NASA CR 102096

LR 18906

Modular Multipurpose Space Station Study

Appendix—EXPERIMENTAL APPLICATION SUMMARY

FINAL REPORT

Submitted to: NASA MANNED SPACECRAFT CENTER
Houston, Texas
30 July 1965

N70-71385

FACILITY FORM 602

(ACCESSION NUMBER) (THRU)

457 (PAGES) NONE (CODE)

NASA CR # 102096 (NASA CR OR TMX OR AD NUMBER) (CATEGORY)

LOCKHEED-CALIFORNIA COMPANY • BURBANK
A DIVISION OF LOCKHEED AIRCRAFT CORPORATION

VOLUME INDEX

MODULAR MULTIPURPOSE SPACE STATION STUDY

The complete study, consisting of six sections, an appendix, and a condensed summary, is contained in the following seven volumes.

1. INTRODUCTION
2. TECHNICAL SUMMARY
3. MODULAR SPACE STATION DESIGN
   - 3.1 Modular Configurations
   - 3.2 Radiation Shielding
   - 3.3 Structural Design
   - 3.4 Weight Analysis
   - 3.5 Subsystems
   - 3.6 Subsystem Integration
   - 3.7 Special Subsystem Studies
4. PRELIMINARY SPECIFICATIONS
5. MULTIPURPOSE SPACE STATION APPLICATIONS
6. DEVELOPMENT PLAN

Appendix - EXPERIMENTAL APPLICATION SUMMARY

CONDENSED SUMMARY

LOCKHEED
CALIFORNIA COMPANY

APPENDIX

EXPERIMENT AND APPLICATION SUMMARIES

This appendix presents data compiled on 405 potential space station experiments and applications from a NASA-furnished mission task model containing titles to 648 experiments and applications. Table A-1 lists the 405 experiments that were analyzed and shows the modular space station designations to which each can be assigned. Of the 405 experiments, 381 can be assigned to the One-Compartment Dependent Laboratory, 384 to the Two-Compartment Independent Laboratory, 87 to the Polar Orbit Laboratory, 56 to the Synchronous Orbit Laboratory, and 389 to either the Interim or the Operational Space Station.

Final experiment-to-mission assignments and groupings will require extensive analysis; however, for this preliminary allocation, the following guidelines were adopted to provide an indication of compatibility between missions and experiments:

- Experiments were assigned to the polar and synchronous missions only if special benefits could be derived. These benefits included such items as capability for world wide observations or for continuous observation of one area, space environment differences from that encountered by a 28.5-degree, 200-n. mile mission, and communication coverage.
- If any one experiment exceeded the volume or weight capability of a particular mission, it was not scheduled on that mission.

LOCKHEED
CALIFORNIA COMPANY

- The Operational Space Station could be operated in a despun mode to accommodate those experiments requiring high pointing accuracy and stability.
- If an experiment had the requirement to be performed in both a zero-gravity field and a partial-gravity field, and if some useful data could be obtained from the zero-gravity part only, then the experiment was considered as a candidate for a zero-gravity laboratory or space station.

Immediately following Table A-1 are the 405 Experiment and Application Summary forms which provide basic data for the experiment grouping and integration tasks. These experiment and application summaries have been derived from the list of titles contained in National Multipurpose Space Station Utilization Outline, issued Oct. 1, 1964 by the Space Station Study Office, MSC.

TABLE A-1

POTENTIAL EXPERIMENT-TO-MISSION ALLOCATIONS

[illegible]	[illegible]			SPACE STATION DESIGNATION						GRAVITY REQUIREMENT		
[illegible]	NAME	WEIGHT (LB)	INTERNAL VOLUME (CU. FT)	ONE COMPT LAB	TWO COMPT LAB	POLAR ORBIT LAB	SYNCH ORBIT LAB	INTERIM SPACE STATION	OPER-ATIONAL SPACE STATION	ZERO	ZERO AND PARTIAL	NO REQUIREMENT
[illegible]	Pulmonary Pathology and Heart Size	119	3.3	X	X			X	X	X	Desirable	
[illegible]	Evaluation of Superficial Sensation	0.7	0.002	X	X			X	X	X	Desirable	
1.1.1.3	Blood Volume	0	0	X	X			X	X	X	Desirable	
1.1.1.4	Body Mass	0	0	X	X			X	X	X	Desirable	
1.1.1.5	Cardiac Electrical Activity and State	0	0	X	X			X	X	X	Desirable	
1.1.1.6	Venous Pressure and Circulation Time	0.6	0.1	X	X			X	X	X	Desirable	
1.1.1.7	Exercise Test	12.0	3.3	X	X			X	X	X	Desirable	
1.1.1.8	Cardiac Output and Heart Movement	30.0	2.0	X	X			X	X	X	Desirable	
1.1.1.9	Blood and Urine Potassium and Sodium	0	0	X	X			X	X	X	Desirable	
1.1.1.10	Muscle Function	11.0	1.6	X	X			X	X	X	Desirable	
1.1.1.11	Blood Catecholamine	0	0	X	X			X	X	X	Desirable	
1.1.1.12	End Expiratory pCO_2 and pO_2	29.0	1.9	X	X			X	X	X	Desirable	
1.1.1.13	Voiding Evaluation	0	0	X	X			X	X	X	Desirable	
1.1.1.14	Kidney and Bladder Stone Formation	0	0	X	X			X	X	X	Desirable	
1.1.1.15	Red Blood Cell Mass	274.0	3.0	X	X			X	X	X	Desirable	
1.1.1.16	Eosinophil Count	0	0	X	X			X	X	X	Desirable	
1.1.1.17	Capillary Fragility	0.46	0.7	X	X			X	X	X	Desirable	
1.1.1.18	Visual Fields Evaluation	2.2	1.6	X	X			X	X	X	Desirable	
1.1.1.19	Incisional Healing and Bleeding Time	0	0	X	X			X	X	X	Desirable	
1.1.1.20	Respiratory Rate	0.56	0.002	X	X			X	X	X	Desirable	
1.1.1.21	Mucosal Integrity Evaluation	0	0	X	X			X	X	X	Desirable	
1.1.1.22	Cardiopulmonary Symptoms	0	0	X	X			X	X	X	Desirable	
1.1.1.23	Skin Thickness	0.3	0.006	X	X			X	X	X	Desirable	
1.1.1.24	Venous Distension	0	0	X	X			X	X	X	Desirable	
1.1.1.25	Nausea-Regurgitation Evaluation	0	0	X	X			X	X	X	Desirable	
1.1.1.26	Blood Bilirubin	0	0	X	X			X	X	X	Desirable	
1.1.1.27	Body Temperature	0.009	0.002	X	X			X	X	X	Desirable	
1.1.1.28	Tubular Reabsorption Test	76	2.2	X	X			X	X	X	Desirable	
1.1.1.29	Energy Requirements	0	0	X	X			X	X	X	Desirable	
1.1.1.30	Gastrointestinal Tract Mobility	0	0	X	X			X	X	X	Desirable	

TABLE A-1 (cont)
POTENTIAL EXPERIMENT-TO-MISSION ALLOCATIONS

EXPERIMENT				SPACE STATION DESIGNATION						GRAVITY REQUIREMENT		
NASA NO.	NAME	WEIGHT (LB)	INTERNAL VOLUME (CU FT)	ONE COMPT LAB	TWO COMPT LAB	POLAR ORBIT LAB	SYNCH ORBIT LAB	INTERIM SPACE STATION	OPER-ATIONAL SPACE STATION	ZERO	ZERO AND PARTIAL	NO REQ'M'T
1.1.1.31	Color Vision Evaluation	0	0	X	X			X	X	X	Desirable	
1.1.1.32	Urine 17 kg Steroid	0	0	X	X			X	X	X	Desirable	
1.1.1.33	Heart Sounds	5.0	0.2	X	X			X	X	X	Desirable	
1.1.1.34	Muscle Size	0.13	0.002	X	X			X	X	X	Desirable	
1.1.1.35	Urine and Fecal Nitrogen	50.0	3.4	X	X			X	X	X	Desirable	
1.1.1.36	Reflex Response and Clonus Evaluation	0.5	0.01	X	X			X	X	X	Desirable	
1.1.1.37	Bowel Function Evaluation and Stool Characteristics	0	0	X	X			X	X	X	Desirable	
1.1.1.38	Vestibular Reaction	0.13	0.009	X	X			X	X	X	Desirable	
1.1.1.39	Cortical Activity	0.13	0.001	X	X			X	X	X	Desirable	
1.1.1.40	Eating Habits Evaluation	0	0	X	X			X	X	X	Desirable	
1.1.1.41	Pulse Rate	0	0	X	X			X	X	X	Desirable	
1.1.1.42	Autonomic Hyperactivity	0	0	X	X			X	X	X	Desirable	
1.1.1.43	State of Arousal	0	0	X	X			X	X	X	Desirable	
1.1.1.44	Blood and Urine Sugar	0	0	X	X			X	X	X	Desirable	
1.1.1.45	Visual Acuity, Depth Perception and Accommodation	45.0	3.8	X	X			X	X	X	Desirable	
1.1.1.46	Cerebral Blood Flow	6.0	0.74	X	X			X	X	X	Desirable	
1.1.1.47	Urine Bilirubin	0	0	X	X			X	X	X	Desirable	
1.1.1.48	GI Absorption Test	0	0	X	X			X	X	X	Desirable	
1.1.1.49	Urine and Fecal Occult Hemorrhage	0.1	0.02	X	X			X	X	X	Desirable	
1.1.1.50	Capillary Morphology	0	0	X	X			X	X	X	Desirable	
1.1.1.51	Protein Assimilation Test	0	0	X	X			X	X	X	Desirable	
1.1.1.52	Blood and Urine Chloride	0	0	X	X			X	X	X	Desirable	
1.1.1.53	Blood 17 kg Steroid	0	0	X	X			X	X	X	Desirable	
1.1.1.54	Prothrombin Time	0	0	X	X			X	X	X	Desirable	
1.1.1.55	Blood, Salivary and Urine Delayed Analysis	15.0	1.0	X	X			X	X	X	Desirable	
1.1.1.56	Respiratory Volume	133.0	7.7	X	X			X	X	X	Desirable	
1.1.1.57	Bromsulphalein (BSP)	0	0	X	X			X	X	X	Desirable	
1.1.1.58	Incidence of Aerotitis Media	0	0	X	X			X	X	X	Desirable	
1.1.1.59	Expiratory-Inspiratory Force	1.1	0.02	X	X			X	X	X	Desirable	
1.1.1.60	Blood Plasma Protein Fractionation	0	0	X	X			X	X	X	Desirable	

TABLE A-1 (cont)
POTENTIAL EXPERIMENT-TO-MISSION ALLOCATIONS

EXPERIMENT				SPACE STATION DESIGNATION						GRAVITY REQUIREMENT		
NASA NO.	NAME	WEIGHT (LB)	INTERNAL VOLUME (CU FT)	ONE COMPT LAB	TWO COMPT LAB	POLAR ORBIT LAB	SYNCH ORBIT LAB	INTERIM SPACE STATION	OPER-ATIONAL SPACE STATION	ZERO	ZERO AND PARTIAL	NO REQ'M'T
1.1.1.61	Glomerular Filtration Test	0	0	X	X			X	X	X	Desirable	
1.1.1.62	Blood Alkaline Phosphate	0	0	X	X			X	X	X	Desirable	
1.1.1.63	Tubular Excretion Test	0	0	X	X			X	X	X	Desirable	
1.1.1.64	Complete Blood Cell Count	5.6	0.9	X	X			X	X	X	Desirable	
1.1.1.65	Oxygen Uptake and Carbon Dioxide Production	0	0	X	X			X	X	X	Desirable	
1.1.1.66	Blood Pressure	1.4	0.1	X	X			X	X	X	Desirable	
1.1.1.67	Fluid Intake and Output Evaluation	12.0	0.3	X	X			X	X	X	Desirable	
1.1.1.68	Blood Osmolarity	0	0	X	X			X	X	X	Desirable	
1.1.1.69	RBC Uptake I_{125}	0	0	X	X			X	X	X	Desirable	
1.1.1.70	Oxygen Uptake by Red Blood Cells	14.0	0.9	X	X			X	X	X	Desirable	
1.1.1.71	Blood-Urea Nitrogen	0	0	X	X			X	X	X	Desirable	
1.1.1.72	Visual Illusion Evaluation	1.2	0.02	X	X			X	X	X	Desirable	
1.1.1.73	Hearing	3.4	0.1	X	X			X	X	X	Desirable	
1.1.1.74	Joint Motion Range	2.2	1.6	X	X			X	X	X	Desirable	
1.1.1.75	Urinary Albumin	0	0	X	X			X	X	X	Desirable	
1.1.1.76	Bacteria Smears and Cultures	5.0	6.0	X	X			X	X	X	Desirable	
1.1.1.77	Red Blood Cell Survival	0	0	X	X			X	X	X	Desirable	
1.1.1.78	Blood ATP	0	0	X	X			X	X	X	Desirable	
1.1.1.79	Retinal Examination	2.2	0.08	X	X			X	X	X	Desirable	
1.1.1.80	Urine Catecholamine	0	0	X	X			X	X	X	Desirable	
1.1.1.81	Pulse Wave Velocity	2.5	0.3	X	X			X	X	X	Desirable	
1.1.1.82	Liver Size	0	0	X	X			X	X	X	Desirable	
1.1.1.83	Gas Formation and Passage	0	0	X	X			X	X	X	Desirable	
1.1.1.84	Venous pCO_2, pO_2, pH	22.0	1.0	X	X			X	X	X	Desirable	
1.1.1.85	Muscle Activity and State	0.2	0.001	X	X			X	X	X	Desirable	
1.1.1.86	General Physical Examination	0	0	X	X	X	X	X	X	X	Desirable	
1.1.1.87	Bone Density	0	0	X	X			X	X	X	Desirable	
1.1.1.88	Blood and Urine Creatinine	0	0	X	X			X	X	X	Desirable	
1.1.1.89	Hemoglobin and Hematocrit	0	0	X	X			X	X	X	Desirable	
1.1.1.90	Centrifuge Test	820.0	1000.0	X	X			X	X	X	Desirable	
1.1.1.91	Urinalysis	0	0	X	X			X	X	X	Desirable	

TABLE A-1 (cont)
POTENTIAL EXPERIMENT-TO-MISSION ALLOCATIONS

EXPERIMENT				SPACE STATION DESIGNATION						GRAVITY REQUIREMENT		
NASA NO.	NAME	WEIGHT (LB)	INTERNAL VOLUME (CU FT)	ONE COMPT LAB	TWO COMPT LAB	POLAR ORBIT LAB	SYNCH ORBIT LAB	INTERIM SPACE STATION	OPER-ATIONAL SPACE STATION	ZERO	ZERO AND PARTIAL	NO REQ'M'T
1.1.1.92	Total Body Water	0	0	X	X			X	X	X	Desirable	
1.1.1.93	Calcium Balance Study	24.0	1.2	X	X			X	X	X	Desirable	
1.1.2.1	Distant Static Depth Perception	10.0	45.0	X	X			X	X	X	Desirable	
1.1.2.2	Dynamic Depth Perception	0	0	X	X			X	X	X	Desirable	
1.1.2.3	Cue Abstraction	0	0	X	X			X	X	X	Desirable	
1.1.2.4	Decision Making	0	0	X	X			X	X	X	Desirable	
1.1.2.5	Detection of Light Touch	20.0	1.0	X	X			X	X	X	Desirable	
1.1.2.6	Problem Solving	0	0	X	X			X	X	X	Desirable	
1.1.2.7	Brightness Detection/ Discrimination	0	0	X	X			X	X	X	Desirable	
1.1.2.8	Association	0	0	X	X			X	X	X	Desirable	
1.1.2.9	Sound Localization	0.5	0.01	X	X			X	X	X	Desirable	
1.1.2.10	Tone Pattern Discrimination	0	0	X	X			X	X	X	Desirable	
1.1.2.11	Detection of Heat/Cold	1.0	0.01	X	X			X	X	X	Desirable	
1.1.2.12	Pain Detection	2.0	0.4	X	X			X	X	X	Desirable	
1.1.2.13	Olfaction	3.0	0.17	X	X			X	X	X	Desirable	
1.1.2.14	Texture Discrimination	0.1	0.01	X	X			X	X	X	Desirable	
1.1.2.15	Detection/ Discrimination of Linear and Angular Acceleration	22.0	3.3	X	X			X	X	X	Desirable	
1.1.2.16	Inductive Reasoning	0	0	X	X			X	X	X	Desirable	
1.1.2.17	Detection/ Discrimination of Force against Limb	6.2	1.2	X	X			X	X	X	Desirable	
1.1.2.18	Arm/Hand/Finger Reaction Time and Speed Control	8.5	2.2	X	X			X	X	X	Desirable	
1.1.2.19	Visual-Motor Tracking	0	0	X	X			X	X	X	Desirable	
1.1.2.20	Leg Control of Force	5.0	0.03	X	X			X	X	X	Desirable	
1.1.2.21	Near Depth Perception	4.0	0.13	X	X			X	X	X	Desirable	
1.1.2.22	Visual Resolution of Detail	0	0	X	X			X	X	X	Desirable	
1.1.2.23	Tone Audition	0	0	X	X			X	X	X	Desirable	
1.1.2.24	Peripheral Visual/ Detection/ Discrimination	2.0	1.0	X	X			X	X	X	Desirable	
1.1.2.25	Color Detection/ Discrimination	0	0	X	X			X	X	X	Desirable	
1.1.2.26	Vibration Detection/ Discrimination	0.6	0.3	X	X			X	X	X	Desirable	
1.1.2.27	Time Perception	0	0	X	X			X	X	X	Desirable	
1.1.2.28	Arm/Hand/Finger Manipulation	1.0	0.01	X	X			X	X	X	Desirable	

TABLE A-1 (cont)
POTENTIAL EXPERIMENT-TO-MISSION ALLOCATIONS

EXPERIMENT				SPACE STATION DESIGNATION						GRAVITY REQUIREMENT		
NASA NO.	NAME	WEIGHT (LB)	INTERNAL VOLUME (CU FT)	ONE COMPT LAB	TWO COMPT LAB	POLAR ORBIT LAB	SYNCH ORBIT LAB	INTERIM SPACE STATION	OPER-ATIONAL SPACE STATION	ZERO	ZERO AND PARTIAL	NO REQ'M'T
1.1.2.29	Complex Pattern Discrimination	48.0	2.6	X	X			X	X	X	Desirable	
1.1.2.30	Computation	0.5	0.001	X	X			X	X	X	Desirable	
1.1.2.31	Learned Procedure	0	0	X	X			X	X	X	Desirable	
1.1.2.32	Mass Handling	28.5	1.6	X	X			X	X	X	Desirable	
1.1.2.33	Speech and Speech Perception	0	0	X	X			X	X	X	Desirable	
1.1.2.34	Perceptual Set	205.0	10.0	X	X			X	X	X	Desirable	
1.1.3.1	Embryology at Zero-G	50.0	3.0	X	X	X	X	X	X	X		
1.1.3.2	Cellular Physiology	50.0	3.0	X	X	X	X	X	X	X		
1.1.3.3	Micro-Organism Exposure to Space Environment	2.0	2.0	X	X	X	X	X	X	X	Desirable	
1.1.3.4	Biological and Chemical Decontamination	10.0	4.0	X	X			X	X	X	Desirable	
1.1.3.5	Plant Physiology	20.0	2.0	X	X	X	X	X	X	X	Desirable	
1.1.3.6	Long-Term Animal Exposure	300.0	100.0	X	X	X	X	X	X	X	Desirable	
1.1.3.7	The Independent and Synergistic Effects of Radiation and Zero-Gravity on Differentiation in the Flour Beatle-Tribolium	86.0	3.8	X	X	X	X	X	X	X		
1.1.3.8	The Effects of Zero-Gravity on Paramecia and Hela Cells	90.0	5.0	X	X	X	X	X	X	X		
1.1.3.9	Effects of Weightlessness on Immune Defenses Against Pathogenic Agent	220.0	31.0	X	X			X	X		X	
1.1.3.10	Effect of Weightlessness on Dividing Human Cells in Culture	113.0	6.3	X	X	X	X	X	X	X		
1.1.3.11	Germination, Seedling Development, and Historical and Morphological Plant Studies During Zero G	441.0	10.0	X	X	X	X	X	X	X		
1.1.3.12	Experimental Analysis of Animal Adjustment in Various Degrees of Gravitational Force	43.0	9.9	X	X			X	X		X	
1.1.3.13	The Effect of Weightlessness on the Replication and Recombination of DNA	76.0	19.1	X	X	X	X	X	X	X		
1.1.3.14	Study of Tissue Regeneration and Wound Healing During Space Flight	71.0	3.0	X	X			X	X	X		
1.1.3.15	Function and Dysfunction of the Gravity-Sensitive Organ in Zero G	30.0	1.5	X	X			X	X	X		

TABLE A-1 (cont)
POTENTIAL EXPERIMENT-TO-MISSION ALLOCATIONS

EXPERIMENT				SPACE STATION DESIGNATION						GRAVITY REQUIREMENT		
NASA NO.	NAME	WEIGHT (LB)	INTERNAL VOLUME (CU FT)	ONE COMPT LAB	TWO COMPT LAB	POLAR ORBIT LAB	SYNCH ORBIT LAB	INTERIM SPACE STATION	OPER-ATIONAL SPACE STATION	ZERO	ZERO AND PARTIAL	NO REQ'M'T
1.1.3.16	Effect of the Space Environment on the Feeding, Survival and Reproduction of Daphnia Pulex	34.0	1.4	X	X	X	X	X	X	X		
1.1.3.17	Discrimination and Communication of Animals Under Zero-G Conditions	56.0	10.0	X	X			X	X	X		
1.1.3.18	A Study of Photosynthetic Action Spectra During Exposure of Algae Cultures to True Space Illumination	110.0	4.8	X	X	X	X	X	X			X
1.1.3.19	Changes in Sex Distribution of Offspring Conceived, Developed and Born in the Weightless State	65.0	6.7	X	X	X	X	X	X	X		
1.1.3.20	Origin of Biochemical Compounds	49.0	9.2					X	X			X
1.1.3.21	Effects of Space Flight on Cerebral Neuronal and Glial Chemistry	135.0	19.4	X	X			X	X	X	Desirable	
1.1.3.22	Ventilation of Respired Gases in Manned Space Enclosure	26.0	1.2	X	X			X	X		X	
1.1.3.23	Changes in Vestibular Nerve Activity and Vestibular Mebry in Fractional G Loads and Prolonged Zero G	192.0	67.8	X	X			X	X		X	
1.1.3.24	Collecting and Sampling of Microorganisms in Near-Earth Orbits	80.0	21.0	X	X	X	X	X	X			X
1.1.3.25	Effects of High Energy Particulate Radiation on Selected Bacterials in Particular Organic Compounds	232.0	6.0	X	X	X	X	X	X	X		
1.2.1.1	Extraterrestrial Electromagnetic Radiation Survey	30.0	2.0	X	X	X	X	X	X			X
1.2.1.2	Bubble Chamber Experiment	100.0	2.0	X	X			X	X			X
1.2.1.5	Ionizing Radiation Measurements	92.0	3.8	X	X	X	X	X	X			X
1.2.1.6	Distribution, Density, and Measurement of Radioactive Fallout After Nuclear Explosions	30.0	2.0	X	X	X	X	X	X			X
1.2.1.7	Albedo Level Measurement Program	200.0	8.0	X	X	X	X	X	X	X		
1.2.2.1	Micrometeoroid Environment Mapping	0	0	X	X	X	X	X	X			X

TABLE A-1 (cont.)
POTENTIAL EXPERIMENT-TO-MISSION ALLOCATIONS

EXPERIMENT				SPACE STATION DESIGNATION						GRAVITY REQUIREMENT		
NASA NO.	NAME	WEIGHT (LB)	INTERNAL VOLUME (CU FT)	ONE COMPT LAB	TWO COMPT LAB	POLAR ORBIT LAB	RANCH ORBIT LAB	INTERIM SPACE STATION	OPERATIONAL SPACE STATION	ZERO	ZERO AND PARTIAL	NA REQUIRED
1.2.2.2	Micrometeoroid Composition and Velocity	35.0	13.0	X	X	X	X	X	X			X
1.2.2.3	Projection of Artificial Meteoroids into the Earth's Atmosphere	50.0	9.0	X	X		X	X	X			X
1.2.2.7	Cosmic Dust Measurements	104.0	18.5	X	X	X	X	X	X			X
1.2.3.3	Measurement of Earth Origin Electromagnetic Radiation Spectrum and Distribution	7.0	1.3	X	X	X	X	X	X			X
1.2.3.4	Study of the Aurora Borealis	100.0	3.0	X	X	X	X	X	X			X
1.2.4.1	Ultra-High Vacuum Research	30.0	1.0	X	X			X	X			X
1.2.4.2	Horizon Spectrometry	120.0	4.0	X	X			X	X			X
1.2.4.3	Methods to Obtain Localized Ultra-High Vacuum	45.0	3.0	X	X			X	X			X
1.2.4.4	Measurements of Jet Flow in Vacuum	150.0	2.0	X	X			X	X			X
1.2.4.6	Measurements of Local Spacecraft External Atmosphere	64.0	3.1	X	X	X	X	X	X			X
1.2.4.7	Drag Studies	100.0	8.0	X	X			X	X			X
1.3.1.8	Stellar Background Measurements	200.0	4.0	X	X			X	X			X
1.3.1.15	Measurement of Lunar Temperatures Using a Spectrometer	300.0	20.0	X	X			X	X			X
1.3.2.1	Observations of Earth-Surface Detail in 8 to 16 Micro Band Pass	0	0	X	X	X		X	X			X
1.3.2.2	Electro-Optical Experiment	30.0	2.1	X	X			X	X			X
1.3.2.3	Orbiting Radio Telescope	900.0	2.5		X			X	X	X		
1.3.2.4	Orbiting Phased Array Radio Telescope	10000.0	200.0				X			X		
1.3.2.5	Radio Astronomy Star Resolution	500.0	2.4		X			X	X	X		
1.3.2.6	Radio and Radar Astronomy Measurements of Solar Flares	912.0	7.0	X	X			X	X			X
1.3.2.7	Low Frequency Ionospheric Research	150.0	1.5	X	X			X	X			X
1.3.3.2	Spectral Analysis of Star Sources Useful for Space Navigation	100.0	0.5	X	X			X	X	X		
1.3.3.4	Evaluation of Pertinent Vectors in High Resolution Space Pr[illegible] Reconnaissance	760.0	21.0	X	X			X	X	X		

TABLE A-1 (cont)
POTENTIAL EXPERIMENT-TO-MISSION ALLOCATIONS

EXPERIMENT				SPACE STATION DESIGNATION						GRAVITY REQUIREMENT		
NASA NO.	NAME	WEIGHT (LB)	INTERNAL VOLUME (CU FT)	ONE COMPT LAB	TWO COMPT LAB	POLAR ORBIT LAB	SYNCH ORBIT LAB	INTERIM SPACE STATION	OPER-ATIONAL SPACE STATION	ZERO	ZERO AND PARTIAL	NO REQ'M'T
1.3.4.1	Observations of a Space Radiation Telescope	90.0	1.3	X	X	X		X	X			X
1.3.4.8	Solar Telescope	100.0	5.0	X	X			X	X	X		
1.3.4.9	Observation of Ionized Cloud in Space	9.0	0.7	X	X			X	X			X
1.4.1.1	Multispectral Sensing of the Terrestrial Surface	0	0	X	X	X		X	X			X
1.4.1.2	Photography of the Terrestrial Surface	50.0	0.1	X	X	X		X	X			X
1.4.1.3	Monitoring of Earth's Vegetation by IR	0	0	X	X	X		X	X			X
1.4.1.4	Infrared (7-30 microns) Response of Geologic Materials	220.0	10.5	X	X	X		X	X			X
1.4.1.5	Infrared-UV Spectral Emittance	150.0	8.0	X	X			X	X			X
1.4.1.7	Radar and Microwave Geoscience Mapping Capability	480.0	2.0	X	X	X		X	X			X
1.4.1.8	Spectral Photo-graphic Response	300.0	15.0	X	X			X	X			X
1.4.1.9	Multispectral Photography, Film Filter Oriented	200.0	15.0	X	X			X	X			X
1.4.1.10	Geographic Studies	320.0	5.5	X	X	X		X	X			X
1.4.1.11	Terrain Mapping Applications by Microwave Radiometer	220.0	1.5	X	X	X		X	X			X
1.4.1.12	Cartography	0	0	X	X	X		X	X			X
1.4.1.13	Geodetic Survey	40.0	2.0	X	X	X		X	X			X
1.4.1.14	Determination of Composition and Distribution of Rock-Types from Infrared Emission Imagery	0	0	X	X	X		X	X			X
1.4.2.2	Multispectral Sens-ing of Lunar Surfaces	800.0	20.0	X	X			X	X			X
1.4.2.3	Photography of Lunar Surfaces	600.0	15.0	X	X			X	X			X
1.4.3.4	Study of Planetary and Satellite Surface Properties	400.0	6.5	X	X			X	X	X	Desirable	
1.5.1.1	Action of Liquids Under Zero-G and Partial-G Environments	75.0	8.0	X	X			X	X		X	
1.5.1.2	Heat Transfer in Liquids and Gases Under Zero-G	200.0	3.0	X	X			X	X	X		
1.5.1.3	Absorption of Gases by Liquids at Zero-G	109.0	7.0	X	X			X	X	X		

TABLE A-1 (cont)
POTENTIAL EXPERIMENT-TO-MISSION ALLOCATIONS

EXPERIMENT				SPACE STATION DESIGNATION						GRAVITY REQUIREMENT		
NASA NO.	NAME	WEIGHT (LB)	INTERNAL VOLUME (CU FT)	ONE COMPT LAB	TWO COMPT LAB	POLAR ORBIT LAB	SYNCH ORBIT LAB	INTERIM SPACE STATION	OPER-ATIONAL SPACE STATION	ZERO	ZERO AND PARTIAL	NO REQ'M'T
1.5.1.4	Density Profiles of Liquids in the Critical Region	99.0	2.6	X	X			X	X	X		
1.5.1.5	Static and Motion Tests of Interface Phenomena	213.0	12.3	X	X			X	X	X		
1.5.1.6	Study of Convective Heat Transfer at Zero-G	200.0	9.0	X	X			X	X	X		
1.5.1.13	Thermal Conductivity of High Pressure Gases Under Zero-G	50.0	0.3	X	X			X	X	X		
1.5.1.14	Viscosity and Self-Diffusion Coefficients of High Pressure Gases	100.0	1.0	X	X			X	X	X		
1.5.2.2	Study of Atmospheric Effects on Electromagnetic Wave Propagation	220.0	3.0	X	X	X	X	X	X			X
1.5.2.3	Determination of the Frequency Distribution of Cosmic Noise	280.0	3.0				X					X
1.5.2.6	Plasma-Electromagnetic Interactions	50.0	0.1	X	X			X	X			X
1.5.2.11	Millimeter Wavelength Space Propagation Measurements	150.0	2.0				X					X
1.5.3.2	High Energy Particle Physics	150.0	0.5	X	X	X	X	X	X			X
1.5.3.3	Study of High Energy Particle Physics Using Spark Chamber	245.0	13.5	X	X	X	X	X	X			X
1.5.3.4	Particle-Particle Studies	200.0	8.0	X	X	X	X	X	X			X
1.5.3.6	Particle-Surface Interactions	250.0	20.0	X	X	X	X	X	X			X
1.5.4.2	Measurement of Nongravitational Forces	33.0	2.5	X	X			X	X	X		
1.6.2.1	Combustion of Materials in Zero-G	250.0	27.0	X	X			X	X	X		
2.1.1.1	Performance and Reliability Data of Secondary Environmental Control System	1150.0	39.0	X	X			X	X	X	Desirable	
2.1.1.2	Life Support System Temperature and Humidity in Zero and Partial G	30.0	2.3	X	X			X	X		X	
2.1.1.3	Toxicological Studies	135.0	102.0	X	X			X	X	X	Desirable	
2.1.1.4	Transient Effects of Varying Heat Load on ECS	25.0	5.0	X	X			X	X			X

TABLE A 1 (cont)
POTENTIAL EXPERIMENT-TO-MISSION ALLOCATIONS

EXPERIMENT				SPACE STATION DESIGNATION						GRAVITY REQUIREMENT		
NASA NO.	NAME	WEIGHT (LB)	INTERNAL VOLUME (CU FT)	ONE COMPT LAB	TWO COMPT LAB	POLAR ORBIT LAB	SYNCH ORBIT LAB	INTERIM SPACE STATION	OPER-ATIONAL SPACE STATION	ZERO	ZERO AND PARTIAL	NO REQ'M'T
2.1.1.5	Carbon Dioxide Removal Under Zero and Partial Gravity	70.0	4.5	X	X			X	X		X	
2.1.2.1	Tests of Garbage and Waste Disposal Methods	159.0	7.0	X	X			X	X	X		
2.1.2.2	Development of Regenerative Oxygen Supply Systems Under Zero-G	150.0	5.0	X	X			X	X	X		
2.1.2.3	Photosynthetic Gas Exchanger Tests	300.0	8.0	X	X			X	X	X		
2.1.2.4	Extravehicular Suit and Biopack Evaluation	198.0	18.0	X	X			X	X	X	Desirable	
2.1.2.5	Evaluation of Oxygen Recovery System	45.0	3.0	X	X			X	X	X		
2.1.2.7	Algae Closed Cycle Life Support Systems	65.0	4.0	X	X			X	X	X	Desirable	
2.1.2.8	Fire Extinguishment Under Zero or Partial Gravity Conditions	225.0	9.0	X	X			X	X		X	
2.1.2.9	Fecal Collection Unit Functional Tests	50.0	1.0	X	X			X	X	X		
2.1.2.10	Tests to Evaluate Food Storage and Preparation Under Zero-G	20.0	2.0	X	X			X	X	X		
2.1.2.11	Gas-Liquid Separator Tests	500.0	10.0	X	X			X	X	X		
2.1.2.13	Solid Waste Reclamation Under Zero-G	40.0	2.0	X	X			X	X	X		
2.1.2.14	Test of Regenerative Water Supply System Under Zero-G	142.0	3.0	X	X			X	X	X		
2.1.2.15	Urine Purification System Functional Tests	50.0	1.5	X	X			X	X	X		
2.1.2.16	Magnetic Radiation Shielding Evaluation	500.0	30.0	X	X	X	X	X	X			X
2.1.3.1	Tests of Personnel Restraint Equipment	25.0	0.5	X	X			X	X	X	Desirable	
2.1.3.2	Feasibility Test of Special Bed for Use Under Weightless Conditions	5.0	3.0	X	X			X	X	X		
2.1.3.3	Weightless Condition Feeding Devices	Undetermined	Undetermined	X	X			X	X	X		
2.1.3.4	Evaluation of Protective Clothing	200.0	6.0	X	X			X	X	X		
2.2.1.1	The Effect on Materials of Long-Term Exposure to Space Environment	150.0	8.0	X	X			X	X			X

TABLE A-1 (cont)
POTENTIAL EXPERIMENT-TO-MISSION ALLOCATIONS

EXPERIMENT				SPACE STATION DESIGNATION						GRAVITY REQUIREMENT		
NASA NO.	NAME	WEIGHT (LB)	INTERNAL VOLUME (CU FT)	ONE COMPT LAB	TWO COMPT LAB	POLAR ORBIT LAB	SYNCH ORBIT LAB	INTERIM SPACE STATION	OPER-ATIONAL SPACE STATION	ZERO	ZERO AND PARTIAL	NO REQ'M'T
2.2.1.2	Fatigue Tests of Materials After Exposure to Space Environment	25.0	8.0	X	X			X	X			X
2.2.1.3	Evaluation of the Effects of Exposure to the Space Environment on Transparent Materials	150.0	2.0	X	X			X	X			X
2.2.1.4	Behavior of Thermal Control Surfaces in Space	100.0	6.0	X	X			X	X			X
2.2.1.5	Structural Damage Determination Caused by Meteoroid Penetration	20.0	1.0	X	X			X	X			X
2.2.1.6	Liquid Lubricant Life Under Zero-G and One-Sixth Gravity Conditions	0	0	X	X			X	X		X	
2.2.1.7	Liquid Lubricant Recovery Under Zero-G Conditions	60.0	3.5	X	X			X	X	X		
2.2.1.8	Determination of Thermal Conductivities of Materials at Zero-G	150.0	16.0	X	X			X	X	X		
2.2.1.9	Cold Welding of Metals in a Space Environment	10.0	1.0	X	X			X	X			X
2.2.1.10	Activation Measurements	25.0	2.0	X	X	X	X	X	X			X
2.2.1.11	Measurement of Solar Absorptivity and Thermal Emissivity of Thermal Control Coating by Spectrophotometry	30.0	1.5	X	X			X	X			X
2.2.1.12	Effect of Space Environment on Ablative Materials	80.0	30.0	X	X			X	X			X
2.2.1.13	Effects of Space Environment on the Wear Properties of Metals	30.0	1.5	X	X			X	X			X
2.2.1.14	Fatigue Crack Propagation in a Vacuum	135.0	9.0	X	X			X	X			X
2.2.1.15	Environmental Correlation	30.0	20.0	X	X			X	X			X
2.2.1.19	Fluid and Gas Permeability of Various Elastomers	10.0	1.0	X	X			X	X			X
2.2.1.20	Polymerization of Elastomeric Monomers	5.0	1.0	X	X			X	X			X
2.2.1.21	Decompressional Fatigue of Rubber Mechanical Items	2.0	1.0	X	X			X	X			X
2.2.1.25	Heat Transfer and Radiation Properties of Solid, Matrix and Filled Thermal Insulators	30.0	2.0	X	X			X	X			X

TABLE A-1 (cont)
POTENTIAL EXPERIMENT-TO-MISSION ALLOCATIONS

EXPERIMENT				SPACE STATION DESIGNATION						GRAVITY REQUIREMENT		
NASA NO.	NAME	WEIGHT (LB)	INTERNAL VOLUME (CU FT)	ONE COMPT LAB	TWO COMPT LAB	POLAR ORBIT LAB	SYNCH ORBIT LAB	INTERIM SPACE STATION	OPER-ATIONAL SPACE STATION	ZERO	ZERO AND PARTIAL	NO REQ'M'T
2.2.1.30	Effects of High Energy Particulate Radiation on Selected Materials - Particularly Organic Compounds	100.0	4.0	X	X	X	X	X	X			X
2.2.1.33	Meteroid Effects on Materials and Surfaces	63.0	1.0	X	X	X	X	X	X			X
2.2.1.34	Meteroid Penetration of Materials	6.0	1.0	X	X	X	X	X	X			X
2.2.1.35	Breathing Mode and Fluid Behavior in Zero-G Space Environment	50.0	5.0	X	X			X	X	X		
2.2.1.36	Evaluation of Elastomers	10.0	1.0	X	X			X	X			X
2.2.1.37	Radiation Heat Transfer	150.0	10.0	X	X			X	X			X
2.2.2.1	Thermal Strains in Space-frame Structure and Installation	25.0	1.0	X	X			X	X			X
2.2.2.3	Structural Damping Measurements	0	0	X	X			X	X			X
2.2.2.4	Determine Corrosive Effects on Space Station Resulting from Propellant Boil-Off	25.0	2.0	X	X			X	X			X
2.2.2.5	Pressure Loss Through Structural Organic Material	12.0	1.5	X	X			X	X			X
2.2.2.6	Radiation Shielding Materials Testing	300.0	3.0	X	X	X	X	X	X			X
2.2.3.1	Deployment and Structural Stability Tests	10.0	1.0	X	X			X	X	X		
2.2.3.2	Tests of Self-Sealing Structures	60.0	2.0	X	X			X	X			X
2.2.3.3	Development of Inflatable Structures	10.0	1.0	X	X			X	X	X		
2.2.4.1	Development of Expandable Structures	15.0	1.0	X	X			X	X			X
2.2.4.2	Deployment and Structural Stability Tests	10.0	1.0	X	X			X	X			X
2.2.4.3	Radiation Shadow Shield Tests	20.0	0.1	X	X			X	X			X
2.2.5.1	Leak Detection and Sealing Techniques	100.0	8.0	X	X			X	X			X
2.2.5.2	Analysis of Outgassing of an Orbiting Space Vehicle by Use of a Mass Spectrometer	100.0	4.0	X	X			X	X			X
2.2.5.3	Internal Laboratory Spacecraft Environment Noise and Vibration Levels	25.0	1.0	X	X			X	X			X

TABLE A-1 (cont)
POTENTIAL EXPERIMENT-TO-MISSION ALLOCATIONS

EXPERIMENT				SPACE STATION DESIGNATION						GRAVITY REQUIREMENT		
NASA NO.	NAME	WEIGHT (LB)	INTERNAL VOLUME (CU FT)	ONE COMPT LAB	ONE COMPT LAB	POLAR ORBIT LAB	SYNCH ORBIT LAB	INTERIM SPACE STATION	OPER-ATIONAL SPACE STATION	ZERO	ZERO AND PARTIAL	NO REQ'M'T
2.3.1.1	Deployment and Erection of Large Area Solar Cell Arrays	300.0	1.0	X	X			X	X	X		
2.3.1.2	Deployment of Foam-Rigidized Solar Collectors	50.0	2.0	X	X			X	X	X		
2.3.1.3	Photovoltaic Solar Cell Evaluation	10.0	0.5	X	X			X	X			X
2.3.1.4	Deployment and Erection of Large Area Solar Collectors	300.0	1.0	X	X			X	X	X		
2.3.1.5	Deployment and Erection of Large Area Space Radiators	300.0	1.0	X	X			X	X	X		
2.3.1.6	Evaluation of Petal Type (Sunflower) Solar Dynamic System	1000.0	7.0	X	X			X	X			X
2.3.1.7	Evaluation of Solar Mercury Rankine System	1000.0	7.0	X	X			X	X			X
2.3.1.8	Orbital Test of Solar Thermoelectric Components	60.0	2.0	X	X			X	X			X
2.3.1.9	Photovoltaic and Photoemissive Material Deterioration Evaluation	191.0	3.6	X	X			X	X			X
2.3.1.10	High Sensitivity Photo Detectors	50.0	2.0	X	X			X	X			X
2.3.1.11	Solar Thermionic Static Power Generating System	100.0	4.5	X	X			X	X			X
2.3.3.2	Hydrogen-Oxygen Power Generation Systems Using a Reciprocating Prime Mover	5519.0	498.0		X			X	X	X	Desirable	
2.4.1.1	Liquid Lubricant Systems Under Zero-G Conditions	20.0	0.5	X	X			X	X	X		
2.4.1.2	Study of Whirl Instabilities in a Hydrodynamic Journal Bearing Operating Under Zero-Gravity Conditions	200.0	27.0	X	X			X	X	X		
2.4.2.1	Rendezvous and Docking	0	0	X	X			X	X	X		
2.4.2.2	Crew Transfer and Cargo Handling	0	0	X	X			X	X	X		
2.4.2.3	Airlock and Hatches	50.0	50.0	X	X			X	X		X	
2.4.2.4	Deployment Devices	20.0	1.0	X	X			X	X	X		
2.4.2.5	Redesign of Mechanical Fasteners	2.0	100.0	X	X			X	X	X		

TABLE A-1 (cont)
POTENTIAL EXPERIMENT-TO-MISSION ALLOCATIONS

EXPERIMENT				SPACE STATION DESIGNATION						GRAVITY REQUIREMENT		
NASA NO.	NAME	WEIGHT (LB)	INTERNAL VOLUME (CU FT)	ONE COMPT LAB	TWO COMPT LAB	POLAR ORBIT LAB	SYNCH ORBIT LAB	INTERIM SPACE STATION	OPER-ATIONAL SPACE STATION	ZERO	ZERO AND PARTIAL	NO REQ'M'T
2.5.1.1	Advanced Guidance System Evaluation	100.0	5.0	X	X			X	X			X
2.5.2.1	Development of Space Navigational Aids and Techniques	60.0	4.0	X	X			X	X			X
2.5.2.3	Comparative Evaluation of Navigation Techniques	25.0	0.5	X	X			X	X			X
2.5.2.4	Demonstration of Reliable Autonomous Navigation Capability	17.0	0.27	X	X			X	X			X
2.5.2.5	Navigation Fixes with Simple Instruments	20.0	0.4	X	X			X	X			X
2.6.1.1	Passive Communication Relay Development	20.0	1.0	X	X			X	X			X
2.6.1.2	Free Space Antenna Pattern Determination	350.0	0.0	X	X			X	X			X
2.6.1.3	Laser Communication Experiment	100.0	5.0	X	X			X	X			X
2.6.1.4	Re-entry Communications Testing	30.0	2.0	X	X			X	X			X
2.6.1.6	Deployment and Erection of Large Antennas	300.0	1.0	X	X			X	X	X		
2.6.1.9	Magnetic Effects on Communication Systems	200.0	1.5	X	X	X	X	X	X			X
2.6.1.10	Van Allen Radiation Effects on Communications	50.0	0.5				X					X
2.6.1.14	Study of Atmospheric Effects on EM Propagation	480.0	5.0	X	X	X	X	X	X			X
2.7.1.1	Astronomical Telescope Development	1625.0	120.0	X	X			X	X	X		
2.7.2.1	Advanced Photographic Systems Evaluation	200.0	8.0	X	X			X	X	X		
2.8.1.1	Zero-G Propellant Tank Slosh and Vortexing	150.0	10.0	X	X			X	X	X		
2.8.1.2	Re-Start Capability After Long Exposure to Space	50.0	0.3	X	X			X	X			X
2.8.1.3	Leakage of Propellants	0	0	X	X			X	X			X
2.8.1.4	Propellant Storability Test	50.0	0	X	X			X	X			X
2.8.1.5	Test of Propellant Activated Device Components in Space Environment	100.0	0	X	X			X	X			X
2.8.2.1	Ion Propulsion Recombination	50.0	0	X	X			X	X			X

TABLE A-1 (cont)
POTENTIAL EXPERIMENT-TO-MISSION ALLOCATIONS

EXPERIMENT				SPACE STATION DESIGNATION						GRAVITY REQUIREMENT		
NASA NO.	NAME	WEIGHT (LB)	INTERNAL VOLUME (CU FT)	ONE COMPT LAB	TWO COMPT LAB	POLAR ORBIT LAB	SYNCH ORBIT LAB	INTERIM SPACE STATION	OPER-ATIONAL SPACE STATION	ZERO	ZERO AND PARTIAL	NO REQ'M'T
2.8.2.8	Test of an Electric Propulsion Unit	59.1	2.5	X	X			X	X	X		
2.8.3.1	Nuclear Propulsion Techniques	500.0	0	X	X			X	X			X
2.9.1.2	Horizon-Scanning Infrared Sensor	0	0	X	X			X	X	X		
2.9.1.3	Evaluation of Lock-on Systems for Terrain Reconnaissance and Communication	150.0	4.0	X	X			X	X	X		
2.9.1.4	Evaluation of Low Range Accelerometers	20.0	1.0	X	X			X	X			X
2.9.1.5	Evaluation of Earth, Moon, Sun and Star Tracker Performance	100.0	27.0	X	X			X	X	X		
2.9.1.6	Evaluation of Inertial Components	100.0	10.0	X	X			X	X	X	Desirable	
2.9.1.7	Gyro Drift Tests	5.0	0.05	X	X			X	X	X		
2.9.1.8	Optical Scanners	100.0	27.0	X	X			X	X	X		
2.9.1.9	Radiation Sensors to Determine Earth's Vertical	10.0	1.0	X	X			X	X	X		
2.9.1.10	Development Tests of Gravity Gradient Components and Techniques	75.0	1.0	X	X			X	X	X		
2.9.1.11	Evaluation of Stabilization Systems for Laser Communication	200.0	268.0	X	X			X	X	X		
2.9.2.1	Evaluation of Reaction Control Components	145.0	2.5	X	X			X	X			X
2.9.2.3	Test and Evaluation of Control System Torqueing Devices	100.0	9.5	X	X			X	X		X	
2.9.2.4	Techniques for Trailing Test Units From Space Station	100.0	5.0	X	X			X	X			X
2.10.1.1	Joining Materials and Components in Space	50.0	10.0	X	X			X	X			X
2.10.1.2	Application of Thermal Control Coatings in Space	150.0	4.0	X	X			X	X			X
2.10.2.1	Repair of Thermal Control Surfaces in Space	200.0	6.0	X	X			X	X			X
2.10.2.2	Study of Space Maintenance Methods and Tools	100.0	6.0	X	X			X	X			X
2.10.2.3	Repair of Heat Shield in Space	75.0	0	X	X			X	X			X
2.10.2.5	Proof Test of Orbital Maintenance and Repair Facility Utilizing Inflatable Housing	800.0	11.0	X	X			X	X			X

TABLE A-1 (cont)
POTENTIAL EXPERIMENT-TO-MISSION ALLOCATIONS

EXPERIMENT				SPACE STATION DESIGNATION						GRAVITY REQUIREMENT		
NASA NO.	NAME	WEIGHT (LB)	INTERNAL VOLUME (CU FT)	ONE COMPT LAB	TWO COMPT LAB	POLAR ORBIT LAB	SYNCH ORBIT LAB	INTERIM SPACE STATION	OPER-ATIONAL SPACE STATION	ZERO	ZERO AND PARTIAL	NO REQ'M'T
2.10.2.7	Meteoroid Hit Repair	100.0	27.0	X	X			X	X			X
2.10.2.8	Determination of Fabrication and Sealing Techniques and Heat Transfer Patterns for Structural Parts	10.0	1.5	X	X			X	X			X
2.11.1.5	Crew and Cargo Transfer Techniques	350.0	10.5	X	X			X	X	X		
2.11.2.4	Rendezvous and Docking	200.0	27.0	X	X			X	X	X		
2.11.3.1	Crew Extra-Vehicular Suit and Portable Life Support System Training	0	0	X	X			X	X			X
3.1.1.1	Mapping of Cloud Formations	0	0	X	X	X		X	X			X
3.1.1.2	Mapping of Changes in Snow and Ice Coverage	0	0	X	X	X		X	X			X
3.1.1.3	Monitoring Jet Streams	0	0	X	X	X		X	X			X
3.1.1.4	Meteorological Satellite Support	150.0	27.0	X	X	X		X	X			X
3.1.1.5	Hurricane Watch and Warning	0	0	X	X			X	X			X
3.1.1.6	Fog/Smog Survey and Prediction	0	0	X	X	X		X	X			X
3.1.2.2	Clear Air Turbulence Study and Prediction	0	0	X	X	X		X	X			X
3.2.1.1	Voice of America Service	535.0	10.0				X					X
3.2.1.2	Education to Under Developed Countries	0	0				X					X
3.2.2.1	Earth-Earth Radio Relay	80.0	1.0				X					X
3.2.2.2	Earth-Earth TV Relay	200.0	2.0				X					X
3.2.2.3	Earth-Earth Teletype Service	80.0	1.0				X					X
3.3.1.1	Navigation Aid for Ships at Sea	35.0	1.0	X	X	X	X	X	X			X
3.3.1.2	Search and Rescue	0	0	X	X	X		X	X			X
3.3.1.3	Ship Routing and Control	0	0	X	X	X		X	X			X
3.4.1.1	Survey and Dynamic Mapping of the Earth's Surface for Agricultural Production Estimates	0	0	X	X	X		X	X			X
3.4.1.2	Water Resources Survey	0	0	X	X	X		X	X			X
3.4.1.3	Geodetic and Topographic Mapping		INCLUDED IN 1.4.1.12									
3.4.1.5	Forestry Survey	0	0	X	X	X		X	X			X
3.4.1.6	Agricultural Survey	0	0	X	X	X		X	X			X

TABLE A-1 (cont)
POTENTIAL EXPERIMENT-TO-MISSION ALLOCATIONS

EXPERIMENT				SPACE STATION DESIGNATION						GRAVITY REQUIREMENT		
NASA NO.	NAME	WEIGHT (LB)	INTERNAL VOLUME (CU FT)	ONE COMPT LAB	TWO COMPT LAB	POLAR ORBIT LAB	SYNCH ORBIT LAB	INTERIM SPACE STATION	OPER-ATIONAL SPACE STATION	ZERO	ZERO AND PARTIAL	NO REQ'M'T
3.4.1.7	Forest Fire Warning	0	0	X	X	X		X	X			X
3.4.1.8	Crop Prediction	0	0	X	X	X		X	X			X
3.4.1.9	Monitor Earth's Vegetation	0	0	X	X	X		X	X			X
3.4.1.10	Optimum Use of Habitable Land	0	0	X	X	X		X	X			X
3.4.1.11	Mineral Survey	0	0	X	X	X		X	X			X
3.4.1.12	Observation of Volcanic Eruption Effects	295.0	1.0	X	X	X		X	X			X
3.4.1.13	Earthquake Observations	0	0	X	X	X		X	X			X
3.4.1.14	Determine Composition of Soils from Spectral Infrared Emission	0	0	X	X	X		X	X			X
3.4.1.15	Determination of Composition and Distribution of Soil Types from Infrared Emission Imagery	0	0	X	X	X		X	X			X
3.4.1.16	Atmospheric Modification of the Infrared Spectral Reflectance and Emittance from Vegetation	0	0	X	X	X		X	X			X
3.4.2.1	Oceanography Studies	0	0	X	X	X		X	X			X
3.4.2.2	Remote Sensing of Broad Scale Hydrologic Phenomena			INCLUDED IN 3.4.2.1								
3.4.2.3	Sea Temperature Gradients	0	0	X	X	X		X	X			X
3.4.2.5	Ocean Currents Analysis			INCLUDED IN 3.4.2.1								
3.4.2.6	Tidal Wave Warning	0	0	X	X	X		X	X			X
3.4.2.7	Iceberg Position Status	0	0			X						X
3.4.2.9	Fish Migration	0	0	X	X	X		X	X			X
3.4.2.10	Whale Migration	0	0	X	X	X		X	X			X
3.4.2.12	Thermal Structure and Patterns of the Ocean Surface from Spectral Infrared Emittance	50.0	4.0	X	X	X		X	X			X
3.4.2.13	Determination of the Thermal Pattern and Structure of the Ocean Surface by Imaging the Emitted Infrared Radiation	0	0	X	X	X		X	X			X
3.5.2.3	Radioactivity Level Survey	30.0	2.0	X	X	X		X	X			X
3.5.2.4	Community Planning	0	0	X	X	X		X	X			X
3.5.2.5	Industrial Planning	0	0	X	X	X		X	X			X

TABLE A-1 (cont)
POTENTIAL EXPERIMENT-TO-MISSION ALLOCATIONS

EXPERIMENT				SPACE STATION DESIGNATION						GRAVITY REQUIREMENT		
NASA NO.	NAME	WEIGHT (LB)	INTERNAL VOLUME (CU FT)	ONE COMPT LAB	TWO COMPT LAB	POLAR ORBIT LAB	SYNCH ORBIT LAB	INTERIM SPACE STATION	OPER-ATIONAL SPACE STATION	ZERO	ZERO AND PARTIAL	NO REQ'M'T
4.1.1.1	Spacecraft Repair Facility	300.0	168.0					X	X			X
4.1.1.2	Analysis of Maintenance Problems in a Zero-G Environment	75.0	3.0	X	X			X	X	X		
4.2.2.1	Feasibility of Using Space Station for Training, Training Simulators and Devices	300.0	50.0	X	X			X	X	X	Desirable	
4.2.2.2	Evaluation of Ground Training Techniques for Space Crews	150.0	27.0	X	X			X	X	X	Desirable	
4.3.3.1	Analysis of Ferry Vehicle Launch from Laboratory Spacecraft	350.0	4.0					X	X	Desirable		X
4.3.3.3	Reentry Tests	60.0	2.0	X	X			X	X			X
4.4.1.1	Earth-Lunar Relay	4050.0	3.0				X					X
4.4.1.2	Earth-Interplanetary Relay	48090.0	1000.0				X					X
4.4.1.3	Communication Satellite Support	150.0	27.0	X	X	X	X	X	X			X
4.4.1.5	Communication Support for Space Missions	1000.0	3.0				X					X
4.4.2.1	Navigational Satellite Support	150.0	27.0	X	X	X	X	X	X			X
4.4.2.2	Tracking and Guidance of Manned and Unmanned Spacecraft	50.0	2.0	X	X		X	X	X			X
4.5.1.1	Quarantine for Returning Spacecraft Crews	0	0	X	X			X	X			X
4.5.2.1	Conditioning Before Re-entry for Returning Spacecraft Crews	0	0					X	X		X	
4.5.2.2	Medical Aid for Returning Spacecraft Crews	0	0					X	X		X	
4.5.3.2	Data Capsule Delivery	1700.0	41.5	X	X			X	X			X
5.0	National Defense Support	1600.0	50.0	X	X			X	X	X	Desirable	

EXPERIMENT AND APPLICATION SUMMARY

TITLE	NASA No. 1.1.1.1
PULMONARY PATHOLOGY AND HEART SIZE	Lockheed No. 032

OBJECTIVE

Primary: Crew health and efficiency

Secondary: Effect of zero g on heart size and pathology

INSTALLATION REQUIREMENTS

1. Normal Operating Environment: Equip. Interior ; Crew Interior
2. Weight of Equipment and Supplies (lb.) 119
3. Volume of Equipment and Supplies (cu. ft.): Internal 3.3 ; External 0
4. Critical Dimensions (ft.)
5. List of Test Apparatus Lightweight, low-power X-ray machine
6. Average Power Requirements (kw) 0.550
7. Special Thermal Requirements N/R
8. Orientation: Laboratory N/R ; Equipment N/R
9. Special Navigation Accuracy N/R
10. Stability and Pointing Accuracy N/R
11. Orbit Requirements N/R
12. Gravity Requirements Both 0 and Partial G

MANPOWER REQUIREMENTS

1. Number of Crew Required 1 Medical Tech.; 1 Physician; 6 Subjects
2. Skill Categories Biomedical Science, Physician, Subjects
3. Total Man-hours 52
4. Chronological Span 1 yr.
5. Experiment Cycles: Duration 66 min. ; Number 26
6. Potential Hazards Radiation, chemical contaminants

DISCUSSION:

Support Equipment: Light box to view X-rays, developing rooms, shielding, film, chemicals, calipers and centimeter scale.

TITLE

EVALUATION OF SUPERFICIAL SENSATION

NASA No. 1.1.1.2
Lockheed No. 031

OBJECTIVE

Primary: Crew health and efficiency maintenance

Secondary: Effect of zero g on cutaneous sensation

INSTALLATION REQUIREMENTS

1. Normal Operating Environment: Equip. Interior ; Crew Interior
2. Weight of Equipment and Supplies (lb.) 0.7
3. Volume of Equipment and Supplies (cu. ft.): Internal 0.002 ; External 0
4. Critical Dimensions (ft.)
5. List of Test Apparatus Log book (rating scale)
6. Average Power Requirements (kw) 0
7. Special Thermal Requirements N/R
8. Orientation: Laboratory N/R ; Equipment N/R
9. Special Navigation Accuracy N/R
10. Stability and Pointing Accuracy N/R
11. Orbit Requirements N/R
12. Gravity Requirements Both 0 and Partial G

MANPOWER REQUIREMENTS

1. Number of Crew Required 1 Physician; 6 Subjects
2. Skill Categories Physician & Subjects
3. Total Man-hours 62.4
4. Chronological Span 1 yr.
5. Experiment Cycles: Duration 42 min for Physician ; Number 56
6. Potential Hazards None

DISCUSSION:

TITLE	NASA No. 1.1.1.3
BLOOD VOLUME	Lockheed No. 034

OBJECTIVE

Primary: Crew health and efficiency maintenance

Secondary Effects of zero g on blood distirbution and volume

INSTALLATION REQUIREMENTS

1. Normal Operating Environment: Equip. Internal ; Crew Internal
2. Weight of Equipment and Supplies (lb.) Included in other experiments
3. Volume of Equipment and Supplies (cu. ft.): Internal Included in other exp. ; External 0
4. Critical Dimensions (ft.)
5. List of Test Apparatus Included in other experiments
6. Average Power Requirements (kw) Included in other experiments.
7. Special Thermal Requirements N/R
8. Orientation: Laboratory N/R ; Equipment N/R
9. Special Navigation Accuracy N/R
10. Stability and Pointing Accuracy N/R
11. Orbit Requirements N/R
12. Gravity Requirements Both 0 and Partial G

MANPOWER REQUIREMENTS

1. Number of Crew Required 1 Physician; 6 Subjects
2. Skill Categories Physician & Subjects
3. Total Man-hours 20.8
4. Chronological Span 1 yr.
5. Experiment Cycles: Duration 30 min. ; Number 52
6. Potential Hazards None

DISCUSSION:

No crew time necessary because physician reviews previous records included in other experiments.

TITLE	NASA No. 1.1.1.4
BODY MASS	Lockheed No. 033

OBJECTIVE

Primary: Crew health and efficiency maintenance

Secondary: Effect of zero g on body mass

INSTALLATION REQUIREMENTS

1. Normal Operating Environment: Equip. Interior ; Crew Interior
2. Weight of Equipment and Supplies (lb.) 820 (Included in 1.1.1.90)
3. Volume of Equipment and Supplies (cu. ft.): Internal 1000 (Included in 1.1.1.90) ; External 0
4. Critical Dimensions (ft.)
5. List of Test Apparatus Centrifuge, dynamometer
6. Average Power Requirements (kw) 3.0 (Included in 1.1.1.90)
7. Special Thermal Requirements N/R
8. Orientation: Laboratory N/R ; Equipment N/R
9. Special Navigation Accuracy N/R
10. Stability and Pointing Accuracy N/R
11. Orbit Requirements N/R
12. Gravity Requirements Both 0 and Partial G

MANPOWER REQUIREMENTS

1. Number of Crew Required 1 Physician (Incl. in 1.1.1.90); 6 Subjects
2. Skill Categories Physician & Subjects
3. Total Man-hours Included in 1.1.1.90
4. Chronological Span 1 yr.
5. Experiment Cycles: Duration Included in 1.1.1.90 ; Number Incl. in 1.1.1.90
6. Potential Hazards High g stress with low g tolerance

DISCUSSION:

TITLE	NASA No. 1.1.1.5
CARDIAC ELECTRICAL ACTIVITY & STATE	Lockheed No. 036

OBJECTIVE

Primary: Crew Health and efficiency maintenance

Secondary: Effect of zero g on EKG

INSTALLATION REQUIREMENTS

1. Normal Operating Environment: Equip. Internal ; Crew Internal
2. Weight of Equipment and Supplies (lb.) 10 (Incl. in 1.1.1.8)
3. Volume of Equipment and Supplies (cu. ft.): Internal 0.5 (Incl. in 1.1.1.8) ; External 0
4. Critical Dimensions (ft.)
5. List of Test Apparatus Waters Electrocardiogram (See 1.1.1.8)
6. Average Power Requirements (kw) 0.010
7. Special Thermal Requirements N/R
8. Orientation: Laboratory N/R ; Equipment N/R
9. Special Navigation Accuracy N/R
10. Stability and Pointing Accuracy N/R
11. Orbit Requirements N/R
12. Gravity Requirements Both 0 and Partial G

MANPOWER REQUIREMENTS

1. Number of Crew Required 1 Physician; 6 Subjects; 1 Medical Tech.
2. Skill Categories Physician, Biomedical Science, Subjects
3. Total Man-hours 910
4. Chronological Span 1 yr.
5. Experiment Cycles: Duration 60 min. for Medical Tech. ; Number 365
6. Potential Hazards None

DISCUSSION:

TITLE	NASA No. 1.1.1.6
VENOUS PRESSURE AND CIRCULATION TIME	Lockheed No. 035

OBJECTIVE

Primary: Crew health and efficiency maintenance

Secondary: Effects of zero g on blood pressure and circulation time. (See Note 2)

INSTALLATION REQUIREMENTS

1. Normal Operating Environment: Equip. Interior ; Crew Interior
2. Weight of Equipment and Supplies (lb.) 0.56
3. Volume of Equipment and Supplies (cu. ft.): Internal 0.04 ; External 0
4. Critical Dimensions (ft.)
5. List of Test Apparatus Pressure gauge & stop watch
6. Average Power Requirements (kw) 0
7. Special Thermal Requirements N/R
8. Orientation: Laboratory N/R ; Equipment N/R
9. Special Navigation Accuracy N/R
10. Stability and Pointing Accuracy N/R
11. Orbit Requirements N/R
12. Gravity Requirements Both 0 and Partial G

MANPOWER REQUIREMENTS

1. Number of Crew Required 1 Observer; 6 Subjects
2. Skill Categories Biomedical Science & Subjects
3. Total Man-hours 109.2
4. Chronological Span 1 yr.
5. Experiment Cycles: Duration 84 min. for Observer ; Number 52
6. Potential Hazards Serum Hepatitis

DISCUSSION:

Note 1: To be conducted at end of blood samples.
Note 2: These might be considered as two experiments.

EXPERIMENT AND APPLICATION SUMMARY

TITLE	NASA No. 1.1.1.7
EXERCISE TEST	Lockheed No. 038

OBJECTIVE

Primary: Crew health and efficiency maintenance

Secondary: Effect of zero g on cardiovascular, pulmonary, and muscle impairment

INSTALLATION REQUIREMENTS

1. Normal Operating Environment: Equip. Interior ; Crew Interior
2. Weight of Equipment and Supplies (lb.) 12 (+10 lbs) (Incl. in 1.1.1.8)
3. Volume of Equipment and Supplies (cu. ft.): Internal 3.3 (+0.5) (Incl. in 1.1.1.8) ; External 0
4. Critical Dimensions (ft.)
5. List of Test Apparatus Oxygen Analyzer, Bicycle Ergometer, Cardiotachometer
6. Average Power Requirements (kw) 0.005
7. Special Thermal Requirements N/R
8. Orientation: Laboratory N/R ; Equipment N/R
9. Special Navigation Accuracy N/R
10. Stability and Pointing Accuracy N/R
11. Orbit Requirements N/R
12. Gravity Requirements Both 0 and Partial G

MANPOWER REQUIREMENTS

1. Number of Crew Required 1 Physician; 6 Subjects
2. Skill Categories Physician & Subjects
3. Total Man-hours 436.8
4. Chronological Span 1 yr.
5. Experiment Cycles: Duration 336 min. ; Number 52
6. Potential Hazards Hypoxia, tendons and muscle asthesia

DISCUSSION:

This is not a valid test because: (1) 180 bpm does not represent maximal work - some subjects will never reach 180; (2) loose ligaments in the knees would cause decreased performance and the cause of the decrease would be erroneously attributed to other factors.

TITLE	NASA No. 1.1.1.8
CARDIAC OUTPUT & HEART MOVEMENT	Lockheed No. 037

OBJECTIVE

Primary: Crew health and efficiency maintenance

Secondary: Effects of zero g on cardiac output and heart movement

INSTALLATION REQUIREMENTS

1. Normal Operating Environment: Equip. Internal ; Crew Internal
2. Weight of Equipment and Supplies (lb.) 30
3. Volume of Equipment and Supplies (cu. ft.): Internal 2.0 ; External 0
4. Critical Dimensions (ft.)
5. List of Test Apparatus Ballistocardiogram, Phonovibiogram and EKG (See Exp. 1.1.1.5 for EKG)
6. Average Power Requirements (kw) 0.010
7. Special Thermal Requirements N/R
8. Orientation: Laboratory N/R ; Equipment N/R
9. Special Navigation Accuracy N/R
10. Stability and Pointing Accuracy N/R
11. Orbit Requirements N/R
12. Gravity Requirements Both 0 and Partial G

MANPOWER REQUIREMENTS

1. Number of Crew Required 1 Physician; 1 Medical Tech.; 6 Subjects
2. Skill Categories Physician, Biomedical Science, Subjects
3. Total Man-hours 166.4
4. Chronological Span 1 yr.
5. Experiment Cycles: Duration 90 min. ; Number 52
6. Potential Hazards None

DISCUSSION:

TITLE	NASA No. 1.1.1.9
BLOOD URINE PATASSIUM & SODIUM	Lockheed No. 042

OBJECTIVE

Primary: Crew health and efficiency maintenance

Secondary: Effect of zero-g on blood and urine chemistry

INSTALLATION REQUIREMENTS

1. Normal Operating Environment: Equip. Int. ; Crew Int.
2. Weight of Equipment and Supplies (lb.) 24 + 8.4 (Incl. in 1.1.1.90, 1.1.1.93)
3. Volume of Equipment and Supplies (cu. ft.): Internal 1.2 + .13 (Incl. in 1.1.1.90, 1.1.1.93) ; External 0
4. Critical Dimensions (ft.)
5. List of Test Apparatus Flame Photometer
6. Average Power Requirements (kw) 0.010
7. Special Thermal Requirements N/R
8. Orientation: Laboratory N/R ; Equipment N/R
9. Special Navigation Accuracy N/R
10. Stability and Pointing Accuracy N/R
11. Orbit Requirements N/R
12. Gravity Requirements Both 0 and Partial G

MANPOWER REQUIREMENTS

1. Number of Crew Required 1 Medical Tech.; 6 Subjects
2. Skill Categories Biomedical Science & Subjects
3. Total Man-hours 114.4
4. Chronological Span 1 yr.
5. Experiment Cycles: Duration 126 min. for Medical Tech. ; Number 52
6. Potential Hazards An open flame photometer is not advisable in a 50% O_2 atmosphere

DISCUSSION:

TITLE	NASA No. 1.1.1.10
MUSCLE FUNCTION	Lockheed No. 041

OBJECTIVE

Primary: Crew health and efficiency maintenance

Secondary: Effect of zero g on muscle strength

INSTALLATION REQUIREMENTS

1. Normal Operating Environment: Equip. Interior ; Crew Interior
2. Weight of Equipment and Supplies (lb.) 11
3. Volume of Equipment and Supplies (cu. ft.): Internal 1.6 ; External 0
4. Critical Dimensions (ft.)
5. List of Test Apparatus Back and leg lift dynamometer, grip dynamometer (Bechtal adjustable hand grip dynamometer)
6. Average Power Requirements (kw) 0
7. Special Thermal Requirements N/R
8. Orientation: Laboratory N/R ; Equipment N/R
9. Special Navigation Accuracy N/R
10. Stability and Pointing Accuracy N/R
11. Orbit Requirements N/R
12. Gravity Requirements Both 0 and Partial G

MANPOWER REQUIREMENTS

1. Number of Crew Required 6
2. Skill Categories Subjects
3. Total Man-hours 436.8
4. Chronological Span 1 yr.
5. Experiment Cycles: Duration 36 min. ; Number 122
6. Potential Hazards Back and knee injury with weakened ligaments

DISCUSSION:

This is not a valid test of muscle function. 90% of muscle function is dynamic and spring resistance tests measure only static strength.

TITLE	NASA No. 1.1.1.11
BLOOD CATECHOLAMINE	Lockheed No. 039

OBJECTIVE

Primary: Crew health and efficiency maintenance

Secondary: Effects of zero g on blood chemistry

INSTALLATION REQUIREMENTS

1. Normal Operating Environment: Equip. Internal ; Crew Internal
2. Weight of Equipment and Supplies (lb.) 24 (Incl. in 1.1.1.93) (See Note on 1.1.1.78)
3. Volume of Equipment and Supplies (cu. ft.): Internal 1.2 ; External 0
4. Critical Dimensions (ft.)
5. List of Test Apparatus Calsul Packets, Calbiometer, Microfuge
6. Average Power Requirements (kw) 0.010
7. Special Thermal Requirements N/R
8. Orientation: Laboratory N/R ; Equipment N/R
9. Special Navigation Accuracy N/R
10. Stability and Pointing Accuracy N/R
11. Orbit Requirements N/R
12. Gravity Requirements Both 0 and Partial G

MANPOWER REQUIREMENTS

1. Number of Crew Required 1 Medical Tech.; 6 Subjects
2. Skill Categories Biomedical Science & Subjects
3. Total Man-hours 46.8
4. Chronological Span 1 yr.
5. Experiment Cycles: Duration 42 min. ; Number 52
6. Potential Hazards Serum Hepatitis

DISCUSSION:

TITLE	NASA No. 1.1.1.12
END EXPRATORY pCO_2 AND pO_2	Lockheed No. 040

OBJECTIVE

Primary: Crew health and efficiency maintenance

Secondary: Effect of zero g on end pCO_2 & pO_2

INSTALLATION REQUIREMENTS

1. Normal Operating Environment: Equip. Interior ; Crew Interior
2. Weight of Equipment and Supplies (lb.) 29
3. Volume of Equipment and Supplies (cu. ft.): Internal 1.9 ; External 0
4. Critical Dimensions (ft.)
5. List of Test Apparatus Mass Spectrometer
6. Average Power Requirements (kw) 0.052
7. Special Thermal Requirements N/R
8. Orientation: Laboratory N/R ; Equipment N/R
9. Special Navigation Accuracy N/R
10. Stability and Pointing Accuracy N/R
11. Orbit Requirements N/R
12. Gravity Requirements Both 0 and Partial G

MANPOWER REQUIREMENTS

1. Number of Crew Required 1 Observer; 6 Subjects
2. Skill Categories Biomedical Science; Subjects
3. Total Man-hours 182
4. Chronological Span 1 yr.
5. Experiment Cycles: Duration 54 min. ; Number 122
6. Potential Hazards None

DISCUSSION:

TITLE	NASA No. 1.1.1.13
VOIDING EVALUATION	Lockheed No. 044

OBJECTIVE

Primary: Crew health and efficiency maintenance

Secondary: Effect of zero g on urine voiding

INSTALLATION REQUIREMENTS

1. Normal Operating Environment: Equip. Internal ; Crew Internal
2. Weight of Equipment and Supplies (lb.) 12 (Incl. in 1.1.1.67)
3. Volume of Equipment and Supplies (cu. ft.): Internal 0.24 (Incl. in 1.1.1.67) ; External 0
4. Critical Dimensions (ft.)
5. List of Test Apparatus A checklist of urine volume, frequency, and complaints will be filled out daily by each crew member.
6. Average Power Requirements (kw) 0
7. Special Thermal Requirements N/R
8. Orientation: Laboratory N/R ; Equipment N/R
9. Special Navigation Accuracy N/R
10. Stability and Pointing Accuracy N/R
11. Orbit Requirements N/R
12. Gravity Requirements Both 0 and Partial G

MANPOWER REQUIREMENTS

1. Number of Crew Required 6
2. Skill Categories Subject
3. Total Man-hours 73
4. Chronological Span 1 yr.
5. Experiment Cycles: Duration 2 min. ; Number 52
6. Potential Hazards None

DISCUSSION:

TITLE	NASA No. 1.1.1.14
KIDNEY AND BLADDER STONE FORMATION	Lockheed No. 043

OBJECTIVE

Primary: Crew health and efficiency maintenance

Secondary: Effects of zero g on kidney and bladder stone formation

INSTALLATION REQUIREMENTS

1. Normal Operating Environment: Equip. Interior ; Crew Interior
2. Weight of Equipment and Supplies (lb.) 53 (Incl. in 1.1.1.1)
3. Volume of Equipment and Supplies (cu. ft.): Internal 1.3 (Incl. in 1.1.1.1) ; External 0
4. Critical Dimensions (ft.)
5. List of Test Apparatus Lightweight, low-power X-ray machine and Polaroid X-ray film (See Exp. 1.1.1.87 and 1.1.1.1)
6. Average Power Requirements (kw) 0.55
7. Special Thermal Requirements N/R
8. Orientation: Laboratory N/R ; Equipment N/R
9. Special Navigation Accuracy N/R
10. Stability and Pointing Accuracy N/R
11. Orbit Requirements N/R
12. Gravity Requirements Both 0 and Partial G

MANPOWER REQUIREMENTS

1. Number of Crew Required 1 Medical Tech.; 1 Physician; 6 Subjects
2. Skill Categories Biomedical Science; Physician; Subjects
3. Total Man-hours 49.4
4. Chronological Span 1 yr.
5. Experiment Cycles: Duration 66 min for Medical Tech. ; Number 26
6. Potential Hazards Excess radiation, chemical contamination

DISCUSSION:

To be conducted at same time as 1.1.1.87 and 1.1.1.1

TITLE	NASA No. 1.1.1.15
RED BLOOD CELL MASS	Lockheed No. 046

OBJECTIVE

Primary: Crew health and efficiency maintenance

Secondary: Effect of zero g on red blood cell mass

INSTALLATION REQUIREMENTS

1. Normal Operating Environment: Equip. Int. ; Crew Int.
2. Weight of Equipment and Supplies (lb.) 274
3. Volume of Equipment and Supplies (cu. ft.): Internal 3 ; External 0
4. Critical Dimensions (ft.)
5. List of Test Apparatus Scintillometer, radioactive isotopes, etc.
6. Average Power Requirements (kw) 0.040
7. Special Thermal Requirements N/R
8. Orientation: Laboratory N/R ; Equipment N/R
9. Special Navigation Accuracy N/R
10. Stability and Pointing Accuracy N/R
11. Orbit Requirements N/R
12. Gravity Requirements Both 0 and Partial G

MANPOWER REQUIREMENTS

1. Number of Crew Required 1 Medical Tech.; 6 Subjects
2. Skill Categories Biomedical Science & Subjects
3. Total Man-hours 41.6
4. Chronological Span 1 yr.
5. Experiment Cycles: Duration 360 min. for Medical Tech. ; Number 6
6. Potential Hazards Excessive radiation

DISCUSSION:

Subject time is only the time for reading the instrument and does not include the time required for absorption. Absorption time is 24 hours.

TITLE

EOSINOPHIL COUNT

NASA No. 1.1.1.16
Lockheed No. 045

OBJECTIVE

Primary: Crew health and efficiency maintenance

Secondary: Effects of zero g on eosinophil count

INSTALLATION REQUIREMENTS

1. Normal Operating Environment: Equip. Interior ; Crew Interior
2. Weight of Equipment and Supplies (lb.) 8.4 + 5.0 + 12.0 (Incl. in 1.1.1.64, 1.1.1.67, 1.1.1.90)
3. Volume of Equipment and Supplies (cu. ft.): Internal .13 + .57 + .24 (Incl. in 1.1.1.64, 1.1.1.67, 1.1.1.90)
4. Critical Dimensions (ft.)
5. List of Test Apparatus Checklist (1.1.1.67), Microsope and Centrifuge (microfuge)
6. Average Power Requirements (kw) 0.010
7. Special Thermal Requirements N/R
8. Orientation: Laboratory N/R ; Equipment N/R
9. Special Navigation Accuracy N/R
10. Stability and Pointing Accuracy N/R
11. Orbit Requirements N/R
12. Gravity Requirements Both 0 and Partial G

MANPOWER REQUIREMENTS

1. Number of Crew Required 1 Medical Tech.; 6 Subjects
2. Skill Categories Biomedical Science & Subjects
3. Total Man-hours 114.4
4. Chronological Span 1 yr.
5. Experiment Cycles: Duration 54 min for ~~Medical Tech.~~ ; Number 122
6. Potential Hazards Infection from puncture

DISCUSSION:

TITLE	NASA No. 1.1.1.17
CAPILLARY FRAGILITY	Lockheed No. 048

OBJECTIVE

Primary Crew health and efficiency maintenance

Secondary: Effect of zero g on capillary fragility

INSTALLATION REQUIREMENTS

1. Normal Operating Environment: Equip. Interior ; Crew Interior
2. Weight of Equipment and Supplies (lb.) .7 +(.1 Incl. in 1.1.1.41)
3. Volume of Equipment and Supplies (cu. ft.): Internal .46 + (0.1 Incl. in 1.1.1.41); External 0
4. Critical Dimensions (ft.)
5. List of Test Apparatus
6. Average Power Requirements (kw) 0
7. Special Thermal Requirements N/R
8. Orientation: Laboratory N/R ; Equipment N/R
9. Special Navigation Accuracy N/R
10. Stability and Pointing Accuracy N/R
11. Orbit Requirements N/R
12. Gravity Requirements Both 0 and Partial G

MANPOWER REQUIREMENTS

1. Number of Crew Required 1 Observer; 6 Subjects
2. Skill Categories Biomedical Science; 6 Subjects
3. Total Man-hours 124.8
4. Chronological Span 1 yr.
5. Experiment Cycles: Duration 72 min. ; Number 52
6. Potential Hazards Unnecessary breaking of blood vessels

DISCUSSION:

The use of a patechrometer is probably a better technique for detecting capillary fragility.

TITLE	NASA No. 1.1.1.18
VISUAL FIELDS EVALUATION	Lockheed No. 047

OBJECTIVE

Primary: Crew health and maintenance of efficiency

Secondary: Effects of zero g on visual field

INSTALLATION REQUIREMENTS

1. Normal Operating Environment: Equip. Interior ; Crew Interior
2. Weight of Equipment and Supplies (lb.) 2.2
3. Volume of Equipment and Supplies (cu. ft.): Internal 1.6 ; External 0
4. Critical Dimensions (ft.)
5. List of Test Apparatus Visual hemispherometer (see 1.1.1.31)
6. Average Power Requirements (kw) 0
7. Special Thermal Requirements N/R
8. Orientation: Laboratory N/R ; Equipment N/R
9. Special Navigation Accuracy N/R
10. Stability and Pointing Accuracy N/R
11. Orbit Requirements N/R
12. Gravity Requirements Both 0 and Partial G

MANPOWER REQUIREMENTS

1. Number of Crew Required 1 Observer; 6 Subjects
2. Skill Categories Biomedical Science & Subjects
3. Total Man-hours 72.8
4. Chronological Span 1 yr.
5. Experiment Cycles: Duration 42 min. ; Number 52
6. Potential Hazards None

DISCUSSION:

Crew members can map for each other, eliminating observer.

TITLE	NASA No. 1.1.1.19
INCISIONAL HEALING AND BLEEDING TIME	Lockheed No. 050

OBJECTIVE

Primary: Crew health

Secondary: Effect of zero g on clotting time

INSTALLATION REQUIREMENTS

1. Normal Operating Environment: Equip. Interior ; Crew Interior
2. Weight of Equipment and Supplies (lb.) 0
3. Volume of Equipment and Supplies (cu. ft.): Internal 0 ; External 0
4. Critical Dimensions (ft.)
5. List of Test Apparatus
6. Average Power Requirements (kw) 0
7. Special Thermal Requirements N/R
8. Orientation: Laboratory N/R ; Equipment N/R
9. Special Navigation Accuracy N/R
10. Stability and Pointing Accuracy N/R
11. Orbit Requirements N/R
12. Gravity Requirements Both 0 and Partial G

MANPOWER REQUIREMENTS

1. Number of Crew Required 1
2. Skill Categories Physician
3. Total Man-hours Insignificant
4. Chronological Span Mission duration
5. Experiment Cycles: Duration Insignificant ; Number -
6. Potential Hazards Excess bleeding

DISCUSSION:

Perform by observation of incisions for other experiments and of accidental injuries.

TITLE	NASA No. 1.1.1.20
RESPIRATORY RATE	Lockheed No. 049

OBJECTIVE

Primary: Crew health and efficiency maintenance

Secondary: Effects of zero g on respiratory rate

INSTALLATION REQUIREMENTS

1. Normal Operating Environment: Equip. Interior ; Crew Interior
2. Weight of Equipment and Supplies (lb.) 0.56
3. Volume of Equipment and Supplies (cu. ft.): Internal 0.002 ; External 0
4. Critical Dimensions (ft.)
5. List of Test Apparatus Pneumotachometer
6. Average Power Requirements (kw) 0.001
7. Special Thermal Requirements N/R
8. Orientation: Laboratory N/R ; Equipment N/R
9. Special Navigation Accuracy N/R
10. Stability and Pointing Accuracy N/R
11. Orbit Requirements N/R
12. Gravity Requirements Both 0 and Partial G

MANPOWER REQUIREMENTS

1. Number of Crew Required 1 Observer; 6 Subjects
2. Skill Categories Biomedical Science & Subjects
3. Total Man-hours 655
4. Chronological Span 1 yr.
5. Experiment Cycles: Duration 36 min. ; Number 730
6. Potential Hazards None

DISCUSSION:

This experiment can be eliminated. Respiratory rate could be taken during the oxygen consumption (resting phase) of experiment 1.1.1.7.

EXPERIMENT AND APPLICATION SUMMARY

TITLE	NASA No. 1.1.1.21
MUCOSAL INTEGRITY EVALUATION	Lockheed No. 052

OBJECTIVE

Primary: Crew health and efficiency maintenance

Secondary: Effect of zero g on mucosal integrity

INSTALLATION REQUIREMENTS

1. Normal Operating Environment: Equip. Interior ; Crew Interior
2. Weight of Equipment and Supplies (lb.) 0
3. Volume of Equipment and Supplies (cu. ft.): Internal 0 ; External 0
4. Critical Dimensions (ft.)
5. List of Test Apparatus Visual inspection
6. Average Power Requirements (kw) 0
7. Special Thermal Requirements N/R
8. Orientation: Laboratory N/R ; Equipment N/R
9. Special Navigation Accuracy N/R
10. Stability and Pointing Accuracy N/R
11. Orbit Requirements N/R
12. Gravity Requirements Both 0 and Partial G

MANPOWER REQUIREMENTS

1. Number of Crew Required 1 Observer; 6 Subjects
2. Skill Categories Biomedical Science & Subjects
3. Total Man-hours 20.8
4. Chronological Span 1 yr.
5. Experiment Cycles: Duration 12 min. ; Number 52
6. Potential Hazards None

DISCUSSION:

TITLE	NASA No. 1.1.1.22
CARDIOPULMONARY SYMPTOMS	Lockheed No. 051

OBJECTIVE

Primary: Crew health and efficiency maintenance

Secondary: Effect of zero-g on incidence of dyspnea

INSTALLATION REQUIREMENTS

1. Normal Operating Environment: Equip. Int. ; Crew Int.
2. Weight of Equipment and Supplies (lb.) 0
3. Volume of Equipment and Supplies (cu. ft.): Internal 0 ; External 0
4. Critical Dimensions (ft.)
5. List of Test Apparatus A checklist to be completed by each subject
6. Average Power Requirements (kw) 0
7. Special Thermal Requirements N/R
8. Orientation: Laboratory N/R ; Equipment N/R
9. Special Navigation Accuracy N/R
10. Stability and Pointing Accuracy N/R
11. Orbit Requirements N/R
12. Gravity Requirements Both 0 and Partial G

MANPOWER REQUIREMENTS

1. Number of Crew Required 6
2. Skill Categories Subject
3. Total Man-hours 36.5
4. Chronological Span 1 yr.
5. Experiment Cycles: Duration 1 min. ; Number 365
6. Potential Hazards None

DISCUSSION:

TITLE	NASA No. 1.1.1.23
SKIN THICKNESS	Lockheed No. 054

OBJECTIVE

Primary: Effect of zero g on subcutaneous fat.

Secondary: Crew health and efficiency maintenance

INSTALLATION REQUIREMENTS

1. Normal Operating Environment: Equip. Interior ; Crew Interior
2. Weight of Equipment and Supplies (lb.) 0.3
3. Volume of Equipment and Supplies (cu. ft.): Internal 0.006 ; External 0
4. Critical Dimensions (ft.)
5. List of Test Apparatus Fat Calipers
6. Average Power Requirements (kw) 0
7. Special Thermal Requirements N/R
8. Orientation: Laboratory N/R ; Equipment N/R
9. Special Navigation Accuracy N/R
10. Stability and Pointing Accuracy N/R
11. Orbit Requirements N/R
12. Gravity Requirements Both 0 and Partial G

MANPOWER REQUIREMENTS

1. Number of Crew Required 1 Observer; 6 Subjects
2. Skill Categories Biomedical Science & Subjects
3. Total Man-hours 20.8
4. Chronological Span 1 yr.
5. Experiment Cycles: Duration 12 min. ; Number 52
6. Potential Hazards None

DISCUSSION:

TITLE	NASA No. 1.1.1.24
VENOUS DISTENSION	Lockheed No. 053

OBJECTIVE

Primary: Crew health and efficiency maintenance

Secondary: Effects of zero-g on peripheral blood flow and venous return

INSTALLATION REQUIREMENTS

1. Normal Operating Environment: Equip. Int. ; Crew Int.
2. Weight of Equipment and Supplies (lb.) 0
3. Volume of Equipment and Supplies (cu. ft.): Internal 0 ; External 0
4. Critical Dimensions (ft.)
5. List of Test Apparatus Visual inspection
6. Average Power Requirements (kw) 0
7. Special Thermal Requirements N/R
8. Orientation: Laboratory N/R ; Equipment N/R
9. Special Navigation Accuracy N/R
10. Stability and Pointing Accuracy N/R
11. Orbit Requirements N/R
12. Gravity Requirements Both 0 and Partial G

MANPOWER REQUIREMENTS

1. Number of Crew Required 1 Observer; 6 Subjects
2. Skill Categories Biomedical Science & Subjects
3. Total Man-hours 218.4
4. Chronological Span 1 yr.
5. Experiment Cycles: Duration 12 min. ; Number 52
6. Potential Hazards None

DISCUSSION:

EXPERIMENT AND APPLICATION SUMMARY

TITLE	NASA No. 1.1.1.25
NAUSEA - REGURGITATION EVALUATION	Lockheed No. 056

OBJECTIVE

Primary: Crew health and efficiency maintenance

Secondary: Effect of zero g on gastric acid placement

INSTALLATION REQUIREMENTS

1. Normal Operating Environment: Equip. Interior ; Crew Interior
2. Weight of Equipment and Supplies (lb.) 0
3. Volume of Equipment and Supplies (cu. ft.): Internal 0 ; External 0
4. Critical Dimensions (ft.)
5. List of Test Apparatus A checklist to be filled in by crew members
6. Average Power Requirements (kw) 0
7. Special Thermal Requirements N/R
8. Orientation: Laboratory N/R ; Equipment N/R
9. Special Navigation Accuracy N/R
10. Stability and Pointing Accuracy N/R
11. Orbit Requirements N/R
12. Gravity Requirements Both 0 and Partial G

MANPOWER REQUIREMENTS

1. Number of Crew Required 6
2. Skill Categories Subjects
3. Total Man-hours 73
4. Chronological Span 1 yr.
5. Experiment Cycles: Duration 2 min. ; Number 365
6. Potential Hazards None

DISCUSSION:

TITLE	NASA No. 1.1.1.26
BLOOD BILIRUBIN	Lockheed No. 055

OBJECTIVE

Primary: Crew health and efficiency maintenance

Secondary: Effects of zero g on blood bilirubin (liver function)

INSTALLATION REQUIREMENTS

1. Normal Operating Environment: Equip. Interior ; Crew Interior
2. Weight of Equipment and Supplies (lb.) 24 + 8.4 (Incl. in 1.1.1.90, 1.1.1.93)
3. Volume of Equipment and Supplies (cu. ft.): Internal 1.2 + 0.13 (Incl. in 1.1.1.90, 1.1.1.93) ; External 0
4. Critical Dimensions (ft.)
5. List of Test Apparatus Beckman Microfuge and Spectro-Colorimeter
6. Average Power Requirements (kw) 0.010
7. Special Thermal Requirements N/R
8. Orientation: Laboratory N/R ; Equipment N/R
9. Special Navigation Accuracy N/R
10. Stability and Pointing Accuracy N/R
11. Orbit Requirements N/R
12. Gravity Requirements Both 0 and Partial G

MANPOWER REQUIREMENTS

1. Number of Crew Required 1 Medical Tech.; 6 Subjects
2. Skill Categories Biomedical Science & Subjects
3. Total Man-hours 67.6
4. Chronological Span 1 yr.
5. Experiment Cycles: Duration 84 min for Medical Tech. ; Number 52
6. Potential Hazards Serum Hepatitis from puncture

DISCUSSION:

EXPERIMENT AND APPLICATION SUMMARY

TITLE	NASA No. 1.1.1.27
BODY TEMPERATURE	Lockheed No. 058

OBJECTIVE

Primary: Crew health and efficiency maintenance

Secondary: Effect of zero g on body regulatory mechanisms

INSTALLATION REQUIREMENTS

1. Normal Operating Environment: Equip. Interior ; Crew Interior
2. Weight of Equipment and Supplies (lb.) 0.009
3. Volume of Equipment and Supplies (cu. ft.): Internal 0.002 ; External 0
4. Critical Dimensions (ft.)
5. List of Test Apparatus Mercury Thermometers
6. Average Power Requirements (kw) 0
7. Special Thermal Requirements N/R
8. Orientation: Laboratory N/R ; Equipment N/R
9. Special Navigation Accuracy N/R
10. Stability and Pointing Accuracy N/R
11. Orbit Requirements N/R
12. Gravity Requirements Both 0 and Partial G

MANPOWER REQUIREMENTS

1. Number of Crew Required 6
2. Skill Categories Subjects
3. Total Man-hours 436.8
4. Chronological Span 1 yr.
5. Experiment Cycles: Duration 3 min. ; Number 1460
6. Potential Hazards Breaking and release of Mercury vapor

DISCUSSION:

Core temperature (rectal) is of more importance than oral or axillary. This, however, need not be taken 4 times daily.

TITLE	NASA No. 1.1.1.28
TUBULAR REABSORPTION TEST	Lockheed No. 057

OBJECTIVE

Primary: Crew health and efficiency maintenance

Secondary: Effect of zero g on urine specific gravity

INSTALLATION REQUIREMENTS

1. Normal Operating Environment: Equip. Interior ; Crew Interior
2. Weight of Equipment and Supplies (lb.) 76
3. Volume of Equipment and Supplies (cu. ft.): Internal 2.2 ; External 0
4. Critical Dimensions (ft.)
5. List of Test Apparatus Freezing point Osmometer
6. Average Power Requirements (kw) 0.150
7. Special Thermal Requirements N/R
8. Orientation: Laboratory N/R ; Equipment N/R
9. Special Navigation Accuracy N/R
10. Stability and Pointing Accuracy N/R
11. Orbit Requirements N/R
12. Gravity Requirements Both 0 and Partial G

MANPOWER REQUIREMENTS

1. Number of Crew Required 1 Observer; 6 Subjects
2. Skill Categories Biomedical Science & Subjects
3. Total Man-hours 10.4
4. Chronological Span 1 yr.
5. Experiment Cycles: Duration 12 min. ; Number 26
6. Potential Hazards Forced urination

DISCUSSION:

TITLE	NASA No. 1.1.1.29
ENERGY REQUIREMENTS	Lockheed No. 060

OBJECTIVE

Primary: Crew health and efficiency maintenance

Secondary: To determine more efficient ECS

INSTALLATION REQUIREMENTS

1. Normal Operating Environment: Equip. Interior ; Crew Interior
2. Weight of Equipment and Supplies (lb.) 0
3. Volume of Equipment and Supplies (cu. ft.): Internal 0 ; External 0
4. Critical Dimensions (ft.) None
5. List of Test Apparatus Notebook and pencil
6. Average Power Requirements (kw) 0
7. Special Thermal Requirements N/R
8. Orientation: Laboratory N/R ; Equipment N/R
9. Special Navigation Accuracy N/R
10. Stability and Pointing Accuracy N/R
11. Orbit Requirements N/R
12. Gravity Requirements Both 0 and Partial G

MANPOWER REQUIREMENTS

1. Number of Crew Required 6
2. Skill Categories Subjects
3. Total Man-hours 182
4. Chronological Span 1 yr.
5. Experiment Cycles: Duration 5 min. ; Number 365
6. Potential Hazards None

DISCUSSION:

TITLE	NASA No. 1.1.1.30
GASTROINTESTINAL TRACT MOTILITY	Lockheed No. 059

OBJECTIVE

Primary: Crew health and efficiency maintenance

Secondary: Effects of zero g on GI tract motility

INSTALLATION REQUIREMENTS

1. Normal Operating Environment: Equip. Interior ; Crew Interior
2. Weight of Equipment and Supplies (lb.) 87 + 21 (Incl. in 1.1.1.93 1.1.1.1)
3. Volume of Equipment and Supplies (cu. ft.): Internal 2.6 + 0.99 (incl. in 1.1.1.93, 1.1.1.1) ; External 0
4. Critical Dimensions (ft.)
5. List of Test Apparatus Lightweight low-power X-ray and Barium Salts
6. Average Power Requirements (kw) 0.55
7. Special Thermal Requirements N/R
8. Orientation: Laboratory N/R ; Equipment N/R
9. Special Navigation Accuracy N/R
10. Stability and Pointing Accuracy N/R
11. Orbit Requirements N/R
12. Gravity Requirements Both 0 and Partial G

MANPOWER REQUIREMENTS

1. Number of Crew Required 1 Physician; 6 Subjects
2. Skill Categories Physician & Subjects
3. Total Man-hours 52
4. Chronological Span 1 yr.
5. Experiment Cycles: Duration 36 min. for Physician ; Number 6
6. Potential Hazards Excess radiation; weight of Barium on weakened GI Tract.

DISCUSSION:

TITLE	NASA No. 1.1.1.31
COLOR VISION EVALUATION	Lockheed No. 062

OBJECTIVE

Primary: Crew efficiency and health maintenance

Secondary: Effects of zero g on color vision

INSTALLATION REQUIREMENTS

1. Normal Operating Environment: Equip. Int. ; Crew Int.
2. Weight of Equipment and Supplies (lb.) 0.5 (Incl. in 1.1.1.45)
3. Volume of Equipment and Supplies (cu. ft.): Internal 0.05 (Incl. in 1.1.1.45) ; External 0
4. Critical Dimensions (ft.)
5. List of Test Apparatus Visual hemispherometer, color vision charts
6. Average Power Requirements (kw) 0
7. Special Thermal Requirements N/R
8. Orientation: Laboratory N/R ; Equipment N/R
9. Special Navigation Accuracy N/R
10. Stability and Pointing Accuracy N/R
11. Orbit Requirements N/R
12. Gravity Requirements Both 0 and Partial G

MANPOWER REQUIREMENTS

1. Number of Crew Required 1 Observer; 6 Subjects
2. Skill Categories Biomedical Science, Subjects
3. Total Man-hours 20.8
4. Chronological Span 1 yr.
5. Experiment Cycles: Duration 12 min. ; Number 52
6. Potential Hazards None

DISCUSSION:

TITLE

URINE 17 KG STEROID

NASA No. 1.1.1.32
Lockheed No. 061

OBJECTIVE

Primary: Crew health and efficiency maintenance

Secondary: Effects of zero g on stress reaction

INSTALLATION REQUIREMENTS

1. Normal Operating Environment: Equip. Int. ; Crew Int.
2. Weight of Equipment and Supplies (lb.) 24 (incl. in 1.1.1.93) See Note on Exp. 1.1.1.78
3. Volume of Equipment and Supplies (cu. ft.): Internal 1.2 (Incl. in 1.1.1.93) ; External 0
4. Critical Dimensions (ft.)
5. List of Test Apparatus Calsul Packets, Calbiometer, Microfuge
6. Average Power Requirements (kw) N/R
7. Special Thermal Requirements N/R
8. Orientation: Laboratory N/R ; Equipment N/R
9. Special Navigation Accuracy N/R
10. Stability and Pointing Accuracy N/R
11. Orbit Requirements N/R
12. Gravity Requirements Both 0 and Partial G

MANPOWER REQUIREMENTS

1. Number of Crew Required 1 Medical Tech.; 6 Subjects
2. Skill Categories Biomedical Science & Subjects
3. Total Man-hours 46.8
4. Chronological Span 1 yr.
5. Experiment Cycles: Duration 42 min. ; Number 52
6. Potential Hazards Rupture of vessels from forced urination

DISCUSSION:

See "discussion" in Exp. 1.1.1.88

TITLE	NASA No. 1.1.1.33
HEART SOUNDS	Lockheed No. 064

OBJECTIVE

Primary: Crew health and efficiency maintenance

Secondary: Effects of zero g on cardiac function.

INSTALLATION REQUIREMENTS

1. Normal Operating Environment: Equip. Int. ; Crew Int.
2. Weight of Equipment and Supplies (lb.) 5
3. Volume of Equipment and Supplies (cu. ft.): Internal 0.2 ; External 0
4. Critical Dimensions (ft.)
5. List of Test Apparatus Phonocardiograph
6. Average Power Requirements (kw) 0.010
7. Special Thermal Requirements N/R
8. Orientation: Laboratory N/R ; Equipment N/R
9. Special Navigation Accuracy N/R
10. Stability and Pointing Accuracy N/R
11. Orbit Requirements N/R
12. Gravity Requirements Both 0 and Partial G

MANPOWER REQUIREMENTS

1. Number of Crew Required 1 Physician; 6 Subjects
2. Skill Categories Physician & Subjects
3. Total Man-hours 31.2
4. Chronological Span 1 yr.
5. Experiment Cycles: Duration 24 min. ; Number 52
6. Potential Hazards Both 0 and Partial G

DISCUSSION:

TITLE

MUSCLE SIZE

NASA No. 1.1.1.34
Lockheed No. 063

OBJECTIVE

Primary: Crew health and maintenance

Secondary: Effect of zero g on muscle girth

INSTALLATION REQUIREMENTS

1. Normal Operating Environment: Equip. Interior ; Crew Interior
2. Weight of Equipment and Supplies (lb.) 0.13
3. Volume of Equipment and Supplies (cu. ft.): Internal 0.002 ; External 0
4. Critical Dimensions (ft.)
5. List of Test Apparatus Flexible steel tape
6. Average Power Requirements (kw) 0
7. Special Thermal Requirements N/R
8. Orientation: Laboratory N/R ; Equipment N/R
9. Special Navigation Accuracy N/R
10. Stability and Pointing Accuracy N/R
11. Orbit Requirements N/R
12. Gravity Requirements Both 0 and Partial G

MANPOWER REQUIREMENTS

1. Number of Crew Required 1 Observer; 6 Subjects
2. Skill Categories Biomedical Science & Subjects
3. Total Man-hours 72.8
4. Chronological Span 1 yr.
5. Experiment Cycles: Duration 42 min. ; Number 52
6. Potential Hazards None

DISCUSSION:

With appropriate preflight training the subjects could take measurements on each other, thus eliminating the observer.

TITLE

UREA AND FECAL NITROGEN

NASA No. 1.1.1.35
Lockheed No. 066

OBJECTIVE

Primary: Crew health and efficiency maintenance
Secondary: Effect of zero g on body chemistry

INSTALLATION REQUIREMENTS

1. Normal Operating Environment: Equip. Interior ; Crew Interior
2. Weight of Equipment and Supplies (lb.) 50
3. Volume of Equipment and Supplies (cu. ft.): Internal 3.4 ; External 0
4. Critical Dimensions (ft.)
5. List of Test Apparatus Microfuge and Spectro-Colorimeter
6. Average Power Requirements (kw) 0.75
7. Special Thermal Requirements N/R
8. Orientation: Laboratory N/R ; Equipment N/R
9. Special Navigation Accuracy N/R
10. Stability and Pointing Accuracy N/R
11. Orbit Requirements N/R
12. Gravity Requirements Both 0 and Partial G

MANPOWER REQUIREMENTS

1. Number of Crew Required 1 Medical Tech.; 6 Subjects
2. Skill Categories Biomedical Science & Subject
3. Total Man-hours 119.6
4. Chronological Span 1 yr.
5. Experiment Cycles: Duration 126 min. ; Number 52
6. Potential Hazards Forced urination may rupture vessels

DISCUSSION:

TITLE	NASA No. 1.1.1.36
REFLEX RESPONSE AND CLONUS EVALUATION	Lockheed No. 065

OBJECTIVE

Primary: Crew health and efficiency maintenance

Secondary: Effect of zero g on tendon reflex

INSTALLATION REQUIREMENTS

1. Normal Operating Environment: Equip. Interior ; Crew Interior
2. Weight of Equipment and Supplies (lb.) 0.5
3. Volume of Equipment and Supplies (cu. ft.): Internal 0.01 ; External 0
4. Critical Dimensions (ft.)
5. List of Test Apparatus Reflex Hammer
6. Average Power Requirements (kw) 0
7. Special Thermal Requirements N/R
8. Orientation: Laboratory N/R ; Equipment N/R
9. Special Navigation Accuracy N/R
10. Stability and Pointing Accuracy N/R
11. Orbit Requirements N/R
12. Gravity Requirements Both 0 and Partial G

MANPOWER REQUIREMENTS

1. Number of Crew Required 1 Physician; 6 Subjects
2. Skill Categories Physician & Subjects
3. Total Man-hours 20.8
4. Chronological Span 1 yr.
5. Experiment Cycles: Duration 12 min. ; Number 52
6. Potential Hazards None

DISCUSSION:

TITLE

BOWEL FUNCTION EVALUATION AND STOOL CHARACTERISTICS

NASA No. 1.1.1.37
Lockheed No. 068

OBJECTIVE

Primary: Crew health and efficiency maintenance
Secondary: Effects of zero g on bowel function etc.

INSTALLATION REQUIREMENTS

1. Normal Operating Environment: Equip. Interior ; Crew Interior
2. Weight of Equipment and Supplies (lb.) 12 (Incl. 1.1.1.67)
3. Volume of Equipment and Supplies (cu. ft.): Internal 0.24 (Incl. in 1.1.1.67) ; External 0
4. Critical Dimensions (ft.)
5. List of Test Apparatus A checklist to be filled out by crew member
6. Average Power Requirements (kw) 0
7. Special Thermal Requirements N/R
8. Orientation: Laboratory N/R ; Equipment N/R
9. Special Navigation Accuracy N/R
10. Stability and Pointing Accuracy N/R
11. Orbit Requirements N/R
12. Gravity Requirements Both 0 and Partial G

MANPOWER REQUIREMENTS

1. Number of Crew Required 6
2. Skill Categories Subject
3. Total Man-hours 109.5
4. Chronological Span 1 yr.
5. Experiment Cycles: Duration 3 min. ; Number 365
6. Potential Hazards None

DISCUSSION:

TITLE VESTIBULAR REACTION

NASA No. 1.1.1.38
Lockheed No. 067

OBJECTIVE

Primary: Crew health and efficiency

Secondary: Effect of zero g on vestibular reaction

INSTALLATION REQUIREMENTS

1. Normal Operating Environment: Equip. Int. ; Crew Int.
2. Weight of Equipment and Supplies (lb.) 0.13
3. Volume of Equipment and Supplies (cu. ft.): Internal 0.009 ; External 0
4. Critical Dimensions (ft.)
5. List of Test Apparatus Thermal vestibular mechanism stimulator
6. Average Power Requirements (kw) 0
7. Special Thermal Requirements N/R
8. Orientation: Laboratory N/R ; Equipment N/R
9. Special Navigation Accuracy N/R
10. Stability and Pointing Accuracy N/R
11. Orbit Requirements N/R
12. Gravity Requirements Both 0 and Partial G

MANPOWER REQUIREMENTS

1. Number of Crew Required 1 Medical Tech.; 6 Subjects
2. Skill Categories Biomedical Science & Subjects
3. Total Man-hours 91
4. Chronological Span 1 yr.
5. Experiment Cycles: Duration 126 min. ; Number 26
6. Potential Hazards

DISCUSSION:

Water cannot be taken out of ear in zero-g; hence, the stimulator is recommended.

EXPERIMENT AND APPLICATION SUMMARY

TITLE	NASA No. 1.1.1.39
CORTICAL ACTIVITY	Lockheed No. 070

OBJECTIVE

Primary: Crew health and efficiency

Secondary: Effect of zero g on alpha, beta, and gama rhythms

INSTALLATION REQUIREMENTS

1. Normal Operating Environment: Equip. Interior ; Crew Interior
2. Weight of Equipment and Supplies (lb.) 0.13 (See Note 2)
3. Volume of Equipment and Supplies (cu. ft.): Internal 0.001 ; External 0
4. Critical Dimensions (ft.)
5. List of Test Apparatus Electroencephalograph
6. Average Power Requirements (kw) 0.00002
7. Special Thermal Requirements N/R
8. Orientation: Laboratory N/R ; Equipment N/R
9. Special Navigation Accuracy N/R
10. Stability and Pointing Accuracy N/R
11. Orbit Requirements N/R
12. Gravity Requirements Both 0 and Partial G

MANPOWER REQUIREMENTS

1. Number of Crew Required 1 Observer; 6 Subjects
2. Skill Categories Biomedical Science & Subject
3. Total Man-hours 109
4. Chronological Span 1 yr.
5. Experiment Cycles: Duration 168 min. Observer; Number 26
6. Potential Hazards Use of needle electrodes in the skull. Plate electrodes have not proven adequate.

DISCUSSION:

NOTE 1: The health hazards make this one of the most dangerous experiments with the least justification for being included.

NOTE 2: The equipment listed is only for the electrodes and does not include the recording unit.

NOTE 3: The observer is not adequate to interpret EEG data; data should be transmitted to ground for analysis.

TITLE	NASA No. 1.1.1.40
EATING HABITS EVALUATION	Lockheed No. 069

OBJECTIVE

Primary: Crew health and efficiency maintenance
Secondary: The effect of zero g on appetite

INSTALLATION REQUIREMENTS

1. Normal Operating Environment: Equip. Interior ; Crew Interior
2. Weight of Equipment and Supplies (lb.) 0
3. Volume of Equipment and Supplies (cu. ft.): Internal 0 ; External 0
4. Critical Dimensions (ft.)
5. List of Test Apparatus A checklist to be filled in by crew
6. Average Power Requirements (kw) 0
7. Special Thermal Requirements N/R
8. Orientation: Laboratory N/R ; Equipment N/R
9. Special Navigation Accuracy N/R
10. Stability and Pointing Accuracy N/R
11. Orbit Requirements N/R
12. Gravity Requirements Both 0 and Partial G

MANPOWER REQUIREMENTS

1. Number of Crew Required 6
2. Skill Categories Subjects
3. Total Man-hours 73
4. Chronological Span 1 yr.
5. Experiment Cycles: Duration 2 min. ; Number 365
6. Potential Hazards None

DISCUSSION:

TITLE	NASA No. 1.1.1.41
PULSE RATE	Lockheed No. 072

OBJECTIVE

Primary: Crew health and efficiency meintenance

Secondary: Effect of zero g on cardiovascular efficiency

INSTALLATION REQUIREMENTS

1. Normal Operating Environment: Equip. Interior ; Crew Interior
2. Weight of Equipment and Supplies (lb.) 0.13 (Incl. in 1.1.1.10)
3. Volume of Equipment and Supplies (cu. ft.): Internal 0.0001 (Incl. in 1.1.1.10) ; External 0
4. Critical Dimensions (ft.)
5. List of Test Apparatus Stop Watch
6. Average Power Requirements (kw) 0
7. Special Thermal Requirements N/R
8. Orientation: Laboratory N/R ; Equipment N/R
9. Special Navigation Accuracy N/R
10. Stability and Pointing Accuracy N/R
11. Orbit Requirements N/R
12. Gravity Requirements Both 0 and Partial G

MANPOWER REQUIREMENTS

1. Number of Crew Required 1 Observer; 6 Subjects
2. Skill Categories Biomedical Science & Subjects
3. Total Man-hours 145.6
4. Chronological Span 1 yr.
5. Experiment Cycles: Duration 6 min. ; Number 730
6. Potential Hazards None

DISCUSSION:

Subjects can take each other's pulse rate, thus eliminating the observer.

TITLE	NASA No. 1.1.1.42
AUTONOMIC HYPERACTIVITY	Lockheed No. 071

OBJECTIVE

Primary: Crew health and efficiency maintenance

Secondary: Effect of zero g on autonomic hyperactivity

INSTALLATION REQUIREMENTS

1. Normal Operating Environment: Equip. Interior ; Crew Interior
2. Weight of Equipment and Supplies (lb.) 0
3. Volume of Equipment and Supplies (cu. ft.): Internal 0 ; External 0
4. Critical Dimensions (ft.)
5. List of Test Apparatus
6. Average Power Requirements (kw) 0
7. Special Thermal Requirements N/R
8. Orientation: Laboratory N/R ; Equipment N/R
9. Special Navigation Accuracy N/R
10. Stability and Pointing Accuracy N/R
11. Orbit Requirements N/R
12. Gravity Requirements Both 0 and Partial G

MANPOWER REQUIREMENTS

1. Number of Crew Required 6
2. Skill Categories Subject
3. Total Man-hours 73
4. Chronological Span 1 yr.
5. Experiment Cycles: Duration 2 min. ; Number 365
6. Potential Hazards None

DISCUSSION:

Note: "Nausea" covered in 1.1.1.25, "Appetite" in 1.1.1.40.

TITLE	NASA No. 1.1.1.43
STATE OF AROUSAL	Lockheed No. 074

OBJECTIVE

Primary: Crew health and efficiency maintenance

Secondary: Effect of zero g on arousal status

INSTALLATION REQUIREMENTS

1. Normal Operating Environment: Equip. Interior ; Crew Interior
2. Weight of Equipment and Supplies (lb.) 0
3. Volume of Equipment and Supplies (cu. ft.): Internal 0 ; External 0
4. Critical Dimensions (ft.)
5. List of Test Apparatus A checklist to be completed by subjects
6. Average Power Requirements (kw) 0
7. Special Thermal Requirements N/R
8. Orientation: Laboratory N/R ; Equipment N/R
9. Special Navigation Accuracy N/R
10. Stability and Pointing Accuracy N/R
11. Orbit Requirements N/R
12. Gravity Requirements Both 0 and Partial G

MANPOWER REQUIREMENTS

1. Number of Crew Required 6
2. Skill Categories Subjects
3. Total Man-hours 109.5
4. Chronological Span 1 yr.
5. Experiment Cycles: Duration 3 min. ; Number 365
6. Potential Hazards None

DISCUSSION:

TITLE	NASA No. 1.1.1.44
BLOOD AND URINE SUGAR	Lockheed No. 073

OBJECTIVE

Primary: Crew health and efficiency maintenance

Secondary: Effect of zero g on blood and urine sugar

INSTALLATION REQUIREMENTS

1. Normal Operating Environment: Equip. Interior ; Crew Interior
2. Weight of Equipment and Supplies (lb.) 24 + 8.4 (Incl. in 1.1.1.90, 1.1.1.93) (See note on 1.1.1.78)
3. Volume of Equipment and Supplies (cu. ft.): Internal 1.2 + 0.13 (Incl. in 1.1.1.90, 1.1.1.93); External 0
4. Critical Dimensions (ft.)
5. List of Test Apparatus Calsul packets, calbiometer, microfuge
6. Average Power Requirements (kw) 0.010
7. Special Thermal Requirements N/R
8. Orientation: Laboratory N/R ; Equipment N/R
9. Special Navigation Accuracy N/R
10. Stability and Pointing Accuracy N/R
11. Orbit Requirements N/R
12. Gravity Requirements Both 0 and Partial G

MANPOWER REQUIREMENTS

1. Number of Crew Required 1 Medical Tech.; 6 Subjects
2. Skill Categories Biomedical Science & Subjects
3. Total Man-hours 41.6
4. Chronological Span 1 yr.
5. Experiment Cycles: Duration 42 min. for Medical Tech. ; Number 52
6. Potential Hazards Serum Hepatitis & ruptured vessels by forced urination

DISCUSSION:

TITLE

VISUAL ACUITY, DEPTH PERCEPTION AND ACCOMMODATION

NASA No. 1.1.1.45
Lockheed No. 076

OBJECTIVE

Primary: Crew efficiency and health maintenance

Secondary: Effects of zero g on above variables

INSTALLATION REQUIREMENTS

1. Normal Operating Environment: Equip. Int. ; Crew Int.
2. Weight of Equipment and Supplies (lb.) 45
3. Volume of Equipment and Supplies (cu. ft.): Internal 3.8 ; External 0
4. Critical Dimensions (ft.)
5. List of Test Apparatus Modified ortho-rater
6. Average Power Requirements (kw) 0.225
7. Special Thermal Requirements N/R
8. Orientation: Laboratory N/R ; Equipment N/R
9. Special Navigation Accuracy N/R
10. Stability and Pointing Accuracy N/R
11. Orbit Requirements N/R
12. Gravity Requirements Both 0 and Partial G

MANPOWER REQUIREMENTS

1. Number of Crew Required 1 Observer; 6 Subjects
2. Skill Categories Biomedical Science & Subjects
3. Total Man-hours 72.8
4. Chronological Span 1 yr.
5. Experiment Cycles: Duration 42 min. for Observer ; Number 52
6. Potential Hazards None

DISCUSSION:

EXPERIMENT AND APPLICATION SUMMARY

TITLE	NASA No. 1.1.1.46
CEREBRAL BLOOD FLOW	Lockheed No. 075

OBJECTIVE

Primary: Crew health and efficiency maintenance

Secondary: Effect of zero g on cerebral flow

INSTALLATION REQUIREMENTS

1. Normal Operating Environment: Equip. Interior ; Crew Interior
2. Weight of Equipment and Supplies (lb.) 6
3. Volume of Equipment and Supplies (cu. ft.): Internal 0.74 ; External 0
4. Critical Dimensions (ft.)
5. List of Test Apparatus Impedance Galvanic Skin Resistance Meter
6. Average Power Requirements (kw) 0.050
7. Special Thermal Requirements N/R
8. Orientation: Laboratory N/R ; Equipment N/R
9. Special Navigation Accuracy N/R
10. Stability and Pointing Accuracy N/R
11. Orbit Requirements N/R
12. Gravity Requirements Both 0 and Partial G

MANPOWER REQUIREMENTS

1. Number of Crew Required 1 Observer; 6 Subjects
2. Skill Categories Biomedical Science & Subjects
3. Total Man-hours 218
4. Chronological Span 1 yr.
5. Experiment Cycles: Duration 168 min. for Observer ; Number 52
6. Potential Hazards Use of needle electrodes

DISCUSSION:

Note: Plate electrodes are not effective and needle electrodes need a skilled Bioinstrumentation man for their placement.

TITLE	NASA No. 1.1.1.47
URINE BILIRUBIN	Lockheed No. 078

OBJECTIVE

Primary: Crew health and efficiency maintenance

Secondary: Effect of zero g on body chemistry

INSTALLATION REQUIREMENTS

1. Normal Operating Environment: Equip. Interior ; Crew Interior
2. Weight of Equipment and Supplies (lb.) 24 + 8.4 (Incl. in 1.1.1.90, 1.1.1.93)
3. Volume of Equipment and Supplies (cu. ft.): Internal 1.2 + 0.13 (Incl. in 1.1.1.90, 1.1.1.93); External 0
4. Critical Dimensions (ft.)
5. List of Test Apparatus Beckman Microfuge and Sepctro-Calorimeter
6. Average Power Requirements (kw) 0.010
7. Special Thermal Requirements N/R
8. Orientation: Laboratory N/R ; Equipment N/R
9. Special Navigation Accuracy N/R
10. Stability and Pointing Accuracy N/R
11. Orbit Requirements N/R
12. Gravity Requirements Both 0 and Partial G

MANPOWER REQUIREMENTS

1. Number of Crew Required 1 Medical Tech.; 6 Subjects
2. Skill Categories Biomedical Science & Subjects
3. Total Man-hours 57
4. Chronological Span 1 yr.
5. Experiment Cycles: Duration 60 min. for Medical Tech. ; Number 52
6. Potential Hazards Forced urination may rupture vessels

DISCUSSION:

TITLE	NASA No. 1.1.1.48
G I ABSORPTION TEST	Lockheed No. 077

OBJECTIVE

Primary: Crew health and efficiency maintenance

Secondary: Effect of zero g on carbohydrate uptake

INSTALLATION REQUIREMENTS

1. Normal Operating Environment: Equip. Interior ; Crew Interior
2. Weight of Equipment and Supplies (lb.) 24 (Incl. in 1.1.1.93)
3. Volume of Equipment and Supplies (cu. ft.): Internal 1.2 (Incl. in 1.1.1.93) ; External 0
4. Critical Dimensions (ft.)
5. List of Test Apparatus Beckman Microfuge and Spectro-Calorimeter
6. Average Power Requirements (kw) 0.010
7. Special Thermal Requirements N/R
8. Orientation: Laboratory N/R ; Equipment N/R
9. Special Navigation Accuracy N/R
10. Stability and Pointing Accuracy N/R
11. Orbit Requirements N/R
12. Gravity Requirements Both 0 and Partial G

MANPOWER REQUIREMENTS

1. Number of Crew Required 1 Medical Tech.; 6 Subjects
2. Skill Categories Biomedical Science & Subjects
3. Total Man-hours 146
4. Chronological Span 1 yr.
5. Experiment Cycles: Duration 252 min. for Medical Tech. ; Number 26
6. Potential Hazards Forced urination - chemical toxins

DISCUSSION:

TITLE	NASA No. 1.1.1.49
URINE AND FECAL OCCULT HEMORRHAGE	Lockheed No. 080

OBJECTIVE

Primary: Crew health and efficiency maintenance

Secondary: Effect of zero g on occult hemorrhage

INSTALLATION REQUIREMENTS

1. Normal Operating Environment: Equip. Interior ; Crew Interior
2. Weight of Equipment and Supplies (lb.) 0.1
3. Volume of Equipment and Supplies (cu. ft.): Internal 0.02 ; External 0
4. Critical Dimensions (ft.)
5. List of Test Apparatus Impregnated paper test
6. Average Power Requirements (kw) 0
7. Special Thermal Requirements N/R
8. Orientation: Laboratory N/R ; Equipment N/R
9. Special Navigation Accuracy N/R
10. Stability and Pointing Accuracy N/R
11. Orbit Requirements N/R
12. Gravity Requirements Both 0 and Partial G

MANPOWER REQUIREMENTS

1. Number of Crew Required 6
2. Skill Categories Subjects
3. Total Man-hours 2.6
4. Chronological Span 1 yr.
5. Experiment Cycles: Duration 0.5 min. ; Number 52
6. Potential Hazards None

DISCUSSION:

EXPERIMENT AND APPLICATION SUMMARY

TITLE	NASA No. 1.1.1.50
CAPILLARY MORPHOLOGY	Lockheed No. 079

OBJECTIVE

Primary: Crew health and efficiency maintenance

Secondary: Effect of zero g on capillaries

INSTALLATION REQUIREMENTS

1. Normal Operating Environment: Equip. Interior ; Crew Interior
2. Weight of Equipment and Supplies (lb.) 5 (Incl. in 1.1.1.64)
3. Volume of Equipment and Supplies (cu. ft.): Internal 0.57 (Incl. in 1.1.1.64) ; External 0
4. Critical Dimensions (ft.)
5. List of Test Apparatus Microscope, Microtome, etc.
6. Average Power Requirements (kw) 0.010
7. Special Thermal Requirements N/R
8. Orientation: Laboratory N/R ; Equipment N/R
9. Special Navigation Accuracy N/R
10. Stability and Pointing Accuracy N/R
11. Orbit Requirements N/R
12. Gravity Requirements Both 0 and Partial G

MANPOWER REQUIREMENTS

1. Number of Crew Required 1 Medical Tech.; 6 Subjects
2. Skill Categories Biomedical Science & Subjects
3. Total Man-hours 10.4
4. Chronological Span 1 yr.
5. Experiment Cycles: Duration 30 min. for Medical Tech. ; Number 12
6. Potential Hazards Sectioning of skin

DISCUSSION:

TITLE	NASA No. 1.1.1.51
PROTEIN ASSIMILATION TEST	Lockheed No. 082

OBJECTIVE

Primary: Crew health and efficiency maintenance

Secondary: Effect of zero g on protein assimilation

INSTALLATION REQUIREMENTS

1. Normal Operating Environment: Equip. Interior ; Crew Interior
2. Weight of Equipment and Supplies (lb.) 24 (Incl. in 1.1.1.93)
3. Volume of Equipment and Supplies (cu. ft.): Internal 1.2 (Incl. in 1.1.1.93) ; External 0
4. Critical Dimensions (ft.)
5. List of Test Apparatus Beckman microfuge and spectro-calorimeter
6. Average Power Requirements (kw) 0.010
7. Special Thermal Requirements N/R
8. Orientation: Laboratory N/R ; Equipment N/R
9. Special Navigation Accuracy N/R
10. Stability and Pointing Accuracy N/R
11. Orbit Requirements N/R
12. Gravity Requirements Both 0 and Partial G

MANPOWER REQUIREMENTS

1. Number of Crew Required 1 Medical Tech., 6 Subjects
2. Skill Categories Biomedical Science & Subject
3. Total Man-hours 119
4. Chronological Span 1 yr.
5. Experiment Cycles: Duration 126 min. ; Number 52
6. Potential Hazards Forced urination

DISCUSSION:

TITLE

BLOOD AND URINE CHLORIDE

NASA No. 1.1.1.52
Lockheed No. 081

OBJECTIVE

Primary: Crew health and efficiency maintenance

Secondary: Effects of zero g on body chemistry

INSTALLATION REQUIREMENTS

1. Normal Operating Environment: Equip. Interior ; Crew Interior
2. Weight of Equipment and Supplies (lb.)
3. Volume of Equipment and Supplies (cu. ft.): Internal ; External
4. Critical Dimensions (ft.)
5. List of Test Apparatus Beckman Ultramicro Analytical System
6. Average Power Requirements (kw)
7. Special Thermal Requirements N/R
8. Orientation: Laboratory N/R ; Equipment N/R
9. Special Navigation Accuracy N/R
10. Stability and Pointing Accuracy N/R
11. Orbit Requirements N/R
12. Gravity Requirements Both 0 and Partial G

MANPOWER REQUIREMENTS

1. Number of Crew Required 1 Medical Tech., 6 Subjects
2. Skill Categories Biomedical Science & Subjects
3. Total Man-hours 67.6
4. Chronological Span 1 yr.
5. Experiment Cycles: Duration 60 min. ; Number 52
6. Potential Hazards None

DISCUSSION:

TITLE

BLOOD 17 KG STEROID

NASA No. 1.1.1.53
Lockheed No. 084

OBJECTIVE

Primary: Crew health and efficiency maintenance

Secondary: Effects of zero g on stress reaction

INSTALLATION REQUIREMENTS

1. Normal Operating Environment: Equip. Interior ; Crew Interior
2. Weight of Equipment and Supplies (lb.) 24 (Incl. in 1.1.1.93 (See Note on 1.1.1.78)
3. Volume of Equipment and Supplies (cu. ft.): Internal 1.2 (Incl. in 1.1.1.93) ; External 0
4. Critical Dimensions (ft.)
5. List of Test Apparatus Calsul packets, Calbiometer, Microfuge
6. Average Power Requirements (kw) 0.010
7. Special Thermal Requirements N/R
8. Orientation: Laboratory N/R ; Equipment N/R
9. Special Navigation Accuracy N/R
10. Stability and Pointing Accuracy N/R
11. Orbit Requirements N/R
12. Gravity Requirements Both 0 and Partial G

MANPOWER REQUIREMENTS

1. Number of Crew Required 1 Medical Tech., 6 Subjects
2. Skill Categories Biomedical Science & Subjects
3. Total Man-hours 46.8
4. Chronological Span 1 yr.
5. Experiment Cycles: Duration 42 min. for Medical Tech. ; Number 52
6. Potential Hazards Serum Hepatitis

DISCUSSION:

See Note on 1.1.1.88.

TITLE	NASA No. 1.1.1.54
PROTHROMBIN TIME	Lockheed No. 083

OBJECTIVE

Primary: Crew health and efficiency maintenance

Secondary: Effect of zero g on clotting time

INSTALLATION REQUIREMENTS

1. Normal Operating Environment: Equip. Interior ; Crew Interior
2. Weight of Equipment and Supplies (lb.) 21 + 8.4 + 12 (Incl. in 1.1.1.67, 1.1.1.90, 1.1.1.93)
3. Volume of Equipment and Supplies (cu. ft.): Internal .99 + .13 + .24 ; External (Incl. in 1.1.1.67, 1.1.1.90, 1.1.1.93)
4. Critical Dimensions (ft.)
5. List of Test Apparatus Blass Capillary Tubes, Microfuge, checklist
6. Average Power Requirements (kw) 0.10
7. Special Thermal Requirements N/R
8. Orientation: Laboratory N/R ; Equipment N/R
9. Special Navigation Accuracy N/R
10. Stability and Pointing Accuracy N/R
11. Orbit Requirements N/R
12. Gravity Requirements Both 0 and Partial G

MANPOWER REQUIREMENTS

1. Number of Crew Required 1 Medical Tech., 6 Subjects
2. Skill Categories Biomedical Science & Subjects
3. Total Man-hours 57.2
4. Chronological Span 1 yr.
5. Experiment Cycles: Duration 60 min. for subjects ; Number 1 per week
6. Potential Hazards Serum Hepatitis + broken glass

DISCUSSION:

Note: The equipment called out in the description of the experiment requires some power; appropriate changes have been made to the NASA description.

TITLE	NASA No. 1.1.1.55
BLOOD, SALIVARY & URINE DELAYED ANALYSIS	Lockheed No. 086

OBJECTIVE

Primary: Crew health and efficiency

Secondary: Effect of zero g on life processes

INSTALLATION REQUIREMENTS

1. Normal Operating Environment: Equip. Interior ; Crew Interior
2. Weight of Equipment and Supplies (lb.) 15
3. Volume of Equipment and Supplies (cu. ft.): Internal 1 ; External 0
4. Critical Dimensions (ft.)
5. List of Test Apparatus See Note 1
6. Average Power Requirements (kw) 0
7. Special Thermal Requirements Freezer (-40°C)
8. Orientation: Laboratory N/R ; Equipment N/R
9. Special Navigation Accuracy N/R
10. Stability and Pointing Accuracy N/R
11. Orbit Requirements N/R
12. Gravity Requirements Both 0 and Partial G

MANPOWER REQUIREMENTS

1. Number of Crew Required 1 Medical Tech., 6 Subjects
2. Skill Categories Biomedical Science & Subjects
3. Total Man-hours Time incl. in other blood and urine experiments.
4. Chronological Span 1 yr.
5. Experiment Cycles: Duration - ; Number -
6. Potential Hazards None

DISCUSSION:

Note 1: Catecholamine requires a test too complex to be performed on board, according to this experiment. However, experiment 1.1.1.11 calls for a CALSUL determination of blood catecholamines.

Note 2: This does not consider the power required for freezing samples.

TITLE	NASA No. 1.1.1.56
RESPIRATORY VOLUME	Lockheed No. 085

OBJECTIVE

Primary: Crew health and efficiency maintenance

Secondary: Effect of zero g on respiratory volume

INSTALLATION REQUIREMENTS

1. Normal Operating Environment: Equip. Interior ; Crew Interior
2. Weight of Equipment and Supplies (lb.) 133
3. Volume of Equipment and Supplies (cu. ft.): Internal 7.7 ; External 0
4. Critical Dimensions (ft.)
5. List of Test Apparatus Spirometer
6. Average Power Requirements (kw) 0.320
7. Special Thermal Requirements N/R
8. Orientation: Laboratory N/R ; Equipment N/R
9. Special Navigation Accuracy N/R
10. Stability and Pointing Accuracy N/R
11. Orbit Requirements N/R
12. Gravity Requirements Both 0 and Partial G

MANPOWER REQUIREMENTS

1. Number of Crew Required 1 Physician, 6 Subjects
2. Skill Categories Physician, Subjects
3. Total Man-hours 182
4. Chronological Span 1 yr.
5. Experiment Cycles: Duration 168 min. for Physician ; Number 52
6. Potential Hazards None

DISCUSSION:

EXPERIMENT AND APPLICATION SUMMARY

TITLE	NASA No. 1.1.1.57
BROMSULPHALEIN (BSP)	Lockheed No. 088

OBJECTIVE

Primary: Crew health and efficiency maintenance

Secondary: Effects of zero g on BSP uptake

INSTALLATION REQUIREMENTS

1. Normal Operating Environment: Equip. Interior ; Crew Interior
2. Weight of Equipment and Supplies (lb.) 3.2 + 8.4 (Incl. 1.1.1.90, 1.1.1.93)
3. Volume of Equipment and Supplies (cu. ft.): Internal .25 + .13 (Incl. in 1.1.1.90, 1.1.1.93) ; External 0
4. Critical Dimensions (ft.)
5. List of Test Apparatus microcentrifuge, normal blood testing apparatus
6. Average Power Requirements (kw) 0.010
7. Special Thermal Requirements N/R
8. Orientation: Laboratory N/R ; Equipment N/R
9. Special Navigation Accuracy
10. Stability and Pointing Accuracy N/R
11. Orbit Requirements N/R
12. Gravity Requirements Both 0 and Partial G

MANPOWER REQUIREMENTS

1. Number of Crew Required 1 Medical Tech., 6 Subjects
2. Skill Categories Biomedical Science & Subjects
3. Total Man-hours 78 (See Note 2)
4. Chronological Span 1 yr
5. Experiment Cycles: Duration 84 min. for Medical Tech. ; Number 52
6. Potential Hazards Serum Hepatitis

DISCUSSION:

Note 1: Fluid dosage based on subjects body weight is difficult to determine in zero or partial g.

Note 2: 45 minutes is required between injection and determination. The 1 minute each per subject is only for injection.

EXPERIMENT AND APPLICATION SUMMARY

TITLE	NASA No. 1.1.1.58
INCIDENCE OF AEROTITIS MEDIA	Lockheed No. 087

OBJECTIVE

Primary: Crew health and efficiency maintenance

Secondary: Effects of zero g on secretions of the eustachian tube.

INSTALLATION REQUIREMENTS

1. Normal Operating Environment: Equip. Interior ; Crew Interior
2. Weight of Equipment and Supplies (lb.) 2.2 (Incl. in 1.1.1.79)
3. Volume of Equipment and Supplies (cu. ft.): Internal 0.08 (Incl. in 1.1.1.79) ; External 0
4. Critical Dimensions (ft.)
5. List of Test Apparatus Otoscope
6. Average Power Requirements (kw) 0.010
7. Special Thermal Requirements N/R
8. Orientation: Laboratory N/R ; Equipment N/R
9. Special Navigation Accuracy N/R
10. Stability and Pointing Accuracy N/R
11. Orbit Requirements
12. Gravity Requirements Both 0 and Partial G

MANPOWER REQUIREMENTS

1. Number of Crew Required 1 Physician, 6 Subjects
2. Skill Categories Physician & Subjects
3. Total Man-hours 72.8
4. Chronological Span 1 yr
5. Experiment Cycles: Duration 42 min. for Physician ; Number 52
6. Potential Hazards None

DISCUSSION:

TITLE

EXPIRATORY-INSPIRATORY FORCE

NASA No. 1.1.1.59
Lockheed No. 090

OBJECTIVE

Primary: Health and efficiency maintenance

Secondary: Effect of zero g on breathing force

INSTALLATION REQUIREMENTS

1. Normal Operating Environment: Equip. Interior ; Crew Interior
2. Weight of Equipment and Supplies (lb.) 1.1
3. Volume of Equipment and Supplies (cu. ft.): Internal 0.02 ; External 0
4. Critical Dimensions (ft.)
5. List of Test Apparatus Aneroid pressure gage connected to standard mouthpiece
6. Average Power Requirements (kw) 0
7. Special Thermal Requirements N/R
8. Orientation: Laboratory N/R ; Equipment N/R
9. Special Navigation Accuracy N/R
10. Stability and Pointing Accuracy N/R
11. Orbit Requirements N/R
12. Gravity Requirements Both 0 and Partial G

MANPOWER REQUIREMENTS

1. Number of Crew Required 1 Observer & 6 Subjects
2. Skill Categories Biomedical Science & Subjects
3. Total Man-hours 52
4. Chronological Span 1 yr
5. Experiment Cycles: Duration 42 min. for Observer ; Number 52
6. Potential Hazards Inhalation must not take place near toxic contaminants.

DISCUSSION:

Note: If pressure gauge does not drop back to zero but stays at highest pressure, the subject may read gauge himself, thus eliminating observer.

TITLE

BLOOD PLASMA PROTEIN FRACTIONATION

NASA No. 1.1.1.60
Lockheed No. 089

OBJECTIVE

Primary: Crew health and efficiency maintenance

Secondary: Effects of zero g on overall health

INSTALLATION REQUIREMENTS

1. Normal Operating Environment: Equip. Interior ; Crew Interior
2. Weight of Equipment and Supplies (lb.) 24 + 8.4 (Incl. in 1.1.1.90, 1.1.1.93)
3. Volume of Equipment and Supplies (cu. ft.): Internal 1.2 + .13 (Incl. in 1.1.1.90, 1.1.1.93) ; External 0
4. Critical Dimensions (ft.)
5. List of Test Apparatus Paper electrophoresis (Note: Disc electrophoresis might be more effective)
6. Average Power Requirements (kw) 0.010
7. Special Thermal Requirements N/R
8. Orientation: Laboratory N/R ; Equipment N/R
9. Special Navigation Accuracy N/R
10. Stability and Pointing Accuracy N/R
11. Orbit Requirements N/R
12. Gravity Requirements Both 0 and Partial G

MANPOWER REQUIREMENTS

1. Number of Crew Required 1 Medical Tech., 6 Subjects
2. Skill Categories Biomedical Science & Subjects
3. Total Man-hours 127
4. Chronological Span 1 yr
5. Experiment Cycles: Duration 21 min. for Medical Tech. ; Number 365
6. Potential Hazards Serum Hepatitis

DISCUSSION:

TITLE	NASA No. 1.1.1.61
GLOMERULAR FILTRATION TEST	Lockheed No. 092

OBJECTIVE

Primary: Crew health and efficiency maintenance

Secondary: Effect of zero g on kidney function

INSTALLATION REQUIREMENTS

1. Normal Operating Environment: Equip. Interior ; Crew Interior
2. Weight of Equipment and Supplies (lb.) 24 (Incl. in 1.1.1.93)(See Note on Exp. 1.1.1.78)
3. Volume of Equipment and Supplies (cu. ft.): Internal 1.2 (Incl. in 1.1.1.93) ; External 0
4. Critical Dimensions (ft.)
5. List of Test Apparatus Calsul packets, calbiometer
6. Average Power Requirements (kw) 0.010
7. Special Thermal Requirements N/R
8. Orientation: Laboratory N/R ; Equipment N/R
9. Special Navigation Accuracy N/R
10. Stability and Pointing Accuracy N/R
11. Orbit Requirements N/R
12. Gravity Requirements Both 0 and Partial G

MANPOWER REQUIREMENTS

1. Number of Crew Required 1 Medical Tech., 6 Subjects
2. Skill Categories Biomedical Science & Subjects
3. Total Man-hours 348
4. Chronological Span 1 yr
5. Experiment Cycles: Duration 84 min. for Medical Tech. ; Number 26
6. Potential Hazards Serum Hepatitis

DISCUSSION:

Subjects are required to provide urine and venous blood over a two hour period.

TITLE	NASA No. 1.1.1.62
BLOOD ALKALINE PHOSPHATE	Lockheed No. 091

OBJECTIVE

Primary: Crew health and efficiency maintenance

Secondary: Effects of zero g on blood chemistry (enzyme activity)

INSTALLATION REQUIREMENTS

1. Normal Operating Environment: Equip. Interior ; Crew Interior
2. Weight of Equipment and Supplies (lb.) 24 + 8.4 (Incl. in 1.1.1.90, 1.1.1.93) (See Note on 1.1.1.78)
3. Volume of Equipment and Supplies (cu. ft.): Internal 1.2 + 0.13 (Incl. in 1.1.1.90, 1.1.1.93) ; External 0
4. Critical Dimensions (ft.)
5. List of Test Apparatus Calsul packets, calbiometer, microfuge
6. Average Power Requirements (kw) 0.010
7. Special Thermal Requirements N/R
8. Orientation: Laboratory N/R ; Equipment N/R
9. Special Navigation Accuracy N/R
10. Stability and Pointing Accuracy N/R
11. Orbit Requirements N/R
12. Gravity Requirements Both 0 and Partial G

MANPOWER REQUIREMENTS

1. Number of Crew Required 1 Medical Tech., 6 Subjects
2. Skill Categories Biomedical Science & Subjects
3. Total Man-hours 41.6
4. Chronological Span 1 yr
5. Experiment Cycles: Duration 42 min. for Medical Tech. ; Number 52
6. Potential Hazards Serum Hepatitis

DISCUSSION:

TITLE	NASA No. 1.1.1.63
TUBULAR EXCRETION TEST	Lockheed No. 093

OBJECTIVE

Primary: Crew health and efficiency maintenance .

Secondary: Effect of zero g on BSP uptake

INSTALLATION REQUIREMENTS

1. Normal Operating Environment: Equip. Interior ; Crew Interior
2. Weight of Equipment and Supplies (lb.) 24 + 8.4 (Incl. in 1.1.1.90, 1.1.1.93)
3. Volume of Equipment and Supplies (cu. ft.): Internal 1.2 + .13 (Inc. in 1.1.1.90, 1.1.1.93) ; External 0
4. Critical Dimensions (ft.)
5. List of Test Apparatus Microfuge and Spectro Calorimeter
6. Average Power Requirements (kw) 0.010
7. Special Thermal Requirements N/R
8. Orientation: Laboratory N/R ; Equipment N/R
9. Special Navigation Accuracy N/R
10. Stability and Pointing Accuracy N/R
11. Orbit Requirements N/R
12. Gravity Requirements Both 0 and Partial G

MANPOWER REQUIREMENTS

1. Number of Crew Required 1 Medical Tech., 6 Subjects
2. Skill Categories Biomedical Science & Subjects
3. Total Man-hours 174.2
4. Chronological Span 1 yr
5. Experiment Cycles: Duration 42 min. for Medical Tech. ; Number 1 per 14 days
6. Potential Hazards Dehydration of subjects for just one test

DISCUSSION:

The NASA subject time does not include 60 minutes between injection and measurement.

TITLE

COMPLETE BLOOD CELL COUNT

NASA No. 1.1.1.64
Lockheed No. 001

OBJECTIVE

Primary: Crew health and efficiency maintenance

Secondary: Effects of zero g on white blood cell, red blood cell, and reticulocyte count

INSTALLATION REQUIREMENTS

1. Normal Operating Environment: Equip. Interior ; Crew Interior
2. Weight of Equipment and Supplies (lb.) 5.6
3. Volume of Equipment and Supplies (cu. ft.): Internal 0.91 ; External 0
4. Critical Dimensions (ft.)
5. List of Test Apparatus Sanborn Model 75 Cell Counter and Model 74 Hemo-Diluter
6. Average Power Requirements (kw) 0.025
7. Special Thermal Requirements N/R
8. Orientation: Laboratory N/R ; Equipment N/R
9. Special Navigation Accuracy N/R
10. Stability and Pointing Accuracy N/R
11. Orbit Requirements N/R
12. Gravity Requirements Both 0 and Partial G

MANPOWER REQUIREMENTS

1. Number of Crew Required 6 Subjects, 1 Physician
2. Skill Categories Physician
3. Total Man-hours 400
4. Chronological Span 1 yr
5. Experiment Cycles: Duration 3 hrs. for Physician ; Number 122
6. Potential Hazards Serum Hepatitis

DISCUSSION:

TITLE	NASA No. 1.1.1.65
OXYGEN UPTAKE AND CARBON DIOXIDE PRODUCTION	Lockheed No. 002

OBJECTIVE

Primary: Crew health and efficiency maintenance

Secondary: Effect of zero g on energy expenditure and Respiratory Quotient (RQ)

INSTALLATION REQUIREMENTS

1. Normal Operating Environment: Equip. Interior ; Crew Interior
2. Weight of Equipment and Supplies (lb.) 133 (Incl. in Exp. 1.1.1.56)
3. Volume of Equipment and Supplies (cu. ft.): Internal 7.7 (Incl. in Exp. 1.1.1.56) ; External 0
4. Critical Dimensions (ft.)
5. List of Test Apparatus Beckman Polarigraphic O_2 and CO_2 analyzers plus a recording system.
6. Average Power Requirements (kw) 0.320
7. Special Thermal Requirements N/R
8. Orientation: Laboratory N/R ; Equipment N/R
9. Special Navigation Accuracy N/R
10. Stability and Pointing Accuracy N/R
11. Orbit Requirements N/R
12. Gravity Requirements Both 0 and Partial G

MANPOWER REQUIREMENTS

1. Number of Crew Required 1 Medical Tech., 6 Subjects
2. Skill Categories Biomedical Science & Subjects
3. Total Man-hours 15.6
4. Chronological Span 1 yr
5. Experiment Cycles: Duration 12 min. for Med. Tech. ; Number 52
6. Potential Hazards None

DISCUSSION:

Apparatus should be calibrated against known gas samples quite regularly.

This experiment could be combined with Experiment 1.1.1.7. One minute is not long enough for adequate determination of R.Q.

TITLE	NASA No. 1.1.1.66
BLOOD PRESSURE	Lockheed No. 003

OBJECTIVE

Primary: Crew health and efficiency maintenence

Secondary: Effect of zero g on circulatory system

INSTALLATION REQUIREMENTS

1. Normal Operating Environment: Equip. Interior ; Crew Interior
2. Weight of Equipment and Supplies (lb.) 1.4
3. Volume of Equipment and Supplies (cu. ft.): Internal 0.08 ; External 0
4. Critical Dimensions (ft.)
5. List of Test Apparatus Sphygmomanometer
6. Average Power Requirements (kw) 0
7. Special Thermal Requirements N/R
8. Orientation: Laboratory N/R ; Equipment N/R
9. Special Navigation Accuracy N/R
10. Stability and Pointing Accuracy N/R
11. Orbit Requirements N/R
12. Gravity Requirements Both 0 and Partial G

MANPOWER REQUIREMENTS

1. Number of Crew Required 1 observer, 6 subjects
2. Skill Categories Biomedical Science & Subjects
3. Total Man-hours 437
4. Chronological Span 1 yr
5. Experiment Cycles: Duration 24 min. for observer ; Number 730
6. Potential Hazards None

DISCUSSION:

With appropriate training (as required for observer), subjects can take each other's blood pressure, thus eliminating observer.

TITLE	NASA No. 1.1.1.67
FLUID INTAKE AND OUTPUR EVALUATION	Lockheed No. 004

OBJECTIVE

Primary: Health Maintenance - to determine abnormal fluid balance

Secondary: To determine the effect of zero g on fluid balance and water retention.

INSTALLATION REQUIREMENTS

1. Normal Operating Environment: Equip. Interior ; Crew Interior
2. Weight of Equipment and Supplies (lb.) 12
3. Volume of Equipment and Supplies (cu. ft.): Internal 0.24 ; External 0
4. Critical Dimensions (ft.)
5. List of Test Apparatus Checklist
6. Average Power Requirements (kw) 0
7. Special Thermal Requirements N/R
8. Orientation: Laboratory None ; Equipment None
9. Special Navigation Accuracy None
10. Stability and Pointing Accuracy N/R
11. Orbit Requirements N/R
12. Gravity Requirements Both 0 and Partial G

MANPOWER REQUIREMENTS

1. Number of Crew Required 6
2. Skill Categories Subject
3. Total Man-hours 99.5
4. Chronological Span 1 yr
5. Experiment Cycles: Duration 3 min. ; Number 6570
6. Potential Hazards None

DISCUSSION:

TITLE

BLOOD OSMOLARITY

NASA No. 1.1.1.68
Lockheed No. 005

OBJECTIVE

Primary: Crew health and efficiency maintenance

Secondary: Effects of zero g on blood osmolarity

INSTALLATION REQUIREMENTS

1. Normal Operating Environment: Equip. Interior ; Crew Interior
2. Weight of Equipment and Supplies (lb.) 8.4 + 21 + 48 (Incl. in 1.1.1.90, 1.1.1.93, 1.1.1.28)
3. Volume of Equipment and Supplies (cu. ft.): Internal .13 + .99 + 1.4 (Incl. in 1.1.1.90, 1.1.1.93, 1.1.1.28) ; External 0
4. Critical Dimensions (ft.)
5. List of Test Apparatus Osmometer & Flame Photometer (See Discussion)
6. Average Power Requirements (kw) 0.150
7. Special Thermal Requirements N/R
8. Orientation: Laboratory N/R ; Equipment N/R
9. Special Navigation Accuracy N/R
10. Stability and Pointing Accuracy N/R
11. Orbit Requirements N/R
12. Gravity Requirements Both 0 and Partial G

MANPOWER REQUIREMENTS

1. Number of Crew Required 6 Subjects (Incl. in Exp. 1.1.1.84) 1 Medical Tech.
2. Skill Categories Biomedical Science & Subjects
3. Total Man-hours 135.2
4. Chronological Span 1 yr.
5. Experiment Cycles: Duration 126 min. for Medical Tech. ; Number 52
6. Potential Hazards

DISCUSSION:

It is not advisable to use an open flame photometer in a 7 psia, 50% O_2 atmosphere; a closed flame photometer is indicated

TITLE	NASA No. 1.1.1.69
RBC UPTAKE OF I_{125}	Lockheed No. 006

OBJECTIVE

Primary: Crew health and efficiency maintenance

Secondary: Effects of zero g on red blood cell function and thyroid activity

INSTALLATION REQUIREMENTS

1. Normal Operating Environment: Equip. Interior ; Crew Interior
2. Weight of Equipment and Supplies (lb.) 8.4 + 274 (Incl. in 1.1.1.90, 1.1.1.15)
3. Volume of Equipment and Supplies (cu. ft.): Internal 0.13 + 3.0 (Incl. in 1.1.1.90, 1.1.1.15) ; External 0
4. Critical Dimensions (ft.)
5. List of Test Apparatus Scintillometer and safe for radioactive materials
6. Average Power Requirements (kw) 0.040
7. Special Thermal Requirements N/R
8. Orientation: Laboratory N/R ; Equipment N/R
9. Special Navigation Accuracy N/R
10. Stability and Pointing Accuracy N/R
11. Orbit Requirements N/R
12. Gravity Requirements Both 0 and Partial G

MANPOWER REQUIREMENTS

1. Number of Crew Required 1 Medical Tech., 6 Subjects
2. Skill Categories Biomedical Science & Subject
3. Total Man-hours 46.8
4. Chronological Span 1 yr
5. Experiment Cycles: Duration 126 min. for Medical Tech. ; Number 17
6. Potential Hazards Storage and use of radioactive materials

DISCUSSION:

24 hours are required between ingestion and recording of results. A safe to hold a year's supply of radioactive isotopes would require considerable shielding and care in handling.

TITLE	NASA No. 1.1.1.70
O_2 UPTAKE BY RED BLOOD CELLS	Lockheed No. 007

OBJECTIVE

Primary: Crew health and efficiency maintenance

Secondary: Effects of zero g on blood pO_2

INSTALLATION REQUIREMENTS

1. Normal Operating Environment: Equip. Interior ; Crew Interior
2. Weight of Equipment and Supplies (lb.) 14 + (8.4 Incl. in 1.1.1.90)
3. Volume of Equipment and Supplies (cu. ft.): Internal 0.86 + (0.13 Incl. in 1.1.1.90) ; External 0
4. Critical Dimensions (ft.)
5. List of Test Apparatus Radiometer Gas Monitor System
6. Average Power Requirements (kw) 0.140
7. Special Thermal Requirements N/R
8. Orientation: Laboratory N/R ; Equipment N/R
9. Special Navigation Accuracy N/R
10. Stability and Pointing Accuracy N/R
11. Orbit Requirements N/R
12. Gravity Requirements Both 0 and Partial G

MANPOWER REQUIREMENTS

1. Number of Crew Required 1 Medical Tech., 6 Subjects incl. in Exp. 1.1.1.84
2. Skill Categories Biomedical Science & Subject
3. Total Man-hours 62.4
4. Chronological Span 1 yr
5. Experiment Cycles: Duration 42 min. for Medical Tech. ; Number 52
6. Potential Hazards Serum Hepatitis

DISCUSSION:

TITLE	NASA No. 1.1.1.71
BLOOD-UREA NITROGEN	Lockheed No. 008

OBJECTIVE

Primary: Crew health and efficiency maintenance

Secondary: Effects of zero g on nitrogen formation

INSTALLATION REQUIREMENTS

1. Normal Operating Environment: Equip. Interior ; Crew Interior
2. Weight of Equipment and Supplies (lb.) 24 + 8.4 (Inc. in Exp 1.1.1.90, 1.1.1.93)
3. Volume of Equipment and Supplies (cu. ft.): Internal 1.2 + 0.13 (Inc. in 1.1.1.90, 1.1.1.93) ; External 0
4. Critical Dimensions (ft.)
5. List of Test Apparatus Calsul determination & calbiometer (See Exp. 1.1.1.93); also a small centrifuge
6. Average Power Requirements (kw) 0.010
7. Special Thermal Requirements N/R
8. Orientation: Laboratory N/R ; Equipment N/R
9. Special Navigation Accuracy N/R
10. Stability and Pointing Accuracy N/R
11. Orbit Requirements N/R
12. Gravity Requirements Both 0 and Partial G

MANPOWER REQUIREMENTS

1. Number of Crew Required 1 Medical Tech., 6 Subjects
2. Skill Categories Biomedical Science & Subjects
3. Total Man-hours 98.8
4. Chronological Span 1 yr
5. Experiment Cycles: Duration 36 min. for Medical Tech. ; Number 122
6. Potential Hazards Infection (Serum Hepatitis) from needle

DISCUSSION:

Note 1: The literature on the CALSUL method does not list blood-urea nitrogen as being analyzable by their method. A better method is the BECKMAN ultramicro analytical system.

Note 2: There are no figures listed in "Centrifuge Test" similar to those for weight and volume needed in this experiment. Suggest a microfuge as listed by Beckman.

TITLE

VISUAL ILLUSION EVALUATION

NASA No. 1.1.1.72
Lockheed No. 009

OBJECTIVE

Primary: Crew health and efficiency maintenance

Secondary: Effect of space environment on visual illusions

INSTALLATION REQUIREMENTS

1. Normal Operating Environment: Equip. Interior ; Crew Interior
2. Weight of Equipment and Supplies (lb.) 1.2
3. Volume of Equipment and Supplies (cu. ft.): Internal 0.02 ; External 0
4. Critical Dimensions (ft.)
5. List of Test Apparatus Muller-Lyer and Vertical-Horizontal Illustion test
6. Average Power Requirements (kw) 0
7. Special Thermal Requirements N/R
8. Orientation: Laboratory N/R ; Equipment N/R
9. Special Navigation Accuracy N/R
10. Stability and Pointing Accuracy N/R
11. Orbit Requirements N/R
12. Gravity Requirements Both 0 and Partial G

MANPOWER REQUIREMENTS

1. Number of Crew Required 1
2. Skill Categories Subject
3. Total Man-hours 6
4. Chronological Span 1 yr
5. Experiment Cycles: Duration 1 min. ; Number 365
6. Potential Hazards None

DISCUSSION:

Someone other than the subject should record the results and analyze the data

TITLE	NASA No. 1.1.1.73
HEARING	Lockheed No. 010

OBJECTIVE

Primary: Crew health and efficiency maintenance

Secondary: Effects of space environment on hearing

INSTALLATION REQUIREMENTS

1. Normal Operating Environment: Equip. Interior ; Crew Interior
2. Weight of Equipment and Supplies (lb.) 3.4
3. Volume of Equipment and Supplies (cu. ft.): Internal 0.11 ; External 0
4. Critical Dimensions (ft.)
5. List of Test Apparatus Audiometer
6. Average Power Requirements (kw) 0.010
7. Special Thermal Requirements N/R
8. Orientation: Laboratory N/R ; Equipment N/R
9. Special Navigation Accuracy N/R
10. Stability and Pointing Accuracy N/R
11. Orbit Requirements N/R
12. Gravity Requirements Both 0 and Partial G

MANPOWER REQUIREMENTS

1. Number of Crew Required 1 observer, 6 subjects
2. Skill Categories Biomedical Science & Subjects
3. Total Man-hours 62.4
4. Chronological Span 1 yr
5. Experiment Cycles: Duration 42 min. for observer ; Number 52
6. Potential Hazards None

DISCUSSION:

TITLE	NASA No. 1.1.1.74
JOINT MOTION RANGE	Lockheed No. 011

OBJECTIVE

Primary: Crew health maintenance

Secondary: Effect of zero and partial g on ligament strength

INSTALLATION REQUIREMENTS

1. Normal Operating Environment: Equip. Interior ; Crew Interior
2. Weight of Equipment and Supplies (lb.) 2.2
3. Volume of Equipment and Supplies (cu. ft.): Internal 1.6 ; External 0
4. Critical Dimensions (ft.) 2 arms, 1/4" x 36"
5. List of Test Apparatus Electro goniometer and conventional medical kit of physician
6. Average Power Requirements (kw) 0.001
7. Special Thermal Requirements None
8. Orientation: Laboratory None ; Equipment N/R
9. Special Navigation Accuracy None
10. Stability and Pointing Accuracy N/R
11. Orbit Requirements N/R
12. Gravity Requirements Both 0 and Partial G

MANPOWER REQUIREMENTS

1. Number of Crew Required 1 observer, 6 subjects
2. Skill Categories Physician
3. Total Man-hours 72.8
4. Chronological Span 1 yr
5. Experiment Cycles: Duration 42 min. ; Number 52
6. Potential Hazards None

DISCUSSION:

A standard (non-electric) goniometer would be adequate. Weight is 1/2 lb.

TITLE

URINARY ALBUMIN

NASA No. 1.1.1.75
Lockheed No. 012

OBJECTIVE

Primary: Crew health and efficiency maintenance

Secondary: Effect of zero g on urinary albumin formation

INSTALLATION REQUIREMENTS

1. Normal Operating Environment: Equip. Interior ; Crew Interior
2. Weight of Equipment and Supplies (lb.) 24 (Incl. in 1.1.1.93)
3. Volume of Equipment and Supplies (cu. ft.): Internal 1.2 (incl. in 1.1.1.93) ; External 0
4. Critical Dimensions (ft.)
5. List of Test Apparatus Beckman Spectrocolorimeter, microfuge and closed flame photometer
6. Average Power Requirements (kw) 0.010
7. Special Thermal Requirements N/R
8. Orientation: Laboratory N/R ; Equipment N/R
9. Special Navigation Accuracy N/R
10. Stability and Pointing Accuracy N/R
11. Orbit Requirements N/R
12. Gravity Requirements Both 0 and Partial G

MANPOWER REQUIREMENTS

1. Number of Crew Required 1 Medical Tech., 6 Subjects
2. Skill Categories Biomedical Science & Subjects
3. Total Man-hours 46.8
4. Chronological Span 1 yr
5. Experiment Cycles: Duration 42 min. for Medical Tech. ; Number 52
6. Potential Hazards Forced urination in zero g may rupture vessels

DISCUSSION:

None of the various CALSUL tests mention its use for urinary albumin.

TITLE

BACTERIA SMEARS AND CULTURES

NASA No. 1.1.1.76
Lockheed No. 013

OBJECTIVE

Primary: Crew health and efficiency maintenance

Secondary: Effect of zero g on bacterial growth

INSTALLATION REQUIREMENTS

1. Normal Operating Environment: Equip. Interior ; Crew Interior
2. Weight of Equipment and Supplies (lb.) 5
3. Volume of Equipment and Supplies (cu. ft.): Internal 6 ; External 0
4. Critical Dimensions (ft.)
5. List of Test Apparatus Microscope, slides, stains, etc.
6. Average Power Requirements (kw) 0.050
7. Special Thermal Requirements N/R
8. Orientation: Laboratory N/R ; Equipment N/R
9. Special Navigation Accuracy N/R
10. Stability and Pointing Accuracy N/R
11. Orbit Requirements N/R
12. Gravity Requirements Both 0 and Partial G

MANPOWER REQUIREMENTS

1. Number of Crew Required 1 Medical Tech., 3 Subjects
2. Skill Categories Biomedical Science & Subjects
3. Total Man-hours 325 (5 yrs)
4. Chronological Span Mission duration
5. Experiment Cycles: Duration 1 hr. per Medical Tech. ; Number 260 (5 yrs.)
6. Potential Hazards None

DISCUSSION:

TITLE	NASA No. 1.1.1.77
RED BLOOD CELL SURVIVAL	Lockheed No. 014

OBJECTIVE

Primary: Crew health and efficiency maintenance

Secondary: Effect of space environment on red blood cell survival

INSTALLATION REQUIREMENTS

1. Normal Operating Environment: Equip. Interior ; Crew Interior
2. Weight of Equipment and Supplies (lb.) 8.4 + 274.0 (Incl. in 1.1.1.90, 1.1.1.15)
3. Volume of Equipment and Supplies (cu. ft.): Internal 0.13 + 3.0 (Incl. in 1.1.1.90, 1.1.1.15) ; External 0
4. Critical Dimensions (ft.)
5. List of Test Apparatus Scintillometer, safe for storage of radioactive isotopes (See note on Experiment 1.1.1.69)
6. Average Power Requirements (kw) 0.040
7. Special Thermal Requirements N/R
8. Orientation: Laboratory N/R ; Equipment N/R
9. Special Navigation Accuracy N/R
10. Stability and Pointing Accuracy N/R
11. Orbit Requirements N/R
12. Gravity Requirements Both 0 and Partial G

MANPOWER REQUIREMENTS

1. Number of Crew Required 1 Medical Tech., 6 Subjects
2. Skill Categories Biomedical Science & Subjects
3. Total Man-hours 72
4. Chronological Span 1 yr
5. Experiment Cycles: Duration 360 min. for Medical Tech. ; Number 6
6. Potential Hazards Handling and storage of radioactive materials

DISCUSSION:

It is appropriate for ingestion only once per 60 days, but the tracing should be done at least once a week and preferably more often.

This experiment might be combined with 1.1.1.69.

EXPERIMENT AND APPLICATION SUMMARY

TITLE	NASA No. 1.1.1.78
BLOOD ATP	Lockheed No. 015

OBJECTIVE

Primary: Crew health and efficiency maintenance

Secondary: Effect of zero g on blood chemistry

INSTALLATION REQUIREMENTS

1. Normal Operating Environment: Equip. Interior ; Crew Interior
2. Weight of Equipment and Supplies (lb.) 24 + 8.4 (Incl. in 1.1.1.90, 1.1.1.93)
3. Volume of Equipment and Supplies (cu. ft.): Internal 1.2 + 0.13 (Incl. in 1.1.1.90, 1.1.1.93) ; External 0
4. Critical Dimensions (ft.)
5. List of Test Apparatus Calsul packets, Calbiometer, and Microfuge
6. Average Power Requirements (kw) 0.010
7. Special Thermal Requirements N/R
8. Orientation: Laboratory N/R ; Equipment N/R
9. Special Navigation Accuracy N/R
10. Stability and Pointing Accuracy N/R
11. Orbit Requirements N/R
12. Gravity Requirements Both 0 and Partial G

MANPOWER REQUIREMENTS

1. Number of Crew Required 1 Medical Tech., 6 Subjects
2. Skill Categories Biomedical Science & Subjects
3. Total Man-hours 41.6
4. Chronological Span 1 yr
5. Experiment Cycles: Duration 42 min. for Mecidal Tech. ; Number 52
6. Potential Hazards Serum Hepatitis

DISCUSSION:

TITLE	NASA No. 1.1.1.79
RETINAL EXAMINATION	Lockheed No. 016

OBJECTIVE

Primary: Crew health and efficiency maintenance

Secondary: Effect of space cabin environment on retina

INSTALLATION REQUIREMENTS

1. Normal Operating Environment: Equip. Interior ; Crew Interior
2. Weight of Equipment and Supplies (lb.) 2.2
3. Volume of Equipment and Supplies (cu. ft.): Internal 0.08 ; External 0
4. Critical Dimensions (ft.)
5. List of Test Apparatus Opthamalascope
6. Average Power Requirements (kw) 0.010
7. Special Thermal Requirements N/R
8. Orientation: Laboratory N/R ; Equipment N/R
9. Special Navigation Accuracy N/R
10. Stability and Pointing Accuracy N/R
11. Orbit Requirements N/R
12. Gravity Requirements Both 0 and Partial G

MANPOWER REQUIREMENTS

1. Number of Crew Required 6 Subjects, 1 Physician
2. Skill Categories Physician & Subjects
3. Total Man-hours 72.8
4. Chronological Span 1 yr
5. Experiment Cycles: Duration 6 min. ; Number 365
6. Potential Hazards None

DISCUSSION:

TITLE

URINE CATECHOLAMINE

NASA No. 1.1.1.80
Lockheed No. 017

OBJECTIVE

Primary: Crew health and efficiency

Secondary: Effect of zero g on catecholamines

INSTALLATION REQUIREMENTS

1. Normal Operating Environment: Equip. Internal ; Crew Internal
2. Weight of Equipment and Supplies (lb.) 24 (Incl. in 1.1.1.93)
3. Volume of Equipment and Supplies (cu. ft.): Internal 1.2 (Incl. in 1.1.1.93) ; External 0
4. Critical Dimensions (ft.)
5. List of Test Apparatus Calsul packets, calbiometer, microfuge (See Discussion 1.1.1.78)
6. Average Power Requirements (kw) 0.010
7. Special Thermal Requirements N/R
8. Orientation: Laboratory N/R ; Equipment N/R
9. Special Navigation Accuracy N/R
10. Stability and Pointing Accuracy N/R
11. Orbit Requirements N/R
12. Gravity Requirements Both 0 and Partial G

MANPOWER REQUIREMENTS

1. Number of Crew Required 1 Medical Tech., 6 Subjects
2. Skill Categories Biomedical Science & Subjects
3. Total Man-hours 41.6
4. Chronological Span 1 yr
5. Experiment Cycles: Duration 42 min. ; Number 52
6. Potential Hazards Forced urination in zero g may rupture vessels

DISCUSSION:

TITLE	NASA No. 1.1.1.81
PULSE WAVE VELOCITY	Lockheed No. 018

OBJECTIVE

Primary: Crew health and efficiency maintenance

Secondary: Effect of zero g on pulse wave velocity

INSTALLATION REQUIREMENTS

1. Normal Operating Environment: Equip. Interior ; Crew Interior
2. Weight of Equipment and Supplies (lb.) 2.5
3. Volume of Equipment and Supplies (cu. ft.): Internal 0.3 ; External 0
4. Critical Dimensions (ft.)
5. List of Test Apparatus Pressure transducers and chronoscope
6. Average Power Requirements (kw) 0.010
7. Special Thermal Requirements N/R
8. Orientation: Laboratory N/R ; Equipment N/R
9. Special Navigation Accuracy N/R
10. Stability and Pointing Accuracy N/R
11. Orbit Requirements N/R
12. Gravity Requirements Both 0 and Partial G

MANPOWER REQUIREMENTS

1. Number of Crew Required 1 observer, 6 subjects
2. Skill Categories Biomedical Science & Subjects
3. Total Man-hours 109.2
4. Chronological Span 1 yr
5. Experiment Cycles: Duration 84 min. for observer ; Number 52
6. Potential Hazards None

DISCUSSION:

TITLE	NASA No. 1.1.1.82
LIVER SIZE	Lockheed No. 019

OBJECTIVE

Primary: Crew health and efficiency maintenance

Secondary: Effect of zero g on liver size

INSTALLATION REQUIREMENTS

1. Normal Operating Environment: Equip. Internal ; Crew Internal
2. Weight of Equipment and Supplies (lb.) 0
3. Volume of Equipment and Supplies (cu. ft.): Internal 0 ; External 0
4. Critical Dimensions (ft.)
5. List of Test Apparatus None
6. Average Power Requirements (kw) 0
7. Special Thermal Requirements N/R
8. Orientation: Laboratory N/R ; Equipment N/R
9. Special Navigation Accuracy N/R
10. Stability and Pointing Accuracy N/R
11. Orbit Requirements N/R
12. Gravity Requirements Both 0 and Partial G

MANPOWER REQUIREMENTS

1. Number of Crew Required 1 Physician, 6 crew members
2. Skill Categories Physician & Subjects
3. Total Man-hours 72.8
4. Chronological Span 1 yr
5. Experiment Cycles: Duration 6 min. ; Number 365
6. Potential Hazards None

DISCUSSION:

TITLE	NASA No. 1.1.1.83
GAS FORMATION AND PASSAGE	Lockheed No. 020

OBJECTIVE

Primary: Health maintenance

Secondary: Effect of zero g on gas formation and crepitation

INSTALLATION REQUIREMENTS

1. Normal Operating Environment: Equip. Interior ; Crew Interior
2. Weight of Equipment and Supplies (lb.) 0
3. Volume of Equipment and Supplies (cu. ft.): Internal 0 ; External 0
4. Critical Dimensions (ft.)
5. List of Test Apparatus Checklist
6. Average Power Requirements (kw) 0
7. Special Thermal Requirements N/R
8. Orientation: Laboratory N/R ; Equipment N/R
9. Special Navigation Accuracy N/R
10. Stability and Pointing Accuracy N/R
11. Orbit Requirements N/R
12. Gravity Requirements Both 0 and Partial G

MANPOWER REQUIREMENTS

1. Number of Crew Required 6
2. Skill Categories Subject
3. Total Man-hours 18.2
4. Chronological Span 1 yr
5. Experiment Cycles: Duration 0.5 min. ; Number 365
6. Potential Hazards None

DISCUSSION:

TITLE

VENOUS pCO_2, pO_2, pH

NASA No. 1.1.1.84
Lockheed No. C21

OBJECTIVE

Primary: Crew health and efficiency maintenance

Secondary: Effect of zero g on blood gas exchange

INSTALLATION REQUIREMENTS

1. Normal Operating Environment: Equip. Interior ; Crew Interior
2. Weight of Equipment and Supplies (lb.) 22
3. Volume of Equipment and Supplies (cu. ft.): Internal 0.99 ; External 0
4. Critical Dimensions (ft.)
5. List of Test Apparatus Radiometer Gas Monitor System
6. Average Power Requirements (kw) 0.040
7. Special Thermal Requirements N/R
8. Orientation: Laboratory N /R ; Equipment N/R
9. Special Navigation Accuracy N/R
10. Stability and Pointing Accuracy N/R
11. Orbit Requirements N/R
12. Gravity Requirements Both 0 and Partial G

MANPOWER REQUIREMENTS

1. Number of Crew Required 1 Medical Tech., 6 Subjects
2. Skill Categories Biomedical Science & Subjects
3. Total Man-hours 145.6
4. Chronological Span 1 yr
5. Experiment Cycles: Duration 126 min. for Medical Tech. ; Number 52
6. Potential Hazards Serum Hepatitis

DISCUSSION:

TITLE	NASA No. 1.1.1.85
MUSCLE ACTIVITY AND STATE	Lockheed No. 022

OBJECTIVE

Primary: Crew health and efficiency maintenance

Secondary: Effect of zero g on muscle aesthenia, tonus, and EMG activity.

INSTALLATION REQUIREMENTS

1. Normal Operating Environment: Equip. Internal ; Crew Internal
2. Weight of Equipment and Supplies (lb.) 0.13
3. Volume of Equipment and Supplies (cu. ft.): Internal 0.001 ; External 0
4. Critical Dimensions (ft.)
5. List of Test Apparatus
6. Average Power Requirements (kw) 0
7. Special Thermal Requirements N/R
8. Orientation: Laboratory N/R ; Equipment N/R
9. Special Navigation Accuracy N/R
10. Stability and Pointing Accuracy N/R
11. Orbit Requirements N/R
12. Gravity Requirements

MANPOWER REQUIREMENTS

1. Number of Crew Required 1 Observer, 6 Subjects
2. Skill Categories Biomedical Science & Subjects
3. Total Man-hours 109.0
4. Chronological Span 1 yr.
5. Experiment Cycles: Duration 168 min. for observer ; Number 26
6. Potential Hazards Serum Hepatitis with needle electrodes. Breaking off or tearing muscle fibres with needles, etc.

DISCUSSION:

Subjects can record each other, eliminating observer.

TITLE

GENERAL PHYSICAL EXAMINATION

NASA No. 1.1.1.86
Lockheed No. 023

OBJECTIVE

Primary: Crew health and efficiency maintenance

Secondary:

INSTALLATION REQUIREMENTS

1. Normal Operating Environment: Equip. Interior ; Crew Interior
2. Weight of Equipment and Supplies (lb.) Included in other experiments
3. Volume of Equipment and Supplies (cu. ft.): Internal Included in other experiments ; External 0
4. Critical Dimensions (ft.)
5. List of Test Apparatus Standard physician's kit included in other experiments
6. Average Power Requirements (kw) incl. in other exp.
7. Special Thermal Requirements N/R
8. Orientation: Laboratory N/R ; Equipment N/R
9. Special Navigation Accuracy N/R
10. Stability and Pointing Accuracy N/R
11. Orbit Requirements N/R
12. Gravity Requirements N/R

MANPOWER REQUIREMENTS

1. Number of Crew Required 1 Physician, 24 Subjects*
2. Skill Categories Physician & Subjects
3. Total Man-hours 1840 (5 yrs.)
4. Chronological Span Mission Duration
5. Experiment Cycles: Duration 7 hrs. ; Number 60 (5 yrs.)
6. Potential Hazards None

DISCUSSION:

These tests are performed on the physician and all crew members.

* Number of subjects will be limited to crew size.

TITLE	NASA No. 1.1.1.87
BONE DENSITY	Lockheed No. 024

OBJECTIVE

Primary: Crew health and efficiency maintenance

Secondary: Effect of zero g on calcium retention in long bones.

INSTALLATION REQUIREMENTS

1. Normal Operating Environment: Equip. Interior ; Crew Interior
2. Weight of Equipment and Supplies (lb.) 87 (Incl. in Exp. 1.1.1.1)
3. Volume of Equipment and Supplies (cu. ft.): Internal 2.6 (Incl. in Exp. 1.1.1.1) ; External 0
4. Critical Dimensions (ft.)
5. List of Test Apparatus Lightweight low-power X-ray machine using Polaroid X-ray film and a densitometer
6. Average Power Requirements (kw) 0.550
7. Special Thermal Requirements N/R
8. Orientation: Laboratory N/R ; Equipment N/R
9. Special Navigation Accuracy N/R
10. Stability and Pointing Accuracy N/R
11. Orbit Requirements N/R
12. Gravity Requirements Both 0 and Partial G

MANPOWER REQUIREMENTS

1. Number of Crew Required 1 Physician, 6 Subjects
2. Skill Categories Physician
3. Total Man-hours 36.4
4. Chronological Span 1 yr
5. Experiment Cycles: Duration 84 min. ; Number 18
6. Potential Hazards Over-exposure to X radiation

DISCUSSION:

X-Rays can be taken at same time as for experiment 1.1.1.1.

EXPERIMENT AND APPLICATION SUMMARY

TITLE	NASA No. 1.1.1.88
BLOOD & URINE CREATININE	Lockheed No. 025

OBJECTIVE

Primary: Crew health and efficiency maintenance

Secondary: Effect of zero g on blood and urine chemistry

INSTALLATION REQUIREMENTS

1. Normal Operating Environment: Equip. Interior ; Crew Interior
2. Weight of Equipment and Supplies (lb.) 24 See Note on 1.1.1.78
3. Volume of Equipment and Supplies (cu. ft.): Internal 1.2 (Incl. in 1.1.1.93) ; External 0
4. Critical Dimensions (ft.)
5. List of Test Apparatus Calsul packets, Calbiometer, Microfuge
6. Average Power Requirements (kw) 0.010
7. Special Thermal Requirements N/R
8. Orientation: Laboratory N/R ; Equipment N/R
9. Special Navigation Accuracy N/R
10. Stability and Pointing Accuracy N/R
11. Orbit Requirements N/R
12. Gravity Requirements Both 0 and Partial G

MANPOWER REQUIREMENTS

1. Number of Crew Required 1 Medical Tech., 6 Subjects
2. Skill Categories Biomedical Science & Subject
3. Total Man-hours 46.8
4. Chronological Span 1 yr
5. Experiment Cycles: Duration 42 min. for Medical Tech. ; Number 52
6. Potential Hazards Serum Hepatitis - ruptured vessels due to forced urination

DISCUSSION:

Experiments 1.1.1.78 and 1.1.1.80 require only 1 minute each per subject whereas 1.1.1.75 and 1.1.1.88 require 2 minutes each subject. This makes a difference in the amount of time for analysis unless someone besides the Medical Technician takes the sample.

TITLE	NASA No. 1.1.1.89
HEMOGLOBIN AND HEMATOCRIT	Lockheed No. 026

OBJECTIVE

Primary: Crew health and efficiency maintenance

Secondary: Effect of zero g on blood chemistry

INSTALLATION REQUIREMENTS

1. Normal Operating Environment: Equip. Internal ; Crew Internal
2. Weight of Equipment and Supplies (lb.) 24 + 8.4 +12 (Incl. in 1.1.1.67, 1.1.1.90, 1.1.1.93)
3. Volume of Equipment and Supplies (cu. ft.): Internal 1.2 + 0.13 +0.24 ; External (Incl. in 1.1.1.67, 1.1.1.90, 1.1.1.93)
4. Critical Dimensions (ft.)
5. List of Test Apparatus Beckman Spectro-Colorimeter, Microfuge, and Fisher Autocytometer
6. Average Power Requirements (kw) 0.010
7. Special Thermal Requirements N/R
8. Orientation: Laboratory N/R ; Equipment N/R
9. Special Navigation Accuracy N/R
10. Stability and Pointing Accuracy N/R
11. Orbit Requirements N/R
12. Gravity Requirements Both 0 and Partial G

MANPOWER REQUIREMENTS

1. Number of Crew Required 1 Medical Tech., 6 Subjects
2. Skill Categories Biomedical Science & Subjects
3. Total Man-hours 195
4. Chronological Span 1 yr
5. Experiment Cycles: Duration 90 min. for Medical Tech. ; Number 122
6. Potential Hazards Serum Hepatitis

DISCUSSION:

TITLE	NASA No. 1.1.1.90
CENTRIFUGE TEST	Lockheed No. 027

OBJECTIVE

Primary: Crew health and maintenance of efficiency

Secondary: Effect of zero g on cardio-pulmonary response

INSTALLATION REQUIREMENTS

1. Normal Operating Environment: Equip. Internal ; Crew Internal
2. Weight of Equipment and Supplies (lb.) 820 + (76 + 3.2 + 10) (Incl. in 1.1.1.93, 1.1.1.8, 1.1.1.56)
3. Volume of Equipment and Supplies (cu. ft.): Internal 1000 + (3.8 + 0.25 + 0.5) ; External (Incl. in 1.1.1.93, 1.1.1.8, 1.1.1.56)
4. Critical Dimensions (ft.)
5. List of Test Apparatus Centrifuge, BCG, EKG, and Phonovibiogram, and Cary Respiration Pattern Analyzer (See 1.1.1.56)
6. Average Power Requirements (kw) 3.34
7. Special Thermal Requirements N/R
8. Orientation: Laboratory N/R ; Equipment N/R
9. Special Navigation Accuracy N/R
10. Stability and Pointing Accuracy N/R
11. Orbit Requirements N/R
12. Gravity Requirements Both 0 and Partial G

MANPOWER REQUIREMENTS

1. Number of Crew Required 1 Physician, 6 Subjects
2. Skill Categories Physician & Subjects
3. Total Man-hours 436.8
4. Chronological Span 1 yr
5. Experiment Cycles: Duration 336 min. for Physician ; Number 52
6. Potential Hazards Over exposure to "g" while in weakened condition

DISCUSSION:

TITLE	NASA No. 1.1.1.91
URINALYSIS	Lockheed No. 028

OBJECTIVE

Primary: Crew health and efficiency maintenance

Secondary: Effect of zero g on body chemistry

INSTALLATION REQUIREMENTS

1. Normal Operating Environment: Equip. Interior ; Crew Interior
2. Weight of Equipment and Supplies (lb.) 3.2 + 12 + 3.5 (Incl. in 1.1.1.64, 1.1.1.67, 1.1.1.93)
3. Volume of Equipment and Supplies (cu. ft.): Internal 25 + 2.5 + 0.57 (Incl. in ~~1.1.1.64,~~ 1.1.1.67, ~~1.1.1.93~~
4. Critical Dimensions (ft.)
5. List of Test Apparatus Microscope, Microfuge, Osmometer, Henia-Combistix and Sanborn Cell Counter
6. Average Power Requirements (kw) 0.035
7. Special Thermal Requirements N/R
8. Orientation: Laboratory N/R ; Equipment N/R
9. Special Navigation Accuracy N/R
10. Stability and Pointing Accuracy N/R
11. Orbit Requirements N/R
12. Gravity Requirements Both 0 and Partial G

MANPOWER REQUIREMENTS

1. Number of Crew Required 1 Medical Tech. 6 Subjects
2. Skill Categories Biomedical Science and Subjects
3. Total Man-hours 145.6
4. Chronological Span 1 year
5. Experiment Cycles: Duration 54 min. for ~~Medical Tech.~~ ; Number 122
6. Potential Hazards Forced urination may rupture vessels

DISCUSSION:

TITLE TOTAL BODY WATER

NASA No. 1.1.1.92
Lockheed No. 030

OBJECTIVE

Primary: Crew health and efficiency maintenance

Secondary: Effects of zero g on body water

INSTALLATION REQUIREMENTS

1. Normal Operating Environment: Equip. Interior ; Crew Interior
2. Weight of Equipment and Supplies (lb.) 24+8.4 (Incl. in 1.1.1.90, 1.1.1.93)
3. Volume of Equipment and Supplies (cu. ft.): Internal 1.2+.13 (Incl. in 1.1.1.90, 1.1.1.93) ; External 0
4. Critical Dimensions (ft.)
5. List of Test Apparatus Microfuge (see also exper. 1.1.1.93)
6. Average Power Requirements (kw) 0.010
7. Special Thermal Requirements N/R
8. Orientation: Laboratory N/R ; Equipment N/R
9. Special Navigation Accuracy N/R
10. Stability and Pointing Accuracy N/R
11. Orbit Requirements N/R
12. Gravity Requirements Both 0 and Partial G

MANPOWER REQUIREMENTS

1. Number of Crew Required 1 Medical Tech., 6 Subjects
2. Skill Categories Biomedical Science & Subjects
3. Total Man-hours 125
4. Chronological Span 1 year
5. Experiment Cycles: Duration 168 min. for Medical Tech. ; Number 26
6. Potential Hazards Serum Hepatitis

DISCUSSION:

TITLE	NASA No. 1.1.1.93
CALCIUM BALANCE STUDY	Lockheed No. 029

OBJECTIVE

Primary: Crew health and efficiency maintenance

Secondary: Effect of zero g on body chemistry

INSTALLATION REQUIREMENTS

1. Normal Operating Environment: Equip. Interior ; Crew Interior
2. Weight of Equipment and Supplies (lb.) 24
3. Volume of Equipment and Supplies (cu. ft.): Internal 1.2 ; External 0
4. Critical Dimensions (ft.)
5. List of Test Apparatus Beckman Spectro Colorimeter, microfuge, and B-A Flame Photometer or Coleman Jr. closed Flame Photometer
6. Average Power Requirements (kw) 0.010
7. Special Thermal Requirements N/R
8. Orientation: Laboratory N/R ; Equipment N/R
9. Special Navigation Accuracy N/R
10. Stability and Pointing Accuracy
11. Orbit Requirements
12. Gravity Requirements Both 0 and Partial G

MANPOWER REQUIREMENTS

1. Number of Crew Required 1 Medical Tech., 6 Subjects
2. Skill Categories Biomedical Science and Subject
3. Total Man-hours 163.8
4. Chronological Span 1 year
5. Experiment Cycles: Duration 336 min. for Medical Tech ; Number 26
6. Potential Hazards ~~Flame Photometer in 50% O_2 atmosphere~~

DISCUSSION:

TITLE DISTANT STATIC DEPTH PERCEPTION

NASA No. 1.1.2.1
Lockheed No. 094

OBJECTIVE

Primary: Determine whether a significant difference exists between space and ground conditions for static depth perception.

INSTALLATION REQUIREMENTS

1. Normal Operating Environment: Equip. Interior ; Crew Interior
2. Weight of Equipment and Supplies (lb.) Less than 10
3. Volume of Equipment and Supplies (cu. ft.): Internal 45 ; External 0
4. Critical Dimensions (ft.) 5' min length: 1.5' in height
5. List of Test Apparatus Howard-Dolman Apparatus
6. Average Power Requirements (kw) 0.445
7. Special Thermal Requirements N/R
8. Orientation: Laboratory N/R ; Equipment N/R
9. Special Navigation Accuracy N/R
10. Stability and Pointing Accuracy N/R
11. Orbit Requirements N/R
12. Gravity Requirements Both 0 and Partial G

MANPOWER REQUIREMENTS

1. Number of Crew Required 5
2. Skill Categories Biomedical Science
3. Total Man-hours 22
4. Chronological Span 13 weeks
5. Experiment Cycles: Duration 20 min. ; Number 65
6. Potential Hazards None known

DISCUSSION:

TITLE

DYNAMIC DEPTH PERCEPTION

NASA No. 1.1.2.2
Lockheed No. 095

OBJECTIVE

Primary: Determine whether a significant difference exists between space and ground conditions for dynamic depth perception.

INSTALLATION REQUIREMENTS

1. Normal Operating Environment: Equip. Interior ; Crew Interior
2. Weight of Equipment and Supplies (lb.) Included in 1.1.2.34
3. Volume of Equipment and Supplies (cu. ft.): Internal Included in 1.1.2.34 ; External 0
4. Critical Dimensions (ft.)
5. List of Test Apparatus A simulator used in conjunction with a preprogrammed computer.
6. Average Power Requirements (kw) 0.445
7. Special Thermal Requirements N/R
8. Orientation: Laboratory N/R ; Equipment N/R
9. Special Navigation Accuracy N/R
10. Stability and Pointing Accuracy N/R
11. Orbit Requirements N/R
12. Gravity Requirements Both 0 and G Partial

MANPOWER REQUIREMENTS

1. Number of Crew Required 5
2. Skill Categories Biomedical Science
3. Total Man-hours 33
4. Chronological Span 13 weeks
5. Experiment Cycles: Duration 20 min. ; Number 65
6. Potential Hazards None known

DISCUSSION:

TITLE

CUE ABSTRACTION

NASA No. 1.1.2.3
Lockheed No. 097

OBJECTIVE

Primary: Determine whether a significant difference exists between space and ground conditions for cue abstraction task.

INSTALLATION REQUIREMENTS

1. Normal Operating Environment: Equip. Interior ; Crew Interior
2. Weight of Equipment and Supplies (lb.) Included in 1.1.2.29
3. Volume of Equipment and Supplies (cu. ft.): Internal Incl. in 1.1.2.29 ; External 0
4. Critical Dimensions (ft.)
5. List of Test Apparatus Blaisdell-Garceau Stimulus-Response Recorder (descrip. in Medical Electronic News, June 1962)-Prototype at University of Cinn.
6. Average Power Requirements (kw) 0.225
7. Special Thermal Requirements N/R
8. Orientation: Laboratory N/R ; Equipment N/R
9. Special Navigation Accuracy N/R
10. Stability and Pointing Accuracy N/R
11. Orbit Requirements N/R
12. Gravity Requirements Both 0 and Partial G

MANPOWER REQUIREMENTS

1. Number of Crew Required 5
2. Skill Categories Biomedical Science
3. Total Man-hours 22
4. Chronological Span 13 weeks
5. Experiment Cycles: Duration 20 min. ; Number 65
6. Potential Hazards None

DISCUSSION:

TITLE DECISION MAKING	NASA No. 1.1.2.4 Lockheed No. 096

OBJECTIVE

Primary: Determine whether a significant difference exists between space and ground conditions for human decision making tasks.

INSTALLATION REQUIREMENTS

1. Normal Operating Environment: Equip. Interior ; Crew Interior
2. Weight of Equipment and Supplies (lb.) 0
3. Volume of Equipment and Supplies (cu. ft.): Internal 0 ; External 0
4. Critical Dimensions (ft.)
5. List of Test Apparatus Problems on sheets of paper given to subject by observer
6. Average Power Requirements (kw) 0
7. Special Thermal Requirements N/R
8. Orientation: Laboratory N/R ; Equipment N/R
9. Special Navigation Accuracy
10. Stability and Pointing Accuracy N/R
11. Orbit Requirements N/R
12. Gravity Requirements Both 0 and Partial G

MANPOWER REQUIREMENTS

1. Number of Crew Required 11
2. Skill Categories Biomedical Science and Subjects
3. Total Man-hours 130
4. Chronological Span 13 weeks
5. Experiment Cycles: Duration 30 ; Number 143
6. Potential Hazards None

DISCUSSION:

TITLE

DETECTION OF LIGHT TOUCH

NASA No. 1.1.2.5
Lockheed No. 099

OBJECTIVE

Primary: To determine amount of force required to perceive threshold of touch and non-threshold

INSTALLATION REQUIREMENTS

1. Normal Operating Environment: Equip. Interior ; Crew Interior
2. Weight of Equipment and Supplies (lb.) 20
3. Volume of Equipment and Supplies (cu. ft.): Internal 1 ; External 0
4. Critical Dimensions (ft.)
5. List of Test Apparatus Electromagnetic Aesthesometer
6. Average Power Requirements (kw) 0.050
7. Special Thermal Requirements N/R
8. Orientation: Laboratory N/R ; Equipment N/R
9. Special Navigation Accuracy N/R
10. Stability and Pointing Accuracy N/R
11. Orbit Requirements N/R
12. Gravity Requirements Both 0 and G Partial

MANPOWER REQUIREMENTS

1. Number of Crew Required 6
2. Skill Categories Biomedical Science and Subjects
3. Total Man-hours 39
4. Chronological Span 13 weeks
5. Experiment Cycles: Duration 15 min. ; Number 65
6. Potential Hazards None

DISCUSSION:

TITLE	NASA No. 1.1.2.6
PROBLEM SOLVING	Lockheed No. 098

OBJECTIVE

Primary: Determine whether a significant difference exists between space and ground conditions for human problem solving performance.

INSTALLATION REQUIREMENTS

1. Normal Operating Environment: Equip. Interior ; Crew Interior
2. Weight of Equipment and Supplies (lb.) 0.5 (included in 1.1.2.30)
3. Volume of Equipment and Supplies (cu. ft.): Internal Incl. in 1.1.2.30 ; External None
4. Critical Dimensions (ft.)
5. List of Test Apparatus Paper and pencil
6. Average Power Requirements (kw) 0
7. Special Thermal Requirements N/R
8. Orientation: Laboratory N/R ; Equipment N/R
9. Special Navigation Accuracy N/R
10. Stability and Pointing Accuracy N/R
11. Orbit Requirements N/R
12. Gravity Requirements Both 0 and Partial G

MANPOWER REQUIREMENTS

1. Number of Crew Required 10
2. Skill Categories Biomedical Sciences
3. Total Man-hours 65
4. Chronological Span 13 Weeks
5. Experiment Cycles: Duration 30 min. ; Number 130
6. Potential Hazards None

DISCUSSION:

TITLE

BRIGHTNESS DETECTION/DISCRIMINATION

NASA No. 1.1.2.7
Lockheed No. 101

OBJECTIVE

Primary: To determine space JND's for brightness and the direction of difference for stimulus pairs compared with ground JND's.

INSTALLATION REQUIREMENTS

1. Normal Operating Environment: Equip. Interior ; Crew Interior
2. Weight of Equipment and Supplies (lb.) 48 (included in 1.1.2.29)
3. Volume of Equipment and Supplies (cu. ft.): Internal 2.6 (incl. in 1.1.2.29) ; External 0
4. Critical Dimensions (ft.)
5. List of Test Apparatus Same as 1.1.2.29, except for brightness intensity equipment.
6. Average Power Requirements (kw) 0.225
7. Special Thermal Requirements N/R
8. Orientation: Laboratory N/R ; Equipment N/R
9. Special Navigation Accuracy N/R
10. Stability and Pointing Accuracy N/R
11. Orbit Requirements N/R
12. Gravity Requirements Both 0 and Partial G

MANPOWER REQUIREMENTS

1. Number of Crew Required 5
2. Skill Categories Biomedical Science
3. Total Man-hours 27
4. Chronological Span 13 weeks
5. Experiment Cycles: Duration 25 min. ; Number 65
6. Potential Hazards Minor-discs should be fastened securely

DISCUSSION:

TITLE	NASA No. 1.1.2.8
ASSOCIATION	Lockheed No. 100

OBJECTIVE

Primary: To determine the amount of decrement, if any, in memory which may occur after transfer to space environment.

INSTALLATION REQUIREMENTS

1. Normal Operating Environment: Equip. Interior ; Crew Interior
2. Weight of Equipment and Supplies (lb.) 28.5 (included in 1.1.2.32)
3. Volume of Equipment and Supplies (cu. ft.): Internal 1.6 (incl. in 1.1.2.32) ; External 0
4. Critical Dimensions (ft.)
5. List of Test Apparatus
6. Average Power Requirements (kw) 0.020
7. Special Thermal Requirements N/R
8. Orientation: Laboratory N/R ; Equipment N/R
9. Special Navigation Accuracy N/R
10. Stability and Pointing Accuracy N/R
11. Orbit Requirements N/R
12. Gravity Requirements Both 0 and Partial G

MANPOWER REQUIREMENTS

1. Number of Crew Required 5
2. Skill Categories Biomedical Science
3. Total Man-hours 22
4. Chronological Span 13 weeks
5. Experiment Cycles: Duration 15 min. ; Number 13
6. Potential Hazards None

DISCUSSION:

TITLE

SOUND LOCALIZATION

NASA No. 1.1.2.9
Lockheed No. 103

OBJECTIVE

Primary: To determine whether or not sound localization changes in space conditions

INSTALLATION REQUIREMENTS

1. Normal Operating Environment: Equip. Interior ; Crew Interior
2. Weight of Equipment and Supplies (lb.) 0.5
3. Volume of Equipment and Supplies (cu. ft.): Internal 0.01 ; External 0
4. Critical Dimensions (ft.)
5. List of Test Apparatus Sound source
6. Average Power Requirements (kw) 0.0002
7. Special Thermal Requirements N/R
8. Orientation: Laboratory N/R ; Equipment N/R
9. Special Navigation Accuracy N/R
10. Stability and Pointing Accuracy N/R
11. Orbit Requirements N/R
12. Gravity Requirements Both Zero-G and Partial G

MANPOWER REQUIREMENTS

1. Number of Crew Required 6
2. Skill Categories Biomedical Science and Subjects
3. Total Man-hours 17.0
4. Chronological Span 13 weeks
5. Experiment Cycles: Duration 10 min. ; Number 65
6. Potential Hazards None

DISCUSSION:

TITLE	NASA No. 1.1.2.10
TONE PATTERN DISCRIMINATION	Lockheed No. 102

OBJECTIVE

Primary: To determine whether a significant difference exists between tone pattern discrimination on ground and in space.

INSTALLATION REQUIREMENTS

1. Normal Operating Environment: Equip. Interior ; Crew Interior
2. Weight of Equipment and Supplies (lb.) 28.5 (included in 1.1.2.32)
3. Volume of Equipment and Supplies (cu. ft.): Internal 1.6 (incl. in 1.1.2.32); External 0
4. Critical Dimensions (ft.)
5. List of Test Apparatus Set of earphones and tape recorder
6. Average Power Requirements (kw) 0.020
7. Special Thermal Requirements N/R
8. Orientation: Laboratory N/R ; Equipment N/R
9. Special Navigation Accuracy N/R
10. Stability and Pointing Accuracy N/R
11. Orbit Requirements N/R
12. Gravity Requirements Both 0 and Partial G

MANPOWER REQUIREMENTS

1. Number of Crew Required 5
2. Skill Categories Subjects
3. Total Man-hours 11
4. Chronological Span 13 weeks
5. Experiment Cycles: Duration 10 min. ; Number 65
6. Potential Hazards None

DISCUSSION:

TITLE	NASA No. 1.1.2.11
DETECTION OF HEAT/COLD	Lockheed No. 105

OBJECTIVE

Primary: To determine whether thermal thresholds alter in a space environment.

INSTALLATION REQUIREMENTS

1. Normal Operating Environment: Equip. Internal ; Crew Internal
2. Weight of Equipment and Supplies (lb.) 1
3. Volume of Equipment and Supplies (cu. ft.): Internal 0.01 ; External 0
4. Critical Dimensions (ft.)
5. List of Test Apparatus Thermal stimulator
6. Average Power Requirements (kw) 0
7. Special Thermal Requirements Constant temperature
8. Orientation: Laboratory N/R ; Equipment N/R
9. Special Navigation Accuracy N/R
10. Stability and Pointing Accuracy N/R
11. Orbit Requirements N/R
12. Gravity Requirements Both 0 and Partial G

MANPOWER REQUIREMENTS

1. Number of Crew Required 6
2. Skill Categories Biomedical Science and Subjects
3. Total Man-hours 39
4. Chronological Span 13 weeks
5. Experiment Cycles: Duration 15 min. ; Number 65
6. Potential Hazards None

DISCUSSION:

TITLE	NASA No. 1.1.2.12
PAIN DETECTION	Lockheed No. 104

OBJECTIVE

Primary: To determine if pain detection ability changes in space conditions.

INSTALLATION REQUIREMENTS

1. Normal Operating Environment: Equip. Interior ; Crew Interior
2. Weight of Equipment and Supplies (lb.) 2
3. Volume of Equipment and Supplies (cu. ft.): Internal 0.4 ; External 0
4. Critical Dimensions (ft.)
5. List of Test Apparatus Inflatable hose
6. Average Power Requirements (kw) 0
7. Special Thermal Requirements N/R
8. Orientation: Laboratory N/R ; Equipment N/R
9. Special Navigation Accuracy N/R
10. Stability and Pointing Accuracy N/R
11. Orbit Requirements N/R
12. Gravity Requirements Both 0 and Partial G

MANPOWER REQUIREMENTS

1. Number of Crew Required 6
2. Skill Categories Biomedical Science
3. Total Man-hours 39
4. Chronological Span 13 weeks
5. Experiment Cycles: Duration 75 min. ; Number 65
6. Potential Hazards None

DISCUSSION:

TITLE	NASA No. 1.1.2.13
OLFACTION	Lockheed No. 107

OBJECTIVE

Primary: To determine whether olfactory stimuli can be identified correctly in space environment.

INSTALLATION REQUIREMENTS

1. Normal Operating Environment: Equip. Interior ; Crew Interior
2. Weight of Equipment and Supplies (lb.) 3
3. Volume of Equipment and Supplies (cu. ft.): Internal 0.17 ; External 0
4. Critical Dimensions (ft.) None
5. List of Test Apparatus Zwaardemaher's Olfactometer; Elsberg's blast injection device
6. Average Power Requirements (kw) 0
7. Special Thermal Requirements N/R
8. Orientation: Laboratory N/R ; Equipment N/R
9. Special Navigation Accuracy N/R
10. Stability and Pointing Accuracy N/R
11. Orbit Requirements N/R
12. Gravity Requirements Both 0 and Partial G

MANPOWER REQUIREMENTS

1. Number of Crew Required 6
2. Skill Categories Biomedical Science and Subjects
3. Total Man-hours 39
4. Chronological Span 13 weeks
5. Experiment Cycles: Duration 15 min. ; Number 65
6. Potential Hazards None

DISCUSSION:

TITLE	NASA No. 1.1.2.14
TEXTURE DISCRIMINATION	Lockheed No. 106

OBJECTIVE

Primary: To determine whether texture discrimination changes under space conditions.

INSTALLATION REQUIREMENTS

1. Normal Operating Environment: Equip. Interior ; Crew Interior
2. Weight of Equipment and Supplies (lb.) 0.1
3. Volume of Equipment and Supplies (cu. ft.): Internal 0.01 ; External 0
4. Critical Dimensions (ft.)
5. List of Test Apparatus 10 squares of sandpaper of graded fineness
6. Average Power Requirements (kw) 0
7. Special Thermal Requirements N/R
8. Orientation: Laboratory N/R ; Equipment N/R
9. Special Navigation Accuracy N/R
10. Stability and Pointing Accuracy N/R
11. Orbit Requirements N/R
12. Gravity Requirements Both 0 and Partial G

MANPOWER REQUIREMENTS

1. Number of Crew Required 6
2. Skill Categories Biomedical Science and Subjects
3. Total Man-hours 26
4. Chronological Span 13 weeks
5. Experiment Cycles: Duration 10 min. ; Number 65
6. Potential Hazards None

DISCUSSION:

TITLE	NASA No. 1.1.2.15
DETECTION/DISCRIMINATION OF LINEAR AND ANGULAR ACCELERATION	Lockheed No. 109

OBJECTIVE

Primary: To determine the ability of man to detect and discriminate both linear and angular acceleration

INSTALLATION REQUIREMENTS

1. Normal Operating Environment: Equip. Interior ; Crew Interior
2. Weight of Equipment and Supplies (lb.) 22
3. Volume of Equipment and Supplies (cu. ft.): Internal 3.3 ; External 0
4. Critical Dimensions (ft.)
5. List of Test Apparatus Acceleration chair
6. Average Power Requirements (kw) 0.020
7. Special Thermal Requirements N/R
8. Orientation: Laboratory N/R ; Equipment N/R
9. Special Navigation Accuracy N/R
10. Stability and Pointing Accuracy N/R
11. Orbit Requirements N/R
12. Gravity Requirements Both 0 and Partial G

MANPOWER REQUIREMENTS

1. Number of Crew Required 6
2. Skill Categories Biomedical Science and Subjects
3. Total Man-hours 39
4. Chronological Span 13 weeks
5. Experiment Cycles: Duration 15 ; Number 65
6. Potential Hazards None

DISCUSSION:

TITLE	NASA No. 1.1.2.16
INDUCTIVE REASONING	Lockheed No. 108

OBJECTIVE

Primary: To determine if inductive reasoning changes significantly during space missions.

INSTALLATION REQUIREMENTS

1. Normal Operating Environment: Equip. Interior ; Crew Interior
2. Weight of Equipment and Supplies (lb.) 0
3. Volume of Equipment and Supplies (cu. ft.): Internal 0 ; External 0
4. Critical Dimensions (ft.) 0
5. List of Test Apparatus Test materials (paper)
6. Average Power Requirements (kw) 0
7. Special Thermal Requirements N/R
8. Orientation: Laboratory N/R ; Equipment N/R
9. Special Navigation Accuracy N/R
10. Stability and Pointing Accuracy N/R
11. Orbit Requirements N/R
12. Gravity Requirements Both 0 and Partial G

MANPOWER REQUIREMENTS

1. Number of Crew Required 5
2. Skill Categories Subjects
3. Total Man-hours 5 hours
4. Chronological Span 13 weeks
5. Experiment Cycles: Duration 1 hour ; Number 5
6. Potential Hazards None

DISCUSSION:

TITLE	NASA No. 1.1.2.17
DETECTION/DISCRIMINATION OF FORCE AGAINST LIMBS	Lockheed No. 111

OBJECTIVE

Primary: To determine the detection and discrimination of force exerted against a limb.

INSTALLATION REQUIREMENTS

1. Normal Operating Environment: Equip. Interior ; Crew Interior
2. Weight of Equipment and Supplies (lb.) 6.2
3. Volume of Equipment and Supplies (cu. ft.): Internal 1.2 ; External 0
4. Critical Dimensions (ft.)
5. List of Test Apparatus Spring mounted lever
6. Average Power Requirements (kw) 0.100
7. Special Thermal Requirements N/R
8. Orientation: Laboratory N/R ; Equipment N/R
9. Special Navigation Accuracy N/R
10. Stability and Pointing Accuracy N/R
11. Orbit Requirements N/R
12. Gravity Requirements Both 0 and Partial G

MANPOWER REQUIREMENTS

1. Number of Crew Required 6
2. Skill Categories Biomedical Science
3. Total Man-hours 52
4. Chronological Span 13 weeks
5. Experiment Cycles: Duration ; Number 78
6. Potential Hazards Spring may injure subject

DISCUSSION:

TITLE

ARM/HAND/FINGER REACTION TIME AND SPEED CONTROL

NASA No. 1.1.2.18
Lockheed No. 110

OBJECTIVE

Primary: To determine both reaction time and speed control for arm, hand, and finger.

INSTALLATION REQUIREMENTS

1. Normal Operating Environment: Equip. Int. ; Crew Int.
2. Weight of Equipment and Supplies (lb.) 8.5
3. Volume of Equipment and Supplies (cu. ft.): Internal 2.2 ; External 0
4. Critical Dimensions (ft.)
5. List of Test Apparatus Control timer, rotary pursuit apparatus
6. Average Power Requirements (kw) 0.100
7. Special Thermal Requirements N/R
8. Orientation: Laboratory N/R ; Equipment N/R
9. Special Navigation Accuracy N/R
10. Stability and Pointing Accuracy N/R
11. Orbit Requirements N/R
12. Gravity Requirements Both 0 and Partial G

MANPOWER REQUIREMENTS

1. Number of Crew Required 5
2. Skill Categories Subjects
3. Total Man-hours 11.0
4. Chronological Span 13 weeks
5. Experiment Cycles: Duration 10 min. ; Number 65
6. Potential Hazards None

DISCUSSION:

TITLE	NASA No. 1.1.2.19
VISUAL-MOTOR TRACKING	Lockheed No. 113

OBJECTIVE

Primary: To determine the visual-motor tracking ability of man under space conditions.

INSTALLATION REQUIREMENTS

1. Normal Operating Environment: Equip. Interior ; Crew Interior
2. Weight of Equipment and Supplies (lb.) 205 (included in 1.1.2.34)
3. Volume of Equipment and Supplies (cu. ft.): Internal 10 (incl. in 1.1.2.34) ; External 0
4. Critical Dimensions (ft.)
5. List of Test Apparatus Prototype special simulator for attitude control
6. Average Power Requirements (kw) 0.445
7. Special Thermal Requirements N/R
8. Orientation: Laboratory N/R ; Equipment N/R
9. Special Navigation Accuracy N/R
10. Stability and Pointing Accuracy N/R
11. Orbit Requirements N/R
12. Gravity Requirements Both 0 and Partial G

MANPOWER REQUIREMENTS

1. Number of Crew Required 5
2. Skill Categories Subject
3. Total Man-hours 27.04
4. Chronological Span 13 weeks
5. Experiment Cycles: Duration 25 min. ; Number 65
6. Potential Hazards Unknown

DISCUSSION:

TITLE	NASA No. 1.1.2.20
LEG CONTROL OF FORCE	Lockheed No. 112

OBJECTIVE

Primary: To determine the ability to control muscle force.

INSTALLATION REQUIREMENTS

1. Normal Operating Environment: Equip. Interior ; Crew Interior
2. Weight of Equipment and Supplies (lb.) 5
3. Volume of Equipment and Supplies (cu. ft.): Internal 0.03 ; External 0
4. Critical Dimensions (ft.)
5. List of Test Apparatus Spring gage dynamometer, recording meter
6. Average Power Requirements (kw) 0.0005
7. Special Thermal Requirements N/R
8. Orientation: Laboratory N/R ; Equipment N/R
9. Special Navigation Accuracy N/R
10. Stability and Pointing Accuracy N/R
11. Orbit Requirements N/R
12. Gravity Requirements Both 0 and Partial G

MANPOWER REQUIREMENTS

1. Number of Crew Required 5
2. Skill Categories Subjects
3. Total Man-hours 26
4. Chronological Span 13 weeks
5. Experiment Cycles: Duration 15 ; Number 65
6. Potential Hazards None

DISCUSSION:

TITLE	NASA No. 1.1.2.21
NEAR DEPTH PERCEPTION	Lockheed No. 115

OBJECTIVE

Primary: To determine man's ability to perceive near depth in space conditions.

INSTALLATION REQUIREMENTS

1. Normal Operating Environment: Equip. Int. ; Crew Int.
2. Weight of Equipment and Supplies (lb.) 4
3. Volume of Equipment and Supplies (cu. ft.): Internal 0.13 ; External 0
4. Critical Dimensions (ft.)
5. List of Test Apparatus Near depth perception apparatus
6. Average Power Requirements (kw) 0
7. Special Thermal Requirements N/R
8. Orientation: Laboratory N/R ; Equipment N/R
9. Special Navigation Accuracy N/R
10. Stability and Pointing Accuracy N/R
11. Orbit Requirements N/R
12. Gravity Requirements Both 0 and Partial G

MANPOWER REQUIREMENTS

1. Number of Crew Required 6
2. Skill Categories Biomedical Science and Subjects
3. Total Man-hours 16.25
4. Chronological Span 13 weeks
5. Experiment Cycles: Duration 5 min. ; Number 65
6. Potential Hazards None

DISCUSSION:

TITLE	NASA No. 1.1.2.22
VISUAL RESOLUTION OF DETAIL	Lockheed No. 114

OBJECTIVE

Primary: To determine the ability of man in space to resolve a visual detail.

INSTALLATION REQUIREMENTS

1. Normal Operating Environment: Equip. Int. ; Crew Int.
2. Weight of Equipment and Supplies (lb.) 48 (included in 1.1.2.29(
3. Volume of Equipment and Supplies (cu. ft.): Internal 2.6 (incl. in 1.1.2.29) ; External 0
4. Critical Dimensions (ft.)
5. List of Test Apparatus A visual display
6. Average Power Requirements (kw) 0.225
7. Special Thermal Requirements N/R
8. Orientation: Laboratory N/R ; Equipment N/R
9. Special Navigation Accuracy N/R
10. Stability and Pointing Accuracy N/R
11. Orbit Requirements N/R
12. Gravity Requirements Both 0 and Partial G

MANPOWER REQUIREMENTS

1. Number of Crew Required 6
2. Skill Categories Biomedical Science and Subject
3. Total Man-hours 27.04
4. Chronological Span 13 weeks
5. Experiment Cycles: Duration 10 min. ; Number 65
6. Potential Hazards None

DISCUSSION:

TITLE	NASA No. 1.1.2.23
TONE AUDITION	Lockheed No. 117

OBJECTIVE

Primary: To measure the ability of man to detect a tone in random sampling of tones

INSTALLATION REQUIREMENTS

1. Normal Operating Environment: Equip. Interior ; Crew Interior
2. Weight of Equipment and Supplies (lb.) 28.5 (included in 1.1.2.32)
3. Volume of Equipment and Supplies (cu. ft.): Internal 1.6 (incl. in 1.1.2.32) ; External 0
4. Critical Dimensions (ft.)
5. List of Test Apparatus Audio-signal generator amplifier and speaker
6. Average Power Requirements (kw) 0.020
7. Special Thermal Requirements N/R
8. Orientation: Laboratory N/R ; Equipment N/R
9. Special Navigation Accuracy N/R
10. Stability and Pointing Accuracy N/R
11. Orbit Requirements N/R
12. Gravity Requirements Both 0 and Partial G

MANPOWER REQUIREMENTS

1. Number of Crew Required 5
2. Skill Categories Subjects
3. Total Man-hours 16.25
4. Chronological Span 13 weeks
5. Experiment Cycles: Duration 15 min. ; Number 65
6. Potential Hazards None

DISCUSSION:

TITLE	NASA No. 1.1.2.24
PERIPHERAL VISUAL DETECTION/DISCRIMINATION	Lockheed No. 116

OBJECTIVE

Primary: To determine extent of peripheral visual detection/discrimination ability of man in space.

INSTALLATION REQUIREMENTS

1. Normal Operating Environment: Equip. Int. ; Crew Int.
2. Weight of Equipment and Supplies (lb.) 2.0
3. Volume of Equipment and Supplies (cu. ft.): Internal 1 ; External 0
4. Critical Dimensions (ft.)
5. List of Test Apparatus Hand or stand Perimeter
6. Average Power Requirements (kw) 0
7. Special Thermal Requirements N/R
8. Orientation: Laboratory N/R ; Equipment N/R
9. Special Navigation Accuracy N/R
10. Stability and Pointing Accuracy N/R
11. Orbit Requirements N/R
12. Gravity Requirements Both 0 and Partial G

MANPOWER REQUIREMENTS

1. Number of Crew Required 6
2. Skill Categories Biomedical Science and Subjects
3. Total Man-hours 27.04
4. Chronological Span 13 weeks
5. Experiment Cycles: Duration 10 min. ; Number 65
6. Potential Hazards None

DISCUSSION:

TITLE	NASA No. 1.1.2.25
COLOR DETECTION/DISCRIMINATION	Lockheed No. 119

OBJECTIVE

Primary: To determine ability of man to detect and discriminate color in space.

INSTALLATION REQUIREMENTS

1. Normal Operating Environment: Equip. Int. ; Crew Int.
2. Weight of Equipment and Supplies (lb.) 48 (included in 1.1.2.29)
3. Volume of Equipment and Supplies (cu. ft.): Internal 2.6 (incl. in 1.1.2.29); External 0
4. Critical Dimensions (ft.)
5. List of Test Apparatus
6. Average Power Requirements (kw) 0.225
7. Special Thermal Requirements N/R
8. Orientation: Laboratory N/R ; Equipment N/R
9. Special Navigation Accuracy N/R
10. Stability and Pointing Accuracy N/R
11. Orbit Requirements N/R
12. Gravity Requirements Both 0 and Partial G

MANPOWER REQUIREMENTS

1. Number of Crew Required 5
2. Skill Categories Subjects
3. Total Man-hours 37.92
4. Chronological Span 13 weeks
5. Experiment Cycles: Duration 35 min. ; Number 65
6. Potential Hazards None

DISCUSSION:

TITLE	NASA No. 1.1.2.26
VIBRATION DETECTION/DISCRIMINATION	Lockheed No. 118

OBJECTIVE

Primary: To determine the ability of man in space to detect and discriminate vibration

INSTALLATION REQUIREMENTS

1. Normal Operating Environment: Equip. Interior ; Crew Interior
2. Weight of Equipment and Supplies (lb.) 0.6
3. Volume of Equipment and Supplies (cu. ft.): Internal 0.3 ; External 0
4. Critical Dimensions (ft.)
5. List of Test Apparatus Photoelectric plethysmograph
6. Average Power Requirements (kw) 0.010
7. Special Thermal Requirements N/R
8. Orientation: Laboratory N/R ; Equipment N/R
9. Special Navigation Accuracy N/R
10. Stability and Pointing Accuracy N/R
11. Orbit Requirements N/R
12. Gravity Requirements Both 0 and Partial G

MANPOWER REQUIREMENTS

1. Number of Crew Required 6
2. Skill Categories Biomedical Science and Subjects
3. Total Man-hours 16.25
4. Chronological Span 13 weeks
5. Experiment Cycles: Duration 5 min. ; Number 65
6. Potential Hazards None

DISCUSSION:

EXPERIMENT AND APPLICATION SUMMARY

LR 18906

TITLE	NASA No. 1.1.2.27
TIME PERCEPTION	Lockheed No. 121

OBJECTIVE

Primary: To determine the ability of man to perceive temporal duration in space conditions.

INSTALLATION REQUIREMENTS

1. Normal Operating Environment: Equip. Interior ; Crew Interior
2. Weight of Equipment and Supplies (lb.) 28.5 (Included in 1.1.2.32)
3. Volume of Equipment and Supplies (cu. ft.): Internal 1.6 (incl. in 1.1.2.32) ; External 0
4. Critical Dimensions (ft.)
5. List of Test Apparatus
6. Average Power Requirements (kw) 0.020
7. Special Thermal Requirements N/R
8. Orientation: Laboratory N/R ; Equipment N/R
9. Special Navigation Accuracy N/R
10. Stability and Pointing Accuracy N/R
11. Orbit Requirements N/R
12. Gravity Requirements Both 0 and Partial G

MANPOWER REQUIREMENTS

1. Number of Crew Required 5
2. Skill Categories Subjects
3. Total Man-hours 16.25
4. Chronological Span 13 weeks
5. Experiment Cycles: Duration 10 min. ; Number 65
6. Potential Hazards None

DISCUSSION:

TITLE	NASA No. 1.1.2.28
ARM/HAND/FINGER MANIPULATION	Lockheed No. 120

OBJECTIVE

Primary: To determine the speed with which integrated arm, hand, finger action occurs in space environment.

INSTALLATION REQUIREMENTS

1. Normal Operating Environment: Equip. Interior ; Crew Interior
2. Weight of Equipment and Supplies (lb.) 1
3. Volume of Equipment and Supplies (cu. ft.): Internal 0.01 ; External 0
4. Critical Dimensions (ft.)
5. List of Test Apparatus Table with test objects
6. Average Power Requirements (kw) 0
7. Special Thermal Requirements N/R
8. Orientation: Laboratory N/R ; Equipment N/R
9. Special Navigation Accuracy N/R
10. Stability and Pointing Accuracy N/R
11. Orbit Requirements N/R
12. Gravity Requirements Both 0 and Partial G

MANPOWER REQUIREMENTS

1. Number of Crew Required 6
2. Skill Categories Biomedical Science and Subjects
3. Total Man-hours 27.04
4. Chronological Span 13 weeks
5. Experiment Cycles: Duration 10 min. ; Number 65
6. Potential Hazards None

DISCUSSION:

TITLE

COMPLEX PATTERN DISCRIMINATION

NASA No. 1.1.2.29
Lockheed No. 123

OBJECTIVE

Primary: To determine man's ability to make complex pattern discriminations in space.

INSTALLATION REQUIREMENTS

1. Normal Operating Environment: Equip. Interior ; Crew Interior
2. Weight of Equipment and Supplies (lb.) 48
3. Volume of Equipment and Supplies (cu. ft.): Internal 2.6 ; External 0
4. Critical Dimensions (ft.)
5. List of Test Apparatus Any projector used for display (visual)
6. Average Power Requirements (kw) 0.225
7. Special Thermal Requirements N/R
8. Orientation: Laboratory N/R ; Equipment N/R
9. Special Navigation Accuracy N/R
10. Stability and Pointing Accuracy N/R
11. Orbit Requirements N/R
12. Gravity Requirements Both 0 and Partial G

MANPOWER REQUIREMENTS

1. Number of Crew Required 5
2. Skill Categories Subjects
3. Total Man-hours 21.71
4. Chronological Span 13 weeks
5. Experiment Cycles: Duration 20 min. ; Number 65
6. Potential Hazards None

DISCUSSION:

TITLE	NASA No. 1.1.2.30
COMPUTATION	Lockheed No. 122

OBJECTIVE

Primary: To determine man's ability to solve computational problems in space conditions

INSTALLATION REQUIREMENTS

1. Normal Operating Environment: Equip. Interior ; Crew Technical
2. Weight of Equipment and Supplies (lb.) 0.5
3. Volume of Equipment and Supplies (cu. ft.): Internal 0.001 ; External 0
4. Critical Dimensions (ft.) None
5. List of Test Apparatus Paper and pencil with problems in notebook
6. Average Power Requirements (kw) 0
7. Special Thermal Requirements N/R
8. Orientation: Laboratory N/R ; Equipment N/R
9. Special Navigation Accuracy N/R
10. Stability and Pointing Accuracy N/R
11. Orbit Requirements N/R
12. Gravity Requirements Both 0 and Partial G

MANPOWER REQUIREMENTS

1. Number of Crew Required 5
2. Skill Categories Subjects
3. Total Man-hours 32.5
4. Chronological Span 13 weeks
5. Experiment Cycles: Duration 30 min. ; Number 65
6. Potential Hazards None

DISCUSSION:

EXPERIMENT AND APPLICATION SUMMARY

LR 18906

TITLE	NASA No. 1.1.2.31
LEARNED PROCEDURE	Lockheed No. 125

OBJECTIVE

Primary: To determine whether normally scheduled procedure tasks can be recalled accurately

INSTALLATION REQUIREMENTS

1. Normal Operating Environment: Equip. Interior ; Crew Interior
2. Weight of Equipment and Supplies (lb.) 0.5 (included in 1.1.2.30)
3. Volume of Equipment and Supplies (cu. ft.): Internal 0.001 (incl. in 1.1.2.30) ; External 0
4. Critical Dimensions (ft.)
5. List of Test Apparatus See Experiment No. 1.1.2.30.
6. Average Power Requirements (kw) 0
7. Special Thermal Requirements N/R
8. Orientation: Laboratory N/R ; Equipment N/R
9. Special Navigation Accuracy N/R
10. Stability and Pointing Accuracy N/R
11. Orbit Requirements N/R
12. Gravity Requirements Both 0 and Partial G

MANPOWER REQUIREMENTS

1. Number of Crew Required 1
2. Skill Categories Biomedical Science
3. Total Man-hours 16.25
4. Chronological Span 13 weeks
5. Experiment Cycles: Duration 1.25 hrs. ; Number 13
6. Potential Hazards None

DISCUSSION:

TITLE	NASA No. 1.1.2.32
MASS HANDLING	Lockheed No. 124

OBJECTIVE

Primary: To determine man's ability to predict mass loading under space conditions.

INSTALLATION REQUIREMENTS

1. Normal Operating Environment: Equip. Interior ; Crew Interior
2. Weight of Equipment and Supplies (lb.) 28.5 (Plus 0.5 included in 1.1.2.30)
3. Volume of Equipment and Supplies (cu. ft.): Internal 1.6 ; External 0
4. Critical Dimensions (ft.)
5. List of Test Apparatus Objects of different mass in spring loaded clip
6. Average Power Requirements (kw) 0.020
7. Special Thermal Requirements N/R
8. Orientation: Laboratory N/R ; Equipment N/R
9. Special Navigation Accuracy N/R
10. Stability and Pointing Accuracy N/R
11. Orbit Requirements N/R
12. Gravity Requirements Both 0 and Partial G

MANPOWER REQUIREMENTS

1. Number of Crew Required 6
2. Skill Categories Biomedical Science and Subjects
3. Total Man-hours 27.04
4. Chronological Span 13 weeks
5. Experiment Cycles: Duration 10 min. ; Number 65
6. Potential Hazards Care in placing weights (secure them)

DISCUSSION:

EXPERIMENT AND APPLICATION SUMMARY

TITLE	NASA No. 1.1.2.33
SPEECH AND SPEECH PERCEPTION	Lockheed No. 127

OBJECTIVE

Primary: To determine man's ability to transmit information by and derive information from speech.

INSTALLATION REQUIREMENTS

1. Normal Operating Environment: Equip. Interior ; Crew Interior
2. Weight of Equipment and Supplies (lb.) 28.5 (included in 1.1.2.32)
3. Volume of Equipment and Supplies (cu. ft.): Internal 1.6 (incl. in 1.1.2.32) ; External 0
4. Critical Dimensions (ft.)
5. List of Test Apparatus Tape Recorder
6. Average Power Requirements (kw) 0.020
7. Special Thermal Requirements N/R
8. Orientation: Laboratory N/R ; Equipment N/R
9. Special Navigation Accuracy N/R
10. Stability and Pointing Accuracy N/R
11. Orbit Requirements N/R
12. Gravity Requirements Both 0 and Partial G

MANPOWER REQUIREMENTS

1. Number of Crew Required 5
2. Skill Categories Subjects
3. Total Man-hours 32.5
4. Chronological Span 13 weeks
5. Experiment Cycles: Duration 150 min. ; Number 13
6. Potential Hazards None

DISCUSSION:

TITLE	NASA No. 1.1.2.34
PERCEPTUAL SET	Lockheed No. 126

OBJECTIVE

Primary: To determine if man can maintain perceptual set for given period in space task.

INSTALLATION REQUIREMENTS

1. Normal Operating Environment: Equip. Interior ; Crew Interior
2. Weight of Equipment and Supplies (lb.) 205
3. Volume of Equipment and Supplies (cu. ft.): Internal 10 ; External 0
4. Critical Dimensions (ft.)
5. List of Test Apparatus PPI Scope
6. Average Power Requirements (kw) 0.445
7. Special Thermal Requirements N/R
8. Orientation: Laboratory N/R ; Equipment N/R
9. Special Navigation Accuracy N/R
10. Stability and Pointing Accuracy N/R
11. Orbit Requirements N/R
12. Gravity Requirements Both 0 and Partial G

MANPOWER REQUIREMENTS

1. Number of Crew Required 5
2. Skill Categories Subjects
3. Total Man-hours 33.54
4. Chronological Span 13 weeks
5. Experiment Cycles: Duration 35 min. ; Number 65
6. Potential Hazards None

DISCUSSION:

TITLE	NASA No. 1.1.3.1
EMBRYOLOGY AT ZERO G	Lockheed No. 128

OBJECTIVE

Primary: Effect of zero g on the development of embryo.

INSTALLATION REQUIREMENTS

1. Normal Operating Environment: Equip. Interior ; Crew Interior
2. Weight of Equipment and Supplies (lb.) 50
3. Volume of Equipment and Supplies (cu. ft.): Internal 3 ; External 0
4. Critical Dimensions (ft.)
5. List of Test Apparatus Microscope, refrigerator, microtome, glass slides
6. Average Power Requirements (kw) 0.050
7. Special Thermal Requirements N/R
8. Orientation: Laboratory N/R ; Equipment N/R
9. Special Navigation Accuracy N/R
10. Stability and Pointing Accuracy N/R
11. Orbit Requirements N/R
12. Gravity Requirements 0 g

MANPOWER REQUIREMENTS

1. Number of Crew Required 1
2. Skill Categories Biomedical Science
3. Total Man-hours 42
4. Chronological Span 6 weeks
5. Experiment Cycles: Duration 1 hour ; Number 42
6. Potential Hazards None

DISCUSSION:

TITLE	NASA No. 1.1.3.2
CELLULAR PHYSIOLOGY	Lockheed No. 129

OBJECTIVE

Primary: Effects of Zero g on life processes

INSTALLATION REQUIREMENTS

1. Normal Operating Environment: Equip. Interior ; Crew Interior
2. Weight of Equipment and Supplies (lb.) 50
3. Volume of Equipment and Supplies (cu. ft.): Internal 3 ; External 0
4. Critical Dimensions (ft.)
5. List of Test Apparatus Microscope and supporting equipment
6. Average Power Requirements (kw) 0.050
7. Special Thermal Requirements N/R
8. Orientation: Laboratory N/R ; Equipment N/R
9. Special Navigation Accuracy N/R
10. Stability and Pointing Accuracy N/R
11. Orbit Requirements N/R
12. Gravity Requirements 0 g

MANPOWER REQUIREMENTS

1. Number of Crew Required 1
2. Skill Categories Biomedical Science
3. Total Man-hours 917 (5 yrs.)
4. Chronological Span Mission duration
5. Experiment Cycles: Duration 30 minutes ; Number 1835 (5 yrs.)
6. Potential Hazards None

DISCUSSION:

TITLE	NASA No. 1.1.3.3
MICRO-ORGANISM EXPOSURE TO SPACE ENVIRONMENT	Lockheed No. 130

OBJECTIVE

Primary: The effect of space environment on life processes.

INSTALLATION REQUIREMENTS

1. Normal Operating Environment: Equip. Interior ; Crew Interior
2. Weight of Equipment and Supplies (lb.) 2 (See note)
3. Volume of Equipment and Supplies (cu. ft.): Internal 2 ; External 0
4. Critical Dimensions (ft.)
5. List of Test Apparatus Microscope (See note)
6. Average Power Requirements (kw) 0.010
7. Special Thermal Requirements N/R
8. Orientation: Laboratory N/R ; Equipment N/R
9. Special Navigation Accuracy N/R
10. Stability and Pointing Accuracy N/R
11. Orbit Requirements N/R
12. Gravity Requirements Both 0 and Partial G

MANPOWER REQUIREMENTS

1. Number of Crew Required 1
2. Skill Categories Biomedical Science
3. Total Man-hours 917 (5 yrs.)
4. Chronological Span Mission duration
5. Experiment Cycles: Duration 30 min. ; Number 1835 (5 yrs)
6. Potential Hazards

DISCUSSION:

Note: The equipment should be the same as for experiment 1.13.2. Genetic changes in micro organisms cannot be observed without a microscope.

TITLE	NASA No. 1.1.3.4
BIOLOGICAL AND CHEMICAL DECONTAMINATION	Lockheed No. 131

OBJECTIVE

Primary: Crew Safety

Secondary: Effect of zero g on contaminants

INSTALLATION REQUIREMENTS

1. Normal Operating Environment: Equip. Interior ; Crew Interior
2. Weight of Equipment and Supplies (lb.) 10
3. Volume of Equipment and Supplies (cu. ft.): Internal 4 ; External 0
4. Critical Dimensions (ft.)
5. List of Test Apparatus Gas Detector, Biological sampler, Microscope
6. Average Power Requirements (kw) 0.010
7. Special Thermal Requirements N/R
8. Orientation: Laboratory N/R ; Equipment N/R
9. Special Navigation Accuracy N/R
10. Stability and Pointing Accuracy N/R
11. Orbit Requirements N/R
12. Gravity Requirements Both 0 and Partial G

MANPOWER REQUIREMENTS

1. Number of Crew Required 1
2. Skill Categories Biomedical Science
3. Total Man-hours 917 (5 yrs.)
4. Chronological Span Mission duration
5. Experiment Cycles: Duration 30 min. ; Number 1835 (5 yrs.)
6. Potential Hazards Contamination of inspector

DISCUSSION:

May lead to modifications to the Environment Control Subsystem.

TITLE	NASA No. 1.1.3.5
PLANT PHYSIOLOGY	Lockheed No. 132

OBJECTIVE

Primary: Effect of space station environment on broad leaf plants and algae.

INSTALLATION REQUIREMENTS

1. Normal Operating Environment: Equip. Interior ; Crew Interior
2. Weight of Equipment and Supplies (lb.) 20
3. Volume of Equipment and Supplies (cu. ft.): Internal 2 ; External 0
4. Critical Dimensions (ft.)
5. List of Test Apparatus Microscope
6. Average Power Requirements (kw) 0.20
7. Special Thermal Requirements N/R
8. Orientation: Laboratory N/R ; Equipment N/R
9. Special Navigation Accuracy N/R
10. Stability and Pointing Accuracy N/R
11. Orbit Requirements N/R
12. Gravity Requirements Both 0 and Partial G

MANPOWER REQUIREMENTS

1. Number of Crew Required 1
2. Skill Categories Biomedical Science
3. Total Man-hours 917 (5 yrs.)
4. Chronological Span Mission duration
5. Experiment Cycles: Duration 30 min. ; Number 1835 (5 yrs.)
6. Potential Hazards None

DISCUSSION:

TITLE	NASA No. 1.1.3.6
LONG TERM ANIMAL EXPOSURES	Lockheed No. 133

OBJECTIVE

Primary: Effects of space environment to life processes (Biological change)

INSTALLATION REQUIREMENTS

1. Normal Operating Environment: Equip. Interior ; Crew Interior
2. Weight of Equipment and Supplies (lb.) 300
3. Volume of Equipment and Supplies (cu. ft.): Internal 100 ; External 0
4. Critical Dimensions (ft.)
5. List of Test Apparatus Animal cages and feeding apparatus. Also environment chamber.
6. Average Power Requirements (kw) 0.3
7. Special Thermal Requirements N/R
8. Orientation: Laboratory N/R ; Equipment N/R
9. Special Navigation Accuracy N/R
10. Stability and Pointing Accuracy N/R
11. Orbit Requirements N/R
12. Gravity Requirements 0 g

MANPOWER REQUIREMENTS

1. Number of Crew Required 1
2. Skill Categories Biomedical Science
3. Total Man-hours 2912 (5 yrs.)
4. Chronological Span Mission duration
5. Experiment Cycles: Duration Cont. ; Number -
6. Potential Hazards Bites from animals, aerobic contaminants

DISCUSSION:

TITLE THE INDEPENDENT AND SYNERGISTIC EFFECTS OF RADIATION AND ZERO GRAVITY ON DIFFERENTIATION IN THE FLOUR BEETLE	NASA No. 1.1.3.7 Lockheed No. 134

OBJECTIVE

Primary: To determine interactions of radiation and zero g on a complex, multicellular creature.

INSTALLATION REQUIREMENTS

1. Normal Operating Environment: Equip. Interior ; Crew Interior
2. Weight of Equipment and Supplies (lb.) 86
3. Volume of Equipment and Supplies (cu. ft.): Internal 3.8 ; External 0
4. Critical Dimensions (ft.)
5. List of Test Apparatus Specimen jars, growth chamber (duplicates, one lead covered) (See Note)
6. Average Power Requirements (kw) .465
7. Special Thermal Requirements See Note
8. Orientation: Laboratory N/R ; Equipment N/R
9. Special Navigation Accuracy N/R
10. Stability and Pointing Accuracy N/R
11. Orbit Requirements N/R
12. Gravity Requirements zero-g

MANPOWER REQUIREMENTS

1. Number of Crew Required 1
2. Skill Categories Biomedical
3. Total Man-hours 15
4. Chronological Span 30 days
5. Experiment Cycles: Duration 1/2 hr/day ; Number 30
6. Potential Hazards none

DISCUSSION: Control maintained on earth.

NOTE: Requires a quick freeze and refrigerator. These are not included in the dimensions.

TITLE	EFFECTS OF ZERO GRAVITY ON PARAMECIA AND ON HELA CELLS	NASA No. 1.1.3.8 Lockheed No. 135

OBJECTIVE

Primary: To study the effect of zero g on the growth rate enzyme activity and morphological changes in paramecia and the hela cells.

INSTALLATION REQUIREMENTS

1. Normal Operating Environment: Equip. Internal ; Crew Internal
2. Weight of Equipment and Supplies (lb.) 90
3. Volume of Equipment and Supplies (cu. ft.): Internal 5 ; External 0
4. Critical Dimensions (ft.)
5. List of Test Apparatus Culture vessels, circulating pumps, quick-freeze equipment (sufficiently large to allow storage of samples), pipettes
6. Average Power Requirements (kw) 0.58
7. Special Thermal Requirements Freezer (-20°C)
8. Orientation: Laboratory N/R ; Equipment N/R
9. Special Navigation Accuracy N/R
10. Stability and Pointing Accuracy N/R
11. Orbit Requirements N/R
12. Gravity Requirements 0

MANPOWER REQUIREMENTS

1. Number of Crew Required 1
2. Skill Categories Biomedical
3. Total Man-hours 3650 (5 yrs.)
4. Chronological Span Duration of mission
5. Experiment Cycles: Duration 2 hrs/day ; Number 1825 (5 yrs)
6. Potential Hazards None

DISCUSSION: Assumptions: 1) Organisms will be transported to space station in refrigerated culture flasks

2) After selected daily intervals, samples will be taken, frozen, and returned to earth for study of growth rate, enzyme analysis, and morphological changes.

TITLE	EFFECT OF WEIGHTLESSNESS OF IMMUNE DEFENSES AGAINST PATHOGENIC AGENTS	NASA No. 1.1.3.9 Lockheed No. 136-137

OBJECTIVE

Primary: To study immune defenses against pathogenic agents under weightlessness and varying degrees of artificial gravity.

INSTALLATION REQUIREMENTS

1. Normal Operating Environment: Equip. Interior ; Crew Interior
2. Weight of Equipment and Supplies (lb.) 220
3. Volume of Equipment and Supplies (cu. ft.): Internal 31 ; External 0
4. Critical Dimensions (ft.)
5. List of Test Apparatus Animal support system, animal compartments, feeding system, waste collection system, air conditioning system, instruments, glassware, microscope, microscope light
6. Average Power Requirements (kw) 0.175
7. Special Thermal Requirements 37°C and 4°C
8. Orientation: Laboratory N/R ; Equipment N/R
9. Special Navigation Accuracy N/R
10. Stability and Pointing Accuracy N/R
11. Orbit Requirements N/R
12. Gravity Requirements 0g and fractional artificial gravities

MANPOWER REQUIREMENTS

1. Number of Crew Required 1
2. Skill Categories Biomedical
3. Total Man-hours 60
4. Chronological Span 15 weeks
5. Experiment Cycles: Duration cont. ; Number 2 (5 wks. between)
6. Potential Hazards Contamination hazard

DISCUSSION: Note 1. Radiation, even at low levels may have an effect on many of the mechanisms of immunity.

Note 2. Experiment imposes contamination hazards for the laboratory.

Note 3. Animal life support system may be designed to be self-sustaining and not depend on the cabin atmosphere for O_2 consumption or CO_2 elimination.

TITLE	EFFECT OF WEIGHTLESSNESS ON DIVIDING HUMAN CELLS IN CULTURE	NASA No. 1.1.3.10 Lockheed No. 138

OBJECTIVE

Primary: To investigate the morphological changes in human malignant and benign tumor cells when weightless.

INSTALLATION REQUIREMENTS

1. Normal Operating Environment: Equip. Interior ; Crew Interior
2. Weight of Equipment and Supplies (lb.) 113
3. Volume of Equipment and Supplies (cu. ft.): Internal 6.3 ; External 0
4. Critical Dimensions (ft.)
5. List of Test Apparatus Tissue culture vessels, supply of culture media, microscope with camera attachment, light source, still and movie camera, film supplies, storm cellar.
6. Average Power Requirements (kw) 0.515
7. Special Thermal Requirements -40° for refrigerated storm cellar
8. Orientation: Laboratory N/R ; Equipment N/R
9. Special Navigation Accuracy N/R
10. Stability and Pointing Accuracy N/R
11. Orbit Requirements N/R
12. Gravity Requirements 0

MANPOWER REQUIREMENTS

1. Number of Crew Required 1
2. Skill Categories Biomedical
3. Total Man-hours 304 (5 yrs.)
4. Chronological Span Mission duration
5. Experiment Cycles: Duration cont. ; Number -
6. Potential Hazards None

DISCUSSION: Movie camera is recommended to provide the capability of time photography.

EXPERIMENT AND APPLICATION SUMMARY

TITLE	GERMINATION, SEEDING DEVELOPMENT, AND HISTOLOGICAL AND MORPHOLOGICAL STUDIES DURING ZERO GRAVITY	NASA No. 1.1.3.11 Lockheed No. 139

OBJECTIVE

Primary: Observe histological, morphological & developmental phenomena of the seedlings of the snap bean, and other representation species, in 0-g.

INSTALLATION REQUIREMENTS

1. Normal Operating Environment: Equip. Interior ; Crew Interior
2. Weight of Equipment and Supplies (lb.) 441
3. Volume of Equipment and Supplies (cu. ft.): Internal 10 ; External 0
4. Critical Dimensions (ft.) 3 x 1/4 x 1/3
5. List of Test Apparatus Germination boxes (to provide proper temp. and humidity), steroscope microscope with camera attachment, camera, light source, appropriate tools.
6. Average Power Requirements (kw) 0.480
7. Special Thermal Requirements Freezer: -20°C
8. Orientation: Laboratory N/R ; Equipment N/R
9. Special Navigation Accuracy N/R
10. Stability and Pointing Accuracy N/R
11. Orbit Requirements N/R
12. Gravity Requirements 0

MANPOWER REQUIREMENTS

1. Number of Crew Required 1
2. Skill Categories Biomedical Science
3. Total Man-hours 21
4. Chronological Span 6 weeks
5. Experiment Cycles: Duration continuous ; Number -
6. Potential Hazards

DISCUSSION:

To obtain better experimental data, some samples of the seedlings should be allowed to germinate at different g levels (the max. of which in the space station is expected to be 0.4 g). Furthermore, since germinating seeds are highly susceptible to radiation, provisions must be made in the experimental designs to allow for partitioning of radiation effects from those of zero g, if any.

TITLE	EXPERIMENTAL ANALYSIS OF ANIMAL ADJUSTMENT IN VARIOUS DEGREES OF GRAVITATIONAL FORCE	NASA No. 1.1.3.12 Lockheed No. 140

OBJECTIVE

Primary: Establish optimum gravitational environment for a rodent in a biological centrifuge (max G = 0.4)

INSTALLATION REQUIREMENTS

1. Normal Operating Environment: Equip. Interior ; Crew Interior
2. Weight of Equipment and Supplies (lb.) 43
3. Volume of Equipment and Supplies (cu. ft.): Internal 9.9 ; External 0
4. Critical Dimensions (ft.)
5. List of Test Apparatus Biological centrifuge designed for small rodent use, hardware for mass determination
6. Average Power Requirements (kw) 0.270
7. Special Thermal Requirements N/R
8. Orientation: Laboratory N/R ; Equipment N/R
9. Special Navigation Accuracy N/R
10. Stability and Pointing Accuracy N/R
11. Orbit Requirements N/R
12. Gravity Requirements 0 - 0.4 g

MANPOWER REQUIREMENTS

1. Number of Crew Required 1
2. Skill Categories Biomedical
3. Total Man-hours 90
4. Chronological Span 90 days
5. Experiment Cycles: Duration Continuous ; Number -
6. Potential Hazards None

DISCUSSION:

TITLE	THE EFFECT OF WEIGHTLESSNESS ON THE REPLICATION AND RECOMBINATION OF DNA	NASA No. 1.1.3.13 Lockheed No. 141

OBJECTIVE

Primary: Study the effects of zero gravity on the replication of DNA by incorporating genetic markers in the bacteria/phage.

INSTALLATION REQUIREMENTS

1. Normal Operating Environment: Equip. Interior ; Crew Interior
2. Weight of Equipment and Supplies (lb.) 76
3. Volume of Equipment and Supplies (cu. ft.): Internal 19.1 ; External 0
4. Critical Dimensions (ft.) Incubator = 16 ft^3
5. List of Test Apparatus Incubator, glassware, media, colony counter
6. Average Power Requirements (kw) 0.275
7. Special Thermal Requirements 37°C
8. Orientation: Laboratory N/R ; Equipment N/R
9. Special Navigation Accuracy N/R
10. Stability and Pointing Accuracy N/R
11. Orbit Requirements N/R
12. Gravity Requirements 0

MANPOWER REQUIREMENTS

1. Number of Crew Required 1
2. Skill Categories Biomedical
3. Total Man-hours 7
4. Chronological Span 1 week
5. Experiment Cycles: Duration 18 hrs. ; Number 7
6. Potential Hazards None

DISCUSSION: The replication and recombination of DNA are highly sensitive to radiation. Consequently the intensity of radiation must be monitored so that control requirements can be exposed to the same dose of radiation.

Alternately the experiment in space can be shielded against much of the radiation.

Assume 7 experimental runs.

TITLE	STUDY OF TISSUE REGENERATION AND WOUND-HEALING DURING SPACE FLIGHT	NASA No. 1.1.3.14 Lockheed No. 142

OBJECTIVE

Primary: Study alteration, if any, of the tissue regenerative capabilities of Dugesia dortocephala.

INSTALLATION REQUIREMENTS

1. Normal Operating Environment: Equip. Interior ; Crew Interior
2. Weight of Equipment and Supplies (lb.) 70.5
3. Volume of Equipment and Supplies (cu. ft.): Internal 3 ; External 0
4. Critical Dimensions (ft.)
5. List of Test Apparatus Woven container, dissecting kit, dissecting board, stereoscopic microscope
6. Average Power Requirements (kw) 0.3
7. Special Thermal Requirements N/R
8. Orientation: Laboratory N/R ; Equipment N/R
9. Special Navigation Accuracy N/R
10. Stability and Pointing Accuracy N/R
11. Orbit Requirements N/R
12. Gravity Requirements 0

MANPOWER REQUIREMENTS

1. Number of Crew Required 1
2. Skill Categories Biomedical
3. Total Man-hours 42
4. Chronological Span 42 days
5. Experiment Cycles: Duration continuous ; Number
6. Potential Hazards None

DISCUSSION: Incisions should be made at varying lengths of Zero-g exposure. Location and length for the incision should be the same throughout the experiment.

TITLE	FUNCTION AND DYSFUNCTION OF THE GRAVITY SENSITIVE ORGAN IN ZERO G	NASA No. 1.1.3.15 Lockheed No. 143

OBJECTIVE

Primary: To determine if any muscle atrophy does occur during prolonged stay in zero gravity (using statocept muscles of hippolysmata californica)

Secondary: To determine whether artificial muscle stimulation will prevent or reduce atrophy if it does occur.

INSTALLATION REQUIREMENTS

1. Normal Operating Environment: Equip. Interior ; Crew Interior
2. Weight of Equipment and Supplies (lb.) 29.5
3. Volume of Equipment and Supplies (cu. ft.): Internal 1.5 ; External 0
4. Critical Dimensions (ft.)
5. List of Test Apparatus Strain gauges, recorder & amplifiers (or tape recorder), electronic stimulator with electrodes, storage containers for shrimp.
6. Average Power Requirements (kw) 0.015
7. Special Thermal Requirements N/R
8. Orientation: Laboratory N/R ; Equipment N/R
9. Special Navigation Accuracy N/R
10. Stability and Pointing Accuracy N/R
11. Orbit Requirements N/R
12. Gravity Requirements 0

MANPOWER REQUIREMENTS

1. Number of Crew Required 1
2. Skill Categories Biomedical
3. Total Man-hours 45
4. Chronological Span 90 days
5. Experiment Cycles: Duration continuous ; Number -
6. Potential Hazards None

DISCUSSION:

Note: The shrimp should be divided into two groups; the members of one group will receive periodic electrical stimulations of appropriate strength while the other group will receive no stimulation.

TITLE	EFFECT OF SPACE ENVIRONMENT ON THE FEEDING, SURVIVAL, AND REPRODUCTION OF DAPHINA PULEX	NASA No. 1.1.3.16 Lockheed No. 144

OBJECTIVE

Primary: To study the subtle effects of the space environment on Daphina Pulex to determine if activities of aquatic animals remain normal in space.

Secondary: Study use of Daphina Pulex as a possible biological monitor of atmospheric contaminants.

INSTALLATION REQUIREMENTS

1. Normal Operating Environment: Equip. Interior ; Crew Interior
2. Weight of Equipment and Supplies (lb.) 34
3. Volume of Equipment and Supplies (cu. ft.): Internal 1.38 ; External -
4. Critical Dimensions (ft.) 3 ft. x 2 ft. (laboratory bench)
5. List of Test Apparatus Animal containers (2), animals (200), lead shield for one container, microscope & sample chamber, sampling & sample transferring apparatus, film microscope illuminator (1), Polaroid camera
6. Average Power Requirements (kw) 0.100
7. Special Thermal Requirements 65° F for water in the animal containers
8. Orientation: Laboratory N/R ; Equipment N/R
9. Special Navigation Accuracy N/R
10. Stability and Pointing Accuracy N/R
11. Orbit Requirements N/R
12. Gravity Requirements 0

MANPOWER REQUIREMENTS

1. Number of Crew Required 1
2. Skill Categories Biomedical
3. Total Man-hours 30
4. Chronological Span 30 days
5. Experiment Cycles: Duration 1 hr. ; Number 30
6. Potential Hazards None

DISCUSSION: Due to the fact that these animals are extremely sensitive to a variety of environmental variables (such as vibration, temperature, toxic elements, etc.), it would make the use of these animals in space impractical. Experimenter must be highly skilled in the use of microscope and microscopic photography, and familiar with the normal development of the experimental subjects.

TITLE	DISCRIMINATION AND COMMUNICATION OF ANIMALS UNDER ZERO G CONDITIONS	NASA No. 1.1.3.17 Lockheed No. 145

OBJECTIVE

Primary: Investigate the ability of the Apic Mellifera to navigate to a previously conditioned spot while in a weightless environment.

Secondary: Observations will be made to determine whether environment affects social structure.

INSTALLATION REQUIREMENTS

1. Normal Operating Environment: Equip. Interior ; Crew Interior
2. Weight of Equipment and Supplies (lb.) 56
3. Volume of Equipment and Supplies (cu. ft.): Internal 10 ; External 0
4. Critical Dimensions (ft.) 12 in x 6 in x 6 in (beehive)
5. List of Test Apparatus See discussion below
6. Average Power Requirements (kw) 0.115
7. Special Thermal Requirements N/R
8. Orientation: Laboratory N/R ; Equipment N/R
9. Special Navigation Accuracy N/R
10. Stability and Pointing Accuracy N/R
11. Orbit Requirements N/R
12. Gravity Requirements 0

MANPOWER REQUIREMENTS

1. Number of Crew Required 1
2. Skill Categories Biomedical
3. Total Man-hours 30
4. Chronological Span 30 days
5. Experiment Cycles: Duration continuous ; Number -
6. Potential Hazards None

DISCUSSION: Technical Requirements

1) Beehive and bee colony (12" x 6" x 6") (1)
2) Bee flight cage (3' x 3' x 3' x 1/8" lucite) (1)
3) Polaroid still camera (1)
4) Color-sound motion picture camera (1)
5) Film
6) Food
7) Flight cage blower (1)
8) Artificial light source (Flourescent tube) (2)

TITLE	A STUDY OF PHOTOSYNTHETIC ACTION SPECTRA DURING EXPOSURE OF ALGAE CULTURES TO TRUE SPACE ILLUMINATION	NASA No. 1.1.3.18 Lockheed No. 146

OBJECTIVE

Primary: To determine effects of long term exposure to space illumination.

Secondary: To determine feasibility of in-space raising of food-stuff and algae ECS.

INSTALLATION REQUIREMENTS

1. Normal Operating Environment: Equip. Interior ; Crew Interior
2. Weight of Equipment and Supplies (lb.) 110
3. Volume of Equipment and Supplies (cu. ft.): Internal 4.75 ; External 0
4. Critical Dimensions (ft.)
5. List of Test Apparatus Continuous culture apparatus (custom made), sensor & recorder, light filters, light source (See Note)
6. Average Power Requirements (kw) .825
7. Special Thermal Requirements Freezer (-20°C)
8. Orientation: Laboratory N/R ; Equipment N/R
9. Special Navigation Accuracy N/R
10. Stability and Pointing Accuracy N/R
11. Orbit Requirements N/R
12. Gravity Requirements None

MANPOWER REQUIREMENTS

1. Number of Crew Required 1
2. Skill Categories Biomedical
3. Total Man-hours 120
4. Chronological Span 120 days
5. Experiment Cycles: Duration 1 hr/day ; Number 120
6. Potential Hazards Excess illumination as a visual hazard

DISCUSSION:

Note: The algae must be kept in a freezer and these dimensions are not included above.

TITLE	CHANGES IN SEX DISTRIBUTION OF OFFSPRING CONCEIVED, DEVELOPED AND BORN IN THE WEIGHTLESS STATE	NASA No. 1.1.3.19 Lockheed No. 147

OBJECTIVE

Primary: To determine if the sex distribution of white mice conceived, born and raised during orbiting space flight is affected by the conditions inherent in space flight.

INSTALLATION REQUIREMENTS

1. Normal Operating Environment: Equip. Interior ; Crew Interior
2. Weight of Equipment and Supplies (lb.) 65
3. Volume of Equipment and Supplies (cu. ft.): Internal 6.7 ; External 0
4. Critical Dimensions (ft.)
5. List of Test Apparatus Animal cages, food dispensers, freezer, specimen preservation tubes
6. Average Power Requirements (kw) 0.215
7. Special Thermal Requirements Freezer (-20°C)
8. Orientation: Laboratory N/R ; Equipment N/R
9. Special Navigation Accuracy N/R
10. Stability and Pointing Accuracy N/R
11. Orbit Requirements N/R
12. Gravity Requirements 0

MANPOWER REQUIREMENTS

1. Number of Crew Required 1
2. Skill Categories Biomedical Exp.
3. Total Man-hours 360
4. Chronological Span 6 months
5. Experiment Cycles: Duration 6 mos. ; Number 1
6. Potential Hazards Animal bites and infection

DISCUSSION: The assumption, basic to this experiment, is that conception can take place in the weightless state in orbiting spacecraft. Litter mates must be used as controls in an earth bound environment under identical conditions except for the weightless state which will exist in orbiting flight. Paired mates (at least 10 pairs) will be kept in breeding cages. Any offspring will be raised and separated at proper time and paired for additional data acquisition to determine their capability to procreate having been born and raised in the weightless state. The earth bound control group will be treated similarly. Data will be acquired for both groups as to: (1) Number of offspring/litter; (2) Sex of offspring; (3) Survival/mortality data; (4) Number of litters/6 month period; (5) Ability of subsequent generations to reproduce the species.

TITLE	NASA No. 1.1.3.20
ORIGIN OF BIOCHEMICAL COMPOUNDS	Lockheed No. 148

OBJECTIVE

Primary: To investigate spontaneous generation of chemical compounds to be used as food-stuffs.

INSTALLATION REQUIREMENTS

1. Normal Operating Environment: Equip. Int. ; Crew Int.
2. Weight of Equipment and Supplies (lb.) 49
3. Volume of Equipment and Supplies (cu. ft.): Internal 9.2 ; External 0
4. Critical Dimensions (ft.)
5. List of Test Apparatus Biochemical collection equipment (needs development), refrigerator (see note).
6. Average Power Requirements (kw) 0.225
7. Special Thermal Requirements Freezer (-20°C)
8. Orientation: Laboratory N/R ; Equipment N/R
9. Special Navigation Accuracy N/R
10. Stability and Pointing Accuracy N/R
11. Orbit Requirements N/R
12. Gravity Requirements None

MANPOWER REQUIREMENTS

1. Number of Crew Required 1
2. Skill Categories Biomedical
3. Total Man-hours 10
4. Chronological Span 20 days
5. Experiment Cycles: Duration .5 hr/day ; Number 20
6. Potential Hazards Handling of toxic contaminants

DISCUSSION:

Note: (1) NASA description does not include refrigerator
(2) exit port to space required
(3) analysis: to be performed on Earth.

TITLE	NASA No. 1.1.3.21
EFFECTS OF SPACEFLIGHT ON CEREBRAL, NEURONAL AND GLIAL CHEMISTRY	Lockheed No. 149

OBJECTIVE

Primary: Effects of space environment on brain and spinal chord tissue.

Secondary: To determine preventive measures if changes do occur.

INSTALLATION REQUIREMENTS

1. Normal Operating Environment: Equip. Int. ; Crew Int.
2. Weight of Equipment and Supplies (lb.) 135
3. Volume of Equipment and Supplies (cu. ft.): Internal 19.4 ; External 0
4. Critical Dimensions (ft.)
5. List of Test Apparatus Animal cages, special deep freezer
6. Average Power Requirements (kw) 0.620
7. Special Thermal Requirements Freezer (-40°C)
8. Orientation: Laboratory N/R ; Equipment N/R
9. Special Navigation Accuracy N/R
10. Stability and Pointing Accuracy N/R
11. Orbit Requirements N/R
12. Gravity Requirements Both Zero and Partial G

MANPOWER REQUIREMENTS

1. Number of Crew Required 1
2. Skill Categories Biomedical
3. Total Man-hours 105
4. Chronological Span 30 days
5. Experiment Cycles: Duration 3.5 hrs/day ; Number 30
6. Potential Hazards

DISCUSSION:

Control group maintained on earth.

TITLE	NASA No. 1.1.3.22
VENTILATION OF RESPIRED GASES IN MANNED SPACE ENCLOSURES	Lockheed No. 150

OBJECTIVE

Primary: To determine minimum atmospheric requirements for human and animal support in sealed environments

INSTALLATION REQUIREMENTS

1. Normal Operating Environment: Equip. Int. ; Crew Int.
2. Weight of Equipment and Supplies (lb.) 25.5
3. Volume of Equipment and Supplies (cu. ft.): Internal 1.12 ; External 0
4. Critical Dimensions (ft.)
5. List of Test Apparatus Gas chromatograph or mass spectroscope, psycho-motor performance panel
6. Average Power Requirements (kw) 0.006
7. Special Thermal Requirements N/R
8. Orientation: Laboratory N/R ; Equipment N/R
9. Special Navigation Accuracy N/R
10. Stability and Pointing Accuracy N/R
11. Orbit Requirements N/R
12. Gravity Requirements Zero G and Partial Gravity

MANPOWER REQUIREMENTS

1. Number of Crew Required 3
2. Skill Categories Biomedical Science
3. Total Man-hours 4 hr/day*
4. Chronological Span Duration of mission
5. Experiment Cycles: Duration 10 min. ; Number 1 hr*
6. Potential Hazards Disablement of crew members or worse.

DISCUSSION: It is assumed that the minimums will have been previously determined under carefully controlled conditions in research laboratory facilities at standard gravity and at appropriate partial vacuum and temperature conditions. The spaceborne experimental studies should be designed to verify the effects of partial gravity and/or weightlessness on the established safe minimums and to move from them to other levels as indicated by experimental data. The station is not the place to find and/or establish minimums. Psycho-motor performance tests should be conducted during individual exposures to minimal-environmental conditions to determine personnel effectiveness levels. Pencil and paper tests as well as machine testing should be accompalished. Vigilance and/or tracking tasks are typical examples of machine testing. Respiratory pattern - rate and depth - should be measured. *4 manhours/day required during first two weeks of experiment or until safe minimums have been established. Thereafter, one 10 minute monitoring period every 8 hours will be sufficient.

TITLE CHANGES IN VESTIBULAR NERVE ACTIVITY AND VESTIBULO-MEBRY AT FRACTIONAL G-LOADS AND PROLONGED ZERO G	NASA No. 1.1.3.23 Lockheed No. 151

OBJECTIVE

Primary: Investigate the electrical discharge pattern of vestibular nerve of Rhesus monkey during weightlessness.

Secondary: Investigate the interdependency of the otoliths semicircular canals and the degree of augmentation of the two subsystems.

INSTALLATION REQUIREMENTS

1. Normal Operating Environment: Equip. Int. ; Crew Int.
2. Weight of Equipment and Supplies (lb.) 192
3. Volume of Equipment and Supplies (cu. ft.): Internal 67.8 ; External 0
4. Critical Dimensions (ft.)
5. List of Test Apparatus Recorder and associated preamplifiers and/or tape recorder equipment for motor coordination tests, animal quarters
6. Average Power Requirements (kw) 0.315
7. Special Thermal Requirements N/R
8. Orientation: Laboratory N/R ; Equipment N/R
9. Special Navigation Accuracy N/R
10. Stability and Pointing Accuracy N/R
11. Orbit Requirements N/R
12. Gravity Requirements Fractional g to prolonged 0g

MANPOWER REQUIREMENTS

1. Number of Crew Required 2
2. Skill Categories Biomedical
3. Total Man-hours 450
4. Chronological Span 90 days
5. Experiment Cycles: Duration cont. ; Number -
6. Potential Hazards None

DISCUSSION:

It is assumed that the pick-up electrodes on the vestibular nerve are chronic implants prepared on earth prior to the experiment.

TITLE COLLECTING AND SAMPLING OF MICROORGANISMS IN NEAR EARTH ORBITS	NASA No. 1.1.3.24 Lockheed No. 152

OBJECTIVE

Primary: Test various collector and sampling techniques already developed for space operations and determine their validity.

Secondary: Analyze the yield attained by these techniques in regard to types and viability of life forms.

INSTALLATION REQUIREMENTS

1. Normal Operating Environment: Equip. Interior and Exterior ; Crew Interior
2. Weight of Equipment and Supplies (lb.) 80
3. Volume of Equipment and Supplies (cu. ft.): Internal 18.1 - 24.1 ; External
4. Critical Dimensions (ft.)
5. List of Test Apparatus Impaction collector, electrostatic collector, sterile glove box (collapsible), laboratory glassware, incubator.
6. Average Power Requirements (kw) 0.375
7. Special Thermal Requirements N/R
8. Orientation: Laboratory N/R ; Equipment N/R
9. Special Navigation Accuracy N/R
10. Stability and Pointing Accuracy N/R
11. Orbit Requirements N/R
12. Gravity Requirements Partial gravity may be needed during assay procedures

MANPOWER REQUIREMENTS

1. Number of Crew Required 1
2. Skill Categories Biomedical
3. Total Man-hours 90
4. Chronological Span 30 days
5. Experiment Cycles: Duration Cont. ; Number --
6. Potential Hazards No safety hazards are foreseen

DISCUSSION:

TITLE THE EFFECTS OF ZERO GRAVITY AT THE SUBCELLULAR LEVEL

NASA No. 1.1.3.25
Lockheed No. 153

OBJECTIVE

Primary: The effect of zero gravity and hard radiation on the activity of protein synthesis

INSTALLATION REQUIREMENTS

1. Normal Operating Environment: Equip. Interior ; Crew Interior
2. Weight of Equipment and Supplies (lb.) 231.6
3. Volume of Equipment and Supplies (cu. ft.): Internal 6 ; External 0
4. Critical Dimensions (ft.)
5. List of Test Apparatus -20°C freezer, "storm cellar" (See Note)
6. Average Power Requirements (kw) .480
7. Special Thermal Requirements -20°C (freezer)
8. Orientation: Laboratory N/R ; Equipment N/R
9. Special Navigation Accuracy N/R
10. Stability and Pointing Accuracy N/R
11. Orbit Requirements N/R
12. Gravity Requirements zero g

MANPOWER REQUIREMENTS

1. Number of Crew Required 1
2. Skill Categories Biomedical
3. Total Man-hours 18
4. Chronological Span 90 days
5. Experiment Cycles: Duration 6 hrs ; Number 3
6. Potential Hazards

DISCUSSION:

A similar experiment performed in an earth laboratory would act as a control.

Note: Dimensions do not include those of the storm cellar.

TITLE	NASA No. 1.2.1.1
EXTRATERRESTRIAL ELECTROMAGNETIC RADIATION SURVEY	Lockheed No. 311

OBJECTIVE

Primary: Determine power flux of electromagnetic radiation and the approximate location of strong sources at frequencies outside the normally transparent "atmosphere windows"

INSTALLATION REQUIREMENTS

1. Normal Operating Environment: Equip. Exterior ; Crew Interior
2. Weight of Equipment and Supplies (lb.) 30
3. Volume of Equipment and Supplies (cu. ft.): Internal ; External 2
4. Critical Dimensions (ft.)
5. List of Test Apparatus Scintillation counter
6. Average Power Requirements (kw) 0.025
7. Special Thermal Requirements N/R
8. Orientation: Laboratory N/R ; Equipment variable
9. Special Navigation Accuracy N/R
10. Stability and Pointing Accuracy
11. Orbit Requirements N/R
12. Gravity Requirements Gravity field not important

MANPOWER REQUIREMENTS

1. Number of Crew Required 1
2. Skill Categories Physical Science
3. Total Man-hours 365-730
4. Chronological Span 1-2 years
5. Experiment Cycles: Duration 1-2 years ; Number variable
6. Potential Hazards None

DISCUSSION:

Detection equipment must be provided for the entire range of the electromagnetic spectrum from very short wavelength gamma rays to very long wavelength microwaves. (Ultraviolet, infrared, and microwave radiation, however, may be excepted since these are measured in experiments 1.3.4.6, 1.3.1.8, and 1.3.2.4). Equipment must be capable of good resolution and will be rotated to locate strong sources.

TITLE	NASA No. 1.2.1.2
BUBBLE CHAMBER EXPERIMENT	Lockheed No. 308

OBJECTIVE

Primary: To determine radiation environment and study high energy ($>10^{10}$ev) interactions

INSTALLATION REQUIREMENTS

1. Normal Operating Environment: Equip. Interior ; Crew Interior
2. Weight of Equipment and Supplies (lb.) 100
3. Volume of Equipment and Supplies (cu. ft.): Internal 2 ; External 0
4. Critical Dimensions (ft.)
5. List of Test Apparatus Bubble chamber, stereoscopic camera, auxiliary electronics
6. Average Power Requirements (kw) 0.025
7. Special Thermal Requirements N/R
8. Orientation: Laboratory N/R ; Equipment N/R
9. Special Navigation Accuracy N/R
10. Stability and Pointing Accuracy N/R
11. Orbit Requirements N/R
12. Gravity Requirements Gravity field not important

MANPOWER REQUIREMENTS

1. Number of Crew Required 1
2. Skill Categories Physical Science
3. Total Man-hours 91-182
4. Chronological Span 3-6 months
5. Experiment Cycles: Duration Cont. ; Number --
6. Potential Hazards None

DISCUSSION:

TITLE	NASA No. 1.2.1.5
IONIZING RADIATION MEASUREMENTS	Lockheed No. 319

OBJECTIVE

Primary: To monitor internal and external radiation intensities

Secondary: To provide an estimate of shielding effectiveness

INSTALLATION REQUIREMENTS

1. Normal Operating Environment: Equip. Interior and Exterior ; Crew Interior
2. Weight of Equipment and Supplies (lb.) 92 (not including telescope)
3. Volume of Equipment and Supplies (cu. ft.): Internal 3.8 ; External .5
4. Critical Dimensions (ft.) 2
5. List of Test Apparatus Scintillation counters, ionization counters, sandwich spectrometers, emulsion stacks, space radiation telescope
6. Average Power Requirements (kw) 0.1
7. Special Thermal Requirements fulfilled by internal on-board placement
8. Orientation: Laboratory N/R ; Equipment
9. Special Navigation Accuracy N/R
10. Stability and Pointing Accuracy required for space radiation telescope measurements
11. Orbit Requirements N/R
12. Gravity Requirements none

MANPOWER REQUIREMENTS

1. Number of Crew Required 1
2. Skill Categories Physical Science
3. Total Man-hours 1200 (5 years)
4. Chronological Span mission lifetime
5. Experiment Cycles: Duration 9 to 15 hours; Number 60
6. Potential Hazards None

DISCUSSION:

This experiment is designed to provide a time history of the radiation flux and identify the particle types and their energies - both inside and outside the spacecraft. In the experimental set-up one crew member would devote 15 minutes per day checking detectors. Subsequently, once every month (during periods of high radiation) one crew member would work a 9 to 15 hour run.

TITLE	NASA No. 1.2.1.6
DISTRIBUTION, DENSITY & MEASUREMENT OF RADIO-ACTIVE FALLOUT AFTER NUCLEAR EXPLOSION	Lockheed No. 313

OBJECTIVE

Primary: Measure density and distribution of atmospheric radioactive fallout.

Secondary: Measure the transient high altitude and space radiations from nuclear explosions.

INSTALLATION REQUIREMENTS

1. Normal Operating Environment: Equip. Exterior ; Crew Interior
2. Weight of Equipment and Supplies (lb.) 30
3. Volume of Equipment and Supplies (cu. ft.): Internal _____ ; External 2 Ft^3
4. Critical Dimensions (ft.) Cube
5. List of Test Apparatus Gamma Ray Detector (2)
6. Average Power Requirements (kw) 0.01
7. Special Thermal Requirements N/R
8. Orientation: Laboratory Earth Orientation (desired) ; Equipment Earth Orientation (required)
9. Special Navigation Accuracy N/R
10. Stability and Pointing Accuracy N/R
11. Orbit Requirements N/R
12. Gravity Requirements Not important

MANPOWER REQUIREMENTS

1. Number of Crew Required One
2. Skill Categories Physical Science
3. Total Man-hours One per day (initial)
4. Chronological Span Mission Duration
5. Experiment Cycles: Duration One hour ; Number One per day normally with more intensive readings after an explosion
6. Potential Hazards Radiation damage to crew etc. from explosion

DISCUSSION:

Experiment is designed basically to monitor and detect all nuclear explosions. It is assumed that explosion can be monitored by 1-10 MEV gamma ray detection. Standard detector is used. It is assumed that the advanced circuitry requirements of such a system can be fulfilled.

TITLE: ALBEDO LEVEL MEASUREMENT PROGRAM

NASA No. 1.2.1.7
Lockheed No. 307

OBJECTIVE

Primary: To observe reflected, emitted and scattered radiation from planets (including earth) in U.V. to far IR without the degrading effects of the earth's atmosphere.

INSTALLATION REQUIREMENTS

1. Normal Operating Environment: Equip. Exterior ; Crew Interior
2. Weight of Equipment and Supplies (lb.) 200
3. Volume of Equipment and Supplies (cu. ft.): Internal _____ ; External 8
4. Critical Dimensions (ft.) Approx. 2' dia. x 3' long with gimbal support & drives
5. List of Test Apparatus Multicolor photometers, bolometers, IR spectrometer, UV spectrometer
6. Average Power Requirements (kw) 0.5
7. Special Thermal Requirements 20°C to -50°C ± 5°C
8. Orientation: Laboratory N/R ; Equipment Point at planets incl. earth
9. Special Navigation Accuracy N/R
10. Stability and Pointing Accuracy <1 sec of arc
11. Orbit Requirements N/R
12. Gravity Requirements Zero-G

MANPOWER REQUIREMENTS

1. Number of Crew Required One
2. Skill Categories Physical Science
3. Total Man-hours 100 to 300
4. Chronological Span period of years
5. Experiment Cycles: Duration 1 hour ; Number 100 to 300
6. Potential Hazards None

DISCUSSION:

Cannot be scheduled; dependent on launch date and planet positions.

EXPERIMENT AND APPLICATION SUMMARY

TITLE MICROMETEROID ENVIRONMENT MAPPING	NASA No. 1.2.2.1 Lockheed No. 302

OBJECTIVE

Primary: Register hits by meteoroids and record their velocity.

Secondary: Map the meteoroid flux over an extended period of time.

INSTALLATION REQUIREMENTS

1. Normal Operating Environment: Equip. Int. & Ext. ; Crew Int. & Ext.
2. Weight of Equipment and Supplies (lb.) _____
3. Volume of Equipment and Supplies (cu. ft.): Internal _____ ; External _____
4. Critical Dimensions (ft.) 2 panels each 12' x 15'
5. List of Test Apparatus _____
6. Average Power Requirements (kw) 0.01
7. Special Thermal Requirements N/R
8. Orientation: Laboratory N/R ; Equipment must be known
9. Special Navigation Accuracy N/R
10. Stability and Pointing Accuracy _____
11. Orbit Requirements N/R
12. Gravity Requirements Gravity field not important

MANPOWER REQUIREMENTS

1. Number of Crew Required One
2. Skill Categories Physical Science
3. Total Man-hours 7 hours/week
4. Chronological Span 1-2 years
5. Experiment Cycles: Duration Cont. ; Number --
6. Potential Hazards Extravehicular activity

DISCUSSION:

TITLE MICROMETEOROID COMPOSITION AND VELOCITY	NASA No. 1.2.2.2 Lockheed No. 309

OBJECTIVE

Primary: To define meteoroid composition and particle velocity

INSTALLATION REQUIREMENTS

1. Normal Operating Environment: Equip. Int. & Ext. ; Crew Interior
2. Weight of Equipment and Supplies (lb.) 35
3. Volume of Equipment and Supplies (cu. ft.): Internal 13 (stored) External 520
4. Critical Dimensions (ft.) 10 ft. dia. sphere external
5. List of Test Apparatus Inflatable chamber, pressurization systems, two cameras, spectrograph
6. Average Power Requirements (kw) 0.02
7. Special Thermal Requirements N/R
8. Orientation: Laboratory N/R ; Equipment N/R
9. Special Navigation Accuracy N/R
10. Stability and Pointing Accuracy N/R
11. Orbit Requirements N/R
12. Gravity Requirements Gravity field not important

MANPOWER REQUIREMENTS

1. Number of Crew Required One
2. Skill Categories Physical Science
3. Total Man-hours 13-26
4. Chronological Span 13-26 weeks
5. Experiment Cycles: Duration Cont. ; Number --
6. Potential Hazards None

DISCUSSION:

TITLE PROJECTION OF ARTIFICIAL METEOROIDS INTO EARTH'S ATMOSPHERE

NASA No. 1.2.2.3
Lockheed No. 310

OBJECTIVE

Primary: To obtain basic data pertinent to meteoroid phenomena

INSTALLATION REQUIREMENTS

1. Normal Operating Environment: Equip. Interior ; Crew Interior
2. Weight of Equipment and Supplies (lb.) 50
3. Volume of Equipment and Supplies (cu. ft.): Internal 9 ; External 0
4. Critical Dimensions (ft.)
5. List of Test Apparatus Shaped charge projection device and associated spark shadowgraph equipment
6. Average Power Requirements (kw) 0.1
7. Special Thermal Requirements N/R
8. Orientation: Laboratory N/R ; Equipment Earth
9. Special Navigation Accuracy N/R
10. Stability and Pointing Accuracy N/R
11. Orbit Requirements N/R
12. Gravity Requirements Gravity field not important

MANPOWER REQUIREMENTS

1. Number of Crew Required One
2. Skill Categories Physical Science
3. Total Man-hours 25
4. Chronological Span 2 weeks
5. Experiment Cycles: Duration 1 hour ; Number 25
6. Potential Hazards None

DISCUSSION:

TITLE	NASA No. 1.2.2.7
COSMIC DUST MEASUREMENTS	Lockheed No. 320

OBJECTIVE

Primary: Measure meteoroid impact rates and momenta.

INSTALLATION REQUIREMENTS

1. Normal Operating Environment: Equip. Int. & Ext. ; Crew Int. & Ext.
2. Weight of Equipment and Supplies (lb.) 104
3. Volume of Equipment and Supplies (cu. ft.): Internal 18.5 ; External 32
4. Critical Dimensions (ft.) 4
5. List of Test Apparatus Sounding boards; photomultiplier counters
6. Average Power Requirements (kw) .015 ac .010 dc
7. Special Thermal Requirements none
8. Orientation: Laboratory N/R, but must be known Equipment See Note
9. Special Navigation Accuracy None
10. Stability and Pointing Accuracy a few degrees
11. Orbit Requirements N/R
12. Gravity Requirements Not critical

MANPOWER REQUIREMENTS

1. Number of Crew Required 2
2. Skill Categories Physical Science
3. Total Man-hours 400/year
4. Chronological Span 1-2 year
5. Experiment Cycles: Duration Cont. ; Number --
6. Potential Hazards None

DISCUSSION:

This experiment would measure meteoroid impact rates and momenta during the life of the laboratory. These measurements will give statistical variations with season, orbit position and orientation. Eight sounding boards equipped with piezoelectric transducers and 8 photomultipliers could be used in 4 detection arrays mounted on masts and capable of 360° rotation about the mast and ± 90° tilt.

NOTE: Capable of 360° rotation about the mast axis and ± 90° about vehicle longitudinal centerline.

TITLE MEASUREMENT OF EARTH ORIGIN E/M RADIATION SPECTRUM & DISTRIBUTION	NASA No. 1.2.3.3 Lockheed No. 314

OBJECTIVE

Primary: See title

Secondary: Correlation of space magnetic field and cosmic rays

INSTALLATION REQUIREMENTS

1. Normal Operating Environment: Equip. Interior ; Crew Interior
2. Weight of Equipment and Supplies (lb.) 7
3. Volume of Equipment and Supplies (cu. ft.): Internal 1.3 ; External --
4. Critical Dimensions (ft.) 1
5. List of Test Apparatus Rubidium vapor magnetometer
6. Average Power Requirements (kw) .005
7. Special Thermal Requirements None
8. Orientation: Laboratory None ; Equipment N/R
9. Special Navigation Accuracy None
10. Stability and Pointing Accuracy None
11. Orbit Requirements None
12. Gravity Requirements None

MANPOWER REQUIREMENTS

1. Number of Crew Required One
2. Skill Categories Physical Science
3. Total Man-hours 20
4. Chronological Span 6 months
5. Experiment Cycles: Duration 5 minutes ; Number 200
6. Potential Hazards None

DISCUSSION:

It is assumed that one man would operate the equipment until significant experimental results have been achieved. It is also assumed that there would be coincident measurements of the cosmic ray intensity.

TITLE STUDY OF AURORAE

NASA No. 1.2.3.4
Lockheed No. 315

OBJECTIVE

Primary: To study the morphology of aurorae. To compare the auroral activity in the northern and southern hemispheres.

Secondary: To study morphology of low latitude red auroral arcs; to study transition between aurorae and airglow.

INSTALLATION REQUIREMENTS

1. Normal Operating Environment: Equip. Interior ; Crew Interior
2. Weight of Equipment and Supplies (lb.) 100 (NASA: see note)
3. Volume of Equipment and Supplies (cu. ft.): Internal 1.3 (a no. of small items); External None (window needed)
4. Critical Dimensions (ft.) 3 (telescope length)
5. List of Test Apparatus Camera, telescope, spectrophotometer
6. Average Power Requirements (kw) 0.010
7. Special Thermal Requirements Normal interior space station
8. Orientation: Laboratory N/R ; Equipment Earth oriented
9. Special Navigation Accuracy N/R
10. Stability and Pointing Accuracy N/R
11. Orbit Requirements Not critical (but polar preferred)
12. Gravity Requirements None

MANPOWER REQUIREMENTS

1. Number of Crew Required One
2. Skill Categories Physical Science
3. Total Man-hours 14,600 (5 years)
4. Chronological Span mission duration
5. Experiment Cycles: Duration 30 min/orbit ; Number 28,880
6. Potential Hazards High voltage for photomultiplier

DISCUSSION:

The low inclination orbit (29.8) would provide an unprecedented opportunity to study the morphology of low latitude aurorae, low latitude red auroral arcs, and the transition between aurorae and airglow. Polar orbits would provide opportunity to study details of northern and southern hemisphere aurorae, structure near the poles and polar airglow. At times the space station would probably pass directly through the aurora. The space station could possibly give first opportunity to study in detail morphology of sunlit aurorae. Photographic, spectrophotometric, and visual observations could be made simultaneously with relative ease. Support equipment: Tape recorder, dark room optical comparator, precision developing equipment. Provision must be made for experimenter's eyes to be dark adapted. This experiment requires the critical judgment of a Physicist (Aeronomy).

TITLE ULTRA-HIGH VACUUM RESEARCH

NASA No. 1.2.4.1
Lockheed No. 301

OBJECTIVE

Primary: Investigate techniques for obtaining ultra-high vacuum (10^{-16} to 10^{-40} mm Hg)

INSTALLATION REQUIREMENTS

1. Normal Operating Environment: Equip. Exterior ; Crew Interior
2. Weight of Equipment and Supplies (lb.) 30
3. Volume of Equipment and Supplies (cu. ft.): Internal 1 ; External 0
4. Critical Dimensions (ft.) None
5. List of Test Apparatus Pressure vessel, remotely controlled valve, several high vacuum gauges, test monitoring panel
6. Average Power Requirements (kw)
7. Special Thermal Requirements N/R
8. Orientation: Laboratory N/R ; Equipment N/R
9. Special Navigation Accuracy N/R
10. Stability and Pointing Accuracy N/R
11. Orbit Requirements N/R
12. Gravity Requirements Gravity field not important

MANPOWER REQUIREMENTS

1. Number of Crew Required One
2. Skill Categories Physical Science
3. Total Man-hours 72
4. Chronological Span 18 days
5. Experiment Cycles: Duration 4 hrs/day ; Number 14
6. Potential Hazards None

DISCUSSION:

TITLE

HORIZON SPECTROMETRY

NASA No. 1.2.4.2
Lockheed No. 303

OBJECTIVE

Primary: Determine spectral region in which the earth's horizon can most accurately be defined.

INSTALLATION REQUIREMENTS

1. Normal Operating Environment: Equip. Exterior ; Crew Interior
2. Weight of Equipment and Supplies (lb.) 120
3. Volume of Equipment and Supplies (cu. ft.): Internal _____ ; External 4
4. Critical Dimensions (ft.) Cylinder: 17" dia., 30" long
5. List of Test Apparatus Radiometer, sources to calibrate spectral response recorder
6. Average Power Requirements (kw) 0.015
7. Special Thermal Requirements 30°K for detector
8. Orientation: Laboratory N/R ; Equipment 360° Azimuth, horizontal to 30° down
9. Special Navigation Accuracy Local vertical within 0.1°
10. Stability and Pointing Accuracy Not critical - 0.5°/sec. is adequate
11. Orbit Requirements N/R
12. Gravity Requirements Zero-G

MANPOWER REQUIREMENTS

1. Number of Crew Required One
2. Skill Categories Physical Science
3. Total Man-hours 24
4. Chronological Span 26 weeks
5. Experiment Cycles: Duration 6 hrs/day ; Number 4
6. Potential Hazards None

DISCUSSION:

No external window. Earth's emission in several spectral bands from approximately 2 to 20 microns will be sampled.

TITLE CONTINUATION OF EXPERIMENT 303	NASA No. 1.2.4.2 Lockheed No. 304

OBJECTIVE

INSTALLATION REQUIREMENTS

1. Normal Operating Environment: Equip. _____ ; Crew _____
2. Weight of Equipment and Supplies (lb.) _____
3. Volume of Equipment and Supplies (cu. ft.): Internal _____ ; External _____
4. Critical Dimensions (ft.) _____
5. List of Test Apparatus _____
6. Average Power Requirements (kw) _____
7. Special Thermal Requirements _____
8. Orientation: Laboratory _____ ; Equipment _____
9. Special Navigation Accuracy _____
10. Stability and Pointing Accuracy _____
11. Orbit Requirements _____
12. Gravity Requirements _____

MANPOWER REQUIREMENTS

1. Number of Crew Required _____
2. Skill Categories _____
3. Total Man-hours _____
4. Chronological Span _____
5. Experiment Cycles: Duration _____ ; Number _____
6. Potential Hazards _____

DISCUSSION:

TITLE	NASA No. 1.2.4.2
CONTINUATION OF EXPERIMENT 303	Lockheed No. 305

OBJECTIVE

INSTALLATION REQUIREMENTS

1. Normal Operating Environment: Equip. _____ ; Crew _____
2. Weight of Equipment and Supplies (lb.) _____
3. Volume of Equipment and Supplies (cu. ft.): Internal _____ ; External _____
4. Critical Dimensions (ft.) _____
5. List of Test Apparatus _____
6. Average Power Requirements (kw) _____
7. Special Thermal Requirements _____
8. Orientation: Laboratory _____ ; Equipment _____
9. Special Navigation Accuracy _____
10. Stability and Pointing Accuracy _____
11. Orbit Requirements _____
12. Gravity Requirements _____

MANPOWER REQUIREMENTS

1. Number of Crew Required _____
2. Skill Categories _____
3. Total Man-hours _____
4. Chronological Span _____
5. Experiment Cycles: Duration _____ ; Number _____
6. Potential Hazards _____

DISCUSSION:

TITLE
CONTINUATION OF EXPERIMENT 303

NASA No. 1.2.4.2
Lockheed No. 306

OBJECTIVE

INSTALLATION REQUIREMENTS

1. Normal Operating Environment: Equip. _____ ; Crew _____
2. Weight of Equipment and Supplies (lb.) _____
3. Volume of Equipment and Supplies (cu. ft.): Internal _____ ; External _____
4. Critical Dimensions (ft.) _____
5. List of Test Apparatus _____
6. Average Power Requirements (kw) _____
7. Special Thermal Requirements _____
8. Orientation: Laboratory _____ ; Equipment _____
9. Special Navigation Accuracy _____
10. Stability and Pointing Accuracy _____
11. Orbit Requirements _____
12. Gravity Requirements _____

MANPOWER REQUIREMENTS

1. Number of Crew Required _____
2. Skill Categories _____
3. Total Man-hours _____
4. Chronological Span _____
5. Experiment Cycles: Duration _____ ; Number _____
6. Potential Hazards _____

DISCUSSION:

EXPERIMENT AND APPLICATION SUMMARY

TITLE METHODS TO OBTAIN LOCALIZED ULTRA-HIGH VACUUM	NASA No. 1.2.4.3 Lockheed No. 316

OBJECTIVE

Primary: Measure the high vacuum thought to exist in the wake of a spacecraft.

Secondary: Evaluate aero and astro-mechanic data and theories

INSTALLATION REQUIREMENTS

1. Normal Operating Environment: Equip. Exterior ; Crew Interior
2. Weight of Equipment and Supplies (lb.) 45
3. Volume of Equipment and Supplies (cu. ft.): Internal 0 ; External 3
4. Critical Dimensions (ft.)
5. List of Test Apparatus Field emission ultra high vacuum gage
6. Average Power Requirements (kw) 0.02
7. Special Thermal Requirements None
8. Orientation: Laboratory N/R ; Equipment N/R
9. Special Navigation Accuracy None required
10. Stability and Pointing Accuracy N/R
11. Orbit Requirements N/R
12. Gravity Requirements Not critical

MANPOWER REQUIREMENTS

1. Number of Crew Required One
2. Skill Categories Physical Science
3. Total Man-hours 60 hours
4. Chronological Span 4 weeks
5. Experiment Cycles: Duration 15 hour ; Number 4
6. Potential Hazards None

DISCUSSION:

TITLE

MEASUREMENT OF JET FLOW IN A VACUUM

NASA No. 1.2.4.4
Lockheed No. 317

OBJECTIVE

Primary: To determine conditions which cause attenuation and phase shift of signals due to electromagnetic noise created by exhaust plasma ionization.

Secondary: To determine total and static pressure, flow angularity, density and forces due to plume impingement on the space station surface.

INSTALLATION REQUIREMENTS

1. Normal Operating Environment: Equip. Ext. & Int. ; Crew Ext. & Int.
2. Weight of Equipment and Supplies (lb.) 150
3. Volume of Equipment and Supplies (cu. ft.): Internal 2 ; External 2
4. Critical Dimensions (ft.) 1.5 x 1.0
5. List of Test Apparatus See attached sheet
6. Average Power Requirements (kw) 0.2
7. Special Thermal Requirements N/R
8. Orientation: Laboratory N/R ; Equipment N/R
9. Special Navigation Accuracy N/R
10. Stability and Pointing Accuracy N/R
11. Orbit Requirements N/R
12. Gravity Requirements None

MANPOWER REQUIREMENTS

1. Number of Crew Required One
2. Skill Categories Physical Science
3. Total Man-hours 20
4. Chronological Span 20 hours
5. Experiment Cycles: Duration 2 minutes ; Number Indeterminate
6. Potential Hazards Extravehicular work is required

DISCUSSION:

This experiment can be run initially as an extremely simple one which would use only station installed attitude and translation motors with station communication gear and astronaut extravehicular activity to check the effects on the station outer hull.

5. TEST APPARATUS

1. Space Station Communication Equipment
2. Microwave Receiving Antennas
3. Lobing Switch
4. Power Meter
5. Recording Equipment
6. Thermocouples
7. Resistance Thermometers
8. Hot Wire Anemometers
9. Cameras
10. Infra-red Sensors
11. Pressure Sensors

TITLE	NASA No. 1.2.4.6
MEASUREMENT OF LOCAL SPACECRAFT EXTERNAL ENVIRONMENT	Lockheed No. 318

OBJECTIVE

Primary: To measure local environmental conditions.
Secondary: Determine drag phenomena, local contamination by lab leakage, waste discharge and effect of control jets.

INSTALLATION REQUIREMENTS

1. Normal Operating Environment: Equip. Ext. & Int. ; Crew Interior
2. Weight of Equipment and Supplies (lb.) 64
3. Volume of Equipment and Supplies (cu. ft.): Internal 3.1 ; External 1.0
4. Critical Dimensions (ft.)
5. List of Test Apparatus Standing wave impedance probe, mass spectrometer, capacitance gages
6. Average Power Requirements (kw) 0.125 D.C.
7. Special Thermal Requirements None
8. Orientation: Laboratory N/R ; Equipment N/R
9. Special Navigation Accuracy N/R
10. Stability and Pointing Accuracy N/R
11. Orbit Requirements N/R
12. Gravity Requirements None

MANPOWER REQUIREMENTS

1. Number of Crew Required One
2. Skill Categories Physical Science
3. Total Man-hours 1040 (5 years)
4. Chronological Span Mission duration
5. Experiment Cycles: Duration 5 minutes ; Number 1/orbit first 10 days then 2/wk
6. Potential Hazards None

DISCUSSION:

This experiment would be done in conjunction with close ground tracking to investigate drag phenomena. The first ten days the crewman would take readings or make recordings once every orbit; after that, he will perform routine checks for the duration of the mission. It is assumed that the necessary positioning booms would be available.

TITLE	NASA No. 1.2.4.7
DRAG STUDIES	Lockheed No. 664

OBJECTIVE

Primary: To conduct drag studies on a variety of inflatable bodies.

INSTALLATION REQUIREMENTS

1. Normal Operating Environment: Equip. External ; Crew Internal
2. Weight of Equipment and Supplies (lb.) 100
3. Volume of Equipment and Supplies (cu. ft.): Internal 8 (stored) External
4. Critical Dimensions (ft.)
5. List of Test Apparatus Theodolite, electronic distance measuring equipment, inflatable drag bodies
6. Average Power Requirements (kw) 1.0
7. Special Thermal Requirements N/R
8. Orientation: Laboratory N/R ; Equipment N/R
9. Special Navigation Accuracy N/R
10. Stability and Pointing Accuracy N/R
11. Orbit Requirements N/R
12. Gravity Requirements Gravity field not important

MANPOWER REQUIREMENTS

1. Number of Crew Required One
2. Skill Categories Physical Science
3. Total Man-hours 15
4. Chronological Span 1 week
5. Experiment Cycles: Duration 1.5 hrs. avg. ; Number 10
6. Potential Hazards None

DISCUSSION:

TITLE

STELLAR BACKGROUND MEASUREMENTS

NASA No. 1.3.1.8
Lockheed No. 713

OBJECTIVE

Primary: Collect data of Stellar background for space navigation equipment.

INSTALLATION REQUIREMENTS

1. Normal Operating Environment: Equip. Int. & Ext. ; Crew Interior
2. Weight of Equipment and Supplies (lb.) 200
3. Volume of Equipment and Supplies (cu. ft.): Internal 4 ; External 0.5
4. Critical Dimensions (ft.) --
5. List of Test Apparatus UV and IR radiometers for various selected wavelength regions
6. Average Power Requirements (kw) 0.2
7. Special Thermal Requirements N/R
8. Orientation: Laboratory N/R ; Equipment Inertially oriented
9. Special Navigation Accuracy N/R
10. Stability and Pointing Accuracy Not critical
11. Orbit Requirements N/R
12. Gravity Requirements None

MANPOWER REQUIREMENTS

1. Number of Crew Required 3
2. Skill Categories Physical Science
3. Total Man-hours 720
4. Chronological Span Duration of mission
5. Experiment Cycles: Duration 3 days ; Number 10 (5 years)
6. Potential Hazards None

DISCUSSION:

The knowledge of stellar background in various wavelength regions is necessary since any equipment which is designed to lock on a particular star for navigation has to do this in the presence of this background.

TITLE MEASUREMENT OF LUNAR TEMPERATURES USING A SPECTROMETER

NASA No. 1.3.1.15
Lockheed No. 701

OBJECTIVE

Primary: To determine radiation characteristic of the moon and compute its temperatures.

INSTALLATION REQUIREMENTS

1. Normal Operating Environment: Equip. Int. & Ext. ; Crew Interior
2. Weight of Equipment and Supplies (lb.) 300
3. Volume of Equipment and Supplies (cu. ft.): Internal 20 ; External 1
4. Critical Dimensions (ft.)
5. List of Test Apparatus IR - spectrometer
6. Average Power Requirements (kw) 0.5
7. Special Thermal Requirements N/R
8. Orientation: Laboratory N/R ; Equipment Moon oriented
9. Special Navigation Accuracy N/R
10. Stability and Pointing Accuracy High enough to scan portions of the moon (< 10 arc sec.)
11. Orbit Requirements
12. Gravity Requirements None

MANPOWER REQUIREMENTS

1. Number of Crew Required One
2. Skill Categories Physical Science
3. Total Man-hours 80
4. Chronological Span One week
5. Experiment Cycles: Duration half orbit ; Number 112
6. Potential Hazards None

DISCUSSION:

The experiment would provide radiation characteristics (emissivity, reflectivity, etc.) of the moon as a function of wavelength.

TITLE OBSERVATION OF EARTH SURFACE IN 8-16 MICRON REGION	NASA No. 1.3.2.1 Lockheed No. 702

OBJECTIVE

Primary: Provide data on feasibility and operational aspect of space located IR systems.

Secondary: Detailed picture of the radiation characteristics of earth's surface.

INSTALLATION REQUIREMENTS

1. Normal Operating Environment: Equip. Interior ; Crew Interior
2. Weight of Equipment and Supplies (lb.) 220 (incl. in 1.4.1.4)
3. Volume of Equipment and Supplies (cu. ft.): Internal 10.5 (incl. ~~in 1.4.1.4~~) External 0
4. Critical Dimensions (ft.) (See 1.4.1.4)
5. List of Test Apparatus IR receiver, recorder, film magazine, power supply, CRT display*
6. Average Power Requirements (kw) 2.2*
7. Special Thermal Requirements Special cooling of IR detector*
8. Orientation: Laboratory earth (desired) ; Equipment earth (required)
9. Special Navigation Accuracy See 1.4.1.4
10. Stability and Pointing Accuracy Platform stability not critical, 1 degree pointing accuracy desired
11. Orbit Requirements Prefer higher orbit inclinations for maximum earth coverage
12. Gravity Requirements None

MANPOWER REQUIREMENTS

1. Number of Crew Required Incl. in 1.4.1.10
2. Skill Categories Physical Science
3. Total Man-hours 200 (in 1.4.1.10)
4. Chronological Span 3 months
5. Experiment Cycles: Duration Cont. ; Number --
6. Potential Hazards None

DISCUSSION:

Experiment shall provide a detailed thermal picture of the earth surface in order to determine the variation characteristic of various terrestrial surface elements and help specify required sensors for special purposes. At the same time, the experiment will give experience in the long time, space located operation of IR equipment.

*Included in 1.4.1.4

TITLE	NASA No. 1.3.2.2
ELECTRO OPTICAL EXPERIMENT	Lockheed No. 703

OBJECTIVE

Primary: Determine techniques to extend the use of photographic equipment into darkness.

INSTALLATION REQUIREMENTS

1. Normal Operating Environment: Equip. Interior ; Crew Interior
2. Weight of Equipment and Supplies (lb.) 30*
3. Volume of Equipment and Supplies (cu. ft.): Internal 2.1 ; External 0
4. Critical Dimensions (ft.) 68" (length of telescope)**
5. List of Test Apparatus Image orthicon, photogrammetric telescope** film processor
6. Average Power Requirements (kw) 0.500
7. Special Thermal Requirements Film storage, 75°F; telescope, 40-90°F
8. Orientation: Laboratory earth (desired) ; Equipment earth (required
9. Special Navigation Accuracy 1 mile
10. Stability and Pointing Accuracy telescope, .003°/sec stability; 0.5° pointing accuracy
11. Orbit Requirements Low inclination orbit would be satisfactory
12. Gravity Requirements None

MANPOWER REQUIREMENTS

1. Number of Crew Required One
2. Skill Categories Physical Science Experimenter
3. Total Man-hours 48
4. Chronological Span 6 months
5. Experiment Cycles: Duration 20 minutes ; Number 144
6. Potential Hazards None

DISCUSSION:

This experiment would study factors which now limit the performance of the electro-optical system. Supplementary activity would investigate the combined use of electro-optical and other electromagnetic techniques and frequencies.

* In addition to experiment 1.3.3.4
**Included in experiment 1.3.3.4

TITLE

ORBITING RADIO TELESCOPE

NASA No. 1.3.2.3
Lockheed No. 704

OBJECTIVE

Primary: To locate and measure the radio emissions of stars especially at frequencies for which atmospheric attenuation is high.

INSTALLATION REQUIREMENTS

1. Normal Operating Environment: Equip. Int. & Ext. ; Crew Interior
2. Weight of Equipment and Supplies (lb.) 900
3. Volume of Equipment and Supplies (cu. ft.): Internal 2.5 ; External 285
4. Critical Dimensions (ft.) Antenna; 15' dia.
5. List of Test Apparatus Parabolic antenna, masers (interchangeable), cryogenic system, second stage low noise amplifier (paramp or best available for freq.), std. receiver
6. Average Power Requirements (kw) .17
7. Special Thermal Requirements N/R
8. Orientation: Laboratory N/R ; Equipment Inertial Orientation
9. Special Navigation Accuracy N/R
10. Stability and Pointing Accuracy Overall accuracy: ±0.05°
11. Orbit Requirements N/R
12. Gravity Requirements N/R

MANPOWER REQUIREMENTS

1. Number of Crew Required One
2. Skill Categories Physical Science
3. Total Man-hours 3650 (5 years)
4. Chronological Span Mission duration
5. Experiment Cycles: Duration Continuous ; Number --
6. Potential Hazards None

DISCUSSION:

An erectable antenna of 15' dia. would be usable up to 25-30 gc. To maintain the 0.04 rms deviation from true parabola needed for best results to 30 gc the antenna would weigh about 480 lb. A smaller 5' dia. antenna could be used up to 75 gc and would weigh about 40 lb. The masers, cryogenics, receivers, pointing systems, etc. would weigh about 380 lb. The measurements would be direction, frequency, bandwidth or spectral distribution, periodicity of the stellar emissions.

TITLE	NASA No. 1.3.2.4
ORBITING PHASED ARRAY RADIO TELESCOPE	Lockheed No. 705

OBJECTIVE

Primary: To locate and measure radio emissions of stars at frequencies which ionospheric reflections preclude at earth surface

INSTALLATION REQUIREMENTS

1. Normal Operating Environment: Equip. Int. & Ext. ; Crew Interior
2. Weight of Equipment and Supplies (lb.) 10,000
3. Volume of Equipment and Supplies (cu. ft.): Internal 4+(200 stored) ; External antenna envelope: 4 sq. mi.
4. Critical Dimensions (ft.) Longest antenna dimension up to 3 miles
5. List of Test Apparatus
6. Average Power Requirements (kw) 1
7. Special Thermal Requirements N/R
8. Orientation: Laboratory N/R ; Equipment Stellar
9. Special Navigation Accuracy N/R
10. Stability and Pointing Accuracy
11. Orbit Requirements See discussion
12. Gravity Requirements N/R

MANPOWER REQUIREMENTS

1. Number of Crew Required 2
2. Skill Categories Physical Science
3. Total Man-hours 29,200 (5 years)
4. Chronological Span Mission duration
5. Experiment Cycles: Duration Continuous ; Number --
6. Potential Hazards None

DISCUSSION:

This experiment should be limited to synchronous orbits partially to reduce pointing rates of antenna if vehicle is earth oriented and partially to avoid radiation belts which would have adverse effects at lower frequencies. Angle measurements will not be as good as for experiment 1.3.2.3 at any frequency measured (15 mc and below) and will be extremely rough for frequencies much below 100 kc, though extensive correlation techniques could provide improvements in angular information. Other parameters would be obtained in manner similar to higher frequency techniques.

TITLE	NASA No. 1.3.2.5
RADIO ASTRONOMY STAR RESOLUTION	Lockheed No. 706

OBJECTIVE

Primary: To measure star location angles and resolution capability through frequency diversity interferometer techniques.

INSTALLATION REQUIREMENTS

1. Normal Operating Environment: Equip. Int. & Ext. ; Crew Interior
2. Weight of Equipment and Supplies (lb.) 500
3. Volume of Equipment and Supplies (cu. ft.): Internal 2.5 ; External 1.5
4. Critical Dimensions (ft.)
5. List of Test Apparatus Wide band or multifeed erectable antennas, octave bandwith minimum noise level receivers
6. Average Power Requirements (kw) 0.3
7. Special Thermal Requirements N/R
8. Orientation: Laboratory N/R ; Equipment Stellar
9. Special Navigation Accuracy N/R
10. Stability and Pointing Accuracy ±0.05°
11. Orbit Requirements N/R
12. Gravity Requirements N/R

MANPOWER REQUIREMENTS

1. Number of Crew Required One
2. Skill Categories Physical Science
3. Total Man-hours 7300 (5 years)
4. Chronological Span Mission duration
5. Experiment Cycles: Duration 4 hr/day ; Number 1825 (5 years)
6. Potential Hazards None

DISCUSSION:

By correlation of phase relationships of emissions of stars, covering a wide frequency range, received at relatively closely spaced antennae, angle measurements, and hence resolution, of the stellar emissions can be made very precise.

TITLE	NASA No. 1.3.2.6
RADIO AND RADAR ASTRONOMY MEASUREMENTS OF SOLAR FLARES	Lockheed No. 714

OBJECTIVE

Primary: Monitor solar flares with radio and radar equipment.
Secondary: Develop understanding of the flare mechanism and the measurement techniques.

INSTALLATION REQUIREMENTS

1. Normal Operating Environment: Equip. Int. & Ext. ; Crew Interior
2. Weight of Equipment and Supplies (lb.) 200 (radar) 712 (radio)
3. Volume of Equipment and Supplies (cu. ft.): Internal 7.0 ; External 1.0
4. Critical Dimensions (ft.) Inside: 2.5 Outside: 3
5. List of Test Apparatus Radio receiver - radar equipment
6. Average Power Requirements (kw) 0.100 radar 0.112 radio
7. Special Thermal Requirements N/R
8. Orientation: Laboratory N/R ; Equipment Solar
9. Special Navigation Accuracy N/R
10. Stability and Pointing Accuracy For certain antenna systems some degree of pointing accuracy is needed (a few degrees: $< \pm 5°$)
11. Orbit Requirements N/R
12. Gravity Requirements None

MANPOWER REQUIREMENTS

1. Number of Crew Required 2
2. Skill Categories Physical Science
3. Total Man-hours 2 mhrs/solar event
4. Chronological Span Mission duration
5. Experiment Cycles: Duration 1 hour ; Number --
6. Potential Hazards None

DISCUSSION:

TITLE	NASA No. 1.3.2.7
LOW FREQUENCY IONOSPHERIC RESEARCH	Lockheed No. 712

OBJECTIVE

Primary: To measure ionosphere attenuation and reflection from upper side and spacecraft - earth paths.

INSTALLATION REQUIREMENTS

1. Normal Operating Environment: Equip. Int. & Ext. ; Crew Interior
2. Weight of Equipment and Supplies (lb.) 150
3. Volume of Equipment and Supplies (cu. ft.): Internal 1.5 ; External 2.5
4. Critical Dimensions (ft.)
5. List of Test Apparatus
6. Average Power Requirements (kw) 0.1
7. Special Thermal Requirements N/R
8. Orientation: Laboratory N/R ; Equipment Earth and Space
9. Special Navigation Accuracy N/R
10. Stability and Pointing Accuracy N/R
11. Orbit Requirements N/R
12. Gravity Requirements Not critical

MANPOWER REQUIREMENTS

1. Number of Crew Required 2
2. Skill Categories Physical Science
3. Total Man-hours 4000
4. Chronological Span 1 year
5. Experiment Cycles: Duration Continuous ; Number --
6. Potential Hazards None

DISCUSSION:

Most measurements of the ionosphere from the top side, thus far, have been short term or limited in the frequency range of the tests. Long term and multifrequency measurements from the topside would bring the knowledge of these aspects in line with the knowledge of the underside of the ionosphere. Two vehicles working in cooperation with each other could made transverse measurements through selected portions of the ionosphere.

TITLE SPECTRAL ANALYSES OF STARS USEFUL FOR SPACE NAVIGATION	NASA No. 1.3.3.2 Lockheed No. 707

OBJECTIVE

Primary: To measure spectral distribution of various bright stars such as Sirius, Canopus, etc.

INSTALLATION REQUIREMENTS

1. Normal Operating Environment: Equip. Ext. & Int. ; Crew Interior
2. Weight of Equipment and Supplies (lb.) 100
3. Volume of Equipment and Supplies (cu. ft.): Internal 0.5 ; External 0.5
4. Critical Dimensions (ft.) None
5. List of Test Apparatus IR spectrometer
6. Average Power Requirements (kw) 0.022
7. Special Thermal Requirements N/R
8. Orientation: Laboratory N/R ; Equipment Towards specific stars
9. Special Navigation Accuracy N/R
10. Stability and Pointing Accuracy 0.1 sec.
11. Orbit Requirements N/R
12. Gravity Requirements None

MANPOWER REQUIREMENTS

1. Number of Crew Required One
2. Skill Categories Physical Science
3. Total Man-hours 4256
4. Chronological Span Mission duration
5. Experiment Cycles: Duration 6 hours ; Number 608
6. Potential Hazards None

DISCUSSION:

The precision with which a star sensor can discriminate a particular star depends on how accurate the ratio of a star's characteristics to characteristics of other stars is known.

TITLE EVALUATION OF PERTINENT FACTORS IN HIGH RESOLUTION SPACE PHOTOGRAMMETRY

NASA No. 1.3.3.4
Lockheed No. 708

OBJECTIVE

Primary: Establish the feasibility of terrestial mapping from orbital vehicles.

Secondary: Assess the quality of data obtainable, and evaluate proposed experiments based on photogrammetry.

INSTALLATION REQUIREMENTS

1. Normal Operating Environment: Equip. Interior ; Crew Interior
2. Weight of Equipment and Supplies (lb.) 760
3. Volume of Equipment and Supplies (cu. ft.): Internal 21 ; External 0
4. Critical Dimensions (ft.) 68"(telescope)
5. List of Test Apparatus Telescope, 70-mm and 5-inch aerial cameras, photometers, film processor, film (90 lb)
6. Average Power Requirements (kw) 0.200
7. Special Thermal Requirements film storage at 35 to 55°F (include radiation protection)
8. Orientation: Laboratory earth (desired) ; Equipment earth (required)
9. Special Navigation Accuracy Maximum obtainable; 1000-2000' is currently obtainable
10. Stability and Pointing Accuracy 0.01 deg/sec; 0.01 to 0.03 deg.
11. Orbit Requirements No special requirements
12. Gravity Requirements None

MANPOWER REQUIREMENTS

1. Number of Crew Required One
2. Skill Categories Physical Science Experimenter
3. Total Man-hours 90
4. Chronological Span 3 months
5. Experiment Cycles: Duration 1 hour ; Number 90
6. Potential Hazards None

DISCUSSION:

Results of this experiment could greatly aid experiments such as 1.4.1.10 and related photogrammetric experiments.

TITLE OBSERVATIONS OF A SPACE RADIATION TELESCOPE

NASA No. 1.3.4.1
Lockheed No. 709

OBJECTIVE

Primary: To provide basic directional and spectral information concerning cosmic rays, solar flare phenomena, galactic gamma rays, and neutron flux distribution by use of a space radiation telescope.

INSTALLATION REQUIREMENTS

1. Normal Operating Environment: Equip. see below ; Crew Interior
2. Weight of Equipment and Supplies (lb.) 90
3. Volume of Equipment and Supplies (cu. ft.): Internal 1.3 ; External .5
4. Critical Dimensions (ft.) 6' (telescope head)
5. List of Test Apparatus Telescope head, electronics and control package, deployment mechanism, data display
6. Average Power Requirements (kw) 0.020
7. Special Thermal Requirements None except for passive thermal control (coatings) of telescope
8. Orientation: Laboratory no requirement on vehicle ; Equipment manually controllable
9. Special Navigation Accuracy Precise for flux determinations - automatic correlation
10. Stability and Pointing Accuracy
11. Orbit Requirements See below
12. Gravity Requirements None

MANPOWER REQUIREMENTS

1. Number of Crew Required One
2. Skill Categories Physical Science Experimenter
3. Total Man-hours 456*
4. Chronological Span Mission duration
5. Experiment Cycles: Duration * ; Number --
6. Potential Hazards None

DISCUSSION:

1. supporting equipment, interior; telescope, exterior
8. several different inclinations so attenuation effects of radiation belts can be analyzed.

*No crew time will be required for normal mapping operations. However, for examination of special targets, several minutes will be required to reorient the telescope.

TITLE

SOLAR TELESCOPE

NASA No. 1.3.4.8
Lockheed No. 710

OBJECTIVE

Primary: Investigate the solar corona and solar flares by simulating a total eclipse with a coronagraph.

INSTALLATION REQUIREMENTS

1. Normal Operating Environment: Equip. Exterior ; Crew Interior
2. Weight of Equipment and Supplies (lb.) 100
3. Volume of Equipment and Supplies (cu. ft.): Internal 0 ; External 5
4. Critical Dimensions (ft.) Undetermined - See discussion
5. List of Test Apparatus Coronagraph of unspecified design - not available, fine guidance sun sensor subsystem, replacement lenses
6. Average Power Requirements (kw) 0.025
7. Special Thermal Requirements Instrument requires a high degree of thermal stability
8. Orientation: Laboratory sun (desired) ; Equipment sun
9. Special Navigation Accuracy N/R
10. Stability and Pointing Accuracy 2 hour exposures at a 1 degree pointing accuracy (2 half-orbits)*
11. Orbit Requirements None specified
12. Gravity Requirements None

MANPOWER REQUIREMENTS

1. Number of Crew Required One
2. Skill Categories Physical Science Experimenter
3. Total Man-hours 270
4. Chronological Span 3 months
5. Experiment Cycles: Duration 3 hours ; Number 90
6. Potential Hazards None**

DISCUSSION:

An extensive and long term development period is required to develop a suitable coronagraph. Considerable reduction is required in instrument length before the experiment can be considered feasible for the proposed manned earth orbiting space stations.

* Performance of the attitude control system is critical to the successful accomplishment of this experiment.

**Use an airlock for retrieval of film.

TITLE	NASA No. 1.3.4.9
OBSERVATION OF IONIZED CLOUDS IN SPACE	Lockheed No. 711

OBJECTIVE

Primary: Observe the motions of an ionized cloud and determine the ionization processes.

INSTALLATION REQUIREMENTS

1. Normal Operating Environment: Equip. Int. & Ext. ; Crew Interior
2. Weight of Equipment and Supplies (lb.) 9 lb. & telescope of other experiments
3. Volume of Equipment and Supplies (cu. ft.): Internal .7 ; External (see 3.C)
4. Critical Dimensions (ft.) 40" dia., 110" length (typical)
5. List of Test Apparatus Telescope, detector - photomultiplier, control electronics, camera
6. Average Power Requirements (kw) 0.080
7. Special Thermal Requirements Athermalization of telescope is essential
8. Orientation: Laboratory earth (desired) ; Equipment
9. Special Navigation Accuracy No requirement
10. Stability and Pointing Accuracy .06 arc sec/min stability; 0.1 arc sec pointing accuracy
11. Orbit Requirements No requirement
12. Gravity Requirements None

MANPOWER REQUIREMENTS

1. Number of Crew Required One
2. Skill Categories Physical Science Experimenter
3. Total Man-hours 23 hours
4. Chronological Span Mission lifetime
5. Experiment Cycles: Duration .75 hour ; Number 30 (5 years)
6. Potential Hazards None

DISCUSSION:

The NASA suggests that the observer be an astronomer because of the scientific importance of the observations and the oral notes.

EXPERIMENT AND APPLICATION SUMMARY

LR 18906

TITLE MULTISPECTRAL SENSING OF TERRESTRIAL SURFACE	NASA No. 1.4.1.1 Lockheed No. 351

OBJECTIVE

Primary: Correlate relationship between spectral radiance and surface features of the earth

INSTALLATION REQUIREMENTS

1. Normal Operating Environment: Equip. Ext. ; Crew Int.
2. Weight of Equipment and Supplies (lb.) (200 + 320)*
3. Volume of Equipment and Supplies (cu. ft.): Internal (10.5+5.5)* External
4. Critical Dimensions (ft.) Approx. 2' dia. x 3' long & gimbal support & drives
5. List of Test Apparatus Reflective telescope, photomultiplier, bolometer or cooled doped germainium detector*
6. Average Power Requirements (kw) 0.5
7. Special Thermal Requirements 20°C to -50°C ± 5°C during experiment
8. Orientation: Laboratory N/R ; Equipment Earth
9. Special Navigation Accuracy
10. Stability and Pointing Accuracy <10 sec. arc/sec.
11. Orbit Requirements N/R
12. Gravity Requirements Zero-G

MANPOWER REQUIREMENTS

1. Number of Crew Required *
2. Skill Categories Phy. Sci.
3. Total Man-hours *
4. Chronological Span 30-90 days
5. Experiment Cycles: Duration 2 hrs. ; Number 30-90
6. Potential Hazards None

DISCUSSION: *Included in 1.4.1.4 and 1.4.1.10

TITLE PHOTOGRAPHY OF TERRESTRIAL SURFACES

NASA No. 1.4.1.2
Lockheed No. 352

OBJECTIVE

Primary: To detect features not revealed by conventional photography

INSTALLATION REQUIREMENTS

1. Normal Operating Environment: Equip. Int. ; Crew Int.
2. Weight of Equipment and Supplies (lb.) 50
3. Volume of Equipment and Supplies (cu. ft.): Internal 0.09 ; External 0
4. Critical Dimensions (ft.)
5. List of Test Apparatus Camera
6. Average Power Requirements (kw) 0.002
7. Special Thermal Requirements 20°C ± 5°C
8. Orientation: Laboratory N/R ; Equipment Earth
9. Special Navigation Accuracy N/R
10. Stability and Pointing Accuracy 10 sec arc/sec
11. Orbit Requirements N/R
12. Gravity Requirements Zero-G

MANPOWER REQUIREMENTS

1. Number of Crew Required 1
2. Skill Categories Phy. Sci.
3. Total Man-hours 60-180
4. Chronological Span 30-90 days
5. Experiment Cycles: Duration 2 hrs. ; Number 30-90
6. Potential Hazards None

DISCUSSION: The objectives of this experiment are accomplished under experiments 1.4.1.4 and 1.4.1.10 and other related experiments.

TITLE

MONITORING OF EARTH'S VEGETATION BY IR

NASA No. 1.4.1.3
Lockheed No. 353

OBJECTIVE

Primary: Plant life and moisture in soils have differing reflectivity & emissivity which can be detected by IR

INSTALLATION REQUIREMENTS

1. Normal Operating Environment: Equip. Ext. ; Crew Int.
2. Weight of Equipment and Supplies (lb.) 220*
3. Volume of Equipment and Supplies (cu. ft.): Internal 10.5 ; External 0
4. Critical Dimensions (ft.) 18" x 18" x 40"
5. List of Test Apparatus see 1.4.1.4
6. Average Power Requirements (kw) 0.2*
7. Special Thermal Requirements Preferably -20°C to -50°C
8. Orientation: Laboratory N/R ; Equipment Earth
9. Special Navigation Accuracy N/R
10. Stability and Pointing Accuracy see 1.4.1.4
11. Orbit Requirements N/R
12. Gravity Requirements Zero-G

MANPOWER REQUIREMENTS

1. Number of Crew Required 1**
2. Skill Categories Phy. Sci.
3. Total Man-hours 1820 (5 yrs)**
4. Chronological Span mission duration
5. Experiment Cycles: Duration ; Number 1820 (5 yrs)
6. Potential Hazards None

DISCUSSION:

* included in 1.4.1.4
** included in 1.4.1.10

TITLE INFARED (7-30 MICRONS) RESPONSE OF GEOLOGIC MATERIALS	NASA No. 1.4.1.4 Lockheed No. 357

OBJECTIVE

Primary: Mapping of surface structures & relative emissivity levels

INSTALLATION REQUIREMENTS

1. Normal Operating Environment: Equip. Interior ; Crew Interior
2. Weight of Equipment and Supplies (lb.) 220
3. Volume of Equipment and Supplies (cu. ft.): Internal 10.5 ; External 0
4. Critical Dimensions (ft.) (see below)
5. List of Test Apparatus IR receiver; recorder, film magazine, power supply, CRT display
6. Average Power Requirements (kw)
7. Special Thermal Requirements Special cooling of IR detector (incl. in 3 a,b)
8. Orientation: Laboratory earth (desired) ; Equipment earth (required)
9. Special Navigation Accuracy In-orbit position accuracies obtainable (1000-2000') should be adequate
10. Stability and Pointing Accuracy Platform stability not critical, 1 degree pointing accuracy desired
11. Orbit Requirements preferably high inclination for maximum earth coverage
12. Gravity Requirements None

MANPOWER REQUIREMENTS

1. Number of Crew Required incl. in 1.4.1.10
2. Skill Categories Phy. Sci. Experimenter
3. Total Man-hours incl. in 1.4.1.10
4. Chronological Span Mission lifetime
5. Experiment Cycles: Duration Cont. ; Number
6. Potential Hazards None

DISCUSSION:

4. receiver, 1.5 x 1.5 x 1; recorder, 1.5 x 2 x 1.5; film magazine, 1. x 1.5 x 1; power supply 1.5 x 1 x .5; CRO display .5 x .5 x 1.

9. location correlation will be made most precisely with coincident photographic mapping and position recognition.

TITLE INFRARED-UV SPECTRAL EMITTANCE

NASA No. 1.4.1.5
Lockheed No. 362

OBJECTIVE

Primary: Obtain precise measurements of solar spectral emittance in the IR & UV regions

Secondary: Check validity of data obtained with earth based equipment

INSTALLATION REQUIREMENTS

1. Normal Operating Environment: Equip. Int. & Ext. ; Crew Interior
2. Weight of Equipment and Supplies (lb.) 150
3. Volume of Equipment and Supplies (cu. ft.): Internal 8 ; External 8
4. Critical Dimensions (ft.) None
5. List of Test Apparatus IR spectrometer, UV spectrometer, automatic spectrum analyzer, & data recorder
6. Average Power Requirements (kw) 0.5
7. Special Thermal Requirements N/R
8. Orientation: Laboratory N/R ; Equipment solar
9. Special Navigation Accuracy N/R
10. Stability and Pointing Accuracy ±0.1° 1°/Hr
11. Orbit Requirements N/R
12. Gravity Requirements N/R

MANPOWER REQUIREMENTS

1. Number of Crew Required 1 (1 Hr/Day)
2. Skill Categories Phys. Sci.
3. Total Man-hours 1825
4. Chronological Span 5 years
5. Experiment Cycles: Duration 90 days ; Number 20
6. Potential Hazards None

DISCUSSION:

Solar radiation amplitude will be measured using IR and UV spectrometers with multiple narrow band sensing heads adjusted to different wavelengths. The IR spectrum from 0.8 to 400 microns will be analyzed. The UV spectrum from 150 to 4000 angstrom units will be analyzed. After the solar analysis is complete, this experiment can be extended to star analysis.

TITLE	NASA No. 1.4.1.7
RADAR & MICROWAVE GEOSCIENCE MAPPING CAPABILITY	Lockheed No. 360

OBJECTIVE

Primary: Establish reflectivity maps of earth surface - land masses.

INSTALLATION REQUIREMENTS

1. Normal Operating Environment: Equip. Int. & Ext. ; Crew Interior
2. Weight of Equipment and Supplies (lb.) 480
3. Volume of Equipment and Supplies (cu. ft.): Internal 2 ; External 4
4. Critical Dimensions (ft.) Ant. 1 dimension 20-30 ft.
5. List of Test Apparatus CW & pulsed radars - 3 antennae - 1-3' x 30', 2-5' dia.
6. Average Power Requirements (kw) 2.0
7. Special Thermal Requirements N/R
8. Orientation: Laboratory N/R ; Equipment Earth
9. Special Navigation Accuracy ± 1 mile
10. Stability and Pointing Accuracy 1°
11. Orbit Requirements See discussion
12. Gravity Requirements zero g

MANPOWER REQUIREMENTS

1. Number of Crew Required 1
2. Skill Categories Phys. Sci. (radar operator)
3. Total Man-hours 840
4. Chronological Span 21 wks.
5. Experiment Cycles: Duration 7 wks. ; Number 3
6. Potential Hazards None

DISCUSSION:

Determine near tangential & normal reflectivity of earth land surfaces. Measure reflected pulsed emission response both tangential & normal. C.W. response normal only using 2 antennas with maximum possible isolation. Measurements of received return to include both amplitude and phase distribution. On board correlation used to reduce data for transmission to earth. A polar orbit at an altitude that provides a small deviation from exactly repeating sets of passes will allow a complete earth survey in a few weeks.

TITLE	NASA No. 1.4.1.8
SPECTRAL PHOTOGRAPHIC RESPONSE	Lockheed No. 361

OBJECTIVE

Primary: Measure spectral response of various photographic emulsions from IR thru Gamma

Secondary: Develop improved photographic emulsions

INSTALLATION REQUIREMENTS

1. Normal Operating Environment: Equip. Interior ; Crew Interior
2. Weight of Equipment and Supplies (lb.) 300 lbs.
3. Volume of Equipment and Supplies (cu. ft.): Internal 15 ; External 0
4. Critical Dimensions (ft.)
5. List of Test Apparatus Various spectrometers, spectrum analyzer and various photographic equipment.
6. Average Power Requirements (kw) 0.5
7. Special Thermal Requirements N/R
8. Orientation: Laboratory N/R ; Equipment solar
9. Special Navigation Accuracy N/R
10. Stability and Pointing Accuracy $\pm$ 0.1° 1°/hr
11. Orbit Requirements N/R
12. Gravity Requirements -

MANPOWER REQUIREMENTS

1. Number of Crew Required 1 (4 hrs/day)
2. Skill Categories Phys. Scientist
3. Total Man-hours 1400
4. Chronological Span 1 yr.
5. Experiment Cycles: Duration 1 day ; Number 350
6. Potential Hazards None

DISCUSSION:

Solar radiation will be broken up into several wavelengths bands by spectrometers and applied to various photographic emulsions for selected portions of the spectrum. The spectrum from 150 to 4×10^6 angstrom units will be utilized. Each emulsion sample will be exposed, processed, and analyzed on-board the space station.

TITLE MULTISPECTRAL PHOTOGRAPHY, FILM FILTER ORIENTED	NASA No. 1.4.1.9 Lockheed No. 364

OBJECTIVE

Primary: Evaluate multispectral photographic methods using multiple narrow band filters.

Secondary: Determine feasibility of using radiation holes in earth's atmosphere

INSTALLATION REQUIREMENTS

1. Normal Operating Environment: Equip. Int. ; Crew Int.
2. Weight of Equipment and Supplies (lb.) 200
3. Volume of Equipment and Supplies (cu. ft.): Internal 15 ; External 5
4. Critical Dimensions (ft.)
5. List of Test Apparatus Tracking periscope, IR sensor, optical sensor, UV sensor, film processor, various filters
6. Average Power Requirements (kw) 0.5
7. Special Thermal Requirements N/R
8. Orientation: Laboratory Earth (preferred) ; Equipment Earth
9. Special Navigation Accuracy Altitude ± 0.5 n.m. Lat. & Long. ± 0.1°
10. Stability and Pointing Accuracy 10 second of arc pointing 0.003°/second body rate motion
11. Orbit Requirements N/R
12. Gravity Requirements N/R

MANPOWER REQUIREMENTS

1. Number of Crew Required 2
2. Skill Categories Phy. Sci.
3. Total Man-hours 2000
4. Chronological Span 2 years
5. Experiment Cycles: Duration 5 days ; Number 100
6. Potential Hazards None

DISCUSSION:

Experimental investigation to increase man's knowledge of the earth and its atmosphere. The experiment consists of three sensors (IR, visual, UV) designed to record the reflective and emitted radiation in selected narrow spectral bands between UV and IR regions. The sensor equipment will be capable of generating a pictoral representation of the spatial variations in the reflective or emitted radiation from previously chosen test sites on earth's surface.

TITLE	NASA No. 1.4.1.10
GEOGRAPHIC STUDIES	Lockheed No. 358

OBJECTIVE

Primary: Obtain detailed knowledge of physical and cultural environment.

Secondary: Evaluations of land use, surface roughness, distributional factors of water, vegetation, etc.

INSTALLATION REQUIREMENTS

1. Normal Operating Environment: Equip. Interior ; Crew Interior
2. Weight of Equipment and Supplies (lb.) 320
3. Volume of Equipment and Supplies (cu. ft.): Internal 5.5 ; External 0
4. Critical Dimensions (ft.) See attached sheet
5. List of Test Apparatus See attached sheet
6. Average Power Requirements (kw) .300
7. Special Thermal Requirements Interior atmosphere temperature control is adequate
8. Orientation: Laboratory Earth (desired) ; Equipment Earth (required)
9. Special Navigation Accuracy Maximum obtainable
10. Stability and Pointing Accuracy .01 degree/second; .01 to .03 deg.
11. Orbit Requirements Preferably high inclination for maximum earth coverage
12. Gravity Requirements None

MANPOWER REQUIREMENTS

1. Number of Crew Required 6
2. Skill Categories Phys. Sci. Experimenter
3. Total Man-hours 87,600 (5 yrs.)
4. Chronological Span Mission lifetime
5. Experiment Cycles: Duration Cont. ; Number -
6. Potential Hazards None

DISCUSSION:

7. on-board film processing will require precise liquid temperature control. 9. 1000-2000' position accuracy obtainable with ground ranging techniques and computer updating of stored ephemeris data will be adequate for a large number of the photographic applications. Additional benefits will be realized by each further increase in navigation accuracy.

NOTE: All earth oriented photographic and IR application manhours are included in this description. Film processing equipment (on-board) and film quantities are not included in the wt., vol., and power requirements.

EQUIPMENT SUMMARY - 1.4.1.10/358

ITEM	WT. (LB)	VOL. (FT^3)	POWER REQ'D. (WATTS)	DIMENSIONS (IN.)
9 x 9 Mapping Camera & Control Unit	100	1.3	100	23 x 14 x 8
Viewfinder	70	.7	-	60 x 12
Velocity/Height System	33	.5	108	4 x 7 x 6
Auxiliary Data Recorder	35	.8	75	13 x 10 x 10
Tape Recorder	30	.5	30	12 x 12 x 6
Spares & Test Equipment	40	1.5	25	-

TITLE	NASA No. 1.4.1.11
TERRAIN MAPPING APPLICATIONS BY MICROWAVE RADIOMETER	Lockheed No. 355

OBJECTIVE

Primary: To obtain microwave emissivity map of earth land masses

INSTALLATION REQUIREMENTS

1. Normal Operating Environment: Equip. Int. & Ext. ; Crew Int.
2. Weight of Equipment and Supplies (lb.) 220
3. Volume of Equipment and Supplies (cu. ft.): Internal 1.5 ; External 1
4. Critical Dimensions (ft.)
5. List of Test Apparatus Microwave radiometer 14-18 gc. 2-3 ft. dia. ant.
6. Average Power Requirements (kw) .15
7. Special Thermal Requirements N/R
8. Orientation: Laboratory N/R ; Equipment Earth
9. Special Navigation Accuracy
10. Stability and Pointing Accuracy
11. Orbit Requirements See discussion
12. Gravity Requirements N/R

MANPOWER REQUIREMENTS

1. Number of Crew Required 3
2. Skill Categories Phy. Sci.
3. Total Man-hours 550
4. Chronological Span 7 wks.
5. Experiment Cycles: Duration 2 wks. ; Number 1
6. Potential Hazards None

DISCUSSION:

Determine emissivity of earth land masses at a frequency below water vapor & oxygen absorption bands yet high enough to avoid high usage frequencies and to obtain minimum beamwidth for given antenna size. A polar orbit at an altitude that provides a small deviation from exactly repeating sets of passes for each day will allow a complete earth survey in a few weeks. With sufficient antenna isolation, this experiment can be conducted simultaneously with 1.4.1.7.

TITLE	NASA No. 1.4.1.12
CARTOGRAPHY	Lockheed No. 356

OBJECTIVE

Primary: Mapping on scale of at least 1:1,000,000. for entire earth

Secondary: Detailed mapping for special sites - recurrent observations over same areas will give dynamic properties

INSTALLATION REQUIREMENTS

1. Normal Operating Environment: Equip. Interior ; Crew Interior
2. Weight of Equipment and Supplies (lb.) 320*
3. Volume of Equipment and Supplies (cu. ft.): Internal 5.5* ; External 0
4. Critical Dimensions (ft.) See 1.4.1.10
5. List of Test Apparatus See 1.4.1.10
6. Average Power Requirements (kw) .300*
7. Special Thermal Requirements Interior atmosphere temperature control is adq.
8. Orientation: Laboratory Earth (desired) ; Equipment Earth (required)
9. Special Navigation Accuracy Maximum obtainable (see 1.4.1.10)
10. Stability and Pointing Accuracy .01 deg./second; .01 to .03 deg.
11. Orbit Requirements Preferably high inclination for maximum earth coverage.
12. Gravity Requirements None

MANPOWER REQUIREMENTS

1. Number of Crew Required incl. in 1.4.1.10
2. Skill Categories Phys. Sci. Experimenter
3. Total Man-hours incl. in 1.4.1.10
4. Chronological Span Mission lifetime
5. Experiment Cycles: Duration continuous ; Number -
6. Potential Hazards None

DISCUSSION:

Specialists in photogrammetry and photo-interpretation, preferably geographers-cartographers, are preferred.

7. may require special liquid bath temperature control for photographic chemicals

*included in 1.4.1.10

TITLE

GEODETIC SURVEY

NASA No. 1.4.1.13
Lockheed No. 359

OBJECTIVE

Primary: Improve knowledge of shape of the earth.

Secondary: Map rectification

INSTALLATION REQUIREMENTS

1. Normal Operating Environment: Equip. Int. ; Crew Int.
2. Weight of Equipment and Supplies (lb.) 40
3. Volume of Equipment and Supplies (cu. ft.): Internal 2 ; External 1
4. Critical Dimensions (ft.)
5. List of Test Apparatus Digital computer program, camera, telescope
6. Average Power Requirements (kw) 0.5
7. Special Thermal Requirements Near room temperature
8. Orientation: Laboratory N/R ; Equipment Variable
9. Special Navigation Accuracy Thousands of feet
10. Stability and Pointing Accuracy Several seconds of arc
11. Orbit Requirements High inclination preferred
12. Gravity Requirements Not critical

MANPOWER REQUIREMENTS

1. Number of Crew Required 1
2. Skill Categories Phy. Sci.
3. Total Man-hours 3000 (5 yrs.)
4. Chronological Span Mission duration
5. Experiment Cycles: Duration 0.5 hr ; Number 6000 (5 yrs.)
6. Potential Hazards None

DISCUSSION:

Procedure depends on information received from ground tracking network.

TITLE	NASA No. 1.4.1.14
DETERMINATION OF COMPOSITION AND DISTRIBUTION OF ROCK TYPES FROM INFRARED EMISSION IMAGERY	Lockheed No. 363

OBJECTIVE

Primary: Map the distribution of rock material having similar physical mineralogical or chemical characteristics.

INSTALLATION REQUIREMENTS

1. Normal Operating Environment: Equip. Int. ; Crew Int.
2. Weight of Equipment and Supplies (lb.) 220*
3. Volume of Equipment and Supplies (cu. ft.): Internal 10.5* ; External 0
4. Critical Dimensions (ft.) See 1.4.1.4
5. List of Test Apparatus IR receiver, recorder, film magazine, power supply CRT display
6. Average Power Requirements (kw)
7. Special Thermal Requirements Special cooling of IR detector*
8. Orientation: Laboratory Earth (desired) ; Equipment Earth (required)
9. Special Navigation Accuracy 1000-2000' should be adequate
10. Stability and Pointing Accuracy Platform stability not critical; 1 degree pointing accuracy desired.
11. Orbit Requirements Preferably high inclination for maximum earth coverage
12. Gravity Requirements N/R

MANPOWER REQUIREMENTS

1. Number of Crew Required **
2. Skill Categories Phy. Sci. Exp.
3. Total Man-hours 60**
4. Chronological Span 60 days
5. Experiment Cycles: Duration 1 hr ; Number 60**
6. Potential Hazards None

DISCUSSION:

Only large scale anomalies will be of real value in mineral detection. Spectral maps will be of great academic but little economic value since depth detections are not yet within the state of the art and masking presents great problems.

* included in 1.4.1.4

**included in 1.4.1.10

TITLE	MULTISPECTRAL SENSING OF LUNAR SURFACES	NASA No. 1.4.2.2 Lockheed No. 365

OBJECTIVE

Primary: Obtain lunar surface maps using narrow band sensors.
Secondary: Locate and define areas of unusual electromagnetic radiation.

INSTALLATION REQUIREMENTS

1. Normal Operating Environment: Equip. Int. & Ext. ; Crew Int.
2. Weight of Equipment and Supplies (lb.) 800
3. Volume of Equipment and Supplies (cu. ft.): Internal 20 ; External 10
4. Critical Dimensions (ft.)
5. List of Test Apparatus Microwave sensor, IR sensor, UV sensor, tracking periscope.
6. Average Power Requirements (kw) 1.0
7. Special Thermal Requirements N/R
8. Orientation: Laboratory N/R ; Equipment Lunar
9. Special Navigation Accuracy + 1 N.M. Altitude + 0.1° Celestial position
10. Stability and Pointing Accuracy 1 sec. of arc pointing 0.003°/second body rate motion
11. Orbit Requirements N/R
12. Gravity Requirements N/R

MANPOWER REQUIREMENTS

1. Number of Crew Required 2 (2 hr/day)
2. Skill Categories Phy. Sci.
3. Total Man-hours 730
4. Chronological Span 2 years
5. Experiment Cycles: Duration 10 min. ; Number 500
6. Potential Hazards None

DISCUSSION:

Experimental investigation to increase man's knowledge of the moon and develop space multispectral sensing techniques. Tracking periscope and microwave antenna will be used to map the lunar surface using narrow band filters in the microwave, IR, and UV spectrums, photo imaging and electronic recording techniques will be utilized.

TITLE	NASA No. 1.4.2.3.
PHOTOGRAPHY OF LUNAR SURFACES	Lockheed No. 366

OBJECTIVE

Primary: Obtain high resolution photo maps of the lunar surface

Secondary: Develop improved lunar mapping techniques and photo image compensation methods.

INSTALLATION REQUIREMENTS

1. Normal Operating Environment: Equip. Int. & Ext. ; Crew Int.
2. Weight of Equipment and Supplies (lb.) 600
3. Volume of Equipment and Supplies (cu. ft.): Internal 15 ; External 600
4. Critical Dimensions (ft.)
5. List of Test Apparatus Tracking telescopic camera, film processing equipment
6. Average Power Requirements (kw) 0.3
7. Special Thermal Requirements N/R
8. Orientation: Laboratory N/R ; Equipment Lunar
9. Special Navigation Accuracy ± 1 N.M. Altitude ± 0.1° celestial position
10. Stability and Pointing Accuracy 1 sec. of arc pointing 0.003°/second body rate motion
11. Orbit Requirements N/R
12. Gravity Requirements N/R

MANPOWER REQUIREMENTS

1. Number of Crew Required 2 (2 hr/day)
2. Skill Categories Phys. Scientist
3. Total Man-hours 730
4. Chronological Span 2 yrs.
5. Experiment Cycles: Duration 10 min ; Number 500
6. Potential Hazards None

DISCUSSION:

Experimental investigation to increase man's knowledge of the moon and develop space photography techniques. A tracking telescope will be used to take photographs of the lunar surface using various optical gain factors. Both photographic film imaging and electronic recording techniques will be utilized.

TITLE

STUDY OF PLANETARY AND SATELLITE SURFACE PROPERTIES

NASA No. 1.4.3.4
Lockheed No. 354

OBJECTIVE

Primary: Determine the nature of soil failure due to compressure stress in a zero-g environment.

Secondary: Determine effect of water distribution in the soil specimens after lengthy exposure to low gravitational fields.

INSTALLATION REQUIREMENTS

1. Normal Operating Environment: Equip. Interior ; Crew Interior
2. Weight of Equipment and Supplies (lb.) 400
3. Volume of Equipment and Supplies (cu. ft.): Internal 6.5 ; External None
4. Critical Dimensions (ft.) None
5. List of Test Apparatus Steel/glass container (cubical), photographic equipment with short focal length, supplementary lighting, hydraulic press
6. Average Power Requirements (kw) 0.05
7. Special Thermal Requirements None
8. Orientation: Laboratory No requirement ; Equipment No requirement
9. Special Navigation Accuracy No requirement
10. Stability and Pointing Accuracy No pointing accuracy requirements; vehicle accelerations must be minimized for short periods.
11. Orbit Requirements No requirement
12. Gravity Requirements Must be zero; data at 1/6 g (lunar) would also be useful.

MANPOWER REQUIREMENTS

1. Number of Crew Required 1
2. Skill Categories Phy. Sci. Experimenter
3. Total Man-hours 75
4. Chronological Span 100 days
5. Experiment Cycles: Duration 1/2 hr. ; Number 100
6. Potential Hazards None

DISCUSSION:

Volume: 0.5 cu. ft./sample
0.5 container
1.0 press

Assume 10 samples. Camera included in other experiments.

EXPERIMENT AND APPLICATION SUMMARY

TITLE	NASA No. 1.5.1.1
ACTION OF LIQUIDS UNDER ZERO-G AND PARTIAL-G ENVIRONMENT	Lockheed No. 402

OBJECTIVE

Primary: Study the action of liquids under zero and partial gravity including capillary effects and surface tensions.

Secondary: Study the effects of zero and partial gravity for wetting and non-wetting liquid/container combinations.

INSTALLATION REQUIREMENTS

1. Normal Operating Environment: Equip. Int. ; Crew Int.
2. Weight of Equipment and Supplies (lb.) 75
3. Volume of Equipment and Supplies (cu. ft.): Internal 8 ; External 0
4. Critical Dimensions (ft.)
5. List of Test Apparatus Various capillary tubes, vessels, plus photographic equipment, viewing lenses, etc.
6. Average Power Requirements (kw) 0.01
7. Special Thermal Requirements Temperature equilibrium of fluids under observation.
8. Orientation: Laboratory N/R ; Equipment N/R
9. Special Navigation Accuracy N/R
10. Stability and Pointing Accuracy N/R
11. Orbit Requirements N/R
12. Gravity Requirements Zero and Partial G

MANPOWER REQUIREMENTS

1. Number of Crew Required 2
2. Skill Categories Phy. Sci.
3. Total Man-hours 224-336
4. Chronological Span 4-6 wks.
5. Experiment Cycles: Duration 4 hrs. ; Number 28-42
6. Potential Hazards None, unless fluids are inherently hazardous.

DISCUSSION:

TITLE	NASA No. 1.5.1.2
HEAT TRANSFER IN LIQUIDS AND GASES UNDER ZERO GRAVITY	Lockheed No. 403

OBJECTIVE

Primary: Determine the mechanics of heat transfer under zero gravity.

INSTALLATION REQUIREMENTS

1. Normal Operating Environment: Equip. Int. ; Crew Int.
2. Weight of Equipment and Supplies (lb.) 200
3. Volume of Equipment and Supplies (cu. ft.): Internal 3 ; External 0
4. Critical Dimensions (ft.)
5. List of Test Apparatus Elec. heat source, containers for fluids, thermocouples, photographic equipment.
6. Average Power Requirements (kw) .1
7. Special Thermal Requirements Periodic temperature stabilization.
8. Orientation: Laboratory N/R ; Equipment N/R
9. Special Navigation Accuracy N/R
10. Stability and Pointing Accuracy N/R
11. Orbit Requirements N/R
12. Gravity Requirements Zero-G

MANPOWER REQUIREMENTS

1. Number of Crew Required 2
2. Skill Categories Phy. Sci.
3. Total Man-hours 224-336
4. Chronological Span 4-6 wks.
5. Experiment Cycles: Duration 4 hrs. ; Number 28-42
6. Potential Hazards None

DISCUSSION:

TITLE ABSORPTION OF GASES BY LIQUIDS AT ZERO-G

NASA No. 1.5.1.3
Lockheed No. 404

OBJECTIVE

Primary: To determine the absorption characteristics of gases in liquids at zero-g for use in the design of life support systems.

Secondary: Increase the technology in this area.

INSTALLATION REQUIREMENTS

1. Normal Operating Environment: Equip. Int. ; Crew Int.
2. Weight of Equipment and Supplies (lb.) 109
3. Volume of Equipment and Supplies (cu. ft.): Internal 7 ; External 0
4. Critical Dimensions (ft.) 1.8 x 1.5 x 1.4
5. List of Test Apparatus Tank assembly, gas analyzer, camera, pressure and temperature indicator and recorder
6. Average Power Requirements (kw) 0.210
7. Special Thermal Requirements N/R
8. Orientation: Laboratory N/R ; Equipment N/R
9. Special Navigation Accuracy N/R
10. Stability and Pointing Accuracy N/R
11. Orbit Requirements N/R
12. Gravity Requirements zero g

MANPOWER REQUIREMENTS

1. Number of Crew Required 1
2. Skill Categories Phy. Sci.
3. Total Man-hours 100
4. Chronological Span 25 days
5. Experiment Cycles: Duration 4 hrs. ; Number 25
6. Potential Hazards None

DISCUSSION:

This experiment will provide information for use in life support systems. The amount of gases, CO_2, O_2, that can be absorbed by water would be measured. Included would be the absorption rate and gas distribution. Possible use of the test set-up of experiment 1.5.1.5 (static and motion tests of the interface phenomena).

TITLE DENSITY PROFILES OF LIQUID IN THE CRITICAL REGION

NASA No. 1.5.1.4
Lockheed No. 405

OBJECTIVE

Primary: To determine the density of fluids in the critical region.

INSTALLATION REQUIREMENTS

1. Normal Operating Environment: Equip. Int. ; Crew Int.
2. Weight of Equipment and Supplies (lb.) 99
3. Volume of Equipment and Supplies (cu. ft.): Internal 2.6 ; External 0
4. Critical Dimensions (ft.) 1.7 ft dia.
5. List of Test Apparatus Cameras, Environmental Control Box (Test Cell), Power Supplies
6. Average Power Requirements (kw) 0.145
7. Special Thermal Requirements N/R
8. Orientation: Laboratory N/R ; Equipment N/R
9. Special Navigation Accuracy N/R
10. Stability and Pointing Accuracy N/R
11. Orbit Requirements N/R
12. Gravity Requirements Zero-G

MANPOWER REQUIREMENTS

1. Number of Crew Required 1
2. Skill Categories Phy. Sci.
3. Total Man-hours 84
4. Chronological Span 6 months
5. Experiment Cycles: Duration 7 hours ; Number 12
6. Potential Hazards None

DISCUSSION:

By conducting the experiments to determine the fluid densities at the critical region in zero-g, the gravity dependent hydrostatic pressure is eliminated and a true critical condition can be attained.

TITLE	NASA No. 1.5.1.5
STATIC AND MOTION TESTS OF INTERFACE PHENOMENA	Lockheed No. 406

OBJECTIVE

Primary: To measure interface phenomena under zero-g

INSTALLATION REQUIREMENTS

1. Normal Operating Environment: Equip. Int. ; Crew Int.
2. Weight of Equipment and Supplies (lb.) 213
3. Volume of Equipment and Supplies (cu. ft.): Internal 12.3 ; External 0
4. Critical Dimensions (ft.)
5. List of Test Apparatus Tank module, pressure & temp. recorders, camera orientation system.
6. Average Power Requirements (kw) 0.220
7. Special Thermal Requirements N/R
8. Orientation: Laboratory N/R ; Equipment N/R
9. Special Navigation Accuracy N/R
10. Stability and Pointing Accuracy N/R
11. Orbit Requirements N/R
12. Gravity Requirements Zero-G

MANPOWER REQUIREMENTS

1. Number of Crew Required 1
2. Skill Categories Phy. Sci.
3. Total Man-hours 200
4. Chronological Span 50 days
5. Experiment Cycles: Duration 4 hours ; Number 50
6. Potential Hazards None

DISCUSSION:

The data from this experiment are not required for success of the mission, but are needed for design of future space systems. Surface shapes of liquid-liquid, liquid-gas, liquid-vapor, and liquid-liquid-gas, systems will be measured to determine intermolecular forces and forces due to surface tension and wetting.

EXPERIMENT AND APPLICATION SUMMARY

TITLE	NASA No. 1.5.1.6
STUDY OF CONVECTIVE HEAT TRANSFER AT ZERO-G	Lockheed No. 407

OBJECTIVE

Primary: Determination of heat transfer rates to stored fluids at near zero-g levels.

INSTALLATION REQUIREMENTS

1. Normal Operating Environment: Equip. Int. ; Crew Int.
2. Weight of Equipment and Supplies (lb.) 200
3. Volume of Equipment and Supplies (cu. ft.): Internal 9 ; External 0
4. Critical Dimensions (ft.)
5. List of Test Apparatus Two test tanks mounted on rotating table
6. Average Power Requirements (kw) 0.2
7. Special Thermal Requirements Variable
8. Orientation: Laboratory N/R ; Equipment N/R
9. Special Navigation Accuracy N/R
10. Stability and Pointing Accuracy N/R
11. Orbit Requirements N/R
12. Gravity Requirements Zero-g

MANPOWER REQUIREMENTS

1. Number of Crew Required 1
2. Skill Categories Phy. Sci.
3. Total Man-hours 100
4. Chronological Span 25 days
5. Experiment Cycles: Duration 4 ; Number 25
6. Potential Hazards None

DISCUSSION:

TITLE THERMAL CONDUCTIVITY OF HIGH PRESSURE GASES UNDER ZERO-G

NASA No. 1.5.1.13
Lockheed No. 408

OBJECTIVE

Primary: To evaluate heat conduction of gases under zero-g

INSTALLATION REQUIREMENTS

1. Normal Operating Environment: Equip. Int. ; Crew Int.
2. Weight of Equipment and Supplies (lb.) 50
3. Volume of Equipment and Supplies (cu. ft.): Internal 0.3 ; External 0
4. Critical Dimensions (ft.) 1 (diameter) by 1/3
5. List of Test Apparatus Concentric spheres or cylinders, heating element, precision temperature measurement and recording apparatus.
6. Average Power Requirements (kw) 0.1
7. Special Thermal Requirements Variable
8. Orientation: Laboratory N/R ; Equipment N/R
9. Special Navigation Accuracy N/R
10. Stability and Pointing Accuracy N/R
11. Orbit Requirements N/R
12. Gravity Requirements Zero-g (free from vehicle accelerations)

MANPOWER REQUIREMENTS

1. Number of Crew Required 1
2. Skill Categories Phys. Sci.
3. Total Man-hours 40
4. Chronological Span 1 week
5. Experiment Cycles: Duration 1 hr. ; Number 40
6. Potential Hazards None

DISCUSSION:

Although the experiment is to be carried out in a zero-g laboratory, some g force remains, however small. It is necessary to locate the plate normal to the gravity vector, and the g vector points from the hot plate to the cold plate to reduce convective current.

THERMAL CONDUCTIVITY OF HIGH PRESSURE GASES UNDER ZERO-G

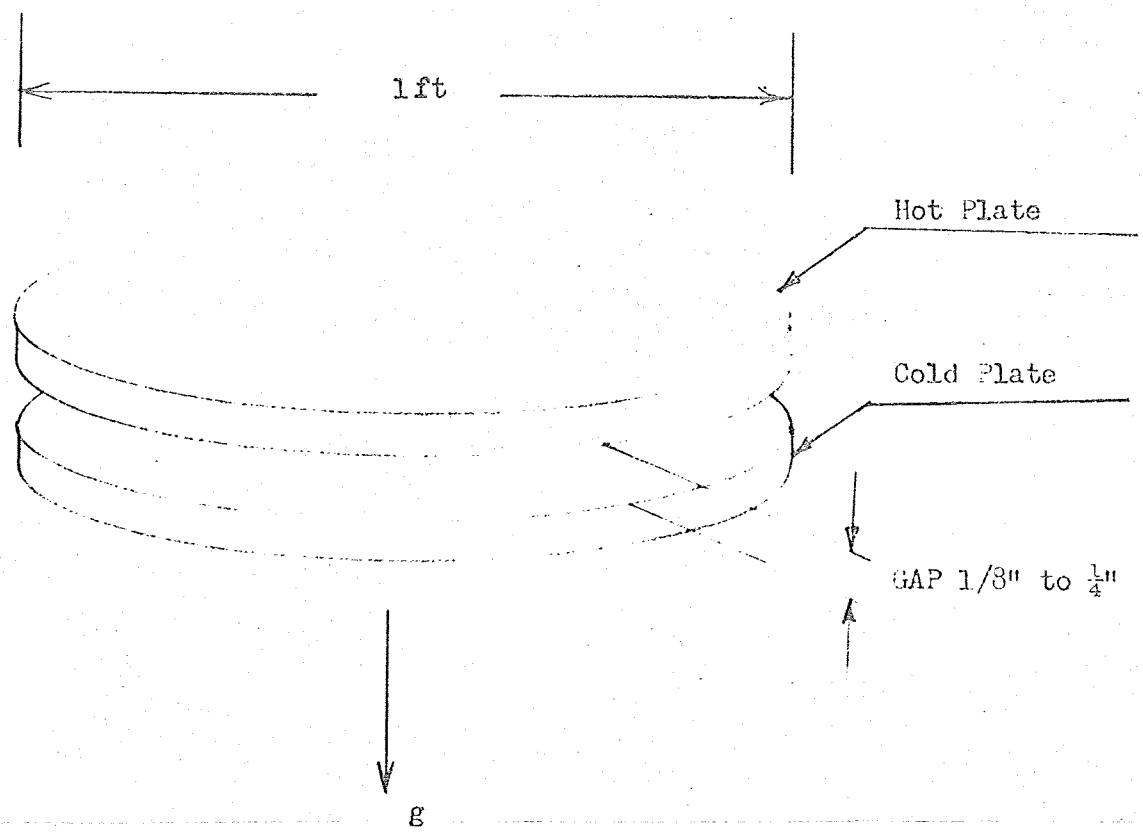

Two one-foot diameter circular plates spaced 1/8" to 1/4" are enclosed in a container which provides thermal insulation to the plates from the outside environment. The hot plate will be heated in such a manner as to produce a nearly uniform temperature. Heat will be conducted from the hot plate to the cold plate by the gas. Transient temperature of both plates will be measured with thermocouples.

TITLE VISCOSITY AND SELF-DIFFUSION COEFFICIENTS OF HIGH PRESSURE GASES

NASA No. 1.5.1.14
Lockheed No. 409

OBJECTIVE

Primary: To measure the viscosity and self-diffusion co-efficients of high pressure gases in a zero g environment.

INSTALLATION REQUIREMENTS

1. Normal Operating Environment: Equip. Int. ; Crew Int.
2. Weight of Equipment and Supplies (lb.) 50-150
3. Volume of Equipment and Supplies (cu. ft.): Internal 1 ; External 0
4. Critical Dimensions (ft.)
5. List of Test Apparatus Viscometer
6. Average Power Requirements (kw) 0.1
7. Special Thermal Requirements N/R
8. Orientation: Laboratory N/R ; Equipment N/R
9. Special Navigation Accuracy N/R
10. Stability and Pointing Accuracy N/R
11. Orbit Requirements N/R
12. Gravity Requirements Zero

MANPOWER REQUIREMENTS

1. Number of Crew Required 1
2. Skill Categories Phy. Sci.
3. Total Man-hours 10
4. Chronological Span 2 months
5. Experiment Cycles: Duration 10 min. ; Number 60
6. Potential Hazards None

DISCUSSION:

It is felt that much preliminary information could be obtained in a vacuum chamber on Earth.

TITLE	NASA No. 1.5.2.2
STUDY OF ATMOSPHERE EFFECTS ON ELECTROMAGNETIC WAVE PROPAGATION	Lockheed No. 410

OBJECTIVE

Primary: Determine radio propagation effects as functions of varying frequency and paths through atmosphere and ionosphere.

INSTALLATION REQUIREMENTS

1. Normal Operating Environment: Equip. Int. & Ext. ; Crew Interior
2. Weight of Equipment and Supplies (lb.) 220
3. Volume of Equipment and Supplies (cu. ft.): Internal 3 ; External 2
4. Critical Dimensions (ft.)
5. List of Test Apparatus Series of receivers or converters with std. receiver, spectrum analyzers, and antennas. Frequency range 0.2 kc to 30,000 mc.
6. Average Power Requirements (kw) 0.2
7. Special Thermal Requirements N/R
8. Orientation: Laboratory N/R ; Equipment Earth
9. Special Navigation Accuracy N/R
10. Stability and Pointing Accuracy
11. Orbit Requirements See discussion
12. Gravity Requirements None

MANPOWER REQUIREMENTS

1. Number of Crew Required 2
2. Skill Categories Phy. Sci.
3. Total Man-hours 1000 (for 5 years)
4. Chronological Span Mission duration
5. Experiment Cycles: Duration 2 hr/day ; Number 250
6. Potential Hazards None

DISCUSSION:

Used on all types orbital missions - best are polar, low altitude, oscillating synchronous or equatorial synchronous. Equipment used in conjunction with cooperating ground stations or using natural r.f. radiation-producing phenomena. Best quantitative determinations of "whistler" radiation would be accomplished by using high power VLF transmitter sending a equidensity spectrum of frequencies. Tests repeated for different orbit positions & altitudes. Comparisons of portions of transmitted spectra received by NMSS receivers as function of position (North or South of transmitter) and altitude will give data on dispersion-delay measurements. Can be made only for spectral portions received.

TITLE	DETERMINATION OF THE FREQUENCY DISTRIBUTION OF COSMIC NOISE	NASA No. 1.5.2.3 Lockheed No. 411

OBJECTIVE

Primary: Determine levels of cosmic (galactic) noise for wide frequency sepctrum without atmospheric effects and with reduced magnetic effects.

INSTALLATION REQUIREMENTS

1. Normal Operating Environment: Equip. Int. & Ext. ; Crew Int.
2. Weight of Equipment and Supplies (lb.) 280
3. Volume of Equipment and Supplies (cu. ft.): Internal 3 ; External 4
4. Critical Dimensions (ft.)
5. List of Test Apparatus Series of receivers or converters with std. receiver having minimum internal noise, std. noise pwr. sources, & antennas (some directivity)
6. Average Power Requirements (kw) 0.2
7. Special Thermal Requirements N/R
8. Orientation: Laboratory N/R ; Equipment Toward galactic center
9. Special Navigation Accuracy N/R
10. Stability and Pointing Accuracy 1°
11. Orbit Requirements See discussion
12. Gravity Requirements Not critical

MANPOWER REQUIREMENTS

1. Number of Crew Required 2
2. Skill Categories Phy. Sci.
3. Total Man-hours 600 (5 years)
4. Chronological Span Mission duration
5. Experiment Cycles: Duration 2 hr/day ; Number 1825 (5 years)
6. Potential Hazards None

DISCUSSION:

5. Frequency range 0.2 kc - 30,000 mc.

Best conducted on oscillating synchronous orbit NMSS so that distribution resulting from earth magnetic field can be measured. Synchronous altitude permits measurements almost completely free from atmospheric and ionospheric effects, or measurments through limbs of atmosphere if antennas are directive. Measured radiation should be compared to standard noise sources in frequency range being measured.

TITLE PLASMA-ELECTROMAGNETIC INTERACTIONS

NASA No. 1.5.2.6
Lockheed No. .412

OBJECTIVE

Primary: Obtain knowledge of plasma-electromagnetic interactions in real space.

Secondary: Evaluate methods of signal propagation in a plasma.

INSTALLATION REQUIREMENTS

1. Normal Operating Environment: Equip. Ext. ; Crew Int.
2. Weight of Equipment and Supplies (lb.) 50
3. Volume of Equipment and Supplies (cu. ft.): Internal _____ ; External 1.0
4. Critical Dimensions (ft.) 1
5. List of Test Apparatus Faraday cups with counters and magnetometers
6. Average Power Requirements (kw) 1.2
7. Special Thermal Requirements Only standard electronics cooling
8. Orientation: Laboratory N/R ; Equipment N/R
9. Special Navigation Accuracy Should be known
10. Stability and Pointing Accuracy N/R
11. Orbit Requirements Must be known
12. Gravity Requirements None

MANPOWER REQUIREMENTS

1. Number of Crew Required 2 man
2. Skill Categories Phy. Sci.
3. Total Man-hours 112
4. Chronological Span 2 weeks
5. Experiment Cycles: Duration 4 hrs. ; Number 1/day (14)
6. Potential Hazards None

DISCUSSION:

TITLE MILLIMETER WAVELENGTH SPACE PROPAGATION MEASUREMENTS

NASA No. 1.5.2.11
Lockheed No. 413

OBJECTIVE

Primary: Determine if exo-atmosphere millimeter wavelength propagation is subject to anomolies by plasmas, radiation belts, etc.

INSTALLATION REQUIREMENTS

1. Normal Operating Environment: Equip. Int & Ext. ; Crew Interior
2. Weight of Equipment and Supplies (lb.) 50
3. Volume of Equipment and Supplies (cu. ft.): Internal 2 ; External 0.1
4. Critical Dimensions (ft.)
5. List of Test Apparatus
6. Average Power Requirements (kw) 0.2
7. Special Thermal Requirements N/R
8. Orientation: Laboratory See discussion ; Equipment See discussion
9. Special Navigation Accuracy See discussion
10. Stability and Pointing Accuracy 0.05°
11. Orbit Requirements See discussion
12. Gravity Requirements N/R

MANPOWER REQUIREMENTS

1. Number of Crew Required 1 ea. vehicle
2. Skill Categories Phy. Sci.
3. Total Man-hours 500 each vehicle
4. Chronological Span Mission duration
5. Experiment Cycles: Duration 3 hr. ; Number 150
6. Potential Hazards None

DISCUSSION: Should be two-way system between two vehicles - either both in synchronous orbits or one synchronous and one lower altitude - effect of radiation belts is best determined if tests under both conditions are conducted. Two-way system with receiving antenna tracking part time and sweeping past direction of source part time then similar operations with transmitting antenna will provide data on max. signal & permit calibrating out pointing errors. Monitoring transmitter outputs & comparison of received signals with std. noise source will provide data on attenuation & absorption when correlated with navigational parameters.

TITLE HIGH-ENERGY PARTICLE PHYSICS	NASA No. 1.5.3.2 Lockheed No. 414

OBJECTIVE

Primary: To measure particle intensity of ionizing radiation

Secondary: To calibrate alternate methods of measurement and evaluate the on-board shielding configuration.

INSTALLATION REQUIREMENTS

1. Normal Operating Environment: Equip. Int. & Ext. ; Crew Int.
2. Weight of Equipment and Supplies (lb.) 150
3. Volume of Equipment and Supplies (cu. ft.): Internal .5 ; External .5
4. Critical Dimensions (ft.) 1.0
5. List of Test Apparatus Stacks and plates of varying sensitivity nuclear track emulsion
6. Average Power Requirements (kw) 0.010 at 28 VDC
7. Special Thermal Requirements Temperature control & measurement apparatus
8. Orientation: Laboratory N/R ; Equipment Earth
9. Special Navigation Accuracy N/R
10. Stability and Pointing Accuracy N/R
11. Orbit Requirements N/R
12. Gravity Requirements N/R

MANPOWER REQUIREMENTS

1. Number of Crew Required 1 man
2. Skill Categories Phy. Sci.
3. Total Man-hours 130 (5 yrs.)
4. Chronological Span Mission lifetime
5. Experiment Cycles: Duration 6 wks. ; Number 40 (5 yrs.)
6. Potential Hazards None

DISCUSSION: It is assumed in this experiment that emulsion stacks may be easily and frequently deployed from and retrieved to the space station. It should be noted that this experiment, while requiring few manhours, is capable of delivering many precise data.

TITLE	NASA No. 1.5.3.3
STUDY OF HIGH ENERGY PARTICLES USING SPARK CHAMBER	Lockheed No. 415

OBJECTIVE

Primary: To measure particle intensity of ionizing radiation

Secondary: To calibrate alternate methods of measurement and evaluate the on-board shielding configuration

INSTALLATION REQUIREMENTS

1. Normal Operating Environment: Equip. Int. ; Crew Int.
2. Weight of Equipment and Supplies (lb.) 245
3. Volume of Equipment and Supplies (cu. ft.): Internal 13.5 ; External 0
4. Critical Dimensions (ft.) 6
5. List of Test Apparatus Spark chamber with associated magnetic field generator, film processing facility
6. Average Power Requirements (kw) .275
7. Special Thermal Requirements Cooling equipment necessary
8. Orientation: Laboratory N/R ; Equipment N/R
9. Special Navigation Accuracy N/R
10. Stability and Pointing Accuracy N/R
11. Orbit Requirements Location should be recorded
12. Gravity Requirements None

MANPOWER REQUIREMENTS

1. Number of Crew Required 1 man
2. Skill Categories Phy. Sci.
3. Total Man-hours 1825 (5 yrs.)
4. Chronological Span Mission lifetime
5. Experiment Cycles: Duration 1 hr. ; Number 1 per day
6. Potential Hazards None

DISCUSSION:

It is assumed in this experiment that the required magnetic field generators could be successfully utilized aboard and that the general high weight of the spark chamber apparatus would be no serious impediment to the flight. It is also noted that this is the type of experiment that has a desirable easily modified schedule.

EXPERIMENT AND APPLICATION SUMMARY

LR 18906

TITLE	NASA No. 1.5.3.4
PARTICLE - PARTICLE STUDIES	Lockheed No. 401

OBJECTIVE

Primary: Determine neutron flux and study nuclear processes

INSTALLATION REQUIREMENTS

1. Normal Operating Environment: Equip. Ext. ; Crew Int. & Ext.
2. Weight of Equipment and Supplies (lb.) 200
3. Volume of Equipment and Supplies (cu. ft.): Internal _____ ; External 8
4. Critical Dimensions (ft.) _____
5. List of Test Apparatus Photographic emulsion packs
6. Average Power Requirements (kw) .010
7. Special Thermal Requirements None
8. Orientation: Laboratory N/R ; Equipment Variable
9. Special Navigation Accuracy N/R
10. Stability and Pointing Accuracy Variable
11. Orbit Requirements N/R
12. Gravity Requirements Gravity field not important

MANPOWER REQUIREMENTS

1. Number of Crew Required 1
2. Skill Categories Phy. Sci.
3. Total Man-hours 30-90
4. Chronological Span 30-90 days
5. Experiment Cycles: Duration 1 hr. ; Number 30-90
6. Potential Hazards Possible extravehicular activity

DISCUSSION:

TITLE

PARTICLE SURFACE INTERACTIONS

NASA No. 1.5.3.6
Lockheed No. 416

OBJECTIVE

Primary: To determine solid surface interactions with ambient flux of neutral atoms and molecules.

Secondary: To monitor ambient and particle intensity at low energies.

INSTALLATION REQUIREMENTS

1. Normal Operating Environment: Equip. Int. & Ext. ; Crew Interior
2. Weight of Equipment and Supplies (lb.) 250
3. Volume of Equipment and Supplies (cu. ft.): Internal 20 ; External 1
4. Critical Dimensions (ft.) 4
5. List of Test Apparatus Electron microscope, optical microscope
6. Average Power Requirements (kw) .01
7. Special Thermal Requirements None
8. Orientation: Laboratory None ; Equipment N/R
9. Special Navigation Accuracy None
10. Stability and Pointing Accuracy None
11. Orbit Requirements Location should be known
12. Gravity Requirements None

MANPOWER REQUIREMENTS

1. Number of Crew Required 1 man
2. Skill Categories Phy. Sci.
3. Total Man-hours 1460
4. Chronological Span 1 year
5. Experiment Cycles: Duration 4 hrs. ; Number 1 per day (365)
6. Potential Hazards None

DISCUSSION: This experiment assumes that it is possible to distinquish material damage due to the low energy particle flux discussed. It also assumes that these material blocks may be deployed and retrieved from a space station and that the low energy particle intensities are being measured concurrently.

TITLE MEASUREMENT OF NON-GRAVITATIONAL FORCES	NASA No. 1.5.4.2 Lockheed No. 417

OBJECTIVE

Primary: Attainment of true zero-g for a satellite

Secondary: Calibration of acceleration

INSTALLATION REQUIREMENTS

1. Normal Operating Environment: Equip. Ext. & Int. ; Crew Int.
2. Weight of Equipment and Supplies (lb.) 33
3. Volume of Equipment and Supplies (cu. ft.): Internal 2.5 ; External 4.5
4. Critical Dimensions (ft.) 2 ft. diameter sphere
5. List of Test Apparatus 2 ft. diameter spherical outer-satellite; small central isolated inner satellite
6. Average Power Requirements (kw) 0.008
7. Special Thermal Requirements N/R
8. Orientation: Laboratory N/R ; Equipment N/R
9. Special Navigation Accuracy ± 1 N. M.
10. Stability and Pointing Accuracy few degrees
11. Orbit Requirements Should be accurately known
12. Gravity Requirements N/R

MANPOWER REQUIREMENTS

1. Number of Crew Required 1
2. Skill Categories Phy. Sci.
3. Total Man-hours 1080 (5 yrs.)
4. Chronological Span Mission duration
5. Experiment Cycles: Duration 18 hr. ; Number 60 (5 yrs.)
6. Potential Hazards Release and retraction of device from space environment.

DISCUSSION: The experiment could be designed as a sustained made accelerometer for which feedback control is used to apply thrusts to the outer satellite shell so as to cancel the non-gravitational forces that act on it. Here, the entire satellite moves in free fall, following the central isolated mass.

1.5.4.2/417

MEASUREMENT OF NON-GRAVITATIONAL FORCES

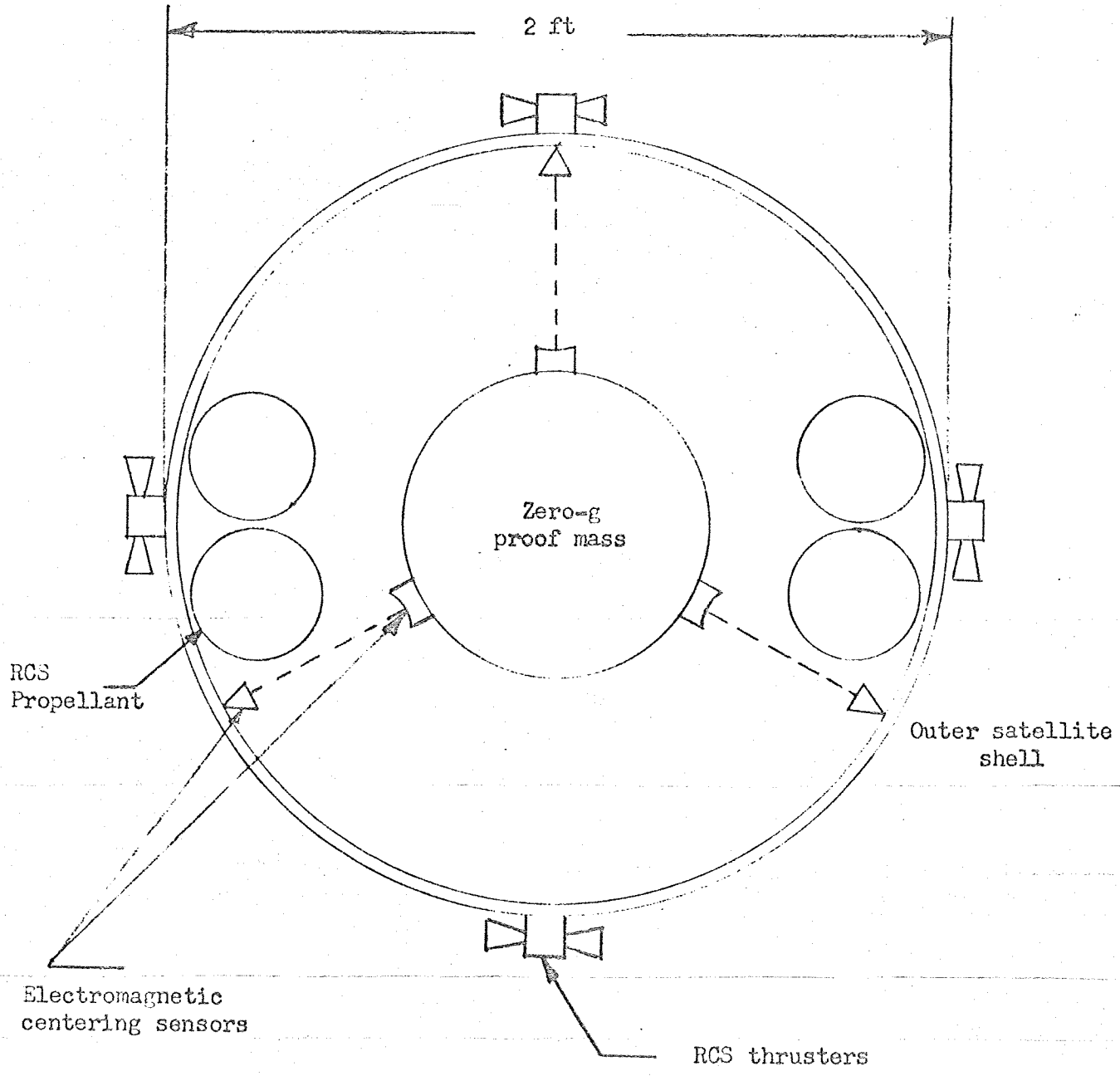

TITLE

COMBUSTION OF MATERIALS IN ZERO GRAVITY

NASA No. 1.6.2.1
Lockheed No. 451

OBJECTIVE

Primary: Determination of chemical species resulting from combustion of various fuels in oxygen at zero gravity

Secondary: To evaluate potentialities of chemical synthesis of valuable materials under zero gravity conditions.

INSTALLATION REQUIREMENTS

1. Normal Operating Environment: Equip. Int. ; Crew Int.
2. Weight of Equipment and Supplies (lb.) 250
3. Volume of Equipment and Supplies (cu. ft.): Internal 27 ; External 0
4. Critical Dimensions (ft.)
5. List of Test Apparatus Reaction chamber, miniature mass spectrometer, miniature gas chromatograph, liquid N_2 cold traps, He and O_2 gases, and various fuels.
6. Average Power Requirements (kw) 0.1
7. Special Thermal Requirements N/R
8. Orientation: Laboratory N/R ; Equipment N/R
9. Special Navigation Accuracy N/R
10. Stability and Pointing Accuracy N/R
11. Orbit Requirements N/R
12. Gravity Requirements Zero-G

MANPOWER REQUIREMENTS

1. Number of Crew Required 2
2. Skill Categories Phy. Sci.
3. Total Man-hours 1200
4. Chronological Span 5.4 wks.
5. Experiment Cycles: Duration 24 hrs. ; Number 25
6. Potential Hazards Potential fire hazard and toxicity hazard

DISCUSSION:

TITLE	NASA No. 2.1.1.1
PERFORMANCE AND RELIABILITY DATA OF SECONDARY ENVIRONMENTAL CONTROL SYSTEM	Lockheed No. 501

OBJECTIVE

Primary: Development of improved methods of environmental control for future spacecraft.

Secondary: Obtain empirical data for system design under zero and partial g conditions.

INSTALLATION REQUIREMENTS

1. Normal Operating Environment: Equip. Internal ; Crew Internal
2. Weight of Equipment and Supplies (lb.) 1150
3. Volume of Equipment and Supplies (cu. ft.): Internal 39 ; External 0
4. Critical Dimensions (ft.) 24-28" O.D. spheres for CO_2 accumulation
5. List of Test Apparatus Meas. equipment for temperatures, pressures, flow rates, gas composition
6. Average Power Requirements (kw) 1.0
7. Special Thermal Requirements Heat rejection to a maximum of 2 KW
8. Orientation: Laboratory None ; Equipment None
9. Special Navigation Accuracy None
10. Stability and Pointing Accuracy None
11. Orbit Requirements None
12. Gravity Requirements Zero and partial

MANPOWER REQUIREMENTS

1. Number of Crew Required 3
2. Skill Categories Physical Science
3. Total Man-hours 1095
4. Chronological Span 1 yr
5. Experiment Cycles: Duration 1 hr ; Number 365
6. Potential Hazards Oxygen handling

DISCUSSION:

Secondary ECS components such as regenerable CO_2 removal units, heat exchangers, air/water separators and possibly some new approaches to O_2 regeneration will be examined under this experiment. The effect of gravity is the primary unknown.

TITLE	NASA No. 2.1.1.2
LIFE SUPPORT SYSTEM - TEMPERATURE & HUMIDITY IN ZERO AND PARTIAL G	Lockheed No. 520

OBJECTIVE

Primary: Thermal control system evaluation and qualification.
Secondary: To evaluate temperature and humidity in compartment under zero and partial G.

INSTALLATION REQUIREMENTS

1. Normal Operating Environment: Equip. Int. ; Crew Int.
2. Weight of Equipment and Supplies (lb.) 30
3. Volume of Equipment and Supplies (cu. ft.): Internal 2.25 ; External 0
4. Critical Dimensions (ft.) 1 1/2 x 1 1/2 x 1
5. List of Test Apparatus Temperature and pressure recorder, airflow indicator or duct calibration, local temp., pressure, velocity & humidity indicators
6. Average Power Requirements (kw) 0.05
7. Special Thermal Requirements Variable
8. Orientation: Laboratory N/R ; Equipment N/R
9. Special Navigation Accuracy N/R
10. Stability and Pointing Accuracy N/R
11. Orbit Requirements No special requirement
12. Gravity Requirements zero & partial G

MANPOWER REQUIREMENTS

1. Number of Crew Required 1
2. Skill Categories Physical Sci.
3. Total Man-hours 30 hrs.
4. Chronological Span 1 month
5. Experiment Cycles: Duration 1 month ; Number 1
6. Potential Hazards None

DISCUSSION:

This experiment is an ECS qualification for the station. However, during the qualification testing, the temperature and humidity stratification would be determined under zero and partial G. This test could be combined with transient ECS, 2.1.1.4. This experiment would have to be performed on all stations.

TITLE	NASA No. 2.1.1.3
TOXICOLOGICAL STUDIES	Lockheed No. 509

OBJECTIVE

Primary: To determine and identify the contaminants that will occur and the effect of zero-g on their accumulation

Secondary: To qualify and develop methods for contaminant control

INSTALLATION REQUIREMENTS

1. Normal Operating Environment: Equip. Int. ; Crew Int.
2. Weight of Equipment and Supplies (lb.) 135
3. Volume of Equipment and Supplies (cu. ft.): Internal 102 ; External 0
4. Critical Dimensions (ft.)
5. List of Test Apparatus Gas chromatograph & mass spectrometer plus electronic components
6. Average Power Requirements (kw) 0.066
7. Special Thermal Requirements N/R
8. Orientation: Laboratory N/R ; Equipment N/R
9. Special Navigation Accuracy N/R
10. Stability and Pointing Accuracy N/R
11. Orbit Requirements N/R
12. Gravity Requirements partial and zero-g

MANPOWER REQUIREMENTS

1. Number of Crew Required 1
2. Skill Categories Phy. Sci.
3. Total Man-hours 7300
4. Chronological Span mission duration
5. Experiment Cycles: Duration 10 min. ; Number 1/hr
6. Potential Hazards None

DISCUSSION:

An extremely important consideration in the development of the space station is the detection and identification of the contaminants occurring during long duration missions. These contaminants arise from personnel, material, and processes equipment. The addition of an animal laboratory increases the probability of occurrence of contaminants. There is insufficient evidence as to what the contaminants are and how they will be affected in zero-g.

TITLE TRANSIENT EFFECTS OF VARYING HEAT LOAD ON ECS	NASA No. 2.1.1.4 Lockheed No. 510

OBJECTIVE

Primary: Transient performance evaluation of the Thermal Control System with respect to varying heat loads.

Secondary: Evaluation of the compartment temperature (wall and bulk) response under varying heat loads.

INSTALLATION REQUIREMENTS

1. Normal Operating Environment: Equip. Int. & Ext. ; Crew Int.
2. Weight of Equipment and Supplies (lb.) 25
3. Volume of Equipment and Supplies (cu. ft.): Internal 5 ; External
4. Critical Dimensions (ft.) 2 X 2 X 1 1/4
5. List of Test Apparatus Temperature & pressure recorder, Thermal radiation detector Normal ECS equipment
6. Average Power Requirements (kw) .015
7. Special Thermal Requirements variable
8. Orientation: Laboratory N/R ; Equipment N/R
9. Special Navigation Accuracy N/R
10. Stability and Pointing Accuracy N/R
11. Orbit Requirements N/R
12. Gravity Requirements zero or partial-g

MANPOWER REQUIREMENTS

1. Number of Crew Required 1
2. Skill Categories Physical Science
3. Total Man-hours 50
4. Chronological Span 25 days
5. Experiment Cycles: Duration 5 minutes ; Number 600
6. Potential Hazards None

DISCUSSION:

This test should be incorporated with the total ECS functional evaluation. The ECS transient heat load response is very important with respect to the operational aspects of the radiator and crew compartment wall and bulk temperature control. The largest factor is the external heat load during orbit. This test is in addition to a ground test since the effect of gravity in the internal compartment wall temperature and benefits of a flight test evaluation are necessary.

TITLE CARBON DIOXIDE REMOVAL UNDER ZERO & PARTIAL GRAVITY	NASA No. 2.1.1.5 Lockheed No. 518

OBJECTIVE

Primary: System qualification under zero-g conditions integrated in the ECS

Secondary: Evaluation and development testing of advanced type or alternate CO_2 removal systems

INSTALLATION REQUIREMENTS

1. Normal Operating Environment: Equip. Interior ; Crew Interior
2. Weight of Equipment and Supplies (lb.) 70
3. Volume of Equipment and Supplies (cu. ft.): Internal 4 1/2 ; External 0
4. Critical Dimensions (ft.) 1 1/2 x 1 x 2
5. List of Test Apparatus CO_2 removal system, CO_2 partial press, sensors, CO_2 supply bottle
6. Average Power Requirements (kw) 0.100
7. Special Thermal Requirements N/R
8. Orientation: Laboratory N/R ; Equipment N/R
9. Special Navigation Accuracy N/R
10. Stability and Pointing Accuracy N/R
11. Orbit Requirements N/A
12. Gravity Requirements Zero & Partial G

MANPOWER REQUIREMENTS

1. Number of Crew Required 1
2. Skill Categories Phy. Sci.
3. Total Man-hours 120
4. Chronological Span 120 days
5. Experiment Cycles: Duration 40 days ; Number 3
6. Potential Hazards

DISCUSSION:

This experiment is actually a system qualification test for the CO_2 removal system. A scaled down version (3 men) to be tested (prior to installation on the large station) on a small zero g station. The actual system would be tested as an integrated CO_2 removal subsystem on the total ECS. In addition, alternate or advanced CO_2 removal systems are to be tested either on an advanced zero-g or the large station.

TITLE
TESTS OF GARBAGE AND WASTE DISPOSAL METHODS

NASA No. 2.1.2.1
Lockheed No. .502

OBJECTIVE

Primary: Determine maximum storage times, feasibility of separation of solids and liquids for re-cycling of liquids, pulverizing of solids for storage or injection into space, and use of disinfectants.

INSTALLATION REQUIREMENTS

1. Normal Operating Environment: Equip. Interior ; Crew Interior
2. Weight of Equipment and Supplies (lb.) 159
3. Volume of Equipment and Supplies (cu. ft.): Internal 7 ; External None
4. Critical Dimensions (ft.)
5. List of Test Apparatus Storage vessels, incinerator, pulverizer
6. Average Power Requirements (kw) 0.43
7. Special Thermal Requirements N/R
8. Orientation: Laboratory N/R ; Equipment N/R
9. Special Navigation Accuracy N/R
10. Stability and Pointing Accuracy N/R
11. Orbit Requirements N/R
12. Gravity Requirements Gravity field not important

MANPOWER REQUIREMENTS

1. Number of Crew Required 2
2. Skill Categories Physical Science
3. Total Man-hours 67.2
4. Chronological Span 4 wks.
5. Experiment Cycles: Duration 4.2 hrs. ; Number 28
6. Potential Hazards Release of contaminants into cabin, high temp. of incinerator

DISCUSSION:

TITLE	NASA No. 2.1.2.2
TESTS OF REGENERATIVE OXYGEN SUPPLY SYSTEMS UNDER ZERO G	Lockheed No. 503

OBJECTIVE

Primary: Evaluate the effectiveness of prototype concepts in the regeneration of O_2 from metabolic CO_2

INSTALLATION REQUIREMENTS

1. Normal Operating Environment: Equip. Int. ; Crew Int.
2. Weight of Equipment and Supplies (lb.) 150
3. Volume of Equipment and Supplies (cu. ft.): Internal 5 ; External None
4. Critical Dimensions (ft.)
5. List of Test Apparatus
6. Average Power Requirements (kw) 1.5
7. Special Thermal Requirements Heat rejection; .75 KW continuous
8. Orientation: Laboratory N/R ; Equipment N/R
9. Special Navigation Accuracy N/R
10. Stability and Pointing Accuracy N/R
11. Orbit Requirements N/R
12. Gravity Requirements Zero-G

MANPOWER REQUIREMENTS

1. Number of Crew Required 2, 35% for 1 week; 1 man - 5% for remainder
2. Skill Categories Phy. Sci.
3. Total Man-hours 40
4. Chronological Span 30-90 days
5. Experiment Cycles: Duration 3 hrs. ; Number 9
6. Potential Hazards Recombination of electrolyzed hydrogen and oxygen

DISCUSSION:

TITLE
PHOTOSYNTHETIC GAS EXCHANGER TESTS

NASA No. 2.1.2.3
Lockheed No. 504

OBJECTIVE

Primary: Evaluate algae food harvesting under zero gravity and solar radiation conditions to verify performance.

INSTALLATION REQUIREMENTS

1. Normal Operating Environment: Equip. Int. ; Crew Int.
2. Weight of Equipment and Supplies (lb.) 300
3. Volume of Equipment and Supplies (cu. ft.): Internal 8 ; External 0
4. Critical Dimensions (ft.) Sufficient window area for sunlight transmission
5. List of Test Apparatus Transparent rotatable containers, filters, driers, air circulating blowers.
6. Average Power Requirements (kw) 7.0
7. Special Thermal Requirements temperature equilibrium plus variable nominal temperature
8. Orientation: Laboratory N/R ; Equipment Sun
9. Special Navigation Accuracy N/R
10. Stability and Pointing Accuracy N/R
11. Orbit Requirements N/R
12. Gravity Requirements Zero-G

MANPOWER REQUIREMENTS

1. Number of Crew Required 1
2. Skill Categories Biomedical Science
3. Total Man-hours 120-360
4. Chronological Span 30-90 days
5. Experiment Cycles: Duration 4 hrs. ; Number 30-90
6. Potential Hazards None except those normal for oxygen

DISCUSSION:

Equipment receives solar radiation thru a station window

TITLE EXTRAVEHICULAR SUIT AND BIOPACK EVALUATION	NASA No. 2.1.2.4 Lockheed No. 506

OBJECTIVE

Primary: Determine the performance decrements and the effectiveness of the suit in motion in the space environment.

INSTALLATION REQUIREMENTS

1. Normal Operating Environment: Equip. Int. & Ext. ; Crew Ext.
2. Weight of Equipment and Supplies (lb.) Suit: 22, Biopack: 11
3. Volume of Equipment and Supplies (cu. ft.): Internal 3 per suit ~~(stored)~~; External
4. Critical Dimensions (ft.)
5. List of Test Apparatus
6. Average Power Requirements (kw) 0.05
7. Special Thermal Requirements N/R
8. Orientation: Laboratory N/R ; Equipment N/R
9. Special Navigation Accuracy N/R
10. Stability and Pointing Accuracy N/R
11. Orbit Requirements N/R
12. Gravity Requirements Both 0 and Partial g

MANPOWER REQUIREMENTS

1. Number of Crew Required 2
2. Skill Categories Biomedical
3. Total Man-hours 72-216
4. Chronological Span 30-90 days
5. Experiment Cycles: Duration 8 hrs. ; Number 4-12
6. Potential Hazards Extravehicular activity

DISCUSSION:

Performance decrement imposed by the suit and biopack will be compared with the normal range of body motions.

TITLE EVALUATION OF OXYGEN RECOVERY SYSTEM	NASA No. 2.1.2.5 Lockheed No. 511

OBJECTIVE

Primary: Performance and concept evaluation of CO_2 reduction system
Secondary: Qualification testing of the station CO_2 reduction system

INSTALLATION REQUIREMENTS

1. Normal Operating Environment: Equip. Int. ; Crew Int.
2. Weight of Equipment and Supplies (lb.) 45
3. Volume of Equipment and Supplies (cu. ft.): Internal 3.0 ; External 0
4. Critical Dimensions (ft.) 1.44 x 1.44 x 1.44
5. List of Test Apparatus CO_2 collection unit, CO_2 reduction unit, water electrolysis unit
6. Average Power Requirements (kw) 0.200
7. Special Thermal Requirements N/R
8. Orientation: Laboratory N/R ; Equipment N/R
9. Special Navigation Accuracy N/R
10. Stability and Pointing Accuracy N/R
11. Orbit Requirements N/R
12. Gravity Requirements zero g

MANPOWER REQUIREMENTS

1. Number of Crew Required 1
2. Skill Categories Phy. Sci.
3. Total Man-hours 40 hrs.
4. Chronological Span 40 days
5. Experiment Cycles: Duration 1 hr/day ; Number 40
6. Potential Hazards None

DISCUSSION:

This experiment should be done in two phases, i.e., the first would be a development evaluation of the CO_2 reduction system for the large rotating station and would be done in a prior station. This would include a scaled down version of the candidate method. The second phase would be accomplished on the large station and would consist of the qualification and evaluation of the CO_2 reduction as an integrated system utilizing the station ECS. Future development of CO_2 reduction systems would continue as on the small station.

TITLE	NASA No. 2.1.2.7
ALGAE CLOSED CYCLE LIFE SUPPORT SYSTEM	Lockheed No. 519

OBJECTIVE

Primary: To establish the effects of outer space ionizing particle radiation upon the growth rate of selected algae strains

Secondary: To demonstrate system performance in zero or reduced gravity.

INSTALLATION REQUIREMENTS

1. Normal Operating Environment: Equip. Int. ; Crew Int.
2. Weight of Equipment and Supplies (lb.) 65
3. Volume of Equipment and Supplies (cu. ft.): Internal 4 ; External 0
4. Critical Dimensions (ft.) 1 x 2 x 2
5. List of Test Apparatus see sketch and attached list
6. Average Power Requirements (kw) 0.175
7. Special Thermal Requirements cooling and heating for maintaining temp. of algae suspension
8. Orientation: Laboratory N/R ; Equipment N/R
9. Special Navigation Accuracy N/R
10. Stability and Pointing Accuracy N/R
11. Orbit Requirements N/R
12. Gravity Requirements zero (required); partial (desired)

MANPOWER REQUIREMENTS

1. Number of Crew Required 1
2. Skill Categories Phy. Sci.
3. Total Man-hours 120
4. Chronological Span 6 months
5. Experiment Cycles: Duration 40 min. ; Number 1/day (180)
6. Potential Hazards None

DISCUSSION:

System needs to be attached to the outerwall on an area of about 1 ft x 1 ft. The photosynthetic reactor cell culture flow passages should be lengthwise in the near-radial direction for a rotating station. The cell should also be located so that it will be exposed to the sun as much as possible. Unless artificial illumination, with energy in the visible spectral range, is provided, the photosynthetic reaction will occur only during sunlight periods. Light filters will be beneficial in ultraviolet and infrared regions of sunlight. The only algae problem considered to uniquely require an orbiting laboratory is the effect of outer space ionizing particle radiation upon cell growth and life cycle.

5. The accessories contemplated are:

   A. Illuminated camera-type microscope and slides.
   B. Storage containers for nutrients and harvest.
   C. Essential spare parts for operating components.
   D. More detailed test programs will need additional instrumentation for gas and liquid analysis, pH measurement, cell density measurement, centrifuge, etc.
   E. A limited amount of miscellaneous standard laboratory supplies would be useful. These could be also used in other programs.

ALGAE CLOSED CYCLE LIFE SUPPORT SYSTEMS

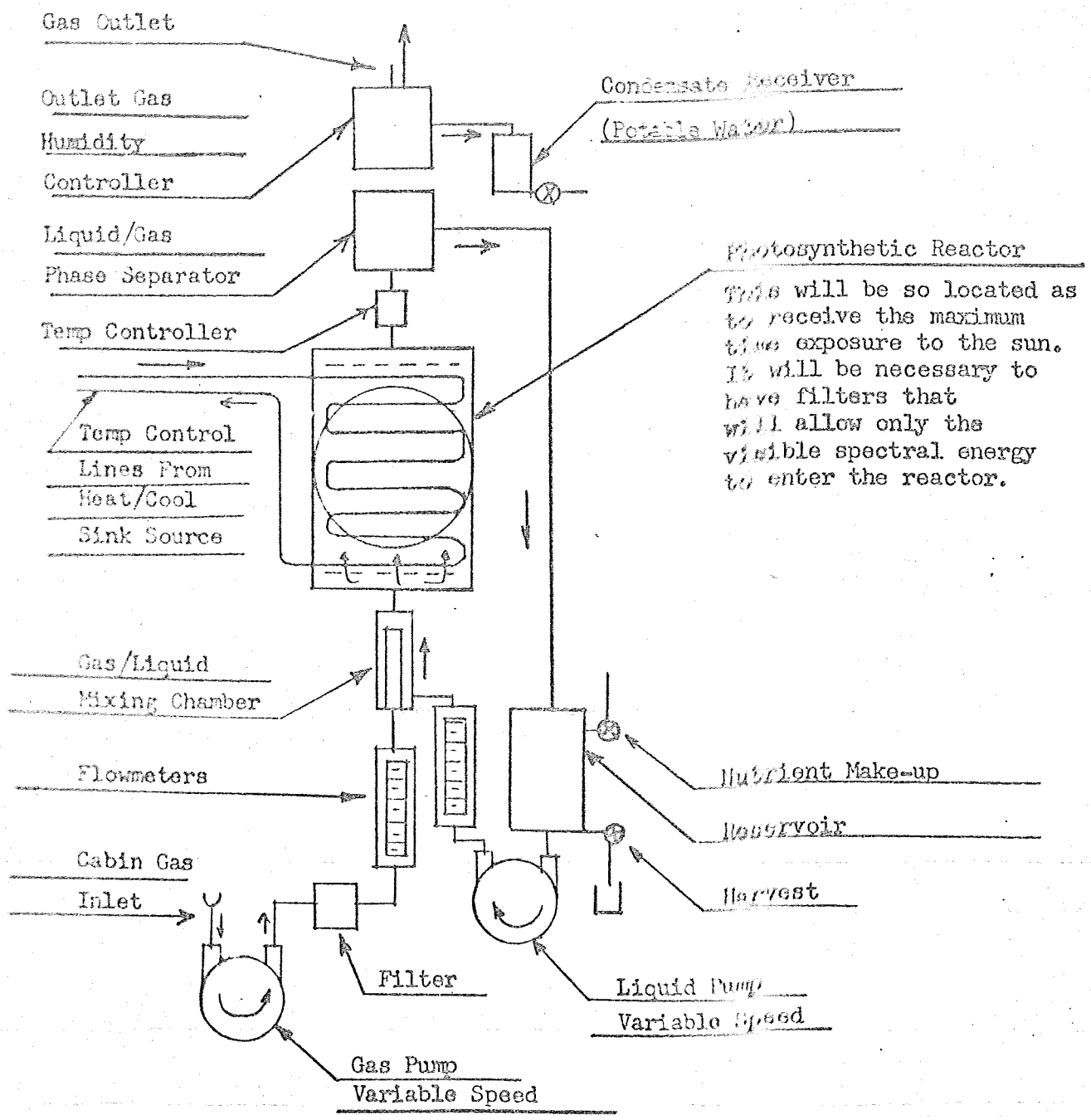

The complexity of the test program will determine the necessity of gas, pH, illumination and temperature sensors.

TITLE FIRE EXTINGUISHMENT UNDER ZERO OR PARTIAL GRAVITY CONDITIONS	NASA No. 2.1.2.8 Lockheed No. 507

OBJECTIVE

Primary: To determine the relative merits of various inert gases and powdered potassium biocarbonate on fire extinguishment under zero or partial gravity. To determine effectiveness and best techniques for extinguishing flames under zero or partial gravity.

INSTALLATION REQUIREMENTS

1. Normal Operating Environment: Equip. Int. ; Crew Int.
2. Weight of Equipment and Supplies (lb.) 225
3. Volume of Equipment and Supplies (cu. ft.): Internal 9 ; External 0
4. Critical Dimensions (ft.)
5. List of Test Apparatus Test chamber, cameras, thermocouples, pressure gages, static voltmeters, mass spectrometer, stopwatch
6. Average Power Requirements (kw) 1.0
7. Special Thermal Requirements N/R
8. Orientation: Laboratory N/R ; Equipment N/R
9. Special Navigation Accuracy N/R
10. Stability and Pointing Accuracy N/R
11. Orbit Requirements N/R
12. Gravity Requirements Both 0 and Partial g

MANPOWER REQUIREMENTS

1. Number of Crew Required 2
2. Skill Categories Phy. Sci.
3. Total Man-hours 66
4. Chronological Span 96 hrs.
5. Experiment Cycles: Duration 8.2 hrs. ; Number 4
6. Potential Hazards Fire hazard, toxicity hazard

DISCUSSION:

TITLE FECAL COLLECTION UNIT FUNCTIONAL TEST	NASA No. 2.1.2.9 Lockheed No. 512

OBJECTIVE

Primary: To determine the effectiveness of fecal collection devices under orbital space conditions-zero g

Secondary: To establish standard operating procedures for collection of fecal matter

INSTALLATION REQUIREMENTS

1. Normal Operating Environment: Equip. Interior ; Crew Interior
2. Weight of Equipment and Supplies (lb.) 50
3. Volume of Equipment and Supplies (cu. ft.): Internal 1 ; External 0
4. Critical Dimensions (ft.)
5. List of Test Apparatus
6. Average Power Requirements (kw) 0.030
7. Special Thermal Requirements N/R
8. Orientation: Laboratory N/R ; Equipment N/R
9. Special Navigation Accuracy N/R
10. Stability and Pointing Accuracy N/R
11. Orbit Requirements N/R
12. Gravity Requirements Zero g

MANPOWER REQUIREMENTS

1. Number of Crew Required 5
2. Skill Categories Phy. Sci.
3. Total Man-hours 17.5
4. Chronological Span 7 days
5. Experiment Cycles: Duration .5 hr ; Number daily - 7
6. Potential Hazards release of toxic contaminants

DISCUSSION:

Collection, freezing and storage of fecal matter will involve psychological and personal readjustments to previously established life long mores. The zero g environment will require that specific physical procedure be established to enable safe, sanitary, and acceptable methods of collection. Special containers must be tested for their effectiveness in preventing toxic contamination from occurring in the station environment; studies must be conducted to determine the nature of parasitic growth in fecal matter, bacterial content of anaerobic and aerobic nature and their relationship to the safe environment of the station and the effectiveness of collection devices in preventing these contaminants from being liberated in the station atmosphere.

EXPERIMENT AND APPLICATION SUMMARY

TITLE TESTS TO EVALUATE FOOD STORAGE & PREPARATION UNDER ZERO G	NASA No. 2.1.2.10 Lockheed No. 974

OBJECTIVE

Primary: To evaluate various methods of food refrigeration for long duration missions. To evaluate methods of food preparation.

INSTALLATION REQUIREMENTS

1. Normal Operating Environment: Equip. Int. ; Crew Int.
2. Weight of Equipment and Supplies (lb.) 20
3. Volume of Equipment and Supplies (cu. ft.): Internal 2 ; External 0
4. Critical Dimensions (ft.) 1 x 1 x 2
5. List of Test Apparatus Test cell, temperature & pressure recorder, food warmer
6. Average Power Requirements (kw) 0.020
7. Special Thermal Requirements Food warmer and freezer
8. Orientation: Laboratory N/R ; Equipment N/R
9. Special Navigation Accuracy N/R
10. Stability and Pointing Accuracy N/R
11. Orbit Requirements N/R
12. Gravity Requirements zero g

MANPOWER REQUIREMENTS

1. Number of Crew Required 1
2. Skill Categories Phy. Sci.
3. Total Man-hours 30
4. Chronological Span 30 days
5. Experiment Cycles: Duration 1 hr. ; Number 30
6. Potential Hazards None

DISCUSSION:

Influence of zero-g environment on food handling, preparation, and food storage must be evaluated. The methods of food storage that would be included are thermoelectric, direct or indirect radiation, and expendable refrigerant.

TITLE GAS-LIQUID SEPARATOR TEST	NASA No. 2.1.2.11 Lockheed No. 513

OBJECTIVE

Primary: Verification of liquid-gas separator performance in zero and near zero gravity

INSTALLATION REQUIREMENTS

1. Normal Operating Environment: Equip. Int. ; Crew Int.
2. Weight of Equipment and Supplies (lb.) 500
3. Volume of Equipment and Supplies (cu. ft.): Internal 10 ; External 0
4. Critical Dimensions (ft.) cylindrical
5. List of Test Apparatus Tank containing heater, fluid, and separator
6. Average Power Requirements (kw) 0.5
7. Special Thermal Requirements N/R
8. Orientation: Laboratory N/R ; Equipment N/R
9. Special Navigation Accuracy N/R
10. Stability and Pointing Accuracy N/R
11. Orbit Requirements N/R
12. Gravity Requirements zero g

MANPOWER REQUIREMENTS

1. Number of Crew Required 1
2. Skill Categories Phy. Sci.
3. Total Man-hours 30
4. Chronological Span 5 days
5. Experiment Cycles: Duration 1 day ; Number 5
6. Potential Hazards None

DISCUSSION:

It is anticipated that several devices would be installed in a test tank and operated for a sufficient period to verify performance.

TITLE SOLID WASTE RECLAMATION UNDER ZERO-G	NASA No. 2.1.2.13 Lockheed No. 981

OBJECTIVE

Primary: To evaluate the zero-g performance of candidate water reclamation systems from solid wastes.

Secondary: To evaluate possible use for the residual waste.

INSTALLATION REQUIREMENTS

1. Normal Operating Environment: Equip. Int. ; Crew Int.
2. Weight of Equipment and Supplies (lb.) 40
3. Volume of Equipment and Supplies (cu. ft.): Internal 2 ; External 0
4. Critical Dimensions (ft.) 2 x 1 x 1
5. List of Test Apparatus Fecal water reclamation system (dehydration concept) instrumentation, water purity monitor
6. Average Power Requirements (kw) .100
7. Special Thermal Requirements N/R
8. Orientation: Laboratory N/R ; Equipment N/R
9. Special Navigation Accuracy N/R
10. Stability and Pointing Accuracy N/R
11. Orbit Requirements N/R
12. Gravity Requirements zero-g

MANPOWER REQUIREMENTS

1. Number of Crew Required 1
2. Skill Categories Phys. Sci.
3. Total Man-hours 30
4. Chronological Span 1 month
5. Experiment Cycles: Duration 1 hr/day ; Number 30
6. Potential Hazards None

DISCUSSION:

Fecal water reclamation could be used advantageously for supplementary O_2, drinking or radiation protection. Accumulation of the residual waste could be reduced by using for radiation protection or for plant growth. This experiment should be accomplished on stations prior to the large station for possible use thereon. After installation, the experiment would revert to a qualification or system evaluation program.

TITLE	NASA No. 2.1.2.14
TESTS OF REGENERATIVE WATER SUPPLY SYSTEM UNDER ZERO-G	Lockheed No. 980

OBJECTIVE

Primary: To determine effectiveness of the regenerative water supply system (urine, waste water, & humidity condensate) under zero-g

Secondary: To evaluate advanced concepts for regenerative water supply systems.

INSTALLATION REQUIREMENTS

1. Normal Operating Environment: Equip. Int. ; Crew Int.
2. Weight of Equipment and Supplies (lb.) 142*
3. Volume of Equipment and Supplies (cu. ft.): Internal 3 ; External 0
4. Critical Dimensions (ft.) 1.5 x 1.5 x 1.3
5. List of Test Apparatus Regenerative water supply, systems, water purification instrumentation, gas chromatograph, temp. & pressure recorder
6. Average Power Requirements (kw) 0.400
7. Special Thermal Requirements N/R
8. Orientation: Laboratory N/R ; Equipment N/R
9. Special Navigation Accuracy N/R
10. Stability and Pointing Accuracy N/R
11. Orbit Requirements N/R
12. Gravity Requirements zero-g

MANPOWER REQUIREMENTS

1. Number of Crew Required 1
2. Skill Categories Phy. Sci.
3. Total Man-hours 30
4. Chronological Span 6 wks.
5. Experiment Cycles: Duration 2 hrs. ; Number 15
6. Potential Hazards None

DISCUSSION:

Influence of zero-g environment on the performance of regenerative water supply systems must be established. This experiment incorporates experiment No. 2.1.2.15/514. For system qualification, the existing station system is used.

*Includes urine, waste water, and humidity condensate purification systems.

TITLE URINE PURIFICATION SYSTEM FUNCTIONAL TEST

NASA No. 2.1.2.15
Lockheed No. 514

OBJECTIVE

Primary: To determine effectiveness of a urine purification system in an orbital space station zero g environment

Secondary: System qualification of station urine purification system.

INSTALLATION REQUIREMENTS

1. Normal Operating Environment: Equip. Interior ; Crew Interior
2. Weight of Equipment and Supplies (lb.) 50
3. Volume of Equipment and Supplies (cu. ft.): Internal 1.5 ; External 0
4. Critical Dimensions (ft.) 1 x 1 x 1.5
5. List of Test Apparatus Urine purification system, urine storage, water purity monitoring, pressure and temperature recorders
6. Average Power Requirements (kw) 0.1
7. Special Thermal Requirements N/R
8. Orientation: Laboratory N/R ; Equipment N/R
9. Special Navigation Accuracy N/R
10. Stability and Pointing Accuracy N/R
11. Orbit Requirements N/R
12. Gravity Requirements zero g

MANPOWER REQUIREMENTS

1. Number of Crew Required 1
2. Skill Categories Phy. Sci.
3. Total Man-hours 10 manhours
4. Chronological Span 2 wks.
5. Experiment Cycles: Duration 2 hrs. ; Number 5
6. Potential Hazards Toxic contamination of space station stmosphere

DISCUSSION:

Influence of zero g environment on the performance of the purification system must be established. Spillage of collected urine samples must be avoided at all times to prevent contamination of the station atmosphere. Urine samples will be collected on a 24-hour basis and properly stored until run through the purification system. Transfer techniques in the zero g field must be tested and verified for effectiveness and ease of operation.

TITLE	NASA No. 2.1.2.16
MAGNETIC RADIATION SHIELDING EVALUATION	Lockheed No. 515

OBJECTIVE

Primary: Evaluate effectiveness of equipment
Secondary: Evaluate ease of use and reliability of equipment.

INSTALLATION REQUIREMENTS

1. Normal Operating Environment: Equip. Int. & Ext. ; Crew Interior
2. Weight of Equipment and Supplies (lb.) 500
3. Volume of Equipment and Supplies (cu. ft.): Internal 30 at launch - ~~5 opera-~~ tion ; External 25 in ~~operation~~
4. Critical Dimensions (ft.) 4
5. List of Test Apparatus coils, transformer, cooling apparatus, magnetometer, counters
6. Average Power Requirements (kw) 1.0
7. Special Thermal Requirements cooling apparatus required
8. Orientation: Laboratory N/R ; Equipment N/R
9. Special Navigation Accuracy N/R
10. Stability and Pointing Accuracy N/R
11. Orbit Requirements N/R
12. Gravity Requirements N/R

MANPOWER REQUIREMENTS

1. Number of Crew Required 2
2. Skill Categories Phy. Sci.
3. Total Man-hours 240
4. Chronological Span 60 days
5. Experiment Cycles: Duration 2 hrs. ; Number 60
6. Potential Hazards None

DISCUSSION:

This experiment could pave the way for utilization of a new, perhaps more effective, means of shielding.

TITLE TESTS OF PERSONNEL RESTRAINT EQUIPMENT	NASA No. 2.1.3.1 Lockheed No. 505

OBJECTIVE

Primary: Evaluate personnel restraint equipment in an operational environment. Results will be used to design optimum equipment.

INSTALLATION REQUIREMENTS

1. Normal Operating Environment: Equip. Int. ; Crew Int.
2. Weight of Equipment and Supplies (lb.) 25
3. Volume of Equipment and Supplies (cu. ft.): Internal 0.5 ; External 0
4. Critical Dimensions (ft.)
5. List of Test Apparatus
6. Average Power Requirements (kw) 0
7. Special Thermal Requirements N/R
8. Orientation: Laboratory N/R ; Equipment N/R
9. Special Navigation Accuracy
10. Stability and Pointing Accuracy N/R
11. Orbit Requirements N/R
12. Gravity Requirements Both 0 and Partial g

MANPOWER REQUIREMENTS

1. Number of Crew Required 2
2. Skill Categories Subject
3. Total Man-hours 1040 (5 yrs.)
4. Chronological Span mission duration
5. Experiment Cycles: Duration 2 hrs. ; Number 520
6. Potential Hazards Determine the safeness of each restraint.

DISCUSSION:

TITLE FEASIBILITY TESTS OF SPECIAL BED FOR USE UNDER WEIGHTLESSNESS	NASA No. 2.1.3.2 Lockheed No. 516

OBJECTIVE

Primary: To determine the effectiveness of techniques to provide orientation while going to sleep & at awakening

INSTALLATION REQUIREMENTS

1. Normal Operating Environment: Equip. Interior ; Crew Interior
2. Weight of Equipment and Supplies (lb.) 5
3. Volume of Equipment and Supplies (cu. ft.): Internal 3 ; External 0
4. Critical Dimensions (ft.)
5. List of Test Apparatus
6. Average Power Requirements (kw) 0.2
7. Special Thermal Requirements N/R
8. Orientation: Laboratory N/R ; Equipment N/R
9. Special Navigation Accuracy N/R
10. Stability and Pointing Accuracy N/R
11. Orbit Requirements N/R
12. Gravity Requirements zero g

MANPOWER REQUIREMENTS

1. Number of Crew Required 1
2. Skill Categories Subjects
3. Total Man-hours 18
4. Chronological Span 90 days
5. Experiment Cycles: Duration sleeping period ; Number 90
6. Potential Hazards Restrictive, improper restraints

DISCUSSION: In a true zero g field there is no "up" or "down" except as fixed equipment orientation will establish. In order to establish a mind set of an operator relative to his established equipment operations, it will be advantageous to provide him with a spatial orientation. The physical arrangements for sleeping should be as nearly in keeping with common usage as possible, i.e., sleeping "upside-down" to normal orientation of surrounding may produce psychological upsets which might affect performance of the astronaut operators. Restraints must be such so as not to create unpleasant restrictive limitations on the normal movements occurring during sleeping hours. Movements of the bed must not be abrupt or violent so as not to interfere with normal sleep. Performance will suffer if insufficient rest occurs. Adequate safeguards must be available to prevent rolling, spinning or rotational effects of the bed movements while the bed attempts to maintain a "fixed" position relative to space station orientation movements.

TITLE WEIGHTLESS CONDITION FEEDING DEVICES	NASA No. 2.1.3.3 Lockheed No. 508

OBJECTIVE

Primary: To determine which of several feeding techniques is most satisfactory under weightless conditions

Secondary: To determine the effect of zero gravity or weightlessness on the ability of the astronaut to ingest food.

INSTALLATION REQUIREMENTS

1. Normal Operating Environment: Equip. Interior ; Crew Interior
2. Weight of Equipment and Supplies (lb.) See attached sheet
3. Volume of Equipment and Supplies (cu. ft.): Internal See attached sheet ; External 0
4. Critical Dimensions (ft.) See attached sheet
5. List of Test Apparatus 1) special can opener & special mouthpiece with squeeze handle; 2) polyethelene bags with mouthtube for squeeze injection of (con't)
6. Average Power Requirements (kw) 0
7. Special Thermal Requirements N/R
8. Orientation: Laboratory N/R ; Equipment N/R
9. Special Navigation Accuracy N/R
10. Stability and Pointing Accuracy N/R
11. Orbit Requirements N/R
12. Gravity Requirements Zero- weightless condition

MANPOWER REQUIREMENTS

1. Number of Crew Required 9
2. Skill Categories Subjects
3. Total Man-hours 189
4. Chronological Span 3 wks
5. Experiment Cycles: Duration 7 days ; Number 3
6. Potential Hazards None

DISCUSSION:

Each astronaut subject will rate each food item of each method for the following: (1) Ease of preparation; (2) Ease of handling; (3) Ease of ingestion; (4) Taste; (5) Hunger satisfaction. The rating will be on a 6-scale. 1-2 unsatisfactory, 3-4 poor, 5-6 good. Data will be accumulated throughout the experimental period and questionaire data will be transmitted to earth for analysis. The three methods of food ingestion described in 5 above will each be tried on one week menus. Two (2) each of the breakfasts, lunches, dinners in each method will be accomplished while operating in a pressurized pressure suit equipped with an inflight feeding port in the helmet assembly.

2. will be determined by the foods provided by the food industry.

3. packaging and final volume will be governed by requirements for at least 9 men for 3 meals/day for 21 days.

5. (cont.) prepared foods (semisolid), 3) supply of polyethylene bags (empty) in which dehydrated foods will be prepared for ingestion by the addition of water. 4) prepared questionnaires will be used to obtain astronaut reactions to various foods and different methods of ingestion.

TITLE EVALUATION OF PROTECTIVE CLOTHING

NASA No. 2.1.3.4
Lockheed No. 517

OBJECTIVE

Primary: To determine the effectiveness of protective clothing: thermal, pressurized, coverall in space station operations both intra and extra vehicular operations

INSTALLATION REQUIREMENTS

1. Normal Operating Environment: Equip. Int. & Ext. ; Crew Int. & Ext.
2. Weight of Equipment and Supplies (lb.) 200
3. Volume of Equipment and Supplies (cu. ft.): Internal 6 ; External 0
4. Critical Dimensions (ft.)
5. List of Test Apparatus Biomedical monitoring capability for heartrates-heat-ventilation
6. Average Power Requirements (kw) 0
7. Special Thermal Requirements N/R
8. Orientation: Laboratory N/R ; Equipment N/R
9. Special Navigation Accuracy N/R
10. Stability and Pointing Accuracy N/R
11. Orbit Requirements N/R
12. Gravity Requirements Zero g

MANPOWER REQUIREMENTS

1. Number of Crew Required all
2. Skill Categories Subjects
3. Total Man-hours 90
4. Chronological Span 90 days
5. Experiment Cycles: Duration daily ; Number 90
6. Potential Hazards Exceeding physiological tolerances

DISCUSSION:

All garments taken on board space stations will have been tested in environmental simulators at ground level conditions - Standard g and controlled temperature and pressures. These garments will then be checked on board space stations under zero g conditions and both intra and extra vehicular conditions as indicated by the nature of the garment or their effectiveness and comfort, ease of donning/doffing and maintenance. Pressure suits will be worn intra vehicular for ventilation effectiveness unpressurized, and under test conditions, pressurized. Adequacy of operations for mobility, comfort, mission performance requirements and protection will be analyzed. Biomedical monitoring will be integral with all pressure suit test programs.

TITLE THE EFFECT ON MATERIALS OF LONG TERM EXPOSURE TO THE SPACE ENVIRONMENT	NASA No. 2.2.1.1 Lockheed No. 521

OBJECTIVE

Primary: To examine the effects of long term exposure of the space environment on material properties

Secondary: To compare results with the data obtained using simulated space environmental conditions in earth space chambers.

INSTALLATION REQUIREMENTS

1. Normal Operating Environment: Equip. Ext. ; Crew Int. & Ext.
2. Weight of Equipment and Supplies (lb.) 150
3. Volume of Equipment and Supplies (cu. ft.): Internal ; External 8
4. Critical Dimensions (ft.) 4
5. List of Test Apparatus
6. Average Power Requirements (kw) 0.5
7. Special Thermal Requirements N/R
8. Orientation: Laboratory N/R ; Equipment N/R
9. Special Navigation Accuracy N/R
10. Stability and Pointing Accuracy N/R
11. Orbit Requirements N/R
12. Gravity Requirements Gravity field not important

MANPOWER REQUIREMENTS

1. Number of Crew Required 2
2. Skill Categories Phys. Sci.
3. Total Man-hours 3360 (5 yrs.)
4. Chronological Span Mission duration
5. Experiment Cycles: Duration Cont. ; Number --
6. Potential Hazards Extravehicular activity

DISCUSSION:

Supplies expended will be 60 lb in 3 months. Development of an accurate weighing device is highly desirable for this experiment.

TITLE	NASA No. 2.2.1.2
FATIGUE TESTS OF MATERIALS AFTER EXPOSURE TO SPACE ENVIRONMENT	Lockheed No. 523

OBJECTIVE

Primary: To measure the mechanical properties of elastic materials after long term space exposure.

Secondary: To evaluate the changes in mechanical properties compared with laboratory test data.

INSTALLATION REQUIREMENTS

1. Normal Operating Environment: Equip. Ext. ; Crew Int.
2. Weight of Equipment and Supplies (lb.) 30
3. Volume of Equipment and Supplies (cu. ft.): Internal 2 ; External 6
4. Critical Dimensions (ft.)
5. List of Test Apparatus Tensile, elongation and shore hardness test equipment
6. Average Power Requirements (kw) 0.5
7. Special Thermal Requirements N/R
8. Orientation: Laboratory N/R ; Equipment N/R
9. Special Navigation Accuracy N/R
10. Stability and Pointing Accuracy N/R
11. Orbit Requirements N/R
12. Gravity Requirements Zero-G

MANPOWER REQUIREMENTS

1. Number of Crew Required 1
2. Skill Categories Phy. Sci.
3. Total Man-hours 52
4. Chronological Span 26 wks.
5. Experiment Cycles: Duration 26 wks. ; Number 25
6. Potential Hazards None

DISCUSSION:

TITLE	NASA No. 2.2.1.3
EVALUATION OF THE EFFECTS OF EXPOSURE TO THE SPACE ENVIRONMENT ON TRANSPARENT MATERIALS	Lockheed No. 524

OBJECTIVE

Primary: To evaluate the effect of the space environment on transparent materials.

Secondary: To compare the results with the test data obtained in the simulated space chambers.

INSTALLATION REQUIREMENTS

1. Normal Operating Environment: Equip. Int. & Ext. ; Crew Int.
2. Weight of Equipment and Supplies (lb.) 150
3. Volume of Equipment and Supplies (cu. ft.): Internal 2 ; External 3
4. Critical Dimensions (ft.) 4
5. List of Test Apparatus Mirror for visual observation
6. Average Power Requirements (kw) 0.003
7. Special Thermal Requirements N/R
8. Orientation: Laboratory N/R ; Equipment N/R
9. Special Navigation Accuracy N/R
10. Stability and Pointing Accuracy N/R
11. Orbit Requirements N/R
12. Gravity Requirements Gravity field not important

MANPOWER REQUIREMENTS

1. Number of Crew Required 1
2. Skill Categories Phy. Sci.
3. Total Man-hours 800
4. Chronological Span 1 yr.
5. Experiment Cycles: Duration Cont. ; Number --
6. Potential Hazards Extravehicular activity

DISCUSSION:

Ten pounds of supplies (1/2 cu. ft.) will be returned to Earth each 90 days.

TITLE	NASA No. 2.2.1.4
BEHAVIOR OF THERMAL CONTROL SURFACES IN SPACE	Lockheed No. 525

OBJECTIVE

Primary: To determine changes in spectral characteristics for selected thermal control surfaces during extended operation in space and to continue investigation to find several thermal control surfaces with minimal changes during long orbital life.

INSTALLATION REQUIREMENTS

1. Normal Operating Environment: Equip. Ext. ; Crew Int. normally
2. Weight of Equipment and Supplies (lb.) 100
3. Volume of Equipment and Supplies (cu. ft.): Internal 6 ; External 2
4. Critical Dimensions (ft.) None
5. List of Test Apparatus Tape recorder, wheatstone bridge of solar cells, thermocouples
6. Average Power Requirements (kw) 0.03
7. Special Thermal Requirements sample insulation from station
8. Orientation: Laboratory N/R ; Equipment Sun
9. Special Navigation Accuracy N/R
10. Stability and Pointing Accuracy N/R
11. Orbit Requirements N/R
12. Gravity Requirements Gravity field not important

MANPOWER REQUIREMENTS

1. Number of Crew Required 1
2. Skill Categories Phy. Sci.
3. Total Man-hours 1830-2730
4. Chronological Span 175 - 260 wks.
5. Experiment Cycles: Duration 90 min/day ; Number 25
6. Potential Hazards None

DISCUSSION:

Supplies expended: 20 lbs. (0.5 ft.^{3}) every 90 days

TITLE	NASA No. 2.2.1.5
STRUCTURAL DAMAGE CAUSED BY METEOROID PENETRATION	Lockheed No. 526

OBJECTIVE

Primary: Examine the penetrations and cratering effects of meteoroids on various types of materials.

Secondary: Compare material damage with craters produced in high velocity research facilities.

INSTALLATION REQUIREMENTS

1. Normal Operating Environment: Equip. Int. & Ext. ; Crew Int.
2. Weight of Equipment and Supplies (lb.) 20
3. Volume of Equipment and Supplies (cu. ft.): Internal 1 ; External 1
4. Critical Dimensions (ft.) 1
5. List of Test Apparatus None
6. Average Power Requirements (kw) 0
7. Special Thermal Requirements N/R
8. Orientation: Laboratory N/R ; Equipment N/R
9. Special Navigation Accuracy N/R
10. Stability and Pointing Accuracy N/R
11. Orbit Requirements N/R
12. Gravity Requirements Gravity field not important

MANPOWER REQUIREMENTS

1. Number of Crew Required 1
2. Skill Categories Phy. Sci.
3. Total Man-hours 8-24
4. Chronological Span 30-90 days
5. Experiment Cycles: Duration 2 hrs. ; Number 4-12
6. Potential Hazards None

DISCUSSION:

TITLE LIQUID LUBRICANT LIFE UNDER ZERO GRAVITY AND ONE-SIXTH GRAVITY CONDITIONS	NASA No. 2.2.1.6 Lockheed No. 528

OBJECTIVE

Primary: Evaluate lubricants in zero gravity to define their expectant life.

Secondary: Devise means to insure uniform circulation of liquid lubricants.

INSTALLATION REQUIREMENTS

1. Normal Operating Environment: Equip. Int. ; Crew Int.
2. Weight of Equipment and Supplies (lb.) 0
3. Volume of Equipment and Supplies (cu. ft.): Internal 0 ; External 0
4. Critical Dimensions (ft.) 0
5. List of Test Apparatus Uses analytical equipment common to other experiments
6. Average Power Requirements (kw) 0.1
7. Special Thermal Requirements N/R
8. Orientation: Laboratory N/R ; Equipment N/R
9. Special Navigation Accuracy N/R
10. Stability and Pointing Accuracy N/R
11. Orbit Requirements N/R
12. Gravity Requirements Both 0 and Partial g

MANPOWER REQUIREMENTS

1. Number of Crew Required 1
2. Skill Categories Phy. Sci.
3. Total Man-hours 12
4. Chronological Span 500 hrs.
5. Experiment Cycles: Duration 0.5 hrs. ; Number 24
6. Potential Hazards None

DISCUSSION:

TITLE LIQUID LUBRICANT RECOVERY UNDER ZERO GRAVITY CONDITIONS	NASA No. 2.2.1.7 Lockheed No. 530

OBJECTIVE

Primary: To determine feasibility of processing liquid lubricants for re-use, to determine extent of recovery, to determine new material handling procedures, to formulate recommendations for lubricant recovery equipment design.

INSTALLATION REQUIREMENTS

1. Normal Operating Environment: Equip. Int. ; Crew Int.
2. Weight of Equipment and Supplies (lb.) 60
3. Volume of Equipment and Supplies (cu. ft.): Internal 3.5 ; External 0
4. Critical Dimensions (ft.)
5. List of Test Apparatus Closed mechanical system, centrifuge, spherical metallic distillation device
6. Average Power Requirements (kw) 0.1
7. Special Thermal Requirements N/R
8. Orientation: Laboratory N/R ; Equipment N/R
9. Special Navigation Accuracy N/R
10. Stability and Pointing Accuracy N/R
11. Orbit Requirements N/R
12. Gravity Requirements Zero-G

MANPOWER REQUIREMENTS

1. Number of Crew Required 1
2. Skill Categories Phy. Sci.
3. Total Man-hours 4
4. Chronological Span 4 hrs.
5. Experiment Cycles: Duration 2 hrs. ; Number 2
6. Potential Hazards None

DISCUSSION:

TITLE DETERMINATION OF THERMAL CONDUCTIVITIES OF MATERIALS AT ZERO GRAVITY

NASA No. 2.2.1.8
Lockheed No. 532

OBJECTIVE

Primary: To determine the thermal conductivity of selected materials for subsequent use in the design of spacecraft heat exchangers, etc.

Secondary: To assess the importance of convective heat transfer in various porous materials (insulators).

INSTALLATION REQUIREMENTS

1. Normal Operating Environment: Equip. Int. ; Crew Int.
2. Weight of Equipment and Supplies (lb.) 150
3. Volume of Equipment and Supplies (cu. ft.): Internal 16 ; External 0
4. Critical Dimensions (ft.)
5. List of Test Apparatus Recording potentiometer, thermocouples, electric heat source chart
6. Average Power Requirements (kw) 0.200
7. Special Thermal Requirements electrical heat source - applied to one end of specimen
8. Orientation: Laboratory N/R ; Equipment N/R
9. Special Navigation Accuracy N/R
10. Stability and Pointing Accuracy N/R
11. Orbit Requirements N/R
12. Gravity Requirements Zero-G

MANPOWER REQUIREMENTS

1. Number of Crew Required 1
2. Skill Categories Phy. Sci.
3. Total Man-hours 96
4. Chronological Span 1.7 wks.
5. Experiment Cycles: Duration 8 hrs. ; Number 12
6. Potential Hazards Electric heat source malfunction

DISCUSSION:

TITLE COLD WELDING OF METALS IN A SPACE ENVIRONMENT

NASA No. 2.2.1.9
Lockheed No. 533

OBJECTIVE

Primary: To determine the degree of cold welding which occurs between stationary & moving metal surfaces (similar or dissimilar).

Secondary: Evaluate the effect of surface finishes, dissimilar metals, space conditions & heat and pressure on cold welding.

INSTALLATION REQUIREMENTS

1. Normal Operating Environment: Equip. Ext. ; Crew Int.
2. Weight of Equipment and Supplies (lb.) 10
3. Volume of Equipment and Supplies (cu. ft.): Internal 1 ; External 1/2
4. Critical Dimensions (ft.)
5. List of Test Apparatus Visual examination of welded specimens, log book, test specimens
6. Average Power Requirements (kw) 0.01
7. Special Thermal Requirements N/R
8. Orientation: Laboratory N/R ; Equipment N/R
9. Special Navigation Accuracy N/R
10. Stability and Pointing Accuracy N/R
11. Orbit Requirements N/R
12. Gravity Requirements

MANPOWER REQUIREMENTS

1. Number of Crew Required 1
2. Skill Categories Phy. Sci.
3. Total Man-hours 52
4. Chronological Span 1 yr.
5. Experiment Cycles: Duration Cont. ; Number --
6. Potential Hazards None

DISCUSSION:

Welded specimens will be returned to earth for further analysis at the rate of 5 lb per 3 mos. period.

TITLE	NASA No. 2.2.1.10
ACTIVATION MEASUREMENTS	Lockheed No. 991

OBJECTIVE

Primary: To determine whether any portions of the spacecraft become significantly radioactive

Secondary: Monitor radiation levels aboard a spacecraft

INSTALLATION REQUIREMENTS

1. Normal Operating Environment: Equip. Int. ; Crew Int.
2. Weight of Equipment and Supplies (lb.) 25
3. Volume of Equipment and Supplies (cu. ft.): Internal 2 ; External 0
4. Critical Dimensions (ft.) 2
5. List of Test Apparatus low energy particle counter system
6. Average Power Requirements (kw) .05
7. Special Thermal Requirements internal location is sufficient
8. Orientation: Laboratory N/R ; Equipment N/R
9. Special Navigation Accuracy N/R
10. Stability and Pointing Accuracy N/R
11. Orbit Requirements must know position history
12. Gravity Requirements none

MANPOWER REQUIREMENTS

1. Number of Crew Required 1
2. Skill Categories Phy. Sci.
3. Total Man-hours 60
4. Chronological Span 1 year
5. Experiment Cycles: Duration 10 min. ; Number 365
6. Potential Hazards none

DISCUSSION:

This experiment could be performed by monitoring test coupons which are made of materials used in the construction of the spacecraft.

TITLE	NASA No. 2.2.1.11
MEASUREMENT OF SOLAR ABSORPTIVITY & THERMAL EMISSIVITY OF THERMAL CONTROL COATING BY SPECTROPHOTOMETRY	Lockheed No. 983

OBJECTIVE

Primary: To find the physical variables which causes change and determine degree of change in ratio of solar absorptivity to thermal emissivity

Secondary: To develop improved materials for thermal control

INSTALLATION REQUIREMENTS

1. Normal Operating Environment: Equip. Int. & Ext. ; Crew Int.
2. Weight of Equipment and Supplies (lb.) 30
3. Volume of Equipment and Supplies (cu. ft.): Internal 1.5 ; External 1
4. Critical Dimensions (ft.)
5. List of Test Apparatus Photometer, sphere reflectometer, thermal & radiometric equipment
6. Average Power Requirements (kw) 0.2
7. Special Thermal Requirements N/R
8. Orientation: Laboratory N/R ; Equipment N/R
9. Special Navigation Accuracy N/R
10. Stability and Pointing Accuracy ± 10° of sun line for specimens
11. Orbit Requirements N/R
12. Gravity Requirements N/R

MANPOWER REQUIREMENTS

1. Number of Crew Required 1 man (1 hr/mo)
2. Skill Categories Phy. Sci.
3. Total Man-hours 15
4. Chronological Span 1 yr.
5. Experiment Cycles: Duration 24 days ; Number 15
6. Potential Hazards None

DISCUSSION:

Coated metal samples will be exposed to space environment. Periodically the total thermal emittance and solar absorption will be determined by calorimetric measurements while specimens are mounted externally.

MEASUREMENT OF SOLAR ABSORPTIVITY AND THERMAL EMISSIVITY

OF THERMAL CONTROL COATING BY SPECTROPHOTOMETRY

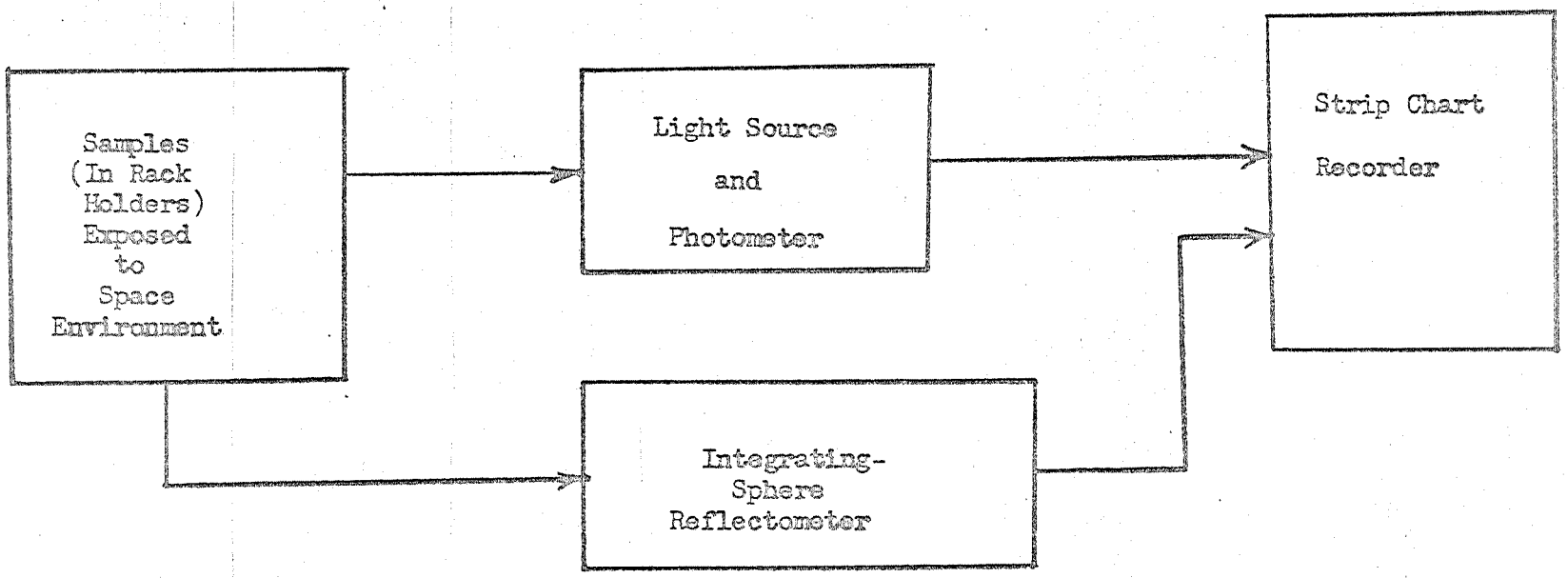

	WT. (lb)	VOL. (cu ft)
Sample Rack	5	0.5
Light Source and Photometer	5	0.5
Integrating Reflectometer	10	0.5
Recording Inst.	10	1
Work/Space		50
	30	52.5

TITLE	NASA No. 2.2.1.12
EFFECT OF SPACE ENVIRONMENT ON ABLATIVE MATERIALS	Lockheed No. 979

OBJECTIVE

Primary: Effect of space exposure on ablative materials subjected to solar radiation, meteorites, vacuum & cosmic radiation

INSTALLATION REQUIREMENTS

1. Normal Operating Environment: Equip. Int. & Ext. ; Crew Int.
2. Weight of Equipment and Supplies (lb.) 80 lbs.
3. Volume of Equipment and Supplies (cu. ft.): Internal 30 ; External
4. Critical Dimensions (ft.) max 2 ft. length
5. List of Test Apparatus Microscope (to 10000X), Heat transfer test unit, optical pyrometer and analytical balance
6. Average Power Requirements (kw) 0.350
7. Special Thermal Requirements Variable
8. Orientation: Laboratory N/R ; Equipment N/R
9. Special Navigation Accuracy N/R
10. Stability and Pointing Accuracy N/R
11. Orbit Requirements N/R
12. Gravity Requirements N/R

MANPOWER REQUIREMENTS

1. Number of Crew Required 1
2. Skill Categories Phy. Sci.
3. Total Man-hours 145
4. Chronological Span 180 days
5. Experiment Cycles: Duration 8 hrs. ; Number 9
6. Potential Hazards None, unless extravehicular activity is required

DISCUSSION: Ablative materials will be exposed to space environment and periodically examined & tested to determine the effect of solar radiation, vacuum meteorites & cosmic radiation. Specimens will be visually examined with microscope. To determine dimensional stability and to determine degradation of material structure. Heat transfer tests will be performed on specimens to determine the effect of space environment on thermal transfer properties. Weight reductions will also be determined.

EXPERIMENT AND APPLICATION SUMMARY

TITLE	NASA No. 2.2.1.13
EFFECTS OF SPACE ENVIRONMENT ON THE WEAR PROPERTIES OF METALS (PART A: SLIDING FRICTION)	Lockheed No. 993

OBJECTIVE

Primary: To study the behavior of sliding bearing materials in space environment

INSTALLATION REQUIREMENTS

1. Normal Operating Environment: Equip. Exterior ; Crew Interior
2. Weight of Equipment and Supplies (lb.) 10 (excluding readout equip.)
3. Volume of Equipment and Supplies (cu. ft.): Internal 0 ; External 1/2 ft^3
4. Critical Dimensions (ft.) 1
5. List of Test Apparatus Multiple specimen friction & wear apparatus driven by an electric motor. Friction readout by strain gage on each sample.
6. Average Power Requirements (kw) 0.01
7. Special Thermal Requirements -100°F to +150°F on various tests
8. Orientation: Laboratory None ; Equipment N/R
9. Special Navigation Accuracy None
10. Stability and Pointing Accuracy None
11. Orbit Requirements N/R
12. Gravity Requirements None

MANPOWER REQUIREMENTS

1. Number of Crew Required One
2. Skill Categories Phy. Sci.
3. Total Man-hours 100 hrs
4. Chronological Span 8 wks
5. Experiment Cycles: Duration 1 day ; Number 25
6. Potential Hazards None

DISCUSSION:

Readout instrumentation to be shared with other tests.

For purposes of program scheduling the experiment will be combined with 2.2.1.13/993 (Part B)

TITLE	EFFECTS OF SPACE ENVIRONMENT ON THE WEAR PROPERTIES OF METALS (PART B: ROLLING FRICTION)	NASA No. 2.2.1.13 Lockheed No. 993

OBJECTIVE

Primary: To develop rolling element bearings for use in space environments at high loads and low speeds.

INSTALLATION REQUIREMENTS

1. Normal Operating Environment: Equip. Exterior ; Crew Interior
2. Weight of Equipment and Supplies (lb.) 20
3. Volume of Equipment and Supplies (cu. ft.): Internal 0 ; External 1
4. Critical Dimensions (ft.) 1
5. List of Test Apparatus Multiple specimen bearing test machine utilizing internal loading of bearings. Electric motor drive. Friction measurements in first test.
6. Average Power Requirements (kw) 0.025
7. Special Thermal Requirements -100° to +150°F
8. Orientation: Laboratory None ; Equipment N/R
9. Special Navigation Accuracy None
10. Stability and Pointing Accuracy None
11. Orbit Requirements N/R
12. Gravity Requirements None

MANPOWER REQUIREMENTS

1. Number of Crew Required One
2. Skill Categories Phy. Sci.
3. Total Man-hours 125 hrs.
4. Chronological Span 25 wks.
5. Experiment Cycles: Duration 1 wk. ; Number 25
6. Potential Hazards None

DISCUSSION:

Parts to be inspected at conclusion of test

For purposes of program scheduling, this experiment will be combined with 2.2.1.13/993 (Part A)

TITLE	NASA No. 2.2.1.14
FATIGUE CRACK PROPAGATION IN A VACUUM	Lockheed No. 982

OBJECTIVE

Primary: Establish structural design criteria for the safe manufacture of space vehicle.

INSTALLATION REQUIREMENTS

1. Normal Operating Environment: Equip. Int. & Ext. ; Crew Int.
2. Weight of Equipment and Supplies (lb.) 15
3. Volume of Equipment and Supplies (cu. ft.): Internal 1 (specimen) ; External 1 (test sphere)
4. Critical Dimensions (ft.) 10" diameter test sphere located externally
5. List of Test Apparatus thin sheet metal sphere with strain concentrators, pressure cycling controls, instrumentation
6. Average Power Requirements (kw)
7. Special Thermal Requirements no requirement
8. Orientation: Laboratory no requirement ; Equipment no requirement
9. Special Navigation Accuracy no requirement
10. Stability and Pointing Accuracy no requirement
11. Orbit Requirements no requirement
12. Gravity Requirements none

MANPOWER REQUIREMENTS

1. Number of Crew Required 1
2. Skill Categories Phy. Sci. Exp.
3. Total Man-hours 260 (5 years)
4. Chronological Span mission duration
5. Experiment Cycles: Duration 1 hr/wk ; Number 260
6. Potential Hazards None unless extravehicular activity is required

DISCUSSION:

Externally mounted sphere of test construction are subjected to cycle of internal pressurization by utilizing the station internal atmosphere and bleeding down cyclically to space vacuum conditions. A second operating condition is long term exposure to vacuum.

TITLE	NASA No. 2.2.1.15
ENVIRONMENTAL CORRELATION	Lockheed No. 996

OBJECTIVE

Primary: to obtain actual space environment effect on thermal control coatings.

Secondary: to correlate data with that obtained on earth under simulated space environmental conditions.

INSTALLATION REQUIREMENTS

1. Normal Operating Environment: Equip. Int. ; Crew Int.
2. Weight of Equipment and Supplies (lb.) 30
3. Volume of Equipment and Supplies (cu. ft.): Internal 2 ; External 1
4. Critical Dimensions (ft.)
5. List of Test Apparatus Microscope, weighing device
6. Average Power Requirements (kw) 0
7. Special Thermal Requirements N/R
8. Orientation: Laboratory N/R ; Equipment N/R
9. Special Navigation Accuracy N/R
10. Stability and Pointing Accuracy N/R
11. Orbit Requirements N/R
12. Gravity Requirements Not critical

MANPOWER REQUIREMENTS

1. Number of Crew Required 1
2. Skill Categories Phy. Science
3. Total Man-hours 24
4. Chronological Span 2 yrs.
5. Experiment Cycles: Duration 4 mos. ; Number 6
6. Potential Hazards None

DISCUSSION:

Specimens containing coatings would be exposed for 4 months cycles. Evaluation tests such as adhesion, change in hardness, weight loss or thickness change could be performed in space station. Samples could be sent to earth for complete analysis and changes in emissivity. Data could then be correlated with that obtained under simulated space environmental conditions.

TITLE	NASA No. 2.2.1.19
FLUID & GAS PERMEABILITY OF VARIOUS ELASTOMERS	Lockheed No. 540

OBJECTIVE

Primary: To determine the permeability rate of O_2 & N_2 through various elastomers intended for space station usage

Secondary: To determine the permeability of H_2O and other fluids through elastomers in a vacuum.

INSTALLATION REQUIREMENTS

1. Normal Operating Environment: Equip. Int. & Ext. ; Crew Int.
2. Weight of Equipment and Supplies (lb.) 10
3. Volume of Equipment and Supplies (cu. ft.): Internal 1 ; External 1
4. Critical Dimensions (ft.)
5. List of Test Apparatus gas pressure recorder (portable), frame for specimen
6. Average Power Requirements (kw) .5
7. Special Thermal Requirements N/R
8. Orientation: Laboratory N/R ; Equipment N/R
9. Special Navigation Accuracy
10. Stability and Pointing Accuracy N/R
11. Orbit Requirements N/R
12. Gravity Requirements None

MANPOWER REQUIREMENTS

1. Number of Crew Required 1
2. Skill Categories Phy. Sci.
3. Total Man-hours 10
4. Chronological Span 1 wk
5. Experiment Cycles: Duration 2 min ; Number 60 (20 samples)
6. Potential Hazards None

DISCUSSION:

Low pressure of space is used as source of pressure differential. Experiment would have a two section airlock for specimens mounted in a test frame. Gas recording device could measure the increase in pressure on the opposite side of specimen in a given time cycle. Rate of gas or liquid permeability through a given thickness per length of time could be easily recorded.

TITLE	NASA No. 2.2.1.20
POLYMERIZATION OF ELASTOMERIC MONOMERS	Lockheed No. 986

OBJECTIVE

Primary: To study the effect of space on the curing of elastomeric sealants, coatings, etc.

Secondary: To develop the process of polymerization of elastomeric monomers by the use of the space ultraviolet, heat, and vacuum.

INSTALLATION REQUIREMENTS

1. Normal Operating Environment: Equip. Ext. ; Crew Int.
2. Weight of Equipment and Supplies (lb.) 5
3. Volume of Equipment and Supplies (cu. ft.): Internal Door opening space ; External 1
4. Critical Dimensions (ft.)
5. List of Test Apparatus Containers and handling equipment
6. Average Power Requirements (kw) 0
7. Special Thermal Requirements N/R
8. Orientation: Laboratory N/R ; Equipment Solar
9. Special Navigation Accuracy N/R
10. Stability and Pointing Accuracy N/R
11. Orbit Requirements N/R
12. Gravity Requirements None

MANPOWER REQUIREMENTS

1. Number of Crew Required 1
2. Skill Categories Physical Sci.
3. Total Man-hours 15
4. Chronological Span 2 days
5. Experiment Cycles: Duration 24 hrs ; Number 3 each material (20 materials)
6. Potential Hazards None

DISCUSSION:

Certain polyurethane resins will cure with the aid of ultraviolet rays and heat to an elastomeric material.

Certain rubber monomers could cure using the heat and vacuum of space.

TITLE	NASA No. 2.2.1.21
DECOMPRESSIONAL FATIGUE OF RUBBER MECHANICAL ITEMS	Lockheed No. 987

OBJECTIVE

Primary: To determine the effect of subjecting mechanical rubber items to cycling reduced pressures

INSTALLATION REQUIREMENTS

1. Normal Operating Environment: Equip. Int. & Ext. ; Crew Interior
2. Weight of Equipment and Supplies (lb.) 2
3. Volume of Equipment and Supplies (cu. ft.): Internal Door opening to space ; External 1
4. Critical Dimensions (ft.)
5. List of Test Apparatus Measuring instruments only
6. Average Power Requirements (kw) .2
7. Special Thermal Requirements N/R
8. Orientation: Laboratory N/R ; Equipment N/R
9. Special Navigation Accuracy N/R
10. Stability and Pointing Accuracy N/R
11. Orbit Requirements N/R
12. Gravity Requirements None

MANPOWER REQUIREMENTS

1. Number of Crew Required 1
2. Skill Categories Phy. Sci.
3. Total Man-hours 20
4. Chronological Span 1 wk
5. Experiment Cycles: Duration 1 hr ; Number 3/sample (20 samples)
6. Potential Hazards None

DISCUSSION:

Samples of elastomer materials to be used in the design of space vehicles could be subjected to the expected pressure changes along with the space environment in order to predict service life.

TITLE	HEAT TRANSFER & RADIATION PROPERTIES OF SOLID MATRIX & FILLED THERMAL INSULATORS	NASA No. 2.2.1.25 Lockheed No. 978

OBJECTIVE

Primary: To determine the heat transfer and radiation properties of solid matrix and filled thermal insulators

INSTALLATION REQUIREMENTS

1. Normal Operating Environment: Equip. Int. & Ext. ; Crew Int.
2. Weight of Equipment and Supplies (lb.) 30
3. Volume of Equipment and Supplies (cu. ft.): Internal 2 ; External 1
4. Critical Dimensions (ft.) 1 x 1 x 2
5. List of Test Apparatus α/ϵ detector, model insulators
6. Average Power Requirements (kw) 0.050
7. Special Thermal Requirements varying
8. Orientation: Laboratory N/R ; Equipment N/R
9. Special Navigation Accuracy N/R
10. Stability and Pointing Accuracy N/R
11. Orbit Requirements N/R
12. Gravity Requirements None

MANPOWER REQUIREMENTS

1. Number of Crew Required 1
2. Skill Categories Phy. Sci.
3. Total Man-hours 96
4. Chronological Span 28 days
5. Experiment Cycles: Duration 4 hrs ; Number 28
6. Potential Hazards None

DISCUSSION:

This test is to be conducted on various configurations in a space atmosphere. The model is to be mounted external to the station. This requires that provisions be incorporated in the station for the egress and ingress of the model with the crew remaining internal. Further evaluation may show that these tests may be more economically performed in a ground installation.

TITLE THE EFFECTS OF HIGH ENERGY PARTICULATE RADIATION ON SELECTED MATERIALS - PARTICULARLY ORGANIC COMPOUNDS	NASA No. 2.2.1.30 Lockheed No. 992

OBJECTIVE

Primary: To measure the effects of long term exposure to solar & cosmic radiation

Secondary: To provide a continuing check on support materials

INSTALLATION REQUIREMENTS

1. Normal Operating Environment: Equip. Interior ; Crew Interior
2. Weight of Equipment and Supplies (lb.) 100
3. Volume of Equipment and Supplies (cu. ft.): Internal 4 ; External 0
4. Critical Dimensions (ft.) 2
5. List of Test Apparatus microscope and camera
6. Average Power Requirements (kw) 0
7. Special Thermal Requirements N/R
8. Orientation: Laboratory N/R ; Equipment N/R
9. Special Navigation Accuracy N/R
10. Stability and Pointing Accuracy None
11. Orbit Requirements location should be known
12. Gravity Requirements None

MANPOWER REQUIREMENTS

1. Number of Crew Required 1 man
2. Skill Categories Phy. Sci.
3. Total Man-hours 15 min/day (Total: 456)
4. Chronological Span mission duration
5. Experiment Cycles: Duration 15 min. ; Number 1 per day (1825)
6. Potential Hazards none

DISCUSSION:

This experiment is designed to keep a check on the various support materials in a space station and evaluate material usefulness. It is also assumed that the radiation intensities are measured concurrently.

TITLE	NASA No. 2.2.1.33
METEOROID EFFECTS ON MATERIALS AND SURFACES	Lockheed No. 998

OBJECTIVE

Primary: To study the effects of meteoroid erosion on reflecting and refracting surfaces and on coatings used for temperature control and energy filtering

INSTALLATION REQUIREMENTS

1. Normal Operating Environment: Equip. Int.* ; Crew Int.
2. Weight of Equipment and Supplies (lb.) 63
3. Volume of Equipment and Supplies (cu. ft.): Internal 1.0 ; External 0
4. Critical Dimensions (ft.)
5. List of Test Apparatus **integrating sphere reflectometer, photometer, various detectors
6. Average Power Requirements (kw) 0.400
7. Special Thermal Requirements measurement apparatus require high thermal control
8. Orientation: Laboratory no requirement ; Equipment *
9. Special Navigation Accuracy no requirement
10. Stability and Pointing Accuracy no requirement
11. Orbit Requirements no requirement
12. Gravity Requirements none

MANPOWER REQUIREMENTS

1. Number of Crew Required 1
2. Skill Categories Phy. Sci. Experimenter
3. Total Man-hours 232
4. Chronological Span 1 year
5. Experiment Cycles: Duration 16 hrs. ; Number 12
6. Potential Hazards none

DISCUSSION:

*Samples are to be mounted on a gimbaled platform which is always oriented toward space and shielded from solar and earth radiation.

**It is proposed that most of the samples be returned to earth laboratories for further extensive analysis.

TITLE	NASA No. 2.2.1.34
METEOROID PENETRATION OF MATERIALS	Lockheed No. 999

OBJECTIVE

Primary: To obtain meteoroid craters, punctures, and penetrations in metallic materials; to verify data from unmanned satellites, and attempt to correlate experimental evidence with current penetration theories.

INSTALLATION REQUIREMENTS

1. Normal Operating Environment: Equip. Ext. & Int. ; Crew Int.
2. Weight of Equipment and Supplies (lb.) 5.5
3. Volume of Equipment and Supplies (cu. ft.): Internal 1 (analysis equipment) ; External .025 per sample
4. Critical Dimensions (ft.)
5. List of Test Apparatus microscope, depth gauge, photographic equipment (from other experiments) short focal length accessories, polishing materials
6. Average Power Requirements (kw) negligible
7. Special Thermal Requirements none
8. Orientation: Laboratory none ; Equipment N/R
9. Special Navigation Accuracy N/R
10. Stability and Pointing Accuracy N/R
11. Orbit Requirements N/R
12. Gravity Requirements none

MANPOWER REQUIREMENTS

1. Number of Crew Required 1
2. Skill Categories Phy. Sci. Exp.
3. Total Man-hours 6
4. Chronological Span 300 days
5. Experiment Cycles: Duration 1 hr ** ; Number 6
6. Potential Hazards none unless experiment requires crew member to go outside the vehicle for retrieval of sample

DISCUSSION:

**Includes 35 minutes/sample retrieval

Test specimens will be mounted outside the station, or the station surface itself can be used. Samples will be subsequently sectioned, microphotographed, and further analyzed.

TITLE	NASA No. 2.2.1.35
BREATHING MODE AND FLUID BEHAVIOR IN ZERO-G SPACE ENVIRONMENT	Lockheed No. 985

OBJECTIVE

Primary: Determine fluid behavior and breathing mode of tanks.

INSTALLATION REQUIREMENTS

1. Normal Operating Environment: Equip. Int. ; Crew Int.
2. Weight of Equipment and Supplies (lb.) 50
3. Volume of Equipment and Supplies (cu. ft.): Internal 5 ; External 0
4. Critical Dimensions (ft.) (tank structures) est: 1-2 ft^3
5. List of Test Apparatus tanks, cameras, auxiliary lighting, strain gages and indicators or recorders
6. Average Power Requirements (kw) 0.100
7. Special Thermal Requirements No requirement
8. Orientation: Laboratory No requirement ; Equipment No requirement
9. Special Navigation Accuracy No requirement
10. Stability and Pointing Accuracy No requirement
11. Orbit Requirements No requirement
12. Gravity Requirements Zero-g, free from vehicle accelerations

MANPOWER REQUIREMENTS

1. Number of Crew Required 1
2. Skill Categories Phy. Sci. Exp.
3. Total Man-hours 500
4. Chronological Span 6 months
5. Experiment Cycles: Duration 20 hrs. ; Number 25
6. Potential Hazards None

DISCUSSION:

Fluid behavior would be recorded photographically for later analysis. Structural deflections would be measured by strain gauges.

TITLE	NASA No. 2.2.1.36
EVALUATION OF ELASTOMERS	Lockheed No. 997

OBJECTIVE

Primary: To evaluate the effect of the space environment, such as vacuum, radiation, on elastomers.

Secondary: To establish expected service life of elastomeric materials expected to be used in space station design.

INSTALLATION REQUIREMENTS

1. Normal Operating Environment: Equip. Int. & Ext. ; Crew Int.
2. Weight of Equipment and Supplies (lb.) 10
3. Volume of Equipment and Supplies (cu. ft.): Internal Included in 2.2.1.15 ; External 1 cu.ft.
4. Critical Dimensions (ft.)
5. List of Test Apparatus Microscope, weighing device
6. Average Power Requirements (kw) 0
7. Special Thermal Requirements N/R
8. Orientation: Laboratory N/R ; Equipment N/R
9. Special Navigation Accuracy N/R
10. Stability and Pointing Accuracy N/R
11. Orbit Requirements N/R
12. Gravity Requirements Not critical

MANPOWER REQUIREMENTS

1. Number of Crew Required 1
2. Skill Categories Physical Science
3. Total Man-hours 48
4. Chronological Span 1 yr.
5. Experiment Cycles: Duration 1 mo. ; Number 12
6. Potential Hazards None

DISCUSSION: Specimens of elastomers would be placed into an external chamber with exposure to the space elements for monthly cycles. Each month they would be brought into the space station, examined and checked for hardness changes, flexibility and weight loss. At the end of 4 months, 8 months, and 12 months individual specimens could be packaged and sent back to earth for complete analysis requiring large test equipment. Data could then be compared to test data obtained on earth under simulated space conditions.

EXPERIMENT AND APPLICATION SUMMARY

TITLE	NASA No. 2.2.1.37
RADIATION HEAT TRANSFER	Lockheed No. 984

OBJECTIVE

Primary: To determine radiation heat transfer properties of various materials, coatings and surface conditions in space.

INSTALLATION REQUIREMENTS

1. Normal Operating Environment: Equip. Int. ; Crew Int.
2. Weight of Equipment and Supplies (lb.) 150
3. Volume of Equipment and Supplies (cu. ft.): Internal 10 ft^3 ; External 0
4. Critical Dimensions (ft.) 1 x 2 x 5
5. List of Test Apparatus α/ϵ detector
6. Average Power Requirements (kw) 0.10
7. Special Thermal Requirements varying
8. Orientation: Laboratory N/R ; Equipment N/R
9. Special Navigation Accuracy N/R
10. Stability and Pointing Accuracy N/R
11. Orbit Requirements N/R
12. Gravity Requirements None

MANPOWER REQUIREMENTS

1. Number of Crew Required 1
2. Skill Categories Phys. Sci.
3. Total Man-hours 96
4. Chronological Span 12 days
5. Experiment Cycles: Duration 8 hrs. ; Number 12
6. Potential Hazards None

DISCUSSION:

Tests to be conducted on various heated materials, both metallic and non-metallic, or different shapes, surface conditions, and coatings to determine radiation heat transfer in space. This test would be more beneficial if it determined the thermal degradation in space since most of the above can be accomplished in a ground installation.

TITLE	NASA No. 2.2.2.1
THERMAL STRAINS IN SPACEFRAME STRUCTURE & INSULATION	Lockheed No. 988

OBJECTIVE

Primary: Structural stresses induced by temperature variation.
Secondary: Wall temperatures

INSTALLATION REQUIREMENTS

1. Normal Operating Environment: Equip. Int. ; Crew Int.
2. Weight of Equipment and Supplies (lb.) 25 lbs approx.
3. Volume of Equipment and Supplies (cu. ft.): Internal 1 max. (signal cond.) ; External 0
4. Critical Dimensions (ft.) 1 x 1 x 1
5. List of Test Apparatus Strain gages on struct., signal conditioner, temp. pickups, time measurement
6. Average Power Requirements (kw) 0.001
7. Special Thermal Requirements N/R
8. Orientation: Laboratory N/R ; Equipment N/R
9. Special Navigation Accuracy N/R
10. Stability and Pointing Accuracy N/R
11. Orbit Requirements N/R
12. Gravity Requirements None

MANPOWER REQUIREMENTS

1. Number of Crew Required 1
2. Skill Categories Phys. Sci.
3. Total Man-hours 3
4. Chronological Span 3 hrs.
5. Experiment Cycles: Duration 1/2 min ; Number 200
6. Potential Hazards None

DISCUSSION:

Record stresses, temps., & time on tape for later telemetry. Strain gages & temp. pickups can be installed before launch. Record parameters intermittently during two orbits. Station D.C. power supply satisfactory. Power requirements very low.

TITLE	NASA No. 2.2.2.3
STRUCTURAL DAMPING MEASUREMENTS	Lockheed No. 989

OBJECTIVE

Primary: Effect of vibration on structure.

INSTALLATION REQUIREMENTS

1. Normal Operating Environment: Equip. Int. ; Crew Int.
2. Weight of Equipment and Supplies (lb.) None - See discussion below
3. Volume of Equipment and Supplies (cu. ft.): Internal None - see discussion ; External 0
4. Critical Dimensions (ft.) None - see discussion
5. List of Test Apparatus None - see discussion
6. Average Power Requirements (kw) 0.001
7. Special Thermal Requirements N/R
8. Orientation: Laboratory N/R ; Equipment N/R
9. Special Navigation Accuracy N/R
10. Stability and Pointing Accuracy N/R
11. Orbit Requirements N/R
12. Gravity Requirements None

MANPOWER REQUIREMENTS

1. Number of Crew Required 1
2. Skill Categories Physical Sci.
3. Total Man-hours 10
4. Chronological Span One resupply period
5. Experiment Cycles: Duration 1 min ; Number 100
6. Potential Hazards None

DISCUSSION:

Measure vibration in structure & noise in compartments during orbit keeping, attitude stabilization, docking, hangaring, crew movements, etc. on tape for later telemetry. Station power supply satisfactory. Power requirements very low. May be done in conjunction with experiment 2.2.5.3.

TITLE	NASA No. 2.2.2.4
DETERMINE CORROSIVE EFFECTS ON SPACE STATION RESULTING FROM PROPELLANT BOIL-OFF	Lockheed No. 995

OBJECTIVE

Primary: To determine corrosive effects from propellant boil-off.

INSTALLATION REQUIREMENTS

1. Normal Operating Environment: Equip. Ext. ; Crew Int.
2. Weight of Equipment and Supplies (lb.) 25
3. Volume of Equipment and Supplies (cu. ft.): Internal 0 ; External 2
4. Critical Dimensions (ft.)
5. List of Test Apparatus Metal samples and mounts
6. Average Power Requirements (kw) 0
7. Special Thermal Requirements None
8. Orientation: Laboratory None ; Equipment None
9. Special Navigation Accuracy None
10. Stability and Pointing Accuracy None
11. Orbit Requirements N/R
12. Gravity Requirements N/R

MANPOWER REQUIREMENTS

1. Number of Crew Required 1
2. Skill Categories Phy. Sci.
3. Total Man-hours 20
4. Chronological Span 3 months
5. Experiment Cycles: Duration varying ; Number 25
6. Potential Hazards Working outside space station

DISCUSSION:

Use selected sizes of various metals such as Al and stainless alloys, which would possibly be affected by either of the propellant components. Mg & non-stainless steel alloys which would be susceptible to N_2O_4 and IRFNA attack would be tested also. Joints of the different metals would be studied for bimetallic effects. Retrieve the specimens for examination upon return to Earth.

TITLE	NASA No. 2.2.2.5
PRESSURE LOSS THROUGH STRUCTURAL ORGANIC MATERIAL	Lockheed No. 994

OBJECTIVE

Primary: Determine rate of pressure loss through organic structural materials.

INSTALLATION REQUIREMENTS

1. Normal Operating Environment: Equip. Interior ; Crew Interior
2. Weight of Equipment and Supplies (lb.) 12
3. Volume of Equipment and Supplies (cu. ft.): Internal 1.5 ; External 1.5
4. Critical Dimensions (ft.) 1' x 1' x 1.5'
5. List of Test Apparatus Modified "Dow" gas transmission cell
6. Average Power Requirements (kw) .1
7. Special Thermal Requirements N/R
8. Orientation: Laboratory N/R ; Equipment N/R
9. Special Navigation Accuracy N/R
10. Stability and Pointing Accuracy N/R
11. Orbit Requirements N/R
12. Gravity Requirements Not critical

MANPOWER REQUIREMENTS

1. Number of Crew Required 1
2. Skill Categories Phy. Sci.
3. Total Man-hours 40
4. Chronological Span 30 days
5. Experiment Cycles: Duration 4 hrs. ; Number 20
6. Potential Hazards None

DISCUSSION:

A standard gas transmission test will be conducted on each organic materials used as primary structure. The analysis will be obtained by use of a modified "Dow Gas Transmission Cell". Approximately 90% of pressure loss testing can be done in space simulation chamber, and space station testing would then be limited to confirmation of data and determining effect of radiation, meteoroids, etc.

TITLE	NASA No. 2.2.2.6
RADIATION SHIELDING MATERIALS TESTING	Lockheed No. 539

OBJECTIVE

Primary: Measure the shielding effectiveness of shielding materials and conventional structures.

Secondary: Provide environment information.

INSTALLATION REQUIREMENTS

1. Normal Operating Environment: Equip. Int. ; Crew Int.
2. Weight of Equipment and Supplies (lb.) 300
3. Volume of Equipment and Supplies (cu. ft.): Internal Approx. 3 ; External 0
4. Critical Dimensions (ft.) Approx. 15 detectors: cylinders $\frac{1}{2}$ ft long x 3" dia.
5. List of Test Apparatus Cage manufactured to hold detectors and materials as shown in sketch.
6. Average Power Requirements (kw) 0.1
7. Special Thermal Requirements N/R
8. Orientation: Laboratory N/R ; Equipment N/R
9. Special Navigation Accuracy N/R
10. Stability and Pointing Accuracy N/R
11. Orbit Requirements N/R
12. Gravity Requirements Not important

MANPOWER REQUIREMENTS

1. Number of Crew Required 1
2. Skill Categories Phy. Sci.
3. Total Man-hours 40 hrs.
4. Chronological Span 1 week
5. Experiment Cycles: Duration 1 wk ; Number 6
6. Potential Hazards Exposure of personnel to environment

DISCUSSION: This experiment involves the measurement of the shielding characteristics of various spacecraft materials. It is assumed that doses and/or fluxes of trapped protons, trapped electrons, solar particles and cosmic ray particles behind shielding will be measured. Shielding samples are 3" diameter discs of .5 g/cm^2 and weighing approx. 0.05 lbs each. If 30 discs are allowed for each material, approx. 6 materials can be tested.
The operator is occupied in changing material and material thickness. He may also record data points.
Fifteen particle detectors are assumed so that various particles and various energies may be measured. A sample test apparatus is shown in the sketch.

RADIATION SHIELDING MATERIALS TESTING

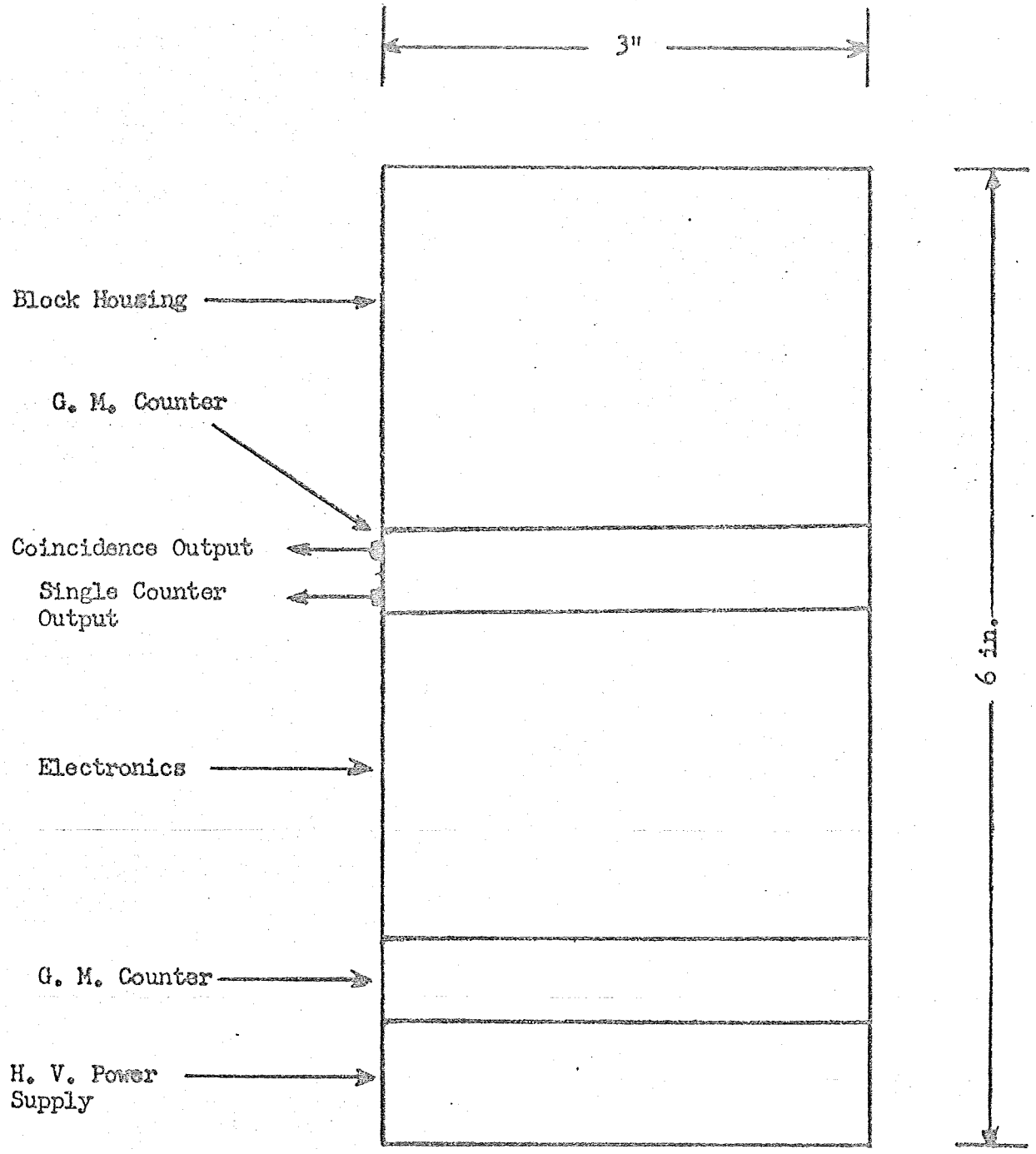

THE G. M. COUNTER TELESCOPE AND BLOCK HOUSING CONFIGURATION

EXPERIMENT AND APPLICATION SUMMARY

TITLE	NASA No. 2.2.3.1
DEPLOYMENT & STRUCTURAL STABILITY TESTS (INFLATABLE STRUCTURES)	Lockheed No. 534

OBJECTIVE

Primary: To check deployment & structural soundness of inflatable structures.

INSTALLATION REQUIREMENTS

1. Normal Operating Environment: Equip. Int. ; Crew Int.
2. Weight of Equipment and Supplies (lb.) 10
3. Volume of Equipment and Supplies (cu. ft.): Internal 1 (stowed) to 5 (inflated) ; External 0
4. Critical Dimensions (ft.) 1 (stowed) to 5 (inflated)
5. List of Test Apparatus Tensile & compression tester
6. Average Power Requirements (kw) 0
7. Special Thermal Requirements N/R
8. Orientation: Laboratory N/R ; Equipment N/R
9. Special Navigation Accuracy N/R
10. Stability and Pointing Accuracy N/R
11. Orbit Requirements N/R
12. Gravity Requirements Zero G for deployment experiments

MANPOWER REQUIREMENTS

1. Number of Crew Required 1
2. Skill Categories Phy. Sci. Exp.
3. Total Man-hours 5
4. Chronological Span 1 day
5. Experiment Cycles: Duration 1 hr ; Number 4
6. Potential Hazards

DISCUSSION:

Deployment of small inflatable structures can take place within the space station. Rigidizing must take place in zero g. Sections of these structures must then be tested for strength & accuracy in contour.

TITLE	NASA No. 2.2.3.2
TESTS OF SELF-SEALING STRUCTURES	Lockheed No. 522

OBJECTIVE

Primary: To evaluate the performance of various self-sealing systems developed on earth under space conditions.

Secondary: To compare the efficiency of the self-sealing systems in space with the results obtained in earth laboratory test programs after various service lifes.

INSTALLATION REQUIREMENTS

1. Normal Operating Environment: Equip. Int. & Ext. ; Crew Int.
2. Weight of Equipment and Supplies (lb.) 60 (test panels)
3. Volume of Equipment and Supplies (cu. ft.): Internal 2 ; External 2
4. Critical Dimensions (ft.)
5. List of Test Apparatus
6. Average Power Requirements (kw) 0.02
7. Special Thermal Requirements N/R
8. Orientation: Laboratory N/R ; Equipment N/R
9. Special Navigation Accuracy N/R
10. Stability and Pointing Accuracy N/R
11. Orbit Requirements N/R
12. Gravity Requirements Gravity field not important

MANPOWER REQUIREMENTS

1. Number of Crew Required 1
2. Skill Categories Phy. Sci.
3. Total Man-hours 7-15
4. Chronological Span 14-30 days
5. Experiment Cycles: Duration cont. ; Number -
6. Potential Hazards None

DISCUSSION:

Experiment time may be as much as 1 yr. Test panels should be returned to Earth at the rate of about 5 lb every 3 mos.

TITLE	NASA No. 2.2.3.3
DEVELOPMENT OF INFLATABLE STRUCTURES	Lockheed No. 535

OBJECTIVE

Primary: To develop a variety of shapes that can best be used for inflatable structures.

Secondary: To determine best materials for inflating.

INSTALLATION REQUIREMENTS

1. Normal Operating Environment: Equip. Int. & Ext. ; Crew Int.
2. Weight of Equipment and Supplies (lb.) 10
3. Volume of Equipment and Supplies (cu. ft.): Internal 1 (stowed) to 5 (inflated) ; External 1
4. Critical Dimensions (ft.) 1 (stowed) to 5 (inflated)
5. List of Test Apparatus High speed camera, pressure gages
6. Average Power Requirements (kw) 30 watt-hrs/week
7. Special Thermal Requirements N/R
8. Orientation: Laboratory N/R ; Equipment N/R
9. Special Navigation Accuracy N/R
10. Stability and Pointing Accuracy N/R
11. Orbit Requirements N/R
12. Gravity Requirements Zero g for inflating

MANPOWER REQUIREMENTS

1. Number of Crew Required 1
2. Skill Categories Physical Sci.
3. Total Man-hours 8
4. Chronological Span 2 days
5. Experiment Cycles: Duration 15 min. ; Number 4
6. Potential Hazards Samples might explode during deployment.

DISCUSSION:

A variety of shapes are to be inflated & residual pressures checked. Hi speed movies will show deployment. A variety of materials should be tested for deployment and rigidizing. Some of these tests on the materials should be performed in space in an external experiment package.

TITLE	NASA No. 2.2.4.1
DEVELOPMENT OF EXPANDABLE STRUCTURES	Lockheed No. 536

OBJECTIVE

Primary: To develop a variety of configurations for expandable structures.

Secondary: To determine optimum materials for expandable structures.

INSTALLATION REQUIREMENTS

1. Normal Operating Environment: Equip. Int. & Ext. ; Crew Int.
2. Weight of Equipment and Supplies (lb.) 15
3. Volume of Equipment and Supplies (cu. ft.): Internal 1 (stowed) to 5(expanded) ; External
4. Critical Dimensions (ft.) 1 (stowed) to 5 (expanded)
5. List of Test Apparatus Camera - pressure gage
6. Average Power Requirements (kw) 30 watt-hrs/week
7. Special Thermal Requirements N/R
8. Orientation: Laboratory N/R ; Equipment N/R
9. Special Navigation Accuracy N/R
10. Stability and Pointing Accuracy N/R
11. Orbit Requirements N/R
12. Gravity Requirements Not important

MANPOWER REQUIREMENTS

1. Number of Crew Required 1
2. Skill Categories Physical Sci.
3. Total Man-hours 4
4. Chronological Span 1 day
5. Experiment Cycles: Duration 15 min ; Number 4
6. Potential Hazards None

DISCUSSION:

A variety of expandable configurations should be tested to determine optimum design features. Methods of sealing sections should be studied. Some of these tests should be in vacuum environment.

It is believed that a major part of this experiment could be performed on earth.

TITLE	NASA No. 2.2.4.2
DEPLOYMENT & STRUCTURAL STABILITY TESTS (EXPANDABLE STRUCTURES)	Lockheed No. 537

OBJECTIVE

Primary: To check deployment & structural soundness of expandable structures.

INSTALLATION REQUIREMENTS

1. Normal Operating Environment: Equip. Int. ; Crew Int.
2. Weight of Equipment and Supplies (lb.) 10
3. Volume of Equipment and Supplies (cu. ft.): Internal 1 (stowed) to 5 (expanded) ; External
4. Critical Dimensions (ft.) 1 (stowed) to 5 (expanded)
5. List of Test Apparatus Tensile & compression tester, pressure gages
6. Average Power Requirements (kw) 30 watt-hrs/week
7. Special Thermal Requirements N/R
8. Orientation: Laboratory N/R ; Equipment N/R
9. Special Navigation Accuracy N/R
10. Stability and Pointing Accuracy N/R
11. Orbit Requirements N/R
12. Gravity Requirements Not important

MANPOWER REQUIREMENTS

1. Number of Crew Required 1
2. Skill Categories Phy. Sci.
3. Total Man-hours 5
4. Chronological Span 1 day
5. Experiment Cycles: Duration 1 hr ; Number 4
6. Potential Hazards None

DISCUSSION:

Deployment of small expandable structures can take place within the space station and required testing accomplished.

It is believed that a major part of this experiment could be performed on earth.

TITLE	NASA No. 2.2.4.3
RADIATION SHADOW SHIELD TEST	Lockheed No. 538

OBJECTIVE

Primary: Measure neutron & gamma fluxes from nuclear power sources (incl. isotopes) inside & outside space station.

Secondary: Monitor environment fluxes.

INSTALLATION REQUIREMENTS

1. Normal Operating Environment: Equip. Int. & Ext. ; Crew Int. & Ext.
2. Weight of Equipment and Supplies (lb.) 20
3. Volume of Equipment and Supplies (cu. ft.): Internal 0.1 Ft^3 Approx. ; External Extension boom 25 ft.
4. Critical Dimensions (ft.) 3 cylinders 1/2 ft. long, 3" diameter
5. List of Test Apparatus 2 neutron detectors & 1 gamma detector (neutron detectors; 1 for slow neutrons plus 1 for fast neutrons)
6. Average Power Requirements (kw) 0.02
7. Special Thermal Requirements N/R
8. Orientation: Laboratory N/R ; Equipment N/R
9. Special Navigation Accuracy N/R
10. Stability and Pointing Accuracy N/R
11. Orbit Requirements N/R
12. Gravity Requirements Not important

MANPOWER REQUIREMENTS

1. Number of Crew Required One
2. Skill Categories Physical Sci.
3. Total Man-hours 260 in 5 years
4. Chronological Span Mission duration
5. Experiment Cycles: Duration One hr. ; Number One per week (260)
6. Potential Hazards Personnel radiation dose from high power source fluxes.

DISCUSSION: Three radiation detectors will measure neutron and gamma fluxes behind a shadow shield of a nuclear power source. Fluxes measured once per week will provide continuous monitoring of dose. Extension boom stored exterior will make possible exterior measurements and measurements along docking path. Detectors will also monitor environment fluxes.

TITLE	NASA No. 2.2.5.1
LEAK DETECTION AND SEALING TECHNIQUES	Lockheed No. 527

OBJECTIVE

Primary: Evaluate the effectiveness of leakage detection systems in locating micrometeoroid punctures or stress cracking, and detecting increases in leakage by static and dynamic seals.

Secondary: To evaluate repair techniques and repair materials for damaged structure and seals.

INSTALLATION REQUIREMENTS

1. Normal Operating Environment: Equip. Int. & Ext. ; Crew Int. & Ext.
2. Weight of Equipment and Supplies (lb.) 100
3. Volume of Equipment and Supplies (cu. ft.): Internal 8 ; External 2
4. Critical Dimensions (ft.) 4 sq. ft.
5. List of Test Apparatus Removable bulk head in air lock for test panels.
6. Average Power Requirements (kw) 0.1
7. Special Thermal Requirements N/R
8. Orientation: Laboratory N/R ; Equipment N/R
9. Special Navigation Accuracy N/R
10. Stability and Pointing Accuracy N/R
11. Orbit Requirements N/R
12. Gravity Requirements Gravity field not important

MANPOWER REQUIREMENTS

1. Number of Crew Required 1
2. Skill Categories Phy. Sci.
3. Total Man-hours 1200
4. Chronological Span 5 yrs.
5. Experiment Cycles: Duration 4 hrs. ; Number 300
6. Potential Hazards Extravehicular activity

DISCUSSION:

Volume may be 10 cu. ft.; power 0.2 KW

Supplies expended will be 20 lb per 3 mos. period.

TITLE	NASA No. 2.2.5.2
ANALYSIS OF OUTGASSING OF AN ORBITING SPACE VEHICLE BY USE OF A MASS SPECTROMETER	Lockheed No. 531

OBJECTIVE

Primary: The accurate determination of material loss rates of outer structural materials under actual space conditions.

INSTALLATION REQUIREMENTS

1. Normal Operating Environment: Equip. Ext. & Int. ; Crew Int.
2. Weight of Equipment and Supplies (lb.) 100
3. Volume of Equipment and Supplies (cu. ft.): Internal 3.5 ; External
4. Critical Dimensions (ft.)
5. List of Test Apparatus Mass spectrometer
6. Average Power Requirements (kw) 1.0
7. Special Thermal Requirements passive protection for external apparatus
8. Orientation: Laboratory N/R ; Equipment N/R
9. Special Navigation Accuracy N/R
10. Stability and Pointing Accuracy N/R
11. Orbit Requirements N/R
12. Gravity Requirements N/R

MANPOWER REQUIREMENTS

1. Number of Crew Required 1
2. Skill Categories Phy. Sci.
3. Total Man-hours 8
4. Chronological Span 48 hrs.
5. Experiment Cycles: Duration 48 hrs. ; Number 1
6. Potential Hazards None

DISCUSSION:

TITLE INTERNAL LABORATORY SPACECRAFT ENVIRONMENTAL NOISE & VIBRATION LEVELS	NASA No. 2.2.5.3 Lockheed No. 990

OBJECTIVE

Primary: Sound & vibration survey.

INSTALLATION REQUIREMENTS

1. Normal Operating Environment: Equip. Interior ; Crew Interior
2. Weight of Equipment and Supplies (lb.) 25 lbs. approx.
3. Volume of Equipment and Supplies (cu. ft.): Internal 1 ; External 0
4. Critical Dimensions (ft.) 1 x 1 x 1
5. List of Test Apparatus Noise & vibration pickups, signal conditioner, time measurement.
6. Average Power Requirements (kw) 0.001
7. Special Thermal Requirements N/R
8. Orientation: Laboratory N/R ; Equipment N/R
9. Special Navigation Accuracy N/R
10. Stability and Pointing Accuracy N/R
11. Orbit Requirements N/R
12. Gravity Requirements N/R

MANPOWER REQUIREMENTS

1. Number of Crew Required 1
2. Skill Categories Physical Sci.
3. Total Man-hours 10
4. Chronological Span One resupply period
5. Experiment Cycles: Duration 1 min ; Number 100
6. Potential Hazards None

DISCUSSION:

Same as Experiment 2.2.2.3/989

TITLE	NASA No. 2.3.1.1
DEPLOYMENT & ERECTION OF LARGE SOLAR CELL ARRAYS	Lockheed No. 541

OBJECTIVE

Primary: To determine how to cope with the space environment in establishing very large, accurate contour surfaces.

Secondary: To study optical and mechanical alignment procedures.

INSTALLATION REQUIREMENTS

1. Normal Operating Environment: Equip. Ext. & Int. ; Crew Int. & Ext.
2. Weight of Equipment and Supplies (lb.) 300
3. Volume of Equipment and Supplies (cu. ft.): Internal 1 ; External 5
4. Critical Dimensions (ft.)
5. List of Test Apparatus T.V. camera, theodolite
6. Average Power Requirements (kw) 0.200
7. Special Thermal Requirements N/R
8. Orientation: Laboratory N/R ; Equipment sun
9. Special Navigation Accuracy N/R
10. Stability and Pointing Accuracy ± 30° about line of sight to sun
11. Orbit Requirements N/R
12. Gravity Requirements 0-g

MANPOWER REQUIREMENTS

1. Number of Crew Required 3
2. Skill Categories Phy. Sci.
3. Total Man-hours 168
4. Chronological Span 1 week
5. Experiment Cycles: Duration 28 hrs ; Number 2
6. Potential Hazards Extravehicular activity

DISCUSSION:

TITLE	NASA No. 2.3.1.2
DEPLOYMENT OF FOAM RIGIDIZED SOLAR COLLECTORS	Lockheed No. 543

OBJECTIVE

Primary: To determine feasibility of deploying foam rigidized solar collectors in the space environment.

Secondary: Radiometric measurements to give performance data on rigidized collector.

INSTALLATION REQUIREMENTS

1. Normal Operating Environment: Equip. Int. & Ext. ; Crew Internal & External
2. Weight of Equipment and Supplies (lb.) 50
3. Volume of Equipment and Supplies (cu. ft.): Internal 2 cu. ft. ; External
4. Critical Dimensions (ft.)
5. List of Test Apparatus Radiometer, 2 motion picture cameras, 2 still cameras
6. Average Power Requirements (kw) 0.6
7. Special Thermal Requirements N/R
8. Orientation: Laboratory N/R ; Equipment Solar
9. Special Navigation Accuracy N/R
10. Stability and Pointing Accuracy N/R
11. Orbit Requirements N/R
12. Gravity Requirements Gravity field not important

MANPOWER REQUIREMENTS

1. Number of Crew Required 1
2. Skill Categories Physical Science
3. Total Man-hours 28
4. Chronological Span 4 wks.
5. Experiment Cycles: Duration 4 wks. ; Number 1
6. Potential Hazards Extravehicular activity, if required.

DISCUSSION:

TITLE	NASA No. 2.3.1.3
SOLAR CELL EVALUATION	Lockheed No. 544

OBJECTIVE

Primary: Evaluate various solar cell types in space environment.

Secondary: Determine methods of extending useful life.

INSTALLATION REQUIREMENTS

1. Normal Operating Environment: Equip. External ; Crew Internal
2. Weight of Equipment and Supplies (lb.) 10
3. Volume of Equipment and Supplies (cu. ft.): Internal 0.5 ; External Array area 50 sq.ft.
4. Critical Dimensions (ft.) 10
5. List of Test Apparatus 10 test panels 2' x 2' mounted on external ORL array structure; must be retractable to inside of station.
6. Average Power Requirements (kw) 0.1
7. Special Thermal Requirements N/R
8. Orientation: Laboratory N/R ; Equipment Array - Sun Oriented
9. Special Navigation Accuracy N/R
10. Stability and Pointing Accuracy Roll Attitude: ± 10°
    Pitch Attitude: ± 10°
11. Orbit Requirements N/R
12. Gravity Requirements Gravity field not important

MANPOWER REQUIREMENTS

1. Number of Crew Required 1
2. Skill Categories Physical Science
3. Total Man-hours 182
4. Chronological Span 13 wks.
5. Experiment Cycles: Duration 13 wks. ; Number 8
6. Potential Hazards None

DISCUSSION:

Experiment time may be as much as 2 yrs.

TITLE	NASA No. 2.3.1.4
DEPLOYMENT & ERECTION OF LARGE AREA SOLAR COLLECTORS	Lockheed No. 545

OBJECTIVE

Primary: To determine how to cope with the space environment in establishing very large, accurate contour surfaces.

Secondary: To study optical and mechanical alignment procedures.

INSTALLATION REQUIREMENTS

1. Normal Operating Environment: Equip. Ext. & Int.; Crew Int. & Ext.
2. Weight of Equipment and Supplies (lb.) 300
3. Volume of Equipment and Supplies (cu. ft.): Internal 1 ; External 5
4. Critical Dimensions (ft.)
5. List of Test Apparatus T.V. camera, theodolite
6. Average Power Requirements (kw) 0.200*
7. Special Thermal Requirements N/R
8. Orientation: Laboratory N/R ; Equipment Sun
9. Special Navigation Accuracy N/R
10. Stability and Pointing Accuracy ± 1° about line of sight to sun
11. Orbit Requirements N/R
12. Gravity Requirements 0-g

MANPOWER REQUIREMENTS

1. Number of Crew Required 3
2. Skill Categories Phy. Sci.
3. Total Man-hours 168
4. Chronological Span 1 week
5. Experiment Cycles: Duration ; Number 2
6. Potential Hazards Extravehicular activity

DISCUSSION:

TITLE	NASA No. 2.3.1.5
DEPLOYMENT & ERECTION OF LARGE AREA SPACE RADIATORS	Lockheed No. 546

OBJECTIVE

Primary: To determine how to cope with the space environment in establishing very large, accurate contour surfaces.

Secondary: To study optical and mechanical alignment procedures.

INSTALLATION REQUIREMENTS

1. Normal Operating Environment: Equip. Ext. & Int. ; Crew Int. & Ext.
2. Weight of Equipment and Supplies (lb.) 300
3. Volume of Equipment and Supplies (cu. ft.): Internal 1 ; External 5
4. Critical Dimensions (ft.)
5. List of Test Apparatus T.V. camera, theodolite
6. Average Power Requirements (kw) 0.200
7. Special Thermal Requirements N/R
8. Orientation: Laboratory N/R ; Equipment N/R
9. Special Navigation Accuracy N/R
10. Stability and Pointing Accuracy N/R
11. Orbit Requirements N/R
12. Gravity Requirements 0-g

MANPOWER REQUIREMENTS

1. Number of Crew Required 3
2. Skill Categories Phy. Sci.
3. Total Man-hours 168
4. Chronological Span 1 week
5. Experiment Cycles: Duration 28 hrs. ; Number 2
6. Potential Hazards Extravehicular activity

DISCUSSION:

TITLE	NASA No. 2.3.1.6
EVALUATION OF PETAL TYPE (SUNFLOWER) SOLAR DYNAMIC SYSTEM	Lockheed No. 542

OBJECTIVE

Primary: To evaluate performance and endurance of a sunflower solar dynamic system.

INSTALLATION REQUIREMENTS

1. Normal Operating Environment: Equip. Int. & Ext. ; Crew Int.
2. Weight of Equipment and Supplies (lb.) 1000
3. Volume of Equipment and Supplies (cu. ft.): Internal 7 ; External 20
4. Critical Dimensions (ft.)
5. List of Test Apparatus Solar dynamic collector/converter 1 KW mounted on external surface of S/S and sun oriented
6. Average Power Requirements (kw) 0.050*
7. Special Thermal Requirements
8. Orientation: Laboratory N/R ; Equipment Sun
9. Special Navigation Accuracy N/R
10. Stability and Pointing Accuracy ± 1° about line of sight to sun
11. Orbit Requirements N/R
12. Gravity Requirements Not critical

MANPOWER REQUIREMENTS

1. Number of Crew Required 1
2. Skill Categories Phy. Sci.
3. Total Man-hours 1460
4. Chronological Span 1 yr.**
5. Experiment Cycles: Duration 1 yr. ; Number 1
6. Potential Hazards None

DISCUSSION:

*1000 watts for 2 hrs. of activation

**NASA suggests additional tests if first test is successful.

System will be dismantled and returned to Earth after one year for complete evaluation.

TITLE	NASA No. 2.3.1.7
EVALUATION OF A SOLAR MERCURY RANKINE SYSTEM	Lockheed No. 547

OBJECTIVE

Primary: To evaluate performance and endurance of a solar mercury rankine system.

INSTALLATION REQUIREMENTS

1. Normal Operating Environment: Equip. Int. & Ext. ; Crew Int.
2. Weight of Equipment and Supplies (lb.) 1000
3. Volume of Equipment and Supplies (cu. ft.): Internal 7 ; External 20
4. Critical Dimensions (ft.)
5. List of Test Apparatus Solar dynamic collector/converter 1 KW mounted on external surface of S/S and sun oriented.
6. Average Power Requirements (kw) 0.050*
7. Special Thermal Requirements
8. Orientation: Laboratory N/R ; Equipment Sun
9. Special Navigation Accuracy N/R
10. Stability and Pointing Accuracy ± 1° about line of sight to sun
11. Orbit Requirements N/R
12. Gravity Requirements Not critical

MANPOWER REQUIREMENTS

1. Number of Crew Required 1
2. Skill Categories Phy. Sci.
3. Total Man-hours 1460
4. Chronological Span 1 yr.**
5. Experiment Cycles: Duration 1 yr. ; Number 1
6. Potential Hazards None

DISCUSSION:

*1000 watts for 2 hrs. of activation

**NASA suggests additional tests if first test is successful.

System will be dismantled and returned to Earth after one year for complete evaluation.

TITLE	NASA No. 2.3.1.8
ORBITAL TEST OF SOLAR THERMOELECTRIC COMPONENTS	Lockheed No. 548

OBJECTIVE

Primary: To evaluate performance of bismuth telluride thermo-electric elements.

Secondary: Determine reliability and endurance of the element in a space environment.

INSTALLATION REQUIREMENTS

1. Normal Operating Environment: Equip. Int. & Ext. ; Crew Int.
2. Weight of Equipment and Supplies (lb.) 60
3. Volume of Equipment and Supplies (cu. ft.): Internal 2 ; External 1.6
4. Critical Dimensions (ft.)
5. List of Test Apparatus Radiation, thermal and power measuring equipment (see sketch)
6. Average Power Requirements (kw) 0.1
7. Special Thermal Requirements N/R
8. Orientation: Laboratory N/R ; Equipment Solar
9. Special Navigation Accuracy N/R
10. Stability and Pointing Accuracy ± 10° about line of sight to sun
11. Orbit Requirements N/R
12. Gravity Requirements N/R

MANPOWER REQUIREMENTS

1. Number of Crew Required 1 man (0.1 hr/d)
2. Skill Categories Phy. Sci.
3. Total Man-hours 182.5
4. Chronological Span 5 yrs
5. Experiment Cycles: Duration Cont. ; Number -
6. Potential Hazards None

DISCUSSION: Two small flat plates of coated aluminum with bismuth telluride sandwiches between them as a test thermo electric element so that they may be automatically deployed after the space station is in orbit. During the course of the experiment other T/E element types will be tested. The purpose of the experiment is to determine the performance, reliability, and endurance when exposed to space environment for long time periods.

ORBITAL TEST OF SOLAR THERMOELECTRIC COMPONENTS

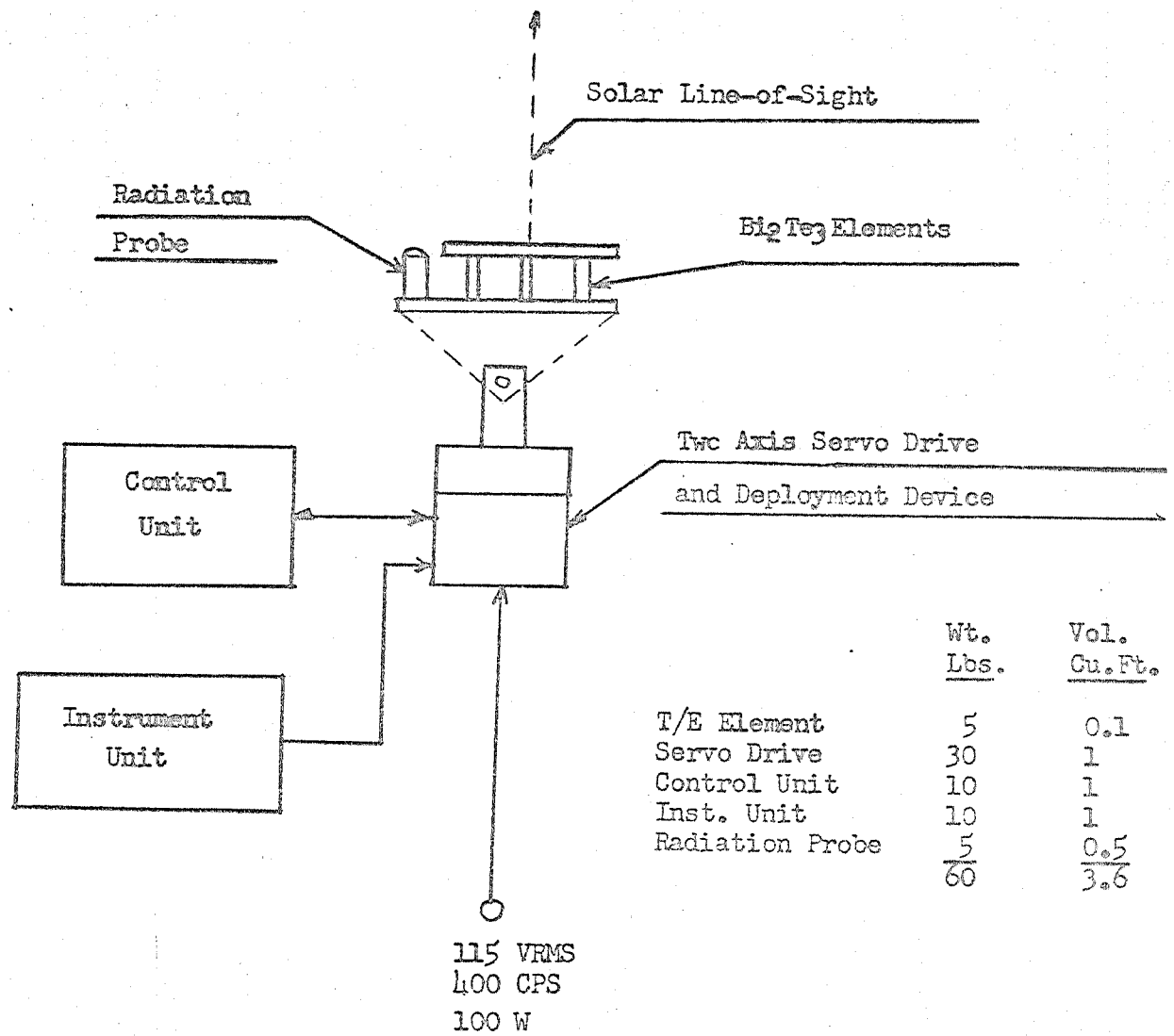

	Wt. Lbs.	Vol. Cu.Ft.
T/E Element	5	0.1
Servo Drive	30	1
Control Unit	10	1
Inst. Unit	10	1
Radiation Probe	5	0.5
	60	3.6

Measurements

Element Temperatures
Voltage vs Load
Power Output-Watts
Solar Alignment
Radiation Analyzer

TITLE	NASA No. 2.3.1.9
PHOTOVOLTAIC AND PHOTOEMISSION MATERIAL DETERIORATION EVALUATION	Lockheed No. 549

OBJECTIVE

Primary: Measure deterioration of photovoltaic and photoemission material in space environment.

Secondary: Analyze deterioration and develop methods to reduce degradation.

INSTALLATION REQUIREMENTS

1. Normal Operating Environment: Equip. Int. & Ext. ; Crew Int.
2. Weight of Equipment and Supplies (lb.) 191
3. Volume of Equipment and Supplies (cu. ft.): Internal 3.6 ; External 10
4. Critical Dimensions (ft.) 20
5. List of Test Apparatus Radiation, thermal, micrometeorite, and power measurements.
6. Average Power Requirements (kw) 0.2
7. Special Thermal Requirements 50-120°F
8. Orientation: Laboratory N/R ; Equipment Solar
9. Special Navigation Accuracy
10. Stability and Pointing Accuracy ± 10° about line of sight to sun
11. Orbit Requirements N/R
12. Gravity Requirements N/R

MANPOWER REQUIREMENTS

1. Number of Crew Required 1 (0.1 hr/day)
2. Skill Categories Phys. Sci.
3. Total Man-hours 182.5
4. Chronological Span 5 yrs.
5. Experiment Cycles: Duration 5 yrs. ; Number 1
6. Potential Hazards None

DISCUSSION:

Various photovoltaic and photoemissive materials will be placed in an array, oriented with respect to the sun, and electrically connected to recording devices which intermittently record voltage and power capabilities. The experiment will determine the degree to which these materials deteriorate in performance as a result of micrometeoroids, electromagnetic & particle radiation.

PHOTOVOLTAIC AND PHOTOEMISSION MATERIAL DETERIORATION EVALUATION

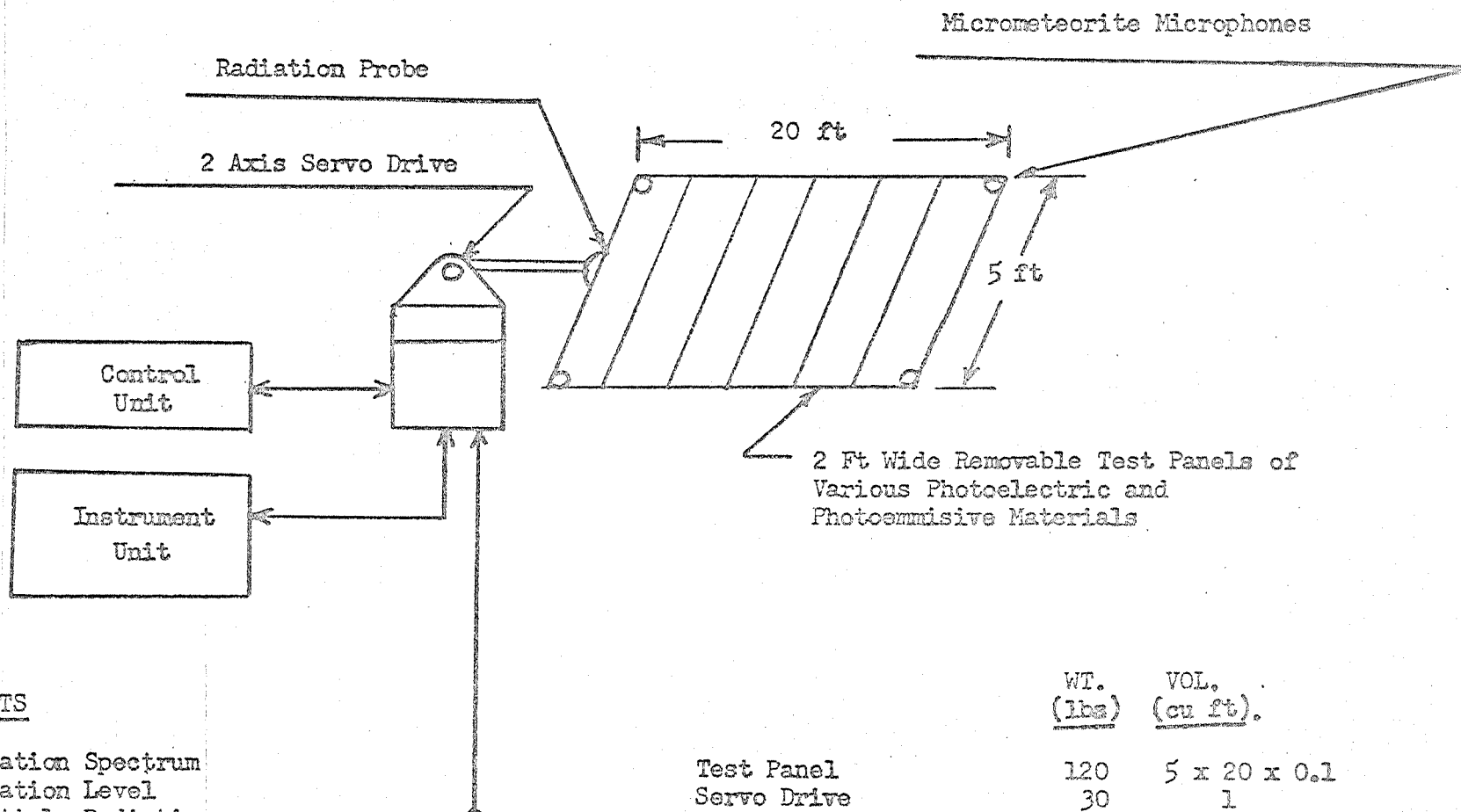

*MEASUREMENTS

Solar Radiation Spectrum
Solar Radiation Level
EM and Particle Radiation
Micrometeorite Impact
Output Voltage
Output Current
Output Power vs Load
Solar Alignment
Solar Side Surface Temperature
Back Side Surface Temperature

	WT. (lbs)	VOL. (cu ft).
Test Panel	120	5 x 20 x 0.1
Servo Drive	30	1
Control Unit	10	1
Inst. Unit	25	1
Radiation Probe	5	0.5
Micrometeorite Mic.	1	0.1
	191	3.6

* All meaurements recorded vs. Time

TITLE	NASA No. 2.3.1.10
HIGH SENSITIVITY PHOTO DETECTORS	Lockheed No. 550

OBJECTIVE

Primary: Test the performance (noise figure) of high sensitivity photo detectors.

INSTALLATION REQUIREMENTS

1. Normal Operating Environment: Equip. Int. ; Crew Int.
2. Weight of Equipment and Supplies (lb.) 50
3. Volume of Equipment and Supplies (cu. ft.): Internal 2 ; External 0
4. Critical Dimensions (ft.) None
5. List of Test Apparatus Multiple photo detectors, directional collector system
6. Average Power Requirements (kw) 0.050
7. Special Thermal Requirements N/R
8. Orientation: Laboratory N/R ; Equipment Space
9. Special Navigation Accuracy No requirement
10. Stability and Pointing Accuracy
11. Orbit Requirements No requirement
12. Gravity Requirements None

MANPOWER REQUIREMENTS

1. Number of Crew Required 1
2. Skill Categories Phy. Sci. Experimenter
3. Total Man-hours 14
4. Chronological Span 2 weeks
5. Experiment Cycles: Duration 1 hr. ; Number 14
6. Potential Hazards None

DISCUSSION:

This test should be combined with background studies of sky and space.

EXPERIMENT AND APPLICATION SUMMARY

TITLE	NASA No. 2.3.1.11
SOLAR THERMIONIC STATIC POWER GENERATING SYSTEM	Lockheed No. 551

OBJECTIVE

Primary: Measure converter performance for extended time periods in space environment.

Secondary: Determine degradation of performance due to long time exposure to space environment.

INSTALLATION REQUIREMENTS

1. Normal Operating Environment: Equip. Int. & Ext. ; Crew Int.
2. Weight of Equipment and Supplies (lb.) 100
3. Volume of Equipment and Supplies (cu. ft.): Internal 4.5 ; External 150
4. Critical Dimensions (ft.) 10 ft. dia. (external)
5. List of Test Apparatus radiation, thermal, and power measurements
6. Average Power Requirements (kw) 0.2
7. Special Thermal Requirements 50-120°F
8. Orientation: Laboratory N/R ; Equipment Solar
9. Special Navigation Accuracy N/R
10. Stability and Pointing Accuracy ± 10° about line of sight to sun
11. Orbit Requirements N/R
12. Gravity Requirements N/R

MANPOWER REQUIREMENTS

1. Number of Crew Required 1 (0.1 hr/day)
2. Skill Categories Phy. Sci.
3. Total Man-hours 73
4. Chronological Span 2 yrs.
5. Experiment Cycles: Duration 90 days ; Number 8
6. Potential Hazards None

DISCUSSION:

Various thermionic converters and solar collector systems will be operated at different system temperatures. Performance, degradation, and reliability will be determined.

SOLAR THERMIONIC STATIC POWER GENERATING SYSTEM

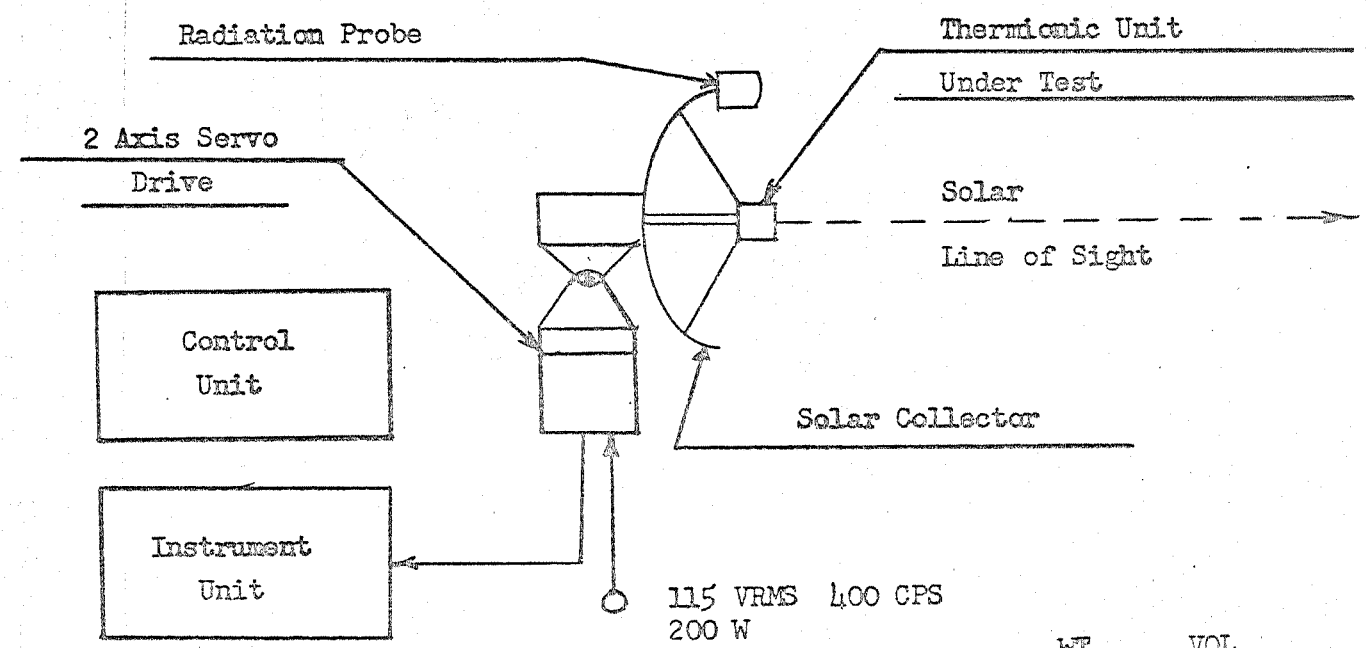

	WT. (lbs)	VOL. (cu ft)
Solar Collector	20	10-ft dia x 2 ft
Thermionic Unit	20	1
Servo Drive	30	1
Control Unit	10	1
Inst. Unit	15	1
Radiation Probe	5	0.5
	100	4.5

MEASUREMENTS

Solar Radiation
Cathode Temperature
Anode Temperature
Gas Vapor Pressure
Collector Temperature
Output Voltage
Output Current
Output Power vs Load
Solar Alignment

TITLE

HYDROGEN-OXYGEN POWER GENERATION SYSTEMS USING A RECIPROCATING PRIME MOVER

NASA No. 2.3.3.2
Lockheed No. 552

OBJECTIVE

Primary: System testing in space environment at zero-g and variable-g.

Secondary: Qualification testing for manned space applications.

INSTALLATION REQUIREMENTS

1. Normal Operating Environment: Equip. Int. & Ext. ; Crew Int.
2. Weight of Equipment and Supplies (lb.) 2279 w/o fuel, 5519 incl. fuel
3. Volume of Equipment and Supplies (cu. ft.): Internal 498 ; External 16
4. Critical Dimensions (ft.)
5. List of Test Apparatus Variable load with heat exchanger and recording wattmeter, fuel flowmeter, & freq. meter.
6. Average Power Requirements (kw) 0
7. Special Thermal Requirements 0-150°F
8. Orientation: Laboratory N/R ; Equipment N/R
9. Special Navigation Accuracy N/R
10. Stability and Pointing Accuracy N/R
11. Orbit Requirements N/R
12. Gravity Requirements Zero-g and variable 0 to 0.4G

MANPOWER REQUIREMENTS

1. Number of Crew Required 1 man ($\frac{1}{2}$ hr/day)
2. Skill Categories Phy. Sci.
3. Total Man-hours 183
4. Chronological Span 1 year
5. Experiment Cycles: Duration 3 months ; Number 4
6. Potential Hazards None

DISCUSSION: The experiment described is a complete system consisting of super-critically stored H_2 and O_2 fuel feeding a Vickers or Marquardt reciprocating engine which drives a speed regulated one KW brushless 400 cycle alternator. The test will operate the machine through 2 to 4 on/off cycles per day with the load varied from 0 to full load in 20% increments using a dummy load. See attached block diagram. Fuel for 90 days is provided.

HYDROGEN/OXYGEN POWER GENERATION SYSTEMS USING A RECIPROCATING PRIME MOVER

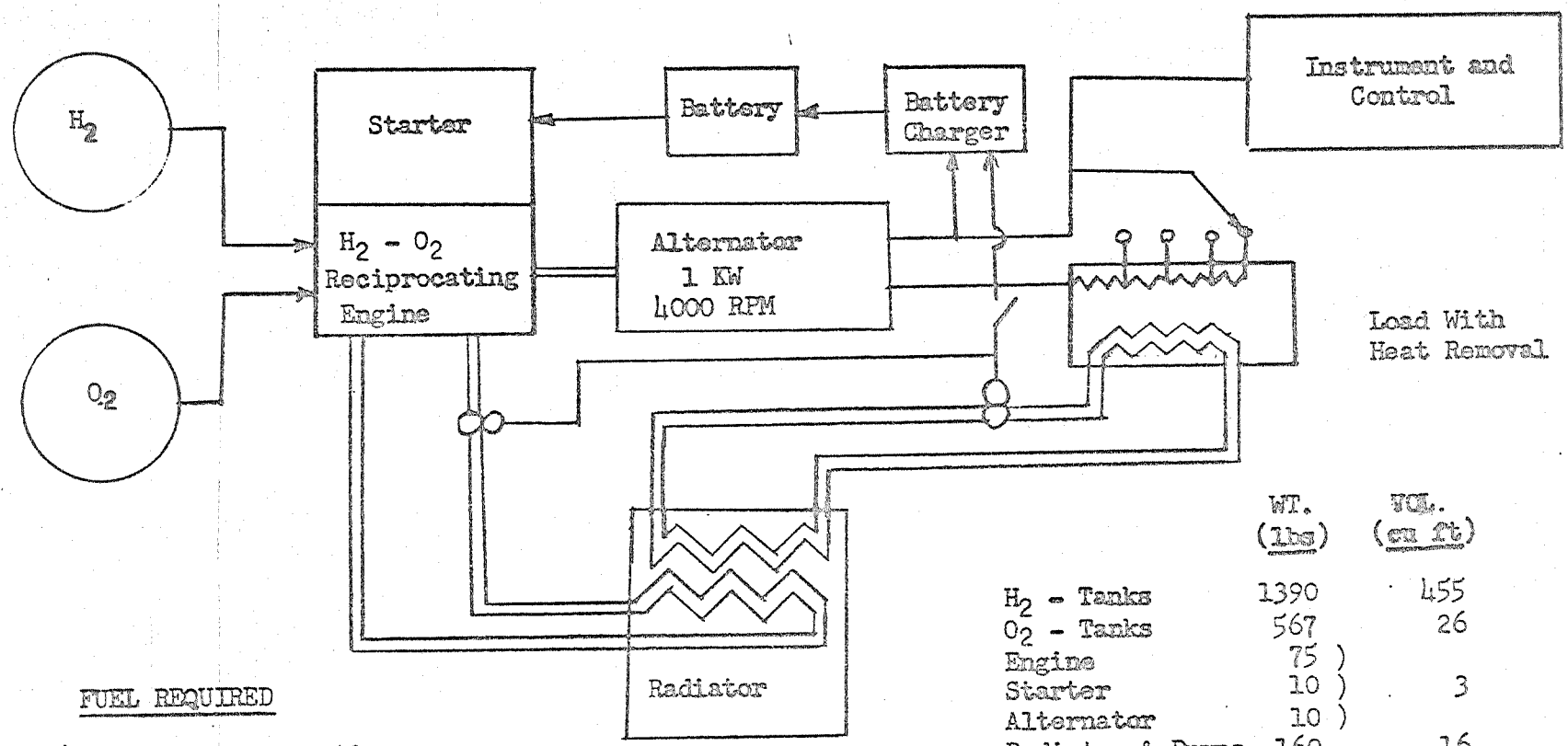

	WT. (lbs)	VOL. (cu ft)
H_2 - Tanks	1390	455
O_2 - Tanks	567	26
Engine	75)	
Starter	10)	3
Alternator	10)	
Radiator & Pumps	160	16
Load/H.E.	50	10
Battery	10	2
Battery Chrgr.	2	1
Control/Inst.	5	1
	2279 lb	514 cu ft
Fuel	3240	
	5519	

FUEL REQUIRED

1.5 LB/KWH = Fuel Consumption

KWH = 90 X 24 X 1 = 2160 KWH

Fuel Weight = 1.5 X 2160 = 3240 lbs

O/F = 1.4

O_2 = 1890 lbs H_2 = 1350 lbs

TITLE

LIQUID LUBRICANT SYSTEMS UNDER ZERO GRAVITY CONDITIONS

NASA No. 2.4.1.1
Lockheed No. 561

OBJECTIVE

Primary: Evaluate performance of various lubricating systems, using circulating liquids, under prolonged periods of zero gravity.

INSTALLATION REQUIREMENTS

1. Normal Operating Environment: Equip. Int. ; Crew Int.
2. Weight of Equipment and Supplies (lb.) 20
3. Volume of Equipment and Supplies (cu. ft.): Internal 0.5 ; External 0
4. Critical Dimensions (ft.) 1
5. List of Test Apparatus Special prepackaged design that will require only electrical connection, checkout and periodic monitoring.
6. Average Power Requirements (kw) 0.075
7. Special Thermal Requirements N/R
8. Orientation: Laboratory N/R ; Equipment N/R
9. Special Navigation Accuracy N/R
10. Stability and Pointing Accuracy N/R
11. Orbit Requirements N/R
12. Gravity Requirements Zero-G

MANPOWER REQUIREMENTS

1. Number of Crew Required 1
2. Skill Categories Phy. Sci.
3. Total Man-hours 34
4. Chronological Span 500 hrs.
5. Experiment Cycles: Duration cont. ; Number -
6. Potential Hazards Flammability of the lubricants

DISCUSSION:

Suggest 2 units to be tested.

TITLE

WHIRL INSTABILITIES IN A HYDRODYNAMIC JOURNAL BEARING UNDER ZERO-G

NASA No. 2.4.1.2
Lockheed No. 562

OBJECTIVE

Primary: To define whirl instabilities in various types of journal bearings to permit improved bearing designs for future spacecraft.

INSTALLATION REQUIREMENTS

1. Normal Operating Environment: Equip. Int. ; Crew Int.
2. Weight of Equipment and Supplies (lb.) 200
3. Volume of Equipment and Supplies (cu. ft.): Internal 27 ; External 0
4. Critical Dimensions (ft.) 2 $\frac{1}{4}$ high x 3 deep x 4 wide
5. List of Test Apparatus Special prepackaged design
6. Average Power Requirements (kw) 0.100
7. Special Thermal Requirements N/R
8. Orientation: Laboratory N/R ; Equipment N/R
9. Special Navigation Accuracy N/R
10. Stability and Pointing Accuracy N/R
11. Orbit Requirements N/R
12. Gravity Requirements Zero-G

MANPOWER REQUIREMENTS

1. Number of Crew Required 1
2. Skill Categories Phy. Sci.
3. Total Man-hours 4-30
4. Chronological Span 4-30 days
5. Experiment Cycles: Duration 1 wk. ; Number 3
6. Potential Hazards Flammability of lubricants

DISCUSSION:

TITLE	NASA No. 2.4.2.1
RENDEZVOUS & DOCKING	Lockheed No. 566

OBJECTIVE

Primary: To develop improved components and systems to aid in rendezvous & docking.

INSTALLATION REQUIREMENTS

1. Normal Operating Environment: Equip. Int. & Ext. ; Crew Int. & Ext.
2. Weight of Equipment and Supplies (lb.) *
3. Volume of Equipment and Supplies (cu. ft.): Internal * ; External *
4. Critical Dimensions (ft.)
5. List of Test Apparatus T.V. camera, film recorder
6. Average Power Requirements (kw) *
7. Special Thermal Requirements N/R
8. Orientation: Laboratory N/R ; Equipment N/R
9. Special Navigation Accuracy
10. Stability and Pointing Accuracy
11. Orbit Requirements N/R
12. Gravity Requirements Zero-G

MANPOWER REQUIREMENTS

1. Number of Crew Required *
2. Skill Categories Phy. Sci.
3. Total Man-hours *
4. Chronological Span *
5. Experiment Cycles: Duration ; Number *
6. Potential Hazards Danger to crew if docking system becomes inoperable

DISCUSSION:

* Included in experiment 2.11.2.4/622

TITLE	NASA No. 2.4.2.2
CREW TRANSFER AND CARGO HANDLING	Lockheed No. 567

OBJECTIVE

Primary: To develop improved components and systems to aid in crew transfer and cargo handling.

INSTALLATION REQUIREMENTS

1. Normal Operating Environment: Equip. Int. & Ext.; Crew Int. & Ext.
2. Weight of Equipment and Supplies (lb.) *
3. Volume of Equipment and Supplies (cu. ft.): Internal *; External
4. Critical Dimensions (ft.)
5. List of Test Apparatus T.V. camera, film recorder
6. Average Power Requirements (kw) *
7. Special Thermal Requirements N/R
8. Orientation: Laboratory N/R; Equipment
9. Special Navigation Accuracy N/R
10. Stability and Pointing Accuracy N/R
11. Orbit Requirements N/R
12. Gravity Requirements 0-g

MANPOWER REQUIREMENTS

1. Number of Crew Required *
2. Skill Categories Phy. Sci.
3. Total Man-hours *
4. Chronological Span *
5. Experiment Cycles: Duration *; Number *
6. Potential Hazards Possible extravehicular activity. Transfer of dangerous fluids.

DISCUSSION:

*Included in 2.11.1.5

TITLE	NASA No. 2.4.2.3
AIRLOCKS & HATCHES	Lockheed No. 563

OBJECTIVE

Primary: To determine optimum sizes & operation of airlocks & hatches.

INSTALLATION REQUIREMENTS

1. Normal Operating Environment: Equip. Int. & Ext. ; Crew Int. & Ext.
2. Weight of Equipment and Supplies (lb.) 50
3. Volume of Equipment and Supplies (cu. ft.): Internal 50 cu.ft.; External 50 cu.ft.
4. Critical Dimensions (ft.) 6
5. List of Test Apparatus
6. Average Power Requirements (kw) 100 watt-hrs/week
7. Special Thermal Requirements N/R
8. Orientation: Laboratory N/R ; Equipment N/R
9. Special Navigation Accuracy N/R
10. Stability and Pointing Accuracy N/R
11. Orbit Requirements N/R
12. Gravity Requirements 0 and partial gravity

MANPOWER REQUIREMENTS

1. Number of Crew Required 2
2. Skill Categories Physical Sci.
3. Total Man-hours 15
4. Chronological Span 1 wk
5. Experiment Cycles: Duration 1 hr ; Number 5
6. Potential Hazards Extravehicular activity

DISCUSSION:

Hatches should be set up so that personnel may experiment going thru and opening and closing them. Expandable type airlocks may be tested internally and externally. A variety of hatch closures should be tested for emergency operations. Space suits should be used for some of these tests.

A major portion of this testing could be performed on earth.

TITLE	NASA No. 2.4.2.4
DEPLOYMENT DEVICES	Lockheed No. 564

OBJECTIVE

Primary: To determine optimum deployment devices to operate in the space environment.

INSTALLATION REQUIREMENTS

1. Normal Operating Environment: Equip. Int. & Ext. ; Crew Int.
2. Weight of Equipment and Supplies (lb.) 20
3. Volume of Equipment and Supplies (cu. ft.): Internal 1 ; External 2
4. Critical Dimensions (ft.) 1
5. List of Test Apparatus Friction measuring devices.
6. Average Power Requirements (kw) 85 watt-hrs./week
7. Special Thermal Requirements N/R
8. Orientation: Laboratory N/R ; Equipment N/R
9. Special Navigation Accuracy N/R
10. Stability and Pointing Accuracy N/R
11. Orbit Requirements N/R
12. Gravity Requirements Zero gravity

MANPOWER REQUIREMENTS

1. Number of Crew Required 2
2. Skill Categories Physical Sci.
3. Total Man-hours 20
4. Chronological Span 1 wk.
5. Experiment Cycles: Duration 2 hrs. ; Number 5
6. Potential Hazards None

DISCUSSION:

Various types of linkages as might be required for sensors should be tested. Examples are: Antennas, solar cells, petal reflectors, & sensor booms. Some of the orientation units should be tested for long periods of time in the space environment.

TITLE	NASA No. 2.4.2.5
REDESIGN OF MECHANICAL FASTENERS	Lockheed No. 565

OBJECTIVE

Primary: To develop mechanical fasteners that are especially adapted for attachment in space.

INSTALLATION REQUIREMENTS

1. Normal Operating Environment: Equip. Int. ; Crew Int.
2. Weight of Equipment and Supplies (lb.) 2
3. Volume of Equipment and Supplies (cu. ft.): Internal 100 (space for man floating); External 0
4. Critical Dimensions (ft.) 6
5. List of Test Apparatus
6. Average Power Requirements (kw) 0
7. Special Thermal Requirements N/R
8. Orientation: Laboratory N/R ; Equipment N/R
9. Special Navigation Accuracy N/R
10. Stability and Pointing Accuracy N/R
11. Orbit Requirements N/R
12. Gravity Requirements Zero gravity

MANPOWER REQUIREMENTS

1. Number of Crew Required 2
2. Skill Categories Physical Sci.
3. Total Man-hours 100
4. Chronological Span 6 mo.
5. Experiment Cycles: Duration 2 hrs. ; Number 25
6. Potential Hazards None

DISCUSSION:

Men will attempt to attach various types of fasteners while in zero g. Degree of success will be recorded.

TITLE	NASA No. 2.5.1.1
ADVANCED GUIDANCE SYSTEM EVALUATION	Lockheed No. 581

OBJECTIVE Primary: Develop operational equipment & techniques for performing autonomous navigation requiring little or no support from gound facilities.
Secondary: Evaluate specific advance guid. systems generally representing improvements in the state of the art. (Position navigation). Employ this Attitude Ref. platform to assist other experiments; Sensor Stab., radar performance.

INSTALLATION REQUIREMENTS

1. Normal Operating Environment: Equip. Int. ; Crew Int.
2. Weight of Equipment and Supplies (lb.) 100
3. Volume of Equipment and Supplies (cu. ft.): Internal 5 ; External None
4. Critical Dimensions (ft.) 15" cube
5. List of Test Apparatus Navigation aids, etc. Exp. 2.5.2.1; Tracker outputs Exp. 2.9.1.5; platform preparation equipment, field maintenance equipment
6. Average Power Requirements (kw) .2
7. Special Thermal Requirements Dissipate heat from 0.2 KW/Hr.
8. Orientation: Laboratory N/R ; Equipment N/R
9. Special Navigation Accuracy Ground positions data that is more accurate than platform output.
10. Stability and Pointing Accuracy
11. Orbit Requirements N/R
12. Gravity Requirements Zero-G

MANPOWER REQUIREMENTS

1. Number of Crew Required 1
2. Skill Categories Phy. Sci.
3. Total Man-hours 60
4. Chronological Span 60 days
5. Experiment Cycles: Duration cont. ; Number -
6. Potential Hazards None

DISCUSSION:

TITLE	NASA No. 2.5.2.1
DEVELOPMENT OF SPACE NAVIGATION AIDS & TECHNIQUES	Lockheed No. 582

OBJECTIVE

Primary: Develop operational equipment & techniques for performing autonomous navigation requiring little or no support from ground facilities.

Secondary: Evaluate the operations of a space sextant. Evaluate man's capability to use this instrument: Support experiment 2.5.1.1.

INSTALLATION REQUIREMENTS

1. Normal Operating Environment: Equip. Int. ; Crew Int.
2. Weight of Equipment and Supplies (lb.) 60
3. Volume of Equipment and Supplies (cu. ft.): Internal 4 ; External 0
4. Critical Dimensions (ft.)
5. List of Test Apparatus Space sextant used independently and in support of Exp. 2.5.1.1.
6. Average Power Requirements (kw) 0.02
7. Special Thermal Requirements N/R
8. Orientation: Laboratory N/R ; Equipment Earth & stellar
9. Special Navigation Accuracy Ground tracked position data that is more accurate than the sextant.
10. Stability and Pointing Accuracy
11. Orbit Requirements N/R
12. Gravity Requirements Zero-G

MANPOWER REQUIREMENTS

1. Number of Crew Required 1
2. Skill Categories Phy. Sci.
3. Total Man-hours 273
4. Chronological Span 9 mos.
5. Experiment Cycles: Duration 1 hr. ; Number 273
6. Potential Hazards None

DISCUSSION:

TITLE	NASA No. 2.5.2.3
COMPARATIVE EVALUATION OF NAVIGATION TECHNIQUES	Lockheed No. 584

OBJECTIVE

Primary: Evaluate merits and deficiencies of techniques and systems proposed for orbital and space navigation.

Secondary: Interface with Experiment No. 2.9.1.6 for component integration studies.

INSTALLATION REQUIREMENTS

1. Normal Operating Environment: Equip. Int. ; Crew Int.
2. Weight of Equipment and Supplies (lb.) 25/system
3. Volume of Equipment and Supplies (cu. ft.): Internal 0.5/system ; External 0
4. Critical Dimensions (ft.) 1.0
5. List of Test Apparatus Electronic test set and calibration equipment; possibly environmental control for equipment under test.
6. Average Power Requirements (kw) .025
7. Special Thermal Requirements -54°C to +71°C
8. Orientation: Laboratory variable ; Equipment variable
9. Special Navigation Accuracy variable
10. Stability and Pointing Accuracy variable
11. Orbit Requirements variable
12. Gravity Requirements N/R

MANPOWER REQUIREMENTS

1. Number of Crew Required 1
2. Skill Categories Phy. Sci.
3. Total Man-hours 1000
4. Chronological Span 5 yr.
5. Experiment Cycles: Duration 8 hr. ; Number 25/system
6. Potential Hazards None, except those requiring window for sightings

DISCUSSION:

This experiment will aid in the development and evaluation of various navigation techniques and systems proposed for future space missions. Time and space should be reserved for promising techniques which are proposed after the station is operational.

Assume 5 systems will be tested.

TITLE	NASA No. 2.5.2.4
DEMONSTRATION OF RELIABLE AUTONOMOUS NAVIGATION CAPABILITY	Lockheed No. 585

OBJECTIVE

Primary: Demonstrate ability to continuously determine position (and attitude) in orbit independent of external inputs.

Secondary: Determine problem areas and performance parameters of components in such systems.

INSTALLATION REQUIREMENTS

1. Normal Operating Environment: Equip. Int. ; Crew Int.
2. Weight of Equipment and Supplies (lb.) 17.0/system
3. Volume of Equipment and Supplies (cu. ft.): Internal 0.27/system ; External 0
4. Critical Dimensions (ft.) 1.0
5. List of Test Apparatus Electronic test set and calibration equipment; possibly environmental control for equipment under test.
6. Average Power Requirements (kw) 0.025
7. Special Thermal Requirements -54°C to 71°C
8. Orientation: Laboratory variable ; Equipment variable
9. Special Navigation Accuracy variable
10. Stability and Pointing Accuracy variable
11. Orbit Requirements variable
12. Gravity Requirements zero-g possibly growth to rotating

MANPOWER REQUIREMENTS

1. Number of Crew Required 1
2. Skill Categories Phy. Sci.
3. Total Man-hours 500
4. Chronological Span 1 yr.
5. Experiment Cycles: Duration 1 hr to 1 mo. ; Number 20
6. Potential Hazards None

DISCUSSION:

This experiment could evaluate autonomous systems using advanced sensors, such as gravity gradient sensors, magnetic field sensors, etc.

Assume 5 systems.

TITLE	NASA No. 2.5.2.5
NAVIGATION FIXES WITH SIMPLE INSTRUMENTS	Lockheed No. 583

OBJECTIVE

Primary: To investigate the ability of a man to determine his position and attitude with simple instruments.

INSTALLATION REQUIREMENTS

1. Normal Operating Environment: Equip. Int. ; Crew Int.
2. Weight of Equipment and Supplies (lb.) 10-30
3. Volume of Equipment and Supplies (cu. ft.): Internal 0.4 ; External 0
4. Critical Dimensions (ft.)
5. List of Test Apparatus Star trackers, telescopes, sextant-type instruments
6. Average Power Requirements (kw) .05
7. Special Thermal Requirements normal
8. Orientation: Laboratory variable ; Equipment variable
9. Special Navigation Accuracy ± 1 N.M.
10. Stability and Pointing Accuracy 0.1 deg.
11. Orbit Requirements N/R
12. Gravity Requirements N/R

MANPOWER REQUIREMENTS

1. Number of Crew Required 1
2. Skill Categories Phy. Sci.
3. Total Man-hours 50
4. Chronological Span 1 month
5. Experiment Cycles: Duration 1 hr ; Number 50
6. Potential Hazards Necessity for window to space

DISCUSSION:

Experience in the Mercury program has shown that the capability of a man to physically determine his attitude by making simple star sightings in a back-up mode can make the difference between safe and unsuccessful recovery from orbit. This experiment would expand this technique to increase its flexibility and usefulness. Valuable data would be accumulated to aid in future design.

TITLE	NASA No. 2.6.1.1
PASSIVE COMMUNICATION RELAY DEVELOPMENT	Lockheed No. 602

OBJECTIVE

Primary: Observe inflation or erection of passive satellites.

Secondary: Ascertain surface condition and reflectivity after inflation.

INSTALLATION REQUIREMENTS

1. Normal Operating Environment: Equip. Internal ; Crew Internal
2. Weight of Equipment and Supplies (lb.) 20
3. Volume of Equipment and Supplies (cu. ft.): Internal 1 ; External 1
4. Critical Dimensions (ft.)
5. List of Test Apparatus Telescope, telescope camera
6. Average Power Requirements (kw) 0.005
7. Special Thermal Requirements N/R
8. Orientation: Laboratory N/R ; Equipment N/R
9. Special Navigation Accuracy N/R
10. Stability and Pointing Accuracy N/R
11. Orbit Requirements N/R
12. Gravity Requirements Gravity field not important

MANPOWER REQUIREMENTS

1. Number of Crew Required 2
2. Skill Categories Physical Science
3. Total Man-hours 9-19
4. Chronological Span 1 - 2 wks.
5. Experiment Cycles: Duration 1 - 2 wks. ; Number
6. Potential Hazards None

DISCUSSION:

TITLE

FREE SPACE ANTENNA PATTERN DETERMINATION

NASA No. 2.6.1.2
Lockheed No. 603

OBJECTIVE

Primary: Make antenna pattern measurements in space.

Secondary: Determine effect of free space on antenna configuration.

INSTALLATION REQUIREMENTS

1. Normal Operating Environment: Equip. Ext. ; Crew Int.
2. Weight of Equipment and Supplies (lb.) 350
3. Volume of Equipment and Supplies (cu. ft.): Internal 0 ; External 2
4. Critical Dimensions (ft.) 100' diameter
5. List of Test Apparatus Rotatable antenna excited with radar pointed at satellite target reflector at 1 - 10 n.m. from space station.
6. Average Power Requirements (kw) 0.1
7. Special Thermal Requirements N/R
8. Orientation: Laboratory N/R ; Equipment Controllable
9. Special Navigation Accuracy N/R
10. Stability and Pointing Accuracy Pitch Rate: .01°/Hr; Roll Rate: .01°/Hr; Yaw Rate: .01°/Hr.
11. Orbit Requirements N/R
12. Gravity Requirements Gravity field not important

MANPOWER REQUIREMENTS

1. Number of Crew Required 2
2. Skill Categories Physical Science
3. Total Man-hours 336
4. Chronological Span 10 wks.
5. Experiment Cycles: Duration 1 wk. ; Number 10
6. Potential Hazards Target ejection

DISCUSSION:

TITLE	NASA No. 2.6.1.3
LASER COMMUNICATION EXPERIMENT	Lockheed No. 601

OBJECTIVE

Primary: Development of earth-to-deep-space coherent light communication system.

Secondary: Communication link performance using various Laser frequencies.

INSTALLATION REQUIREMENTS

1. Normal Operating Environment: Equip. Interior ; Crew Interior
2. Weight of Equipment and Supplies (lb.) 100
3. Volume of Equipment and Supplies (cu. ft.): Internal 5 ; External 5
4. Critical Dimensions (ft.)
5. List of Test Apparatus Laser mounted in astrodome on airlock
6. Average Power Requirements (kw) 0.6
7. Special Thermal Requirements 600 watt heat load
8. Orientation: Laboratory N/R ; Equipment Earth
9. Special Navigation Accuracy ± 1 N.M.
10. Stability and Pointing Accuracy 4 arc sec; 4 arc sec/sec and 40 arc sec/hr (all axes)
11. Orbit Requirements N/R
12. Gravity Requirements Gravity field not important

MANPOWER REQUIREMENTS

1. Number of Crew Required 1
2. Skill Categories Physical Science
3. Total Man-hours 56-120
4. Chronological Span 14-30 days
5. Experiment Cycles: Duration 2 wks. ; Number 2-4
6. Potential Hazards Retracting Laser thru ORL wall

DISCUSSION:

EXPERIMENT AND APPLICATION SUMMARY

TITLE	NASA No. 2.6.1.4
REENTRY COMMUNICATIONS TESTING	Lockheed No. 604

OBJECTIVE

Primary: Evaluate techniques for penetration of aerothermodynamic plasma during vehicle reentry.

INSTALLATION REQUIREMENTS

1. Normal Operating Environment: Equip. Interior ; Crew Interior
2. Weight of Equipment and Supplies (lb.) 30
3. Volume of Equipment and Supplies (cu. ft.): Internal 2 ; External 0
4. Critical Dimensions (ft.)
5. List of Test Apparatus Transmitter, receiver, antenna
6. Average Power Requirements (kw) 0.01
7. Special Thermal Requirements 100 watt heat load
8. Orientation: Laboratory N/R ; Equipment Controllable
9. Special Navigation Accuracy N/R
10. Stability and Pointing Accuracy N/R
11. Orbit Requirements N/R
12. Gravity Requirements Gravity field not important

MANPOWER REQUIREMENTS

1. Number of Crew Required 2
2. Skill Categories Physical Science
3. Total Man-hours 30
4. Chronological Span 6 mo.
5. Experiment Cycles: Duration 2 hrs. ; Number 6
6. Potential Hazards Vehicle reentry

DISCUSSION:

TITLE	NASA No. 2.6.1.4
CONTINUATION OF EXPERIMENT 604	Lockheed No. 605

OBJECTIVE

INSTALLATION REQUIREMENTS

1. Normal Operating Environment: Equip. _____ ; Crew _____
2. Weight of Equipment and Supplies (lb.) _____
3. Volume of Equipment and Supplies (cu. ft.): Internal _____ ; External _____
4. Critical Dimensions (ft.) _____
5. List of Test Apparatus _____
6. Average Power Requirements (kw) _____
7. Special Thermal Requirements _____
8. Orientation: Laboratory _____ ; Equipment _____
9. Special Navigation Accuracy _____
10. Stability and Pointing Accuracy _____
11. Orbit Requirements _____
12. Gravity Requirements _____

MANPOWER REQUIREMENTS

1. Number of Crew Required _____
2. Skill Categories _____
3. Total Man-hours _____
4. Chronological Span _____
5. Experiment Cycles: Duration _____ ; Number _____
6. Potential Hazards _____

DISCUSSION:

TITLE	NASA No. 2.6.1.4
CONTINUATION OF EXPERIMENT 604	Lockheed No. 606

OBJECTIVE

INSTALLATION REQUIREMENTS

1. Normal Operating Environment: Equip. _____ ; Crew _____
2. Weight of Equipment and Supplies (lb.) _____
3. Volume of Equipment and Supplies (cu. ft.): Internal _____ ; External _____
4. Critical Dimensions (ft.) _____
5. List of Test Apparatus _____
6. Average Power Requirements (kw) _____
7. Special Thermal Requirements _____
8. Orientation: Laboratory _____ ; Equipment _____
9. Special Navigation Accuracy _____
10. Stability and Pointing Accuracy _____
11. Orbit Requirements _____
12. Gravity Requirements _____

MANPOWER REQUIREMENTS

1. Number of Crew Required _____
2. Skill Categories _____
3. Total Man-hours _____
4. Chronological Span _____
5. Experiment Cycles: Duration _____ ; Number _____
6. Potential Hazards _____

DISCUSSION:

EXPERIMENT AND APPLICATION SUMMARY

TITLE	NASA No. 2.6.1.6
DEPLOYMENT AND ERECTION OF LARGE ANTENNAE	Lockheed No. 610

OBJECTIVE

Primary: To determine how to cope with space environment as affecting deployment and erection of large antennae.

Secondary: To study optical and mechanical alignment procedures.

INSTALLATION REQUIREMENTS

1. Normal Operating Environment: Equip. Ext. ; Crew Int. & Ext.
2. Weight of Equipment and Supplies (lb.) 300
3. Volume of Equipment and Supplies (cu. ft.): Internal 1 ; External 5
4. Critical Dimensions (ft.)
5. List of Test Apparatus T.V. camera, theodolite
6. Average Power Requirements (kw) 0.200
7. Special Thermal Requirements N/R
8. Orientation: Laboratory N/R ; Equipment N/R
9. Special Navigation Accuracy N/R
10. Stability and Pointing Accuracy N/R
11. Orbit Requirements N/R
12. Gravity Requirements 0-g

MANPOWER REQUIREMENTS

1. Number of Crew Required 3
2. Skill Categories Phy. Sci
3. Total Man-hours 168
4. Chronological Span 1 week
5. Experiment Cycles: Duration 28 hrs. ; Number 2
6. Potential Hazards Extravehicular activity

DISCUSSION:

TITLE	NASA No. 2.6.1.9
MAGNETIC EFFECTS ON COMMUNICATIONS SYSTEMS	Lockheed No. 609

OBJECTIVE

Primary: Determine effect on communication propagation as results of variations in magnetic field near vehicle.

INSTALLATION REQUIREMENTS

1. Normal Operating Environment: Equip. Int. & Ext. ; Crew Interior
2. Weight of Equipment and Supplies (lb.) 200
3. Volume of Equipment and Supplies (cu. ft.): Internal 1.5 ; External 2.5
4. Critical Dimensions (ft.) Non-metallic boom to isolate sensor from vehicle
5. List of Test Apparatus Magnetometers - sat. coil or rubidium-vapor depending on mission-vehicle mag. field and eddy current compensation req. Radio equipm. same as for propagat. exp.
6. Average Power Requirements (kw) 0.3
7. Special Thermal Requirements N/R
8. Orientation: Laboratory N/R ; Equipment Earth
9. Special Navigation Accuracy N/R
10. Stability and Pointing Accuracy N/R
11. Orbit Requirements See discussion
12. Gravity Requirements Not critical

MANPOWER REQUIREMENTS

1. Number of Crew Required 1
2. Skill Categories Phy. Sci.
3. Total Man-hours 200 (5 yrs.)
4. Chronological Span Mission life
5. Experiment Cycles: Duration cont. ; Number -
6. Potential Hazards None

DISCUSSION: Except for VLF propagation direct magnetic effects are most likely to be masked or swamped out by other effects i.e. ionization fields. However, the magnetic field and variations due to solar effects have marked effects on ionosphere & radiation belts which do have very strong effects on propagation. Correlation of magnetic field measurements with effects of ionosphere, auroral disturbances etc. would result in greater understanding of these effects. Polar low altitude orbits and oscillating synchronous orbits would provide greater variety in measurements and effects.

TITLE VAN ALLEN RADIATION EFFECTS ON COMMUNICATIONS	NASA No. 2.6.1.10 Lockheed No. 608

OBJECTIVE

Primary: Determine propagation anomalies caused by Van Allen Radiation Belts on communications.

INSTALLATION REQUIREMENTS

1. Normal Operating Environment: Equip. Int. & Ext. ; Crew Interior
2. Weight of Equipment and Supplies (lb.) 50
3. Volume of Equipment and Supplies (cu. ft.): Internal 0.5 ; External 0.5
4. Critical Dimensions (ft.)
5. List of Test Apparatus
6. Average Power Requirements (kw) 0.05
7. Special Thermal Requirements N/R
8. Orientation: Laboratory N/R ; Equipment Earth
9. Special Navigation Accuracy N/R
10. Stability and Pointing Accuracy N/R
11. Orbit Requirements See discussion
12. Gravity Requirements Not critical

MANPOWER REQUIREMENTS

1. Number of Crew Required 1
2. Skill Categories Phy. Sci.
3. Total Man-hours 1000 (5 yrs.)
4. Chronological Span Mission duration
5. Experiment Cycles: Duration 1 hr. ; Number 1000 (5 yrs.)
6. Potential Hazards None

DISCUSSION: Synchronous orbits to allow propagation through radiation belts required. An oscillating orbit will permit measurements over a wider range of conditions. Measurements of propagation must be correlated with data from rocket probes measuring the position, thickness and intensity of the Van Allen radiation fields in the vicinity of the propagation paths.

TITLE	NASA No. 2.6.1.14
STUDY OF ATMOSPHERIC EFFECTS ON EM PROPAGATION	Lockheed No. 607

OBJECTIVE

Primary: Improve knowledge of propagation anomalies caused by atmospheric effects.

INSTALLATION REQUIREMENTS

1. Normal Operating Environment: Equip. Int. & Ext. ; Crew Int.
2. Weight of Equipment and Supplies (lb.) 480
3. Volume of Equipment and Supplies (cu. ft.): Internal 5 ; External 6
4. Critical Dimensions (ft.)
5. List of Test Apparatus Series of receivers or converters with std. receiver, rf. oscillators transmitters, antennas, covering range 0.2 kc to 30,000mc
6. Average Power Requirements (kw) 0.7
7. Special Thermal Requirements N/R
8. Orientation: Laboratory N/R ; Equipment
9. Special Navigation Accuracy N/R
10. Stability and Pointing Accuracy
11. Orbit Requirements N/R
12. Gravity Requirements Not critical

MANPOWER REQUIREMENTS

1. Number of Crew Required 2
2. Skill Categories Phy. Sci.
3. Total Man-hours 1500 (5 yrs.)
4. Chronological Span mission life
5. Experiment Cycles: Duration 4 hr. ; Number 375 (5 yrs.)
6. Potential Hazards None

DISCUSSION: By intercommunication with cooperating ground stations using a wide range of frequencies and as many simultaneously as possible, a good appraisal of the effects of specific atmosphere conditions can be made. Some frequencies such as higher VHF, UHF, and lower microwave for which atmospheric and ionospheric effects are small can be deleted so emphasis can be given to VLF- LF- HF and high microwave bands. An area for study of special interest is the nonreciprocal propagation of HF under certain ionosphere conditions.

TITLE

ASTRONOMICAL TELESCOPE DEVELOPMENT

NASA No. 2.7.1.1
Lockheed No. 692

OBJECTIVE

Primary: Develop techniques and hardware necessary for a space astronomical observatory.

Secondary: Gather astronomical data

INSTALLATION REQUIREMENTS

1. Normal Operating Environment: Equip. Ext. ; Crew Int.
2. Weight of Equipment and Supplies (lb.) 1625
3. Volume of Equipment and Supplies (cu. ft.): Internal 120* ; External 0
4. Critical Dimensions (ft.) Telescope length, 110"; dia. 40"
5. List of Test Apparatus telescope, gimballed platform, maintenance and repair equipment
6. Average Power Requirements (kw)
7. Special Thermal Requirements rigid design criteria needed to provide athermalization.
8. Orientation: Laboratory earth (desired) ; Equipment none
9. Special Navigation Accuracy not critical
10. Stability and Pointing Accuracy .06 arc sec/min and 0.1 arc sec; platform stability and pointing accuracy respectively
11. Orbit Requirements no requirement
12. Gravity Requirements none

MANPOWER REQUIREMENTS

1. Number of Crew Required 3
2. Skill Categories Phy. Sci. Experimenter
3. Total Man-hours 1248
4. Chronological Span 1 yr. (minimum)
5. Experiment Cycles: Duration 24 hr. ; Number 52 (minimum)
6. Potential Hazards none

DISCUSSION: Critical development problems are stability and control - a separate tethered vehicle may be required as the platform. Also thermal control will require extensive analysis and design.

*Telescope may be mounted externally.

TITLE
ADVANCED PHOTOGRAPHIC SYSTEMS EVALUATION

NASA No. 2.7.2.1
Lockheed No. 691

OBJECTIVE

Primary: Determine limits of high resolution space-to-ground photography.

Secondary: Determine ability of man and/or instruments to stop image motion during photography.

INSTALLATION REQUIREMENTS

1. Normal Operating Environment: Equip. Ext. ; Crew Int.
2. Weight of Equipment and Supplies (lb.) 200
3. Volume of Equipment and Supplies (cu. ft.): Internal ; External 8
4. Critical Dimensions (ft.) 2' Dia. x 3' long min.
5. List of Test Apparatus Photometer, tracking periscope, film processing & viewing.
6. Average Power Requirements (kw) 0.5
7. Special Thermal Requirements N/R
8. Orientation: Laboratory N/R ; Equipment earth
9. Special Navigation Accuracy N/R
10. Stability and Pointing Accuracy Stability: 10 sec. arc/sec.
11. Orbit Requirements N/R
12. Gravity Requirements 0 g

MANPOWER REQUIREMENTS

1. Number of Crew Required 1
2. Skill Categories Physical Science
3. Total Man-hours 180
4. Chronological Span 90 Days
5. Experiment Cycles: Duration 2 hrs. ; Number 90
6. Potential Hazards None

DISCUSSION:

EXPERIMENT AND APPLICATION SUMMARY

TITLE

ZERO-G PROPELLANT TANK SLOSH AND VORTEXING

NASA Hq.
Lockheed Hq.

OBJECTIVE

Primary: To determine fluid orientation characteristics under [illegible] low-g conditions, entrapment of gas in propellants [illegible] direct pressurization on the non-oriented fluid, vortex characteristics, and propellant phase at tank outlet.

INSTALLATION REQUIREMENTS

1. Normal Operating Environment: Equip. Int. ; Crew
2. Weight of Equipment and Supplies (lb.) 150
3. Volume of Equipment and Supplies (cu. ft.): Internal 10 ; External
4. Critical Dimensions (ft.) None
5. List of Test Apparatus Variety of containers and fluids, pump and [illegible] zation source, photographic equipment.
6. Average Power Requirements (kw) 0.01
7. Special Thermal Requirements N/R
8. Orientation: Laboratory N/R ; Equipment N/R
9. Special Navigation Accuracy N/R
10. Stability and Pointing Accuracy N/R
11. Orbit Requirements N/R
12. Gravity Requirements Zero-G

MANPOWER REQUIREMENTS

1. Number of Crew Required 2
2. Skill Categories Phy. Sci.
3. Total Man-hours 56
4. Chronological Span 1 wk.
5. Experiment Cycles: Duration 4 hrs. ; Number
6. Potential Hazards None except those normally associated with [illegible] propellant.

DISCUSSION:

TITLE

RESTART CAPABILITY OF PROPULSION SYSTEMS AFTER LONG EXPOSURE TO SPACE

NASA No. 2.8.1.2
Lockheed No. 642

OBJECTIVE

Primary: Determine if a high number of restarts is possible after varying numbers of inactivity periods.

INSTALLATION REQUIREMENTS

1. Normal Operating Environment: Equip. Int. & Ext. ; Crew Int.
2. Weight of Equipment and Supplies (lb.) 50
3. Volume of Equipment and Supplies (cu. ft.): Internal 1/2 ; External 3
4. Critical Dimensions (ft.)
5. List of Test Apparatus Standard propulsion system monitoring instrumentation with additional time measurements
6. Average Power Requirements (kw) 0.005
7. Special Thermal Requirements N/R
8. Orientation: Laboratory N/R ; Equipment N/R
9. Special Navigation Accuracy N/R
10. Stability and Pointing Accuracy N/R
11. Orbit Requirements N/R
12. Gravity Requirements Gravity field not important

MANPOWER REQUIREMENTS

1. Number of Crew Required 2 men for set up; 1 man to monitor
2. Skill Categories Phy. Sci.
3. Total Man-hours 20-60
4. Chronological Span 90 days - 1 year
5. Experiment Cycles: Duration 1 hr/wk. ; Number 12-52
6. Potential Hazards Those normal to hypergolic fuel usage

DISCUSSION:

TITLE	NASA No. 2.8.1.3
LEAKAGE OF PROPELLANTS	Lockheed No. 644

OBJECTIVE

Primary: Development of leak proof seals and joints of highest possible reliability.

Secondary: Obtain knowledge of propellant behavior when exposed to different materials and coatings.

INSTALLATION REQUIREMENTS

1. Normal Operating Environment: Equip. Int. ; Crew Int.
2. Weight of Equipment and Supplies (lb.) 130*
3. Volume of Equipment and Supplies (cu. ft.): Internal 100* ; External 0
4. Critical Dimensions (ft.)
5. List of Test Apparatus mass spectrometer, gas chromatograph, infrared spectrometer
6. Average Power Requirements (kw)
7. Special Thermal Requirements N/R
8. Orientation: Laboratory N/R ; Equipment N/R
9. Special Navigation Accuracy N/R
10. Stability and Pointing Accuracy N/R
11. Orbit Requirements N/R
12. Gravity Requirements None

MANPOWER REQUIREMENTS

1. Number of Crew Required 1
2. Skill Categories Phy. Sci. Exp.
3. Total Man-hours 455 (5yrs.)
4. Chronological Span mission duration
5. Experiment Cycles: Duration 15 min/day ; Number 365/year (1825)
6. Potential Hazards Possible contamination of inhabited areas

DISCUSSION: *The weight and volume requirements of this laboratory equipment should not be added to basic station weight as normal station operation would require the presence of this equipment.

TITLE	NASA No. 2.8.1.4
PROPELLANT STORABILITY TEST	Lockheed No. 645

OBJECTIVE

Primary: To conduct tests of various fuels and oxidizers in different propellant tank configurations and with various insulation techniques and materials.

INSTALLATION REQUIREMENTS

1. Normal Operating Environment: Equip. Int. ; Crew Int.
2. Weight of Equipment and Supplies (lb.) 50
3. Volume of Equipment and Supplies (cu. ft.): Internal 2.0 ; External 0
4. Critical Dimensions (ft.)
5. List of Test Apparatus Propellant tanks, temperature and pressure sensors
6. Average Power Requirements (kw) 0.01
7. Special Thermal Requirements
8. Orientation: Laboratory N/R ; Equipment N/R
9. Special Navigation Accuracy N/R
10. Stability and Pointing Accuracy N/R
11. Orbit Requirements N/R
12. Gravity Requirements Zero

MANPOWER REQUIREMENTS

1. Number of Crew Required 1
2. Skill Categories Phy. Sci.
3. Total Man-hours 15 min/day
4. Chronological Span Mission duration
5. Experiment Cycles: Duration 15 min. (456:5 yrs) ; Number 1/day (1825:5 yrs.)
6. Potential Hazards Tank pressure relief must be incorporated

DISCUSSION:

Cost of experiment must be adjudged against accuracy of results obtained by short duration fluid orientation under zero-g measurements and subsequent analysis.

TITLE	NASA No. 2.8.1.5
TEST OF PROPELLANT ACTIVATED DEVICES	Lockheed No. 646

OBJECTIVE

Primary: To expose to space environment several types of propellant activated devices and their components

INSTALLATION REQUIREMENTS

1. Normal Operating Environment: Equip. Ext. ; Crew Int.
2. Weight of Equipment and Supplies (lb.) 100
3. Volume of Equipment and Supplies (cu. ft.): Internal ; External 15.5
4. Critical Dimensions (ft.)
5. List of Test Apparatus None - Components as supplied
6. Average Power Requirements (kw) 0.2
7. Special Thermal Requirements N/R
8. Orientation: Laboratory N/R ; Equipment N/R
9. Special Navigation Accuracy N/R
10. Stability and Pointing Accuracy N/R
11. Orbit Requirements N/R
12. Gravity Requirements None

MANPOWER REQUIREMENTS

1. Number of Crew Required 2
2. Skill Categories Phy. Sci.
3. Total Man-hours 6 hours/90 days (120)
4. Chronological Span Mission duration
5. Experiment Cycles: Duration 6 hrs. ; Number 1 per 90 days (20)
6. Potential Hazards Propellant device explosion on actuation

DISCUSSION:

Cost of experiment must be compared with accuracy of results obtained from ground based environment test chambers.

TITLE	NASA No. 2.8.2.1
ION PROPULSION RECOMBINATION	Lockheed No. 643

OBJECTIVE

Primary: Measure charge neutralization in jet at various distances from accelerator. Study recombination of ions and electrons in jet.

INSTALLATION REQUIREMENTS

1. Normal Operating Environment: Equip. Ext. ; Crew Int.
2. Weight of Equipment and Supplies (lb.) 50
3. Volume of Equipment and Supplies (cu. ft.): Internal ; External 1.0
4. Critical Dimensions (ft.)
5. List of Test Apparatus Ion engine, propulsion system sensors, and data recording equipment
6. Average Power Requirements (kw) 1.2
7. Special Thermal Requirements N/R
8. Orientation: Laboratory N/R ; Equipment N/R
9. Special Navigation Accuracy N/R
10. Stability and Pointing Accuracy N/R
11. Orbit Requirements N/R
12. Gravity Requirements Gravity field not important

MANPOWER REQUIREMENTS

1. Number of Crew Required 2
2. Skill Categories Phy. Sci.
3. Total Man-hours 28
4. Chronological Span 1 wk.
5. Experiment Cycles: Duration 2 hrs. ; Number 7
6. Potential Hazards None

DISCUSSION:

TITLE	NASA No. 2.8.2.8
TEST OF ELECTRIC PROPULSION UNIT	Lockheed No. 647

OBJECTIVE

Primary: Thrust test of ion engine in space environment

Secondary: Qualification testing of ion engine for manned space applications

INSTALLATION REQUIREMENTS

1. Normal Operating Environment: Equip. Int. & Ext. ; Crew Int.
2. Weight of Equipment and Supplies (lb.) 59.1
3. Volume of Equipment and Supplies (cu. ft.): Internal 2.5 ; External 0.5
4. Critical Dimensions (ft.) 1
5. List of Test Apparatus See sketch
6. Average Power Requirements (kw) 1.9
7. Special Thermal Requirements 0 - 100°F
8. Orientation: Laboratory N/R ; Equipment N/R
9. Special Navigation Accuracy N/R
10. Stability and Pointing Accuracy N/R
11. Orbit Requirements N/R
12. Gravity Requirements Zero-G

MANPOWER REQUIREMENTS

1. Number of Crew Required 1 man ($\frac{1}{2}$ hr/day)
2. Skill Categories Phy. Sci.
3. Total Man-hours 183
4. Chronological Span 1 yr.
5. Experiment Cycles: Duration 90 days ; Number 4
6. Potential Hazards High voltage up to 5 KV

DISCUSSION:

This experiment will permit long time testing of a small ion propulsion engine in a space environment. Ground testing in a vacuum chamber is time limited due to sputtering of electrode material onto the vacuum chamber & backscatter onto the engine. Engines for tests are available from Hughes-Malibu, Electro-Optical Systems, & AVCO.

TEST OF ELECTRIC PROPULSION UNIT

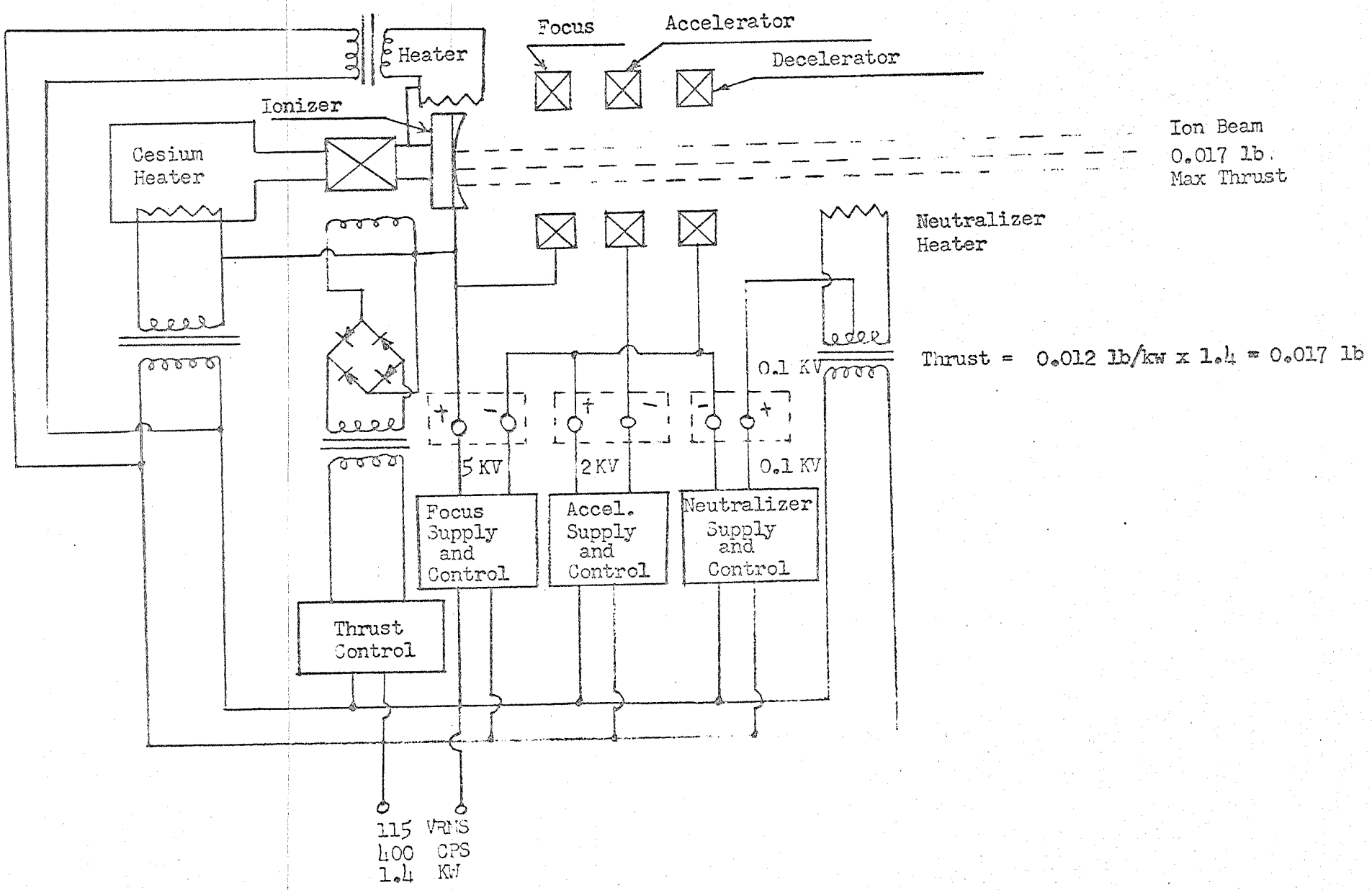

TEST OF ELECTRIC PROPULSION UNIT

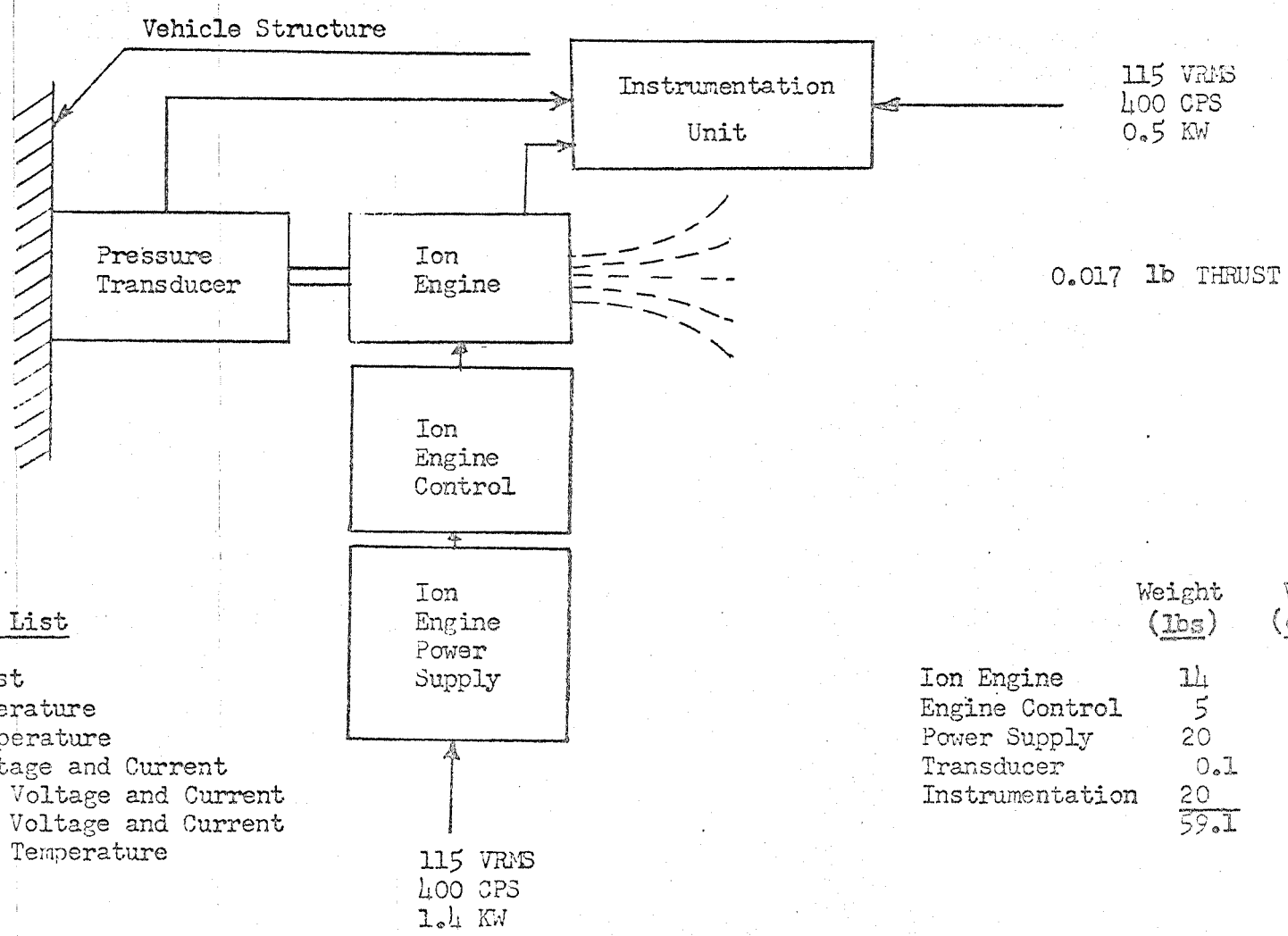

Measurement List

Engine Thrust
Cesium Temperature
Ionizer Temperature
Ionizer Voltage and Current
Accelerator Voltage and Current
Neutralizer Voltage and Current
Neutralizer Temperature
Total Power

	Weight (lbs)	Vol. (cu ft)
Ion Engine	14	0.5
Engine Control	5	0.5
Power Supply	20	1.0
Transducer	0.1	0.01
Instrumentation	20	1.0
	59.1	3.01

TITLE	NASA No. 2.8.3.1
NUCLEAR PROPULSION TECHNIQUES	Lockheed No. 648

OBJECTIVE

Primary: Fabricate and operate various nuclear propulsion systems in a space environment.

Secondary: To develop handling and operating techniques.

INSTALLATION REQUIREMENTS

1. Normal Operating Environment: Equip. Int. & Ext. ; Crew Interior
2. Weight of Equipment and Supplies (lb.) 500
3. Volume of Equipment and Supplies (cu. ft.): Internal ; External 10
4. Critical Dimensions (ft.)
5. List of Test Apparatus Radiation monitoring devices
6. Average Power Requirements (kw) 0
7. Special Thermal Requirements Cooling apparatus, heat exchanger
8. Orientation: Laboratory N/R ; Equipment N/R
9. Special Navigation Accuracy N/R
10. Stability and Pointing Accuracy N/R
11. Orbit Requirements N/R
12. Gravity Requirements none

MANPOWER REQUIREMENTS

1. Number of Crew Required 1 man
2. Skill Categories Phy. Sci.
3. Total Man-hours 3 hrs. per day (Total 1095)
4. Chronological Span 1 year
5. Experiment Cycles: Duration 3 hrs. ; Number 1 per day (365)
6. Potential Hazards Radiation exposure due to reactor accident

DISCUSSION:

It is assumed that the propulsion unit can be successfully mounted and maintained external to space station. It is also assumed that this experiment does not constitute a basic check-out of a propulsion unit but rather the in-flight service testing of the unit.

TITLE	NASA No. 2.9.1.2
HORIZON-SCANNING INFRARED SENSOR	Lockheed No. 670

OBJECTIVE

INSTALLATION REQUIREMENTS

1. Normal Operating Environment: Equip. _____ ; Crew _____
2. Weight of Equipment and Supplies (lb.) _____
3. Volume of Equipment and Supplies (cu. ft.): Internal _____ ; External _____
4. Critical Dimensions (ft.) _____
5. List of Test Apparatus _____
6. Average Power Requirements (kw) _____
7. Special Thermal Requirements _____
8. Orientation: Laboratory _____ ; Equipment _____
9. Special Navigation Accuracy _____
10. Stability and Pointing Accuracy _____
11. Orbit Requirements _____
12. Gravity Requirements _____

MANPOWER REQUIREMENTS

1. Number of Crew Required _____
2. Skill Categories _____
3. Total Man-hours _____
4. Chronological Span _____
5. Experiment Cycles: Duration _____ ; Number _____
6. Potential Hazards _____

DISCUSSION:

It is suggested that this experiment be combined with 2.9.1.9/672.

TITLE
EVALUATION OF STABILIZATION & LOCK-ON SYSTEMS FOR TERRAIN RECONNAISSANCE & COMM.

NASA No. 2.9.1.3
Lockheed No. 662

OBJECTIVE

Primary: To evaluate and flight qualify a lock-on system providing the precise pointing capability required for telescope camera reconnaissance and laser communication with the ground for extended periods.

INSTALLATION REQUIREMENTS

1. Normal Operating Environment: Equip. Int. ; Crew Int.
2. Weight of Equipment and Supplies (lb.) 150
3. Volume of Equipment and Supplies (cu. ft.): Internal 4 ; External optical window
4. Critical Dimensions (ft.) 2 x 2 x 1
5. List of Test Apparatus Telescope for locating targets
6. Average Power Requirements (kw) 0.01-0.05
7. Special Thermal Requirements N/R
8. Orientation: Laboratory N/R ; Equipment Earth
9. Special Navigation Accuracy ±1 N.M.
10. Stability and Pointing Accuracy For laser communication: 4 arc sec; 4 arc sec/sec and 40 arc sec/hr (all axes)
11. Orbit Requirements N/R
12. Gravity Requirements Zero-G

MANPOWER REQUIREMENTS

1. Number of Crew Required 1
2. Skill Categories Phy. Sci.
3. Total Man-hours 112
4. Chronological Span 8 wks.
5. Experiment Cycles: Duration 2 hrs/day ; Number 56
6. Potential Hazards None

DISCUSSION:

EXPERIMENT AND APPLICATION SUMMARY

TITLE	NASA No. 2.9.1.4
EVALUATION OF LOW RANGE ACCELEROMETERS	Lockheed No. 666

OBJECTIVE

Primary: Improve navigation techniques. Demonstrate gravity gradient measurement of local vertical.

Secondary: Measure all accelerations experienced by the space station and study disturbance, measure air drag.

INSTALLATION REQUIREMENTS

1. Normal Operating Environment: Equip. Int. ; Crew Int.
2. Weight of Equipment and Supplies (lb.) 20
3. Volume of Equipment and Supplies (cu. ft.): Internal 1 ; External 0
4. Critical Dimensions (ft.)
5. List of Test Apparatus Inertial Quality Accelerometer equivalent to Bell Aerosystems
6. Average Power Requirements (kw) 0.10
7. Special Thermal Requirements Accelerometer & circuit to be installed in a temperature controlled oven.
8. Orientation: Laboratory N/R ; Equipment N/R
9. Special Navigation Accuracy N/R
10. Stability and Pointing Accuracy N/R
11. Orbit Requirements N/R
12. Gravity Requirements Gravity field not important

MANPOWER REQUIREMENTS

1. Number of Crew Required 1
2. Skill Categories Phy. Sci.
3. Total Man-hours 112
4. Chronological Span 8 wks.
5. Experiment Cycles: Duration 2 hrs. ; Number 56
6. Potential Hazards None

DISCUSSION:

TITLE	NASA No. 2.9.1.5
EVALUATION OF EARTH, MOON, SUN & STAR TRACKER PERFORMANCE	Lockheed No. 663

OBJECTIVE

Primary: To obtain performance data on trackers under conditions approaching actual use.

Secondary: To optimize those systems for future use.

INSTALLATION REQUIREMENTS

1. Normal Operating Environment: Equip. Int. ; Crew Int.
2. Weight of Equipment and Supplies (lb.) 100
3. Volume of Equipment and Supplies (cu. ft.): Internal 27 ; External 0
4. Critical Dimensions (ft.)
5. List of Test Apparatus
6. Average Power Requirements (kw) 0.05
7. Special Thermal Requirements N/R
8. Orientation: Laboratory N/R ; Equipment Earth, Solar, Lunar, Stellar
9. Special Navigation Accuracy
10. Stability and Pointing Accuracy < 1 arc-sec; 0.5×10^{-4} to 1×10^{-4} rad/sec
11. Orbit Requirements N/R
12. Gravity Requirements Zero-G

MANPOWER REQUIREMENTS

1. Number of Crew Required 1
2. Skill Categories Phy. Sci.
3. Total Man-hours 112
4. Chronological Span 8 wks.
5. Experiment Cycles: Duration 20 min.; Number 300
6. Potential Hazards None

DISCUSSION:

Non-rotating station

TITLE	NASA No. 2.9.1.6
EVALUATION OF INERTIAL COMPONENTS	Lockheed No. 673

OBJECTIVE

Primary: To test performance of various inertial sensors for prolonged periods in space environment

Secondary: To evaluate the performance of these components in candidate navigation systems.

INSTALLATION REQUIREMENTS

1. Normal Operating Environment: Equip. Int. ; Crew Ext.
2. Weight of Equipment and Supplies (lb.) 10 lb per component
3. Volume of Equipment and Supplies (cu. ft.): Internal 1 cu ft per component ; External 0
4. Critical Dimensions (ft.) 1 ft.
5. List of Test Apparatus dependent on particular component under test
6. Average Power Requirements (kw) .05
7. Special Thermal Requirements variable
8. Orientation: Laboratory variable ; Equipment variable
9. Special Navigation Accuracy variable
10. Stability and Pointing Accuracy variable
11. Orbit Requirements not critical
12. Gravity Requirements zero-g & partial g

MANPOWER REQUIREMENTS

1. Number of Crew Required 1-2
2. Skill Categories Phy. Sci.
3. Total Man-hours 450-900
4. Chronological Span 1 yr.
5. Experiment Cycles: Duration 1 yr. ; Number 5-10
6. Potential Hazards none

DISCUSSION:

Examples of components to be tested in space environment are gyros, accelerometers, sun sensors, star trackers, horizon scanners, magnetic field sensors, planet trackers, landmark sighting devices, etc. (Some of these components are not rigorously classified as "inertial" components, but this experiment is envisioned as applicable for the entire spectrum of navigation sensors).

For scheduling purposes assume 10 components

TITLE	NASA No. 2.9.1.7
GYRO DRIFT TESTS	Lockheed No. 671

OBJECTIVE

Primary: Direct accurate measurement of gyro drift rates.

Secondary: Possibility of testing gyro assemblies in vacuum environment.

INSTALLATION REQUIREMENTS

1. Normal Operating Environment: Equip. Internal ; Crew Internal
2. Weight of Equipment and Supplies (lb.) 5
3. Volume of Equipment and Supplies (cu. ft.): Internal .05 ; External 0
4. Critical Dimensions (ft.) 0.5
5. List of Test Apparatus Vibration isolation table, monitoring and power supply electronics, star trackers
6. Average Power Requirements (kw) .01
7. Special Thermal Requirements Variable
8. Orientation: Laboratory N/R ; Equipment Fixed inertially
9. Special Navigation Accuracy 20 arc-sec at discrete times
10. Stability and Pointing Accuracy Not critical except for discrete measurement times
11. Orbit Requirements N/R
12. Gravity Requirements Zero-g

MANPOWER REQUIREMENTS

1. Number of Crew Required 1
2. Skill Categories Phy. Science
3. Total Man-hours 200 hours
4. Chronological Span 1000 hours
5. Experiment Cycles: Duration 1000 hrs. ; Number 1
6. Potential Hazards None

DISCUSSION:

Inertial grade gyros are commonly tested on a turntable in the earth's gravitational field. Angular deviations are due both to drift and acceleration sensitive unbalance terms. Separation of these effects must be done by Fourier analysis. Testing in the zero-g space environment would permit direct, accurate measurement of gyro drift rates.

TITLE	NASA No. 2.9.1.8
OPTICAL SCANNERS	Lockheed No. 674

OBJECTIVE

Primary: Evaluate earth, moon, sun, and star optical scanners.

Secondary: Improve ability of optical scanners to distinguish, acquire, and track desired optical targets.

INSTALLATION REQUIREMENTS

1. Normal Operating Environment: Equip. Int. & Ext. ; Crew Int.
2. Weight of Equipment and Supplies (lb.) 100
3. Volume of Equipment and Supplies (cu. ft.): Internal 27 ; External 5
4. Critical Dimensions (ft.)
5. List of Test Apparatus extension capsule, extension & retraction mechanism, control panel, display panel, & data recorder
6. Average Power Requirements (kw) 0.05
7. Special Thermal Requirements N/R
8. Orientation: Laboratory N/R ; Equipment earth-solar-lunar-space
9. Special Navigation Accuracy ± 1 N.M. altitude ± .01° celestial position
10. Stability and Pointing Accuracy 0.1 second of arc 0.001°/second
11. Orbit Requirements N/R
12. Gravity Requirements zero-g

MANPOWER REQUIREMENTS

1. Number of Crew Required 1 (1 hr/day)
2. Skill Categories Phy. Sci.
3. Total Man-hours 250
4. Chronological Span 6 mo.
5. Experiment Cycles: Duration 1-10 hrs. ; Number 200
6. Potential Hazards None

DISCUSSION:

Various sensors will be required to point at objects of interest long enough to obtain data on their operation. The instrument under test will be placed in a capsule which will be extended out from the space station to provide a nonrestricted view of space. The test will be remotely controlled from within the space laboratory.

EXPERIMENT AND APPLICATION SUMMARY

TITLE	NASA No. 2.9.1.9
RADIATION SENSORS TO DETERMINE EARTH'S VERTICAL	Lockheed No. 672

OBJECTIVE

Primary: Determine the line-of-sight from an orbiting vehicle to the earth's center.

Secondary: To measure the altitude along this line of sight.

INSTALLATION REQUIREMENTS

1. Normal Operating Environment: Equip. Internal ; Crew Internal
2. Weight of Equipment and Supplies (lb.) 10
3. Volume of Equipment and Supplies (cu. ft.): Internal 1 ; External 0
4. Critical Dimensions (ft.) 1
5. List of Test Apparatus
6. Average Power Requirements (kw) .02
7. Special Thermal Requirements N/R
8. Orientation: Laboratory N/R ; Equipment Toward earth disk
9. Special Navigation Accuracy ±1 N.M.
10. Stability and Pointing Accuracy .02 deg. angular alignment
11. Orbit Requirements N/R
12. Gravity Requirements Zero-g for pointing accuracy

MANPOWER REQUIREMENTS

1. Number of Crew Required 1
2. Skill Categories Phy. Sci.
3. Total Man-hours 200
4. Chronological Span 1 year
5. Experiment Cycles: Duration 1 hr. ; Number 200
6. Potential Hazards Requires window in space station

DISCUSSION:

Enough data points must be taken to evaluate the daily and yearly cyclic changes in performance.

TITLE	NASA No. 2.9.1.10
GRAVITY GRADIENT COMPONENTS, TECHNIQUES & DEVELOPMENT TESTS	Lockheed No. 669

OBJECTIVE

Primary: To establish the feasibility of using gravity measurements for stabilization, control, navigation & guidance functions.

Secondary: To perform development tests on gravity gradient sensors and verify their performance.

INSTALLATION REQUIREMENTS

1. Normal Operating Environment: Equip. Int. ; Crew Int.
2. Weight of Equipment and Supplies (lb.) 75
3. Volume of Equipment and Supplies (cu. ft.): Internal 1 ; External 0
4. Critical Dimensions (ft.) 1.5 feet (length)
5. List of Test Apparatus G.G. sensors such as extremely precise accelerometers (10^{-9} to 10^{-12}g) Instrumentation is principally the on-board computer & navigation equipment.
6. Average Power Requirements (kw) 0.100
7. Special Thermal Requirements N/R
8. Orientation: Laboratory ; Equipment
9. Special Navigation Accuracy
10. Stability and Pointing Accuracy
11. Orbit Requirements N/R
12. Gravity Requirements Zero G

MANPOWER REQUIREMENTS

1. Number of Crew Required 1
2. Skill Categories Physical Sci.
3. Total Man-hours 160
4. Chronological Span 8 wks.
5. Experiment Cycles: Duration See Disc. ; Number See Disc.
6. Potential Hazards None

DISCUSSION:

Some of the factors to be investigated: sensor exposure to space environment, accuracy, response & calibration techniques. Also, studies of other operational uses for very precise gravity gradient sensors.

For flight control experiments - operation full time for 4 orbits (2 in succession). For nav/guid experiments, one hour tests repeated at least 10 times. Monitoring time - full time.

Assume 10 tests of each type (Total = 20 tests)

EXPERIMENT AND APPLICATION SUMMARY

TITLE	NASA No. 2.9.1.11
EVALUATION OF STABILIZATION FOR LEASE COMMUNICATIONS	Lockheed No. 661

OBJECTIVE

Primary: Develop Laser communication between space vehicles.

INSTALLATION REQUIREMENTS

1. Normal Operating Environment: Equip. Int. ; Crew Int.
2. Weight of Equipment and Supplies (lb.) 200
3. Volume of Equipment and Supplies (cu. ft.): Internal 268 ; External 0
4. Critical Dimensions (ft.)
5. List of Test Apparatus Laser transmitter/receiver, stabilized platform and recording equipment
6. Average Power Requirements (kw) 0.015
7. Special Thermal Requirements N/R
8. Orientation: Laboratory N/R ; Equipment Earth
9. Special Navigation Accuracy ±1 N.M.
10. Stability and Pointing Accuracy 4 arc sec; 4 arc sec/sec and 40 arc sec/hr (all axes)
11. Orbit Requirements N/R
12. Gravity Requirements 0 g

MANPOWER REQUIREMENTS

1. Number of Crew Required 1
2. Skill Categories Physical Science
3. Total Man-hours 112
4. Chronological Span 8 wks.
5. Experiment Cycles: Duration 2 hrs. ; Number 56
6. Potential Hazards None

DISCUSSION:

This experiment duplicates No. 2.9.1.3 if ground communication is attempted.

TITLE	NASA No. 2.9.2.1
EVALUATION OF REACTION CONTROL COMPONENTS	Lockheed No. 667

OBJECTIVE

Primary: To evaluate the effects of extended space operation on reaction control components

Secondary: To verify the performance of reaction control engines in space

INSTALLATION REQUIREMENTS

1. Normal Operating Environment: Equip. Ext. ; Crew Int.
2. Weight of Equipment and Supplies (lb.) 145
3. Volume of Equipment and Supplies (cu. ft.): Internal 0 ; External 2.5
4. Critical Dimensions (ft.) 1.5 x 1.5
5. List of Test Apparatus Reaction control engine system such as advanced hypergolic, bi-propellant, vaporization and ion. Instrumentation to (Cont)
6. Average Power Requirements (kw) 0.175
7. Special Thermal Requirements N/R
8. Orientation: Laboratory N/R ; Equipment N/R
9. Special Navigation Accuracy N/R
10. Stability and Pointing Accuracy N/R
11. Orbit Requirements N/R
12. Gravity Requirements N/R

MANPOWER REQUIREMENTS

1. Number of Crew Required 1
2. Skill Categories Physical Sci.
3. Total Man-hours 100
4. Chronological Span 8 wks
5. Experiment Cycles: Duration 1000 hrs ; Number 2
6. Potential Hazards None

DISCUSSION:

Some of the factors to be investigated: cold welding, sublimation, radiation effects and insulation effectiveness. Minimum useful exposure time to space environment - 60 days. Operating time for higher thrust devices 10,000 seconds. Operating time for lower thrust devices 1000 hours. Monitoring time for high thrust devices - continuous; for low thrust devices 1 hour per 10 hours of operation.

(5) measure pressure, temperature, thrust, fluid flow & response. System components: thrust chambers, valving, ignition systems, tankage.

TITLE TEST AND EVALUATION OF CONTROL SYSTEM TORQUEING DEVICES	NASA No. 2.9.2.3 Lockheed No. 668

OBJECTIVE

Primary: To evaluate the effectiveness of control torqueing devices in an operational environment

Secondary: To verify the performance of components and subsystem elements

INSTALLATION REQUIREMENTS

1. Normal Operating Environment: Equip. Int. ; Crew Int.
2. Weight of Equipment and Supplies (lb.) 100
3. Volume of Equipment and Supplies (cu. ft.): Internal 9.5 ; External 0
4. Critical Dimensions (ft.) 2.5 x 2.5
5. List of Test Apparatus Torqueing device such as mercury loop, inertia sphere, precession wheel plus instrumentation to measure frequency response (Cont.)
6. Average Power Requirements (kw) 0.250
7. Special Thermal Requirements N/R
8. Orientation: Laboratory N/R ; Equipment N/R
9. Special Navigation Accuracy N/R
10. Stability and Pointing Accuracy N/R
11. Orbit Requirements N/R
12. Gravity Requirements Some tests at Zero-G and some with simulated G

MANPOWER REQUIREMENTS

1. Number of Crew Required 1
2. Skill Categories Phy. Sci
3. Total Man-hours 85
4. Chronological Span 4 wks
5. Experiment Cycles: Duration Cont. ; Number 5
6. Potential Hazards None

DISCUSSION:

Some of the factors to be investigated: control cross coupling, pointing accuracies attainable, response, and operational life. Random disturbance environment of space station necessary to gather data on required momentum capacity.

(5) temperature, rotational speed, power consumption & torque.

TITLE	NASA No. 2.9.2.4
TECHNIQUES FOR TRAILING TEST UNITS FROM SPACE STATION	Lockheed No. 665

OBJECTIVE

Primary: To develop a technique for maintaining small test units in the proximity of the space station.

INSTALLATION REQUIREMENTS

1. Normal Operating Environment: Equip. Ext. ; Crew Int.
2. Weight of Equipment and Supplies (lb.) 100
3. Volume of Equipment and Supplies (cu. ft.): Internal 5(stored); External 0
4. Critical Dimensions (ft.)
5. List of Test Apparatus
6. Average Power Requirements (kw) 0.01
7. Special Thermal Requirements N/R
8. Orientation: Laboratory N/R ; Equipment N/R
9. Special Navigation Accuracy N/R
10. Stability and Pointing Accuracy N/R
11. Orbit Requirements N/R
12. Gravity Requirements Gravity field not important

MANPOWER REQUIREMENTS

1. Number of Crew Required 2
2. Skill Categories Phy. Sci.
3. Total Man-hours 112-224
4. Chronological Span 2-4 wks.
5. Experiment Cycles: Duration 4 hrs. ; Number 14-28
6. Potential Hazards None

DISCUSSION:

TITLE	NASA No. 2.10.1.1
JOINING MATERIALS AND COMPONENTS IN SPACE	Lockheed No. 683

OBJECTIVE

Primary: To test procedures and materials used in joining.

INSTALLATION REQUIREMENTS

1. Normal Operating Environment: Equip. Int. ; Crew Int.
2. Weight of Equipment and Supplies (lb.) 50
3. Volume of Equipment and Supplies (cu. ft.): Internal 10 ; External 0
4. Critical Dimensions (ft.)
5. List of Test Apparatus electric arc welder, metal sheet and bar stock samples
6. Average Power Requirements (kw) .200
7. Special Thermal Requirements N/R
8. Orientation: Laboratory N/R ; Equipment N/R
9. Special Navigation Accuracy N/R
10. Stability and Pointing Accuracy N/R
11. Orbit Requirements N/R
12. Gravity Requirements N/R

MANPOWER REQUIREMENTS

1. Number of Crew Required 1
2. Skill Categories Phy. Sci. Exp.
3. Total Man-hours 30
4. Chronological Span 15 days
5. Experiment Cycles: Duration 2 hrs. ; Number 15
6. Potential Hazards atmosphere contamination or explosion

DISCUSSION:

Recommended procedure would be to evacuate one compartment and have the crew member perform the actual material joining while wearing a pressure suit. Set-up and jigging could be done previously in a normal atmosphere.

TITLE	NASA No. 2.10.1.2
APPLICATION OF THERMAL CONTROL COATINGS IN SPACE	Lockheed No. 684

OBJECTIVE

Primary: To determine and evaluate methods of applying thermal coatings in space.

Secondary: To determine the effective life of thermal coatings

INSTALLATION REQUIREMENTS

1. Normal Operating Environment: Equip. Int.&Ext. ; Crew Int. & Ext.
2. Weight of Equipment and Supplies (lb.) 150 lbs.
3. Volume of Equipment and Supplies (cu. ft.): Internal 4 ; External
4. Critical Dimensions (ft.)
5. List of Test Apparatus α/ε detector
6. Average Power Requirements (kw) 0.050
7. Special Thermal Requirements
8. Orientation: Laboratory N/R ; Equipment N/R
9. Special Navigation Accuracy N/R
10. Stability and Pointing Accuracy N/R
11. Orbit Requirements N/R
12. Gravity Requirements N/R

MANPOWER REQUIREMENTS

1. Number of Crew Required 1
2. Skill Categories Phy. Sci.
3. Total Man-hours 365 hours
4. Chronological Span 2 yrs.
5. Experiment Cycles: Duration 30 min. ; Number 1/day (730)
6. Potential Hazards None

DISCUSSION:

Various methods will be tried to apply thermal coatings in space environment, and once applied, will determine effective life of thermal control coatings and methods of replacing or applying new coatings.

TITLE	NASA No. 2.10.2.1
REPAIR OF THERMAL CONTROL SURFACES IN SPACE	Lockheed No. 681

OBJECTIVE

Primary: To replace or repair thermal control surfaces in space.

INSTALLATION REQUIREMENTS

1. Normal Operating Environment: Equip. Ext. ; Crew Int. & Ext.
2. Weight of Equipment and Supplies (lb.) 200
3. Volume of Equipment and Supplies (cu. ft.): Internal _____ ; External 6
4. Critical Dimensions (ft.) _____
5. List of Test Apparatus Thermal control surface samples, framework, tools
6. Average Power Requirements (kw) 0.2
7. Special Thermal Requirements N/R
8. Orientation: Laboratory N/R ; Equipment N/R
9. Special Navigation Accuracy N/R
10. Stability and Pointing Accuracy N/R
11. Orbit Requirements N/R
12. Gravity Requirements N/R

MANPOWER REQUIREMENTS

1. Number of Crew Required 2
2. Skill Categories Phy. Sci.
3. Total Man-hours 312
4. Chronological Span 52 weeks
5. Experiment Cycles: Duration 2 hours ; Number 52
6. Potential Hazards Extravehicular activity

DISCUSSION:

TITLE	NASA No. 2.10.2.2
STUDY OF SPACE MAINTENANCE METHODS AND TOOLS	Lockheed No. 682

OBJECTIVE

Primary: Evaluate the efficiency of tools, materials, and techniques in the performance of tasks inside and outside of the space station.

INSTALLATION REQUIREMENTS

1. Normal Operating Environment: Equip. Int. & Ext. ; Crew Int. & Ext.
2. Weight of Equipment and Supplies (lb.) 50-150
3. Volume of Equipment and Supplies (cu. ft.): Internal (stored) 2-8 ; External
4. Critical Dimensions (ft.)
5. List of Test Apparatus Space tools
6. Average Power Requirements (kw) 0.1-1.0
7. Special Thermal Requirements N/R
8. Orientation: Laboratory N/R ; Equipment N/R
9. Special Navigation Accuracy N/R
10. Stability and Pointing Accuracy N/R
11. Orbit Requirements N/R
12. Gravity Requirements Gravity field not important

MANPOWER REQUIREMENTS

1. Number of Crew Required 2
2. Skill Categories Biomedical Science & Subject
3. Total Man-hours 90-180
4. Chronological Span 30-60 days
5. Experiment Cycles: Duration 1.5 hrs. ; Number 20-40
6. Potential Hazards Extravehicular activity

DISCUSSION:

TITLE	NASA No. 2.10.2.3
REPAIR OF HEAT SHIELD IN SPACE	Lockheed No. 685

OBJECTIVE

Primary: Develop in-space repair techniques for heat shields and acquire the capability to determine heat shield condition

INSTALLATION REQUIREMENTS

1. Normal Operating Environment: Equip. Ext. ; Crew Ext.
2. Weight of Equipment and Supplies (lb.) 75
3. Volume of Equipment and Supplies (cu. ft.): Internal 0 ; External 2
4. Critical Dimensions (ft.) None
5. List of Test Apparatus Portable hand power tools, power supply, fasteners, normal personnel extravehicular suit and accessories
6. Average Power Requirements (kw) 0.200
7. Special Thermal Requirements Variable
8. Orientation: Laboratory N/R ; Equipment N/R
9. Special Navigation Accuracy N/R
10. Stability and Pointing Accuracy N/R
11. Orbit Requirements N/R
12. Gravity Requirements None

MANPOWER REQUIREMENTS

1. Number of Crew Required 1
2. Skill Categories Phy. Sci. Exp.
3. Total Man-hours Undetermined
4. Chronological Span Undetermined
5. Experiment Cycles: Duration 5 hrs/wk ; Number Undetermined
6. Potential Hazards Extravehicular activity

DISCUSSION: 1., 2., 3.) Equipment will be used externally but internal storage space must be provided

The anticipated heat shield failure would be at the attachment points of the heat shield and the higher strength sub-structure. The failure is precipitated by thermal cycling during orbital operations. The repair activity is expected to be that of applying mechanical screws (made of phenolic fiberglass or similar material) at the edge of the heat shield.

Meteoroid damage repair attempts may be similar; that of mechanically attaching additional material to the heat shield surface.

TITLE	PROOF TEST OF ORBITAL MAINTENANCE AND REPAIR FACILITY UTILIZING INFLATABLE HOUSING	NASA No. 2.10.2.5 Lockheed No. 686

OBJECTIVE

Primary: Development of capability for maintenance and repair in shirtsleeve environment

INSTALLATION REQUIREMENTS

1. Normal Operating Environment: Equip. Ext. ; Crew Int.
2. Weight of Equipment and Supplies (lb.) 800
3. Volume of Equipment and Supplies (cu. ft.): Internal 11 stowed ; External 4189 inflated
4. Critical Dimensions (ft.) stowed: 1.3 dia. x 2.1 external: 20 ft. dia.
5. List of Test Apparatus An assy. of inflatable material. Carry on kit of condition sensors. Airlock with attachment provision
6. Average Power Requirements (kw) 1.0
7. Special Thermal Requirements N/R
8. Orientation: Laboratory N/R ; Equipment N/R
9. Special Navigation Accuracy N/R
10. Stability and Pointing Accuracy N/R
11. Orbit Requirements N/R
12. Gravity Requirements None

MANPOWER REQUIREMENTS

1. Number of Crew Required 2
2. Skill Categories Phy. Sci.
3. Total Man-hours 8 hrs/week
4. Chronological Span 6 mo. to 2 yrs
5. Experiment Cycles: Duration 1 mo. ; Number 6
6. Potential Hazards Meteoroid penetration, sudden loss of pressure

DISCUSSION:

The assembly should be tested in two modes: In enveloping a nearby satellite target and as an appendage to the station wall for repairing a portion of the station itself. The assembly will likely be double wall with the walls held by strings, so that a shape can be effected without pressurizing the whole. There would be appropriate hard flanges and hatches. It will attached to the airlock through which it was passed prior to erection.

TITLE

METEOROID HIT REPAIR

NASA No. 2.10.2.7
Lockheed No. 688

OBJECTIVE

Primary: To determine a method of patching meteoroid punctures

INSTALLATION REQUIREMENTS

1. Normal Operating Environment: Equip. Int. ; Crew Int.
2. Weight of Equipment and Supplies (lb.) 100
3. Volume of Equipment and Supplies (cu. ft.): Internal 27 ; External
4. Critical Dimensions (ft.) 1
5. List of Test Apparatus Ultra sonic leak detector
6. Average Power Requirements (kw) 0.005
7. Special Thermal Requirements N/R
8. Orientation: Laboratory N/R ; Equipment N/R
9. Special Navigation Accuracy N/R
10. Stability and Pointing Accuracy N/R
11. Orbit Requirements N/R
12. Gravity Requirements N/R

MANPOWER REQUIREMENTS

1. Number of Crew Required 1
2. Skill Categories Phy. Sci
3. Total Man-hours 40 hours
4. Chronological Span Mission duration
5. Experiment Cycles: Duration 20 min. ; Number 120
6. Potential Hazards Depressurization of Module Compartment

DISCUSSION:

Some of these patches should be installed while the experimenter is in a pressure suit.

These tests can probably be more easily performed on earth.

TITLE	NASA No. 2.10.2.8
DETERMINATION OF FABRICATION SEALING TECHNIQUES, & HEAT TRANSFER PATTERNS FOR STRUCTURAL PARTS	Lockheed No. 687

OBJECTIVE

Primary: Development of optimum structures for long life space applications

INSTALLATION REQUIREMENTS

1. Normal Operating Environment: Equip. Interior & Exterior ; Crew Interior & Exterior
2. Weight of Equipment and Supplies (lb.) 10
3. Volume of Equipment and Supplies (cu. ft.): Internal 1.5 ; External 1.5
4. Critical Dimensions (ft.)
5. List of Test Apparatus Several test panels, variety of attachments installed on assy. Thermocouples, strain gages
6. Average Power Requirements (kw) 0.2
7. Special Thermal Requirements None
8. Orientation: Laboratory None ; Equipment None
9. Special Navigation Accuracy None
10. Stability and Pointing Accuracy None
11. Orbit Requirements None
12. Gravity Requirements None

MANPOWER REQUIREMENTS

1. Number of Crew Required 1
2. Skill Categories Phy. Sci.
3. Total Man-hours 84
4. Chronological Span six weeks
5. Experiment Cycles: Duration 1 wk. ; Number 6
6. Potential Hazards Examination or replacement of panels requires extravehicular work.

DISCUSSION:

It will be desirable to superimpose a load on test panels from an actuator (installed on exterior of station once in orbit).

The major part of this experiment could be performed on Earth.

TITLE	NASA No. 2.11.1.5
CREW & CARGO TRANSFER TECHNIQUES	Lockheed No. 627

OBJECTIVE

Primary: Develop improved techniques of cargo & crew transfer

INSTALLATION REQUIREMENTS

1. Normal Operating Environment: Equip. Int. ; Crew Int.
2. Weight of Equipment and Supplies (lb.) 200-500
3. Volume of Equipment and Supplies (cu. ft.): Internal 6-15 ; External 0
4. Critical Dimensions (ft.)
5. List of Test Apparatus To be designed
6. Average Power Requirements (kw) 1.5
7. Special Thermal Requirements N/R
8. Orientation: Laboratory N/R ; Equipment N/R
9. Special Navigation Accuracy
10. Stability and Pointing Accuracy N/R
11. Orbit Requirements N/R
12. Gravity Requirements Zero-G

MANPOWER REQUIREMENTS

1. Number of Crew Required 4
2. Skill Categories Phy. Sci.
3. Total Man-hours 112-448
4. Chronological Span 5-20 wks
5. Experiment Cycles: Duration 1-4 wks ; Number 5
6. Potential Hazards During transfer of dangerous fluids

DISCUSSION:

TITLE RENDEZVOUS & DOCKING	NASA No. 2.11.2.4 Lockheed No. 622

OBJECTIVE

Primary: To evaluate & develop various rendezvous & docking techniques

Secondary: Develop crew proficiency in maneuvers

INSTALLATION REQUIREMENTS

1. Normal Operating Environment: Equip. Ext. ; Crew Int.
2. Weight of Equipment and Supplies (lb.) 200
3. Volume of Equipment and Supplies (cu. ft.): Internal ; External 27
4. Critical Dimensions (ft.)
5. List of Test Apparatus Variety of rendezvous and docking equipment
6. Average Power Requirements (kw) 0.1
7. Special Thermal Requirements N/R
8. Orientation: Laboratory N/R ; Equipment N/R
9. Special Navigation Accuracy N/R
10. Stability and Pointing Accuracy N/R
11. Orbit Requirements N/R
12. Gravity Requirements Gravity field not important

MANPOWER REQUIREMENTS

1. Number of Crew Required 5
2. Skill Categories Phy. Sci.
3. Total Man-hours 10-15
4. Chronological Span 1-3 wks.
5. Experiment Cycles: Duration 2-3 hrs. ; Number 1
6. Potential Hazards Danger to crew of logistics vehicle if docking system inoperable.

DISCUSSION:

TITLE	NASA No. 2.11.2.4
CONTINUATION OF EXPERIMENT 622	Lockheed No. 623

OBJECTIVE

INSTALLATION REQUIREMENTS

1. Normal Operating Environment: Equip. _____ ; Crew _____
2. Weight of Equipment and Supplies (lb.) _____
3. Volume of Equipment and Supplies (cu. ft.): Internal _____ ; External _____
4. Critical Dimensions (ft.) _____
5. List of Test Apparatus _____
6. Average Power Requirements (kw) _____
7. Special Thermal Requirements _____
8. Orientation: Laboratory _____ ; Equipment _____
9. Special Navigation Accuracy _____
10. Stability and Pointing Accuracy _____
11. Orbit Requirements _____
12. Gravity Requirements _____

MANPOWER REQUIREMENTS

1. Number of Crew Required _____
2. Skill Categories _____
3. Total Man-hours _____
4. Chronological Span _____
5. Experiment Cycles: Duration _____ ; Number _____
6. Potential Hazards _____

DISCUSSION:

TITLE CONTINUATION OF EXPERIMENT 622	NASA No. 2.11.2.4 Lockheed No. 624

OBJECTIVE

INSTALLATION REQUIREMENTS

1. Normal Operating Environment: Equip. _____ ; Crew _____
2. Weight of Equipment and Supplies (lb.) _____
3. Volume of Equipment and Supplies (cu. ft.): Internal _____ ; External _____
4. Critical Dimensions (ft.) _____
5. List of Test Apparatus _____
6. Average Power Requirements (kw) _____
7. Special Thermal Requirements _____
8. Orientation: Laboratory _____ ; Equipment _____
9. Special Navigation Accuracy _____
10. Stability and Pointing Accuracy _____
11. Orbit Requirements _____
12. Gravity Requirements _____

MANPOWER REQUIREMENTS

1. Number of Crew Required _____
2. Skill Categories _____
3. Total Man-hours _____
4. Chronological Span _____
5. Experiment Cycles: Duration _____ ; Number _____
6. Potential Hazards _____

DISCUSSION:

TITLE	NASA No. 2.11.2.4
CONTINUATION OF EXPERIMENT 622	Lockheed No. 625

OBJECTIVE

INSTALLATION REQUIREMENTS

1. Normal Operating Environment: Equip. _____ ; Crew _____
2. Weight of Equipment and Supplies (lb.) _____
3. Volume of Equipment and Supplies (cu. ft.): Internal _____ ; External _____
4. Critical Dimensions (ft.) _____
5. List of Test Apparatus _____
6. Average Power Requirements (kw) _____
7. Special Thermal Requirements _____
8. Orientation: Laboratory _____ ; Equipment _____
9. Special Navigation Accuracy _____
10. Stability and Pointing Accuracy _____
11. Orbit Requirements _____
12. Gravity Requirements _____

MANPOWER REQUIREMENTS

1. Number of Crew Required _____
2. Skill Categories _____
3. Total Man-hours _____
4. Chronological Span _____
5. Experiment Cycles: Duration _____ ; Number _____
6. Potential Hazards _____

DISCUSSION:

TITLE	CREW EXTRAVEHICULAR SUIT AND PORTABLE LIFE SUPPORT SYSTEM TRAINING	NASA No. 2.11.3.1 Lockheed No. 621

OBJECTIVE

PRIMARY: To determine requirements for advanced training program in extravehicular suit and life support systems for lunar and planetary missions.

INSTALLATION REQUIREMENTS

1. Normal Operating Environment: Equip. Int. ; Crew Ext.
2. Weight of Equipment and Supplies (lb.) existing equipment
3. Volume of Equipment and Supplies (cu. ft.): Internal existing equipment ; External 0
4. Critical Dimensions (ft.)
5. List of Test Apparatus Space tools
6. Average Power Requirements (kw) 0.05
7. Special Thermal Requirements N/R
8. Orientation: Laboratory N/R ; Equipment N/R
9. Special Navigation Accuracy N/R
10. Stability and Pointing Accuracy N/R
11. Orbit Requirements N/R
12. Gravity Requirements Gravity field not important

MANPOWER REQUIREMENTS

1. Number of Crew Required 6
2. Skill Categories Biomedical Science
3. Total Man-hours 288
4. Chronological Span 16 wks.
5. Experiment Cycles: Duration 1.0 hrs. ; Number 48
6. Potential Hazards Extravehicular activity

DISCUSSION:

EXPERIMENT AND APPLICATION SUMMARY

TITLE	NASA No. 3.1.1.1
MAPPING OF CLOUD FORMATIONS	Lockheed No. 726

OBJECTIVE

Primary: Weather forecasting

Secondary: Percent cloud cover vs. location

INSTALLATION REQUIREMENTS

1. Normal Operating Environment: Equip. Int. ; Crew Int.
2. Weight of Equipment and Supplies (lb.) 540*
3. Volume of Equipment and Supplies (cu. ft.): Internal 21* ; External 0
4. Critical Dimensions (ft.)
5. List of Test Apparatus
6. Average Power Requirements (kw) 0.2
7. Special Thermal Requirements N/R
8. Orientation: Laboratory N/R ; Equipment earth
9. Special Navigation Accuracy N/R
10. Stability and Pointing Accuracy see 1.4.1.10
11. Orbit Requirements Polar preferred
12. Gravity Requirements Zero-G

MANPOWER REQUIREMENTS

1. Number of Crew Required 2*
2. Skill Categories Phy. Sci.
3. Total Man-hours 7280 (5 yrs)*
4. Chronological Span Mission Duration
5. Experiment Cycles: Duration 2 hrs. ; Number 1825 (5 yrs)*
6. Potential Hazards None

DISCUSSION:

*Included in 1.4.1.4 and 1.4.1.10

TITLE	NASA No. 3.1.1.2
MAP CHANGES IN SNOW AND ICE COVERAGE	Lockheed No. 727

OBJECTIVE

Primary: Secure maps of snow and ice coverage

INSTALLATION REQUIREMENTS

1. Normal Operating Environment: Equip. External ; Crew Internal
2. Weight of Equipment and Supplies (lb.) 220*
3. Volume of Equipment and Supplies (cu. ft.): Internal 10.5* ; External
4. Critical Dimensions (ft.) (See 1.4.1.4)
5. List of Test Apparatus I.R. receiver, recorder, film magazine, power supply and CRT display*
6. Average Power Requirements (kw) 0.2
7. Special Thermal Requirements N/R
8. Orientation: Laboratory N/R ; Equipment Earth
9. Special Navigation Accuracy N/R
10. Stability and Pointing Accuracy 1° pointing accuracy
11. Orbit Requirements Polar preferred
12. Gravity Requirements 0 g

MANPOWER REQUIREMENTS

1. Number of Crew Required *
2. Skill Categories Physical Science
3. Total Man-hours *
4. Chronological Span Mission duration
5. Experiment Cycles: Duration 2 hrs/day ; Number 1825 (5 yrs)
6. Potential Hazards None

DISCUSSION:

*Included in 1.4.1.4

TITLE	NASA No. 3.1.1.3
MONITOR JET STREAMS	Lockheed No. 728

OBJECTIVE

Primary: Detect thermal gradient associated with jet streams

INSTALLATION REQUIREMENTS

1. Normal Operating Environment: Equip. Int. ; Crew Int.
2. Weight of Equipment and Supplies (lb.) 220*
3. Volume of Equipment and Supplies (cu. ft.): Internal 10.5* ; External 0
4. Critical Dimensions (ft.) see 1.4.1.4
5. List of Test Apparatus IR scanner to detect the thermal gradient roughly 0.2°C per mile (associated with jet streams), film magazine, power supply, CRT display*
6. Average Power Requirements (kw) 2.2*
7. Special Thermal Requirements -20° to -50°C
8. Orientation: Laboratory N/R ; Equipment Earth
9. Special Navigation Accuracy N/R
10. Stability and Pointing Accuracy 1 min. of arc/sec.
11. Orbit Requirements Polar preferred
12. Gravity Requirements Gravity field not important

MANPOWER REQUIREMENTS

1. Number of Crew Required 1*
2. Skill Categories Phy. Sci.
3. Total Man-hours 3650 (5 yrs)*
4. Chronological Span mission duration
5. Experiment Cycles: Duration 2 hrs. ; Number 1825 (5 yrs)*
6. Potential Hazards None

DISCUSSION:

*Included in 1.4.1.4

TITLE	NASA No. 3.1.1.4
METEOROLOGICAL SATELLITE SUPPORT	Lockheed No. 729

OBJECTIVE

Primary: To place an unmanned weather satellite into orbit from the space station.

INSTALLATION REQUIREMENTS

1. Normal Operating Environment: Equip. Int. & Ext. ; Crew Int. & Ext.
2. Weight of Equipment and Supplies (lb.) 150
3. Volume of Equipment and Supplies (cu. ft.): Internal 27 (stored) ; External
4. Critical Dimensions (ft.)
5. List of Test Apparatus checkout and repair equipment
6. Average Power Requirements (kw) 0.5
7. Special Thermal Requirements N/R
8. Orientation: Laboratory N/R ; Equipment N/R
9. Special Navigation Accuracy N/R
10. Stability and Pointing Accuracy N/R
11. Orbit Requirements N/R
12. Gravity Requirements Gravity field not important

MANPOWER REQUIREMENTS

1. Number of Crew Required 2 for checkout
3 for launch
2. Skill Categories Physical Science
3. Total Man-hours 48
4. Chronological Span 18
5. Experiment Cycles: Duration 6 hrs. ; Number 3
6. Potential Hazards Satellite at launch could hit station

DISCUSSION:

TITLE	NASA No. 3.1.1.5
HURRICANE WATCH AND WARNING	Lockheed No. 731

OBJECTIVE

Primary: Movement of storms related to total weather pattern in order to predict paths with greater accuracy

INSTALLATION REQUIREMENTS

1. Normal Operating Environment: Equip. Int. ; Crew Int.
2. Weight of Equipment and Supplies (lb.) 220*
3. Volume of Equipment and Supplies (cu. ft.): Internal 10.5* ; External 0
4. Critical Dimensions (ft.) See 1.4.1.4
5. List of Test Apparatus IR receiver, recorder, film magazine, power supply and CRT display*
6. Average Power Requirements (kw)
7. Special Thermal Requirements special cooling of IR detector*
8. Orientation: Laboratory earth (desired) ; Equipment earth (required)
9. Special Navigation Accuracy 1 n. mi. desired
10. Stability and Pointing Accuracy platform stability not critical, 1 deg. pointing accuracy desired
11. Orbit Requirements 28.5° inclination would be adequate
12. Gravity Requirements N/R

MANPOWER REQUIREMENTS

1. Number of Crew Required Incl. in 1.4.1.10
2. Skill Categories Phy. Sci. Exp.
3. Total Man-hours incl. in 1.4.1.10
4. Chronological Span mission lifetime
5. Experiment Cycles: Duration continuous ; Number -
6. Potential Hazards None

DISCUSSION:

This application is envisioned as a portion of the total weather watch and warning system and as such is continuous during hurricane season.

*Included in 1.4.1.4

TITLE	NASA No. 3.1.1.6
FOG/SMOG SURVEY AND PREDICTION	Lockheed No. 730

OBJECTIVE

Primary: Add to information on areal distribution of smog and fog. Movement overland can be tracked.

Secondary: Attempt to understand causes of smog/fog in relation to areas where combustibles are not released to atmosphere with intensity of U.S. cities .... Capetown, Santiago, etc.

INSTALLATION REQUIREMENTS

1. Normal Operating Environment: Equip. Interior ; Crew Interior
2. Weight of Equipment and Supplies (lb.) 220*
3. Volume of Equipment and Supplies (cu. ft.): Internal 10.5* ; External 0
4. Critical Dimensions (ft.)
5. List of Test Apparatus IR receiver, recorder, film magazine, power supply and CRT display*
6. Average Power Requirements (kw)
7. Special Thermal Requirements special cooling of IR detector*
8. Orientation: Laboratory earth (desired) ; Equipment earth (required)
9. Special Navigation Accuracy 1 n. mile desired
10. Stability and Pointing Accuracy platform stability not critical, 1 deg. pointing accuracy desired
11. Orbit Requirements prefer higher inclination for greatest earth coverage
12. Gravity Requirements N/R

MANPOWER REQUIREMENTS

1. Number of Crew Required Incl. in 1.4.1.10
2. Skill Categories Physical Science Experimenter
3. Total Man-hours Incl. in 1.4.1.10
4. Chronological Span Mission lifetime
5. Experiment Cycles: Duration continuous ; Number
6. Potential Hazards none

DISCUSSION:

The time elements on this particular experiment may be related to known seasonal occurrences.

* Included in 1.4.1.4

TITLE	NASA No. 3.1.2.2
CLEAR AIR TURBULENCE AND PREDICTION	Lockheed No. 732

OBJECTIVE

Primary: Contributions to Upper Atmospheric Studies

Secondary: Warning of potential areas of difficulty for aircraft flight

INSTALLATION REQUIREMENTS

1. Normal Operating Environment: Equip. Interior ; Crew Interior
2. Weight of Equipment and Supplies (lb.) 220*
3. Volume of Equipment and Supplies (cu. ft.): Internal 10.5* ; External 0
4. Critical Dimensions (ft.) (see 1.4.1.4)
5. List of Test Apparatus IR receiver, recorder, film magazine, power supply and CRT display*
6. Average Power Requirements (kw)
7. Special Thermal Requirements special cooling of IR detector*
8. Orientation: Laboratory earth (desired) ; Equipment earth (required)
9. Special Navigation Accuracy 1 n. mile desired
10. Stability and Pointing Accuracy platform stability not critical, 1 deg. pointing accuracy desired
11. Orbit Requirements prefer higher inclination for greater earth coverage
12. Gravity Requirements N/R

MANPOWER REQUIREMENTS

1. Number of Crew Required incl. in 1.4.1.10
2. Skill Categories Physical Science Experimenter
3. Total Man-hours incl. in 1.4.1.10
4. Chronological Span Mission lifetime
5. Experiment Cycles: Duration continuous ; Number
6. Potential Hazards none

DISCUSSION:

The temperature variations in relation to jet-stream phenomena and other areas of shear in the atmosphere will give clues as to the areal distribution through time of regions of possible turbulence.

* Included in 1.4.1.4

TITLE	NASA No. 3.2.1.1
VOICE OF AMERICA SERVICE	Lockheed No. 755

OBJECTIVE

Primary: Determine the feasibility of direct broadcast into amateur and home commercial receivers

Secondary: Achieve prestige from this type of world-wide service

INSTALLATION REQUIREMENTS

1. Normal Operating Environment: Equip. Interior & Ext.; Crew Interior
2. Weight of Equipment and Supplies (lb.) 535
3. Volume of Equipment and Supplies (cu. ft.): Internal 10 cu. ft. inc. cooling provisions; External not estimated
4. Critical Dimensions (ft.) antenna
5. List of Test Apparatus receiver, transmitter, controls and antenna
6. Average Power Requirements (kw) .4
7. Special Thermal Requirements none
8. Orientation: Laboratory earth (desired); Equipment earth (required)
9. Special Navigation Accuracy normal for synchronous orbit
10. Stability and Pointing Accuracy normal for synchronous orbit
11. Orbit Requirements synchronous orbit preferred (2-3 vehicles required)
12. Gravity Requirements none

MANPOWER REQUIREMENTS

1. Number of Crew Required 1
2. Skill Categories Physical Science Experimenter
3. Total Man-hours 1/day (1825)
4. Chronological Span mission duration
5. Experiment Cycles: Duration 1 hr; Number 1825 (5 yrs)
6. Potential Hazards none

DISCUSSION:

1. An experiment duration of 3 wks. would yield an indication of the feasibility of objective no. 1. The achievement of prestige, objective no. 2, would require up to 1 year.
2. Assumed one-1 hr. broadcasts per day.
3. Assumptions utilized in the calculation of power requirement; (synchronous orbit) A. signal frequency: 30 mc; B. signal to ground receiver: 30 volts at 100 Ω, -105 db; C. distance: 22,512 statute miles; D. space transmission loss: 154 db; E. vehicle antenna gain; 20; F. power required: 1800 watts RF energy or approximately 10 KW prime power.
4. If it is found desirable to utilize the shorter transmission times (average: 8 minutes) of a 200 n. mi, low inclination orbit, the following assumptions are appropriate:

DISCUSSION:

A. signal frequency: 30 mc; B. distance to horizon: 1000 statute miles;
C. space transmission loss: 130 db; D. vehicle antenna gain: 9 db;
E. power required: 120 watts RF energy or approximately 600 watts prime power

TITLE EDUCATION TO UNDEVELOPED COUNTRIES	NASA No. 3.2.1.2 Lockheed No. 756

OBJECTIVE

Primary: Prove the feasibility of educational broadcasting from space

Secondary: Prove the effectiveness of space transmitted educational program materials in lesser developed countries

INSTALLATION REQUIREMENTS

1. Normal Operating Environment: Equip. Interior & Ext. ; Crew Interior
2. Weight of Equipment and Supplies (lb.) 535 (Included in Exp. 3.2.1.1/755
3. Volume of Equipment and Supplies (cu. ft.): Internal 10 (incl. in 3.2.1.1/755 ; External not estimated
4. Critical Dimensions (ft.) antenna
5. List of Test Apparatus receiver, transmitter, controls and antenna
6. Average Power Requirements (kw) 1.25
7. Special Thermal Requirements none
8. Orientation: Laboratory earth (desired) ; Equipment earth (required)
9. Special Navigation Accuracy normal for synchronous orbit
10. Stability and Pointing Accuracy normal for synchronous orbit
11. Orbit Requirements synchronous orbit required
12. Gravity Requirements none

MANPOWER REQUIREMENTS

1. Number of Crew Required 1
2. Skill Categories Physical Science Experimenter
3. Total Man-hours 2/per day (Total: 3650)
4. Chronological Span mission lifetime
5. Experiment Cycles: Duration 3 hrs ; Number 1825 (5 yrs)
6. Potential Hazards none

DISCUSSION:

See exp. no. 3.2.1.1/756

Assumed 3 hrs. of broadcasting time per day

TITLE	NASA No. 3.2.2.1
EARTH-EARTH RADIO RELAY	Lockheed No. 754

OBJECTIVE

Primary: To utilize the NMSS as a long life multiple channel radio relay between distant ground stations.

INSTALLATION REQUIREMENTS

1. Normal Operating Environment: Equip. Int. & Ext. ; Crew Interior
2. Weight of Equipment and Supplies (lb.) 80
3. Volume of Equipment and Supplies (cu. ft.): Internal 1 ; External 1
4. Critical Dimensions (ft.)
5. List of Test Apparatus transponder and antenna
6. Average Power Requirements (kw) 0.1-0.3
7. Special Thermal Requirements N/R
8. Orientation: Laboratory N/R ; Equipment Earth
9. Special Navigation Accuracy N/R
10. Stability and Pointing Accuracy overall stability: 1°
11. Orbit Requirements See discussion
12. Gravity Requirements not critical

MANPOWER REQUIREMENTS

1. Number of Crew Required 1
2. Skill Categories Physical Science
3. Total Man-hours 600 (for 5 years)
4. Chronological Span mission duration
5. Experiment Cycles: Duration cont. ; Number -
6. Potential Hazards None

DISCUSSION: This application is best suited for the synchronous orbit missions with an additional preference for a zero inclination angle. The principal advantage of incorporating an earth-earth radio relay on the NMSS is longer life (5 years primary mission life plus 2 to 3 years after station abandonment), greater reliability through maintainability, and the saving of a launch specifically for the radio relay function.

TITLE EARTH-EARTH TV RELAY

NASA No. 3.2.2.2
Lockheed No. 753

OBJECTIVE

Primary: To utilize the NMSS as an earth-earth TV relay

INSTALLATION REQUIREMENTS

1. Normal Operating Environment: Equip. Int. & Ext. ; Crew Interior
2. Weight of Equipment and Supplies (lb.) 200
3. Volume of Equipment and Supplies (cu. ft.): Internal 2 ; External 1.5
4. Critical Dimensions (ft.)
5. List of Test Apparatus Transponder, monitor, antenna
6. Average Power Requirements (kw) 0.8
7. Special Thermal Requirements N/R
8. Orientation: Laboratory N/R - see discussion Equipment N/R
9. Special Navigation Accuracy N/R
10. Stability and Pointing Accuracy N/R
11. Orbit Requirements see discussion
12. Gravity Requirements

MANPOWER REQUIREMENTS

1. Number of Crew Required 1
2. Skill Categories Phys. Sci.
3. Total Man-hours 1000 (5 years)
4. Chronological Span mission duration
5. Experiment Cycles: Duration cont. ; Number --
6. Potential Hazards None

DISCUSSION:

This application is best suited for an equatorial synchronous orbit. Advantages of the use of NMSS are longer useful life, easier attainment of adequate power and cooling, greater reliability through maintenance with a possible additional period of use after crew abandonment, and continuous use throughout each 24 hour period as compared to the few-minute periods of lower altitude TV relay satellites. Power requirements listed are odb vehicle antenna gain so that no specific orientation, that may limit other applications, is required.

TITLE	NASA No. 3.2.2.3
EARTH-EARTH TELETYPE SERVICE	Lockheed No. 752

OBJECTIVE

Primary: To utilize the NMSS as a multiple channel teletype relay between ground stations

INSTALLATION REQUIREMENTS

1. Normal Operating Environment: Equip. Int. & Ext. ; Crew Interior
2. Weight of Equipment and Supplies (lb.) 80
3. Volume of Equipment and Supplies (cu. ft.): Internal 1 ; External 1
4. Critical Dimensions (ft.)
5. List of Test Apparatus transponder and antenna
6. Average Power Requirements (kw) 0.1-0.3
7. Special Thermal Requirements N/R
8. Orientation: Laboratory N/R ; Equipment Earth
9. Special Navigation Accuracy N/R
10. Stability and Pointing Accuracy overall stability 1°
11. Orbit Requirements See discussion
12. Gravity Requirements None

MANPOWER REQUIREMENTS

1. Number of Crew Required 1
2. Skill Categories Physical Science
3. Total Man-hours 600 (for 5 years)
4. Chronological Span Mission Duration
5. Experiment Cycles: Duration ; Number
6. Potential Hazards None

DISCUSSION: This application is best suited for an equatorial synchronous orbit mission. The advantages are the same as stated for 3.2.2.1. The equipment could be the same as for 3.2.2.1 with either or both types of signals handled simultaneously, or, if the traffic volume is great enough, separate equipments could be used for each application.

TITLE	NASA No. 3.3.1.1
NAVIGATION AIDS FOR SHIPS AT SEA	Lockheed No. 779

OBJECTIVE

Primary: Provide a navigation beacon type service for ships at sea.

INSTALLATION REQUIREMENTS

1. Normal Operating Environment: Equip. Int. ; Crew Int.
2. Weight of Equipment and Supplies (lb.) 35
3. Volume of Equipment and Supplies (cu. ft.): Internal 1.0 ; External 1
4. Critical Dimensions (ft.) 1.0
5. List of Test Apparatus Transmitter and antenna
6. Average Power Requirements (kw) .04
7. Special Thermal Requirements N/R
8. Orientation: Laboratory N/R ; Equipment Earth
9. Special Navigation Accuracy 1000' - 2000' position accuracy
10. Stability and Pointing Accuracy N/R
11. Orbit Requirements Polar or synchronous orbit preferred but not necessary
12. Gravity Requirements N/R

MANPOWER REQUIREMENTS

1. Number of Crew Required 1
2. Skill Categories Phys.Sci.
3. Total Man-hours negligible
4. Chronological Span duration of mission
5. Experiment Cycles: Duration total mission ; Number continuous
6. Potential Hazards None

DISCUSSION:

The system should be designed similar to the Transit system, so that ships could use either Transit information or space station information, as available. This technique requires a computer on-board the ship to interpret the data. An alternate approach would be to have the ship's position determined by a spacecraft occupant and this information transmitted by voice radio to ship.

TITLE	NASA No. 3.3.1.2
SEARCH AND RESCUE	Lockheed No. 778

OBJECTIVE

Primary: The saving of human life and the minimization of property damage.

INSTALLATION REQUIREMENTS

1. Normal Operating Environment: Equip. Int.* ; Crew Int.*
2. Weight of Equipment and Supplies (lb.) *
3. Volume of Equipment and Supplies (cu. ft.): Internal * ; External *
4. Critical Dimensions (ft.) *
5. List of Test Apparatus * IR receiver, recorder, 9 x 9" and 70 mm aerial camera, spotting telescope, stereo view, film
6. Average Power Requirements (kw) *
7. Special Thermal Requirements *
8. Orientation: Laboratory earth (desired) ; Equipment earth (required)
9. Special Navigation Accuracy Maximum obtainable
10. Stability and Pointing Accuracy *
11. Orbit Requirements Preferably high inclination for maximum earth coverage
12. Gravity Requirements None

MANPOWER REQUIREMENTS

1. Number of Crew Required 2
2. Skill Categories Phy. Sci. Experimenter
3. Total Man-hours Undetermined**
4. Chronological Span Mission lifetime
5. Experiment Cycles: Duration 1 week ; Number Undetermined**
6. Potential Hazards None

DISCUSSION:

Principal reasons for search and rescue missions are anticipated to be transportation (ship and aircraft) disasters. Since these missions cannot be scheduled, an estimate of required manhours for the scheduling program is not attempted. The chief advantage of an orbital space station is seen to be in its ability to obtain earth coverage in remote areas with minimal search time.

* included in 1.4.1.4, 1.4.1.10 and 3.4.1.12

** a rough estimate of manhours required is 100 manhour/year

TITLE	NASA No. 3.3.1.3
SHIP ROUTING AND CONTROL	Lockheed No. 777

OBJECTIVE

Primary: Integration of synoptic information on weather to ship routing and control

Secondary: Monitoring shipping

INSTALLATION REQUIREMENTS

1. Normal Operating Environment: Equip. Interior ; Crew Interior
2. Weight of Equipment and Supplies (lb.) 220*
3. Volume of Equipment and Supplies (cu. ft.): Internal 10.5* ; External 0
4. Critical Dimensions (ft.) (see 1.4.1.4)
5. List of Test Apparatus IR receiver, recorder, film magazine, power supply, CRT display*
6. Average Power Requirements (kw)
7. Special Thermal Requirements Special cooling of IR detector*
8. Orientation: Laboratory earth (desired) ; Equipment earth (required)
9. Special Navigation Accuracy ±1 n. mile; not considered critical
10. Stability and Pointing Accuracy Platform stability not critical, 1 degree pointing accuracy desired
11. Orbit Requirements Inclination high enough to cover major shipping routes
12. Gravity Requirements None

MANPOWER REQUIREMENTS

1. Number of Crew Required Incl. in 1.4.1.10
2. Skill Categories Phy. Sci. Experimenter
3. Total Man-hours Included in 1.4.1.10
4. Chronological Span Mission lifetime
5. Experiment Cycles: Duration cont. ; Number -
6. Potential Hazards None

DISCUSSION:

The advantage of manned transmission to shipping control stations over present methods is that of time primarily since routes of optimum weather can be immediately given. A trained weather analyst aboard would greatly enhance this function.

*Included in 1.4.1.4

TITLE	NASA No. 3.4.1.1
SURVEY AND DYNAMIC MAPPING OF THE EARTH'S SURFACE FOR AGRICULTURAL PRODUCTION ESTIMATES	Lockheed No. 934

OBJECTIVE

Primary: Help increase the world's food production by obtaining better land utilization.

Secondary: Predict crop production quantities and expected impact on commercial markets.

INSTALLATION REQUIREMENTS

1. Normal Operating Environment: Equip. Int. ; Crew Int.
2. Weight of Equipment and Supplies (lb.) 540*
3. Volume of Equipment and Supplies (cu. ft.): Internal 21* ; External 0
4. Critical Dimensions (ft.) See dimensions in 1.4.1.10 and 1.4.1.4
5. List of Test Apparatus See 1.4.1.10 and 1.4.1.4 (photographic and infrared equipment)
6. Average Power Requirements (kw)
7. Special Thermal Requirements IR detector cooling and film processing
8. Orientation: Laboratory earth (desired) ; Equipment earth (required)
9. Special Navigation Accuracy Not critical (±1 mile)
10. Stability and Pointing Accuracy .01 deg./sec.; .01 to .03 deg.
11. Orbit Requirements Prefer higher inclinations for maximum earth coverage
12. Gravity Requirements None

MANPOWER REQUIREMENTS

1. Number of Crew Required Incl. in 1.4.1.10
2. Skill Categories Phy. Sci. Experimenter
3. Total Man-hours Incl. in 1.4.1.10
4. Chronological Span Mission lifetime
5. Experiment Cycles: Duration continuous ; Number -
6. Potential Hazards None

DISCUSSION:

This experiment is closely related to experiments 3.4.1.6, 3.4.1.8, and 3.4.1.9

* Included in 1.4.1.10 and 1.4.1.4

TITLE	NASA No. 3.4.1.2
WATER RESOURCES SURVEY	Lockheed No. 929

OBJECTIVE

Primary: Mapping of fluctuating patterns with special emphasis on depth of snow packs, etc. Predictions of runoff.

Secondary: Conservation planning - reservoirs, flood control

INSTALLATION REQUIREMENTS

1. Normal Operating Environment: Equip. Interior ; Crew Interior
2. Weight of Equipment and Supplies (lb.) 540*
3. Volume of Equipment and Supplies (cu. ft.): Internal 21* ; External 0
4. Critical Dimensions (ft.) See dimensions in 1.4.1.10 and 1.4.1.4
5. List of Test Apparatus See 1.4.1.10 and 1.4.1.4 (photographic and infrared equipment)
6. Average Power Requirements (kw)
7. Special Thermal Requirements IR detector cooling and film processing
8. Orientation: Laboratory earth (desired) ; Equipment earth (required)
9. Special Navigation Accuracy Not critical (±1 mile)
10. Stability and Pointing Accuracy .01 deg./sec.; .01 to .03 deg.
11. Orbit Requirements Prefer higher inclinations for maximum earth coverage
12. Gravity Requirements None

MANPOWER REQUIREMENTS

1. Number of Crew Required Incl. in 1.4.1.10
2. Skill Categories Phy. Sci. Experimenter
3. Total Man-hours Incl. in 1.4.1.10
4. Chronological Span Mission lifetime
5. Experiment Cycles: Duration continuous ; Number -
6. Potential Hazards None

DISCUSSION:

* Included in 1.4.1.10 and 1.4.1.4

Related to Experiment 3.4.1.9/946

TITLE	NASA No. 3.4.1.3
GEODETIC AND TOPOGRAPHIC MAPPING	Lockheed No. 933

OBJECTIVE

INSTALLATION REQUIREMENTS

1. Normal Operating Environment: Equip. _____ ; Crew _____
2. Weight of Equipment and Supplies (lb.) _____
3. Volume of Equipment and Supplies (cu. ft.): Internal _____ ; External _____
4. Critical Dimensions (ft.) _____
5. List of Test Apparatus _____
6. Average Power Requirements (kw) _____
7. Special Thermal Requirements _____
8. Orientation: Laboratory _____ ; Equipment _____
9. Special Navigation Accuracy _____
10. Stability and Pointing Accuracy _____
11. Orbit Requirements _____
12. Gravity Requirements _____

MANPOWER REQUIREMENTS

1. Number of Crew Required _____
2. Skill Categories _____
3. Total Man-hours _____
4. Chronological Span _____
5. Experiment Cycles: Duration _____ ; Number _____
6. Potential Hazards _____

DISCUSSION:

It is recommended that this experiment be included in 1.4.1.12 'Cartography' and 1.4.1.13 'Geodetic Survey'.

TITLE	NASA No. 3.4.1.5
FORESTRY SURVEY	Lockheed No. 936

OBJECTIVE

Primary: To map the different forests by type and distribution, especially in relation to watershed.

INSTALLATION REQUIREMENTS

1. Normal Operating Environment: Equip. Interior ; Crew Interior
2. Weight of Equipment and Supplies (lb.) 540*
3. Volume of Equipment and Supplies (cu. ft.): Internal 21* ; External
4. Critical Dimensions (ft.) See dimensions in 1.4.1.10 and 1.4.1.4
5. List of Test Apparatus See 1.4.1.10 and 1.4.1.4 (photographic and infrared equipment)
6. Average Power Requirements (kw)
7. Special Thermal Requirements IR detector cooling and film processing
8. Orientation: Laboratory earth (desired) ; Equipment earth (required)
9. Special Navigation Accuracy Not critical (± 1 mile)
10. Stability and Pointing Accuracy .01 deg./sec.; .01 to .03 deg.
11. Orbit Requirements Prefer higher inclinations for maximum earth coverage
12. Gravity Requirements None

MANPOWER REQUIREMENTS

1. Number of Crew Required Incl. in 1.4.1.10
2. Skill Categories Phy. Sci. Experimenter
3. Total Man-hours Incl. in 1.4.1.10
4. Chronological Span Mission lifetime
5. Experiment Cycles: Duration continuous ; Number -
6. Potential Hazards None

DISCUSSION:

Aerial photography and IR scanning can be utilized to distinguish the different types of vegetative patterns. The world's rain forests and other inaccessible areas could be mapped. Relation to 3.4.1.7 important.

* Included in 1.4.1.10 and 1.4.1.4

TITLE	NASA No. 3.4.1.6
AGRICULTURAL SURVEY	Lockheed No. 945

OBJECTIVE

Primary: To determine the extent of the world's area under cultivation and extent of the area potentially suitable for agricultural purposes.

INSTALLATION REQUIREMENTS

1. Normal Operating Environment: Equip. Interior ; Crew Interior
2. Weight of Equipment and Supplies (lb.) 540*
3. Volume of Equipment and Supplies (cu. ft.): Internal 21* ; External 0
4. Critical Dimensions (ft.) See dimensions in 1.4.1.10 and 1.4.1.4
5. List of Test Apparatus See 1.4.1.10 and 1.4.1.4 (photographic and infrared equipment)
6. Average Power Requirements (kw)
7. Special Thermal Requirements IR detector cooling and film processing*
8. Orientation: Laboratory earth (desired) ; Equipment earth (required)
9. Special Navigation Accuracy Not critical (± 1 mile)
10. Stability and Pointing Accuracy .01 deg./sec. roll rate for platform stability; pointing accuracy of .01 to .03 deg.
11. Orbit Requirements Preferably high inclination for maximum earth coverage
12. Gravity Requirements None

MANPOWER REQUIREMENTS

1. Number of Crew Required Incl. in 1.4.1.10
2. Skill Categories Phy. Sci. Experimenter
3. Total Man-hours Incl. in 1.4.1.10
4. Chronological Span Mission lifetime
5. Experiment Cycles: Duration continuous ; Number --
6. Potential Hazards None

DISCUSSION:

This application is extended by 3.4.1.8

* Incl. in 1.4.1.10 and 1.4.1.4

TITLE	NASA No. 3.4.1.7
FOREST FIRE WARNING	Lockheed No. 927

OBJECTIVE

Primary: Reduce the human and material resource losses due to inefficiency in early fire detection

Secondary: Reduce the present cost of fire control

INSTALLATION REQUIREMENTS

1. Normal Operating Environment: Equip. Interior ; Crew Interior
2. Weight of Equipment and Supplies (lb.) 220*
3. Volume of Equipment and Supplies (cu. ft.): Internal 10.5* ; External 0
4. Critical Dimensions (ft.) (See 1.4.1.4)
5. List of Test Apparatus IR receiver, recorder, film magazine, power supply, CRT display*
6. Average Power Requirements (kw)
7. Special Thermal Requirements Special cooling of IR detector*
8. Orientation: Laboratory earth (desired) ; Equipment earth (required)
9. Special Navigation Accuracy 1000-2000' position accuracy is desirable (see discussion)
10. Stability and Pointing Accuracy Platform stability not critical, 1 degree pointing accuracy desired
11. Orbit Requirements Preferably high inclination for maximum forest coverage
12. Gravity Requirements None

MANPOWER REQUIREMENTS

1. Number of Crew Required Incl. in 1.4.1.10
2. Skill Categories Phy. Sci Experimenter
3. Total Man-hours Incl. in 1.4.1.10
4. Chronological Span Mission Lifetime
5. Experiment Cycles: Duration continuous ; Number
6. Potential Hazards None

DISCUSSION:

See attached sheet. Present methods rely on the visual observation of smoke. These methods are ineffective at night or when visibility is otherwise obscured.

* Included in 1.4.1.4

9. In some instances precise location will be required and can be accomplished by correlation with conventional photographs.

"Existing infrared mappers are suitable for fire control applications both in mapping the perimeter of large fires and in determining location of spot fires outside the main perimeter. Existing systems are not, at present, suitable for fire detection applications. In order to provide a fire detection capability, scanning techniques development for target acquisition and tracking systems will have to be incorporated into infrared mappers to provide the "multiple look" needed to assure reliable detection of fires obscured by trees. With this change, infrared mappers may well provide the answer to early fire detection", "Proceedings of the Second Symposium on Remote Sensing of Environment", Institute of Science and Technology, University of Michigan, February 1963, Page 302.

TITLE	NASA No. 3.4.1.8
CROP PREDICTION	Lockheed No. 937

OBJECTIVE

Primary: To determine on world basis the amount of acreage under agricultural production and the type of crop.

INSTALLATION REQUIREMENTS

1. Normal Operating Environment: Equip. Interior ; Crew Interior
2. Weight of Equipment and Supplies (lb.) 540*
3. Volume of Equipment and Supplies (cu. ft.): Internal 21* ; External 0
4. Critical Dimensions (ft.) See dimensions in 1.4.1.10 and 1.4.1.4
5. List of Test Apparatus See 1.4.1.10 and 1.4.1.4 (photographic and infrared equipment)
6. Average Power Requirements (kw)
7. Special Thermal Requirements IR detector cooling and film processing
8. Orientation: Laboratory earth (desired) ; Equipment earth (required)
9. Special Navigation Accuracy Not critical (± 1 mile)
10. Stability and Pointing Accuracy .01 deg./sec.; .01 to .03 deg.
11. Orbit Requirements Prefer higher inclinations for maximum earth coverage
12. Gravity Requirements None

MANPOWER REQUIREMENTS

1. Number of Crew Required Incl. in 1.4.1.10
2. Skill Categories Phy. Sci. Experimenter
3. Total Man-hours Incl. in 1.4.1.10
4. Chronological Span Mission lifetime
5. Experiment Cycles: Duration continuous ; Number -
6. Potential Hazards None

DISCUSSION:

* Included in 1.4.1.10 and 1.4.1.4

TITLE	NASA No. 3.4.1.9
MONITOR EARTH'S VEGETATION	Lockheed No. 946

OBJECTIVE

Primary: To establish present limits of vegetation in relation to climate and to monitor fluctuations

INSTALLATION REQUIREMENTS

1. Normal Operating Environment: Equip. Interior ; Crew Interior
2. Weight of Equipment and Supplies (lb.) 540*
3. Volume of Equipment and Supplies (cu. ft.): Internal 21* ; External 0
4. Critical Dimensions (ft.) See dimensions in 1.4.1.10 and 1.4.1.4
5. List of Test Apparatus See 1.4.1.10 and 1.4.1.4 (photographic and infrared equipment)
6. Average Power Requirements (kw)
7. Special Thermal Requirements IR detector cooling and film processing
8. Orientation: Laboratory earth (desired) ; Equipment earth (required)
9. Special Navigation Accuracy Not critical (± 1 mile)
10. Stability and Pointing Accuracy .01 deg./sec.; .01 to .03 deg.
11. Orbit Requirements Prefer higher inclinations for maximum earth coverage
12. Gravity Requirements None

MANPOWER REQUIREMENTS

1. Number of Crew Required Incl. in 1.4.1.10
2. Skill Categories Phy. Sci. Experimenter
3. Total Man-hours Incl. in 1.4.1.10
4. Chronological Span Mission lifetime
5. Experiment Cycles: Duration continuous ; Number -
6. Potential Hazards None

DISCUSSION:

This effort is carried out in conjunction with 3.4.1.5 and 3.4.1.6. Efficacy of such programs as the Mediterranean reclamation program can be examined. Desert creep, swamp encroachment and timber line fluctuations can be followed. Position correlation will not be difficult because of past data record.

* Incl. in 1.4.1.10 and 1.4.1.4

TITLE	NASA No. 3.4.1.10
OPTIMUM USE OF HABITABLE LAND	Lockheed No. 931

OBJECTIVE

Primary: Accomplish more efficient and orderly community development

INSTALLATION REQUIREMENTS

1. Normal Operating Environment: Equip. Int. ; Crew Int.
2. Weight of Equipment and Supplies (lb.) 540*
3. Volume of Equipment and Supplies (cu. ft.): Internal 21* ; External 0
4. Critical Dimensions (ft.) See dimensions in 1.4.1.10 and 1.4.1.4
5. List of Test Apparatus See 1.4.1.10 and 1.4.1.4 (photographic and infrared equipment)
6. Average Power Requirements (kw)
7. Special Thermal Requirements IR detector cooling and film processing
8. Orientation: Laboratory earth (desired) ; Equipment earth (required)
9. Special Navigation Accuracy Not critical (± 1 mile)
10. Stability and Pointing Accuracy .01 deg./sec.; .01 to .03 deg.
11. Orbit Requirements Prefer higher inclinations for maximum earth coverage
12. Gravity Requirements None

MANPOWER REQUIREMENTS

1. Number of Crew Required Incl. in 1.4.1.10
2. Skill Categories Phy. Sci. Experimenter
3. Total Man-hours Incl. in 1.4.1.10
4. Chronological Span Mission lifetime
5. Experiment Cycles: Duration continuous ; Number -
6. Potential Hazards None

DISCUSSION:

The value of this experiment is directly related to the ability to acquire the information readily with the acquisition of other useful data.

* Included in 1.4.1.10 and 1.4.1.4

TITLE	NASA No. 3.4.1.11
MINERAL SURVEY	Lockheed No. 930

OBJECTIVE

Primary: Obtain mineralogical data in areas previously considered inaccessible

Secondary: Define potential areas of mineral deposits from gross surveys of earth's geological structure

INSTALLATION REQUIREMENTS

1. Normal Operating Environment: Equip. Int. ; Crew Int.
2. Weight of Equipment and Supplies (lb.) 540*
3. Volume of Equipment and Supplies (cu. ft.): Internal 21* ; External 0
4. Critical Dimensions (ft.) See dimensions in 1.4.1.4 and 1.4.1.10
5. List of Test Apparatus See 1.4.1.4 and 1.4.1.10 (infrared and photographic equipment)
6. Average Power Requirements (kw)
7. Special Thermal Requirements IR detector cooling and film processing
8. Orientation: Laboratory earth (desired) ; Equipment earth (required)
9. Special Navigation Accuracy Not critical (± 1 mile)
10. Stability and Pointing Accuracy .01 deg./sec.; .01 to .03 deg.
11. Orbit Requirements Prefer higher inclinations for maximum earth coverage
12. Gravity Requirements None

MANPOWER REQUIREMENTS

1. Number of Crew Required Incl. in 1.4.1.10
2. Skill Categories Phy. Sci. Experimenter
3. Total Man-hours Incl. in 1.4.1.10
4. Chronological Span Mission lifetime
5. Experiment Cycles: Duration continuous ; Number -
6. Potential Hazards None

DISCUSSION:

* Included in 1.4.1.4 and 1.4.1.10

TITLE	NASA No. 3.4.1.12
OBSERVATION OF VOLCANIC ERUPTION EFFECTS	Lockheed No. 944

OBJECTIVE

Primary: To observe immediate effects of lava flows, ash falls, fissuring and associated faulting. Act as warning station.

Secondary: To measure atmospheric effects, nucleation, etc.

INSTALLATION REQUIREMENTS

1. Normal Operating Environment: Equip. Interior ; Crew Interior
2. Weight of Equipment and Supplies (lb.) 295 (plus wt. of 1.4.1.10 and 1.4.1.4)
3. Volume of Equipment and Supplies (cu. ft.): Internal 6.0 (Plus vol. of 1.4.1.10 & 1.4.1.4) ; External 0
4. Critical Dimensions (ft.) See attached sheet (plus 1.4.1.10 & 1.4.1.4)
5. List of Test Apparatus See attached sheet (plus 1.4.1.10 and 1.4.1.4)
6. Average Power Requirements (kw)
7. Special Thermal Requirements See 1.4.1.10 and 1.4.1.4
8. Orientation: Laboratory earth (desired) ; Equipment earth (required)
9. Special Navigation Accuracy ± 1 mile
10. Stability and Pointing Accuracy Pointing accuracy accomplished with spotting telescope, platform stability desired less than .01 deg./sec.
11. Orbit Requirements Preferably high inclination for maximum earth coverage
12. Gravity Requirements None

MANPOWER REQUIREMENTS

1. Number of Crew Required Incl. in 1.4.1.10
2. Skill Categories Phy. Sci. Experimenter
3. Total Man-hours Incl. in 1.4.1.10
4. Chronological Span Mission lifetime
5. Experiment Cycles: Duration - ; Number -
6. Potential Hazards None

DISCUSSION:

Major volcanic explosions produce effects which are world-wide in scope such as the weather effects caused by eruptions in Java.

* Plus requirements of 1.4.1.10 and 1.4.1.4

ITEM	WT. (LB)	VOL. (FT^3)	POWER REQ'D (WATTS)	DIMENSIONS (IN.)
Spotting Telescope & Camera	150	1.0	250	56 x 20 x 20
Auxiliary Data Recorder	35	.75	75	13 x 10 x 10
Tape Recorder	30	.5	30	12 x 12 x 6
Stereo Viewer	45	2.0	-	24 x 18 x 16
Spare Parts & Test Equipment	35	1.5	125	-

TITLE	NASA No. 3.4.1.13
EARTHQUAKE OBSERVATIONS	Lockheed No. 941

OBJECTIVE

Primary: Observe and record in situ phenomena

Secondary: Follow and provide tsunami warnings

INSTALLATION REQUIREMENTS

1. Normal Operating Environment: Equip. Int. ; Crew Int.
2. Weight of Equipment and Supplies (lb.) 295 plus wt. of 1.4.1.10 & 1.4.1.4*
3. Volume of Equipment and Supplies (cu. ft.): Internal 6.0 (plus vol. of 1.4.1.10 & 1.4.1.4) ; External 0
4. Critical Dimensions (ft.) See 3.4.1.12
5. List of Test Apparatus See 3.4.1.12
6. Average Power Requirements (kw)
7. Special Thermal Requirements See 1.4.1.10 and 1.4.1.4
8. Orientation: Laboratory earth (desired) ; Equipment earth (required)
9. Special Navigation Accuracy Not critical (± 1 mile)
10. Stability and Pointing Accuracy .01 deg./sec. roll rate for platform stability; pointing accuracy accomplished with spotting telescope
11. Orbit Requirements Preferably high inclination for maximum earth coverage
12. Gravity Requirements None

MANPOWER REQUIREMENTS

1. Number of Crew Required Incl. in 1.4.1.10
2. Skill Categories Phy. Sci. Experimenter
3. Total Man-hours Incl. in 1.4.1.10
4. Chronological Span Mission lifetime
5. Experiment Cycles: Duration as required ; Number -
6. Potential Hazards None

DISCUSSION:

Between seven and ten major earthquakes (8+ on the Richter scale) occur annually. Many less severe but important ones occur, especially in the circum-Pacific belt. The importance of tidal wave prediction and accurate information of diastrophism in the uninhabited or sparsely settled areas are critical to earthquake studies and the development of prediction techniques.

This cannot be considered as an experiment but rather as an observational program on a continuing basis and as an adjust to volcanic eruptions, oceanographic studies, etc.

* Included in 3.4.1.12

TITLE	NASA No. 3.4.1.14
DETERMINE COMPOSITION OF SOILS FROM SPECTRAL INFRARED EMISSION	Lockheed No. 924

OBJECTIVE

Primary: Determine the use of soils for agricultural and forestry by identifying their physical and chemical composition

INSTALLATION REQUIREMENTS

1. Normal Operating Environment: Equip. Int. ; Crew Int.
2. Weight of Equipment and Supplies (lb.) 50*
3. Volume of Equipment and Supplies (cu. ft.): Internal 4* ; External 0
4. Critical Dimensions (ft.)
5. List of Test Apparatus Spectrometer*
6. Average Power Requirements (kw)
7. Special Thermal Requirements IR detector required for equipment of 1.4.1.4
8. Orientation: Laboratory earth (desired) ; Equipment earth (required)
9. Special Navigation Accuracy 1000 - 2000' should be adequate
10. Stability and Pointing Accuracy Platform stability not critical; 1 degree pointing accuracy desired
11. Orbit Requirements Preferably high inclination for maximum earth coverage
12. Gravity Requirements None

MANPOWER REQUIREMENTS

1. Number of Crew Required 1**
2. Skill Categories Phy. Sci. Experimenter
3. Total Man-hours 180**
4. Chronological Span 6 months
5. Experiment Cycles: Duration 1 hr ; Number 180**
6. Potential Hazards None

DISCUSSION:

Since most of the earth's soils are vegetatively covered the determinations from this experiment must be made through comparative analysis and the time span of 30 days is unrealistic.

* plus equipment specified for experiment 1.4.1.4
** included in experiment 1.4.1.10

TITLE	DETERMINATION OF COMPOSITION AND DISTRIBUTION OF SOIL TYPES FROM INFRARED EMISSION IMAGERY	NASA No. 3.4.1.15 Lockheed No. 949

OBJECTIVE

Primary: Identify the spatial distribution of particular soil surface species and indicate their usefulness for agriculture and forestry.

INSTALLATION REQUIREMENTS

1. Normal Operating Environment: Equip. Int. ; Crew Int.
2. Weight of Equipment and Supplies (lb.) 220*
3. Volume of Equipment and Supplies (cu. ft.): Internal 10.5* ; External 0
4. Critical Dimensions (ft.) See 1.4.1.4
5. List of Test Apparatus IR receiver, recorder, film magazine, power supply, CRT display
6. Average Power Requirements (kw)
7. Special Thermal Requirements Special cooling of IR detector*
8. Orientation: Laboratory earth (desired) ; Equipment earth (required)
9. Special Navigation Accuracy 1000 - 2000' should be adequate
10. Stability and Pointing Accuracy Platform stability not critical; 1 degree pointing accuracy desired
11. Orbit Requirements Preferably high inclination for maximum earth coverage
12. Gravity Requirements N/R

MANPOWER REQUIREMENTS

1. Number of Crew Required **
2. Skill Categories Phy. Sci. Exp.
3. Total Man-hours 180**
4. Chronological Span 6 months
5. Experiment Cycles: Duration 1 hr ; Number 180**
6. Potential Hazards None

DISCUSSION:

It must be kept in mind that vegetative patterns will obscure the information and that surface indications of soils are illusory since such things as porosity and trace element composition at root level can be extremely important in assessing usefulness for agriculture. This method is recommended for mapping as a prelude to further surface investigation.

* included in 1.4.1.4
** included in 1.4.1.10

TITLE	ATMOSPHERIC MODIFICATION OF THE INFRARED SPECTRAL REFLECTANCE AND EMITTANCE FROM VEGETATION	NASA No. 3.4.1.16 Lockheed No. 950

OBJECTIVE

Primary: Assist in the correction of atmosphere distortion of infrared imagery by determining atmosphere attentuation effects of plant infrared emission and reflectance.

INSTALLATION REQUIREMENTS

1. Normal Operating Environment: Equip. Int. ; Crew Int.
2. Weight of Equipment and Supplies (lb.) 220*
3. Volume of Equipment and Supplies (cu. ft.): Internal 10.5* ; External 0
4. Critical Dimensions (ft.) See 1.4.1.4
5. List of Test Apparatus IR receiver, recorder, film magazine, power supply, CRT display
6. Average Power Requirements (kw)
7. Special Thermal Requirements Special cooling of IR detector*
8. Orientation: Laboratory earth (desired) ; Equipment earth (required)
9. Special Navigation Accuracy 1000 - 2000' should be adequate
10. Stability and Pointing Accuracy Platform stability not critical
1 degree pointing accuracy desired
11. Orbit Requirements Preferably high inclination for maximum earth coverage
12. Gravity Requirements N/R

MANPOWER REQUIREMENTS

1. Number of Crew Required **
2. Skill Categories Phy. Sci. Exp.
3. Total Man-hours 180**
4. Chronological Span 6 months
5. Experiment Cycles: Duration 1 hr ; Number 180**
6. Potential Hazards None

DISCUSSION:

* Included in experiment 3.4.1.14
** Included in experiment 1.4.1.10

TITLE	NASA No. 3.4.2.1
OCEANOGRAPHY STUDIES	Lockheed No. 938

OBJECTIVE

Primary: Observe, monitor and measure ocean currents, and surface phenomena.

INSTALLATION REQUIREMENTS

1. Normal Operating Environment: Equip. Int. ; Crew Int.
2. Weight of Equipment and Supplies (lb.) 540*
3. Volume of Equipment and Supplies (cu. ft.): Internal 21* ; External 0
4. Critical Dimensions (ft.) See dimensions in 1.4.1.10 and 1.4.1.4
5. List of Test Apparatus See 1.4.1.10 and 1.4.1.4 (photographic and infrared equipment)
6. Average Power Requirements (kw)
7. Special Thermal Requirements IR detector cooling and film processing
8. Orientation: Laboratory earth (desired) ; Equipment earth (required)
9. Special Navigation Accuracy Not critical (± 1 mile)
10. Stability and Pointing Accuracy .01 deg./sec.; .01 to .03 deg.
11. Orbit Requirements Prefer higher inclinations for maximum earth coverage
12. Gravity Requirements None

MANPOWER REQUIREMENTS

1. Number of Crew Required Incl. in 1.4.1.10
2. Skill Categories Phy. Sci. Experimenter
3. Total Man-hours Incl. in 1.4.1.10
4. Chronological Span Mission lifetime
5. Experiment Cycles: Duration cont. ; Number -
6. Potential Hazards None

DISCUSSION:

Oceanography studies from 100-300 mile orbits will probably be limited to the surface. Surface resolutions of 10 meters or better are desired.

* Included in 1.4.1.10 and 1.4.1.4

TITLE	NASA No. 3.4.2.2.
REMOTE SENSING OF BROAD SCALE HYDROLOGIC PHENOMENA	Lockheed No. 939

OBJECTIVE

INSTALLATION REQUIREMENTS

1. Normal Operating Environment: Equip. _____ ; Crew _____
2. Weight of Equipment and Supplies (lb.) _____
3. Volume of Equipment and Supplies (cu. ft.): Internal _____ ; External _____
4. Critical Dimensions (ft.) _____
5. List of Test Apparatus _____
6. Average Power Requirements (kw) _____
7. Special Thermal Requirements _____
8. Orientation: Laboratory _____ ; Equipment _____
9. Special Navigation Accuracy _____
10. Stability and Pointing Accuracy _____
11. Orbit Requirements _____
12. Gravity Requirements _____

MANPOWER REQUIREMENTS

1. Number of Crew Required _____
2. Skill Categories _____
3. Total Man-hours _____
4. Chronological Span _____
5. Experiment Cycles: Duration _____ ; Number _____
6. Potential Hazards _____

DISCUSSION:

It is recommended that this experiment be conducted as a part of experiment 3.4.2.1 'Oceanography Studies'.

TITLE	NASA No. 3.4.2.3
SEA TEMPERATURE GRADIENTS	Lockheed No. 928

OBJECTIVE

Primary: Determine surface currents and their seasonal variations.

Secondary: Investigate surface phenomena of internal waves upwelling and submarine canyons

INSTALLATION REQUIREMENTS

1. Normal Operating Environment: Equip. Interior ; Crew Interior
2. Weight of Equipment and Supplies (lb.) 220*
3. Volume of Equipment and Supplies (cu. ft.): Internal 10.5* ; External 0
4. Critical Dimensions (ft.) (See 1.4.1.4)
5. List of Test Apparatus IR receiver, recorder, film magazine, power supply, CRT display*
6. Average Power Requirements (kw)
7. Special Thermal Requirements Special cooling of IR detector*
8. Orientation: Laboratory earth (desired) ; Equipment earth (required)
9. Special Navigation Accuracy Not critical - see discussion
10. Stability and Pointing Accuracy Platform stability not critical, 1 degree pointing accuracy desired
11. Orbit Requirements Prefer higher orbit inclinations for maximum earth coverage
12. Gravity Requirements

MANPOWER REQUIREMENTS

1. Number of Crew Required Incl. in 1.4.1.10
2. Skill Categories Phy. Sci. Experimenter
3. Total Man-hours Incl. in 1.4.1.10
4. Chronological Span Mission lifetime
5. Experiment Cycles: Duration cont. ; Number -
6. Potential Hazards None

DISCUSSION:

Infra-red scanning of sea surface will give desired information which must be compared with known data and interpreted by a trained physical oceanographer. Major convergences and divergences can be distinguished in this manner and their permanence or impermanence determined.

* Included in 1.4.1.4

9. Position determination must be accomplished with reasonable accuracy without the aid of photographic correlation.

TITLE	NASA No. 3.4.2.5
OCEAN CURRENT ANALYSIS	Lockheed No. 940

OBJECTIVE

INSTALLATION REQUIREMENTS

1. Normal Operating Environment: Equip. _____ ; Crew _____
2. Weight of Equipment and Supplies (lb.) _____
3. Volume of Equipment and Supplies (cu. ft.): Internal _____ ; External _____
4. Critical Dimensions (ft.) _____
5. List of Test Apparatus _____
6. Average Power Requirements (kw) _____
7. Special Thermal Requirements _____
8. Orientation: Laboratory _____ ; Equipment _____
9. Special Navigation Accuracy _____
10. Stability and Pointing Accuracy _____
11. Orbit Requirements _____
12. Gravity Requirements _____

MANPOWER REQUIREMENTS

1. Number of Crew Required _____
2. Skill Categories _____
3. Total Man-hours _____
4. Chronological Span _____
5. Experiment Cycles: Duration _____ ; Number _____
6. Potential Hazards _____

DISCUSSION:

It is recommended that this experiment be conducted as a part of experiment 3.4.2.1, 'Oceanography Studies'.

TITLE	NASA No. 3.4.2.6
TIDAL WAVE WARNING	Lockheed No. 926

OBJECTIVE

Primary: Provide evacuation warnings for coastal personnel and decrease property damage.

INSTALLATION REQUIREMENTS

1. Normal Operating Environment: Equip. Int. ; Crew Int.
2. Weight of Equipment and Supplies (lb.) 320*
3. Volume of Equipment and Supplies (cu. ft.): Internal 5.5* ; External 0
4. Critical Dimensions (ft.) See 1.4.1.10
5. List of Test Apparatus See 1.4.1.10
6. Average Power Requirements (kw) .300*
7. Special Thermal Requirements N/R
8. Orientation: Laboratory earth (desired) ; Equipment earth (required)
9. Special Navigation Accuracy Maximum obtainable (See 1.4.1.10)
10. Stability and Pointing Accuracy .01 deg./second; .01 to .03 deg.
11. Orbit Requirements Preferably high inclination for maximum earth coverage
12. Gravity Requirements None

MANPOWER REQUIREMENTS

1. Number of Crew Required Incl. in 1.4.1.10
2. Skill Categories Phy. Sci. Exp.
3. Total Man-hours Incl. in 1.4.1.10
4. Chronological Span Mission Lifetime
5. Experiment Cycles: Duration cont. ; Number -
6. Potential Hazards None

DISCUSSION:

* Included in 1.4.1.10

7. May require special liquid bath temperature control for photographic chemicals.

TITLE: ICEBERG POSITION STATUS

NASA No. 3.4.2.7
Lockheed No. 925

OBJECTIVE

Primary: Provide iceberg position to ships at sea for improved travel safety

Secondary: To determine the relationship of icebergs and ice-islands to continental glaciation

INSTALLATION REQUIREMENTS

1. Normal Operating Environment: Equip. Int. ; Crew Int.
2. Weight of Equipment and Supplies (lb.) 220*
3. Volume of Equipment and Supplies (cu. ft.): Internal 10.5* ; External 0
4. Critical Dimensions (ft.) (See 1.4.1.4)
5. List of Test Apparatus IR receiver, recorder, film magazine, power supply and CRT display*
6. Average Power Requirements (kw)
7. Special Thermal Requirements Special cooling of IR detector*
8. Orientation: Laboratory earth (desired) ; Equipment earth (required)
9. Special Navigation Accuracy 1 n. mi. desired
10. Stability and Pointing Accuracy Platform stability not critical, 1 deg. pointing accuracy desired
11. Orbit Requirements Polar orbit considered necessary
12. Gravity Requirements N/R

MANPOWER REQUIREMENTS

1. Number of Crew Required Incl. in 1.4.1.10
2. Skill Categories Phy. Sci. Exp.
3. Total Man-hours Incl. in 1.4.1.10
4. Chronological Span Mission lifetime
5. Experiment Cycles: Duration continuous ; Number -
6. Potential Hazards None

DISCUSSION:

* Included in 1.4.1.4

TITLE	NASA No. 3.4.2.9
FISH MIGRATION	Lockheed No. 935

OBJECTIVE

Primary: Forecasting of fish location for direction of fishing fleet

Secondary: Knowledge of fish migratory habits

INSTALLATION REQUIREMENTS

1. Normal Operating Environment: Equip. Int. ; Crew Int.
2. Weight of Equipment and Supplies (lb.) 220*
3. Volume of Equipment and Supplies (cu. ft.): Internal 10.5* ; External 0
4. Critical Dimensions (ft.) (See 1.4.1.4)
5. List of Test Apparatus IR receiver, recorder, film magazine, power supply and CRT display
6. Average Power Requirements (kw)
7. Special Thermal Requirements Special cooling of IR detector*
8. Orientation: Laboratory earth (desired) ; Equipment earth (required)
9. Special Navigation Accuracy Not critical (± 2 miles)
10. Stability and Pointing Accuracy Platform stability not critical, 1 degree pointing accuracy desired
11. Orbit Requirements Provide sufficient inclination to cover major fishing areas
12. Gravity Requirements None

MANPOWER REQUIREMENTS

1. Number of Crew Required Incl. in 1.4.1.10
2. Skill Categories Phy. Sci. Exp.
3. Total Man-hours Incl. in 1.4.1.10
4. Chronological Span Mission lifetime
5. Experiment Cycles: Duration cont. ; Number -
6. Potential Hazards None

DISCUSSION:

With presently available visual optical methods this application can reveal schools of fish when they are near the surface of the water. By IR mapping and water slick determination, some prediction as to fish location can be made. Location of schools of deep-running fish might be determined indirectly by water temperature or location of schools of surface-running bait fish such as menhaden.

* Included in 1.4.1.4

TITLE	NASA No. 3.4.2.10
WHALE MIGRATION	Lockheed No. 948

OBJECTIVE

Primary: Forecasting of whale school location for direction of whaling fleet

Secondary: Knowledge of whale migratory habits

INSTALLATION REQUIREMENTS

1. Normal Operating Environment: Equip. Int. ; Crew Int.
2. Weight of Equipment and Supplies (lb.) 295 (plus wt. of 1.4.1.10 & 1.4.1.4*)
3. Volume of Equipment and Supplies (cu. ft.): Internal 6.0 (plus vol. of 1.4.1.10 & 1.4.1.4) ; External 0
4. Critical Dimensions (ft.) See 3.4.1.12
5. List of Test Apparatus See 3.4.1.12
6. Average Power Requirements (kw)
7. Special Thermal Requirements See 1.4.1.10 and 1.4.1.4
8. Orientation: Laboratory earth (desired) ; Equipment earth (required)
9. Special Navigation Accuracy Not critical (± 2 miles)
10. Stability and Pointing Accuracy .01 deg./sec. roll rate for platform stability; pointing accuracy accomplished with spotting telescope
11. Orbit Requirements Provide sufficient inclination to cover major whaling areas
12. Gravity Requirements None

MANPOWER REQUIREMENTS

1. Number of Crew Required Incl. in 1.4.1.10
2. Skill Categories Phy. Sci. Exp.
3. Total Man-hours Incl. in 1.4.1.10
4. Chronological Span Mission lifetime
5. Experiment Cycles: Duration cont. ; Number 0
6. Potential Hazards None

DISCUSSION:

* Included in 3.4.1.12

EXPERIMENT AND APPLICATION SUMMARY

TITLE	THERMAL STRUCTURE AND PATTERNS OF THE OCEAN SURFACE FROM SPECTRAL INFRARED EMITTANCE	NASA No. 3.4.2.12 Lockheed No. 951

OBJECTIVE

Primary: Determine the thermal structure and pattern of the ocean surface to record wind and wave strength

Secondary: Determine the composition of the intervening atmosphere where this might modify the interpretation of the thermal structure

INSTALLATION REQUIREMENTS

1. Normal Operating Environment: Equip. Int. ; Crew Int.
2. Weight of Equipment and Supplies (lb.) 50*
3. Volume of Equipment and Supplies (cu. ft.): Internal 4* ; External 0
4. Critical Dimensions (ft.)
5. List of Test Apparatus Spectrometer*
6. Average Power Requirements (kw)
7. Special Thermal Requirements IR detector required for equipment of 1.4.1.4
8. Orientation: Laboratory earth (desired) ; Equipment earth (required)
9. Special Navigation Accuracy 1000-2000' should be adequate
10. Stability and Pointing Accuracy Platform stability not critical; 1 degree pointing accuracy desired
11. Orbit Requirements Preferably high inclination for maximum earth coverage
12. Gravity Requirements None

MANPOWER REQUIREMENTS

1. Number of Crew Required 1**
2. Skill Categories Phy. Sci. Exp.
3. Total Man-hours 180**
4. Chronological Span 6 months
5. Experiment Cycles: Duration 1 hr ; Number 180**
6. Potential Hazards None

DISCUSSION:

* Plus equipment specified for experiment 1.4.1.4
** Included in experiment 1.4.1.10

TITLE	DETERMINATION OF THE THERMAL PATTERN AND STRUCTURE OF THE OCEAN SURFACE BY IMAGING THE EMITTED INFRARED	NASA No. 3.4.2.13 Lockheed No. 952

OBJECTIVE

Primary: Determine the thermal structure and pattern of the ocean surface to record wind and wave strength

Secondary: Establish the total heat flow from sea to the air

INSTALLATION REQUIREMENTS

1. Normal Operating Environment: Equip. Int.; Crew Int.
2. Weight of Equipment and Supplies (lb.) 220*
3. Volume of Equipment and Supplies (cu. ft.): Internal 10.5* ; External 0
4. Critical Dimensions (ft.) See 1.4.1.4
5. List of Test Apparatus IR receiver, recorder, film magazine, power supply, CRT display
6. Average Power Requirements (kw)
7. Special Thermal Requirements Special cooling of IR detector*
8. Orientation: Laboratory earth (desired) ; Equipment earth (required)
9. Special Navigation Accuracy 1000 - 2000' should be adequate
10. Stability and Pointing Accuracy Platform stability not critical, 1 degree pointing accuracy desired
11. Orbit Requirements Preferably high inclination for maximum earth coverage
12. Gravity Requirements N/R

MANPOWER REQUIREMENTS

1. Number of Crew Required **
2. Skill Categories Phy. Sci. Experimenter
3. Total Man-hours 1825**
4. Chronological Span Mission duration
5. Experiment Cycles: Duration 1 hr ; Number 1825 (5 yrs)**
6. Potential Hazards None

DISCUSSION:

Reference is made to other notations on oceanographic studies and temperature patterns of the sea surface. It is not recommended that specific wind strengths or wave heights be sought. There are specific break-off points which might be revealed through the patterns and these can be studied. Heat flow might be more amenable.

* Included in 1.4.1.4
** Included in 1.4.1.10

TITLE	NASA No. 3.5.2.3
RADIOACTIVITY LEVEL SURVEY	Lockheed No. 975

OBJECTIVE

Primary: Measure ground radiation levels

Secondary: Monitor atmospheric radiation levels

INSTALLATION REQUIREMENTS

1. Normal Operating Environment: Equip. Exterior ; Crew Interior
2. Weight of Equipment and Supplies (lb.) 30
3. Volume of Equipment and Supplies (cu. ft.): Internal 0 ; External 2 Ft^3
4. Critical Dimensions (ft.) Cube
5. List of Test Apparatus 2 γ Detectors
6. Average Power Requirements (kw) 0.01
7. Special Thermal Requirements N/R
8. Orientation: Laboratory N/R ; Equipment Earth
9. Special Navigation Accuracy N/R
10. Stability and Pointing Accuracy N/R
11. Orbit Requirements N/R
12. Gravity Requirements Not important

MANPOWER REQUIREMENTS

1. Number of Crew Required 1
2. Skill Categories Physical Sci.
3. Total Man-hours 15 (for 10 days)
4. Chronological Span 10 days/set (for mission duration)
5. Experiment Cycles: Duration 2 min ; Number 450/set
6. Potential Hazards None

DISCUSSION:

Experiment is designed to detect radiation levels over surface of Earth. It is assumed that these levels may be estimated from 1-10 MEV gamma ray flux data. Measurements are taken in every third orbit for a period of 10 days with measurements spaced 10 minutes. This set of measurements should be repeated at frequent intervals.

TITLE	NASA No. 3.5.2.4
COMMUNITY PLANNING	Lockheed No. 976

OBJECTIVE

Primary: Aid in long range planning for best utilization of land and for efficient transportation and public utility systems.

INSTALLATION REQUIREMENTS

1. Normal Operating Environment: Equip. Int. ; Crew Int.
2. Weight of Equipment and Supplies (lb.) 370*
3. Volume of Equipment and Supplies (cu. ft.): Internal 6.5* ; External 0
4. Critical Dimensions (ft.) See experiment 1.4.1.10
5. List of Test Apparatus Equipment of 1.4.1.10 plus optical magnifying equipment for photo print analysis
6. Average Power Requirements (kw) .300**
7. Special Thermal Requirements None
8. Orientation: Laboratory None ; Equipment None except for 1.4.1.10
9. Special Navigation Accuracy None except for 1.4.1.10
10. Stability and Pointing Accuracy None except for 1.4.1.10
11. Orbit Requirements Inclination high enough to cover habitable areas
12. Gravity Requirements None

MANPOWER REQUIREMENTS

1. Number of Crew Required 1
2. Skill Categories Phy. Sci. Experimenter
3. Total Man-hours 400 manhours/year
4. Chronological Span Mission lifetime
5. Experiment Cycles: Duration 8 hrs/wk ; Number 250/5 yr. mission
6. Potential Hazards None

DISCUSSION:

Earth mapping conducted under experiment 1.4.1.10 and related experiments would provide the photographic data which would be the basis for this (3.5.2.4) experiment.

* Includes equipment of 1.4.1.10
** Included in Experiment 1.4.1.10

EXPERIMENT AND APPLICATION SUMMARY

LR 18906

TITLE	NASA No. 3.5.2.5
INDUSTRIAL PLANNING	Lockheed No. 977

OBJECTIVE

Primary: Obtain the best locations for new industry that will result in the least disturbance to community growth while yielding high productivity.

INSTALLATION REQUIREMENTS

1. Normal Operating Environment: Equip. Int. ; Crew Int.
2. Weight of Equipment and Supplies (lb.) 370*
3. Volume of Equipment and Supplies (cu. ft.): Internal 6.5* ; External 0
4. Critical Dimensions (ft.) See experiment 1.4.1.10
5. List of Test Apparatus Equipment of 1.4.1.10 plus optical magnifying equipment for photo print analysis
6. Average Power Requirements (kw) .300**
7. Special Thermal Requirements None
8. Orientation: Laboratory None ; Equipment None except for 1.4.1.10
9. Special Navigation Accuracy None except for 1.4.1.10
10. Stability and Pointing Accuracy None except for 1.4.1.10
11. Orbit Requirements Inclination high enough to cover habitable area
12. Gravity Requirements None

MANPOWER REQUIREMENTS

1. Number of Crew Required 1
2. Skill Categories Phy. Sci. Experimenter
3. Total Man-hours 400 mhrs/yr***
4. Chronological Span Mission lifetime
5. Experiment Cycles: Duration 8 hrs/wk ; Number 250/5 yr mission
6. Potential Hazards None

DISCUSSION:

Earth mapping conducted under experiment 1.4.1.10 and related experiments would provide the photographic data which would be the basis for this (3.5.2.5) experiment.

* Includes equipment of experiment 1.4.1.10
** Included in experiment 1.4.1.10
*** Included in experiment 3.5.2.4

TITLE	NASA No. 4.1.1.1
SPACECRAFT REPAIR FACILITY	Lockheed No. 851

OBJECTIVE

Primary: Establish repair facilities on board the space station

INSTALLATION REQUIREMENTS

1. Normal Operating Environment: Equip. Int. ; Crew Int.
2. Weight of Equipment and Supplies (lb.) 300
3. Volume of Equipment and Supplies (cu. ft.): Internal 168 ; External 0
4. Critical Dimensions (ft.) 4 x 6 x 7
5. List of Test Apparatus (see below)
6. Average Power Requirements (kw) 5000 watt-hrs/week (welder)
7. Special Thermal Requirements
8. Orientation: Laboratory N/R ; Equipment N/R
9. Special Navigation Accuracy N/R
10. Stability and Pointing Accuracy N/R
11. Orbit Requirements N/R
12. Gravity Requirements Partial g desired

MANPOWER REQUIREMENTS

1. Number of Crew Required 2
2. Skill Categories Phy. Sci.
3. Total Man-hours 3,000 (for 5 yrs)
4. Chronological Span Mission duration
5. Experiment Cycles: Duration Undetermined ; Number Undetermined
6. Potential Hazards None

DISCUSSION:

Materials required in a repair facility include aluminum sheets, small fabricating machines, instrument repair facilities, large patches for wall repair, spare parts for docks and hatches, hand tools and powered tools, work benches, test instrumentation and calibration equipment, oscilloscope and meters, etc.

TITLE	NASA No. 4.1.1.2
ANALYSIS OF MAINTENANCE PROBLEMS IN A ZERO-GRAVITY ENVIRONMENT	Lockheed No. 852

OBJECTIVE

Primary: Evaluation of zero gravity maintenance tools & techniques
Secondary: Establish design criteria for maintainability of subsequent station equipment

INSTALLATION REQUIREMENTS

1. Normal Operating Environment: Equip. Internal ; Crew Internal
2. Weight of Equipment and Supplies (lb.) 75 lbs.
3. Volume of Equipment and Supplies (cu. ft.): Internal 3 ; External 0
4. Critical Dimensions (ft.) 1 x 1 x 3 (tool kit) & film
5. List of Test Apparatus Kit of tools designed for zero gravity use, film for documentation, movie camera from other experiments
6. Average Power Requirements (kw) .300
7. Special Thermal Requirements None
8. Orientation: Laboratory None ; Equipment None
9. Special Navigation Accuracy None
10. Stability and Pointing Accuracy None
11. Orbit Requirements None
12. Gravity Requirements 0

MANPOWER REQUIREMENTS

1. Number of Crew Required 2
2. Skill Categories Phy. Sci.
3. Total Man-hours 480
4. Chronological Span 6 mo.
5. Experiment Cycles: Duration 1 hr. ; Number 240
6. Potential Hazards Damage to pressure skin by tool

DISCUSSION:

Several vendors have demonstrated prototype tools utilizing torque absorption, magnetics, low reaction motion change devices, etc. It is anticipated that a wide variety will be available for testing. Motion pictures will be taken approximately every 4th experiment.

TITLE

FEASIBILITY OF USING SPACE STATION FOR TRAINING, TRAINING SIMULATORS, & DEVICES

NASA No. 4.2.2.1
Lockheed No. 802

OBJECTIVE

Primary: To determine prototype training programs and relevant techniques, for advanced space missions, which supplement ground training.

INSTALLATION REQUIREMENTS

1. Normal Operating Environment: Equip. Int. ; Crew Int.
2. Weight of Equipment and Supplies (lb.) 300
3. Volume of Equipment and Supplies (cu. ft.): Internal 50 ; External 0
4. Critical Dimensions (ft.)
5. List of Test Apparatus Display & Control Panel of Command/Control Compartment
6. Average Power Requirements (kw) 0.150
7. Special Thermal Requirements N/R
8. Orientation: Laboratory N/R ; Equipment N/R
9. Special Navigation Accuracy N/R
10. Stability and Pointing Accuracy N/R
11. Orbit Requirements N/R
12. Gravity Requirements Both 0 and Partial G

MANPOWER REQUIREMENTS

1. Number of Crew Required 5
2. Skill Categories Biomedical Science
3. Total Man-hours 1120
4. Chronological Span 4 wks.
5. Experiment Cycles: Duration 8 hrs. ; Number 12
6. Potential Hazards None

DISCUSSION:

TITLE	NASA No. 4.2.2.2
EVALUATION OF GROUND TRAINING TECHNIQUES FOR SPACE CREWS	Lockheed No. 801

OBJECTIVE

Primary: Evaluation of ground training techniques.

INSTALLATION REQUIREMENTS

1. Normal Operating Environment: Equip. Int. & Ext. ; Crew Interior & Exterior
2. Weight of Equipment and Supplies (lb.) 150
3. Volume of Equipment and Supplies (cu. ft.): Internal 27 ; External
4. Critical Dimensions (ft.)
5. List of Test Apparatus
6. Average Power Requirements (kw) 0.1
7. Special Thermal Requirements N/R
8. Orientation: Laboratory N/R ; Equipment N/R
9. Special Navigation Accuracy N/R
10. Stability and Pointing Accuracy N/R
11. Orbit Requirements N/R
12. Gravity Requirements Both 0 and Partial g

MANPOWER REQUIREMENTS

1. Number of Crew Required 4
2. Skill Categories Physical Science & Biomedical Science
3. Total Man-hours 448-896
4. Chronological Span 2-4 wks
5. Experiment Cycles: Duration 8 hrs. ; Number 14-64
6. Potential Hazards Extravehicular activity

DISCUSSION:

TITLE	NASA No. 4.3.3.1
ANALYSIS OF FERRY VEHICLE LAUNCH FROM LABORATORY SPACECRAFT	Lockheed No. 827,828,829

OBJECTIVE

Primary: Obtain empirical data for use in planning interplanetary spacecraft launches

INSTALLATION REQUIREMENTS

1. Normal Operating Environment: Equip. Int./Ext. ; Crew Int.
2. Weight of Equipment and Supplies (lb.) 350
3. Volume of Equipment and Supplies (cu. ft.): Internal 4 ; External 2
4. Critical Dimensions (ft.) several small items approx. 3/4 x 3/4 x 3/4
5. List of Test Apparatus Additional launch equipment includes: theodolite, transponders, optical aids
6. Average Power Requirements (kw) 0.393
7. Special Thermal Requirements N/R
8. Orientation: Laboratory normal launch ; Equipment normal launch
9. Special Navigation Accuracy Normal launch
10. Stability and Pointing Accuracy That required for normal launch operation
11. Orbit Requirements N/R
12. Gravity Requirements N/R

MANPOWER REQUIREMENTS

1. Number of Crew Required 4
2. Skill Categories Phy. Sci.
3. Total Man-hours 72
4. Chronological Span 9 mo.
5. Experiment Cycles: Duration 6 hrs. ; Number 3
6. Potential Hazards None beyond normal launch operation

DISCUSSION:

EXPERIMENT AND APPLICATION SUMMARY

TITLE	NASA No. 4.3.3.3
REENTRY TESTS	Lockheed No. 826

OBJECTIVE

Primary: To study heat shields and reentry shapes of models of advanced reentry vehicles and of logistics vehicles

INSTALLATION REQUIREMENTS

1. Normal Operating Environment: Equip. External ; Crew Internal; possibly ext.
2. Weight of Equipment and Supplies (lb.) 20-100
3. Volume of Equipment and Supplies (cu. ft.): Internal 1-3 (stored) External
4. Critical Dimensions (ft.)
5. List of Test Apparatus
6. Average Power Requirements (kw) 0.005
7. Special Thermal Requirements N/R
8. Orientation: Laboratory N/R ; Equipment N/R
9. Special Navigation Accuracy N/R
10. Stability and Pointing Accuracy N/R
11. Orbit Requirements N/R
12. Gravity Requirements Gravity field not important

MANPOWER REQUIREMENTS

1. Number of Crew Required 1 man to monitor reentry, 2 during launch
2. Skill Categories Physical Science
3. Total Man-hours 140
4. Chronological Span 100 hrs.
5. Experiment Cycles: Duration 5 hrs. ; Number 20
6. Potential Hazards None

DISCUSSION:

TITLE	NASA No. 4.4.1.1.
EARTH-LUNAR RELAY	Lockheed No. 863

OBJECTIVE

Primary: To utilize the NMSS to increase the communication availability of lunar space missions to U.S. ground stations.

INSTALLATION REQUIREMENTS

1. Normal Operating Environment: Equip. Int. & Ext. ; Crew Int.
2. Weight of Equipment and Supplies (lb.) 4050
3. Volume of Equipment and Supplies (cu. ft.): Internal 3 ; External 1420
4. Critical Dimensions (ft.)
5. List of Test Apparatus Dual transponder, NMSS-lunar antenna (may be special vehicle close to NMSS), NMSS-earth antenna
6. Average Power Requirements (kw) 0.8
7. Special Thermal Requirements N/R
8. Orientation: Laboratory N/R ; Equipment Earth-Lunar
9. Special Navigation Accuracy N/R
10. Stability and Pointing Accuracy Pointing accuracy: 0.25°
11. Orbit Requirements See discussion
12. Gravity Requirements zero (for NMSS-lunar antenna)

MANPOWER REQUIREMENTS

1. Number of Crew Required 2
2. Skill Categories Phy. Sci.
3. Total Man-hours 1000
4. Chronological Span Mission duration
5. Experiment Cycles: Duration 1 month ; Number 6
6. Potential Hazards None

DISCUSSION:

A single earth-lunar relay in an equatorial synchronous earth orbit can extend a single earth based station's communication availability to the moon to approximately 22.5 hours out of each 24. The relay should be located by about 80° difference in longitude from the earth station. For reasonable NMSS power consumption levels and adquate bandwidths for experimental data, engineering and safety monitoring parameters, and possibly slow scan TV the antenna on NMSS for the relay-moon link will need to be large with high gain and accurate pointing capability-probably best obtained with the use of an auxiliary zero-g vehicle near NMSS.

TITLE	NASA No. 4.4.1.2
EARTH-INTERPLANETARY RELAY	Lockheed No. 862

OBJECTIVE

Primary: To determine the utility of the use of NMSS to increase the communication availability of interplanetary space vehicles

INSTALLATION REQUIREMENTS

1. Normal Operating Environment: Equip. Int. & Ext. ; Crew Int.
2. Weight of Equipment and Supplies (lb.) 48,090
3. Volume of Equipment and Supplies (cu. ft.): Internal 4 ; External 31,820 (envelope)
4. Critical Dimensions (ft.) Antenna: 100' dia.
5. List of Test Apparatus Large erectable parabolic antenna 100' dia.; maser, receiver and transmitter; earth-NMSS transponder
6. Average Power Requirements (kw) 1.5
7. Special Thermal Requirements N/R
8. Orientation: Laboratory N/R ; Equipment Earth-interplanetary
9. Special Navigation Accuracy N/R
10. Stability and Pointing Accuracy 0.05°
11. Orbit Requirements See discussion
12. Gravity Requirements N/R

MANPOWER REQUIREMENTS

1. Number of Crew Required 7
2. Skill Categories Phy. Sci.
3. Total Man-hours 19,000
4. Chronological Span Mission duration
5. Experiment Cycles: Duration 8 months ; Number 3
6. Potential Hazards Space ferry - high voltages and power

DISCUSSION:

This application is best performed by a separate equatorial synchronous orbit vehicle associated with NMSS namely a 100 ft. dia. self tracking antenna, receiver and transmitter. The NMSS provides fuel, cryogenic materials, service and control to the communicating vehicle. One such vehicle can enable a single earth based station to have approximately 22.5 hours of contact with the interplanetary vehicle each day. Two vehicles displaced 20° or more in longitude from each other can provide 24 hour/day communications coverage for the single ground station (See sketch showing 35° separation and area not covered). The NMSS can be caused to drift from one antenna to another, to provide servicing, with very little expenditure of fuel.

EARTH-INTERPLANETARY RELAY

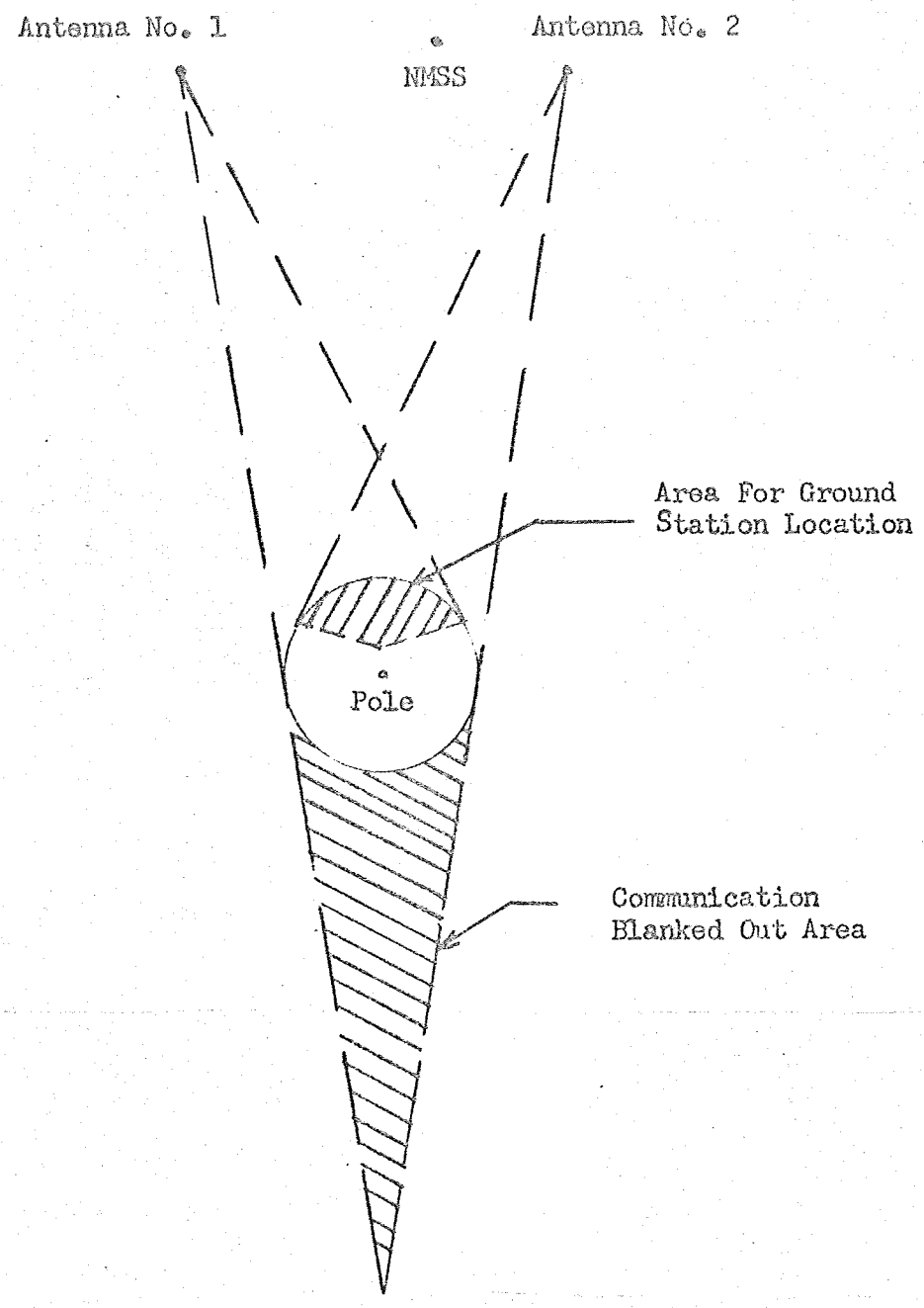

TITLE	NASA No. 4.4.1.3
COMMUNICATION SATELLITE SUPPORT	Lockheed No. 751

OBJECTIVE

Primary: To put an unmanned communications satellite into orbit from the space station.

INSTALLATION REQUIREMENTS

1. Normal Operating Environment: Equip. External ; Crew Internal - checkout External - launch
2. Weight of Equipment and Supplies (lb.) 150
3. Volume of Equipment and Supplies (cu. ft.): Internal 27 (stored); External
4. Critical Dimensions (ft.)
5. List of Test Apparatus Checkout and repair equipment
6. Average Power Requirements (kw) 0.5
7. Special Thermal Requirements N/R
8. Orientation: Laboratory N/R ; Equipment N/R
9. Special Navigation Accuracy N/R
10. Stability and Pointing Accuracy N/R
11. Orbit Requirements N/R
12. Gravity Requirements Gravity field not important

MANPOWER REQUIREMENTS

1. Number of Crew Required 2 for checkout, 3 for launch
2. Skill Categories Physical Science
3. Total Man-hours 48
4. Chronological Span 18 hrs.
5. Experiment Cycles: Duration 6 hrs. ; Number 3
6. Potential Hazards Satellite at launch could hit station

DISCUSSION:

TITLE	NASA No. 4.4.1.5
COMMUNICATIONS SUPPORT FOR SPACE MISSIONS	Lockheed No. 861

OBJECTIVE

Primary: To utilize the NMSS to provide space-to-earth communication for a variety of space missions

INSTALLATION REQUIREMENTS

1. Normal Operating Environment: Equip. Ext. & Int. ; Crew Interior
2. Weight of Equipment and Supplies (lb.) 1000
3. Volume of Equipment and Supplies (cu. ft.): Internal 3 ; External 100
4. Critical Dimensions (ft.)
5. List of Test Apparatus Earth-space link transponder, relay transmitter, receiver, antennas
6. Average Power Requirements (kw) 0.5
7. Special Thermal Requirements N/R
8. Orientation: Laboratory N/R ; Equipment Earth-space
9. Special Navigation Accuracy N/R
10. Stability and Pointing Accuracy 1°
11. Orbit Requirements See discussion
12. Gravity Requirements None

MANPOWER REQUIREMENTS

1. Number of Crew Required 1
2. Skill Categories Phy. Sci.
3. Total Man-hours 14560 (for 5 years)
4. Chronological Span Mission duration
5. Experiment Cycles: Duration cont. ; Number -
6. Potential Hazards None

DISCUSSION:

Preferred orbit would depend on orbit of missions to be supported. Distance of NMSS from vehicle performing mission depends on other factors such as ferry requirements or upon amount of information traffic to be carried by space - space link between vehicles. High information volumes would require quite close spacing (a few miles) while a few hundred or thousands of bits/second could permit spacings of hundreds of miles.

TITLE

NAVIGATIONAL SATELLITE SUPPORT

NASA No. 4.4.2.1
Lockheed No. 776

OBJECTIVE

Primary: To put an unmanned navigational satellite into orbit from the space station

INSTALLATION REQUIREMENTS

1. Normal Operating Environment: Equip. External ; Crew Internal - checkout External - launch
2. Weight of Equipment and Supplies (lb.) 150
3. Volume of Equipment and Supplies (cu. ft.): Internal 27 (stored); External
4. Critical Dimensions (ft.)
5. List of Test Apparatus Checkout and repair equipment
6. Average Power Requirements (kw) 0.5
7. Special Thermal Requirements N/R
8. Orientation: Laboratory N/R ; Equipment N/R
9. Special Navigation Accuracy N/R
10. Stability and Pointing Accuracy N/R
11. Orbit Requirements N/R
12. Gravity Requirements Gravity field not important

MANPOWER REQUIREMENTS

1. Number of Crew Required 2 for checkout, 3 for launch
2. Skill Categories Physical Science
3. Total Man-hours 48
4. Chronological Span 18 hrs.
5. Experiment Cycles: Duration 6 hrs. ; Number 3
6. Potential Hazards Satellite at launch could hit station

DISCUSSION:

TITLE	NASA No. 4.4.2.2
TRACKING AND GUIDANCE OF MANNED AND UNMANNED SPACECRAFT	Lockheed No. 864

OBJECTIVE

Primary: Tracking of manned and unmanned friendly and alien spacecraft; guidance for friendly vehicles

INSTALLATION REQUIREMENTS

1. Normal Operating Environment: Equip. Int. ; Crew Int.
2. Weight of Equipment and Supplies (lb.) 50
3. Volume of Equipment and Supplies (cu. ft.): Internal 2 ; External 0
4. Critical Dimensions (ft.) 1.5
5. List of Test Apparatus Antennae, transmitters & receivers, guidance computation equipment, displays
6. Average Power Requirements (kw) 0.4
7. Special Thermal Requirements N/R
8. Orientation: Laboratory N/R ; Equipment N/R
9. Special Navigation Accuracy Not critical (< 1 n.m.)
10. Stability and Pointing Accuracy N/R
11. Orbit Requirements N/R
12. Gravity Requirements N/R

MANPOWER REQUIREMENTS

1. Number of Crew Required 1
2. Skill Categories Phy.Sci.
3. Total Man-hours 520
4. Chronological Span duration of mission
5. Experiment Cycles: Duration 2 hrs ; Number 260 (5 yrs)
6. Potential Hazards None

DISCUSSION:

Possible missions include: tracking & guidance for logistics spacecraft rendezvousing with space station; monitoring alien spacecraft; tracking aids for vehicles being launched; tracking and guidance aids for vehicles performing in-orbit maneuvers; etc.

TITLE	NASA No. 4.5.1.1
QUARANTINE FOR RETURNING SPACECRAFT CREWS	Lockheed No. 882

OBJECTIVE

Primary: To isolate, treat and control any infections, diseases and/or organisms present in returning crews

Secondary: To establish control methodology for space station medical procedures

INSTALLATION REQUIREMENTS

1. Normal Operating Environment: Equip. Int. ; Crew Int.
2. Weight of Equipment and Supplies (lb.) Incl. in other experiments
3. Volume of Equipment and Supplies (cu. ft.): Internal Incl. in other experiments ; External 0
4. Critical Dimensions (ft.)
5. List of Test Apparatus Included in other experiments
6. Average Power Requirements (kw) 0
7. Special Thermal Requirements N/R
8. Orientation: Laboratory N/R ; Equipment N/R
9. Special Navigation Accuracy N/R
10. Stability and Pointing Accuracy N/R
11. Orbit Requirements N/R
12. Gravity Requirements N/R

MANPOWER REQUIREMENTS

1. Number of Crew Required 2 X*
2. Skill Categories Biomedical, Physician, Subjects
3. Total Man-hours See Note
4. Chronological Span 2 wks
5. Experiment Cycles: Duration 2 wks ; Number 1
6. Potential Hazards None

DISCUSSION:

The basic assumption involved is that the space station itself represents the most complete Quarantine Unit possible. One group of X about to be returned to earth will be separated and isolated within one section of the station for two weeks before return date. Cultures of skin, throat, feces, blood, urine, etc. will be carefully studied for indications of infections, disease or organisms. Another group of X within the main station will be studied equally, however, this second group will continue its normal functions and duty cycles and co-mingle with the other members of the space station while undergoing whatever medical treatment might be indicated. (Cont.)

DISCUSSION (Cont.)

Interference with performance of duty cycles, etc., will be minimal. Daily medical examinations and indicated treatments will be accomplished, but, unless contra-indicated by medical officer, duty as usual will be the rule.

Medical examinations for each man in each group will be accomplished each day. Laboratory and medical mock-up of data will be the major time consuming activities.

Medical and technical time will take a minimum of 2 hrs/day/Subject for at least 2 men to run all cultures etc. as previously indicated. Astronaut examination time will be approximately 15-30 min/day, then duty as usual, one group isolated from rest of station personnel. The other group will continue normal activities.

*X = number of crew members to be returned to Earth on ferry flight

NOTE: 7 hrs/Subject
28 hrs/Subject (Physician)
28 hrs/Subject (Biomed.)

TITLE	CONDITIONING BEFORE REENTRY FOR RETURNING SPACECRAFT CREWS	NASA No. 4.5.2.1 Lockheed No. 881

OBJECTIVE

Primary: To determine most effective re-entry conditioning program

Secondary: To establish exercise and centrifuge dosage rates

INSTALLATION REQUIREMENTS

1. Normal Operating Environment: Equip. Int.; Crew Int.
2. Weight of Equipment and Supplies (lb.) 820 (Incl. in 1.1.1.3/33)
3. Volume of Equipment and Supplies (cu. ft.): Internal 1000 (Incl. in 1.1.1.3/33); External 0
4. Critical Dimensions (ft.)
5. List of Test Apparatus Centrifuge; delorme type apparatus; isometric exercise rack
6. Average Power Requirements (kw) 3
7. Special Thermal Requirements N/R
8. Orientation: Laboratory N/R; Equipment N/R
9. Special Navigation Accuracy N/R
10. Stability and Pointing Accuracy N/R
11. Orbit Requirements N/R
12. Gravity Requirements None

MANPOWER REQUIREMENTS

1. Number of Crew Required All
2. Skill Categories None
3. Total Man-hours 1 hr/day/Subject
4. Chronological Span 3 wks
5. Experiment Cycles: Duration 1 hr/day; Number
6. Potential Hazards Physical damage due to excessive load

DISCUSSION:

Each returning group would be administered one of the following requirements: isotonic exercises, isometric exercises, centrifuging. The loads should approx. be 1g for the first series of tests and later be modified. Evaluations of physical condition will be by physical medicine specialists upon return to earth base and modality comparisons by a Biostatistician.

TITLE	NASA No. 4.5.2.2
MEDICAL AID FOR RETURNING SPACE CREWS	Lockheed No. 883

OBJECTIVE

Primary: To prepare crews for return to Earth

INSTALLATION REQUIREMENTS

1. Normal Operating Environment: Equip. Int. ; Crew Int.
2. Weight of Equipment and Supplies (lb.) Included in other experiments
3. Volume of Equipment and Supplies (cu. ft.): Internal Incl. in other experiments ; External 0
4. Critical Dimensions (ft.)
5. List of Test Apparatus Centrifuge, exercise apparatus, medical examination facilities
6. Average Power Requirements (kw) 0
7. Special Thermal Requirements N/R
8. Orientation: Laboratory N/R ; Equipment N/R
9. Special Navigation Accuracy N/R
10. Stability and Pointing Accuracy N/R
11. Orbit Requirements N/R
12. Gravity Requirements N/R

MANPOWER REQUIREMENTS

1. Number of Crew Required All returning
2. Skill Categories Physician
3. Total Man-hours *
4. Chronological Span 3 weeks
5. Experiment Cycles: Duration 4.5 ; Number 7 pr. wk. for 3 wks.
6. Potential Hazards Physical damage due to excesses

DISCUSSION:

Regimens of (1) exercise therapy, (2) centrifuging, and (3) no special preparation for return will be compared by non-parametric analysis of variance based on examinations by Physical Medicine Specialists regarding their condition after re-entry.

*Physician time: 15 min/subject/day
Subject time: 15 min/subject/day

TITLE	NASA No. 4.5.3.2
DATA CAPSULE DELIVERY	Lockheed No. 884

OBJECTIVE

Primary: To determine an optimum delivery method with minimum ground support

Secondary: To gain experience in handling, loading, ejecting and retrieving capsules

INSTALLATION REQUIREMENTS

1. Normal Operating Environment: Equip. Int. ; Crew Int.
2. Weight of Equipment and Supplies (lb.) 1700
3. Volume of Equipment and Supplies (cu. ft.): Internal 41.5 ; External 0
4. Critical Dimensions (ft.) 1 x 2 1/2
5. List of Test Apparatus check-out equipment for capsule systems
6. Average Power Requirements (kw) .10 (for 2 min.)
7. Special Thermal Requirements N/R
8. Orientation: Laboratory N/R ; Equipment
9. Special Navigation Accuracy 0.1 NM position, 0.1 ft/sec velocity
10. Stability and Pointing Accuracy 0.01°/sec during launch
11. Orbit Requirements N/R
12. Gravity Requirements N/R

MANPOWER REQUIREMENTS

1. Number of Crew Required 1
2. Skill Categories Phy. Sci.
3. Total Man-hours 22 1/2 hrs
4. Chronological Span 3 mos.
5. Experiment Cycles: Duration 1 1/2 hrs. ; Number 15
6. Potential Hazards Undesired ignition of rocket system

DISCUSSION:

Capsule requires orientation system, retro package and parachute system. A radio signal transmitter is also required. Launch tube will require an ejection system. If complex orientation systems are not within capsule, accurate station orientation is required.

The data capsule should be capable of being oriented with respect to its pitch axis within a range of ± 35°.

EXPERIMENT AND APPLICATION SUMMARY

TITLE	NASA No. 5.0
DOD APPLICATIONS	Lockheed No. 901

OBJECTIVE

Primary: Military

INSTALLATION REQUIREMENTS

1. Normal Operating Environment: Equip. _____ ; Crew _____
2. Weight of Equipment and Supplies (lb.) 1600
3. Volume of Equipment and Supplies (cu. ft.): Internal 50 ; External _____
4. Critical Dimensions (ft.) _____
5. List of Test Apparatus _____
6. Average Power Requirements (kw) 3.5
7. Special Thermal Requirements _____
8. Orientation: Laboratory _____ ; Equipment _____
9. Special Navigation Accuracy _____
10. Stability and Pointing Accuracy _____
11. Orbit Requirements _____
12. Gravity Requirements Both Zero-G and Partial-G

MANPOWER REQUIREMENTS

1. Number of Crew Required 2
2. Skill Categories Phy. Sci.
3. Total Man-hours 5824
4. Chronological Span 1 yr.
5. Experiment Cycles: Duration _____ ; Number _____
6. Potential Hazards _____

DISCUSSION: