A Reproduced Copy

OF

FACILITY FORM 602

N70-74730
(ACCESSION NUMBER)

(THRU)

133
(PAGES)

NONE
(CODE)

CR-108528
(NASA CR OR TMX OR AD NUMBER)

(CATEGORY)

Reproduced for NASA

by the

NASA Scientific and Technical Information Facility

NASA CR 108528

D2-114017-1

SATURN V SINGLE LAUNCH SPACE STATION AND OBSERVATORY FACILITY

STUDY CONTRACT

NAS9-6816

MIDTERM ORAL REVIEW

JUNE 14, 1967

BOEING

INTRODUCTION

STUDY OBJECTIVES

DEVELOP A CONFIGURATION FOR A 6 TO 9-MAN LOW-ALTITUDE EARTH ORBITAL SPACE STATION HAVING:

- EXPERIMENT FLEXIBILITY
- EARLY AVAILABILITY
- MINIMUM COST
- MAXIMUM USE OF EXISTING SUBSYSTEMS

BOEING

STUDY MILESTONES

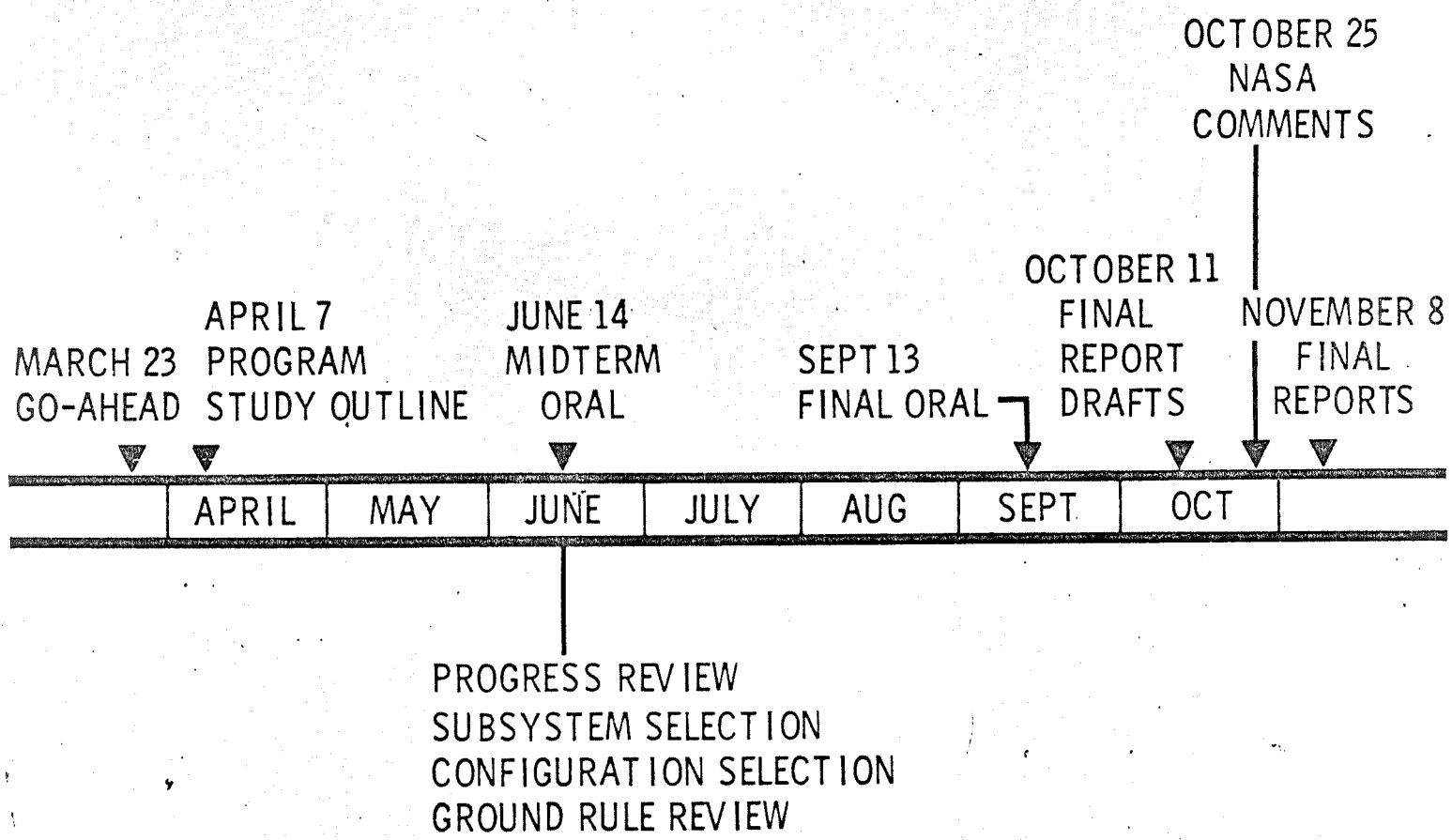

BOEING

STUDY EMPHASIS

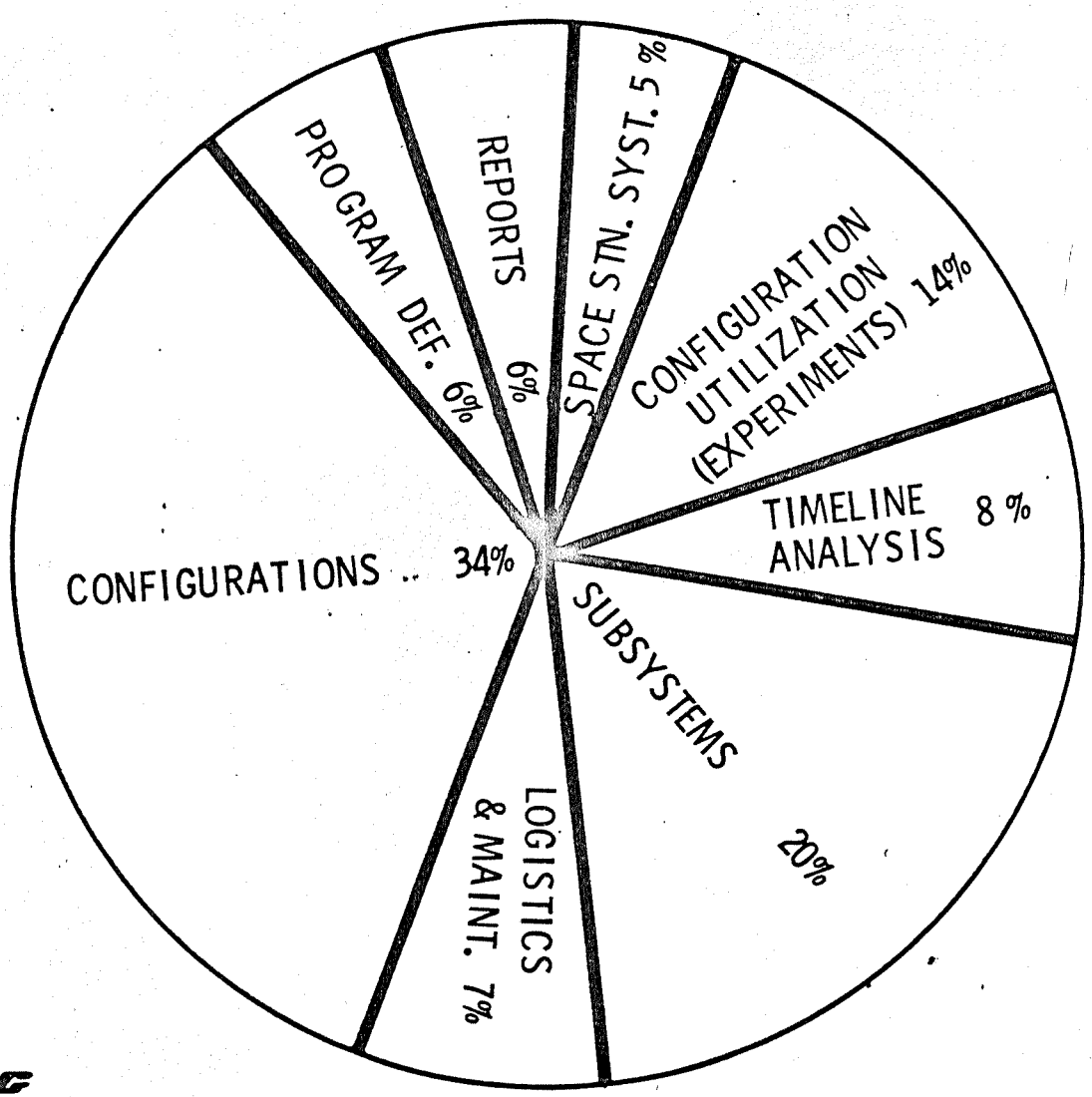

BOEING

ASSOCIATE CONTRACTORS

	CONTRACT	DATA TO BOEING	DATA FROM BOEING
GENERAL DYNAMICS	BASIC SUBSYSTEM MODULE NASA-MSC	• ELECTRICAL POWER • ECS/LSS • STABILITY AND CONTROL	• REQUIREMENTS • BASELINE DESIGN • SYSTEM DEFINITION
DOUGLAS	ADVANCED SIVB WORKSHOP NASA-MSFC	• EXPERIMENT LIST • EXPERIMENT DEFINITIONS	NONE

BOEING

MAJOR GROUND RULES

- SIX-MAN CREW (VARY TO 9 MEN)
- ZERO-GRAVITY STATION WITH CONTINGENCY SPIN CAPABILITY
- TWO-STAGE LAUNCH VEHICLE (SIC & SII)
- ORBIT ALTITUDE - NEAR 260 N MI
- ORBIT INCLINATION — 50 DEGREES
- OPERATIONAL DATE — 1970 OR 1971
- MISSION DURATION — 2 YEARS
- SIX-MAN-APOLLO/SIB LOGISTICS VEHICLE
- EMERGENCY RETURN VEHICLES LAUNCHED WITH STATION

BOEING

MISSION REQUIREMENTS ANALYSIS

BOEING

ALTERNATE PROFILES

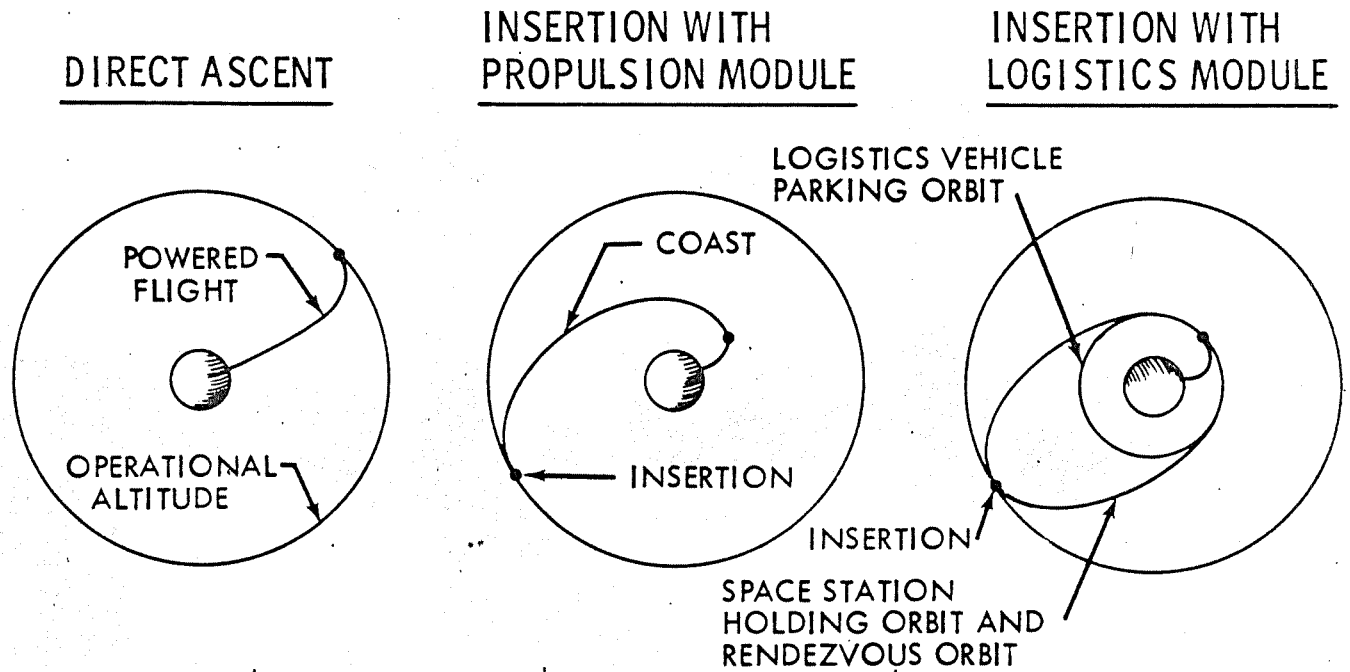

INITIAL LAUNCH PAYLOAD	185,000 LB	248,000 LB	248,000 LB
APOGEE PROPULSION PENALTY	0	10,000 LB	8,000 LB (LOGISTICS VEHICLE)
NET PAYLOAD	185,000 LB	238,000 LB	240,000 LB

BOEING

PAYLOAD VS ALTITUDE

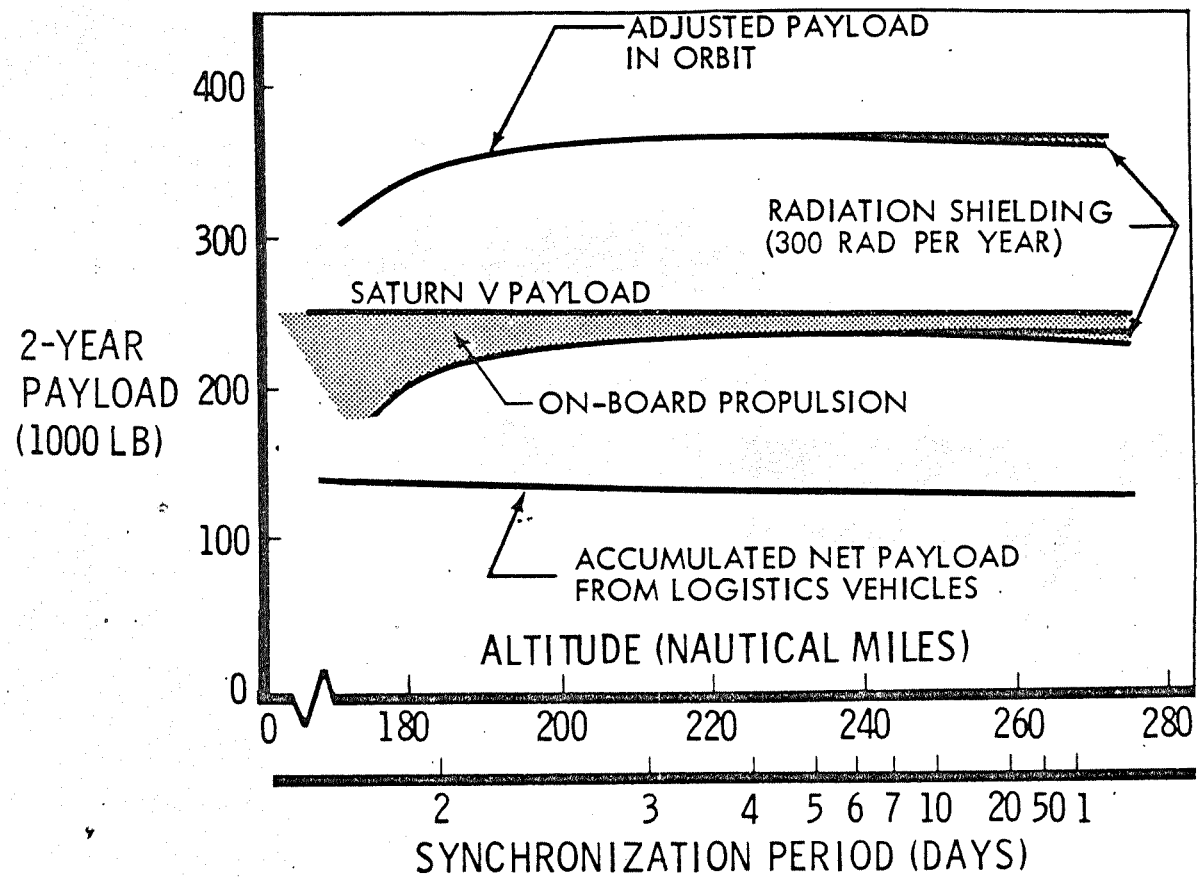

NOTES:

- ONBOARD PROPULSION = I_{SP} = 300 SEC
- AVERAGE DRAG AREA = 4000 SQ FT
- 1970-71 TIME PERIOD

BOEING

EFFECT OF RADIATION SHIELDING
(EXPERIMENTS)

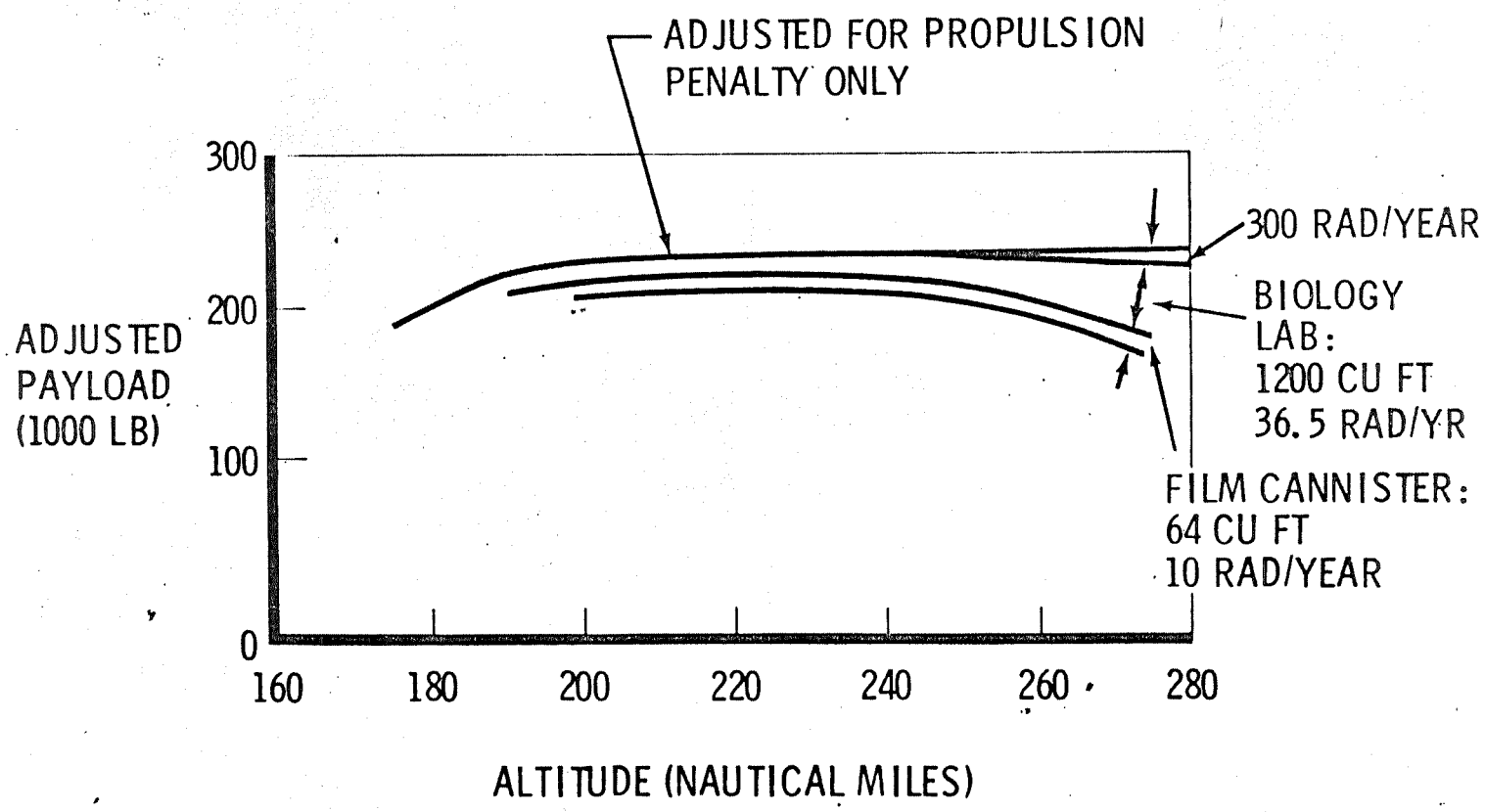

BOEING

COMMUNICATION CONTACT TIME

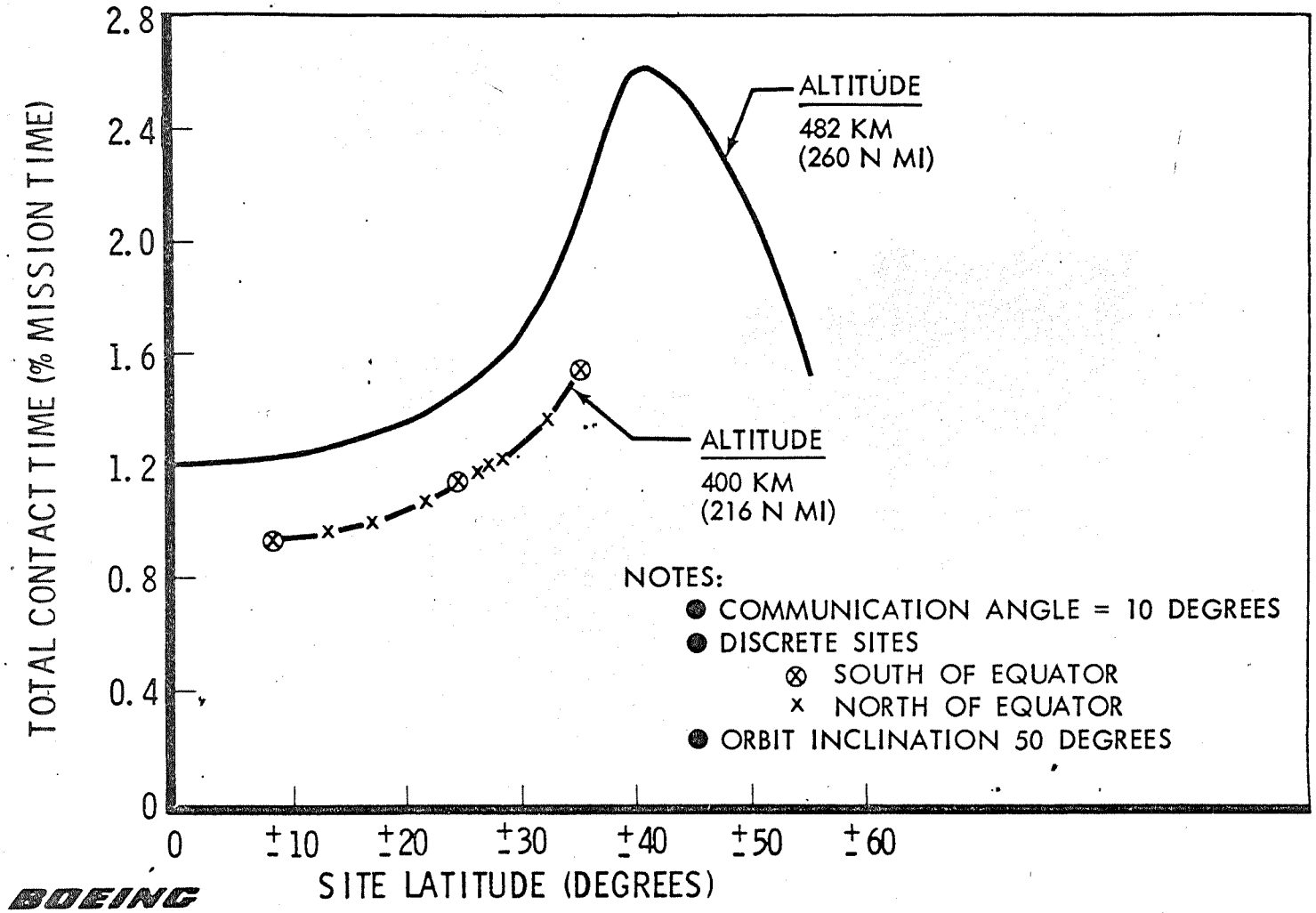

BOEING

EXPERIMENT / CONFIGURATION INTEGRATION

BOEING

EXPERIMENT REQUIREMENTS

EARTH RESOURCES

EXPERIMENT DEFINITION

EXPERIMENT TYPE	EXPERIMENT NAME	VIEWING REQUIREMENTS	NUMBER OF REPETITIONS PER YEAR	FREQUENCY OF REPETITIONS	DURATION OF REPETITIONS (MIN)	TYPE & QUANTITY OF DATA PER REP.	CREW SKILL
LAND SURVEY	METRIC SURVEY	10 AM TO 2 PM	700	1 TO 2 ORBITS PER DAY	15	PHOTO 20 TO 50 FRAMES	
LAND SURVEY	PANORAMIC SURVEY	10 AM TO 2 PM	500	1 TO 2 ORBITS PER DAY	15	PHOTO 6 TO 100 FRAMES	
LAND SURVEY	ULTRAHIGH-RESOLUTION SURVEY	2 HRS AFTER SUNRISE TO 2 HRS BEFORE SUNSET	18,000	2 TO 10 TARGETS PER ORBIT	3	PHOTO 10 TO 60 FRAMES	
LAND SURVEY	SYNOPTIC MULTIBAND SURVEY	10 AM TO 2 PM	500	1 TO 2 ORBITS PER DAY	10	PHOTO 4 TO 0 FRAMES	

EQUIPMENT DEFINITION

EQUIPMENT	VOLUME (CU FT)	WEIGHT (LB)	POWER (WATTS - AV.)	POINTING ACCURACY (DEG)	STABILITY (DEG/SEC)	RESO-LUTION	COVER-AGE
METRIC CAMERA	12	400	336	±0.5	0.05	30 M	392 X 392 N MI
PANORAMIC CAMERA	15	300	280	± 0.5	0.05	10 M	392 X 55 N MI
ULTRAHIGH-RESOLUTION CAMERA	600	900	2,600	± 0.001	0.0005	2.5 M	5.5 X 5.5 N MI
SYNOPTIC MULTIBAND CAMERA	3.5	300	150	± 0.1	0.05	72 M	392 X 200 N MI

BOEING

EXPERIMENT REQUIREMENTS SUMMARY

EXPERIMENT AREA	REQUIREMENT			
	WEIGHT (LB)	VOLUME (CU FT)		POWER (KWH)
		PRESSURIZED	UNPRESSURIZED	
ASTRONOMY	8,430	600	2,000	920
EARTH RESOURCES	3,460	1200	60	1,360
METEOROLOGY	1,265		60	630
PHYSICAL SCIENCE	1,360	700	100	830
ENGINEERING	4,925		1,000	35
COMMUNICATIONS	6,190	100	1,000	60
BIOMEDICAL	340	700	—	275
BIOSCIENCE	1,510	2,610	10	2,410
SUBTOTAL	27,480	5,910	4,230	5,620
MOUNTING	7,800	—	4,330	—
GROWTH ALLOWANCE	8,820	—	—	—
TOTAL	44,100	5,910	8,560	5,620

BOEING

CONFIGURATION DRIVERS

EXPERIMENT AREA	EXPERIMENT	CONFIGURATION FACTORS						
		WEIGHT	VOLUME		MAN HOURS	STABILITY	RADIATION LIMIT	OTHER
			PRESS	UNPRESS.				
ASTRONOMY	HIGH-RES. STAR PHOTOGRAPHS	2000 LB + MOUNT		120 CU FT		0.05°/SEC [1]	FILM 0.25 RAD/DAY	
EARTH RESOURCES	RADAR IMAGERY							FILM - 500 LB PER 90 DAYS
METEOROLOGY	WEATHER DATA							4.4×10^9 BITS/DAY
PHYSICAL SCIENCE	MAGNETIC AND GRAVITY FIELD SURVEY							SUBSATELLITE & OPERATIONS
ENGINEERING	ANTENNA EREGTION AND DEPLOYMENT			245 CU FT				
COMMUNICATIONS	HF PROPAGATION							INSTRUMENT BELOW 100-200 N MI
BIOMEDICAL	BIOMONITORING ANALYSIS				1640			
BIOSCIENCE	RAT, FRUITFLY & PLANT STUDIES		2610 CU FT		3050		0.1 RAD PER DAY	SEPARATE ECS

[1] INSTRUMENT: 0.000025°/SEC

BOEING

DATA RETURN REQUIREMENTS

DATA TYPE	PHYSICAL DATA (90 DAYS)		BIT EQUIVALENT PER DAY	RETURN DISTRIBUTION	
	WEIGHT (LB)	VOLUME (CU FT)		PHYSICAL (LB/90 DAYS)	TM (BITS/DAY)
FILM	1330	58	6.6×10^{11}	1330	SAMPLES 1.2×10^{9}
EMULSION STACKS	62	1	—	62	
MATERIALS	25	1	—	25	
BIOMEDICAL RECORDS	35	1	8.5×10^{7}	35	
BIOSCIENCE SLIDES, FOLDERS, VOICE	330	7	10^{5}	330	
DIELECTRIC TAPE	50	2	4.2×10^{9}		4.2×10^{9}
MAGNETIC TAPE	1240	35	5.8×10^{8}		5.8×10^{5}
TOTAL	3072	105	6.65×10^{11}	1782	6.0×10^{9}

BOEING

FILM RADIATION SHIELDING

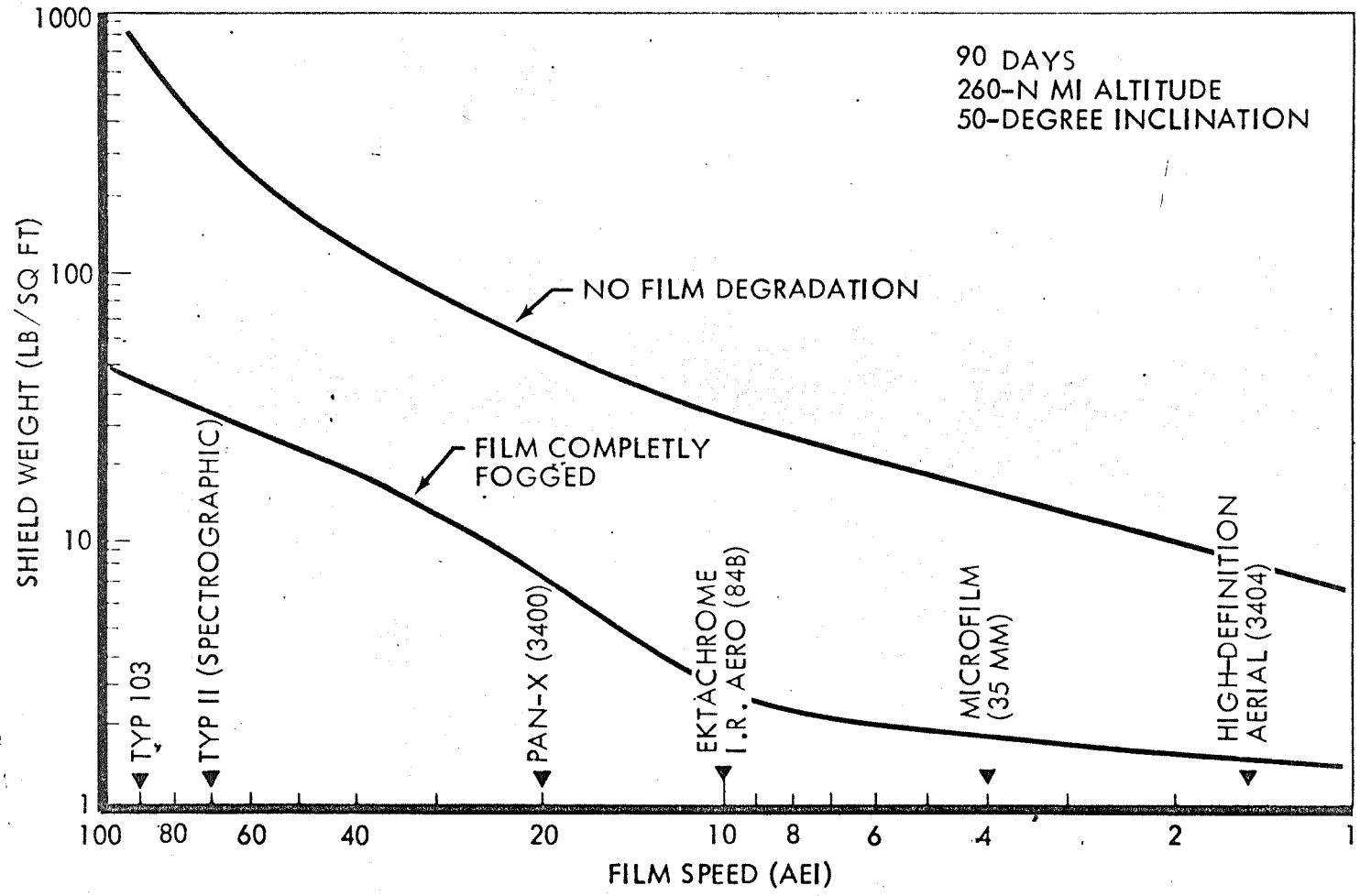

BOEING

5424 HIGH-SPEED I.R. (AEI 127)

EXPERIMENT EQUIPMENT

EARTH RESOURCES

GENERAL REQUIREMENTS : NADIR ORIENTATION CAN VIEW THRU WINDOW

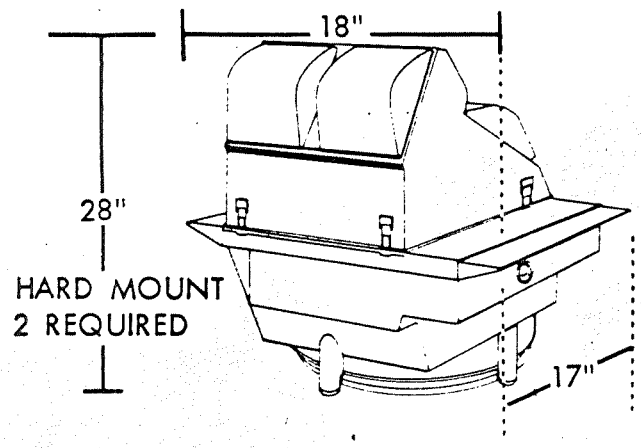

METRIC CAMERA

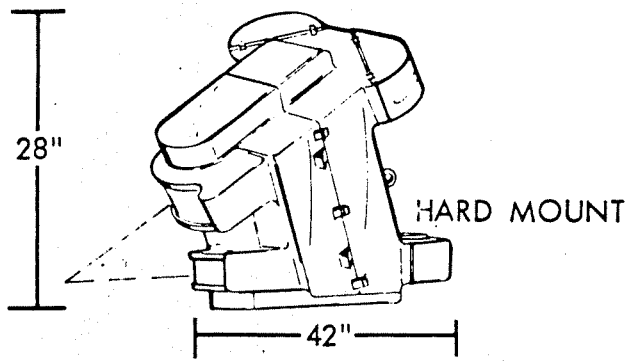

HIGH -RESOLUTION
PANORAMIC CAMERA

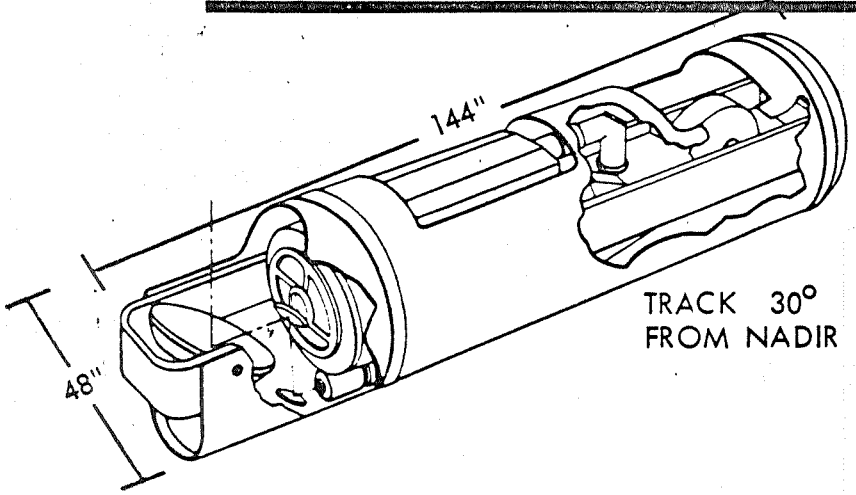

ULTRAHIGH-RESOLUTION POINT CAMERA

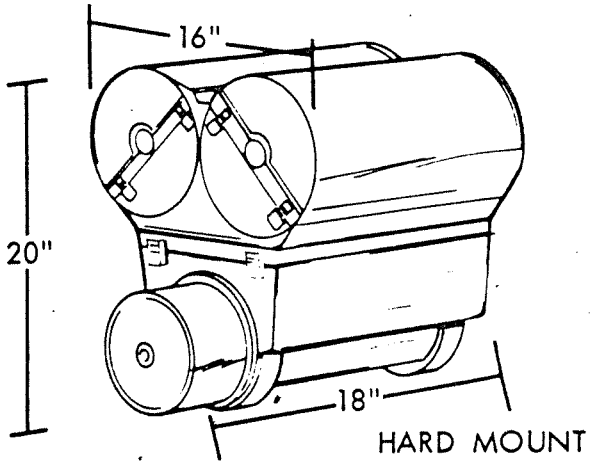

SYNOPTIC MULTIBAND CAMERA

EARTH SENSOR VIEWING REQUIREMENTS

TYPE	F.O.V.	VIEW ANGLE	ACCURACY	DUTY CYCLE	COMMENTS
CAMERAS (6)	8° TO 74°	± 1/2° NADIR	± 0.1 TO 0.5 DEG	10 TO 15 MIN PER ORBIT	STAR CALIB REQD. SOME CAMERA OPERATION CONCURRENT
ULTRAHIGH-RESOLUTION TELESCOPE CAMERA	1.2°	TRACKING ± 30° NADIR	30 ARC SEC	6 TO 30 MIN PER ORBIT INTERMITTENT	AUTOMATIC EARTH TRACKING. INST. CHANGES REQD
SPECTROMETERS (3) E.R.	2 TO 80°	± 2° NADIR	± 1.0 DEG	10 MIN PER ORBIT	COOLING REQD
RADIOMETER	2°	± 7.5° NADIR	± 1.0 DEG	10 MIN PER ORBIT	COOLING REQD CONCURRENT OPERATION WITH IMAGING SYSTEM & SPECTROMETERS
IMAGING SYSTEM	80°	± 40° NADIR	± 0.5 DEG	5 MIN PER ORBIT	OPERATES WITH RADIOMETER
SPECTROMETERS (2) MET.	2.5° TO 12°	(1) TRACKS ± 60° (2) SWEEPS ± 45°	± 5.0 MIN.	1 SWEEP PER DAY	DETECTOR COOLING REQD
REFRACTING TELESCOPE	1.0°	2-AXIS GIMBAL	± 0.5 DEG	4 STAR TRACKS PER ORBIT ONCE A DAY	TRACKS STAR AS VIEWED THRU HORIZON

BOEING

EXPERIMENT EQUIPMENT

ASTRONOMY

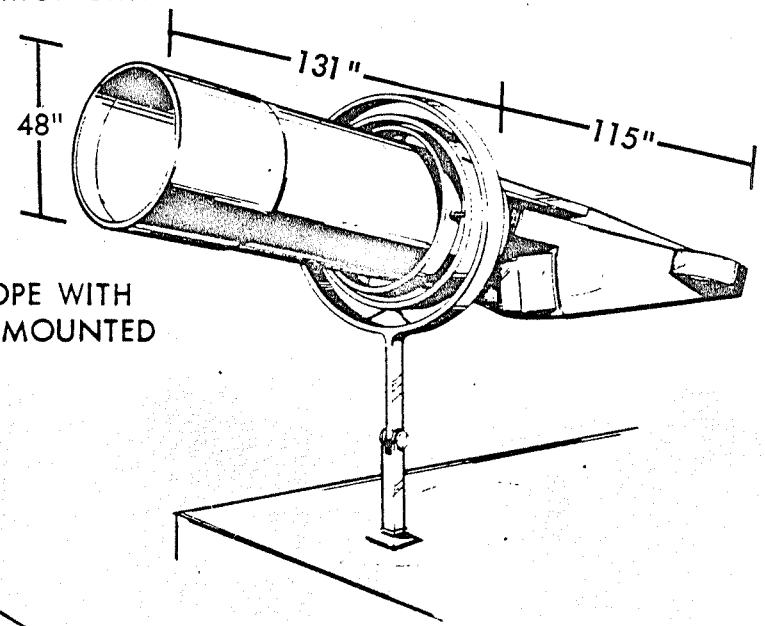

40-INCH CASSEGRAINIAN TELESCOPE WITH HIGH-DISPERSION SPECTROGRAPH MOUNTED (3000 TO 8900Å)

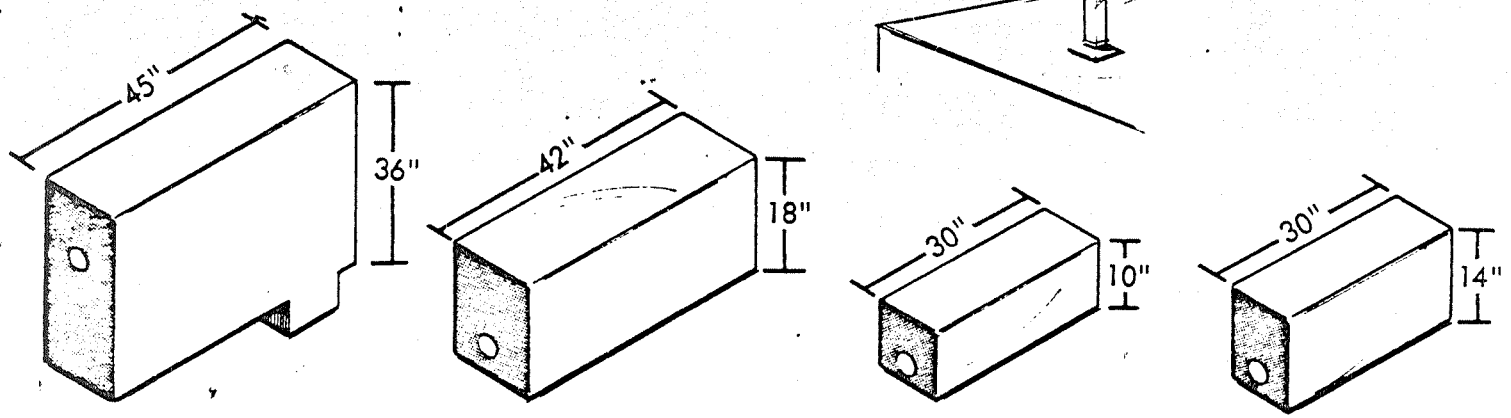

HIGH-DISPERSION IR SPECTROMETER (0.79 TO 15 MICRONS)

HIGH-DISPERSION UV SPECTROMETER (900 TO 4500Å)

LOW-DISPERSION UV SPECTROMETER (900 TO 4500Å)

LOW-DISPERSION SPECTROGRAPH (4000 TO 7000Å)

BOEING

ASTRONOMICAL SENSOR VIEWING REQUIREMENTS

TYPE	F.O.V. VIEW ANGLE	ACCURACY	DUTY CYCLE	COMMENT
20" SCHMIDT TELESCOPE	10 DEG	0.4 SEC	CONTINUOUS MAPPING VIEW ANGLE 90 DEG FROM SUN	REQUIRES INSTRUMENT CHANGES
40" CASSEGRAINIAN TELESCOPE	11.7 MIN.	0.1 SEC	CONTINUOUS MAPPING VIEW ANGLE 90 DEG FROM SUN	REACQUISITION OF CERTAIN TARGETS FOR 3 TO 4 ORBITS
40" X-RAY AND GAMMA-RAY TELESCOPE	1.0 DEG	0.05 SEC	APPROXIMATELY 10 %	INTERMITTENT PERIODS OF ACTIVITY
40" X-RAY TELESCOPE	1.0 DEG	0.05 SEC	APPROXIMATELY 10%	INTERMITTENT PERIODS OF ACTIVITY
SOLAR TELESCOPE	11.7 MIN.	0.1 SEC	CONTINUOUS TRACK OF SUN DURING DAY	REQUIRES INSTRUMENT CHANGES
20" CORONOGRAPH	1.0 DEG	0.4 SEC	CONTINUOUS TRACK OF SUN DURING DAY	POINTING STABILITY OF 0.01 TO 0.02 ARC SEC
SOLAR MONITOR TELESCOPE	10.0 DEG	0.05 DEG	CONTINUOUS TRACK OF SUN DURING DAY	VIDICON FOR TV DISPLAY

GENERAL REQUIREMENTS
- TWO-AXIS GIMBAL FOR TRACKING
- NO EVA FOR FILM CHANGE
- POINTING ACCURACY NOT PROVIDED BY STATION

BOEING

ANTENNA REQUIREMENTS

TYPE	QTY.	F.O.V.	ACCURACY	SIZE	COMMENTS
PARABOLIC (POINTING)	6	VARIES WITH DIAMETER	0.1° TO 1.0°	3-FT DIAMETER TO 30-FT DIAMETER	5 EARTH 1 SYNC. SAT.
SIDE-LOOKING RADAR	1	LAND COVERAGE	0.05° YAW 1.0° PITCH & ROLL	27' X 4'	
FIXED (FLUSH MOUNTED)	4	HEMISPHERICAL			COMMUNICATION
	2	PHASED ARRAY	0.5°	2'X2'X8"	ELECTRON BEAM FORMING
FIXED (EXTENDIBLE BOOM)	2	SPHERICAL		30' STEM BOOM	LONG-RANGE H.F.
DEPLOYED (TETHERED)	2	EARTH TARGETS & SYNC. SAT.	0.01°	200' DIAMETER 50' SPHERE	SEPARATE ATTITUDE CONTROL

BOEING

EXPERIMENT EQUIPMENT

BIOSCIENCE DECK

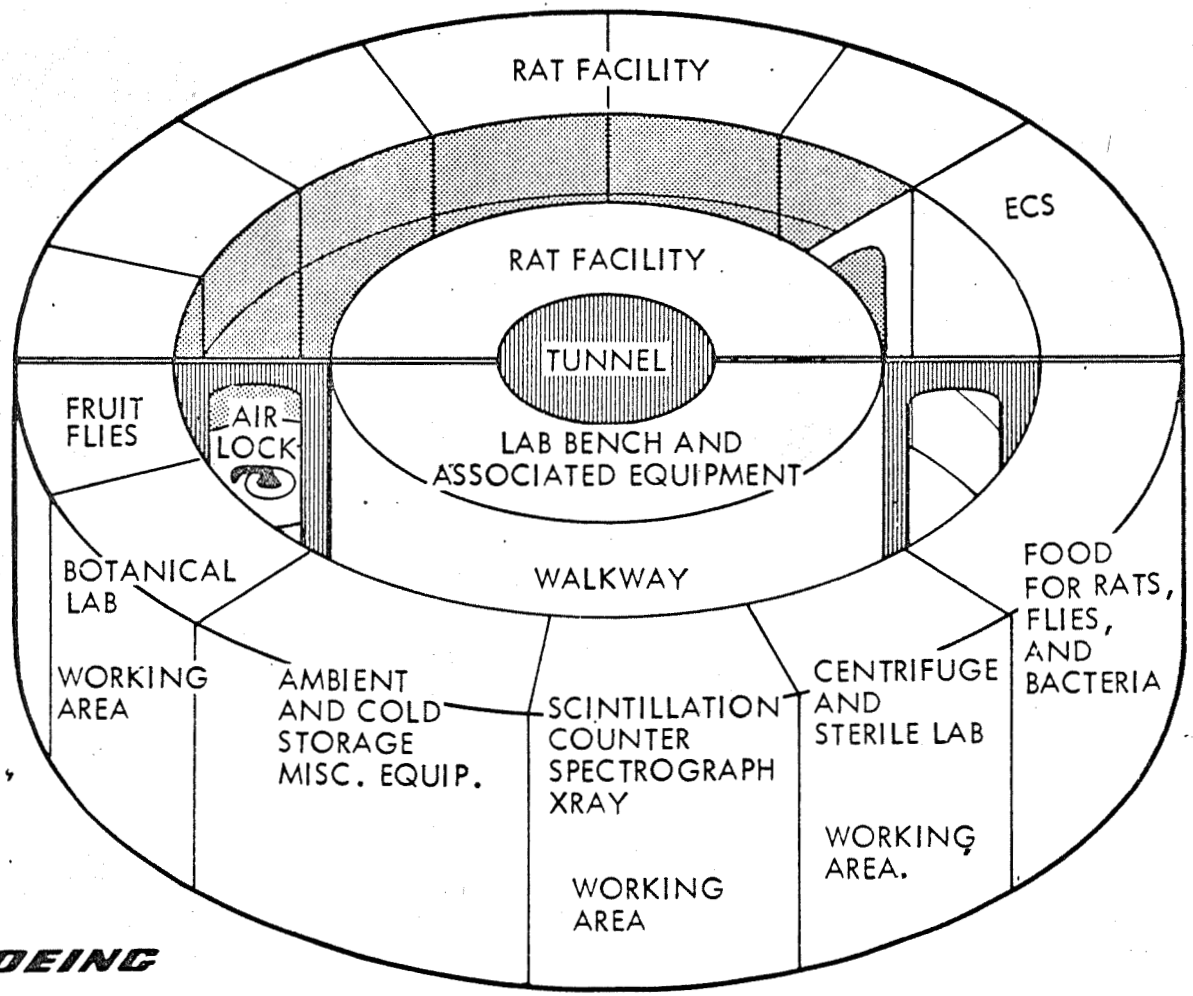

BOEING

TIMELINE ANALYSIS

BOEING

BASIC WORK / REST SCHEDULE

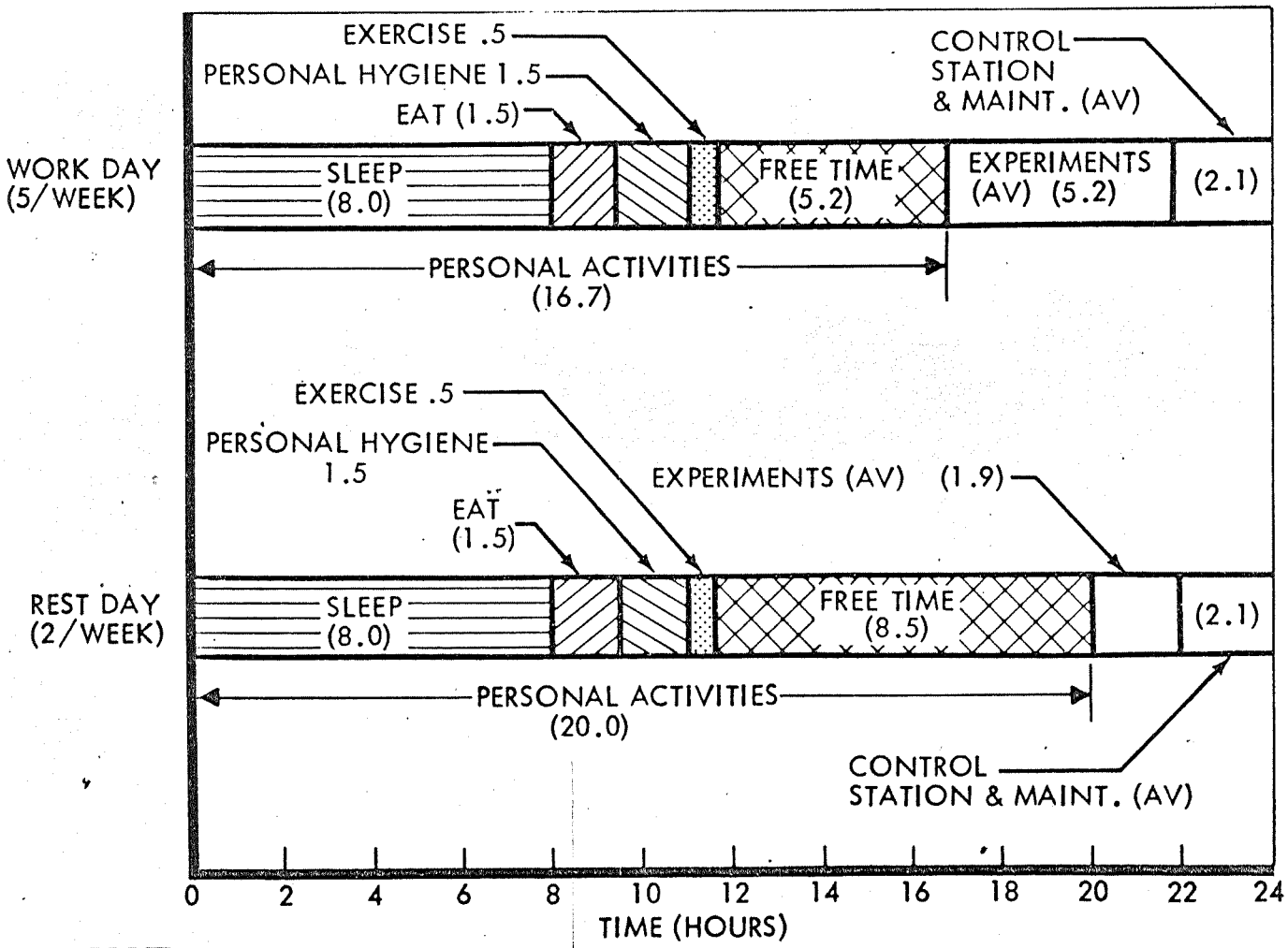

BOEING

CREW EXPERIMENT ASSIGNMENTS

EXPERIMENT AREA	REQUIRED TIME (MAN YEARS)	CREWMEN	
		PRIMARY	BACKUP
ENGINEERING	0.3	A. ELECTRONICS ENGINEER LASER/OPTICAL, CONTROLS, INSTRUMENTATION, rf, & MEDICAL TECHNICIAN	F, B
EARTH RESOURCES	0.8	B. ELECTRICAL/MECHANICAL ENGINEER PHOTOGRAPHY, ASTRONOMY, ELECTRICAL POWER, ECS/LSS, STRUCTURE, & STABILIZATION & CONTROL	A, E
METEOROLOGY	0.2		A, E
BIOMEDICAL	0.7	C. MEDICAL DOCTOR PHYSIOLOGY, BIOMEDICAL, & PSYCHOLOGY	A, D
BIOSCIENCE	1.6	D. PHYSICAL SCIENTIST Ph D BIOLOGY, BIOCHEMICAL, PHYSICS, & CHEMISTRY	C, A
ASTRONOMY	0.8	E. PHYSICAL SCIENTIST ASTRONOMY, METEOROLOGY, GEOLOGY, & PHYSICS	B, F
PHYSICAL SCIENCES	0.2		A, F
COMMUNICATIONS NAVIGATION	0.7	F. ELECTRICAL ENGINEER - COMMANDER NAVIGATION, COMMUNICATIONS, CONTROLS, ELECTRICAL POWER, & ECS/LSS	A, B
TOTAL	5.3		

BOEING

MAINTENANCE ASSUMPTIONS

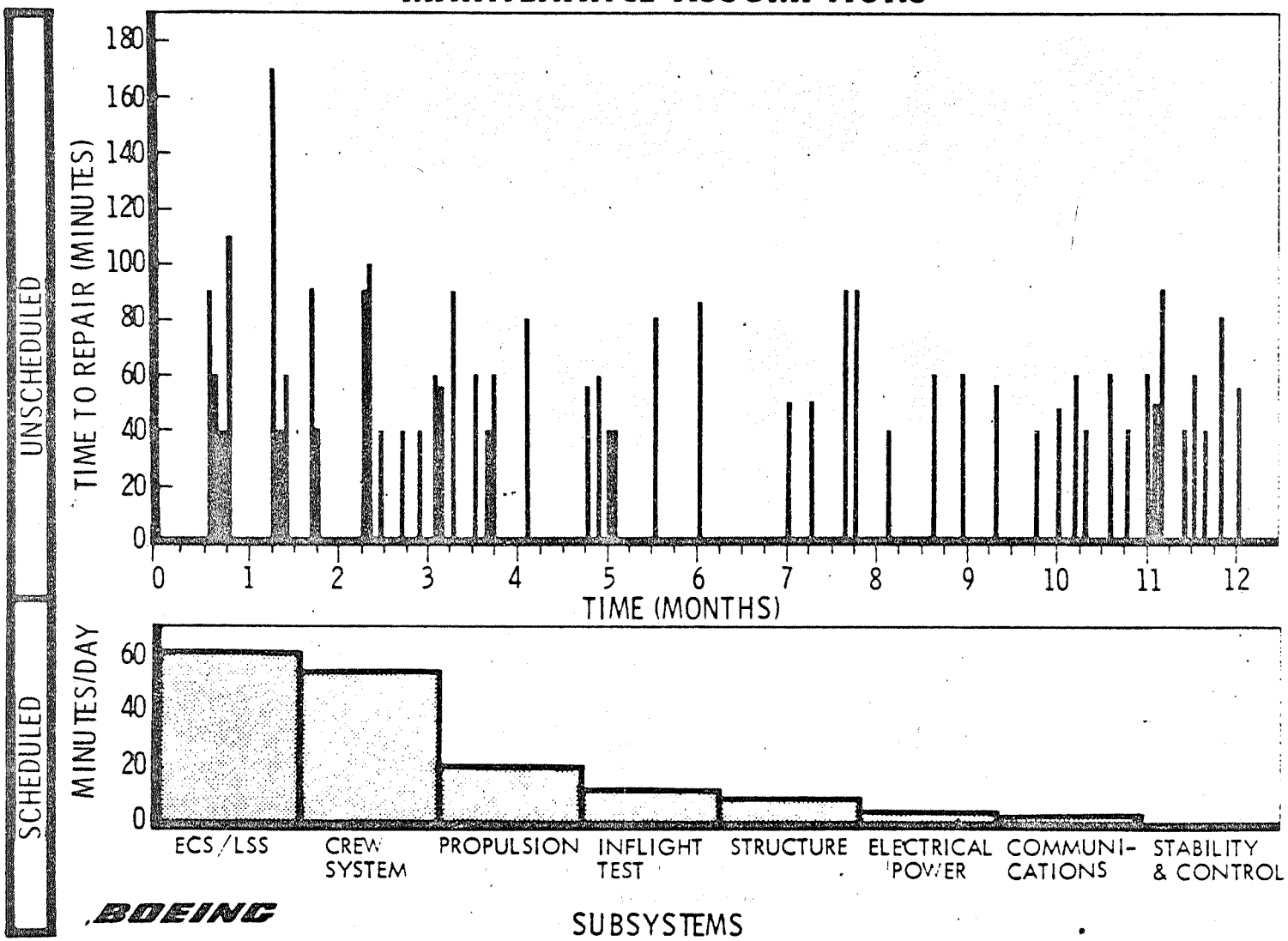

BOEING

CREW UTILIZATION

CREWMAN	EXPERIMENT HOURS/DAY			AVERAGE MAINTENANCE & COMMAND HOURS	AVERAGE USEFUL WORKING HOURS
	MAXIMUM	MINIMUM	AVERAGE		
A	5.3	2.8	4.5	2.0	6.5
B	5.3	4.3	5.2	2.0	7.2
C	5.3	2.3	3.7	2.0	5.7
D	7.3	7.0	7.2	0	7.2
E	5.3	3.6	5.1	2.0	7.1
F	2.8	2.6	2.8	4.5	7.3
		AVERAGE	4.75	2.08	6.83
MAXIMUM SCHEDULED 24-WORKING-DAY TIMELINE RUN					7.3

BOEING

PRELIMINARY CREW SIZE CHECK

(1-YEAR MISSION)

TOTAL EXPERIMENT MANHOURS		10,102
MAXIMUM AVAILABLE EXPERIMENT TIME (1.9 HOURS / REST DAY-MAN) (5.22 HOURS/WORKDAY-MAN)	9,282	
EXPERIMENT TIME LOSS (0.47 HOUR/DAY/MAN)	—743	
NET AVAILABLE TIME		8,539

BOEING

EXPERIMENT DATA STORAGE

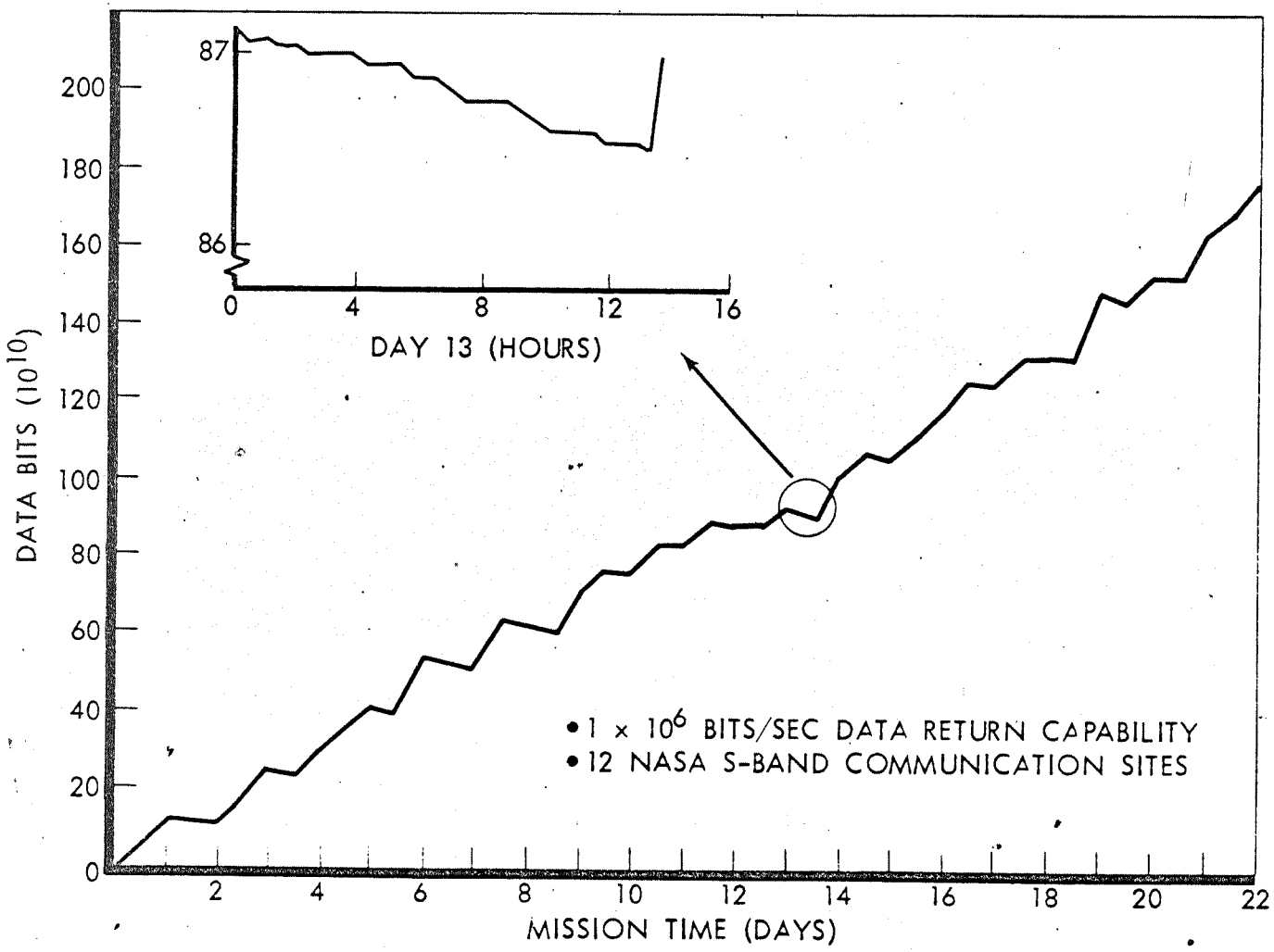

BOEING

EXPERIMENT POWER PROFILE

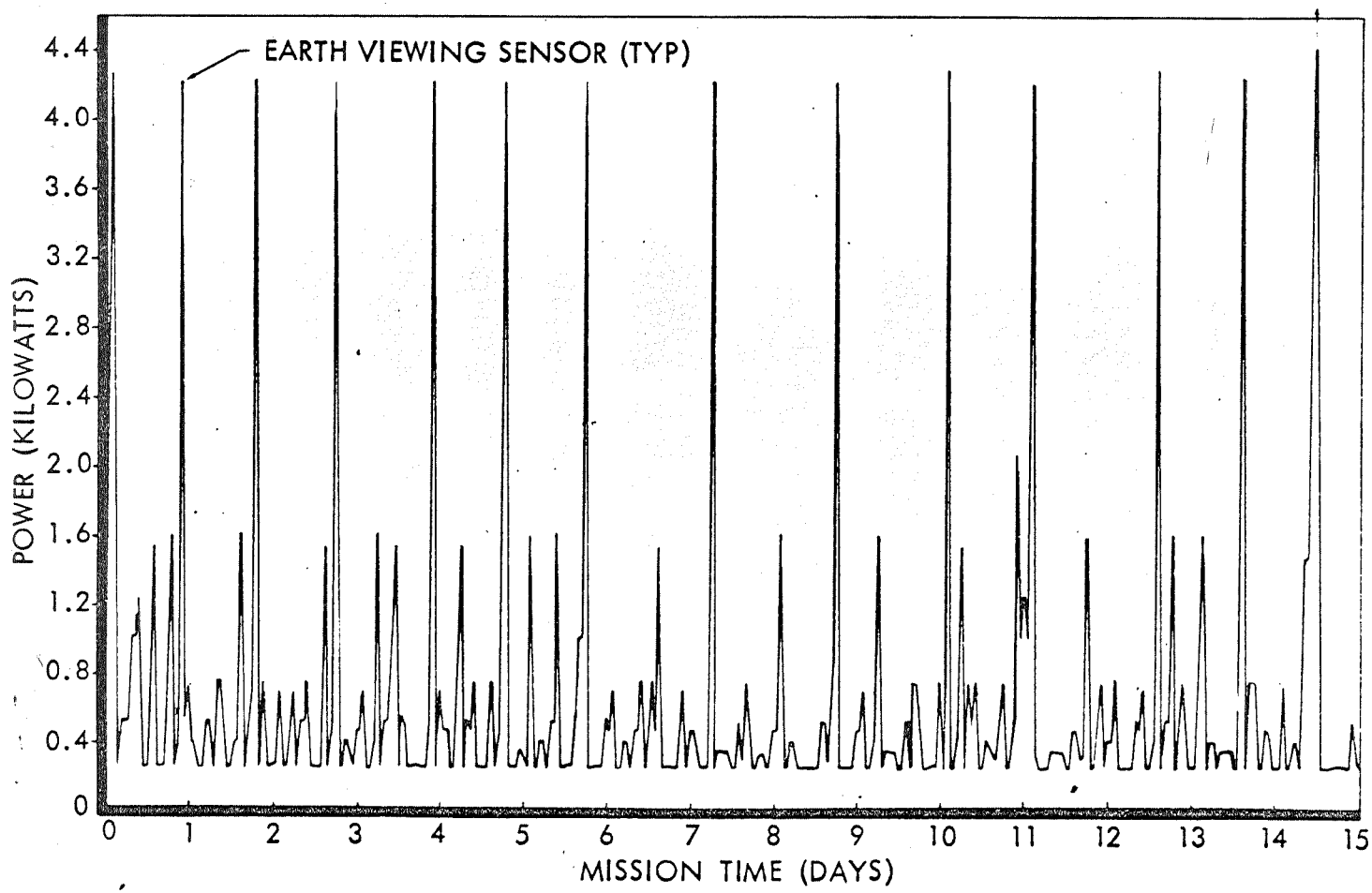

BOEING

SUBSYSTEM SELECTION

SUBSYSTEM STUDY APPROACH

- REQUIREMENTS
- COMPETITIVE CANDIDATES
- AVAILABILITY, COST, WEIGHT, VOLUME
- COST EFFECTIVENESS COMPARISON

  TOTAL COST = $\sum$ \$ R&D + \$ HDWE + \$ OPNS + \$ TRANS

  TRANSPORTATION COSTS:

  INITIAL LAUNCH -(SIC + SII) = \$356 PER POUND

  RESUPPLY -(SAT IB) = \$1,083 PER POUND

BOEING

COMMUNICATIONS & DATA MANAGEMENT SELECTION

BOEING

COMMUNICATIONS & DATA MANAGEMENT SUBSYSTEM

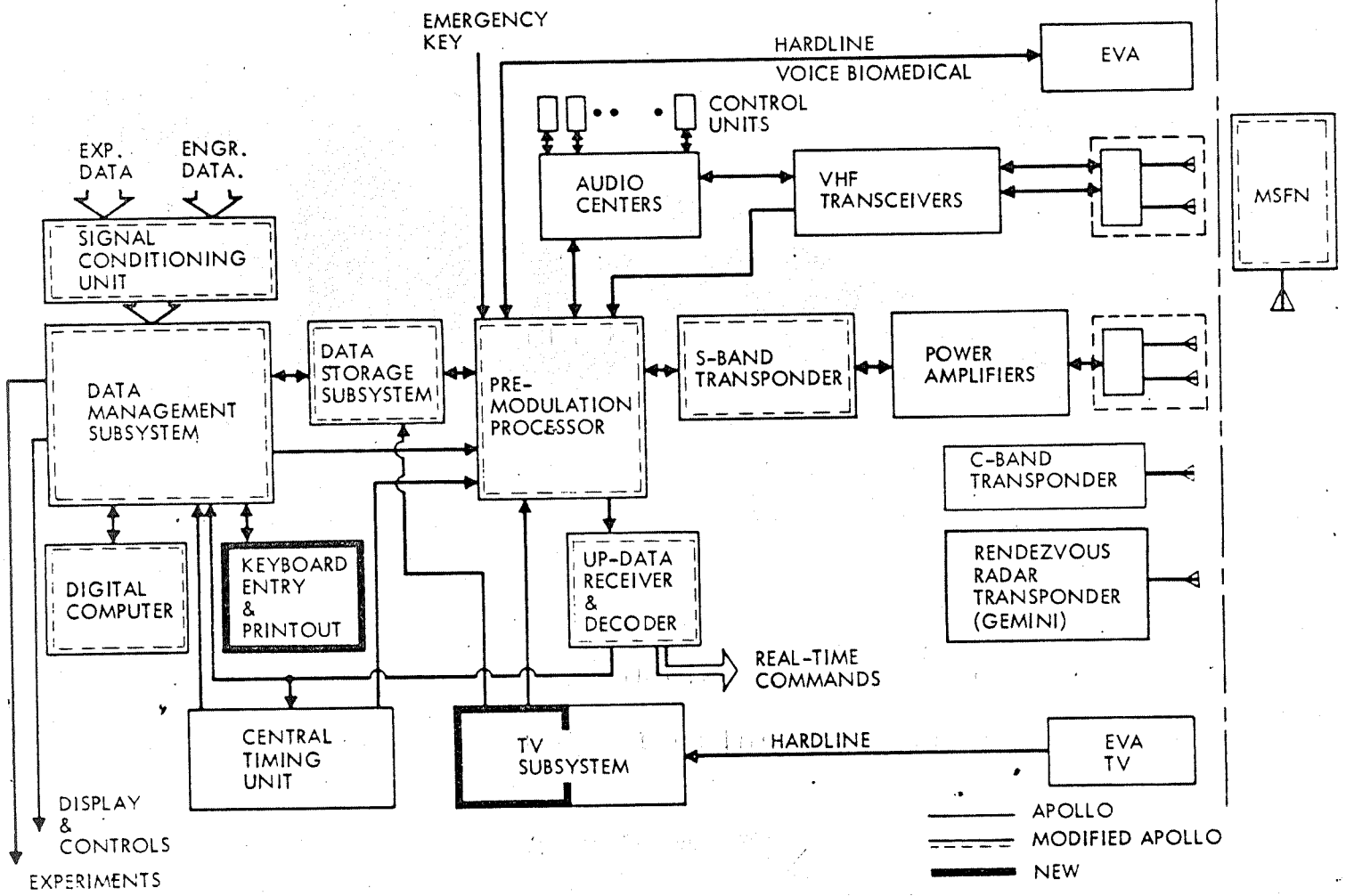

BOEING

PRELIMINARY COMMUNICATIONS REQUIREMENTS

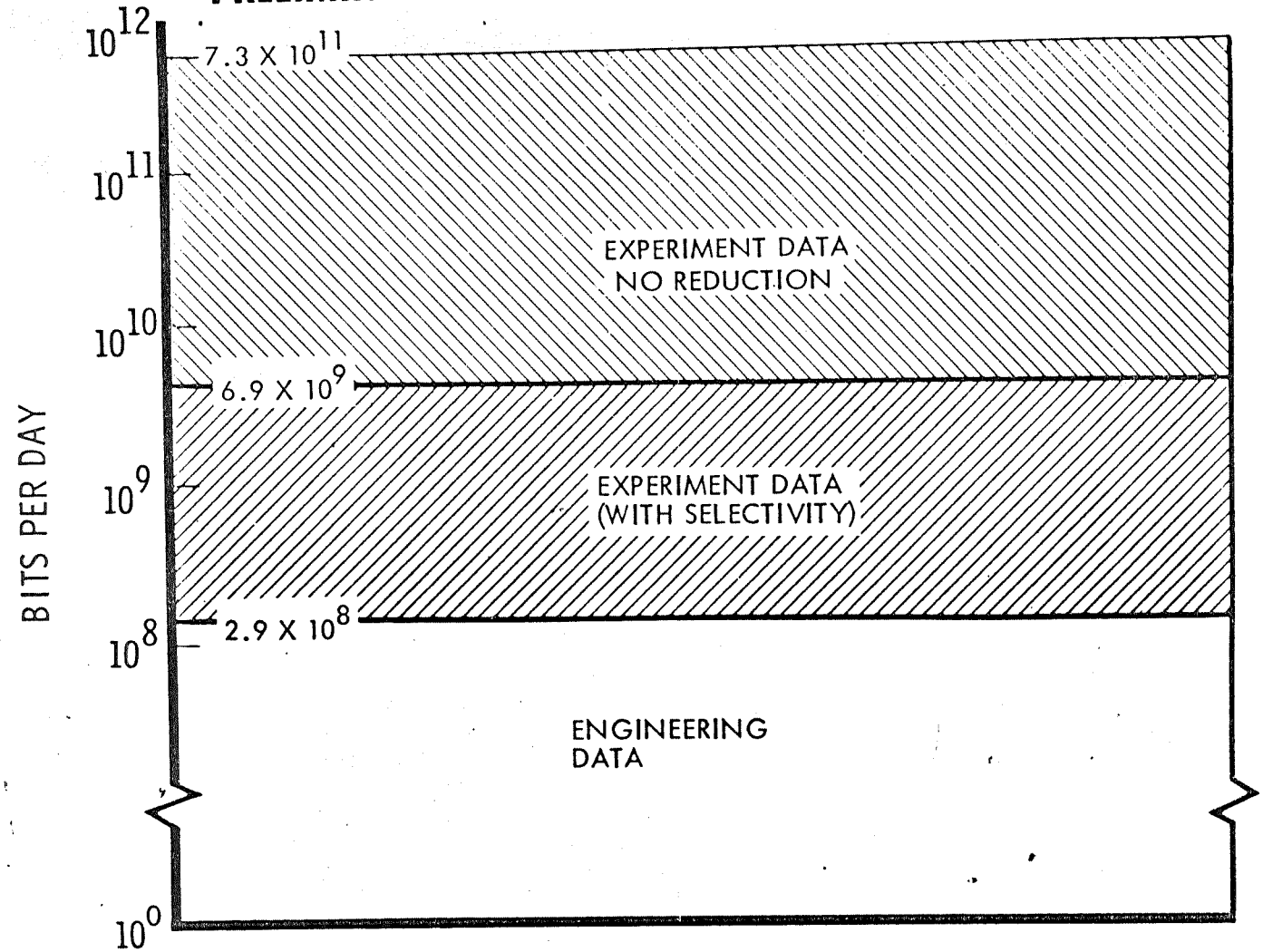

BOEING

COMMUNICATION ALTERNATES

	APOLLO CARRIER FREQUENCIES			
	2272.5 MHz	2277.5 MHz	2282.5 MHz	2287.5 MHz
	CSM TV OR DATA	IU FM	IU/LM FM OR PM	CSM PM
CANDIDATE 1	NO MOD: TV OR 51.2 Kbps & analog	NOT USED	NOT USED	NO MOD: RANGING, VOICE, AND 51.2 Kbps
CANDIDATE 2	MODIFY: 1.024 Mbps OR TV OR 128 Kbps & analog	NOT USED	NOT USED	MODIFY: RANGING, VOICE, AND 128 Kbps
CANDIDATE 3	MODIFY: 2.048 Mbps OR TV	MODIFY: 2.048 Mbps	MODIFY: 2.048 Mbps	SAME AS ABOVE

BOEING

COMMUNICATIONS REQUIREMENTS/CAPABILITIES

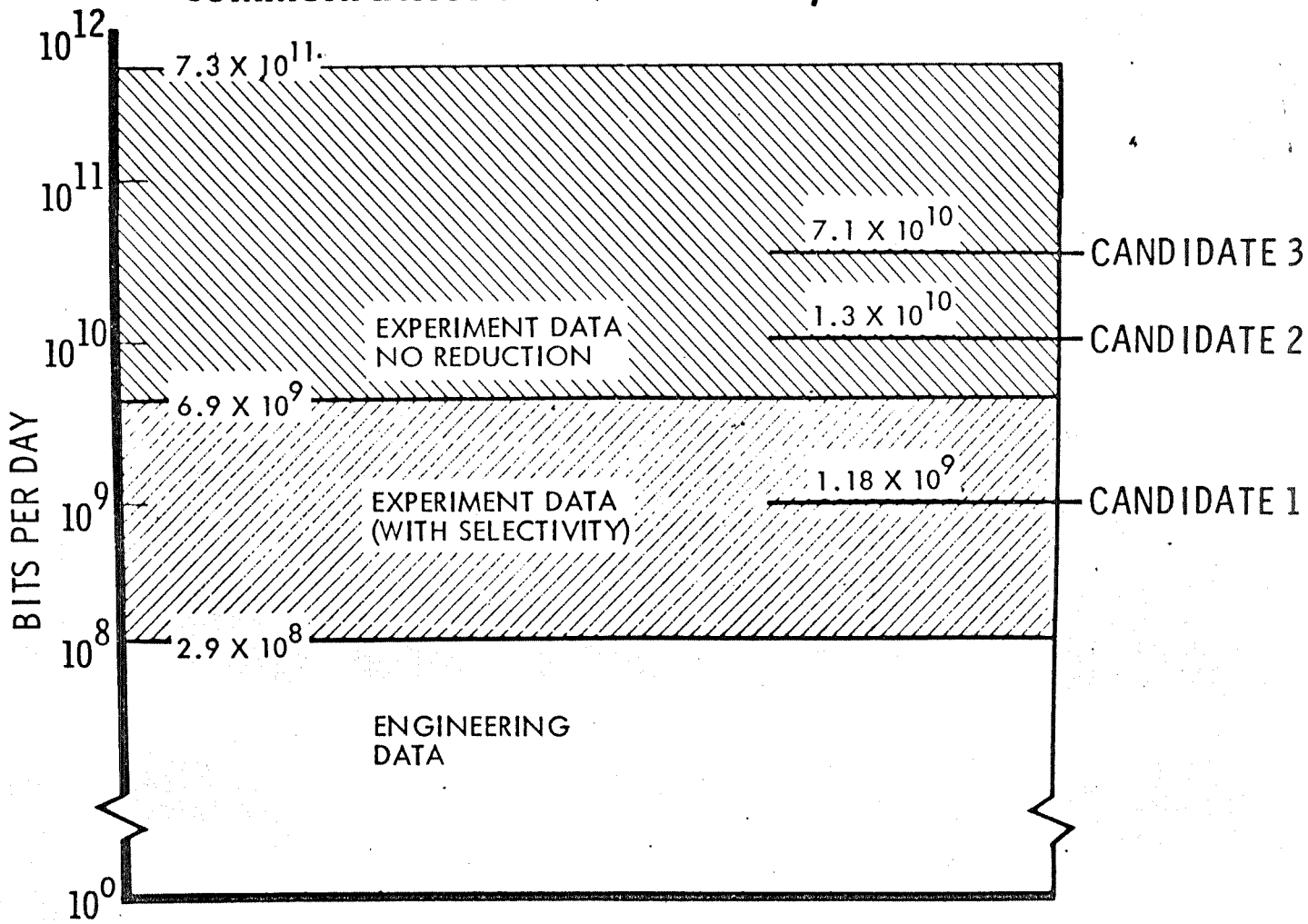

- EARTH ORBIT, 260 N MI ALT., 50-DEGREE INCLINATION
- AAP GROUND NETWORK
- STATION CONTACT TIME = 3.2 HOURS/DAY AVG.

BOEING

COMMUNICATION AND DATA MANAGEMENT SELECTION

CANDIDATE	DATA RATE BITS PER DAY	WEIGHT (LB)	POWER (WATTS)		COST (MILLIONS FOR ONE FLIGHT)	AVAILABILITY FOR 1971 FLIGHT
			TRANS-MISSION	NORMAL		
1	1.2×10^9	468	770	455	94.5	YES
2	1.3×10^{10}	835	1005	725	141.2	YES
3	7.1×10^{10}	1250	1380	885	193.6	YES (SOME RISK)

BOEING

DATA TRANSMISSION CAPABILITY

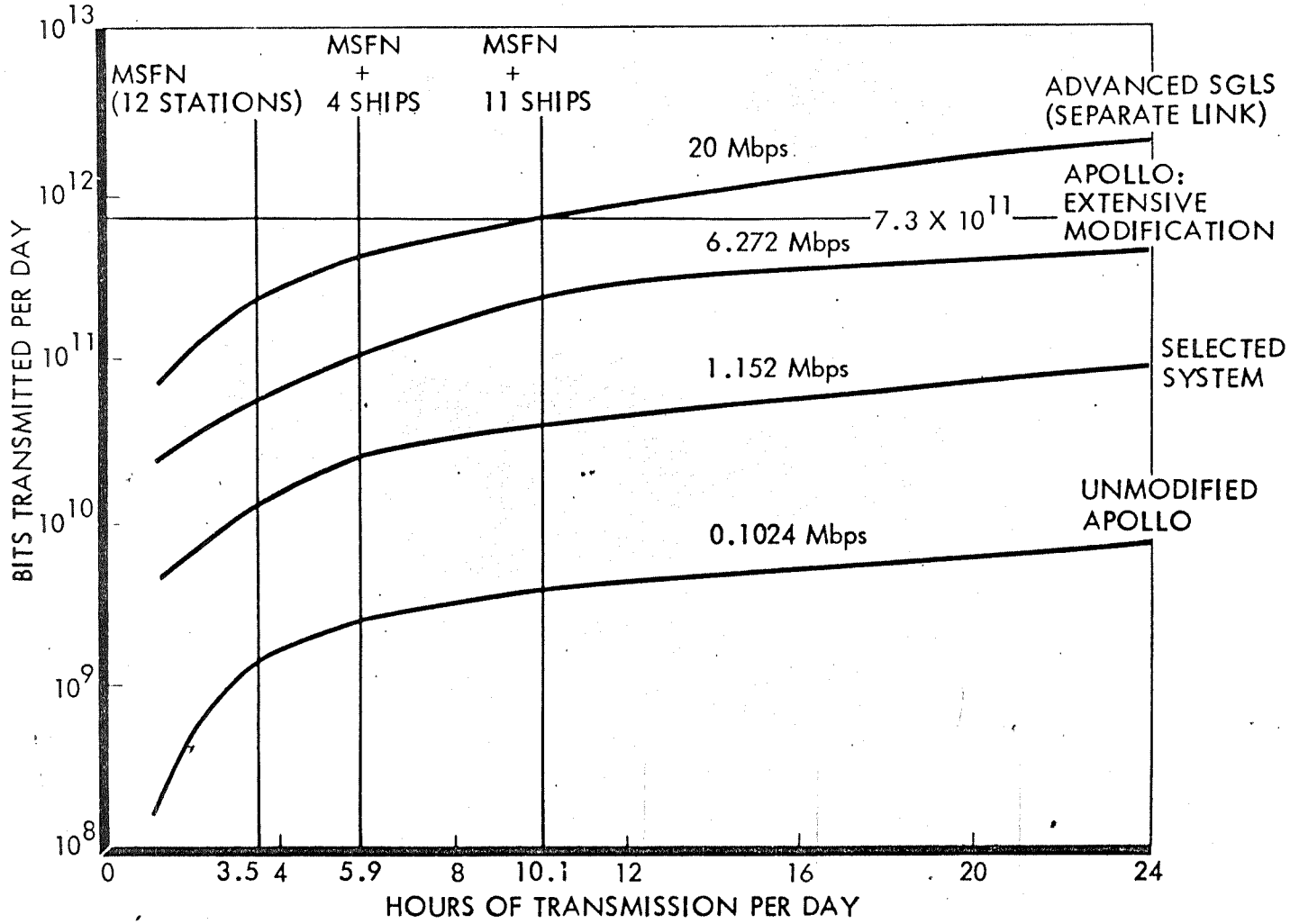

BOEING

CREW SYSTEMS SELECTION

BOEING

CREW SYSTEMS

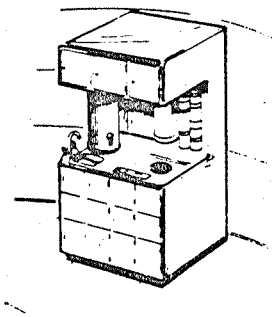

FOOD & FOOD PROCESSING

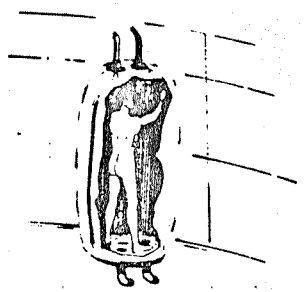

PERSONAL HYGIENE

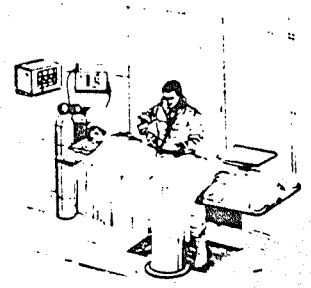

MEDICAL PROVISIONS

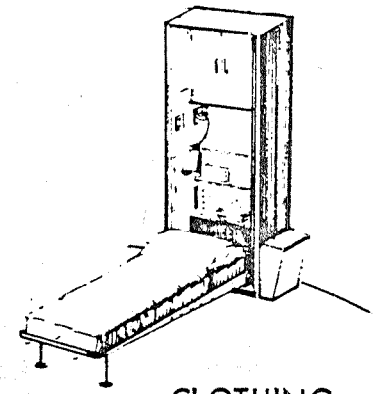

CLOTHING & BEDDING

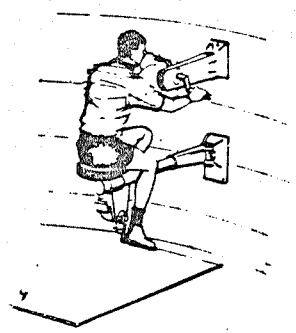

PHYSICAL CONDITIONING

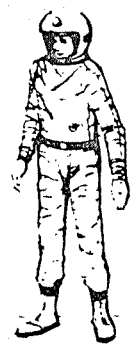

EVA & IVA PRESSURE SUITS

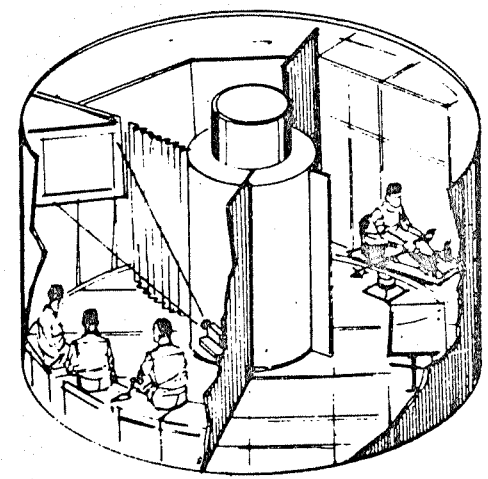

LIVING PROVISIONS

BOEING

CREW SYSTEMS SELECTION

CANDIDATE		WEIGHT (LB)	VOL (CU FT)	AVAILABLE
FOOD	FREEZE-DRIED	1,800	318	67
	CONCENTRATED	2,115	373	67
	FROZEN	2,448	432	68
	CANNED	3,525	621	68
	MIXED	2,277	401	68
CLOTHING BEDDING	DISPOSABLE	1,708	698	69
	REUSABLE	899 *	163	71
PHYSICAL CONDITIONING	CENTRIFUGE	600	1,437	68
	LINEAR ACCEL.	50	15	69
	EXERCISERS	100	32	69
	LOWER NEG. PRESS. BOOT	35	6	68

* INCLUDES 500-LB PENALTY FOR H_2O RECLAMATION

BOEING

CREW SYSTEMS SELECTION (CONT)

CANDIDATE		WEIGHT (LB)	VOL (CU FT)	AVAILABLE
PERSONAL HYGIENE	SHOWER	407 **	117	70
	WET SUIT	471 **	120	69
	PADS	704	37	69
MEDICAL PROVISIONS	FIRST AID	60	5	67
	+ DIAGNOSIS	200	57	71
	+ THERAPY	335	95	71
	+ SURGERY	800	227	75
PRESSURE SUITS	APOLLO BLK II	2,592	236	69
	+ IVA SUIT	3,458	305	71
LIVING PROVISIONS	SINGLE USE	372	85	70
	MULTI-USE	764	176	70
	PRIVATE USE	1,925	341	70
	MIXED USE	675	206	70

** INCLUDES 250-LB PENALTY FOR H_2O RECLAMATION

BOEING

PROPULSION SUBSYSTEM SELECTION

BOEING

PROPULSION REQUIREMENTS

ORBIT CIRCULARIZATION

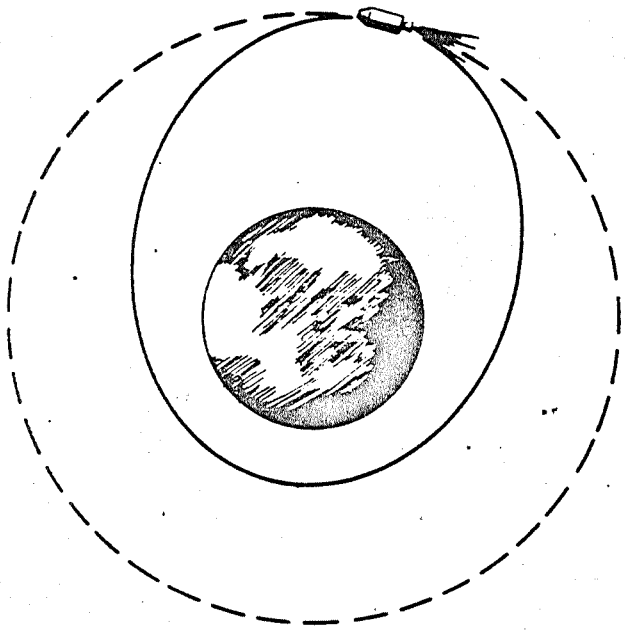

- ONCE PER MISSION

ΔV = 285 FPS

ORBIT REBOOST

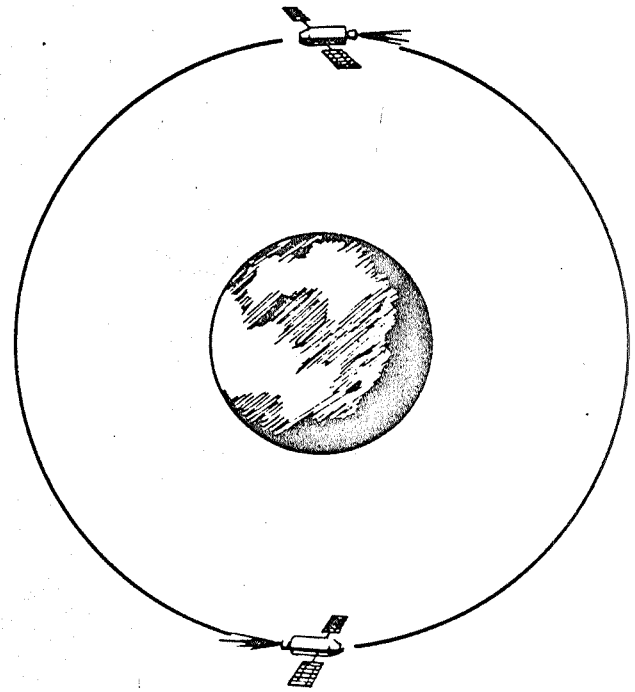

7 PER MISSION

$\Delta V \doteq$ 77 FPS TOTAL

BOEING

ENGINE CANDIDATES

CANDIDATE ENGINE	THRUST (LB)	RATED BURN TIME (SECONDS)	CIRCULARIZATION		REBOOST		ENGINE WEIGHT (LB)
			REQUIRED BURN TIME	PROPELLANT WEIGHT (LB)	REQUIRED BURN TIME	PROPELLANT WEIGHT (LB)	
MARQUARDT R-4D (4 REQUIRED)	100 (EACH)	1,000 [1]	5,750	8,230	1,500	2,140	18
LUNAR MODULE DESCENT ENGINE	10,500	1,000	219	7,550	60	2,000	390
RESISTOJET	0.01	CONTINUOUS	(INSUFFICIENT THRUST)		CONTINUOUS	0 (ECS WASTE)	1
LUNAR MODULE ASCENT ENGINE	3,500	525	658	7,550	171	2,000	202

[1] MARQUARDT DATA INDICATES AN ENGINE LIFE OF MORE THAN 12,650 SECONDS.

BOEING

PROPULSION SUBSYSTEM ALTERNATES

		ENGINE	TANKS	ATTITUDE CONTROL	THRUST CONTROL
ALTERNATE 1	BSM SCS THRUSTERS	4 MARQUARDT R-4D	NEW	SPACE STATION	SPACE STATION
ALTERNATE 2	LOGISTICS SPACECRAFT SCS THRUSTERS	4 MARQUARDT R-4D	APOLLO	LOGISTICS SPACECRAFT	LOGISTICS SPACECRAFT
ALTERNATE 3	SPACE STATION PROPULSION SYSTEM	1 LUNAR MODULE DESCENT ENGINE	NEW	SELF-CONTAINED	SELF-CONTAINED
ALTERNATE 4	LOGISTICS SPACECRAFT PROPULSION	1 LUNAR MODULE DESCENT ENGINE	NEW	LOGISTICS SPACECRAFT	LOGISTICS SPACECRAFT

BOEING

PROPULSION SELECTION

	ALTERNATES	ADAPTABILITY	EXISTING EQUIPMENT	COST * R&D + 1 UNIT (MILLIONS OF $)	AVAILABLE FOR 1971 FLIGHT ?
CIRCULARIZATION	BSM SCS THRUSTERS	COMPLEX	NEW TANKS	16.8	YES
	LOGISTICS S/C SCS THRUSTER	COMPLEX	YES	16.8	YES
	SPACE STATION PROP. MODULE	GOOD	NEW STRUCTURE AND TANKS	80.9	YES
	LOGISTICS S/C PROPULSION	GOOD	NEW STRUCTURE AND TANKS	23.1	YES
REBOOST	BSM SCS THRUSTERS	GOOD	NEW (OR ADDITIONAL TANKS	6.6	YES
	LOGISTICS S/C SCS THRUSTER	GOOD (POOR FLEXIBILITY)	YES	2.2	YES
	SPACE STATION PROP. MODULE	CONFIGURATION PROBLEMS	NEW STRUCTURE AND TANKS	4.8	YES
	LOGISTICS S/C PROPULSION	POOR	NEW STRUCTURE AND TANKS	4.8	YES

* COSTS ARE INCREMENTS TO PROVIDE REQUIRED FUNCTION.

BOEING

BSM SUBSYSTEM EVALUATION

BOEING

BSM SUBSYSTEMS

ELECTRICAL POWER

STABILITY & CONTROL

ENVIRONMENTAL CONTROL
AND LIFE SUPPORT

- CO_2 REMOVAL
- O_2 SUPPLY
- WATER MANAGEMENT

BOEING

ELECTRICAL POWER SUBSYSTEM COST

10 KW, 2-YEAR MISSION

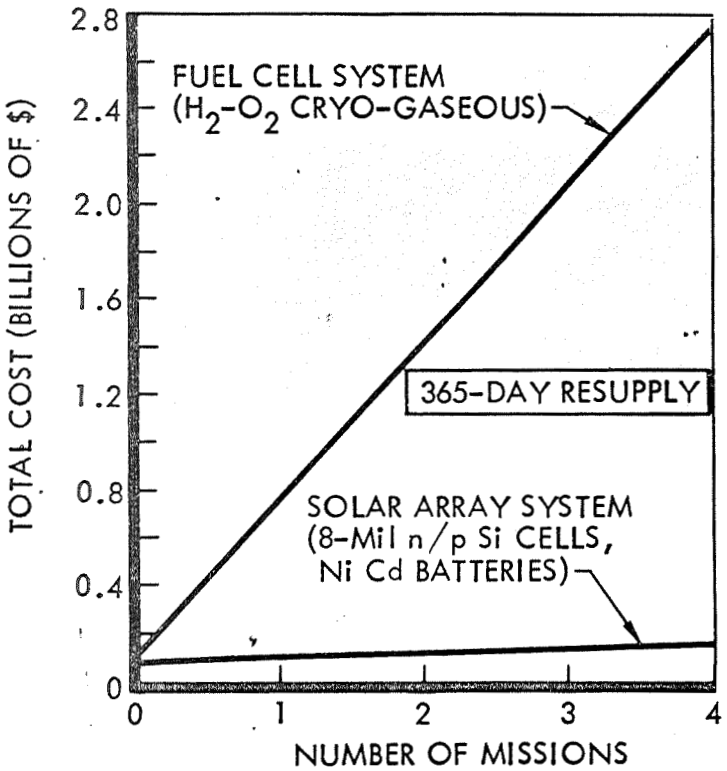

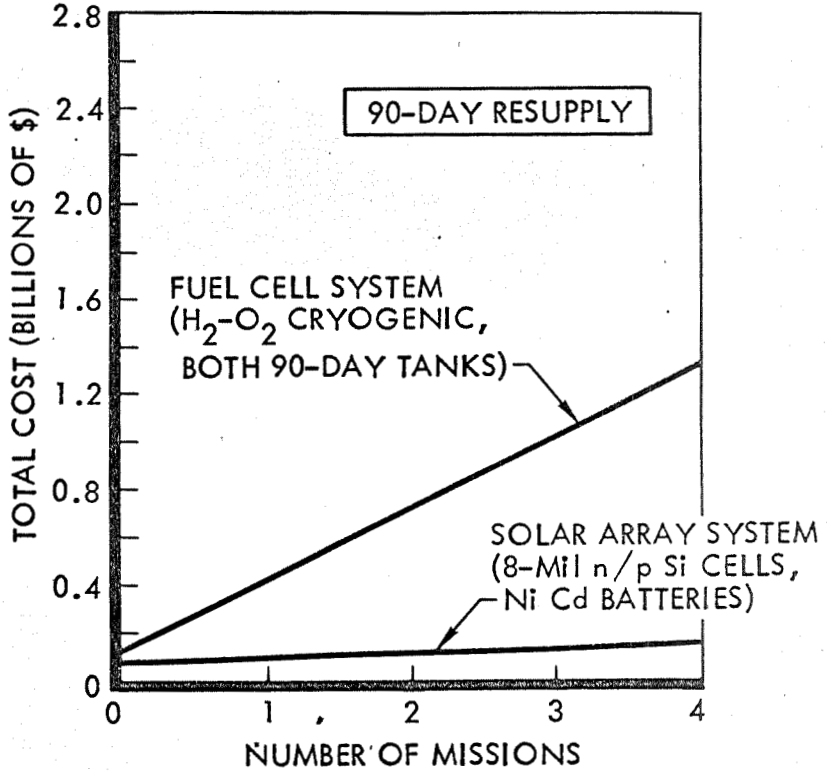

BOEING

STABILITY & CONTROL SUBSYSTEM

REQUIREMENT	ORIENTATION			ESTIMATED SCS CAPABILITY	REMARKS
	BELLY DOWN	END DOWN	ORBIT NORMAL		
ACCURACY PNTG RATE	0.1 DEGREE 0.05 DEGREE/SEC			<0.5 DEGREE <0.05 DEGREE/SEC	PROBABLY CAPABLE OF HIGHER ACCURACY
DISTURBANCE MOMENTUM (FT -LB-SEC/ 1/2 ORBIT)	1,050	816	1,720	ABOUT 2,000	OPERATION ON 2 CMG's ASSUMED
PROPELLANT CONSUMPTION (LB/90-DAY RESUPPLY)	270	368	230	ADEQUATE (WITH RESUPPLY)	POSSIBLE REACTION CONTROL JET LIFE-RELIABILITY PROBLEM
MISSION DURATION	2 YEARS			1 YEAR	CMG LIFE LIMIT, REACTION CONTROL JET RELIABILITY

BOEING

ENVIRONMENTAL CONTROL SUBSYSTEM COSTS

CO_2 REMOVAL — O_2 SUPPLY

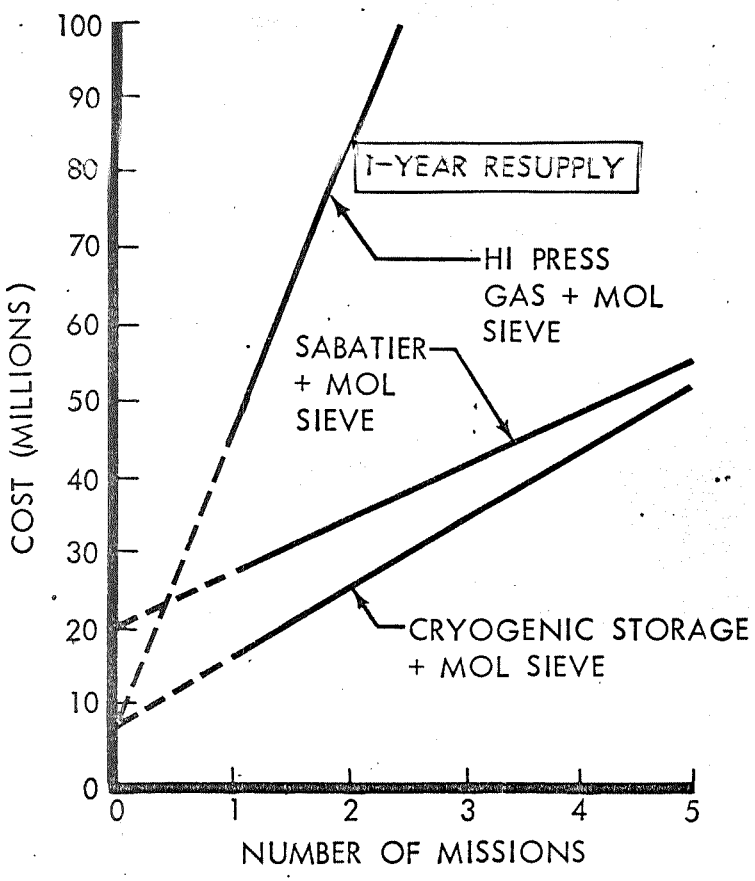

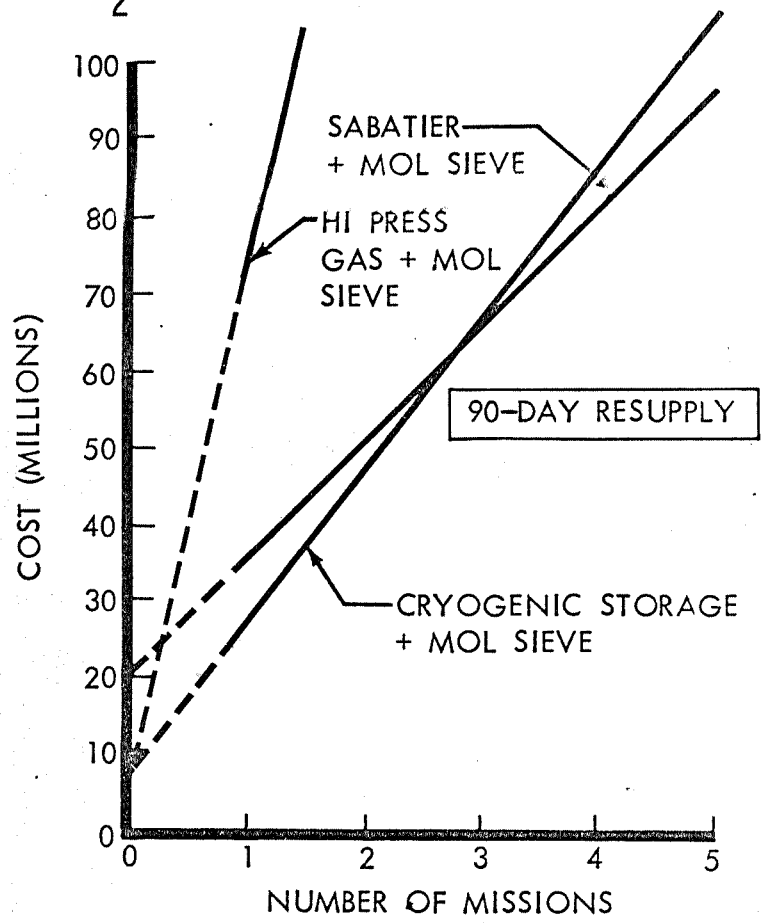

NOTES:

- WATER USED FOR SABATIER MAKEUP
- POWER COST 0.79 LB/WATT
- NO SPARES

BOEING

ENVIRONMENTAL CONTROL SUBSYSTEM PROGRAM COSTS

WATER MANAGEMENT

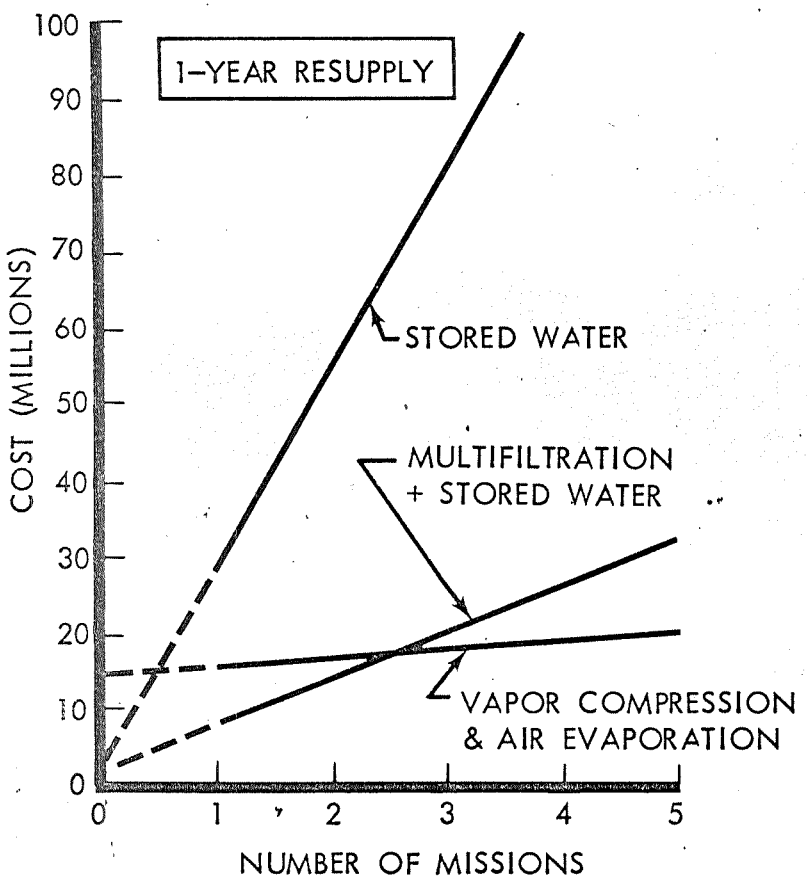

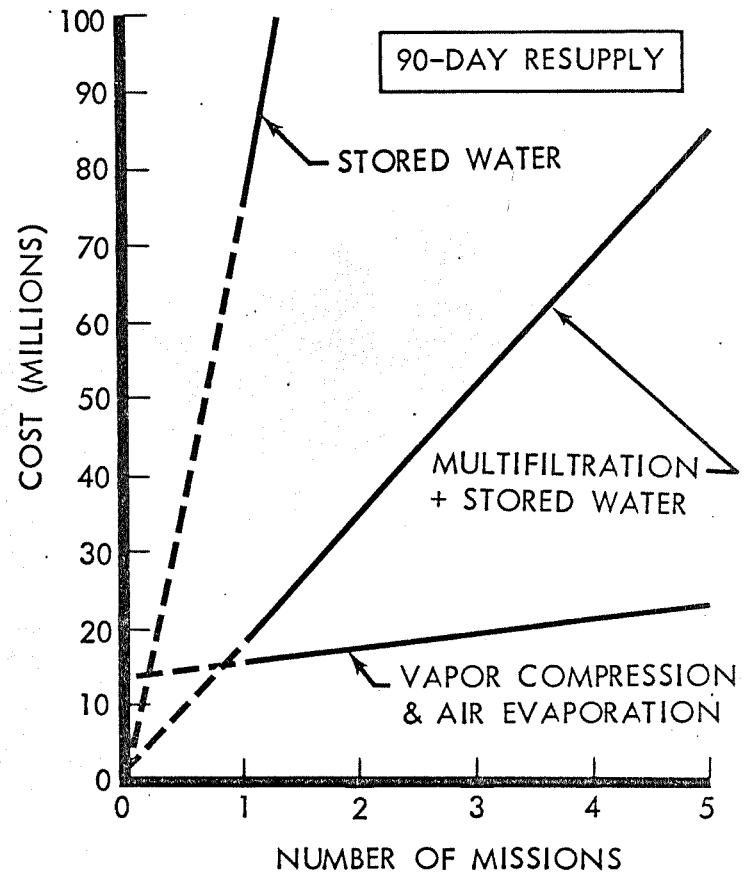

BOEING

WATER PROCESS OR USE RATE 78.8 LB/DAY

MAINTAINABILITY AND SAFETY

BOEING

ON-BOARD CHECKOUT APPROACH

- CRITICAL SUBSYSTEM PARAMETERS ARE AUTOMATICALLY MONITORED AND ANALYZED ON BOARD.
- GROUND TERMINAL MONITORS OVERALL SUBSYSTEM PERFORMANCE AND PERFORMS TREND ANALYSIS.
- CREW PERFORMS TEST FUNCTIONS ONLY IN CASE OF A FAILURE OR WHEN A MARGINAL CONDITION EXISTS.
- CHECKOUT SEQUENCE IS MANUAL.

BOEING

ON-BOARD CHECKOUT SCHEMATIC

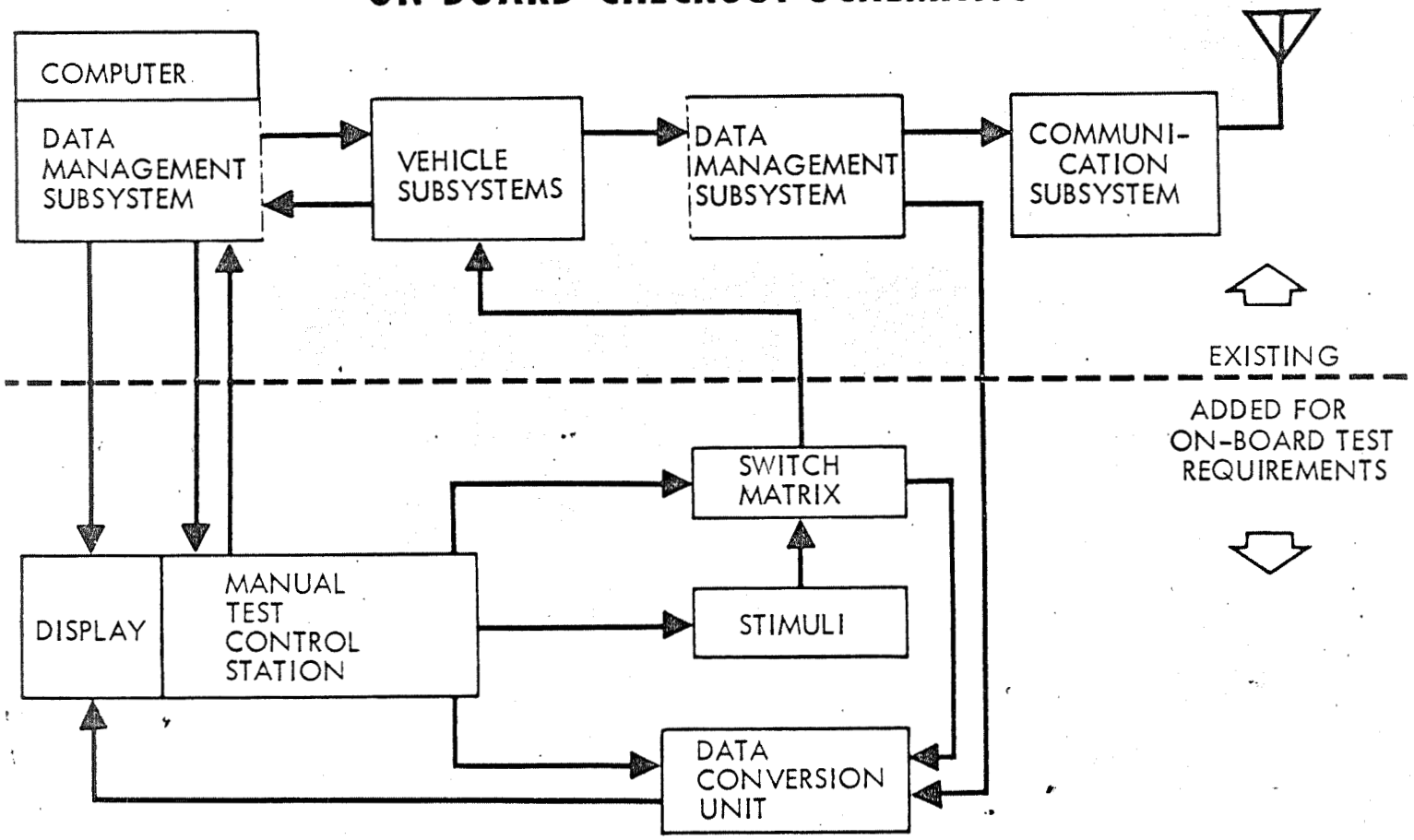

BOEING

ON-BOARD CHECKOUT PANEL

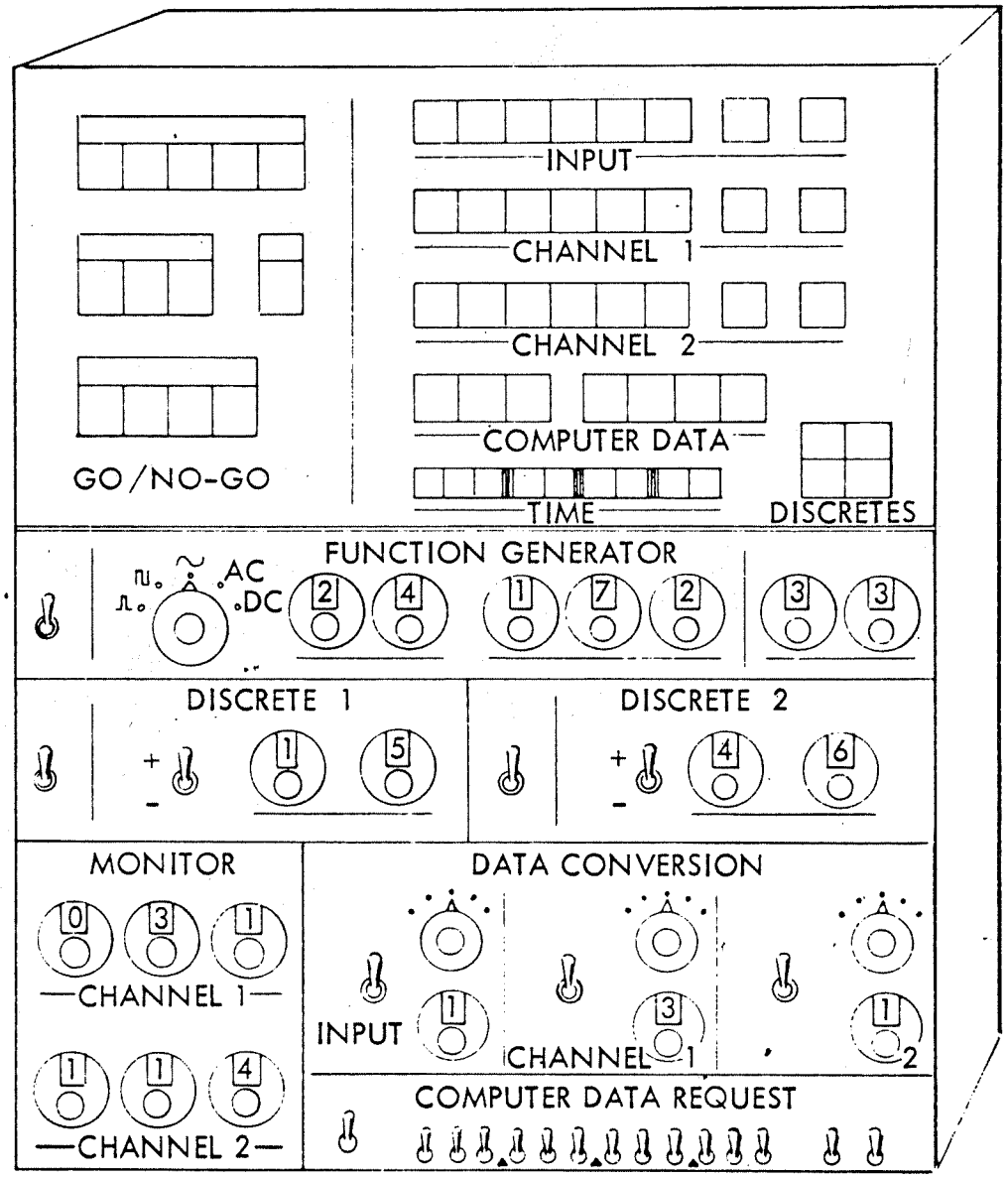

BOEING

TYPICAL MAINTENANCE REQUIREMENTS

SUBSYSTEM	NUMBER OF SCHEDULED MAINTENANCE TASKS BY INTERVAL (DAYS)			UNSCHEDULED MAINTENANCE FREQUENCY (MEAN DAYS BETWEEN FAILURE)	MEAN DAILY MAINTENANCE TIMES (MIN./DAY)		
	DAILY	WEEKLY	MONTHLY		SCHED.	UN-SCHED.	TOTAL
LIFE SUPPORT	1	2	8	15	59.7	9.4	69.1
COMMUNICATIONS				97	1.2	4.6	5.8
CREW		1	2	4500	53.3	0	53.3
ELECTRICAL POWER				500	2.6	0.6	3.2
INFLIGHT TEST	1		1	36	11.4	2.3	13.7
PROPULSION				265	18.7	1.0	19.7
STABILITY & CONTROL				45	0	2.9	2.9
STRUCTURE			1	9000	8.0	0.1	8.1
TOTAL	2	3	12		154.9	20.9	175.8

BOEING

TYPICAL SCHEDULED MAINTENANCE TASKS

SUBSYSTEM	ITEM	INTERVAL	TASK
INFLIGHT TEST	CONSOLE DISPLAYS	DAILY	CHECK & RECORD READINGS
LIFE SUPPORT	LIFE SUPPORT SYSTEM		GENERAL GROSS CHECKS
CREW	SPONGE, DISINFECTANT, VACUUM CLEANER	WEEKLY	GENERAL INTERIOR CLEANING
LIFE SUPPORT	URINE FILTER		REPLACE FILTERS (2)
LIFE SUPPORT	LIFE SUPPORT SYSTEM		GENERAL INSPECTION
LIFE SUPPORT	CHARCOAL FILTER, GAS	MONTHLY	REPLACE FILTERS (4)
LIFE SUPPORT	CATALYTIC CARTRIDGE		REPLACE CARTRIDGES (4)
LIFE SUPPORT	MASS SPECTROMETER		CALIBRATE
LIFE SUPPORT	LIFE SUPPORT SYSTEM		CHECK INSTRUMENTATION, OPERATE MANUAL VALVES
CREW	FIRE EXTINGUISHERS		INSPECT
INFLIGHT TEST	INDICATORS, DISPLAY		REPLACE LAMPS (3)

BOEING

SPACE STATION SPARES WEIGHT

UNSCHEDULED MAINTENANCE

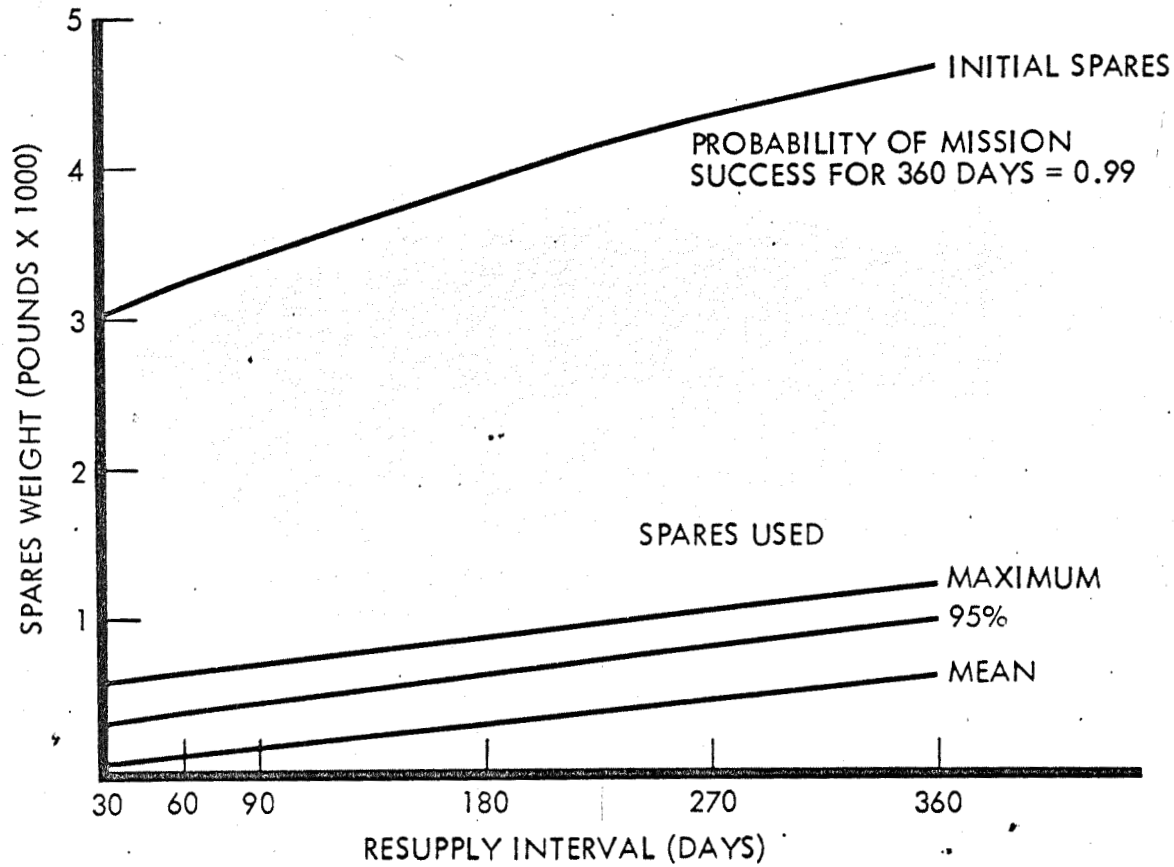

BOEING

SIGNIFICANT HAZARDS

HAZARD	SOLUTION/WORK-AROUND
• POWER SUBSYSTEM FAILURES	• EMERGENCY POWER SUPPLY
• EC/LSS FAILURES • METEOROID PENETRATION OF PRESSURE HULL	• SPACE SUITS AND UMBILICALS OR PLSS • COMPARTMENTATION • HIGH-PRESSURE REPRESSURIZATION GAS
• ATTITUDE CONTROL SUBSYSTEM FAILURES	• BACKUP OR EMERGENCY MODE
• FIRE, EXPLOSIONS, PRESSURE RUPTURE	• ELIMINATION OF IGNITION SOURCES & COMBUSTIBLES • ISOLATION AND/OR CONTAINMENT
• FUMES AND/OR CONTAMINANT ACCUMULATION	• DUMP TO VACUUM PERIODICALLY • SPACE SUITS & PLSS
• RENDEZVOUS AND DOCKING OPERATIONS	• LOCATION OF MISSION-SENSITIVE ITEMS • LOW-VELOCITY MANEUVERS
• RADIATION	• SHIELDING

BOEING

MAJOR SAFETY REQUIREMENTS

- SPACE SUITS AND PLSS'S AVAILABLE—AIRLOCK AND/OR TUNNEL
- ABORT VEHICLES AVAILABLE
- SEPARATE EMERGENCY POWER AND EC/LSS
- EVA MINIMIZED
- TRAVEL DISTANCE TO SHELTER/ESCAPE MINIMIZED
- ENERGY SOURCES OUTSIDE PRESSURE COMPARTMENTS
- STATION SUBSYSTEMS NOT DAMAGED BY VACUUM CONDITIONS

BOEING

CONFIGURATION SELECTION

CONFIGURATION STUDY BASIS

- GROUND RULES
- MINIMUM FLOOR SPACE REQUIRED
- BASELINE DESCRIPTION
- INTER-RELATIONSHIP OF VARIABLES
- CONFIGURATION SELECTION FLOW

BOEING

MAJOR GROUND RULES

- 6-MAN CREW
- 6-MAN APOLLO MANNING MODULE
- 3-MAN APOLLO OR "ERV" USED FOR EMERGENCY REENTRY
- ZERO GRAVITY
- METEOROID P_1 = 0.999 (2 YEARS)
- MAXIMUM RADIATION DOSE: 300 RAD (1 YEAR)
- AT LEAST TWO COMPARTMENTS CAPABLE OF SEPARATE PRESSURIZATION
- RESUPPLY INTERVAL

90 DAYS 1 + YEAR	RESERVES BASED ON 20% USE RATE FACTOR & 27 DAYS ALLOWANCE FOR LATE LAUNCH

BOEING

MINIMUM FLOOR AREAS

FUNCTION	SQ FT
GALLEY	△ 16
WARDROOM	△ 84
ISOLATION WARD	△ 108
CLINICAL LAB	△ 63
GYMNASIUM	△ 40
CREW QUARTERS	△ 36/ MAN
PERSONAL HYGIENE	△ 28

FUNCTION	SQ FT
COMMAND & CONTROL STATION	△ 32
MAINT. FACILITY	60
ELECT. LAB.	50
FLIM PROCESS LAB	30
PHYSICAL SCIENCE EXPERIMENT LAB	50
EVA & PRESSURE SUIT AREA	100
BIOSCIENCE LAB	340

△ MSC JAG STUDY DATA

BOEING

BASELINE CONFIGURATION
(EXTERIOR FEATURES)

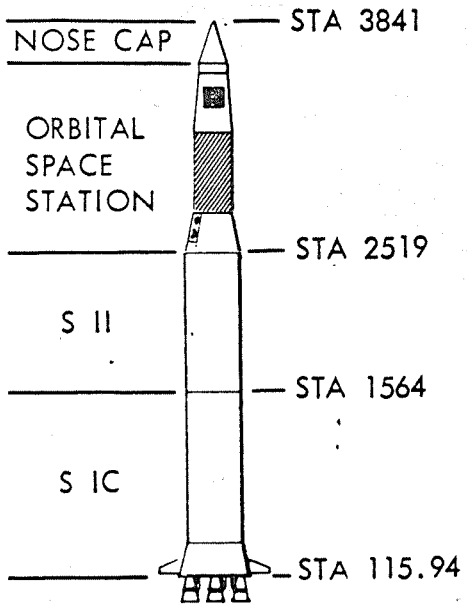

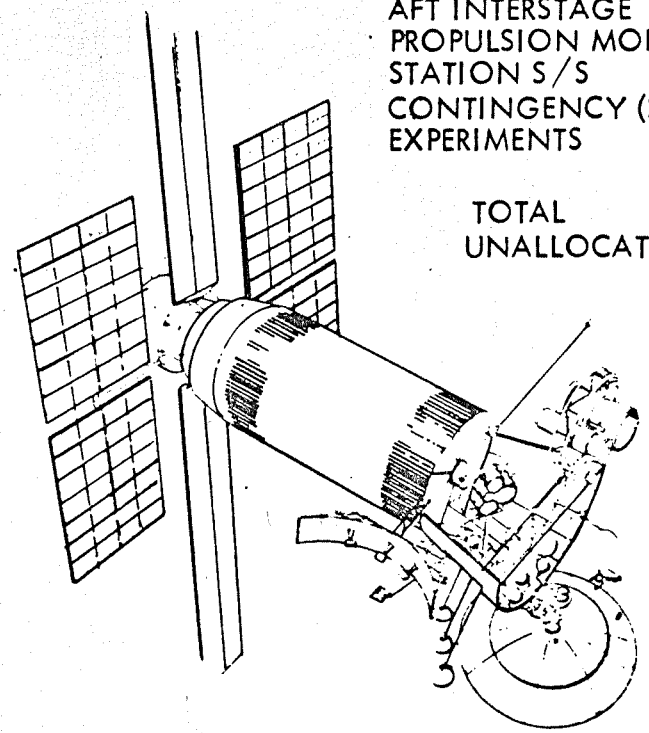

WEIGHT STATEMENT

NOSE FAIRING	1,750
SLA	3,800
INSTRUMENT UNIT	4,150
BASIC S/S MODULE	25,800
ADDITIONAL BSM EXPENDABLES	10,272
PRESSURIZED STRUCT.	30,790
ERV & COMPARTMENT	5,250
AFT INTERSTAGE	10,470
PROPULSION MODULE	11,165
STATION S/S	16,126
CONTINGENCY (25%)	22,255
EXPERIMENTS	44,100
TOTAL	188,965
UNALLOCATED	59,035
	248,000

BOEING

BASELINE CONFIGURATION
(INTERNAL ARRANGEMENT)

ORIENTATION: EARTH-BELLY DOWN
PRESSURIZED VOLUME: 15,388 FT^3
UNPRESSURIZED VOLUME: 16,300 FT^3
GROSS FLOOR AREA: 1,662 FT^2

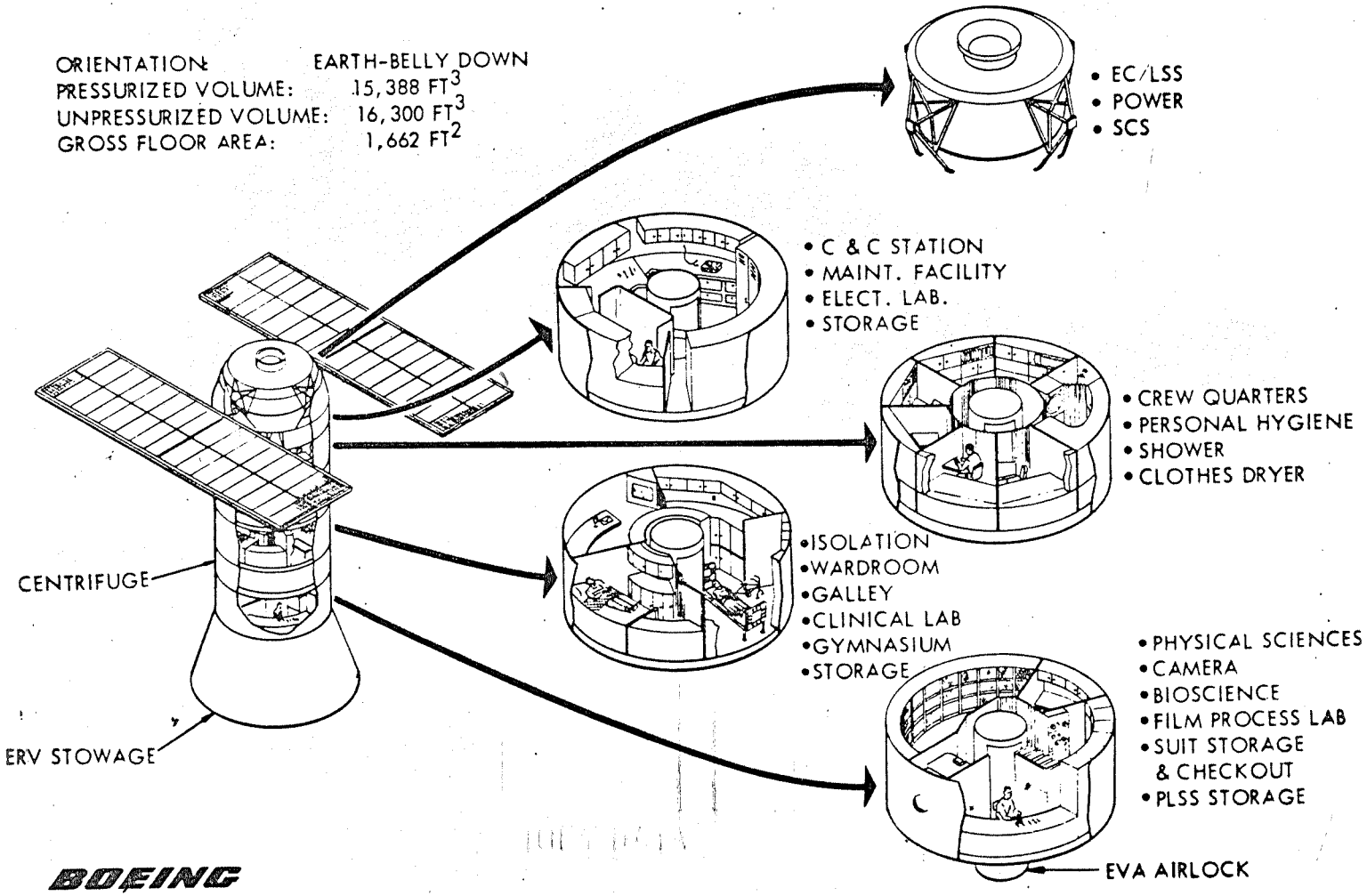

BOEING

BASELINE RESUPPLY VEHICLE

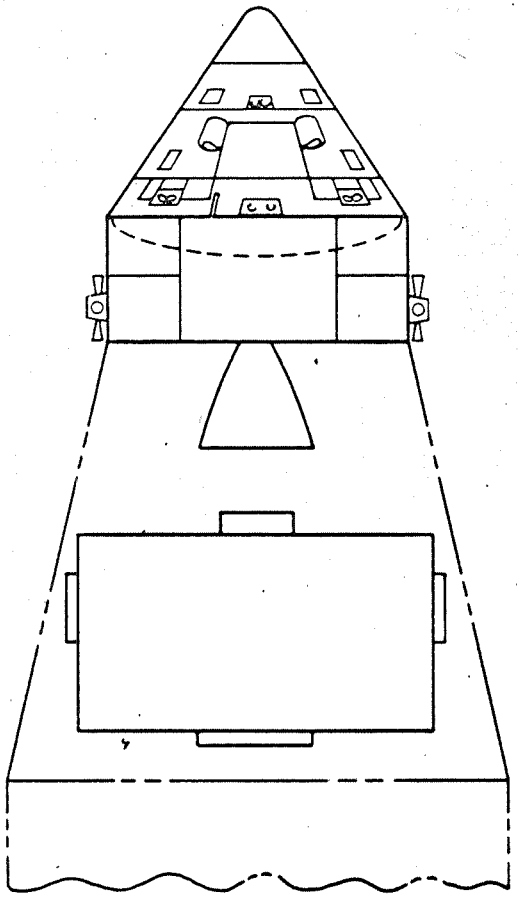

WEIGHT STATEMENT

COMMAND MODULE	13,000
PROPULSION	3,277
PROPELLANT	3,360
INTERSTAGE	1,330
CARGO MODULE STRUCT.	2,770
CARGO	12,319
CONTINGENCY (25% - PROP. MOD., INTERSTAGE, CARGO STRUCTURE)	1844
TOTAL	37,900

BOEING

INTER-RELATIONSHIP OF MAJOR VARIABLES

	ARRANGEMENT				SUB-SYSTEMS			UTILIZATION					
	SENSOR LOCATION	DOCKING PROVISIONS	TRAFFIC PATTERNS	RADIATOR LOCATION	COMMUN-ICATIONS	ATTITUDE CONTROL	SOLAR ARRAY	WEIGHT	VOLUME	OPERATIONAL COMPLEXITY	VERSATILITY	SAFETY	COST
ORIENTATION	X			X	X	X	X	X		X	X		
DIAMETER	X	X	X			X		X	X		X	X	
PRESSURE		X						X		X		X	
LAUNCH MODE (MANNED/UNMANNED)								X		X		X	X
RESUPPLY VS NO RESUPPLY								X	X		X		X
S/S MODULARIZATION LEVEL		X	X	X		X	X			X	X	X	
EXPERIMENT MOUNTING	X	X			X	X		X	X	X	X		

BOEING

STUDY SELECTION FLOW

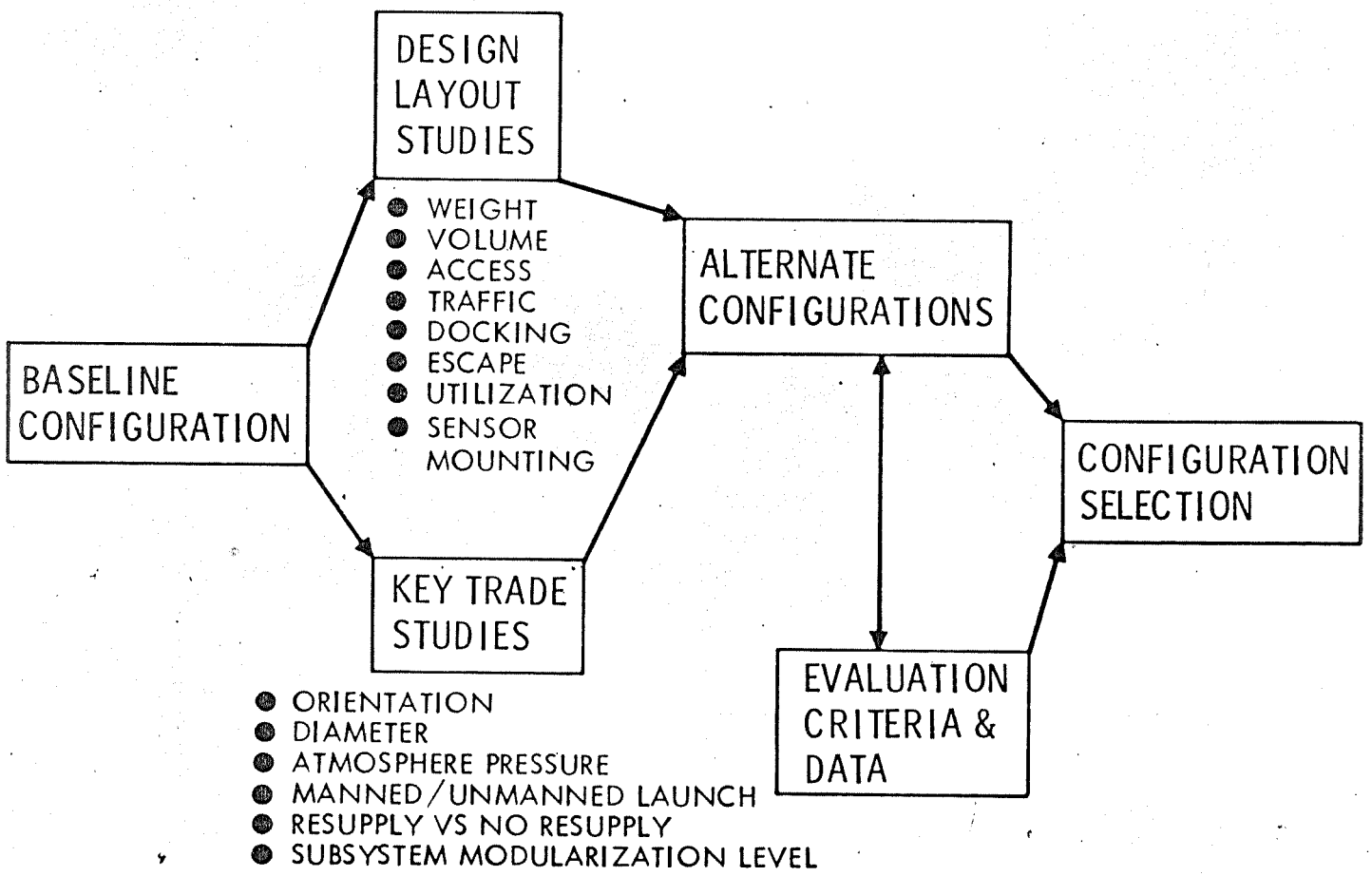

BOEING

SPACECRAFT ORIENTATION

BOEING

SENSOR POINTING REQUIREMENTS

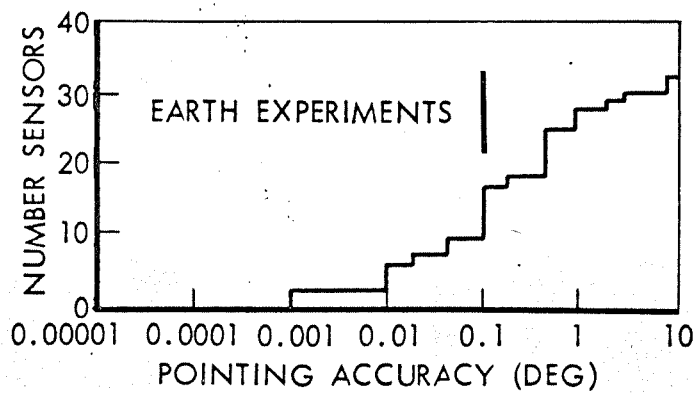

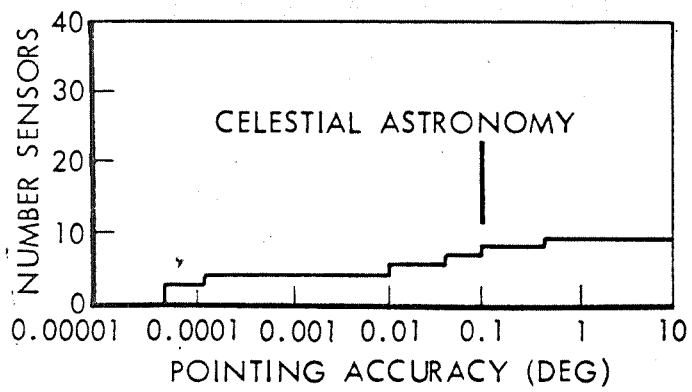

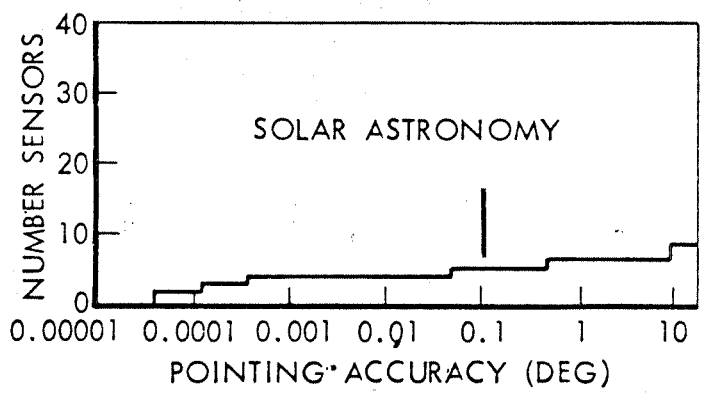

BOEING

SENSOR LOCATION

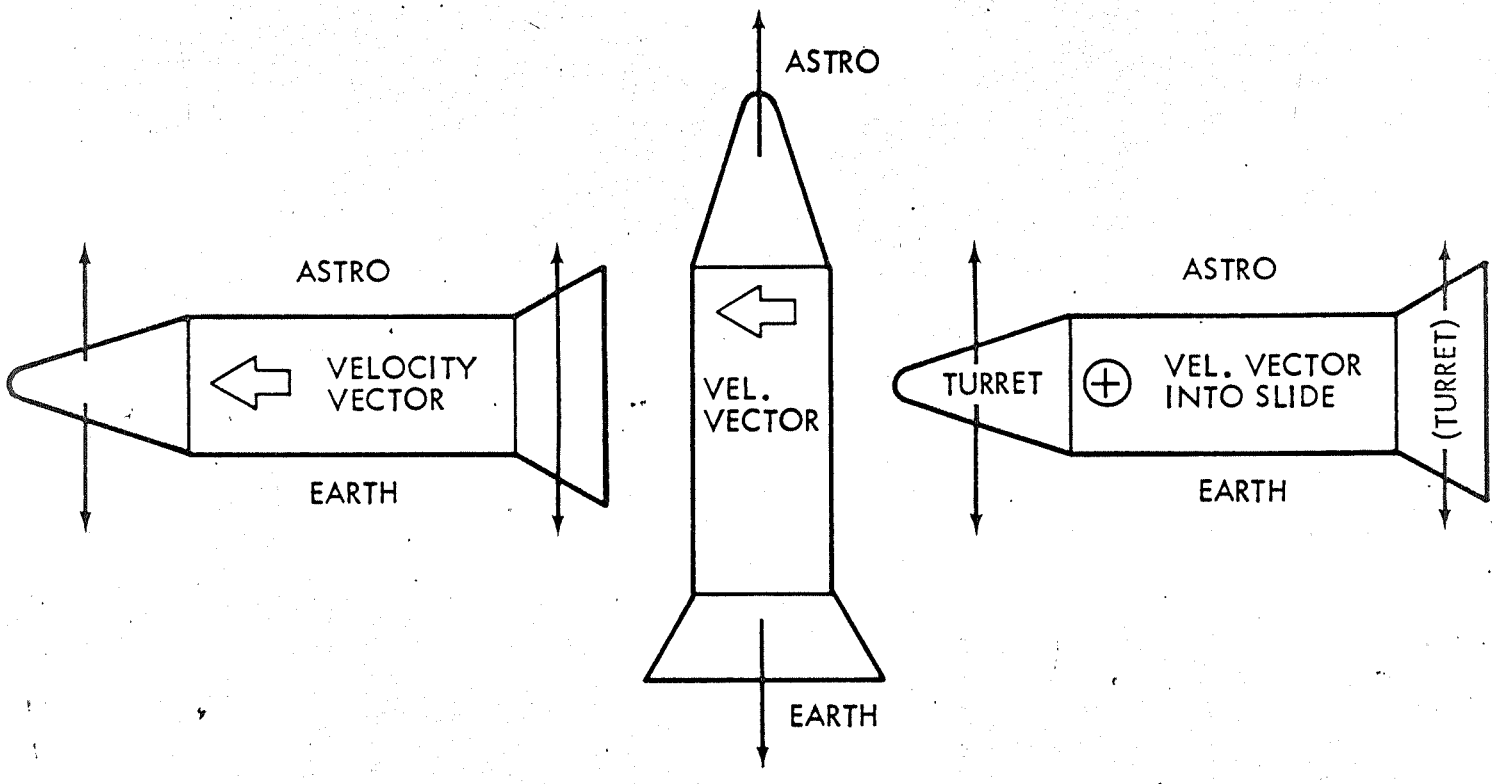

BOEING

INITIAL ORIENTATION SCREENING

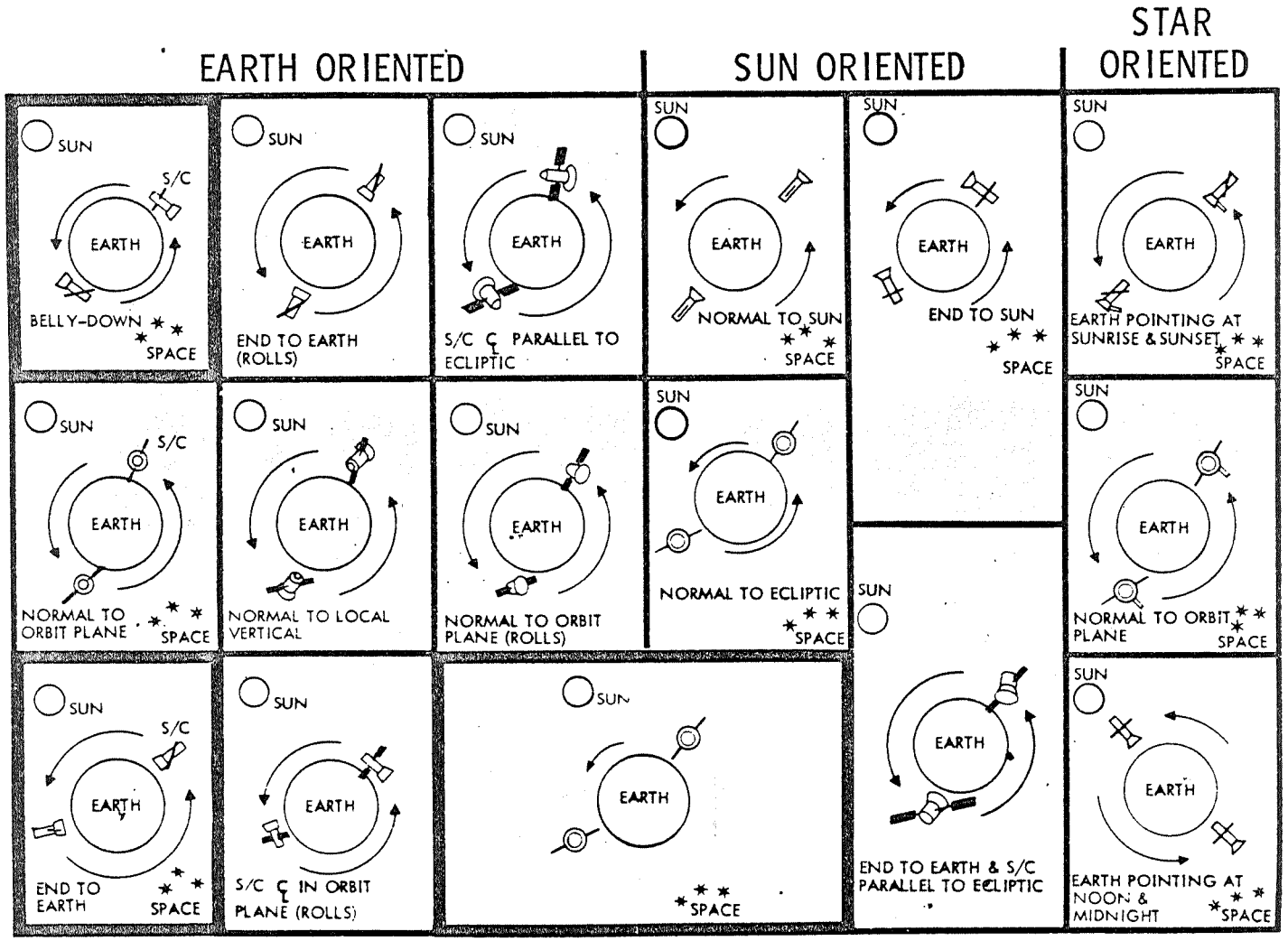

BOEING

CANDIDATE MODES

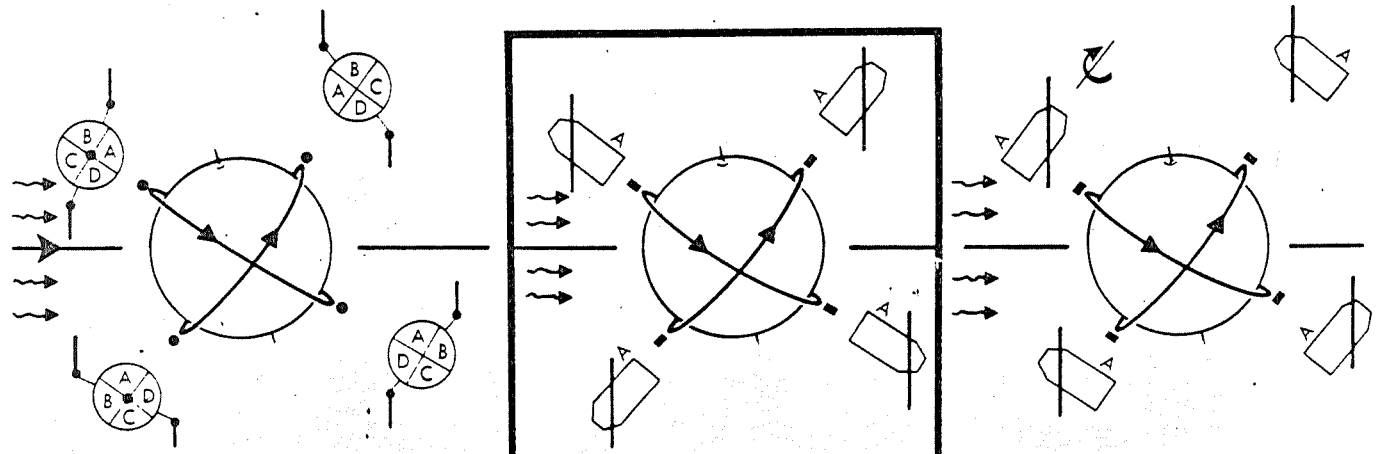

	MODE 1 BELLY DOWN S/C ℄ IN ORBIT PLANE	MODE 3 END DOWN S/C ℄ IN ORBIT PLANE	MODE 17 NORMAL TO ORBIT PLANE S/C ROLL TO TRACK SUN
ORBIT KEEPING FUEL (LBS PER 90 DAYS)	90/250	200/300	200/300
CMG FT LB SEC MOMENTUM	1,050	816	1,720
R C FUEL (LBS PER 90 DAYS)	270	368	230
* CELESTIAL SENSORS	< HEMISPHERICAL VIEW 2-AXIS GIMBAL	> HEMISPHERICAL VIEW TWO-AXIS GIMBAL	< HEMISPHERICAL VIEW TWO-AXIS GIMBAL
* SOLAR SENSORS	TWO-AXIS GIMBAL	TWO-AXIS GIMBAL	SINGLE-AXIS GIMBAL (COARSE POINTING) TWO-AXIS (FINE POINTING)
* EARTH SENSORS	FIXED (COARSE POINTING)	FIXED (COARSE POINTING)	360° TURRET REQUIRED
SOLAR PANELS	TWO-AXIS GIMBAL	TWO-AXIS GIMBAL	ONE-AXIS GIMBAL
THERMAL	COMPATIBLE WITH INTEGRAL RADIATORS	BEST - COMPATIBLE WITH INTEGRAL RADIATORS	COMPATIBLE WITH INTEGRAL RADIATORS

BOEING

SPACECRAFT DIAMETER

BOEING

VOLUME VS DIAMETER

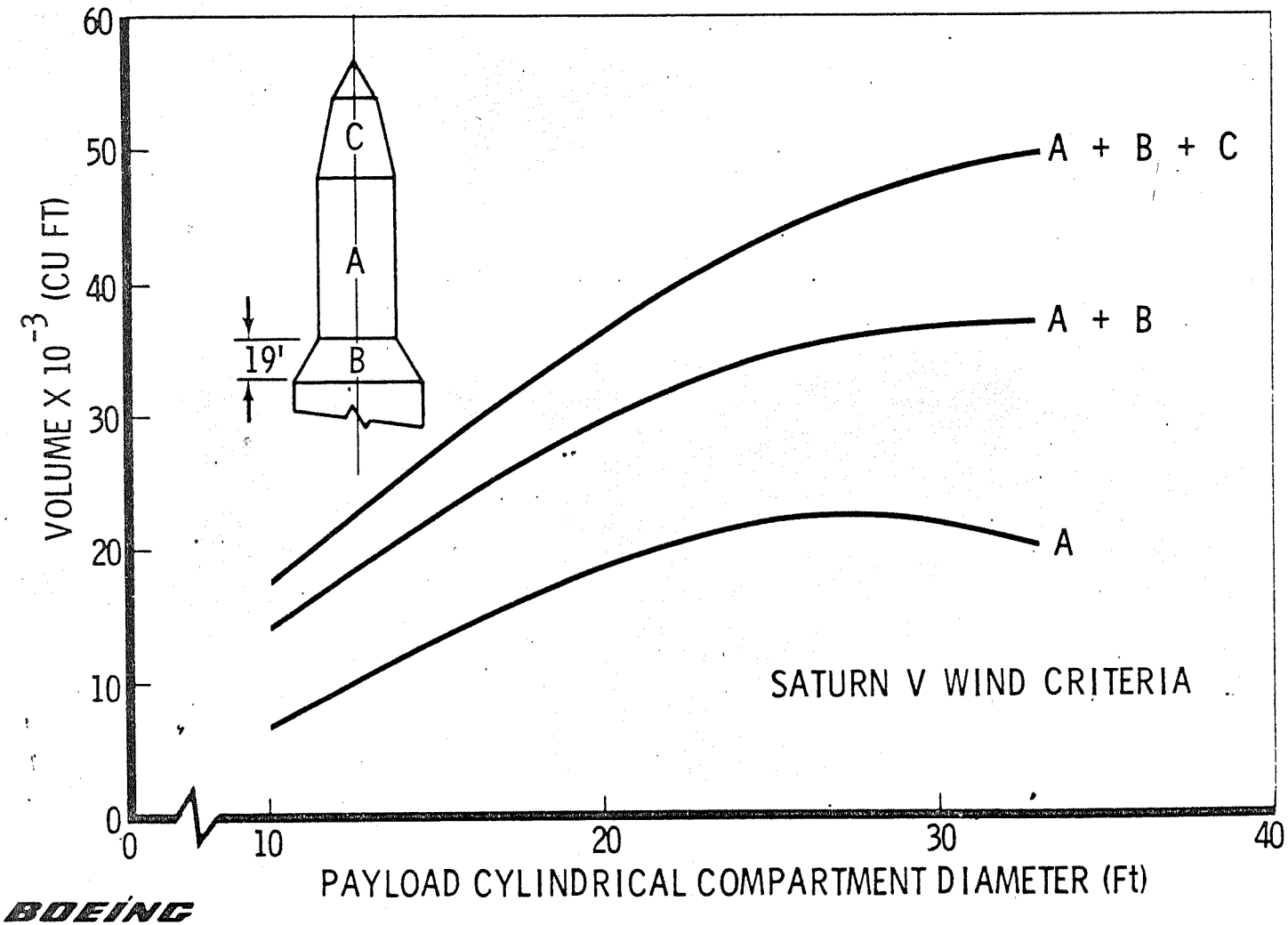

BOEING

TYPICAL VOLUME REQUIREMENTS

	EQUIPMENT	VOLUME REQUIRED (CU FT)
PRESSURIZED	CENTRIFUGE	1,305
	EXPERIMENTS	5,910
	MAINTENANCE	600
	SUBSYSTEMS PLUS STORAGE	
	STATION	949
	BSM	1,550
	ACCESS, TRANSFER, & STRUCTURE	6,874
	TOTAL	17,188
UNPRESSURIZED	EXPERIMENTS	
	EARTH	3,100
	ASTRO	5,460
	ERV	4,350
	EXPENDABLES	650
	SOLAR PANELS	2,110
	CLEARANCES & LOST VOLUME	5,000
	TOTAL	20,670

BOEING

VOLUME COMPARISON

	REQUIRED	BASELINE	MAXIMUM 22 FEET	MAXIMUM 33 FEET
PRESSURIZED VOLUME (CU FT)	17,188	15,388		
UNPRESSURIZED VOLUME (CU FT)	20,670	17,290		
TOTAL VOLUME (CU FT)	37,858	32,678	37,900	49,500

BOEING

STRUCTURAL WEIGHT EFFICIENCY

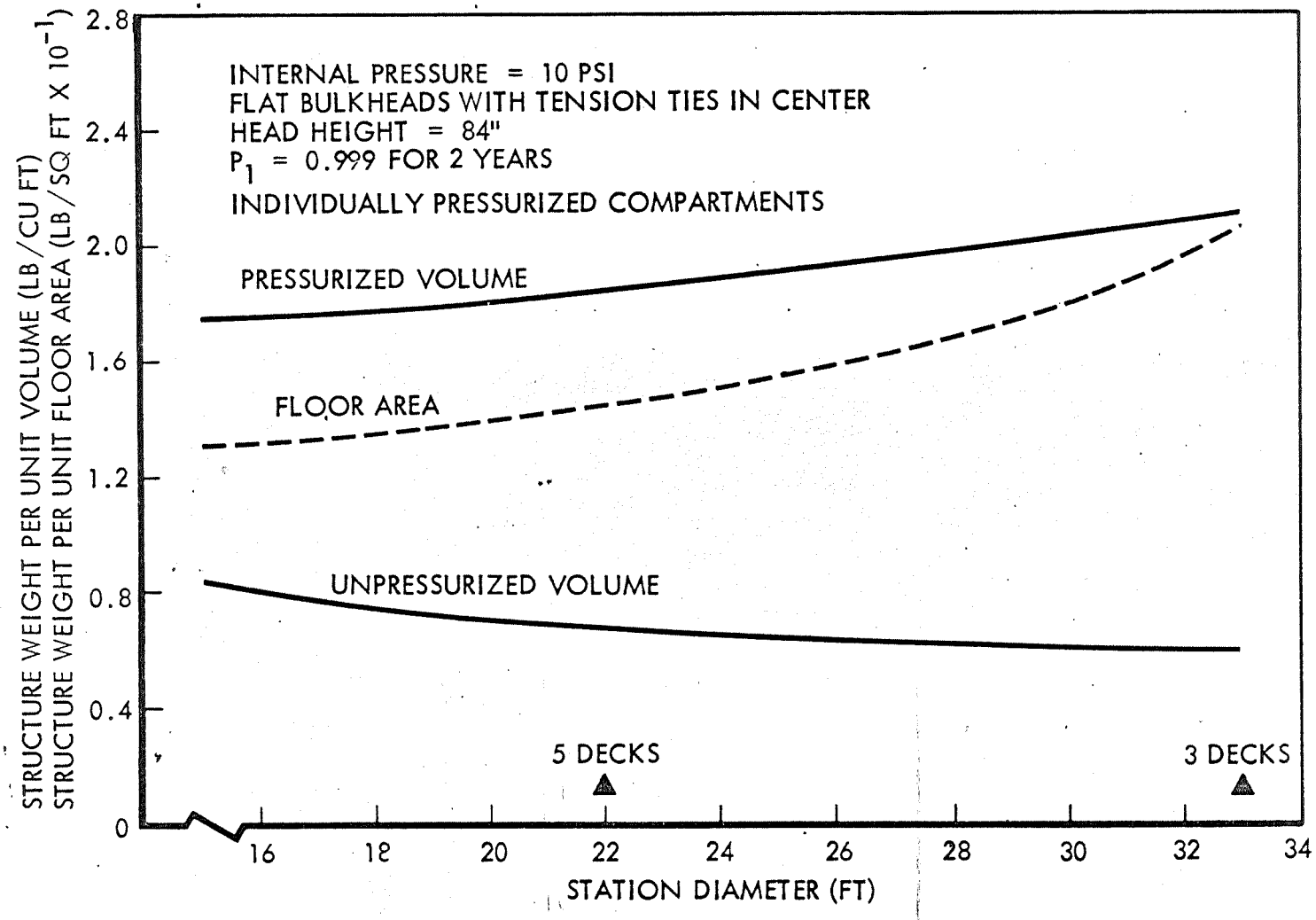

BOEING

TRAFFIC PATTERNS

33' DIA
(2 CREW MEMBERS
FOR 10 DAYS)

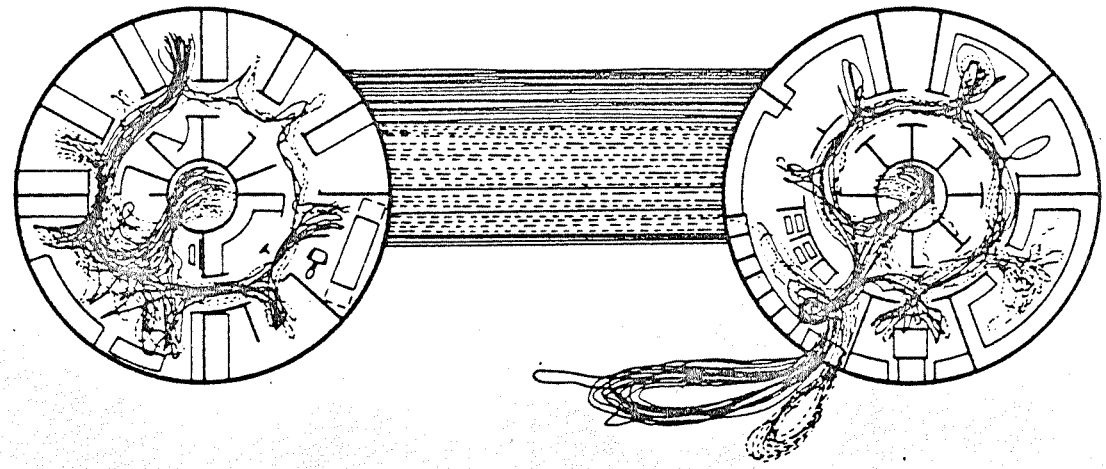

22' DIA
(2 CREW MEMBERS
FOR 10 DAYS)

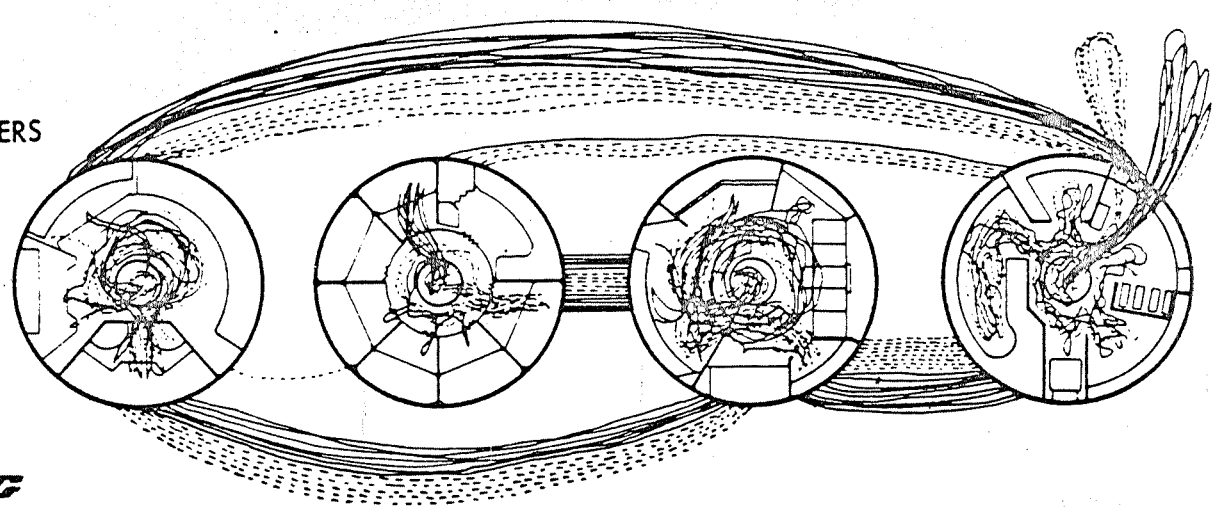

BOEING

DIAMETER SELECTION SUMMARY

NOMINAL DIAMETER (FT)	MAX. TOTAL VOLUME (CU FT)	VOLUME PER DECK (CU FT)	TRAFFIC PATTERNS	CONFIG. VERSATILITY	LAUNCH VEHICLE COMPAT-IBILITY	TRANS-PORT-ABILITY	GROUND TEST FACILITIES
10	17,500	614	INADEQUATE AREA	INADEQUATE	ALL	RAIL TRUCK AIR BARGE	OK
15	27,500	1,380	EXCESSIVE DECK TO DECK	INADEQUATE	ALL	AIR BARGE	OK
22	37,900	2,970	HIGH DECK TO DECK	ACCEPTABLE	ALL BUT TITAN III	AIR BARGE	OK
33	49,500	6,700	MINIMUM DECK TO DECK	BEST	SIC/SII ONLY	BARGE	OK

BOEING

ATMOSPHERIC PRESSURE LEVEL

BOEING

WEIGHT VS PRESSURE LEVEL

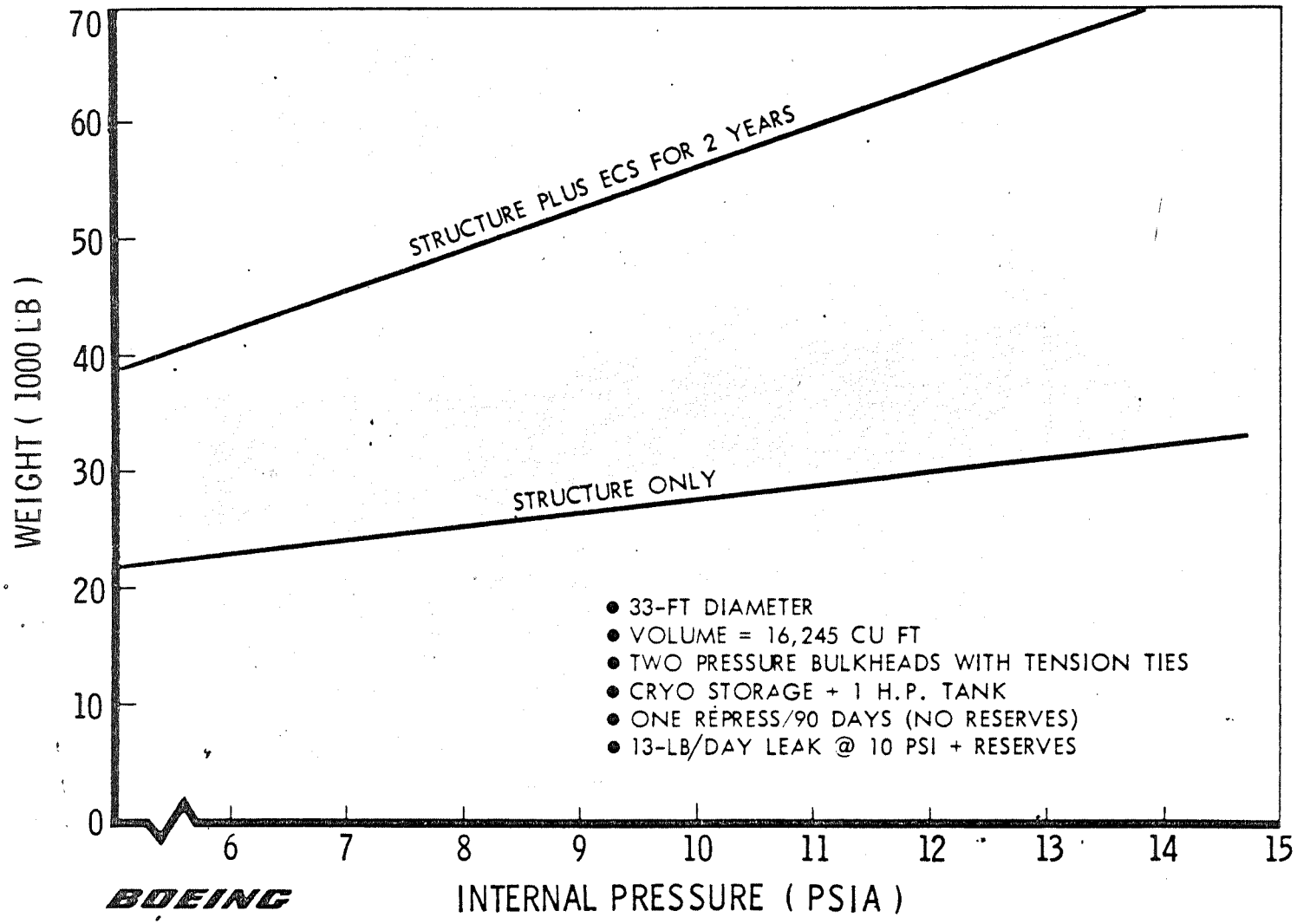

BOEING

PRESSURE CHANGE EFFECTS

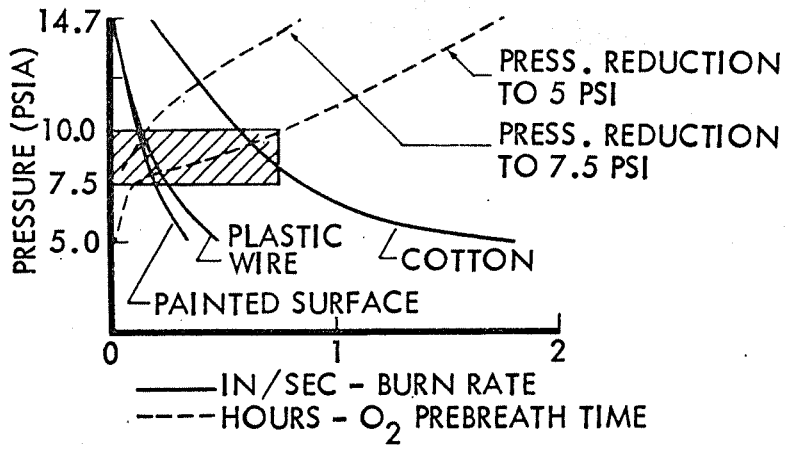

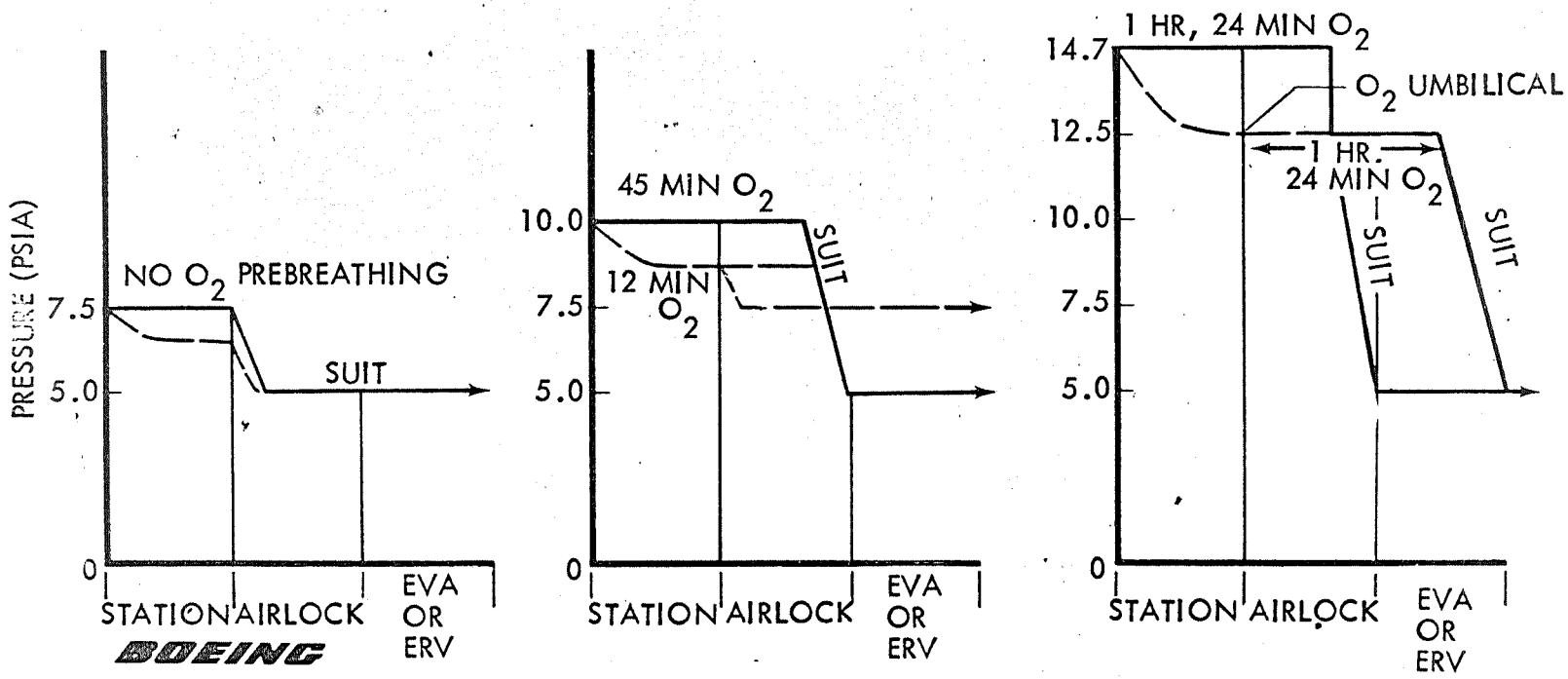

BOEING

PRESSURE LEVEL SELECTION

PRESSURE LEVEL (PSI)	REL TO EARTH	WT. OF PRESS. STRUCT (LB)	WT. OF ECS & SUPPLY (LB)	SAFETY		OPERATIONAL COMPLEXITY EVA
				BURN RATE	ESCAPE	
7.5	1/2	25,000	22,500	+67%	GOOD	MINIMUM
10.0	2/3	27,500	29,000	+36%	MARGINAL	COMPLEX
14.7	1	33,500	39,000	+0%	POOR	HIGH

STATION DIAMETER 33 FT

BOEING

MANNED VS UNMANNED LAUNCH

BOEING

MANNED VS UNMANNED LAUNCH

	LAUNCHED BY	NO. OF LAUNCHES		RELATIVE COSTS			Δ PAYLOAD IN ORBIT (LB)
		R&D	OPERATIONS	R&D	OPERATIONS	TOTAL	
UNMANNED	SIC/SII	0	1 PLUS 1 SPARE	0.52	0.13	0.65	
UNMANNED	S1B	0	8 PLUS 1 SPARE	0	0.35	0.35	
UNMANNED	TOTAL	0	9 LAUNCHES 11 S/C	0.52	0.48	(BASE) 1.00	
MANNED	SIC/SII	3 PLUS 1 SPARE	1 PLUS 1 SPARE	0.91	0.13	1.04	-12,250
MANNED	S1B	0	7 PLUS 1 SPARE	0	0.30	0.30	-14,160
MANNED	TOTAL	3 LAUNCHES 4 S/C	8 LAUNCHES 10 S/C	0.91	0.43	1.34	-26,410

- NO R&D COSTS FOR S1B OR SIC/SII
- ALL S1B LAUNCHES ASSUME MANNING CAPABILITY
- ERV VEHICLES (GFE)
- EXPERIMENT COSTS NOT INCLUDED (GFE)

BOEING

RESUPPLY VS NO RESUPPLY

EXPENDABLE REQUIREMENTS

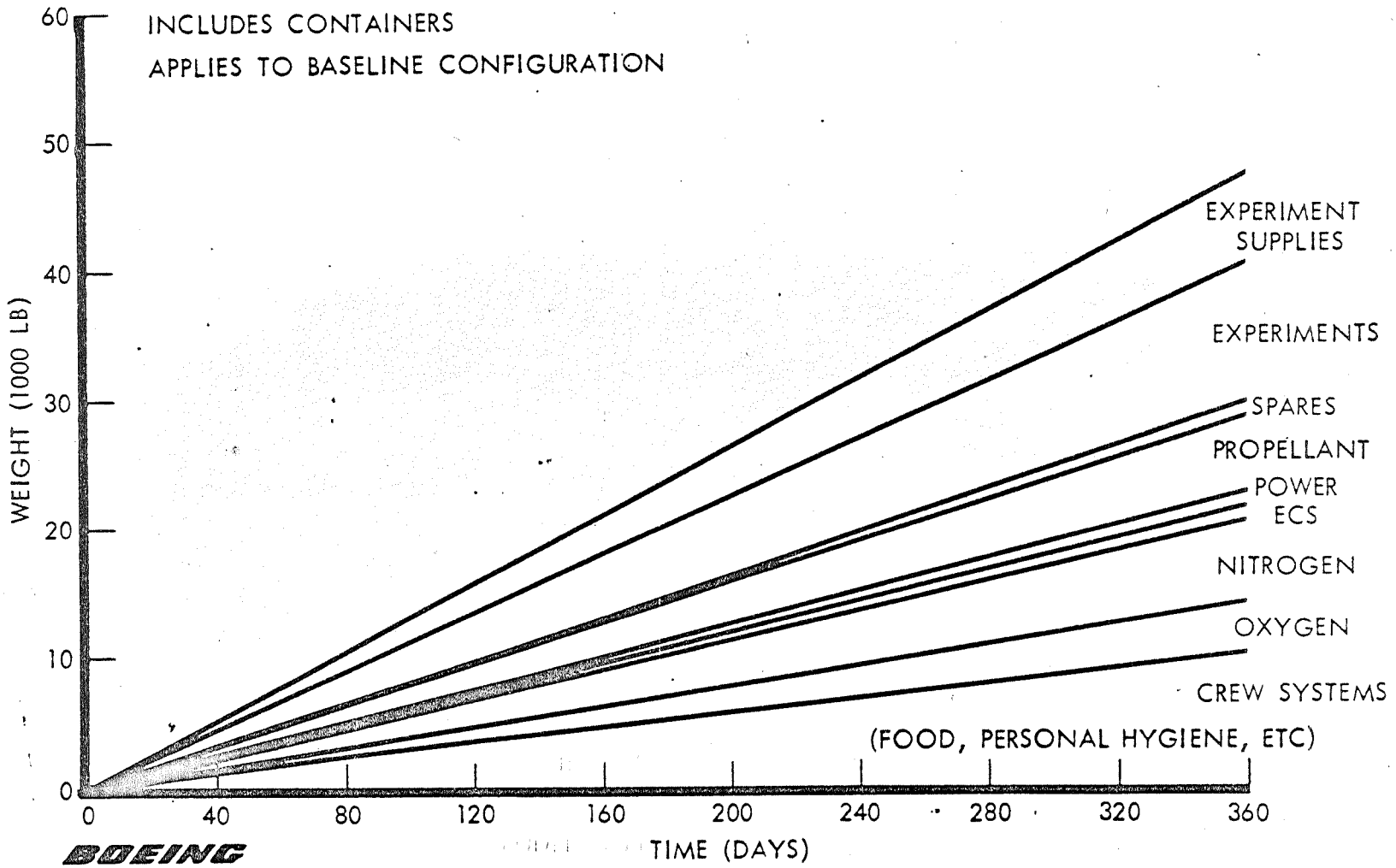

RESUPPLY WEIGHTS COMPARISON

90-DAY RESUPPLY*		ITEM	NO RESUPPLY (1-YEAR LIFE)
INITIAL LAUNCH	RESUPPLY VEHICLE		
1,736 - 2,155	1,002 - 1,164	OXYGEN	4,742 - 5,647
2,445 - 2,978	1,589 - 1,851	NITROGEN	7,212 - 8,531
1,826	1,461	FOOD	6,209
210	168	MEDICAL	714
936	936	PRESSURE SUIT	3,744
340	272	ECS	1,156
6,190	0	PROPELLANT	6,190
0	304	POWER	912
3,564	583	SPARES	5,940
44,100	2,710	EXPERIMENT **	52,230
3,027	1,782	EXPER. SUPPLIES **	8,373
64,374 - 65,326	10,807 - 11,231	TOTAL	97,422 - 99,646
118,831 - 161,105	25,581	FIXED	118,831 - 161,105
64,795 - 21,569	1,512 - 1,088	AVAILABLE	31,747 - (-12,751)

BOEING *BASED ON 1-YEAR MISSION ** DOES NOT INCLUDE RADIATION SHIELDING

SYSTEM COST COMPARISON

	90-DAY RESUPPLY	NO RESUPPLY (1 YR)
INITIAL LAUNCH	BASE	BASE
MANNING LAUNCH	+ $553 MILLION	+ $793 MILLION (INCL. ONE SPARE)
RESUPPLY LAUNCHES (INCL. ONE SPARE)	+ $962 MILLION	N.A.
TOTAL	+ $1,515 MILLION	+ $793 MILLION

BOEING

NO LAUNCH VEHICLE R&D

IMPACT ON EXPERIMENTS

	90-DAY RESUPPLY	NO RESUPPLY (1 YR)
EXPERIMENT WEIGHT CAPABILITY (INITIAL LAUNCH)	111,922/68,696	92350/47852
EXPERIMENT CHANGES OR ADDITIONS	ADD AS REQUIRED EACH 90 DAYS	NONE POSSIBLE
DATA RETURN	USE MANNING MODULE	SPECIAL CAPSULE REQUIRED
FILM	RESUPPLY EACH 90 DAYS	EXCESSIVE RADIATION SHIELDING
CREW ROTATION	CAPABLE OF ROTATING UP TO 6 EACH 90 DAYS	RETURN BY ERV ONLY DURING MISSION

BOEING

INTEGRATED VS BSM SUBSYSTEM

CONSIDERATIONS

• TEST	MINIMIZE SYSTEM LEVEL TESTS
• TANKS	OUTSIDE OF PRESSURIZED VOLUME
• INTERFACES	GROUP SUBSYSTEMS OR COMPONENTS TO SIMPLIFY AND MINIMIZE
• R/C ENGINES	MAXIMUM MOMENT ARM MINIMUM HEAT AND CONTAMINATION TO SOLAR ARRAY AND OPTICS
• SOLAR ARRAY AND RADIATORS	MINIMUM DRAG TORQUE MINIMUM EXPERIMENT INTERFERENCE MAXIMUM SEPARATION FROM DOCKING
• ATTITUDE CONTROL SENSORS	MINIMIZE ALIGNMENT ERRORS. PROVIDE REQUIRED VIEWING
• CMG	INSIDE OR OUTSIDE ACCEPTABLE

BOEING

BASIC SUBSYSTEM MODULE

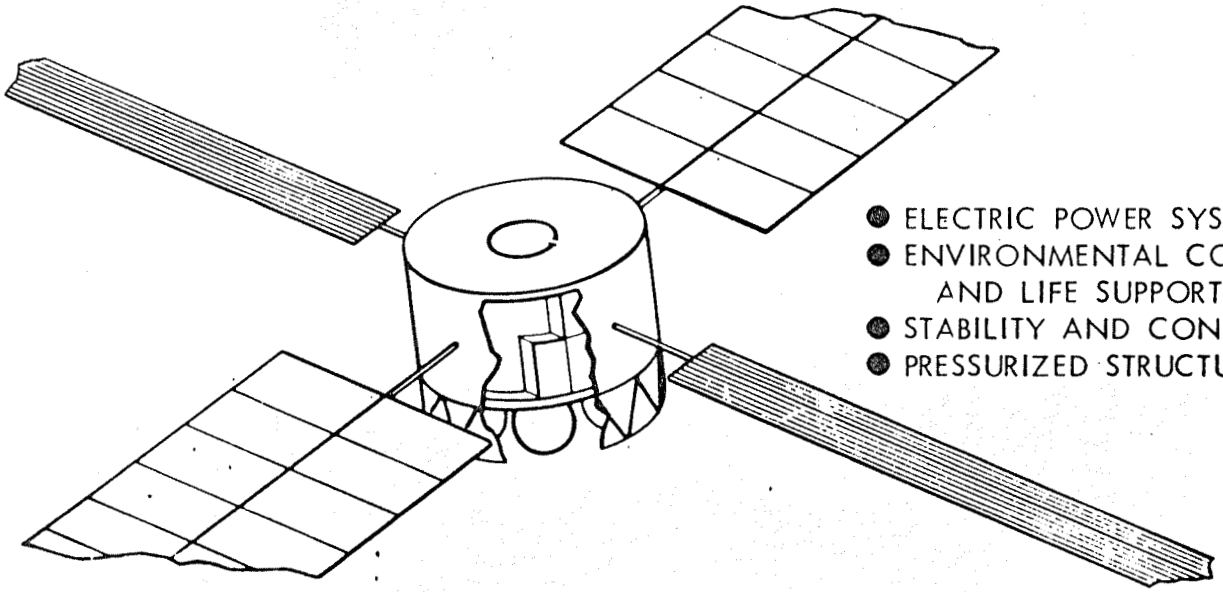

- ELECTRIC POWER SYSTEM
- ENVIRONMENTAL CONTROL AND LIFE SUPPORT SYSTEM
- STABILITY AND CONTROL SYSTEM
- PRESSURIZED STRUCTURE

LOCATIONS

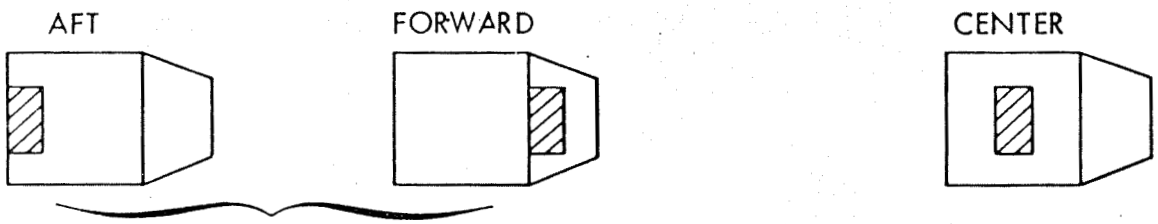

- CONSTRAINS ORIENTATION
- COMPLEX TRAFFIC PATTERN
- CONSTRAINS EXPERIMENT PACKAGING

- REACTION CONTROL UNACCEPTABLE
- COMPLEX STOWAGE OF SOLAR PANELS AND RADIATORS

BOEING

RECOMMENDED APPROACH

SUBSYSTEM LOCATION

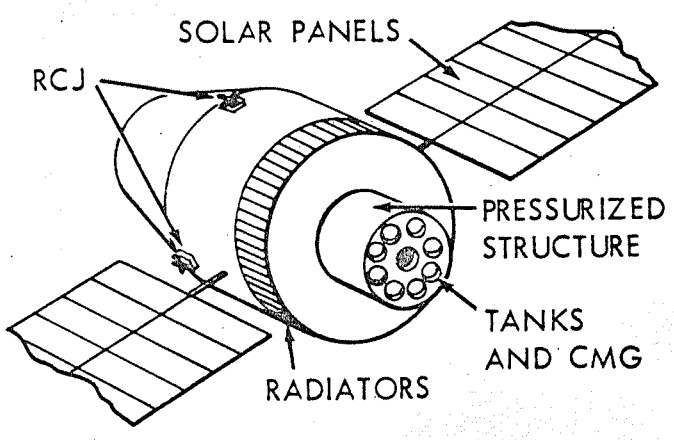

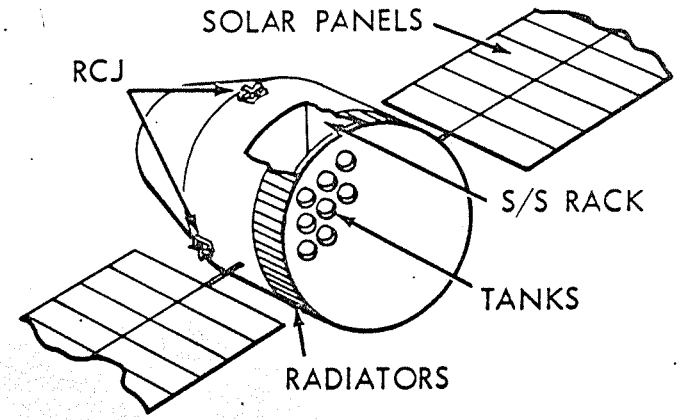

- SUBSYSTEMS GROUPED TO :
  - SIMPLIFY INTERFACES;
  - MINIMIZE INTERFACES;
  - MINIMIZE SYSTEM LEVEL TESTING.
- COMMON MOUNT FOR ATTITUDE CONTROL SENSORS
- RCJ MODULES LOCATED FOR MAXIMUM ARM AND MINIMUM EFFECT ON SOLAR PANELS AND EXPERIMENTS.
- SOLAR ARRAYS LOCATED TO MINIMIZE DRAG, EXPERIMENT INTERFERENCE, AND DOCKING INTERFERENCE.
- INTEGRAL RADIATORS.

BOEING

CONFIGURATION SELECTION RECOMMENDATION

BOEING

ALTERNATE CONFIGURATIONS

DIAMETER	LENGTH	ORIENTATION		
		BELLY DOWN	END DOWN	SUN
21.7	"MINIMUM"	2201 (BASELINE) 2101 MANNED		SIMILAR TO BELLY DOWN
	"MAXIMUM"	2202	2204 2203	
33	"MINIMUM"	3201		
	"MAXIMUM"	3304	3303 3305	

BOEING

ALTERNATE CONFIGURATION

NUMBER 984-2204

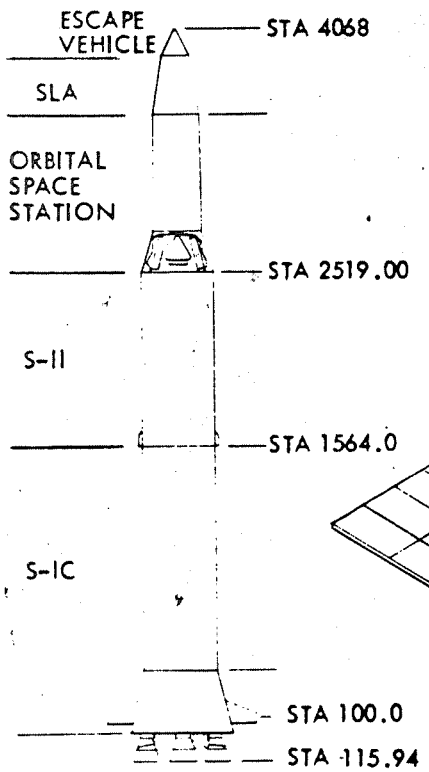

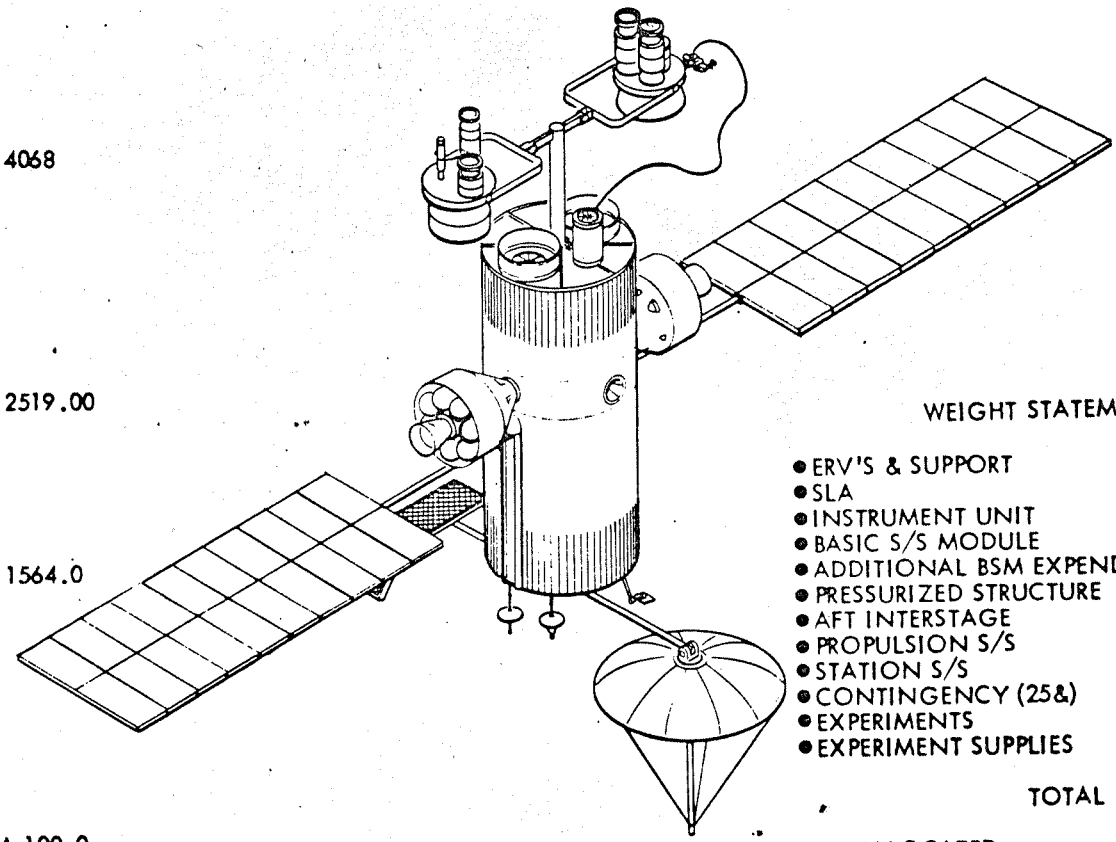

WEIGHT STATEMENT

• ERV'S & SUPPORT	24,000
• SLA	3,800
• INSTRUMENT UNIT	4,150
• BASIC S/S MODULE	25,800
• ADDITIONAL BSM EXPENDABLES	10,726
• PRESSURIZED STRUCTURE	32,840
• AFT INTERSTAGE	10,470
• PROPULSION S/S	11,165
• STATION S/S	16,136
• CONTINGENCY (25&)	22,160
• EXPERIMENTS	44,100
• EXPERIMENT SUPPLIES	3,027
TOTAL	208,774
• UNALLOCATED	39,226
	248,226

BOEING

ALTERNATE CONFIGURATION

NUMBER 984-2204

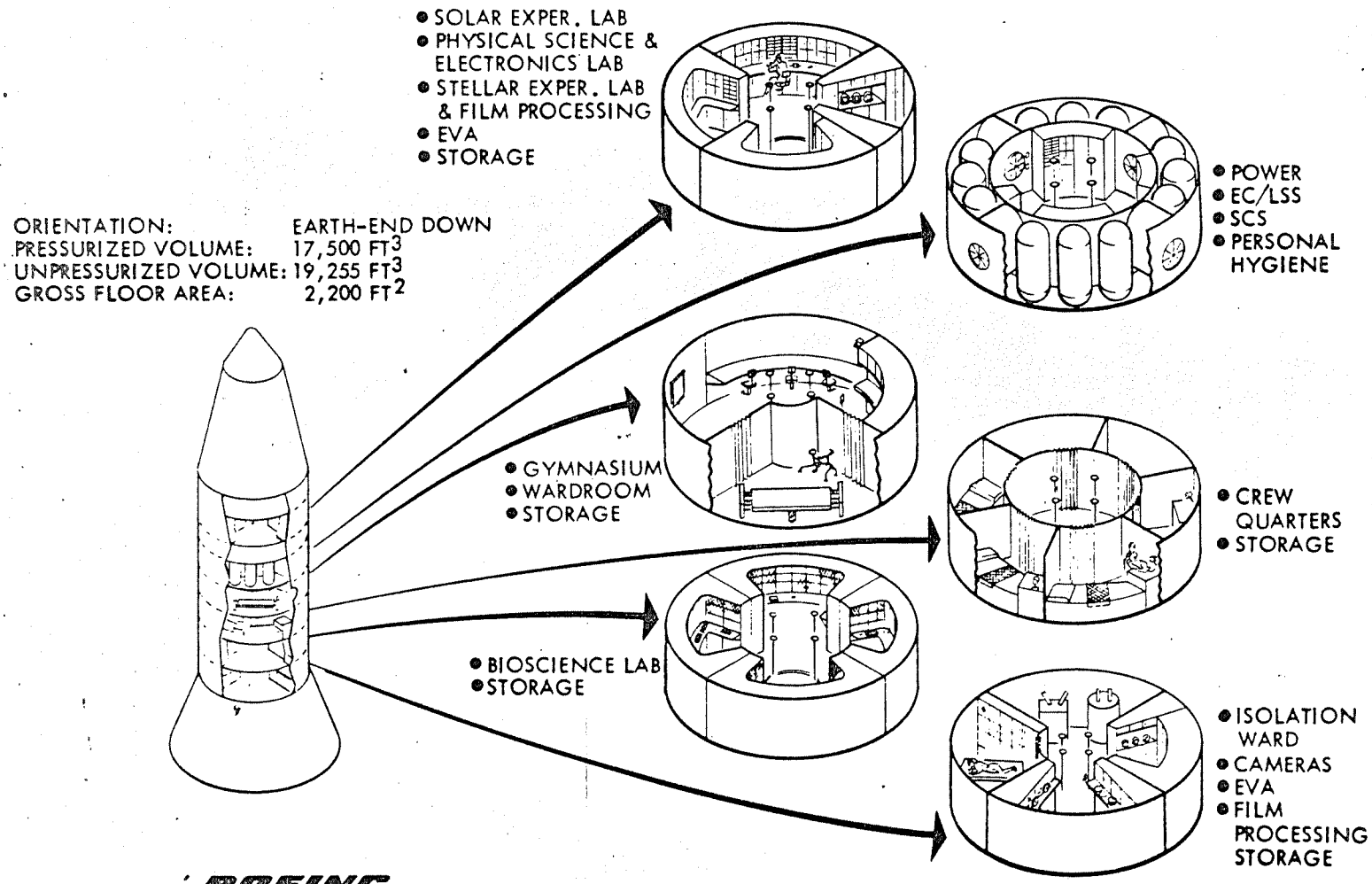

BOEING

ALTERNATE CONFIGURATION

NUMBER 984-2203

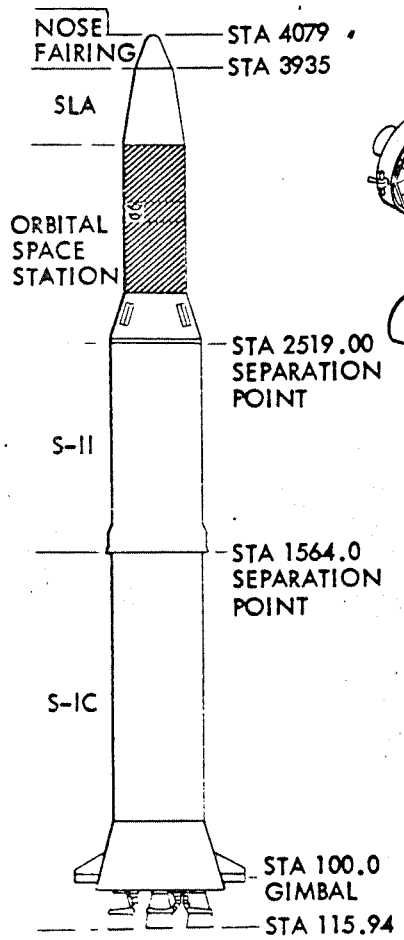

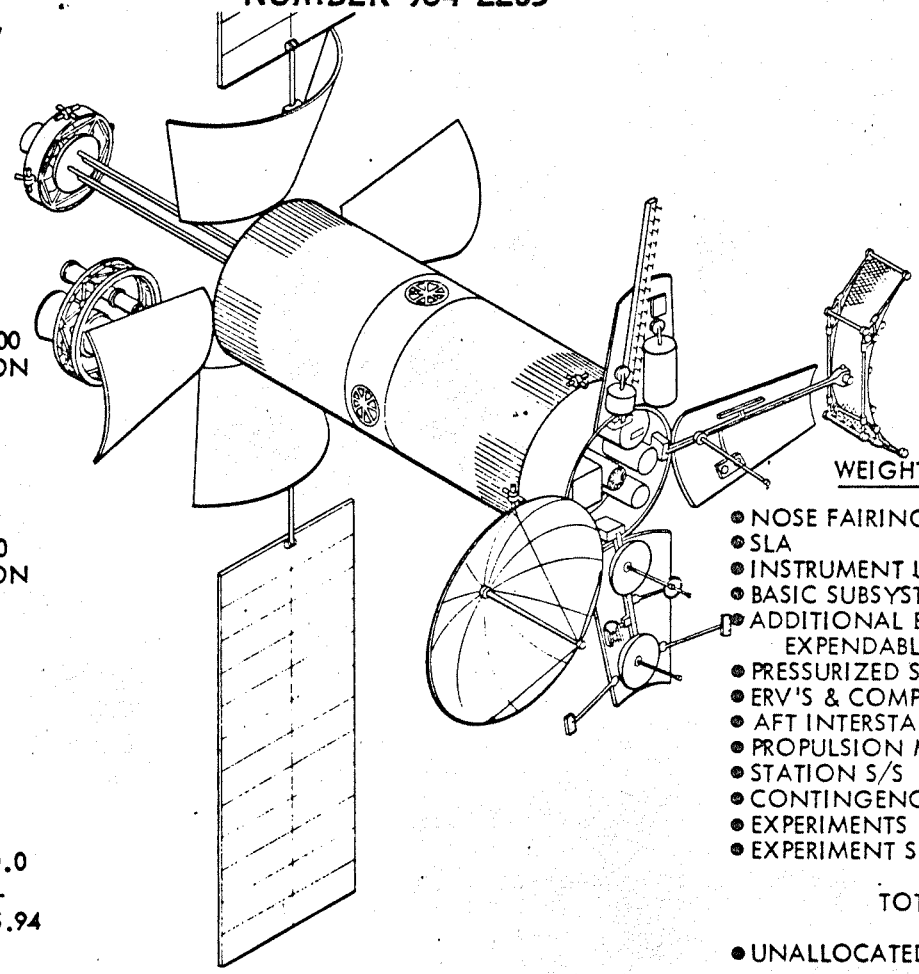

WEIGHT STATEMENT

• NOSE FAIRING	1,750
• SLA	3,800
• INSTRUMENT UNIT	4,150
• BASIC SUBSYSTEMS	23,030
• ADDITIONAL BSM EXPENDABLES	10,643
• PRESSURIZED STRUCTURE	34,460
• ERV'S & COMPARTMENT	5,250
• AFT INTERSTAGE	11,720
• PROPULSION MODULE	11,165
• STATION S/S	16,136
• CONTINGENCY (25) (25%)	23,685
• EXPERIMENTS	44,100
• EXPERIMENT SUPPLIES	3,027
TOTAL	192,916
• UNALLOCATED	55,084
	248,000

BOEING

ALTERNATE CONFIGURATION

NUMBER 984-2203

ORIENTATION: EARTH-NOSE DOWN
PRESSURIZED VOLUME: 16,600 FT^3
UNPRESSURIZED VOLUME: 22,870 FT^3
GROSS FLOOR AREA: 1,835 FT^2

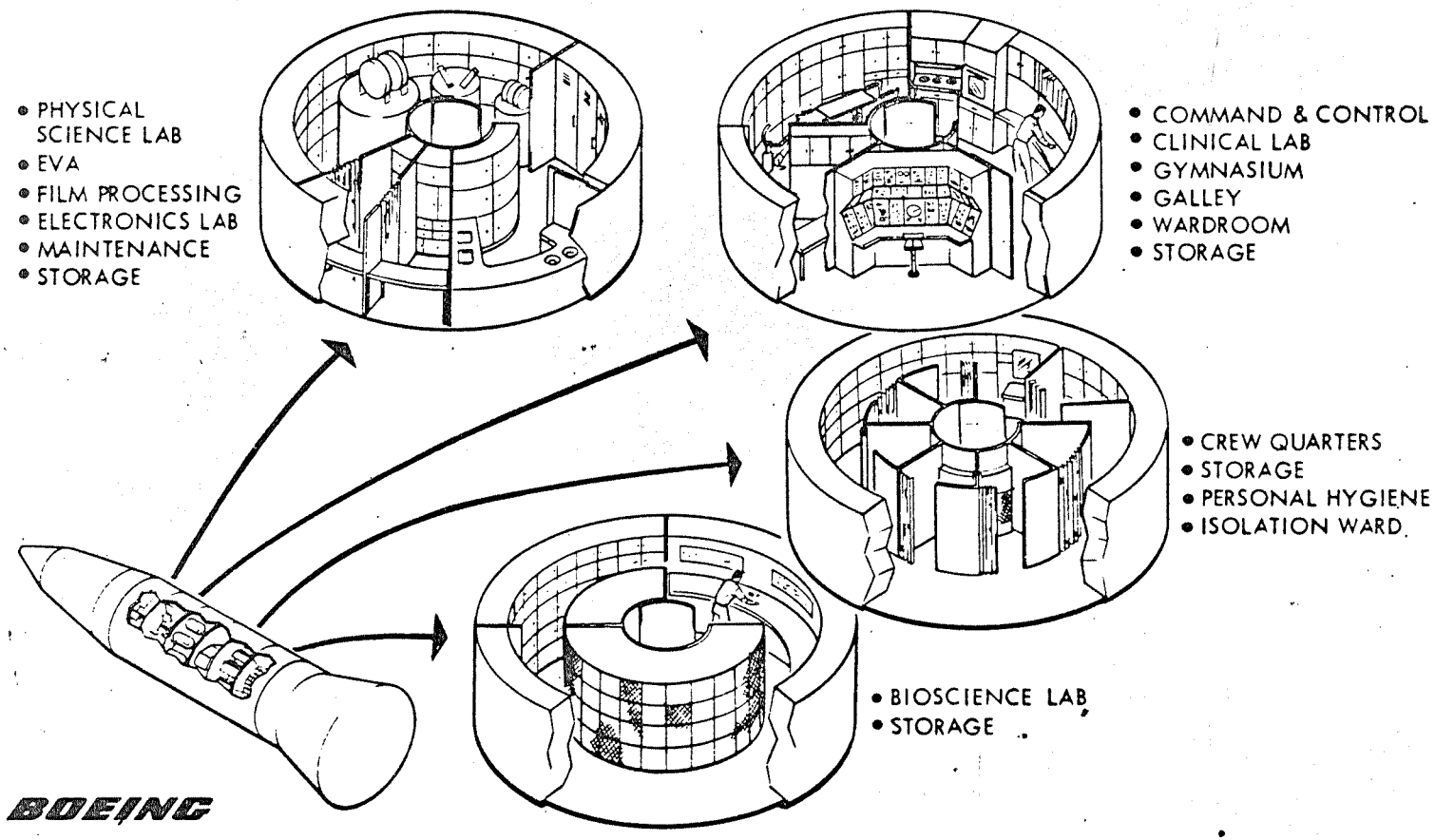

ALTERNATE CONFIGURATION

NUMBER 984-3201

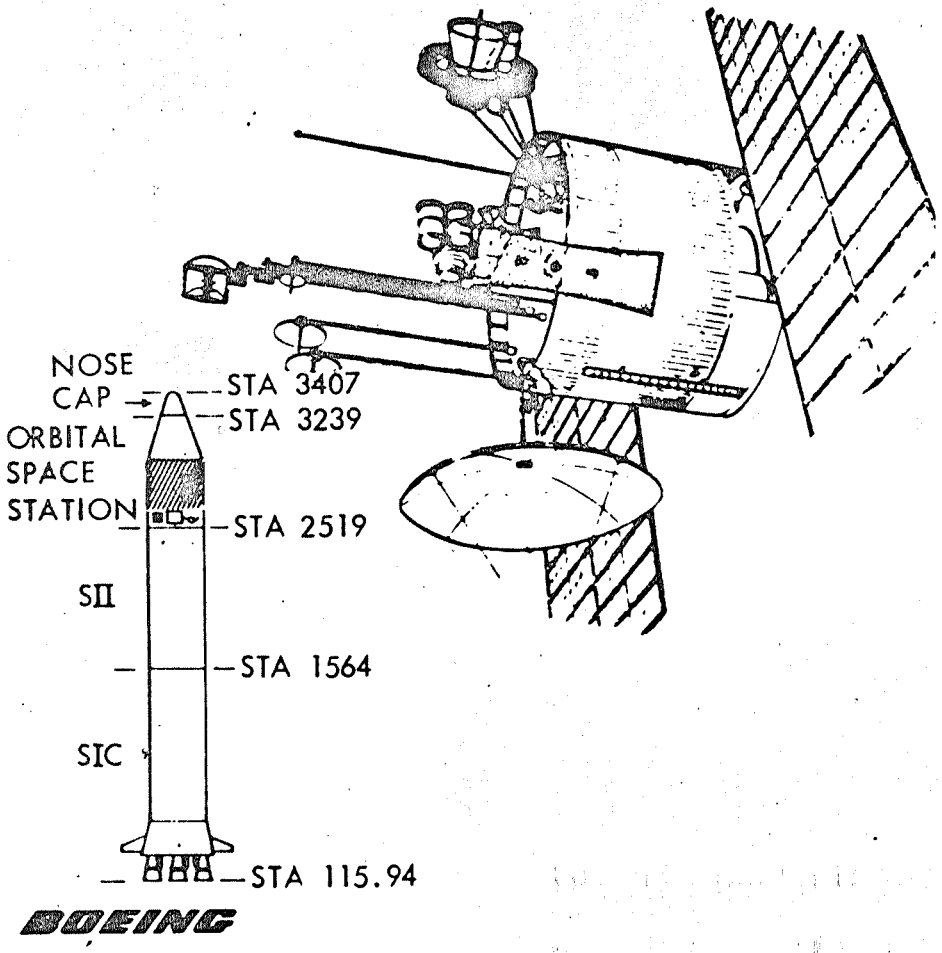

BOEING

WEIGHT STATEMENT

NOSE FAIRING	4,170
INSTRUMENT UNIT	4,150
FWD UNPRESSURIZED STRUCTURE	5,930
PRESSURIZED STRUCTURE	50,475
AFT PRESSURIZED STRUCTURE	6,730
PROPULSION S/S	11,165
BASIC SUBSYSTEM MODULE	25,800
ADDITIONAL BSM EXPENDABLES	11,016
ERV'S & SUPPORTS	5,250
STATION S/S	15,960
CONTINGENCY	27,324
EXPERIMENTS	44,100
EXPERIMENT SUPPLIES	3,027
TOTAL	203,932
UNALLOCATED	44,068
	248,000

ALTERNATE CONFIGURATION

NUMBER 984-3201

ORIENTATION:	EARTH-BELLY DOWN
PRESSURUZED VOLUME:	19,850 FT^3
UNPRESSURIZED VOLUME:	19,720 FT^3
GROSS FLOOR AREA:	1,653 FT^2

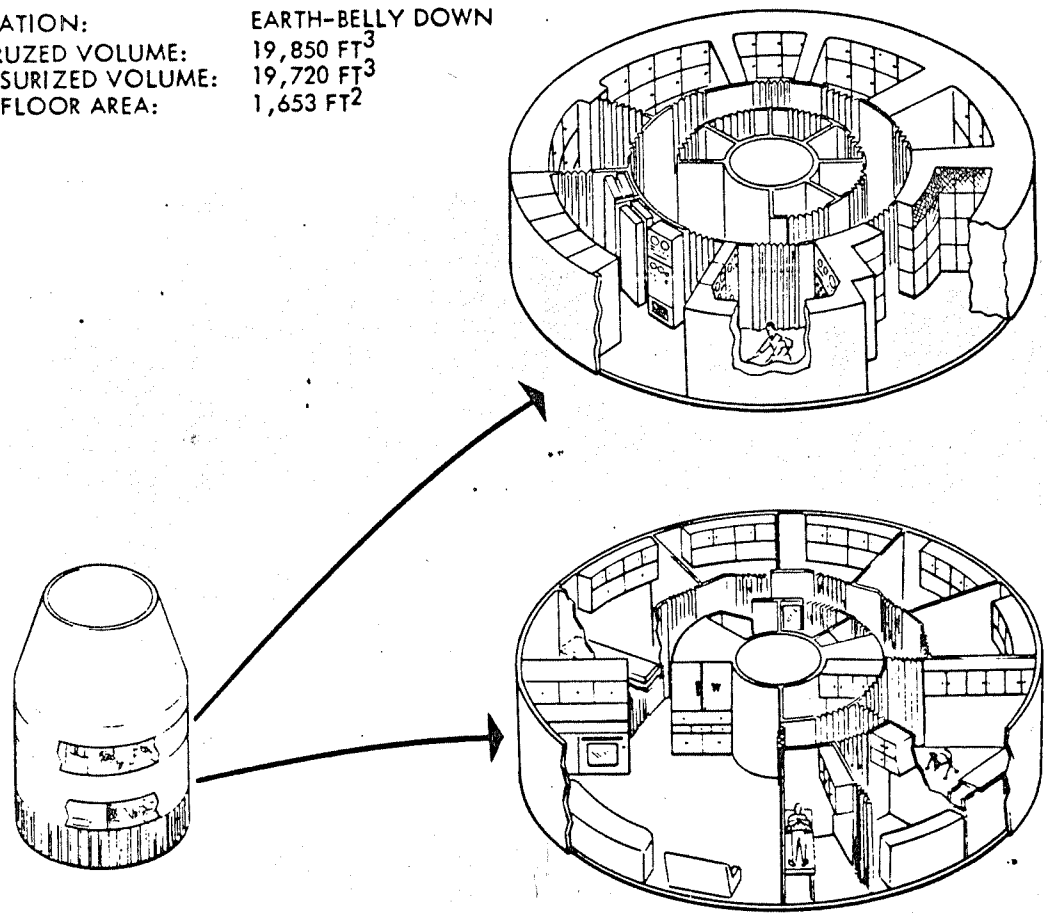

- COMMAND & CONTROL
- EVA
- ENGINEERING LAB
- PHYSICAL SCIENCE LAB
- FILM PROCESSING
- MAINTENANCE LAB
- ELECTRONICS LAB
- BIOSCIENCE LAB
- STORAGE

- ISOLATION WARD
- WARDROOM
- GALLEY
- CREW QUARTERS
- GYMNASIUM
- CLINICAL LAB
- PERSONAL HYGIENE
- STORAGE

BOEING

ALTERNATE CONFIGURATION

NUMBER 984-3205

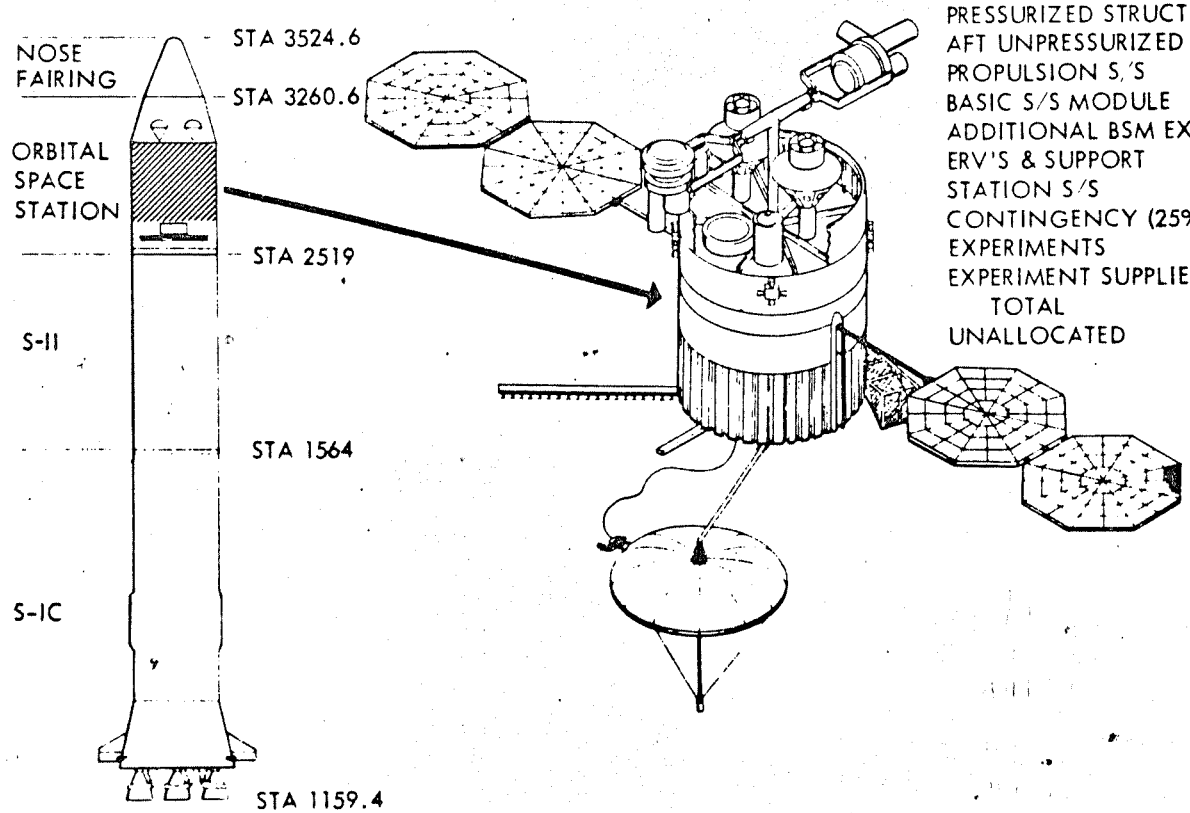

WEIGHT STATEMENT

NOSE FAIRING	4,170
INSTRUMENT UNIT	4,150
FWD UNPRESSURIZED STRUCTURE	5,930
PRESSURIZED STRUCTURE	40,875
AFT UNPRESSURIZED STRUCTURE	13,460
PROPULSION S/S	11,165
BASIC S/S MODULE	25,800
ADDITIONAL BSM EXPENDABLES	11,224
ERV'S & SUPPORT	25,400
STATION S/S	15,956
CONTINGENCY (25%)	26,935
EXPERIMENTS	44,100
EXPERIMENT SUPPLIES	3,027
TOTAL	232,192
UNALLOCATED	15,808
	248,000

BOEING

ALTERNATE CONFIGURATION

NUMBER 984-3205

ORIENTATION: EARTH-AFT END DOWN
PRESSURIZED VOLUME: 20,700 FT^3
UNPRESSURIZED VOLUME: 28,800 FT^3
GROSS FLOOR AREA: 1,653 FT^2

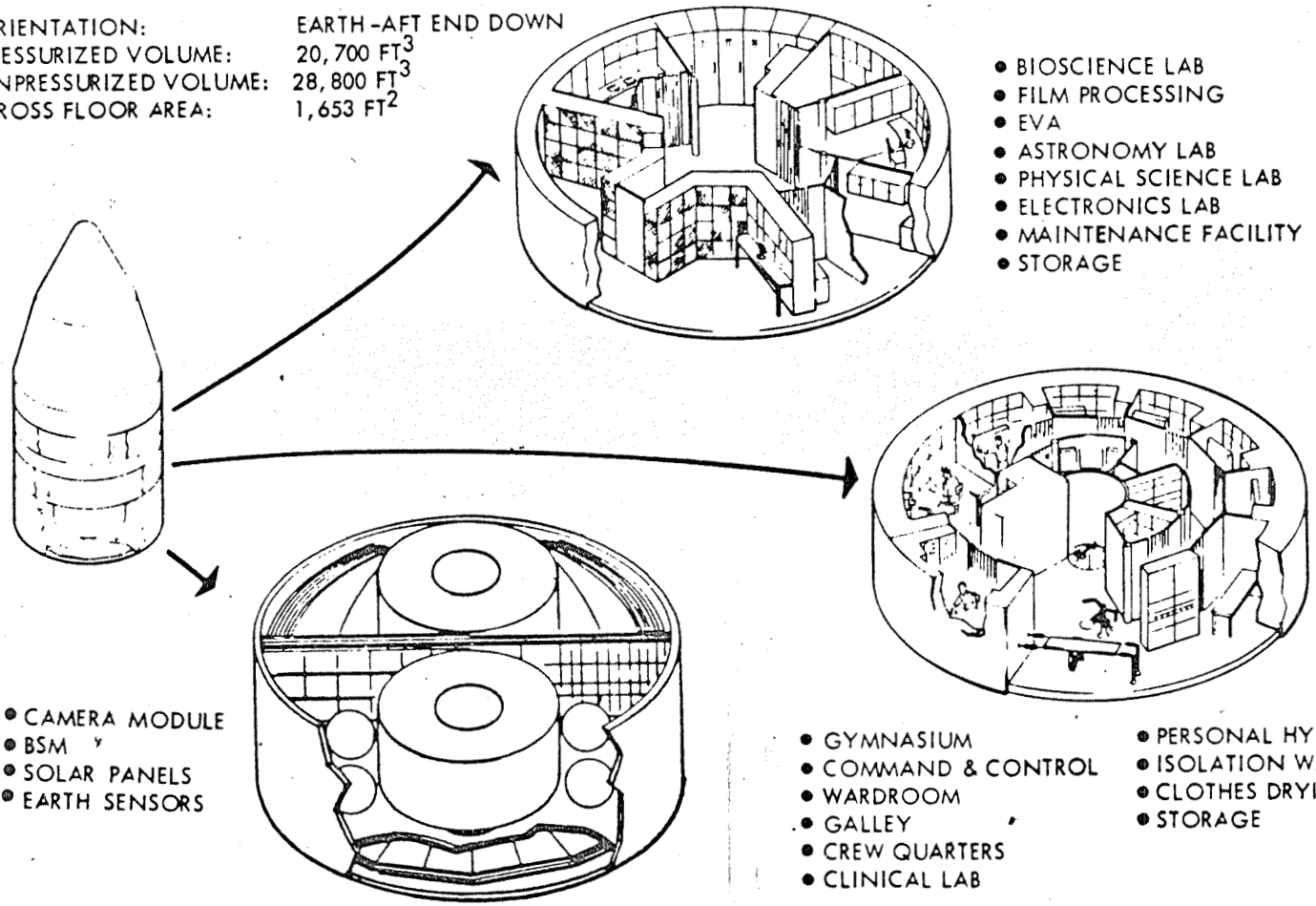

- BIOSCIENCE LAB
- FILM PROCESSING
- EVA
- ASTRONOMY LAB
- PHYSICAL SCIENCE LAB
- ELECTRONICS LAB
- MAINTENANCE FACILITY
- STORAGE

- CAMERA MODULE
- BSM
- SOLAR PANELS
- EARTH SENSORS

- GYMNASIUM
- COMMAND & CONTROL
- WARDROOM
- GALLEY
- CREW QUARTERS
- CLINICAL LAB

- PERSONAL HYGIENE
- ISOLATION WARD
- CLOTHES DRYING
- STORAGE

BOEING

ALTERNATE CONFIGURATION FEATURES

CONFIGURATION	DIA (FT)	VOLUME (FT^3) (INCL STRUCTURE)		GROSS DECK AREA (FT^2)	NUMBER OF DECKS *	BSM LOCATION	ERV	DOCKING LOCATION	ORIENTATION	EXTERNAL EXPERIMENT STOWAGE		LAUNCH WEIGHT MARGIN (LB)
		PRESSURIZED	UNPRESSURIZED									
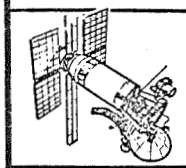	21.7	15,388	16,300	1,662	4 PLUS CENTRIFUGE	FWD	NASA LIFE BOAT (3 MAN & 3 ONE MAN)	FWD	EARTH BELLY DOWN	AFT	AFT	59,035
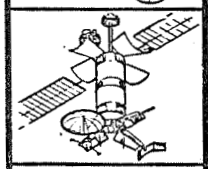	21.7	16,600	22,870	1,835	5 PLUS CENTRIFUGE	INTEGRATED	NASA LIFE BOAT (3 MAN & 3 ONE MAN)	SIDE	EARTH NOSE DOWN	AFT	FWD	55,084
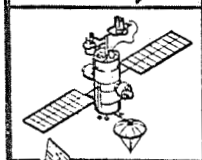	21.7	17,500	19,255	2,200	6 PLUS CENTRIFUGE	CENTER	TWO THREE MAN APOLLO	SIDE	EARTH AFT END DOWN	FWD	AFT	39,226
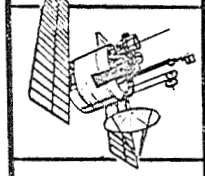	33	19,850	19,720	1,775	2 PLUS CENTRIFUGE	AFT	NASA LIFE BOAT (3 MAN & 3 ONE MAN)	AFT	EARTH BELLY DOWN	FWD	FWD	44,068
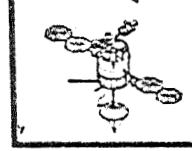	33	20,700	28,800	1,990	2 PLUS CAMERA MODULE	AFT	TWO THREE MAN APOLLO	AFT	EARTH AFT END DOWN	FWD	AFT	15,808

* NOT INCLUDING BSM & CENTRIFUGE

BOEING

SELECTION CRITERIA

- EXPERIMENT ACCOMMODATION
  - WEIGHT AND VOLUME ALLOWANCE
  - MOUNTING AND VIEWING CAPABILITY
- VERSATILITY
  - LAUNCH WEIGHT MARGIN
  - GROWTH CAPABILITY
  - INTERNAL ARRANGEMENT
  - AVAILABLE VOLUME
- CREW ACCOMMODATIONS
  - FLOOR SPACE
  - TRAFFIC PATTERNS
  - SAFETY
- COST AND AVAILABILITY

BOEING

RECOMMENDED CONFIGURATION

OPTIMIZED 984-3205

- END DOWN ORIENTATION BEST FOR SENSOR MOUNTING AND VIEWING
- 33-FOOT DIAMETER ALLOWS :
  - FLEXIBILITY IN SENSOR MOUNTING
  - GOOD TRAFFIC PATTERNS
  - GROWTH CAPABILITY (WEIGHT AND VOLUME)
  - BEST SAFETY PROVISIONS
- UNMANNED LAUNCH MOST COST EFFECTIVE
- ADEQUATE EXPERIMENT WEIGHT ALLOWANCE
- COMPATIBLE WITH MODULARIZED SUBSYSTEMS (SEPARATE COMPARTMENT OR RACK)

BOEING

OPTIMIZATION AREAS

- SUBSYSTEMS LOCATION
- SIZE FOR 7.5 PSI
- DETAIL SENSOR MOUNTING
- ACCESS PROVISIONS DURING ASSEMBLY
- STRUCTURAL DETAILS
- RADIATION PROTECTION
- INTERIOR LAYOUT
- SOLAR ARRAY LOCATION AND ARTICULATION
- MINIMIZED RESUPPLY

BOEING

PROGRAM PLANS

BOEING

GROUND RULES

- ACCELERATED LIFE TESTING
- EXPERIMENTS AVAILABLE AS REQUIRED
- QUALIFICATION IN ACCORDANCE WITH NPC 200-2
- BSM SUBSYSTEMS WILL BE USED
- LOGISTICS VEHICLE AVAILABLE AS REQUIRED

BOEING

CRITICAL LEAD-TIME ITEMS

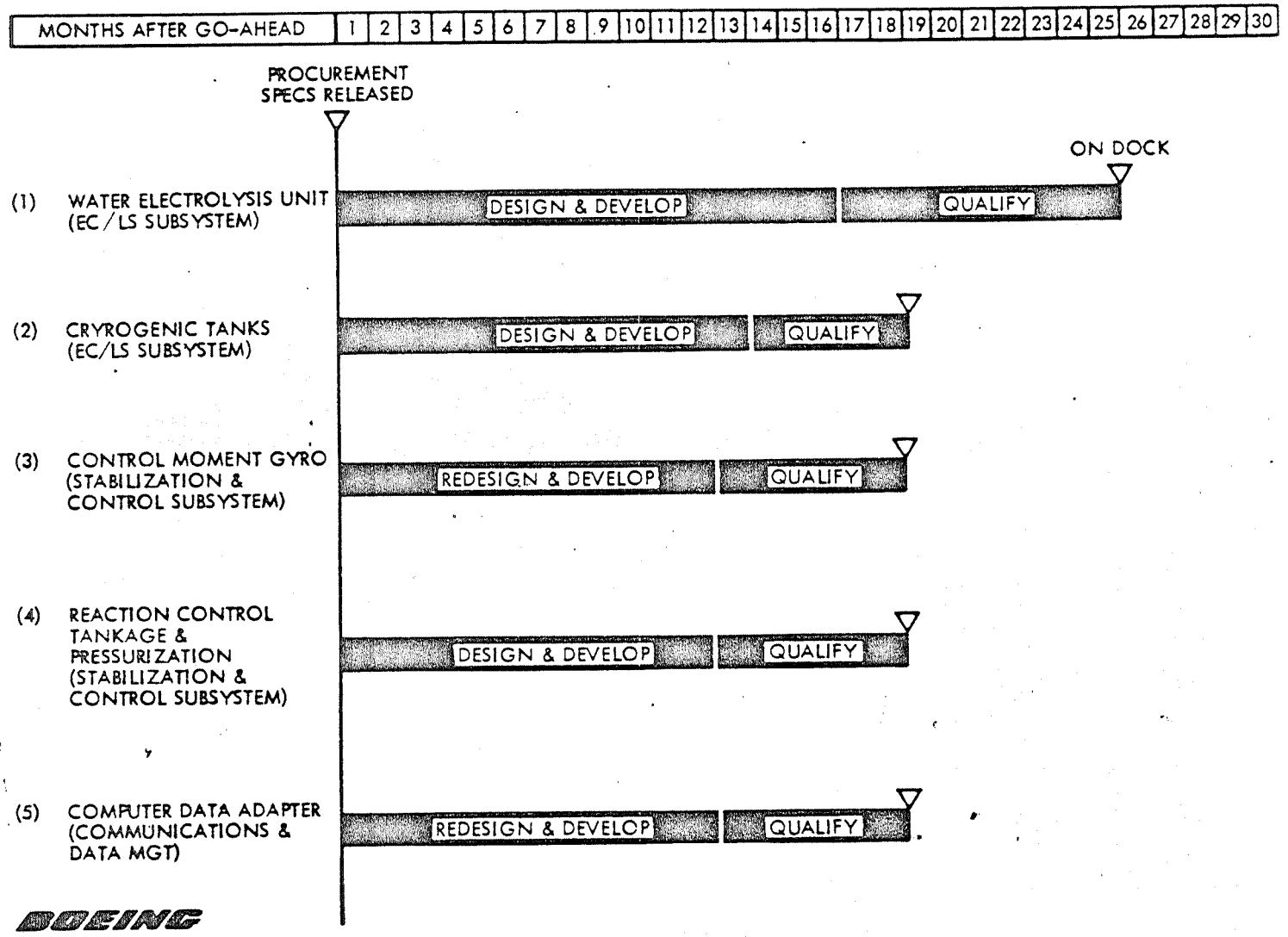

PROGRAM SCHEDULE

NON-ACCELERATED

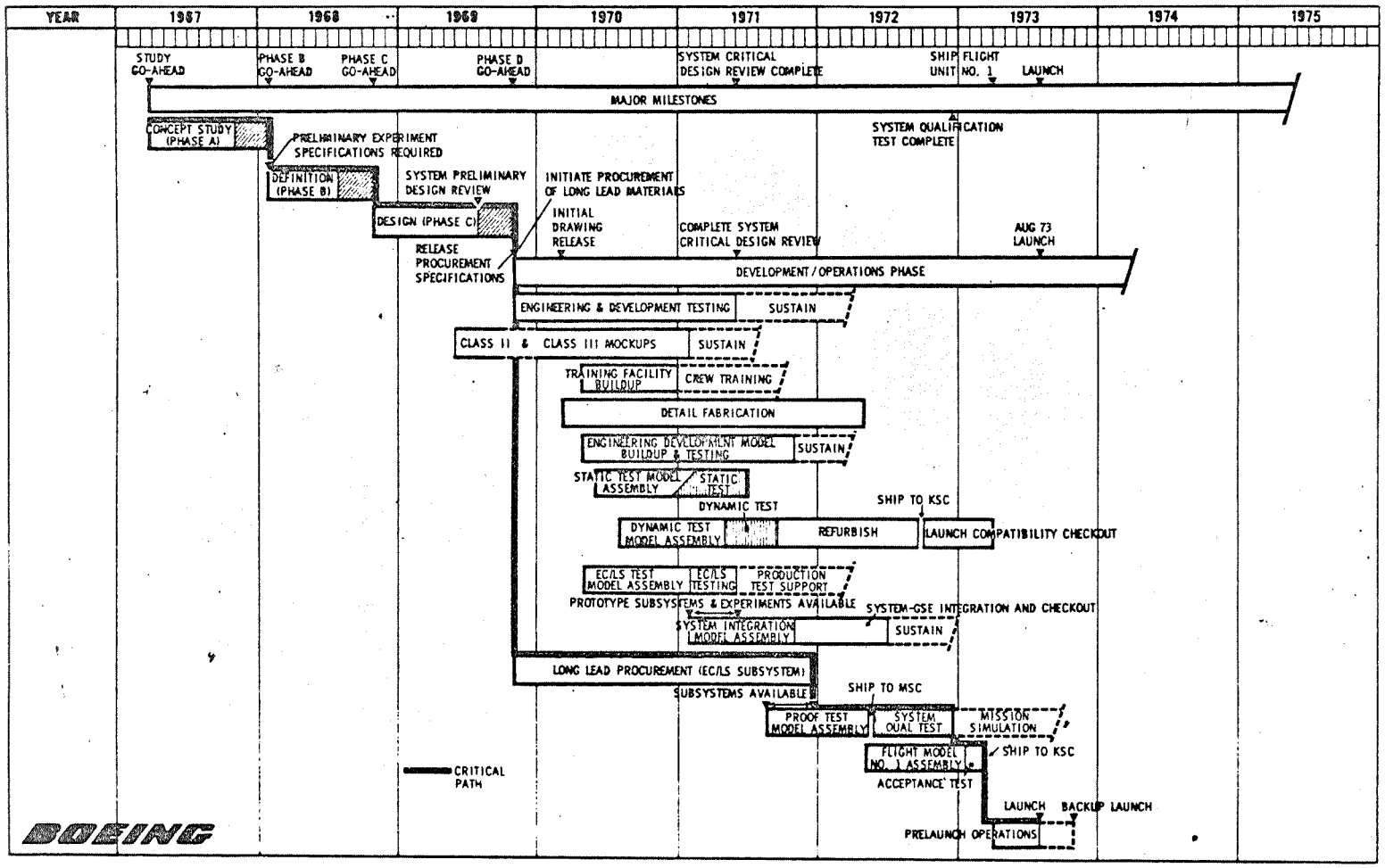

PROGRAM SCHEDULE

ACCELERATED

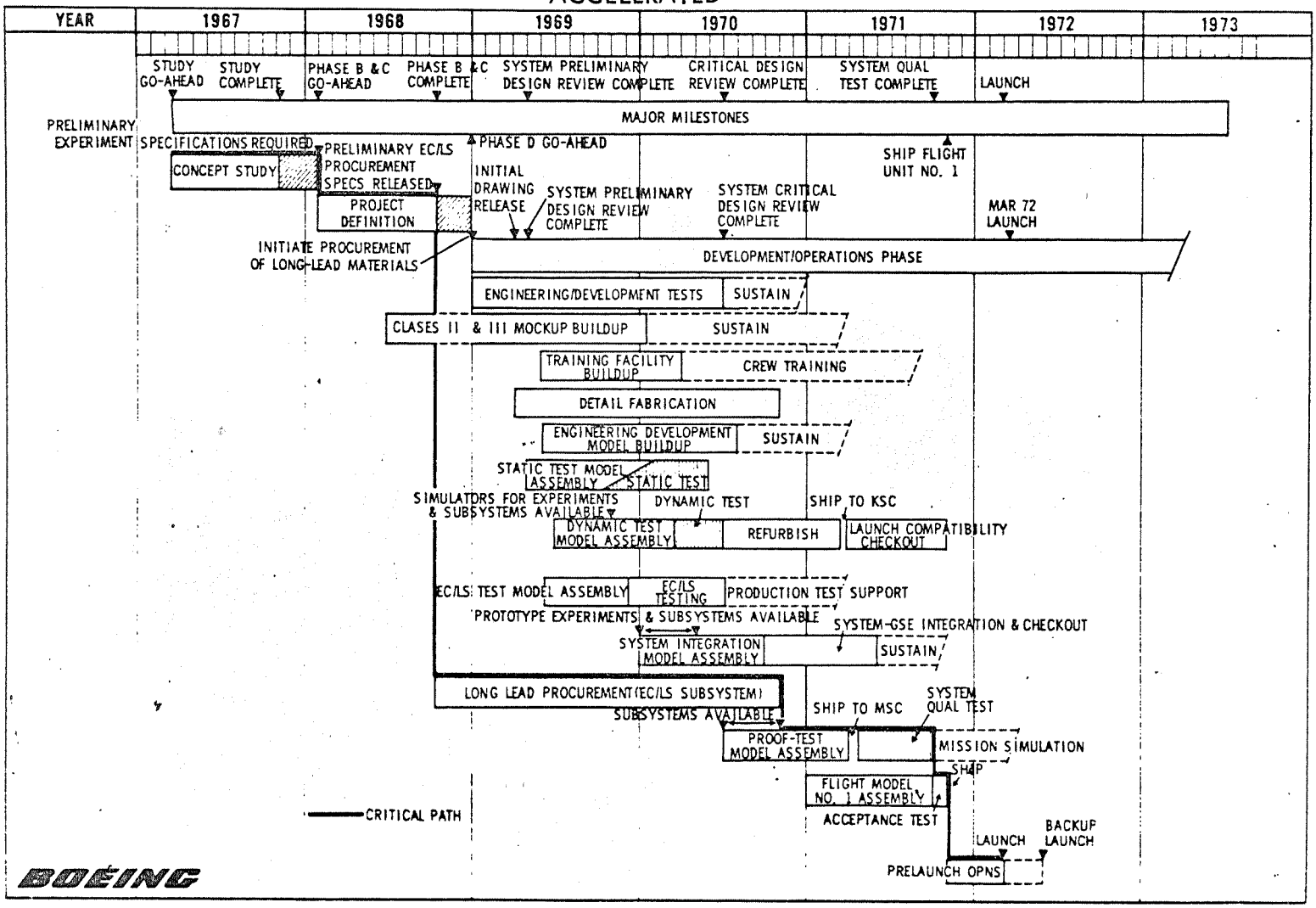

PROGRAM SCHEDULE

ACCELERATED - EARLY SUBSYSTEMS

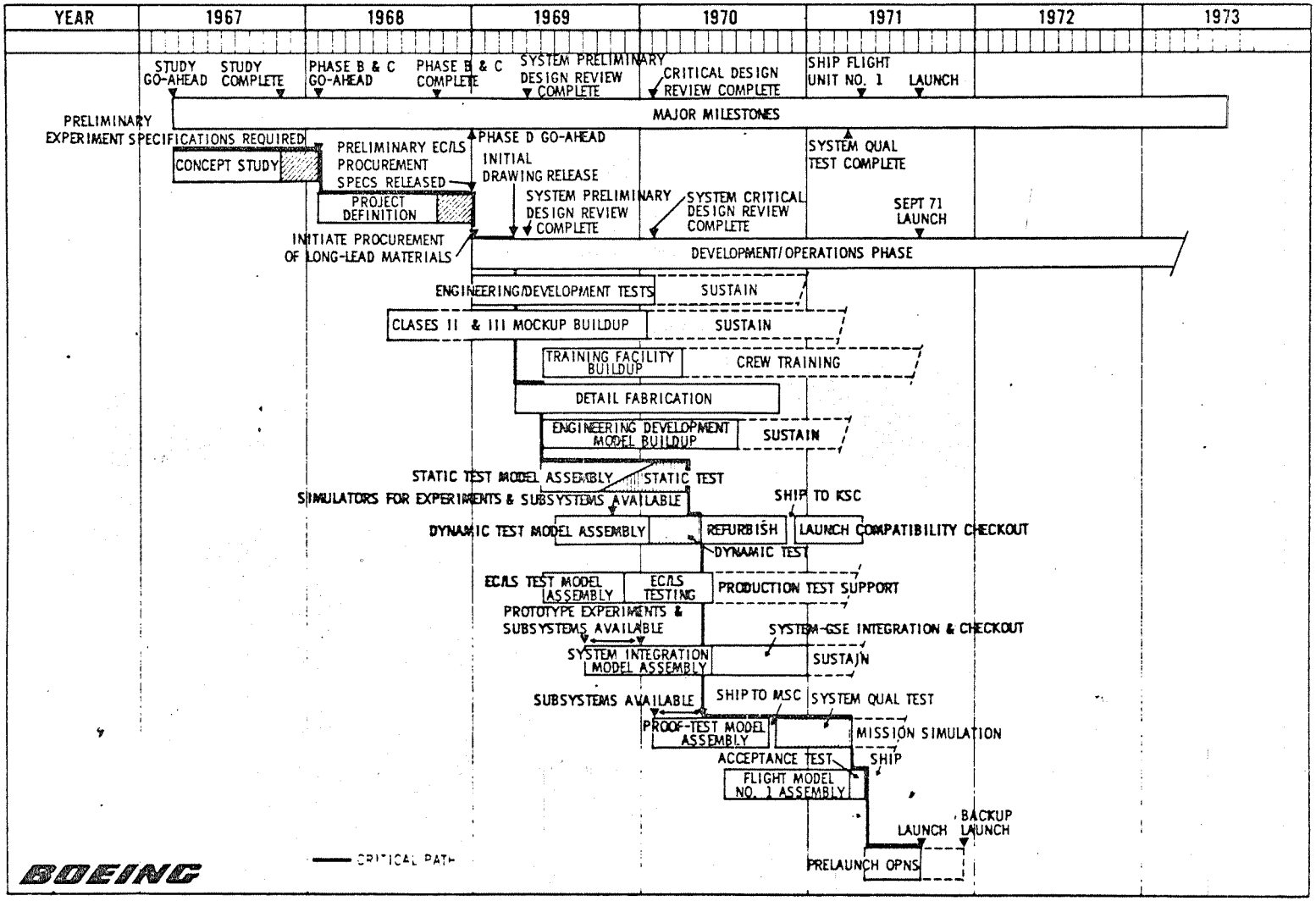

FLIGHT DATE ALTERNATIVES

NONACCELERATED — BSM SUBSYSTEMS	AUG. '73
ACCELERATED — BSM SUBSYSTEMS	MAR. '72
ACCELERATED — EARLY SUBSYSTEMS	SEPT. '71

BOEING

SUMMARY

RECOMMENDED SUBSYSTEM TYPES

- ELECTRICAL POWER — SOLAR CELL / BATTERY
- ATTITUDE CONTROL — CMG / RCJ
- ENVIRONMENTAL CONTROL/LIFE SUPPORT
  - CRYOGENIC O_2, N_2 SUPPLY, MOLECULAR SIEVES
  - MULTIFILTRATION OF WATER PLUS MAKE-UP
- COMMUNICATIONS — IMPROVED APOLLO
- CREW SYSTEMS
  - MIXED FOOD MENU
  - REUSABLE CLOTHING
  - SHOWER
  - MEDICAL PROVISIONS THROUGH THERAPY
  - CENTRIFUGE, LINEAR ACCEL., & EXERCISERS
- PROPULSION
  - CIRCULARIZATION USING LM DESCENT STAGE ENGINE
  - STATION KEEPING USING RCJ

BOEING

RECOMMENDED CONFIGURATION FEATURES

- ORIENTATION — END DOWN, C/L IN ORBIT PLANE
- DIAMETER — 33 FEET
- ATMOSPHERIC PRESSURE LEVEL — 7.5 PSI
- INTEGRATED SUBSYSTEMS
- UNMANNED LAUNCH
- MINIMUM RESUPPLY

BOEING

PREFERRED ARRANGEMENT

NUMBER 984-3205

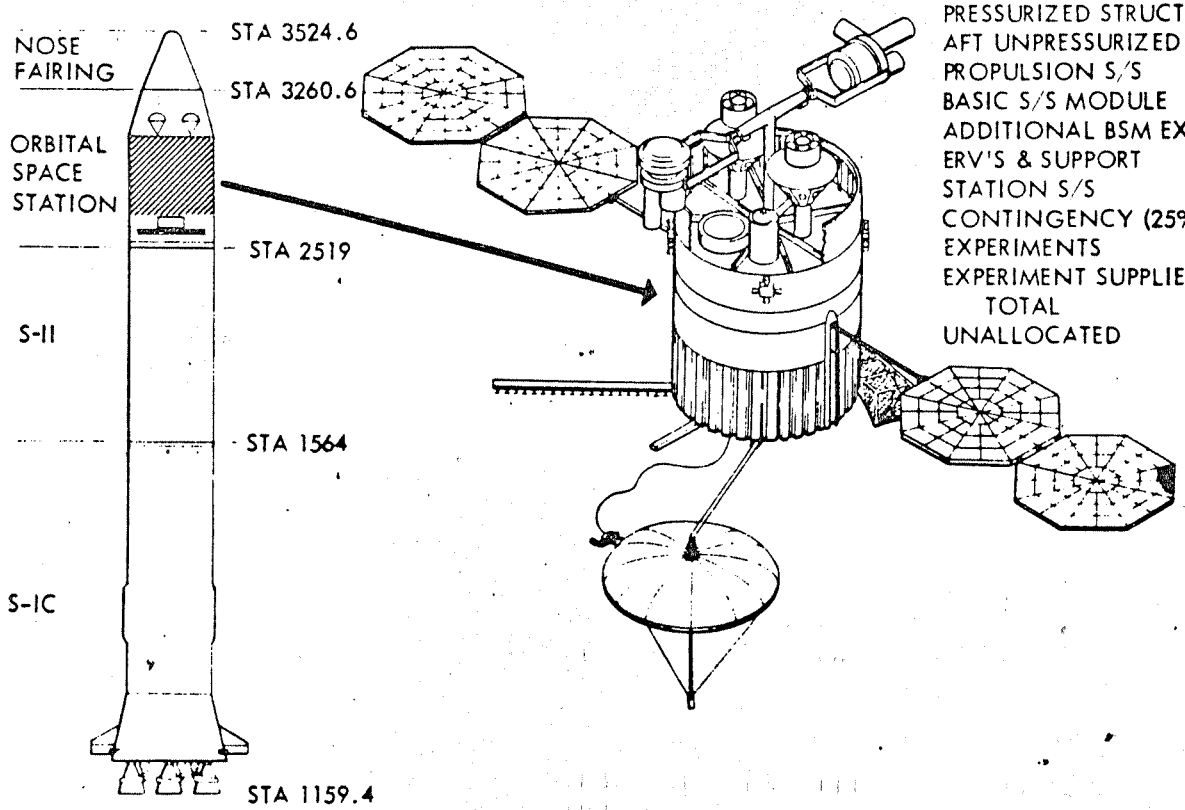

WEIGHT STATEMENT

NOSE FAIRING	4,170
INSTRUMENT UNIT	4,150
FWD UNPRESSURIZED STRUCTURE	5,930
PRESSURIZED STRUCTURE	40,875
AFT UNPRESSURIZED STRUCTURE	13,460
PROPULSION S/S	11,165
BASIC S/S MODULE	25,800
ADDITIONAL BSM EXPENDABLES	11,224
ERV'S & SUPPORT	25,400
STATION S/S	15,956
CONTINGENCY (25%)	26,935
EXPERIMENTS	44,100
EXPERIMENT SUPPLIES	3,027
TOTAL	232,192
UNALLOCATED	15,808
	248,000

BOEING

PROBLEM AREAS

- OPERATIONAL DATE
- EXPERIMENT DEFINITIONS
- EXPERIMENT LEAD TIMES
- LOGISTICS VEHICLE

BOEING

CONCLUSIONS

CONCEPTS STUDIED:

- ARE FEASIBLE
- GIVE FLEXIBLE EXPERIMENT CAPABILITY
- PROVIDE A BASIS FOR SELECTIONS

BSM SUBSYSTEMS COST-EFFECTIVE EXCEPT ECS/LSS

1970-71 OPERATIONAL DATE IS OPTIMISTIC

BOEING

PLANS FOR 2ND HALF

BOEING

SECOND-HALF STUDY PLAN

BASIC STUDY

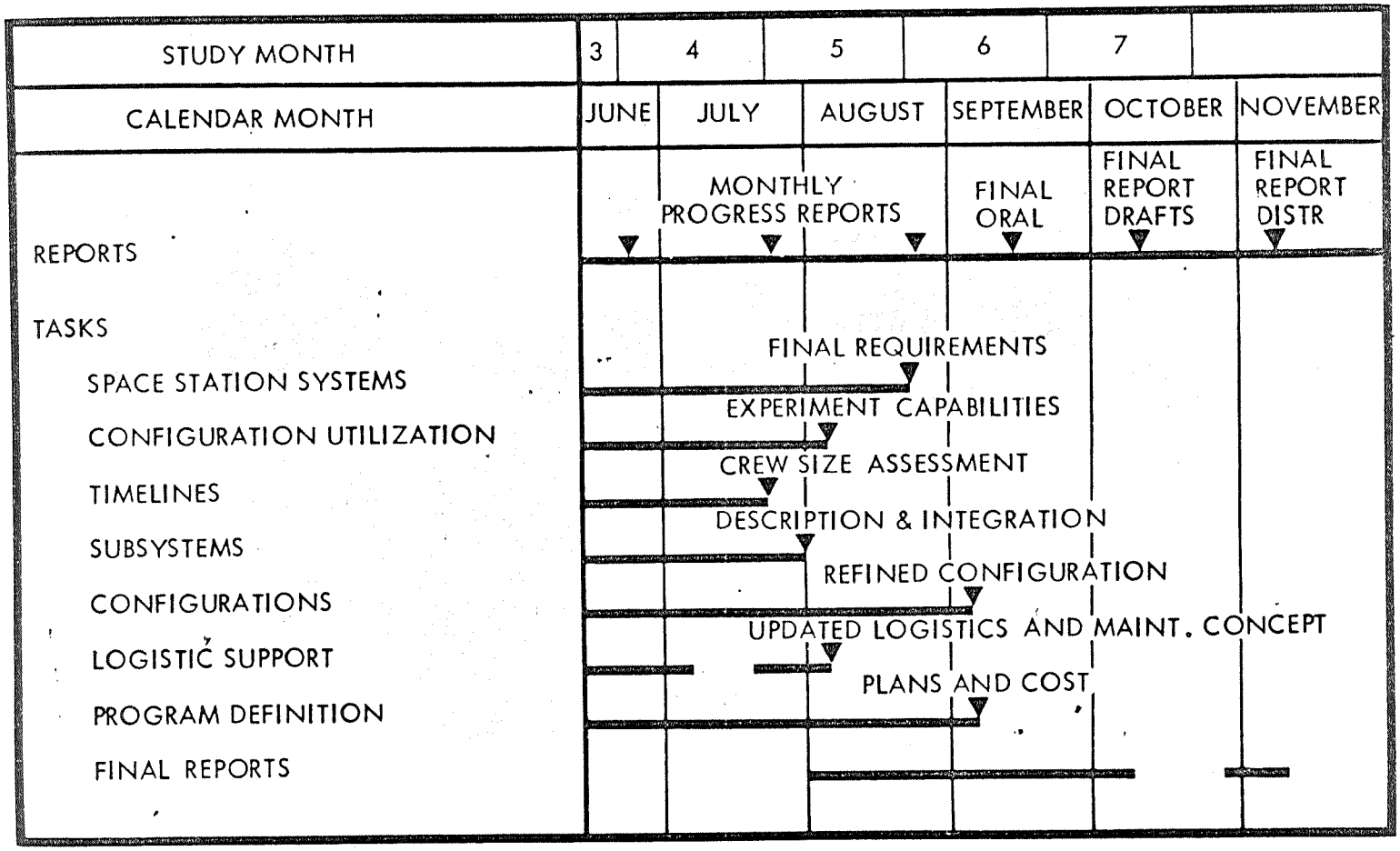

BOEING

ADDENDUM STUDY OBJECTIVES

INVESTIGATE THE FEASIBILITY OF A COMBINED CONFIGURATION FOR BOTH EARTH ORBITAL AND PLANETARY MISSIONS USING THE SAME BASIC SPACECRAFT HARDWARE. PLAN AN EVOLUTIONARY PROGRAM TO:

- OBTAIN MAXIMUM EARTH ORBIT EXPERIENCE ON PLANETARY HARDWARE
- MINIMIZE OVERALL DEVELOPMENT COSTS

BOEING

ADDENDUM STUDY SCHEDULE

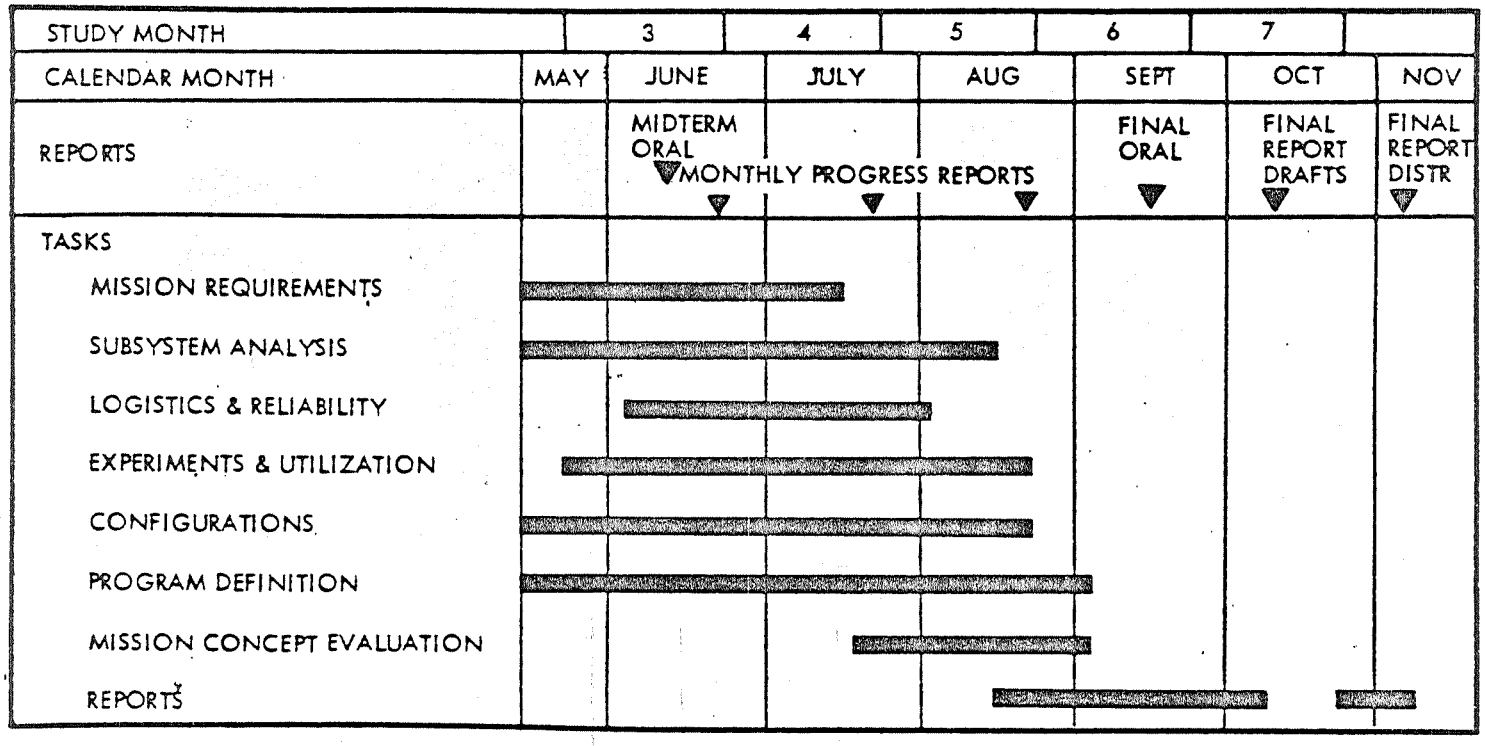

BOEING

4-MAN MARS FLYBY

984-2301

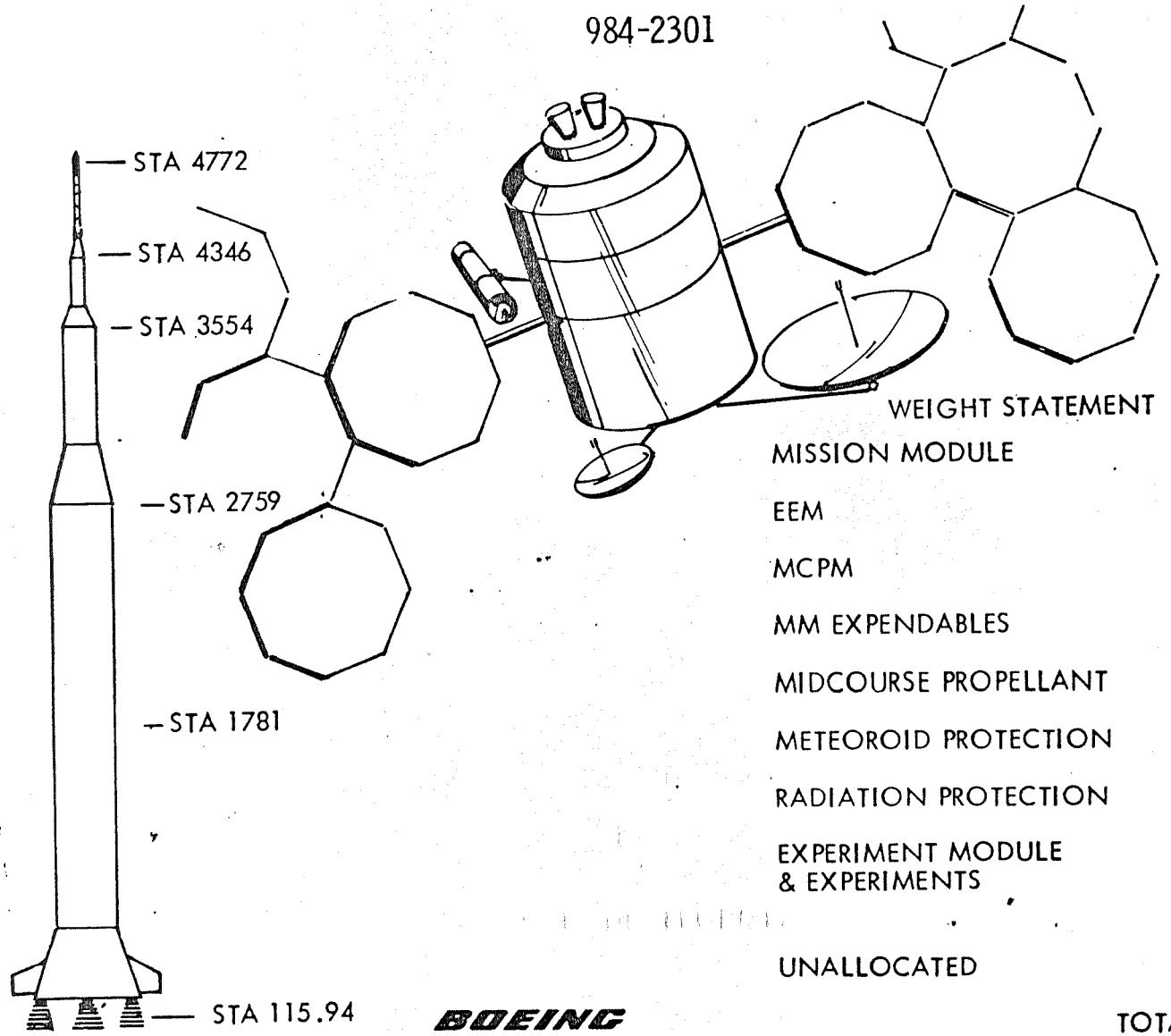

WEIGHT STATEMENT

MISSION MODULE	49,800
EEM	19,630
MCPM	14,080
MM EXPENDABLES	20,860
MIDCOURSE PROPELLANT	14,000
METEOROID PROTECTION	9,500
RADIATION PROTECTION	600
EXPERIMENT MODULE & EXPERIMENTS	40,330
UNALLOCATED	11,200
TOTAL	180,000

BOEING

4-MAN MARS FLYBY

984-2301

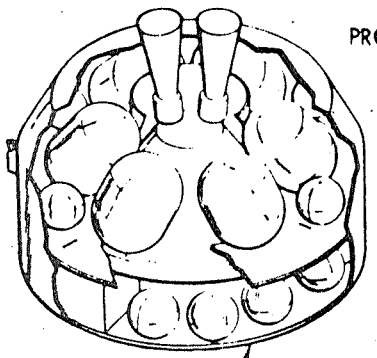

PROPULSION MODULE
- PROPULSION ENGINES (2)
- EARTH ENTRY MODULE (EEM)
- PROPELLANT TANKS (6)
- RCS TANK
- RCS NOZZLES
- ECS STORAGE

MISSION MODULE
- SUBSYSTEMS INSTALLATION
- MEDICAL AND SURGICAL SUPPLIES
- FOOD STORAGE
- PRESS. SUIT 'PLSS STORAGE
- WARDROOM
- STATEROOMS
- HYGIENE AREA
- COMMAND STATION AND EXPERIMENT CONTROL CENTER

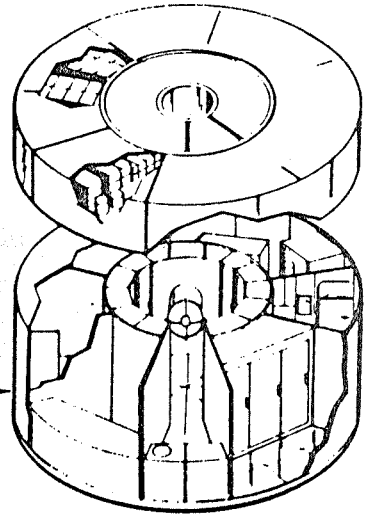

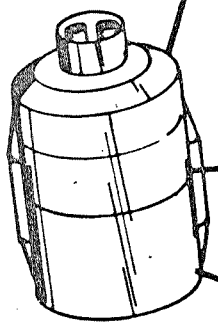

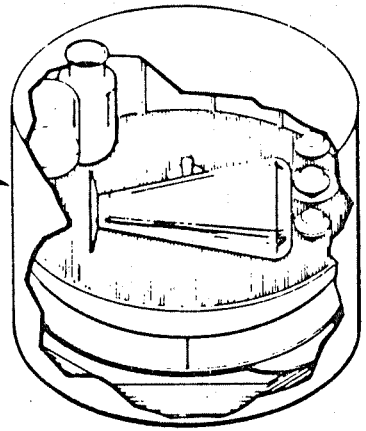

EXPERIMENT MODULE
- SOFT LANDER PROBE
- ATMOSPHERIC 'HARD LANDER PROBES
- ORBITER
- MSSR BIO-LAB
- MSSR PROBE
- 8 FT DIA. ANTENNA
- 20.5 FT DIA. ANTENNA
- SOLAR PANELS

PRESSURIZED VOLUME	3810 FT^3
UNPRESSURIZED VOLUME	9250 FT^3
GROSS FLOOR AREA	346 FT^2

BOEING

6-MAN MARS FLYBY

984-2302

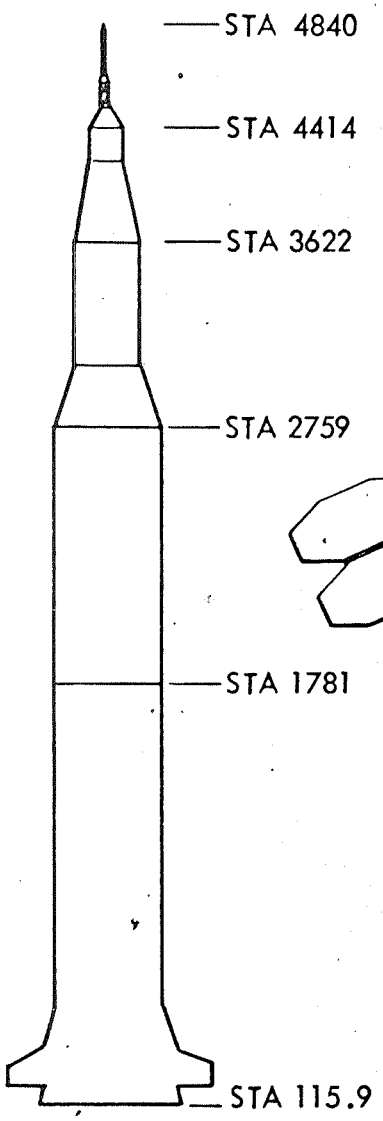

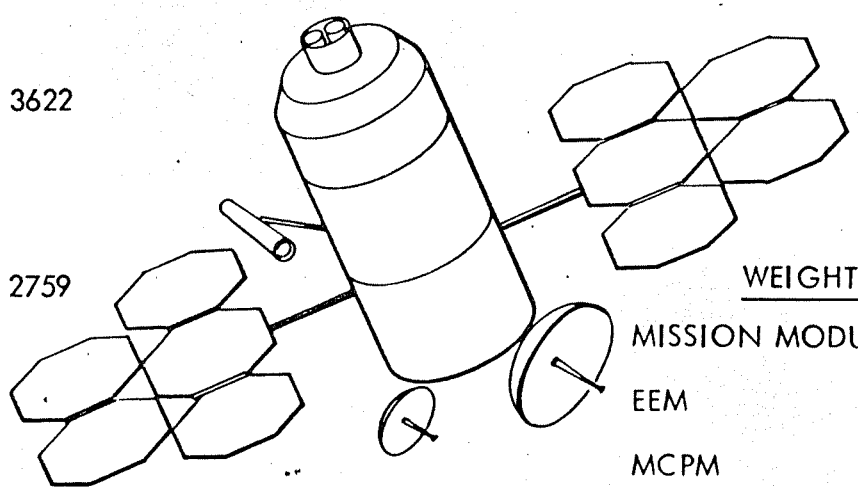

WEIGHT STATEMENT

MISSION MODULE	57,950
EEM	21,450
MCPM	16,150
MM EXPENDABLES	27,240
MIDCOURSE PROPELLANT	18,200
METEOROID PROTECTION	12,400
RADIATION PROTECTION	600
EXPERIMENT MODULE & EXPERIMENTS	40,750
UNCOMMITTED	11,200
TOTAL	205,940

BOEING

6-MAN MARS FLYBY

984-2302

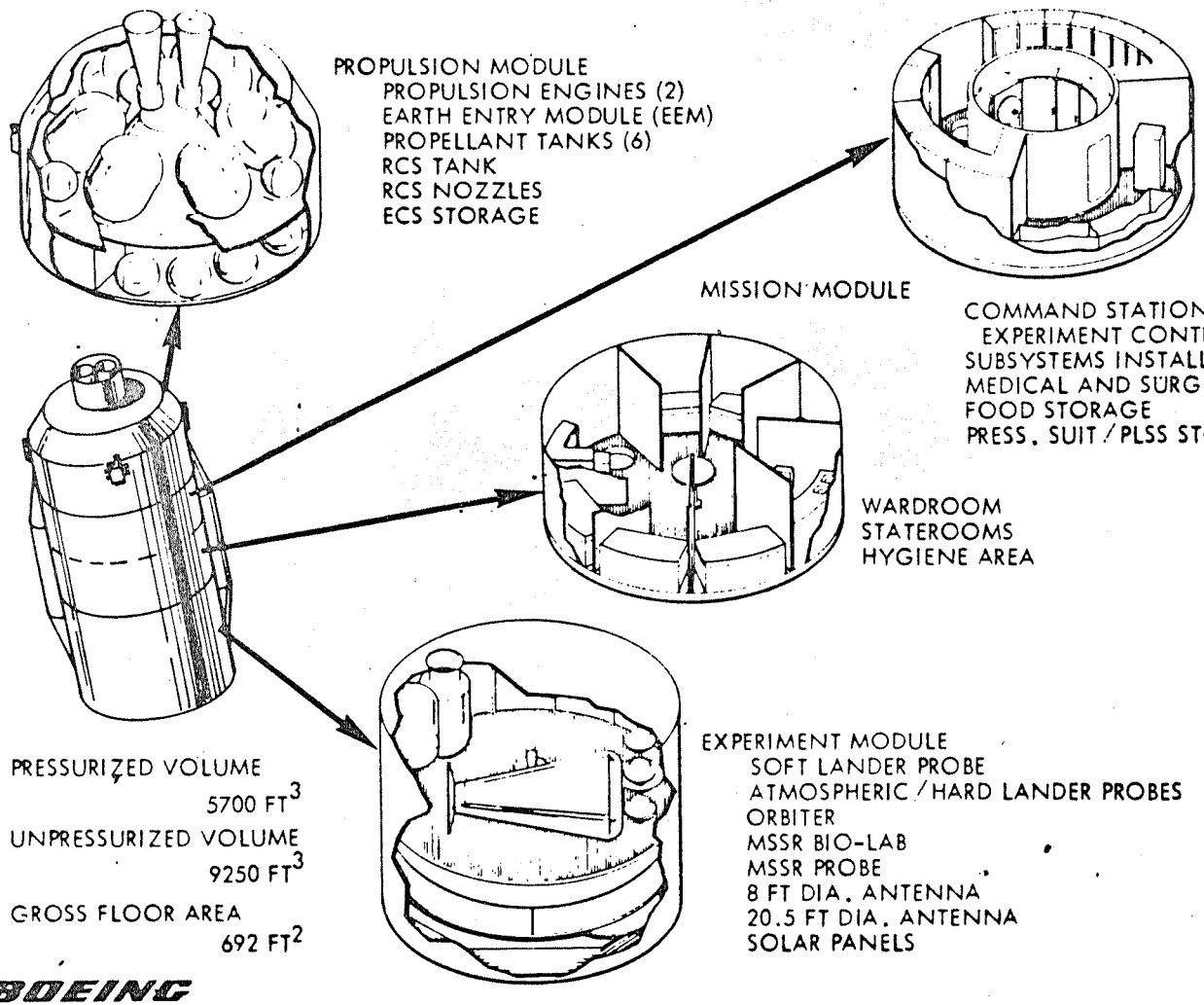

PRESSURIZED VOLUME
5700 FT^3

UNPRESSURIZED VOLUME
9250 FT^3

GROSS FLOOR AREA
692 FT^2

BOEING

REQUIREMENTS DIFFERENCES

EARTH ORBIT VS PLANETARY

- ENVIRONMENT
  - THERMAL
  - SOLAR
  - METEOROID / ASTEROID
- EXPERIMENTS
- RELIABILITY

BOEING

COMMON ELEMENT STUDY

DUAL PURPOSE CONFIGURATION

ELEMENT	CRITERIA	INVESTIGATION
MISSION MODULE	COMMON EXCEPT: GYMNASIUM ISOLATION WARD	WARDROOM FOR EXERCISE STATEROOM FOR ISOLATION
PRESSURIZED EXPERIMENT BAYS	EARTH ORBIT ONLY	TRADE EXPERIMENTS/RESUPPLY WITH MARS STORAGE. MODULARIZE BASIC SPACECRAFT
CENTRIFUGE	EARTH ORBIT ONLY	ELIMINATION
SPACESUIT/PLSS	LIMITED EVA ON THE MARS MISSION	TRADE RESUPPLY WITH ADDITIONAL MARS MISSION STORAGE
EEM/ERV	(2) 3 MAN CAPSULES VS (1) 4 TO 6 MAN CAPSULE	COMMON ENVELOPE & LOCATION
PROPULSION	GREATER IMPULSE ON THE MARS MISSION SIMILAR THRUST LEVELS	DETERMINE VOLUME/WEIGHT PENALTIES COMMON ENGINES
SUBSYSTEMS	ENVIRONMENT DIFFERENCES	TRADE COMMON DESIGNS

BOEING

James C. Jones
June 15, 1967

Space Station Orientation

AAP configuration is more constrained for sensor installation; requiring sensors to point out side of vehicle, because of volume ~~for~~ (exposed area) required to house them. ~~AAP mission is~~ Primary emphasis is on viewing earth. Thus, "belly down" appears logical at this time. Boeing's configuration selection of 33' dia. eliminates any packaging problems which may tend to be "drivers" for orientation selection.

Lack of knowledge of sensor gimballing design problems appears to require deferment of orientation mode selection at this time. Just counting the number of gimbal axes is not productive.

Definition of the basic "Complexity" associated with each ~~gimbal~~ axis of freedom appears to be necessary. "Complexity" involves the degree of sophistication of mechanism, attitude error sensor and the attitude control subsystem necessary to accomplish the pointing task, and the interrelationship with the total spacecraft.

It is recommended that no selection be made at present, but that efforts be directed toward gathering and determining ~~[illegible]~~ all basic ~~&~~ pertinent facts. This effort requires ~~[illegible]~~ studies of ~~the~~ each ~~[illegible]~~ instrument installation for each orientation case (earth, solar, ~~orbital~~ stellar) to the depth necessary to assesse the relative complexity. Operational problems must also be assessed ~~[illegible]~~ as they may

have a moderating influence (i.e. time sharing of orientation modes)

Aerodynamic drag and ~~[illegible]~~ gravity gradient torques do not appear to be ~~[illegible]~~ significant contributory factors to orientation mode selection.