208

S-IVB/SATURN V AFT SKIRT
STRUCTURAL TEST PLAN

SM-46924

Revision "A"

N70-75403

(ACCESSION NUMBER) (THRU)

50 none

(PAGES) (CODE)

CR-112341

(NASA CR OR TMX OR AD NUMBER) (CATEGORY)

FACILITY FORM 602

MISSILE & SPACE SYSTEMS DIVISION
DOUGLAS AIRCRAFT COMPANY, INC.
SANTA MONICA/CALIFORNIA

SEP 1970
RECEIVED
NASA STI FACILITY
INPUT BRANCH

DOUGLAS

S-IVB/SATURN V AFT SKIRT
STRUCTURAL TEST PLAN

SM-46924

Revision "A"

Prepared by:
F. Hylton
Saturn Strength Section

17 August 1966

Prepared For:
National Aeronautics and
Space Administration
Under Contract NAS7-101

Approved By: A. P. O'Neal
A. P. O'Neal, Director
Saturn Development Engineering

DOUGLAS MISSILE & SPACE SYSTEMS DIVISION

PREPARED BY Hylton DOUGLAS AIRCRAFT COMPANY PAGE

DATE MSS DIVISION MODEL

TITLE S-IVB/SATURN V AFT SKIRT STRUCTURAL TEST PLAN SM 46924 REPORT NO.

60-1005(4-62)

						REVISION SHEET		
CHANGE LETTER	DATE	CHANGED BY	CHECKED BY	PAGES CHANGED	PAGES ADDED	BRIEF REASON	APPR. BY	APPR. BY
A	2-27-67	Hylton		IS / WAS i / i ii / ii		To reflect page and figure number changes and additions		
					11 and 12	Figures 8 & 9 added to show temperatures in areas affected by skin splice		
				13 thru 17 / 11 thru 15		Pages Re-numbered		
				18 / 16		APS - Condition II loads were changed to values obtained from actual data during SA-203 Flight		
				19 / 17		Added 245°F. temperatures for areas affected by skin splice		
				20 / 18		Pages Re-numbered		
				21 / 19		Same as page 19 above		
A				22 thru 46 / 20 thru 44		Pages Re-Numbered		

H E Duchard 3/15/67

TABLE OF CONTENTS

Section		Page
	TABLE OF CONTENTS	i
	LIST OF FIGURES	ii
1.0	INTRODUCTION	1
2.0	OBJECTIVES	5
3.0	TEST REQUIREMENTS AND CRITERIA	5
4.0	LOADS AND ENVIRONMENT	5
5.0	TEST PROCEDURE AND SEQUENCE	14
6.0	TEST MONITORING AND QUICK LOOK EVALUATION PROCEDURE	22
7.0	INSTRUMENTATION	24
8.0	TEST FACILITY	24
9.0	REFERENCES	24
	APPENDIX A INSTRUMENTATION DRAWING	26
	APPENDIX B TEST FACILITIES	41
	[illegible]	[illegible]

LIST OF FIGURES

Figure No.		Page
1	S-IVB/Saturn V Aft Skirt Section	2
2	Aft Interstage Test Setup (Part I Aft Skirt Test)	3
3	Aft Skirt Test Setup (Part II)	4
4	Limit Burst Pressure Differentials	7
5	Aft Skirt Skin Temperature History (Maximum Heating Trajectory $h/_{ho}=1$)	8
6	Aft Skirt Skin and Stringer Temperature History (Maximum Heating Trajectory $h/_{ho}=1.5$)	9
7	Aft Interstage Forward Bay Skin Temperature History (Maximum Heating Trajectory $h/_{ho}=1$)	10
8	Aft Skirt - Stringers #123 and #124 skin and Stringer Temperature Histories (Maximum Heating Trajectory $h/_{ho}=2.0$)	11
9	Aft Skirt - Stringers #123 and #124 skin and Stringer Temperature Histories (Maximum Heating Trajectory $h/_{ho}=1.5$)	12
10	Specimen Orientation	15
11	Ullage Rocket Forces	17
12	APS Limit Loads	18
13	APS Protuberance Area	20
14	LH_2 Feed Line Protuberance Area	21

S-IVB/SATURN V AFT SKIRT STRUCTURAL TEST PLAN

1.0 INTRODUCTION

The S-IVB Saturn V Aft Skirt will be statically tested to verify its structural integrity and strength analysis by application of the critical design loads and environmental conditions.

The S-IVB/Saturn V Aft Skirt, P/N 1A39295, is a cylindrical structure fabricated of .040 thick clad 7075-T6 skin reinforced in compression by external hat section stringers (see Figure 1). The assembly is reinforced circumferentially by three intermediate frames. The forward end frame is segmented into six sections with their flanges extending outwardly for connection with the aft circular flange of the propellant tank assembly. The aft frame angle extends inwardly for connection with the interstage flange. The aft frame angle includes an overlying angle portion having an annular tension extension which is served by an annular explosive for separation of the S-IVB stage from the S-II stage.

The Aft Skirt Test Program will be divided into two parts.

The first part will be conducted as a portion of the Saturn V Aft Interstage structural test which is covered in detail in test plan SM 46917 Revision "A". The test setup of the first part, is illustrated schematically in Figure 2. In this assembly, the aft skirt will be subjected to axial load, bending moment-shear, and pressure parameter tests. In addition, the aft skirt will experience limit maximum αq and limit MECO loads.

The second part of the test program will consist of a bending moment parameter test, ultimate maximum αq, an elevated temperature parameter test, ultimate MECO, and failure test. These tests will be performed on the aft skirt, bolted between a dummy aft interstage and a dummy propellant tank, as illustrated in Figure 3. The dummy aft interstage will consist of the forward two bays of a production interstage straightened sufficiently to assure aft skirt failure in the failure test.

FIGURE 1. S-IVB/SATURN V AFT SKIRT SECTION
(REFERENCE P/N 1A39295-1)

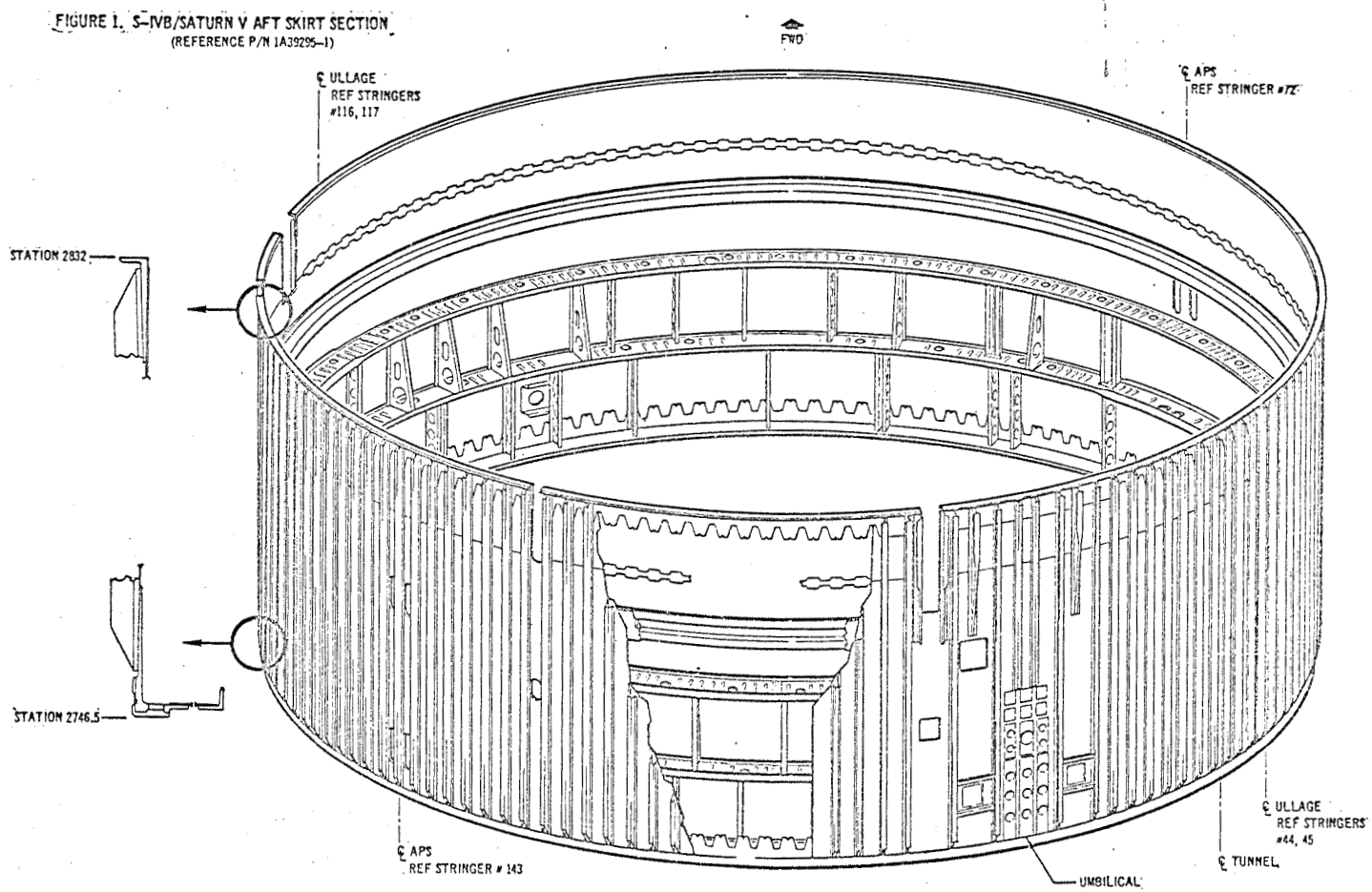

Figure 1

AFT INTERSTAGE TEST SETUP

PART I AFT SKIRT TEST

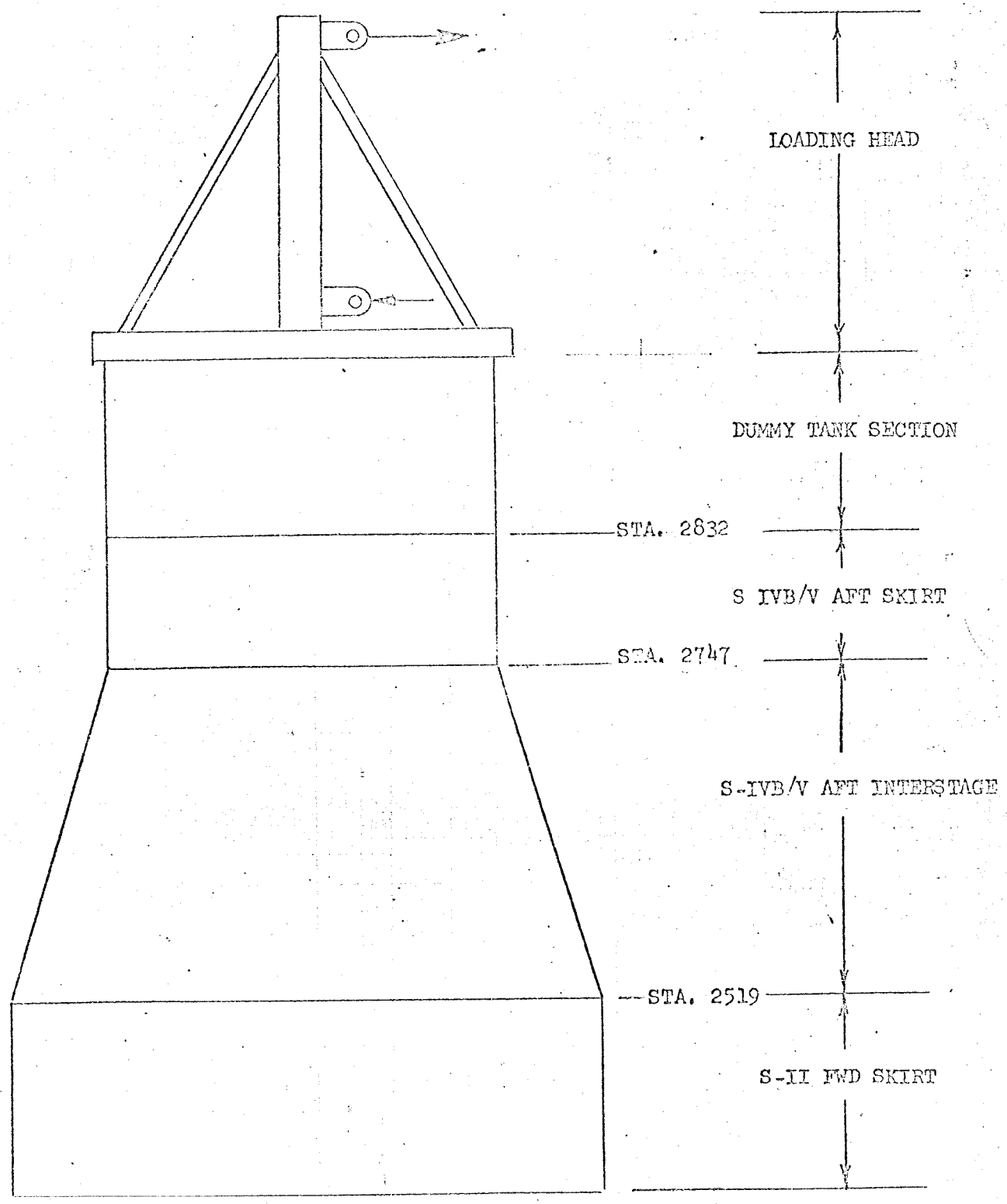

FIGURE 2

AFT SKIRT TEST SETUP

PART II

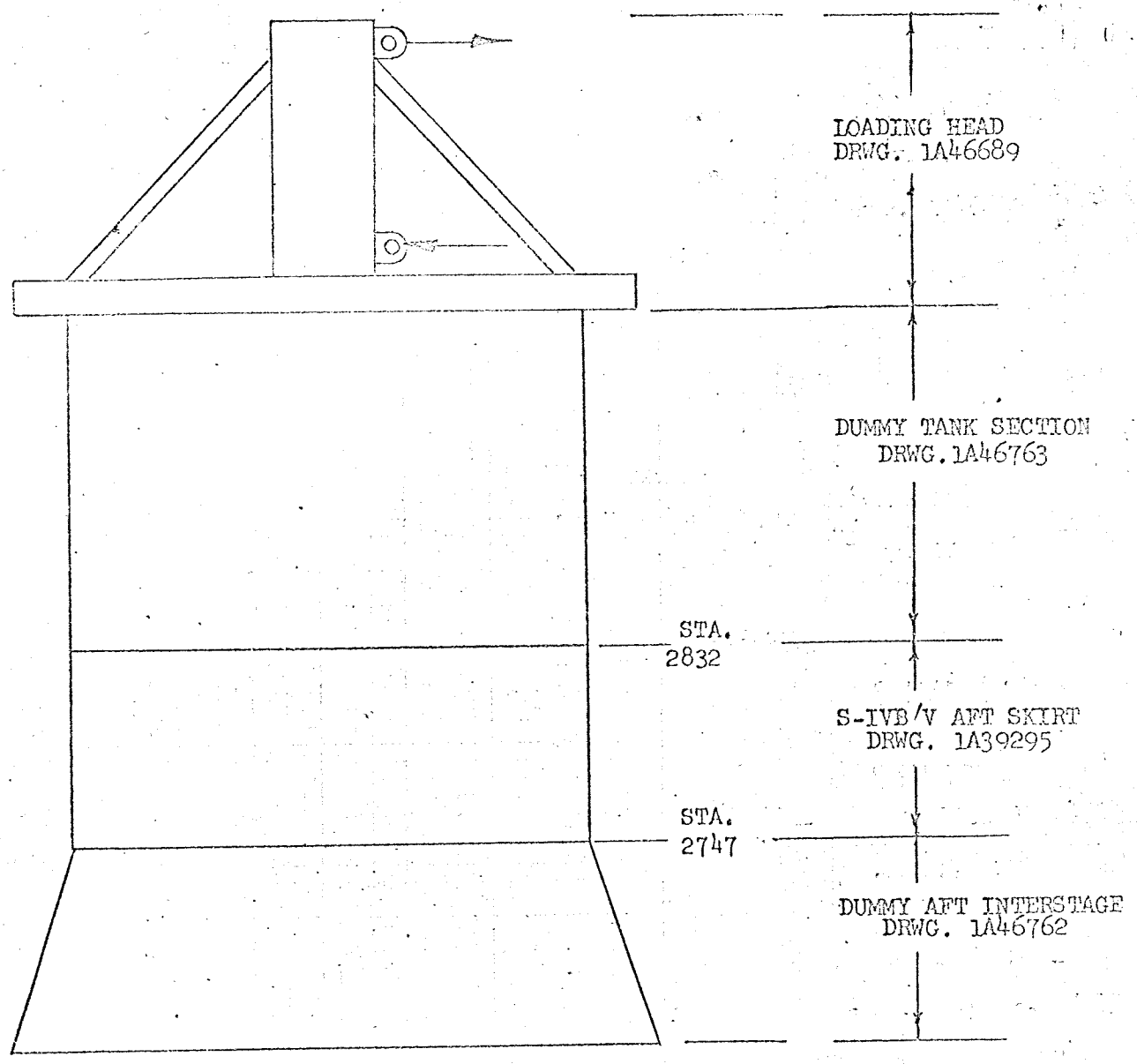

FIGURE 3

During the ultimate maximum αq test, simulated aerodynamic loads on APS and ullage rocket protuberances will be applied. Hydraulic jacks will be used to supply the loads. Program controlled quartz heat lamps will simulate the flight temperature environment. Pressure differential loads will be simulated by use of internal pressure jackets.

2.0 OBJECTIVES

The primary objective of this test program is to verify the structural integrity of the S-IVB/Saturn V Aft Skirt when subjected to design loads and environmental conditions. In addition, secondary objectives include determination of (1) the separate effects of axial load, bending moment and shear, pressure and temperature parameters; (2) maximum structural capability; (3) location and mode of failure and (4) validation of the stress analyses and methods used therein. The secondary objectives are desirable should loads increase for future mission requirements.

3.0 TEST REQUIREMENTS AND CRITERIA

The static structural qualification of the S-IVB/Saturn V Aft Skirt is to comply with the test requirements stated in item A-47A of the S-IVB General Test Plan (SM-41412). The structural integrity of the test specimen will be verified in accordance with the structural design criteria specified in Douglas Model Specification DS-2163.

4.0 LOADS AND ENVIRONMENT

4.1 General

The test loads and environment specified in this Section are compatible with those used in the aft interstage test program and are applicable to the S-IVB/V 501 through 503 stages.

4.2 Critical Design Conditions

The design conditions of maximum αq and main engine cutoff (MECO) have been determined to be the most critical and as such are the conditions to which the specimen will be tested.

4.2.1 Maximum α o Condition

Limit Loads

(Reference M-P&VE-SL-9-62)
(Reference M-P&VE-SL-53-63)

NASA Station 2832

Axial	1.05×10^6	lb.
Moment	64×10^6	in-lb.
Shear	102×10^3	lb.

Rev. "A"

NASA Station 2746.5

Axial	1.05×10^6	lb.
Moment	73×10^6	in-lb.
Shear	99×10^3	lb.

Limit Pressure Differential

(Reference R-P&VE-SL-202-63)

The limit burst pressure differentials at maximum α q are illustrated in Figure 4. During the pressure parameter test, the specimen will be subjected to both burst and crush pressure differentials. However, during the maximum αq tests, only burst pressure will be applied. Analysis has indicated that this pressure condition will be most critical in combination with other maximum αq loads.

Thermal Environment

(Reference Figure 5 thru 9)

The thermal environment for the maximum αq condition test will be ambient temperature.

S-IVB/SATURN V AFT SKIRT TEST

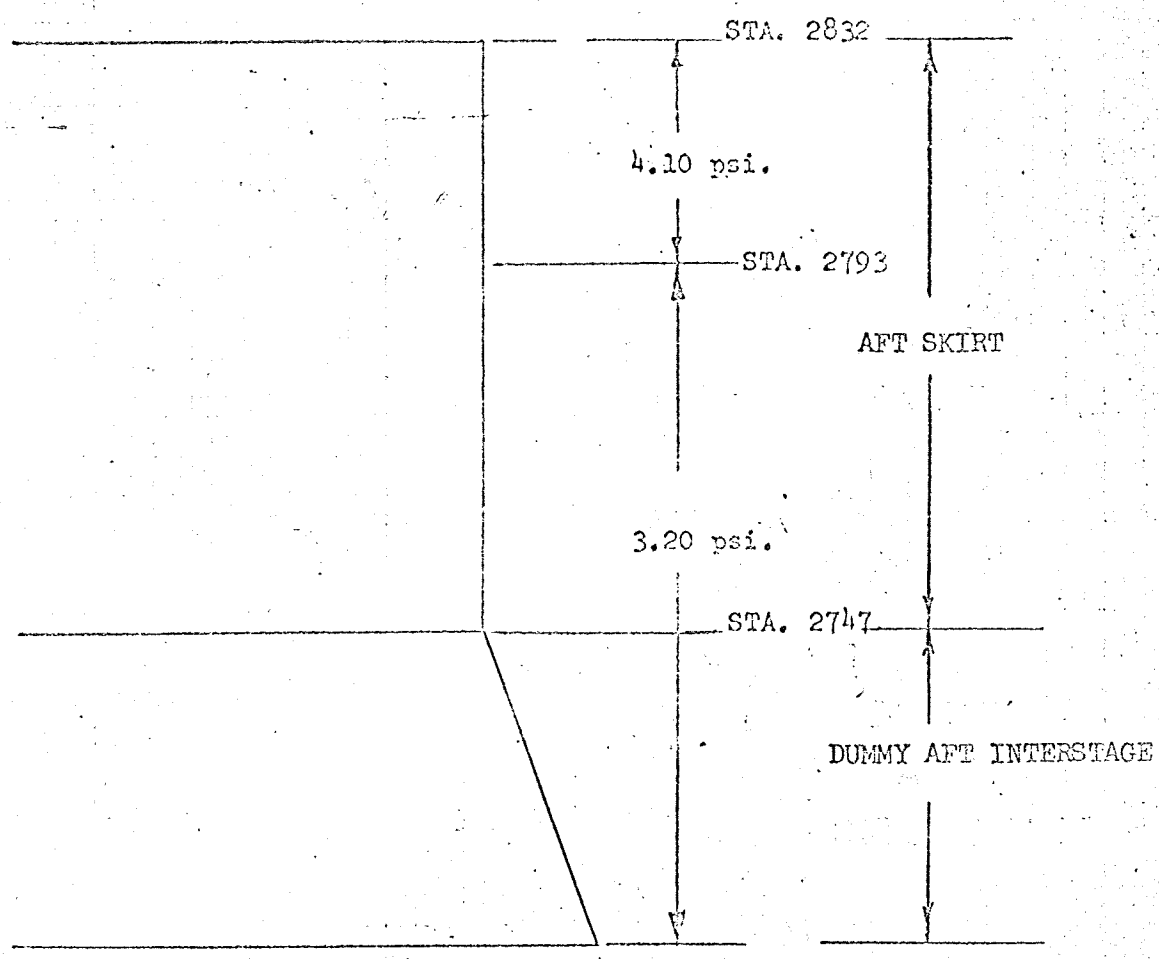

LIMIT BURST PRESSURE DIFFERENTIALS

FIGURE 4

FORM 25 BP-4 REF. JOB PAGE NOS. _____ JOB PAGE NO. _____

PREPARED BY _____ DATE 8-23-66 MODEL Saturn V S-IVB REPORT NO. _____

Fig 1

SATURN V/S-IVB

AFT SKIRT SKIN & STRINGER TEMPERATURE HISTORIES

AS-501 Maximum Heating Trajectory

Ref: MSFC Letter I-V-S-IVB-70-65-112 dated 10-26-65

$h/h_o = 1.0$

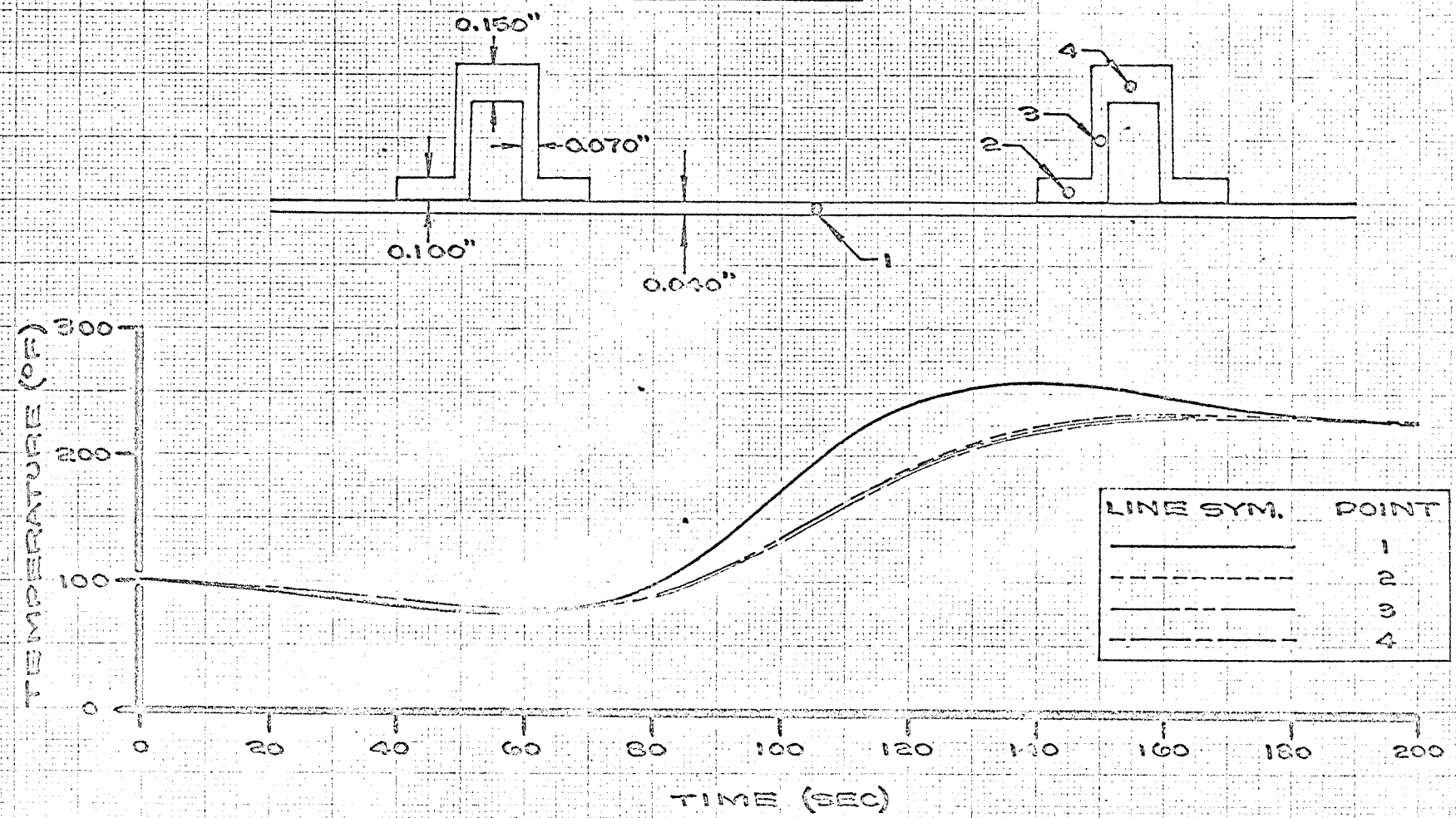

FIGURE 5

FIGURE 5

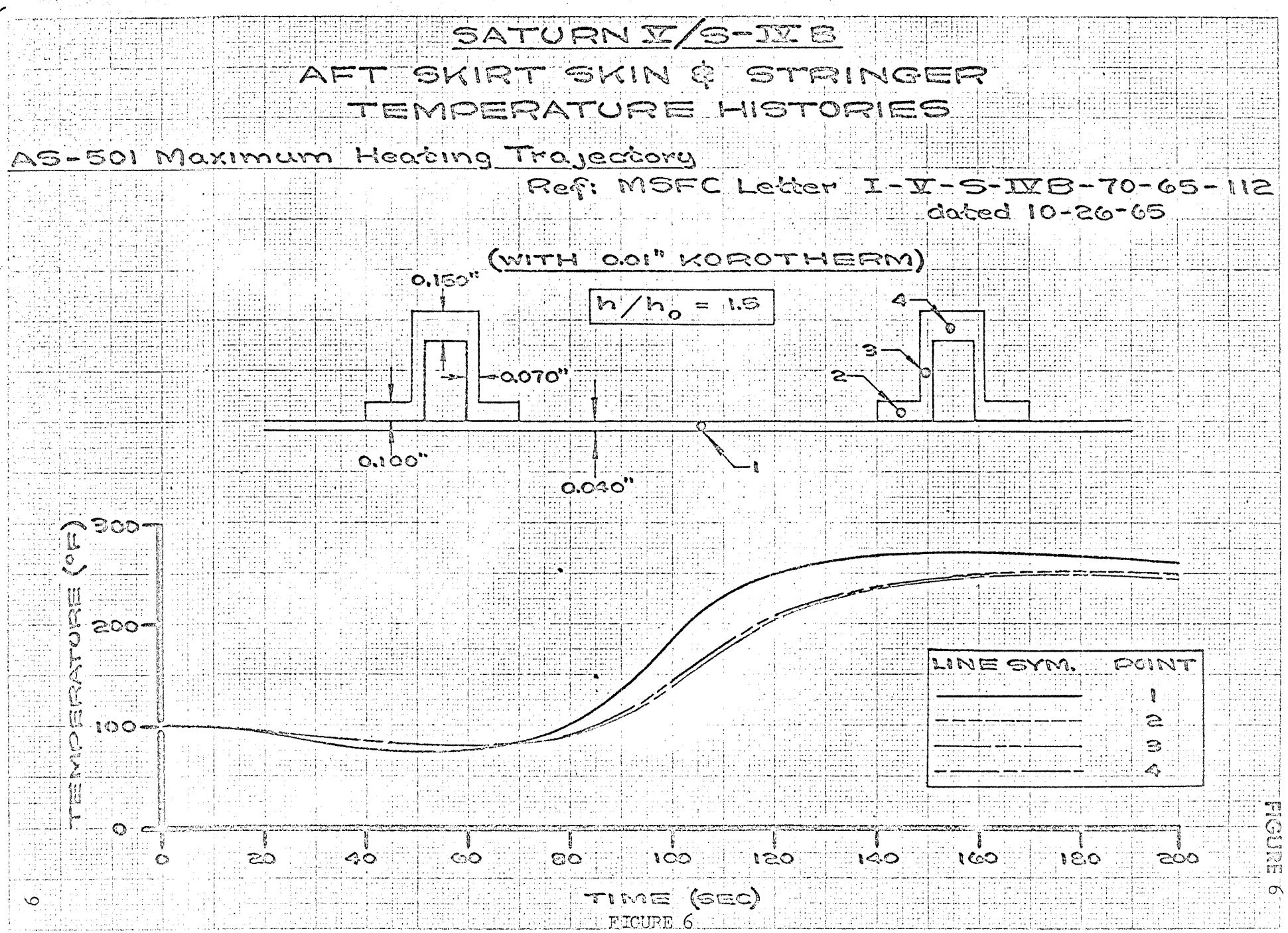
SATURN V/S-IVB
AFT SKIRT SKIN & STRINGER
TEMPERATURE HISTORIES
AS-501 Maximum Heating Trajectory
Ref: MSFC Letter I-V-S-IVB-70-65-112
dated 10-26-65
(WITH 0.01" KOROTHERM)
h/h₀ = 1.5
0.150"
0.070"
0.100"
0.040"
1
2
3
4
TEMPERATURE (°F)
300
200
100
0
0
20
40
60
80
100
120
140
160
180
200
TIME (SEC)
LINE SYM.
POINT
1
2
3
4

FIGURE 6

FORM 25 BP-4 REF. JOB PAGE NOS. _____ JOB PAGE NO. _____

PREPARED BY _____ DATE 8-23-6_ MODEL Saturn V S-IVB REPORT NO. _____

(199) Fig. 6

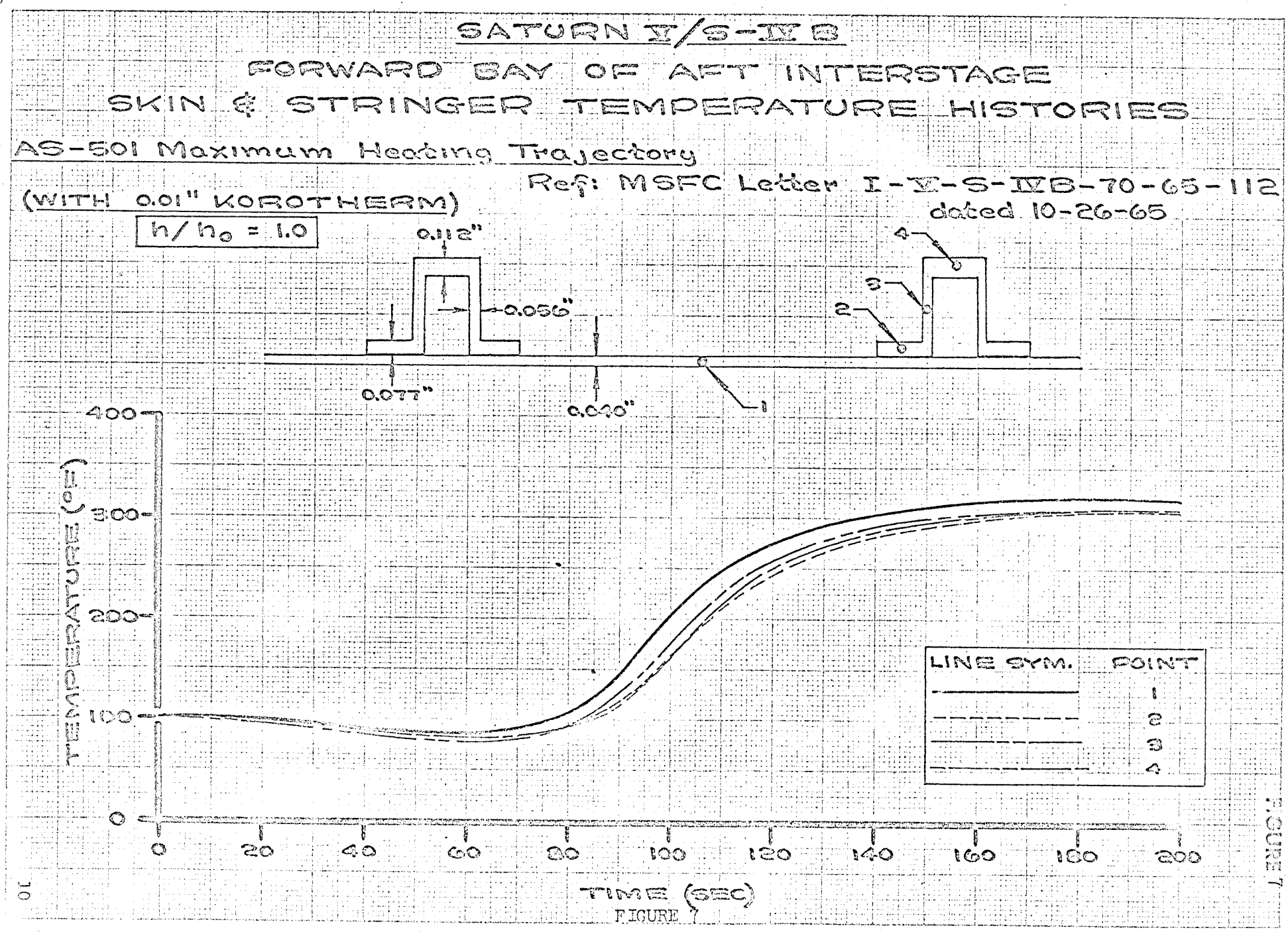

FIGURE 7

FIGURE 7

FORM 25 B

REF. JOB PAGE NOS. _____ JOB PAGE NO. _____

PREPARED BY _____ DATE _____ MODEL _____ REPORT NO. _____

SATURN V/S-IVB

AFT SKIRT - STRINGERS #123 & #124

SKIN AND STRINGER TEMPERATURE HISTORIES

$M_\infty = 2.0$

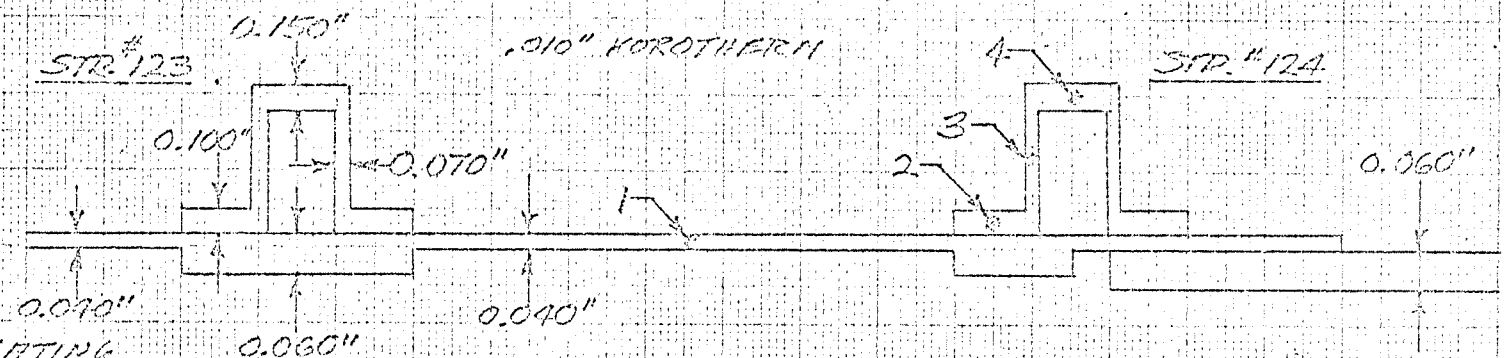

AS-501 MAXIMUM HEATING TRAJECTORY

REF: MSFC LETTER I-V-5-IVB-TD-65-112 DATED 10-26-65

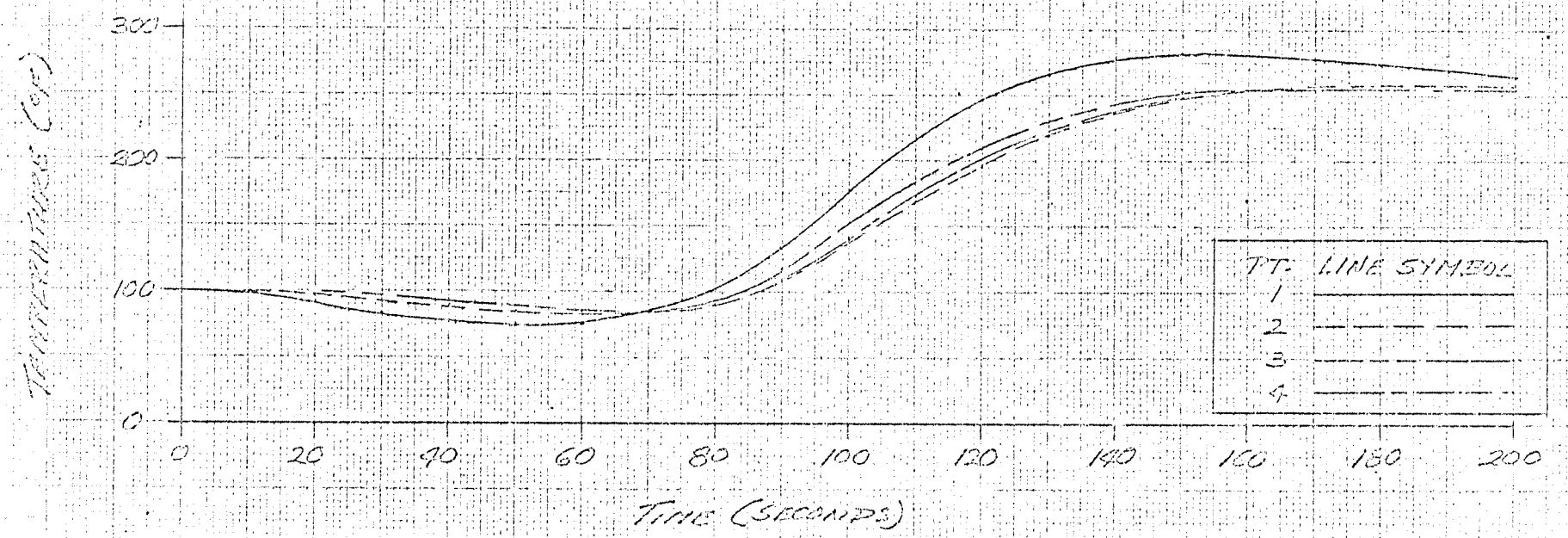

FIGURE 8
REV. A

FORM 25 BP

REF. JOB PAGE NOS. _____ JOB PAGE NO. _____

PREPARED BY _____ DATE _____ MODEL _____ REPORT NO. _____

SATURN V/S-IVB

AFT SKIRT - STRINGERS #123 & #124

SKIN AND STRINGER TEMPERATURE HISTORIES

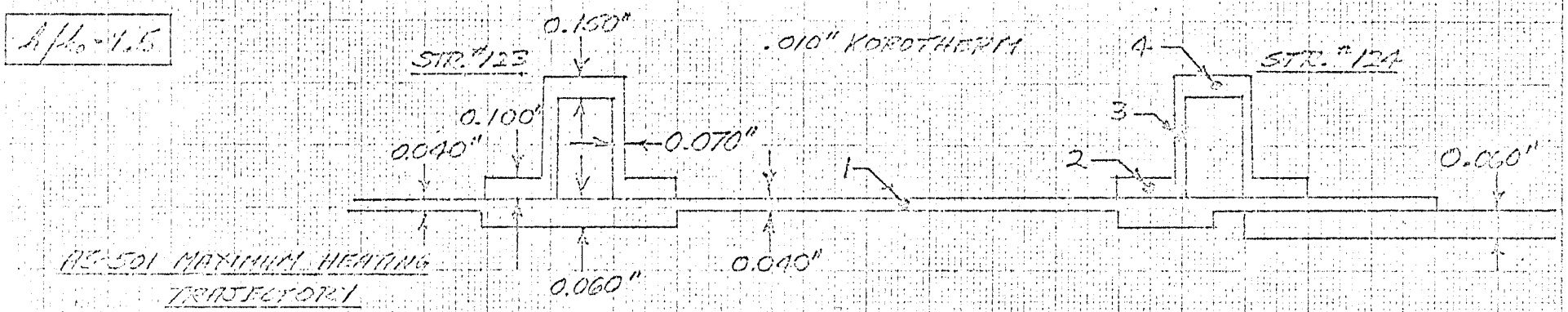

REF: MSFC LETTER I-V-S-IVB-TD-65-112 DATED 10-26-65

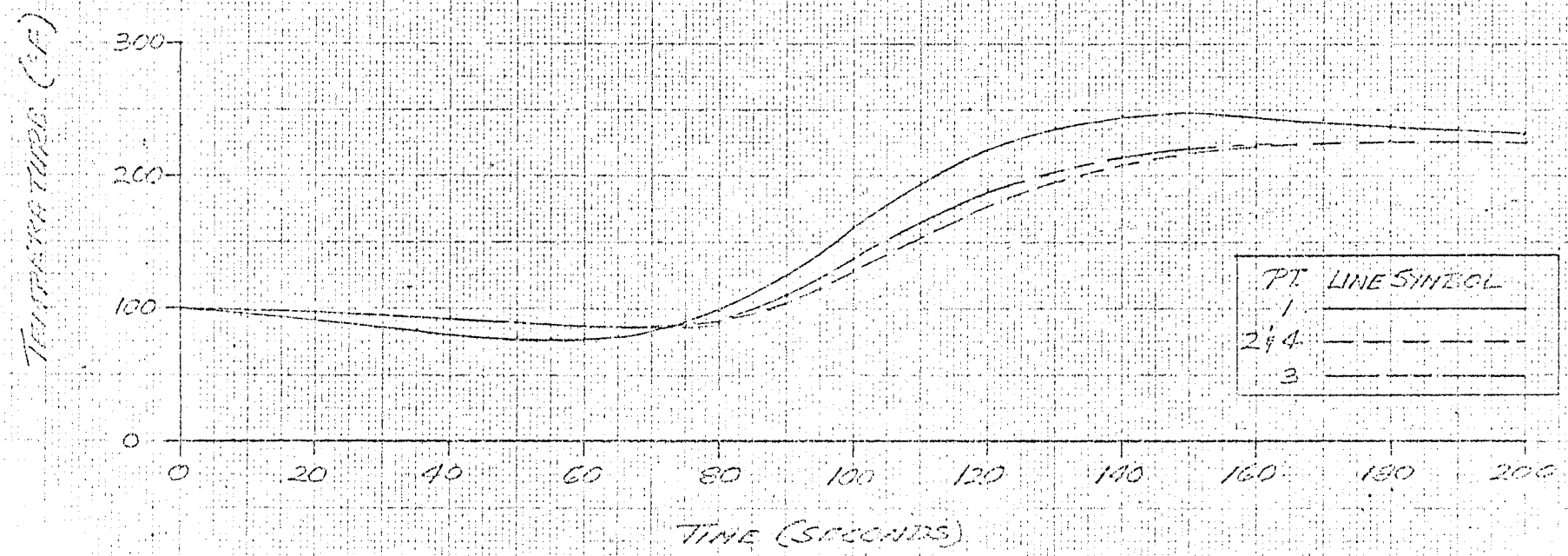

FIGURE 9
REV. "A"

Aerodynamic Loads on APS and Ullage Rocket Protuberances

Aerodynamic limit loads on APS and ullage rocket protuberances during the maximum αq condition are given in Figures 11 and 12.

4.2.2 Main Engine Cutoff (MECO) Condition

Limit Loads

(Reference M-P&VE-SL-53-63)

NASA Station 2832

Axial Load	1.7×10^6 lb.
Moment	0
Shear	0

NASA Station 2746.5

Axial Load	1.7×10^6 lb.
Moment	0
Shear	0

Limit Pressure Differential

(Reference M-AERO-A-89-63)

The pressure differential during the MECO loading condition is considered negligible.

Thermal Environment

(Reference Figure 5 thru 9)

The thermal environment imposed during the ultimate MECO test will simulate skin temperatures in protuberance induced heating areas and unperturbed areas of the aft skirt and in the forward bay of the dummy aft interstage for the maximum heating trajectory.

Aerodynamic Loads on APS and Ullage Rocket Protuberances

These loads are negligible during the MECO condition.

5.0 TEST PROCEDURE AND SEQUENCE

The first part of the Aft Skirt Test as outlined in Section 1.0 will be conducted as a portion of the Aft Interstage Test Program. The test procedures are contained in the Aft Interstage Test Plan (SM-46917) "A" revision. Therefore, only the procedure for the second part of the Aft Skirt Test is outlined in this Section.

The test set-up for the second part of the Aft Skirt Test is schematically illustrated in Figure 3. The specimen orientation will be such that maximum compression loading due to bending moment will be in line with stringer 58 as shown in Figure 10. This is a departure from the orientation of the skirt during the first phase of the test wherein maximum compression occurs at stringer 34. It will therefore be required to repeat the bending moment parameter test to establish the influence characteristics of bending moment and shear on the skirt in this new orientation.

In the following loading procedures, the increments of loading referred to will be those for which instrumentation data will be specifically reported, although data recording will be continuous throughout the test. The primary purpose of continuous data recording is to ensure that the precise load values are determined when failure occurs. Procedures for the monitoring of data channels from critically stressed components are described in Section 6.

5.1 Preload and Instrumentation Check

Before initiation of any formal loading sequence, an instrumentation calibration and jig functional checkout will be performed. The procedure will be to apply up to but not exceeding 50 percent of any or all limit test loads specified in 4.2.1 and 4.2.2, except that bending moment, if applied alone, will not exceed 25 percent of the limit value specified in 4.2.1.

FIG. 10

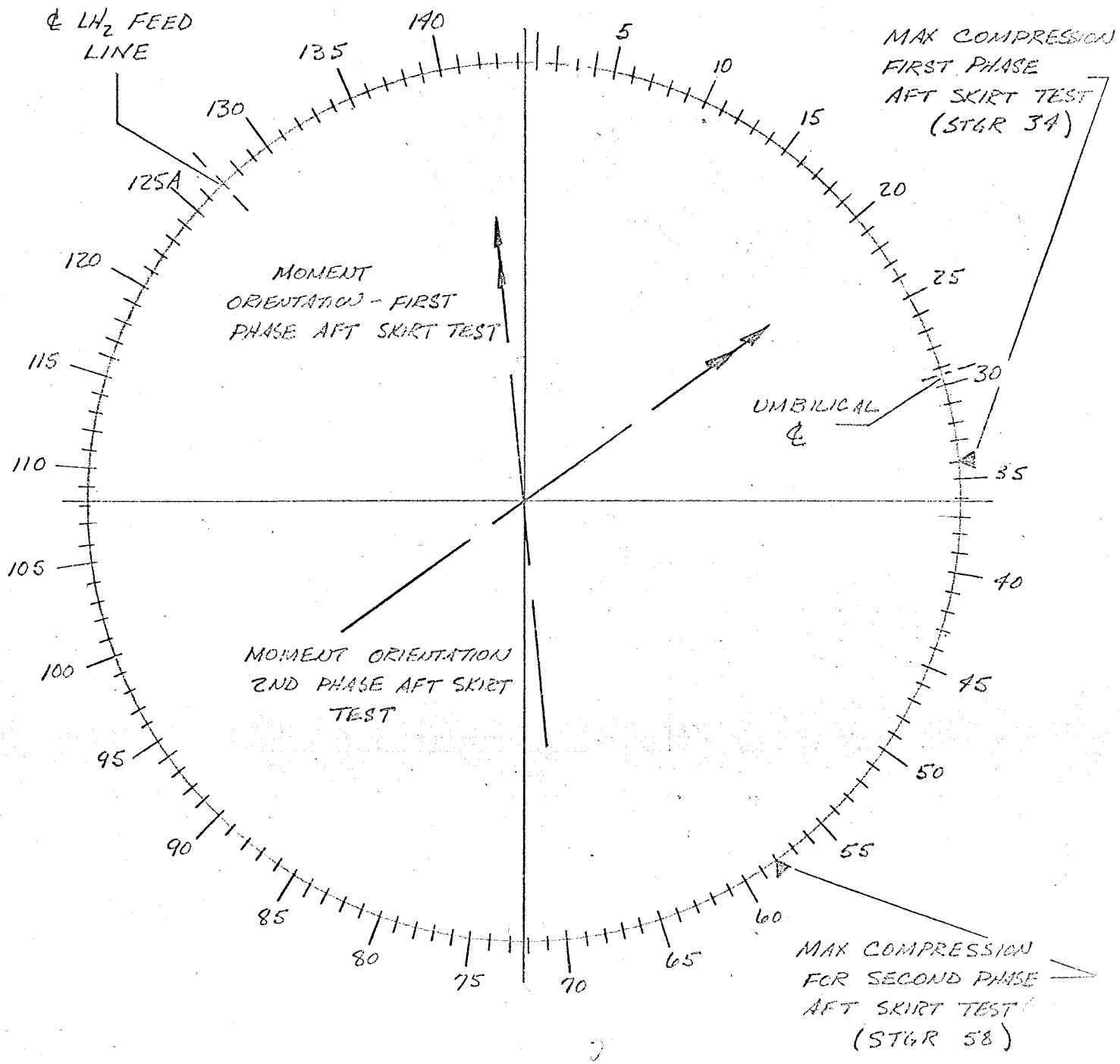

SPECIMEN ORIENTATION
S-IVB/V AFT SKIRT TEST

FIGURE 10

5.2 Bending Moment and Shear Parameter Test

For evaluating parameter effects, bending moment and shear loads will be applied to 25 percent of the limit values specified in 4.2.1 in five equal increments. Structural temperature will remain ambient. Strain and deflection data will be recorded at each increment of load.

NOTE: During this and subsequent portions of the test incorporating bending moment and shear, the shear will be constant along the length of the skirt. A shear load of 102,000 lbs. has been selected as a representative value in order to allow duplication of the bending moment distribution, limit values of which are presented in 4.2.1.

5.3 Maximum q Condition Test - Ultimate Loads

The loading sequence for the ultimate maximum q condition test shall be as follows:

a. The axial, bending moment and shear, ullage rocket aerodynamic and vibration loads (Figure 11), and APS, Condition I, loads (Figure 12) will be applied simultaneously in 20 percent increments to their limit values.

b. Holding all loads at limit, burst pressure will be applied in 5 equal increments to the values indicated in Figure 4.

c. With the burst pressure held at 100 percent limit all loads specified in a. above will be increased in 10 percent increments of limit load to ultimate (140 percent of limit), and held for one minute in this condition.

d. Axial load, bending moment and shear, and ullage rocket loads will be held constant at 140 percent of limit and pressures at 100 percent of limit, while the APS loads will be decreased in reverse order of the sequence called for in a. and c. above.

e. APS, Condition II, loads indicated in Figure 10 will be applied and recorded after stabilization at 50 percent, 100 percent, 110 percent, 120 percent, 130 percent, and 140 percent of their limit values, while all other loads remain at 140 percent and 100 percent respectively as outlined in d. above.

ULLAGE ROCKET FORCES FOR S-IVB / V
AFT SKIRT STATIC TEST

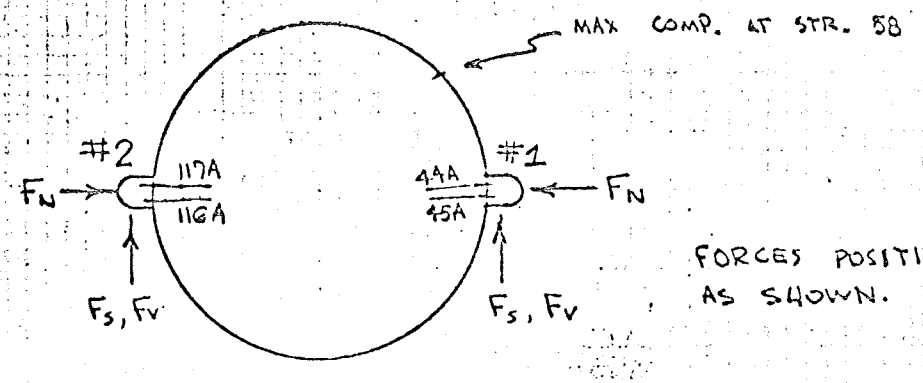

VIEW LOOKING AFT

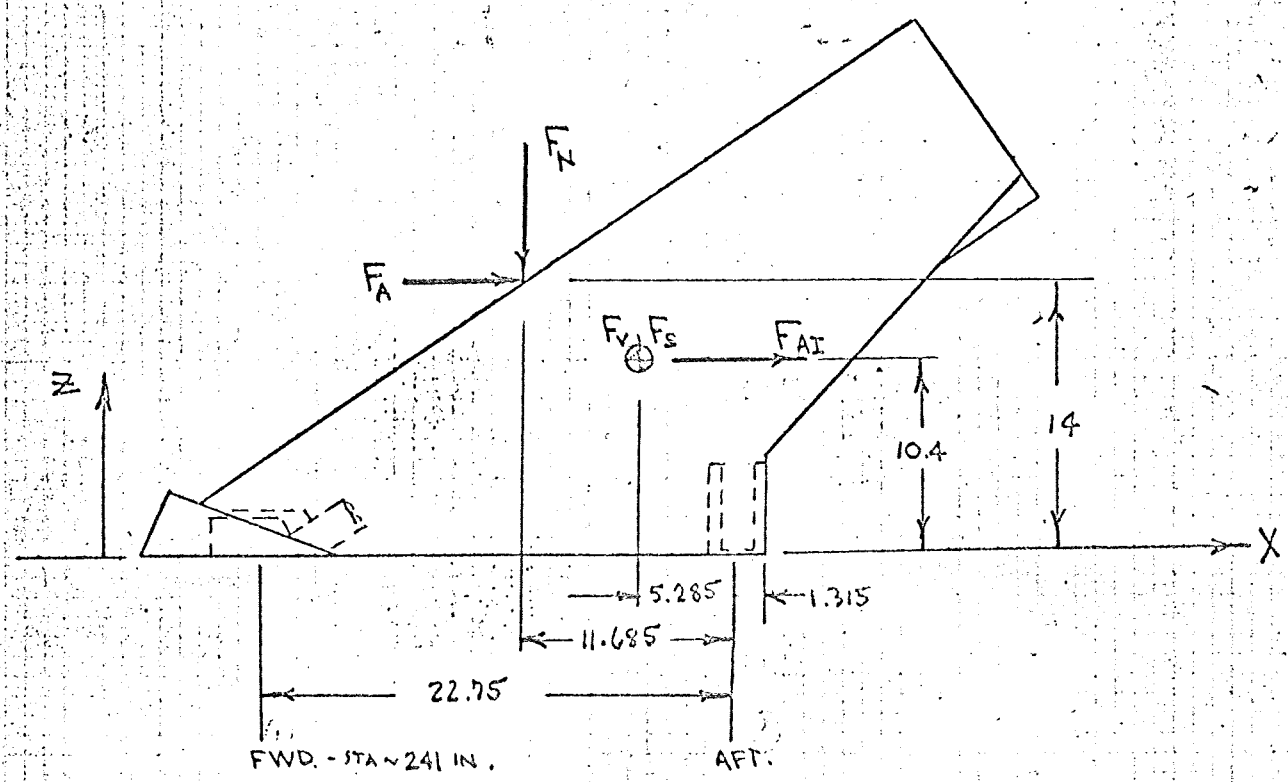

AERODYNAMIC FORCES (LIMIT)

$F_N = 1850$ LB.
$F_S = 2230$ LB. (⊥ TO PLANE OF PAPER) — INWARD FOR ULLAGE NO. 1; OUTWARD FOR ULLAGE NO. 2
$F_A = 1510$ LB.

STATIC INERTIAL FORCES (LIMIT)

$F_{AI} = 253$ LB.

ELASTIC INERTIA FORCE (LIMIT)

$F_V = 1161$ LB (⊥ TO PAPER, SAME DIRECTION AS F_S)

FIGURE 11

APPLIED AERODYNAMIC AND VIBRATIONAL S-IVB/V A.P.S. LIMIT LOADS

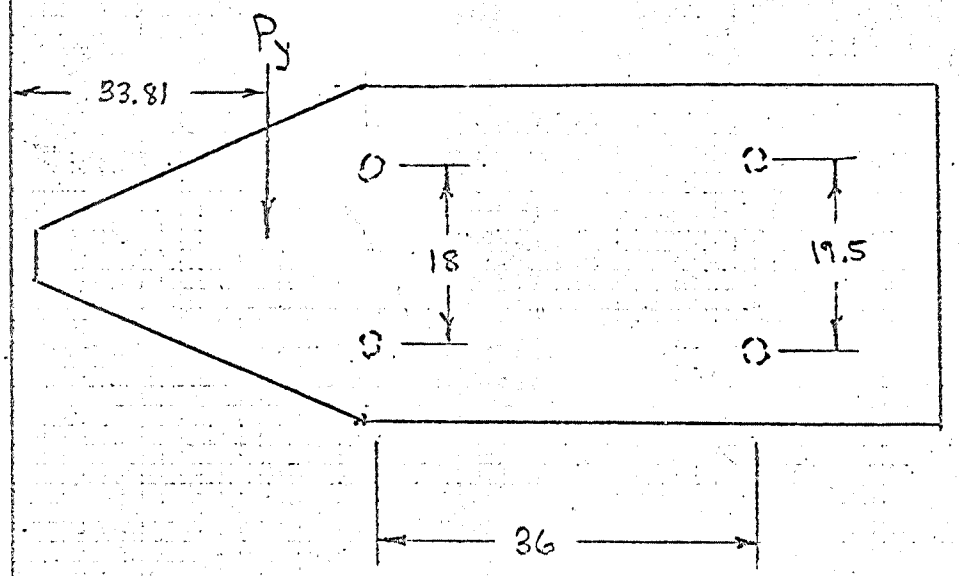

	COND. 1	COND. 2
	MAX αq @ $t = 70$ SEC.	$t = 62$ SEC.
P_x	3732 LB.	4430 LB.
P_y	1501	890
P_z	12071	14,325

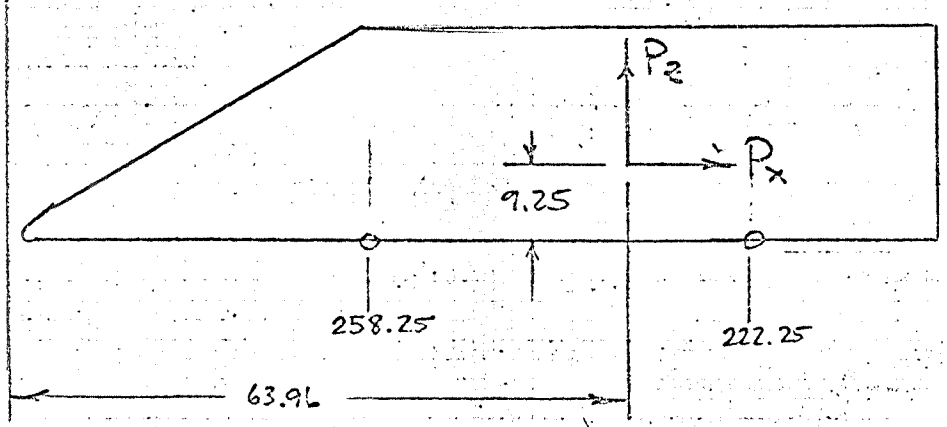

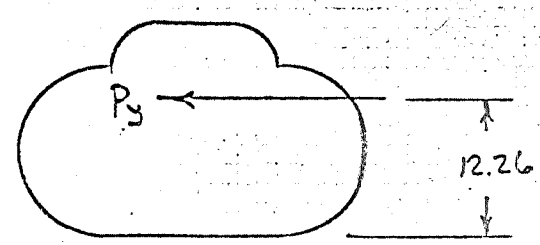

Figure 12

REV. A

f. After flagging of the last increment all loads will be removed.

NOTE: At all load increments in a.b. and c. data will be flagged and bar charts read and recorded for monitoring. Load sequences d. and e. will be accomplished as fast as feasible and the incremental steps held only long enough to flag the data; bar charts will be monitored visually only be overlays with pre-plotted expected strain levels.

5.4 Temperature Parameter Test

To evaluate parameter effects from the temperatures during the maximum heating trajectory the aft skirt, dummy aft interstage and the APS and LH_2 feed line protuberance areas as shown in Figure 13 and 14 will be heated simultaneously at specified rates to the following skin temperatures:

a. 360° of the entire aft skirt to $258^\circ F$ (Figure 5) excepting the APS and LH_2 feed line areas described in b. and c.

b. APS areas to $273^\circ F$ (Figures 6 and 13)

c. LH_2 feed line area to $273^\circ F$, and $245^\circ F$. (Figures 8, 9 and 14) Rev. "A"

d. 360° of the dummy aft interstage forward bay to 325° (Figure 7)

The heating, controlled by skin temperature, will be programmed to follow the maximum heating trajectory rate as shown in Figures 5 through 9.

To simulate temperature differentials, the areas under the LH_2 feed line and chilldown pump fairing and the three stringers directly under the APS units will be shielded by one inch thick, aluminum foil covered, fiberglas blankets.

Time limitation will not allow recording of bar chart data. Channels of critically stressed components will be monitored visually by comparison with pre plotted overlays.

5.5 Main Engine Cutoff (MECO) Condition Test - Ultimate Loads

The test procedure for the ultimate MECO condition will be as follows:

a. Axial loading is applied at such a rate that limit MECO and the temperatures specified in Section 5.4 are reached simultaneously

VEHICLE 501

AFT SKIRT INSULATION REQUIREMENTS

MAXIMUM HEATING TRAJECTORY

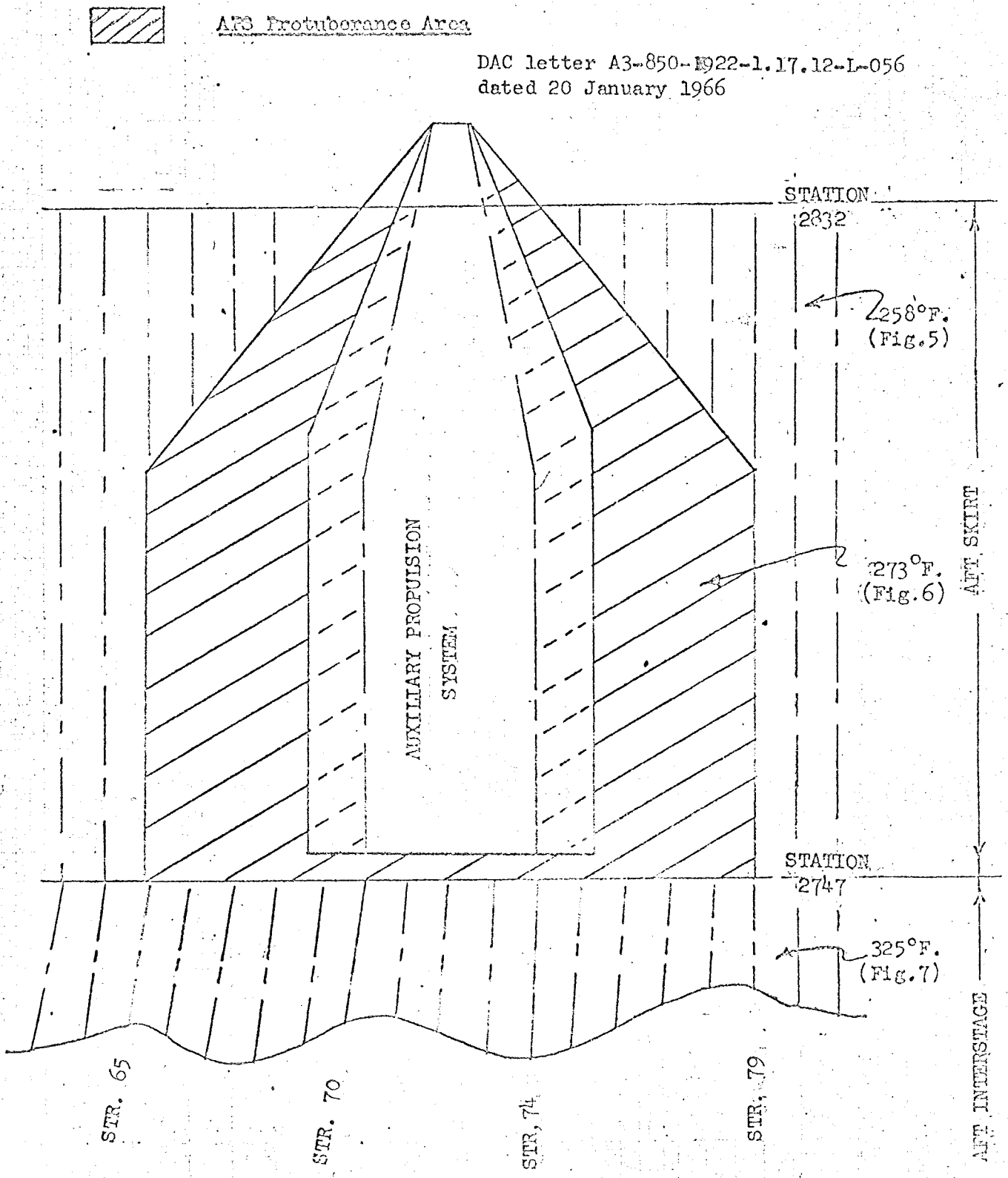

FIGURE 13

VEHICLE 501

AFT SKIRT INSULATION REQUIREMENTS

MAXIMUM HEATING TRAJECTORY

Reference: A3-860-KACB-M-169
dated 1 December 1966

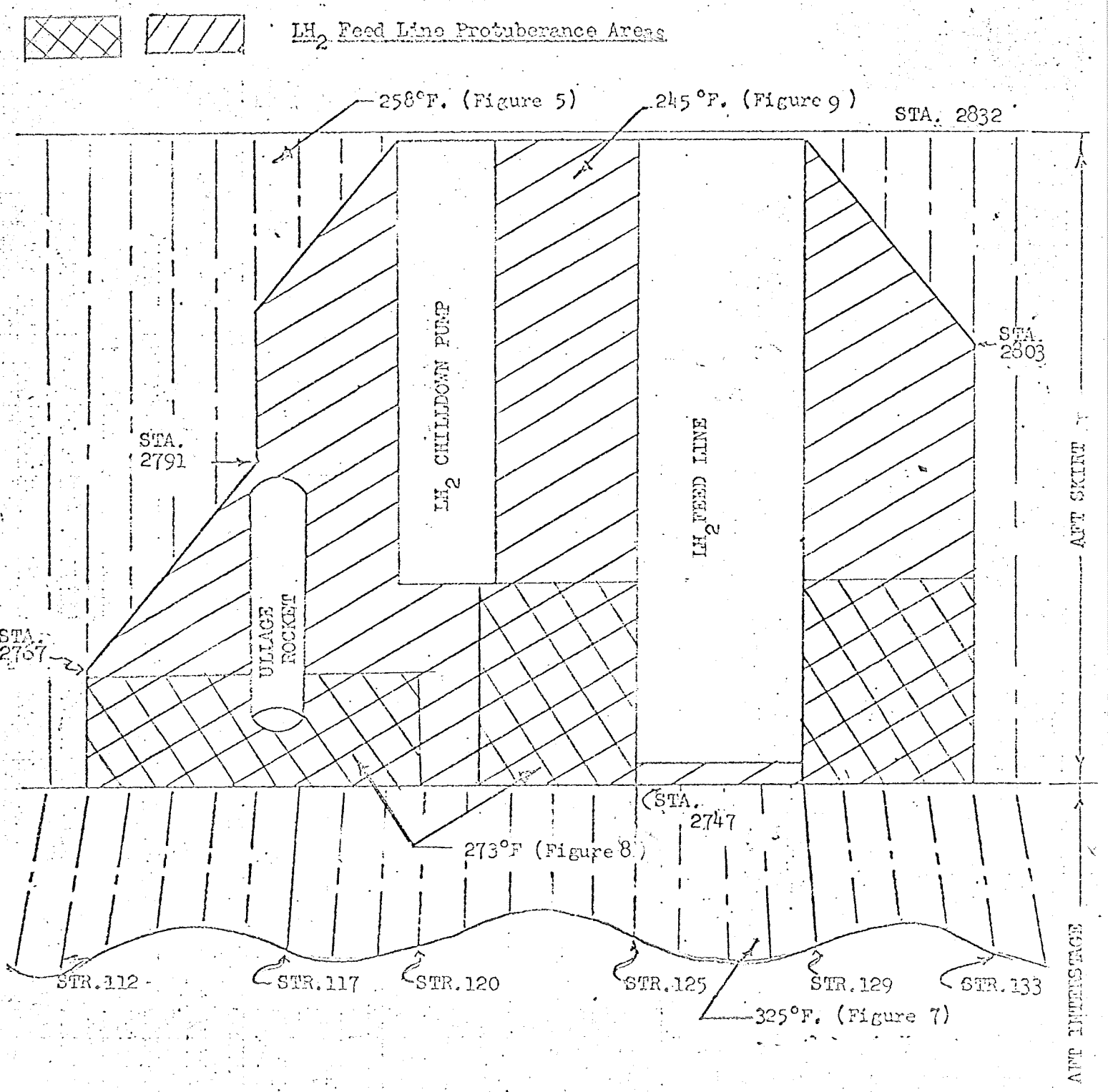

FIGURE 14

at t = 147 seconds if programmed heating is initiated at t = 80 seconds at the maximum heating trajectory rate.

b. On reaching limit MECO load and the specified temperature, the temperature is held constant and the axial load immediately increased to ultimate MECO (140 percent of limit) within 20 seconds.

c. On reaching the ultimate value the loads are immediately removed after flagging of data. Monitoring procedure will be the same as in the temperature parameter test (Section 5.4).

5.6 Failure Test

At ambient temperature, axial, bending moment, and shear loads associated with the maximum αq condition will be applied simultaneously to 100 percent of the limit values specified in 4.2.1. With the axial load held constant at the limit value, the bending moment and shear will be continuously increased until failure occurs. Instrumentation will be recorded at 20 percent increments of limit values to 100 percent limit, in 10 percent increments from 100 percent to 140 percent of limit and from 140 percent limit to failure in 5 percent increments. Bar chart data monitoring is not required for the failure test.

6.0 TEST MONITORING AND QUICK LOOK EVALUATION PROCEDURE

6.1 Monitoring - Bar Charts

Up to 30 data channels will be monitored from selected locations on the test specimen that, by analysis, are the most critical and/or will experience the highest stresses or deflections. Prior to commencing the test, plots of predicted stress or deflection histories will be prepared. In addition, bar chart overlays will be prepared for the two specific tests mentioned below.

Data will be recorded from the bar charts for a given number of load increments depending on the total number of increments for a specific test. The load increments will be held long enough to facilitate bar chart readout, but not to plot data. Data will be plotted on the prepared plots as the test progresses, except that if any unexplained deviations in data appear,

the test may be held at a specific load increment by the DAC Strength Section representative. At no time will the test proceed to the next higher increment without approval of the DAC Strength Section representative.

Three DAC Strength Section members will be required to monitor data during all tests. The Strength Section representative will coordinate the progress with the test conductor. During all tests the increments and the maximum load shall be held long enough to record the bar chart indications, unless a modified monitoring procedure is called for in the Section describing the individual tests.

6.2 Quick Look Data Evaluation

The number of days required for Quick Look Evaluation, following receipt of data from DAC test laboratories, shall be based on the number of load increments (data points) involved in the specific test. The following items comprise the Quick Look Evaluation effort that should be performed prior to proceeding with the next test:

a. Review all data to determine malfunctioning channels, and report to DAC test laboratories as soon as possible to allow checkout and corrective action. For those channels that cannot be corrected without schedule impact, a DAC Strength Section decision will be necessary as to whether the next test may proceed without the discrepant channels.

b. Confirm monitored channel plots with printout data and correct as necessary.

c. Note any high stresses from those channels not monitored, and investigate if they are excessive. Expected levels should be prepared in advance to expedite review.

6.3 Summary Report to MSFC Representative

Prior to proceeding with the next test, the NASA representative shall be briefed and furnished with the following:

1. A summary of the Quick Look Evaluation consisting of one or two paragraphs which will discuss:

   (a) Malfunctioning channels and their disposition.

   (b) Disposition of any discrepancies noted on the monitored channels.

   (c) Any data levels that would indicate potential critical areas for subsequent tests requiring higher loads.

   (d) Notification of intent to proceed with next test.

2. Plots of the thirty (30) monitored channels compared to the predicted levels.

Items 1. and 2. above will be combined in a package, with a transmittal slip, for submittal to the NASA representative.

7.0 INSTRUMENTATION

Strain and deflection gages for the aft skirt test are presented in the Instrumentation Drawing IT07091 Revision "F", a copy of which is included in Appendix A. Page 24.

8.0 TEST FACILITY

The test will be conducted at the Structural Test Laboratory, Douglas Space Systems Center, Huntington Beach, California. A description of the facility is presented in Appendix B. Page 39.

9.0 REFERENCES

9.1 Referenced Drawings

9.1.1 S-IVB/Saturn V Aft Skirt Drawing Number P/N 1A39295 change "BP"

9.1.2 Structural Loading Head Drawing Number 1A46689 change "A"

9.1.3 Dummy Aft Interstage Drawing Number 1A46762 change "B"

9.1.4 Dummy Propulsion Tank Number 1A46763 New

9.1.5 Aft Skirt Structural Test Setup 1T08826 New

9.2 Reference Documents

9.2.1 S-IVB/V Aft Interstage S-II Interface Structural Test Plan SM 46917 Revision "A", dated 2 May 1966

9.2.2 General Test Plan SM 41412 Revision date, 18 July 1966

9.2.3 Change Request 717 SM to GTP SM 41412 Item A-47A, dated 30 May 1966

9.2.4 Douglas Model Specification DS-2163

9.2.5 MSFC Memorandum M-P&VE-SL-9-62, dated November 1962

9.2.6 MSFC Memorandum M-P&VE-SL-53-63, dated April 1963

9.2.7 MSFC Memorandum R-P&VE-SL-202-63, dated October 1963

APPENDIX A

REVISIONS			
SYM	DESCRIPTION	DATE	APPROVED
A	SEE E.O.	[illegible]	[illegible]
B	SEE E.O.	[illegible]	[illegible]
C	THRU F SEE E.O.S	[illegible]	[illegible]
F	SEE E.O.	[illegible]	[illegible]

GENERAL NOTES
UNLESS OTHERWISE SPECIFIED:

1. CODING USED ON DRAWING FOR TRANSDUCERS PER SM 41674
2. CIRCUITS FROM TRANSDUCERS TO RECORDING EQUIPMENT SHALL CONFORM TO THE FOLLOWING BLOCK DIAGRAM:

DDS	TRANSDUCER LOCATION NO. XXX	DIGITAL DATA SYSTEM
LP	TRANSDUCER LOCATION NO. XXX	LOAD PROGRAMMER
C	TRANSDUCER LOCATION NO. XXX	TEMPERATURE PROGRAMMER
M	TRANSDUCER LOCATION NO. XXX	VISUAL DISPLAY LOADS-XY RECORDER TEMP. STRIP CHART

3. TRANSDUCERS ARE DETAILED PER 1T07690
4. THE FOLLOWING TRANSDUCERS WILL BE INSTALLED ON PHASE I TEST ONLY:
   1376-1382 FORCE X'DCRS. (SEE SHT. 14)
   1405, 1407, 1409 PRESS. X'DCRS. (SEE SHT. 14)
   2477 & 2478 STRAIN GAGE BOLTS. (SEE. SHT. 11)
   2490 DEFLECTOMETER (SEE SHT. 11)

TRANSDUCER SYMBOLS

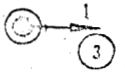

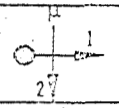

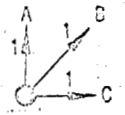

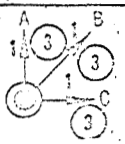

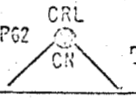

TP01	1	Uniaxial
TP03	1, 3	Uniaxial Back to Back
TP06	1, 2	Uniaxial corrected for Poisson's value
TP16	A, B, C, 1	Rosette
TP17	A, B, C, 1, 3	Rosette Back to Back
TP62	CRL, CN	Thermo Couple Data Channel
TP63	CRL, ALL	Thermo Couple (M) Monitoring (C) Control Channel
	F	Force Transducer
	D	Deflection Transducer
	P	Pressure Transducer

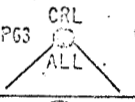

DASH NUMBERS OF THIS DRAWING
ODD DASH NUMBERS SHOWN
EVEN DASH NUMBERS OPPOSITE

1T07091-1

FINISH

UNLESS OTHERWISE SPECIFIED
DIMENSIONS ARE IN INCHES.
TOLERANCES
FRACTIONS ± ~
DECIMALS ± ~
ANGLES ± ~

MATL		
WT CHK		
STR CHK		
CHECK		
PR ENGR		
DES ENGR	[illegible]	[illegible]
CR ENGR		
PREP BY	[illegible]	12-15-5

SEE ENGINEERING RECORDS FOR USAGE DATA

FIRST RELEASE OF PRINTS
ORIGINAL DATE OF DRAWING 00 DEC '64

DESIGN ACTIVITY APPROVAL
CUSTOMER APPROVAL

BOEING AIRCRAFT COMPANY, INC SANTA MONICA, CALIFORNIA

INSTRUMENTATION
AFT SKIRT SATURN-V
STRUCTURAL TEST

CODE IDENT NO. 18355 SIZE C 1T07091

SCALE

SHEET 1 OF 1

FORM X60-999-11 (10-63)

REVISIONS			
SYM	DESCRIPTION	DATE	APPROVED
F			

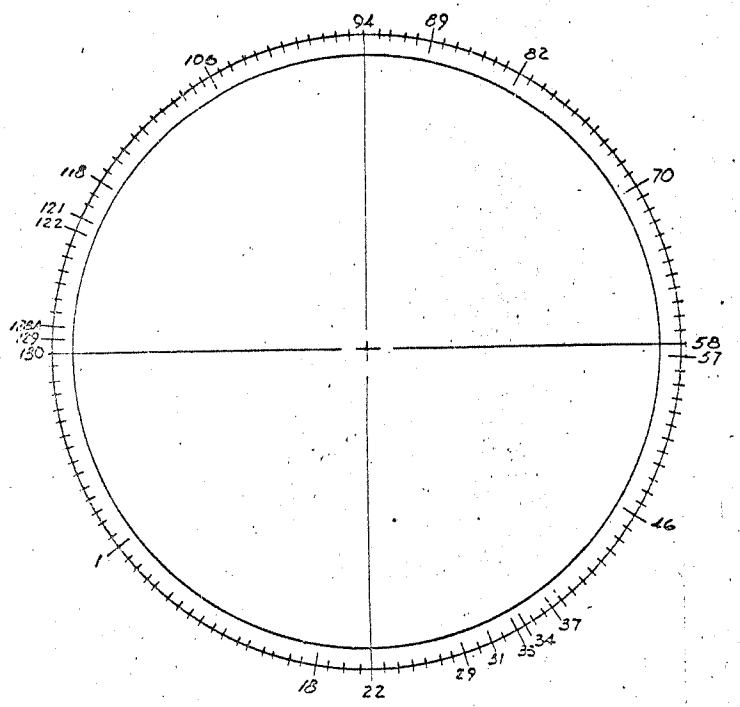

STRAIN GAGES	STGR.	SHT.
3001 TO 3002	1	3
3003 TO 3004	18	3
3005 TO 3018	29	4
3027 TO 3048	31	4
3049 TO 3060	33	4
3061 TO 3082	34	4
3083 TO 3086	35	5
3087 TO 3088	46	5
3089 TO 3090	82	5
3091 TO 3092	94	5
3093 TO 3094	118	5
3095 TO 3110	37	5
3111 TO 3142	58	6
3143 TO 3165	57	6
3166 TO 3177	70	6
3178 TO 3187	106	6
3188 TO 3205	128A	7
3206 TO 3221	129	7
3222 TO 3239	130	7
3240 TO 3241	89	3
3242 TO 3245	121	7
3246 TO 3249	122	7
3250 TO 3251	123	7
3258 TO 3278	FRAME	8 & 9
3252 TO 3257	*	7
THERMOCOUPLES	STGR	SHT
~~3301 TO 3304~~	~~80~~	~~10~~
~~3305 TO 3312~~	~~49~~	~~10~~
~~3313 TO 3333~~	~~106~~	~~10~~
~~3334 TO 3343~~	~~18~~	~~10~~
DEFLECT. POTS	STGR	SHT
3350 TO 3352	29	11
3353 TO 3356	34	11
3357 TO 3361	37	12
3362 TO 3364	46	11
3365 TO 3374	58	12
3375 TO 3381	70	12
3382 TO 3384	82	11
3385 TO 3387	94	11
3388 TO 3393	106	12
3394 TO 3396	118	11
3397 TO 3401	130	12
3402 TO 3403	142	12
3404 TO 3409	22	12
3410 & 3411	58	12
3412 TO 3415	94	11
3416 & 3417	130	12
FORCE TRANS.		SHT.
3421 TO 3433	*	13
PRESS. TRANS.		SHT.
3441 & 3442		13

STRAIN GAGES	STGR.	SHT.
3450 TO 3456	70	6
3457 TO 3480	124	5
3505 TO 3508	FRAME	9

THERMOCOUPLES	SHEET
3550 TO 3589	14
3590 TO 3649	15
3650 TO 3660	14

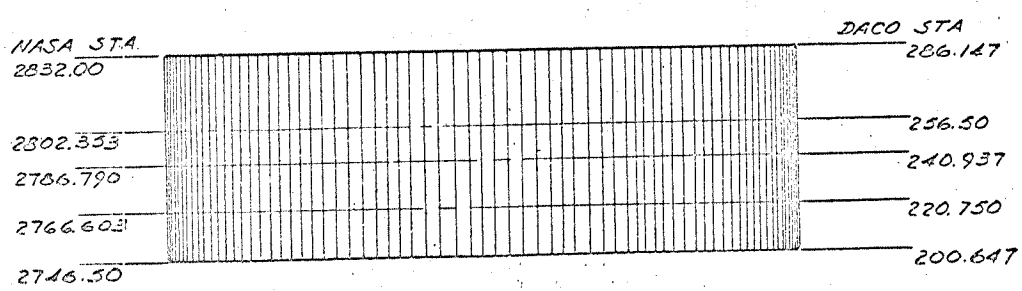

AFT SKIRT SATURN V 1A39295

* 3421B, 3423B, & 3424B M

DOUGLAS AIRCRAFT COMPANY, INC SANTA MONICA, CALIFORNIA

CODE IDENT NO.	SIZE	
10355	C	1T07091
SCALE		SHEET 2

FORM X60-999-11 (10-62)

REVISIONS			
SYM	DESCRIPTION	DATE	APPROVED

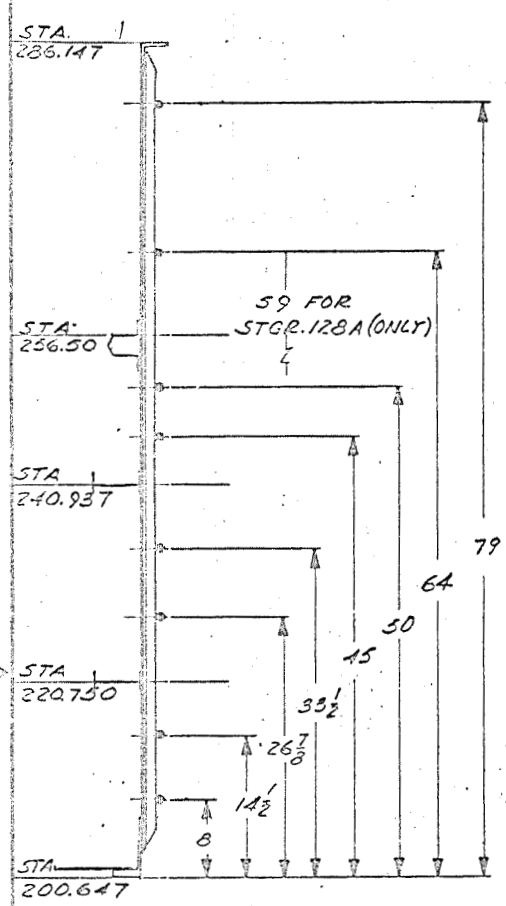

TYPICAL FOR BAYS WITH 2 STRAIN GAGE LOCATIONS. EXCEPT AS NOTED.

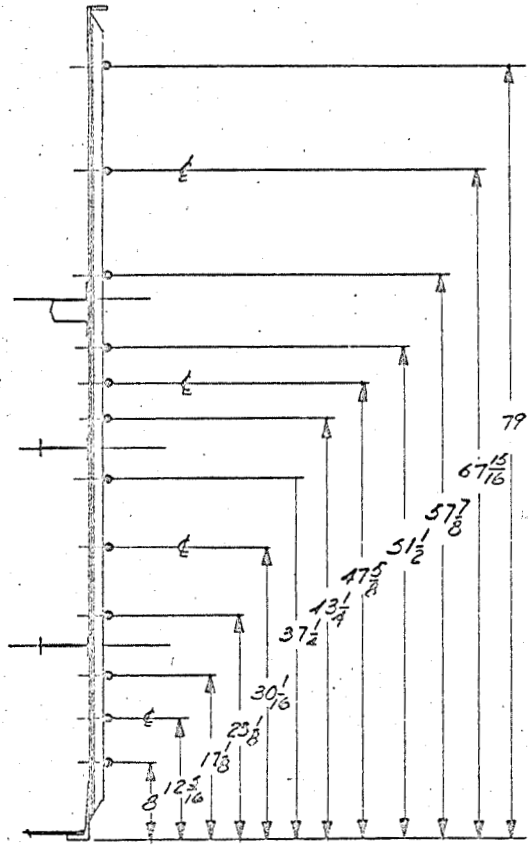

TYPICAL FOR BAYS WITH 3 STRAIN GAGE LOCATIONS

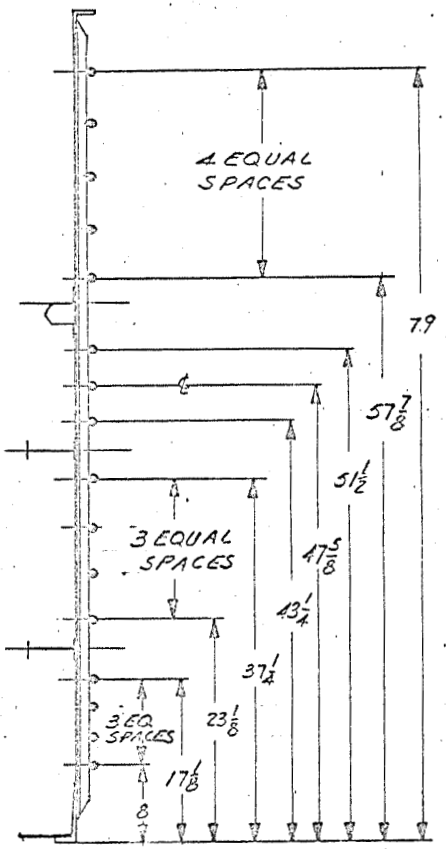

FOR STRINGER 58

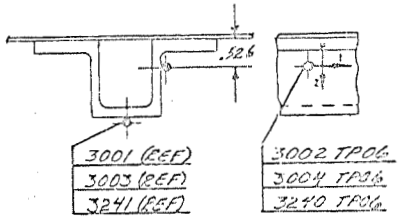

SECTION A-A

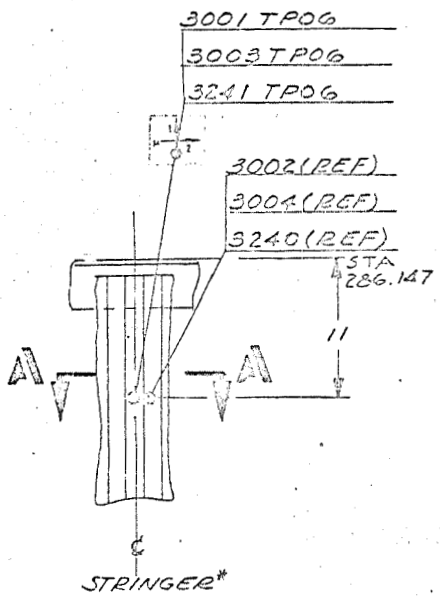

STRINGER*

GAGES 3001 & 3002 FOR 1*
GAGES 3003 & 3004 FOR 18*
GAGES 3240 & 3241 FOR 89*

FOR STRINGERS 29, 31, 32, 33, 34, 35, 37, 46, 57, 70, 82, 94, 106, 128A, 129, & 130.

DIMENSIONS SHOWN NEXT TO GAGE LOCATION TO BE USED WHEN SHOWN

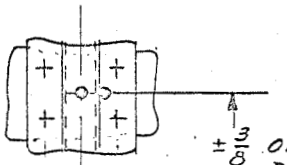

$\pm\frac{3}{8}$ ON ALL VERTICAL DIMENSIONS (SEE ABOVE VIEWS)

GAGES TO BE CENTERED BETWEEN RIVETS TYP FOR ALL STRINGERS.

DOUGLAS AIRCRAFT COMPANY, INC	SANTA MONICA, CALIFORNIA	
CODE IDENT NO. 18355	SIZE C	1T07091
SCALE		SHEET 3

1T07091

1T07091

SHEET

28

FORM X59-999-11 (10-62)

REVISIONS			
SYM	DESCRIPTION	DATE	APPROVED
B			

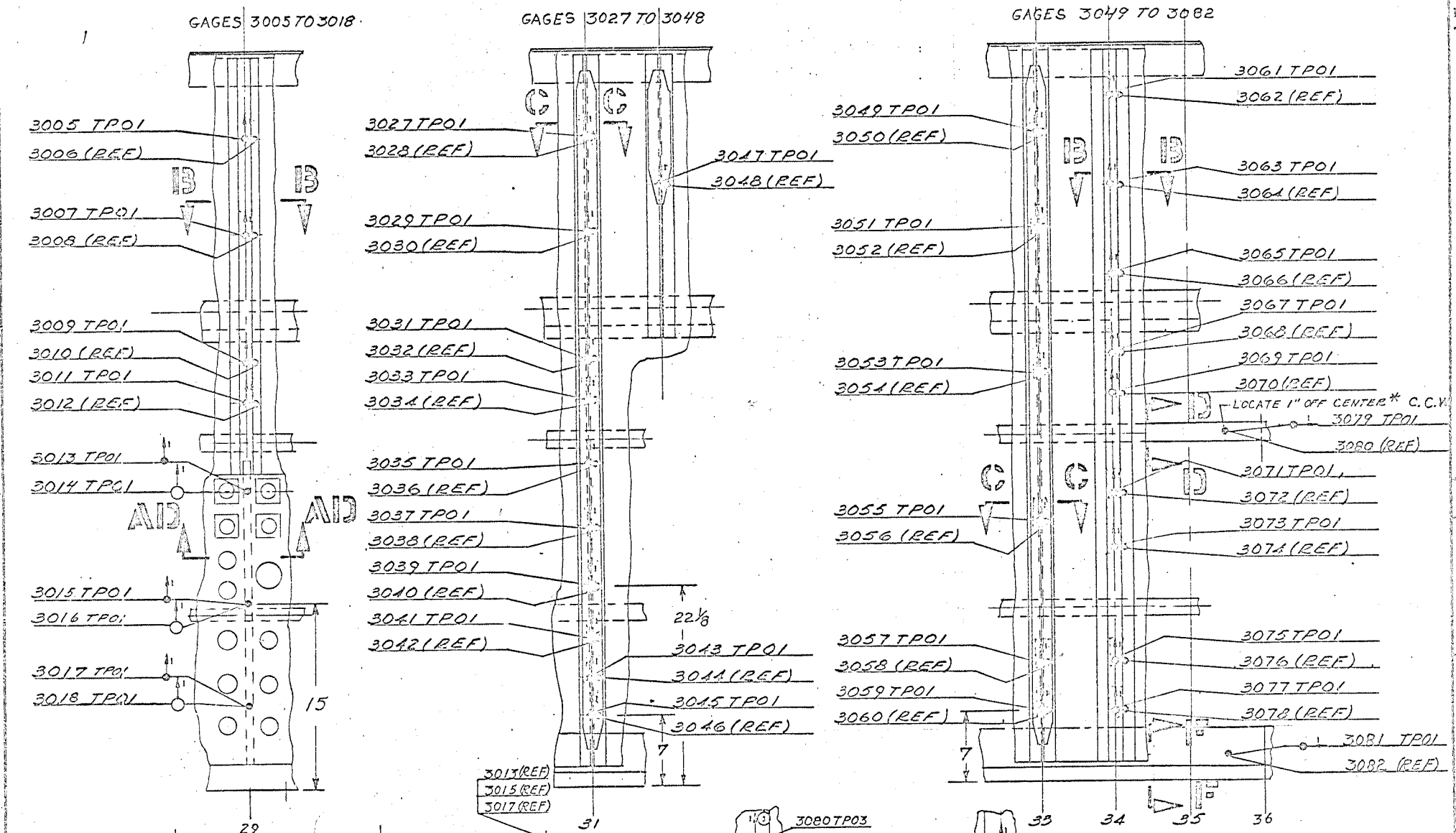

BOEING AIRCRAFT COMPANY, INC SANTA MONICA, CALIFORNIA

CODE IDENT NO.	SIZE	
16355	C	1T07091
SCALE		SHEET 4

FORM X50-999-11 (10-62)

REVISIONS			
SYM	DESCRIPTION	DATE	APPROVED

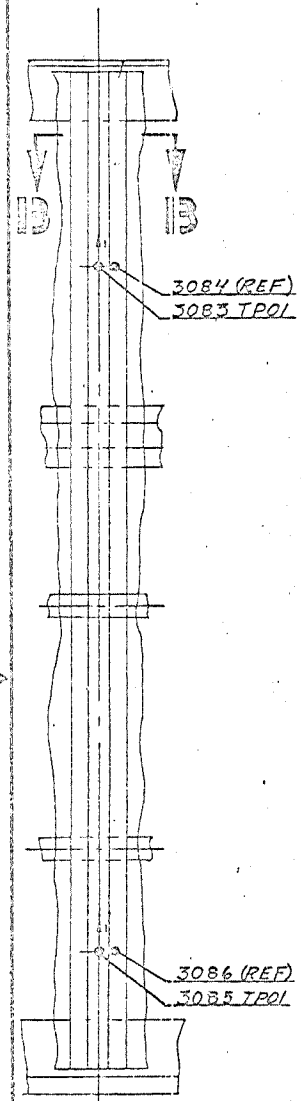

35

GAGE LOCATIONS
3083 TO 3086

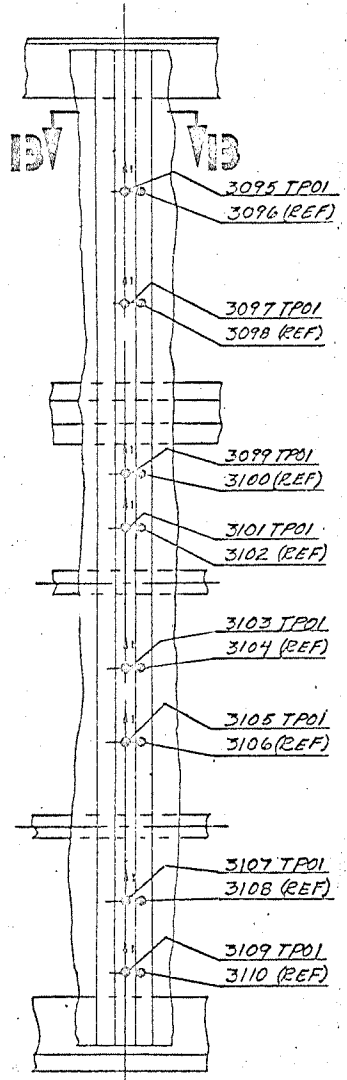

37

GAGE LOCATIONS
3095 TO 3110

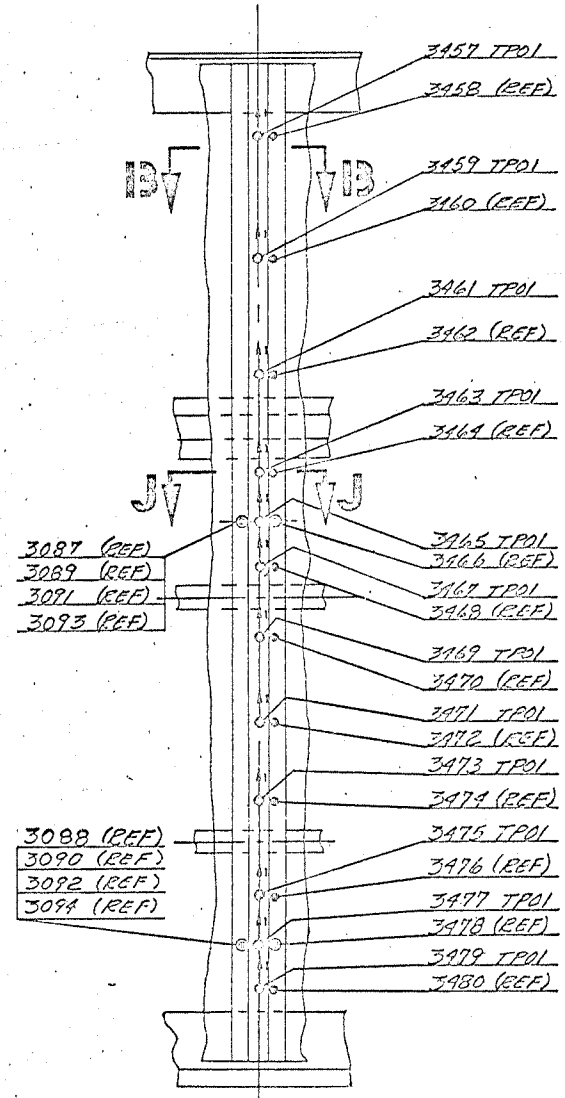

STRINGER*

GAGES 3087 & 3088 FOR 46*
GAGES 3089 & 3090 FOR 82*
GAGES 3091 & 3092 FOR 94*
GAGES 3093 & 3094 FOR 118*
GAGES 3457 TO 3480 FOR 124*

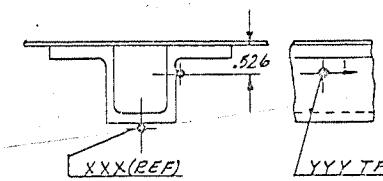

LOCATION FOR ODD NUMBER GAGES
3083 & 3085 STGR 35
3095 TO 3109 STGR 37
3457 TO 3479 STGR 124

LOCATION FOR EVEN NUMBER GAGES
3084 & 3086
3096 TO 3110
3458 TO 3480

SECTION B - B

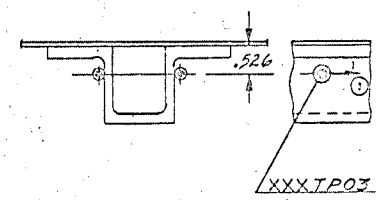

3087 & 3088 STGR 46
3089 & 3090 STGR 82
3091 & 3092 STGR 94
3093 & 3094 STGR 118

SECTION J - J

DOUGLAS AIRCRAFT COMPANY, INC	SANTA MONICA, CALIFORNIA	
CODE IDENT NO. 18355	SIZE C	1T07091
SCALE		SHEET 5

1T07091

SHEET

30

FORM X60-999-11 (10-62)

REVISIONS			
SYM	DESCRIPTION	DATE	APPROVED

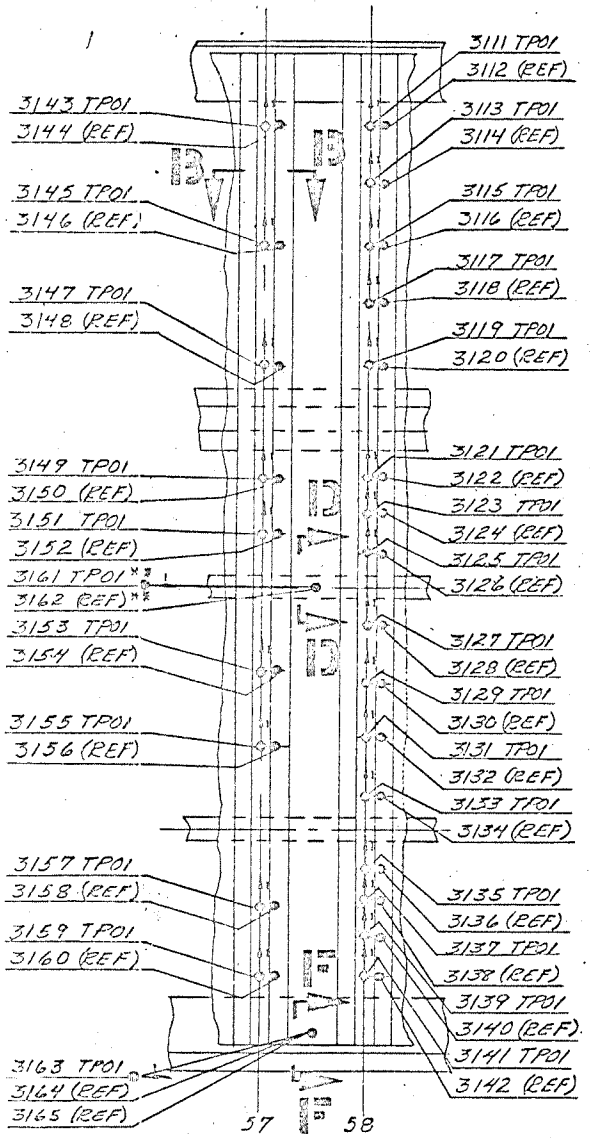

GAGES 3111 TO 3142 STGR 58
GAGES 3143 TO 3165 STGR 57

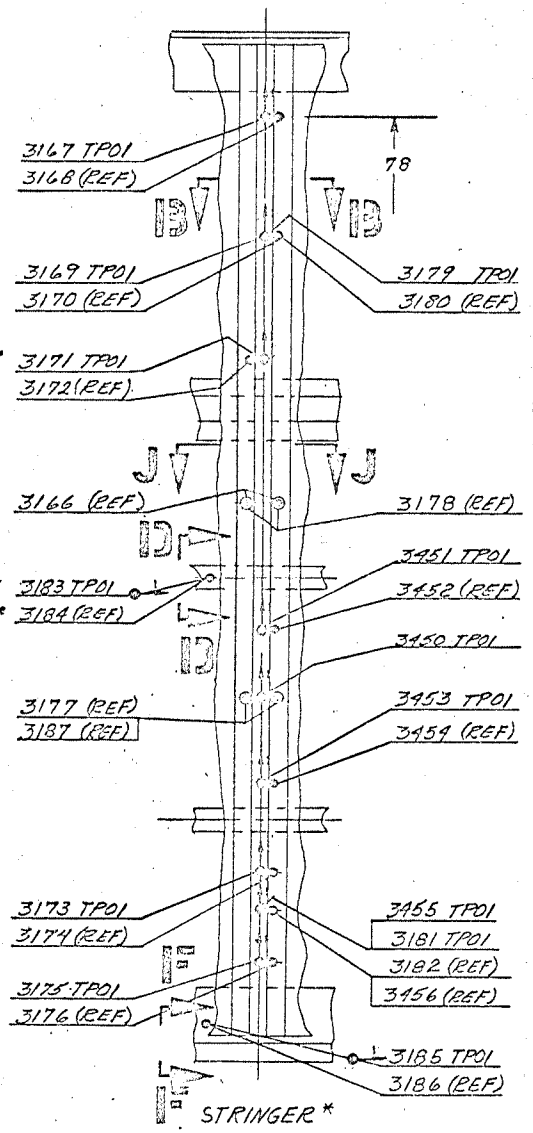

GAGES 3166 TO 3177 & 3450 TO 3456 STGR 70*
GAGES 3178 TO 3187 STGR 106*

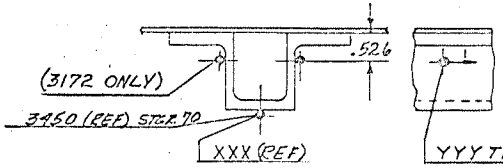

LOCATION FOR ODD NUMBER GAGES
3111 TO 3141 STGR 58
3143 TO 3159 STGR 57
3451 TO 3455, 3167 TO 3175 STGR 70
3177 & 3181 STGR 106

LOCATION FOR EVEN NUMBER GAGES
3112 TO 3142
3144 TO 3160
3168 TO 3176, 3452 TO 3456
3180 & 3182

SECTION B-B

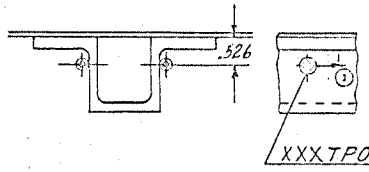

3166 & 3177 STGR 70
3178 & 3187 STGR 106

SECTION J-J

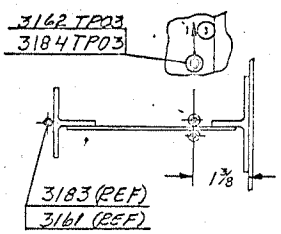

SECTION D-D

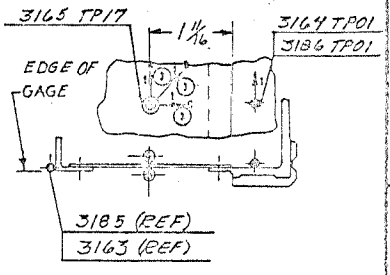

SECTION F-F

*** MOVE OFF CENTER 1" TO CLEAR INTERFERENCE ON WEB

DOUGLAS AIRCRAFT COMPANY, INC — SANTA MONICA, CALIFORNIA

CODE IDENT NO.	SIZE	
18355	C	1T07091
SCALE		SHEET

1T07091

FORM X60-999-11 (10-62)

REVISIONS			
SYM	DESCRIPTION	DATE	APPROVED

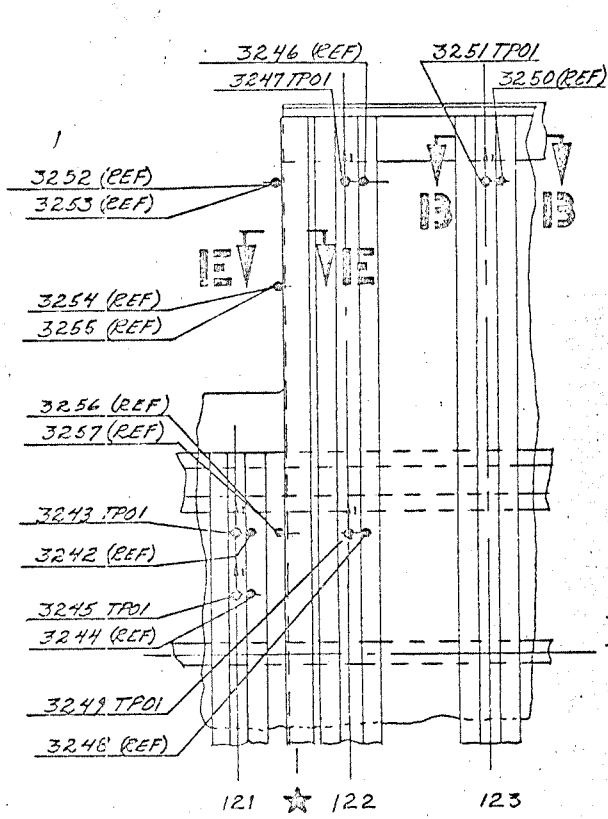

GAGES 3242 TO 3257

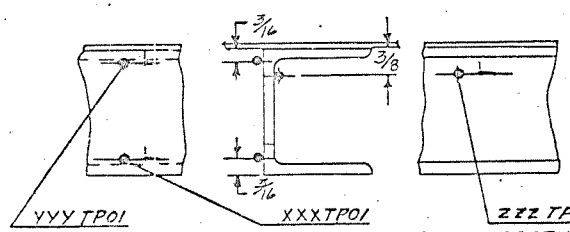

LOCATION FOR EVEN NO. GAGES — LOCATION FOR ODD NO. GAGES — LOCATION FOR EVEN NO. GAGES

3192 TO 3200 – STR 128A – 3191 TO 3205 — 3190, 3202 & 3204

3206 TO 3220 – STR 129 – 3207 TO 3221

3254 & 3256 – ☆ – 3253 TO 3257 — 3252

SECTION E-E

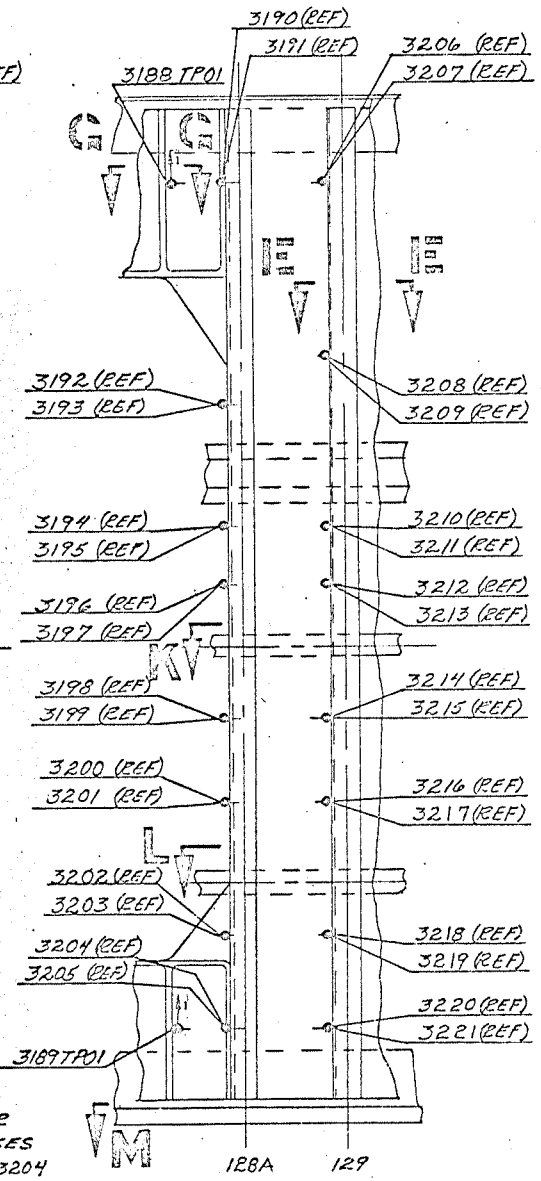

GAGES 3188 TO 3221

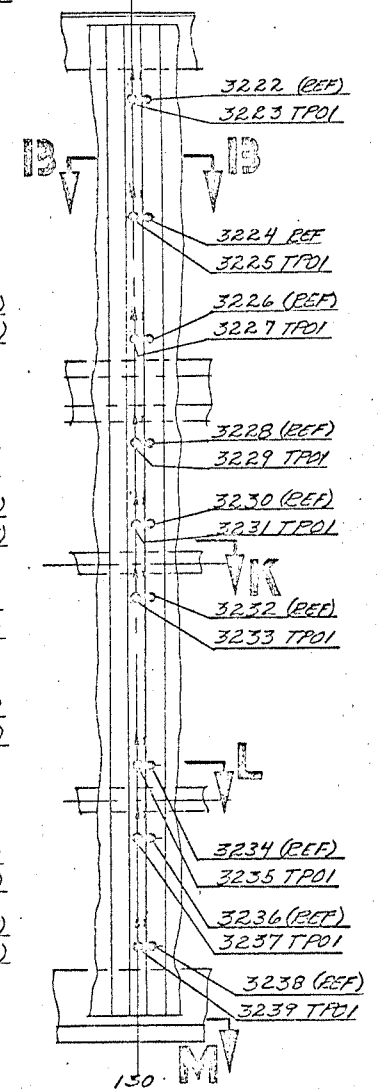

GAGES 3222 TO 3239

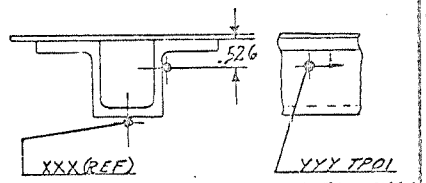

LOCATION FOR ODD NO. GAGES — LOCATION FOR EVEN NO. GAGES

3223 TO 3239 – STR 130 – 3222 TO 3238

3243 & 3245 – STR 121 – 3242 & 3244

3247 & 3249 – STR 122 – 3246 & 3248

3251 – STR 123 – 3250

SECTION B-B

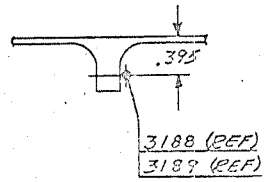

SECTION G-G

DOUGLAS AIRCRAFT COMPANY, INC	SANTA MONICA, CALIFORNIA	
CODE IDENT NO. 18355	SIZE C	1T07091
SCALE		SHEET 7

1T07091

1T07091

SHEET

32

FORM X60-999-11 (10-62)

REVISIONS			
SYM	DESCRIPTION	DATE	APPROVED

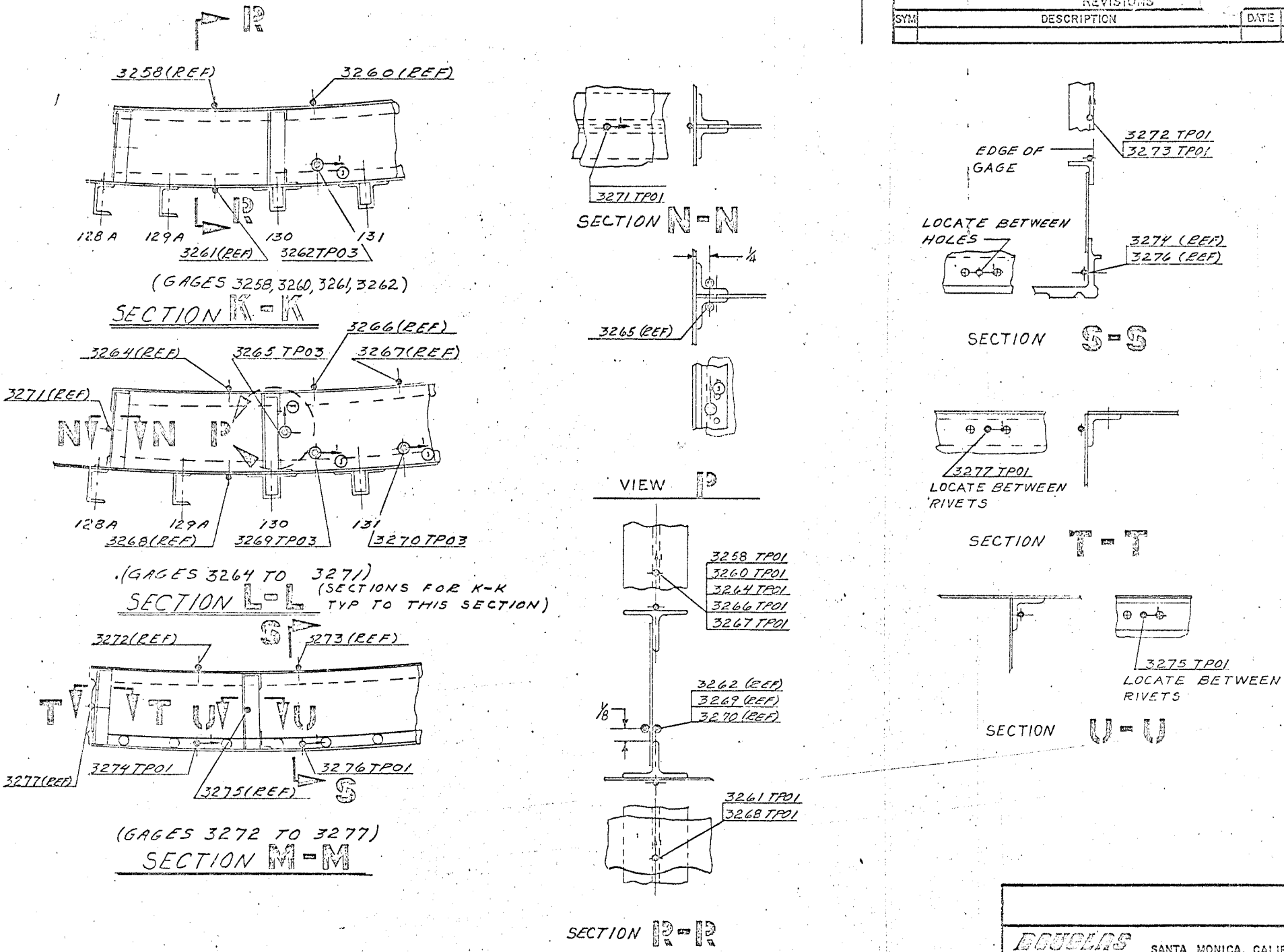

DOUGLAS AIRCRAFT COMPANY, INC	SANTA MONICA, CALIFORNIA	
CODE IDENT NO. 18355	SIZE C	1T07091
SCALE		SHEET 8

1T07091

SHEET 1T07091

33

FORM X60-999-11 (10-62)

REVISIONS			
SYM	DESCRIPTION	DATE	APPROVED

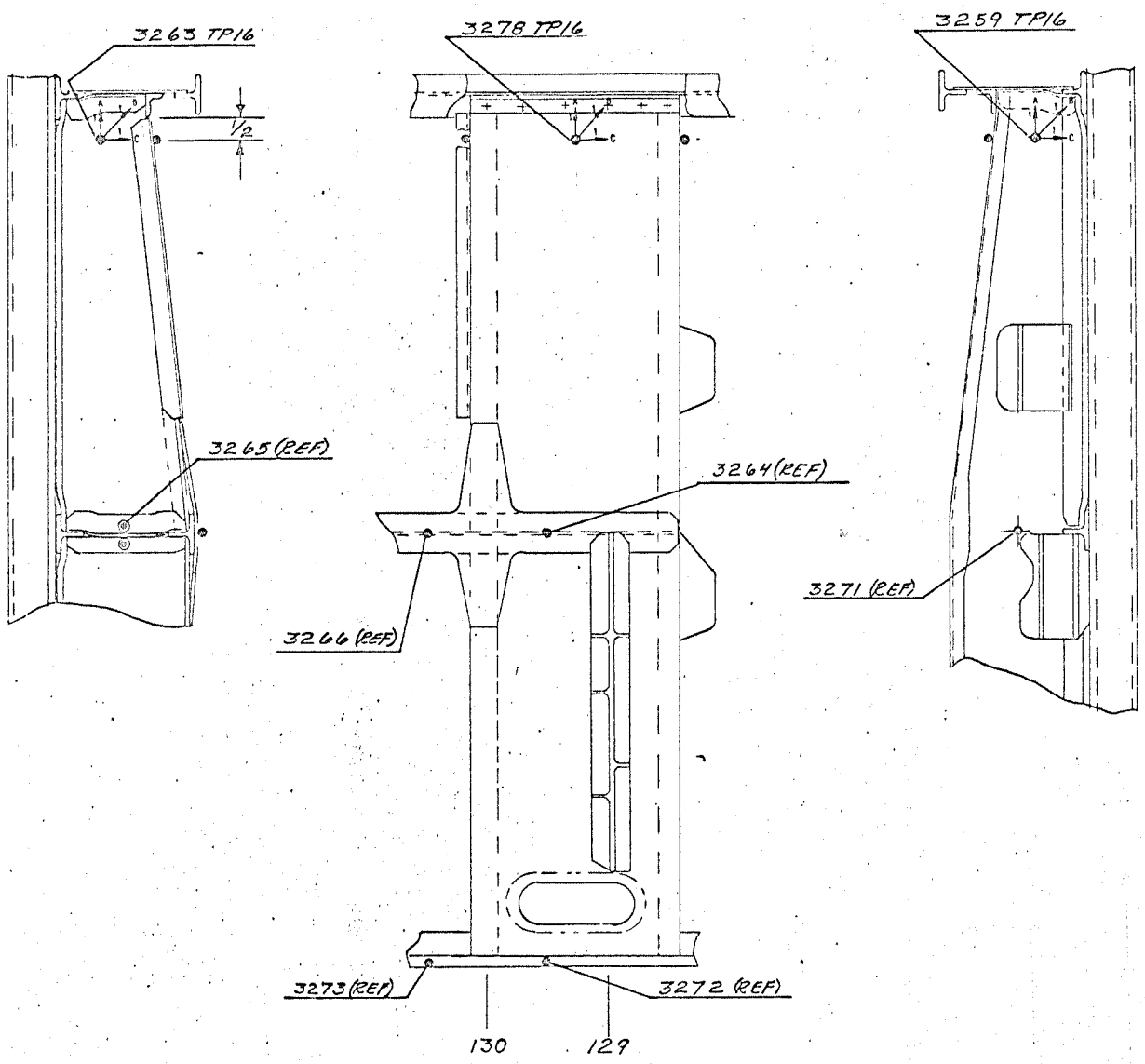

LOCATION FOR GAGES 3259, 3263, & 3278
(SEE SHEET 8 FOR REF. GAGES)

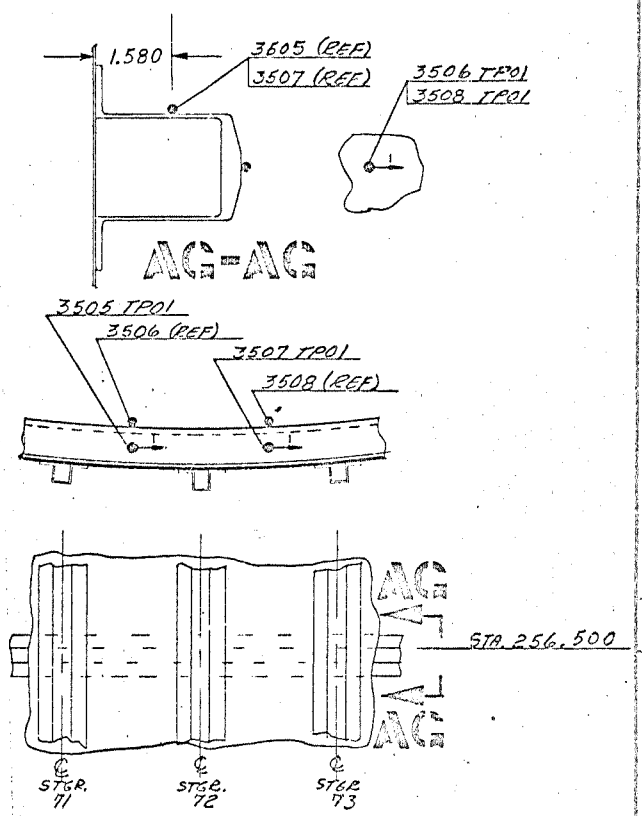

LOCATE GAGES MIDWAY BETWEEN STGRS.

DOUGLAS AIRCRAFT COMPANY, INC	SANTA MONICA, CALIFORNIA	
CODE IDENT NO. 18355	SIZE C	1T07091
SCALE		SHEET 9

1T07091

1T07091

SHEET

34

DELETE ALL LOCATION NUMBERS THIS PAGE

REVISIONS			
SYM	DESCRIPTION	DATE	APPROVED

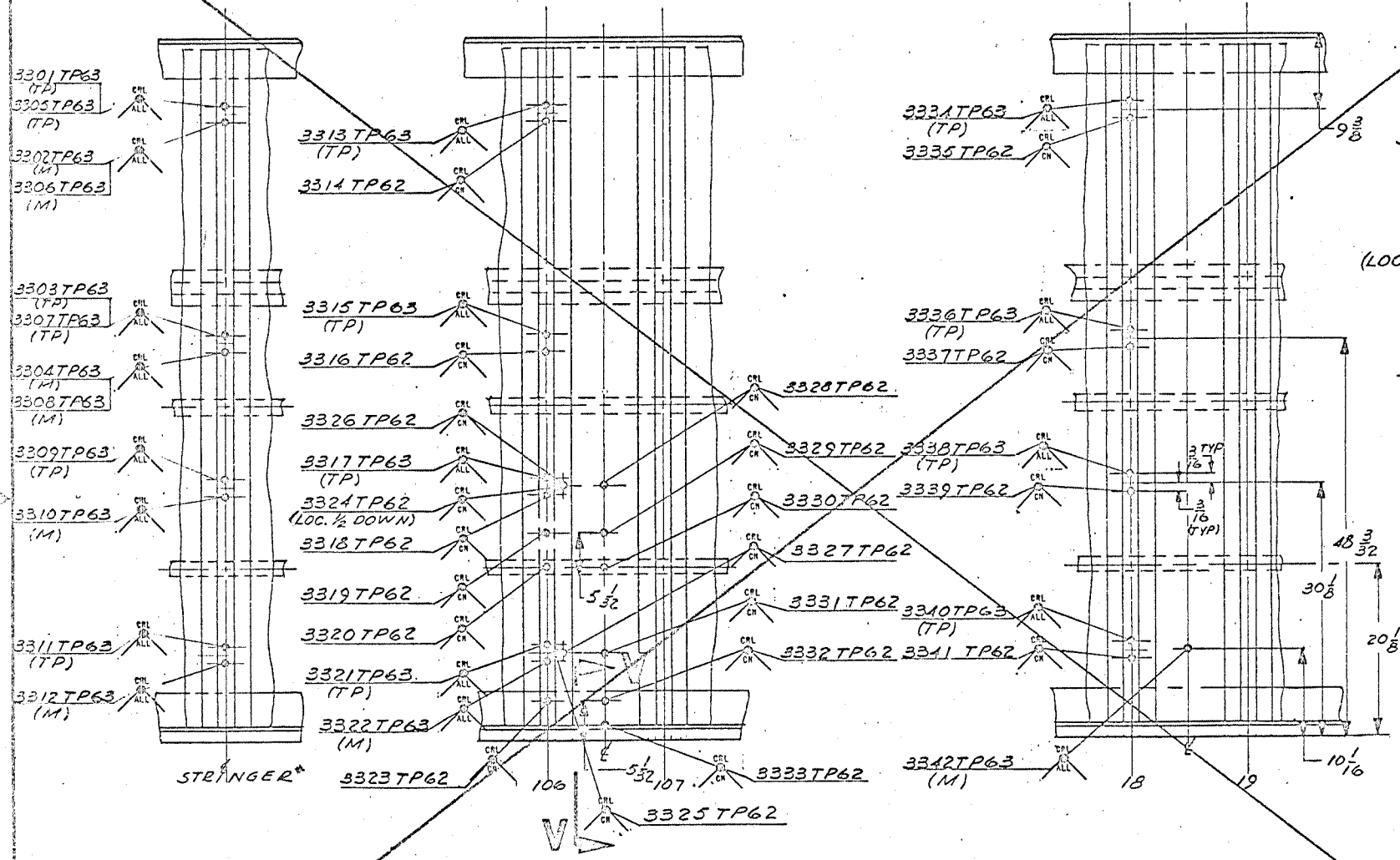

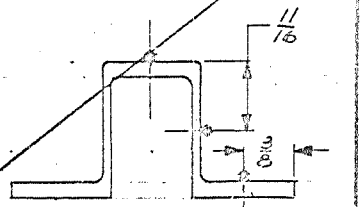

TYP LOCATIONS ON STGR FOR THERMOCOUPLES

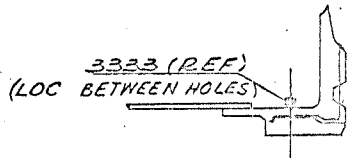

SECTION V-V

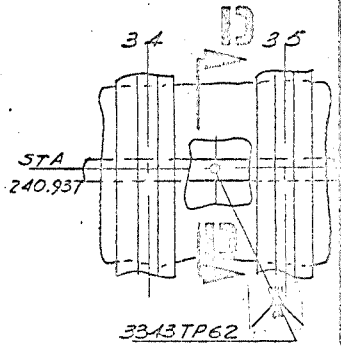

THERMOCOUPLES 3301 TO 3304 80°
THERMOCOUPLES 3305 TO 3312 49°

THERMOCOUPLES 3313 TO 3333

THERMOCOUPLES 3334 TO 3342

NOTE:

1. ALL TP62 THERMOCOUPLES ARE DDS PER GEN-NOTE 2.
2. TP & M THERMOCOUPLES ARE DESIGNATED IN ABOVE VIEWS. (TP & M APPEAR UNDER CALL OUT NUMBER)

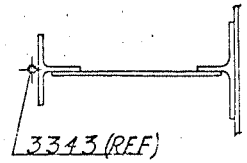

SECTION D-D

DOUGLAS AIRCRAFT COMPANY, INC	SANTA MONICA, CALIFORNIA	
CODE IDENT NO. 18355	SIZE C	1T07091
SCALE		SHEET 10

1T07091 | 1T07091 | 1T07091 | SHEET 1

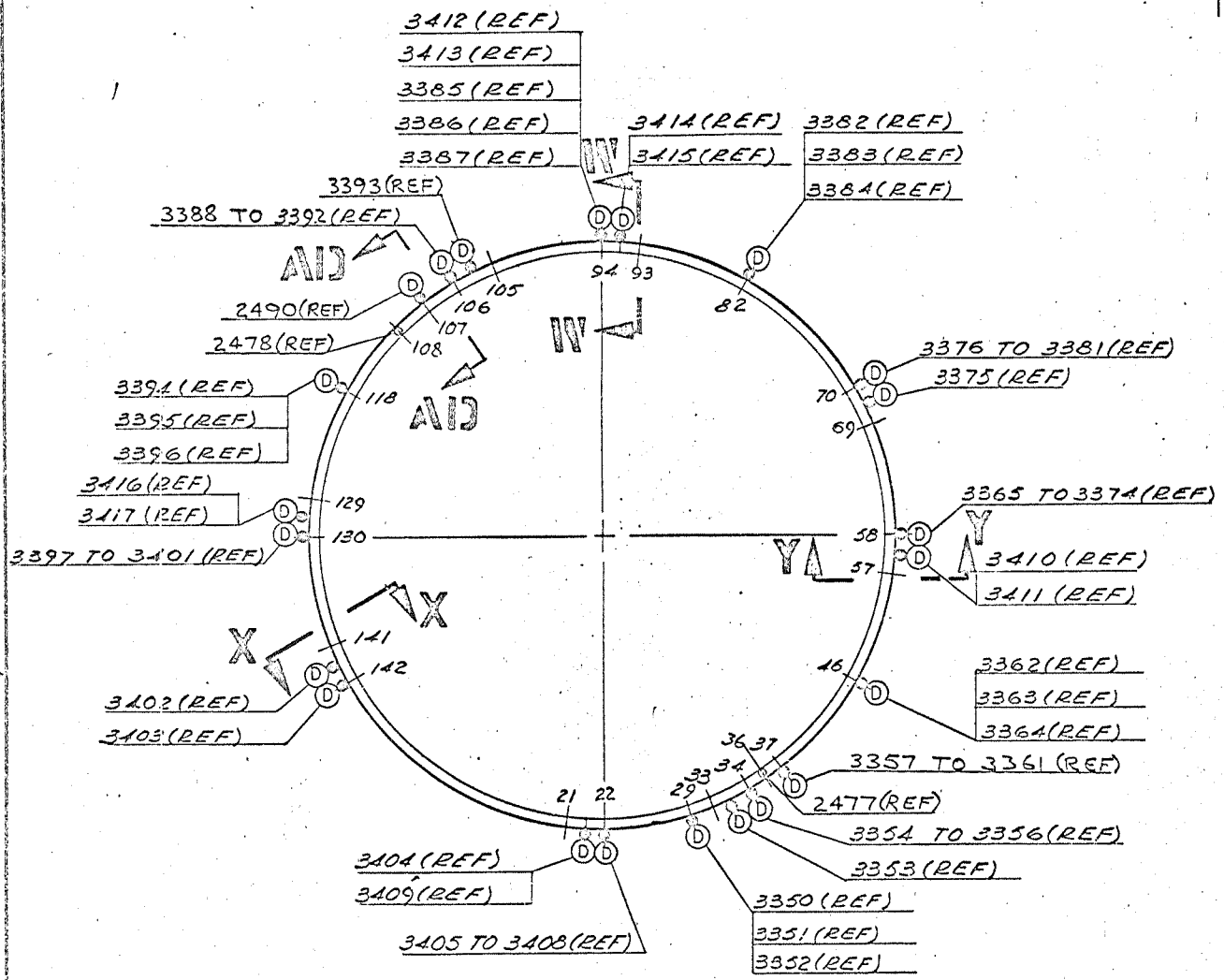

DEFLECTION POTENTIOMETERS 3350 TO 3417

LOOKING AFT

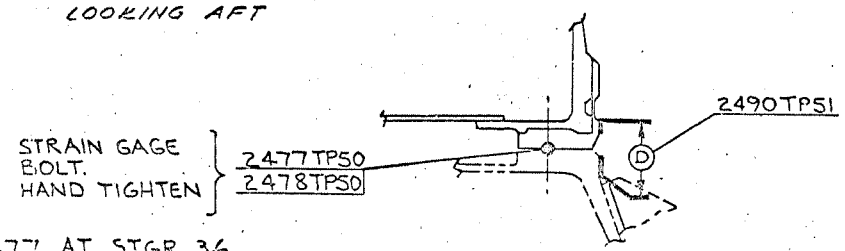

2477 AT STGR. 36
2478 AT STGR. 108
2490 BETWEEN
STGRS. 106 & 107

SECTION AD-AD

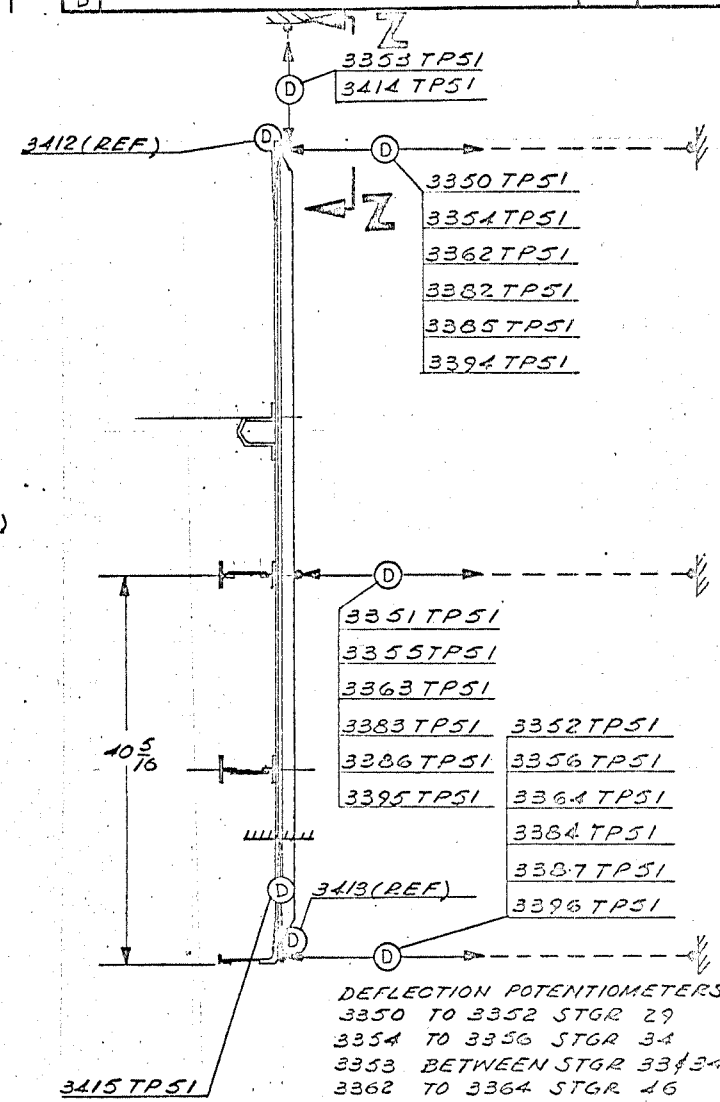

DEFLECTION POTENTIOMETERS
3350 TO 3352 STGR 29
3354 TO 3356 STGR 34
3353 BETWEEN STGR 33 & 34
3362 TO 3364 STGR 46
3382 TO 3384 STGR 82
3385 TO 3387, &
3412 & 3413 STGR 94
3414 & 3415 BET. STGR. 93 & 94
3394 TO 3396 STGR 118.

SECTION W-W

REVISIONS			
SYM	DESCRIPTION	DATE	APPROVED
B			

DOUGLAS AIRCRAFT COMPANY, INC — SANTA MONICA, CALIFORNIA

CODE IDENT NO.	SIZE	
18355	C	1T07091
SCALE		SHEET 11

1T07091

1T07091

SHEET

REVISIONS			
SYM	DESCRIPTION	DATE	APPROVED
B			

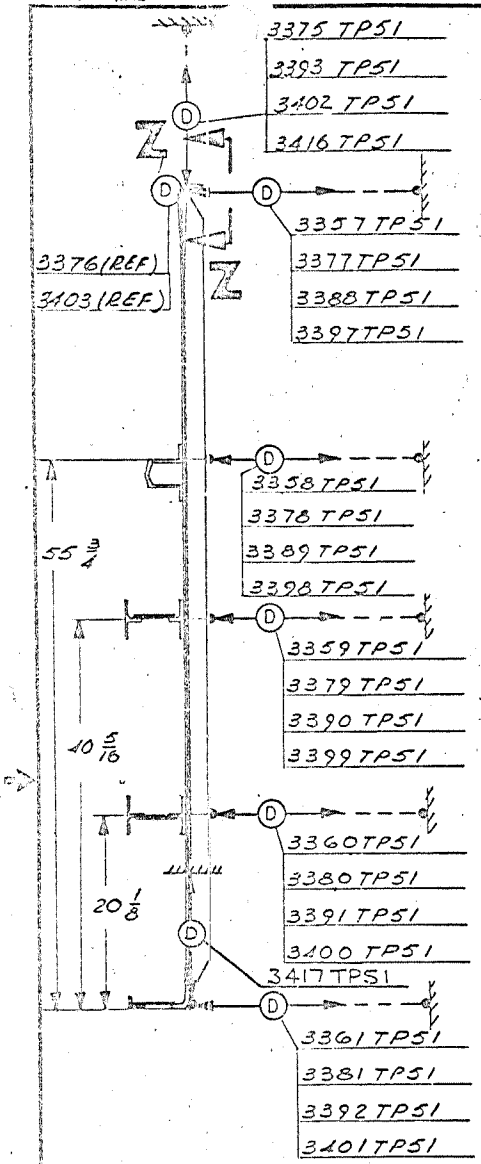

SECTION X-X

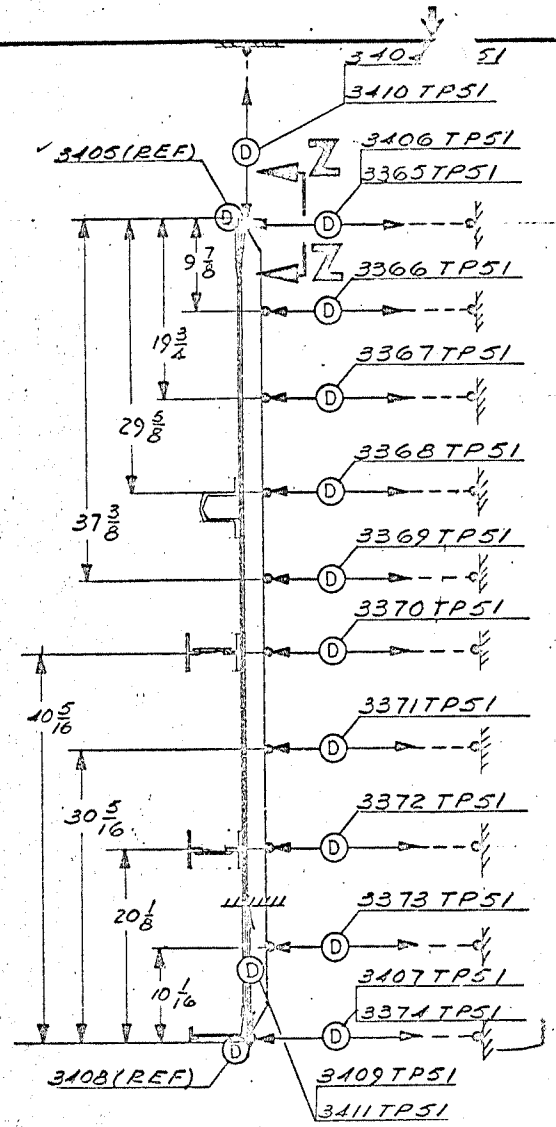

SECTION Y-Y

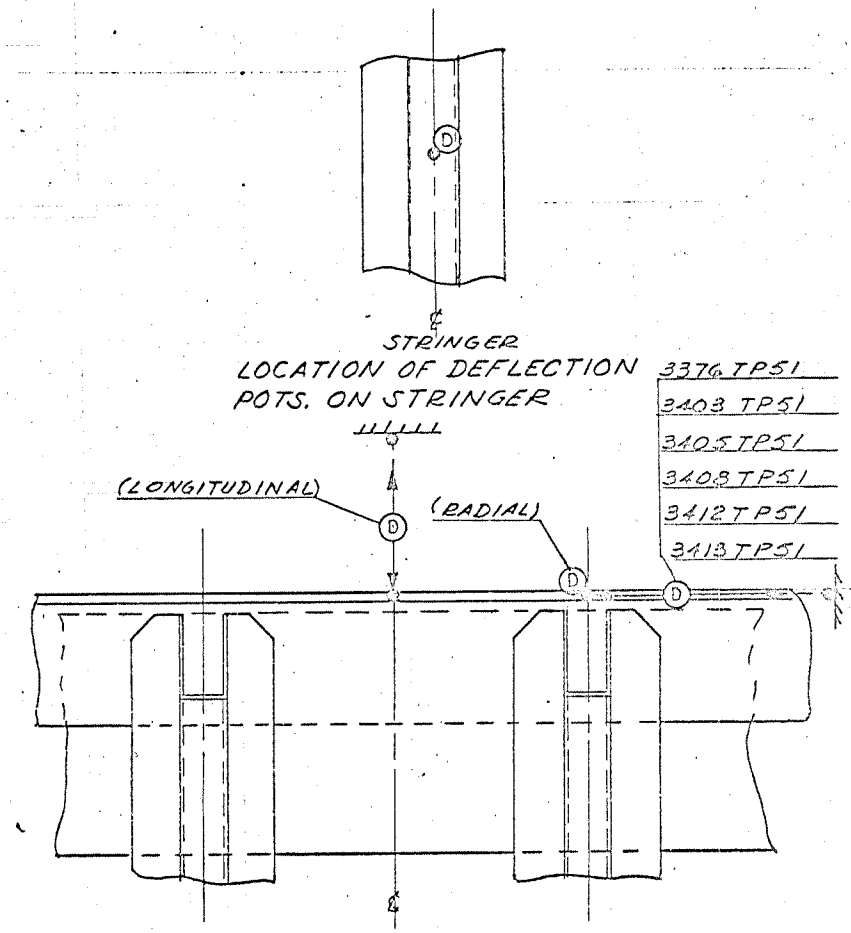

VIEW Z-Z

DEFLECTION POTENTIOMETERS

3357 TO 3361 STGR 37
3376 TO 3381 STGR 70
3375 BETWEEN STGR 69 & 70
3388 TO 3392 STGR 106
3393 BETWEEN STGR 105 & 106
3397 TO 3401 STGR 130
3416 & 3417 BET. STGR 129 & 130
3403 STGR 142
3402 BETWEEN STGR 141 & 142

DEFLECTION POTENTIOMETERS

3365 TO 3374 STGR 58
3410 & 3411 BET. STGR 57 & 58.
3405 TO 3408 STGR 22
3404 & 3409 BET. STGR 21 & 22.

ROHLOFF AIRCRAFT COMPANY, INC	SANTA MONICA, CALIFORNIA		
CODE IDENT NO. 18355	SIZE C	1T07091	
SCALE		SHEET 12	

1T07091 1T07091 1T07091

REVISIONS			
SYM	DESCRIPTION	DATE	APPROVED

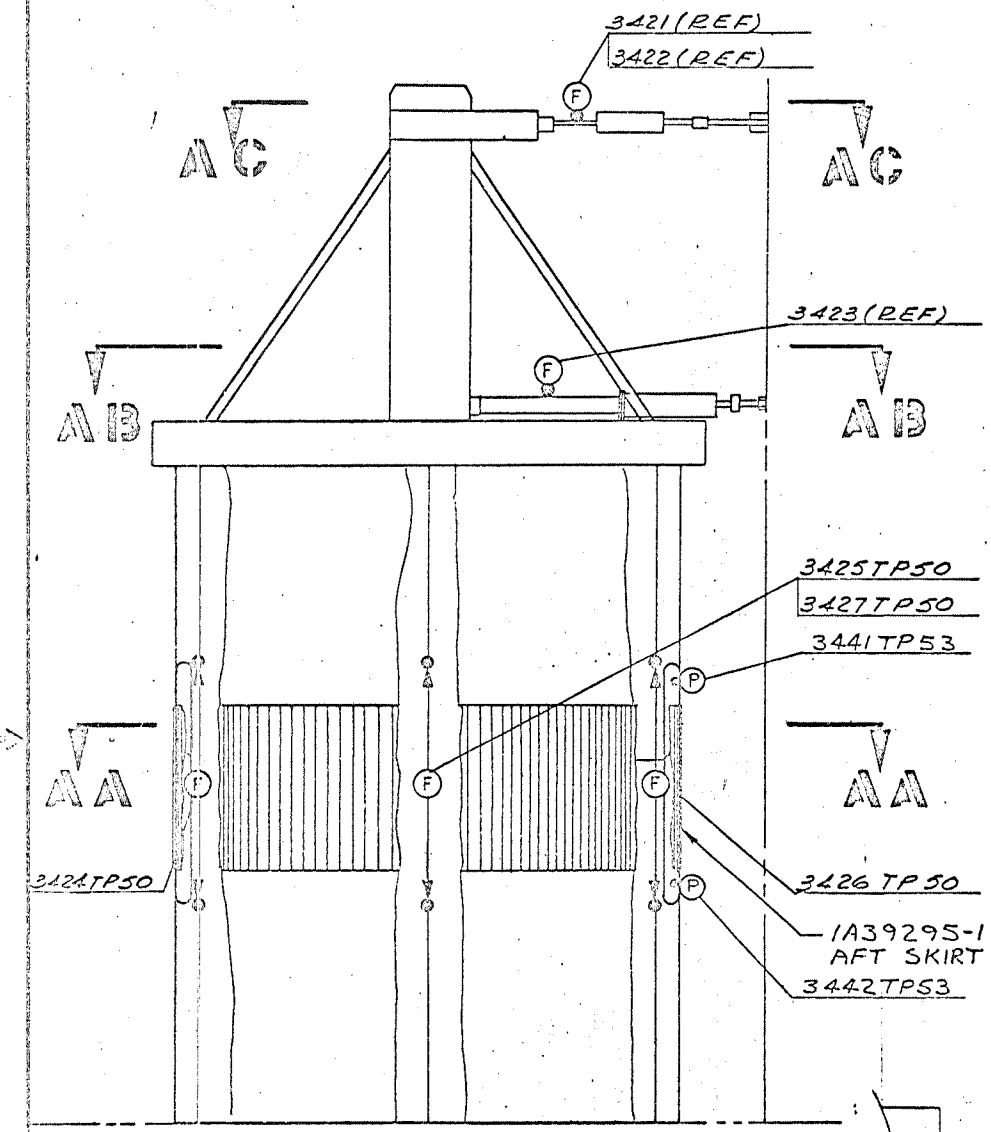

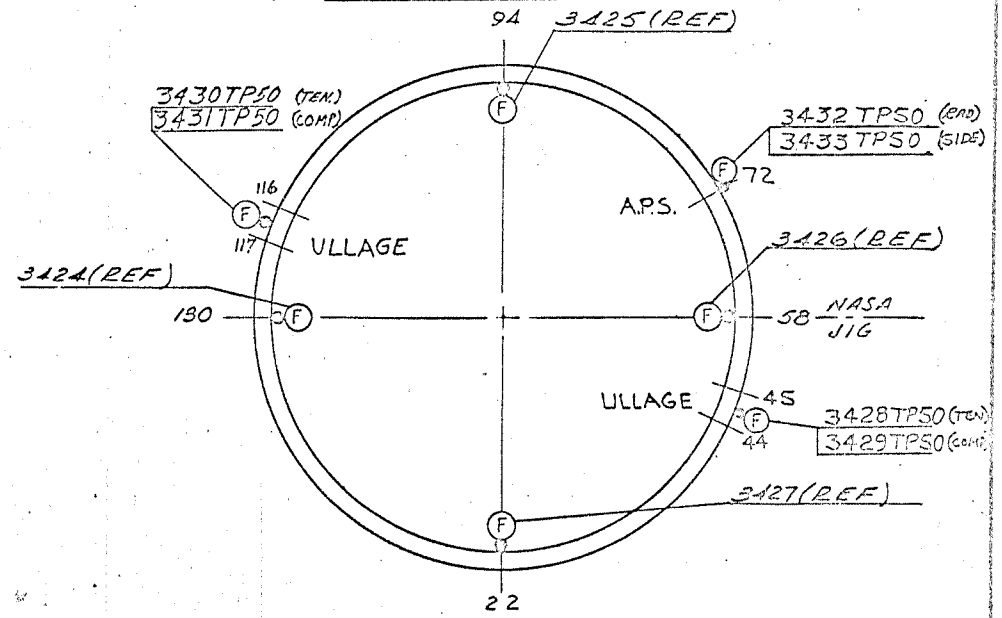

SECTION A A - A A

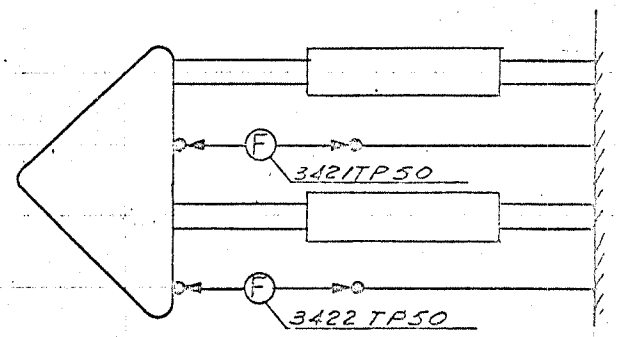

SECTION A C - A C

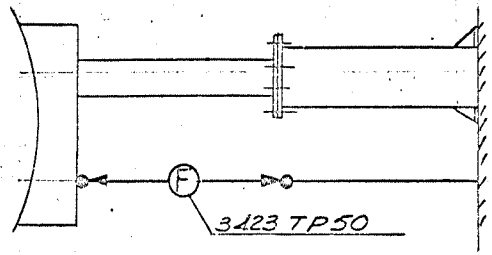

SECTION A B - A B

FORCE TRANSDUCERS - PHASE II ONLY
3421 TO 3427

BOEING AIRCRAFT COMPANY, INC.	SANTA MONICA, CALIFORNIA	
CODE IDENT NO. 10355	SIZE C	1T07091
SCALE		SHEET 3/3

1T07091

FORM X60-999-11 (10-62)

REVISIONS			
SYM	DESCRIPTION	DATE	APPROVED

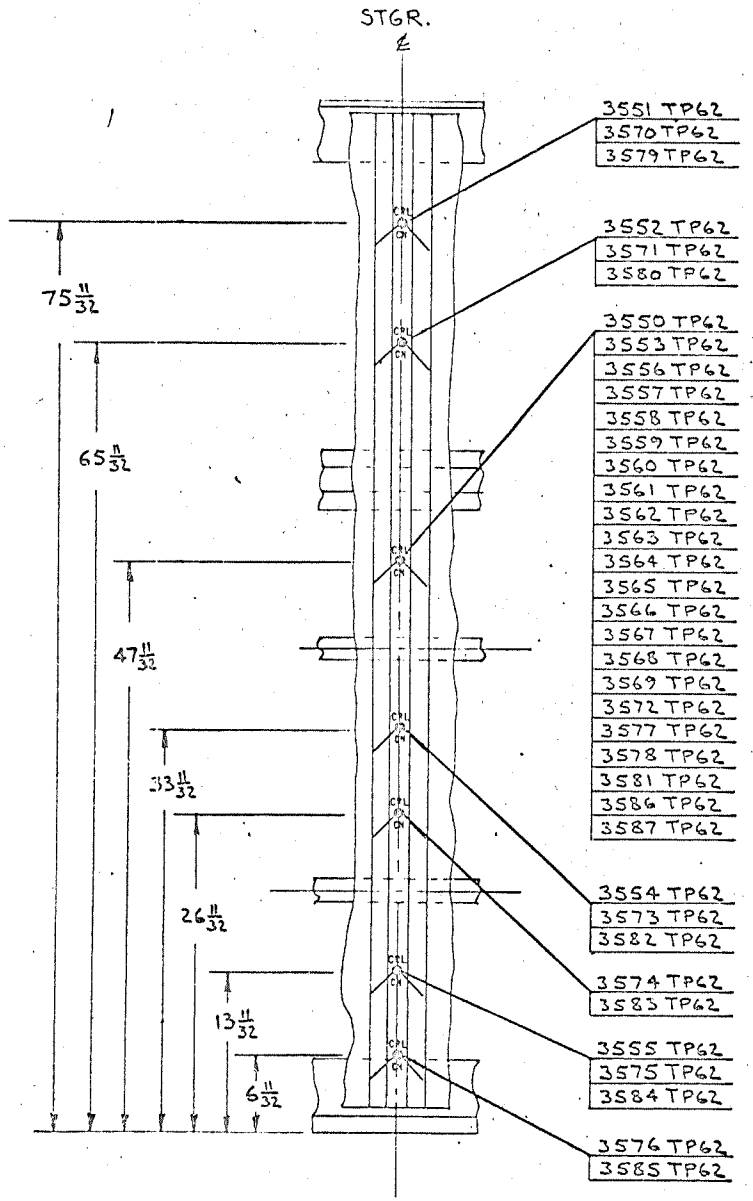

LOCATION NO.	STRINGER NO.
3550	69
3551-3555	70
3556	71
3557	72
3558	73
3559	74
3560	75
3561	115
3562	116
3563	117
3564	118
3565	119
3566	120
3567	121
3568	122
3569	123
3570-3576	124
3577	125
3578	126
3579-3585	128
3586	129
3587	130

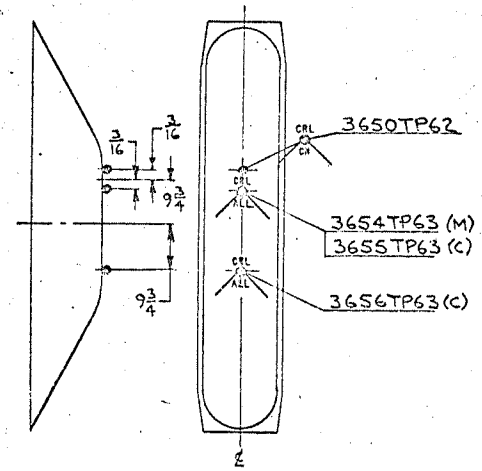

LH₂ FEED LINE FAIRING

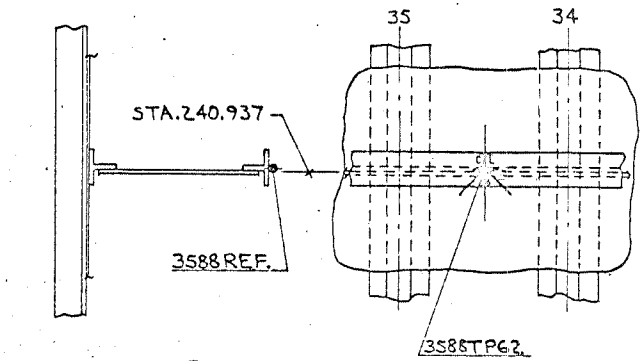

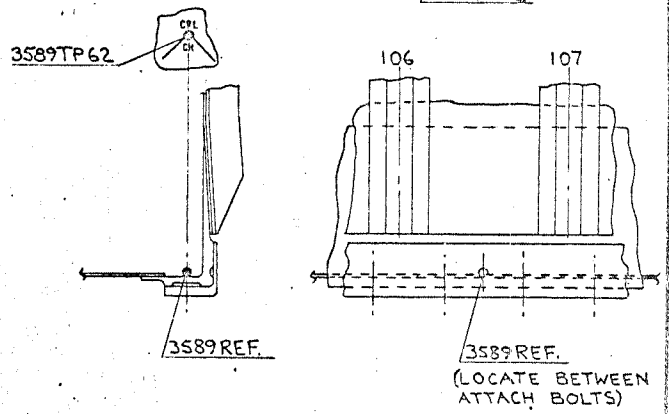

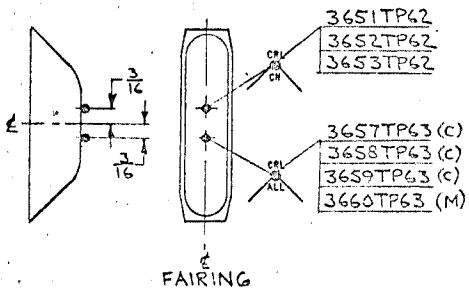

FAIRING

3651, 3657 - CHILL-DOWN PUMP FAIRING
3652, 3658 - CHILL-DOWN RETURN LINE FAIRING
3653, 3659, & 3660 - LH₂ FILL LINE FAIRING

NOTES:
(C) - INDICATES CONTROL THERMOCOUPLE.
(M) - INDICATES MONITOR THERMOCOUPLE.

BOUGLAS AIRCRAFT COMPANY, INC	SANTA MONICA, CALIFORNIA	
CODE IDENT NO. 18355	SIZE C	1T07091
SCALE		SHEET 14

1T07091

1T07091

SHEET

39

FORM X60-999-11 (10-62)

REVISIONS			
SYM	DESCRIPTION	DATE	APPROVED

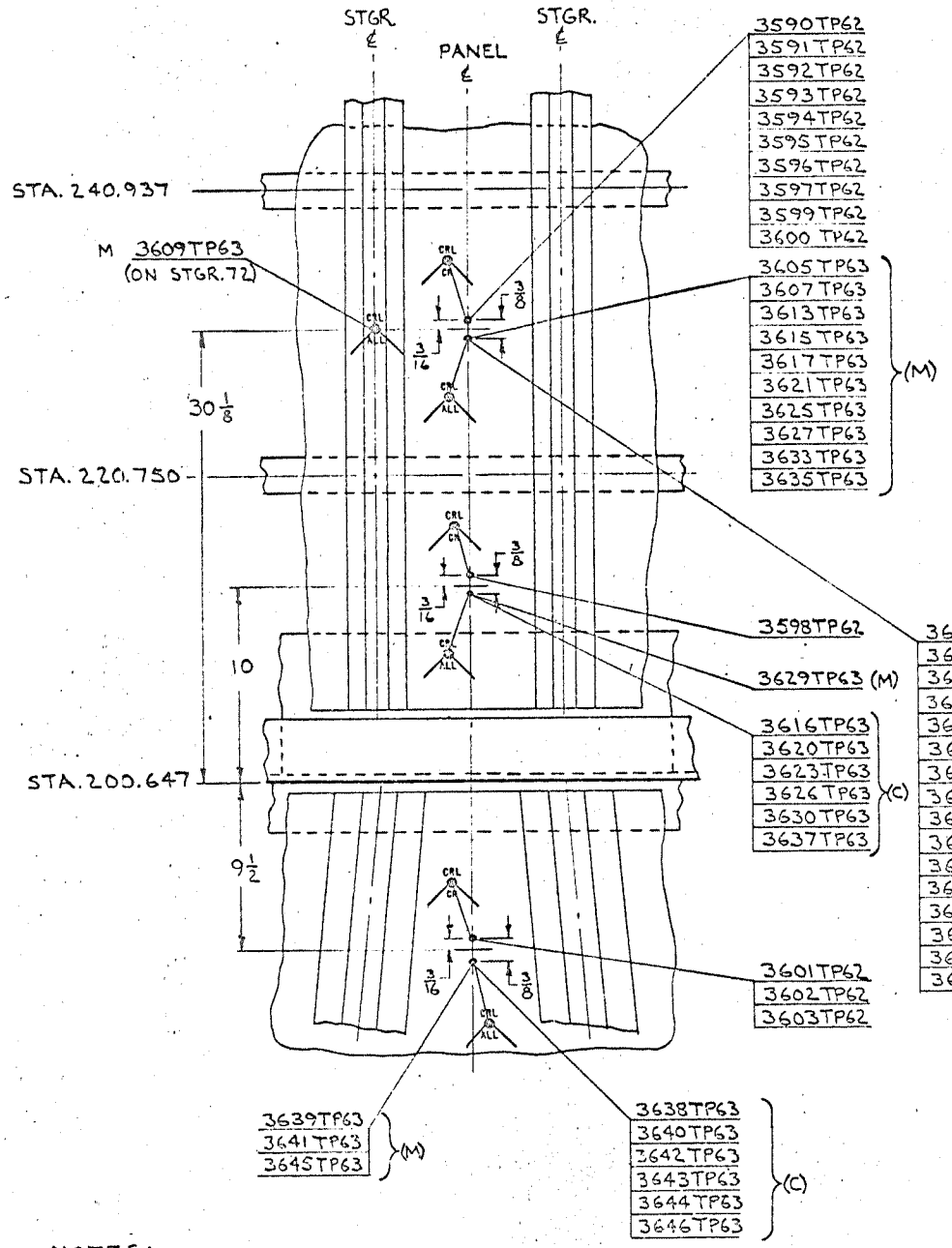

LOCATION NO.	BETWEEN STGRS. NO.
3604	56 - 57
3590,3605,3606	63 - 64
3591,3607,3608	66 - 67
3609	ON STGR.72
3610	77 - 78
3611	81 - 82
3592,3612,3613	87 - 88
3593,3614,3615	91 - 92
3616	99-100
3594,3617,3618	106-107
3619	112-113
3620	122-123
3595,3621,3622	131-132
3623	135-136
3596,3624,3625	138-139
3626	6 - 7
3597,3627,3628	13-14
3598,3629,3630	18-19
3631	19-20
3632	35-36
3599,3633,3634	39-40
3600,3635-3637	51-52
3601,3638,3639	60-61
3640	90-91
3602,3641,3642	110-111
3643	140-141
3603,3644,3645	10-11
3646	40-41
3647-3649	ON STGR.106

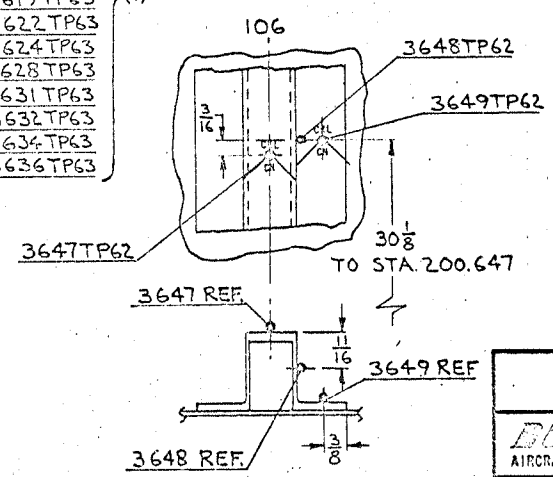

NOTES:
(C) - INDICATES CONTROL THERMOCOUPLE.
(M) - INDICATES MONITOR THERMOCOUPLE.

DOUGLAS AIRCRAFT COMPANY, INC SANTA MONICA, CALIFORNIA

CODE IDENT NO.	SIZE	
10355	C	1T07091
SCALE		SHEET 15

1T07091 SHEET

APPENDIX B

APPENDIX B

1.0 STRUCTURES LABORATORY

1.1 INTRODUCTION

The Structures Laboratory, at the Douglas Space Systems Center, Huntington Beach, California, is designed to allow for maximum flexibility. The semi-circular building, 200 feet in diameter and with a 90 foot ceiling, is built around a central hard core load reaction tower, within which are all the necessary test equipment, data acquisition system, utilities installations machine shops, engineering offices, and other lab support systems. Spaced in a circular array around the tower are five (5) test pads, see Figure A1 and A2. This grouping of the test structures around the central instrumentation core offers distinct advantages in addition to providing a significant saving in time for these test programs. Ready access to the entire perimeter of the building is provided, which allows for the moving in or out of test structures without interfering with others already in place. This arrangement of test pads means that each one is equidistant from the central tower, thus cables are the same length for all instrumentation and fixtures are uniform.

This combination of space-age-sized facilities, with the many advantages of the central tower plan, provides outstanding capabilities for introducing the structural conditions of flight to an entire space vehicle.

1.2 LOAD REACTION CAPACITY

The 50 feet square by 75 feet high load reaction column is the energy source for one billion inch-pounds of bending moment and one million pounds of shear delivered singly or in combination to the specimens under test. Adapters of any practical configuration can be attached to the column to place the force arms of the framework in close proximity to the test pads.

Supporting the entire laboratory is concrete flooring -- 10 feet thick -- capable of reacting eight million pounds of axial thrust load and resisting a bending moment of one billion inch-pounds.

1.3 LOAD APPLICATION

Forces to the test specimens are transmitted from the central reaction column and the floor through hydraulic tension and compression jacks or cylinders. Each jack can exert forces from a compression maximum of 270,000 pounds to a tension maximum of 200,000 pounds. A permanently installed comprehensive hydraulic manifold system exerts 3,000 psi and a 40 gallon per minute flow rate. Monitoring controls distribute the necessary pressure to the proper areas.

1.4 ELEVATED TEMPERATURE FACILITIES

A primary function of the laboratory is the application of elevated temperatures, up to 3,000°F, to test the thermal behavior and characteristics of materials and assemblies at environments to be expected under actual flight conditions. The facility will provide a programmed environment to any structure with varying

1.4 ELEVATED TEMPERATURE FACILITIES (continued)

modes of thermal conditions from steady state to ascending random temperatures with respect to time. A programmed rate change of 800°F per second can be achieved.

Energy is delivered at rates up to 150 BTU/sq ft-sec from the multiple quartz tube infra-red lamps which are the heat source. Eighteen units of combined temperature control and power regulation, and nine units of automatic programs are available for programming power to electrical loads such as infra-red lamps or resistance heating elements. The power capability of this system is rated at 12,000 KVA for 30 seconds, 10,000 KVA for 5 minutes or 5,000 KVA for continuous service at 600 operating volts. A typical test setup is shown in Figure A3.

1.5 DATA ACQUISITION

The digital data system of the Structures Laboratory is part of the giant computer network centrally located at the Space Systems Center. Recorded data from test specimens are sent through the central nervous system of the center, reduced, and fed back to the Structures Laboratory for readout and evaluation.

STRUCTURES LABORATORY

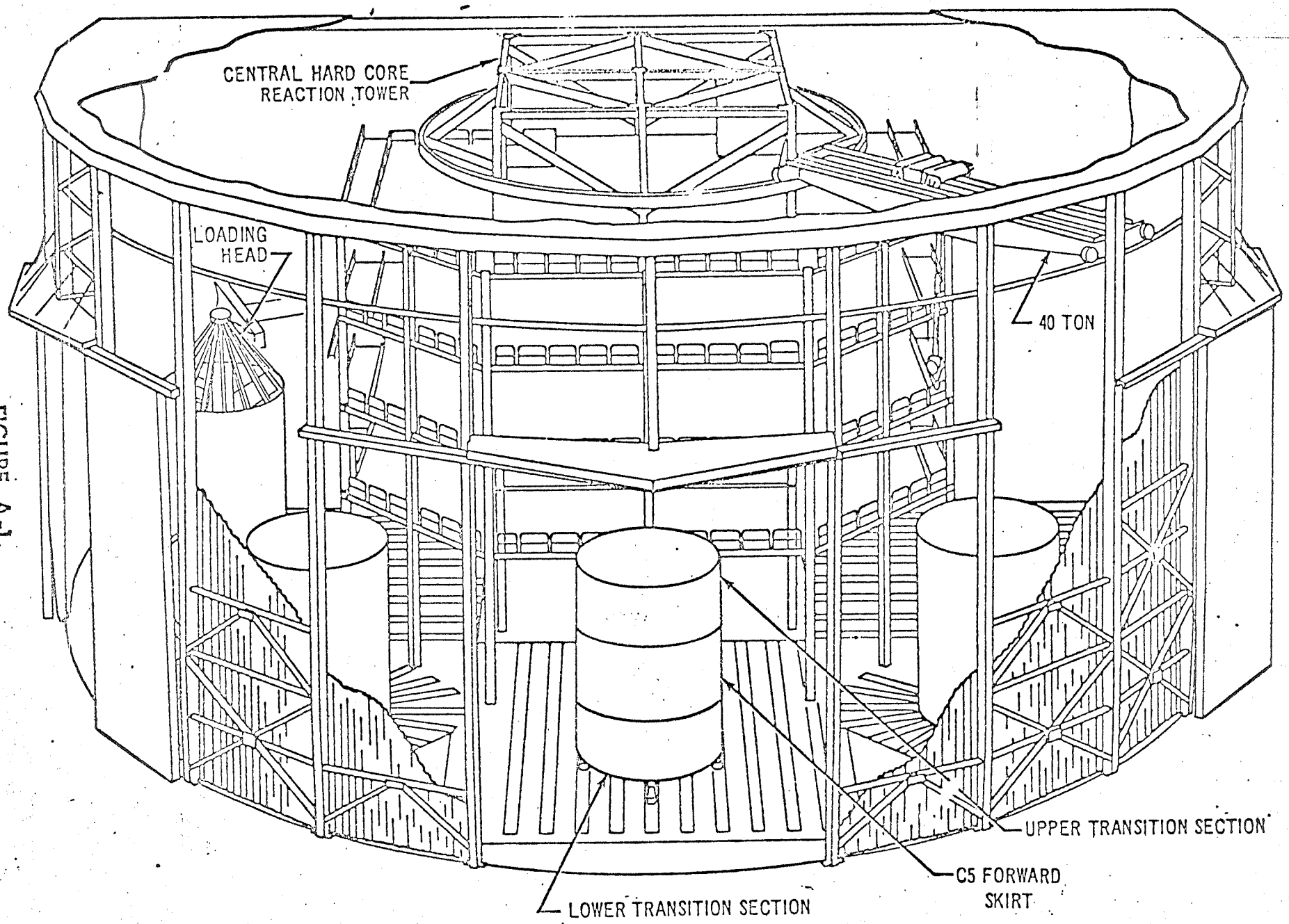

FIGURE A-1

STRUCTURES LABORATORY FLOOR PLAN

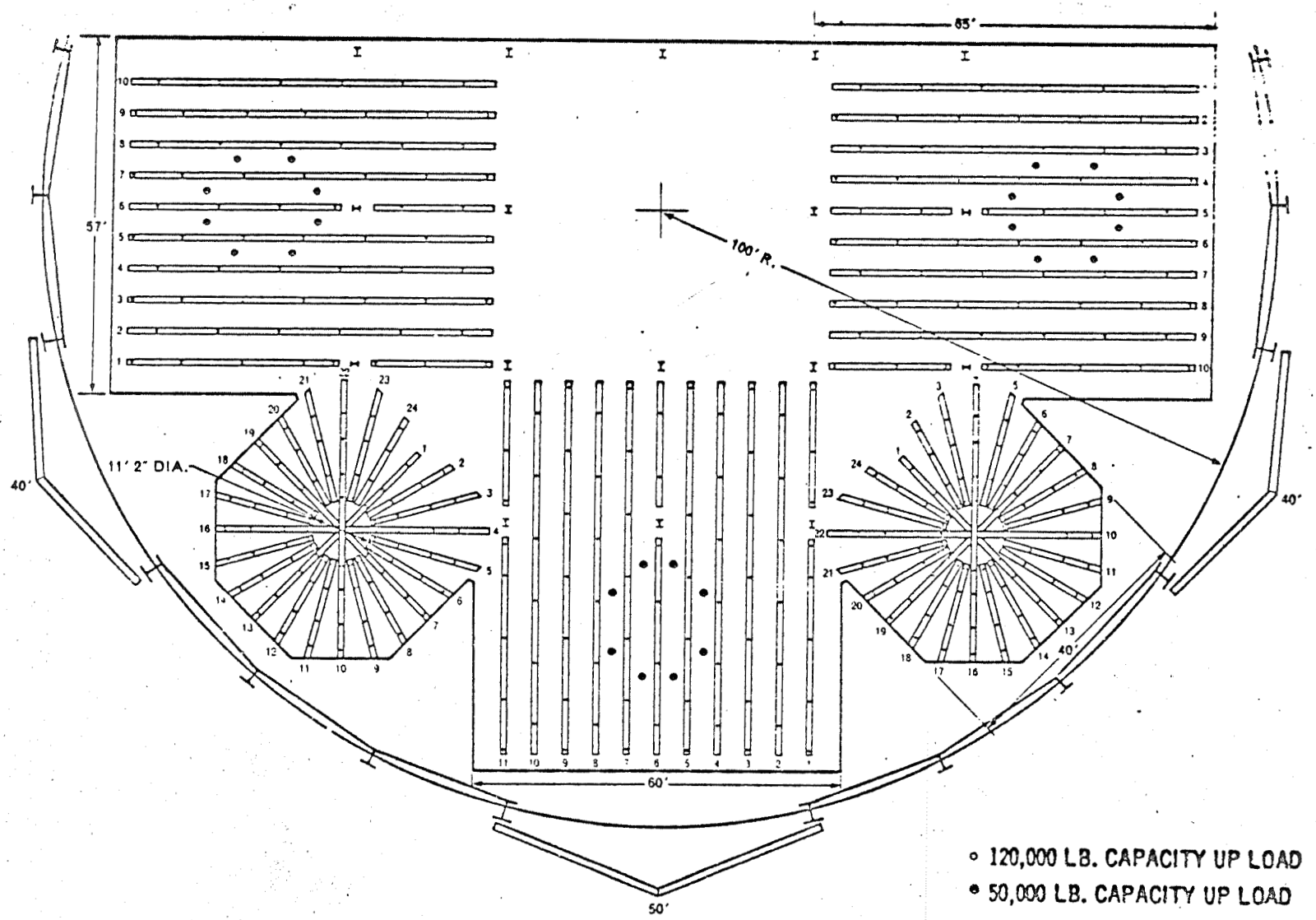

FIGURE A-2

ELEVATED TEMPERATURE FACILITIES

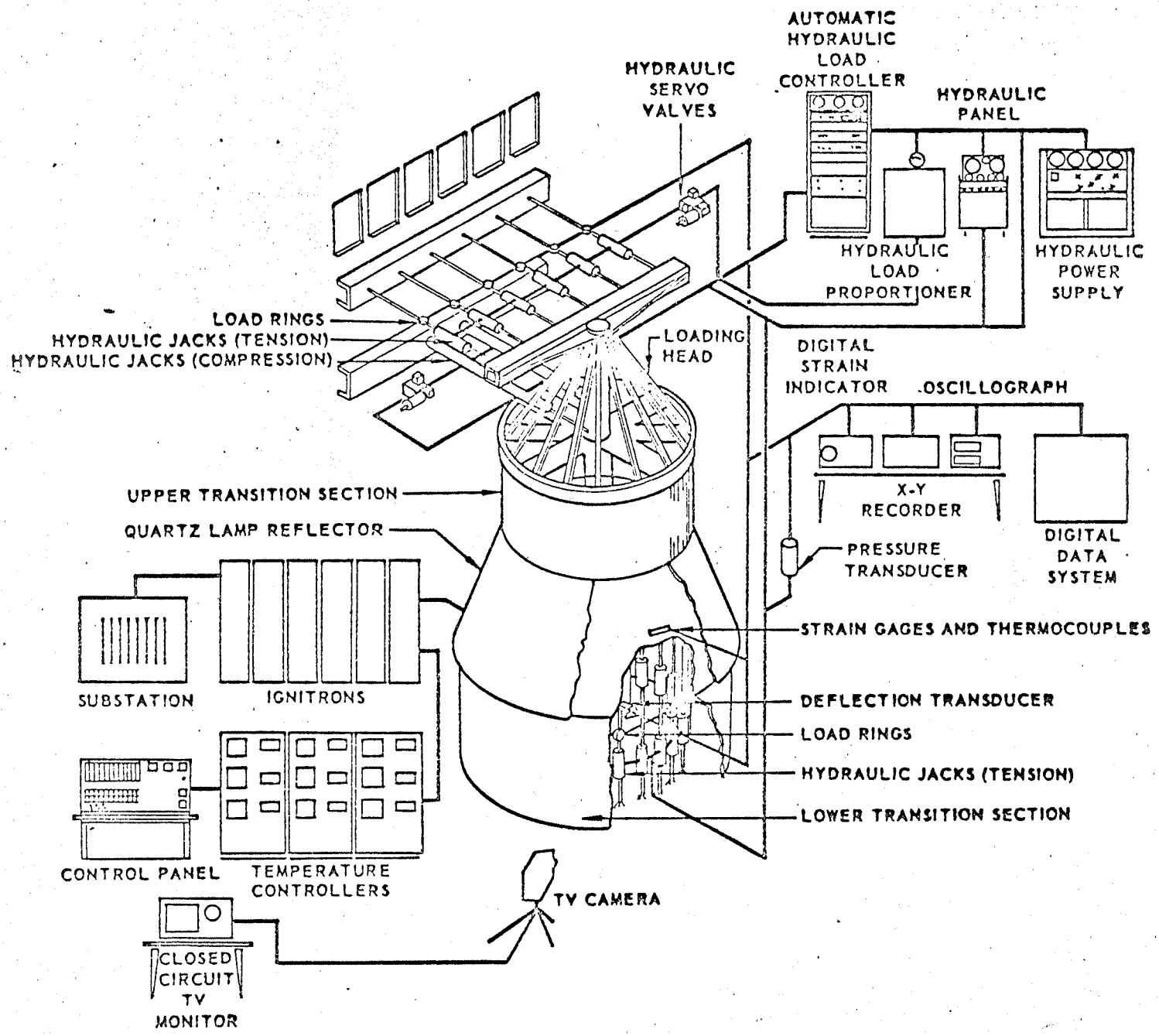

FIGURE A-3

MISSILE & SPACE SYSTEMS DIVISION
DOUGLAS AIRCRAFT COMPANY, INC.
SANTA MONICA, CALIFORNIA