L-85-59 (REV. 4-65)

223

DOUGLAS

MISSILE & SPACE SYSTEMS DIVISION
DOUGLAS AIRCRAFT CO., INC.

ENGINEERING LABORATORIES & SERVICES
TECHNICAL MEMORANDUM

CATALOG NO. PDL 75224

TO: J. L. Holmgren, A3-860, KDCB

REPORT NO. TM-DSV-4B-EE-R-5812

FROM: J. L. Whittaker, A-290, AEC4

DATE 12-20-66

SUBJECT: QUALIFICATION TEST FOR TRANSDUCER, PRESSURE, LOW ABSOLUTE P/N 1B38508-1

REQUESTED BY W. A. Van Ess, A3-863

COPIES TO: 1-SIVB Stage Des.Branch,D/Q Grp.A-860(KDCD)
1-Warren Keller, A3-860(KABC)
1-R.I.Wilkens, A3-860 (KKBB)
1-G.D.Bartelmie, A3-860 (KDCA)
1-J.L.Whittaker, A-290; B. Thomas, A3-(KECD)
1-P.Sellers, A2-263, J. Hilman A3-860
1-J.Holmgren, A3-860 (KDCB)
C. W. Wilson A3-860 (12) NASA

E.W.O. 27743 TCD 1T06935

TEST PLAN & ITEM NO. W92J

SALES ORDER 5879-6502

CLASSIFICATION OR RESTRICTION: Unclassified

ABSTRACT

This report presents procedures and results of design qualification tests performed on four Low Absolute Pressure Transducers P/N 1B38508-1 (D-CHG) according to Detailed Test Procedure (DTP) 1T14732. The pressure transducers were manufactured by Rosemount Engineering Company, Minneapolis, Minnesota. The transducers were subjected to room temperature, EMI, high temperature, low temperature, thermal shock and humidity.

Two units were rejected and sent back to the vendor because of continued degradation of electrical output in the negative direction. The other two units were out-of-tolerance with respect to end points and repeatability throughout the test. Vibration, shock, and leakage tests were performed under GTP W93E and the results are presented in TM-R-5737.

DESCRIPTORS

DSV-4B
Room Temperature
Low Temperature
Humidity
Environmental Test
High Temperature
Thermal Shock
EMI

SEP 1970
RECEIVED
NASA STI FACILITY
INPUT BRANCH

N70-75890
(ACCESSION NUMBER)
(THRU)
142
(PAGES)
(CODE)
CR-113249
(NASA CR OR TMX OR AD NUMBER)
(CATEGORY)
FACILITY FORM 602

FORM 850-2 (11-66)

	DOUGLAS AIRCRAFT CO, INC. MISSILE & SPACE SYSTEMS DIVISION SANTA MONICA, CALIFORNIA	QUALIFICATION STATEMENT	[X] DE/Q TEST [ ] FORMAL QUAL
PROGRAM	SATURN	TEST PLAN AND ITEM NUMBER	W-92J
TEST PLAN LINE ITEM TITLE	TRANSDUCER, PRESSURE, LO-ABS	PART NO.	1B38508-1
TECHNICAL MEMORANDUM NUMBER(S)	TM-DSV-4B-EE-R-5812, Rev. A TM-DSV-4B-EE-R-5716		

ENGINEERING RESOLUTIONS AND CONCLUSIONS

Two specimens failed during humidity tests. One unit had been physically damaged precluding failure analysis. A failure analysis of the second unit disclosed that the vendor had not properly inspected weld joints allowing moisture to enter unit.

Results of the following portions of electromagnetic compatibility tests are acceptable since the existing cable routing, with consideration for the current levels and frequencies known to exist in the stage installation, is such that the transducers will not be affected by interference to which they are susceptible.

1. Narrowband conducted and radiated interference
2. Magnetic field induced into cables
3. Transient conducted susceptibility

Marginal out-of-tolerance conditions were seen during the test program which were not generally repeatable and are acceptable to the cognizant design section.

(USE CONTINUATION SHEET AS NECESSARY)

STATEMENT OF QUALIFICATION

Based on the Qualification Test Results presented in the attached reports, it is the conclusion of the Douglas Aircraft Company, Inc., that the above item is qualified for use as intended on Saturn S-IVB.

DESIGN TECHNOLOGY	RELIABILITY ENGINEERING	PROJECT OFFICE-TEST
	W.F. 1-10-7 1-13-67	

REVISION TO REPORT NO: TM-R-5812

Form 28-600 (4-65)

CHG LTR	DATE REVISED	PAGES REVISED	BREIF DESCRIPTION OF CHANGE AND REASON	REVISED BY	APPROVED BY
A	1-5-67	Page 19 Para. 4.1.2.4	is: S/N 9 was out-of-tolerance with respect to these end points. was: Both S/N 9 and S/N 10 were--		
		Page 19 Para. 4.1.2.6	is: No out-of-tolerances were noted. was: S/N 10 was out-of-the 0.25% tolerance.		
		Page 21 Para. 4.4	is: to repeatability and S/N 9 was out-of-tolerance with respect to end points. was: S/N 9 and S/N 10 were---- to repeatability and end points.		
		Page 23 Para. 5.2	is: S/N 8 was out-of-tolerance with respect to repeatability was: S/N 4 was out-of-tolerance with respect to end point voltages. S/N 8 was out-of-tolerance with respect to end point voltages and repeatability.		
		Page 23 Para. 5.3	is: No out-of-tolerances were noted. was: The unit was out-of-tolerance with respect to end points. is: No out-of-tolerances were noted. was: Out-of-tolerances with respect to end point voltages were noted. Reason: Change in specifications shown in paragraph 3.0 not reflected in paragraphs 4.0 and 5.0.	C.D. Berring	[illegible]

PREFACE

This technical memorandum presents detailed requirements, procedures and results of qualification tests performed on four Pressure Transducers, P/N 1B38508-1, S/N's 4, 8, 9, and 10. The qualification tests were conducted in the Guidance and Control Laboratory (A-293), Propulsion Laboratory (A-293), and EMR Laboratory of the Missile and Space Systems Division during the period 6 July through 4 September 1966.

TABLE OF CONTENTS

Paragraph	Title	Page
1.0	INTRODUCTION	6
1.1	Purpose of Test	6
1.2	Physical Description	6
1.3	Functional Description	6
2.0	SPECIMEN DESCRIPTION	7
3.0	GENERAL REQUIREMENTS	7
3.1	Sequence of Qualification Tests	7
3.2	Pre- and Post-Tests	7
3.3	Recording of Test Data	8
3.4	Test Equipment Certification	8
3.5	Standard Conditions	8
3.6	Tolerances	9
3.7	Pressure Agents	9
3.8	Damage or Failure	9
3.9	UUT Specifications	9
3.9.1	Insulation Resistance	9
3.9.2	Isolation Resistance	10
3.9.3	Operating Ranges	10
3.9.4	Calibration	10
3.9.5	Static Error Band	10
3.9.6	Linearity	10
3.9.7	Repeatability	10
3.9.8	End Points	11
3.9.9	Automatic Checkout	11

TABLE OF CONTENTS (Cont'd)

Paragraph	Title	Page
3.9.10	Output Load	11
3.10	Environmental Tests	11
3.10.1	Pre- and Post-Environmental Tests	11
3.10.1.1	Pressure Calibration	11
3.10.1.2	Automatic Checkout	12
3.10.2	Room Temperature Test	12
3.10.3	EMI	12
3.10.4	Low Temperature	12
3.10.5	High Temperature	13
3.10.6	Thermal Shock	13
3.10.7	Humidity	13
4.0	PROCEDURES AND RESULTS - GENERAL	15
4.1	Procedure and Results, S/N 9 and S/N 10	17
4.1.1	Visual and Mechanical Inspection	17
4.1.2	Pre-Environmental Tests	17
4.1.2.1	Insulation Resistance	17
4.1.2.2	Automatic Checkout	18
4.1.2.3	Pressure Calibration	18
4.2	EMI	19
4.3	Low Temperature	20
4.4	High Temperature	20
4.5	Thermal Shock	21
4.6	Humidity	22
4.7	Post Environmental	22

TABLE OF CONTENTS (Cont'd)

Paragraph	Title	Page
5.0	PROCEDURES AND RESULTS OF S/N 4 AND S/N 8	22
5.1	Visual and Mechanical Inspection	23
5.2	Pre-Environmental Tests	23
5.3	Low Temperature	23
5.4	High Temperature	24
5.5	Thermal Shock	24
5.6	Humidity	25
5.7	Leakage	25
5.8	Post-Environmental Test	25
	Tables and Diagrams	A-1 thru A-4
	Photographs	B-1 thru B-5
	Data Sheets	C-1 thru C-105
	IDEP FORM	C-106

1.0 INTRODUCTION

This report presents the detailed procedures and results of the design qualification tests performed on four Pressure Transducers, P/N 1B38508-1 (D-CHG), S/N's 4, 8, 9, and 10. The pressure transducers were manufactured by Rosemount Engineering Company, Minneapolis, Minnesota.

1.1 Purpose of Test

The purpose of this test program was to qualify two pressure transducers, P/N 1B38508-1 (D-CHG) for use on the Saturn S-IVB vehicle. The testing was authorized by Sales Order (S.O.) 5879-6502 and Engineering Work Order (EWO) 27743. Reference Detailed Test Procedure (DTP) 1T14732 and Test Control Drawing (TCD) 1T06935 under General Test Plan Item (GTP) W-92J.

1.2 Physical Description

The relative physical size of the transducer is shown on page B-1 of the addendum. The weight of the transducer is approximately 21 ounces.

1.3 Functional Description

The pressure transducer is a low absolute pressure device designed for use on the S-IVB thrust structure to monitor high altitude atmospheric pressures. It consists of a variable capacitance pressure sensor and the associated electronic circuitry within one common case to provide a 0 to 5 vdc output signal directly proportional to the applied pressure range of 0 (50 microns) to 0.3 psia. An outline of the transducer including the function of each connector pin is shown on addendum page A-1.

2.0 SPECIMEN DESCRIPTION

Name:	Low Absolute Pressure Transducer
Part No:	1B38508-1
Serial Nos:	4, 8, 9, 10
Quantity:	4
Manufacturer:	Rosemount Engineering Company Minneapolis, Minnesota
Vehicle Model No.:	DSV-4B

3.0 GENERAL REQUIREMENTS

3.1 Sequence of Qualification Tests

The qualification tests shall be completed in the sequence outlined below. The sequence may be changed by mutual agreement between the test engineer and the cognizant design qualification engineer. Each of the environmental tests shall be preceded by a pre-test and followed by a post-test which are described in paragraph 3.2.

1. Pre-Environmental Tests
2. Room Temperature
3. Electromagnetic Compatibility (EMI)
4. Low Temperature
5. High Temperature
6. Thermal Shock
7. Humidity
8. Post-Environmental Tests

3.2 Pre- and Post-Tests

A pre-test shall be performed prior to each environmental test and a post-test upon completion of each environmental test. The tests are identical to and include the insulation resistance, electrical, and pressure calibration portions of the pre-environmental tests.

3.2.1 If the elapsed time between a post-test of a specific environment and the next environmental test is less than 24 hours, the intervening pre-test of the next environment need not be performed, if no significant change in ambient condition has occurred. However, if there is a 24-hour or longer delay between the performance of a pre-test and its associated environmental test, the pre-test shall be repeated before the environmental test is performed.

3.3 Recording of Test Data

Test preparations and testing shall be conducted by the A-293 Group AEC4 test engineer. All pertinent test data shall be recorded. All test data shall be documented and approved by the test engineer prior to starting the next test. Photographs of UUT, test setups, and testing, shall be taken as required.

3.4 Test Equipment Certification

All equipment shall be certified by Douglas MSSD in accordance with MIL-C-45662A and NPC-200-2 which are described in SPB 711.1. Maintain a record of all equipment used. This record shall include:

1. Name of equipment
2. Model Number
3. Serial Number
4. Ownership
5. Manufacturer

3.5 Standard Conditions

Unless specified otherwise, tests and measurements shall be performed with the unit under test (UUT) stabilized as follows:

Temperature:	68°F to 90°F
Relative Humidity:	90% or less
Barometric Pressure	29 to 32 inches of Mercury

3.6 Tolerances

Unless specified otherwise, tolerances shall be as follows:

Temperature:	$\pm 4^{\circ}F$
Humidity:	$\pm 5\%$ (Relative)

3.7 Pressure Agents

The pressure agent for these tests shall be Grade A gaseous nitrogen, except during the leakage tests which will utilize Grade A gaseous helium.

3.8 Damage or Failure

If the UUT fails or is damaged in any way, the testing shall be stopped at the time of the incident. There shall be no change or alterations made in the testing configuration during the stopped period. The test engineer shall be notified and in turn shall notify the design qualification engineer. Testing shall resume upon approval of the test engineer. In the event of a failed or rejected part, ensure that SPB 710.2 Failure and Rejection Report is completed and sufficient photographs taken.

3.9 UUT Specifications

Tests shall be performed as stipulated in paragraph 4.0 in order to determine that the following parameters are within the indicated specifications.

3.9.1 Insulation Resistance

The minimum insulation resistance between any of the electrical terminals and the transducer case (except pin E) shall be 100 megohms at 100 volts DC at room temperature with a relative humidity of 60% or less.

3.9.2 Isolation Resistance

Isolation between input and output leads shall be 100 megohms or more at 100 volts dc.

3.9.3 Operating Ranges

The transducer shall have the following operating ranges:

Operational Pressure:	0 - 0.3 psia
Non-Operational Pressure:	14.7 ± 5% psia
Temperature:	-100°F to +100°F
Input Voltage:	28 ± 4 vdc (10% ripple)
Output Voltage:	0 ± 100 mv to 5.0 vdc ± 100 mv

3.9.4 Calibration

The output voltage shall not exceed the static error band, linearity, repeatability, hysteresis or end point requirements for all values of operating pressures.

3.9.5 Static Error Band

All data points shall fall within 1.5% of the room temperature pre-environmental full scale output for any operational temperature.

3.9.6 Linearity

The maximum deviation from the best fit straight line shall not exceed ± 50 mv or 1% of full scale for all data points. The best fit straight line is defined as that line through the decreasing data points which minimizes the maximum deviation.

3.9.7 Repeatability

The maximum deviation for data points taken under identical conditions shall not exceed ±12.5 mv or 0.25% of full scale.

3.9.8 End Points

The end point output voltages shall be 0 ± 100 mv and 5 vdc ± 100 mv for input pressure of less than 50 microns and 0.3 psia ± .003 psia, respectively.

3.9.9 Automatic Checkout

20% Calibrate: With a 20% calibration input voltage of +27 (+3,-4) vdc applied, the output voltage shall be 20 ± 1% of the full scale pressure output signal for an input pressure of 14.7 ± 5% psia.

80% Calibrate: With an 80% calibration input voltage of +27 (+3,-4) vdc applied, the output voltage shall be 80 ± 1% of the full scale pressure output signal for an input pressure of 14.7 ± 5% psia.

3.9.10 Output Load

The output load shall be 100K ohms ± 5%.

3.10 Environmental Tests

The UUT shall not suffer any degradation of performance or reliability before, during, or after being subjected to the following tests.

3.10.1 Pre- and Post-Environmental Tests

3.10.1.1 Pressure Calibration

The pressure transducer shall be operated by applying 28 volts dc to the unit and operating the unit into a 100K ohm load. Pressure shall be applied from 100% to 0 of full scale pressure range in 10% steps. This operation shall be performed twice.

3.10.1.1 Pressure Calibration (Cont'd)

The output voltage shall be recorded at each pressure step and checked for compliance with paragraphs 3.9.4 through 3.9.9.

3.10.1.2 Automatic Checkout

The pressure transducer shall be operated by applying 28 vdc to the unit and operating the unit into a 100K ohm load. The UUT shall then be subjected to ambient pressure and 28 vdc, 50 milliamperes of current nominal applied between pin F(+) and pin B(-). This shall result in a signal output equal to 20 ± 1% of full scale pressure output signal. 28 vdc, 50 milliamperes of current nominal shall be applied between pins G and B and shall result in an output signal of 80 ± 1% of the full scale pressure output signal. The above outputs shall be measured between pins C and D.

3.10.1.3 The UUT shall also be checked for compliance with the insulation and isolation resistance, paragraphs 3.9.1 and 3.9.2.

3.10.2 Room Temperature Test

Performance of paragraph 3.10.1 shall satisfy the requirements of this test.

3.10.3 EMI

The UUT shall be subjected to the EMI test by the EMR laboratory which shall provide the DTP, test equipment and data sheets as applicable.

3.10.4 Low Temperature

The UUT shall be subjected to the environment specified below. The results shall be continuously monitored and recorded.

3.10.4 Low Temperature (Continued)

The UUT shall be stabilized at -100°F (-73°C) for 4 hours with 0.3 psia applied to the UUT. The output voltage across pins C and D shall be checked at regular intervals for compliance with paragraph 3.10.1.2.

3.10.5 High Temperature

The UUT shall be stabilized at +100°F ± 4°F for a 4 hour period with 0.3 psia applied. The output shall be monitored continuously and an automatic checkout per paragraph 3.10.1.2 shall be performed at regular intervals.

3.10.6 Thermal Shock

The UUT shall be stabilized at -100°F ± 4°F with an input pressure of .15 psia applied. Within five minutes transfer the UUT to a temperature of +100°F ± 4°F. Continuously monitor and record the results. The voltage transient error shall not deviate by more than ± 2% of the output at -100°F while being transferred from one temperature to the other.

3.10.7 Humidity

The UUT shall be placed in a humidity test chamber which is vented to atmosphere to prevent the build-up of pressure. Provisions shall be made to prevent the dripping of moisture onto the test specimen from above.

Distilled or de-mineralized water having a PH value between 6.5 and 7.5 at 77°F shall be used to obtain the desired humidity. The velocity of the air throughout the test area shall not exceed 150 feet per minute.

3.10.7 Humidity (Continued)

Prior to starting the test period, the chamber temperature shall be 84 $\pm$ 16°F. During the first two hour period, the chamber temperature shall be gradually increased to 155°F and then maintained during the next 2 hour period. During the following 4 hour period, the temperature in the chamber shall be gradually reduced to 84 $\pm$ 16°F. This constitutes one cycle (8 hours).

The UUT shall be subjected to 9 cycles (72 hours) of this environment.

At the end of each 8 hour cycle perform the automatic check-out as specified in paragraph 3.10.1.2.

4.0 PROCEDURES AND RESULTS - GENERAL

The following paragraphs present the procedures and results of qualification tests performed on S/N's 4, 8, 9, and 10. S/N's 4 and 8 previously received vibration, shock and leakage under GTP W-93E. The results of this testing effort are presented in TM-R-5737. Equipment used during the testing is identified by type, manufacturer, model number, and serial number on addendum page A-4. The pressure calibration data is presented on computer printout sheets. An explanation follows:

For each calibration run there exists: 1) one page per trial with linearity and hysteresis and 2) one page with repeatability. An explanation of the linearity and hysteresis page is as follows:

1. The title indicates which type of curve was used in determining linearity. A Chebyshey curve fit indicates that a line which minimizes the largest maximum deviation was fit through the downsweep data points.

   The title also identifies the part number, serial number, date of test, title of test, and trial number.

2. Slope and intercept are the slope and intercept of the fitted line.

3. Input X and input Y1 are the coordinates of the data to be fitted. Input X is the abscissa and is the transducer input pressure expressed as per cent of rated full scale pressure. Input Y1 is the ordinate and is the transducer output in volts.

4. Output F is the value of Y on the fitted line for the corresponding input X.

4.0 PROCEDURES AND RESULTS - GENERAL (Cont'd)

5. Residual Y1-F is the deviation of each data point from the determined line.

6. Full scale is the full scale output range of Trial A. This value is in volts.

7. The largest absolute value in item (5) expressed as actual deviation and per cent of full scale is presented at the top of the page.

An explanation of repeatability is as follows:

1. The title indicates which type of repeatability criteria was used for determining repeatability. The title "Repeatability" indicates that the maximum difference between any two trials is recorded for each output value. If a trial is all zeros the trial was not recorded and therefore not used in repeatability calculations.
   The title also identifies the Part Number, Serial Number, date of test and title of test.

2. The trials are the transducer outputs for the pressure range of 100% to 0.

3. Differences are the maximum absolute variations found between any two trials for each input pressure.

4. The largest value found in item (3) expressed as actual difference and per cent of full scale is presented at the top of the page.

4.0 PROCEDURES AND RESULTS - GENERAL (Cont'd)

5. Full scale is the full scale output range of Trial A. This value is in volts.

The percent full scale for linearity, hysteresis, and total error band are presented on the "E Format". The "E Format" indicates that the two digits after the letter "E" determine the power of ten that the first 10 digits in the number are to be multiplied by. For example, .988 XXXX E-02 equals .00988.

4.1 Procedure and Results, S/N 9 and S/N 10

Both S/N 9 and S/N 10 were out-of-tolerance throughout the qualification test. Testing was continued by request of the design qualification section since it was felt useful information could be obtained.

4.1.1 Visual and Mechanical Inspection

The UUT was visually examined for dents, burrs, scratches, chips, defective threads, bent connector pins, etc. S/N 9 was received from DACO Receiving Department with a dent in the case. See photo on addendum page B-2. This defect is reported in FARR A190174. S/N 10 had no defects.

4.1.2 Pre-Environmental Tests

4.1.2.1 Insulation Resistance

The insulation resistance between the transducer case (pin E) and transducer connector pins A,B,C,D,F, and G was measured using 100 vdc at room temperature and at a relative humidity of less than 60%. The insulation resistance was greater than 100 megohms. The resistance between pins A and B shorted together and pins C and D

4.1.2.1 Insulation Resistance (Cont'd)

shorted together was measured using 100 vdc for 30 seconds. The isolation resistance was greater than 100 megohms. Pin E was verified as shorted to ground. For the results of these checks see addendum page C-1 for S/N 9 and C-29 for S/N 10.

4.1.2.2 Automatic Checkout

The UUT was connected into the test circuit shown on addendum page A-2. 28 vdc was applied to pin F. The output voltage across pins C and D was measured and recorded. The output was within 20 ± 1% of full scale. Power was applied to pin G and the output voltage across pins C and D was measured and recorded. The output was within 80 ± 1% of full scale. For results of the automatic checkout, see addendum page C-1 for S/N 9 and C-29 for S/N 10.

4.1.2.3 Pressure Calibration

The UUT was connected to the electrical circuit addendum page A-2 and pressure system addendum page A-3. See photograph addendum pages B-3 and B-4. Power was applied and the UUT was flexed from 0 psia to .3 psia at least 3 times. The input pressure was then monitored using a Texas Instruments Fused Quartz Precision Pressure gauge and tube as the pressure was varied from 0.3 psia to 0 (less than 50 microns) in 10% of full scale pressure steps. The operation was performed twice. The results are shown on addendum pages C-2 for S/N 9 and C-30 for S/N 10.

4.1.2.4 The results from paragraph 4.1.2.3 were checked for compliance with the following limits:

Pressure	Voltage
0 (psia less than 50 microns)	0 ± 100 mv
0.300 psia	+5 vdc ± 100 mv

4.1.2.4 (Cont'd)

S/N 9 was out-of-tolerance with respect to these end points. See addendum page C-2 for S/N 9 and C-30 for S/N 10.

4.1.2.5 The results of paragraph 4.1.2.3 were checked for compliance with the linearity specification of ±1.0% by fitting a best fit straight line through each trial and computing the largest deviation as a per cent of full scale. Full scale is defined as the difference in the end points of the first trial (A). Both trials of 4.1.2.3 (A & B) were checked. Both S/N 9 and S/N 10 were within specification, see addendum pages C-3 and C-4 for S/N 9 and C-31 and C-32 for S/N 10.

4.1.2.6 The results of paragraph 4.1.2.3 were checked for compliance with the repeatability specification of 0.25% by comparing the two trials and by taking the largest difference. This difference was computed as a per cent of full scale. See addendum page C-2 for S/N 9 and C-30 for S/N 10. No out-of-tolerances were noted.

4.1.2.7 The results of paragraph 4.1.2.3 were checked for compliance with the static error band requirement of 1.5% of full scale by averaging the two trials and fitting a best fit straight line through the average points. This straight line is used throughout the testing. Results for the pre-environmental test were within tolerance and the results are on addendum pages C-5 for S/N 9 and C-33 for S/N 10.

4.2 EMI

S/N 10 was subjected to the EMI test by the EMR Lab which provided the test procedure and data sheets. The results are presented in TM-R-5716. A post-test was performed per paragraphs 4.1.2.2 and 4.1.2.3. The results were within specified tolerances. See addendum pages C-34 through C-38.

4.3 Low Temperature

S/N 9 and 10 were subjected to the following test. No pre-test was performed since paragraph 3.2.2 applied. The UUT was connected to the electrical and pressure system shown on addendum pages A-2 and A-3. Power was applied and the input pressure was set at 0.30 psia. The UUT was placed in a temperature chamber. See addendum page B-5. The temperature was stabilized at -100° ± 4°F for 4 hours. The output voltage was monitored at pins C&D and an automatic checkout was performed per paragraph 4.1.2.2. every 10 minutes. The results presented are for information only and were within specified tolerances. See addendum pages C-6 for S/N 9 and C-39 for S/N 10. A post-test per paragraphs 4.1.2.1 through 4.1.2.3 was performed at room temperature. S/N 9 was out-of-tolerance with respect to endpoints and S/N 10 was out-of-tolerance with respect to repeatability. All other results were in tolerance. See addendum pages C-7 through C-11 for S/N 9 and C-40 through C-44 for S/N 10.

4.4 High Temperature

S/N 9 and S/N 10 were subjected to the following environment. No pre-test was performed since paragraph 3.2.2 applied. The UUT was placed in a temperature chamber. See addendum page B-5. The UUT was connected to the electrical and pressure systems shown on addendum pages A-2 and A-3. The input pressure was set to 0.30 psia. The UUT was stabilized at +100°F ± 4°F for 4 hours. The output was monitored at pins C and D and an automatic checkout per paragraph 4.1.2.3 was instituted every 30 minutes. No out-of-

4.4 High Temperature (Cont'd)

tolerances were noted. The results are presented for information only. See addendum pages C-12 for S/N 9 and C-45 for S/N 10. A post-test at room temperature was performed per paragraphs 4.1.2.1 through 4.1.2.3. S/N 9 and S/N 10 were out-of-tolerance with respect to repeatability and S/N 9 was out-of-tolerance with respect to end points. All other results were within specification. See addendum pages C-13 through C-17 for S/N 9 and C-46 through C-50 for S/N 10.

4.5 Thermal Shock

S/N 9 and S/N 10 were subjected to this environment. No pretest was performed since paragraph 3.2.2 applied.

The transducer was connected to the electrical and pressure systems of addendum pages A-2 and A-3. The output of the transducer was monitored on an oscillograph throughout the test. The transducer was stabilized at -100°F ± 4°F and the input pressure was set at 0.15 psia. Within 5 minutes after stabilization the UUT was transferred to an ambient temperature of +100°F ± 4°F. The UUT was stabilized at this temperature. During the transfer from -100°F to +100°F an inspection of the oscillograph record indicates no transient error occurred in the output while at -100°F.

A post-test per paragraph 4.1.2.1 through 4.1.2.3 was performed at room temperature. S/N 9 was again out-of-tolerance with respect to end points and repeatability. No other out-of-tolerance occurred. See addendum pages C-18 through C-22 for S/N 9 and C-51 through C-55 for S/N 10.

4.6 Humidity

S/N 9 and S/N 10 were subjected to the following environment. No pre-test was performed since paragraph 3.2.2 applied. The UUT was exposed to 9 cycles (72 hours) of the following environment. The UUT was stabilized at a temperature of 84 ± 16°F and a relative humidity of 95 ± 5% using distilled water. The temperature was gradually increased to 155°F ± 4°F over a 2-hour period. This temperature was maintained for 2 hours. The temperature was then decreased over a period of 4 hours to the original 84°F ± 16°F. Paragraph 4.1.2.2 was performed. The above procedure was repeated for a total of nine cycles (72 hours). All results of the performance of paragraph 4.1.2.2 were within tolerance. See addendum page C-23 for S/N 9 and C-56 for S/N 10. A post-test per paragraphs 4.1.2.1 through 4.1.2.3 was performed under room ambient conditions. S/N 9 was out-of-tolerance with respect to endpoints, linearity and repeatability. S/N 10 was out-of-tolerance with respect to endpoints at 0 psia (less than 50 microns). The output voltage was approximately -2 vdc. See addendum pages C-24 through C-28 for S/N 9 and C-57 for S/N 10. At this point both units were rejected and returned to the vendor on FARR A212888.

4.7 Post Environmental

The performance of the post-humidity test paragraph 4.6 was considered to be the post-environmental test on these units.

5.0 PROCEDURES AND RESULTS OF S/N 4 and S/N 8

S/N 4 and S/N 8 were subjected to the environmental tests as outlined below. S/N 4 was subjected only to humidity since the design qualification section felt that sufficient information was obtained

5.0 PROCEDURES AND RESULTS OF S/N 4 AND S/N 8 (Cont'd)

from the previous testing performed on S/N 9 and S/N 10.

5.1 Visual and Mechanical Inspection

The UUT was subjected to visual and mechanical inspection per paragraph 4.1.1. No defects were noted.

5.2 Pre-Environmental Tests

S/N 4 and S/N 8 were subjected to tests outlined in paragraph 4.1.2. S/N 8 was out-of-tolerance with respect to repeatability. See addendum pages C-58 through C-62 for S/N 4 and C-70 through C-75 for S/N 8.

5.3 Low Temperature

S/N 8 was subjected to the environment as specified in paragraph 4.3. A pre-test per paragraph 4.1.2 was performed. No out-of-tolerances were noted. (See addendum pages C-76 through C-80.) During low temperature an automatic calibration per paragraph 4.1.2.2 was performed every 15 minutes. The 80% calibration point was out-of-tolerance at two consecutive readings. As may be seen by the temperatures at these two points (2nd and 3rd), the out-of-tolerances were probably due to a drastic temperature change caused by the sticking of the cryogenic valve controlling the gaseous nitrogen. See addendum page C-81. Once the temperature was re-stabilized at -100°F the UUT was within tolerance. Results are shown on addendum page C-81 and are for information only. A post-test per paragraph 4.1.2 was performed. No out-of-tolerances were noted. See addendum pages C-82 through C-86.

5.4 High Temperature

S/N 8 was subjected to this environment. A pre-test per paragraph 4.1.2 was performed. The UUT was out-of-tolerance with respect to endpoints which also caused linearity out-of-tolerances on both trials of paragraph 4.1.2.3. (See addendum pages C-87 through C-91.) High temperature as specified in paragraph 4.4 was performed. The results of the automatic calibration run every 15 minutes are shown on addendum page C-92 and are for information only. The 20% calibration was out-of-tolerance throughout the test. A post-test per paragraph 4.1.2 was performed at ambient temperature. Out-of-tolerances with respect to endpoints which also caused out-of-tolerances with respect to linearity were noted. See addendum pages C-93 through C-97 for results of the post-test.

5.5 Thermal Shock

S/N 8 was subjected to thermal shock. No pre-test was performed since paragraph 3.2.2 applied.

Thermal shock was performed according to the procedure outlined in paragraph 4.5. No transient error occurred during the transfer from -100°F to +100°F as determined from the oscillograph record obtained during the test. A post-test was performed per paragraph 4.1.2. Results of the performance of 4.1.2.1 and 4.1.2.2 were within specified tolerances. (See addendum pages C-98 and C-99.) The results of 4.1.2.3 are not presented herein as no record of the results is available. However, inspection of the daily test log indicates the test was performed. The unit functioned normally

5.5 Thermal Shock (Cont'd)

during and after the humidity test that followed. Therefore, it is concluded that there was no catastrophic failure of the unit during the thermal shock test. No statement can be made concerning the degradation of the unit as a result of the thermal shock test.

5.6 Humidity

S/N 4 and S/N 8 were subjected to the humidity environment as specified in paragraph 4.6. S/N 4 was subjected to a pre-test per paragraph 4.1.2 (see addendum page C-63 for test results). Results of the automatic checkout taken every 24 hours for S/N 4 and every 8 hours for S/N 8 were within specified tolerances. See addendum page C-64 for S/N 4 and C-100 for S/N 8. A post-test per paragraph 4.1.2 was performed and is designated Post-Environmental Test. S/N 4 was out-of-tolerance with respect to endpoints and S/N 8 was out-of-tolerance with respect to linearity and static error band. See addendum pages C-65 through C-69 for S/N 4 and C-101 through C-105 for S/N 8.

5.7 Leakage

S/N 4 and S/N 8 were subjected to this environment under GTP Item W-93E. Results are presented in TM-R-5737.

5.8 Post-Environmental Test

The post-humidity test of paragraph 5.6 satisfied the requirements for this test.

C. D. Bering
C. D. Bering
Test Engineer

Roger E. May
R. E. May
Group Engineer

J. L. Whittaker, Chief
Guidance and Control Laboratory
Electronics Department

FITTING PER
MS 33656-4

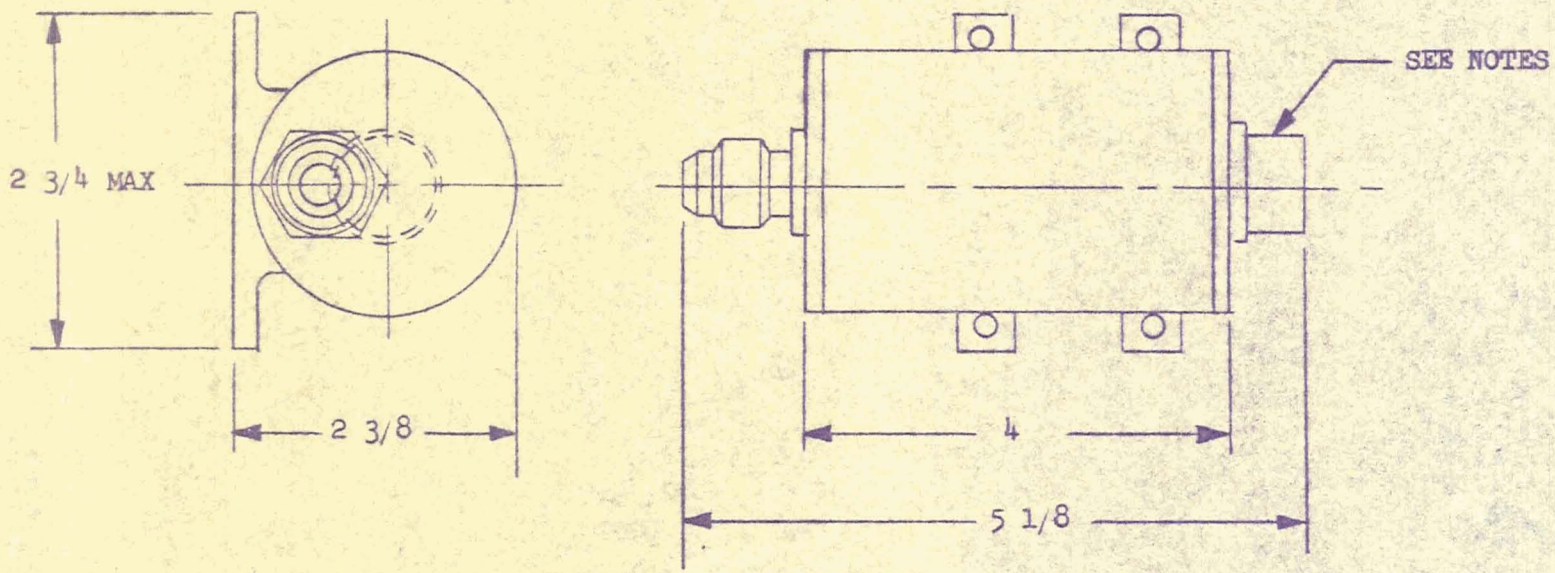

NOTES: PIN ASSIGNMENT

A - +28 VDC
B - Power Return
C - + 5 VDC Signal
D - Signal Return
E - Case Ground
F - 20% Calibrate
G - 80% Calibrate
H - Not Used

PREPARED BY DT
CHECKED BY LaManna
DATE 3-24-66
TITLE TEST SETUP - PRESSURE TRANSDUCER (ELECTRICAL PORTION)

DOUGLAS AIRCRAFT COMPANY, INC.
MISSILE & SPACE SYSTEMS DIVISION

PAGE
MODEL DSV-4B
REPORT NO

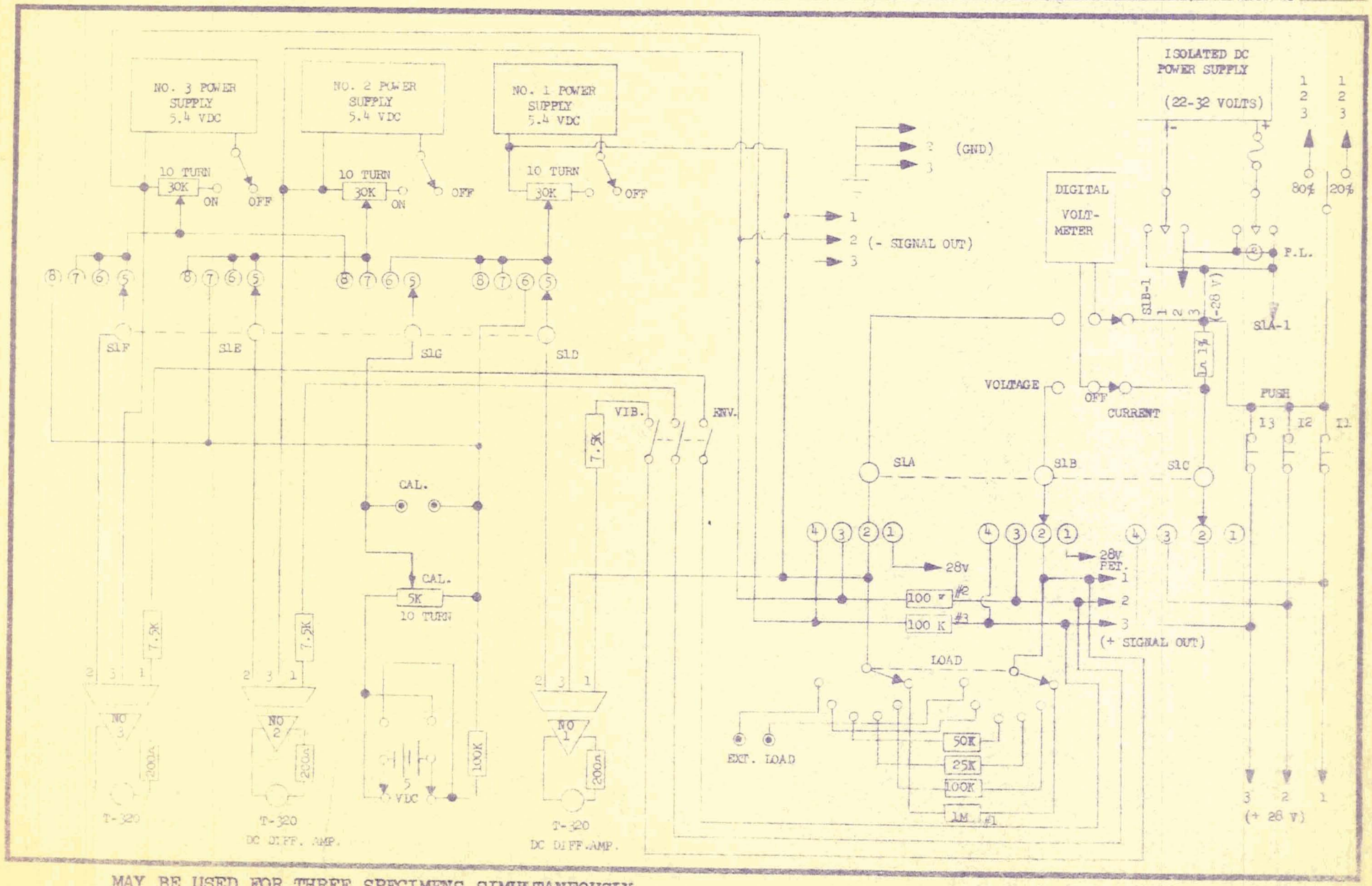

MAY BE USED FOR THREE SPECIMENS SIMULTANEOUSLY

FORM 25-S-1
(REV 8-53)

PREPARED BY: ACA

CHECKED BY:

DATE:

TITLE: PNEUMATIC SCHEMATIC

DOUGLAS AIRCRAFT COMPANY, INC.

MISSILE & SPACE SYSTEMS DIVISION

PAGE: A-3

MODEL: DSV-4B

REPORT NO. TM-R-5812

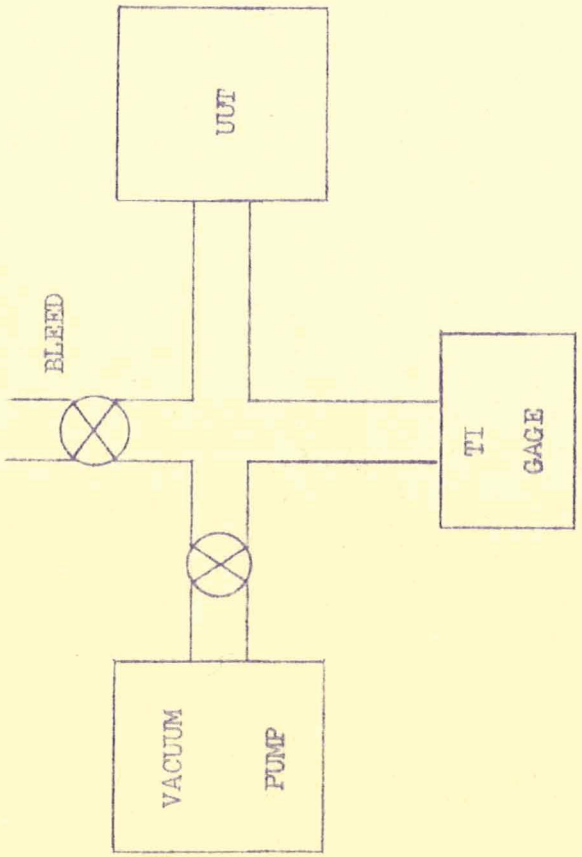

K+E ALBANENE® TRACING PAPER LA 1617

ITEM	MANUFACTURER	MODEL NO.	SERIAL NO.
Precision Pressure Gage	Texas Instr.	141	135
Precision Pressure Gage	Texas Instr.	141A	311
Fused Quartz Pressure Tube (0-5 PSIA)	Texas Instr.	—	—
Fused Quartz Pressure Tube (———)	Texas Instr.	—	—
Digital Integrating Voltmeter	Cimron	7500A	3051
Digital Integrating Ratiometer	Cimron	7500A	2765
Power Supply	Kepco	SC-32-5	C48955
Power Supply	Kepco	SC-32-5	---
Power Supply	Universal	Q-24-28-6A	728
Oscillograph	CEC	5-124	---
Oscillograph	CEC	5-124	---
DC Amplifier	Dynamics	6451	6452-0005
DC Amplifier	Dynamics	6451	---
Amplifier	Dynamics	6456	6447-0006
Amplifier	Dynamics	6456	6447-0002
Voltmeter	Fluke	803	---
Megger	Industrial	L-6B	---
Galvanometer	CEC	7-326	---
		7-315	---
		7-362	---
Minimite	Thermo Electric	80236	AB6901-75
Temp. Regulator	Barber Coleman	292P	---
Pressure Gage (0-60)	Seegers	SS-2170-60	---
Pressure Gage (0-6000)	Seegers	SS-2170-6000	---
Pressure Gage (0-300)	Seegers	SS-2170-300	---
Oscilloscope	Tektronix	533	009913
Oscilloscope	Tektronix	535A	022044
Vacuum Gage	Consolidated Vacuum	GP110	20106A

K+E ALBANENE® LA 1617 TRACING PAPER

FORM 25-9-1
(REV. 8-53)

PREPARED BY: C.D.BERING

CHECKED BY:

DATE:

TITLE:

DOUGLAS AIRCRAFT COMPANY, INC.

MISSILE & SPACE SYSTEMS DIVISION

PAGE: B-1

MODEL: DSV-4E

REPORT NO: TM-R-5812

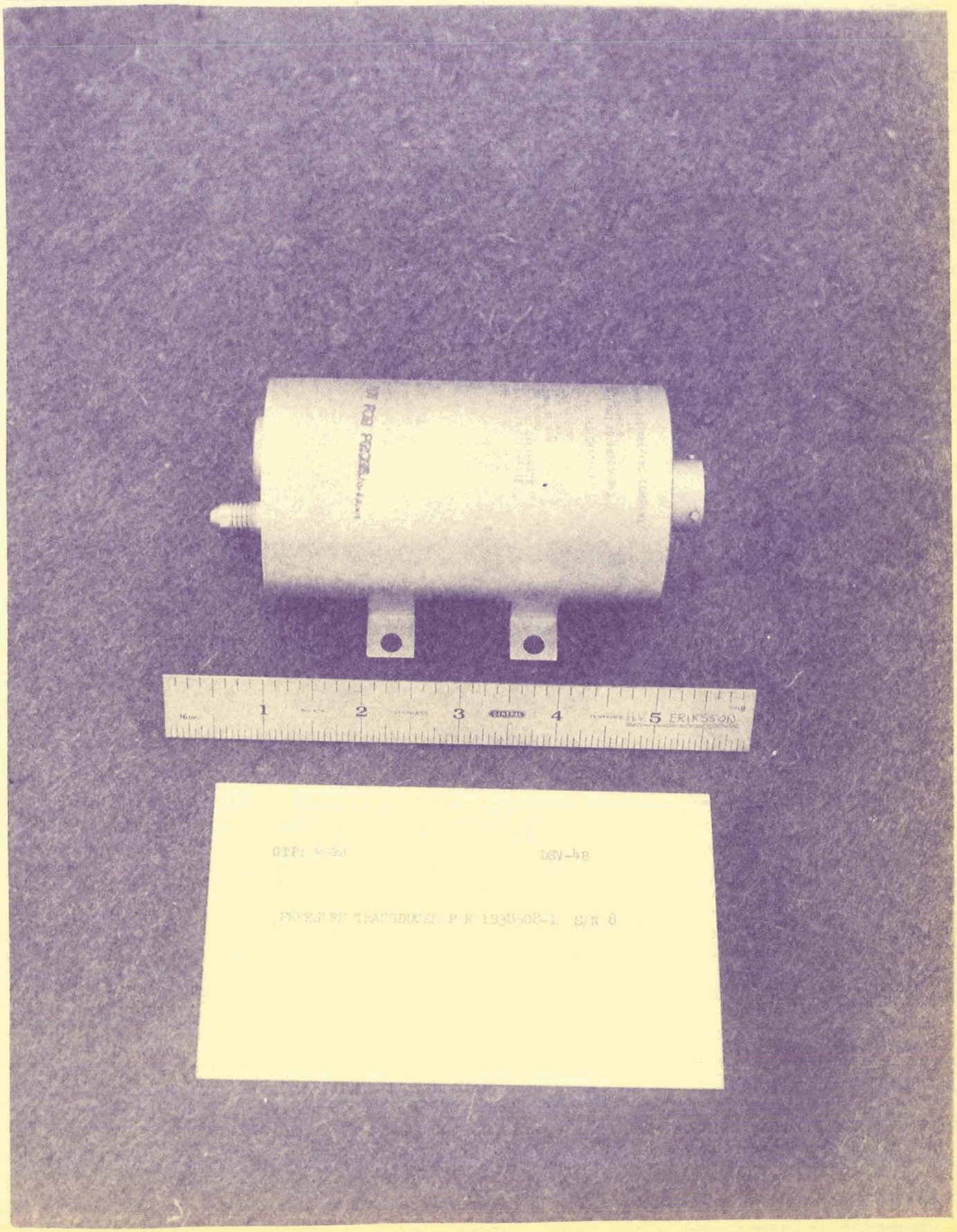

PHOTO SM 470385

FORM 25-S-1
(REV. 8-53)

PREPARED BY: C.D. BERING
CHECKED BY:
DATE:
TITLE:

DOUGLAS AIRCRAFT COMPANY, INC.
MISSILE & SPACE SYSTEMS DIVISION

PAGE: B-2
MODEL: DSV-4B
REPORT NO: TM-R-5812

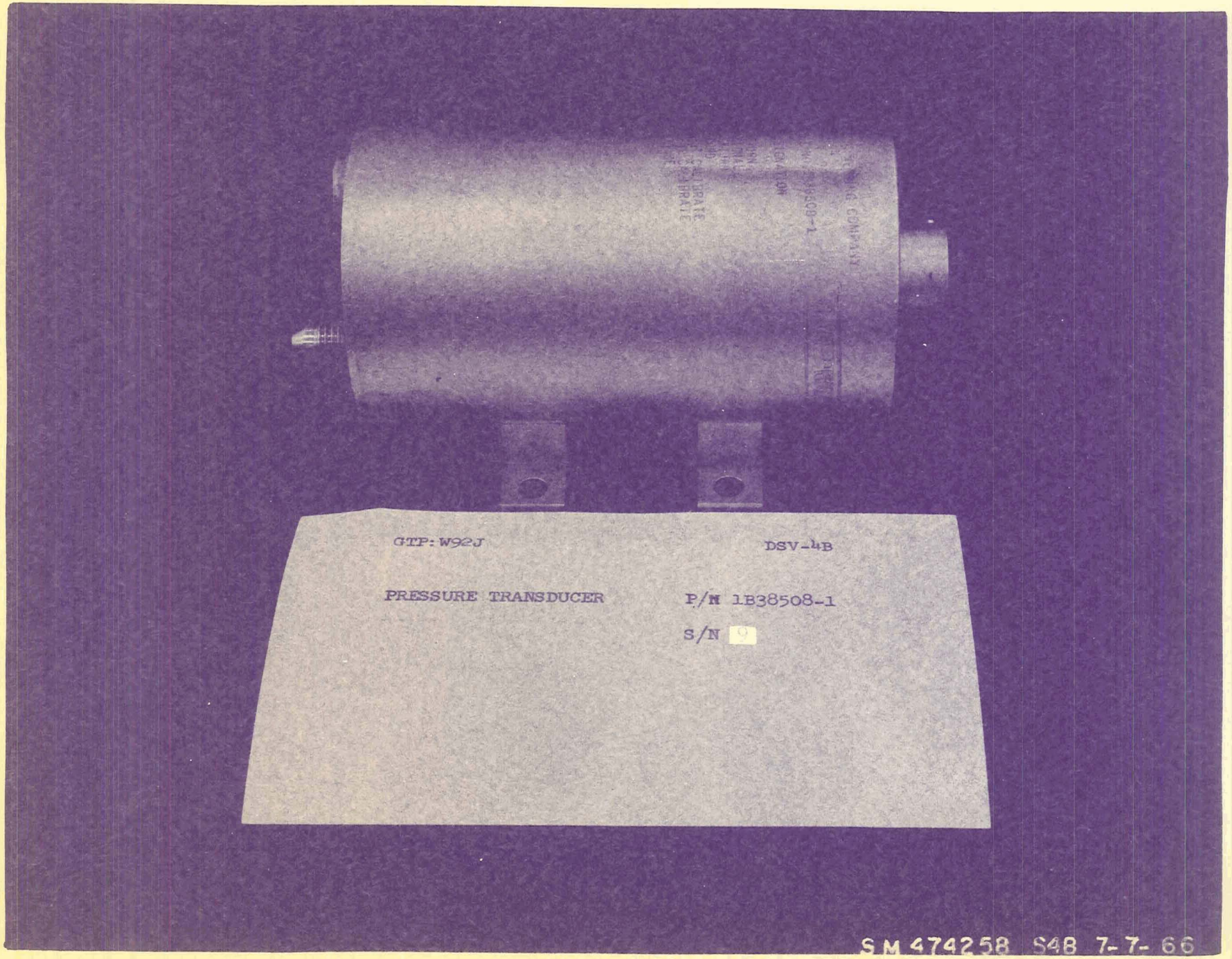

FORM 25-S-1
(REV. 6-53)

DOUGLAS AIRCRAFT COMPANY, INC.

PREPARED BY: C.D.BERING

CHECKED BY:

DATE:

MISSILE & SPACE SYSTEMS DIVISION

PAGE: B-3

MODEL: DSV-4B

TITLE: CALIBRATION TEST SETUP

REPORT NO: TM-R-5812

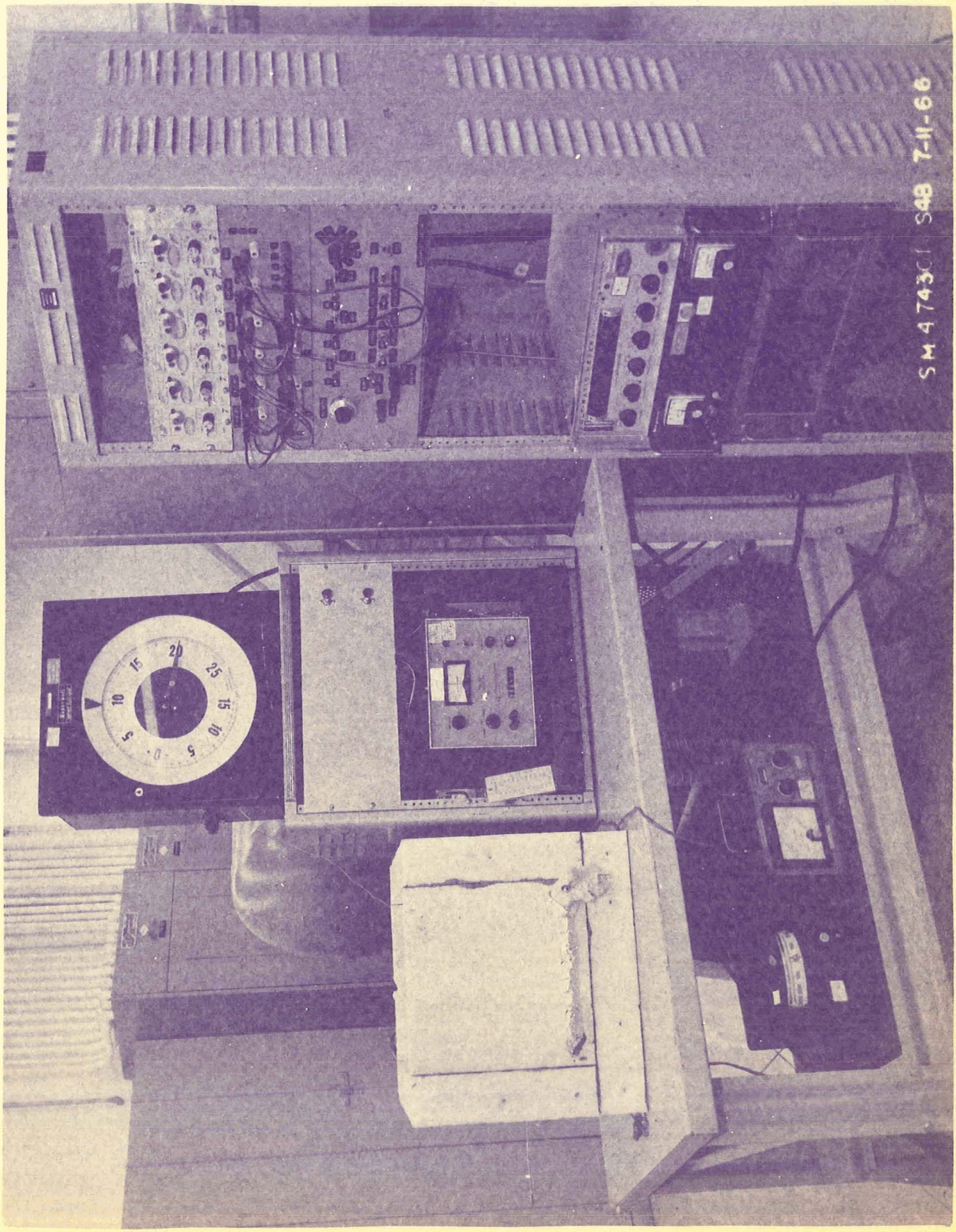

FORM 25-8-1
(REV. 8-53)

PREPARED BY: C.D.BEKING

CHECKED BY:

DATE:

TITLE: VACUUM PUMP AND VACUUM LINE

DOUGLAS AIRCRAFT COMPANY, INC.

MISSILE & SPACE SYSTEMS DIVISION

PAGE: B-4

MODEL: DSV-4B

REPORT NO: TM-A-5812

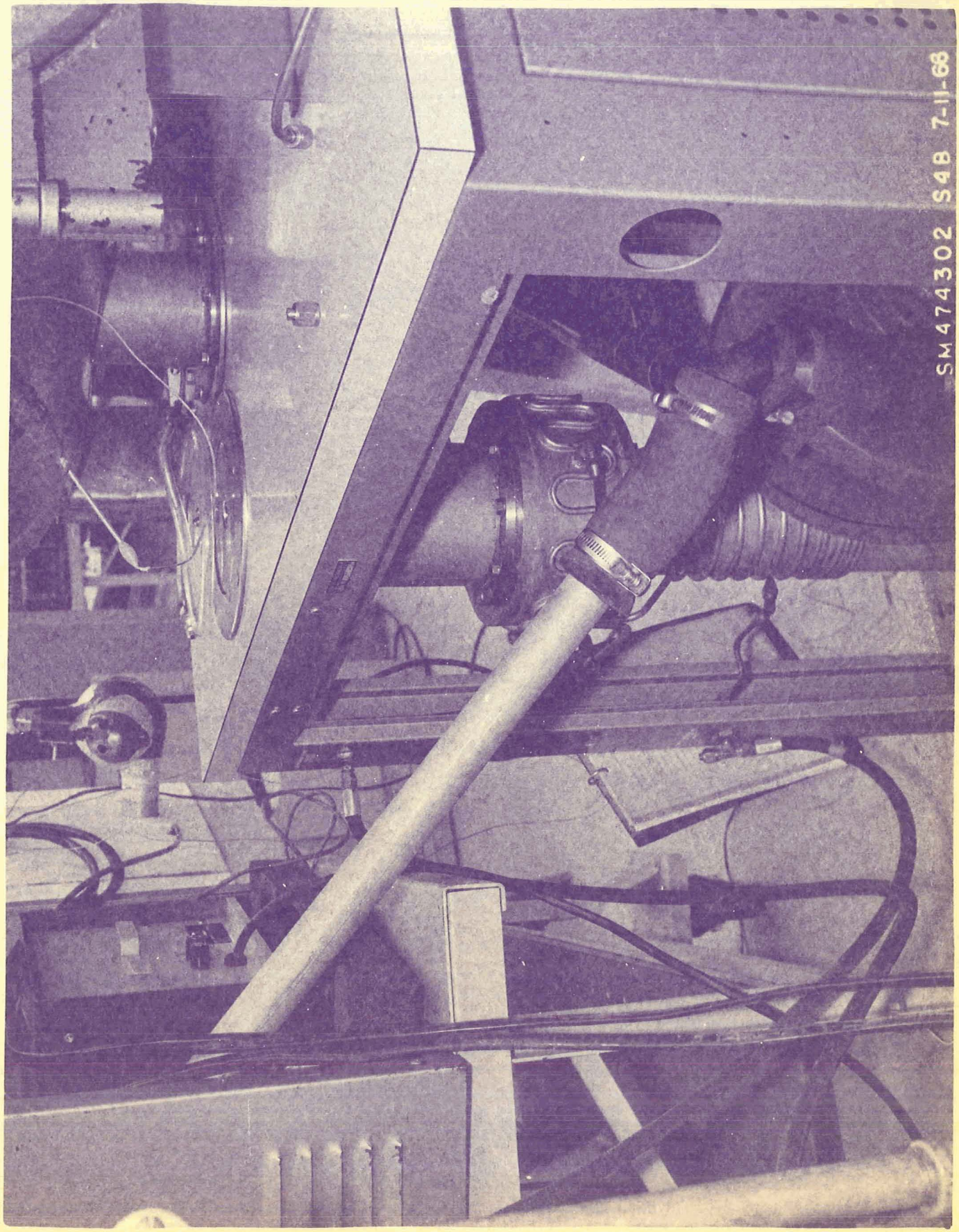

FORM 25-8-1
(REV. 8-53)

DOUGLAS AIRCRAFT COMPANY, INC.

PREPARED BY: C.D.BERING
CHECKED BY:
DATE:
TITLE: TEMPERATURE TEST SETUP

MISSILE & SPACE SYSTEMS DIVISION

PAGE: B-5
MODEL: DSV-4B
REPORT NO: TM-R-5812

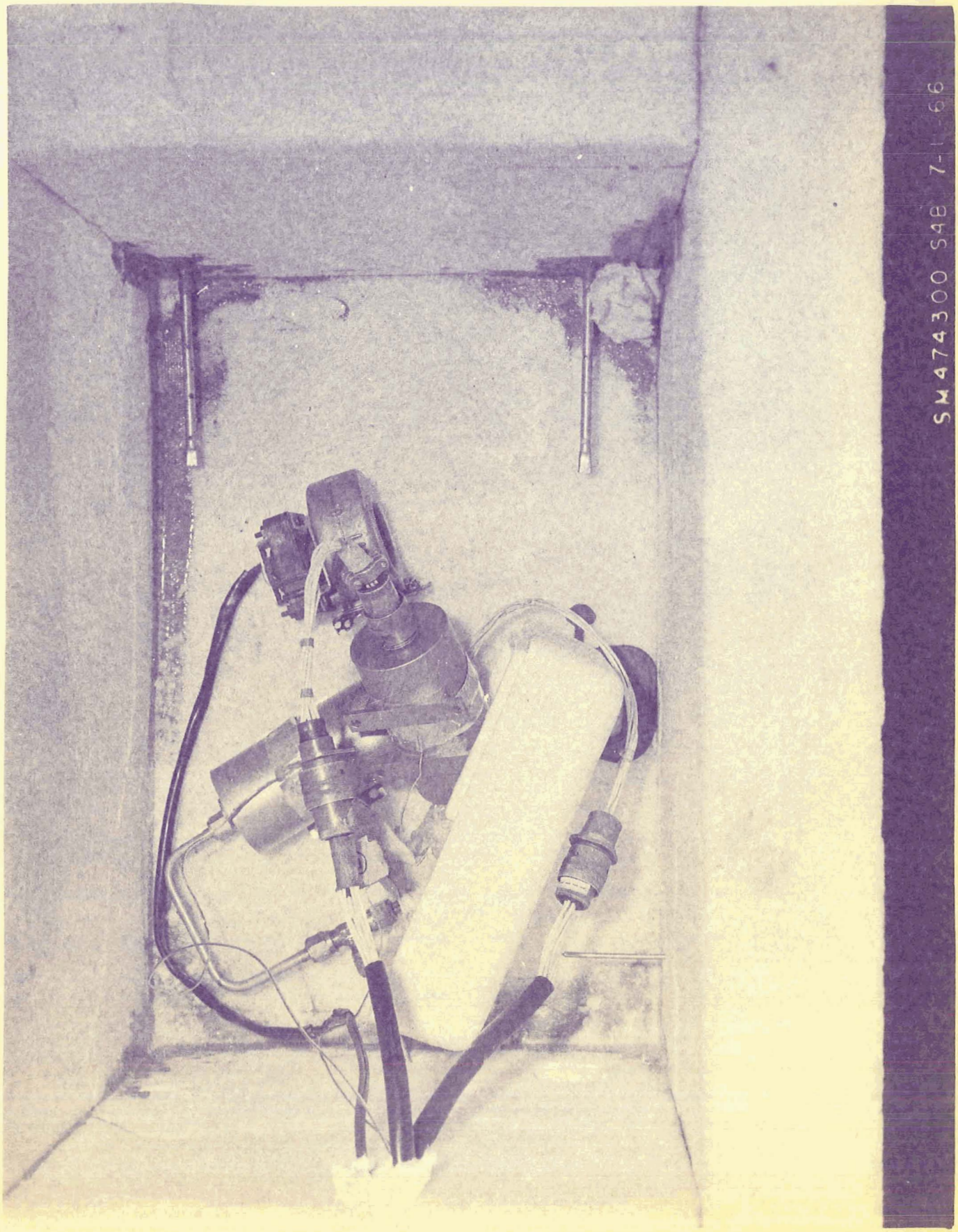

DATA SHEET

FORM 30-830 (7-65)

MISSILE & SPACE SYSTEMS DIVISION
DOUGLAS AIRCRAFT COMPANY, INC.

T M R 5812

DATE 7-6-66 PRE ENVIRONMENTAL TEST PAGE C I

SUBJECT PRESSURE TRANSDUCER

TEST NO. W92J S.O. 5879-6502 D.W.O. 27743 T.C.D. 1T06935 MODEL NO. DSV-4B

OBJECT OF THIS DATA

OBSERVER R.M. McCOMMON LABORATORY EE-6&C ENGINEER C. BERING

GTP: W92J P/N: 1B38508-1 S/N: 9

Weight: 21.1 Oz.

Dimensions: L 5 3/64 In. H 2 25/64 In. DIA. 2 17/64 In.

INSULATION RESISTANCE

Pin A to Case 4KMEG Ohms

Pin B to Case 3KMEG Ohms

Pin C to Case 4KMEG Ohms

Pin D to Case 4KMEG Ohms

Pin F to Case 4KMEG Ohms

Pin G to Case 4KMEG Ohms

Pin E Case Ground ✓ (✓)

AUTOMATIC CHECKOUT

Load 100K Ohms

27 VDC to Pin F 1.0240 Volts

27 VDC to Pin G 3.9752 Volts

ISOLATION RESISTANCE

Pin A to C N.A. Ohms PINS AB TO PINS CD >100MEGOHMS

Pin A to D N.A. Ohms

Pin B to C N.A. Ohms

Pin B to D N.A Ohms

COMMENTS

N.A. - NOT APPLICABLE

UNIT RECEIVED WITH DENT IN CASE

DATE 7/08/70 TITLE PRE ENVIRONMENTAL
BAROMETRIC PRESSURE LINE ITEM 4910 PAN 1338308-1 S/N 9
SUPPLY LOAD 1000 S.O. 5870-6502 E.N.O. 27743 T.C.D. 1T06935
OBSERVER [illegible] ENGINEER MADISON MODEL NO. DSV-43

REPEATABILITY

FULL SCALE = 5.075800 MAXIMUM REPEATABILITY = .007500
PER CENT = .147151

POINT	PERCENT	PSIA	TRIAL A	TRIAL B	TRIAL C	DIFFERENCES
1	100.00	.33	4.958200	4.959800	.000000	.001600
2	90.00	.27	4.377800	4.385300	.000000	.007500
3	80.00	.24	3.959300	3.963800	.000000	.004500
4	70.00	.21	3.454400	3.455400	.000000	.001000
5	60.00	.18	2.968900	2.969900	.000000	.001000
6	50.00	.16	2.463100	2.465100	.000000	.002000
7	40.00	.12	1.949300	1.952700	.000000	.003400
8	30.00	.09	1.425700	1.425600	.000000	.000100
9	20.00	.06	.920500	.920200	.000000	.000800
10	10.00	.03	.399700	.390800	.000000	.001900
11	.00	.00	4.138600	4.138700	.000000	.000100

7/08/66 PRE[illegible]

[illegible] 1335508-1 S/N 9 TRIAL A

CHEBYSHEV CURVE FIT

MAX. LINE DEV. = .4826333374E-01

FULL SCALE = [illegible] PER CENT = .9473254274E 00

SLOPE = .5018[illegible]E-01

INTERCEPT = [illegible]E-01

POINT	INPUT X	INPUT Y1	OUTPUT F	RESIDUAL Y1-F
1	0.00000	[illegible]	[illegible]	.030294
2	90.00000	[illegible]	[illegible]	-.043283
3	80.00000	[illegible]	[illegible]	.035039
4	70.00000	[illegible]	[illegible]	.031941
5	60.00000	[illegible]	[illegible]	.048283
6	50.00000	[illegible]	[illegible]	.044306
7	40.00000	[illegible]	[illegible]	.032326
8	30.00000	[illegible]	[illegible]	.010660
9	20.00000	[illegible]	.91333	.007172
10	10.00000	[illegible]	.41151	-.018806
11	[illegible]	[illegible]	-.09032	-.043283

7/28/66 PRE [illegible] TRIAL 5
LINE [illegible] S/N 9

CHEBYSHEV CURVE FIT

MAX. LINE DEV. = .4630000000E-01
FULL SCALE = [illegible] PER CENT = .9264131[illegible]E 00

SLOPE = [illegible]
INTERCEPT = [illegible]

POINT	INPUT X	INPUT Y1	OUTPUT F	RESIDUAL Y1-F
1	100.00000	[illegible].95280	4.93427	.025533
2	90.00000	[illegible].88830	4.43167	-.046300
3	80.00000	[illegible].96780	3.92893	.034867
4	70.00000	[illegible].45540	3.42627	.029133
5	60.00000	2.96990	2.92360	.046300
6	50.00000	[illegible]	2.42093	.044167
7	40.00000	1.95870	1.91827	.034433
8	30.00000	1.42060	1.41560	.010000
9	20.00000	[illegible].92020	[illegible].91293	.007267
10	10.00000	[illegible].99080	[illegible].41027	-.018467
11	[illegible]	[illegible].13370	4.09240	-.046300

STATIC ERROR BAND [TYPE 1,TEST NO. 1]

DATE 7/08/66 TITLE PRE ENVIRONMENTAL
BAROMETRIC PRESSURE . LINE ITEM NO2J P/N 1838505-1 S/N 9
OUTPUT LOAD 100K S.O. 5879-6502 E.W.O. 27743 T.C.D. 1T06936
OBSERVER MC COMMON ENGINEER MADISON MODEL NO. DSV-48

	PERCENT FULL SCALE	REFERENCE CALIB	MAXIMUM ERROR PT	ACTUAL DEVIATION	PERCENT DEVIATION
1	100.000000	4.931086	4.959800	.028714	.571711
2	90.000000	4.428842	4.377800	-.051042	-1.016271
3	80.000000	3.926507	3.963800	.037293	.740730
4	70.000000	3.424353	3.455400	.031047	.618170
5	60.000000	2.922108	2.969900	.047792	.951562
6	50.000000	2.419864	2.465100	.045236	.900679
7	40.000000	1.917619	1.952700	.035081	.698475
8	30.000000	1.415375	1.425700	.010325	.205577
9	20.000000	.913131	.920500	.007369	.146730
10	10.000000	.410886	.390800	-.020086	-.399927
11	.000000	-.091358	-.138700	-.047342	-.942602

FULL SCALE = 5.02244 MAX DEVIATION[ACT] = -.05104 MAX DEVIATION[PERCENT] = -1.01627

TM R 5812

C 5

FORM NO. 30-830 (REV. 6-66)

DATA SHEET

DATE 7-9-66 LOW TEMP. TEST REPORT NO. [illegible]

PART NO. 1B38508-1 CHG. LTR. S/N. 9 LINE ITEM W92J

S.O. 5879-6502 E.W.O. 27743 T.C.D. IT06935 MODEL NO. DSV-4B

OBSERVER A RICHARDS LABORATORY EE/G&C ENGINEER BERING

AUTOMATIC CALIBRATION

TIME	TEMP. °F	OUTPUT VDC	27 VDC TO PIN F	27 VDC TO PIN G
11:30	-40	—	1.0873 VDC	4.1377 VDC
11:40	-70	—	1.1067 VDC	4.1596 VDC
11:50	-95	—	1.1268 VDC	4.1797 VDC
12:00	—	—	1.1317 VDC	4.1818 VDC
12:10	-104	—	1.1363 VDC	4.1760 VDC
1:20	-112	—	1.1429 VDC	4.1724 VDC
1:30	-102	—	1.1387 VDC	4.1725 VDC
1:40	-101	—	1.1358 VDC	4.1711 VDC
1:50	-100	—	1.1348 VDC	4.1705 VDC
2:00	-100	—	1.1343 VDC	4.1702 VDC
2:10	-99	—	1.1334 VDC	4.1695 VDC
2:20	-100	—	1.1344 VDC	4.1700 VDC
2:50	-100.5	—	1.1344 VDC	4.1735 VDC
3:10	-101	—	1.1346 VDC	4.1670 VDC

MISSILE & SPACE SYSTEMS DIVISION
DOUGLAS AIRCRAFT COMPANY, INC.

DATA SHEET

FORM 20-830 (7-65)

T M R 5812

DATE 7-9-66 POST LOW TEMPERATURE TEST PAGE C 7

SUBJECT PRESSURE TRANSDUCER

TEST NO. W92 J S.O. 5879-6502 D.W.O. 27743 ~~D.R.O.~~ TCD 1T06935 MODEL NO. DSV-4B

OBJECT OF THIS DATA

OBSERVER A. RICHARDS LABORATORY EE-G&C ENGINEER C. BERING

GTP: W92J P/N: 1B38508-1 S/N: 9

Weight: N.A Oz.

Dimensions: L N.A In. H N.A In. DIA. N.A In.

INSULATION RESISTANCE

Pin A to Case 4K MEG Ohms

Pin B to Case 4K MEG Ohms

Pin C to Case 4K MEG Ohms

Pin D to Case 4K MEG Ohms

Pin F to Case 4K MEG Ohms

Pin G to Case 4K MEG Ohms

Pin E Case Ground ✓ (✓)

AUTOMATIC CHECKOUT

Load 100K Ohms

27 VDC to Pin F 1.0241 Volts

27 VDC to Pin G 3.9729 Volts

ISOLATION RESISTANCE

Pin A to C N.A. Ohms PINS AB TO PINS CD 2K MEGOHMS

Pin A to D N.A. Ohms

Pin B to C N.A. Ohms

Pin B to D N.A. Ohms

COMMENTS

DATE 7/ 8/65 TITLE POST LOW TEMPERATURE
BAROMETRIC PRESSURE LINE ITEM A920 P/N 1838-[illegible]-1 S/N 9
OUTPUT [illegible] S.O. 5579-0502 E.W.O. 2/7.3 T.C.D. 1T06935
OBSERVER [illegible] ENGINEER MADISON MODEL NO. [illegible]

REPEATABILITY

FULL SCALE = [illegible] MAXIMUM REPEATABILITY = .012300
PER CENT = .240654

POINT	PERCENT	PSIA	TRIAL A	TRIAL B	TRIAL C	DIFFERENCES
1	[illegible]	[illegible]	4.974400	4.977900	.000000	.003500
2	[illegible]	[illegible]	4.394200	4.400600	.000000	.006400
3	[illegible]	[illegible]	3.965500	3.977800	.000000	.012300
4	[illegible]	[illegible]	3.466800	3.468300	.000000	.002100
5	[illegible]	[illegible]	2.974900	2.980000	.000000	.005100
6	[illegible]	[illegible]	2.468400	2.471800	.000000	.003400
7	[illegible]	[illegible]	1.957000	1.957200	.000000	.000200
8	[illegible]	[illegible]	1.427700	1.427000	.000000	.002700
9	[illegible]	[illegible]	.921500	.919200	.000000	.002300
10	[illegible]	[illegible]	.391000	.385200	.000000	.005800
11	[illegible]	[illegible]	-.138800	-.144300	.000000	.005500

[illegible] TEMPERATURE
[illegible] SAN 9 TRIAL A

CHEBYSHEV CURVE FIT

MAX. LINE DEV. = .45833000001-01
PER CENT = .89569874061 00

FULL SCALE = [illegible]

SLOPE = [illegible]E-01
INTERCEPT = [illegible]E-01

POINT	INPUT X	OUTPUT Y1	OUTPUT F	RESIDUAL Y1-F
1	100.00000	[illegible]	4.94372	.030683
2	60.00000	[illegible]	4.44005	-.045850
3	50.00000	[illegible]	3.93636	.029117
4	70.00000	[illegible]	3.43272	.033483
5	60.00000	[illegible]	2.92905	.045850
6	50.00000	[illegible]	2.42538	.043017
7	40.00000	[illegible]	1.92172	.035283
8	30.00000	[illegible]	1.41805	.011650
9	20.00000	[illegible]	.91438	.007117
10	10.00000	[illegible]	.41072	-.019717
11	.00000	[illegible]	-.09295	-.045850

7/ 9/65 POST LOW TEMPERATURE TRIAL B
LINE ITEM [illegible] P/N 1538608-1 S/N 9

CHEBYSHEV CURVE FIT

MAX. LINE DEV. = .4718803534E-01
PER CENT = .9227[illegible]E 00

FULL SCALE = [illegible]

SLOPE = [illegible]E-01
INTERCEPT = -.9711[illegible]E-01

POINT	INPUT X	INPUT Y1	OUTPUT F	RESIDUAL Y1-F
1	100.00000	4.97790	4.95277	.025128
2	90.00000	4.40060	4.44773	-.047183
3	80.00000	3.97787	3.94279	.035004
4	70.00000	3.46630	3.43781	.030494
5	60.00000	2.98000	2.93282	.047183
6	50.00000	2.47180	2.42783	.043972
7	40.00000	1.96720	1.92284	.034361
8	30.00000	1.42700	1.41785	.009150
9	20.00000	.91920	.91286	.006389
10	10.00000	.38520	.40787	-.022672
11	.00000	-.14430	-.09713	-.047183

STATIC ERROR BAND [TYPE 1,TEST NO. 2]

DATE 7/ 9/66 TITLE POST LOW TEMPERATURE
BAROMETRIC PRESSURE . LINE ITEM A92J P/N 1833508-1 S/N 9
OUTPUT LOAD 100K S.O. 5879-6502 E.W.O. 27743 T.C.O. 1T06935
OBSERVER MC COMMON ENGINEER MADISON MODEL NO. DSV-48

	PERCENT FULL SCALE	REFERENCE CALIB	MAXIMUM ERROR PT	ACTUAL DEVIATION	PERCENT DEVIATION
1	100.000000	4.931036	4.977900	.046814	.932094
2	90.000000	4.428842	4.394200	-.034642	-.689737
3	80.000000	3.926597	3.977800	.051203	1.019479
4	70.000000	3.424353	3.468300	.043947	.875017
5	60.000000	2.922108	2.980000	.057892	1.152659
6	50.000000	2.419864	2.471800	.051936	1.034080
7	40.000000	1.917619	1.957200	.039581	.788074
8	30.000000	1.415375	1.429700	.014325	.285220
9	20.000000	.913131	.921500	.008369	.166641
10	10.000000	.410886	.385200	-.025686	-.511426
11	.000000	-.091358	-.144300	-.052942	-1.054102

FULL SCALE = 5.02244 MAX DEVIATION[ACT] = .05789 MAX DEVIATION[PERCENT] = 1.15266

FORM NO. 30-830 (REV. 6-66)

DATA SHEET

DATE 7-9-66 HIGH TEMP. TEST REPORT NO. TMR 5812

PART NO. 1B38508-1 CHG. LTR. S/N. 9 LINE ITEM W92P

S.O. 5879-6502 E.W.O. 27743 T.C.D. IT06935 MODEL NO. D3V-4B

OBSERVER A. RICHARDS LABORATORY EE/G&C ENGINEER BERING

AUTOMATIC CALIBRATION

TIME	TEMP. °F	OUTPUT VOLTAGE	27 VDC TO PIN F	27 VDC TO PIN G
7:15	+100	+4.9247	1.0212 VDC	3.9717 VDC
7:45	+100	+4.9315	1.0217 VDC	3.9710 VDC
8:15	+100	+4.9465	1.0206 VDC	3.9709 VDC
8:45	+100	+4.9355	1.0215 VDC	3.9705 VDC
9:15	+100	+4.9412	1.0205 VDC	3.9702 VDC
9:45	+100	+4.9445	1.0207 VDC	3.9702 VDC
10:15	+100	+4.9355	1.0217 VDC	3.9705 VDC
10:45	+100	+4.9353	1.0207 VDC	3.9700 VDC
11:15	+100	+4.9406	1.0214 VDC	3.9703 VDC

DATA SHEET

FORM 30-830 (7-65)

MISSILE & SPACE SYSTEMS DIVISION
DOUGLAS AIRCRAFT COMPANY, INC.

T M R 5812

DATE 7-11-66 POST HIGH TEMPERATURE TEST PAGE 13

SUBJECT PRESSURE TRANSDUCER

TEST NO. W92J S.O. 5879 6002 D.W.O. 27743 ~~D.R.O.~~ TCO 1T06935 MODEL NO. DSV-4B

OBJECT OF THIS DATA

OBSERVER A. RICHARDS LABORATORY EE-G&C ENGINEER C.D. BERING

GTP: W92J P/N: 1B38508-1 S/N: 9

Weight: N.A Oz.

Dimensions: L N.A In. H N.A In. DIA. N.A In.

INSULATION RESISTANCE

Pin A to Case 5K MEG Ohms

Pin B to Case 4K MEG Ohms

Pin C to Case 3K MEG Ohms

Pin D to Case 3K MEG Ohms

Pin F to Case 4K MEG Ohms

Pin G to Case 4K MEG Ohms

Pin E Case Ground ✓ (✓)

AUTOMATIC CHECKOUT

Load 100K Ohms

27 VDC to Pin F 1.0238 Volts

27 VDC to Pin G 3.9721 Volts

ISOLATION RESISTANCE

Pin A to C N.A Ohms

Pin A to D N.A Ohms

Pin B to C N.A Ohms

Pin B to D N.A Ohms

COMMENTS

DATE 7/11/66 TITLE POST HIGH TEMPERATURE
BAROMETRIC PRESSURE . LINE ITEM W92J P/N 1B38508-1 S/N 9
OUTPUT LOAD S.O. 5879-6502 E.W.O. 27743 T.C.D. 1T06935
OBSERVER RICHARDS ENGINEER MADISON MODEL NO. DSV-4B

REPEATABILITY

FULL SCALE = 5.084000 MAXIMUM REPEATABILITY = .019900
PER CENT = .391424

POINT	PERCENT	PSIA	TRIAL A	TRIAL B	TRIAL C	DIFFERENCES
1	100.00	.30	4.927500	4.947400	.000000	.019900
2	90.00	.27	4.351300	4.367700	.000000	.016400
3	80.00	.24	3.930500	3.945000	.000000	.014500
4	70.00	.21	3.427500	3.431600	.000000	.004100
5	60.00	.18	2.941100	2.950000	.000000	.008900
6	50.00	.15	2.440800	2.444600	.000000	.003800
7	40.00	.12	1.932300	1.936000	.000000	.003700
8	30.00	.09	1.405700	1.408500	.000000	.002800
9	20.00	.06	.902100	.903700	.000000	.001600
10	10.00	.03	.369600	.371500	.000000	.001900
11	.00	.00	-.156500	-.152400	.000000	.004100

7/11/66 POST HIGH TEMPERATURE TRIAL A
LINE ITEM W92J P/N 1838508-1 S/N 9

CHEBYSHEV CURVE FIT

MAX. LINE DEV. = .4648333333E-01
FULL SCALE = 5.084000 PER CENT = .9143063205E 00

SLOPE = .5008666666669E-01
INTERCEPT = -.1100166666680E 00

POINT	INPUT X	INPUT Y1	OUTPUT F	RESIDUAL Y1-F
1	100.00000	4.92750	4.89865	.028850
2	90.00000	4.36130	4.39778	-.046483
3	80.00000	3.93050	3.89692	.033583
4	70.00000	3.42750	3.39605	.031450
5	60.00000	2.94110	2.89518	.045917
6	50.00000	2.44080	2.39432	.046483
7	40.00000	1.93230	1.89345	.038850
8	30.00000	1.40570	1.39258	.013117
9	20.00000	.90210	.89172	.010383
10	10.00000	.36960	.39085	-.021250
11	.00000	-.15650	-.11002	-.046483

7/11/66 POST HIGH TEMPERATURE TRIAL B
LINE ITEM N92J P/N 1B38508-1 S/N 9

CHEBYSHEV CURVE FIT

MAX. LINE DEV. = .4450000000E-01
FULL SCALE = 5.084000 PER CENT = .8752950433E 00

SLOPE = .5022333333334E-01
INTERCEPT = -.1079000000017E 00

POINT	INPUT X	INPUT Y1	OUTPUT F	RESIDUAL Y1-F
1	100.00000	4.94740	4.91443	.032967
2	90.00000	4.36770	4.41220	-.044500
3	80.00000	3.94500	3.90997	.035033
4	70.00000	3.43160	3.40773	.023867
5	60.00000	2.95000	2.90550	.044500
6	50.00000	2.44460	2.40327	.041333
7	40.00000	1.93600	1.90103	.034967
8	30.00000	1.40850	1.39880	.009700
9	20.00000	.90370	.89657	.007133
10	10.00000	.37150	.39433	-.022833
11	.00000	-.15240	-.10790	-.044500

STATIC ERROR BAND (TYPE 1,TEST NO. 3)

DATE 7/11/66 TITLE POST HIGH TEMPERATURE
BAROMETRIC PRESSURE . LINE ITEM W92J P/N 1B33608-1 S/N 9
OUTPUT LOAD S.O. 5279-6502 E.W.O. 27743 T.C.D. 1T06935
OBSERVER RICHARDS ENGINEER MADISON MODEL NO. DSV-43

	PERCENT FULL SCALE	REFERENCE CALIB	MAXIMUM ERROR PT	ACTUAL DEVIATION	PERCENT DEVIATION	
1	100.000000	4.931086	4.947400	.016314	.324820	
2	90.000000	4.428842	4.351300	-.077542	-1.543903	*
3	80.000000	3.926597	3.945000	.018403	.366411	
4	70.000000	3.424353	3.431600	.007247	.144297	
5	60.000000	2.922108	2.950000	.027892	.555340	
6	50.000000	2.419864	2.444600	.024736	.492511	
7	40.000000	1.917619	1.936000	.018381	.366968	
8	30.000000	1.415375	1.405700	-.009675	-.192635	
9	20.000000	.913131	.902100	-.011031	-.219625	
10	10.000000	.410886	.369600	-.041286	-.822032	
11	.000000	-.091358	-.156500	-.065142	-1.297011	

FULL SCALE = 5.02244 MAX DEVIATION[ACT] = -.07754 MAX DEVIATION[PERCENT] = -1.54390

MISSILE & SPACE SYSTEMS DIVISION
DOUGLAS AIRCRAFT COMPANY, INC.

DATA SHEET

FORM 30-850 (7-65)

TMR 5812

DATE 7-12-66 POST THERMAL SHOCK TEST PAGE C 18

SUBJECT PRESSURE TRANSDUCER

TEST NO. W92J S.O. 5800-6502 D.W.O. 27743 ~~D.R.O.~~ TCO LT06935 MODEL NO. DSV-4B

OBJECT OF THIS DATA

OBSERVER RICHARDS LABORATORY G&C ENGINEER D. MADISON

GTP: W92J P/N: 1B38508-1 S/N: 9

Weight: N.A Oz.

Dimensions: L N.A In. H N.A In. DIA. NA In.

INSULATION RESISTANCE

Pin A to Case >100 MEG Ohms

Pin B to Case >100 MEG Ohms

Pin C to Case >100 MEG Ohms

Pin D to Case >100 MEG Ohms

Pin F to Case >100 MEG Ohms

Pin G to Case >100 MEG Ohms

Pin E Case Ground ✓ (✓)

AUTOMATIC CHECKOUT

Load 100K Ohms

27 VDC to Pin F 1.0242 Volts

27 VDC to Pin G 3.9727 Volts

ISOLATION RESISTANCE

Pin A to C N.A Ohms PINS AB TO PINS CD >100 MEG OHMS

Pin A to D N.A Ohms

Pin B to C N.A Ohms

Pin B to D N.A Ohms

COMMENTS

DATE 7/12/66 TITLE POST THERMAL SHOCK
BAROMETRIC PRESSURE . LINE ITEM W92J P/N 1B38508-1 S/N 9
OUTPUT LOAD S.O. 5879-6502 E.W.O. 27743 T.C.D. 1T06935
OBSERVER RICHARDS ENGINEER MADISON MODEL NO. DSV-4B

REPEATABILITY

FULL SCALE = 5.132800 MAXIMUM REPEATABILITY = .015100
PER CENT = .294186

POINT	PERCENT	PSIA	TRIAL A	TRIAL B	TRIAL C	DIFFERENCES
1	100.00	.30	4.982700	4.994200	.000000	.011500
2	90.00	.27	4.397900	4.413000	.000000	.015100
3	80.00	.24	3.973300	3.985200	.000000	.011900
4	70.00	.21	3.462100	3.472700	.000000	.010600
5	60.00	.18	2.973600	2.983900	.000000	.010300
6	50.00	.15	2.466400	2.476200	.000000	.009800
7	40.00	.12	1.952200	1.956500	.000000	.004300
8	30.00	.09	1.422400	1.422500	.000000	.000100
9	20.00	.06	.913600	.915000	.000000	.001400
10	10.00	.03	.382300	.381500	.000000	.000800
11	.00	.00	-.150100	-.148700	.000000	.001400

7/12/66 POST THERMAL SHOCK TRIAL A
LINE ITEM W92J P/N 1838508-1 S/N 9

CHEBYSHEV CURVE FIT

MAX. LINE DEV. = .4584999999E-01
FULL SCALE = 5.132800 PER CENT = .8932746258E 00

SLOPE = .5053333333338E-01
INTERCEPT = -.1042500000033E 00

POINT	INPUT X	INPUT Y1	OUTPUT F	RESIDUAL Y1-F
1	100.00000	4.98270	4.94908	.033617
2	90.00000	4.39790	4.44375	-.045850
3	80.00000	3.97330	3.93842	.034883
4	70.00000	3.46210	3.43308	.029017
5	60.00000	2.97360	2.92775	.045850
6	50.00000	2.46640	2.42242	.043983
7	40.00000	1.95220	1.91708	.035117
8	30.00000	1.42240	1.41175	.010650
9	20.00000	.91360	.90642	.007183
10	10.00000	.38230	.40108	-.018783
11	.00000	-.15010	-.10425	-.045850

7/12/66 POST THERMAL SHOCK TRIAL B
LINE ITEM 492J P/N 1838508-1 S/N 9

CHEBYSHEV CURVE FIT

MAX. LINE DEV. = .4573333334E-01
FULL SCALE = 5.132800 PER CENT = .8910016626E 00

SLOPE = .5068555555557E-01
INTERCEPT = -.1029666666580E 00

POINT	INPUT X	INPUT Y1	OUTPUT F	RESIDUAL Y1-F
1	100.00000	4.99420	4.96559	.028611
2	90.00000	4.41300	4.45873	-.045733
3	80.00000	3.98520	3.95188	.033322
4	70.00000	3.47270	3.44502	.027678
5	60.00000	2.98390	2.93817	.045733
6	50.00000	2.47620	2.43131	.044889
7	40.00000	1.95650	1.92446	.032044
8	30.00000	1.42250	1.41760	.004900
9	20.00000	.91500	.91074	.004256
10	10.00000	.38150	.40389	-.022389
11	.00000	-.14870	-.10297	-.045733

STATIC ERROR BAND (TYPE 1,TEST NO. 4)

DATE 7/12/66 TITLE POST THERMAL SHOCK
BAROMETRIC PRESSURE . LINE ITEM W92J P/N 1838508-1 S/N 9
OUTPUT LOAD S.O. 5879-6502 E.W.O. 27743 T.C.D. 1T06935
OBSERVER RICHARDS ENGINEER MADISON MODEL NO. DSV-43

	PERCENT FULL SCALE	REFERENCE CALIB	MAXIMUM ERROR PT	ACTUAL DEVIATION	PERCENT DEVIATION
1	100.000000	4.931086	4.994200	.063114	1.256637
2	90.000000	4.428842	4.397900	-.030942	-.616068
3	80.000000	3.926597	3.985200	.058603	1.166818
4	70.000000	3.424353	3.472700	.048347	.962623
5	60.000000	2.922108	2.983900	.061792	1.230311
6	50.000000	2.419864	2.476200	.056336	1.121687
7	40.000000	1.917619	1.956500	.038881	.774136
8	30.000000	1.415375	1.422500	.007125	.141863
9	20.000000	.913131	.915000	.001869	.037222
10	10.000000	.410886	.381500	-.029386	-.585096
11	.000000	-.091358	-.150100	-.058742	-1.169583

FULL SCALE = 5.02244 MAX DEVIATION[ACT] = .06311 MAX DEVIATION[PERCENT] = 1.25664

T M R 68/2
C 22

DATA SHEET

DATE 7-12-66 HUMIDITY TEST REPORT NO. T M R 5812

PART NO. 1B38508-1 CHG. LTR. S/N. 9 LINE ITEM W92J

S.O. 5879-6502 E.W.O. 27743 T.C.D. IT06935 MODEL NO. DSV-4B

OBSERVER A. RICHARDS LABORATORY G&C ENGINEER C. BERING

AUTOMATIC CHECKOUT

	27 VDC TO PIN F	27 VDC TO PIN G
CYCLE #1	1.0230 VDC	3.9697 VDC
CYCLE #2	1.0315 VDC	3.9678 VDC
CYCLE #3	1.0161 VDC	3.9674 VDC
CYCLE #4	1.0836 VDC	3.9702 VDC
CYCLE #5	1.0148 VDC	3.9733 VDC
CYCLE #6	1.0296 VDC	3.9691 VDC
CYCLE #7	1.0227 VDC	3.9666 VDC
CYCLE #8	1.0237 VDC	3.9717 VDC
CYCLE #9	1.0228 VDC	3.9728 VDC

OUTPUT LOAD 100K OHMS

MISSILE & SPACE SYSTEMS DIVISION
DOUGLAS AIRCRAFT COMPANY, INC.

DATA SHEET

FORM 30-830 (7-65)

T M R 5812

DATE 7-21-66 POST ENVIRONMENTAL TEST PAGE C 24

SUBJECT PRESSURE TRANSDUCER

TEST NO. W92J S.O. 5879-6502 D.W.O. 27743 T&D 1T06935 MODEL NO. DSV-4B

OBJECT OF THIS DATA

OBSERVER M. MILLER LABORATORY EE-G&C ENGINEER D. MADISON

GTP: W92J P/N: 1B38508-1 S/N: 9

Weight: N.A Oz.

Dimensions: L N.A In. H N.A In. DIA. N.A In.

INSULATION RESISTANCE

Pin A to Case 70KMEG Ohms

Pin B to Case 40KMEG Ohms

Pin C to Case 70KMEG Ohms

Pin D to Case 80KMEG Ohms

Pin F to Case 80KMEG Ohms

Pin G to Case 150KMEG Ohms

Pin E Case Ground ✓ (✓)

AUTOMATIC CHECKOUT

Load 100K Ohms

27 VDC to Pin F _____ Volts

27 VDC to Pin G _____ Volts

ISOLATION RESISTANCE

Pin A to C N.A. Ohms PINS AB TO PINS CD ∞ OHMS

Pin A to D N.A Ohms

Pin B to C N.A Ohms

Pin B to D N.A. Ohms

COMMENTS

DATE 7/15/66 TITLE PSST ENVIRONMENTAL
BAROMETRIC PRESSURE • LINE ITEM W92J P/N 1838508-1 S/N 9
OUTPUT LOAD 100K S.O. 5879-6502 E.N.O. 27743 T.C.D. 1T06935
OBSERVER FEINGOLD ENGINEER BERING MODEL NO. DSV-48

REPEATABILITY

FULL SCALE = 1.154700 MAXIMUM REPEATABILITY = .036600
PER CENT = 3.169654

POINT	PERCENT	PSIA	TRIAL A	TRIAL B	TRIAL C	DIFFERENCES
1	100.00	.30	-.814600	-.809100	.000000	.005500
2	90.00	.27	-.935000	-.927500	.000000	.007500
3	80.00	.24	-1.023500	-1.016200	.000000	.007300
4	70.00	.21	-1.136000	-1.123900	.000000	.012100
5	60.00	.18	-1.239400	-1.228600	.000000	.010800
6	50.00	.15	-1.351000	-1.338800	.000000	.012200
7	40.00	.12	-1.468000	-1.453900	.000000	.014100
8	30.00	.09	-1.591900	-1.575200	.000000	.016700
9	20.00	.06	-1.708200	-1.695800	.000000	.012400
10	10.00	.03	-1.837100	-1.821700	.000000	.015400
11	.00	.00	-1.969300	-1.932700	.000000	.036600

7/15/66 POST ENVIRONMENTAL TRIAL A
LINE ITEM W92J P/N 1338508-1 S/N 9

CHEBYSHEV CURVE FIT

MAX. LINE DEV. = .2164444444E-01
FULL SCALE = 1.154700 PER CENT = .1891785264E 01

SLOPE = .1149222222221E-01
INTERCEPT = -.1947463555556E 01

POINT	INPUT X	INPUT Y1	OUTPUT F	RESIDUAL Y1-F
1	100.00000	-.81460	-.79823	-.016367
2	90.00000	-.93500	-.91316	-.021844
3	80.00000	-1.02350	-1.02808	.004578
4	70.00000	-1.13600	-1.14300	.007000
5	60.00000	-1.23940	-1.25792	.018522
6	50.00000	-1.35100	-1.37284	.021844
7	40.00000	-1.46800	-1.48777	.019767
8	30.00000	-1.59190	-1.60269	.010789
9	20.00000	-1.70820	-1.71761	.009411
10	10.00000	-1.83710	-1.83253	-.004567
11	.00000	-1.96930	-1.94746	-.021844

7/15/66 POST ENVIRONMENTAL TRIAL B
LINE ITEM 492J P/N 1838508-1 S/N 9

CHEBYSHEV CURVE FIT

MAX. LINE DEV. = .1790000000E-01
FULL SCALE = 1.154700 PER CENT = .1550186195E 01

SLOPE = .1117749999999E-01
INTERCEPT = -.1915575000000E 01

POINT	INPUT X	INPUT Y1	OUTPUT F	RESIDUAL Y1-F
1	100.00000	-.80910	-.79783	-.011275
2	90.00000	-.92750	-.90960	-.017900
3	80.00000	-1.01620	-1.02138	.005175
4	70.00000	-1.12390	-1.13315	.009250
5	60.00000	-1.22860	-1.24493	.016325
6	50.00000	-1.33880	-1.35670	.017900
7	40.00000	-1.45390	-1.46848	.014575
8	30.00000	-1.57620	-1.58025	.005050
9	20.00000	-1.69580	-1.69203	-.003775
10	10.00000	-1.82170	-1.80380	-.017900
11	.00000	-1.93270	-1.91557	-.017125

STATIC ERROR BAND (TYPE 1,TEST NO. 5)

DATE 7/15/66 TITLE POST ENVIRONMENTAL
BAROMETRIC PRESSURE . LINE ITEM W92J P/N 1338508-1 S/N 9
OUTPUT LOAD 100K S.O. 5379-6502 E.W.O. 27743 T.C.D. 1T06935
OBSERVER FEINGOLD ENGINEER BERING MODEL NO. DSV-48

	PERCENT FULL SCALE	REFERENCE CALIB	MAXIMUM ERROR PT	ACTUAL DEVIATION	PERCENT DEVIATION	
1	100.000000	4.931036	-.814600	-5.745686	-114.400192	*
2	90.000000	4.428842	-.935000	-5.363842	-106.797432	*
3	80.000000	3.926597	-1.023500	-4.950097	-98.559522	*
4	70.000000	3.424353	-1.136000	-4.560353	-90.799467	*
5	60.000000	2.922108	-1.239400	-4.161508	-82.858225	*
6	50.000000	2.419864	-1.351000	-3.770864	-75.080251	*
7	40.000000	1.917619	-1.468000	-3.385619	-67.409794	*
8	30.000000	1.415375	-1.591900	-3.007275	-59.876720	*
9	20.000000	.913131	-1.708200	-2.621331	-52.192326	*
10	10.000000	.410886	-1.837100	-2.247986	-44.758805	*
11	.000000	-.091358	-1.969300	-1.877942	-37.390989	*

FULL SCALE = 5.02244 MAX DEVIATION[ACT] = -5.74569 MAX DEVIATION[PERCENT] =-114.40019

MISSILE & SPACE SYSTEMS DIVISION
DOUGLAS AIRCRAFT COMPANY, INC.

DATA SHEET

FORM 30-830 (7-65)

REPORT NO. T M R 5312

DATE 6-11-66 PRE ENVIRONMENTAL TEST PAGE 0 29

SUBJECT PRESSURE TRANSDUCER

TEST NO. W92J S.O. 58786302 D.W.O. 27743 TCD IT06935 MODEL NO. DSV-43

OBJECT OF THIS DATA

OBSERVER A.C. RICHARDS LABORATORY GEC ENGINEER D. MADISON

GTP: W92J P/N: 1B38508-1 S/N: 10

Weight: 21.12 Oz.

Dimensions: L 5 3/64 In. H 2 25/64 In. DIA. 2 17/64 In.

INSULATION RESISTANCE

Pin A to Case 20KM Ohms

Pin B to Case 4KM Ohms

Pin C to Case 2KM Ohms

Pin D to Case 3KM Ohms

Pin F to Case 2KM Ohms

Pin G to Case 3KM Ohms

Pin E Case Ground ✓ (✓)

AUTOMATIC CHECKOUT

Load 100K Ohms

27 VDC to Pin F 1.0326 Volts

27 VDC to Pin G 4.0230 Volts

ISOLATION RESISTANCE

Pin A D 3KM Ohms

Pin B to C NA

NA

COMMENTS

DATE [illegible] TITLE PRE ENVIRONMENTAL
BAROMETRIC PRESSURE [illegible] LINE ITEM [illegible] P/N 1338608-1 S/N 10
OUTPUT LOAD LOCK S.O. 5579-6502 E.W.O. 27743 T.C.O. 1T06935
OBSERVER [illegible] ENGINEER MADISON MODEL NO. DSV-48

REPEATABILITY

FULL SCALE = 5.067300 MAXIMUM REPEATABILITY = .004700
PER CENT = .092880

POINT	PERCENT	PSIA	TRIAL A	TRIAL B	TRIAL C	DIFFERENCES
1	100.00	.30	5.040200	5.040900	.000000	.000700
2	90.00	.27	4.461600	4.461700	.000000	.000100
3	80.00	.24	4.035400	4.038000	.000000	.002600
4	70.00	.21	3.525400	3.532000	.000000	.003600
5	60.00	.18	3.044100	3.046100	.000000	.002000
6	50.00	.15	2.542900	2.543500	.000000	.000600
7	40.00	.12	2.037300	2.038400	.000000	.001100
8	30.00	.09	1.515400	1.516100	.000000	.000700
9	20.00	.06	1.018000	1.018300	.000000	.000300
10	10.00	.03	.506200	.501500	.000000	.004700
11	.00	.00	-.020100	-.018900	.000000	.001200

6/11/66 PRE ENVIRONMENTAL TRIAL A
LINE ITEM [illegible] P/N 1038508-1 S/N 10

CHEBYSHEV CURVE FIT

MAX. LINE DEV. = .39737499992E-01
FULL SCALE [illegible] PER CENT = .78626[illegible]124E 00

SLOPE = [illegible]
INTERCEPT = [illegible]

POINT	INPUT X	INPUT Y1	OUTPUT F	RESIDUAL Y1-F
1	100.[illegible]	[illegible].04020	5.00041	.039788
2	90.[illegible]	[illegible].46160	4.50139	-.039787
3	80.[illegible]	[illegible].03540	4.00235	.033038
4	70.[illegible]	[illegible]	3.50234	.025068
5	60.[illegible]	3.04910	3.00431	.039738
6	50.[illegible]	[illegible].64290	2.50629	.037513
7	40.[illegible]	[illegible].03730	2.00626	.031037
8	30.[illegible]	1.51540	1.50724	.008162
9	20.[illegible]	[illegible].01603	1.00821	.009787
10	10.[illegible]	.50620	.50919	-.002988
11	[illegible]	-.02010	.01016	-.030263

[illegible] PRE ENVIRONMENTAL TRIAL B
[illegible] F/N [illegible] S/N 10

CHEBYSHEV CURVE FIT

MAX. LINE DEV. = .40249999999E-01
FULL SCALE = [illegible] PER CENT = .79940708677E 00

SLOPE = .43869999999E-01
INTERCEPT = .13680000000872E-01

POINT	INPUT X	INPUT Y1	OUTPUT F	RESIDUAL Y1-F
1	100.00000	5.04090	5.00065	.040250
2	90.00000	4.46170	4.50195	-.040250
3	80.00000	4.03600	4.00325	.034750
4	70.00000	3.53200	3.50455	.027450
5	60.00000	3.04610	3.00585	.040250
6	50.00000	2.54350	2.50715	.036350
7	40.00000	2.03840	2.00845	.029950
8	30.00000	1.51610	1.50975	.006350
9	20.00000	1.01380	1.01105	.007250
10	10.00000	.50150	.51235	-.010850
11	.00000	-.01890	.01365	-.032550

STATIC ERROR BAND (TYPE 1,TEST NO. 1)

DATE 6/11/66 TITLE PRE ENVIRONMENTAL
BAROMETRIC PRESSURE . LINE ITEM N920 P/N 1838608-1 S/N 10
OUTPUT LOAD 100K S.O. 5879-6502 E.W.O. 27743 T.C.O. 1T06935
OBSERVER RICHARDS ENGINEER MADISON MODEL NO. DSV-43

	PERCENT FULL SCALE	REFERENCE CALIB	MAXIMUM ERROR PT	ACTUAL DEVIATION	PERCENT DEVIATION
1	100.000000	5.000531	5.040900	.040369	.809216
2	90.000000	4.501669	4.461600	-.040069	-.803202
3	80.000000	4.002806	4.038000	.035194	.705480
4	70.000000	3.503944	3.532000	.028056	.562404
5	60.000000	3.005081	3.046100	.041019	.822246
6	50.000000	2.506219	2.543500	.037281	.747325
7	40.000000	2.007356	2.038400	.031044	.622291
8	30.000000	1.508494	1.516100	.007606	.152472
9	20.000000	1.009631	1.018300	.008669	.173770
10	10.000000	.510769	.501500	-.009269	-.185798
11	.000000	.011906	-.020100	-.032006	-.641585

FULL SCALE = 4.98862 MAX DEVIATION[ACT] = .04102 MAX DEVIATION[PERCENT] = .82225

MISSILE & SPACE SYSTEMS DIVISION
DOUGLAS AIRCRAFT COMPANY, INC.

DATA SHEET

FORM 30-830 (7-65)

TMR 5819
PAGE C 34

DATE 7-6-66 POST EMI TEST
SUBJECT PRESSURE TRANSDUCER
TEST NO. W92J S.O. 5879-6602 D.W.O. 27743 ICD D.R.O. IT06935 MODEL NO. DSV-4B
OBJECT OF THIS DATA
OBSERVER A RICHARDS LABORATORY G & C ENGINEER BERING

GTP: W92J P/N: 1B38508-1 S/N: 10

Weight: N.A Oz.

Dimensions: L N.A In. H N.A In. DIA. N.A In.

INSULATION RESISTANCE

Pin A to Case N.A Ohms
Pin B to Case N.A Ohms
Pin C to Case N.A Ohms
Pin D to Case N.A Ohms
Pin F to Case N.A Ohms
Pin G to Case N.A Ohms

Pin E Case Ground (✓)

AUTOMATIC CHECKOUT

Load 100K Ohms
27 VDC to Pin F 1.0374 Volts
27 VDC to Pin G 4.0267 Volts

ISOLATION RESISTANCE

Pin A to C N.A Ohms
Pin A to D N.A Ohms
Pin B to C N.A Ohms
Pin B to D N.A Ohms

COMMENTS

DATE 7/08/66 TITLE POST EMI
BAROMETRIC PRESSURE . LINE ITEM W92J P/N 1B38608-1 S/N 10
OUTPUT LOAD 100K S.O. 5879-6502 E.W.O. 27743 T.C.D. 1T06935
OBSERVER MC COMMON ENGINEER MADISON MODEL NO. DSV-48

REPEATABILITY

FULL SCALE = 4.991300 MAXIMUM REPEATABILITY = .003100
PER CENT = .062108

POINT	PERCENT	PSIA	TRIAL A	TRIAL B	TRIAL C	DIFFERENCES
1	100.00	.30	5.034700	5.033800	.000000	.000900
2	90.00	.27	4.450700	4.453800	.000000	.003100
3	80.00	.24	4.026800	4.029300	.000000	.002500
4	70.00	.21	3.520200	3.519400	.000000	.000800
5	60.00	.18	3.034000	3.033800	.000000	.000200
6	50.00	.15	2.530200	2.530600	.000000	.000400
7	40.00	.12	2.018400	2.021400	.000000	.003000
8	30.00	.09	1.499800	1.499000	.000000	.000800
9	20.00	.06	1.000100	.999900	.000000	.000200
10	10.00	.03	.470800	.477200	.000000	.002600
11	.00	.00	-.043400	-.044100	.000000	.000700

TMR 819
C 35

7/08/66 POST EMI TRIAL A
LINE ITEM X92U P/N 1338508-1 S/N 10

CHEBYSHEV CURVE FIT

MAX. LINE DEV. = .4191249999E-01
FULL SCALE = 4.991300 PER CENT = .8397110971E 00

SLOPE = .500175000000E-01
INTERCEPT = -.896250002552E-02

POINT	INPUT X	INPUT Y1	OUTPUT F	RESIDUAL Y1-F
1	100.00000	5.03470	4.99279	.041913
2	90.00000	4.45070	4.49261	-.041912
3	80.00000	4.02680	3.99244	.034363
4	70.00000	3.52020	3.49226	.027938
5	60.00000	3.03400	2.99209	.041913
6	50.00000	2.53020	2.49191	.038288
7	40.00000	2.01840	1.99174	.026663
8	30.00000	1.49980	1.49156	.008238
9	20.00000	1.00010	.99139	.008713
10	10.00000	.47980	.49121	-.011412
11	.00000	-.04340	-.00896	-.034437

T M K 5812
C 86

7/08/66 POST EMI TRIAL 3
LINE ITEM W92J P/N 1838508-1 S/N 10

CHEBYSHEV CURVE FIT

MAX. LINE DEV. = .4000000001E-01
FULL SCALE = 4.991300 PER CENT = .8013944265E 00

SLOPE = .5000000000000E-01
INTERCEPT = -.6200000000346E-02

POINT	INPUT X	INPUT Y1	OUTPUT F	RESIDUAL Y1-F
1	100.00000	5.03380	4.99380	.040000
2	90.00000	4.45380	4.49380	-.040000
3	80.00000	4.02930	3.99380	.035500
4	70.00000	3.51940	3.49380	.025600
5	60.00000	3.03380	2.99380	.040000
6	50.00000	2.53060	2.49380	.036800
7	40.00000	2.02140	1.99380	.027600
8	30.00000	1.49900	1.49380	.005200
9	20.00000	.99990	.99380	.006100
10	10.00000	.47720	.49380	-.016600
11	.00000	-.04410	-.00620	-.037900

STATIC ERROR BAND [TYPE 1,TEST NO. 3]

DATE 7/08/66 TITLE POST EMI
BAROMETRIC PRESSURE . LINE ITEM W92J P/N 1B38508-1 S/N 10
OUTPUT LOAD 100K S.O. 5879-6502 E.W.O. 27743 T.C.D. 1T06935
OBSERVER MC COMMON ENGINEER MADISON MODEL NO. DSV-4B

	PERCENT FULL SCALE	REFERENCE CALIB	MAXIMUM ERROR PT	ACTUAL DEVIATION	PERCENT DEVIATION
1	100.000000	5.000531	5.034700	.034169	.684933
2	90.000000	4.501669	4.450700	-.050969	-1.021699
3	80.000000	4.002806	4.029300	.026494	.531083
4	70.000000	3.503944	3.520200	.016256	.325866
5	60.000000	3.005081	3.034000	.028919	.579694
6	50.000000	2.506219	2.530600	.024381	.488737
7	40.000000	2.007356	2.021400	.014044	.281515
8	30.000000	1.508494	1.499000	-.009494	-.190308
9	20.000000	1.009631	.999900	-.009731	-.195069
10	10.000000	.510769	.477200	-.033569	-.672906
11	.000000	.011906	-.044100	-.056006	-1.122679

FULL SCALE = 4.98862 MAX DEVIATION[ACT] = -.05601 MAX DEVIATION[PERCENT] = -1.12268

T M R 5812
C 38

DATA SHEET

DATE 7-9-66 LOW TEMP. TEST REPORT NO. TMR 5312

PART NO. 1B38508-1 CHG. LTR. S/N. 10 LINE ITEM W92J

S.O. 5879-6502 E.W.O. 27743 T.C.D. IT06935 MODEL NO. DSV-4B

OBSERVER A. RICHARDS LABORATORY EE/G&C ENGINEER BERING

AUTOMATIC CALIBRATION

TIME	TEMP. °F	OUTPUT VDC	27 VDC TO PIN F	27 VDC TO PIN G
11:30	-40	—	1.0343 VDC	4.0946 VDC
11:40	-70	—	1.0372 VDC	4.0989 VDC
11:50	-95	—	1.0358 VDC	4.0985 VDC
12:00	—	—	1.0339 VDC	4.0948 VDC
12:10	-104	—	1.0326 VDC	4.0842 VDC
1:20	-112	—	1.0297 VDC	4.0733 VDC
1:30	-102	—	1.0292 VDC	4.0762 VDC
1:40	-101	—	1.0295 VDC	4.0773 VDC
1:50	-100	—	1.0299 VDC	4.0782 VDC
2:00	-100	—	1.0301 VDC	4.0784 VDC
2:10	-99	—	1.0300 VDC	4.0785 VDC
2:20	-100	—	1.0303 VDC	4.0791 VDC
2:50	-100.5	—	1.0303 VDC	4.0811 VDC
3:10	-101	—	1.0303 VDC	4.0755 VDC

MISSILE & SPACE SYSTEMS DIVISION
DOUGLAS AIRCRAFT COMPANY, INC.

DATA SHEET

FORM 30-830 (7-66)

I M R 5816

DATE 7-9-66 POST LOW TEMPERATURE TEST PAGE C 40

SUBJECT PRESSURE TRANSDUCER

TEST NO. W92J S.O. 5879-6502 D.W.O. 27743 TEP 1T06935 MODEL NO. DSV-4B

OBJECT OF THIS DATA

OBSERVER R. McCOMMON LABORATORY EE G&C ENGINEER D. MADISON

GTP: W92J P/N: 1B38508-1 S/N: 10

Weight: N.A Oz.

Dimensions: L N.A In. H N.A In. DIA. N.A In.

INSULATION RESISTANCE

Pin A to Case 2K MEG Ohms

Pin B to Case 3K MEG Ohms

Pin C to Case 2K MEG Ohms

Pin D to Case 2K MEG Ohms

Pin F to Case 2K MEG Ohms

Pin G to Case 2K MEG Ohms

Pin E Case Ground ✓ (✓)

AUTOMATIC CHECKOUT

Load 100K Ohms

27 VDC to Pin F 1.0375 Volts

27 VDC to Pin G 4.0264 Volts

ISOLATION RESISTANCE

Pin A to C N.A. Ohms PINS AB TO PINS CD 2.6K MEGOHMS

Pin A to D N.A. Ohms

Pin B to C N.A. Ohms

Pin B to D N.A. Ohms

COMMENTS

DATE: [illegible] TITLE: POST LOW TEMPERATURE
BAROMETRIC PRESSURE: [illegible] LINE ITEM W92[illegible] P/N 1B38606-1 S/N 10
OUTPUT [illegible] S.O. 5379-6502 E.W.O. 27743 T.C.O. 1TD6935
OBSERVER NO. [illegible] ENGINEER MADISON MODEL NO. DSV-48

REPEATABILITY

FULL SCALE = [illegible] MAXIMUM REPEATABILITY = .013200
PER CENT = .261164

POINT	PERCENT	PSIA	TRIAL A	TRIAL B	TRIAL C	DIFFERENCES
1	100.00	300.00	5.013800	5.013800	.000000	.005500
2	90.00	270.00	4.433700	4.440100	.000000	.006400
3	80.00	240.00	4.004300	4.017500	.000000	.013200
4	70.00	210.00	3.507700	3.510400	.000000	.002700
5	60.00	180.00	3.019900	3.025500	.000000	.005600
6	50.00	150.00	2.518700	2.522500	.000000	.003800
7	40.00	120.00	2.016600	2.014400	.000000	.000800
8	30.00	90.00	1.495100	1.493500	.000000	.001600
9	20.00	60.00	.996200	.995200	.000000	.001000
10	10.00	30.00	.477400	.472500	.000000	.004900
11	[illegible]	.00	-.041000	-.045300	.000000	.004300

7/ 5/66 POST [illegible] TEMPERATURE
LINE ITEM [illegible] S/N 1088508-1 S/N 10

TRIAL A

CHEBYSHEV CURVE FIT

MAX. LINE DEV. = .4062[illegible]-01
PER CENT = .8037[illegible]-00

FOLL [illegible] = [illegible]

SLOPE = .4[illegible]-01
INTERCEPT = -.1[illegible]-01

POINT	INPUT X	INPUT Y1	OUTPUT F	RESIDUAL Y1-F
1	100.00000	[illegible].01330	4.97257	.040625
2	90.00000	[illegible].43370	4.47433	-.040625
3	80.00000	-.00430	3.97597	.028325
4	70.00000	[illegible].50770	3.47769	.030075
5	60.00000	[illegible].01990	2.97327	.040625
6	50.00000	[illegible].51370	2.48092	.037775
7	40.00000	[illegible].01565	1.98257	.031025
8	30.00000	1.49510	1.48422	.010875
9	20.00000	.99620	.98587	.010325
10	10.00000	.47740	.48752	-.010125
11	.00000	-.04100	-.01083	-.030175

[illegible] TEMPERATURE
[illegible] ITEM [illegible] 1338508-1 S/N 10

TRIAL B

CHEBYSHEV CURVE FIT

MAX. LINE DEV. = .40266[illegible]E-01
PER CENT = .7[illegible]E 00

FULL SCALE = [illegible]

SLOPE = [illegible]E-01
INTERCEPT = [illegible]E-02

POINT	INPUT X	INPUT Y1	OUTPUT F	RESIDUAL Y1-F
1	100.00000	[illegible].01880	4.97874	.040056
2	90.00000	4.44010	4.48037	-.040267
3	80.00000	[illegible].01750	3.98139	.036511
4	70.00000	3.[illegible]1040	3.48361	.026789
5	60.00000	3.[illegible]2550	2.98523	.040267
6	50.00000	.02950	2.48686	.035644
7	40.00000	.01440	1.98848	.025922
8	30.00000	1.49350	1.49010	.003400
9	20.00000	.99320	.99172	.003478
10	10.00000	.47250	.49334	-.020844
11	.00000	[illegible].34530	-.00803	-.040267

STATIC ERROR BAND [TYPE 1,TEST NO. 4]

DATE 7/ 9/66 TITLE POST LOW TEMPERATURE
BAROMETRIC PRESSURE . LINE ITEM W92J P/N 1338508-1 S/N 10
OUTPUT LOAD 100K S.O. 5879-6502 E.W.O. 27743 T.C.D. 1T06935
OBSERVER NC COMMON ENGINEER MADISON MODEL NO. DSV-43

	PERCENT FULL SCALE	REFERENCE CALIB	MAXIMUM ERROR PT	ACTUAL DEVIATION	PERCENT DEVIATION
1	100.000000	5.000531	5.018800	.018269	.366208
2	90.000000	4.501669	4.433700	-.067969	-1.362475
3	80.000000	4.002806	4.017500	.014694	.294545
4	70.000000	3.503944	3.510400	.006456	.129419
5	60.000000	3.005081	3.025500	.020419	.409306
6	50.000000	2.506219	2.522500	.016281	.326367
7	40.000000	2.007356	2.014400	.007044	.141196
8	30.000000	1.508494	1.493500	-.014994	-.300559
9	20.000000	1.009631	.995200	-.014431	-.289283
10	10.000000	.510769	.472500	-.038269	-.767120
11	.000000	.011906	-.045300	-.057206	-1.146734

FULL SCALE = 4.98862 MAX DEVIATION[ACT] = -.06797 MAX DEVIATION[PERCENT] = -1.36247

T M R 5812

DATA SHEET

DATE 7-9-66 HIGH TEMP. TEST REPORT NO. T M R 5812

PART NO. 1B38508-1 CHG. LTR. S/N. 10 LINE ITEM W92J

S.O. 5879-6502 E.W.O. 27743 T.C.D. IT06935 MODEL NO. DSV-4B

OBSERVER A RICHARDS LABORATORY EE/G&C ENGINEER BERING

AUTOMATIC CALIBRATION

TIME	TEMP. °F	OUTPUT VDC	27 VDC TO PIN F	27VDC TO PIN G
7:15	+100	5.0104	1.0377 VDC	4.0267 VDC
7:45	+100	5.0206	1.0372 VDC	4.0264 VDC
8:15	+100	5.0232	1.0357 VDC	4.0252 VDC
8:45	+100	5.0205	1.0376 VDC	4.0268 VDC
9:15	+100	5.0218	1.0370 VDC	4.0262 VDC
9:45	+100	5.0213	1.0367 VDC	4.0259 VDC
10:15	+100	5.0145	1.0373 VDC	4.0262 VDC
10:45	+100	5.0131	1.0367 VDC	4.0258 VDC
11:15	+100	5.0163	1.0376 VDC	4.0258 VDC

MISSILE & SPACE SYSTEMS DIVISION
DOUGLAS AIRCRAFT COMPANY, INC.

DATA SHEET

FORM 30-839 (7-65)

TMR 5812
C 46

DATE 7-11-66 POST HIGH TEMPERATURE TEST PAGE

SUBJECT PRESSURE TRANSDUCER

TEST NO. W 92J S.O. 5879-6502 D.W.O. 27743 ~~D.R.O.~~ TCO 1T06935 MODEL NO. DSV-4B

OBJECT OF THIS DATA

OBSERVER A. RICHARDS LABORATORY G & C ENGINEER D. MADISON

GTP: W92J P/N: 1B38508-1 S/N: 10

Weight: N.A Oz.

Dimensions: L NA In. H N.A In. DIA. N.A In.

INSULATION RESISTANCE

Pin A to Case 4K MEG Ohms

Pin B to Case 3K MEG Ohms

Pin C to Case 3K MEG Ohms

Pin D to Case 4K MEG Ohms

Pin F to Case 21K MEG Ohms

Pin G to Case 41K MEG Ohms

Pin E Case Ground ✓ (✓)

AUTOMATIC CHECKOUT

Load 100K Ohms

27 VDC to Pin F 1.0370 Volts

27 VDC to Pin G 4.0262 Volts

ISOLATION RESISTANCE

Pin A to C N.A. Ohms

Pin A to D N.A. Ohms

Pin B to C N.A. Ohms

Pin B to D N.A Ohms

COMMENTS

DATE 7/11/66 TITLE POST HIGH TEMPERATURE
BAROMETRIC PRESSURE . LINE ITEM W92J P/N 1B38508-1 S/N 10
OUTPUT LOAD S.O. 5879-6502 E.W.O. 27743 T.C.D. 1T06935
OBSERVER RICHARDS ENGINEER MADISON MODEL NO. DSV-4B

REPEATABILITY

FULL SCALE = 5.064800 MAXIMUM REPEATABILITY = .021200
PER CENT = .418575

POINT	PERCENT	PSIA	TRIAL A	TRIAL B	TRIAL C	DIFFERENCES
1	100.00	.30	5.013400	5.034600	.000000	.021200
2	90.00	.27	4.437400	4.450300	.000000	.012900
3	80.00	.24	4.012600	4.024100	.000000	.011500
4	70.00	.21	3.504400	3.514300	.000000	.009900
5	60.00	.18	3.015300	3.027000	.000000	.011700
6	50.00	.15	2.518100	2.522800	.000000	.004700
7	40.00	.12	2.013200	2.015100	.000000	.001900
8	30.00	.09	1.488400	1.492500	.000000	.004100
9	20.00	.06	.992800	.992700	.000000	.000100
10	10.00	.03	.464900	.448900	.000000	.016000
11	.00	.00	-.051400	-.047000	.000000	.004400

7/11/66 POST HIGH TEMPERATURE TRIAL A
LINE ITEM W92J P/N 1838508-1 S/N 10

CHEBYSHEV CURVE FIT

MAX. LINE DEV. = .3847000000E-01
FULL SCALE = 5.064800 PER CENT = .7595561523E 00

SLOPE = .4990600000002E-01
INTERCEPT = -.1567000002253E-01

POINT	INPUT X	INPUT Y1	OUTPUT F	RESIDUAL Y1-F
1	100.00000	5.01340	4.97493	.038470
2	90.00000	4.43740	4.47587	-.038470
3	80.00000	4.01260	3.97681	.035790
4	70.00000	3.50440	3.47775	.026650
5	60.00000	3.01530	2.97869	.036610
6	50.00000	2.51810	2.47963	.038470
7	40.00000	2.01320	1.98057	.032630
8	30.00000	1.48840	1.48151	.006890
9	20.00000	.99280	.98245	.010350
10	10.00000	.46490	.48339	-.018490
11	.00000	-.05140	-.01567	-.035730

7/11/66 POST HIGH TEMPERATURE TRIAL B
LINE ITEM W92J P/N 1838508-1 S/N 10

CHEBYSHEV CURVE FIT

MAX. LINE DEV. = .4120000001E-01
FULL SCALE = 5.064800 PER CENT = .8134575898E 00

SLOPE = .5019000000002E-01
INTERCEPT = -.2560000002 27E-01

POINT	INPUT X	INPUT Y1	OUTPUT F	RESIDUAL Y1-F
1	100.00000	5.03460	4.99340	.041200
2	90.00000	4.45030	4.49150	-.041200
3	80.00000	4.02410	3.98960	.034500
4	70.00000	3.51430	3.48770	.026600
5	60.00000	3.02700	2.98580	.041200
6	50.00000	2.52280	2.48390	.038900
7	40.00000	2.01510	1.98200	.033100
8	30.00000	1.49250	1.48010	.012400
9	20.00000	.99270	.97820	.014500
10	10.00000	.44890	.47630	-.027400
11	.00000	-.04700	-.02560	-.021400

STATIC ERROR BAND (TYPE 1,TEST NO. 5)

DATE 7/11/66 TITLE POST HIGH TEMPERATURE
BAROMETRIC PRESSURE . LINE ITEM A92J P/N 1838508-1 S/N 10
OUTPUT LOAD S.O. 5879-6502 E.W.O. 27743 T.C.D. 1T06935
OBSERVER RICHARDS ENGINEER MADISON MODEL NO. DSV-48

	PERCENT FULL SCALE	REFERENCE CALIB	MAXIMUM ERROR PT	ACTUAL DEVIATION	PERCENT DEVIATION
1	100.000000	5.000581	5.034600	.034069	.682929
2	90.000000	4.501669	4.437400	-.064269	-1.288306
3	80.000000	4.002806	4.024100	.021294	.426846
4	70.000000	3.503944	3.514300	.010356	.207597
5	60.000000	3.005081	3.027000	.021919	.439375
6	50.000000	2.506219	2.522800	.016581	.332381
7	40.000000	2.007356	2.015100	.007744	.155228
8	30.000000	1.508494	1.488400	-.020094	-.402791
9	20.000000	1.009631	.992700	-.016931	-.339397
10	10.000000	.510769	.448900	-.061869	-1.240196
11	.000000	.011906	-.051400	-.063306	-1.269012

FULL SCALE = 4.98862 MAX DEVIATION(ACT) = -.06427 MAX DEVIATION(PERCENT) = -1.28831

MISSILE & SPACE SYSTEMS DIVISION
DOUGLAS AIRCRAFT COMPANY, INC.

DATA SHEET

FORM 30-830 (7-65)

REPORT NO. T M R 5312

DATE 7-12-66 POST THERMAL SHOCK TEST PAGE

SUBJECT PRESSURE TRANSDUCER

TEST NO. W92J S.O. 58-6602 D.W.O. 27743 T.E.R. IT 6935 MODEL NO. DSV-4B

OBJECT OF THIS DATA

OBSERVER A. RICHARDS LABORATORY G & C ENGINEER D. MADISON

GTP: W92J P/N: 1B38508-1 S/N: 10

Weight: N.A Oz.

Dimensions: L N.A In. H N.A In. DIA. N.A In.

INSULATION RESISTANCE

Pin A to Case > 100 MEG Ohms

Pin B to Case > 100 MEG Ohms

Pin C to Case > 100 MEG Ohms

Pin D to Case > 100 MEG Ohms

Pin F to Case > 100 MEG Ohms

Pin G to Case > 100 MEG Ohms

Pin E Case Ground ✓ (✓)

AUTOMATIC CHECKOUT

Load 100K Ohms

27 VDC to Pin F 1.0372 Volts

27 VDC to Pin G 4.0259 Volts

ISOLATION RESISTANCE

Pin A to C > 100 MEG Ohms

Pin A to D > 100 MEG Ohms

Pin B to C > 100 MEG Ohms

Pin B to D > 100 MEG Ohms

PINS AB TO PINS CD > 100 MEGOHMS

COMMENTS

DATE 7/12/66 TITLE POST THERMAL SHOCK
BAROMETRIC PRESSURE . LINE ITEM N92J P/N 1838508-1 S/N 10
OUTPUT LOAD S.O. 5879-6502 E.W.O. 27743 T.C.D. 1T06935
OBSERVER RICHARDS ENGINEER MADISON MODEL NO. DSV-4B

REPEATABILITY

FULL SCALE = 5.073900 MAXIMUM REPEATABILITY = .009600
PER CENT = .189204

POINT	PERCENT	PSIA	TRIAL A	TRIAL B	TRIAL C	DIFFERENCES
1	100.00	.30	5.027800	5.029900	.000000	.002100
2	90.00	.27	4.439800	4.449000	.000000	.009200
3	80.00	.24	4.014300	4.023800	.000000	.009500
4	70.00	.21	3.504500	3.514100	.000000	.009600
5	60.00	.18	3.020300	3.028700	.000000	.008400
6	50.00	.15	2.517700	2.526900	.000000	.009200
7	40.00	.12	2.011800	2.014300	.000000	.002500
8	30.00	.09	1.491600	1.488800	.000000	.002800
9	20.00	.06	.992600	.992600	.000000	.000000
10	10.00	.03	.472100	.467200	.000000	.004900
11	.00	.00	-.046100	-.047800	.000000	.001700

7/12/66 POST THERMAL SHOCK TRIAL A
LINE ITEM W92J P/N 1838508-1 S/N 10

CHEBYSHEV CURVE FIT

MAX. LINE DEV. = .4306250000E-01
FULL SCALE = 5.073900 PER CENT = .8487061235E 00

SLOPE = .5018750000000E-01
INTERCEPT = -.3401250000075E-01

POINT	INPUT X	INPUT Y1	OUTPUT F	RESIDUAL Y1-F
1	100.00000	5.02780	4.98474	.043063
2	90.00000	4.43980	4.48286	-.043062
3	80.00000	4.01430	3.98099	.033313
4	70.00000	3.50450	3.47911	.025388
5	60.00000	3.02030	2.97724	.043063
6	50.00000	2.51770	2.47536	.042338
7	40.00000	2.01180	1.97349	.038313
8	30.00000	1.49160	1.47161	.019988
9	20.00000	.99260	.96974	.022863
10	10.00000	.47210	.46786	.004238
11	.00000	-.04610	-.03401	-.012087

7/12/66 POST THERMAL SHOCK TRIAL B
LINE ITEM W92J P/N 1838508-1 S/N 10

CHEBYSHEV CURVE FIT

MAX. LINE DEV. = .4030000001E-01
FULL SCALE = 5.073900 PER CENT = .7942608262E 00

SLOPE = .5002999999999E-01
INTERCEPT = -.1340000000107E-01

POINT	INPUT X	INPUT Y1	OUTPUT F	RESIDUAL Y1-F
1	100.00000	5.02990	4.98960	.040300
2	90.00000	4.44900	4.48930	-.040300
3	80.00000	4.02380	3.98900	.034800
4	70.00000	3.51410	3.48870	.025400
5	60.00000	3.02870	2.98840	.040300
6	50.00000	2.52690	2.48810	.038800
7	40.00000	2.01430	1.98780	.026500
8	30.00000	1.48880	1.48750	.001300
9	20.00000	.99260	.98720	.005400
10	10.00000	.46720	.48690	-.019700
11	.00000	-.04780	-.01340	-.034400

STATIC ERROR BAND [TYPE 1,TEST NO. 6]

DATE 7/12/66 TITLE POST THERMAL SHOCK
BAROMETRIC PRESSURE . LINE ITEM W92J P/N 1838508-1 S/N 10
OUTPUT LOAD S.O. 5879-6502 E.W.O. 27743 T.C.O. 1T06935
OBSERVER RICHARDS ENGINEER MADISON MODEL NO. DGV-48

	PERCENT FULL SCALE	REFERENCE CALIB	MAXIMUM ERROR PT	ACTUAL DEVIATION	PERCENT DEVIATION
1	100.000000	5.000531	5.029900	.029369	.588714
2	90.000000	4.501669	4.439800	-.061869	-1.240136
3	80.000000	4.002806	4.023800	.020994	.420832
4	70.000000	3.503944	3.514100	.010156	.203588
5	60.000000	3.005081	3.028700	.023619	.473452
6	50.000000	2.506219	2.526900	.020681	.414568
7	40.000000	2.007356	2.014300	.006944	.139192
8	30.000000	1.508494	1.488800	-.019694	-.394773
9	20.000000	1.009631	.992600	-.017031	-.341402
10	10.000000	.510769	.467200	-.043569	-.873362
11	.000000	.011906	-.047800	-.059706	-1.196848

FULL SCALE = 4.98862 MAX DEVIATION[ACT] = -.06187 MAX DEVIATION[PERCENT] = -1.24020

0 55
TMR 312

DATA SHEET

DATE 7-12-66 HUMIDITY TEST REPORT NO. T M R 0812

PART NO. 1B38508-1 CHG. LTR. S/N. 10 LINE ITEM W92J

S.O. 5879-6502 E.W.O. 27743 T.C.D. IT06935 MODEL NO. DSV-4B

OBSERVER A. RICHARDS LABORATORY G&C ENGINEER C. BERING

AUTOMATIC CHECKOUT

	27 VDC TO PIN F	27 VDC TO PIN G
CYCLE #1	1.0320 VDC	4.0214 VDC
CYCLE #2	1.0251 VDC	4.0171 VDC
CYCLE #3	1.0154 VDC	4.0097 VDC
CYCLE #4	1.0328 VDC	4.0235 VDC
CYCLE #5	1.0267 VDC	4.0251 VDC
CYCLE #6	1.0077 VDC	4.0082 VDC
CYCLE #7	1.0096 VDC	4.0116 VDC
CYCLE #8	1.0181 VDC	4.0214 VDC
CYCLE #9	1.0202 VDC	4.0225 VDC

OUTPUT LOAD 100K OHMS

DATA SHEET

FORM 30-830 (7-65)

MISSILE & SPACE SYSTEMS DIVISION
DOUGLAS AIRCRAFT COMPANY, INC.

T M R 5812
C 57

DATE 7-21-66 POST ENVIRONMENTAL TEST PAGE

SUBJECT PRESSURE TRANSDUCER

TEST NO. W92J S.O. 5[illegible] D.W.O. 27743 ~~D.R.O.~~ TCD IT6935 MODEL NO. DSV-4B

OBJECT OF THIS DATA

OBSERVER M. MILLER LABORATORY EE. G&C ENGINEER D. MADISON

GTP: W92J P/N: 1B38508-1 S/N: 10

Weight: — Oz.

Dimensions: L — In. H — In. DIA. — In.

INSULATION RESISTANCE

Pin A to Case 80K MEG Ohms

Pin B to Case ∞ Ohms

Pin C to Case 26K MEG Ohms

Pin D to Case 75K MEG Ohms

Pin F to Case 100K MEG Ohms

Pin G to Case 200K MEG Ohms

Pin E Case Ground ✓ (✓)

AUTOMATIC CHECKOUT

Load 100K Ohms

27 VDC to Pin F 1.0211 Volts

27 VDC to Pin G 4.0225 Volts

ISOLATION RESISTANCE

Pin A to C N.A Ohms PINS AB TO PINS CD 70K MEG OHMS.

Pin A to D N.A. Ohms

Pin B to C N.A. Ohms

Pin B to D N.A Ohms

COMMENTS

MISSILE & SPACE SYSTEMS DIVISION
DOUGLAS AIRCRAFT COMPANY, INC.

DATA SHEET

FORM 30-830 (7-65)

REPORT NO. T M R 5312

DATE 9-12-66 PRE ENVIRONMENTAL TEST PAGE C 58

SUBJECT PRESSURE TRANSDUCER

TEST NO. W 92J S.O. 5879-65028 E.W.O. 27743 T.C.D. ~~D.R.O.~~ 1TO 6935 MODEL NO. DSV-4B

OBJECT OF THIS DATA

OBSERVER RICHARDS LABORATORY G & C ENGINEER MADISON

GTP: W92J P/N: 1B38508-1 S/N: 4

Weight: 21.1 Oz.

Dimensions: L 5 In. H 2.25 In. DIA. 2.25 In.

INSULATION RESISTANCE

Pin A to Case 2 K MEG Ohms

Pin B to Case 300 MEG Ohms

Pin C to Case 200 MEG Ohms

Pin D to Case 200 MEG Ohms

Pin F to Case 2K MEG Ohms

Pin G to Case 1.4K MEG Ohms

Pin E Case Ground ✓ (✓)

AUTOMATIC CHECKOUT

Load 100K Ohms

27 VDC to Pin F 1.0380 Volts

27 VDC to Pin G 3.9975 Volts

ISOLATION RESISTANCE

Pin A to C N/R Ohms

Pin A to D N/R Ohms

Pin B to C N/R Ohms

Pin B to D N/R Ohms

SHORTED INPUT PAIR A-B TO SHORTED OUTPUT PAIR C-D = 1K MEGOHMS

COMMENTS

DATE 9/12/66 TITLE PRE ENVIRONMENTAL
BAROMETRIC PRESSURE . LINE ITEM W92J P/N 1B38508-1 S/N 4
OUTPUT LOAD 100K U.O. 5769-6502 E.W.O. 27743 T.C.D. 1T06935
OBSERVER AC RICHARDS ENGINEER D. MADISON MODEL NO. DSV-4B

REPEATABILITY

FULL SCALE = 5.052400 MAXIMUM REPEATABILITY = .005000
PER CENT = .098963

POINT	PERCENT	PSIA	TRIAL A	TRIAL B	TRIAL C	DIFFERENCES
1	100.00	.30	4.966200	4.971200	.000000	.005000
2	90.00	.27	4.400400	4.403200	.000000	.002800
3	80.00	.24	3.983400	3.984900	.000000	.001500
4	70.00	.21	3.483200	3.485300	.000000	.002100
5	60.00	.18	3.000100	3.003300	.000000	.003200
6	50.00	.15	2.505700	2.503600	.000000	.002100
7	40.00	.12	2.000000	1.998000	.000000	.002000
8	30.00	.09	1.476700	1.476500	.000000	.000200
9	20.00	.06	.974700	.975400	.000000	.000700
10	10.00	.03	.449500	.452400	.000000	.002900
11	.00	.00	-.086200	-.086200	.000000	.000000

3/12/68 PRE ENVIRONMENTAL TRIAL A
LINE ITEM 4920 P/N 1838528-1 S/N 4

CHEBYSHEV CURVE FIT

MAX. LINE DEV. = .4967222222E-01
FULL SCALE = 5.056400 PER CENT = .9831411253E 00

SLOPE = .4885111111+E+00
INTERCEPT = -.3652777778037E-01

POINT	INPUT X	INPUT Y1	OUTPUT F	RESIDUAL Y1-F
1	100.00000	4.86620	4.84858	.017617
2	90.00000	4.40040	4.45007	-.049672
3	80.00000	3.98340	3.95156	.031809
4	70.00000	3.46320	3.43303	.030160
5	60.00000	3.00010	2.95454	.045561
6	50.00000	2.50570	2.45603	.049672
7	40.00000	2.00000	1.95752	.042483
8	30.00000	1.47670	1.45901	.017694
9	20.00000	.97470	.96043	.014206
10	10.00000	.44950	.46193	-.012483
11	.00000	-.08620	-.03653	-.049672

9/12/65 PRE ENVIRONMENTAL TRIAL B
LINE ITEM W92J P/N 1838508-1 S/N 4

CHEBYSHEV CURVE FIT

MAX. LINE DEV. = .4628333334E-01
FULL SCALE = 8.052430 PER CENT = .9556514397E 00

SLOPE = .4988222222223E-01
INTERCEPT = -.3791666663826E-01

POINT	INPUT X	INPUT Y1	OUTPUT F	RESIDUAL Y1-F
1	100.00000	4.97120	4.95031	.020894
2	90.00000	4.40320	4.45148	-.048283
3	80.00000	3.98490	3.95266	.032239
4	70.00000	3.48530	3.45384	.031461
5	60.00000	3.00330	2.95502	.048283
6	50.00000	2.50360	2.45619	.047406
7	40.00000	1.99800	1.95737	.040628
8	30.00000	1.47550	1.45855	.017950
9	20.00000	.97540	.95973	.015672
10	10.00000	.45240	.46091	-.008506
11	.00000	-.08620	-.03792	-.048283

STATIC ERROR BAND [TYPE 1,TEST NO. 1]

DATE 9/12/66 TITLE PRE ENVIRONMENTAL
BAROMETRIC PRESSURE * LINE ITEM N92J P/N 1338608-1 S/N 4
OUTPUT LOAD 100K S.O. 5769-6502 E.W.O. 27743 T.C.D. 1T06935
OBSERVER AC RICHARDS ENGINEER D. MADISON MODEL NO. DSV-48

	PERCENT FULL SCALE	REFERENCE CALIB	MAXIMUM ERROR PT	ACTUAL DEVIATION	PERCENT DEVIATION
1	100.000000	4.949225	4.971200	.021975	.440675
2	90.000000	4.450558	4.400400	-.050158	-1.005849
3	80.000000	3.951892	3.984900	.033008	.661932
4	70.000000	3.453225	3.485300	.032075	.643215
5	60.000000	2.954558	3.003300	.048742	.977440
6	50.000000	2.455892	2.505700	.049808	.998830
7	40.000000	1.957225	2.000000	.042775	.857787
8	30.000000	1.458558	1.476700	.018142	.363803
9	20.000000	.959892	.975400	.015508	.310936
10	10.000000	.461225	.449500	-.011725	-.235127
11	.000000	-.037442	-.086200	-.048758	-.977774

FULL SCALE = 4.98667 MAX DEVIATION[ACT] = -.05016 MAX DEVIATION[PERCENT] = -1.00585

TMR 582
6 62

MISSILE & SPACE SYSTEMS DIVISION
DOUGLAS AIRCRAFT COMPANY, INC.

DATA SHEET

FORM 30-650 (7-65)

REPORT NO. TMR 5812

DATE 9-15-66 PRE HUMIDITY TEST PAGE C 63

SUBJECT PRESSURE TRANSDUCER

TEST NO. W92J S.O. 5879-65028 E.W.O. 27743 T.C.D. ~~D.R.O.~~ ITO 6935 MODEL NO. DSV-4B

OBJECT OF THIS DATA

OBSERVER NELSON LABORATORY G & C ENGINEER BERING

GTP: W92J P/N: 1B38508-1 S/N: 4

Weight: N.A Oz.

Dimensions: L N.A In. H N.A In. DIA. N.A In.

INSULATION RESISTANCE

Pin A to Case 3K MEG Ohms

Pin B to Case 3K MEG Ohms

Pin C to Case 3K MEG Ohms

Pin D to Case 3K MEG Ohms

Pin F to Case 3K MEG Ohms

Pin G to Case 3K MEG Ohms

Pin E Case Ground ✓ (✓)

AUTOMATIC CHECKOUT

Load 100K Ohms

27 VDC to Pin F _____ Volts

27 VDC to Pin G _____ Volts

ISOLATION RESISTANCE

Pin A to C N/R Ohms

Pin A to D N/R Ohms

Pin B to C N/R Ohms

Pin B to D N/R Ohms

SHORTED INPUT PAIR A-B TO SHORTED OUTPUT PAIR C-D = 4K MEGOHMS

COMMENTS

FORM NO. 30-830 (REV. 6-66)

DATA SHEET

DATE 9-15-66 HUMIDITY TEST REPORT NO. T M R 5812

PART NO. 1B38508-1 CHG. LTR. S/N. 4 LINE ITEM W92J

S.O. 5879-6502 E.W.O. 27743 T.C.D. IT06935 MODEL NO. DSV*4B

OBSERVER NELSON LABORATORY G&C ENGINEER MADISON

AUTOMATIC CHECKOUT

	27 VDC TO PIN F	27 VDC TO PIN G
CYCLE #3	1.0324 VDC	3.9966 VDC
CYCLE #6	1.0475 VDC	4.0001 VDC
CYCLE #9	1.0428 VDC	3.9988 VDC

OUTPUT LOAD 100K OHMS

DATA SHEET

FORM 30-830 (7-65)

MISSILE & SPACE SYSTEMS DIVISION
DOUGLAS AIRCRAFT COMPANY, INC.

REPORT NO. T M R 5812

DATE 9-20-66 POST ENVIRONMENTAL ~~PRE LOW TEMPERATURE~~ TEST PAGE C 65

SUBJECT PRESSURE TRANSDUCER

TEST NO. W 92 J S.O. 5829-6502 E.W.O. 27743 ~~D.R.O.~~ TCD 1T06935 MODEL NO. DSV-4B

OBJECT OF THIS DATA

OBSERVER C. NELSON LABORATORY EE - G&C ENGINEER C. BERING

GTP: W92J P/N: 1B38508-1 S/N: 4

Weight: N.A Oz.

Dimensions: L N.A In. H N.A In. DIA. N.A In.

INSULATION RESISTANCE

Pin A to Case 3.5K MEG Ohms

Pin B to Case 3.5K MEG Ohms

Pin C to Case 5.0K MEG Ohms

Pin D to Case 4.0K MEG Ohms

Pin F to Case 5.0K MEG Ohms

Pin G to Case 10.0K MEG Ohms

Pin E Case Ground ✓ (✓)

AUTOMATIC CHECKOUT

Load 100K Ohms

27 VDC to Pin F 1.0337 Volts

27 VDC to Pin G 3.9970 Volts

ISOLATION RESISTANCE

Pin A to C N.A Ohms

Pin A to D N.A. Ohms

Pin B to C N.A. Ohms

Pin B to D N.A. Ohms

AB TO CD 4.5K MEG OHMS

COMMENTS

DATE 5/30/66 TITLE PMST ENVIRONMENTAL
GAUGE [illegible] PRESSURE LINE ITEM 992J P/N 1333506-1 S/N 4
OUTPUT LOAD 100K G.O. 5879-6502 E.W.O. 27743 T.C.D. 1T06935
OBSERVER [illegible] ENGINEER C BERING MODEL NO. 98V-48

REPEATABILITY

FULL SCALE = [illegible] MAXIMUM REPEATABILITY = .007300
PER CENT = .1[illegible]

POINT	PERCENT	PSIA	TRIAL A	TRIAL B	TRIAL C	DIFFERENCES
1	100.00	.30	4.889300	4.888000	.000000	.001300
2	80.00	.27	4.388500	4.390400	.000000	.007300
3	60.00	.24	3.892600	3.898000	.000000	.005400
4	40.00	.21	3.393600	3.399600	.000000	.006000
5	20.00	.18	2.913500	2.914300	.000000	.000800
6	10.00	.15	2.409800	2.414800	.000000	.005000
7	40.00	.12	1.903300	1.905600	.000000	.002300
8	60.00	.09	1.379400	1.382400	.000000	.003000
9	80.00	.06	.882500	.882700	.000000	.000200
10	0.00	.03	.353900	.357100	.000000	.003200
11	.00	.00	-.159400	-.160800	.000000	.001200

9/20/[illegible] POST ENVIRONMENTAL TRIAL A
LINE [illegible] 4920 P/N 1538508-1 S/N 4

CHEBYSHEV CURVE FIT

MAX. LINE DEV. = .2272777778E+01
FULL SCALE = 5.048900 PER CENT = .4501330587E 00

SLOPE = .5047855[illegible]E+01
INTERCEPT = 4.1368722[illegible]E 00

POINT	INPUT X	INPUT Y1	OUTPUT F	RESIDUAL Y1-F
1	100.00000	4.88930	4.91102	+.021717
2	90.00000	4.38350	4.40623	+.022728
3	80.00000	3.89260	3.90144	-.008859
4	70.00000	3.39350	3.39665	+.003050
5	60.00000	2.91350	2.89186	.021699
6	50.00000	2.40980	2.38707	.022728
7	40.00000	1.90330	1.88228	.021017
8	30.00000	1.37940	1.37749	.001906
9	20.00000	.88250	.87271	.009794
10	10.00000	.35090	.36792	-.014017
11	.00000	-.15960	-.13687	+.022728

9/20/00 POST ENVIRONMENTAL TRIAL B
LINE ITEM 6920 P/N 1338508-1 S/N 4

CHEBYSHEV CURVE FIT

MAX. LINE DEV. = .2560000000E+01
FULL SCALE = 5.048900 PER CENT = .5070411377E 00

SLOPE = .5948800000010+01
INTERCEPT = .1352000000012E 00

POINT	INPUT X	INPUT Y1	OUTPUT E	RESIDUAL Y1-E
1	100.00000	4.88600	4.91960	+.025600
2	90.00000	4.39080	4.40872	-.017920
3	80.00000	3.89800	3.90384	-.005840
4	70.00000	3.39960	3.39896	.000640
5	60.00000	2.91430	2.89408	.020220
6	50.00000	2.41480	2.38920	.025600
7	40.00000	1.90560	1.88432	.021280
8	30.00000	1.32240	1.37944	.002960
9	20.00000	.88370	.87456	.008140
10	10.00000	.35710	.36965	-.012580
11	.00000	-.16080	-.18520	-.025600

STATIC ERROR BAND [TYPE 1,TEST NO. 2]

DATE 8/20/64 TITLE POST ENVIRONMENTAL
BAROMETRIC PRESSURE * LINE ITEM #92J P/N 1338508-1 S/N 4
OUTPUT LOAD 100K S.O. 5879-6502 E.W.O. 27743 T.C.O. 1T06935
OBSERVER C NELSON ENGINEER C BERING MODEL NO. DSV-48

	PERCENT FULL SCALE	REFERENCE CALIB	MAXIMUM ERROR PT	ACTUAL DEVIATION	PERCENT DEVIATION	
1	100.000000	4.949225	4.888000	-.061225	-1.227774	
2	90.000000	4.450658	4.383600	-.067058	-1.344753	
3	80.000000	3.951892	3.892600	-.059292	-1.189004	
4	70.000000	3.453225	3.393600	-.059625	-1.195689	
5	60.000000	2.954558	2.913500	-.041058	-.823362	
6	50.000000	2.455892	2.409800	-.046092	-.924298	
7	40.000000	1.957225	1.903300	-.053925	-1.081384	
8	30.000000	1.458558	1.379400	-.079158	-1.587400	*
9	20.000000	.959892	.882500	-.077392	-1.551972	*
10	10.000000	.461225	.353900	-.107325	-2.152239	*
11	.000000	-.037442	-.160800	-.123358	-2.473763	*

FULL SCALE = 4.98667 MAX DEVIATION[ACT] = -.12336 MAX DEVIATION[PERCENT] = -2.47376

C 68
T M R 3812

DATA SHEET

FORM 30-630 (7-65)

MISSILE & SPACE SYSTEMS DIVISION
DOUGLAS AIRCRAFT COMPANY, INC.

REPORT NO. T M R 3314

DATE 9-12-66 PRE ENVIRONMENTAL TEST PAGE C 70

SUBJECT PRESSURE TRANSDUCER

TEST NO. W92J S.O. 5879-6502 E.W.O. 27743 T.C.D. ITO 6935 MODEL NO. DSV-4B

OBJECT OF THIS DATA

OBSERVER A.C. RICHARDS LABORATORY G&C ENGINEER BERING

GTP: W92J P/N: 1B38508-1 S/N: 8

Weight: 21 Oz.

Dimensions: L 5 In. H 2.25 In. DIA. 2.25 In.

INSULATION RESISTANCE

Pin A to Case 3K MEG Ohms
Pin B to Case 4K MEG Ohms
Pin C to Case 6K MEG Ohms
Pin D to Case 6K MEG Ohms
Pin F to Case 7K MEG Ohms
Pin G to Case 6K MEG Ohms

Pin E Case Ground ✓ (✓)

AUTOMATIC CHECKOUT

Load 100K Ohms
27 VDC to Pin F 1.0058 Volts
27 VDC to Pin G 4.0050 Volts

ISOLATION RESISTANCE

Pin A to C N.A Ohms
Pin A to D N.A Ohms
Pin B to C N.A Ohms
Pin B to D N.A Ohms

SHORTED INPUT PAIR A-B TO SHORTED OUTPUT PAIR C-D = 4K MEGOHMS

COMMENTS

DATE 9/13/6 TITLE PRE ENVIRONMENTAL
BAROMETRIC PRESSURE .8 LINE ITEM 4920 P/N 1838-C8-1 S/N 8
OUTPUT [illegible] S.O. 8760-6501 C.N.O. 27443 I.C.D. 1T06935
OBSERVER A. RICHARDS ENGINEER D. MADISON MODEL NO. D[illegible]-48

REPEATABILITY

FULL SCALE = 4.97[illegible]300 MAXIMUM REPEATABILITY = .012700
PER CENT = .255107

PMIN	PERCENT	PSIA	TRIAL A	TRIAL B	TRIAL C	DIFFERENCES
1	100.00	.30	5.029700	5.040000	5.042400	.012700
2	90.00	.27	4.539000	4.547000	4.545200	.008000
3	80.00	.24	4.046800	4.053900	4.052800	.007100
4	70.00	.21	3.548700	3.552500	3.552600	.003900
5	60.00	.18	3.076300	3.075900	3.076600	.000900
6	50.00	.15	2.581200	2.580500	2.578100	.003100
7	40.00	.12	2.081600	2.081300	2.081500	.000300
8	30.00	.09	1.571000	1.569400	1.569600	.001600
9	20.00	.06	1.085500	1.082600	1.079400	.003200
10	10.00	.03	.575000	.574500	.568500	.006500
11	.00	.00	.051400	.044000	.045800	.007400

9/18/66 PRE ENVIRONMENTAL TRIAL A
LINE ITEM W92[illegible] P/N 1598608-1 S/N 8

CHEBYSHEV CURVE FIT

MAX. LINE DEV. = .2032500000E-01
FULL SCALE = [illegible] PER CENT = .40[illegible]27190002 00

SLOPE = .4978300000002E-01
INTERCEPT = .7172439999943E-0[illegible]

POINT	INPUT X	INPUT Y1	OUTPUT F	RESIDUAL YT-F
1	10.00000	5.02971	5.05002	-.020325
2	20.00000	4.63900	4.65219	-.013195
3	30.00000	4.06680	4.06436	-.007565
4	70.00000	3.54670	3.55653	-.007845
5	60.00000	3.07680	3.05970	.018095
6	50.00000	2.63120	2.66087	.020325
7	40.00000	2.02160	2.06504	.018555
8	30.00000	1.57100	1.56621	.008735
9	20.00000	1.08050	1.06738	.013115
10	10.00000	.57500	.56055	.005445
11	.00000	.05140	.07172	-.020325

TRIAL 3

[illegible] PRE ENVIRONMENTAL
LINE ITEM [illegible] P/N 1338508-1 S/N 8

CHEBYSHEV CURVE FIT

MAX. LINE DEV. = .1970000000E-01
PER CENT = .3937174136E 00

FULL SCALE = [illegible].07-300

SLOPE = .4796000000001E-01
INTERCEPT = .6369999999953E-01

POINT	INPUT X	INPUT Y1	OUTPUT F	RESIDUAL Y1-F
1	100.00000	5.04000	5.05970	-.019700
2	90.00000	4.94700	4.96010	-.013100
3	80.00000	4.05390	4.06050	-.006600
4	70.00000	3.55250	3.56050	-.008400
5	60.00000	2.07590	2.06130	.014600
6	50.00000	2.58050	2.56170	.018800
7	40.00000	2.08130	2.06210	.019200
8	30.00000	1.56940	1.56250	.006900
9	20.00000	1.08260	1.06290	.019700
10	10.00000	.57450	.56830	.011200
11	.00000	.04400	.06970	-.019700

[illegible] PRE [illegible] TRIAL C
[illegible] ITEM [illegible] P/N 1038508-1 S/N 8

CHEBYSHEV CURVE FIT

MAX. LINE DEV. = .1853000000E-01
FULL SCALE = [illegible] PER CENT = .3722154149E 00

SLOP = .4[illegible]E-01
INTERCEPT = .6[illegible]E-01

POINT	INPUT X	INPUT Y1	OUTPUT F	RESIDUAL Y1-F
1	100.00000	5.04240	5.06093	-.018530
2	90.00000	4.54920	4.56127	-.016070
3	80.00000	4.05280	4.06161	-.008810
4	70.00000	3.55260	3.56195	-.009350
5	60.00000	3.07560	3.06225	.014310
6	50.00000	2.57310	2.56263	.015470
7	40.00000	2.08150	2.06797	.013530
8	30.00000	1.56960	1.56331	.006290
9	20.00000	1.07940	1.06365	.015750
10	10.00000	.56680	.56369	.004310
11	[illegible]	.04580	.06433	-.018530

STATIC ERROR BAND [TYPE 1,TEST NO. 11

DATE 9/13/66 TITLE PRE ENVIRONMENTAL
BAROMETRIC PRESSURE • LINE ITEM W92J P/N 1838508-1 S/N 8
OUTPUT LOAD 100K S.O. 5769-6601 E.W.O. 27443 T.C.O. 1T06935
OBSERVER AC RICHARDS ENGINEER D. MADISON MODEL NO. DSV-4B

	PERCENT FULL SCALE	REFERENCE CALIB	MAXIMUM ERROR PT	ACTUAL DEVIATION	PERCENT DEVIATION
1	100.000000	5.056507	5.029700	-.026807	-.537175
2	90.000000	4.557477	4.539000	-.018477	-.370252
3	80.000000	4.058447	4.046800	-.011647	-.233386
4	70.000000	3.559417	3.548700	-.010717	-.214750
5	60.000000	3.060387	3.076800	.016413	.328905
6	50.000000	2.561357	2.581200	.019843	.397638
7	40.000000	2.062327	2.081600	.019273	.386216
8	30.000000	1.563297	1.571000	.007703	.154366
9	20.000000	1.064267	1.082600	.018333	.367379
10	10.000000	.565237	.575000	.009763	.195646
11	.000000	.066207	.044000	-.022207	-.444997

FULL SCALE = 4.99080 MAX DEVIATION[ACT] = -.02681 MAX DEVIATION[PERCENT] = -.53718

IN R 5812
C 25

MISSILE & SPACE SYSTEMS DIVISION
DOUGLAS AIRCRAFT COMPANY, INC.

DATA SHEET

FORM 30-830 (7-65)

I M R 5812
C 76

DATE 9-15-66 PRE LOW TEMP TEST PAGE

SUBJECT PRESSURE TRANSDUCER

TEST NO. W92J S.O. 5879-6502 E.W.O. 27743 ~~D.R.O.~~ T.C.D. ITO 6935 MODEL NO. DSV-4B

OBJECT OF THIS DATA

OBSERVER NELSON LABORATORY G & C ENGINEER BERING

GTP: W92J P/N: 1B38508-1 S/N: 8

Weight: N.A Oz.

Dimensions: L N.A In. H N.A In. DIA. N.A In.

INSULATION RESISTANCE

Pin A to Case 15K MEG Ohms
Pin B to Case 4K MEG Ohms
Pin C to Case 5K MEG Ohms
Pin D to Case 10K MEG Ohms
Pin F to Case 6K MEG Ohms
Pin G to Case 20K MEG Ohms

Pin E Case Ground ✓ (✓)

AUTOMATIC CHECKOUT 9-20-66

Load 100K Ohms
27 VDC to Pin F 1.0023 Volts
27 VDC to Pin G 4.0036 Volts

ISOLATION RESISTANCE

Pin A to C N/R Ohms
Pin A to D N/R Ohms
Pin B to C N/R Ohms
Pin B to D N/R Ohms

SHORTED INPUT PAIR A-B TO SHORTED OUTPUT PAIR C-D = 4K MEGOHMS

COMMENTS

DATE 3/20/66 TITLE PRE LOW TEMPERATURE
BAROMETRIC PRESSURE LINE ITEM W92U P/N 1838508-1 S/N 8
OUTPUT LOAD 100K G.O. 5079-6502 E.W.O. 27743 T.C.D. 1T06935
OBSERVER C NELSON ENGINEER C BERING MODEL NO. DSV-46

REPEATABILITY

FULL SCALE = 5.007700 MAXIMUM REPEATABILITY = .007600
PER CENT = .151766

POINT	PERCENT	PSIA	TRIAL A	TRIAL B	TRIAL C	DIFFERENCES
1	100.00	.30	5.069200	5.063100	.000000	.006100
2	90.00	.27	4.553400	4.561000	.000000	.007600
3	80.00	.24	4.059100	4.064500	.000000	.005400
4	70.00	.21	3.560800	3.565800	.000000	.005000
5	60.00	.18	3.084600	3.084500	.000000	.000100
6	50.00	.15	2.587400	2.591900	.000000	.004500
7	40.00	.12	2.085800	2.089900	.000000	.001100
8	30.00	.09	1.578500	1.576100	.000000	.002600
9	20.00	.06	1.086300	1.084900	.000000	.001400
10	10.00	.03	.565500	.562700	.000000	.001200
11	.00	.00	.061500	.058800	.000000	.002700

[illegible] PRI [illegible] TEMPERATURE TRIAL A
LINE ITEM [illegible] P/N [illegible] S/N 8

CHEBYSHEV CURVE FIT

MAX. LINE DEV. = .1545000000E-01
FULL SCALE = [illegible] PER CENT = .3085246717E 00

SLOPE = .4991000000E-01
INTERCEPT = .7594959[illegible]E-01

POINT	INPUT X	INPUT Y1	OUTPUT F	RESIDUAL Y1-F
1	100.00000	5.06920	5.06795	.001250
2	90.00000	4.58940	4.56885	-.015450
3	80.00000	4.06[illegible]	4.06975	-.010650
4	70.00000	3.56080	3.57065	-.010350
5	60.00000	3.08950	3.07155	.013950
6	50.00000	2.58740	2.57245	.014950
7	40.00000	2.08850	2.07335	.015450
8	30.00000	1.57350	1.57425	-.000750
9	20.00000	1.08630	1.07515	.011150
10	10.00000	.56860	.57605	-.007550
11	[illegible]	.06150	.07595	-.015450

9/20/66 [illegible] TEMPERATURE TRIAL 8
LINE [illegible] W920 P/N 1384508-1 S/N 8

CHEBYSHEV CURVE FIT

MAX. LINE DEV. = .1593888889E+01
FULL SCALE = [illegible] PER CENT = .3142679148E 00

SLOPE = .5002444444443E-01
INTERCEPT = .7473888382222E+01

POINT	INPUT X	INPUT Y1	OUTPUT F	RESIDUAL Y1-F
1	100.0000	3.05310	3.07716	-.014063
2	90.0000	4.55190	4.57694	-.015939
3	80.0000	4.06450	4.07660	-.012164
4	70.0000	3.55330	3.57645	-.011160
5	60.0000	3.08430	3.07621	.008294
6	50.0000	2.59190	2.57596	.015939
7	40.0000	2.08990	2.07372	.014183
8	30.0000	1.57610	1.57347	.000623
9	20.0000	1.08490	1.07523	.009672
10	10.0000	.56970	.57493	-.005253
11	.00000	.05540	.07474	-.015939

STATIC ERROR BAND (TYPE 1,TEST NO. 2)

DATE 9/20/66 TITLE PRE LOW TEMPERATURE
BAROMETRIC PRESSURE . LINE ITEM W32J P/N 1838808-1 S/N 3
OUTPUT LOAD 100K S.O. 5879-6502 E.W.O. 27743 T.C.O. 1T06935
OBSERVER C NELSON ENGINEER C BERING MODEL NO. DSV-48

	PERCENT FULL SCALE	REFERENCE CALIB	MAXIMUM ERROR PT	ACTUAL DEVIATION	PERCENT DEVIATION
1	100.000000	5.056307	5.069200	.012893	.254360
2	90.000000	4.557477	4.553400	-.004077	-.081692
3	80.000000	4.058447	4.064500	.006053	.121302
4	70.000000	3.559417	3.565300	.005883	.117895
5	60.000000	3.060387	3.084600	.024213	.485208
6	50.000000	2.561357	2.591900	.030643	.612054
7	40.000000	2.062327	2.089900	.027573	.552539
8	30.000000	1.563297	1.576100	.012803	.256664
9	20.000000	1.064267	1.086300	.022033	.441523
10	10.000000	.565237	.569700	.004463	.089440
11	.000000	.066207	.058800	-.007407	-.148421

FULL SCALE = 4.99030 MAX DEVIATION(ACT) = .03054 MAX DEVIATION(PERCENT) = .61205

C 80
T M k 5812

FORM NO. 30-830 (REV. 6-66)

DATA SHEET

DATE 9-21-66 LOW TEMP TEST REPORT NO. T M R 5812

PART NO. 1B38508-1 CHG. LTR. S/N. 8 LINE ITEM W92J

S.O. 5879-6502 E.W.O. 27743 T.C.D. IT06935 MODEL NO. DSV-4B

OBSERVER A. RICHARDS LABORATORY G&C ENGINEER BERING

AUTOMATIC CALIBRATION

TIME	TEMP °F	OUTPUT VDC	27 VDC TO PIN F	27 VDC TO PIN G
15:15	-100	5.7453	.9784 VDC	4.0322 VDC
15:30	-150	5.8093	1.0073 VDC	4.0630 VDC
15:45	-155	5.8032	1.0096 VDC	4.0652 VDC
16:00	-96	5.7698	.9850 VDC	4.0384 VDC
16:15	-108	5.7865	.9870 VDC	4.0414 VDC
16:30	-72	5.7587	.9636 VDC	4.0172 VDC
16:45	-95	5.7860	.9786 VDC	4.0328 VDC
17:00	-95	5.7833	.9759 VDC	4.0301 VDC
17:15	-99	5.7874	.9771 VDC	4.0316 VDC
17:30	-100	5.7900	.9780 VDC	4.0325 VDC
17:45	-100	5.7917	.9786 VDC	4.0331 VDC
18:00	-100	5.7926	.9790 VDC	4.0337 VDC
18:15	-100	5.7933	.9792 VDC	4.0339 VDC
18:30	-100	5.7937	.9794 VDC	4.0339 VDC
18:45	-100	5.7940	.9794 VDC	4.0341 VDC
19:00	-100	5.7944	.9795 VDC	4.0344 VDC
19:15	-100	5.7946	.9796 VDC	4.0345 VDC

DATA SHEET

FORM 30-830 (7-65)

MISSILE & SPACE SYSTEMS DIVISION
DOUGLAS AIRCRAFT COMPANY, INC.

T M R 5812

DATE 9-22-66 POST LOW TEMPERATURE TEST PAGE C 82

SUBJECT PRESSURE TRANSDUCER

TEST NO. W92J S.O. 5879-6502E W.O. 27743 TCD MODEL NO. DSV-4B

OBJECT OF THIS DATA

OBSERVER A RICHARDS LABORATORY E.E. G&C ENGINEER C. BERING

GTP: W92J P/N: 1B38508-1 S/N: 8

Weight: N.A Oz.

Dimensions: L N.A In. H N.A In. DIA. N.A In.

INSULATION RESISTANCE

Pin A to Case 12K MEG Ohms

Pin B to Case 5K MEG Ohms

Pin C to Case 5K MEG Ohms

Pin D to Case 15K MEG Ohms

Pin F to Case 5K MEG Ohms

Pin G to Case 10K MEG Ohms

Pin E Case Ground ✓ (✓)

AUTOMATIC CHECKOUT

Load 100K Ohms

27 VDC to Pin F 0.9054 Volts

27 VDC to Pin G 3.9513 Volts

ISOLATION RESISTANCE

Pin A to C N.A. Ohms PINS AB TO PINS CD 4K MEGOHMS

Pin A to D N.A. Ohms

Pin B to C N.A. Ohms

Pin B to D N.A Ohms

COMMENTS

DATE 9/22/66 TITLE POST LOW TEMPERATURE P/N 1838608-1 S/N 3
BAROMETRIC PRESSURE • LINE ITEM 4920 E.W.O. 27743 T.C.D. 1T06935
OUTPUT LOAD 100K S.O. 5769-6502 MODEL NO. DSV-48
OBSERVER AC RICHARDS ENGINEER C. BERING

REPEATABILITY

FULL SCALE = 5.031100 MAXIMUM REPEATABILITY = .021100
PER CENT = .419391

POINT	PERCENT	PSIA	TRIAL A	TRIAL B	TRIAL C	DIFFERENCES
1	100.00	.30	5.081100	5.087000	.000000	.005900
2	90.00	.27	4.567200	4.584300	.000000	.017100
3	80.00	.24	4.063700	4.073800	.000000	.010100
4	70.00	.21	3.552700	3.564900	.000000	.012200
5	60.00	.18	3.064800	3.080600	.000000	.015800
6	50.00	.15	2.572800	2.580200	.000000	.007400
7	40.00	.12	2.060800	2.072300	.000000	.011500
8	30.00	.09	1.534100	1.552600	.000000	.018500
9	20.00	.06	1.036400	1.051600	.000000	.015200
10	10.00	.03	.504700	.525800	.000000	.021100
11	.00	.00	.050000	.048500	.000000	.001500
12	.00	.00	.000000	.000000	.000000	.000000
13	.00	.00	.000000	.000000	.000000	.000000
14	.00	.00	.000000	.000000	.000000	.000000
15	.00	.00	.000000	.000000	.000000	.000000
16	.00	.00	.000000	.000000	.000000	.000000
17	.00	.00	.000000	.000000	.000000	.000000
18	.00	.00	.000000	.000000	.000000	.000000
19	.00	.00	.000000	.000000	.000000	.000000
20	.00	.00	.000000	.000000	.000000	.000000
21	.00	.00	.000000	.000000	.000000	.000000

3/22/66 POST LOW TEMPERATURE TRIAL A

LINE ITEM 4920 P/N 1338508-1 S/N 8

CHEBYSHEV CURVE FIT

MAX. LINE DEV. = .249999999E-01 MAX. HYS. DEV. = .508110E 01

FULL SCALE = 5.081100 PER CENT = .49551767875E 00 PER CENT = .100994E 03

SLOPE = .504559999999E-01

INTERCEPT = .250699999942E-01

POINT	INPUT X	INPUT Y1	OUTPUT F	RESIDUAL Y1-F	INPUT Y2	HYS. Y1-Y2
1	100.00000	5.08110	5.07067	.010430	.00000	5.08110
2	90.00000	4.56720	4.56611	.001090	.00000	4.56720
3	80.00000	4.06370	4.06155	.002150	.00000	4.06370
4	70.00000	3.55270	3.55698	-.004290	.00000	3.55270
5	60.00000	3.06480	3.05248	.012370	.00000	3.06480
6	50.00000	2.57280	2.54787	.024930	.00000	2.57280
7	40.00000	2.06080	2.04331	.017490	.00000	2.06080
8	30.00000	1.53410	1.53875	-.004650	.00000	1.53410
9	20.00000	1.03640	1.03419	.002210	.00000	1.03640
10	10.00000	.50470	.52963	-.024930	.00000	.50470
11	.00000	.05000	.02507	.024930	.05000	.00000

TM R 342

C 84

9/22/66 POST LOW TEMPERATURE TRIAL 8
LINE ITEM A92J P/N 1838608-1 S/N 8

CHEBYSHEV CURVE FIT

MAX. LINE DEV. = .145200000E-01 MAX. HYS. DEV. = .508700E 01
FULL SCALE = 5.031100 PER CENT = .288604877 6E 00 PER CENT = .101111E 03

SLOPE = .506339999990E-01
INTERCEPT = .339799999947E-01

POINT	INPUT X	INPUT Y1	OUTPUT F	RESIDUAL Y1-F	INPUT Y2	HYS. Y1-Y2
1	100.00000	5.08700	5.09738	-.010380	.00000	5.08700
2	90.00000	4.58430	4.59104	-.006740	.00000	4.58430
3	80.00000	4.07380	4.08470	-.010900	.00000	4.07380
4	70.00000	3.56490	3.57836	-.013460	.00000	3.56490
5	60.00000	3.08060	3.07202	.008580	.00000	3.08060
6	50.00000	2.56020	2.56568	.014520	.00000	2.56020
7	40.00000	2.07230	2.05934	.012960	.00000	2.07230
8	30.00000	1.55260	1.55300	-.000400	.00000	1.55260
9	20.00000	1.05160	1.04666	.004940	.00000	1.05160
10	10.00000	.52580	.54032	-.014520	.00000	.52580
11	.00000	.04850	.03398	.014520	.04850	.00000

I M R 5312
C 85

TOTAL ERROR BAND [TYPE 1,TEST NO. 3]

DATE 9/22/66 TITLE POST LOW TEMPERATURE
BAROMETRIC PRESSURE • LINE ITEM #920 P/N 1338506-1 S/N 3
OUTPUT LOAD 100K S.O. 5760-6502 E.W.O. 27743 T.C.O. 1T06935
OBSERVER AC RICHARDS ENGINEER C. BERING MODEL NO. DSV-48

	PERCENT FULL SCALE	REFERENCE CALIB	MAXIMUM ERROR PT	ACTUAL DEVIATION	PERCENT DEVIATION
1	100.000000	5.066507	5.087000	.080493	.611062
2	90.000000	4.557477	4.554300	.026823	.337509
3	80.000000	4.058447	4.073800	.015353	.307664
4	70.000000	3.559417	3.552700	-.006717	-.134594
5	60.000000	3.060387	3.080600	.020213	.405052
6	50.000000	2.561357	2.580200	.018843	.377599
7	40.000000	2.062327	2.072300	.009973	.199854
8	30.000000	1.563297	1.534100	-.029197	-.585068
9	20.000000	1.064267	1.036400	-.027867	-.558417
10	10.000000	.565237	.504700	-.060537	-1.213087
11	.000000	.066207	.048500	-.017707	-.354822

FULL SCALE = 4.99030 MAX DEVIATION[ACT] = -.06054 MAX DEVIATION[PERCENT] = -1.21309

T M R 5812

C 88

DATA SHEET

FORM 20-830 (7-65)

MISSILE & SPACE SYSTEMS DIVISION
DOUGLAS AIRCRAFT COMPANY, INC.

T M R 5812
C 87

DATE 9-28-66 PRE HIGH TEMPERATURE TEST PAGE

SUBJECT PRESSURE TRANSDUCER

TEST NO. W92J S.O. 5879-65D2E W.O. 27743 TCD 1T06935 MODEL NO. DSV-4B

OBJECT OF THIS DATA

OBSERVER A. RICHARDS LABORATORY EE-G&C ENGINEER C. BERING

GTP: W92J P/N: 1B38508-1 S/N: 8

Weight: N.A Oz.

Dimensions: L N.A In. H N.A In. DIA. N.A In.

INSULATION RESISTANCE

Pin A to Case N.A Ohms

Pin B to Case N.A Ohms

Pin C to Case N.A Ohms

Pin D to Case N.A Ohms

Pin F to Case N.A Ohms

Pin G to Case N.A Ohms

Pin E Case Ground ( )

AUTOMATIC CHECKOUT

Load 100K Ohms

27 VDC to Pin F 1.0054 Volts

27 VDC to Pin G 4.0049 Volts

ISOLATION RESISTANCE

Pin A to C N.A Ohms

Pin A to D N.A Ohms

Pin B to C N.A Ohms

Pin B to D N.A Ohms

COMMENTS

DATE 9/28/66 TITLE PRE HIGH TEMPERATURE
BAROMETRIC PRESSURE LINE ITEM W92J P/N 1338608-1 S/N 8
OUTPUT LOAD S.O. 5879-6502 E.W.O. 27743 T.C.O. IT06935
OBSERVER RICHARDS ENGINEER BERING MODEL NO. DSV-48

REPEATABILITY

FULL SCALE = 5.133900 MAXIMUM REPEATABILITY = .008200
PER CENT = .159723

POINT	PERCENT	PSIA	TRIAL A	TRIAL B	TRIAL C	DIFFERENCES
1	100.00	.30	5.174000	5.174000	.000000	.000000
2	90.00	.27	4.682400	4.683000	.000000	.000600
3	80.00	.24	4.165000	4.165900	.000000	.000900
4	70.00	.21	3.673300	3.665100	.000000	.008200
5	60.00	.18	3.187000	3.188600	.000000	.001600
6	50.00	.15	2.685400	2.684200	.000000	.001200
7	40.00	.12	2.185500	2.185100	.000000	.000400
8	30.00	.09	1.690300	1.687600	.000000	.002700
9	20.00	.06	1.155600	1.155500	.000000	.000100
10	10.00	.03	.631300	.631300	.000000	.000000
11	.00	.00	.040100	.041400	.000000	.001300

9/28/66 PRE HIGH TEMPERATURE TRIAL A
LINE ITEM W92J P/N 1338508-1 S/N 8

CHEBYSHEV CURVE FIT

MAX. LINE DEV. = .5501500001E-01
FULL SCALE = 5.133900 PER CENT = .1071602486E 01

SLOPE = .5133900000001E-01
INTERCEPT = .9511499999892E-01

POINT	INPUT X	INPUT Y1	OUTPUT F	RESIDUAL Y1-F
1	100.00000	5.17400	5.22901	-.055015
2	90.00000	4.68240	4.71562	-.033225
3	80.00000	4.16500	4.20223	-.037235
4	70.00000	3.67330	3.68884	-.015545
5	60.00000	3.18700	3.17545	.011545
6	50.00000	2.68540	2.66206	.023335
7	40.00000	2.18550	2.14867	.036825
8	30.00000	1.69030	1.63528	.055015
9	20.00000	1.15560	1.12189	.033705
10	10.00000	.63130	.60850	.022795
11	.00000	.04010	.09511	-.055015

C 89
TMR 581

9/28/66 PRE HIGH TEMPERATURE TRIAL B
LINE ITEM W92J P/N 1538508-1 S/N 8

CHEBYSHEV CURVE FIT

MAX. LINE DEV. = .5321000000E-01
FULL SCALE = 5.133900 PER CENT = .1036444029E 01

SLOPE = .513260000000E-01
INTERCEPT = .946099999892E-01

POINT	INPUT X	INPUT Y1	OUTPUT F	RESIDUAL Y1-F
1	100.00000	5.17400	5.22721	-.053210
2	90.00000	4.68300	4.71395	-.030950
3	80.00000	4.16590	4.20069	-.034790
4	70.00000	3.66510	3.68743	-.022330
5	60.00000	3.18860	3.17417	.014430
6	50.00000	2.68420	2.66091	.023290
7	40.00000	2.18510	2.14765	.037450
8	30.00000	1.68760	1.63439	.053210
9	20.00000	1.15550	1.12113	.034370
10	10.00000	.63130	.60787	.023430
11	.00000	.04140	.09461	-.053210

STATIC ERROR BAND [TYPE 1,TEST NO. 4]

DATE 9/28/66 TITLE PRE HIGH TEMPERATURE
BAROMETRIC PRESSURE LINE ITEM W92J P/N 1838808-1 S/N 8
OUTPUT LOAD S.O. 5879-6502 E.W.O. 27743 T.C.O. IT36935
OBSERVER RICHARDS ENGINEER BERING MODEL NO. DSV-48

	PERCENT FULL SCALE	REFERENCE CALIB	MAXIMUM ERROR PT	ACTUAL DEVIATION	PERCENT DEVIATION	
1	100.000000	5.056507	5.174000	.117493	2.354434	*
2	90.000000	4.357477	4.688000	.125523	2.515346	*
3	80.000000	4.058447	4.166900	.107453	2.153244	*
4	70.000000	3.559417	3.673300	.113883	2.282094	*
5	60.000000	3.060387	3.188600	.128213	2.569251	*
6	50.000000	2.561357	2.685400	.124043	2.485689	*
7	40.000000	2.062327	2.185500	.123173	2.468255	*
8	30.000000	1.563297	1.690300	.127003	2.545004	*
9	20.000000	1.064267	1.155600	.091333	1.830217	*
10	10.000000	.565237	.631300	.066063	1.323835	
11	.000000	.066207	.040100	-.026107	-.523148	

FULL SCALE = 4.99030 MAX DEVIATION[ACT] = .12821 MAX DEVIATION[PERCENT] = 2.56925

FORM NO. 30-830 (REV. 6-66)

DATA SHEET

PAGE C 02

DATE 9-29-66 HIGH TEMPERATURE TEST REPORT NO. T M R 5812

PART NO. 1B38508-1 CHG. LTR. S/N. 8 LINE ITEM W92J

S.O. 5879-6504 E.W.O. 27743 T.C.D. IT06935 MODEL NO. DSV-4B

OBSERVER A. RICHARDS LABORATORY G&C ENGINEER C. BERING

AUTOMATIC CALIBRATION

TIME	TEMP °F	OUTPUT VDC	27 VDC TO PIN F	27 VDC TO PIN G
10:00	+100	5.1502	.9102 VDC	3.9546 VDC
10:15	+103	5.1576	.9115 VDC	3.9559 VDC
10:30	+99	5.1654	.9122 VDC	3.9566 VDC
10:45	+99	5.1758	.9126 VDC	3.9572 VDC
11:00	+100	5.1799	.9126 VDC	3.9571 VDC
11:15	+100	5.1833	.9125 VDC	3.9571 VDC
11:30	+99	5.1850	.9124 VDC	3.9571 VDC
11:45	+100	5.1765	.9122 VDC	3.9572 VDC
12:00	+101	5.1736	.9265 VDC	3.9597 VDC
12:15	+100.5	5.1705	.9125 VDC	3.9583 VDC
12:30	+100.5	5.1671	.9264 VDC	3.9585 VDC
12:45	+100.5	5.1646	.9264 VDC	3.9589 VDC
13:00	+100	5.1662	.9122 VDC	3.9568 VDC
13:15	+99.5	5.1590	.9122 VDC	3.9568 VDC
13:30	+99.5	5.1535	.9121 VDC	3.9568 VDC
13:45	+99	5.1259	.9121 VDC	3.9554 VDC
14:00	+100	5.1277	.9121 VDC	3.9562 VDC

MISSILE & SPACE SYSTEMS DIVISION
DOUGLAS AIRCRAFT COMPANY, INC.

DATA SHEET

FORM 30-830 (7-65)

REPORT NO. T M R 3312

DATE 9-30-66 POST HIGH TEMP TEST PAGE 0-03

SUBJECT PRESSURE TRANSDUCER

TEST NO. W92J S.O. 5879-6502 E.W.O. 27743 T.C.P. ITO 6935 MODEL NO. DSV-4B

OBJECT OF THIS DATA

OBSERVER NELSON LABORATORY G & C ENGINEER MADISON

GTP: W92J P/N: 1B38508-1 S/N: 8

Weight: N.A Oz.

Dimensions: L N.A In. H N.A In. DIA. N.A In.

INSULATION RESISTANCE

Pin A to Case 15K MEG Ohms

Pin B to Case 10K MEG Ohms

Pin C to Case 6K MEG Ohms

Pin D to Case 12K MEG Ohms

Pin F to Case 20K MEG Ohms

Pin G to Case 10K MEG Ohms

Pin E Case Ground ✓ (✓)

AUTOMATIC CHECKOUT

Load 100K Ohms

27 VDC to Pin F 1.0048 Volts

27 VDC to Pin G 4.0056 Volts

ISOLATION RESISTANCE

Pin A to C N.A. Ohms

Pin A to D N.A. Ohms

Pin B to C N.A. Ohms

Pin B to D N.A. Ohms

SHORTED INPUT PAIR A & B TO SHORTED OUTPUT PAIR C & D = 10K MEGOHMS

COMMENTS

DATE 9/30/66 TITLE POST HIGH TEMPERATURE
BAROMETRIC PRESSURE LINE ITEM W92J P/N 1838608-1 S/N 8
OUTPUT LOAD S.O. 6879-6502 E.W.O. 27743 T.C.D. IT06935
OBSERVER RICHARDS ENGINEER BERING MODEL NO. DSV-4B

REPEATABILITY

FULL SCALE = 5.137400 MAXIMUM REPEATABILITY = .005800
PER CENT = .112898

POINT	PERCENT	PSIA	TRIAL A	TRIAL B	TRIAL C	DIFFERENCES
1	100.00	.30	5.180500	5.175200	.000000	.005300
2	90.00	.27	4.683000	4.679100	.000000	.003900
3	80.00	.24	4.175800	4.171100	.000000	.004700
4	70.00	.21	3.681900	3.682700	.000000	.000800
5	60.00	.18	3.189700	3.183900	.000000	.005800
6	50.00	.15	2.687800	2.688100	.000000	.000300
7	40.00	.12	2.184200	2.185800	.000000	.001600
8	30.00	.09	1.681800	1.684200	.000000	.002400
9	20.00	.06	1.154900	1.151300	.000000	.003600
10	10.00	.03	.636400	.634700	.000000	.001700
11	.00	.00	.043100	.041000	.000000	.002100

9/30/66 POST HIGH TEMPERATURE TRIAL A
LINE ITEM W920 P/N 1838508-1 S/N 8

CHEBYSHEV CURVE FIT

MAX. LINE DEV. = .4874000001E-01
FULL SCALE = 5.137400 PER CENT = .9487289292E 00

SLOPE = .5137399999999E-01
INTERCEPT = .9183999999900E-01

POINT	INPUT X	INPUT Y1	OUTPUT F	RESIDUAL Y1-F
1	100.00000	5.18050	5.22924	-.048740
2	90.00000	4.68300	4.71550	-.032500
3	80.00000	4.17580	4.20176	-.025960
4	70.00000	3.68190	3.68802	-.006120
5	60.00000	3.18970	3.17428	.015420
6	50.00000	2.68780	2.66054	.027260
7	40.00000	2.18420	2.14680	.037400
8	30.00000	1.68180	1.63306	.048740
9	20.00000	1.15490	1.11932	.035580
10	10.00000	.63640	.60358	.030820
11	.00000	.04310	.09184	-.048740

9/30/66 POST HIGH TEMPERATURE TRIAL B
LINE ITEM W92J P/N 1B38508-1 S/N 8

CHEBYSHEV CURVE FIT

MAX. LINE DEV. = .5147000000E-01
FULL SCALE = 5.137400 PER CENT = .1001868650E 01

SLOPE = .5134200000000E-01
INTERCEPT = .9246999999996E-01

POINT	INPUT X	INPUT Y1	OUTPUT F	RESIDUAL Y1-F
1	100.00000	5.17520	5.22667	-.051470
2	90.00000	4.67910	4.71325	-.034150
3	80.00000	4.17110	4.19983	-.028730
4	70.00000	3.68270	3.68641	-.003710
5	60.00000	3.18390	3.17299	.010910
6	50.00000	2.68810	2.65957	.028530
7	40.00000	2.18580	2.14615	.039650
8	30.00000	1.68420	1.63273	.051470
9	20.00000	1.15130	1.11931	.031990
10	10.00000	.63470	.60589	.028810
11	.00000	.04100	.09247	-.051470

STATIC ERROR BAND [TYPE 1,TEST NO. 5]

DATE 9/30/66 TITLE POST HIGH TEMPERATURE
BAROMETRIC PRESSURE LINE ITEM W92J P/N 1B38808-1 S/N 8
OUTPUT LOAD S.O. 5879-6502 E.W.O. 27743 T.C.D. IT06935
OBSERVER RICHARDS ENGINEER BERING MODEL NO. DSV-4B

	PERCENT FULL SCALE	REFERENCE CALIB	MAXIMUM ERROR PT	ACTUAL DEVIATION	PERCENT DEVIATION	
1	100.000000	5.056507	5.180500	.123993	2.434687	*
2	90.000000	4.557477	4.683000	.125523	2.515346	*
3	80.000000	4.058447	4.176800	.117353	2.351629	*
4	70.000000	3.559417	3.682700	.123283	2.470459	*
5	60.000000	3.060387	3.189700	.129313	2.591294	*
6	50.000000	2.561357	2.688100	.126743	2.539794	*
7	40.000000	2.062327	2.185800	.123473	2.474267	*
8	30.000000	1.563297	1.684200	.120903	2.422767	*
9	20.000000	1.064267	1.154900	.090633	1.816190	*
10	10.000000	.565237	.636400	.071163	1.426033	
11	.000000	.066207	.041000	-.025207	-.505113	

FULL SCALE = 4.99030 MAX DEVIATION[ACT] = .12931 MAX DEVIATION[PERCENT] = 2.59129

MISSILE & SPACE SYSTEMS DIVISION
DOUGLAS AIRCRAFT COMPANY, INC.

DATA SHEET

FORM 30-830 (7-65)

T M R 5812

DATE 10-1-66 POST THERMAL SHOCK TEST PAGE C 08

SUBJECT PRESSURE TRANSDOCER

TEST NO. W92J S.O. 5879-6502 E.W.O. 27743 T.C.D. ~~D.R.O.~~ ITO 6935 MODEL NO. DSV-4B

OBJECT OF THIS DATA

OBSERVER R. McCOMMON LABORATORY G & C ENGINEER MADISON

GTP: W92J P/N: 1B38508-1 S/N: 8

Weight: N.A Oz.

Dimensions: L N.A In. H N.A In. DIA. N.A In.

INSULATION RESISTANCE

Pin A to Case 12K MEG Ohms
Pin B to Case 4K MEG Ohms
Pin C to Case 5K MEG Ohms
Pin D to Case 7K MEG Ohms
Pin F to Case 10K MEG Ohms
Pin G to Case 9K MEG Ohms

Pin E Case Ground ✓ (✓)

AUTOMATIC CHECKOUT

Load 100K Ohms
27 VDC to Pin F 1.0042 Volts
27 VDC to Pin G 4.0048 Volts

ISOLATION RESISTANCE

Pin A to C N.A. Ohms
Pin A to D N.A Ohms
Pin B to C N.A Ohms
Pin B to D N.A Ohms

SHORTED INPUT PAIR A & B TO SHORTED OUTPUT PAIR C & D = 10 K MEGOHMS

COMMENTS

FORM NO. 30-830 (REV. 6-66)

DATA SHEET

DATE 10-1-66 POST THERMAL SHOCK TEST REPORT NO. T M R 5812

PART NO. 1B38508-1 CHG. LTR. S/N. 8 LINE ITEM W92J

S.O. 5879-6502 E.W.O. 27743 T.C.D. 1T06935 MODEL NO. DSV-4B

OBSERVER R. McCOMMON LABORATORY EE-G&C ENGINEER C. BERING

PRESSURE CALIBRATION PERFORMED.

RECORD OF RESULTS NOT AVAILABLE.

FORM NO. 30-830 (REV. 6-66)

DATA SHEET

DATE 10-1-66 HUMIDITY TEST REPORT NO. T M R 5812

PART NO. 1B38508-1 CHG. LTR. S/N. 8 LINE ITEM W92J

S.O. 5879-6502 E.W.O. 27743 T.C.D. IT06935 MODEL NO. DSV-4B

OBSERVER A. RICHARDS LABORATORY G&C ENGINEER BERING

AUTOMATIC CHECKOUT

	27 VDC TO PIN F	27 VDC TO PIN G
CYCLE #1	1.0006 VDC	4.0034 VDC
CYCLE #2	.9986 VDC	4.0038 VDC
CYCLE #3	.9951 VDC	4.0016 VDC
CYCLE #4	.9996 VDC	4.0029 VDC
CYCLE #5	1.0003 VDC	4.0036 VDC
CYCLE #6	.9982 VDC	4.0024 VDC
CYCLE #7	.9965 VDC	4.0011 VDC
CYCLE #8	.9974 VDC	4.0015 VDC
CYCLE #9	.9967 VDC	4.0006 VDC

OUTPUT LOAD 100K OHMS

DATA SHEET

FORM 30-830 (7-65)

MISSILE & SPACE SYSTEMS DIVISION
DOUGLAS AIRCRAFT COMPANY, INC.

T M R 5812

DATE 10-4-66 POST ENVIRONMENTAL TEST PAGE C101

SUBJECT PRESSURE TRANSDUCER

TEST NO. W92J S.O. 5879-6502E W.O. 27743 ~~B.R.O.~~ ITO 6935 MODEL NO. DSV-4B

OBJECT OF THIS DATA

OBSERVER C. NELSON LABORATORY EE-G&C ENGINEER C. BERING

GTP: W92J P/N: 1B38508-1 S/N: 8

Weight: N.A Oz.

Dimensions: L N.A In. H N.A In. DIA. N.A In.

INSULATION RESISTANCE

Pin A to Case 10K MEG Ohms

Pin B to Case 6K MEG Ohms

Pin C to Case 10K MEG Ohms

Pin D to Case 10K MEG Ohms

Pin F to Case 10K MEG Ohms

Pin G to Case 10K MEG Ohms

Pin E Case Ground ✓ (✓)

AUTOMATIC CHECKOUT

Load 100K Ohms

27 VDC to Pin F 1.0045 Volts

27 VDC to Pin G 4.0060 Volts

ISOLATION RESISTANCE

Pin A to C N.A Ohms PINS AB TO PINS CD 9K MEGOHMS

Pin A to D N.A Ohms

Pin B to C N.A Ohms

Pin B to D N.A Ohms

COMMENTS

DATE 10/04/66 TITLE POST ENVIRONMENTAL
BAROMETRIC PRESSURE . LINE ITEM W92J P/N 1838508-1 S/N 8
OUTPUT LOAD 100K S.O. 5879-6502 E.W.O. 27743 T.C.D. 1T06935
OBSERVER MC COMMON ENGINEER MADISON MODEL NO. DSV-48

REPEATABILITY

FULL SCALE = 4.980300 MAXIMUM REPEATABILITY = .004300
PER CENT = .086340

POINT	PERCENT	PSIA	TRIAL A	TRIAL B	TRIAL C	DIFFERENCES
1	100.00	.30	5.007300	5.006200	.000000	.001100
2	90.00	.27	4.555500	4.555000	.000000	.000500
3	80.00	.24	4.093700	4.091600	.000000	.002100
4	70.00	.21	3.613300	3.611600	.000000	.001700
5	60.00	.18	3.127600	3.129300	.000000	.001700
6	50.00	.15	2.634700	2.633700	.000000	.001000
7	40.00	.12	2.135700	2.137600	.000000	.001900
8	30.00	.09	1.645900	1.647500	.000000	.001600
9	20.00	.06	1.116200	1.120500	.000000	.004300
10	10.00	.03	.608900	.609700	.000000	.000800
11	.00	.00	.027000	.026800	.000000	.000200

0/04/66 POST ENVIRONMENTAL TRIAL A
LINE ITEM W92J P/N 1838508-1 S/N 8

CHEBYSHEV CURVE FIT

MAX. LINE DEV. = .6240500001E-01
FULL SCALE = 4.980300 PER CENT = .1253036966E 01

SLOPE = .4980300000001E-01
INTERCEPT = .8940499998 43E-01

POINT	INPUT X	INPUT Y1	OUTPUT F	RESIDUAL Y1-F
1	100.00000	5.00730	5.06970	-.062405
2	90.00000	4.55550	4.57167	-.016175
3	80.00000	4.09370	4.07364	.020055
4	70.00000	3.61330	3.57561	.037685
5	60.00000	3.12760	3.07758	.050015
6	50.00000	2.63470	2.57955	.055145
7	40.00000	2.13570	2.08152	.054175
8	30.00000	1.64590	1.58349	.062405
9	20.00000	1.11620	1.08546	.030735
10	10.00000	.60890	.58743	.021465
11	.00000	.02700	.08940	-.062405

0/04/66 POST ENVIRONMENTAL TRIAL B
LINE ITEM W92J P/N 1838508-1 S/N 8

CHEBYSHEV CURVE FIT

MAX. LINE DEV. = .6344000000E-01
FULL SCALE = 4.980300 PER CENT = .1273818846E 01

SLOPE = .4979400000000E-01
INTERCEPT = .9023999999941E-01

POINT	INPUT X	INPUT Y1	OUTPUT F	RESIDUAL Y1-F
1	100.00000	5.00620	5.06964	-.063440
2	90.00000	4.55500	4.57170	-.016700
3	80.00000	4.09160	4.07376	.017840
4	70.00000	3.61160	3.57582	.035780
5	60.00000	3.12930	3.07788	.051420
6	50.00000	2.63370	2.57994	.053760
7	40.00000	2.13760	2.08200	.055600
8	30.00000	1.64750	1.58406	.063440
9	20.00000	1.12050	1.08612	.034380
10	10.00000	.60970	.38818	.021520
11	.00000	.02680	.09024	-.063440

STATIC ERROR BAND (TYPE 1,TEST NO. 61)

DATE 10/04/66 TITLE POST ENVIRONMENTAL
BAROMETRIC PRESSURE . LINE ITEM N92J P/N 1B38608-1 S/N B
OUTPUT LOAD 100K S.O. 5879-6502 E.W.O. 27743 T.C.O. 1T06935
OBSERVER MC COMMON ENGINEER MADISON MODEL NO. DSV-4B

	PERCENT FULL SCALE	REFERENCE CALIB	MAXIMUM ERROR PT	ACTUAL DEVIATION	PERCENT DEVIATION	
1	100.000000	5.056607	5.006200	-.050307	-1.008089	
2	90.000000	4.557477	4.555000	-.002477	-.049630	
3	80.000000	4.058447	4.093700	.035253	.706437	
4	70.000000	3.559417	3.613300	.053883	1.079761	
5	60.000000	3.060387	3.129300	.068913	1.380946	
6	50.000000	2.561357	2.634700	.073343	1.469718	
7	40.000000	2.062327	2.137600	.075273	1.508393	*
8	30.000000	1.563297	1.647500	.084203	1.687340	*
9	20.000000	1.064267	1.120500	.056233	1.126833	
10	10.000000	.565237	.609700	.044463	.890995	
11	.000000	.066207	.026800	-.039407	-.789665	

FULL SCALE = 4.99030 MAX DEVIATION[ACT] = .08420 MAX DEVIATION[PERCENT] = 1.68734

0105

IDEP FORM NO. 1A. 9-62 IDEP

TM R 5812

C 108

REPORT SUMMARY SHEET

1. COMPONENT/PART NAME PER GENERIC CODE TRANSDUCER, PRESSURE GAS, VOLTAGE	2. PROGRAM OR WEAPON SYSTEM SATURN	3. TEST COMPL. DAY 4 MO. 9 YR. 66 REPT. COMPL. DAY 8 MO. 12 YR. 66
4. ORIGINATOR'S REPORT TITLE QUALIFICATION TEST FOR TRANSDUCER PRESSURE, LOW ABSOLUTE P/N 1B38508-1	5. ORIGINATOR'S REPORT NO. TM-DSV-4B-EE-R-5812	
	6. TEST TYPE, ETC. QUALIFICATION	

7. THIS TEST (SUPERSEDES) (SUPPLEMENTS) REPORT NO:

8 ITEM	8A. PART TYPE, SIZE, RATING, LOT, ETC.	9. VENDOR	10. VENDOR PART NO.	11. IND./GOV. STD. NO.	12 TOTAL TESTED
1	S/N's 4, 8, 9, and 10	Rosemount Eng. Co.	800E11A4	None	4
2					
3					
4					(OVER)

13. INTERNAL SPECS. ETC REQ'D TO UTILIZE REPT.		ENCL	SENT WITH REPORT NO.	14. MIL. SPECS./STDS. REFERENCED IN 15C	
A	None		None	D	None
B				E	
C				F	

15A. 8 ITEM	TEST OR ENVIRONMENT	C PER SPEC	D SPEC. PARAGRAPH/ METHOD/CONDITION	E TEST LEVELS, DURATION AND OTHER DETAILS	F NO. TESTED	G NO. FAILED
	PRE- AND POST ENVIRONMENTAL		Insulation Resistance, automatic electrical checkout, pressure calibration		4	0
	LOW TEMPERATURE		-100°F for four hours, with the voltage output monitored and an automatic checkout performed every 10 minutes.		4	0
	HIGH TEMPERATURE		+100°F for four hours with the output monitored and an automatic checkout performed every 30 minutes.		4	0
	EMI		As reported in TM-R-5716.		1	0
	THERMAL SHOCK		Temperature stabilized at -100°F with input pressure at .30 psia. Transferred to a temperature of +100°F within 5 minutes		4	0
	HUMIDITY		Stabilized at +84°F temperature and 95% humidity. Temperature was raised to +155°F over a two hour period then decreased to 84°F over a 4-hour period. This constituted one cycle which was repeated for 9 cycles.		4	2
					(OVER)	

16. SUMMARY OF REPORT, NATURE OF FAILURES AND CORRECTIVE ACTIONS TAKEN:

The transducers were subjected to room temperature, EMI, high temperature, low temperature, thermal shock and humidity. Two units were rejected and sent back to the vendor because of continued degradation of electrical output in the negative direction. The other two units were out-of-tolerance with respect to end points and repeatability throughout the test. Vibration, shock, and leakage tests were performed under GTP W93E and the results are presented in TM-R-5737.

(OVER)

21. REPT. NO. 852.50.85

17. TESTED BEYOND VENDOR CATALOG SPECIFICATIONS	YES	18. VENDOR INFORMED OF TEST RESULT BY: LETTER	CY OF REP'T	ORAL	19. SIGNED	20. CONTRACTOR	SUBCONTRACTOR
		X		X		DOUGLAS AIRCRAFT CO	

REPRODUCTION OR DISPLAY OF THIS MATERIAL FOR SALES OR PUBLICITY PURPOSES IS PROHIBITED