(103)

5/18/64

.003
9.3

SATURN S-IV STAGE PROPELLANT

TANK STRUCTURAL ANALYSIS

(PRELIMINARY)

DOUGLAS REPORT SM-42569

MARCH 25, 1964

MISSILE & SPACE SYSTEMS DIVISION
DOUGLAS AIRCRAFT COMPANY, INC.
SANTA MONICA/CALIFORNIA

FACILITY FORM 602

N70-75935 (ACCESSION NUMBER)

(THRU)

507 (PAGES)

NONE (CODE)

CR-113271 (NASA CR OR TMX OR AD NUMBER)

(CATEGORY)

DOUGLAS

60-987 (3-62)

SATURN S-IV STAGE PROPELLANT TANK STRUCTURAL ANALYSIS (PRELIMINARY)

Model DSV-4

December 1963
Douglas Report SM-42569

Prepared by Saturn Strength Section

Prepared for the National Aeronautics and Space Administration under NASA Contract NAS7-1

Initial Release dated 12-11-63

"A" Change dated 3-25-64

SPACE SYSTEMS ENGINEERING | MISSILE & SPACE SYSTEMS DIVISION
DOUGLAS AIRCRAFT COMPANY, INC.

SM 42569

ABSTRACT

The Saturn S-IV stage propellant tank stress analysis is presented in this report. This analysis covers the basic design and design changes which were made from the initiation of the program, May 1960 to December 1963. The report includes the stress analysis methods, material property curves and the resulting margins of safety. All critical conditions of flight and ground loads for vehicles SA-5 through SA-10 are analyzed including the interaction effects of thermal gradients and discontinuity stresses.

Descriptors

Saturn

S-IV Stage

Propellant Tank

Structure

Analysis

TABLE OF CONTENTS

Section		Page
1	Introduction	1.0
	S-IV Stage Configuration	1.0
	Analysis Conditions	1.0
	Design Criteria	1.1
	Loading Conditions	1.4
	Margin of Safety Table	1.5
	References	1.7
2	Allowables and Material Properties	2.0
3	Forward Liquid Hydrogen Tank Dome	3.0
4	Liquid Hydrogen Tank Cylinder	4.0
5	Aft Tank Dome	5.0
6	Common Bulkhead Assembly	6.0
7	Forward Dome - Cylindrical Tank Joint	7.0
8	Miscellaneous Joints	8.0
	Forward Interstage-Forward Liquid Hydrogen Dome Joint	8.1
	Aft Skirt-Aft Liquid Oxygen Dome Joint	8.2
	Common Dome Joint	8.3
	Thrust Structure - Aft Dome Joint	8.4
9	Cutouts and Openings	9.0
	Forward Dome - Liquid Hydrogen Vent Joint	9.1
	Liquid Hydrogen Manhole	9.2
	Liquid Oxygen Sump	9.3
10	Equipment	10.0
	Cold Helium Bottle Installation	10.1
	Liquid Oxygen Fill Line	10.2
	Liquid Oxygen Level Sensing Probe	10.3
	Liquid Hydrogen Level Sensing Probe	10.4
	Liquid Oxygen Vent Line	10.5
11	Liquid Oxygen Anti-Slosh Baffle	11.0
Appendix I		
	Static Tests Summary	I.0
Appendix II		
	Typical Tank Outlet Tests	II.0

SM4-569

TABLE OF CONTENTS

Section	Page
Appendix III	
General Methods	III.0
Sandwich Structure Stresses	III.1
Membrane Analysis	III.2
Forward Interstage-Forward Liquid Hydrogen Dome Joint	III.3
Forward Dome - Cylinder Joint	III.4
Aft Skirt - Aft Liquid Oxygen Dome Joint	III.5
Common Dome Joint	III.6
Thrust Structure - Aft Dome Joint	III.7
Liquid Hydrogen Manhole	III.8
Liquid Oxygen Sump	III.9

FORM 25-S-9 (REV. 4-51)

PREPARED BY ——— DOUGLAS AIRCRAFT COMPANY PAGE V

DATE ——— MSSD DIVISION MODEL DSV-4

TITLE SATURN S-IV PROPELLANT TANK REPORT NO. SM42569

REVISION SHEET

CHANGE LETTER	DATE	CHANGED BY	CHECKED BY	PAGES CHANGED	PAGES ADDED	BRIEF REASON	APPR. BY	APPR. BY
A	3-25-64	STRENGTH SECTION		i iv v 1.5 1.6 1.10 2.18 2.19 2.20 3.5 3.9 5.26 5.33 5.34 8.1.2 8.1.17 8.1.19 8.1.22 8.2.23 8.3.2 8.3.26 8.3.27 8.3.29 8.3.30 8.3.32 8.4.2 9.3.0 9.3.1 9.3.2 10.1.0 I.1 II.0	9.3.4 9.3.5 9.3.6 9.3.7 9.3.8 9.3.9 9.3.10 9.3.11 9.3.12 9.3.13 9.3.14 9.3.15 9.3.16 9.3.17 9.3.18 9.3.19 9.3.20 9.3.21 9.3.22 9.3.23 I.2 III.9.0 III.9.1 III.9.2 III.9.3 III.9.4 III.9.5 III.9.6 III.9.7 III.9.8 III.9.9 III.9.10 III.9.11 PAGES DELETED I.3	TO CLARIFY, SUPPLEMENT AND UPDATE ANALYSIS	JE 3-25-64	3-25-64

SM42569

INTRODUCTION

The Saturn S-IV propellant tank is a divided container, one compartment sized for 17,000 pounds of liquid hydrogen and the other compartment for 83,000 pounds of liquid oxygen. The tankage serves a dual purpose; it acts as a pressure vessel and it also performs as a primary load carrying structure. Liquid hydrogen tank insulation, to prevent excess bulk temperature rise, is an integral part of the hydrogen tank and is permanently attached to the tank wall interior.

S-IV STAGE CONFIGURATION

The propellant tank is 220 inches in diameter and 330 inches in length. It consists of a cylindrical section, forward and aft hemispherical domes, and a hemispherical common bulkhead, Page 1.2 and 1.3. Thin wall aluminum construction is utilized throughout with integral waffle stiffening for the external load carrying portions. A honeycomb sandwich common bulkhead separates the liquid hydrogen and liquid oxygen tank. This bulkhead retards the heat transfer between the tanks and is capable of withstanding both positive and reverse pressures.

ANALYSIS

The S-IV Propellant Tank being an integral part of the vehicle load carrying structure is analyzed for the vehicle loads that are transferred from the aft interstage and thrust structure to the forward interstage as well as for the tank pressure conditions. The critical loads are obtained from various ground conditions as well as S-I and S-IV powered flight and burn-out conditions (Reference Page 1.4).

The tank is analyzed, using the most critical loads, for its ability to withstand internal pressure, external loads and thermal stresses. The minimum margins of safety determined throughout this analysis are shown on Pages 1.5 and 1.6. The material allowables and properties used in calculating these margins of safety are presented in Section 2.

SUMMARY

The loading conditions used in this analysis are taken from various MSFC and DAC documents (Reference Page 1.4). Future changes in loads or structural configurations will be analyzed and made as addendums to this report.

DESIGN CRITERIA

The propellant tank was designed to both pressure vessel criteria and primary structure criteria.

Pressure Vessel

1. Proof Pressure = 1.10 x (maximum relief value pressure + hydro-static head)
2. Yield Pressure = 1.10 x (proof pressure)
3. Burst Pressure = 1.35 x (maximum relief value pressure + hydro-static head)

Primary Structure

1. Yield factor of safety = 1.10
2. Ultimate factor of safety = 1.35

The minimum margin of safety of either yield or ultimate conditions is the design margin.

SATURN S-IV PROPELLANT TANK

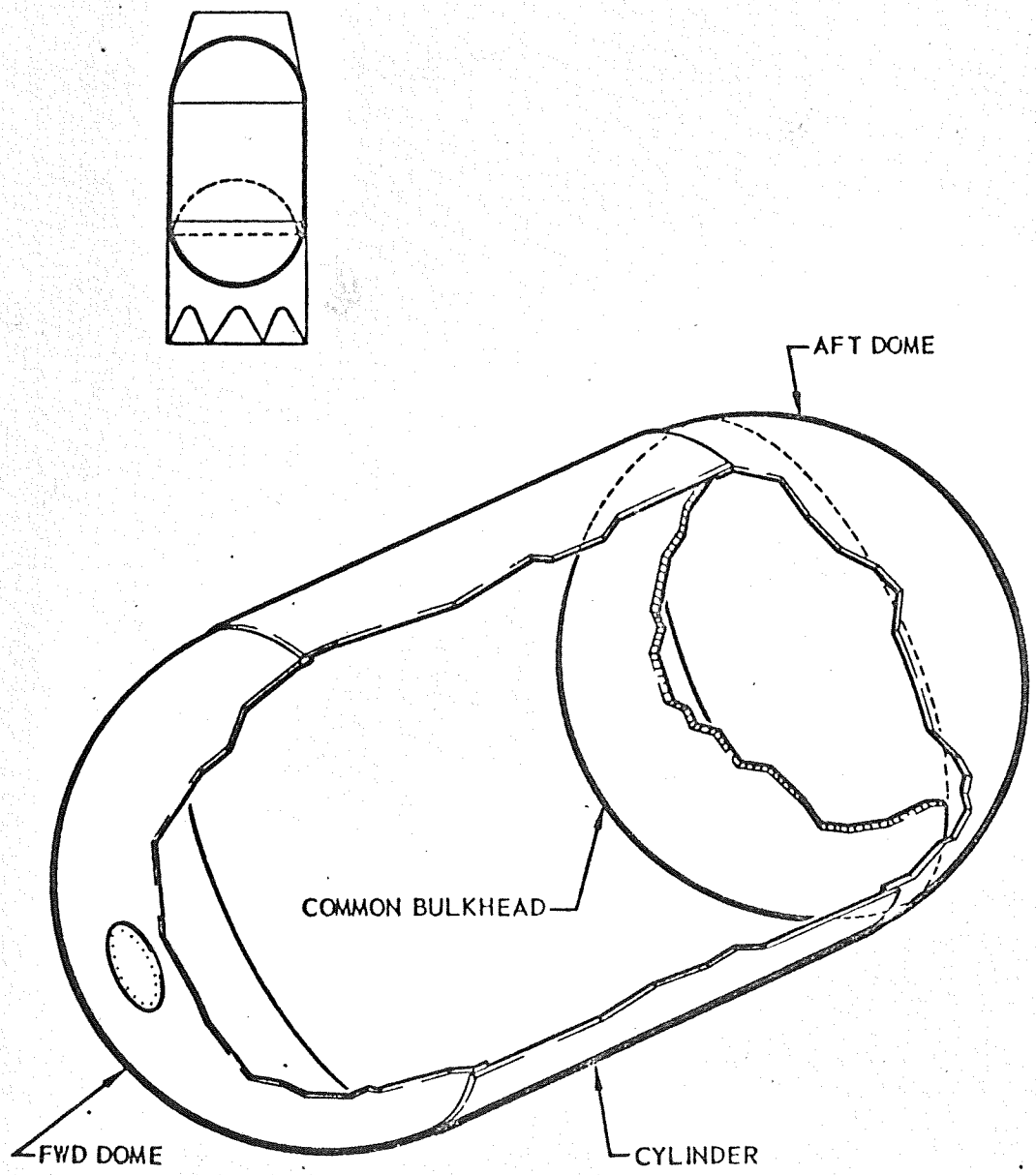

SM 42569

SM 42569

TANK ASSEMBLY (5863801)

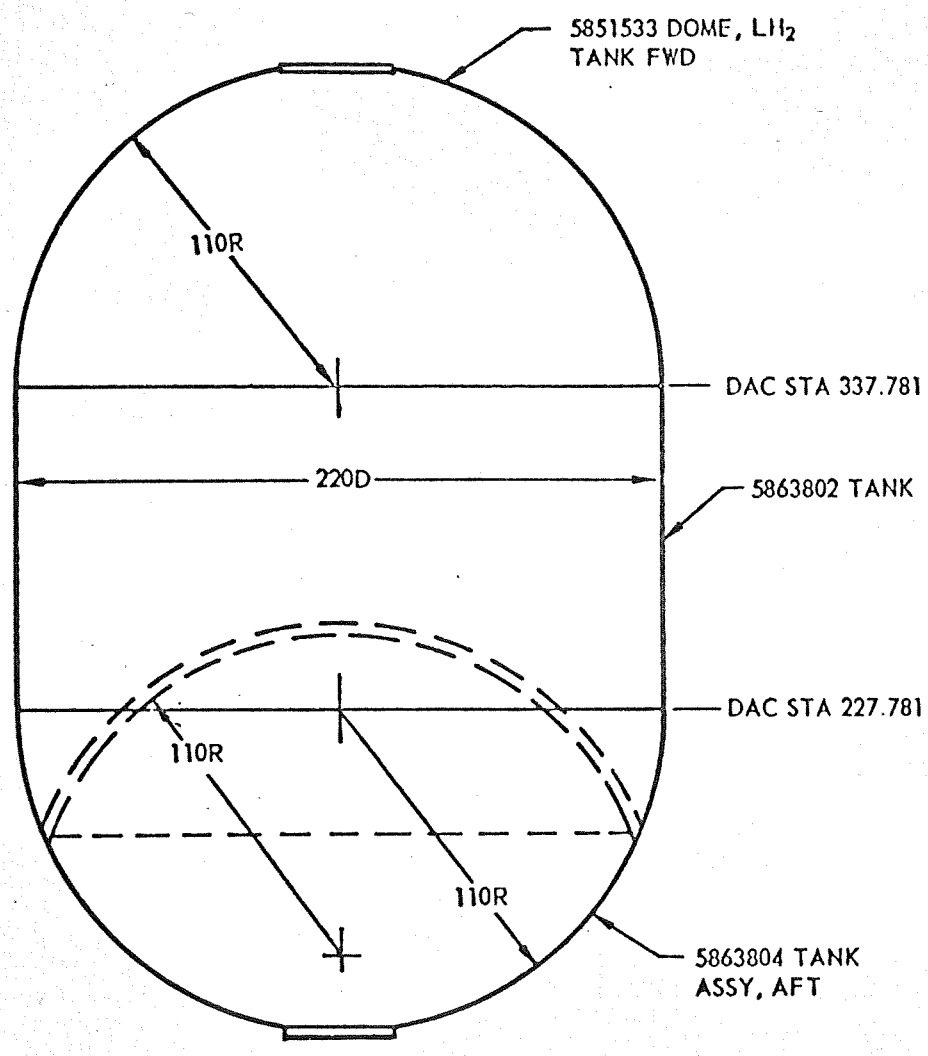

LOADING CONDITION

The S-IV propellant tank was analyzed for all critical flight and ground conditions, these being:

1. Various filling and pressurization conditions.
2. Ground wind conditions.
3. S-I powered flight.
4. S-I burn-out.
5. S-IV powered flight.
6. S-IV burn-out.
7. Loads imposed by attached equipment during various flight conditions.

The above load conditions were taken from References 9, 26, 27, 28 and 29.

FORM 36-930 (REV. 8-49)

REV. 3/25/64

Analysis

Prepared by

Date

DOUGLAS AIRCRAFT COMPANY, INC.

PLANT	LOCATION	DIVISION
H. B.	3	MSSD

Model DSV-4

Report No. SM-42569

SM-42569

MARGINS OF SAFETY

PAGE	DRAWING NO.	CHANGE	TITLE	DESIGN CONDITION	TYPE OF STRESS	NET MARGIN SAFETY
3.4	5851533		LH_2 Tank Fwd. Dome	S-IV B O	Tension	.06
3.6	5851533		LH_2 Tank Fwd. Dome	Ground Wind	Comb	.32
4.4	5863802		Tank Assy, Cyl.	Flight	Tension	.002
4.4	5863803		Tank Segment, Cyl.	Flight	Tension	.002
5.31	5851947		Segment Hemi. Seg Aft	S-I B O	Tension	.001
5.31	5851948		Segment	S-I B O	Tension	.001
5.31	5851950		Segment	S-I B O	Tension	.001
5.31	5851951		Segment	S-I B O	Tension	.001
5.31	5851952		Segment	S-I B O	Tension	.001
5.31	5863804		Tank Assy, Aft	S-I B O	Tension	.001
5.31	5863805		Dome Assy, Aft Tank	S-I B O	Tension	.001
6.9	3863808		Dome Seg. Fwd, C. B.	LH_2 Thermal Shock	Tension	.004
6.9	3863810		Dome Seg. Aft, C. B.	LO_2 L&P	Tension	.02
6.9	5863806		Com Blkhd Assy, Tank	LH_2 Thermal Shock	Tension	.004
6.9	5863807		Fwd. Dome Assy Common Bulkhead	LH_2 Thermal Shock	Tension	.004
6.9	5863809		Aft Dome Assy Common Bulkhead	LO_2 L&P	Tension	.02
8.1.20	5851533		Dome, LH_2 Tank Fwd.	Flight	Comb.	.04
8.1.20	5851906		Segment, Fwd. Dome	Flight	Comb.	.04
8.1.20	5851907		Segment, Hemi. Dome	Flight	Comb.	.04
8.1.20	5863948		Segment Hemispherical Dome	Flight	Comb.	.04
8.3.27	S-2851899		Tee	LO_2 L&P	Comb.	.67
8.3.30	S-2851898		Angle	LH_2 L&P	Comb.	1.05
9.1.47	3851873		Ftg, Weld, Fuel Vent & Ring	LH_2 Vent	Comb.	High
9.2.21	3864247		LH_2 Tank Door Instl.	S-IV C. O.	Comb.	.14

FORM 88-539 (REV. 8-48)

REV. 3/25/64

Analysis

Prepared by

Date

DOUGLAS AIRCRAFT COMPANY, INC.

PLANT: H. B. | LOCATION: 3 | DIVISION: MSSD

Model DSV-4

Report No. SM-42569

SM-42569

MARGINS OF SAFETY

PAGE	DRAWING NO.	CHANGE	TITLE	DESIGN CONDITION	TYPE OF STRESS	NET MARGIN SAFETY
9.3.23	3863911		LOX Sump Joint	S-I C.O.	Tension	.10
9.3.23	5863805		LOX Sump Joint	S-I C.O.	Tension	.09
9.3.23	5863950		LOX Sump Joint	S-I C.O.	Tension	.07
10.2.11	1A21768		Flange	LO_2 Fill	Tension	.18
10.2.11	5851772		Inst., LO_2 Tank Comp.	LO_2 Fill	Tension	.18
10.2.15	4886228		Bracket, Fill Line, LO_2	LO_2 Fill	Comp.	2.95
10.3.2	5871234		Support LO_2 P.U. Probe	Flight	Comp.	.50
10.4.2	1A27599		Link, Connect, Fuel Sensor	Flight	Bending	High
10.4.4	1A27598		Bracket, Angle	Flight	Bending	.34
10.4.6	1A27592		Strut Inst. Fuel Sensor	Flight	Comp.	.29
10.4.6	1A27593		Strut Assy.	Flight	Comp.	.29
10.4.7	1A27596		Clevis, Fuel Sensor, Sup.	Flight	Tension	High
11.2	5864135		Baffle Instl, LOX	LO_2 Slosh	Comp.	.12

REFERENCES

1 Douglas Aircraft Company, Inc., A2-260-S/TNS-61-272, Saturn S-IV Forward Interstage Temperature Analysis in the Vicinity of the Welded Joint During Ground Hold and Flight, September 19, 1961.

2 Douglas Aircraft Company, Inc., Report SM-36166, Design Methods for Thin Walled Cylinders, Model General, February 18, 1960.

3 Douglas Aircraft Company, Inc., Report SM-38938, Buckling of Spherical Caps Under Uniform External Pressure, Model General, January 1962.

4 Douglas Aircraft Company, Inc., A2-260-S/TNS-61-275, Saturn S-IV Aft Interstage Weld Joint and Vicinity Temperature Analysis, September 21, 1961.

5 Douglas Aircraft Company, Inc., Report SM-41734, Buckling Curve of Truncated Spheres Due to Tensile Edgeloads, Model General, April 13, 1963.

6 Douglas Aircraft Company, Inc., Report SM-38944, Buckling of Sandwich Spherical Caps Under Uniform External Pressures, Model General, April 1962.

7 Hexcel Products, Inc., TSB-112. Hexcel Heat Resistant Phenolic Honeycomb, March 30, 1960.

8 Douglas Aircraft Company, Inc., A2-260-TNS-61-187, Structural Temperatures at the Forward Dome of the Saturn Hydrogen Tank, August 8, 1961.

9 Douglas Aircraft Company, Inc., Report SM-39123, Saturn S-IV Stage Load Analysis, Model DSV-4, July 1962.

REFERENCES

10 Douglas Aircraft Company, Inc., A2-260-TH-61-150, Temperature Study Concerning the Saturn Tank Aft Weld Joint and Vicinity, April 20, 1961.

11 Douglas Aircraft Company, Inc., A2-260-S/PT-63-228, Saturn S-IV Temperature Distribution in the Area of the Common Bulkhead Under Various Ground and Flight Conditions, May 16, 1962.

12 Bijlaard, P.P., Welding Research Council Bulletin No. 49, Cornell University, April 1959.

13 National Bureau of Standards, Cryogenic Materials Data Handbook, March 15, 1961.

14 Bijlaard, P.P., Stresses in Cylindrical Shells Under Local Loading, Welding Research Council Bulletin No. 50, Cornell University, May 1959.

15 Douglas Aircraft Company, Inc., Propulsion Report No. 4-1329, Loads on LO_2 Tank Fill Line Fitting During Fill - 1000 GPM, June 28, 1963.

16 Bijlaard, P.P. Computation of the Stresses from Local Loads in Spherical Pressure Vessels or Pressure Vessel Heads, Welding Research Council Bulletin 34.

17 Douglas Aircraft Company, Inc., A2-260-S/Stre.-62-322, Allowable Weld Stresses for 2014-T6 Aluminum, November 16, 1962.

18 Timoshenko, S.P., and Woinowsky-Krieger, S., Theory of Plates and Shells, McGraw-Hill, 1959.

19 MIL-HDBK-5, Metallic Materials and Elements for Flight Vehicle Structures, Department of Defense, August 1962.

SM42569

REFERENCES

20 ROARK, R. J., Formulas for Stress & Strain, 3rd Edition, McGraw Hill Book Corp., Inc., N. Y., 1954.

21 Douglas Aircraft Company, Inc., A2-260-S/G & C-M-498, Dynamic Pressure Loads on S-IVB Tank Baffle, December 13, 1962.

22 ANC-23 Bulletin Part II, Sandwich Construction for Aircraft, Forest Products Lab., 1955.

23 Douglas Aircraft Company, Inc., Propulsion Report No. 4-1316, Pressure Drop in LO_2 Vent Line Considering Partially Rigidized Line, December 15, 1962.

24 Douglas Aircraft Company, Inc., Propulsion Report No. 4-1316 A, Addendum to Report 4-1316 Pressure Drop in LO_2 Vent Line Considering Partially Rigidized Line, June 6, 1963.

25 Douglas Aircraft Company, Inc., Report DEV-3500 Saturn Welding Allowables for 2014-T6 Aluminum Alloy, September 1961.

26 Marshall Space Flight Center, Memo MP & VE-SL-4-63, Design Loads for Saturn C-I, Block II Vehicle, January 9, 1963.

27 Marshall Space Flight Center, Memo MP & VE-SL-22-63, Flight Loads for Saturn SA-5 Vehicle, February 1, 1963.

28 Douglas Aircraft Company, Inc., A3-860-K441-249, Dynamic Loads on Saturn S-IV Components, November 27, 1963.

29 Douglas Aircraft Company, Inc., Memo A-860-K442-102, Design Loads for Saturn Vehicles, November 26, 1963.

30 Douglas Aircraft Company, Inc., SM-35652, Discontinuity Stresses in Shells, July 3, 1961.

REFERENCES

31 Douglas Aircraft Company, Inc., Design Memo No. 70, Structural Design Criteria S-IV Base Heat Shield, September 12, 1961.

32 Douglas Aircraft Company, Inc., Propulsion Report 4-1255, In Flight Missile Hydrogen Tank Vent System, March 1962.

33 Douglas Aircraft Company, Inc., SM-41704, LH_2 Vent and LOX Fill Fitting Test, March 1964.

34 Douglas Aircraft Company, Inc., SM-46565, Structural Investigation of S-IV Cold Helium Sphere Installation, March 1964.

35 Douglas Aircraft Company, Inc., A2-260-S/STRE-62-322, Allowable Weld Stresses for 2014-T6 Aluminum, November 16, 1962.

36 Hanson, M. P.; Stickley, G. W.; and Richards, H. T., Sharp-Notch Behavior of Some High-Strength Sheet Aluminum Alloys and Welded Joints, June, 1960.

2.0 ALLOWABLES AND MATERIAL PROPERTIES

The allowable and material property curves which are presented in this section were derived from many sources, i.e., MIL-HDBK -5, NBS Cryogenic Handbook, DACo test data, etc. The welding allowable curves presented on Pages 2.5, 2.6, 2.7, and 2.8 have been superseded by allowables shown in Reference 17. The analysis was originally based upon these lower allowables and has not been revised. All stress (σ) strain (ε) curves were derived from basic material data using Ramberg-Osgood equations. The Secant Modulus of Elasticity (Esec) versus stress values were than obtained from the stress strain curves. The material used in the fabrication of the S-IV vehicle will meet or exceed 99% conformance to the allowables presented in this section with a 90% confidence level.

Unless otherwise noted in the text, all material allowables and properties, used in the analysis, were taken from this Section.

ALLOWABLE SHEAR AND TENSION LOAD
BB-316-8-8 BLIND BOLT

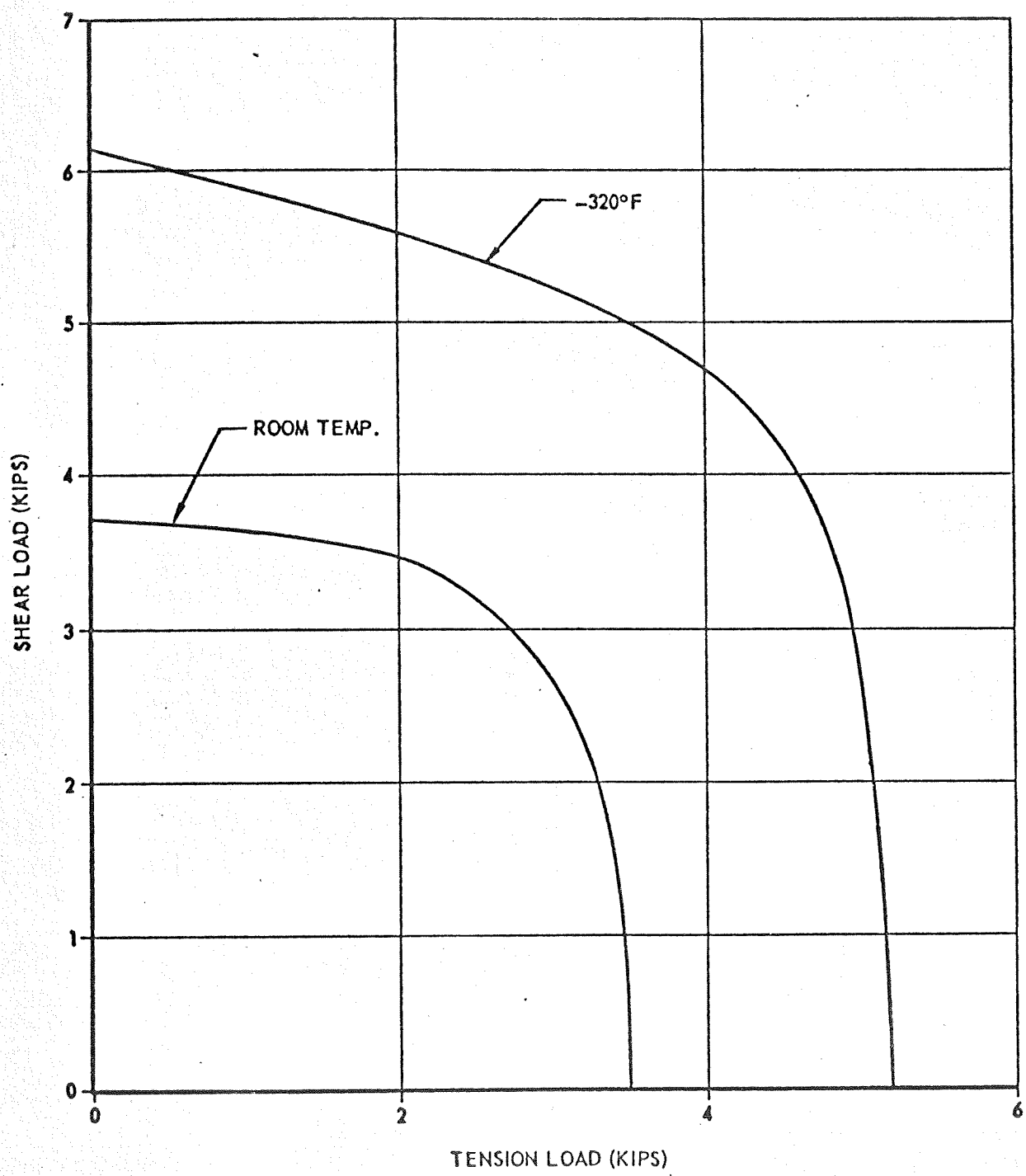

Ref. Structural Test Results
(Report Pending)

SM 42569

ALLOWABLE SHEAR AND TENSION LOAD
10LP-T8-10WD LOCKBOLT

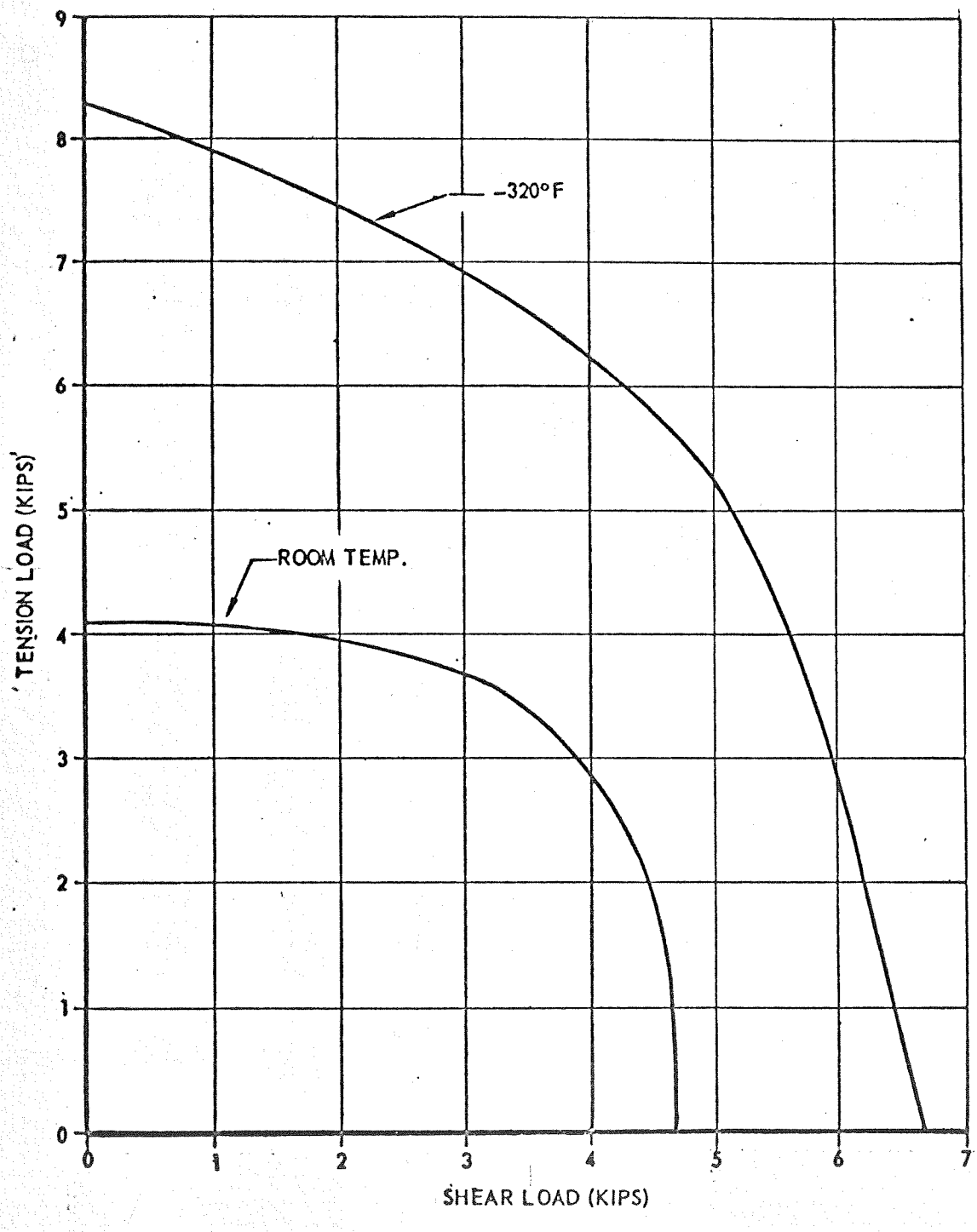

Ref. Structural Test Results

(Report Pending)

MECHANICAL PROPERTIES
OF 2014-T6 ALUMINUM
ALLOY SHEET

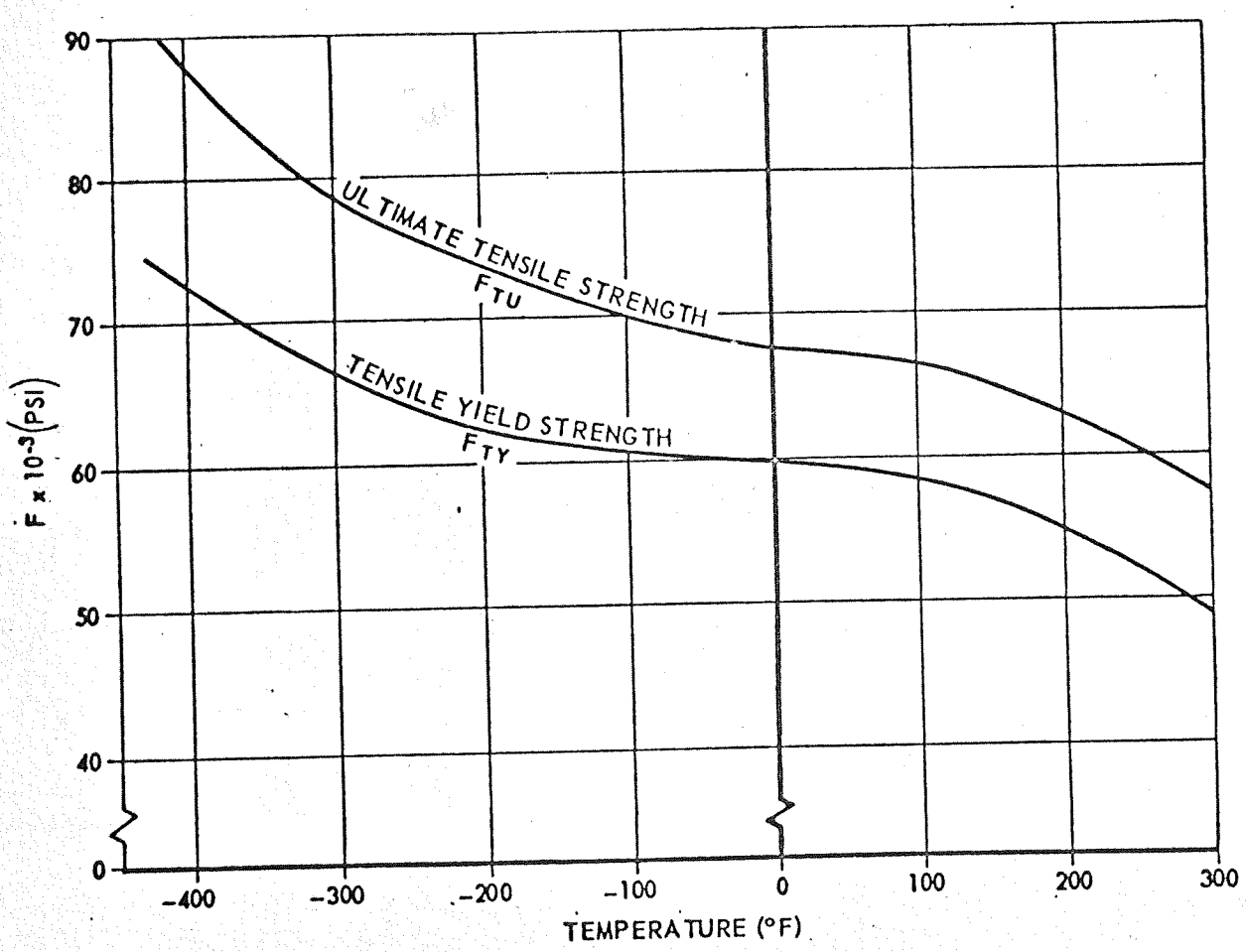

REF. 19

MECHANICAL PROPERTIES
OF 2014-T6 ALUMINUM
ALLOY SHEET

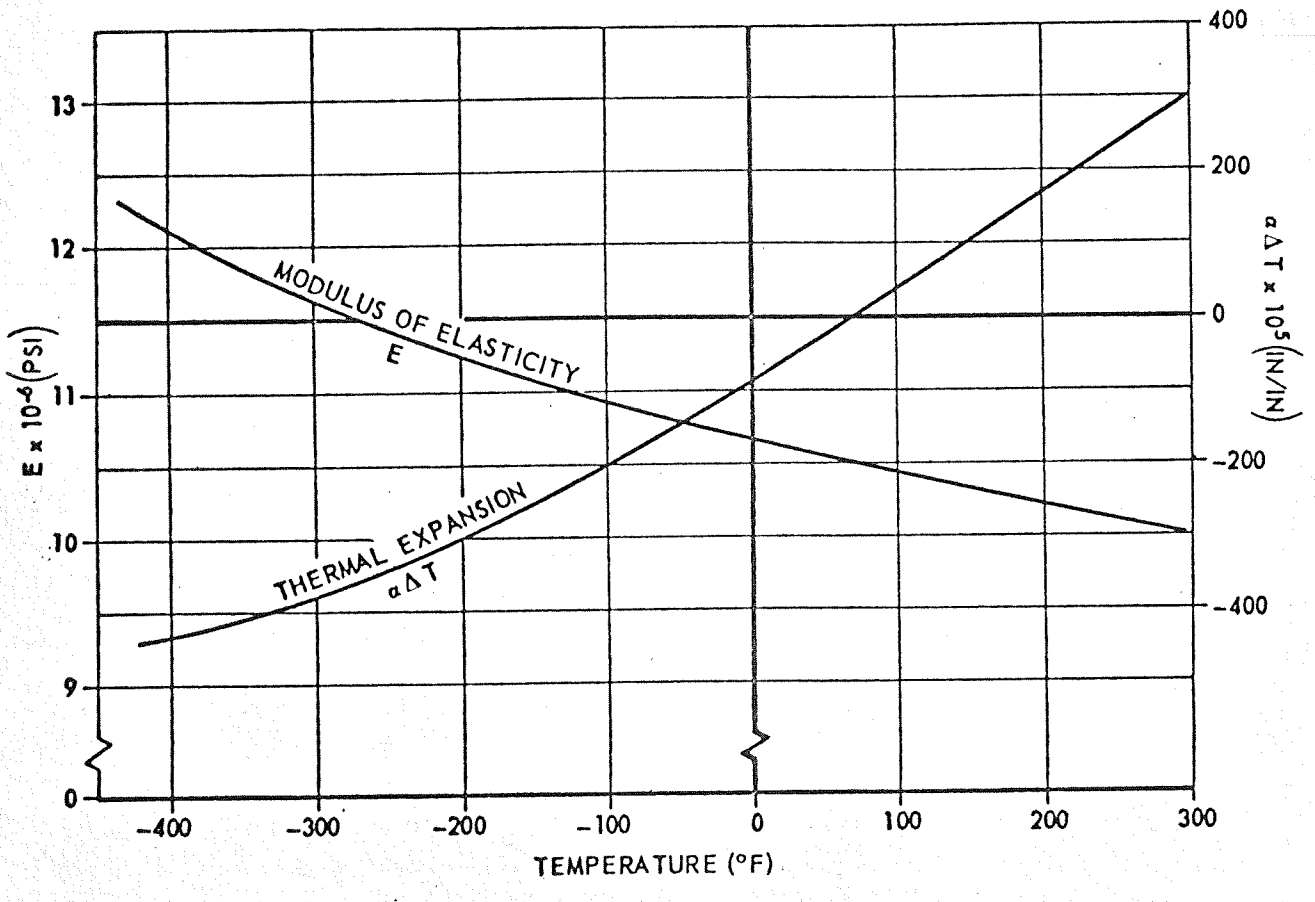

REF. 19

SM 42569

MECHANICAL PROPERTIES
OF 2014-T6 ALUMINUM
BUTT WELDS-4043 WELD
FILLER METAL

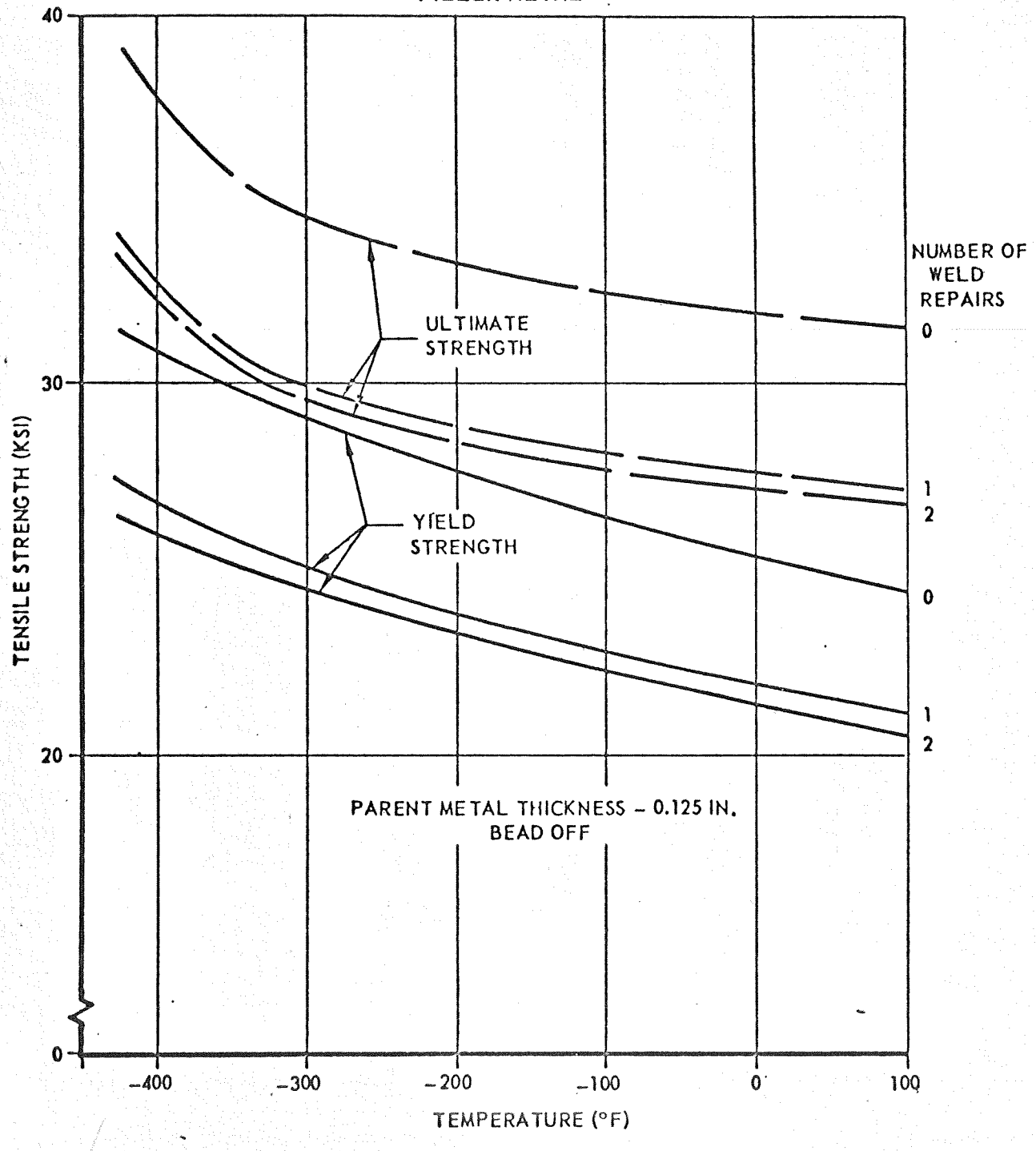

Ref. 25

SM 42569

MECHANICAL PROPERTIES
OF 2014-T6 ALUMINUM
BUTT WELDS-4043 WELD
FILLER METAL

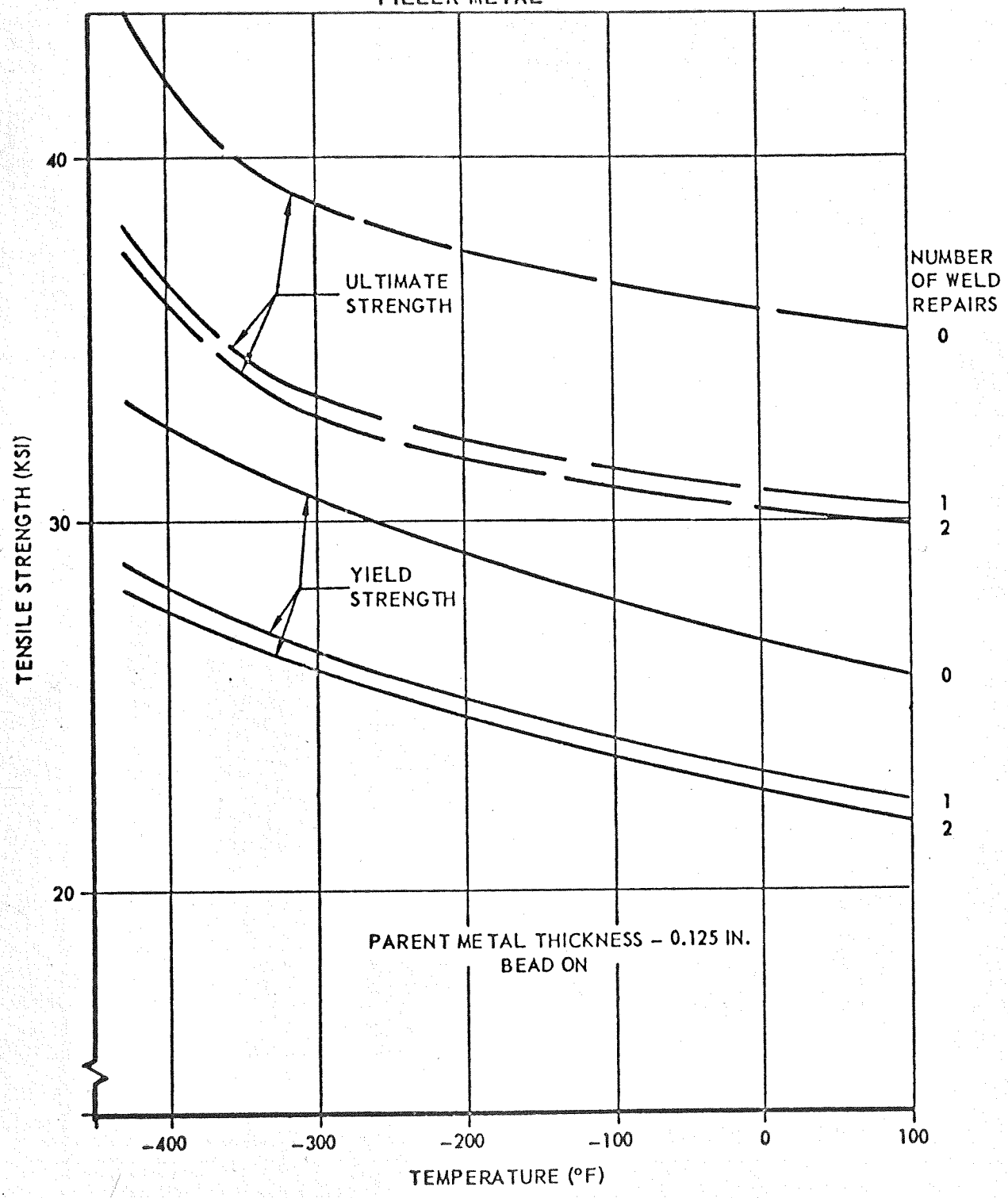

Ref. 25

MECHANICAL PROPERTIES
OF 2014-T6 ALUMINUM
BUTT WELDS–4043 WELD
FILLER METAL

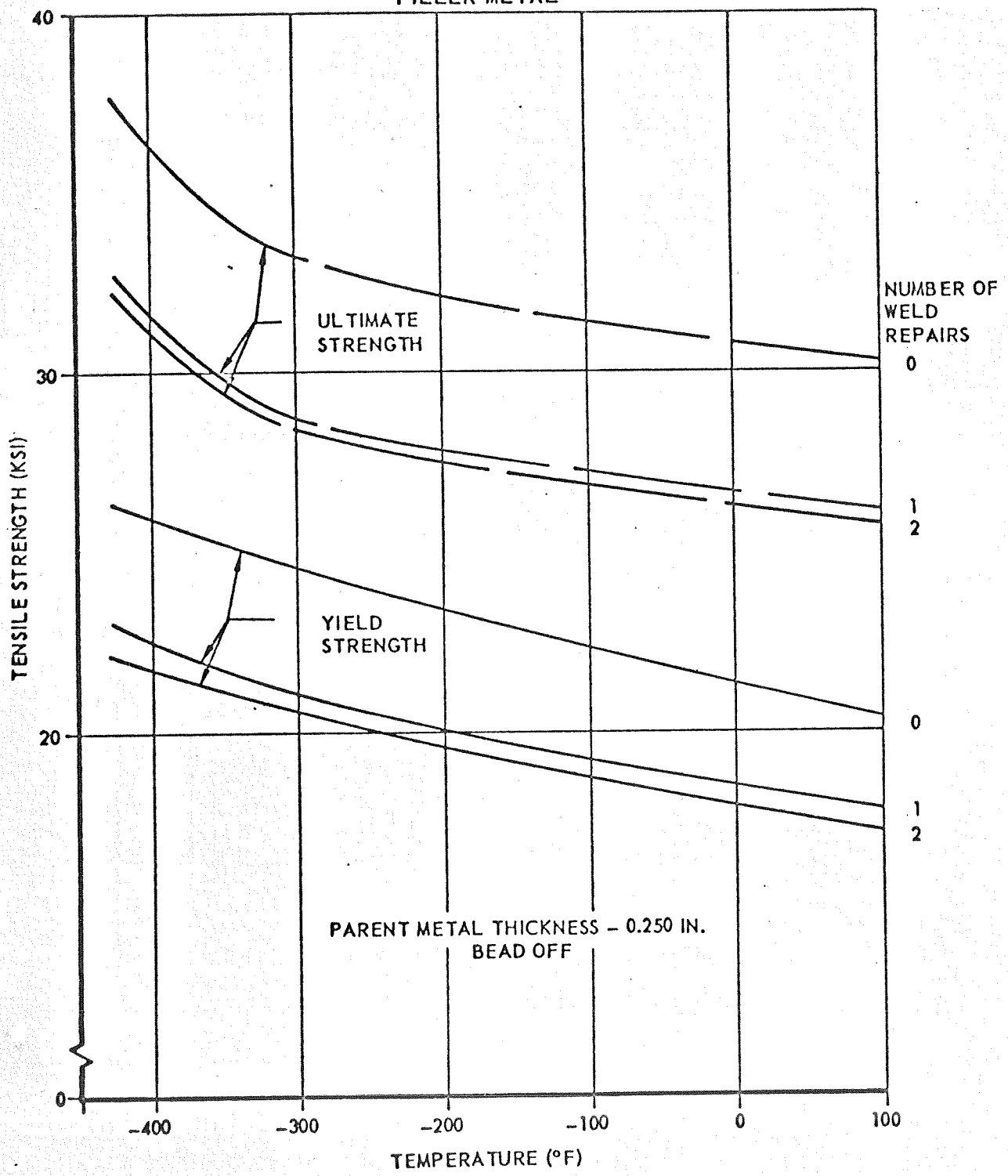

Ref. 25

S M 42569

SM 42569

MECHANICAL PROPERTIES
OF 2014-T6 ALUMINUM
BUTT WELDS–4043 WELD
FILLER METAL

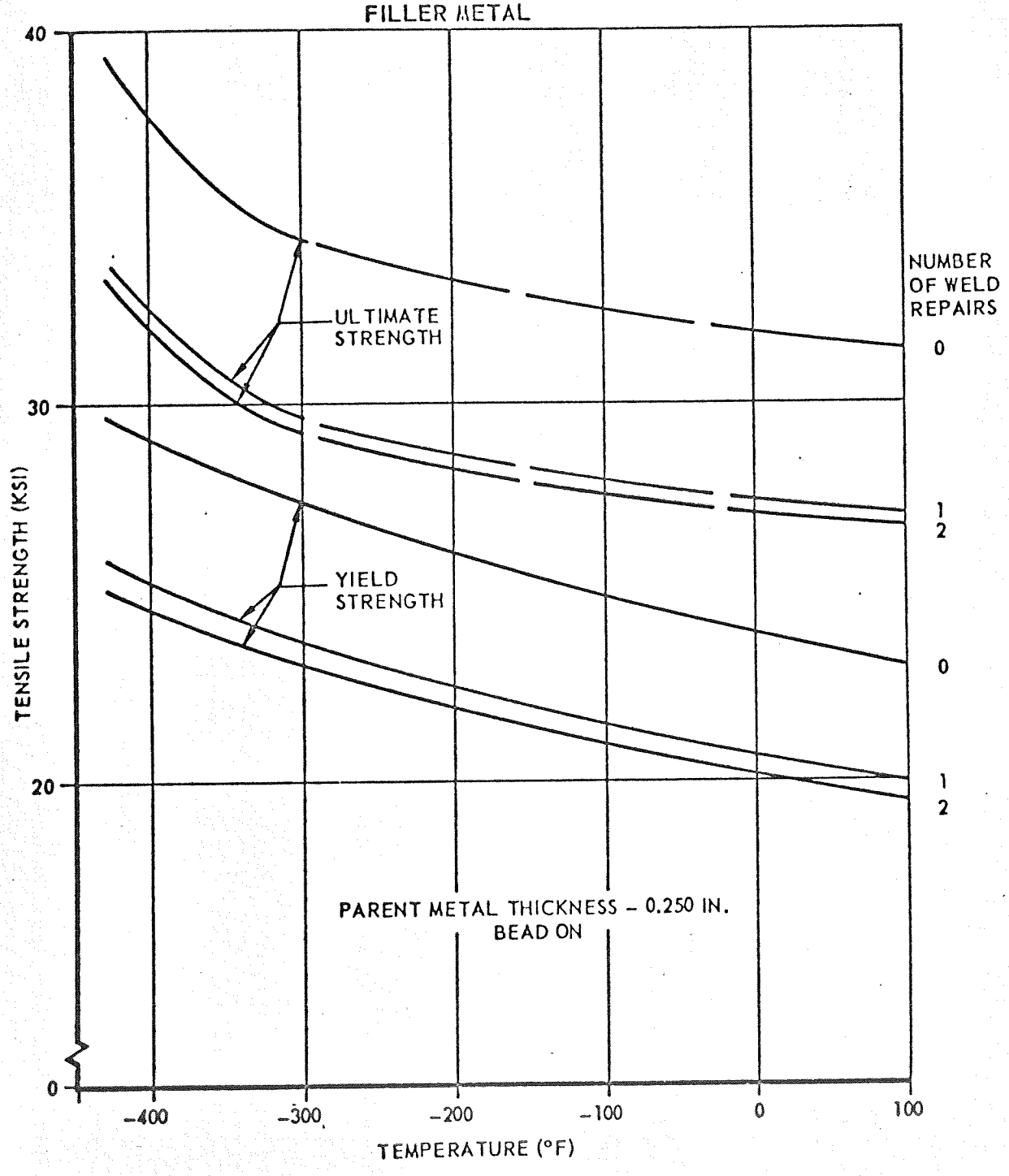

Ref. 25

SM 42569

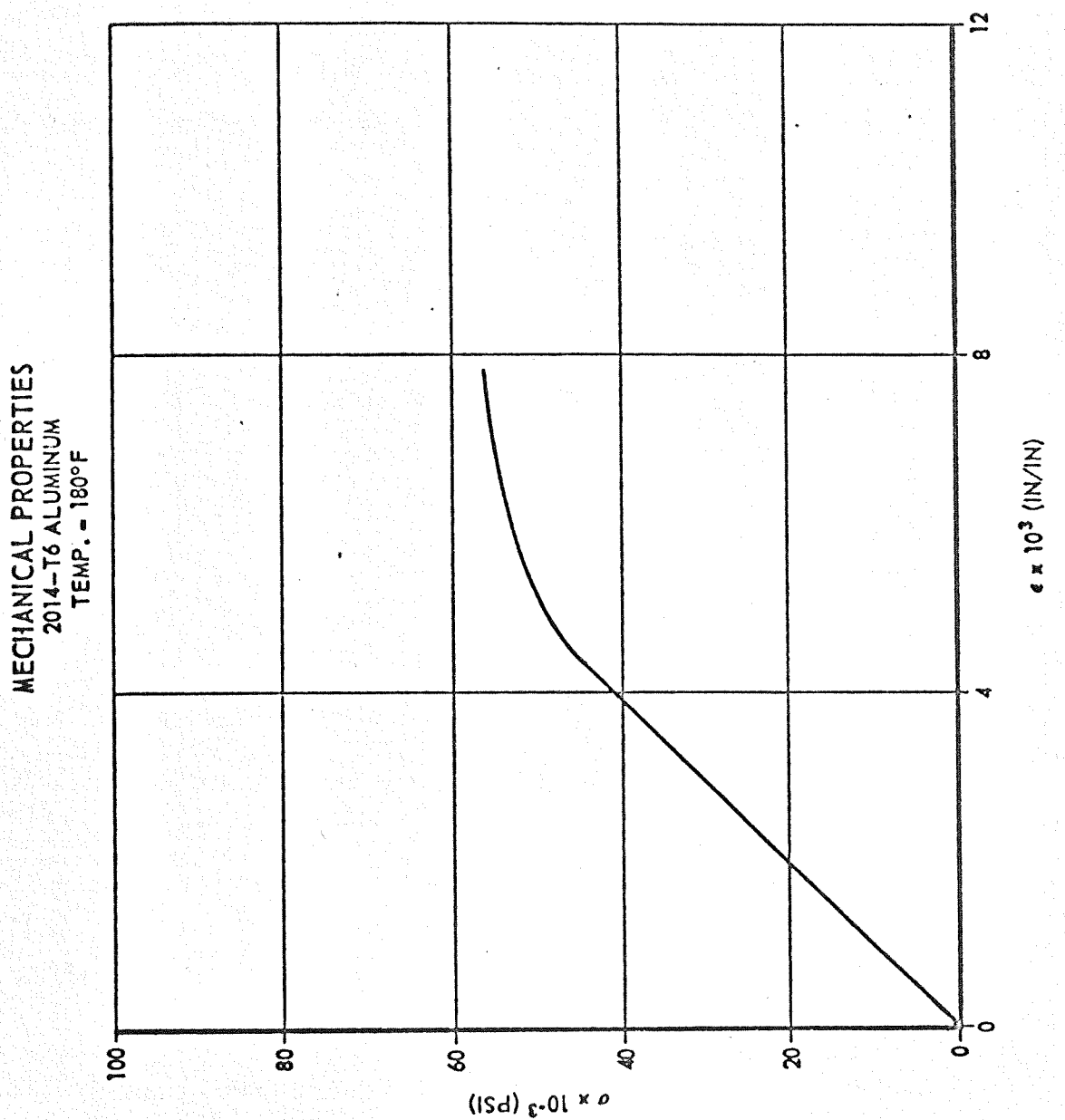

DEVELOPED BY RAMBERG OSGOOD

EQUATIONS REF. PAGE 2.0

S M 42569

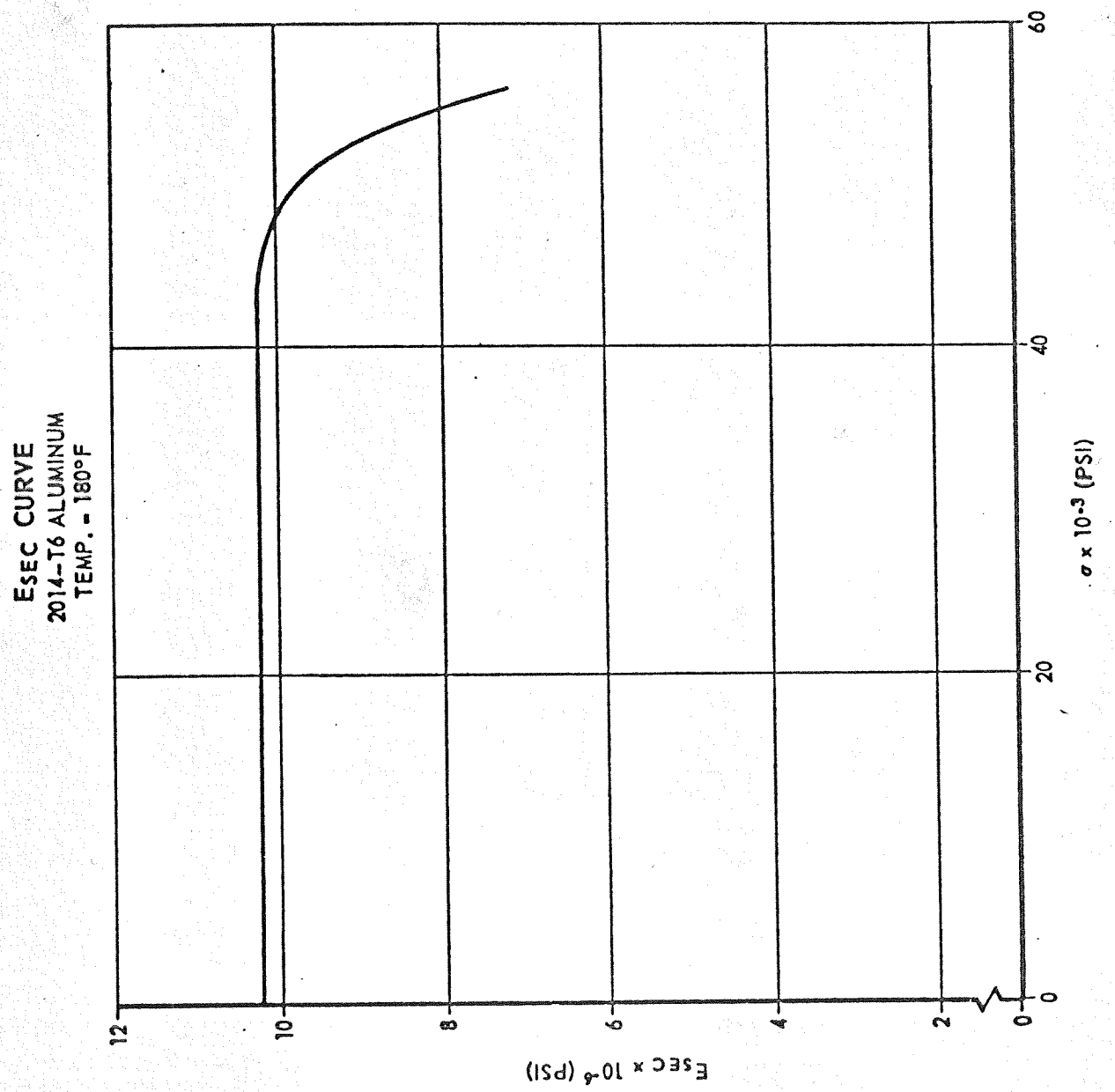

DEVELOPED BY RAMBERG OSGOOD
EQUATIONS REF. PAGE 2.0

SM 42569

MECHANICAL PROPERTIES

2014-T6 ALUMINUM
TEMP = + 120°F

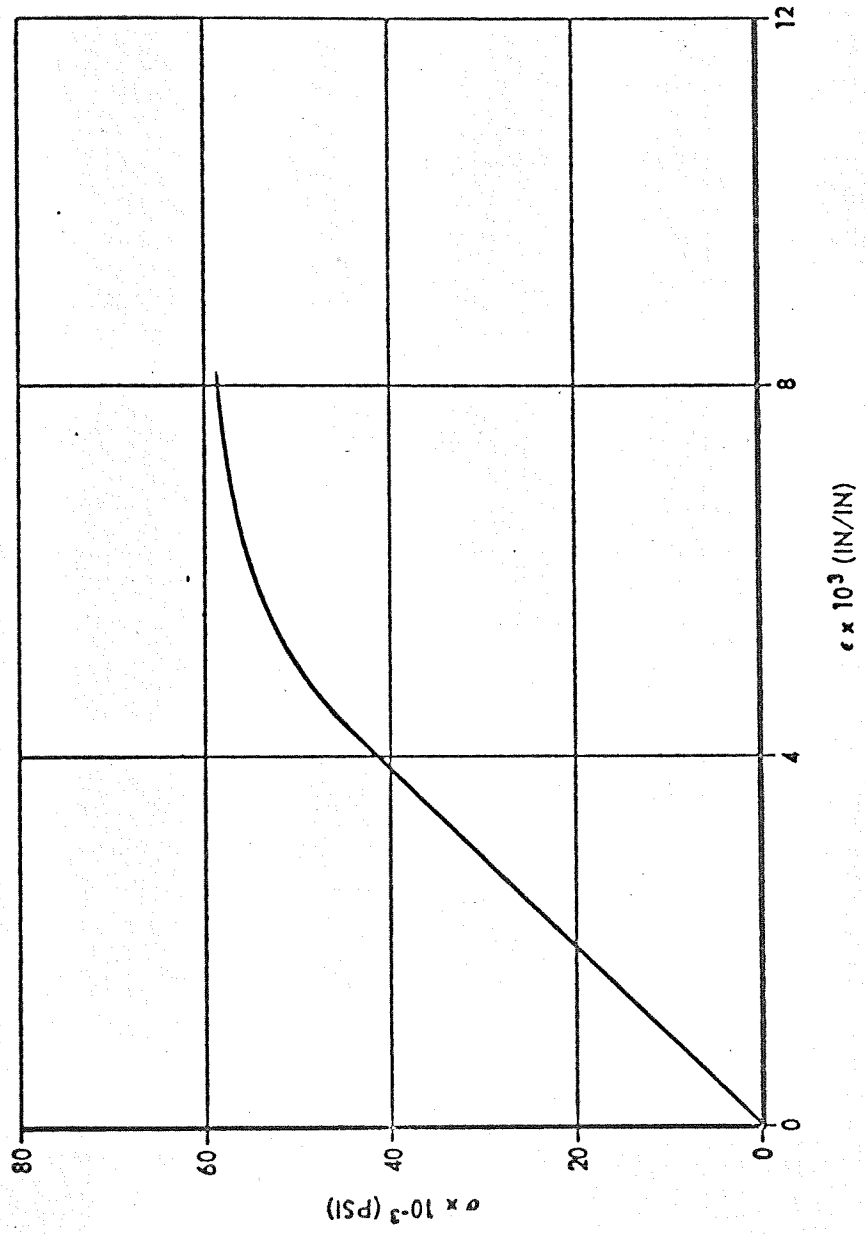

DEVELOPED BY RAMBERG OSGOOD
EQUATIONS REF. PAGE 2.0

S M 4 2 5 6 9

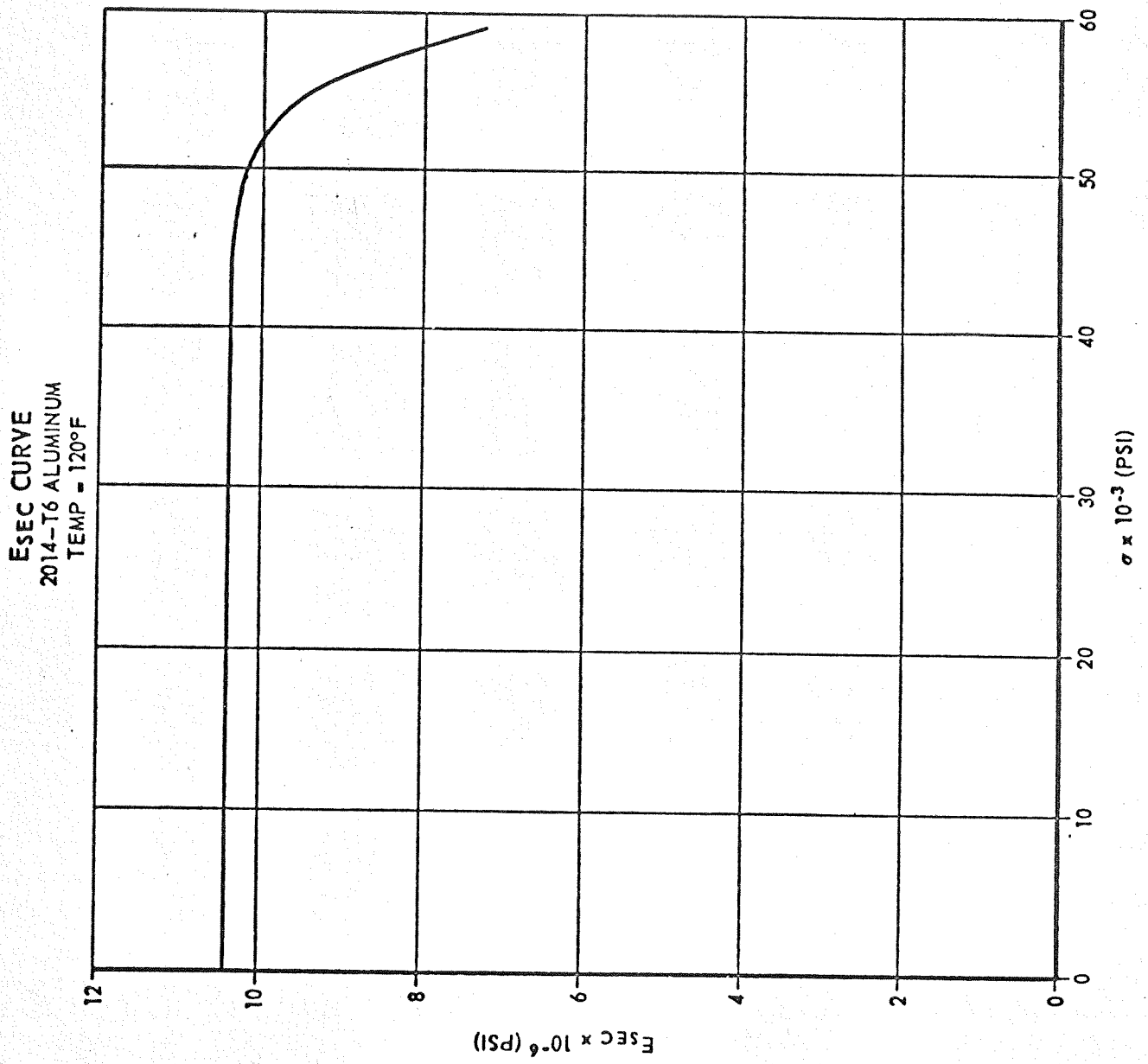

DEVELOPED BY RAMBERG OSGOOD

EQUATIONS REF. PAGE 2.0

S M 42569

MECHANICAL PROPERTIES

2014-T6 ALUMINUM
TEMP = -75°F

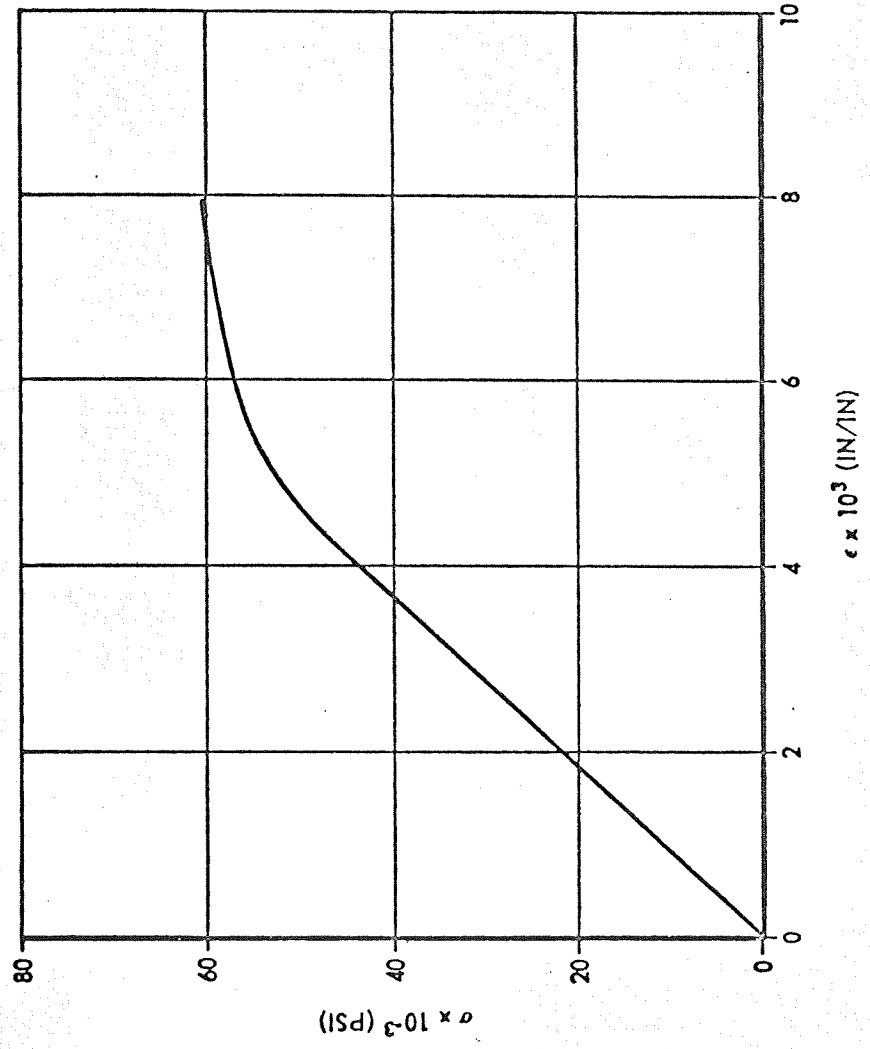

DEVELOPED BY RAMBERG OSGOOD

EQUATIONS REF. PAGE 2.0

SM 42569

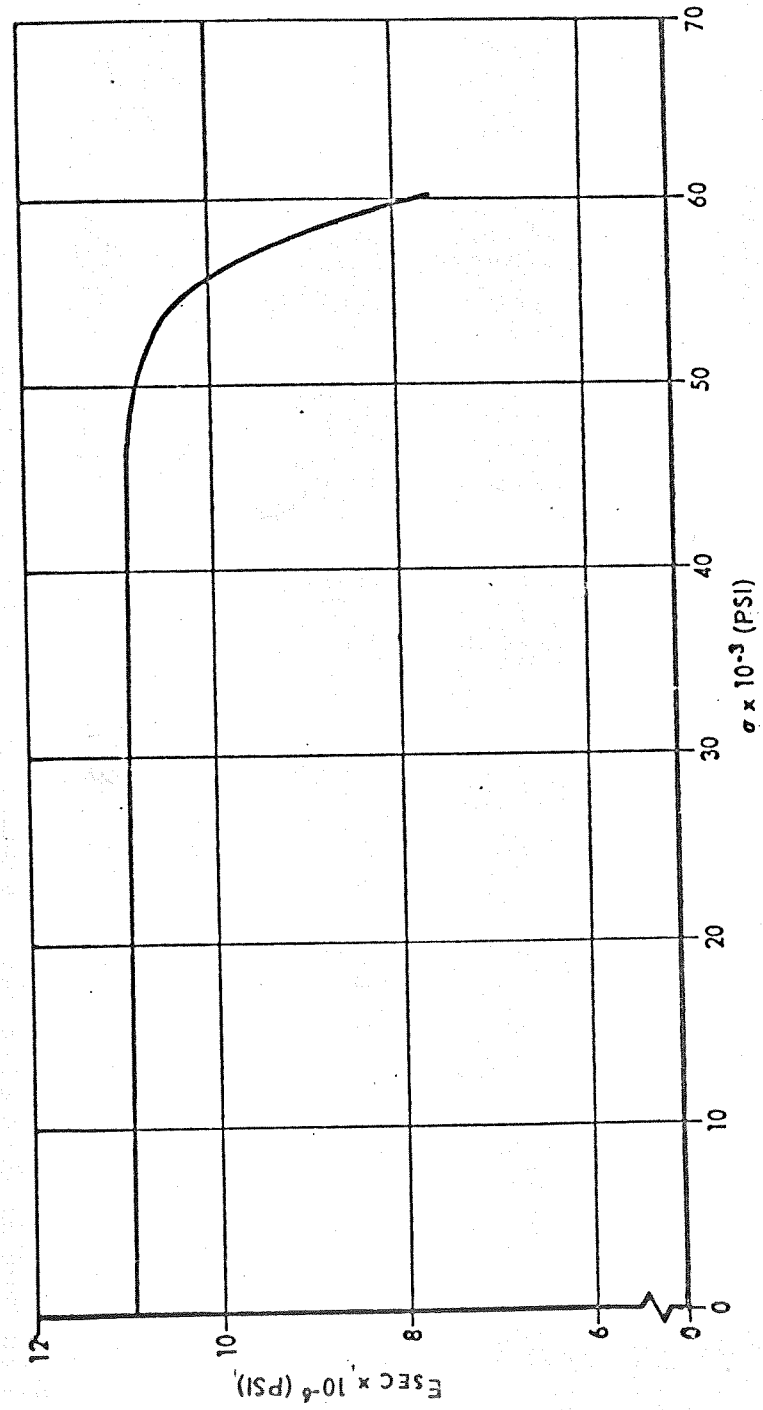

DEVELOPED BY RAMBERG OSGOOD

EQUATIONS REF. PAGE 2.0

MECHANICAL PROPERTIES
2014-T6 ALUMINUM
TEMP. = −200°F

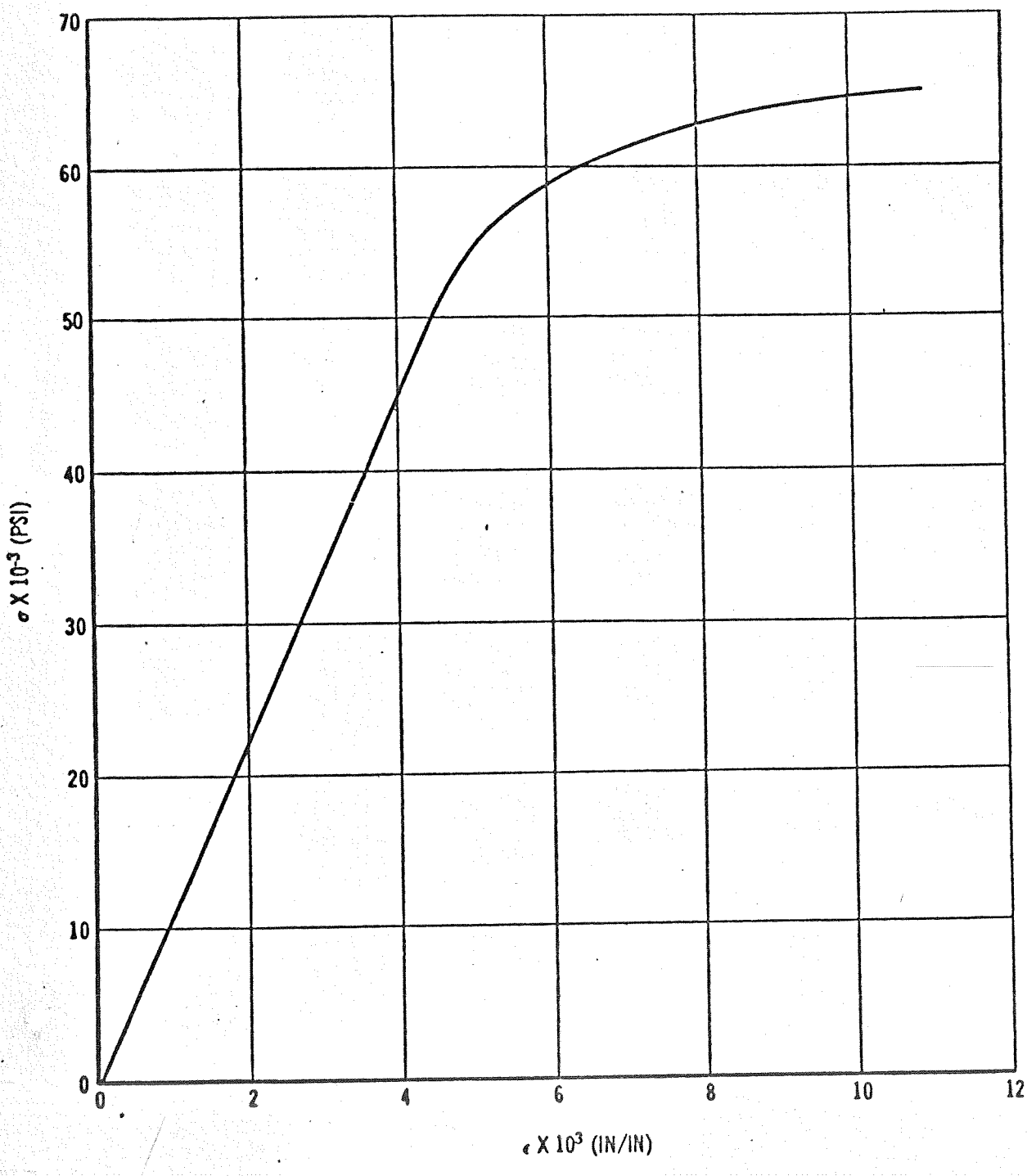

DEVELOPED BY RAMBERG OSGOOD
EQUATIONS REF. PAGE 2.0

SM42569

ESEC CURVE
2014-T6 ALUMINUM
TEMP. = -200°F

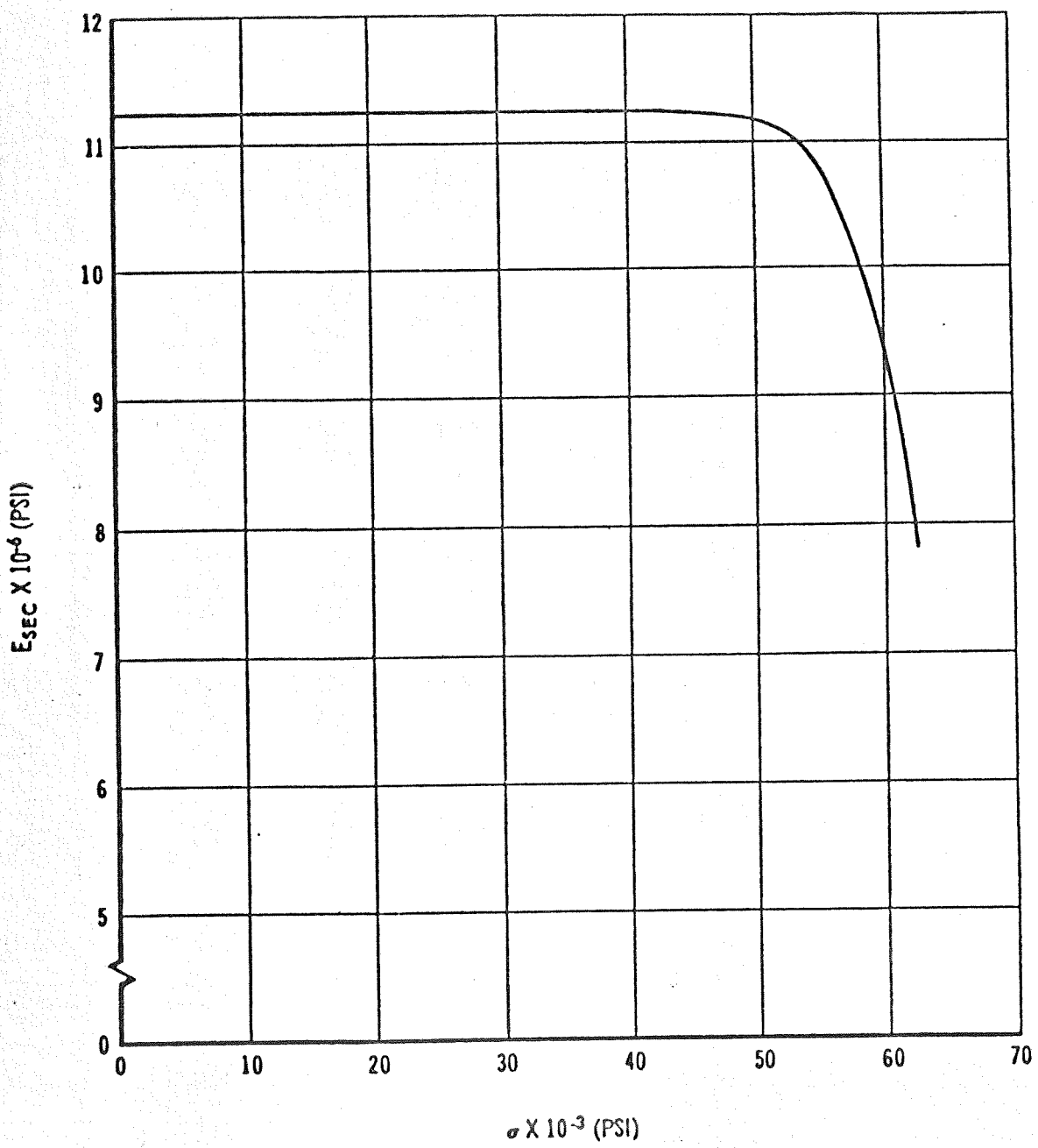

SM 42569

DEVELOPED BY RAMBERG OSGOOD
EQUATIONS REF. PAGE 2.0

MECHANICAL PROPERTIES
2014–T6 ALUMINUM
TEMP = –298°F

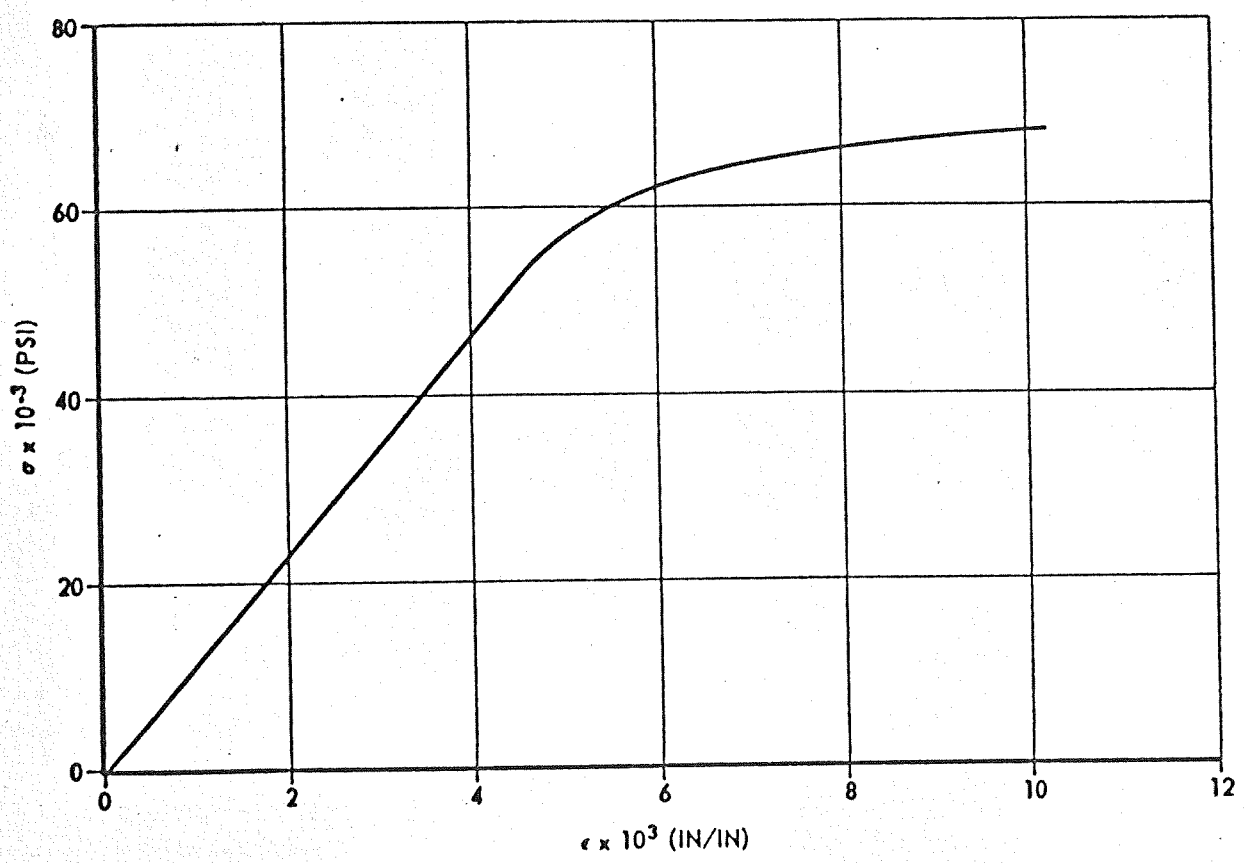

DEVELOPED BY RAMBERG OSGOOD

EQUATIONS REF. PAGE 2.0

REV. 3/25/64

SM 42569

ESEC CURVE
2014-T6 ALUMINUM
TEMP = -298°F

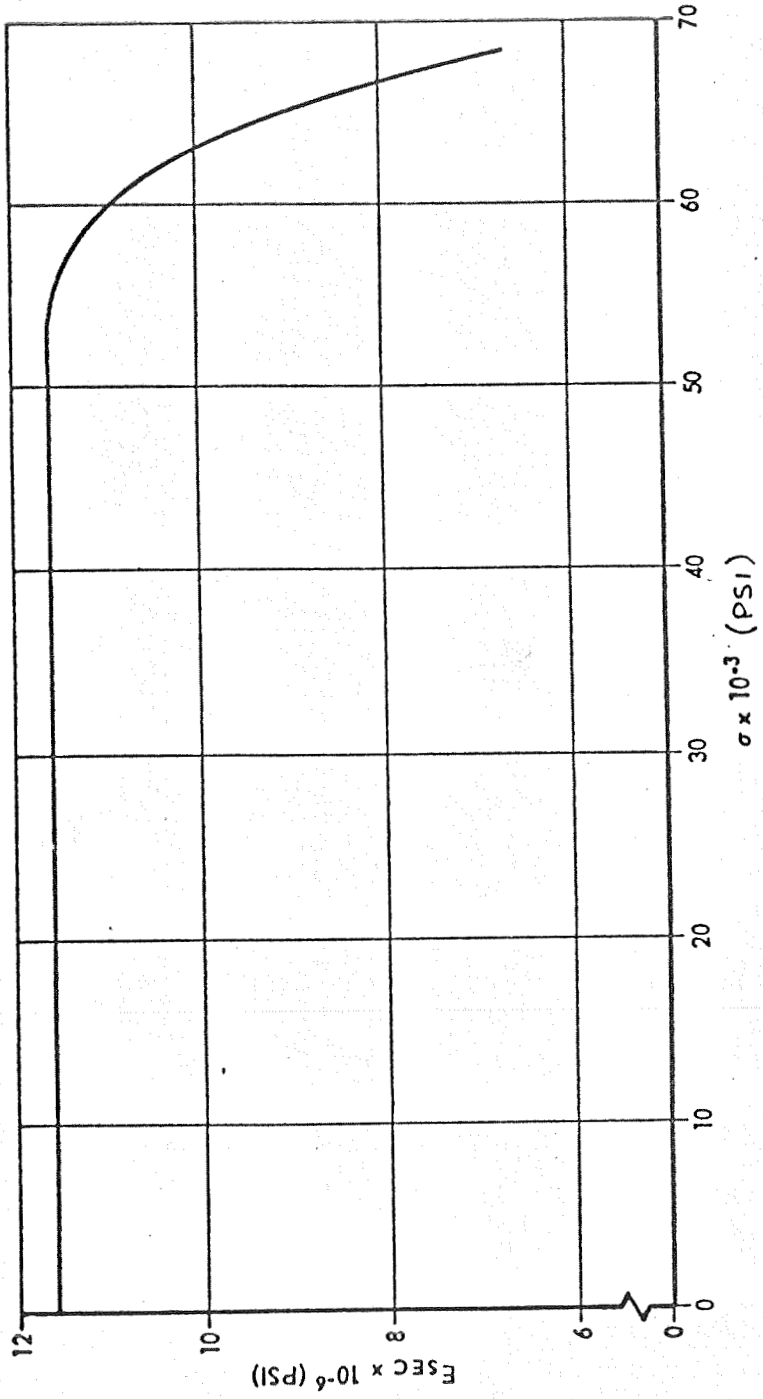

DEVELOPED BY RAMBERG OSGOOD

EQUATIONS REF. PAGE 2.0

MECHANICAL PROPERTIES
6061-T6 ALUMINUM

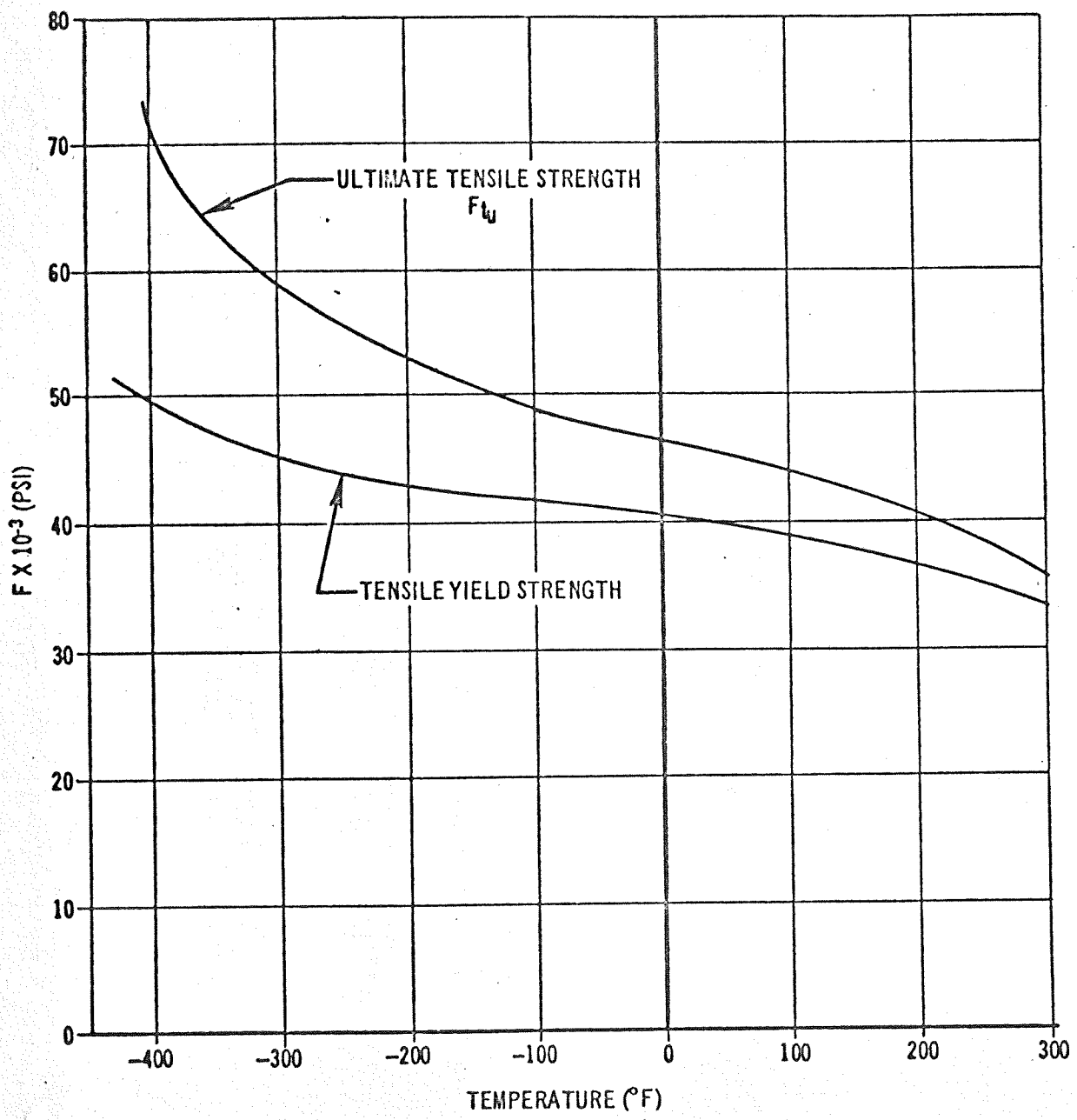

(REF. 13)

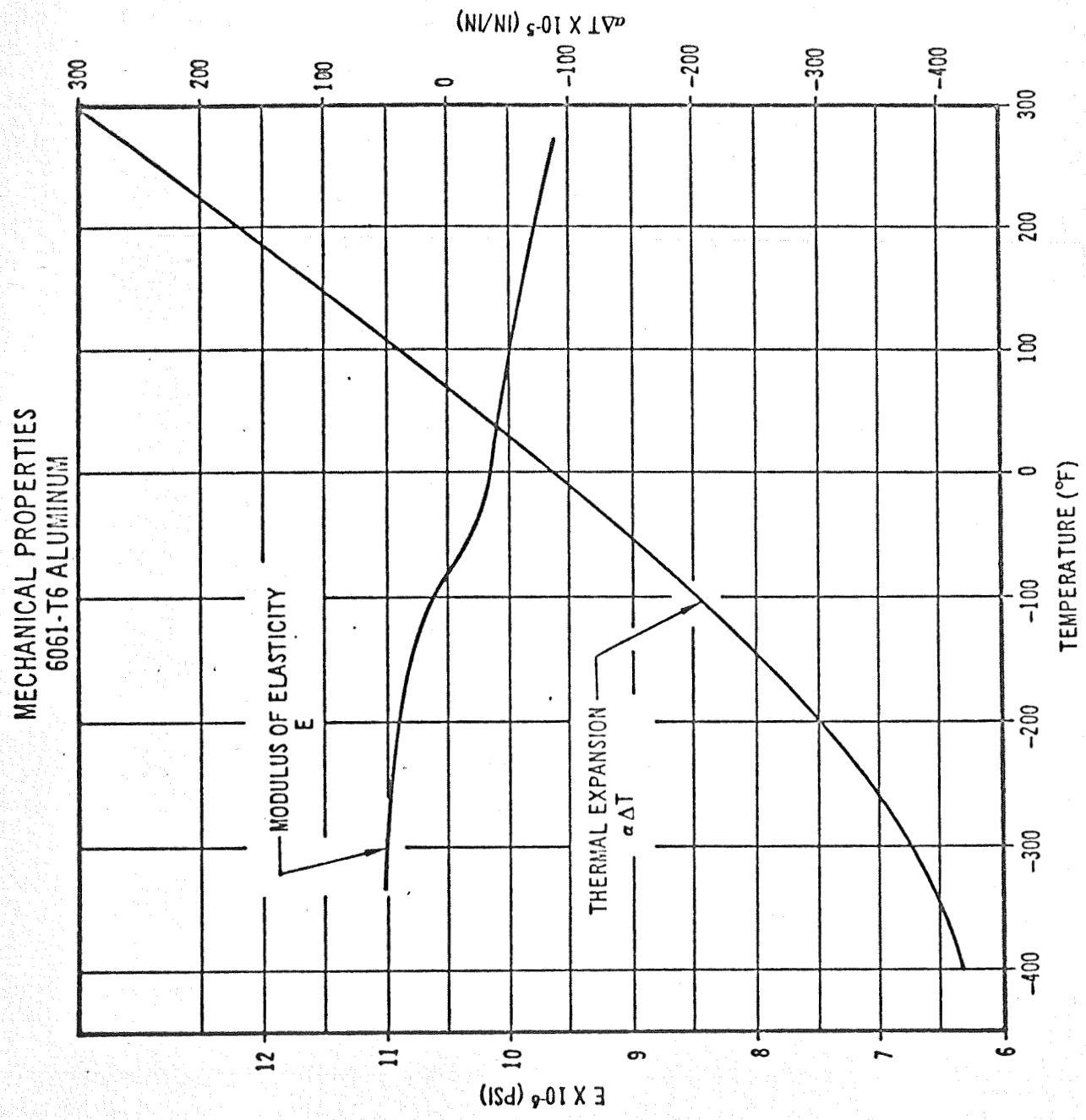
MECHANICAL PROPERTIES
6061-T6 ALUMINUM
MODULUS OF ELASTICITY
E
THERMAL EXPANSION
α ΔT
E X 10-6 (PSI)
αΔT X 10-5 (IN/IN)
TEMPERATURE (°F)
12
11
10
9
8
7
6
300
200
100
0
-100
-200
-300
-400

(REF. 13)

SM 42569

MECHANICAL PROPERTIES
6061-T6 ALUMINUM
TEMP = -298

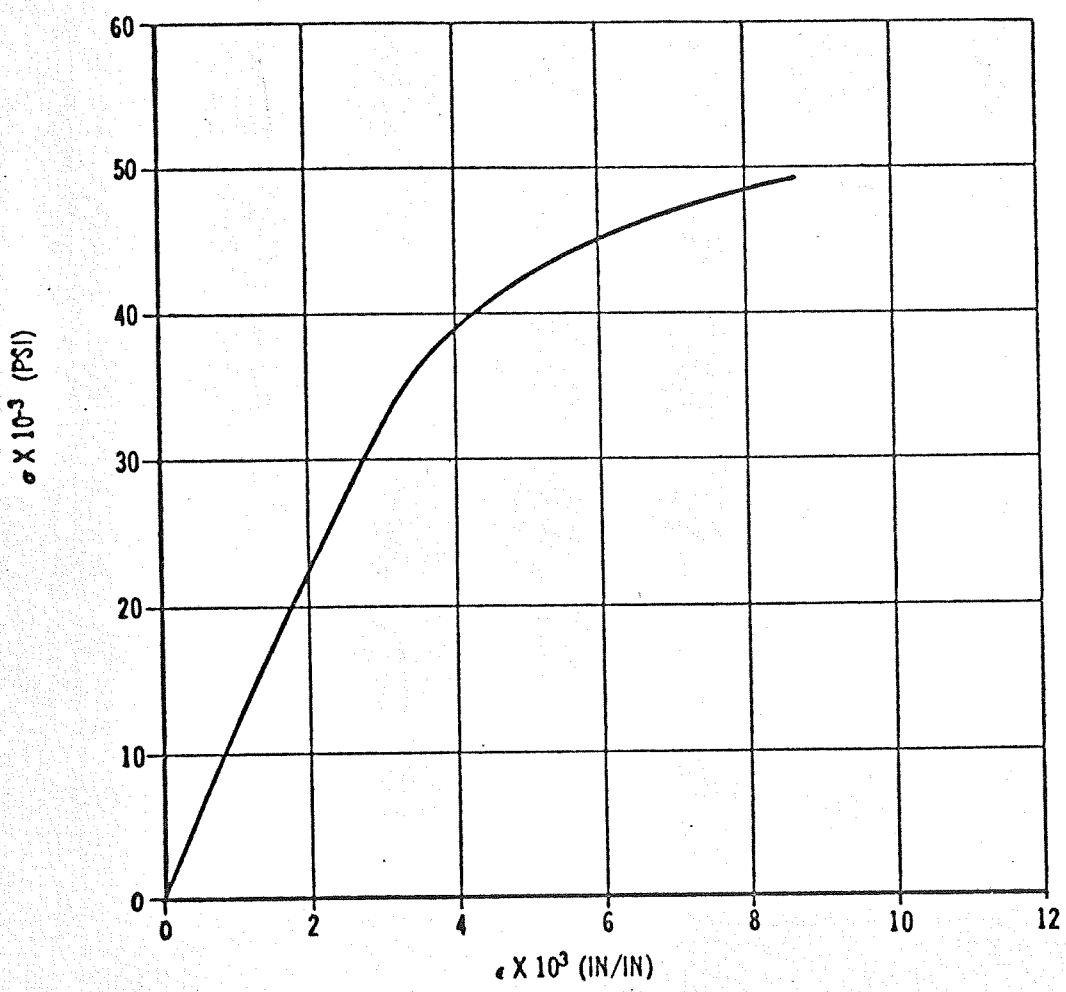

DEVELOPED BY RAMBERG OSGOOD
EQUATIONS REF. PAGE 2.0

SM 42569

E_{SEC} CURVE
6061-T6 ALUMINUM
TEMP = -298°F

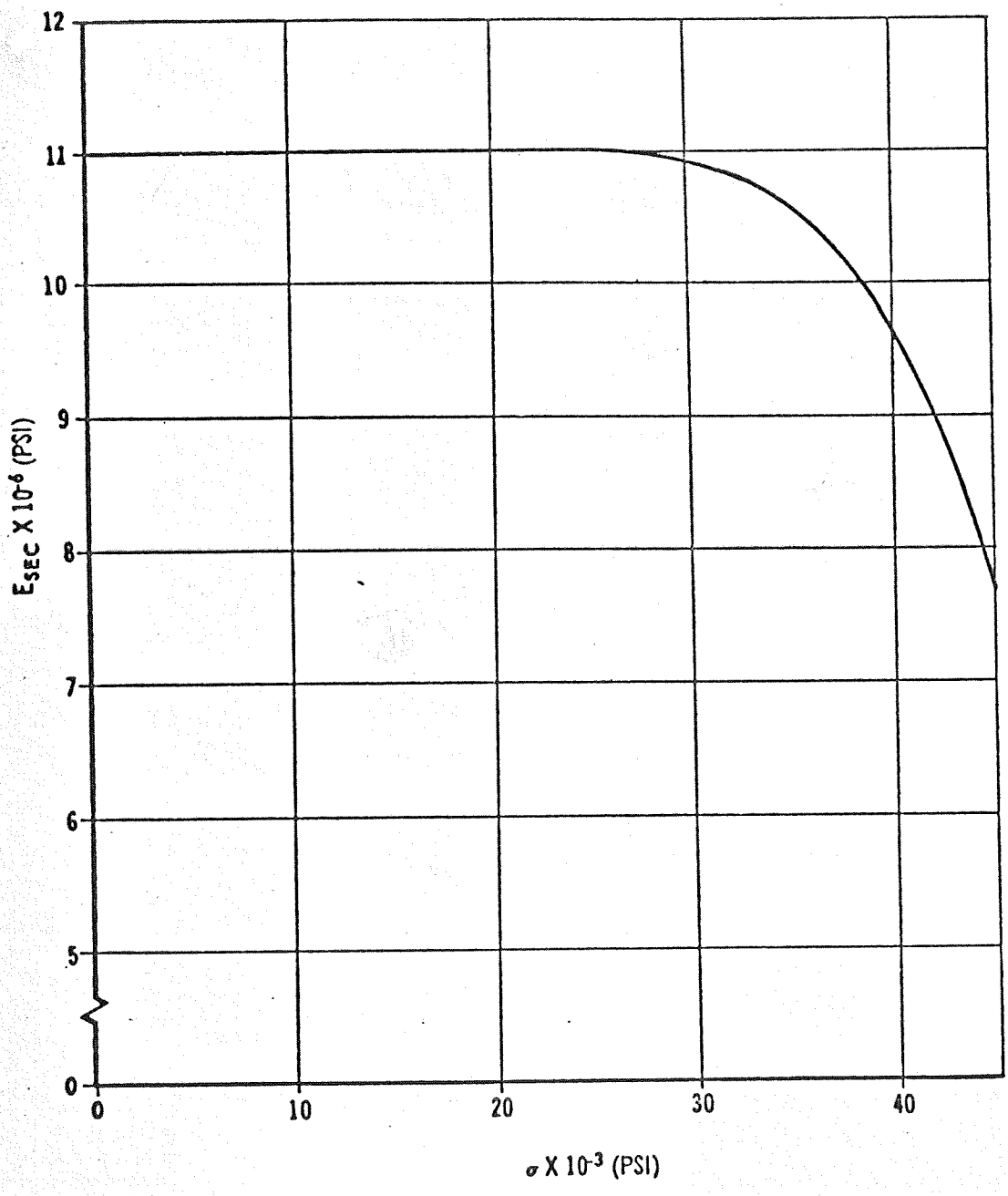

DEVELOPED BY RAMBERG OSGOOD
EQUATIONS REF. PAGE 2.0

3.0 FORWARD LIQUID HYDROGEN TANK DOME

3.1 Configuration

The S-IV forward LH_2 tank dome is constructed using six 2014-T6 aluminum segments. These segments are formed to a 110 inch radius, chemically etched to proper thickness and pattern, and welded into a hemispherical dome (See Figures Pages 3.1 and 3.2).

3.2 Analysis

The forward dome was analyzed using the maximum load conditions which are expected for either flight or ground conditions. The external loads, on the integrally stiffened portion of the dome, are based on the SA-10 trajectory and the internal pressure is based on the maximum relief valve pressure.

SM42569

DOME, LH_2 TANK FORWARD (5851533)

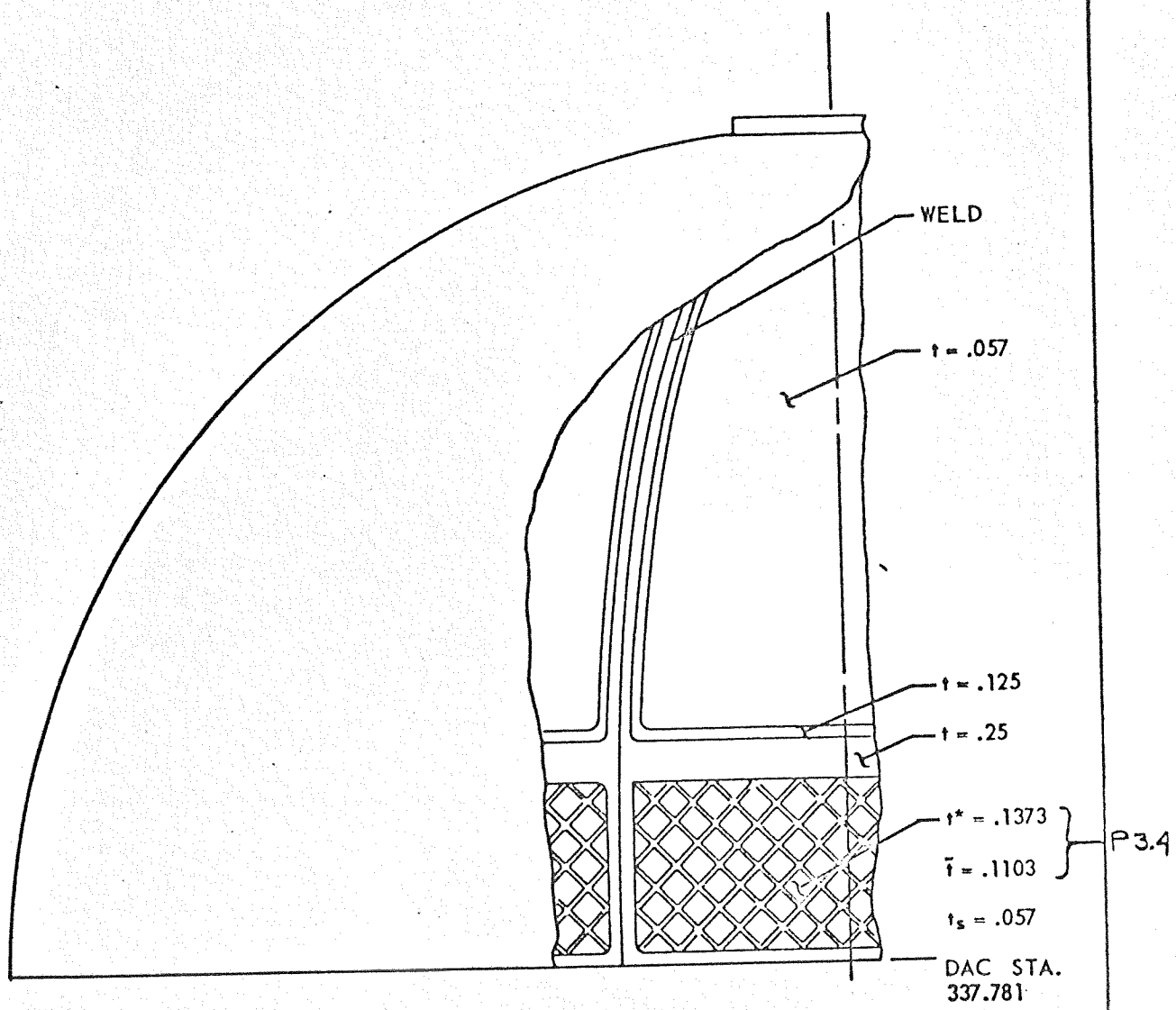

SM 42569

DOME, LH_2 TANK FORWARD (5851533)

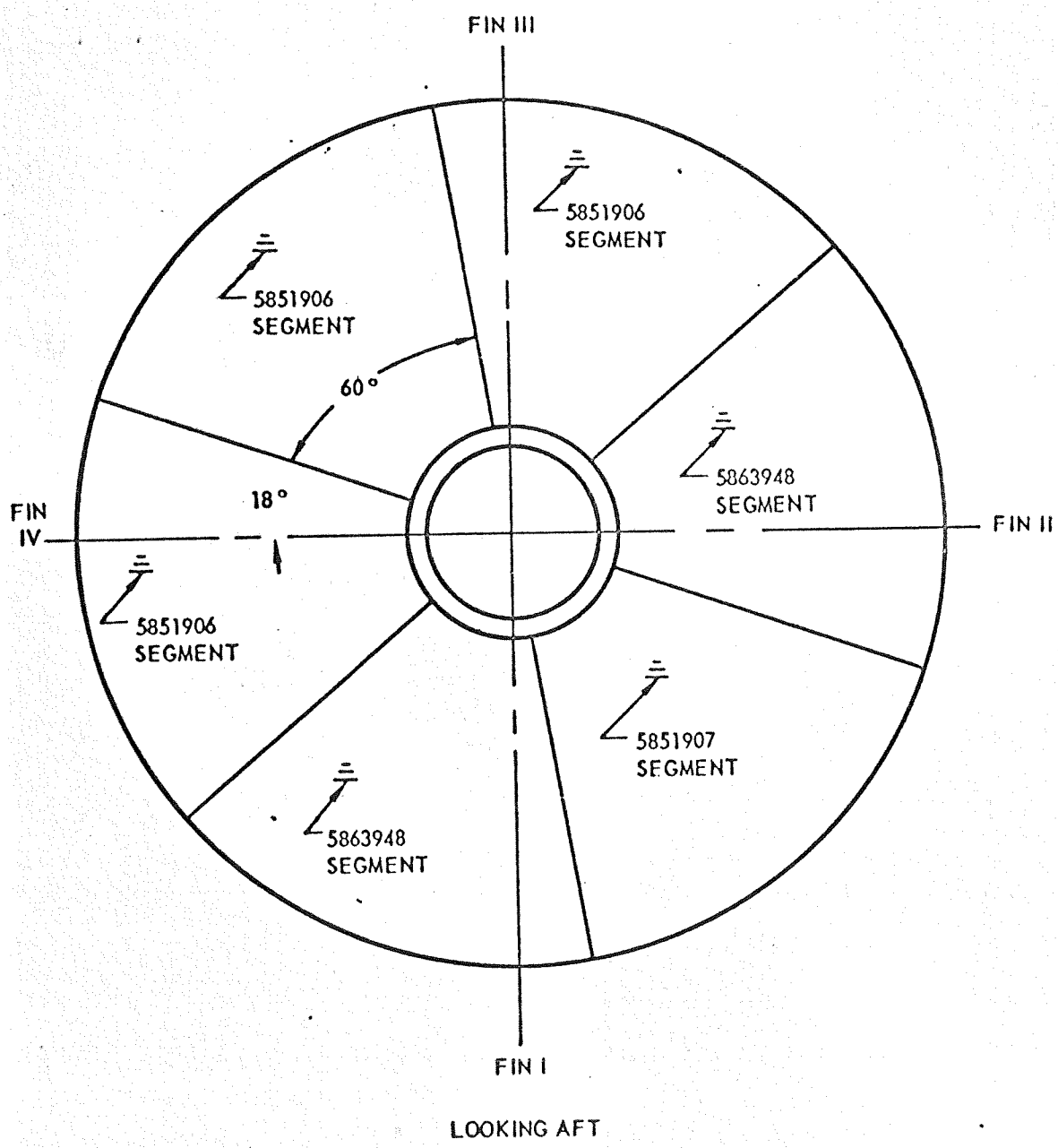

LOOKING AFT

5851533 DOME
LH_2 TANK FWD

ULT. LOADS (REF PG. 1.4)

STA 338

1) GROUND WIND COND., VEHICLE EMPTY, UNPRESSURIZED, AND UNSUPPORTED.

$P = 30,000 \times 1.35 = 40,500$ LBS.
$M = 4.4 \times 10^6 \times 1.35 = 5.94 \times 10^6$ IN LB.
$V = 9,600 \times 1.35 = 12,960$ LB.

2) S-I FLIGHT, MAX Q.

$P = 170,000 \times 1.35 = 230,000$ LB.
$M = 13.7 \times 10^6 \times 1.35 = 18.5 \times 10^6$ IN. LB.
$V = 43,000 \times 1.35 = 58,000$ LB.

3) S-I CUT-OFF,

$P = 190,000 \times 1.35 = 257,000$ LB.
M & V = 0

STA 363

1) GROUND CONDITION, VEHICLE EMPTY, UNPRESSURIZED, AND UNSUPPORTED.

$P = 30,000 \times 1.35 = 40,500$ LBS.
$M = 4.2 \times 10^6 \times 1.35 = 5.67 \times 10^6$ IN.LB.
$V = 9,400 \times 1.35 = 12,700$ LB.

2) S-I FLIGHT, MAX Q

$P = 170,000 \times 1.35 = 230,000$ LB.
$M = 12.8 \times 10^6 \times 1.35 = 17.3 \times 10^6$ IN. LB.
$V = 32,000 \times 1.35 = 43,200$ LB.

3) S-I CUT-OFF,

$P = 190,000 \times 1.35 = 257,000$ LBS.
M & V = 0

PRESSURE SCHEDULE

PRE-PRESSURE	35 - 38 PSIA	LIMIT
S-I FLIGHT (t=130 SEC.)	36.5 - 39.5 PSIA	LIMIT
S-I FLIGHT (t=65 SEC)	35.8 - 38.8 PSIA	LIMIT
S-I CUT-OFF	30 - 34.5 PSIA	LIMIT
S-IV CUT-OFF	41 - 44 PSIA	LIMIT

REF. SCHEMATIC S-IV 5
PROPULSION SYSTEM
1AB9080

SM42569

5851533 DOME
LH_2 TANK FWD

WAFFLE PATTERN

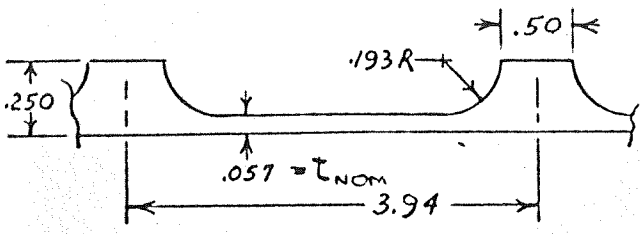

$\theta = 45°$
$t_{w_s} = .500$
$r_{w_s} = .193$
$t_s = .057$
$b_s = 3.94$
$\ell_s = 3.054$
$H = .250$

DETERMINATION OF $\bar{t}$ AND t^* (REF 2)
(REF. P 3.5)

$\bar{t} = .1103$ IN (AVERAGE WEIGHT THICKNESS OF SKIN PLUS STIFFENERS)
$t^* = .1373$ IN (EQUIVALENT THICKNESS OF HOMOGENEOUS SHEET THAT GIVES SAME BUCKLING LOAD)

PRESSURE THICKNESS

P_{MAX} @ S-IV B.O. = 44 PSIA

$T = 14°F$ (REF. 1)

$t_{MIN} = .052$

$$\sigma = \frac{1.21 \times 44 \times 110}{2 \times .052} = 56{,}312 \text{ PSI}$$

$F_{ty} = 59{,}800$ PSI (2014-T6 AL.)

$$M.S. = \frac{59{,}800}{56{,}312} - 1 = \boxed{.06}$$

STABILITY - LOAD CONDITION 1

STA 338

$$\eta_c = \frac{40{,}500}{2\pi(110)} = 58.5 \text{ LBS/IN (DUE TO AXIAL LOAD)}$$

$$\eta_B = \frac{5.94 \times 10^6}{\pi(110)^2} = 156 \text{ LBS/IN (DUE TO MOMENT)}$$

$$\frac{M}{RV} = \frac{5.94 \times 10^6}{110 \times 12{,}950} = 4.17 \qquad \frac{L}{R} = \frac{25.25}{110} = .23$$

$$\frac{t^*}{R} \times 10^3 = \frac{137.3}{110} = 1.25$$

SM 42569

REV. 3/25/64

PARAMETERIZATION OF WAFFLE PATTERN PROPERTIES

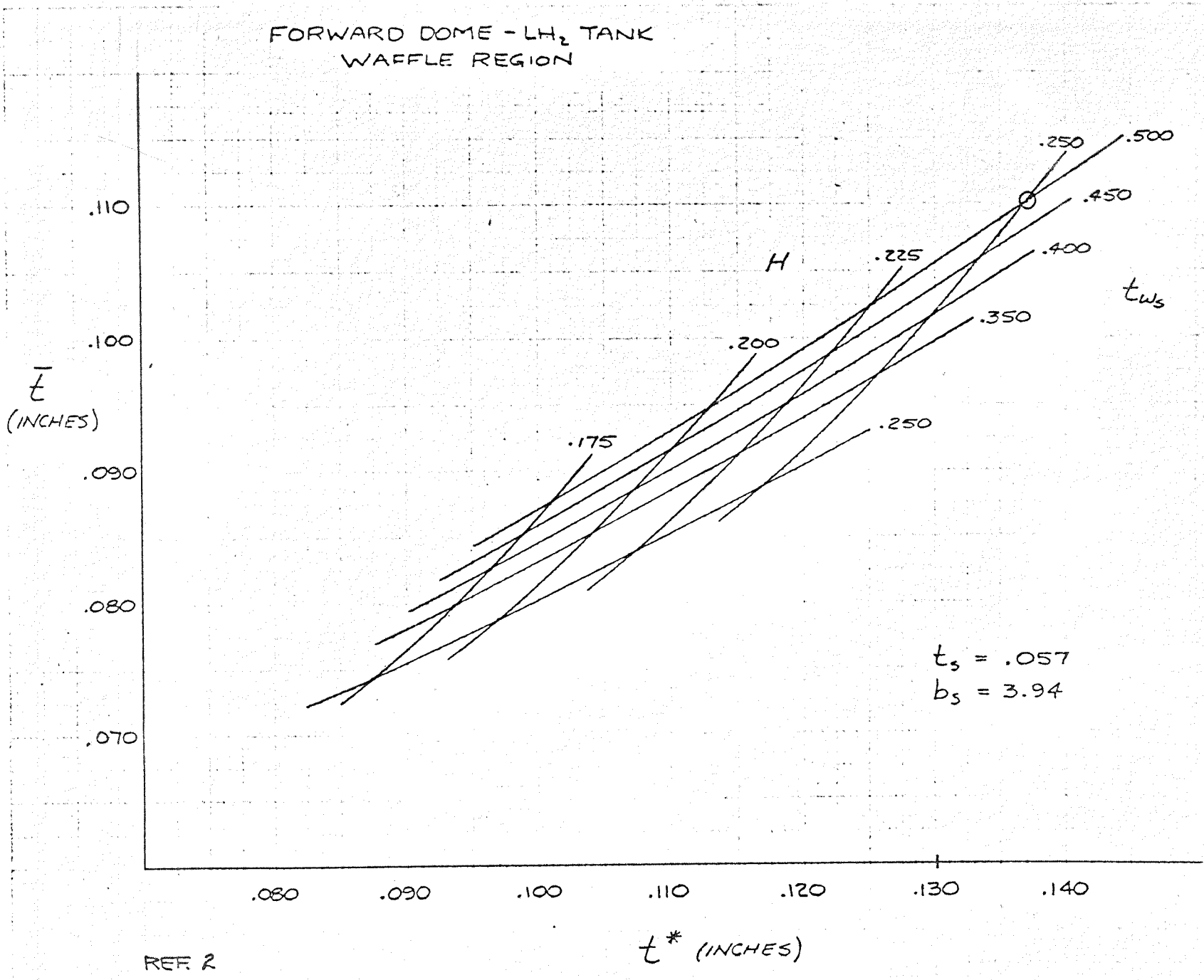

REF. 2

5851533 DOME
LH_2 TANK FWD

DOUGLAS

5851533 DOME
LH_2 TANK FWD

(REF. 2)

$\frac{N_c \times 10^7}{ER} = 2.0 \qquad \frac{N_B \times 10^7}{ER} = 2.75 \qquad \frac{N_s \times 10^7}{ER} = 3.6$

$$\frac{F_{bo}}{F_{vo}} = .80 \frac{N_B}{N_s} = .80 \frac{2.75}{3.6} = .61$$

B = 100% BENDING STRENGTH DEVELOPED

$N_c = 2.0 \times 1.04 \times 110 = 229$ LB/IN

$N_B = 2.75 \times 1.04 \times 110 = 315$ LB/IN

$$M.S. = \frac{1}{\frac{n_c}{N_c} + \frac{n_b}{N_B}} - 1 = \frac{1}{\frac{58.5}{229} + \frac{156}{315}} - 1 = \boxed{.33}$$

STA 363

$$n_c = \frac{40,500}{2\pi(107.118)} = 60 \text{ LBS/IN}$$

$$n_b = \frac{5.67 \times 10^6}{\pi(107.118)^2} = 157 \text{ LBS/IN}$$

$$\frac{M}{RV} = \frac{5.67 \times 10^6}{107.118 \times 12,700} = 4.17 \qquad \frac{L}{R} = \frac{25.25}{107.118} = .24$$

$$\frac{t^4}{R^2} \times 10^3 = \frac{137.3}{110} = 1.25$$

{R' IS THE RADIUS OF CURVATURE OF THE DOME}

$\frac{N_c \times 10^7}{ER} = 2.0 \qquad \frac{N_B \times 10^7}{ER} = 2.75 \qquad \frac{N_s \times 10^7}{ER} = 3.6$

$$\frac{F_{bo}}{F_{vo}} = .80 \frac{N_B}{N_s} = .80 \frac{2.75}{3.6} = .61$$

B = 100% BENDING STRENGTH DEVELOPED

$N_c = 2.0 \times 1.04 \times 110 = 229$ LB/IN

$N_B = 2.75 \times 1.04 \times 110 = 315$ LB/IN

$$M.S. = \frac{1}{\frac{n_c}{N_c} + \frac{n_b}{N_B}} - 1 = \frac{1}{\frac{60}{229} + \frac{157}{315}} - 1 = \boxed{.32}$$

5851533 DOME
LH_2 TANK FWD

STABILITY - LOAD CONDITION 2

STA 338

$$\eta_c = \frac{230,000}{673} = 342 \text{ LBS/IN}$$

$$\eta_B = \frac{18.5 \times 10^6}{36,048} = 513 \text{ LBS/IN}$$

$$\frac{M}{RV} = \frac{18.5 \times 10^6}{110 \times 58,000} = 2.9 \qquad \frac{L}{R} = .23$$

$$\frac{t^4}{R} \times 10^3 = 1.25$$

$$\Delta P = 35.8 \text{ PSIA} - 3.5 \text{ PSIA} = 32.3 \text{ PSIA}$$

$\{P$ IN TANK $t = 65$ SEC $= 35.8$ PSIA, $P_{AMB} = 3.5$ PSIA$\}$

$$\frac{N_c \times 10^7}{ER} = 5.2 \qquad \frac{N_B \times 10^7}{ER} = 9.6 \qquad \frac{N_S \times 10^7}{ER} = 3.6$$

$$\frac{F_{bo}}{F_{vo}} = .80 \frac{9.6}{3.6} = 2.1$$

$B = 78\%$ BENDING STRENGTH DEVELOPED

$$N_c' = 5.2 \times 1.04 \times 110 = 595 \text{ LBS/IN}$$

$$N_B' = 9.6 \times 1.04 \times 110 \times .78 = 857 \text{ LBS/IN}$$

$$N_c = 595 + \frac{32.3 \times 110}{2} = 2371 \text{ LBS/IN}$$

$$N_B = 857 + \frac{32.3 \times 110}{2} = 2633 \text{ LBS/IN}$$

$$M.S. = \frac{1}{\frac{342}{2371} + \frac{513}{2633}} - 1 = \boxed{1.95}$$

STABILITY - LOAD CONDITION 3

STA 338

REF 1

$$\eta_c = \frac{257000}{691.5} = 372 \text{ LB/IN} \quad T = 180°F \quad E = 10.25 \times 10^6$$

$$N_c' = 5.2 \times 1.025 \times 110 = 586 \text{ LBS/IN}$$

$$N_c = 586 + \frac{30 \times 110}{2} = 2,236 \text{ LBS/IN}$$

$$M.S. = \frac{2,236}{372} - 1 = 5.01 \quad \boxed{\text{HIGH}}$$

SM 42569

5851533 · DOME
LH_2 TANK FWD

SEGMENT SPLICE
(LONGITUDINAL SPLICE)

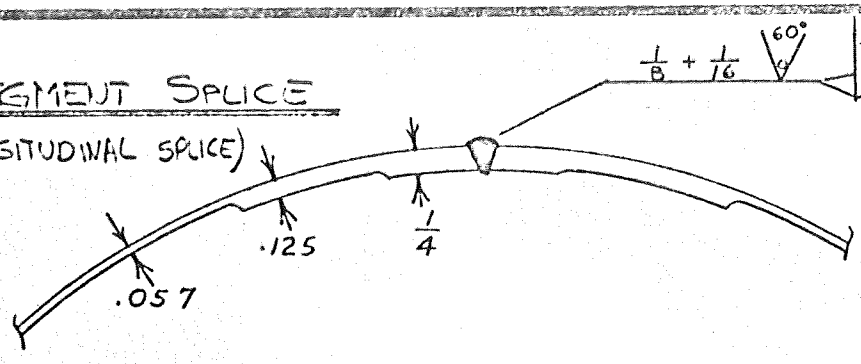

TYPICAL SIX PLACES
INERT GAS SHIELDED METAL ARC WELDED
4043 FILLER METAL
NO HEAT TREAT · AFTER WELDING

$P_{MAX} = 44$ PSIA {S-IV B.O.}

$T = 14°F$ {REF .1}

$\tau_{MIN} = .237$

$\sigma_{y\,WELD} = 20{,}600$ PSI · {2014-T6 AL. 1 WELD REPAIR BEAD ON}

$$\sigma = \frac{1.21 \times 44 \times 110}{2 \times .237} = 12{,}355 \text{ PSI}$$

$$M.S. = \frac{20{,}600}{12{,}355} - 1 = \boxed{.67}$$

5851533 DOME
LH_2 TANK FWD

EXTERNAL PRESSURE BUCKLING OF DSV-4 FWD LH_2 DOME

STA 362.972

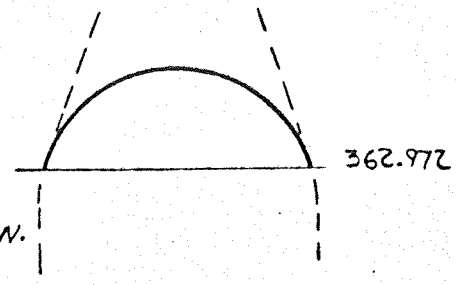

ASSUME NO EFFECT FROM INTERNAL INSULATION (CONSERVATIVE)

TEMP. = 70°F
THICKNESS = .057
$a = 100$ IN. $\nu = .3$ $E = 10.5 \times 10^6$ $R = 110$ IN.

(REF. 3)

$$\lambda = \left[12(1-.09)\right]^{\frac{1}{4}} \frac{100}{\sqrt{110 \times .057}} = \frac{1.818 \times 100}{2.5} = 72.5$$

SINCE THIS VALUE OF λ IS WAY OFF THE CURVE, THE ASSUMPTION OF $K = .1$ WILL BE USED. (CLASSICAL THEORY SAYS $K = .606$)

$$\sigma_{CR} = \frac{KEt}{R} \qquad q_{CR} = \sigma_{CR}\frac{2t}{R} \qquad \therefore q_{CR} = \frac{2KEt^2}{R^2}$$

$$q_{CR} = \frac{2 \times .1 \times 10.5 \times 10^6 (.057)^2}{(110)^2} = .563 \text{ PSI}$$

$$q_{CR_{LIMIT}} = \frac{.563}{1.35} = \underline{\underline{.417 \text{ PSI}}}$$

M.S. = NOT CRITICAL*

STA 337.781 TO 362.972

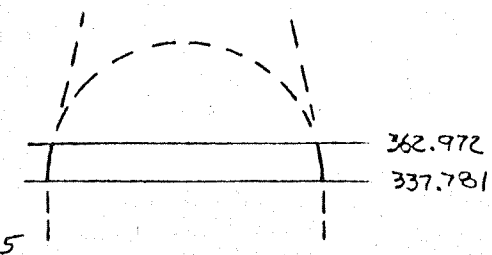

$t = .1373$ $a = R = 110$ $\nu = .3$
$E = 10.5 \times 10^6$

$$\lambda = \left[12(1-.09)\right]^{\frac{1}{4}} \frac{110}{\sqrt{110 \times .1373}} = \frac{1.818 \times 110}{3.89} = 51.5$$

ASSUME $K = .1$

$$q_{CR} = \frac{2 \times .1 \times 10.5 \times 10^6 (.1373)^2}{(110)^2} = 3.27 \text{ PSI}$$

$$q_{CR_{LIMIT}} = \frac{3.27}{1.35} = \underline{\underline{2.42 \text{ PSI}}}$$

M.S. = NOT CRITICAL*

* EXTERNAL PRESSURE IS NOT AN EXPECTED DESIGN CONDITION

K+E ALBANENE® TRACING PAPER 70983

4.0 LIQUID HYDROGEN TANK CYLINDER

4.1 Configuration

The S-IV LH_2 tank cylinder is constructed using three 2014-T6 aluminum segments. These segments are mechanically milled, formed to a 110 inch radius, and welded into a cylinder.

4.2 Analysis

The LH_2 tank cylinder was analyzed using the maximum load conditions which are expected for either flight or ground conditions. The external loads are based on the SA-10 configuration and the internal pressure is based on the maximum relief valve pressure.

SM42569

SM 42566

TANK ASSEMBLY, CYLINDRICAL (5863802)

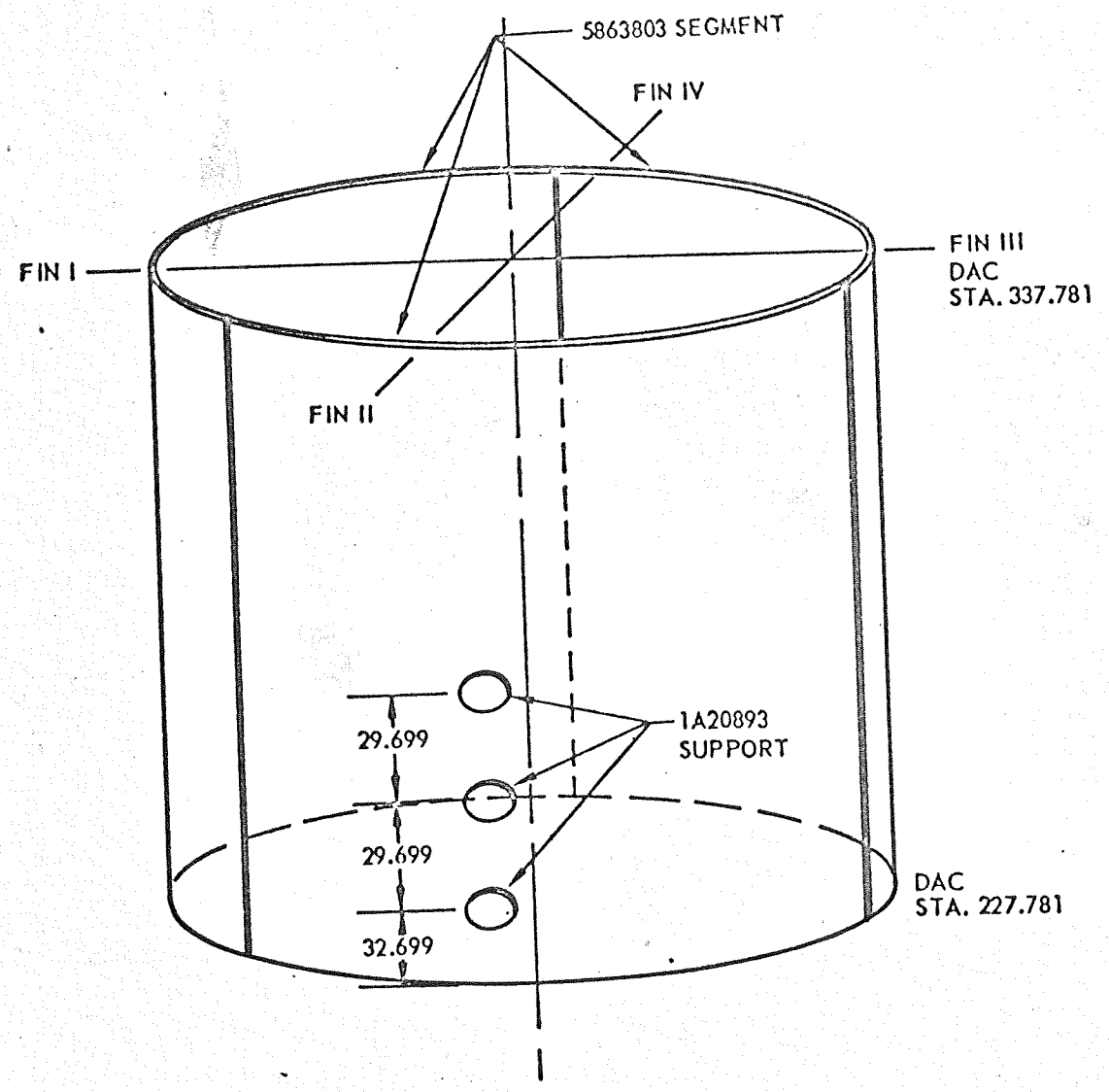

5863802 TANK ASSY, CYLINDRICAL

ULTIMATE LOADS (REF. PG. 1.4)

STA 228.

1) GROUND CONDITION, VEHICLE EMPTY, UNPRESSURIZED AND UNSUPPORTED

$P = 43{,}000 \times 1.35 = 58{,}000$ LB.
$M = 5.6 \times 10^6 \times 1.35 = 7.55 \times 10^6$ IN. LB.
$V = 11{,}000 \times 1.35 = 14{,}850$ LB

2) S-I FLIGHT, MAX q

$P = 190{,}000 \times 1.35 = 256{,}000$ LB.
$M = 18 \times 10^6 \times 1.35 = 24.3 \times 10^6$ IN. LB.
$V = 43{,}000 \times 1.35 = 58{,}000$ LB.

3) S-I BURNOUT,

$P = 230{,}000 \times 1.35 = 310{,}000$ LB.

PRESSURE SCHEDULE ⇒ LIMIT

PRE-PRESSURE	35-38 PSIA	
S-I FLIGHT	36.5-39.5 PSIA	t = 130 SEC
S-IV CUTOFF	41-44 PSIA	

WAFFLE PATTERN

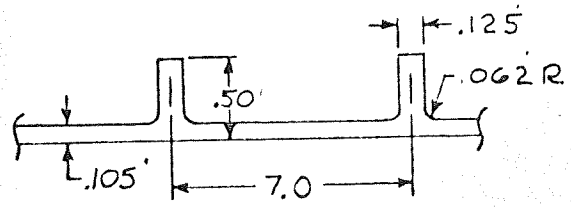

$\theta = 45°$
$r_1 = .3125$
$t_{ws} = .125$
$r_{ws} = .062$
$t_s = .105$
$b_s = 7.0$
$l_s = 6.751$
$H = .500$
$t_r = .333$

METHOD REF. 2

DETERMINATION OF $\bar{t}$ AND t^* (REF PAGE 4.3)

$\bar{t} = 0.1200$
$t^* = 0.1657$

SM 42563

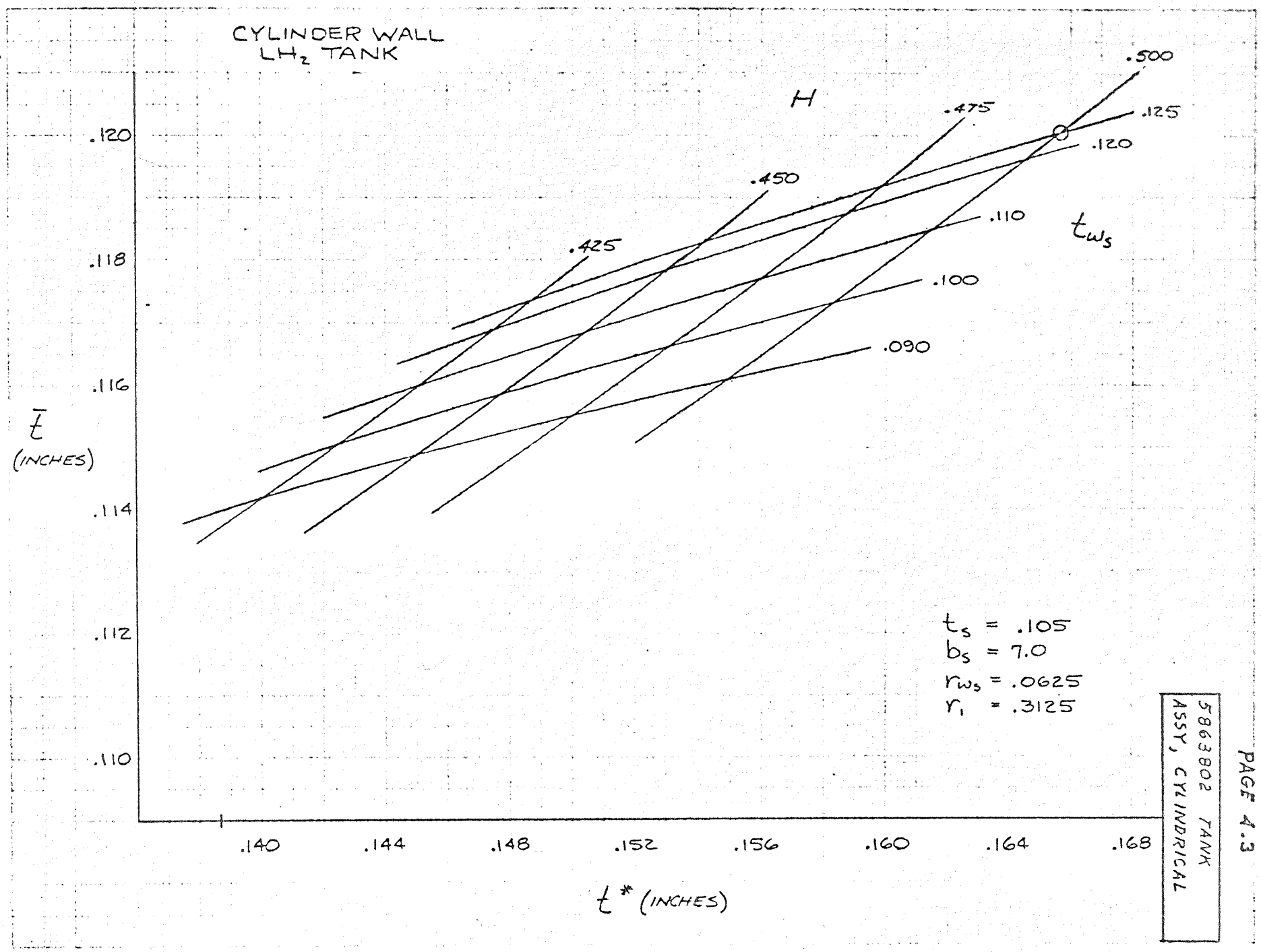

5863802 TANK ASSY, CYLINDRICAL

DOUGLAS

5863802 TANK ASSY, CYLINDRICAL

PRESSURE THICKNESS

$P_{MAX} - \tau = 130$ SEC $= 39.5 + \text{HEAD} = 42.0$

$T = 174°F$ (REF. 4)

$t_{MIN} = .100$

$\sigma_Y = 56{,}000$ (2014-T6 AL.)

$$\sigma = \frac{1.21(42)(110)}{.100} = 55{,}900 \text{ PSI}$$

$$M.S. = \frac{56{,}000}{55{,}900} - 1 = \boxed{.002}$$

STABILITY - LOAD CONDITION 1

$$\eta_c = \frac{P}{2\pi R} = \frac{58{,}000}{2\pi(110)} = 84 \text{ LB/IN}$$

$$\eta_b = \frac{M}{\pi R^2} = \frac{5.6(10^6)}{\pi(110)^2} = 147 \text{ LB/IN}$$

$$\frac{M}{RV} = \frac{5.6(10^6)}{110(14{,}850)} = 3.43 \qquad \frac{L}{R} = \frac{110}{110} = 1$$

$$\frac{t^*}{R} \times 10^3 = \frac{165.7}{110} = 1.51$$

(FROM REF 2)

$$\frac{N_c}{ER} \times 10^7 = 3.05 \qquad \frac{N_b}{ER} \times 10^7 = 4.3 \qquad \frac{N_s}{ER} \times 10^7 = 3.0$$

$$\frac{F_{bo}}{F_{vo}} = .80 \frac{N_b}{N_s} = .80 \frac{4.3}{3.0} = 1.15$$

B = 95% BENDING STRENGTH DEVELOPED

$N_c = 3.05(1.04)(110) = 349$ LB/IN

$N_b = 4.3(1.04)(110)(.95) = 467$ LB/IN

$$M.S. = \frac{1}{\frac{\eta_c}{N_c} + \frac{\eta_b}{N_b}} - 1$$

$$= \frac{1}{\frac{84}{349} + \frac{147}{467}} - 1 = \boxed{.80}$$

SM 42569

5863802 TANK ASSY, CYLINDRICAL

STABILITY - LOAD CONDITION 2

$$\eta_c = \frac{256{,}000}{691.15} = 371 \text{ LB/IN}$$

$$\eta_b = \frac{24.3 \times 10^6}{38{,}013} = 640 \text{ LB/IN}$$

$$\frac{M}{RV} = \frac{24.3 \times 10^6}{110 \times 58{,}000} = 3.81$$

$$\frac{t^*}{R} \times 10^3 = 1.51$$

(FROM REF. 2)

$$\frac{N_c}{ER} 10^7 = 7.8 \qquad \frac{N_b}{ER} 10^7 = 13.8 \qquad \frac{N_s}{ER} 10^7 = 3.0$$

FOR A MINIMUM PRESSURE OF 35 PSIA

$$\frac{F_{bo}}{F_{vo}} = .80 \frac{13.8}{3.0} = 3.68$$

B = 60% BENDING STRENGTH DEVELOPED

$$N_c' = 7.8 \times 1.050 \times 110 = 901$$

$$N_b' = 13.8 \times 1.050 \times 110 \times .60 = 956$$

$$N_c = 901 + p\frac{R}{2} = 901 + 35(55) = 2826$$

$$N_b = 956 + 35(55) = 2881$$

$$M.S. = \frac{1}{\frac{371}{2826} + \frac{640}{2881}} - 1 = \boxed{1.83}$$

STABILITY - LOAD CONDITION 3

$$\eta_c = \frac{310{,}000}{691.15} = 449$$

$$N_c' = 7.8 \times 1.025 \times 110 = 879 \text{ (MIN PRESSURE OF 30 PSIA)}$$

$$N_c = 879 + 30(55) = 2529$$

$$M.S. = \frac{2529}{449} - 1 = \boxed{\text{HIGH}}$$

5863802 TANK ASSY, CYLINDRICAL

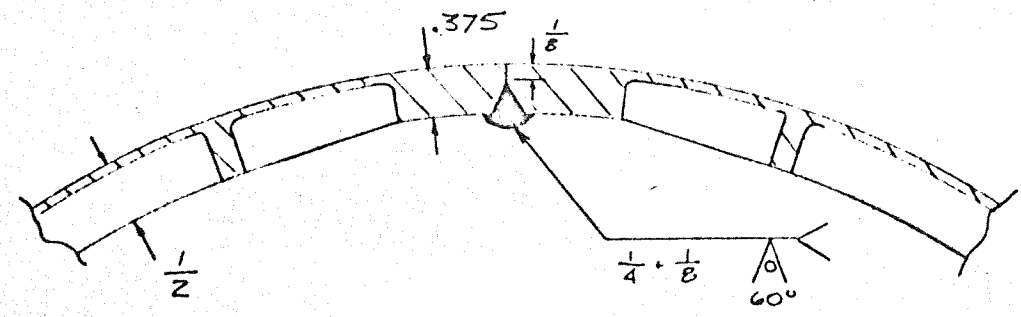

TYPICAL THREE PLACES
INERT GAS SHIELDED METAL ARC WELDED
4043 FILLER METAL
NO HEAT TREAT AFTER WELDING

$P_{MAX.} = 39.5' + HEAD = 42.0'$ (T=130 SEC)

$T = 174°$ (REF. 4)

$t_{MIN} = .365'$

$\sigma_{y\ WELD} = 19{,}400'$ PSI

2014-T6 AL
1 WELD REPAIR
BEAD ON

$$\sigma = \frac{1.21' \times 42' \times 110}{.365'} = 15{,}300 \text{ PSI}$$

$$MS = \frac{19{,}400'}{15{,}300'} - 1 = \boxed{.27}$$

$P_{MAX} = 44' + HEAD = 47.0'$ (SIV CUTOFF)

$T = 140°$ (REF. 1)

$t_{MIN} = .365'$

$\sigma_{Y\ WELD} = 20{,}600'$

$$\sigma = \frac{1.21(47)(110)}{.365'} = 17{,}140'$$

$$M.S. = \frac{20{,}600'}{17{,}140'} - 1 = \boxed{.20}$$

SM4-569

EXTERNAL PRESSURE BUCKLING OF DSV-4 LH_2 TANK CYLINDER

5863602 TANK ASSY, CYLINDRICAL

STA 227.781 TO 337.781

$\mathcal{X}^* = .1657 \quad \nu = .3 \quad R = L = 110 \quad E = 10.5 \times 10^6$

(REF. 2)

$L/R = 1.0 \qquad t/R \times 10^3 = \frac{165.7}{110} = 1.505$

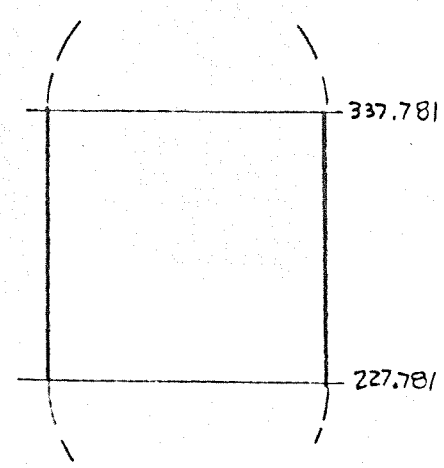

$\frac{P_o}{E} \times 10^7 = 0.8$

$P_o = \frac{10.5 \times 10^6 \times .8}{10^7} = .84$

$P_{o\,LIMIT} = \frac{.84}{1.35} = \underline{.62 \text{ PSI}}$

P_{EXT} EXPECTED ⇒ NEGLIGIBLE

NOT CRITICAL

5.0 AFT TANK DOME

5.1 Configuration

The S-IV aft dome is in contact with LH_2 forward of, and LO_2 aft of, the common bulkhead joint. It also serves as an attachment joint for both the common bulkhead and thrust structure. The aft dome is constructed using six 2014-T6 aluminum segments. These segments are formed to a 110 inch radius, chemically milled, and welded into a hemispherical dome.

5.2 Analysis

The aft dome was analyzed using the maximum load conditions which are expected for either flight or ground conditions. The principal external loads are delivered to the aft dome through the thrust structure attach points. The internal pressures are based upon the maximum relief valve setting plus hydrostatic head. At the time of this analyses the maximum axial acceleration was 7.15 g's (Reference 31). Subsequent to the analysis, a better definition of the load conditions revealed that the maximum acceleration was 6.033 g's and occurred on the SA-8 and 9 vehicles (Reference 29). The analysis has not been revised to incorporate the effects of the acceleration decrease.

SM42569

DOME ASSEMBLY, AFT TANK (5063805)

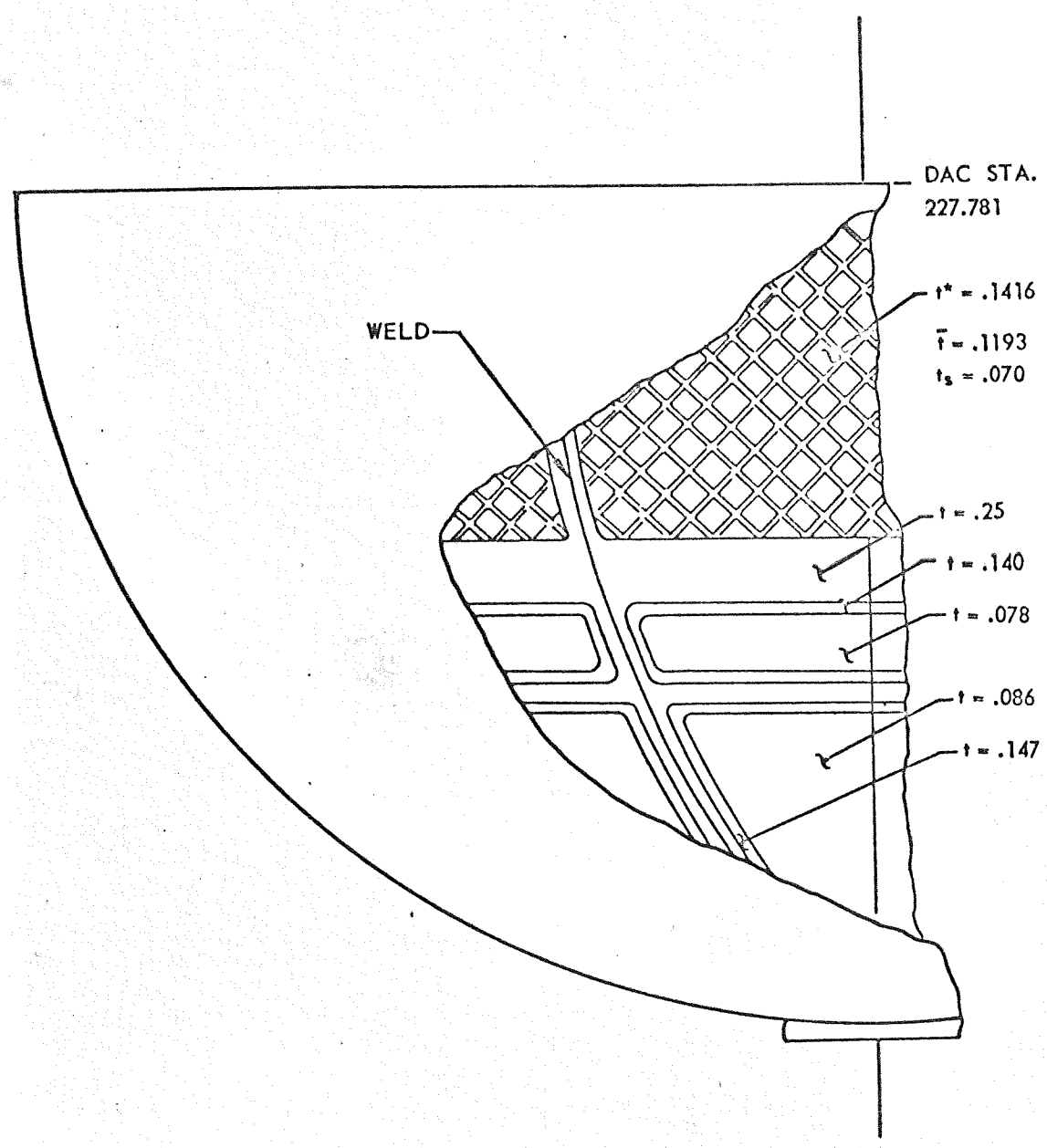

TANK ASSY, AFT (5863804)

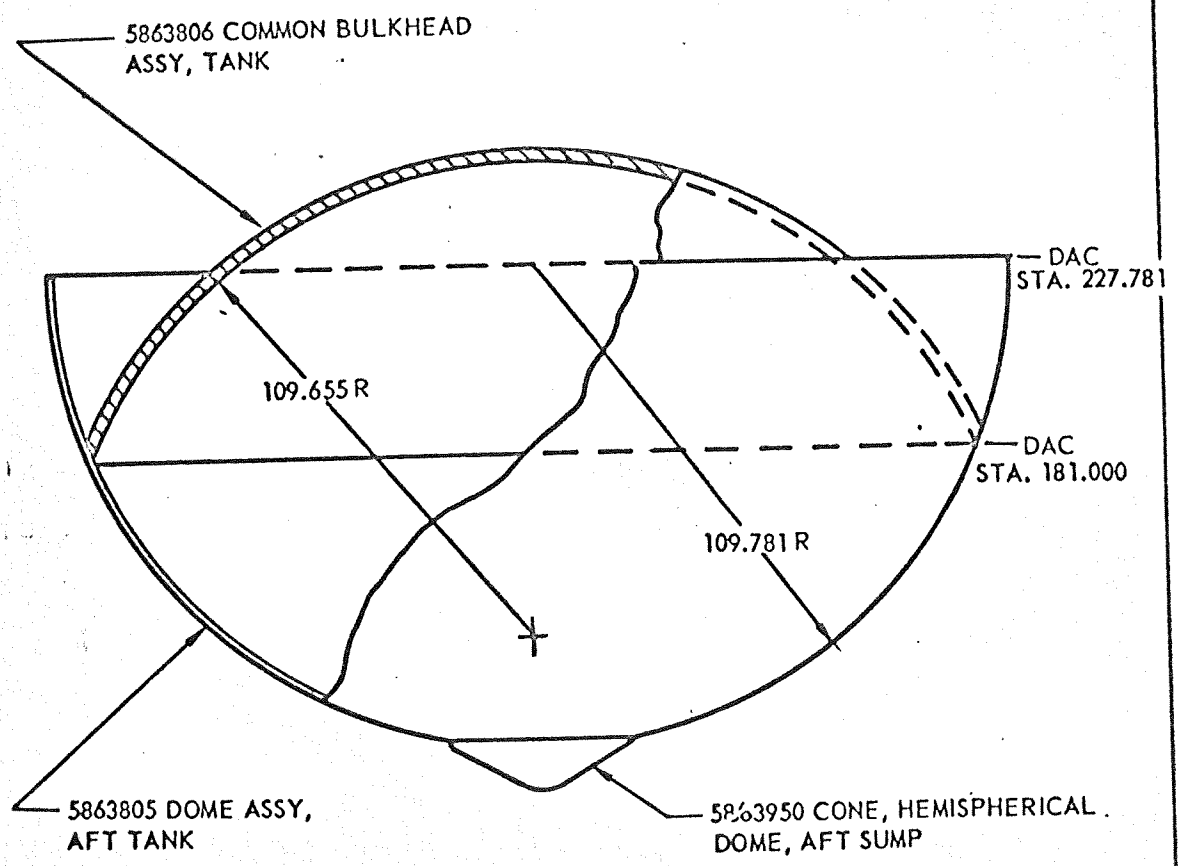

SM 42559

DOME ASSY, AFT TANK (5863805)

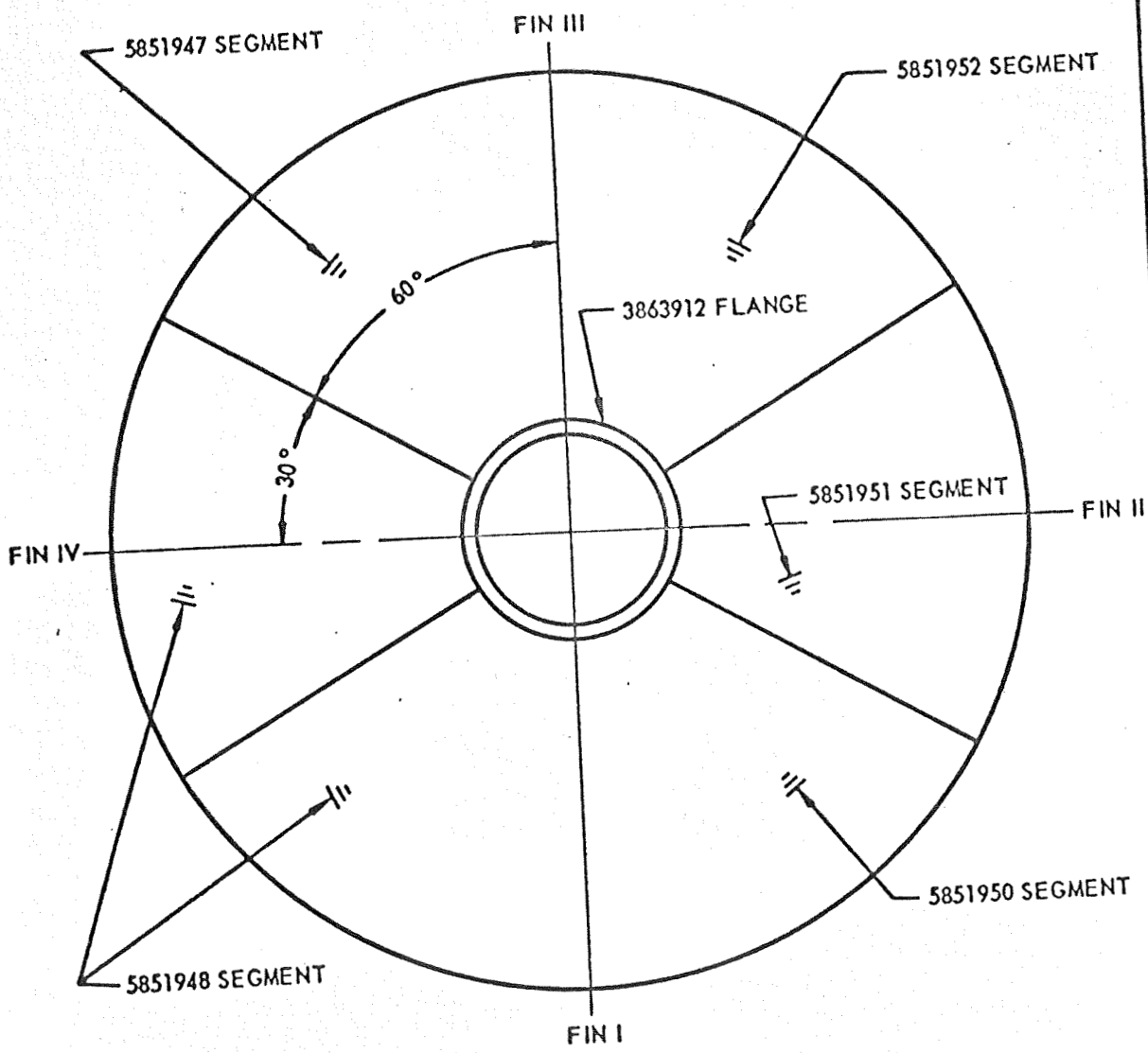

LOOKING AFT

NOTATION, MEMBRANE LOADS

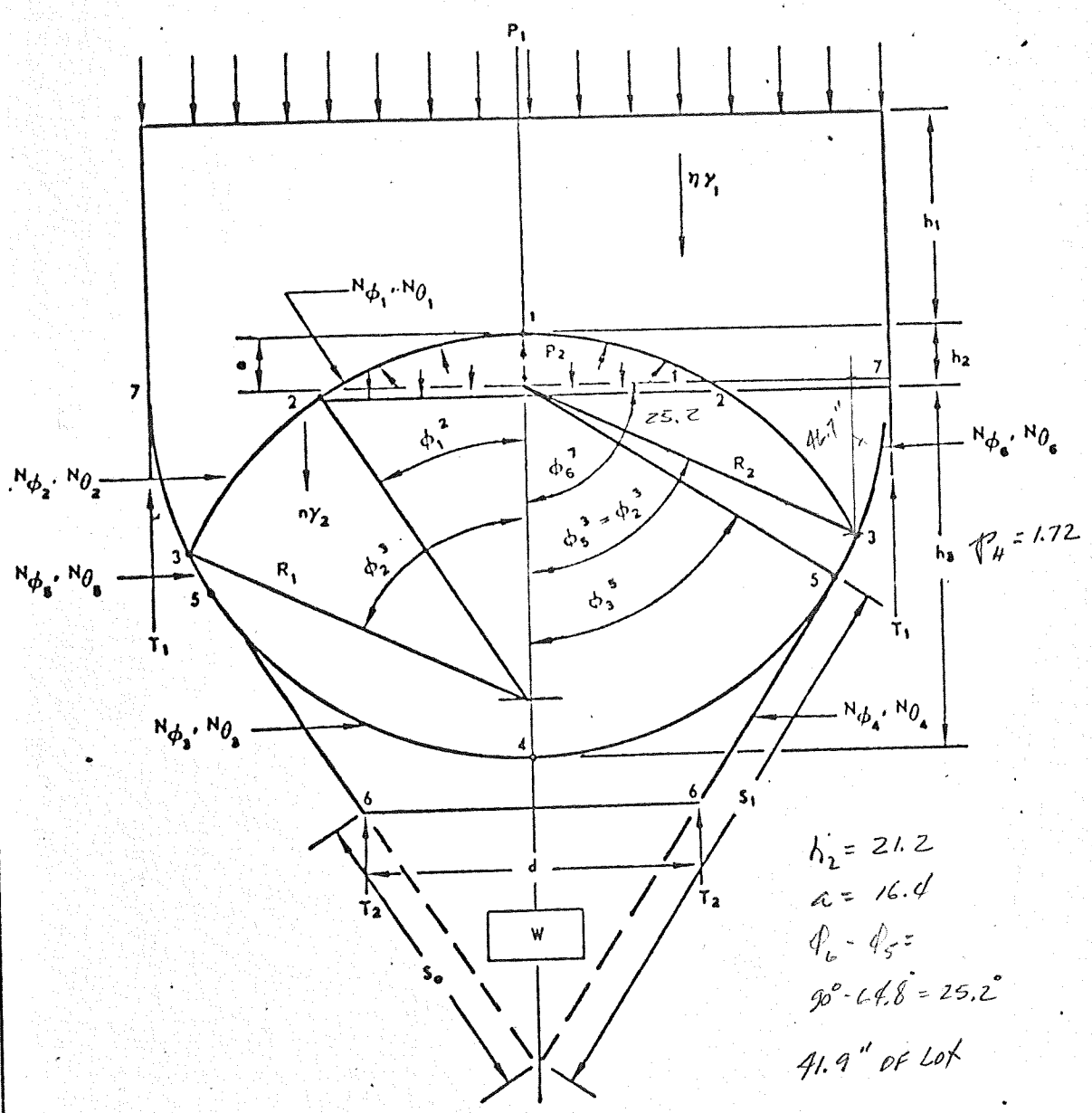

$P_4 = 1.72$

$h_2 = 21.2$

$a = 16.4$

$\phi_6 - \phi_5 =$

$90° - 64.8° = 25.2°$

41.9" of Lot

$P_3 = 51.0 + 1.72 - 14.7 = 38$ psid

SM 42569

5E63E04 TANK ASSY, AFT

CASE I

REF APPENDIX III
PG. III.2.0

S-I BURN OUT

$P_1 = 39.5$ PSI *
$P_2 = 50$ PSI * } LIMIT

$\gamma_1 = .0025$ LBS/IN^3

$\gamma_2 = .0410$ LBS/IN^3

$R_1 = R_2 = 110$ IN.

$a = 16.4$ IN.

$h_1 = 153.2$ IN.

$h_2 = 21.2$ IN.

$h_3 = 105$ IN.

$\phi_1^2 = 39.3°$

$\phi_2^3 = 64.9°$

$\phi_3^5 = 54.8°$

$\phi_5^3 = \phi_6^3 = 64.8°$

$\phi_6^7 = 90°$

$S_1 = 155.9$ IN

$S_2 = 80.7$ IN.

$\eta = 7.15$

$W = 31{,}600$ LBS

YIELD

$P_1 = 47.8$ PSI

$P_2 = 60.5$ PSI

$\eta = 8.65$

$$T_2 = \frac{-31{,}600 \times 1.1}{\pi \times 93} = -119$$

* REF. SCHEMATIC S-IV-5
PROPULSION SYSTEM
1A89080

5863804 TANK ASSY, AFT

$$N_{\phi_1}^2 = \frac{R}{2}\left\{p_2 - p_1 - n\gamma_1(h_1 + R)\right\} - \frac{R^2}{3} n\gamma_1 \frac{\cos^3\phi_1^2 - 1}{\sin^2\phi_1^2}$$

(EQUATION 4, PAGE III.2.5)

$$= 55\left\{60.5 - 47.8 - 8.65 \times .0025(153.2 + 110)\right\} - 4033 \times 8.65 \times .0025 \frac{(.7738)^3 - 1}{(.6334)^2}$$

$$= 55 \times 7.01 - (-116.5)$$

$$N_{\phi_1}^2 = 502 \text{ LB/IN}$$

$$N_{\theta_1}^2 = -N_{\phi_1}^2 + R\left\{p_2 - p_1 - n\gamma_1(h_1 + R - R\cos\phi_1^2)\right\}$$

(EQUATION 6, PAGE III.2.5)

$$= -502 + 110\left\{60.5 - 47.8 - 8.65 \times .0025(153.2 + 110 - 110 \times .7738)\right\}$$

$$= -502 + 110 \times 8.35$$

$$N_{\theta_1}^2 = 471.5 \text{ LB/IN}$$

$$N_{\phi_2}^3 = N_{\phi_1}^2\left(\frac{\sin\phi_1^2}{\sin\phi_2^3}\right)^2 + \frac{R}{2}\left\{p_2 - p_1 - nR(\gamma_1 - \gamma_2)\cos\phi_1^2 - n\gamma_1(h_1 + h_2)\right\}\left[1 - \left(\frac{\sin\phi_1^2}{\sin\phi_2^3}\right)^2\right] - \frac{R^2}{3}n(\gamma_1 - \gamma_2)\frac{\cos^3\phi_2^3 - \cos^3\phi_1^2}{\sin^2\phi_2^3}$$

(EQUATION 7, PAGE III.2.8)

$$= 502\left(\frac{.6334}{.9056}\right)^2 + 55\left\{60.5 - 47.8 - 8.65 \times 110(.0025 - .0410).7738 - 8.65 \times .0025(153.2 + 21.2)\right\}\left[1 - \left(\frac{.6334}{.9056}\right)^2\right] - 4033 \times 8.65 (.0025 - .0410)\frac{(.4242)^3 - (.7738)^3}{(.9056)^2}$$

$$= 245.6 + 55\left\{12.7 - (-28.3) - 3.18\right\}[.5108] + 1343(-.4720)$$

$$= 245.6 + 1045.1 - 633.9$$

$$N_{\phi_2}^3 = 656.8 \text{ LB/IN}$$

$$N_{\theta_2}^3 = -N_{\phi_2}^3 + R\left\{p_2 - p_1 + nR(\gamma_1 - \gamma_2)(\cos\phi_2^3 - \cos\phi_1^2) - n\gamma_1(h_1 + h_2)\right\}$$

(EQUATION 8, PAGE III.2.8)

$$= -656.8 + 110\left\{60.5 - 47.8 + 8.65 \times 110(.0025 - .0410)(.4242 - .7738) - 8.65 \times .0025(153.2 + 21.2)\right\}$$

$$= -656.8 + 110\left\{12.7 + (-36.6)(-.3496) - 3.77\right\}$$

$$N_{\theta_2}^3 = 1733 \text{ LB/IN}$$

5863804 TANK ASSY, AFT

$$N_{\phi_3}^5 = \frac{R}{2}\left\{p_2 + n\gamma_2(h_3 - R)\right\} - \frac{R^2}{3} n\gamma_2 \frac{\cos^3\phi_3^5 - 1}{\sin^2\phi_3^5}$$

(EQUATION 9, PAGE III.2.10)

$$= 55\left\{60.5 + 8.65 \times .0410(105-110)\right\} - 4033 \times 8.65 \times .0410 \frac{(.5764)^3 - 1}{(.8178)^2}$$

$$= 55 \times 58.7 - 1430(-1.2087)$$

$$N_{\phi_3}^5 = 4957 \text{ LB/IN}$$

$$N_{\theta_3}^5 = -N_{\phi_3}^5 + R\left\{p_2 + n\gamma_2(h_3 - R + R\cos\phi_3^5)\right\}$$

$$= -4957 + 110\left\{60.5 + 8.65 \times .0410(105 - 110 + 110 \times .5764)\right\}$$

$$= -4957 + 110(81.2)$$

$$N_{\theta_3}^5 = 3975 \text{ LB/IN}$$

(EQUATION 10, PAGE III.2.10)

EQUATION 11a WILL BE USED TO COMPUTE $N_{\phi_4}^5$, TREATING THE ENGINE WEIGHT W AS A NEGATIVE THRUST

$$N_{\phi_4}^5 = -\frac{S_0}{S} \cdot \frac{T_2}{\sin\phi_3^5}$$

$$= -\frac{80.7}{155.9} \cdot \frac{-119}{.8178}$$

$$= -.5176 \times -145.5$$

$$N_{\phi_4}^5 = 75 \text{ LB/IN}$$

$N_{\theta_4}^5 = 0$ (PAGE III.2.12)

$$N_{\theta_4}^5 = 0$$

SINCE ENGINE WEIGHT HAS BEEN TREATED AS A NEGATIVE THRUST, EQUATION 14a, PAGE III.2.15, FOR SECOND STAGE FIRING, WILL BE USED TO COMPUTE N_{ϕ_5}

$$N_{\phi_5} = (N_{\phi_4}^5 + N_{\phi_3}^5)\left(\frac{\sin\phi_3^5}{\sin\phi_5}\right)^2 + \frac{R}{2}\left\{p_2 + n\gamma_2(h_3 - R)\right\}\left[1 - \left(\frac{\sin\phi_3^5}{\sin\phi_5}\right)^2\right]$$

$$- \frac{R^2}{3} n\gamma_2 \frac{\cos^3\phi_5 - \cos^3\phi_3^5}{\sin^2\phi_5}$$

AT POINT 5, $\phi_5 = \phi_3^5$

$$N_{\phi_5}^5 = N_{\phi_4}^5 + N_{\phi_3}^5$$

$$= 75 + 4957$$

$$N_{\phi_5}^5 = 5032 \text{ LB/IN}$$

5863804 TANK ASSY, AFT

$$N_{\theta_5}^5 = -N_{\phi_5}^5 + R\left\{p_2 + n\gamma_2'(h_3 - R + R\cos\phi_5^5)\right\}$$

(EQUATION 15, PAGE III.2.16)

$$= -5032 + 110\left\{60.5 + 8.65 \times .0410(105 - 110 + 110 \times .5764)\right\}$$

$$= -5032 + 8932$$

$$N_{\theta_5}^5 = 3901 \text{ LB/IN}$$

$$N_{\phi_5}^3 = (75 + 4957)\left(\frac{.8178}{.9048}\right)^2 + 55\left\{60.5 + 8.65 \times .0410(105 - 110)\right\}$$

$$\left[1 - \left(\frac{.8178}{.9048}\right)^2\right] - 4033 \times 8.65 \times .0410 \frac{(.4258)^3 - (.5764)^3}{(.9048)^2}$$

$$= 4111 + 591 + 200$$

$$N_{\phi_5}^3 = 4902 \text{ LB/IN}$$

$$N_{\theta_5}^3 = -4902 + 110\left\{60.5 + 8.65 \times .0410(105 - 110 + 110 \times .4258)\right\}$$

$$= -4902 + 8287$$

$$N_{\theta_5}^3 = 3385 \text{ LB/IN}$$

$$N_{\phi_6} = (N_{\phi_5}^3 - N_{\phi_2}^3)\left(\frac{\sin\phi_6^3}{\sin\phi_6}\right)^2 + \frac{R}{2}\left\{p_1 + n\gamma_1'(h_1 + a)\right\}$$

$$\left[1 - \left(\frac{\sin\phi_6^3}{\sin\phi_6}\right)^2\right] - \frac{R^2}{3} n\gamma_1 \frac{\cos^3\phi_6 - \cos^3\phi_6^3}{\sin^2\phi_6}$$

(EQUATION 15a, PAGE III.2.20)

AT POINT 3, $\phi_6 = \phi_6^3$ (REF. PAGE

$$N_{\phi_6}^3 = N_{\phi_5}^3 - N_{\phi_2}^3$$

$$= 4902 - 657$$

$$N_{\phi_6}^3 = 4245 \text{ LB/IN}$$

$$N_{\theta_6}^3 = -N_{\phi_6}^3 + R\left\{p_1 + n\gamma_1'(h_1 + a + R\cos\phi_6^3)\right\}$$

(EQUATION 16, PAGE III.2.20)

$$= -4245 + 110\left\{47.8 + 8.65 \times .0025(1532 + 16.4 + 110 \times .4258)\right\}$$

$$= -4245 + 5773$$

$$N_{\theta_6}^3 = 1528 \text{ LB/IN}$$

5863804 TANK ASSY, AFT

$$N_{\phi_6}^{7} = (4902 - 398)(.9048)^2 + 55\left\{47.8 + 8.65 \times .0025(153.2 + 16.4)\right\}\left[1 - (.9048)^2\right] - 4033 \times 8.65 \times .0025 \times -(.4258)^3$$

$$= 3687 + 513 + 7$$

$$\underline{N_{\phi_6}^{7} = 4207 \text{ LB/IN}}$$

$$N_{\theta_6}^{7} = -4207 + 110\left\{47.8 + 8.65 \times .0025(153.2 + 16.4)\right\}$$

$$= -4207 + 5661$$

$$\underline{N_{\theta_6}^{7} = 1454 \text{ LB/IN}}$$

TO COMPLETE THE LOAD DIAGRAM, $N_{\phi_3}^{4}$ IS NEEDED. AT POINT 4, $\phi_3^4 = 0$, AND THE EQUATION (9, PAGE III.2.10) BECOMES INDETERMINATE. $N_{\phi_3}^{4}$ MAY BE DETERMINED BY PLOTTING FOR VALUES OF ϕ_3 APPROACHING ZERO, OR MORE DIRECTLY, AS FOLLOWS:

$$N_{\phi_3}^{4} = \frac{R}{2}\left\{p_2 + n\gamma_2 h_3\right\}$$

$$= 55\left\{60.5 + 8.65 \times .0410 \times 105\right\}$$

$$= 55 \times 97.74$$

$$\underline{N_{\phi_3}^{4} = 5376 \text{ LB/IN}}$$

$$N_{\theta_3}^{4} = N_{\phi_3}^{4}$$

$$\underline{N_{\theta_3}^{4} = 5376 \text{ LB/IN}}$$

FORM 29-6-1 (REV. 6-53)

DOUGLAS AIRCRAFT COMPANY, INC.

PREPARED BY: J. F. MEYERS
CHECKED BY: W. L. R.
DATE: 7-61
TITLE: DSV-4 PROPELLANT TANK

SM DIVISION

PAGE: 5.10
MODEL: DSV-4
REPORT NO: SM 42562

5863804 TANK ASSY, AFT

LOAD DIAGRAMS
YIELD VALUES LBS/IN

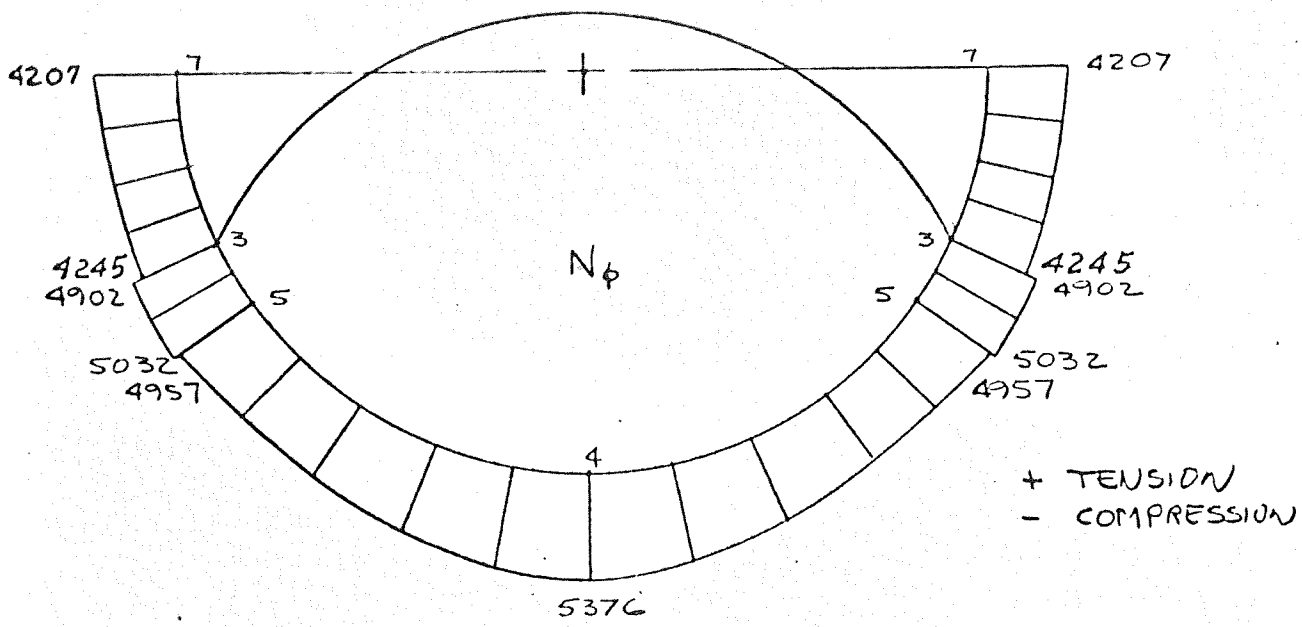

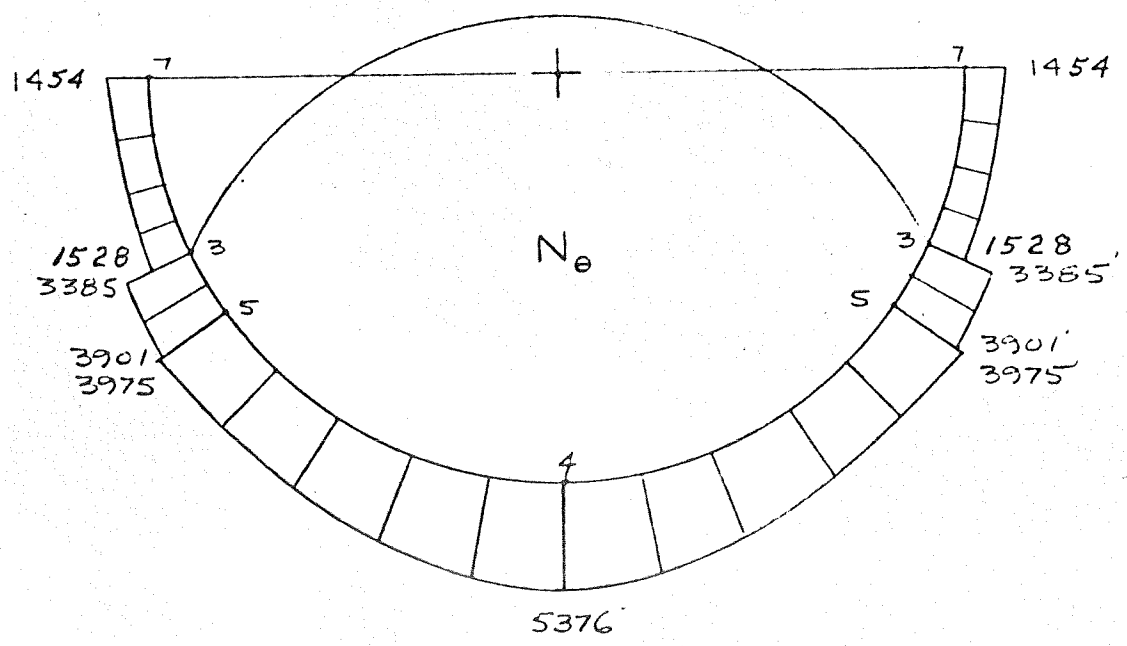

K+E ALBANENE 195L TRACING PAPER 67441

5863804 TANK ASSY, AFT

CASE II

REF. APPENDIX III
PAGE III.2.0

GROUND - LO_2 LOADED

$p_1 = 0$

$p_2 = 0$

$\gamma_1 = 0$

$\gamma_2 = .0410$ LBS/IN^3

$R_1 = R_2 = 110$ IN.

$a = 16.4$ IN.

$h_1 = 0$

$h_2 = 21.2$ IN

$h_3 = 105$ IN.

$\phi_1^2 = 39.3°$

$\phi_2^3 = 64.9°$

$\phi_3^5 = 54.8°$

$\phi_5^3 = \phi_6^3 = 64.8°$

$\phi_6^7 = 90°$

$S_1 = 155.9$ IN.

$S_2 = 80.7$ IN.

$\eta = 1.0$

$d = 93$ IN.

$W = 4419$ LBS.

YIELD

$p_1 = 0$

$p_2 = 0$

$\eta = 1.21$

$$T_2 = -\frac{4419 \times 1.1}{\pi \times 93}$$

$$= -16.6$$

5863804 TANK ASSY, AFT

$N\phi_1^2 = 0$ $\qquad N\phi_1^2 = 0$ LB/IN

$N\phi_2^3 = 55\{-1.21 \times 110(-.0410)\ 7738\}[.5108]$
$\quad -4033 \times 1.21 \times .0410 \times .4720$
$= 119 - 94$ $\qquad N\phi_2^3 = 25$ LB/IN

$N\phi_3^5 = 55\{1.21 \times .0410(105-110)\} - 4033 \times 1.21 \times .0410(-1.2087)$
$= -12.6 + 241.9$ $\qquad N\phi_3^5 = 228$ LB/IN

$N\theta_3^5 = -228 + 110\{1.21 \times .0410(.105 - 110 + 110 \times .5764)\}$
$= -228 + 319$ $\qquad N\theta_3^5 = 91$ LB/IN

$N\phi_4^5 = -.5176 \times \frac{-16.6}{.8178}$
$= 11$ $\qquad N\phi_4^5 = 11$ LB/IN

$N\theta_4^5 = 0$

$N\phi_5^5 = 11 + 228$ $\qquad N\phi_5^5 = 239$ LB/IN

$N\theta_5^5 = -239 + 110\{1.21 \times .0410(105 - 110 + 110 \times .5764)\}$
$= -239 + 319$ $\qquad N\theta_5^5 = 80$ LB/IN

$N\phi_5^3 = (11 + 228)(.8170) + 55\{1.21 \times .0410(105-110)\}[.1830]$
$\quad -4033 \times 1.21 \times .0410(-.1396)$
$= 195 + (-2.5) + 28$ $\qquad N\phi_5^3 = 221$ LB/IN

$N\theta_5^3 = -221 + 110\{1.21 \times .0410(105 - 110 + 110 \times .4258)\}$
$= -221 + 228$ $\qquad N\theta_5^3 = 7$ LB/IN

$N\phi_6^3 = 221 - 25$ $\qquad N\phi_6^3 = 196$ LB/IN

$N\theta_6^3 = -196$ $\qquad N\theta_6^3 = -196$ LB/IN

5863804 TANK ASSY, AFT

$$N_{\phi_6}^{7} = (221 - 25)(.8187)$$
$$= 196 \times 8187$$

$N_{\phi_6}^{7} = 160$ LB/IN

$$N_{\theta_6}^{7} = -160$$

$N_{\theta_6}^{7} = -160$ LB/IN

$$N_{\phi_3}^{4} = 55\{1.21 \times .0410 \times 105\}$$
$$= 55 \times 5.21$$

$N_{\phi_3}^{4} = 287$ LB/IN

$$N_{\theta_3}^{4} = 287$$

$N_{\theta_3}^{4} = 287$ LB/IN

K+E ALBANENE 195L TRACING PAPER 65075

5863804 TANK ASSY, AFT

LOAD DIAGRAMS
YIELD VALUES LBS/IN

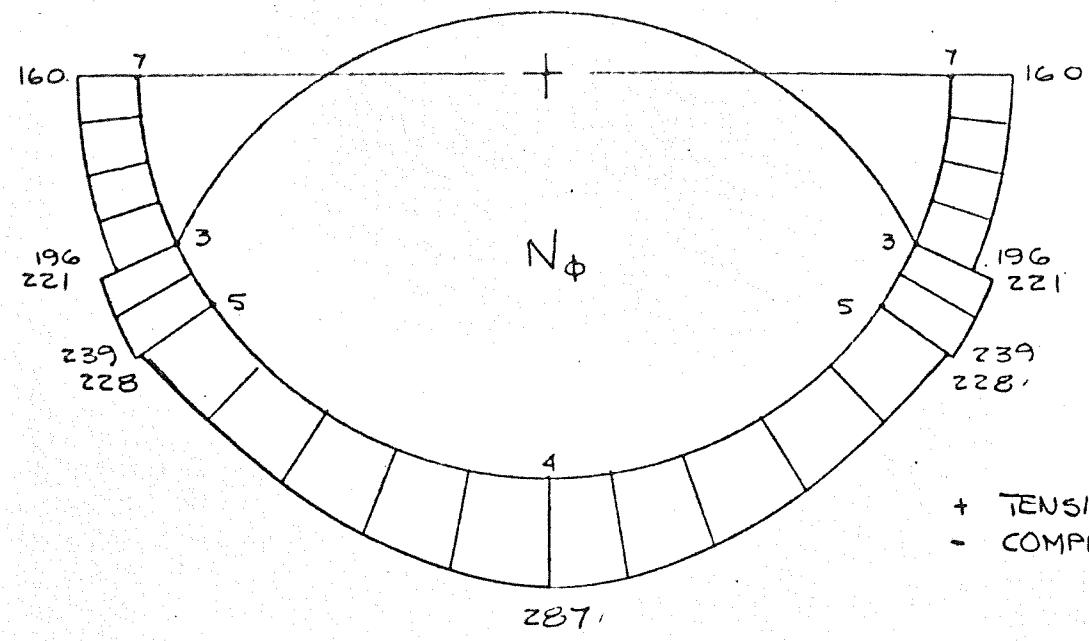

+ TENSION
- COMPRESSION

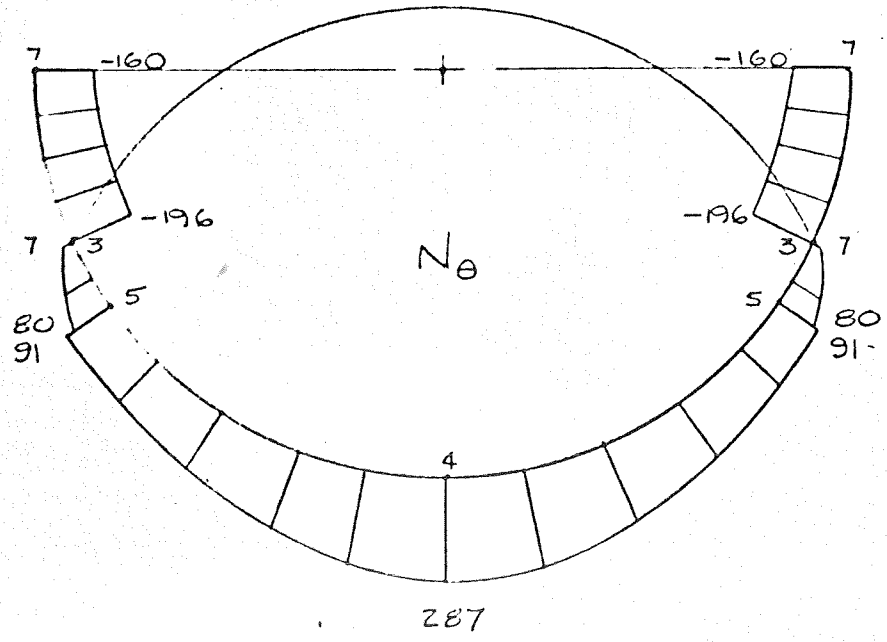

5863804 TANK ASSY, AFT

CASE III REF. APPENDIX III PAGE III.2.0

GROUND - LO_2 LOADED AND PRESSURIZED

$p_1 = 0$

$p_2 = 50 - 14.7 = 35.3$ PSIG

$\gamma_1 = 0$

$\gamma_2 = .0410$ LBS/IN^3

$R_1 = R_2 = 110$ IN

$a = 16.4$ IN

$h_1 = 0$

$h_2 = 21.2$ IN

$h_3 = 105$ IN.

$\phi_1^2 = 33.3°$

$\phi_2^3 = 64.9°$

$\phi_3^5 = 54.8°$

$\phi_5^3 = \phi_4^3 = 64.8°$

$\phi_6^7 = 90°$

$S_1 = 155.9$ IN.

$S_2 = 80.7$ IN

$\eta = 1.0$

$d = 93$ IN.

$W = 4419$ LBS.

YIELD

$p_1 = 0$

$p_2 = 42.7$ PSIG

$\eta = 1.21$

$$T_2 = -\frac{4419 \times 1.1}{\pi \times 93}$$

$$= -16.6 \text{ LBS/IN}$$

THE LOADS FOR THIS CONDITION ARE IDENTICAL TO THOSE FOR THE GROUND-LO_2 LOADED CONDITION EXCEPT FOR THE ADDITION OF THE $\frac{p_2 R}{2}$ TERM TO THE MEMBRANE LOADS IN REGIONS 1, 2, 3 AND 5.

YIELD $\frac{p_2 R}{2} = \frac{42.7 \times 110}{2} = 2349$ LBS/IN

FORM 28-6-1 (REV. 6-53)

DOUGLAS AIRCRAFT COMPANY, INC.

PREPARED BY: J. F. MEYERS
CHECKED BY: W. L. B.
DATE: 11-61
TITLE: DSV-4 PROPELLANT TANK

SM DIVISION

PAGE: 5.16
MODEL: DSV-4
REPORT NO: SM 42569

5863804 TANK ASSY, AFT

LOAD DIAGRAMS
YIELD VALUES - LBS/IN

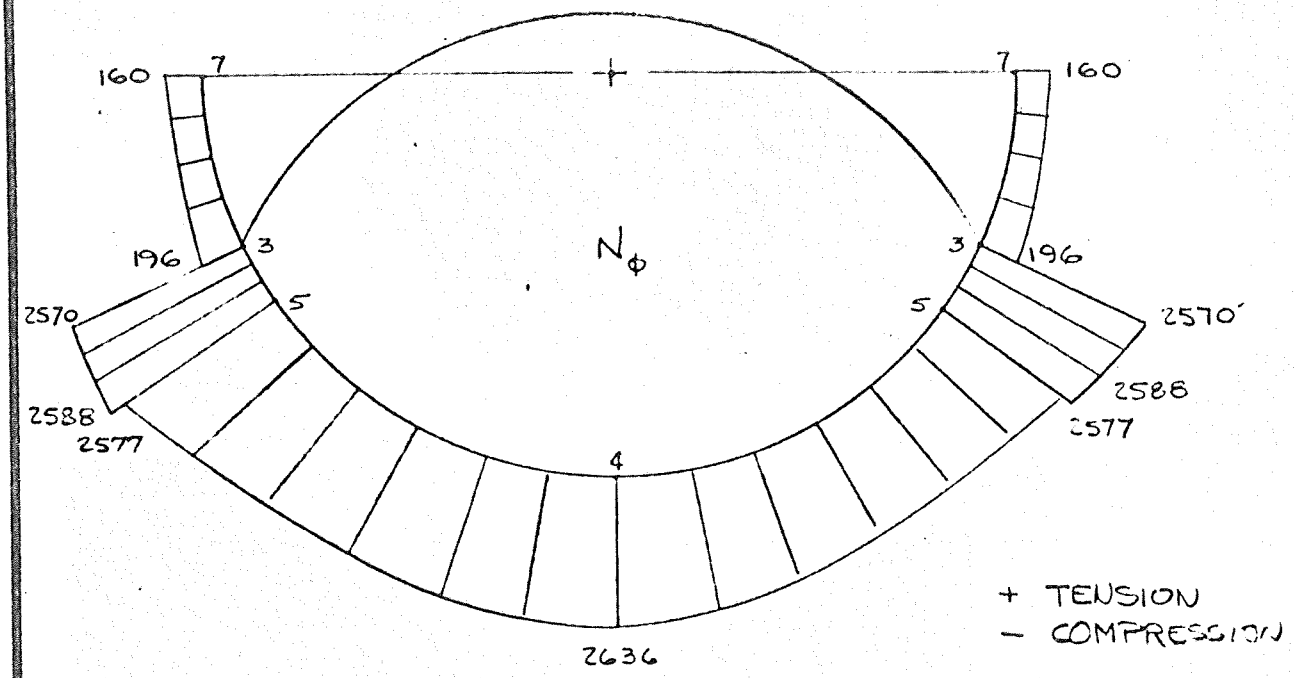

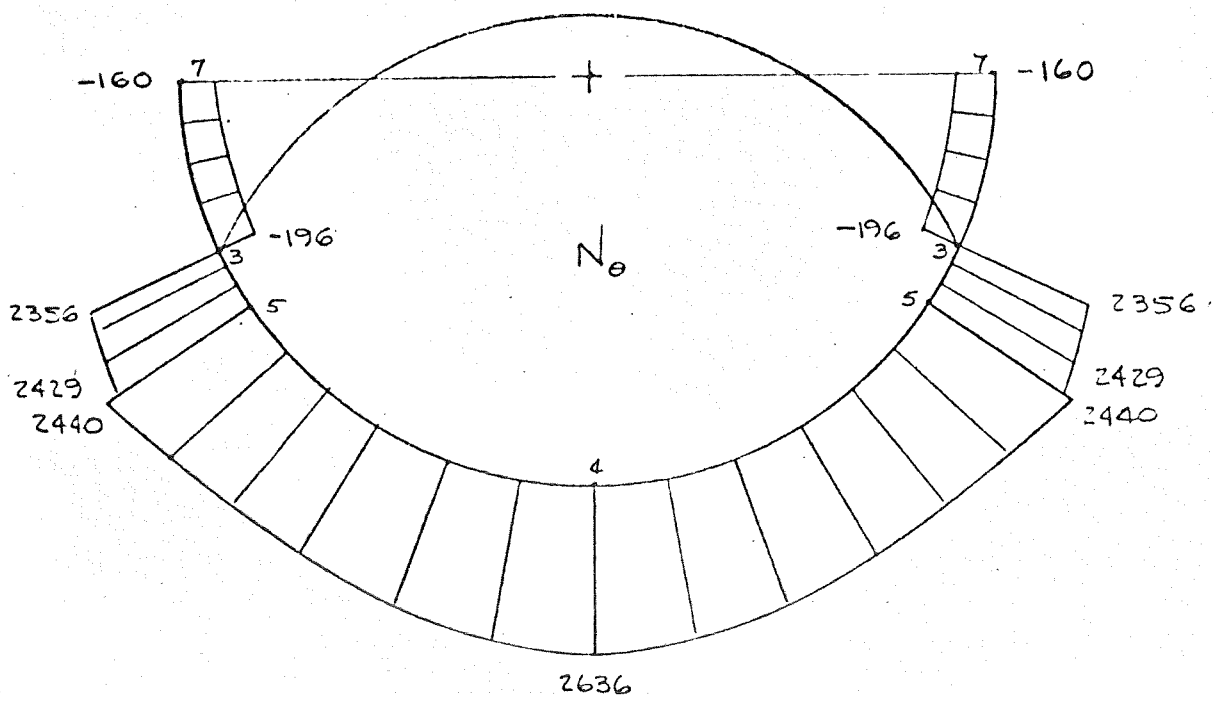

$\sqrt{3}/2 = .2376$

SM 42569

K+E ALBANENE 195L TRACING PAPER 68075

5863804 TANK ASSY, AFT

CASE IV . REF. APPENDIX III PAGE III.2.0

GROUND - LH_2 LOADED

$p_1 = 0$

$p_2 = 0$

$\gamma'_1 = .0025$ LBS/IN^3

$\gamma'_2 = 0$

$R_1 = R_2 = 110$ IN.

$a = 16.4$

$h_1 = 153.2$ IN

$h_2 = 0$

$h_3 = 0$

$\phi_1^2 = 39.3°$

$\phi_2^3 = 64.9°$

$\phi_3^5 = 54.8°$

$\phi_5^3 = \phi_6^3 = 64.8°$

$\phi_6^7 = 90°$

$S_1 = 155.9$ IN

$S_0 = 80.7$ IN

$\eta = 1.0$

$d = 93$ IN.

$W = 4419$ LBS.

YIELD

$p_1 = 0$

$p_2 = 0$

$\eta = 1.21$

$$T_2 = -\frac{4419 \times 1.1}{\pi \times 93}$$

$$= -16.6 \text{ LBS/IN}$$

5863804 TANK ASSY, AFT

$$N_{\phi_1}^2 = 55\{-1.21 \times .0025(153.2 + 110)\} - 4033 \times 1.21 \times .0025 \times -1.3277$$
$$= 55(-.796) + 16.3$$
$$N_{\phi_1}^2 = -27.5 \text{ LB/IN}$$

$$N_{\phi_2}^3 = -27.5(.4892) + 55\{-1.21 \times 110(.0025).7738 - 1.21 \times .0025(153.2)\}(.5108) - 4033 \times 1.21 \times .0025 \times -.4720$$
$$= -13.5 + 55\{-.26 - .46\}(.5108) + 5.76$$
$$= -13.5 - 20.2 + 5.76$$
$$N_{\phi_2}^3 = -27.9 \text{ LB/IN}$$

$$N_{\phi_3}^5 = 0 \qquad N_{\phi_3}^5 = 0$$

$$N_{\theta_3}^5 = 0 \qquad N_{\theta_3}^5 = 0$$

$$N_{\phi_4}^5 = -.5176 \frac{-16.6}{.8178}$$
$$= 11 \qquad N_{\phi_4}^5 = 11 \text{ LB/IN}$$

$$N_{\theta_4}^5 = 0 \qquad N_{\theta_4}^5 = 0$$

$$N_{\phi_5}^5 = 11 + 0 \qquad N_{\phi_5}^5 = 11 \text{ LB/IN}$$

$$N_{\theta_5}^5 = -11 \qquad N_{\theta_5}^5 = -11 \text{ LB/IN}$$

$$N_{\phi_5}^3 = 11(.8169)$$
$$= 9 \qquad N_{\phi_5}^3 = 9 \text{ LB/IN}$$

$$N_{\theta_5}^3 = -9 \qquad N_{\theta_5}^3 = -9 \text{ LB/IN}$$

$$N_{\phi_6}^3 = 9 + 27.9 \qquad N_{\phi_6}^3 = 37 \text{ LB/IN}$$

$$N_{\theta_6}^3 = -37 + 110\{1.21 \times .0025(153.2 + 16.4 + 110 \times .4258)\}$$
$$= -37 + 72 \qquad N_{\theta_6}^3 = 35 \text{ LB/IN}$$

$$N_{\phi_6}^7 = (9 + 28)(.8187) + 55\{1.21 \times .0025(153.2 + 16.4)\}[.1813] - 4033 \times 1.21 \times .0025 \times -.0772$$
$$= 30.3 + 5.1 + .9 \qquad N_{\phi_6}^7 = 36 \text{ LB/IN}$$

$$N_{\theta_6}^7 = -36 + 110\{1.21 \times .0025(153.2 + 16.4)\}$$
$$= -36 + 56 \qquad N_{\theta_6}^7 = 20 \text{ LB/IN}$$

$$N_{\phi_3}^4 = 0 \qquad N_{\phi_3}^4 = 0$$

$$N_{\theta_3}^4 = 0 \qquad N_{\theta_3}^4 = 0$$

5863804 TANK ASSY, AFT

LOAD DIAGRAMS
YIELD VALUES - LBS/IN

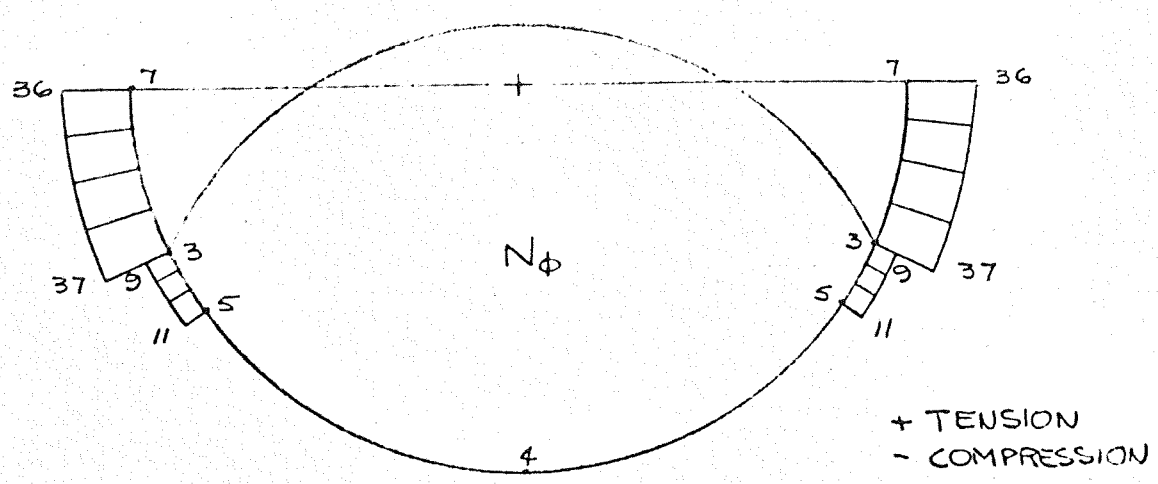

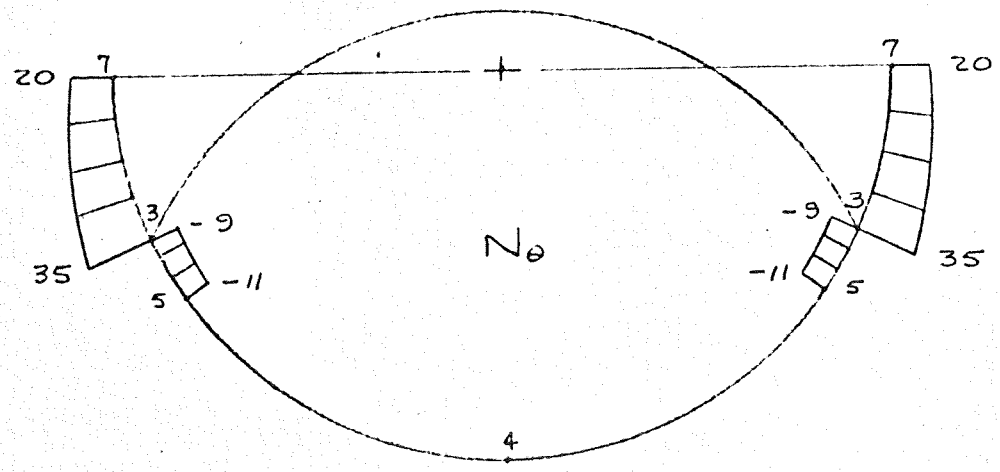

5863804 TANK ASSY, AFT

CASE V REF. APPENDIX III PAGE III.2.0

GROUND - LH_2 LOADED AND PRESSURIZED

$p_1 = 38 - 14.7 = 23.3$ PSIG

$p_2 = 0$

$\gamma_1 = .0025$ LBS

$\gamma_2 = 0$

$R_1 = R_2 = 110$ IN.

$a = 16.4$ IN.

$h_1 = 153.2$ IN

$h_2 = 0$

$h_3 = 0$

$\phi_1^2 = 39.3°$

$\phi_2^3 = 64.9°$

$\phi_3^5 = 54.8°$

$\phi_5^3 = \phi_6^3 = 64.8°$

$\phi_6^7 = 90°$

$S_1 = 155.9$ IN

$S_0 = 80.7$ IN

$\eta = 1.0$

$d = 93$ IN.

$W = 4419$ LBS

YIELD

$p_1 = 28.2$ PSIG

$p_2 = 0$

$\eta = 1.21$

$$T_2 = -\frac{4419 \times 1.1}{\pi \times 93}$$

$$= -16.6 \text{ LBS/IN}$$

THE LOADS FOR THIS CONDITION ARE IDENTICAL TO THOSE FOR THE GROUND-LH_2 LOADED CONDITION EXCEPT FOR THE ADDITION OF THE $\frac{p_1 R}{2}$ TERM TO THE MEMBRANE LOADS IN REGIONS 1, 2 AND 6.

$$\text{YIELD} \quad \frac{p_1 R}{2} = \frac{28.2 \times 110}{2} = 1551 \text{ LBS/IN}$$

FORM 28-8-1 (REV. 8-63)

PREPARED BY: J. F. MEYERS
CHECKED BY: W. B.
DATE: 11-61
TITLE: DSV-4 PROPELLANT TANK

DOUGLAS AIRCRAFT COMPANY, INC.

SM DIVISION

PAGE: 5.21
MODEL: DSV-4
REPORT NO: SM 42569

5863804 TANK ASSY, AFT

LOAD DIAGRAMS
YIELD VALUES - LBS/IN

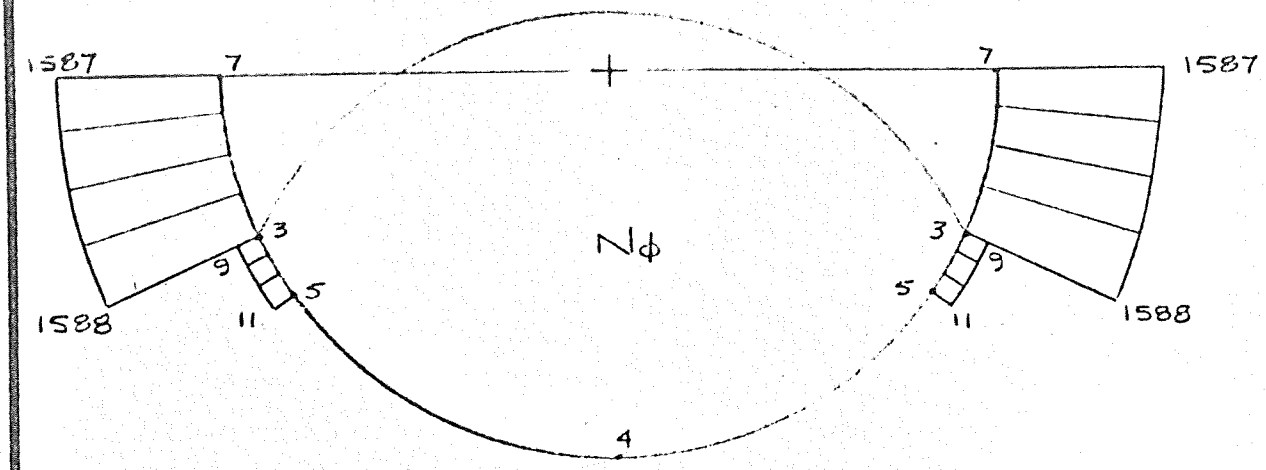

+ TENSION
- COMPRESSION

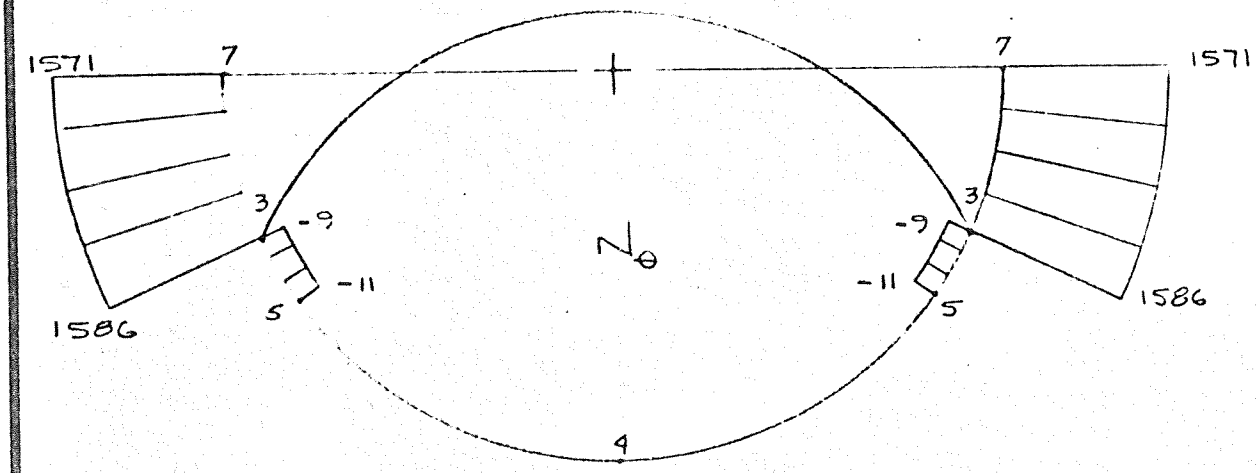

SM 42569

K+E ALBANENE 195L TRACING PAPER 88079

5863804 TANK ASSY, AFT

CASE VI REF. APPENDIX III
S-IV BURN OUT PAGE III.2.0

$p_1 = 44$ PSIG
$p_2 = 50$ PSIG
$\gamma_1 = 0$
$\gamma_2 = 0$
$R_1 = R_2 = 110$
$a = 16.4$
$h_1 = 0$
$h_2 = 0$
$h_3 = 0$

$\phi_1^2 = 39.3°$
$\phi_2^3 = 64.9°$
$\phi_3^5 = 54.8°$
$\phi_5^3 = \phi_6^3 = 64.8°$
$\phi_6^7 = 90°$
$S_1 = 155.9$ IN.
$S_0 = 80.7$ IN.

$d = 93$ IN.
$W = 90{,}000$ LBS

YIELD

$p_1 = 53.24$ PSIG
$p_2 = 60.5$ PSIG

$$T_2 = \frac{1.1 \times 90{,}000}{\pi \times 93}$$
$$= 339 \text{ LBS/IN}$$

$N\phi_1^2 = 55\{60.5 - 53.24\}$
$= 55 \times 7.26$

$N\phi_1^2 = 399$ LB/IN

$N\phi_2^3 = 399(.4892) + 55\{60.5 - 53.24\}[1 - .4892]$
$= 195 + 204$

$N\phi_2^3 = 399$ LB/IN

$N\phi_3^5 = 55\{60.5\}$

$N\phi_3^5 = 3328$ LB/IN

$N\theta_3^5 = -3328 + 110\{60.5\}$
$= -3328 + 6655$

$N\theta_3^5 = 3328$ LB/IN

$N\phi_4^5 = -.5176 \times \frac{339}{.8178}$

$N\phi_4^5 = -215$ LB/IN

$N\theta_4^5 = 0$

$N\phi_5^5 = -215 + 3328$

$N\phi_5^5 = 3113$ LB/IN

$N\theta_5^5 = -3113 + 110\{60.5\}$
$= -3113 + 6655$

$N\theta_5^5 = 3542$ LB/IN

$N\phi_5^3 = (-215 + 3328)(.8170) + 55\{60.5\}[.1830]$
$= 2543 + 609$

$N\phi_5^3 = 3152$ LB/IN

$N\theta_5^3 = -3152 + 110\{60.5\}$
$= -3152 + 6655$

$N\theta_5^3 = 3503$ LB/IN

$N\phi_6^3 = 3152 - 399$

$N\phi_6^3 = 2753$ LB/IN

$N\theta_6^3 = -2753 + 110\{53.24\}$
$= -2753 + 5856$

$N\theta_6^3 = 3103$ LB/IN

$N\phi_6^7 = (3152 - 399)(.8187) + 55\{53.24\}[.1813]$
$= 2254 + 531$

$N\phi_6^7 = 2785$ LB/IN

$N\theta_6^7 = -2785 + 110\{53.24\}$
$= -2785 + 5856$

$N\theta_6^7 = 3071$ LB/IN

$N\phi_3^4 = N\theta_3^4 = 55 \times 60.5$

$N\phi_3^4 = 3328$ LB/IN

$N\theta_3^4 = 3328$ LB/IN

FORM 20-8-1 (REV. 6-59)

PREPARED BY J.F. MEYERS

CHECKED BY: W.L.B.

DATE: 8-61

TITLE: DSV-4 PROPELLANT TANK

DOUGLAS AIRCRAFT COMPANY, INC.

S.M DIVISION

PAGE: 5.24

MODEL: DSV-4

REPORT NO: SM 42 5 C 3

5863804 TANK ASSY, AFT

YIELD VALUES LBS/IN

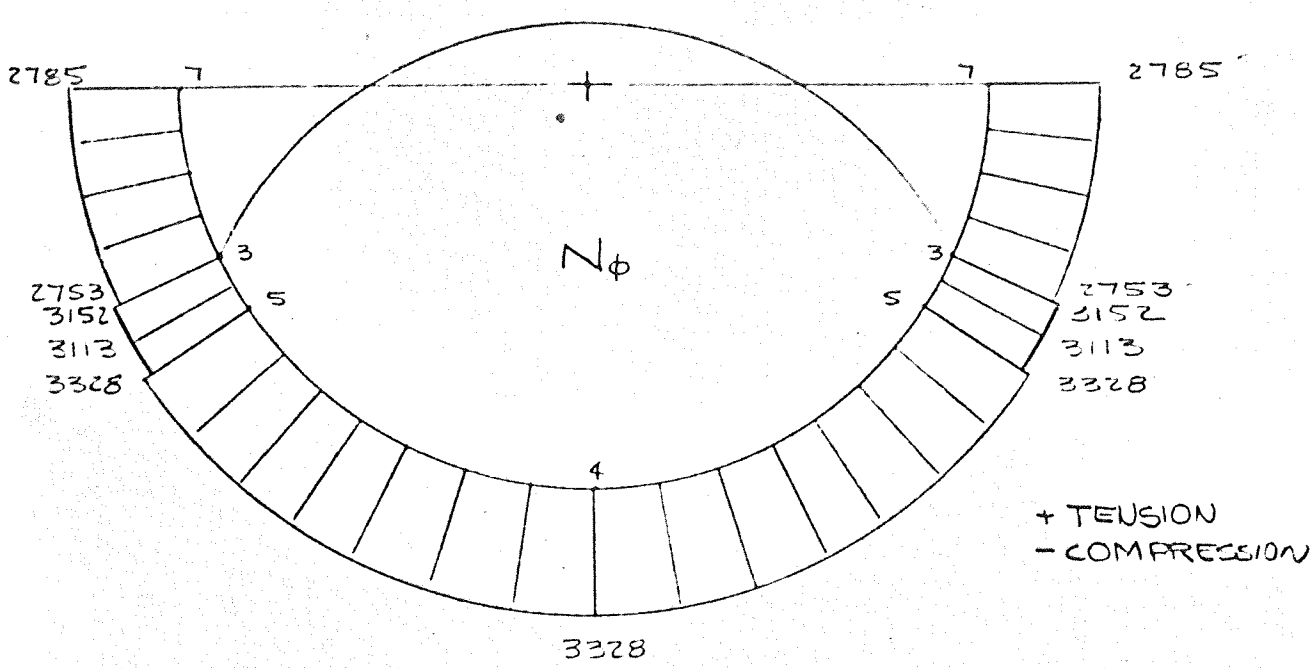

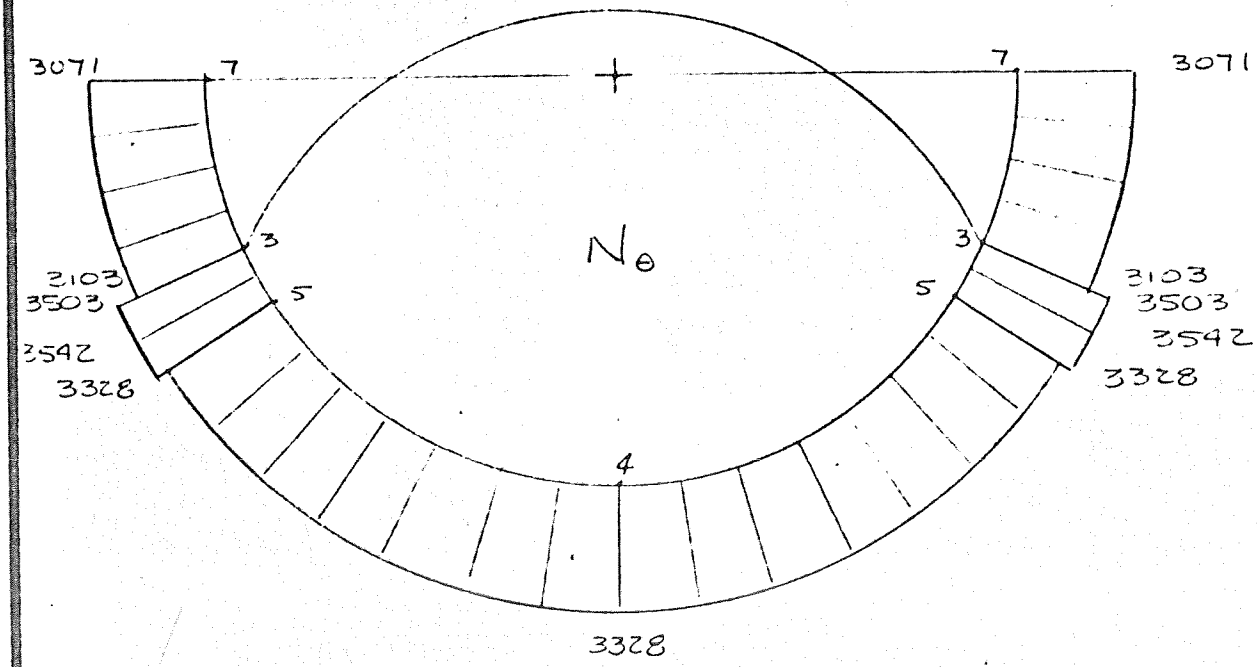

K+E ALBANENE 195L TRACING PAPER 68075

5863805 DOME ASSY, AFT TANK

REGION 3-7

WAFFLE PATTERN

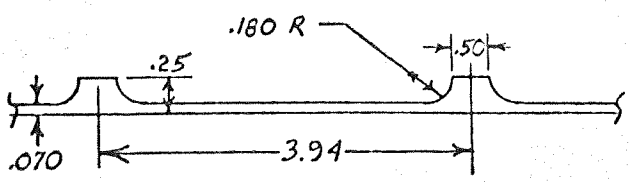

$\theta = 45°$
$t_{ws} = .500$
$r_{ws} = .180$
$t_s = .070$
$b_s = 3.94$
$\ell_s = 3.08$
$H = .250$

DETERMINATION OF $\bar{t}$ AND t^* (METHOD REF 2)
(REF. P. 5.26)
$\bar{t} = .1193$
$t^* = .1416$

TEMP = ROOM
$E = 10.5 \times 10^6$ psi

$R/t = \frac{110}{.1416} = 777$

$\theta = 64.8°$

$\left(\frac{N_T}{ER}\right) \times 10^7 = 4.0$ $\therefore N_T = \frac{4.0 \times 10.5 \times 10^6 \times 110}{10^7} = 462$ #/IN (ULTIMATE)
(REF P 5.27)

$N_\phi = -N_\theta = 196$ #/IN (CASE II Y YIELD) (REF. P. 5.14)

$N_\phi = -N_\theta = \frac{196}{110} \times 1.35 = 241$ #/IN ULT.

$M.S. = \frac{462}{241} - 1 = .91$

ONLY BUCKLING CONDITIONS ($-N_\theta$) OCCUR WHEN LO_2 TANK IS LOADED (PRES. OR NO PRES.) AND LH_2 TANK EMPTY.

5863805 DOME ASSY, AFT TANK

PARAMETERIZATION OF WAFFLE PATTERN PROPERTIES

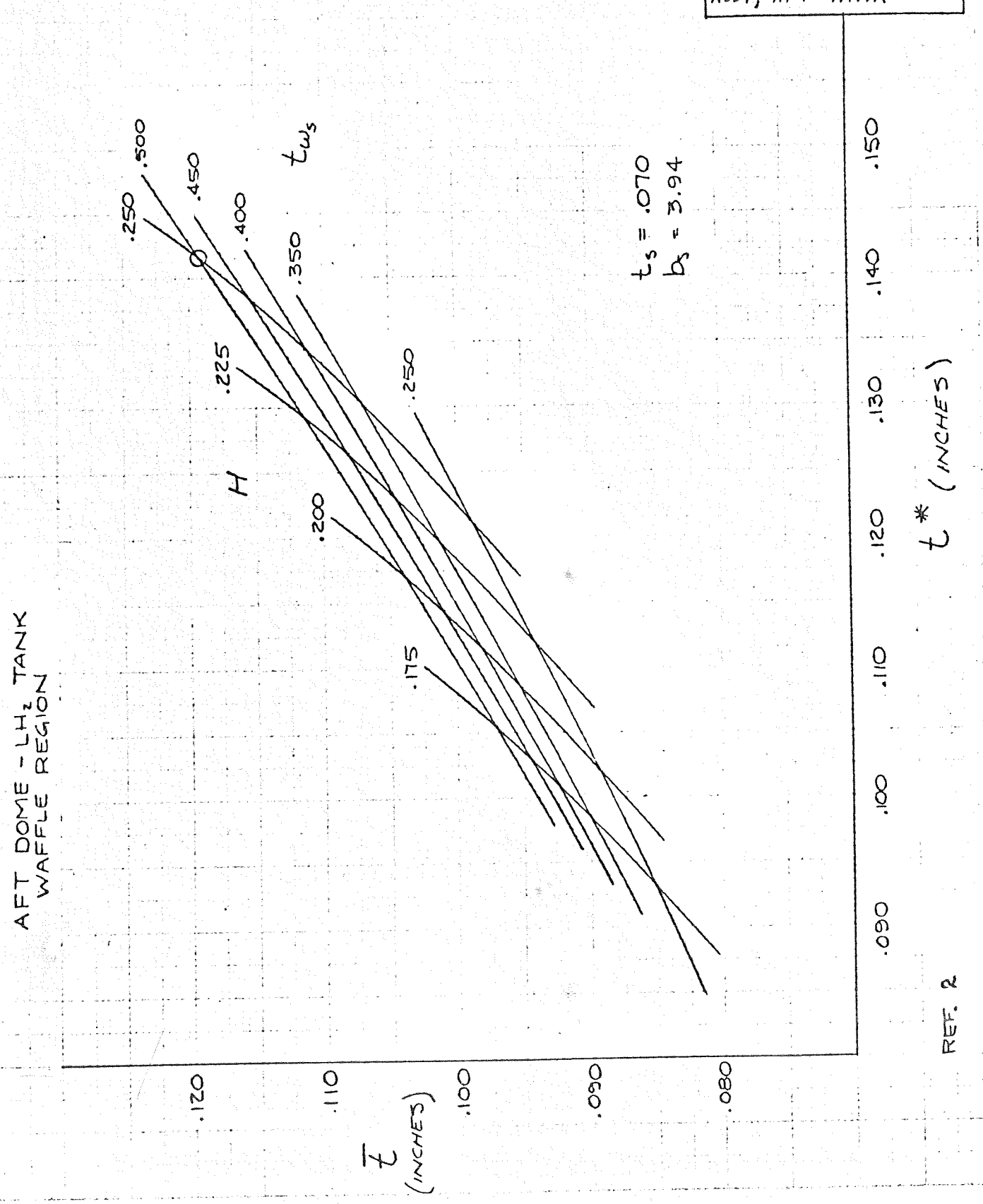

REF. 2

SM 42569

BUCKLING OF A TRUNCATED SPHERE
DUE TO TENSILE EDGE LOAD

EDGES SIMPLY SUPPORTED

(REF. 5)

$$\frac{N_T}{ER} = 0.302\left(\frac{t \sin\theta}{R}\right)^2$$

N_T = TENSILE BUCKLING LOAD AT EQUATOR (LB/IN)

E = YOUNG'S MODULUS (PSI)

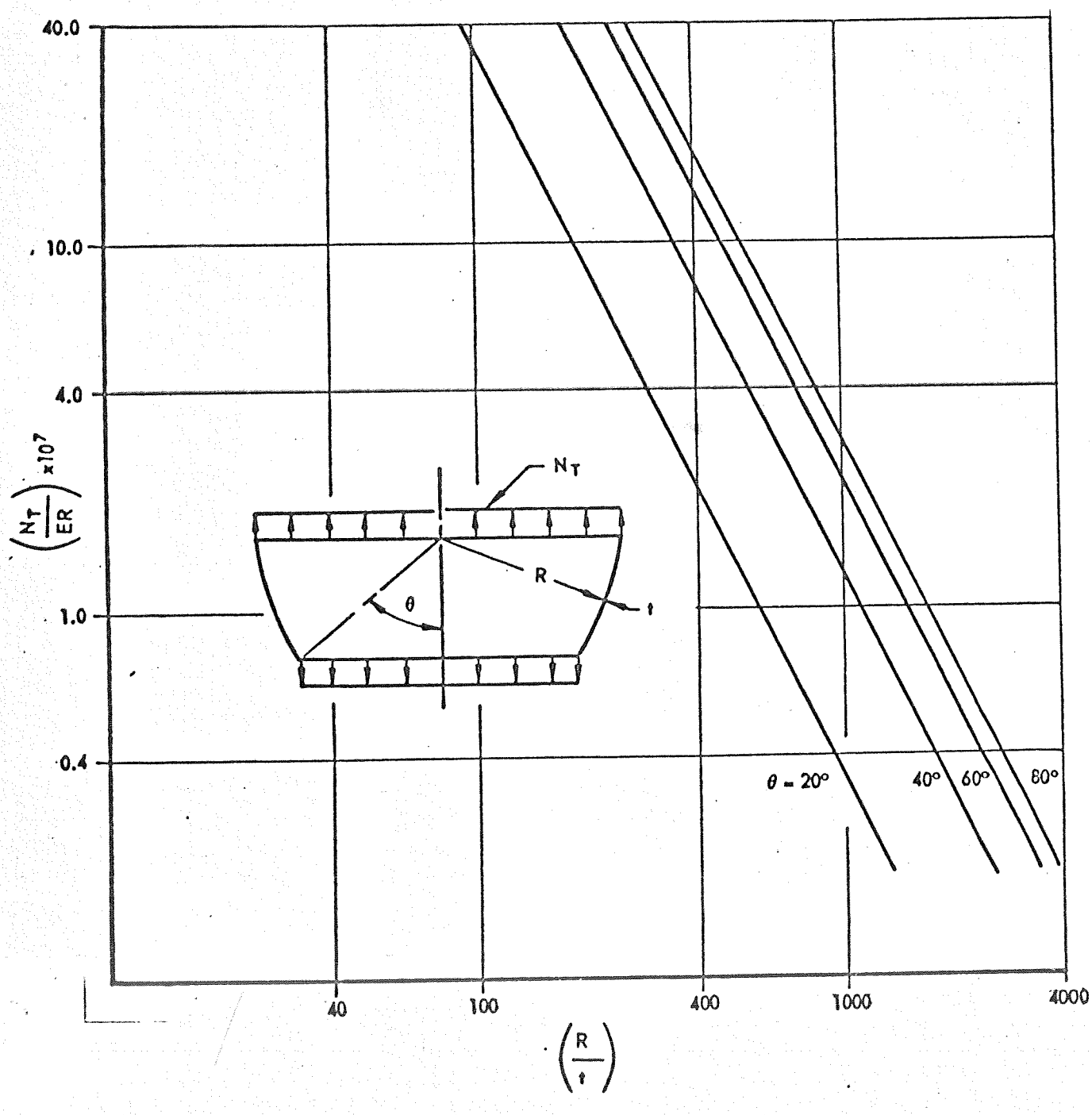

5863805 DOME ASSY, AFT TANK

THE MARGINS OF SAFETY FOR THE VARIOUS SECTIONS OF THE AFT DOME WILL BE DETERMINED USING THE HUBER-HENCKY-VON MISES THEORY OF FAILURE FOR A BIAXIAL STATE OF STRESS, REF. STRENGTH OF MATERIAL, PART II, S. TIMOSHENKO

$$\left(\frac{N_\phi - N_\theta}{t}\right)^2 + \left(\frac{N_\theta}{t}\right)^2 + \left(\frac{N_\phi}{t}\right)^2 = 2\sigma_y^2$$

REGION 4-5

AT POINT 5: $N_\phi = 4957$, $N_\theta = 3775$ } REF. PG. 5.10

$t = .086^{+.010}_{-.005}$

$t_{MIN} = .081$

$$\left(\frac{4957 - 3775}{.081}\right)^2 + \left(\frac{3775}{.081}\right)^2 + \left(\frac{4957}{.081}\right)^2 = 2\sigma^2$$

$$147 \times 10^6 + 2408 \times 10^6 + 3745 \times 10^6 = 2\sigma^2$$

$$\sigma^2 = 3150 \times 10^6$$

$$\sigma = 56{,}124$$

$T = -298°F$ σ_y OF 2014-T6 $= 66{,}500$

$$M.S = \frac{66{,}500}{56{,}124} - 1 = \boxed{.18}$$

AT POINT 4: $N_\phi = 5376$, $N_\theta = 5376$ } REF PG. 5.10

$t_{MIN} = .081$

$$2\left(\frac{5376}{.081}\right)^2 = 2\sigma^2$$

$$\sigma = 66{,}370$$

$$M.S. = \frac{66{,}500}{66{,}370} - 1 = \boxed{.002}$$

5863805 DOME ASSY, AFT TANK

REGION 5-3

AT POINT 3 :

$N_\phi = 4902$
$N_\theta = 3385$ } REF. PG. 5.10
$t = .078 \begin{smallmatrix}+.010\\-.005\end{smallmatrix}$
$t_{MIN.} = .073$

$$\left(\frac{4902-3385}{.073}\right)^2 + \left(\frac{3385}{.073}\right)^2 + \left(\frac{4902}{.073}\right)^2 = 2\sigma^2$$

$$10^6(432 + 2150 + 4509) = 2\sigma^2$$

$$\sigma^2 = 3546 \times 10^6$$

$$\sigma = 59,548$$

$T = -298°F \qquad \sigma_y = 66,500$

$$M.S. = \frac{66,500}{59,548} - 1 = \boxed{.12}$$

AT POINT 5 :

$N_\phi = 5032$
$N_\theta = 3901$ } REF. PG. 5.10

$$\left(\frac{5032-3901}{.073}\right)^2 + \left(\frac{3901}{.073}\right)^2 + \left(\frac{5032}{.073}\right)^2 = 2\sigma^2$$

$$(240 + 2856 + 4751) \times 10^6 = 2\sigma^2$$

$$\sigma^2 = 3923.5 \times 10^6$$

$$\sigma = 62,637$$

$$M.S. = \frac{66,500}{62,637} - 1 = \boxed{.06}$$

5863805 DOME ASSY, AFT TANK

REGION 3-7

AT POINT 7 :

$N_\phi = 4207$
$N_\theta = 1454$ } REF. PG 5.10
$t = .070 \begin{smallmatrix}+.010\\-.005\end{smallmatrix}$
$t_{MIN} = .065$

$$\left(\frac{4207-1454}{.065}\right)^2 + \left(\frac{1454}{.065}\right)^2 + \left(\frac{4207}{.065}\right)^2 = 2\sigma^2$$

$$(1792 + 479 + 4195)\cdot 10^6 = 2\sigma^2$$

$$\sigma^2 = 3233 \times 10^6$$

$$\sigma = 56{,}800$$

$T = -100°F$ $\quad \sigma_y = 60{,}500$ PSI

$$M.S = \frac{60{,}500}{56{,}800} - 1 = \boxed{.07}$$

AT POINT 3 :

$N_\phi = 4245$
$N_\theta = 1528$ } REF. PG 5.10
$t_{MIN} = .065$

$$\left(\frac{4245-1528}{.065}\right)^2 + \left(\frac{1528}{.065}\right)^2 + \left(\frac{4245}{.065}\right)^2 = 2\sigma^2$$

$$(1743 + 552 + 4260)\cdot 10^6 = 2\sigma^2$$

$$\sigma^2 = 3278 \times 10^6$$

$$\sigma = 57{,}250$$

$$M.S = \frac{60{,}500}{57{,}250} - 1 = \boxed{.06}$$

K+E ALBANENE 195L TRACING PAPER 67441

5863605 DOME ASSY, AFT TANK

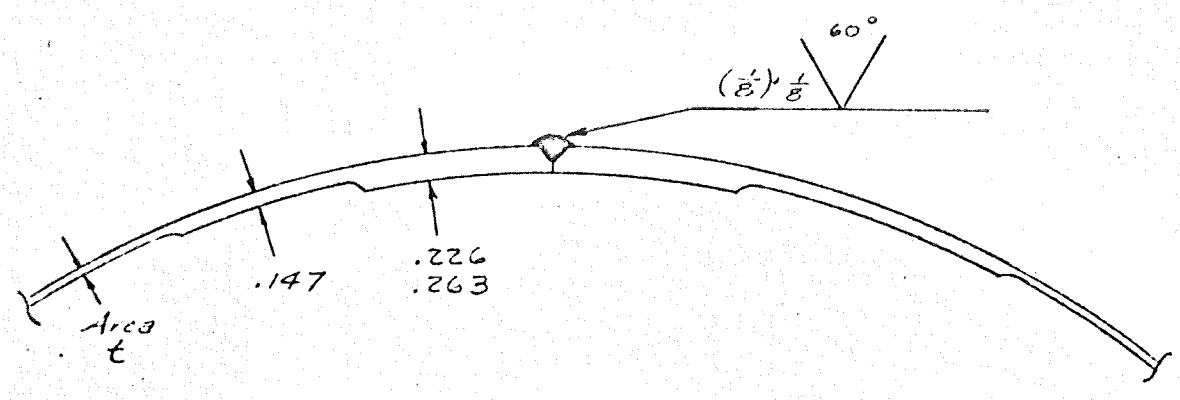

TYPICAL SIX PLACES
INERT GAS SHIELDED METAL ARC WELDED
4043 FILLER METAL
NO HEAT TREAT AFTER WELDING

REGION 4-5 (REF. PAGE 5.28)

$N_\phi = 5376$ $T = -298\,°F$
$N_\theta = 5376$ $\sigma_y = 23{,}800$ PSI
$t_{MIN.} = .226$

2014-T6 AL.
1 WELD REPAIR
BEAD ON

$$2\sigma^2 = 2\left(\frac{5376}{.226}\right)^2$$

$$\sigma = 23{,}787 \text{ PSI}$$

$$M.S = \frac{23{,}800}{23{,}787} - 1 = \boxed{.001}$$

5863605 DOME
ASSY, AFT TANK

REGION 5-3 (REF. PAGE 5.29)

AT POINT 5: $N_\phi = 5032$, $N_\theta = 3901$ } CASE I $T = -298°F$, $\sigma_y = 23,800$ PSI

$t_{MIN.} = .226$

$$2\sigma^2 = \left(\frac{5032}{.226}\right)^2 + \left(\frac{3901}{.226}\right)^2 + \left(\frac{5032-3901}{.226}\right)^2$$

$$2\sigma^2 = (496 + 298 + 25)10^6$$

$$\sigma^2 = 407.5 \times 10^6$$

$$\sigma = 20,236 \text{ PSI}$$

$$M.S. = \frac{23,800}{20,236} - 1 = .18$$

REGION 3-7 (REF. PAGE 5.30)

AT POINT 3: $N_\phi = 4245$, $N_\theta = 1528$ } CASE I $T = -100°F$, $\sigma_y = 21,600$ PSI 2014-T6 AL / WELD REPAIR / BEAD ON

$t_{MIN.} = .226$

$$2\sigma^2 = \left(\frac{4245}{.226}\right)^2 + \left(\frac{1528}{.226}\right)^2 + \left(\frac{4245-1528}{.226}\right)^2$$

$$2\sigma^2 = (353 + 46 + 145)\times 10^6$$

$$\sigma^2 = 272 \times 10^6$$

$$\sigma = 16,493 \text{ PSI}$$

$$M.S. = \frac{21,600}{16,493} - 1 = .31$$

SM 42569

58638C4 TANK ASSY, AFT

EXTERNAL PRESSURE BUCKLING OF DSV-4 AFT DOME

AFT LH_2 DOME

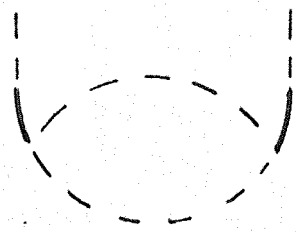

$t^* = .1416 \qquad E = 10.5 \times 10^6$

$\nu = .3 \qquad R = a = 110$

(REF. 3)

$$\lambda = \frac{1.818 \times 110}{\sqrt{110 \times .1416}} = 50.7$$

ASSUME $K = .1$ (λ OFF CURVE)

$$q_{cr} = \frac{.1 \times 2 \times 10.5 \times 10^6 (.1416)^2}{(110)^2} = 3.47 \text{ PSI}$$

$$q_{LIMIT} = \frac{3.47}{1.35} = 2.57 \text{ PSI}$$

M.S. = NOT CRITICAL*

AFT LO_2 DOME

$t = .078 \qquad E = 10.5 \times 10^6$

$\nu = .3 \qquad R = 110 \qquad a = 100$

$$\lambda = \frac{1.818 \times 100}{\sqrt{110 \times .078}} = 62$$

ASSUME $K = .1$ (λ OFF CURVE)

$$q_{cr} = \frac{.1 \times 2 \times 10.5 \times 10^6 (.078)^2}{(110)^2} = 1.055 \text{ PSI}$$

$$q_{cr_{LIMIT}} = \frac{1.055}{1.35} = .78 \text{ PSI}$$

M.S. = NOT CRITICAL*

* EXTERNAL PRESSURE IS NOT AN EXPECTED DESIGN CONDITION

5863804 TANK ASSY, AFT

AFT LO_2 DOME

$t = .086 \quad a = 90 \quad R = 110$

$E = 10.5 \times 10^6 \quad \nu = .3$

$$\lambda = \frac{1.818 \times 90}{\sqrt{110 \times .086}} = 53.2$$

ASSUME $K = .1$ (λ OFF CURVE)

$$q_{cr} = \frac{2 \times .1 \times 10.5 \times 10^6 (.086)^2}{(110)^2} = 1.281 \text{ PSI}$$

$$q_{cr_{LIMIT}} = \frac{1.281}{1.35} = \underline{\underline{.95 \text{ PSI}}}$$

M.S. = NOT CRITICAL*

* EXTERNAL PRESSURE IS NOT AN EXPECTED DESIGN CONDITION

SM42569

K+E ALBANENE® TRACING PAPER 70883

6.0 COMMON BULKHEAD ASSEMBLY

6.1 Configuration

The S-IV common bulkhead is a sandwich construction spherical dome of 110 inch radius. The bulkhead is made up of four basic parts:

1. Forward Dome. Six 2014-T6 segments which are formed to 110 inch radius, chemically milled, and welded.
2. Aft Dome. Six 2014-T6 segments which are formed to 110 inch radius, chemically milled, and welded.
3. HRP 3/16 - GF - 4.0 honeycomb core.
4. HT 424 adhesive.

6.2 Analysis

The common bulkhead was analyzed using the maximum pressure and thermal conditions anticipated. A list of the conditions used for analysis are outlined on Page 6.4.

SM42569

SM 42563

COMMON BULKHEAD ASSY, TANK (5863806)

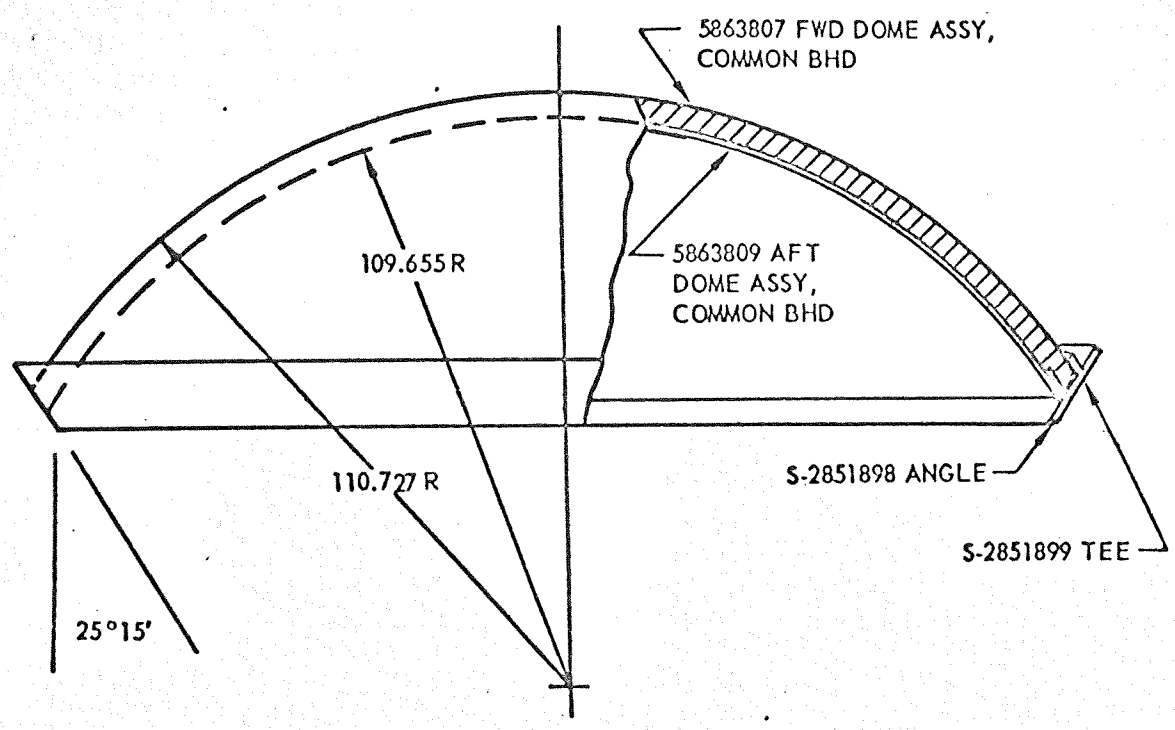

SM 42562

FWD DOME ASSY, COMMON BHD (5863807)

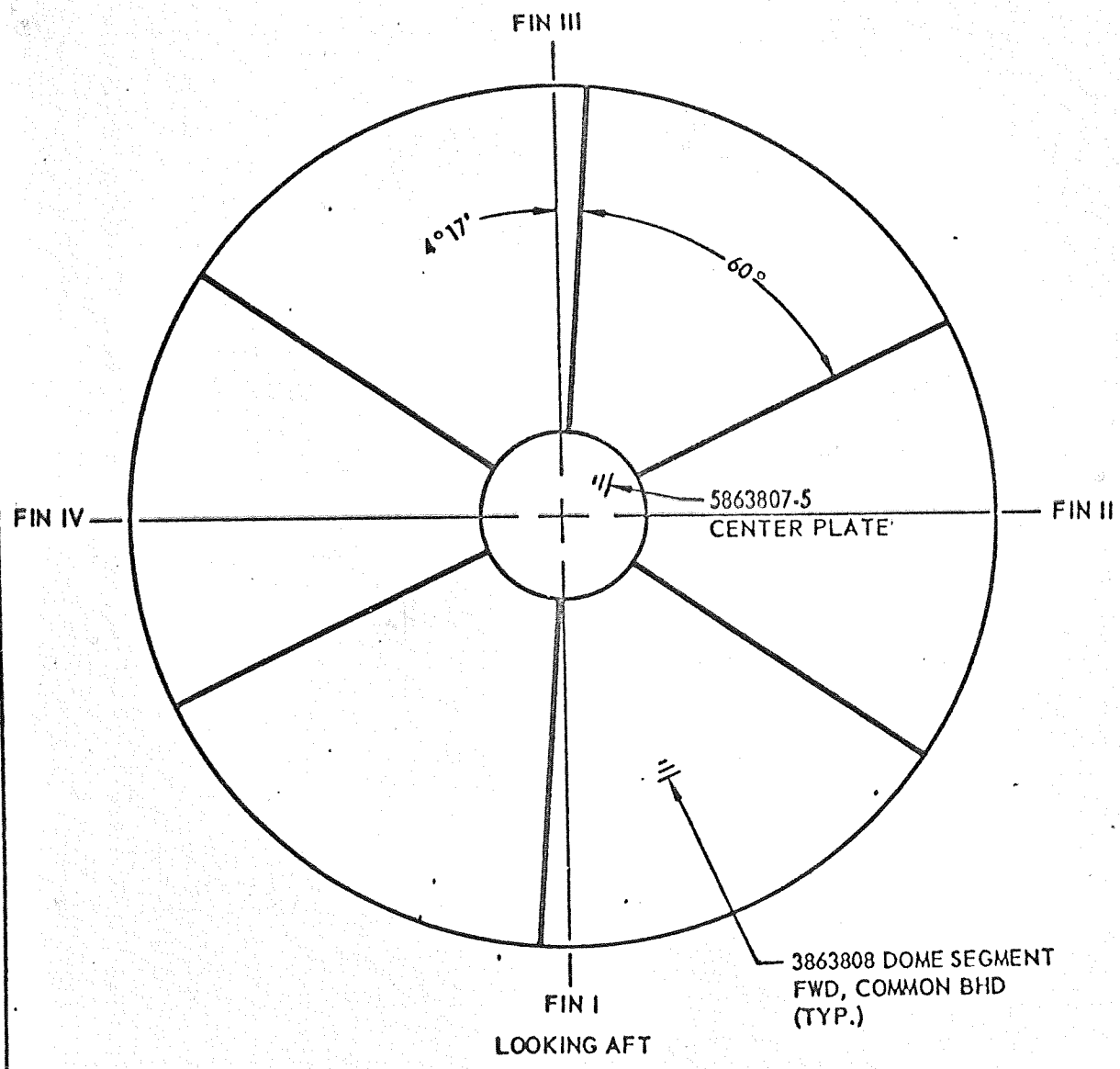

SM42569 SM 42569

AFT DOME ASSY, COMMON BHD (5863809)

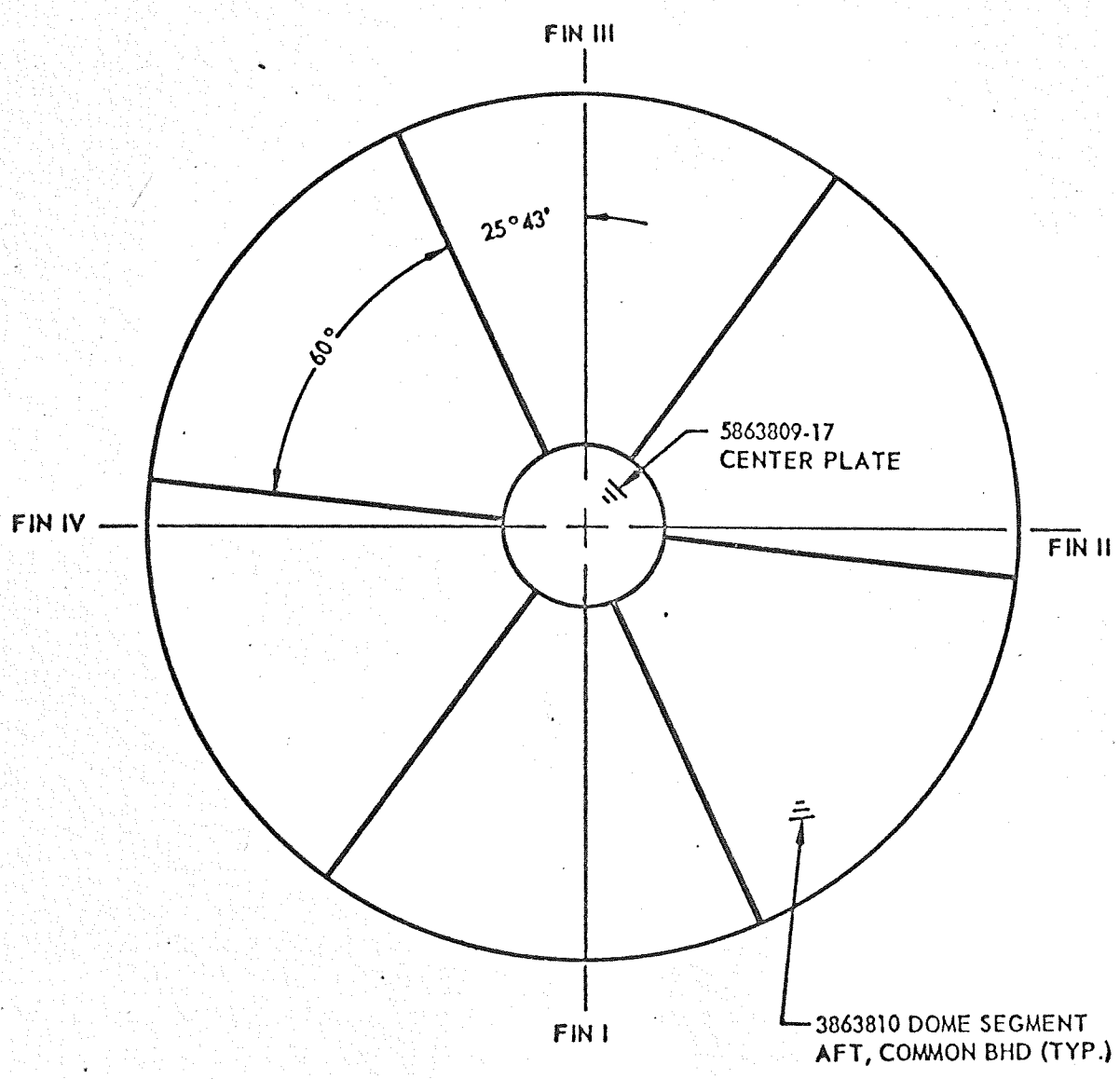

LOOKING AFT

3863808 DOME SEGMENT, FWD, COMMON BHD
3863810 DOME SEGMENT, AFT, COMMON BHD

5863806 COMMON BHD ASSY, TANK

THE COMMON BULKHEAD IS ANALYZED FOR THE FOLLOWING LOAD CONDITIONS

1. GROUND HOLD, LO_2 TANK AT AMBIENT PRESSURE, THERMAL SHOCK FROM THE START OF THE LH_2 TANK FILL.

$$P_{LIMIT} = 15.2 - 14.7 = .5 \text{ PSIG (REVERSE)}$$

2. GROUND HOLD, LH_2 TANK AT AMBIENT PRESSURE, THERMAL SHOCK FROM THE START OF THE LO_2 TANK FILL.

$$P_{LIMIT} = 15.2 - 14.7 = .5 \text{ (INTERNAL)}$$

3. GROUND HOLD, THE LO_2 TANK LOADED AND PRESSURIZED, THE LH_2 TANK EMPTY AND AT AMBIENT PRESSURE.

$$P_{LIMIT} = 50 - 14.7 + 42\,(.041)$$
$$= 37 \text{ PSIG (INTERNAL)}$$

4. S-I BURNOUT - LH_2 TANK PRESSURE MINIMUM, LO_2 TANK PRESSURE MAXIMUM.

$$P_{LIMIT} = -30 - 216\,(.0025)(7.15)$$
$$+ 50 + 42\,(.0410)(7.15)$$
$$= -30 - 3.86 + 50 + 12.31$$
$$= 28.5 \text{ PSIG (INTERNAL)}$$

5. GROUND HOLD, THE LH_2 TANK FULL AND PRESSURIZED, THE LO_2 TANK LOADED AND AT AMBIENT PRESSURE.

$$P_{LIMIT} = 38 - 14.7 + 216\,(.0025)$$
$$= 23.8 \text{ PSIG (REVERSE)}$$

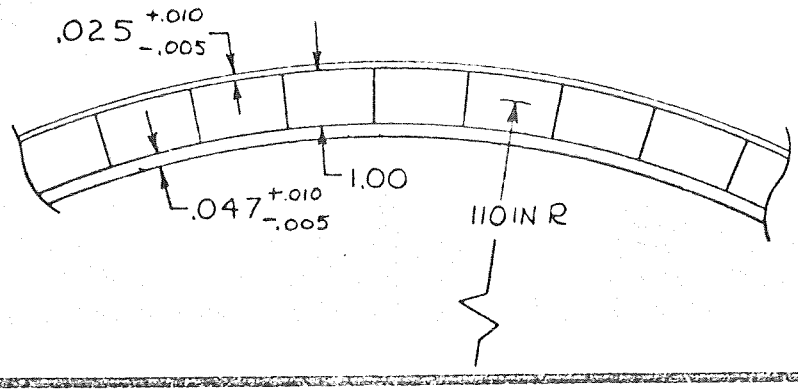

5863806 COMMON BHD ASSY, TANK

THE EQUATIONS FOR FACE STRESSES ARE AS FOLLOWS:
(REF PG III.1.0, III.1.1)

$$\sigma_1 = \frac{PR}{2t_1}\left[\frac{\frac{1}{E_2 t_2}}{\frac{1}{E_1 t_1}+\frac{1}{E_2 t_2}}\right] \pm \frac{1}{2t_1}\left[\frac{\pm(\alpha\Delta T)_1 \pm (\alpha\Delta T)_2}{\frac{1-\mu}{2E_1 t_1}+\frac{1-\mu}{2E_2 t_2}}\right]$$

$$\sigma_2 = \frac{PR}{2t_2}\left[\frac{\frac{1}{E_1 t_1}}{\frac{1}{E_1 t_1}+\frac{1}{E_2 t_2}}\right] \pm \frac{1}{2t_2}\left[\frac{\pm(\alpha\Delta T)_1 \pm (\alpha\Delta T)_2}{\frac{1-\mu}{2E_1 t_1}+\frac{1-\mu}{2E_2 t_2}}\right]$$

FORWARD FACE (LH_2 TANK) — SUBSCRIPT 1
AFT FACE (LO_2 TANK) — SUBSCRIPT 2

THE YIELD AND ULTIMATE FACE STRESSES FOR THE AFOREMENTIONED CONDITIONS ARE FOUND BY MULTIPLYING THE FACE STRESSES BY THE APPROPRIATE FACTORS OF SAFETY, AS FOLLOWS:

YIELD STRESS = (LIMIT PRESSURE STRESS)(1.21) + (LIMIT THERMAL STRESS)(1.1)

$$= \sigma_{PR}(1.21) + \sigma_{TH}(1.1)$$

ULTIMATE STRESS = $1.35(\sigma_{PR} + \sigma_{TH})$

THE MOST CRITICAL CONDITION OCCURS WHEN THE FACES ARE OF MINIMUM THICKNESS. CRITICAL STRESSES ARE FOUND BY MULTIPLYING THE APPROPRIATE YIELD AND ULTIMATE STRESSES BY THE RATIO OF NOMINAL TO MINIMUM THICKNESS.

FWD FACE: $t_{NOMINAL} = .025$
$t_{MINIMUM} = .020$

AFT FACE: $t_{NOMINAL} = .047$
$t_{MINIMUM} = .042$

5863806 COMMON
BHD ASSY, TANK

CONDITION	T_1 °F	T_2 °F	$E_1(10^6)$	$E_2(10^6)$	$(\alpha\Delta T)_1\ 10^{-6}$	$(\alpha\Delta T)_2\ 10^{-6}$
1	-423	120	12.25	10.40	-4400	600
2	120	-298	9.15*	11.60	600	-3800
3	120	-298	10.40	10.00*	600	-3800
4	-423	-298	12.25	11.60	-4400	-3800
5	-423	-298	12.25	11.60	-4400	-3800

CONDITION	$\frac{1}{E_1 t_1}$	$\frac{1}{E_2 t_2}$	$\frac{1}{E_1 t_1} + \frac{1}{E_2 t_2}$	$\frac{1-\mu}{2E_1 t_1}$	$\frac{1-\mu}{2E_2 t_2}$	$\frac{1-\mu}{2E_1 t_1} + \frac{1-\mu}{2E_2 t_2}$
1	3.2653×10^{-6}	2.0458×10^{-6}	5.3111×10^{-6}	1.1429×10^{-6}	$.7160\times10^{-6}$	1.8589×10^{-6}
2	4.3716	1.8342	6.2058	1.5301	.6420	2.1721
3	3.8462	2.1277	5.9739	1.3462	.7447	2.0909
4	3.2653	1.8342	5.0995	1.1429	.6420	1.7849
5	3.2653	1.8342	5.0995	1.1429	.6420	1.7849

CONDITION	$\frac{PR}{2t_1}$	$\frac{PR}{2t_2}$	$\frac{\Delta(\alpha\Delta T)}{2t_1}$	$\frac{\Delta(\alpha\Delta T)}{2t_2}$	$\frac{1}{E_1 t_1} / \frac{1}{E_1 t_1} + \frac{1}{E_2 t_2}$	$\frac{1}{E_2 t_2} / \frac{1}{E_1 t_1} + \frac{1}{E_2 t_2}$
1	-1,100	-585	.100	-.0532	.6148	.3852
2	1,100	585	-.088	.0468	.7044	.2956
3	81,400	43,298	-.088	.0468	.6438	.3562
4	62,700	33,351	.012	-.0064	.6403	.3597
5	-52,360	-27,850	.012	-.0064	.6403	.3597

CONDITION	$\sigma_{1\,PR}$	$\sigma_{1\,TH}$	$\sigma_{1\,(LIM)}$	$\sigma_{2\,PR}$	$\sigma_{2\,TH}$	$\sigma_{2\,(LIM)}$
1	-424	53,795	53,371	-360	-28,619	-28,979
2	325	-40,514	-40,189	412	21,546	21,958
3	28,995	-42,087	-13,092	27,875	22,383	50,258
4	22,553	6,723	29,276	21,355	-3,586	17,769
5	-18,800	6,723	-12,080	-17,830	-3,586	-21,416

* DENOTES SECANT MODULUS OF ELASTICITY, PAGE 2.12 & 2.18

K+E ALBANENE TRACING PAPER

5863806 COMMON BHD ASSY, TANK

CONDITION	$1.21\sigma_{1PR}$	$1.1\sigma_{1TH}$	σ_{1Y}	$1.21\sigma_{2PR}$	$1.1\sigma_{2TH}$	σ_{2Y}
1	-513	59,200	58,687	-436	-31,480	-31,916
2	393	-44,565	-44,172	499	23,700	24,199
3	35,036	-46,296	-11,260	33,729	24,621	58,350
4	27,289	7,395	34,684	25,840	-3,945	21,895
5	-22,750	7,395	-15,355	-21,570	-3,945	-25,515

CONDITION	$\frac{t_{NOM}}{t_{MIN}}\sigma_{1Y}$	$\frac{t_{NOM}}{t_{MIN}}\sigma_{2Y}$
1	73,400	-35,700
2	-55,200	27,100
3	-14,100	65,300
4	43,400	24,500
5	-19,200	-28,600

CONDITION	T_1 °F	T_2 °F	$E_1(10^6)$	$E_2(10^6)$	$(\alpha\Delta T)_1, 10^{-6}$	$(\alpha\Delta T)_2, 10^{-6}$
1	-423	120	12.25	10.40	-4400	600
2	120	-298	7.45*	11.60	600	-3800
3	120	-298	10.40	10.00*	600	-3800
4	-423	-298	12.25	11.60	-4400	-3800
5	-423	-298	12.25	11.60	-4400	-3800

CONDITION	$1/E_1t_1$	$1/E_2t_2$	$\frac{1}{E_1t_1}+\frac{1}{E_2t_2}$	$\frac{1-\mu}{2E_1t_1}$	$\frac{1-\mu}{2E_2t_2}$	$\frac{1-\mu}{2E_1t_1}+\frac{1-\mu}{2E_2t_2}$
1	3.2653×10^{-6}	2.0458×10^{-6}	5.3111×10^{-6}	1.1429×10^{-6}	$.7160\times10^{-6}$	1.8589×10^{-6}
2	5.3691	1.8342	7.2033	1.8792	.6420	2.5212
3	3.8462	2.1277	5.9739	1.3462	.7447	2.0909
4	3.2653	1.8342	5.0995	1.1429	.6420	1.7849
5	3.2653	1.8342	5.0995	1.1429	.6420	1.7849

* DENOTES SECANT MODULUS OF ELASTICITY, PAGE 2.12 & 2.18

K+E ALBANENE® TRACING PAPER 60996

FORM 25-8-1 (REV. 8-53)

PREPARED BY: C.R.N.
CHECKED BY: E.J.S.
DATE: 9/62
TITLE: DSV-4 PROPELLANT TANK

DOUGLAS AIRCRAFT COMPANY, INC.

SM DIVISION

PAGE: 6.8
MODEL: DSV-4
REPORT NO: SM 42560

5863806 COMMON BHD ASSY, TANK

CONDITION	$PR/2t_1$	$PR/2t_2$	$\frac{\Delta(\alpha\Delta T)}{2t_1}$	$\frac{\Delta(\alpha\Delta T)}{2t_2}$	$\frac{1}{E_1t_1} / \frac{1}{E_1t_1}+\frac{1}{E_2t_1}$	$\frac{1}{E_2t_2} / \frac{1}{E_1t_1}+\frac{1}{E_2t_2}$
1	-1,100	-585	.100	-.0532	.6148	.3852
2	1,100	585	-.088	.0468	.7454	.2546
3	81,400	43,298	-.088	.0468	.6438	.3562
4	62,700	33,351	.012	-.0064	.6403	.3597
5	-52,360	-27,850	.012	-.0064	.6403	.3597

CONDITION	$\sigma_{1\,PR}$	$\sigma_{1\,TH}$	$\sigma_{1\,(LIM)}$	$\sigma_{2\,PR}$	$\sigma_{2\,TH}$	$\sigma_{2\,(LIM)}$
1	-424	53,795	53,371	-360	-28,619	-28,979
2	280	-34,904	-34,624	436	18,563	18,999
3	28,995	-42,087	-13,092	27,875	22,383	50,258
4	22,553	6,723	29,276	21,355	-3,586	17,769
5	-18,800	6,723	-12,080	-17,830	-3,586	-21,416

CONDITION	$1.35\sigma_1$	$1.35\sigma_2$	$\frac{t_{NOM}}{t_{MIN}}\sigma_{1u}$	$\frac{t_{NOM}}{t_{MIN}}\sigma_{2u}$
1	72,100	-39,100	90,100	-43,800
2	-46,742	25,649	-58,400	28,700
3	-17,700	67,800	-22,100	75,900
4	39,500	24,000	49,400	26,900
5	-16,300	-28,900	-20,400	-32,300

K+E ALBANENE TRACING PAPER 60006

5863806 COMMON BHD ASSY, TANK

THE FORWARD AND AFT FACE MARGINS OF SAFETY LISTED IN THE FOLLOWING TABLE ARE THE MINIMUM MARGINS OBTAINED FROM A COMPARISON OF THE CALCULATED YIELD AND ULTIMATE STRESSES AND THE ALLOWABLE YIELD AND ULTIMATE STRESSES.

CONDITION	FACE	σ_{YIELD}	$\sigma_{Y\,ALLOW}$	σ_{ULT}	$\sigma_{u\,ALLOW}$	M.S.
1	FWD	+73,400'	+74,000'	+90,100'	+90,500'	.004'
	AFT	-35,700'	-59,000'	-43,800'	-59,000'	.35'
2	FWD	-55,200'	-59,000'	-58,400'	-59,000'	.01'
	AFT	+27,100'	+66,500'	+28,700'	+78,500'	1.44'
3	FWD	-14,100'	-59,000'	-22,100'	-59,000'	1.67'
	AFT	+65,300'	+66,500'	+75,900'	+78,500'	.02'
4	FWD	+43,400'	+74,000'	+49,400'	+90,500'	.71'
	AFT	+24,500'	+66,500'	+26900'	+78,500'	1.71'
5	FWD	-19,200'	-74,000'	-20,400'	-74,000'	HIGH
	AFT	-28,600'	-66,500'	-32,300'	-66,500'	1.06'

COMMON BULKHEAD REVERSE PRESSURE BUCKLING ANALYSIS

PARAMETER REQ'D FOR CURVE PG. 6.11

$$\frac{E_1 t_1 + E_2 t_2}{2 R G_c} = \frac{(12.25)(10^6)(.025) + 11.6(10^6)(.047)}{2(110)(15{,}000)}$$

$$= .258$$

$$t^* = \left[\frac{3 t_1 t_2 (h + t_c)^2}{(t_1 + t_2)^2}\right]^{\frac{1}{2}}$$

5863806 COMMON BHD ASSY, TANK

$$h = t_c + t_1 + t_2 = 1.0 + .025 + .047$$
$$= 1.072$$

$$t^* = \left[\frac{3(.025)(.047)(1.072 + 1.0)^2}{(.025 + .047)^2}\right]^{1/2}$$

$$= (2.9193)^{\frac{1}{2}} = 1.7086$$

$$\lambda = \left[12(1-\mu)^2\right]^{1/4} \frac{a}{(Rt^*)^{\frac{1}{2}}}$$

$$\lambda = \frac{\left[12(1-.3^2)\right]^{1/4} 99.5}{\left[110(1.7086)\right]^{1/2}} = \frac{1.8178(99.5)}{13.709}$$

$$\lambda = 13.19$$

FROM PAGE 6.11

$$P = q_{cR} \frac{a^4 (1-\mu^2)}{t^{*3}(E_1 t_1 + E_2 t_2)} = 800$$

$$q_{cR} = \frac{800\, t^{*3}(E_1 t_1 + E_2 t_2)}{a^4 (1-\mu^2)}$$

$$= \frac{800\,(1.7086)^3\left[(12.25)(.025) + 11.6(.047)\right] 10^6}{(99.5)^4 (.91)}$$

$$= 38.1 \text{ PSIG}$$

$$q_{cR}(\text{LIMIT}) = 28.2 \text{ PSIG}$$

$$M.S. = \frac{28.2}{23.8} - 1 = \boxed{.18}$$

BUCKLING OF SPHERICAL SANDWICH CAPS UNDER EXTERNAL PRESSURE

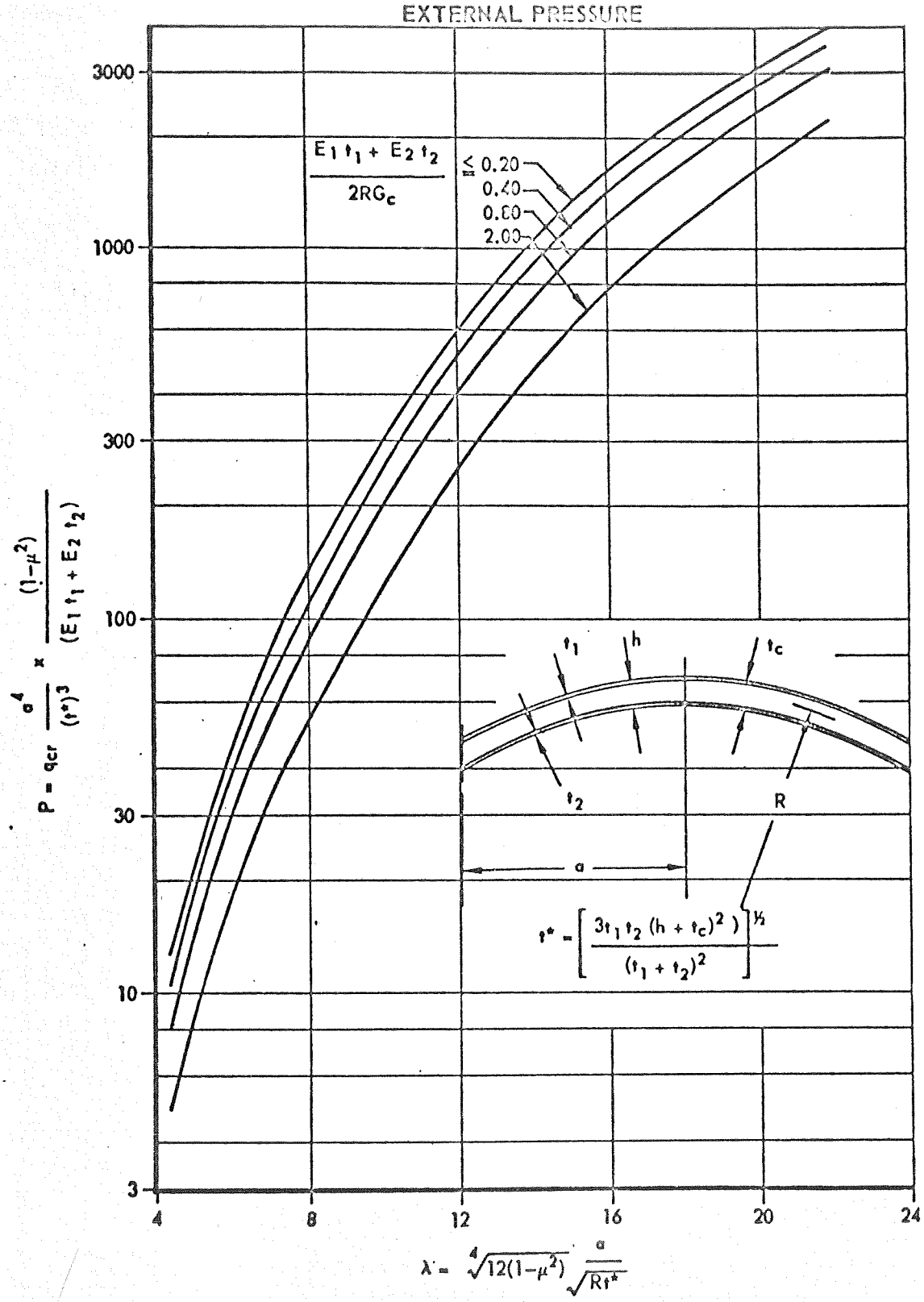

REF. 6

SM 42569

5863806 COMMON BHD ASSY, TANK

COMMON BULKHEAD WELD ANALYSIS

5863807 - FWD DOME ASSY, COMMON BHD
5863809 - AFT DOME ASSY, COMMON BHD

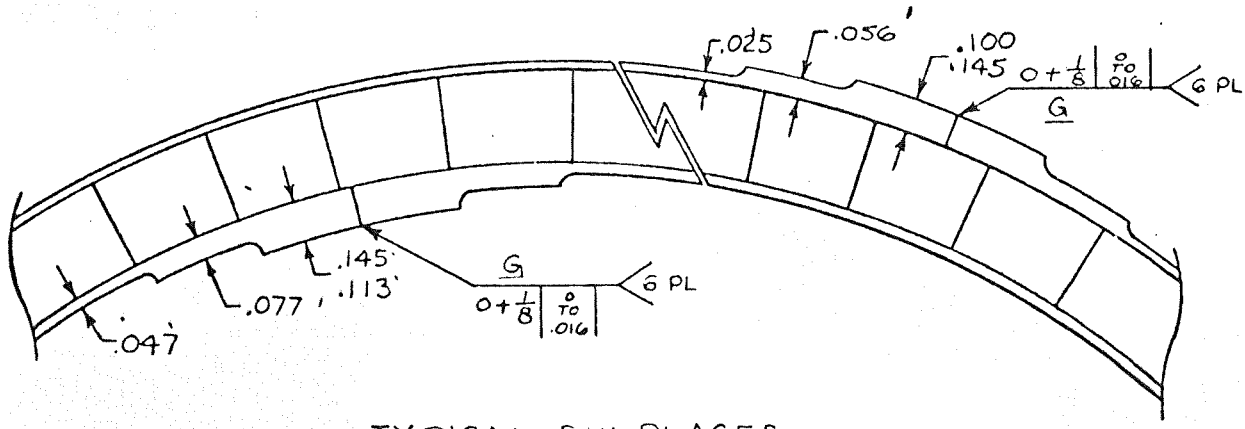

TYPICAL SIX PLACES
INERT GAS SHIELDED METAL ARC WELDED
4043 FILLER METAL
NO HEAT TREAT AFTER WELDING
WELDS GROUND FLUSH ON CORE SURFACES.

CONDITION	FACE	STRESS (LIMIT)	N = σt
1	FWD	53,371'	1,334'
	AFT	- 28,979'	- 1,362'
2	FWD	- 40,189'	- 1,005'
	AFT	21,958'	1,032'
3	FWD	- 13,092'	- 327'
	AFT	50,258'	2,362'
4	FWD	29,276'	732'
	AFT	17,769'	835'
5	FWD	- 12,080'	- 302'
	AFT	- 21,416'	- 1,007'

K+E ALBANENE 100L TRACING PAPER 69250

5863806 COMMON BHD ASSY, TANK

STRESSES AND ALLOWABLES AT BUTT WELDED - JOINTS

CONDITION	FACE	THICKNESS	σ_{LIMIT}	σ_{YIELD}	σ_{ALLOW}*	M.S.
1	FWD	.100	13,340	16,100	28,800	.79
	AFT	.113	-12,050	-14,600	22,200	.52
2	FWD	.100	-10,050	-12,200	22,200	.82
	AFT	.113	9,130	11,000	26,500	1.41
3	FWD	.100	-3,270	-3,950	22,200	HIGH
	AFT	.113	20,900	25,300	26,500	.05
4	FWD	.100	7,320	8,860	28,800	HIGH
	AFT	.113	7,390	8,940	26,500	1.96
5	FWD	.100	-3,020	-3,650	28,800	HIGH
	AFT	.113	-8,910	-10,780	26,500	1.46

* REF. PG. 2.5 - 2.8

5863836 COMMON BHD ASSY, TANK

COMMON BULKHEAD CORE

CORE LOAD $P = \frac{N \times 2}{R}$ WHERE $N = \sigma t$

MAX $N = 2{,}362$ LB/IN (REF PAGE 6.12)

$\therefore P = \frac{2{,}362 \times 2 \times 1.35}{110} = 58.1$ PSI

CORE ~ HRP $\frac{3}{16}$ GF-4.0

$\sigma_{comp.\ allow} = 467$ PSI (REF 7)
RM. TEMP.

$\sigma_{tension\ allow}$ -320°F = ASSUME SAME AS σ_{comp}

$$M.S. = \frac{467}{58.1} - 1 = \underline{\text{HIGH}}$$

SM42569

K+E ALBANENE® TRACING PAPER 70963

SM42569

5863806 COMMON BHD ASSY, TANK

10LP-T8-10WD LOCKBOLT, COMMON BHD
BB316-8-8 BLINDBOLT, COMMON BHD

BLINDBOLT

CONDITION	TEMP	N_T(ULT)***	N_S(ULT)***	P_T(ULT)	P_S(ULT)	P_{ALLOW}*	MS
LH_2 SHOCK	-100	1390	1150	3740	3100	T = 3750 S = 3120	.003
LO_2 SHOCK	120	0	865	0	2320	T ~ S = 3,400	.47
LO_2 L&P	-289	0	282	0	760	T ~ S = 6,100	HIGH
SI BO	-289	761	630	2045	1700	T = 4,505 S = 3,850	1.20
LH_2 L&P	-100	0	260	0	700	T ~ S = 3,120	HIGH

*(REF. P. 2.1)

LOCKBOLT

CONDITION	TEMP	N_T(ULT)***	N_S(ULT)***	P_T(ULT)	P_S(ULT)	P_{ALLOW}**	MS
LH_2 SHOCK	120	0	1170	0	1970	T = ~ S = 4,400	1.23
LO_2 SHOCK	-289	1070	890	1800	1500	T = 5,400 S = 4,450	2.00
LO_2 L&P	-289	2455	2031	4140	3430	T = 5,400 S = 4,450	.30
SI BO	-289	870	719	1470	1210	T = 5700 S = 4150	HIGH
LH_2 L&P	-50	0	870	0	1470	T = ~ S = 5,250	HIGH

** (REF. P. 2.2)

$$M.S. = \frac{P_{ALLOW\ TENSION}}{P_{T\ ULT}} - 1 = \frac{P_{ALLOW\ SHEAR}}{P_{S\ ULT}} - 1$$

*** $N_T = (\sin 50.4°)\,N$

$N_S = (\cos 50.4°)\,N$

$N \Rightarrow$ REF PG. 6.12

7.0 FORWARD DOME - CYLINDRICAL TANK JOINT

7.1 Configuration

The S-IV forward dome welds into the cylindrical tank as shown on Page 7.1.

7.2 Analysis

The joint is analyzed using the pressure and temperatures that occur at maximum αQ conditions. Relative deflection analysis methods are utilized and the structure idealization is shown on Page 7.2. Pages III.4.1 - III.4.6 of Appendix III contains the derivation of the relative deflection equations used in the solution of this problem.

5863800
STRUCTURE ASSY

FWD LH_2 DOME – TANK JOINT

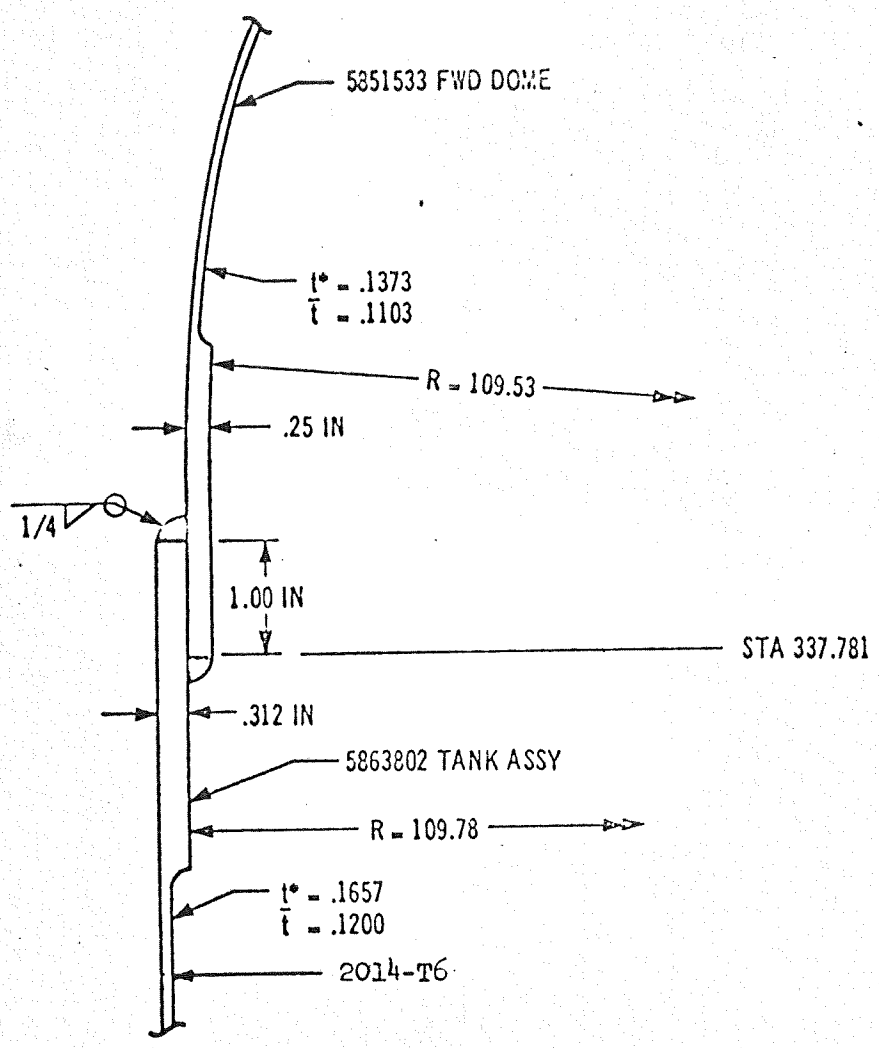

SM42569

5863800
STRUCTURE ASSY

FWD DOME – TANK JOINT

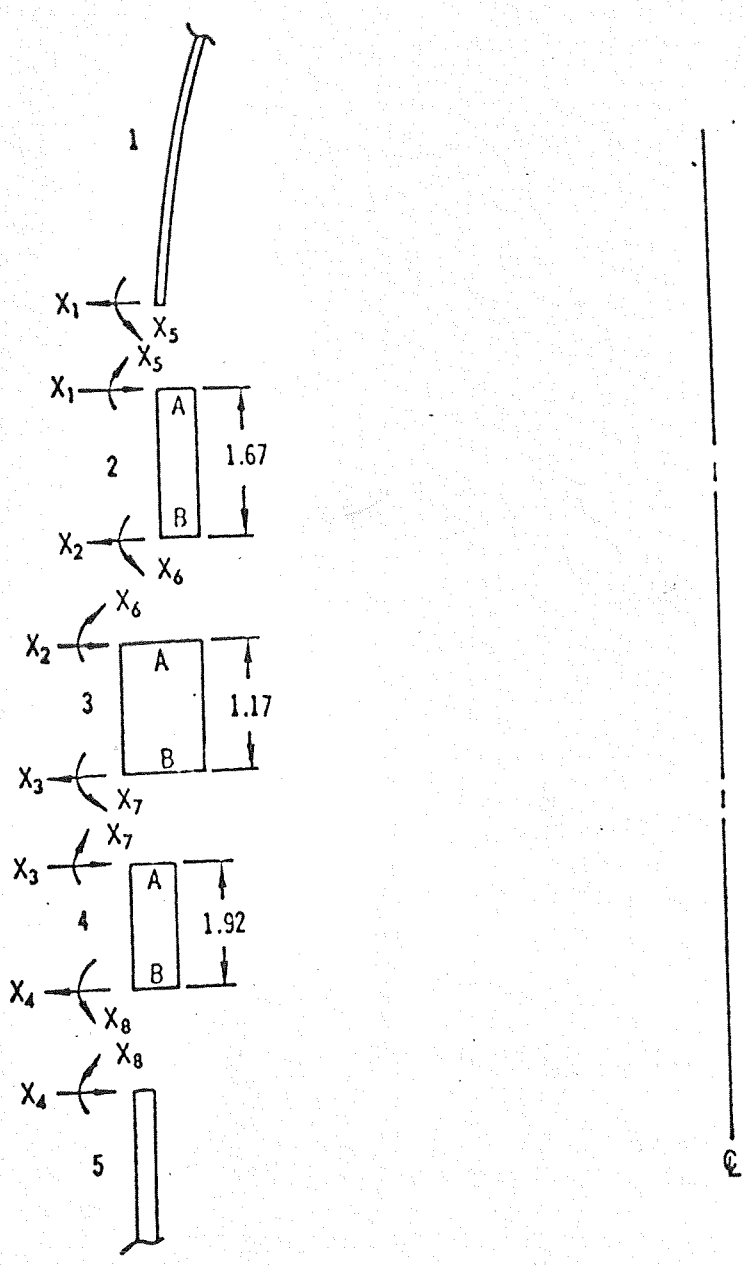

SM425569

REF. APPENDIX III (MAX α Q)
PAGE III.4.

5863800
STRUCTURE ASSY

PART 1

$T = 40°$ (REF 1)

$E = 10.65 \times 10^6$
$\alpha \Delta T = -770 \times 10^{-6}$ } P2.4

$R = 109.7$
$\phi = 89°8'$ } GEOMETRY

$t^* = .1373$
$t = .1103$ } (REF P. 3.4)

REF P 3.3
$P = 39.5 + .0025(60)(7.15)$
$= 40.6$ psia

$$\beta^4 = 3(1-.3^2)\frac{109.7^2}{.1373^2} = 1750 \times 10^4$$

$$\beta^2 = 13.23 \times 10^2 \quad ; \quad \beta = 36.373$$

$$K_1' = 1 - \frac{1-.6}{2(36.373)} \cot 89°8' \cong 1$$

$$K_2' = 1 - \frac{1+.6}{2(36.373)}(.01513) = .9997$$

$$\delta_{1,1} = \frac{X_1 \times 10^{-6}}{10.65(.1373)}(36.373)(109.7)(2) = .5458 \times 10^{-2} X_1$$

$$\delta_{1,5} = -\frac{X_5(10^{-6})}{10.65(.1373)}(2)(1323) = -.1810 \times 10^{-2} X_5$$

$$\delta_{1,P} = \frac{40.6(109.7)^2(.7)(10^{-6})}{2(10.65)(.1103)} = 14.5574 \times 10^{-2}$$

$$\delta_{1,T} = -770 \times 10^{-6}(109.7) = -8.4469 \times 10^{-2}$$

$$\delta_{5,1} = -.1810 \times 10^{-2} X_1$$

$$\delta_{5,5} = \frac{X_5 \times 10^{-6}(4)(36.373)^3}{10.65(.1373)(109.7)(1)} = .1200 \times 10^{-2} X_5$$

PART 2

$T = 10°$
$E = 10.65 \times 10^6$
$\alpha \Delta T = -770 \times 10^{-6}$
$R = 109.655$
$L = 1.67$
$t = .25$
$P = 40.6$ PSI

$$\beta^4 = \frac{3(1-.09)}{109.66^2(.25)^2} = 36.326 \times 10^{-4}$$

$$\beta^2 = .06027 \qquad \beta = .2455$$

$$D = \frac{10.65(10^6)(.25)^3}{12(1-.09)} = 15.2387 \times 10^3$$

$$2D\beta^4 L = 184.89$$

$$-2D\beta^4 L^2 = 308.76$$

$$-2D\beta^4 L^3 = 515.64$$

5863800
STRUCTURE ASSY

PART 2
(CON'D)

$$\delta_{1,1} = \frac{2.0006}{184.89} X_1 = 1.082 \times 10^{-2} X_1$$

$$\delta_{1,2} = +\frac{.9995}{184.89} X_2 = +.5406 \times 10^{-2} X_2$$

$$\delta_{1,5} = \frac{3.0031}{308.76} X_5 = .9726 \times 10^{-2} X_5$$

$$\delta_{1,6} = -\frac{2.9982}{308.76} X_6 = -.9710 \times 10^{-2} X_6$$

$$\delta_{1,P} = -\frac{40.6(109.655)^2}{10.65(106)(.25)}(1-.15) = -15.5852 \times 10^{-2}$$

$$\delta_{1,T} = 770 \times 10^{-6}(109.655) = 8.4434 \times 10^{-2}$$

$$\delta_{2,1} = .5406 \times 10^{-2} X_1$$

$$\delta_{2,2} = 1.0820 \times 10^{-2} X_2$$

$$\delta_{2,5} = +.9710 \times 10^{-2} X_5$$

$$\delta_{2,6} = -.9726 \times 10^{-2} X_6$$

$$\delta_{2,P} = 15.5852 \times 10^{-2}$$

$$\delta_{2,T} = -8.4434 \times 10^{-2}$$

$$\delta_{5,1} = .9726 \times 10^{-2} X_1$$

$$\delta_{5,2} = +.9710 \times 10^{-2} X_2$$

$$\delta_{5,5} = \frac{6.0217}{515.64} X_5 = 1.1678 \times 10^{-2} X_5$$

$$\delta_{5,6} = -\frac{5.9924}{515.64} X_6 = -1.1621 \times 10^{-2} X_6$$

$\delta_{6,1} = -.9710 \times 10^{-2} X_1$	$\delta_{6,5} = -1.1621 \times 10^{-2} X_5$
$\delta_{6,2} = -.9726 \times 10^{-2} X_2$	$\delta_{6,6} = 1.1678 \times 10^{-2} X_6$

5863800
STRUCTURE ASSY

PART 3

$T = -5°$
$E = 10.68 \times 10^6$
$\alpha\Delta T = -950 \times 10^{-6}$
$R = 109.81$
$L = 1.17$
$t = .562$
$P = 40.6$

$$\beta^4 = \frac{3(1-.09)}{(109.81)^2(.562)^2} = .7168 \times 10^{-3}$$

$\beta^2 = .02677$; $\beta = .1636$

$$D = \frac{10.68 \times 10^6 (.562)^3}{12(1-.09)} = 17.3603 \times 10^3$$

$2D\beta^4 L = 29.119$
$2D\beta^4 L^2 = 34.069$
$2D\beta^4 L^3 = 39.861$

$$\delta_{22} = \frac{1.9958}{29.119} X_2 = 6.8539 \times 10^{-2} X_2$$

$$\delta_{23} = \frac{.9958}{29.119} X_3 = 3.4198 \times 10^{-2} X_3$$

$$\delta_{26} = \frac{2.9918}{34.069} X_6 = 8.7815 \times 10^{-2} X_6$$

$$\delta_{27} = -\frac{2.9915}{34.069} X_7 = -8.7807 \times 10^{-2} X_7$$

$$\delta_{2,P} = -\frac{40.6(109.81)^2}{10.68(10^6)(.562)}(1-.15) = -6.9330 \times 10^{-2}$$

$$\delta_{2,T} = 950(109.81)10^{-6} = 10.4320 \times 10^{-2}$$

$\delta_{3,2} = 3.4198 \times 10^{-2} X_2$

$\delta_{3,3} = 6.8539 \times 10^{-2} X_3$

$\delta_{3,6} = +8.7807 \times 10^{-2} X_6$

$\delta_{3,7} = -8.7815 \times 10^{-2} X_7$

$\delta_{3,P} = +6.9330 \times 10^{-2}$

$\delta_{3,T} = -10.4320 \times 10^{-2}$

5863800
STRUCTURE ASSY

$$\delta_{6,2} = 8.7815 \times 10^{-2} X_2'$$

$$\delta_{6,3} = 8.7807 \times 10^{-2} X_3'$$

$$\delta_{6,6} = \frac{5.9843}{39.861} X_6 = 15.0129 \times 10^{-2} X_6'$$

$$\delta_{6,7} = -\frac{5.9828}{39.861} X_7 = -15.0091 \times 10^{-2} X_7$$

$$\delta_{7,2} = -8.7807 \times 10^{-2} X_2'$$

$$\delta_{7,3} = -8.7815 \times 10^{-2} X_3'$$

$$\delta_{7,6} = -15.0091 \times 10^{-2} X_7$$

$$\delta_{7,7} = 15.0129 \times 10^{-2} X_7'$$

PART 4

$T = 0°$
$E = 10.67 \times 10^6$
$\alpha \Delta T = -900 \times 10^{-6}$
$R = 109.936$
$L = 1.92$
$t = .312$
$P = 40.6$

$$\beta^4 = \frac{2.73}{(109.936)^2 (.312)^2} = 2.3205 \times 10^{-3}$$

$$\beta^2 = .04817 \quad ; \quad \beta = .2195$$

$$D = \frac{10.67 (.312)^3}{12(1-.09)} = 29.673 \times 10^3$$

$$20\beta^4 L = 264.408$$

$$20\beta^4 L^2 = 507.66 \qquad 20\beta^4 L^3 = 974.71$$

$$\delta_{3,3} = \frac{2.0006}{264.408} X_3 = .7566 \times 10^{-2} X_3'$$

$$\delta_{3,4} = \frac{.9995}{264.408} X_4 = .3780 \times 10^{-2} X_4'$$

$$\delta_{3,7} = \frac{3.0035}{507.66} X_7 = .5916 \times 10^{-2} X_7'$$

$$\delta_{3,8} = -\frac{2.9979}{507.66} X_8 = -.5905 \times 10^{-2} X_8'$$

$$\delta_{3,P} = -\frac{40.6 (109.936)^2}{10.67 \times 10^6 (.312)} (1-.15) = -12.5287 \times 10^{-2}$$

$$\delta_{3,T} = +900 (109.936) 10^{-6} = +9.8942 \times 10^{-2}$$

K+E ALBANENE® TRACING PAPER 70083

5863800 STRUCTURE ASSY

$$\delta_{4,3} = .3780 \times 10^{-2} X_3'$$

$$\delta_{4,4} = .7566 \times 10^{-2} X_4'$$

$$\delta_{4,7} = .5905 \times 10^{-2} X_7'$$

$$\delta_{4,8} = -.5916 \times 10^{-2} X_8'$$

$$\delta_{4,P} = 12.5287 \times 10^{-2}$$

$$\delta_{4,T} = -9.8942 \times 10^{-2}$$

$$\delta_{7,3} = .5916 \times 10^{-2} X_3'$$

$$\delta_{7,4} = .5905 \times 10^{-2} X_4'$$

$$\delta_{7,7} = \frac{6.0248}{974.71} X_7 = .6181 \times 10^{-2} X_7'$$

$$\delta_{7,8} = -\frac{5.9913}{974.71} X_8 = -.6147 \times 10^{-2} X_8'$$

$$\delta_{8,3} = -.5905 \times 10^{-2} X_3'$$

$$\delta_{8,4} = -.5916 \times 10^{-2} X_4'$$

$$\delta_{8,7} = -.6147 \times 10^{-2} X_7'$$

$$\delta_{8,8} = .6181 \times 10^{-2} X_8'$$

K+E ALBANENE® TRACING PAPER 70883

SM 42569

5863800
STRUCTURE ASSY

PART 5

$T = -10°$
$E = 10.7 \times 10^6$
$\alpha \Delta T = -1000 \times 10^{-6}$
$R = 110.01$
$P = 40.6$ PSIA
$t^* = .1657$
$\bar{t} = .1200$

$$\lambda^4 = \frac{3(1-.09)}{110^2(.1657)^2} = .008215$$

$$\lambda^2 = .09064 \quad ; \quad \lambda = .3011$$

$$D = \frac{.1657^3(10.7)10^6}{12(1-.09)} = 4458$$

$$\delta_{4,4} = \frac{X_4}{2(4458)(.0273)} = .4108 \times 10^{-2} X_4$$

$$\delta_{4,8} = \frac{X_8}{2(4458)(.09064)} = .1237 \times 10^{-2} X_8$$

$$\delta_{4,P} = -\frac{40.6(110.01)^2}{10.7(10^6)(.12)}(1-.15) = -32.5270 \times 10^{-2}$$

$$\delta_{4,T} = 10^{-6} 1000 (110.01) = 11.001 \times 10^{-2}$$

$$\delta_{8,4} = .1237 \times 10^{-2} X_4$$

$$\delta_{8,8} = \frac{X_8}{.3011(4458)} = .0745 \times 10^{-2} X_8$$

SM 425669

5E63800
STRUCTURE ASSY

PART I

$X_1 = -8.6$ $\qquad \phi = 89° 8'$

$X_5 = -20.2$ $\qquad \beta = 36.37$

$R = 109.7$ $\qquad \beta^2 = 1323$

$t = .1103$ $\qquad K_1 \simeq K_2 \simeq 1$

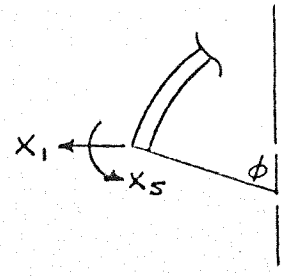

$$\sigma_{\phi_1} = -8.6 \frac{.015}{.1103} = -1$$

$$\sigma_{\theta_1} = -\frac{8.6}{.1103}(2)(36.37)(1) = -5700$$

$$\sigma_{\theta_5} = \frac{20.2(2)(1323)}{.1103(109.7)} = 4400$$

$$\sigma_{\phi_5}' = \frac{6(20.2)}{.1103^2} = 10{,}000$$

$$\sigma_{\theta_5}' = .3(10{,}000) = 3000$$

TOTAL σ

$\sigma_\phi = \pm 10{,}000$

$\sigma_\theta = -5700 + 4400 \pm 3000 = \begin{matrix} +1700 \text{ IF} \\ -4300 \text{ OF} \end{matrix}$

YIELD

INNER FIBER $\sigma_\phi = 12{,}100$

$\sigma_\theta = 2100$

OF $\sigma_\phi = -12{,}000$

$\sigma_\theta = -5200$

MEMBRANE (YIELD)

$\sigma_\phi = 19{,}400$

$\sigma_\theta = 24{,}400$

K+E ALBANENE® TRACING PAPER 70883

5863800
STRUCTURE ASSY

PART 2

$X_1 = 8.6'$ $\quad R = 109.655'$
$X_2 = 13.1'$ $\quad t = .25'$
$X_5 = 20.2'$ $\quad \beta = .2455'$
$X_6 = 39.2'$ $\quad \beta^2 = .0603'$

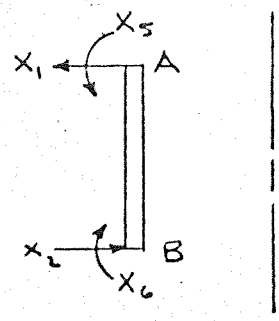

A

$$\sigma_{\theta_1} = \frac{2(8.6)}{.25}(.2455)(109.655)' = 1850'$$

$$\sigma_{\theta_5} = \frac{2(20.2)}{.25}(.0603)(109.655)' = 1070'$$

$$\sigma_{\phi_5}' = \pm \frac{6(20.2)'}{.25^2} = \pm 1940'$$

$$\sigma_{\theta_5}' = \pm .3(1940)' = \pm 580'$$

$$\sigma_{\phi_A} = \pm 1940' \quad ; \quad \sigma_{\theta_A} = 2920' \pm 580' = \begin{matrix} +3500' \\ +2340' \end{matrix}$$

$$\sigma_{\theta_2} = -2\frac{(13.1)}{.25}(.2455)(109.655) = -2820'$$

$$\sigma_{\theta_6} = \frac{2(39.2)}{.25}(.0603)(109.655) = +2070'$$

$$\sigma_{\phi_6}' = \pm 6\frac{39.2'}{.25^2} = \pm 3760'$$

$$\sigma_{\theta_6}' = \pm .3(3760) = \pm 1130'$$

$$\sigma_{\phi_B} = \pm 3760' \quad ; \quad \sigma_{\theta_B} = -750' \pm 1130' = \begin{matrix} +380' \\ -1880' \end{matrix}$$

YIELD:

A
IF $\sigma_\phi = 2300'$, $\sigma_\theta = 4200'$
OF $\sigma_\phi = -2300'$, $\sigma_\theta = 2800'$

B
IF $\sigma_\phi = 4500'$, $\sigma_\theta = 500'$
OF $\sigma_\phi = -4500'$, $\sigma_\theta = -2300'$

MEMBRANE
$-\sigma_\phi = 8500$
$-\sigma_\theta = 21{,}400$

5863800
STRUCTURE ASSY

PART 3

$X_2 = 13.1'$ $\quad R = 109.81'$
$X_3 = 6.6'$ $\quad t = .562'$
$X_6 = 39.2'$ $\quad \beta = .1636'$
$X_7 = 50.8'$ $\quad \beta^2 = .0268'$

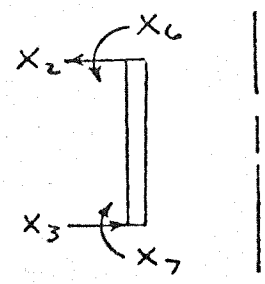

$$\sigma_{\theta_2} = \frac{13.1(2)}{.562}(.1636)(109.81) = 13.1(63.93) = 840'$$

$$\sigma_{\theta_6} = 39.2\,\frac{2}{.562}(.0268)(109.81) = 39.2(10.46) = 410'$$

A

$$\sigma_{\phi_6}' = \pm 6\,\frac{(39.2)'}{.562^2} = 19(39.2) = \pm 740'$$

$$\sigma_{\theta_6}' = \pm .3(740') = \pm 220'$$

$$\sigma_\phi = \pm 740' \quad ; \quad \sigma_\theta = 1250' \pm 220' = \begin{matrix} +1470' \\ +1030' \end{matrix}$$

$$\sigma_{\theta_3} = -6.6(63.93') = -420'$$

$$\sigma_{\theta_7} = 50.8(10.46') = 530'$$

B

$$\sigma_{\phi_7}' = \pm 19(50.8') = \pm 970'$$

$$\sigma_{\theta_7}' = \pm .3(970') = \pm 290'$$

$$\sigma_\phi = \pm 970' \quad ; \quad \sigma_\theta = 110' \pm 290' = \begin{matrix} 400' \\ -180' \end{matrix}$$

YIELD:

A

IF $\sigma_\phi = 900'$, $\sigma_\theta = 1800'$

OF $\sigma_\phi = -900'$, $\sigma_\theta = 1200'$

B

IF $\sigma_\phi = 1200'$, $\sigma_\theta = 480'$

OF $\sigma_\phi = -1200'$, $\sigma_\theta = -200'$

MEMBRANE

$\sigma_\phi = 3800'$

$\sigma_\theta = 9600'$

5863800
STRUCTURE ASSY

PART 4

$X_3 = 6.6'$ $\quad R = 109.936'$
$X_4 = 32.5'$ $\quad t = .312'$
$X_7 = 50.8'$ $\quad B = .2195'$
$X_8 = 28.8'$ $\quad B^2 = .0482'$

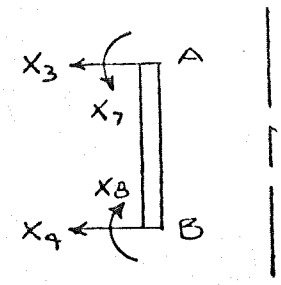

$$\sigma_{\theta_3} = 6.6 \frac{2}{.312}(.2195)(109.936) = 6.6(154.69)$$
$$= 1020'$$

$$\sigma_{\theta_7} = 50.8 \frac{2}{.312}(.0482)(109.936) = 50.8(33.97) = 1700'$$

$$\sigma_{\phi_7}' = \pm 6 \frac{50.8}{.312^2} = 61.64(50.8) = \pm 3100'$$

$$\sigma_{\theta_7}' = .3(3100) = \pm 930'$$

$$\sigma_\phi = \pm 3100' \; ; \qquad \sigma_\theta = 2720 \pm 930 = \begin{matrix} +3650' \\ +1790' \end{matrix}$$

$$\sigma_{\theta_4} = 32.5(154.69) = 5030'$$

$$\sigma_{\theta_8} = 28.8(33.97) = 980'$$

$$\sigma_{\phi_8}' = \pm 61.64(28.8) = \pm 1800'$$

$$\sigma_{\theta_8}' = \pm .3(1800) = \pm 540'$$

$$\sigma_\phi = \pm 1800' \; ; \qquad \sigma_\theta = 6010' \pm 540' = \begin{matrix} 6550' \\ 5500' \end{matrix}$$

YIELD:

A
IF $\sigma_\phi = 3800'$, $\sigma_\theta = 4400'$
OF $\sigma_\phi = -3800'$, $\sigma_\theta = 2200'$

B
IF $\sigma_\phi = 2200'$, $\sigma_\theta = 7900'$
OF $\sigma_\phi = -2200'$, $\sigma_\theta = 6700'$

MEMBRANE

$\sigma_\phi = 6900'$

$\sigma_\theta = 17300'$

SM 42569

17

SM 42569

5863800
STRUCTURE ASSY

PART 5

$X_4 = 32.5''$

$X_8 = -28.8''$

$t = .120''$

$\lambda = .3011''$; $\lambda^2 = .0906''$

$R = 110.01''$

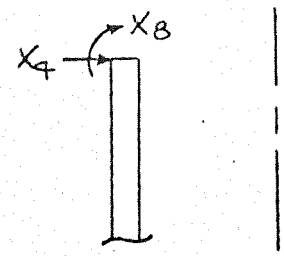

$$\sigma_{\theta_4} = -2\,\frac{32.5}{.120}(.3011)(110.01) = -17{,}900''$$

$$\sigma_{\theta_8} = 2\,\frac{28.8}{.120}(.0906)(110.01) = +4800''$$

$$\sigma_{\phi_8}' = \frac{6(28.8)}{.120^2} = \pm 12{,}000''$$

$$\sigma_{\theta_8}' = .3(12{,}000) = \pm 3600''$$

$\sigma_\phi = \pm 12{,}000$ PSI

$\sigma_\theta = -17{,}900 + 4800 \pm 3600 = \begin{matrix} -9{,}500 \text{ PSI IF} \\ -16{,}700 \text{ PSI OF} \end{matrix}$

MEMBRANE (YIELD)

$\sigma_\phi = 17{,}800$ PSI ; $\sigma_\theta = 45{,}000$ PSI

YIELD:		DISCON	MEMB
IF	σ_ϕ	14,500	17,800
	σ_θ	−11,500	45,000
OF	σ_ϕ	−14,500	17,800
	σ_θ	−20,200	45,000

5863800
STRUCTURE ASSY

FWD DOME - PROPELLANT TANK JOINT

S-I FLIGHT MAX αQ

DEFLECTIONS & ROTATIONS

$\delta_1^1 = .051'$ $\delta_6^3 = .012'$

$\delta_5^1 = -.009'$ $\delta_7^3 = -.016'$

$\delta_1^2 = -.051'$ $\delta_3^4 = -.084'$

$\delta_2^2 = .068'$ $\delta_4^4 = .117'$

$\delta_5^2 = .009'$ $\delta_7^4 = .016'$

$\delta_6^2 = -.012'$ $\delta_8^4 = -.019'$

$\delta_2^3 = -.068'$ $\delta_4^5 = -.117'$

$\delta_3^3 = .084'$ $\delta_8^5 = .019'$

$X_1 = -8.6'$ $X_5 = -20.2'$

$X_2 = -13.1'$ $X_6 = -39.2'$

$X_3 = -6.65'$ $X_7 = -50.8'$

$X_4 = 32.5'$ $X_8 = -28.8'$

FORM 25.8.1 (REV. 8-62)

19

PREPARED BY: GRH
CHECKED BY: [illegible]
DATE: 8-63
TITLE: DSV-4 / PROPELLANT TANK

DOUGLAS AIRCRAFT COMPANY, INC.

SM DIVISION

PAGE: 7.15
MODEL: DSV-4
REPORT NO: SM [illegible]

SM 42569

5863800
STRUCTURE ASSY

FWD DOME - PROPELLANT TANK JOINT

S-1 FLIGHT MAX αQ

PART (P7.1)			DISCONTINUITY (YIELD)	MEMBRANE (YIELD)	DISCONTINUITY + MEMBRANE	M.S.
1	INNER FIBER	σ_ϕ	12,100 } P7.9	19,400 } P7.9	31,500	1.05
		σ_θ	2,100	24,400	26,500	
	OF	σ_ϕ	-12,000	19,400	7,400	HIGH
		σ_θ	-5,200	24,400	19,200	
2	A IF	σ_ϕ	2 300	8,500	10,800	1.69
		σ_θ	4 200	21,400	25,600	
	A OF	σ_ϕ	-2 300	8,500	6,200	1.75
		σ_θ	2 800	21,400	24,200	
	B IF	σ_ϕ	4 500	8,500	13,000	HIGH
		σ_θ	500	21,400	21,900	
	B OF	σ_ϕ	-4 500	8,500	4,000	HIGH
		σ_θ	-2 300	21,400	19,100	
3	A IF	σ_ϕ	900	3,800	4,700	HIGH
		σ_θ	1 800	9,600	11,400	
	A OF	σ_ϕ	-900	3,800	2,900	HIGH
		σ_θ	1 200	9,600	10,800	
	B IF	σ_ϕ	1 200	3,800	5,000	HIGH
		σ_θ	480	9,600	10,080	
	B OF	σ_ϕ	-1 200	3,800	2,600	HIGH
		σ_θ	-200	9,600	9,400	

$$M.S. = \frac{\sigma_{ALLOWABLE}^{*}}{\sqrt{\frac{(\sigma_\phi - \sigma_\theta)^2 + \sigma_\phi^2 + \sigma_\theta^2}{2}}} - 1$$

* REF PG 2.3 TO 2.22

K+E ALBANENE TRACING PAPER 70883

5863800
STRUCTURE ASSY

PART			DISCONTINUITY	MEMBRANE	DISCONTINUITY + MEMBRANE	M.S.
4	A	IF σ_ϕ	3 800	6,900	10,700	HIGH
		IF σ_θ	4 400	17,300	21,700	
		OF σ_ϕ	-3 800	6,900	3,100	HIGH
		OF σ_θ	2 200	17,300	19,500	
	B	IF σ_ϕ	2 200	6,900	9,100	1.71
		IF σ_θ	7 900	17,300	25,200	
		OF σ_ϕ	-2 200	6,900	4,700	1.73
		OF σ_θ	6 700	17,300	24,000	
5		IF σ_ϕ	14,500	17,800	32,300	.82
		IF σ_θ	-11,500	45,000	33,500	
		OF σ_ϕ	-14,500	17,800	3,300	1.58
		OF σ_θ	-20,200	45,000	24,800	

SM 42569

K+E ALBANENE TRACING PAPER 70983

8.0 MISCELLANEOUS JOINTS

8.1 Configuration

This section contains the analysis on various structural joints which occur in the S-IV stage. These joints introduce a discontinuous rigidity to the basic tank structure therefore effecting the distribution of stresses within the structure. The joints that were considered are:

1. Forward Interstage - Forward LH_2 tank dome.
2. Cylindrical tank aft dome.
3. Common Bulkhead aft dome.
4. Thrust Structure - aft dome.

8.2 Analysis

The method of analysis employed is that of relative deflection. The structure is cut at various places. Each part has all of the external loads such as pressure, temperature, etc. imposed upon it. The parts will deflect and rotate depending upon its loads and rigidity. Forces are imposed on the parts of sufficient magnitudes to make the interfaces conform, that is, deflect and rotate the same amount. The stresses caused by the redundant forces plus the stresses caused by the external forces make up the total stresses in the structure. Appendix III shows the derivation of all the relative deflection equations used in the following analyses.

FWD INTERSTAGE TO FWD LH_2 DOME JOINT

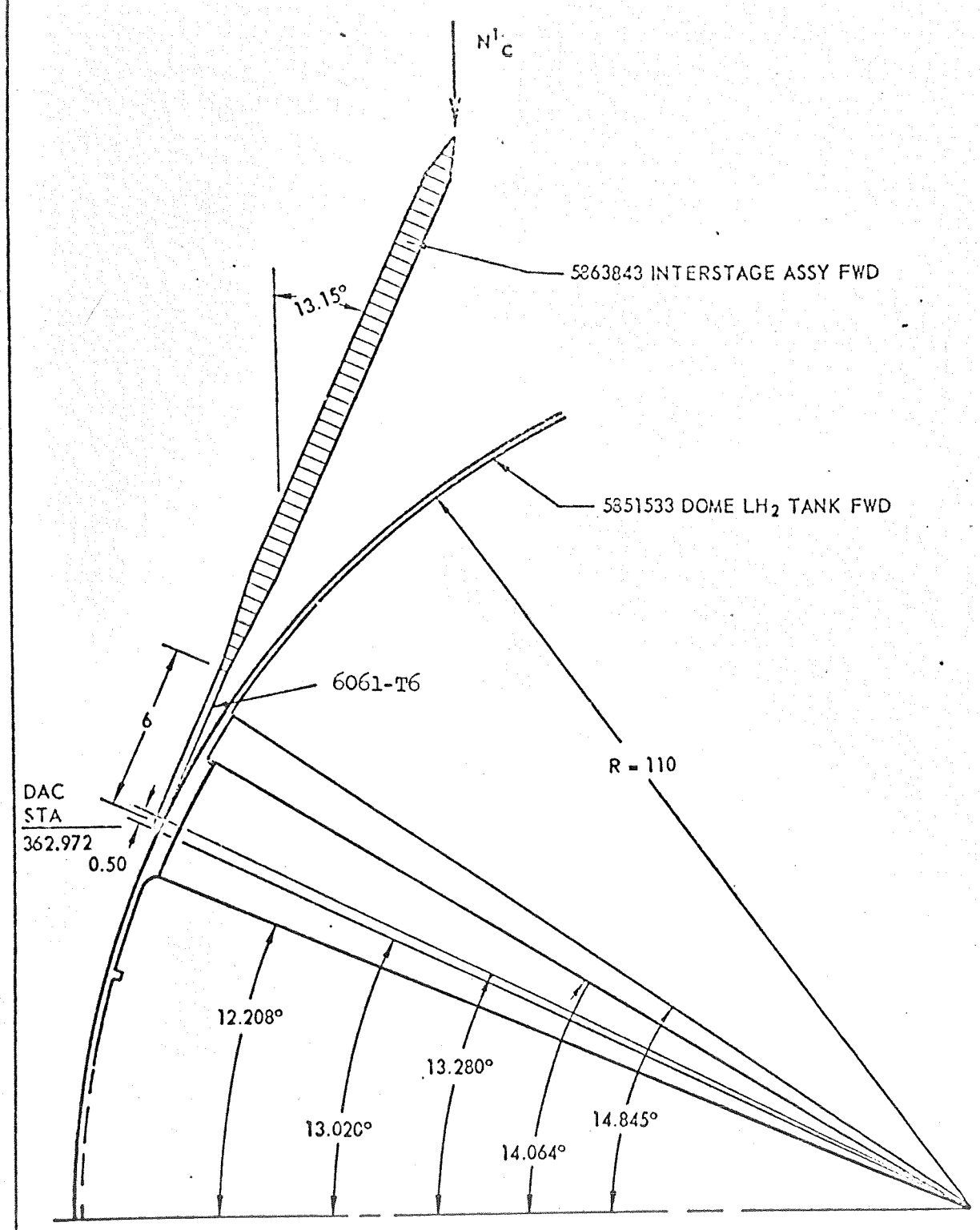

FWD INTERSTAGE TO FWD LH_2 DOME JOINT

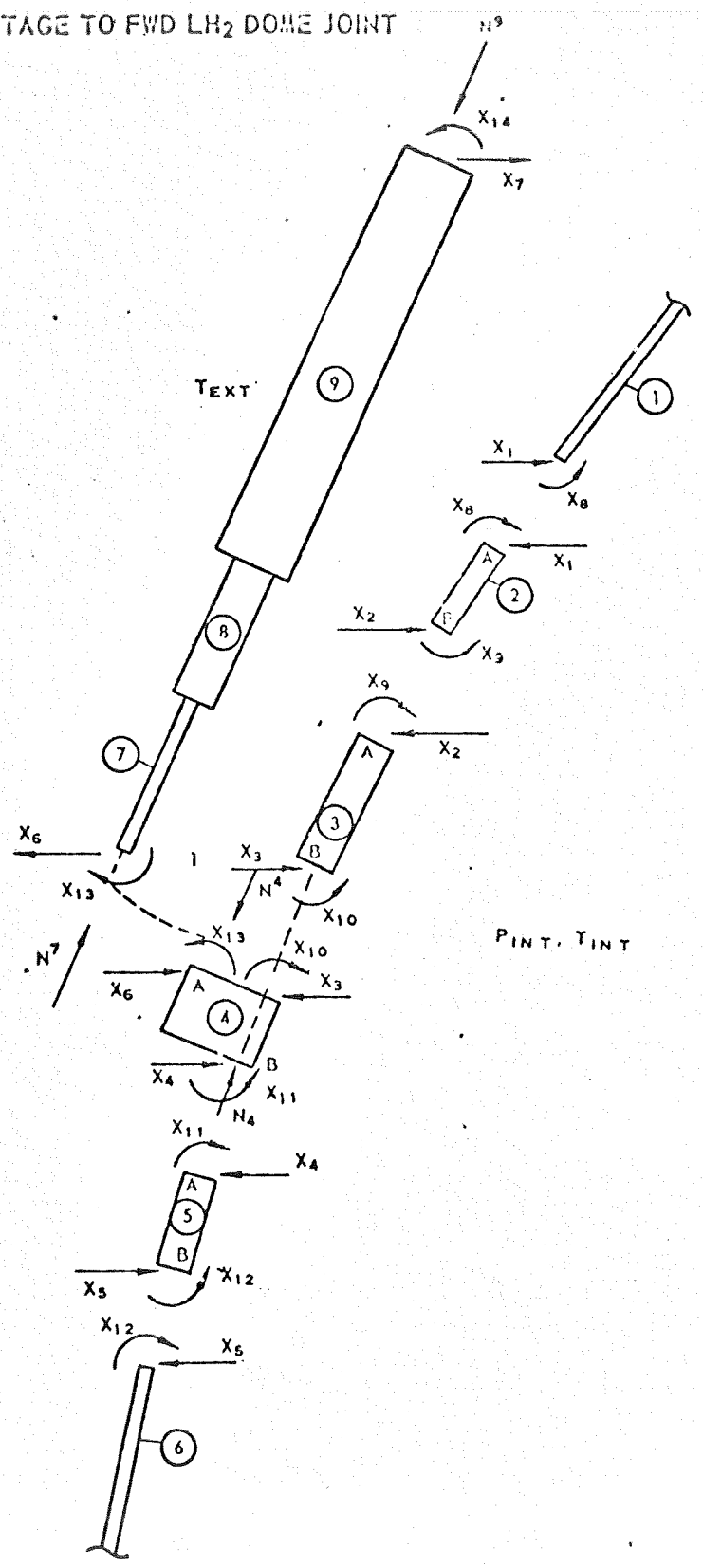

SM 42569

FWD INTERSTAGE TO FWD DOME JOINT

5863800 STRUCT ASSY

GROUND CONDITION:

1- LH_2 EMPTY ; $P_{IN} = 0$ $T_{IN} = 70°F$ $T_{OUT} = 70°F$ (REF 8)

2- MAX. GROUND WIND $N_C^7 = 38\ ^{lb}/_{IN}$ $N_B^7 = 54\ ^{lb}/_{IN}$

$N_C^4 = 38\ ^{lb}/_{IN}$ $N_B^4 = 54\ ^{lb}/_{IN}$

$$N_C^4 = N_C^7 = 92\ ^{lb}/_{IN}$$

PART 1

$\cot \phi^{12} = .26505$ $\sin \phi^{1,2} = .96660$

$$\beta = \sqrt[4]{3(1-.3^2)\left(\frac{110}{.057}\right)^2} = \beta = 56.4675$$

$$K_1 = 1 - \frac{1-.6}{2 \times 56.4675} \times .26505 = K_1 = .9991$$

$$K_2 = 1 - \frac{1+.6}{2 \times 56.4675} \times .26505 = K_2 = .9963$$

$E_1 = 10.6 \times 10^6$ psi $\tau_1 = .057$ $\alpha_1 \Delta T = 0$ $R = 110$

$$\delta'_{1,1} = \frac{X_1}{10.6 \times 10^6 \times .057}\left[56.4675 \times 110 (.96660)^2\right]\left(.9963 + \frac{1}{.9991}\right) = \underline{\underline{\delta'_{1,1} = 1.918 \times 10^{-2} X_1}}$$

$$\delta'_{1,8} = \frac{X_8}{10.6 \times 10^6 \times .057}\left[\frac{2\,(56.4675)^2\,.96660}{.9991}\right] = \underline{\underline{\delta'_{1,8} = 1.021 \times 10^{-2} X_8}}$$

$\delta'_{1,T} =$ $\underline{\underline{\delta'_{1,T} = 0}}$

$\delta'_{1,P} =$ $\underline{\underline{\delta'_{1,P} = 0}}$

$\delta'_{8,1} =$ $\underline{\underline{\delta'_{8,1} = 1.021 \times 10^{-2} X_1}}$

$$\delta'_{8,8} = \frac{X_8}{10.6 \times 10^6 \times .057}\left[\frac{4\,(56.4675)^3}{110 \times .9991}\right] = \underline{\underline{\delta'_{8,8} = 1.085 \times 10^{-2} X_8}}$$

$\underline{\underline{\delta'_{8,P} = 0}}$

$\underline{\underline{\delta'_{8,T} = 0}}$

REF. APPENDIX SECT. III FOR NOMENCLATURE & METHOD OF ANALYSIS.

THE ABOVE GROUND LOADS ARE BASED UPON REF. 9. IN VIEW OF THE VERY HIGH M.S. (SEE PG. 8.1.17), THIS ANALYSIS WAS NOT UPDATED TO THE MORE RECENT LOADS GIVEN IN REF. 29.

5863800 STRUCT ASSY

PART 2

$\delta^2_{1,1} = 3.013 \times 10^{-2} X_1$

$\delta^2_{1,2} = 1.509 \times 10^{-2} X_2$

$\delta^2_{1,8} = -3.740 \times 10^{-2} X_8$

$\delta^2_{1,9} = 3.739 \times 10^{-2} X_9$

$\delta^2_{1,P} = 0$

$\delta^2_{1,T} = 0$

$\delta^2_{2,1} = 1.505 \times 10^{-2} X_1$

$\delta^2_{2,2} = 3.023 \times 10^{-2} X_2$

$\delta^2_{2,8} = -3.736 \times 10^{-2} X_8$

$\delta^2_{2,9} = 3.747 \times 10^{-2} X_9$

$\delta^2_{2,P} = 0$

$\delta^2_{2,T} = 0$

$\delta^2_{8,1} = -3.740 \times 10^{-2} X_1$

$\delta^2_{8,2} = -3.746 \times 10^{-2} X_2$

$\delta^2_{8,8} = 6.206 \times 10^{-2} X_8$

$\delta^2_{8,9} = -6.181 \times 10^{-2} X_9$

$\delta^2_{8,P} = 0$

$\delta^2_{8,T} = 0$

$\delta^2_{9,1} = 3.728 \times 10^{-2} X_1$

$\delta^2_{9,2} = 3.747 \times 10^{-2} X_2$

$\delta^2_{9,8} = -6.164 \times 10^{-2} X_8$

$\delta^2_{9,9} = 6.205 \times 10^{-2} X_9$

$\delta^2_{9,P} = 0$

$\delta^2_{9,T} = 0$

5860800 STRUCTURE ASSY

PART 3

$\delta^3_{2,2} = 1.122 \times 10^{-2}\ x_2$

$\delta^3_{2,3} = .562 \times 10^{-2}\ x_3$

$\delta^3_{2,9} = -1.131 \times 10^{-2}\ x_9$

$\delta^3_{2,10} = 1.132 \times 10^{-2}\ x_{10}$

$\delta^3_{2,P} = 0$

$\delta^3_{2,T} = 0$

$\delta^3_{3,2} = .560 \times 10^{-2}\ x_2$

$\delta^3_{3,3} = 1.126 \times 10^{-2}\ x_3$

$\delta^3_{3,9} = -1.131 \times 10^{-2}\ x_9$

$\delta^3_{3,10} = 1.134 \times 10^{-2}\ x_{10}$

$\delta^3_{3,P} = 0$

$\delta^3_{3,T} = 0$

$\delta^3_{9,2} = -1.135 \times 10^{-2}\ x_2$

$\delta^3_{9,3} = -1.135 \times 10^{-2}\ x_3$

$\delta^3_{9,9} = 1.525 \times 10^{-2}\ x_9$

$\delta^3_{9,10} = -1.522 \times 10^{-2}\ x_{10}$

$\delta^3_{9,P} = 0$

$\delta^3_{9,T} = 0$

$\delta^3_{10,2} = 1.128 \times 10^{-2}\ x_1$

$\delta^3_{10,3} = 1.133 \times 10^{-2}\ x_2$

$\delta^3_{10,9} = -1.517 \times 10^{-2}\ x_9$

$\delta^3_{10,10} = 1.524 \times 10^{-2}\ x_{10}$

$\delta^3_{10,P} = 0$

$\delta^3_{10,T} = 0$

PART 4

586 3800 STRUCT ASSY.

$$\delta_{3,3} = \frac{(107.118)^2 X_3}{10.6\times10^6 \times .25} + \frac{(.224)^2(107.118)^2 X_3}{10.6\times10^6\times.0052} = \qquad \delta_{3,3} = 1.486\times10^{-2} X_3$$

$$\delta_{3,4} = \frac{-(107.118)^2 X_4}{10.6\times10^6\times.25} + \frac{.275\times.224(107.118)^2 X_4}{10.6\times10^6\times.0052} = \qquad \delta_{3,4} = .850\times10^{-2} X_4$$

$$\delta_{3,6} = \frac{-(107.118)^2 X_6}{10.6\times10^6\times.25} - \frac{.275\times.224(107.118)^2 X_6}{10.6\times10^6\times.0052} = \qquad \delta_{3,6} = -1.716\times10^{-2} X_6$$

$$\delta_{3,10} = -\frac{.224(107.118)^2 X_{10}}{10.6\times10^6\times.0052} = \qquad \delta_{3,10} = -4.664\times10^{-2} X_{10}$$

$$\delta_{3,11} = \frac{.224(107.118)^2 X_{11}}{10.6\times10^6\times.0052} = \qquad \delta_{3,11} = 4.664\times10^{-2} X_{11}$$

$$\delta_{3,13} = \frac{.224(107.118)^2 X_{13}}{10.6\times10^6\times.0052} = \qquad \delta_{3,13} = 4.664\times10^{-2} X_{13}$$

$$\delta_{3,N^4} = \frac{2\times 92\times.125\times.224(107.118)^2}{10.6\times10^6\times.0052} = \qquad \delta_{3,N^4} = 107.249\times10^{-2}$$

$$\delta_{3,T} = 0$$

$$\delta_{3,P} = 0$$

$$\delta_{4,3} = \delta_{3,4} = \qquad \delta_{4,3} = .850\times10^{-2} X_3$$

$$\delta_{4,4} = \frac{(107.118)^2 X_4}{10.6\times10^6\times.25} + \frac{(.275)^2(107.118)^2 X_4}{10.6\times10^6\times.0052} = \qquad \delta_{4,4} = 2.008\times10^{-2} X_4$$

$$\delta_{4,6} = \frac{(107.118)^2 X_6}{10.6\times10^6\times.25} - \frac{(.275)^2(107.118)^2 X_6}{10.6\times10^6\times.0052} = \qquad \delta_{4,6} = -1.142\times10^{-2} X_6$$

$$\delta_{4,10} = -\frac{.275(107.118)^2 X_{10}}{10.6\times10^6\times.0052} = \qquad \delta_{4,10} = -5.725\times10^{-2} X_{10}$$

$$\delta_{4,11} = \frac{.275(107.118)^2 X_{11}}{10.6\times10^6\times.0052} = \qquad \delta_{4,11} = 5.725\times10^{-2} X_{11}$$

$$\delta_{4,13} = \frac{.275(107.118)^2 X_{13}}{10.6\times10^6\times.0052} = \qquad \delta_{4,13} = 5.725\times10^{-2} X_{13}$$

$$\delta_{4,N^4} = \frac{2\times 92\times.125\times.275(107.118)^2}{10.6\times10^6\times.0052} = \qquad \delta_{4,N^4} = 131.667\times10^{-2}$$

$$\delta_{4,T} = 0$$

$$\delta_{4,P} = 0$$

$\delta_{6,3} = \delta_{3,6} =$ ——— $\delta_{6,3} = -1.716 \times 10^{-2} X_3$

$\delta_{6,4} = \delta_{4,6} =$ ——— $\delta_{6,4} = -1.142 \times 10^{-2} X_4$

$$\delta_{6,6} = \frac{(107.118)^2 X_6}{10.6 \times 10^6 \times .25} + \frac{(.275)^2 (107.118)^2 X_6}{10.6 \times 10^6 \times .0052} =$$ ——— $\delta_{6,6} = 2.008 \times 10^{-2} X_6$

$$\delta_{6,10} = \frac{.275 (107.118)^2 X_{10}}{10.6 \times 10^6 \times .0052} =$$ ——— $\delta_{6,10} = 5.726 \times 10^{-2} X_{10}$

$$\delta_{6,11} = \frac{-.275 (107.118)^2 X_{11}}{10.6 \times 10^6 \times .0052} =$$ ——— $\delta_{6,11} = -5.726 \times 10^{-2} X_{11}$

$$\delta_{6,13} = -\frac{.275 (107.118)^2 X_{13}}{10.6 \times 10^6 \times .0052} =$$ ——— $\delta_{6,13} = -5.726 \times 10^{-2} X_{13}$

$$\delta_{6,N^4} = -\frac{2 \times 92 \times .125 \times .275 (107.118)^2}{10.6 \times 10^6 \times .0052} =$$ ——— $\delta_{6,N^4} = -131.667 \times 10^{-2}$

$\delta_{6,T} = 0$

$\delta_{6,P} = 0$

$\delta_{10,3} = \delta_{3,10} =$ ——— $\delta_{10,3} = -4.664 \times 10^{-2} X_3$

$\delta_{10,4} = \delta_{4,10} =$ ——— $\delta_{10,4} = -5.726 \times 10^{-2} X_4$

$\delta_{10,6} = \delta_{6,10} =$ ——— $\delta_{10,6} = 5.726 \times 10^{-2} X_6$

$$\delta_{10,10} = \frac{(107.118)^2 X_{10}}{10.6 \times 10^6 \times .0052} =$$ ——— $\delta_{10,10} = 20.817 \times 10^{-2} X_{10}$

$$\delta_{10,11} = \frac{-(107.118)^2 X_{11}}{10.6 \times 10^6 \times .0052} =$$ ——— $\delta_{10,11} = -20.817 \times 10^{-2} X_{11}$

$$\delta_{10,13} = \frac{-(107.118)^2 X_{13}}{10.6 \times 10^6 \times .0052} =$$ ——— $\delta_{10,13} = -20.817 \times 10^{-2} X_{13}$

$$\delta_{10,N^4} = \frac{-2 \times 92 \times .125 (107.118)^2}{10.6 \times 10^6 \times .0052} =$$ ——— $\delta_{10,N^4} = -478.788 \times 10^{-2}$

$\delta_{10,T} = 0$

$\delta_{10,P} = 0$

5863800 STRUCT ASSY

$\delta_{11,3} = \delta_{3,11} =$ ——— $\delta_{11,3} = 4.664 \times 10^{-2} X_3$

$\delta_{11,4} = \delta_{4,11} =$ ——— $\delta_{11,4} = 5.726 \times 10^{-2} X_4$

$\delta_{11,6} = \delta_{6,11} =$ ——— $\delta_{11,6} = -5.726 \times 10^{-2} X_6$

$\delta_{11,10} = \delta_{10,11} =$ ——— $\delta_{11,10} = -20.817 \times 10^{-2} X_{10}$

$\delta_{11,11} = \dfrac{(107.118)^2 X_{11}}{10.6 \times 10^6 \times .0052} =$ ——— $\delta_{11,11} = 20.817 \times 10^{-2} X_{11}$

$\delta_{11,N^4} = \dfrac{2 \times 92 \times .125 (107.118)^2}{10.6 \times 10^6 \times .0052} =$ ——— $\delta_{11,N^4} = 478.788 \times 10^{-2}$

$\delta_{11,13} = \dfrac{(107.118)^2 X_{13}}{10.6 \times 10^6 \times .0052} =$ ——— $\delta_{11,13} = 20.817 \times 10^{-2} X_{13}$

$\delta_{11,T} = 0$

$\delta_{11,P} = 0$

$\delta_{13,3} = \delta_{3,13} =$ ——— $\delta_{13,3} = 4.664 \times 10^{-2} X_3$

$\delta_{13,4} = \delta_{4,13} =$ ——— $\delta_{13,4} = 5.726 \times 10^{-2} X_4$

$\delta_{13,6} = \delta_{6,13} =$ ——— $\delta_{13,6} = -5.726 \times 10^{-2} X_6$

$\delta_{13,10} = \delta_{10,13} =$ ——— $\delta_{13,10} = -20.817 \times 10^{-2} X_{10}$

$\delta_{13,11} = \delta_{11,13} =$ ——— $\delta_{13,11} = 20.817 \times 10^{-2} X_{11}$

$\delta_{13,13} = \dfrac{(107.118)^2 X_{13}}{10.6 \times 10^6 \times .0052} =$ ——— $\delta_{13,13} = 20.817 \times 10^{-2} X_{13}$

$\delta_{13,N^4} = \dfrac{2 \times 92 \times .125 (107.118)^2}{10.6 \times 10^6 \times .0052} =$ ——— $\delta_{13,N^4} = 478.788 \times 10^{-2}$

$\delta_{13,T} = 0$

$\delta_{13,P} = 0$

5863800 STRUCT ASSY

PART 5

$\delta^5_{4,4} = 1.132 \times 10^{-2}\ x_4$

$\delta^5_{4,5} = .567 \times 10^{-2}\ x_5$

$\delta^5_{4,11} = -1.137 \times 10^{-2}\ x_{11}$

$\delta^5_{4,12} = 1.137 \times 10^{-2}\ x_{12}$

$\delta^5_{4,P} = 0$

$\delta^5_{4,T} = 0$

$\delta^5_{5,4} = .565 \times 10^{-2}\ x_4$

$\delta^5_{5,5} = 1.136 \times 10^{-2}\ x_5$

$\delta^5_{5,11} = -1.136 \times 10^{-2}\ x_{11}$

$\delta^5_{5,12} = 1.139 \times 10^{-2}\ x_{12}$

$\delta^5_{5,P} = 0$

$\delta^5_{5,T} = 0$

$\delta^5_{11,4} = -1.137 \times 10^{-2}\ x_4$

$\delta^5_{11,5} = -1.140 \times 10^{-2}\ x_5$

$\delta^5_{11,11} = 1.525 \times 10^{-2}\ x_{11}$

$\delta^5_{11,12} = -1.522 \times 10^{-2}\ x_{12}$

$\delta^5_{11,P} = 0$

$\delta^5_{11,T} = 0$

$\delta^5_{12,4} = 1.134 \times 10^{-2}\ x_4$

$\delta^5_{12,5} = 1.139 \times 10^{-2}\ x_5$

$\delta^5_{12,11} = -1.517 \times 10^{-2}\ x_{11}$

$\delta^5_{12,12} = 1.525 \times 10^{-2}\ x_{12}$

$\delta^5_{12,P} = 0$

$\delta^5_{12,T} = 0$

SM 42560

5263800 STRUCT ASSY

PART 6

$\cot \phi^{5,6} = .21636$ $\sin \phi^{5,6} = .97738$

$$\beta = \sqrt[4]{3(1-\nu^2)\left(\frac{110}{.1103}\right)^2} = \beta = 40.593$$

$x_6 = .1103$

$E_6 = 10.6 \times 10^6$

$\alpha \Delta T_6 = 0$

$P_{IN} = 0$

$$K_1 = 1 + \frac{1-.6}{2 \times 40.593}(.2164) = K_1 = .9989$$

$$K_2 = 1 + \frac{1-.6}{2 \times 40.593}(.2164) = K_2 = .9989$$

$$\delta^6_{5,5} = \frac{X_5 \times 110 \times 40.593(.9774)^2}{10.6 \times 10^6 \times .1103}\left(\frac{1}{.9989} + .9989\right) = \underline{\underline{\delta^6_{5,5} = .730 \times 10^{-2} X_5}}$$

$$\delta^6_{5,12} = \frac{-X_{12} \times 2(40.593)^2 \times .9774}{10.6 \times 10^6 \times .1103 \times .9989} = \underline{\underline{\delta^6_{5,12} = -.276 \times 10^{-2} X_{12}}}$$

$$\underline{\underline{\delta^6_{5,P} = 0}}$$

$$\underline{\underline{\delta^6_{5,T} = 0}}$$

$$\delta^6_{12,5} = \delta^6_{5,12} = \underline{\underline{\delta^6_{12,5} = -.276 \times 10^{-2} X_5}}$$

$$\delta^6_{12,12} = \frac{X_{12} \times 4(40.593)^3}{10.6 \times 10^6 \times .1103 \times 110 \times .9989} = \underline{\underline{\delta^6_{12,12} = .208 \times 10^{-2} X_{12}}}$$

$$\underline{\underline{\delta^6_{12,P} = 0}}$$

$$\underline{\underline{\delta^6_{12,T} = 0}}$$

5863800 STRUCTURE ASSY.

PARTS 7, 8, 9

$\delta^7_{7,7} = .047 \times 10^{-2}\ x_7$

$\delta^7_{7,6} = 0$

$\delta^7_{7,14} = -.010 \times 10^{-2}\ x_{14}$

$\delta^7_{7,13} = 0$

$\delta^7_{7,T} = 0$

$\delta^7_{7,P} = 0$

$\delta^7_{6,7} = 0$

$\delta^7_{6,6} = .197 \times 10^{-2}\ x_6$

$\delta^7_{6,14} = 0$

$\delta^7_{6,13} = .052 \times 10^{-2}\ x_{13}$

$\delta^7_{6,T} = 0$

$\delta^7_{6,P} = 0$

$\delta^7_{14,7} = -.010 \times 10^{-2}\ x_7$

$\delta^7_{14,6} = 0$

$\delta^7_{14,14} = .004 \times 10^{-2}\ x_{14}$

$\delta^7_{14,13} = 0$

$\delta^7_{14,T} = 0$

$\delta^7_{14,P} = 0$

$\delta^7_{13,7} = 0$

$\delta^7_{13,6} = .052 \times 10^{-2}\ x_6$

$\delta^7_{13,14} = 0$

$\delta^7_{13,13} = .026 \times 10^{-2}\ x_{13}$

$\delta^7_{13,T} = 0$

$\delta^7_{13,P} = 0$

5863800 STRUCT ASSY

PART I

$X_1 = -.42'$

$X_8 = .50'$

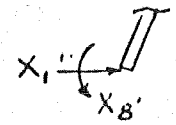

$$\sigma_{\phi_1} = -\frac{X_1 \cos\phi}{t} = \frac{.42(.256)}{.057} = 2$$

$$\sigma_{\theta_1} = -\frac{X_1}{t}\left(\frac{1}{K_1} + \frac{K_1 + K_2}{2}\right) B \sin\phi$$

$$= \frac{.42}{.057}\left(\frac{1}{.9991} + \frac{1.9954}{2}\right)(56.47)(.966) = 803$$

$$\sigma_{\phi_8} = 0$$

$$\sigma_{\theta_8} = \frac{-X_8\, 2\, B^2}{t R K_1} = \frac{-.50(2)(56.47)^2}{.057(110)(.9991)} = -509$$

$$\sigma_{\phi_8'} = \frac{6 X_8}{t^2} = \frac{6(.50)}{(.057)^2} = 923$$

$$\sigma_{\theta_8'} = \mu\, \sigma_{\phi_8'} = .3(923) = 277$$

$$\sigma_\phi = \sigma_{\phi_1} + \sigma_{\phi_8} \pm \sigma_{\phi_8'} = 2 \pm (-923) = \begin{matrix} -921 & \text{INNER FIBER} \\ +925 & \text{OUTER FIBER} \end{matrix}$$

$$\sigma_\theta = \sigma_{\theta_1} + \sigma_{\theta_8} \pm \sigma_{\theta_8'} = 803 - 509 \pm (-277) = \begin{matrix} +17 & \text{IF} \\ +571 & \text{OF} \end{matrix}$$

YIELD: $\sigma_\phi = -1110$, IF $\sigma_\theta = +21$; $\sigma_\phi = +1120$, OF $\sigma_\theta = +691$

MEMBRANE: $\sigma_\phi = \sigma_\theta = 0$

5863800
STRUCTURE ASSY

PART 2

SA08 PROGRAM

$$\sigma_\phi = \frac{N_\phi'}{t} \pm \frac{6M_\phi'}{t^2} = \frac{.105'}{.125'} \pm \frac{(-.5')6'}{(.125)^2} = \begin{matrix} -191' \text{ IF} \\ 193' \text{ OF} \end{matrix}$$

A

$$\sigma_\theta = \frac{N_\theta'}{t} \pm \frac{6M_\theta'}{t^2} = 8'(35.3') \pm 384'(-.155') = \begin{matrix} +223' \text{ IF} \\ +342' \text{ OF} \end{matrix}$$

$$\sigma_\phi = 8'(.17') \pm 384'(-1.2') = \begin{matrix} -459' \text{ IF} \\ +462' \text{ OF} \end{matrix}$$

B

$$\sigma_\theta = 8'(13.51') \pm 384'(-.37') = \begin{matrix} -34' \text{ IF} \\ +250' \text{ OF} \end{matrix}$$

YIELD:

A
IF $\sigma_\phi = -231'$, $\sigma_\theta = 270'$
OF $\sigma_\phi = 234$, $\sigma_\theta = 414'$

B
IF $\sigma_\phi = -555'$, $\sigma_\theta = -41'$
OF $\sigma_\phi = 559'$, $\sigma_\theta = 303'$

MEMBRANE:

$\sigma_\phi = \sigma_\theta = 0'$

5863800
STRUCTURE ASSY

PART 3

$$\sigma_{\phi_1} = \frac{.16'}{.251} \pm \frac{6'(-1.2)'}{.0625'} = \begin{matrix} -115' \text{ IF} \\ 115' \text{ OF} \end{matrix}$$

$$\sigma_{\theta_1} = 4'(30.7') \pm 96'(-.41') = \begin{matrix} 83' \text{ IF} \\ 162' \text{ OF} \end{matrix}$$

$$\sigma_{\phi_2} = 4'(.154') \pm 96'(-2.32') = \begin{matrix} -222' \text{ IF} \\ 223' \text{ OF} \end{matrix}$$

$$\sigma_{\theta_2} = 4'(-37.6') \pm 96'(-.76') = \begin{matrix} -223' \text{ IF} \\ -77' \text{ OF} \end{matrix}$$

YIELD

A: IF $\sigma_\phi = -140'$, $\sigma_\theta = 100'$; OF $\sigma_\phi = 140'$, $\sigma_\theta = 196'$

B: IF $\sigma_\phi = -269'$, $\sigma_\theta = -270'$; OF $\sigma_\phi = 270'$, $\sigma_\theta = -93'$

PART 4

$X_3 = -.65'$, $X_{11} = -6.5'$
$X_4 = -2.85'$, $X_{13} = -12.54'$
$X_6 = 2.58'$, $N_4 = 92'$
$X_{10} = 2.32'$

$$\theta = \frac{\Sigma M_{CG}\, r^2}{EI}$$

$$\delta = \frac{\Sigma F_H\, r^2}{EA}$$

$$\Sigma M_{CG} = -2N^4(.125') - X_{13} + X_6(.275') - X_3(.224') + X_{10} - X_4(.275') - X_{11}$$
$$= -.001' \circlearrowleft$$

$$\Sigma F_H = X_6 - X_3 + X_4 = .38' \rightarrow$$

$$\theta = \frac{-.001'(107.118)^2}{10.5'(10^6)(.005'^2)} = -.0002' \text{ RAD} = .7' \simeq \text{NO ROTATION}$$

$$\delta = \frac{.38'(107.118)^2}{10.5'(10^6)(.25')} = .00166' \rightarrow$$

DISPLACEMENT OF : $\delta_A = .00166'$ C $= \delta_B$; $\epsilon_A = \epsilon_B = .155' \times 10^{-4}$

$$\sigma_{\theta A} = \sigma_{\theta B} = -163'$$

$$\sigma_{\phi A} = \frac{6'(+12.54')}{.25'^2} - \frac{92'}{.25'} = 836' \text{ T}$$

$$\sigma_{\phi B} = \frac{6'(6.5')}{.25'^2} - \frac{92'}{.25'} = 256' \text{ T}$$

YIELD

A: $\sigma_\phi = 1{,}012'$ T, $\sigma_\theta = -197'$ C

B: $\sigma_\phi = 310'$ T, $\sigma_\theta = -197'$ C

K+E ALBANENE TRACING PAPER 60900

5863800
STRUCTURE ASSY

PART 5

$$\sigma_\phi = \frac{.62'}{.25} \pm \frac{6(6.5')}{.25^2} = \begin{matrix} 626'\,IF \\ -622'\,OF \end{matrix}$$

$$\sigma_\theta = 4'(-43.8') \pm 96'(1.89') = \begin{matrix} 6'\,IF \\ -357'\,OF \end{matrix}$$

$$\sigma_\phi = 4'(.38') \pm 96'(2.96') = \begin{matrix} 286'\,IF \\ -283'\,OF \end{matrix}$$

$$\sigma_\theta = 4(-11') \pm 96'(.84') = \begin{matrix} -363'\,IF \\ -525'\,OF \end{matrix}$$

YIELD:

A
- IF: $\sigma_\phi = 760'$, $\sigma_\theta = 7'$
- OF: $\sigma_\phi = -750'$, $\sigma_\theta = -430'$

B
- IF: $\sigma_\phi = 345'$, $\sigma_\theta = -440'$
- OF: $\sigma_\phi = -340'$, $\sigma_\theta = -635'$

MEMBRANE: $\sigma_\phi = -445'$, $\sigma_\theta = +445'$

PART 6

$X_5 = -1.72'$

$X_{12} = -2.96'$

$\beta = 40.593'$

$t = .1103'$

$K_1 = K_2 = .9989'$

$$\sigma_{\phi_5} = \frac{-1.72'(.212)}{.1103'} = -3'$$

$$\sigma_{\theta_5} = \frac{-1.72'}{.1103'}(2)(40.593')(.9774') = -123'$$

$$\sigma_{\theta_{12}} = \frac{2.96'(2)(40.593)^2}{.1103'(110)(.9989)} = 805'$$

$$\sigma_{\phi_{12}} = \frac{-6'(2.96')}{.1103'^2} = -1460'$$

$$\sigma_{\theta_{12}} = .3'(-1460') = -438'$$

$$\sigma_\phi = -3' \pm (1460') = \begin{matrix} 1457'\,IF \\ -1463'\,OF \end{matrix}$$

$$\sigma_\theta = -123' + 805' \pm (438') = \begin{matrix} +61\,IF \\ -870'\,OF \end{matrix}$$

5863800 STRUCTURE ASSY

PART 6

YIELD IF $\sigma_\phi = 1763'$, $\sigma_\theta = 7'$

OF $\sigma_\phi = -1770'$, $\sigma_\theta = -1053'$

MEMBRANE $\sigma_\phi = -1009'$, $\sigma_\theta = +1009'$

PART 7

$$\sigma_\phi = \frac{.59'}{.25'} \pm \frac{6(-12.5')}{.0625'} = \begin{matrix} -1198'\,\text{IF} \\ +1200'\,\text{OF} \end{matrix}$$

$$\sigma_\theta = 4(-33.9') \pm 96(-3.82) = \begin{matrix} -502'\,\text{IF} \\ +231'\,\text{OF} \end{matrix}$$

YIELD IF $\sigma_\phi = -1450'$, $\sigma_\theta = -607'$

OF $\sigma_\phi = +1450'$, $\sigma_\theta = 280'$

MEMBRANE $\sigma_\phi = -445'$, $\sigma_\theta = 0'$

FORM 25-8-1 (REV. 8-53)

DOUGLAS AIRCRAFT COMPANY, INC.

PREPARED BY: GRH
CHECKED BY: G. J. S.
DATE: 10/62
TITLE: DSV-4 PROPELLANT TANK

SM DIVISION

PAGE: 8.1.16
MODEL: DSV-4
REPORT NO: SM 4 2 5 6 0

5863800 STRUCTURE ASSY

GROUND CONDITION

DEFLECTIONS & ROTATIONS

FWD DOME JOINT

$\delta_1^1 = -.003'$

$\delta_8^1 = +.001'$

$\delta_1^2 = +.003'$

$\delta_2^2 = -.001'$

$\delta_8^2 = -.001'$

$\delta_9^2 = +.002'$

$\delta_2^3 = +.001'$

$\delta_3^3 = +.002'$

$\delta_9^3 = -.002'$

$\delta_{10}^3 = +.002'$

$\delta_3^4 = -.002'$

$\delta_4^4 = +.002'$

$\delta_6^4 = +.001'$

$\delta_{10}^4 = -.002'$

$\delta_{11}^4 = +.002'$

$\delta_{13}^4 = +.002'$

$\delta_4^5 = -.002'$

$\delta_5^5 = +.004'$

$\delta_{11}^5 = -.002'$

$\delta_{12}^5 = +.001'$

$\delta_5^6 = -.004'$

$\delta_{12}^6 = -.001'$

$\delta_6^7 = -.001'$

$\delta_{13}^7 = -.002'$

K+E ALBANENE® TRACING PAPER 60000

REV. 3/25/64

FORM 28-8-1 (REV. 8-53)

PREPARED BY: G.P.H.
CHECKED BY: G.J.S.
DATE: 10/62
TITLE: DSV-4 PROPELLANT TANK

DOUGLAS AIRCRAFT COMPANY, INC.

SM DIVISION

PAGE: 8.1.17
MODEL: DSV-4
REPORT NO: SM42[illegible]

5863800 STRUCTURE ASSY

GROUND CONDITION

FWD DOME JOINT

PART			DISCONTINUITY (YIELD) **	MEMBRANE **	DISCONTINUITY + MEMBRANE	* M.S.
1	INNER FIBER	σ_ϕ	-1110	0	-1110	HIGH
		σ_θ	21	↑	21	↑
	OUTER FIBER	σ_ϕ	1120		1120	
		σ_θ	691		691	
2	A IF	σ_ϕ	-231		-231	
		σ_θ	270		270	
	A OF	σ_ϕ	234		234	
		σ_θ	414		414	
	B IF	σ_ϕ	-555		-555	
		σ_θ	-41		-41	
	B OF	σ_ϕ	559		559	
		σ_θ	303		303	
3	A IF	σ_ϕ	-140		-140	
		σ_θ	100		100	
	A OF	σ_ϕ	140		140	
		σ_θ	196		196	
	B IF	σ_ϕ	-269		-269	
		σ_θ	-270		-270	
	B OF	σ_ϕ	270		270	
		σ_θ	-93		-93	
4	A	σ_ϕ	1012		1012	
		σ_θ	-197		-197	
	B	σ_ϕ	310	↓	310	
		σ_θ	-197	0	-197	
5	A IF	σ_ϕ	760	-445	315	
		σ_θ	7	+445	452	
	A OF	σ_ϕ	-750	-445	-1195	
		σ_θ	-430	+445	15	
	B IF	σ_ϕ	345	-445	-100	↓
		σ_θ	-440	+445	5	
	B OF	σ_ϕ	-340	-445	785	HIGH
		σ_θ	-635	+445	-190	

* MAT'L ⇒ 2014-T6 ALLOWABLE, REF. PG 2.3 TO 2.22

** REF. PGS. 8.1.11 TO 8.1.15

K+E ALBANENE TRACING PAPER 69006

FORM 28-9-1 (REV. 6-55)

PREPARED BY: GRH
CHECKED BY: G.J.S.
DATE: 10/62
TITLE: DSV-4 PROPELLANT TANK

DOUGLAS AIRCRAFT COMPANY, INC.

SM DIVISION

PAGE: 8.1.18
MODEL: DSV-4
REPORT NO: SM-42

5863500 STRUCTURE ASSY

GROUND CONDITION

FWD DOME JOINT

PART			DISCONTINUITY (YIELD)	MEMBRANE (YIELD)	DISCONTINUITY + MEMBRANE	M.S.
6	IF	σ_ϕ	1763	-1010	753	* HIGH
		σ_θ	7	+1010	1017	
	OF	σ_ϕ	-1770	-1010	-2780	
		σ_θ	-1053	+1010	-43	
7	IF	σ_ϕ	-1450	-445	-1895	HIGH
		σ_θ	-607	0	-607	
	OF	σ_ϕ	1450	-445	1005	
		σ_θ	280	0	280	

* ALLOWABLES PG. 2.3 TO 2.22

K+E ALBANENE TRACING PAPER 69006

5863800 STRUCTURE ASSY

FWD DOME - MAX αQ *

DEFLECTIONS & ROTATIONS

$\delta_1^1 = .080'$	$\delta_6^4 = .088'$
$\delta_8^1 = .012'$	$\delta_{10}^4 = .003'$
$\delta_1^2 = -.080'$	$\delta_{11}^4 = -.003'$
$\delta_2^2 = .089'$	$\delta_{13}^4 = -.003'$
$\delta_8^2 = -.012'$	$\delta_4^5 = -.087'$
$\delta_9^2 = .001'$	$\delta_5^5 = .077'$
$\delta_2^3 = -.089'$	$\delta_{11}^5 = .003'$
$\delta_3^3 = .088'$	$\delta_{12}^5 = -.009'$
$\delta_9^3 = -.001'$	$\delta_5^6 = -.077'$
$\delta_{10}^3 = -.003'$	$\delta_{12}^6 = .009'$
$\delta_3^4 = -.088'$	$\delta_6^7 = -.088'$
$\delta_4^4 = .087'$	$\delta_{13}^7 = .003'$

* CONDITION PARAMETERS DEFINED ON PAGE 3.3

METHOD OF ANALYSIS IS THE SAME AS PGS. 8.1.2 THRU 8.1.15

FORM 29-8-1 (REV. 8-53)

PREPARED BY: GRH
CHECKED BY: G.J.S.
DATE: 2/62
TITLE: DSV-4 PROPELLANT TANK

DOUGLAS AIRCRAFT COMPANY, INC.

SM DIVISION

PAGE: 8.1.20
MODEL: DSV-4
REPORT NO: SM 42569

FWD DOME - FLIGHT MAX Qα | 5863800 STRUCTURE ASSY

PART			DISCONTINUITY (YIELD)	MEMBRANE (YIELD)	DISCONTINUITY + MEMBRANE	* M.S.
1	IF	σ_ϕ	20,720'	46,100'	66,820'	.04'
		σ_θ	-7,115'	46,100'	38,985'	
	OF	σ_ϕ	-20,840'	46,100'	25,260'	1.34'
		σ_θ	-19,600'	46,100'	26,500'	
2 A	IF	σ_ϕ	4,290'	21,000'	25,290'	1.72'
		σ_θ	-4,750'	↑	16,250'	
	OF	σ_ϕ	-4,350'		16,650'	
		σ_θ	-7,350'		13,650'	
2 B	IF	σ_ϕ	12,310'		33,310'	1.09'
		σ_θ	-2,700'		18,300'	
	OF	σ_ϕ	-12,400'	↓	8,600'	HIGH
		σ_θ	-10,130	21,000'	10,870'	
3 A	IF	σ_ϕ	3,070'	10,520'	13,590'	↑
		σ_θ	-370'	↑	10,150'	
	OF	σ_ϕ	-3,110'		7,410'	
		σ_θ	-2,230'		8,290'	
3 B	IF	σ_ϕ	6,540'		17,060'	
		σ_θ	780'		11,300'	
	OF	σ_ϕ	-6,590'	↓	3,930'	
		σ_θ	-3,170'	10,520'	7,350'	
4 A		σ_ϕ	5,340'	—	5,340'	
		σ_θ	3,630'	—	3,630'	
4 B		σ_ϕ	7,550'	—	7,550'	
		σ_θ	3,630'	—	3,630'	
5 A	IF	σ_ϕ	9,850'	8,310'	18,160'	
		σ_θ	-1,670'	12,700'	11,030'	
	OF	σ_ϕ	-9,760'	8,310'	-1,450'	
		σ_θ	-7,750'	12,700'	5,150'	
5 B	IF	σ_ϕ	3,860'	8,310'	12,170'	↓
		σ_θ	-2,800'	12,700	9,900'	
	OF	σ_ϕ	-3,800'	8,310	4,510'	HIGH
		σ_θ	-5,110'	12,700	7,590'	

* MAT'L 2014-T6 ALLOWABLES PG 2.3 TO 2.22

K+E ALBANENE 10GL TRACING PAPER 60500

FORM 25-9-1 (REV. 8-53)

PREPARED BY: GRH
CHECKED BY: GJS
DATE: 2/62
TITLE: DSV-4 PROPELLANT TANK

DOUGLAS AIRCRAFT COMPANY, INC.

SM DIVISION

PAGE: 8.1.21
MODEL: DSV-4
REPORT NO: SM 12568

5863800 STRUCTURE ASSY

PART		DISCONTINUITY	MEMBRANE	DISCONTINUITY + MEMBRANE	M.S.
6	IF σ_ϕ	19,620	18,800	38,420	* .80
	IF σ_θ	-7,600	28,900	21,300	
	OF σ_ϕ	-19,750	18,800	-950	HIGH
	OF σ_θ	-19,410	28,900	9,490	
7	IF σ_ϕ	-7,450	2,210	-5,240	* HIGH
	IF σ_θ	7,020	—	7,020	
	OF σ_ϕ	7,580	2,210	9,790	HIGH
	OF σ_θ	11,440	—	11,440	

* ALLOWABLES PG 2.3 TO 2.22

K+E ALBANENE® TRACING PAPER 69996

5863800 STRUCTURE ASSEMBLY

SI BURNOUT *

DEFLECTIONS & ROTATIONS

$\delta_1^1 = -.022$	$\delta_{10}^4 = -.001$
$\delta_8^1 = .012$	$\delta_{11}^4 = .001$
$\delta_1^2 = .022$	$\delta_{13}^4 = .001$
$\delta_2^2 = -.012$	$\delta_4^5 = .095$
$\delta_8^2 = -.012$	$\delta_5^5 = -.097$
$\delta_9^2 = .004$	$\delta_{11}^5 = .001$
$\delta_2^3 = .012$	$\delta_{12}^5 = -.004$
$\delta_3^3 = -.009$	$\delta_5^6 = .097$
$\delta_9^3 = -.004$	$\delta_{12}^6 = .004$
$\delta_{10}^3 = .001$	$\delta_6^7 = .008$
$\delta_3^4 = .009$	$\delta_{13}^7 = -.001$
$\delta_4^4 = -.095$	$\delta_7^7 = 0$
$\delta_6^4 = -.008$	$\delta_{14}^7 = 0$

* CONDITION PARAMETERS DEFINED ON PAGE 5.5

METHOD OF ANALYSIS IS THE SAME AS PGS. 8.1.2 THRU 8.1.15

FORM 20-8-1 (REV. 6-63)

PREPARED BY: GRH
CHECKED BY: G.J.S.
DATE: 1-30-62
TITLE: DSV-4 PROPELLANT TANK

DOUGLAS AIRCRAFT COMPANY, INC.

SM DIVISION

PAGE: 8.1.23
MODEL: DSV-4
REPORT NO: SM 42569

FWD DOME JOINT - SI BURNOUT

5863800 STRUCT ASSY

PART			DISCONTINUITY (YIELD)	MEMBRANE (YIELD)	DISCONTINUITY + MEMBRANE	* M.S.
1	IF	σ_ϕ	15,400	46,100	61,500	.11
		σ_θ	-4,600		41,500	
	OF	σ_ϕ	-15,500		30,600	.99
		σ_θ	-15,800	46,100	30,300	
2 A	IF	σ_ϕ	3,230	21,000	24,230	1.66
		σ_θ	-600		20,400	
	OF	σ_ϕ	-3270		17,730	HIGH
		σ_θ	-2460		18,540	
2 B	IF	σ_ϕ	8620		29,620	1.28
		σ_θ	-235		20,765	
	OF	σ_ϕ	-8670		12,330	HIGH
		σ_θ	-5440	21,000	15,560	
3 A	IF	σ_ϕ	2150	10,500	12,650	
		σ_θ	2520		13,020	
	OF	σ_ϕ	-2170		8,330	
		σ_θ	1270		11,770	
3 B	IF	σ_ϕ	3640		14,140	
		σ_θ	2400		12,900	
	OF	σ_ϕ	-3650		6,850	
		σ_θ	210	10,500	10,710	
4 A	IF	σ_ϕ	1800	—	1,800	
		σ_θ	6530	—	6,530	
4 B	OF	σ_ϕ	5770	—	5,770	
		σ_θ	5930	—	5,930	
5 A	IF	σ_ϕ	6940	9400	16,340	
		σ_θ	4660	11,700	16,360	
	OF	σ_ϕ	-6910	9400	2,490	
		σ_θ	500	11,700	12,200	
5 B	IF	σ_ϕ	3500	9400	12,900	
		σ_θ	4000	11,700	15,700	
	OF	σ_ϕ	3450	9400	12,850	HIGH
		σ_θ	1840	11,700	13,540	

* ALLOWABLES PG 2.3 TO 2.22

K-E ALBANENE 196L TRACING PAPER 60209

FORM 25-8-1 (REV. 8-63)

DOUGLAS AIRCRAFT COMPANY, INC.

PREPARED BY: GRH
CHECKED BY: G.J.S.
DATE: 7/62
TITLE: DSV-4 PROPELLANT TANK

SM DIVISION

PAGE: 2.1.24
MODEL: DSV-4
REPORT NO: SM 42500

SM 42500

5863300 STRUCTURE ASSY

PART		DISCONTINUITY (YIELD)	MEMBRANE (YIELD)	DISCONTINUITY + MEMBRANE	M.S.
6	IF σ_ϕ	17,800	21,300	39,100	.73
	IF σ_θ	-5,500	26,500	21,000	
	OF σ_ϕ	-17,900	21,300	3,400	HIGH
	OF σ_θ	-16,200	26,500	10,300	
7	IF σ_ϕ	2940	1150	-1,790	HIGH
	IF σ_θ	45	0	45	
	OF σ_ϕ	2960	1150	4,110	HIGH
	OF σ_θ	1830	0	1,830	

K+E ALBANENE® TRACING PAPER 60006

AFT SKIRT TO AFT LO_2 DOME JOINT STRUCTURE ASSY (5863800)

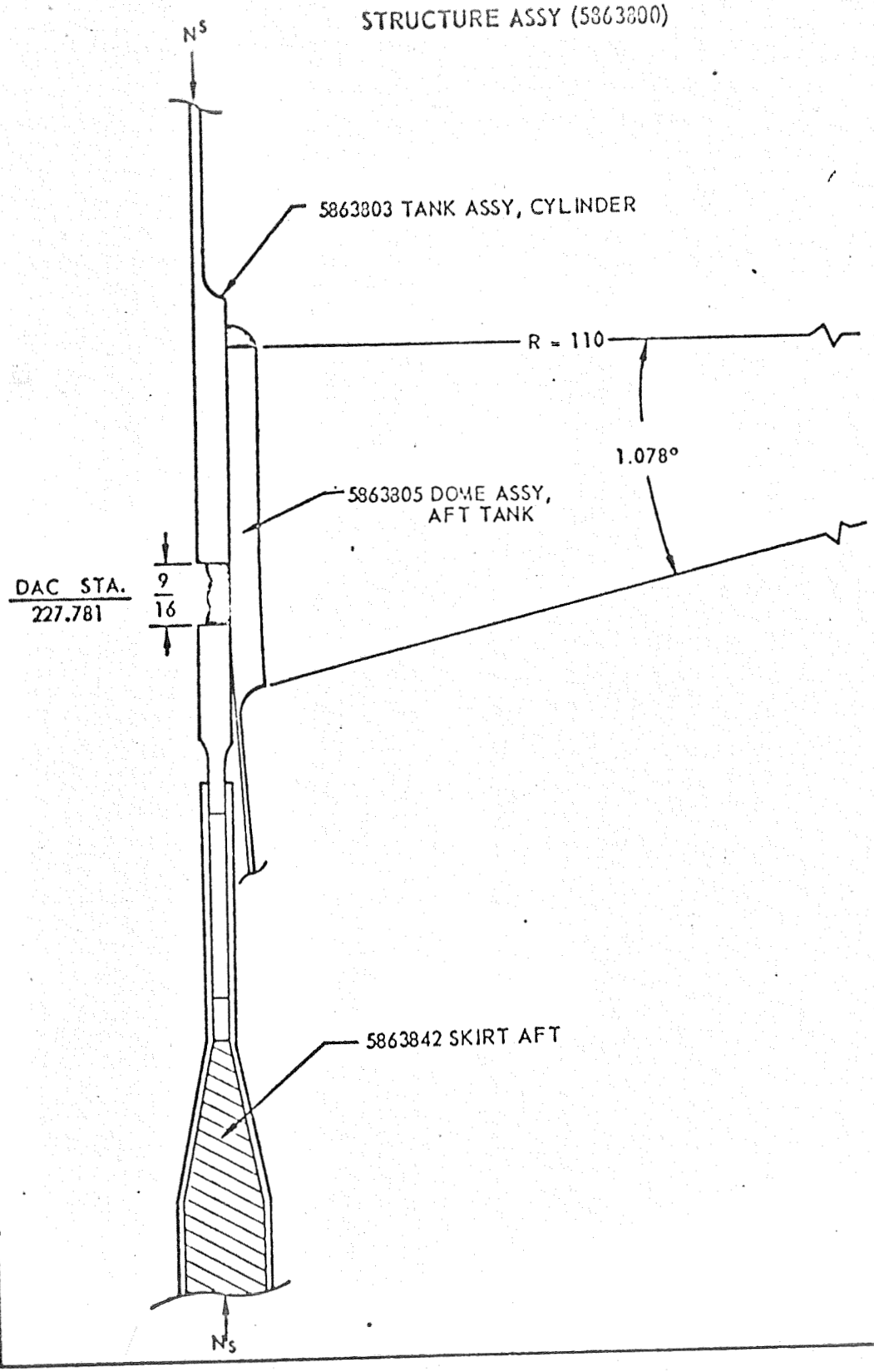

AFT SKIRT TO AFT LO_2 DOME JOINT

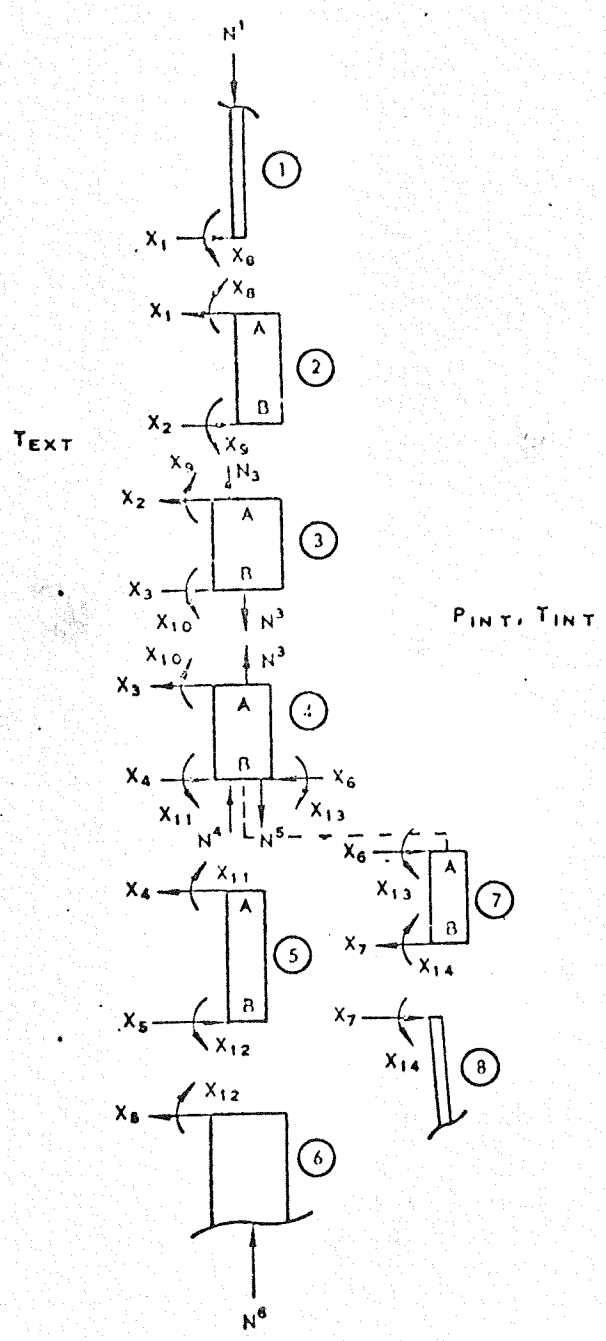

AFT SKIRT TO AFT LO_2 DOME JOINT - S-I BURN OUT
PART 1 - LONG CYLINDER

5863900 STRUCTURE ASSY.

APPENDIX III
PG. III.5.1

$t = .120$ $\quad R = 110$ $\quad \nu = .3$

$T = 180°F$ (REF 10)

$E_{SEC.} = 7.17 \times (10^6)$ — REF. PAGE 2.10

$P = 42.5$ $\quad \alpha \Delta T = 140 \times 10^{-5}$

$$\beta^4 = \left[\frac{3(1-.09)}{110^2 \times .12^2}\right] = .0157; \quad \beta^3 = .0444; \quad \beta^2 = .1253; \quad \beta = .354$$

$$C = \frac{7.17 \times (10^6)(.12)^3}{12(1-.09)} = 1134.593$$

$$\delta^1_{1,1} = \frac{X_1}{2(1{,}134.593)(.0444)} = .9925 \times 10^{-2} X_1$$

$$\delta^1_{1,8} = \frac{X_8}{2(1{,}134.593)(.1253)} = .3517 \times 10^{-2} X_8$$

$$\delta^1_{1,P} = -\frac{42.5(110)^2(.85)}{10.25(10^6)(.120)} = -35.5376 \times 10^{-2}$$

$$\delta^1_{1,T} = -14(10^{-4})(110) = -15.4 \times 10^{-2}$$

$$\delta^1_{8,1} = \delta^1_{1,8} = .3517 \times 10^{-2} X_1$$

$$\delta^1_{8,8} = \frac{X_8}{.354(1{,}134.593)} = .2488 \times 10^{-2} X_8$$

5863800 STRUCTURE ASSY

PART 2 SHORT CYLINDER

$t = .3120'$ $\quad R = 110'$

$T = 170°F$ $\quad \gamma = .3'$

$E = 10.3 \times 10^6$ $\quad \alpha\Delta T = 130 \times 10^{-5}$

$P = 42.5'$ $\quad L = 1.6875'$

$$\beta^4 = \frac{3(1-.09)}{110^2(.312)^2} = 23.175 \times 10^{-4} \qquad \beta = .2194 \qquad \beta L = .3703$$

$$D = \frac{10.3(10^6)(.312)^3}{12(1-.09)} = 28{,}646.82$$

$$2D\beta^4 L = 2(28{,}646.82)(23.175 \times 10^{-4})(1.6875) = 224.0956$$

$$2D\beta^4 L^2 = 378.1613$$

$$2D\beta^4 L^3 = 638.1472$$

$$\delta^2_{1,1} = +\frac{2.0004}{224.0956} X_1 = +.8926 \times 10^{-2} X_1$$

$$\delta^2_{1,2} = +\frac{.9997}{224.0956} X_2 = +.4461 \times 10^{-2} X_2$$

$$\delta^2_{1,8} = -\frac{3.0022}{378.1613} X_8 = -.7939 \times 10^{-2} X_8$$

$$\delta^2_{1,9} = +\frac{2.9988}{378.1613} X_9 = +.7929 \times 10^{-2} X_9$$

$$\delta^2_{1,P} = \frac{42.5(110)^2(1-.15)}{10.3(10^6)(.312)} = +13.6519 \times 10^{-2}$$

$$\delta^2_{1,T} = 13.0 \times 10^{-4} \times 110 = +14.30 \times 10^{-2}$$

PART 2

$$\delta^2_{2,1} = +\delta^{2'}_{1,2} = +.4461\times10^{-2}X_1$$

$$\delta^2_{2,2} = +\delta^{2'}_{1,1} = +.8926\,X_2'$$

$$\delta^2_{2,8} = -\delta^{2'}_{1,9} = -.7929\times10^{-2}X_8'$$

$$\delta^2_{2,9} = -\delta^{2'}_{1,8} = +.7939\times10^{-2}X_9'$$

$$\delta^2_{2,P} = -\delta^{2'}_{1,P} = -13.6019\times10^{-2}$$

$$\delta^2_{2,T} = -\delta^{2'}_{1,T} = -14.30\times10^{-2}$$

$$\delta^2_{8,1} = \delta^{2'}_{1,8} = -.7939\times10^{-2}X_1$$

$$\delta^2_{8,2} = \delta^{2'}_{2,8} = -.7929\times10^{-2}X_2'$$

$$\delta^2_{8,8} = +\frac{6.0152}{638.1472}X_8' = +.9426\times10^{-2}X_8'$$

$$\delta^2_{8,9} = -\frac{5.99486}{638.1472}X_9' = -.9394\times10^{-2}X_9'$$

$$\delta^2_{9,1} = \delta^2_{1,9} = +.7929\times10^{-2}X_1$$

$$\delta^2_{9,2} = \delta^2_{2,9} = +.7939\times10^{-2}X_2$$

$$\delta^2_{9,8} = \delta^2_{8,9} = -.9394\times10^{-2}X_8$$

$$\delta^2_{9,9} = \delta^2_{8,8} = +.9426\times10^{-2}X_9$$

PART 3 SHORT CYLINDER

5863800 STRUCTURE ASSY

$T = 150°F$ $R = 110$

$P = 42.5$ $a = .130$

$E = 10.3(10^6)$ $L = 1.3125$

$\alpha\Delta T = 10\times10^{-4}$ $t = .562$

$N^3 = 1{,}941 \frac{LB}{IN}$ (REF 9)

$$\beta^4 = \frac{3(1-.09)}{110^2(.562)^2} = .07143\times10^{-2}$$

$\beta = .1635$; $\beta L = .2142$

$$D = \frac{10.3(10^6)(.562)^3}{12(1-.09)} = 167{,}426.2$$

$2D\beta^4 L = 313.9305$

$2D\beta^4 L^2 = 412.0338$

$2D\beta^4 L^3 = 540.7943$

$$\delta^3_{2,2} = \frac{1.99844}{313.9305} X_2 = .6366\times10^{-2} X_2$$

$$\delta^3_{2,3} = \frac{.99838}{313.9305} X_3 = .3180\times10^{-2} X_3$$

$$\delta^3_{2,9} = \frac{-2.99721}{412.0338} X_9 = -.7274\times10^{-2} X_9$$

$$\delta^3_{2,10} = \frac{2.99677}{412.0338} X_{10} = +.7273\times10^{-2} X_{10}$$

$$\delta^3_{2,N^3} = \frac{-2.99721}{412.0338}(1{,}941)(.130)$$

$$= -183.548\times10^{-2}$$

$$\delta^3_{2,P} = \frac{42.5(110)^2(1-.15)}{10.3(10^6)(.562)}$$

$$= 7.5513\times10^{-2}$$

$$\delta^3_{2,T} = 10(10^{-4})(110) = 11.00\times10^{-2}$$

$$\delta^3_{3,2} = \delta^3_{2,3} = .3180\times10^{-2} X_2$$

$$\delta^3_{3,3} = \delta^3_{2,2} = .6366\times10^{-2} X_3$$

$$\delta^3_{3,9} = -\delta^3_{2,10} = -.7273\times10^{-2} X_9$$

$$\delta^3_{3,10} = -\delta^3_{2,9} = +.7274\times10^{-2} X_9$$

$$\delta^3_{3,N^3} = \frac{-2.99677}{412.0338}(1{,}941)(.130)$$

$$= -183.524$$

$$\delta^3_{3,P} = -\delta^3_{2,P} = -7.5513\times10^{-2}$$

$$\delta^3_{3,T} = -11.00\times10^{-2}$$

PART 3

$$\delta^3_{9,2} = \delta^{3\,1}_{2,9} = -.7274 \times 10^{-2} X_2$$

$$\delta^3_{9,3} = \delta^{3\,1}_{3,9} = -.7273 \times 10^{-2} X_3$$

$$\delta^3_{9,9} = \frac{5.99572}{540.7943} X_9 = +1.1087 \times 10^{-2} X_9$$

$$\delta^3_{9,10} = -\frac{5.99316}{540.7943} X_{10} = -1.1082 \times 10^{-2} X_{10}$$

$$\delta^3_{9,N^3} = \frac{5.99572}{540.7943}(1.941)(.130) = +279.754 \times 10^{-2}$$

$$\delta^3_{10,2} = \delta^{3\,1}_{2,10} = .7273 \times 10^{-2} X_2$$

$$\delta^3_{10,3} = \delta^{3\,1}_{3,10} = +.7274 \times 10^{-2} X_3$$

$$\delta^3_{10,9} = \delta^{3\,1}_{9,10} = -1.1082 \times 10^{-2} X_9$$

$$\delta^3_{10,10} = \delta^{3\,1}_{9,9} = +1.1087 \times 10^{-2} X_{10}$$

$$\delta^3_{10,N^3} = -\frac{5.99316}{540.7943}(1.941)(.130) = -279.637 \times 10^{-2}$$

PART 4 SHORT CYLINDER

5863800 STRUCTURE ASSY

$T = 150°F$

$P = 42.5$

$E = 10.3 \times 10^6$

$\alpha \Delta T = 10 \times 10^{-4}$

$R = 110$ $\quad L = .563$ $\quad t = .468$

$A = .2634$

(REF 9)

N^4 = SKIRT LOAD = 1,234 #/IN

N^5 = PRESSURE LOAD = 3,175 #/IN

N^3 = RESULTANT = 1,941 #/IN

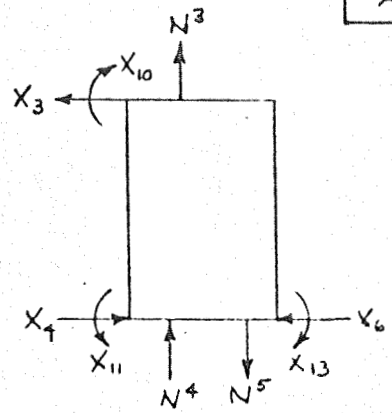

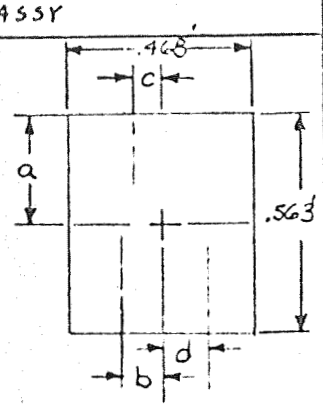

$a = .2813$

$b = .1720$

$c = .0469$

$d = .1091$

$$\beta^4 = \frac{3(1-\nu^2)}{R^2 t^2} = \frac{3(1-.09)}{110^2(.468)^2} = .00103$$

$\beta^3 = .005749$

$\beta^2 = .032095$

$\beta = .1792$

$\beta L = .1008$

$$D = \frac{E t^3}{12(1-\nu)^2} = \frac{10.3(10^6)(.468)^3}{12(1-.09)} = 96{,}683.4$$

$2D\beta^4 L = 112.1315$

$2D\beta^4 L^2 = 63.1300$

$2D\beta^4 L^3 = 35.5422$

$$\delta^4_{3,3} = \frac{1.97059}{112.1315} X_3 = +1.7574 \times 10^{-2} X_3$$

$$\delta^4_{3,4} = \frac{.97059}{112.1315} X_4 = +.8656 \times 10^{-2} X_4$$

$$\delta^4_{3,6} = -\frac{.97059}{112.1315} X_6 = -.8656 \times 10^{-2} X_6$$

$$\delta^4_{3,10} = -\frac{2.94118}{63.13} X_{10} = -4.6589 \times 10^{-2} X_{10}$$

$$\delta^4_{3,11} = \frac{2.94118}{63.13} X_{11} = +4.6589 \times 10^{-2} X_{11}$$

$$\delta^4_{3,13} = -\frac{2.94118}{63.13} X_{13} = -4.6589 \times 10^{-2} X_{13}$$

$$\delta^4_{3,N^3} = -\frac{2.94118}{63.13}(1{,}941)(.468) = -424.118 \times 10^{-2}$$

$$\delta^4_{3,N^4} = -\frac{2.94118}{63.13}(1{,}234)(.172) = -988.854 \times 10^{-2}$$

$$\delta^4_{3,N^5} = -\frac{2.94118}{63.13}(3{,}175)(.109) = -1{,}613.828 \times 10^{-2}$$

$$\delta^4_{3,P} = \frac{42.5(110)^2(1-.15)}{10.3 \times 10^6 (.468)} = 3.0679 \times 10^{-2}$$

$$\delta^4_{3,T} = 10(10^{-4})(110) = 11.00 \times 10^{-2}$$

PART 4

5863800 STRUCTURE ASSY

$\delta^4_{4,3} = \delta^{4\,1}_{3,4} = .8656' \times 10^{-2} X_3$

$\delta^4_{4,4} = +\delta^{4\,1}_{3,3} = 1.7574' \times 10^{-2} X_4$

$\delta^4_{4,6} = -\delta^{4\,1}_{4,4} = -1.7574' \times 10^{-2} X_6$

$\delta^4_{4,10} = -\delta^{4\,1}_{3,11} = -4.6589' \times 10^{-2} X_{10}$

$\delta^4_{4,11} = -\delta^4_{3,10} = +4.6589' \times 10^{-2} X_{11}$

$\delta^4_{4,13} = -\delta^{4\,1}_{4,11} = -4.6589' \times 10^{-2} X_{13}$

$\delta^4_{4,N^3} = \delta^4_{3,N^3} = -424.118' \times 10^{-2}$

$\delta^4_{4,N^4} = \delta^4_{3,N^4} = -988.854' \times 10^{-2}$

$\delta^4_{4,N^5} = \delta^4_{3,N^5} = -1,613.828' \times 10^{-2}$

$\delta^4_{4,P} = -\delta^{4\,1}_{3,P} = -9.0679' \times 10^{-2}$

$\delta^4_{4,T} = -\delta^{4\,1}_{3,T} = -11.00' \times 10^{-2}$

$\delta^4_{6,3} = \delta^{4\,1}_{3,6} = -.8656' \times 10^{-2} X_3$

$\delta^4_{6,4} = \delta^{4\,1}_{4,6} = -1.7574' \times 10^{-2} X_4$

$\delta^4_{6,6} = \delta^{4\,1}_{4,4} = 1.7574' \times 10^{-2} X_6$

$\delta^4_{6,10} = -\delta^{4\,1}_{4,10} = +4.6589' \times 10^{-2} X_{10}$

$\delta^4_{6,11} = -\delta^{4\,1}_{4,11} = -4.6589' \times 10^{-2} X_{11}$

$\delta^4_{6,13} = -\delta^{4\,1}_{4,13} = +4.6589' \times 10^{-2} X_{13}$

$\delta^4_{6,N^3} = -\delta^{4\,1}_{4,N^3} = +424.118' \times 10^{-2}$

$\delta^4_{6,N^4} = -\delta^{4\,1}_{4,N^4} = +988.854' \times 10^{-2}$

$\delta^4_{6,N^5} = -\delta^{4\,1}_{4,N^5} = +1,613.828' \times 10^{-2}$

$\delta^4_{6,P} = -\delta^{4\,1}_{4,P} = +9.0679' \times 10^{-2}$

$\delta^4_{6,T} = -\delta^{4\,1}_{4,T} = +11.00' \times 10^{-2}$

$\delta^4_{10,3} = \delta^{4\,1}_{3,10} = -4.6589' \times 10^{-2} X_3$

$\delta^4_{10,4} = \delta^{4\,1}_{4,10} = -4.6589' \times 10^{-2} X_4$

$\delta^4_{10,6} = \delta^{4\,1}_{6,10} = 4.6589' \times 10^{-2} X_6$

$\delta^4_{10,10} = \frac{5.88241'}{35.5422'} X_{10}$

$= 16.5505' \times 10^{-2} X_{10}$

$\delta^4_{10,11} = -\frac{5.88229'}{35.5422'} X_{11}$

$= -16.5502' \times 10^{-2} X_{11}$

$\delta^4_{10,13} = -\delta^{4\,1}_{10,11} = +16.5507' \times 10^{-2} X_{13}$

$\delta^4_{10,N^3} = \frac{5.88241'}{35.5422'}(1,941')(.0469)$

$= 1,506.637' \times 10^{-2}$

$\delta^4_{10,N^4} = \frac{5.88229'}{35.5422'}(1,234')(.1720')$

$= 3,512.743' \times 10^{-2}$

$\delta^4_{10,N^5} = \frac{5.88229'}{35.5422'}(3,175')(.1091')$

$= 5,732.860' \times 10^{-2}$

PART 4

$$\delta^4_{11,3} = \delta^4_{3,11}{}' = 4.6589' \times 10^{-2} X_3$$

$$\delta^4_{11,4} = \delta^4_{4,11}{}' = 4.6589' \times 10^{-2} X_4$$

$$\delta^4_{11,6} = \delta^4_{6,11}{}' = -4.6589' \times 10^{-2} X_6$$

$$\delta^4_{11,10} = \delta^4_{10,11}{}' = -16.5502' \times 10^{-2} X_{10}$$

$$\delta^4_{11,11} = \delta^4_{10,10}{}' = 16.5505' \times 10^{-2} X_{11}$$

$$\delta^4_{11,13} = -\delta^4_{11,11}{}' = -16.5505' \times 10^{-2} X_{13}$$

$$\delta^4_{11,N^3} = -\frac{5.88229'}{35.5422'}(1941)(.0469) = -1,506.611' \times 10^{-2}$$

$$\delta^4_{11,N^4} = -\frac{5.88241'}{35.5422'}(1237)(.1720) = -3,512.803' \times 10^{-2}$$

$$\delta^4_{11,N^5} = -\frac{5.88241'}{35.5422'}(3,175)(.1001) = -5,732.957' \times 10^{-2}$$

$$\delta^4_{13,3} = \delta^4_{3,13}{}' = -4.6589' \times 10^{-2} X_3'$$

$$\delta^4_{13,4} = \delta^4_{4,13}{}' = -4.6589' \times 10^{-2} X_4'$$

$$\delta^4_{13,6} = \delta^4_{6,13}{}' = +4.6589' \times 10^{-2} X_6'$$

$$\delta^4_{13,10} = \delta^4_{10,13}{}' = +16.5502' \times 10^{-2} X_{10}'$$

$$\delta^4_{13,11} = \delta^4_{11,13}{}' = -16.5505' \times 10^{-2} X_{11}'$$

$$\delta^4_{13,13} = \delta^4_{11,11}{}' = 16.5505' \times 10^{-2} X_{13}'$$

$$\delta^4_{13,N^3} = -\delta^4_{11,N^3}{}' = +1,506.611' \times 10^{-2}$$

$$\delta^4_{13,N^4} = -\delta^4_{11,N^4}{}' = +3,512.803' \times 10^{-2}$$

$$\delta^4_{13,N^5} = -\delta^4_{11,N^5}{}' = +5,732.957' \times 10^{-2}$$

24

SM 42566

PART 5 LONG CYLINDER

5863800 STRUCTURE ASSY

$t = .312'$ $\quad E = 10.2 \times 10^6$ $\quad \nu = .3$

$p = 0$ $\quad \alpha\Delta T = +17 \times 10^{-4}$

$T = 200°F$ $\quad R = 110$

$$\beta^4 = \frac{3(1-.09)}{110^2(.312^2)} = .2318 \times 10^{-2} \; ; \; \beta^3 = 1.0562 \times 10^{-2}$$

$$\beta^2 = 4.8145 \times 10^{-2} \; ; \; \beta = .2194$$

$$D = \frac{10.2 \times 10^6 (.312)^3}{12(1-.09)} = 28{,}368.8$$

$$\delta^5_{4,4} = \frac{X_4}{2(28{,}368.8)(1.0562)(10^{-2})} = .1669 \times 10^{-2} X_4$$

$$\delta^5_{4,11} = -\frac{X_{11} \times 10^{+2}}{2(28{,}368.8)(4.8145)} = -.0366 \times 10^{-2} X_{11}$$

$$\delta^5_{4,T} = 17(110)(10^{-4}) = +18.70 \times 10^{-2}$$

$$\delta^5_{4,5} = \delta^5_{4,12} = 0$$

$$\delta^5_{5,5} = \delta^5_{4,4} = +.1669 \times 10^{-2} X_5$$

$$\delta^5_{5,12} = -\delta^5_{4,11} = +.0366 \times 10^{-2} X_{12}$$

$$\delta^5_{5,T} = -18.70 \times 10^{-2}$$

$$\delta^5_{11,4} = \delta^5_{4,11} = -.0366 \times 10^{-2} X_4$$

$$\delta^5_{11,11} = [.2194(28{,}368.8)]^{-1} X_{11} = .0161 \times 10^{-2} X_{11}$$

$$\delta^5_{12,5} = \delta^5_{5,12} = +.0366 \times 10^{-2} X_5$$

$$\delta^5_{12,12} = \delta^5_{11,11} = +.0161 \times 10^{-2} X_{12}$$

5863800 STRUCTURE ASSY

PART 6 LONG CYLINDER

$t = .60'$ $\qquad \alpha\Delta T = +23 \times 10^{-4}$

$T = 250°F$ $\qquad \mu = .3'$

$E = 10.1' \times 10^6$ $\qquad P = 0$

$$\beta^4 = \frac{3(1-.09')}{110^{2'}(.60)^2} = .06267 \times 10^{-2} \quad ; \quad \beta^3 = .3961' \times 10^{-2}$$

$$\beta^2 = .025034' \quad ; \quad \beta = .1582'$$

$$D = \frac{10.1' \times 10^6 (.6')^3}{12(1-.09')} = 199{,}780.2$$

$$\delta^6_{5,5} = \left[2(199{,}780.2)(.3961)10^{-2}\right]^{-1} X_5 = .0632' \times 10^{-2} X_5$$

$$\delta^6_{5,12} = -\left[2(199{,}780.2)(.025034)\right]^{-1} X_{12} = -.0099' \times 10^{-2} X_{12}$$

$$\delta^6_{5,T} = +23(10^{-4})(110) = 25.30' \times 10^{-2}$$

$$\delta^6_{12,5} = \delta^6_{5,12} = -.0099' \times 10^{-2} X_5$$

$$\delta^6_{12,12} = \left[(.1582)(199{,}780.2)\right]^{-1} X_{12} = .0032' \times 10^{-2} X_{12}$$

5863800 STRUCTURE ASSY

PART 7 SHORT CYLINDER

$t = .25'$ $\quad E = 10.35 \times 10^6$ $\quad L = 1.50'$

$P = 42.5'$ $\quad \alpha\Delta T = 9 \times 10^{-9}$

$T = 140°F$ $\quad R = 109.656'$

$$\beta^4 = \frac{3(1-.09)}{109.656^2(.25)^2} = .36326 \times 10^{-2} \qquad \beta = .2455$$

$$\beta L = .2455(1.5) = .3682'$$

$$D = \frac{10.35(10^6)(.25)^3}{12(1-.09)} = 14{,}809.4$$

$$2D\beta^4 L = 2(14{,}809.4)(.00363326)(1.5) = 161.2977$$

$$2D\beta^4 L^2 = 241.9466$$

$$2D\beta^4 L^3 = 362.9199$$

$$\delta^7_{6,6} = +\frac{2.0004}{161.2977} X_6 = 1.2402 \times 10^{-2} X_6$$

$$\delta^7_{6,7} = +\frac{.9997}{161.2977} X_7 = +.6198 \times 10^{-2} X_7$$

$$\delta^7_{6,13} = -\frac{3.0022}{241.9466} X_{13} = -1.2408 \times 10^{-2} X_{13}$$

$$\delta^7_{6,14} = +\frac{2.9988}{241.9466} X_{14} = +1.2394 \times 10^{-2} X_{14}$$

$$\delta^7_{6,P} = -\frac{42.5(109.656)^2(1-.15)}{10.35(.25) \times 10^6} = -16.7877 \times 10^{-2}$$

$$\delta^7_{6,T} = -3(10^{-4})(109.656) = -3.869 \times 10^{-2}$$

5863800 STRUCTURE ASSY

PART 7

$$\delta^7_{7,6} = \delta^{7\,\prime}_{6,7} = +.6198 \times 10^{-2} X_6'$$

$$\delta^7_{7,7} = \delta^{7\,\prime}_{6,6} = +1.2402 \times 10^{-2} X_7'$$

$$\delta^7_{7,13} = -\delta^{7\,\prime}_{6,14} = -1.2394 \times 10^{-2} X_{13}'$$

$$\delta^7_{7,14} = -\delta^{7\,\prime}_{6,13} = +1.2408 \times 10^{-2} X_{14}'$$

$$\delta^7_{7,P} = -\delta^{7\,\prime}_{6,P} = +16.7877 \times 10^{-2}$$

$$\delta^7_{7,T} = -\delta^{7\,\prime}_{6,T} = +9.869 \times 10^{-2}$$

$$\delta^7_{13,6} = \delta^{7\,\prime}_{6,13} = -1.2408 \times 10^{-2} X_6'$$

$$\delta^7_{13,7} = \delta^{7\,\prime}_{7,13} = -1.2394 \times 10^{-2} X_7'$$

$$\delta^7_{13,13} = +\frac{6.0150}{362.9199} X_{13} = 1.6574 \times 10^{-2} X_{13}'$$

$$\delta^7_{13,14} = -\frac{5.9950}{362.9199} X_{14} = -1.6519 \times 10^{-2} X_{14}'$$

$$\delta^7_{14,6} = \delta^{7\,\prime}_{6,14} = +1.2394 \times 10^{-2} X_6'$$

$$\delta^7_{14,7} = \delta^{7\,\prime}_{7,14} = +1.2408 \times 10^{-2} X_7'$$

$$\delta^7_{14,13} = \delta^{7\,\prime}_{13,14} = -1.6519 \times 10^{-2} X_{13}'$$

$$\delta^7_{14,14} = \delta^{7\,\prime}_{13,13} = +1.6574 \times 10^{-2} X_{13}'$$

5863800 STRUCTURE ASSY

PART 8 SPHERE

$t = .1193$ $\quad E = 10.35 \times 10^6$ $\quad \phi = 89.2162°$

$P = 42.5$ $\quad \alpha\Delta T = +8 \times 10^{-4}$ $\quad \cot\phi = .01367$

$T = 135°F$ $\quad R = 109.656$ $\quad \sin\phi = .9991$

$$\beta^4 = 3(1-.09)\left(\frac{109.656}{.1193}\right)^2 = 230.6463 \times 10^4 \qquad \beta = 38.971$$

$$K_1 = 1 - \frac{1-.6}{38.971}(.0137) = .9999$$

$$K_2 = 1 - \frac{1+.6}{38.971}(.0137) = .9994$$

$$\delta^8_{7,7} = \frac{109.656(38.971)(.9991)^2}{10.35(10^6)(.1193)}\left(\frac{1}{.9999} + .9994\right) = .6908 \times 10^{-2} X_7$$

$$\delta^8_{7,14} = -\frac{2(38.971)^2(.9991)}{10.35(10^6)(.1193)(.9999)} X_{14} = -.2458 \times 10^{-2} X_{14}$$

$$\delta^8_{7,P} = -\frac{42.5(109.656)^2(.7)(.9991)}{2(10.35)(10^6)(.1193)} = -14.473 \times 10^{-2}$$

$$\delta^8_{7,T} = -8 \times 10^{-4}(109.656)(.9991) = -8.7646$$

$$\delta^8_{14,7} = \delta^8_{7,14} = -.2458 \times 10^{-2} X_7$$

$$\delta^8_{14,14} = \frac{4(38.971)^3 10^{-6}}{10.35(.1193)(109.656)(.9999)} X_{14} = .1749 \times 10^{-2} X_{14}$$

5863800 STRUCTURE ASSY

PART 1

$X_1 = 72.3$ $\quad t = .12'$ $\quad T = 180'$ $\quad F_{ty} = 56{,}000'$

$X_B = -105.6$ $\quad \lambda = .354'$ $\quad R = 110'$

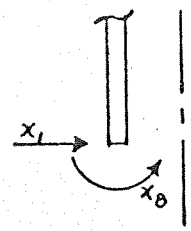

$$\sigma_{\theta_1} = \frac{-2X_1\lambda R}{t} = \frac{-2(72.3)(.354)(110)}{.12} = -46{,}923$$

$$\sigma_{\theta_B} = \frac{-2X_B\lambda^2 R}{t} = -\frac{2(-105.6)(.354)^2\,110}{.12} = 24{,}261$$

$$\sigma_{\phi_B}' = \frac{6(-105.6)\times .833}{.12^2} = -36{,}652 \quad \text{——(REF 7)}$$

$$\sigma_{\theta_B}' = \mu\,\sigma_{\phi_B}' = .3(-36{,}652) = -10{,}996$$

$$\sigma_\theta = \sigma_{\theta_1} + \sigma_{\theta_B} \pm \sigma_{\theta_B}' = -46{,}923 + 24{,}261 \mp 10{,}996 = \begin{matrix} -11{,}666 \\ -33{,}658 \end{matrix}$$

$$\sigma_\phi = \mp(-36{,}653) = \begin{matrix} 36{,}653 \\ -36{,}653 \end{matrix}$$

YIELD: IF $\sigma_\phi = 44{,}350$, $\sigma_\theta = -14{,}120$

OF $\sigma_\phi = -44{,}350$, $\sigma_\theta = -40{,}700$

MEMBRANE: $\sigma_\phi = 19{,}600$, $\sigma_\theta = 47{,}100$

DISC+MEM IF $\sigma_\phi = 63{,}950$, $\sigma_\theta = 32{,}980$

OF $\sigma_\phi = -24{,}750$, $\sigma_\theta = 6{,}400$

$K = 1.5$ $\quad F_y = 50{,}000$ PSI $\quad$ ALLOWABLE $\frac{MC}{I} = 60{,}000$ PSI

$\frac{50{,}000}{60{,}000} = .833$ $\quad \therefore \frac{MC}{I} \times .833 =$ APPLIED STRESS

5863800 STRUCTURE ASSY

PART 2

SA08 PROGRAM

$$\sigma_\phi = \frac{N_\phi}{t} \pm \frac{6M_\phi}{t^2} \qquad \sigma_\theta = \frac{N_\theta}{t} \pm \frac{6M_\theta}{t^2}$$

A

$$\sigma_\phi = \frac{0}{.312} \pm \frac{6(106)}{.312^2} = \begin{matrix} +6530 \text{ IF} \\ -6530 \text{ OF} \end{matrix}$$

$$\sigma_\theta = \frac{-3424}{.312} \pm \frac{6(32)}{.312^2} = \begin{matrix} -9000 \text{ IF} \\ -12{,}950 \text{ OF} \end{matrix}$$

B

$$\sigma_\phi = \frac{0}{.312} \pm \frac{6(270)}{.312^2} = \begin{matrix} +16{,}640 \text{ IF} \\ -16{,}640 \text{ OF} \end{matrix}$$

$$\sigma_\theta = \frac{-2772}{.312} \pm \frac{6(81)}{.312^2} = \begin{matrix} -3890 \text{ IF} \\ -13{,}880 \text{ OF} \end{matrix}$$

YIELD:

A

IF $\sigma_\phi = +7900$, $\sigma_\theta = -10{,}900$

OF $\sigma_\phi = -7900$, $\sigma_\theta = -15{,}700$

B

IF $\sigma_\phi = +20{,}100$, $\sigma_\theta = -4{,}710$

OF $\sigma_\phi = -20{,}100$, $\sigma_\theta = -16{,}800$

MEMBRANE:

$\sigma_\phi = 7530$

$\sigma_\theta = 18{,}130$

5863800 STRUCTURE ASSY

PART 3

SA08 PROGRAM

A

$$\sigma_\phi = \frac{0'}{.562'} \pm \frac{6'(17)'}{.562^2'} = \begin{matrix} +320' \\ -320' \end{matrix}$$

$$\sigma_\theta = \frac{75'}{.562'} \pm \frac{6'(5)'}{.562^2'} = \begin{matrix} +230' \\ +40' \end{matrix}$$

B

$$\sigma_\phi = \frac{0'}{.562'} \pm \frac{6'(172)'}{.562^2'} = \begin{matrix} +3270' \\ -3270' \end{matrix}$$

$$\sigma_\theta = \frac{1255'}{.562'} \pm \frac{6'(52)'}{.562^2} = \begin{matrix} +3220' \\ +1250' \end{matrix}$$

YIELD:

A

IF $\sigma_\phi = +390'$, $\sigma_\theta = +280'$

OF $\sigma_\phi = -390'$, $\sigma_\theta = +50'$

B

IF $\sigma_\phi = +3960'$, $\sigma_\theta = +3900'$

OF $\sigma_\phi = -3960'$, $\sigma_\theta = +1510'$

MEMBRANE

$\sigma_\phi = 4,180'$

$\sigma_\theta = 10,100'$

SM 42569

5863800 STRUCTURE ASSY

PART 4

SA08 PROGRAM

A.

$$\sigma_\phi = \frac{0'}{.468'} \pm \frac{6'(81)'}{.468'^2} = \begin{matrix} +2220\ IF' \\ -2220\ OF' \end{matrix}$$

$$\sigma_\theta = \frac{-2586'}{.468'} \pm \frac{6'(25)'}{.468'^2} = \begin{matrix} -4,800\ IF' \\ -6,210\ OF' \end{matrix}$$

B

$$\sigma_\phi = \frac{0'}{.468'} \pm \frac{6'(145)'}{.468'^2} = \begin{matrix} +3970\ IF' \\ -3970\ OF' \end{matrix}$$

$$\sigma_\theta = \frac{4169'}{.468'} \pm \frac{6'(15)'}{.468'^2} = \begin{matrix} 9320\ IF' \\ 8500\ OF' \end{matrix}$$

YIELD:

$\sigma_\phi = +2660'$
$\sigma_\theta = -5810'$
$\sigma_\phi = -2660'$
$\sigma_\theta = -7510'$

$\sigma_\phi = +4800'$
$\sigma_\theta = +11,300'$
$\sigma_\phi = -4800'$
$\sigma_\theta = 10,300'$

MEMBRANE

$\sigma_\phi = 5,020'$
$\sigma_\theta = 12,100'$

5863800 STRUCTURE ASSY

PART 5

$X_4 = 104'$
$X_5 = -34'$
$X_{11} = 371'$
$X_{12} = 47'$

$B = .2194'$
$t = .312'$
$R = 110.$
$\mu = .3$

$\sigma_\theta = \pm \frac{2VBR}{t}$ $\quad \sigma_\phi' = \pm \frac{6M}{t^2}$

$\sigma_\theta = \pm \frac{2MB^2R}{t}$ $\quad \sigma_\theta' = \mu \sigma_\phi'$

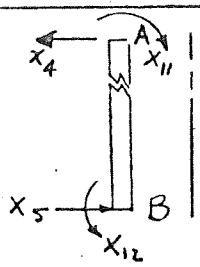

$$\sigma_{\theta_4} = \frac{2(.2194)(110)}{.312} X_4 = 155(104) = 16{,}100'$$

$$\sigma_{\theta_5} = -155(-34) = +5260'$$

$$\sigma_{\theta_{11}} = -\frac{2(.2194)^2(110)}{.312} X_{11} = -34(371) = -12{,}610'$$

$$\sigma_{\theta_{12}} = -34(47) = -1600'$$

$$\sigma_{\phi_{11}}' = \frac{6X_{11}}{.312^2} = 62(371) = 23{,}000'$$

$$\sigma_{\theta_{11}}' = .3(\sigma_{\phi_{11}}') = 6900'$$

$$\sigma_{\phi_{12}}' = 62(47) = 2900'$$

$$\sigma_{\theta_{12}}' = .3(2900) = 870'$$

$$\sigma_{\phi A} = \pm(-23{,}000) = \begin{matrix} -23{,}000' \text{ IF} \\ +23{,}000' \text{ OF} \end{matrix}$$

$$\sigma_{\theta A} = 16{,}100 - 12{,}600 \pm (-6{,}900) = \begin{matrix} -3400' \text{ IF} \\ +10{,}400' \text{ OF} \end{matrix}$$

$$\sigma_{\phi B} = \pm(-2900) = \begin{matrix} -2900' \text{ IF} \\ +2900' \text{ OF} \end{matrix}$$

$$\sigma_{\theta B} = 5260 - 1600 \pm (-870) = \begin{matrix} 2790' \\ +4530' \end{matrix}$$

MEMBRANE
σ_ϕ 4,800'
σ_θ 0'

YIELD:

A IF: $\sigma_\phi = -27{,}800'$, $\sigma_\theta = -4{,}110'$
A OF: $\sigma_\phi = 27{,}800'$, $\sigma_\theta = +12{,}600'$

B: $\sigma_\phi = -3510'$, $\sigma_\theta = +3380'$
B: $\sigma_\phi = +3510'$, $\sigma_\theta = +5{,}500'$

K+E ALBANENE 10BL 60250

34

5863800 STRUCTURE ASSY

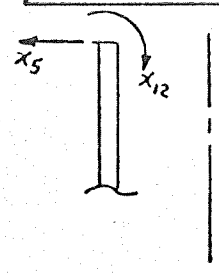

PART 6

$X_5 = -34'$ $\beta = .1582'$

$X_{12} = +47'$ $t = .60'$ $R = 110'$ $\mu = .3'$

$$\sigma_{\theta_5} = \frac{+2(.1582)(110)}{.60}(-34) = -1972$$

$$\sigma_{\theta_{12}} = \frac{-2(.1582)^2(110)}{.60}\,47 = -431$$

$$\sigma_{\phi_{12}}' = \frac{6(47)}{.60^2} = 783$$

$$\sigma_{\theta_{12}}' = .3(783) = 235$$

$\sigma_\phi = -783$ IF
$+783$ OF

$\sigma_\theta = -1972 - 431 \pm (-235) = -2638$ IF, -2168 OF

YIELD IF $\sigma_\phi = -950$
$\sigma_\theta = -3200$

OF $\sigma_\phi = +950$
$\sigma_\theta = -2620$

MEMBRANE

$\sigma_\phi = 2{,}500$
$\sigma_\theta = 0$

5863800 STRUCTURE ASSY

PART 7

SA08 PROGRAM

A

$$\sigma_\phi = \frac{0'}{.25'} \pm \frac{6'(-44')}{.25^2} = \begin{matrix} -4220' \\ +4220' \end{matrix}$$

$$\sigma_\theta = \frac{-1005'}{.25} \pm \frac{6'(-13')}{.25^2} = \begin{matrix} -5270' \\ -2770' \end{matrix}$$

B

$$\sigma_\phi = \frac{0'}{.25'} \pm \frac{6'(-29')}{.25^2} = \begin{matrix} -2780' \\ +2780' \end{matrix}$$

$$\sigma_\theta = \frac{-294'}{.25'} \pm \frac{6'(-9')}{.25^2} = \begin{matrix} -2040' \\ -310' \end{matrix}$$

YIELD

A

IF $\sigma_\phi = -5110'$, $\sigma_\theta = -6{,}400'$

OF $\sigma_\phi = +5110'$, $\sigma_\theta = -3350'$

B

IF $\sigma_\phi = -3360'$, $\sigma_\theta = -2470'$

OF $\sigma_\phi = +3360'$, $\sigma_\theta = -375'$

MEMBRANE:

$\sigma_\phi = 15{,}300'$

$\sigma_\theta = 22{,}600'$

5863800 STRUCTURE ASSY

PART 8

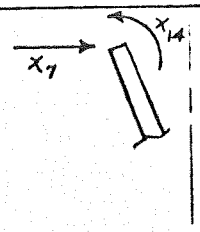

$X_7 = -13.4'$ $\quad B = 38.971'$ $\quad R = 109.656'$

$X_{14} = -28.9'$ $\quad t = .1193'$ $\quad K_1 = .999'$

$$\sigma_{\phi_7} = \frac{13.4'(.0137)}{.1193'} = 2''$$

$$\sigma_{\theta_7} = \frac{13.4'(2)(38.971)(.999)}{.1193'} = 8750'$$

$$\sigma_{\theta_{14}} = -\frac{28.9'(2)(38.971)^2}{.1193(109.656)(.999)} = -6720'$$

$$\sigma_{\phi'_{14}} = -\frac{6'(28.9)}{.1193^2} = -12,180'$$

$$\sigma_{\theta'_{14}} = .3(\sigma_{\phi'_{14}}) = -3,650$$

$$\sigma_\phi = 2' \pm (-12,180)' = \begin{matrix} -12,178' \text{ IF} \\ +12,182' \text{ OF} \end{matrix}$$

$$\sigma_\theta = 8750' - 6720' \pm (-3,650)' = \begin{matrix} -1,620' \text{ IF} \\ +5,680' \text{ OF} \end{matrix}$$

YIELD:

IF $\sigma_\phi = -14,740'$
IF $\sigma_\theta = -1,960'$
OF $\sigma_\phi = 14,740'$
OF $\sigma_\theta = 6,870'$

MEMBRANE

$\sigma_\phi = 32,200'$
$\sigma_\theta = 23,710'$

5863800 STRUCTURE ASSY

AFT DOME JOINT

DEFLECTIONS & ROTATIONS

S-I BURNOUT

$\delta_1^1 = -.163'$

$\delta_8^1 = -.009$

$\delta_1^2 = +.163'$

$\delta_2^2 = -.185'$

$\delta_8^2 = +.009$

$\delta_9^2 = -.020'$

$\delta_2^3 = +.204'$

$\delta_3^3 = -.212$

$\delta_9^3 = +.020$

$\delta_{10}^3 = -.021$

$\delta_3^4 = +.212'$

$\delta_4^4 = -.223'$

$\delta_6^4 = +.225'$

$\delta_{10}^4 = +.021'$

$\delta_{11}^4 = -.022'$

$\delta_{13}^4 = +.022'$

$\delta_9^5 = +.223'$

$\delta_5^5 = -.227$

$\delta_{11}^5 = +.022$

$\delta_{12}^5 = -.005'$

$\delta_5^6 = +.227'$

$\delta_{12}^6 = +.005'$

$\delta_6^7 = -.225'$

$\delta_7^7 = +.254'$

$\delta_{13}^7 = -.022'$

$\delta_{14}^7 = +.018'$

$\delta_7^8 = -.254'$

$\delta_{14}^8 = -.018'$

FORM 25-5.1 (REV. 6-55)

DOUGLAS AIRCRAFT COMPANY, INC.

PREPARED BY: G.R.H. | CHECKED BY: G.T.S. | DATE: 3/62 | SM DIVISION | PAGE: 8.2.24 | MODEL: DSV-4 | REPORT NO: SM 42566

TITLE: DSV-4 PROPELLANT TANK

586300 STRUCTURE ASSY

AFT SKIRT TO AFT LO_2 DOME JOINT
SI BURNOUT

PART			DISCONTINUITY (YIELD)	MEMBRANE (YIELD)	DISCONTINUITY + MEMBRANE	M.S.
1	INNER FIBER	σ_ϕ	44,350'	19,600'	63,950'	.01'
		σ_θ	-14,120'	47,100'	32,980'	
	OUTER FIBER	σ_ϕ	-44,350'	19,600'	-24,750'	.96'
		σ_θ	-40,700'	47,100'	6,400'	
2	A IF	σ_ϕ	7,900'	7,530'	15,430'	HIGH
		σ_θ	-10,900'	18,130'	7,230'	
	A OF	σ_θ	-7,900'	7,530'	-370'	HIGH
		σ_θ	-15,700'	18,130'	2,430'	
	B IF	σ_ϕ	20,100'	7,530'	27,630'	1.36'
		σ_θ	-4,710'	18,130'	13,420'	
	B OF	σ_ϕ	-20,100'	7,530'	-12,570'	HIGH
		σ_θ	-16,800'	18,130'	1,330'	
3	A	σ_ϕ	390'	4,180'	4,570'	↑
		σ_θ	280'	10,100'	10,380'	
	B	σ_ϕ	-390'	4,180'	3,790'	
		σ_θ	50'	10,100'	10,150'	
	C	σ_ϕ	3960'	4,180'	8,140'	
		σ_θ	3900'	10,100'	14,000'	
	D	σ_ϕ	-3960'	4,180'	220'	
		σ_θ	1510'	10,100'	11,610'	
4	IF	σ_ϕ	2660'	5,020'	7,680'	↓
		σ_θ	-5810'	12,100'	6,290'	
	OF	σ_ϕ	-2660'	5,020'	2,360'	HIGH
		σ_θ	-7510'	12,100'	4,590'	
	IF	σ_ϕ	4800'	5,020'	9,820'	1.80'
		σ_θ	11,300'	12,100'	23,400'	
	OF	σ_ϕ	-4800'	5,020'	220'	1.56'
		σ_θ	10,300'	12,100'	22,400'	
5	A	σ_ϕ	-27,800'	4,800'	-23,000'	1.59'
		σ_θ	-4,110'	0	-4,110'	
	B	σ_ϕ	27,800'	4,800'	32,600'	.93'
		σ_θ	12,600'	0	12,600'	
	C	σ_ϕ	-3,510'	4,800'	1,290'	HIGH
		σ_θ	3,380'	0'	3,380'	
	D	σ_ϕ	3,510'	4,800'	8,310'	HIGH
		σ_θ	5,500'	0'	5,500'	

K+E ALBANENE 100L TRACING PAPER 66664

FORM 25-8-1 (REV. 8-52)

PREPARED BY: GPU
CHECKED BY: G. J. S.
DATE: 2/1/62
TITLE: DSV-4 PROPELLANT TANK

DOUGLAS AIRCRAFT COMPANY, INC.

SM DIVISION

PAGE: 8.2.25
MODEL: DSV-4
REPORT NO SM 42569

SM 42569

5863800 STRUCTURE ASSY

PART			DISCONTINUITY (YIELD)	MEMBRANE (YIELD)	DISCONTINUITY + MEMBRANE	* M.S.
6	IF	σ_ϕ	-950'	2,500'	1,550'	HIGH
		σ_θ	-3200'	0'	-3,200'	
	OF	σ_ϕ	950'	2,500'	3,450'	HIGH
		σ_θ	-2620'	0'	-2,620'	
7 A	IF	σ_ϕ	-5110'	15,300	10,190'	HIGH
		σ_θ	-6400'	22,600	16,200'	
	OF	σ_ϕ	5110'	15,300	20,410'	1.90
		σ_θ	-3350'	22,600	19,250'	
7 B	IF	σ_ϕ	-3360'	15,300'	11,940'	HIGH
		σ_θ	-2470'	22,600'	20,130'	
	OF	σ_ϕ	3360'	15,300'	18,660'	1.78
		σ_θ	-375'	22,600'	22,225'	
8	IF	σ_ϕ	-14,740'	32,200'	17,460'	1.88
		σ_θ	-1,960'	23,710'	21,750'	
	OF	σ_ϕ	14,740'	32,200'	46,940'	.39
		σ_θ	6,870'	23,710'	30,580'	

* ALLOWABLES PG 2.3 TO 2.22

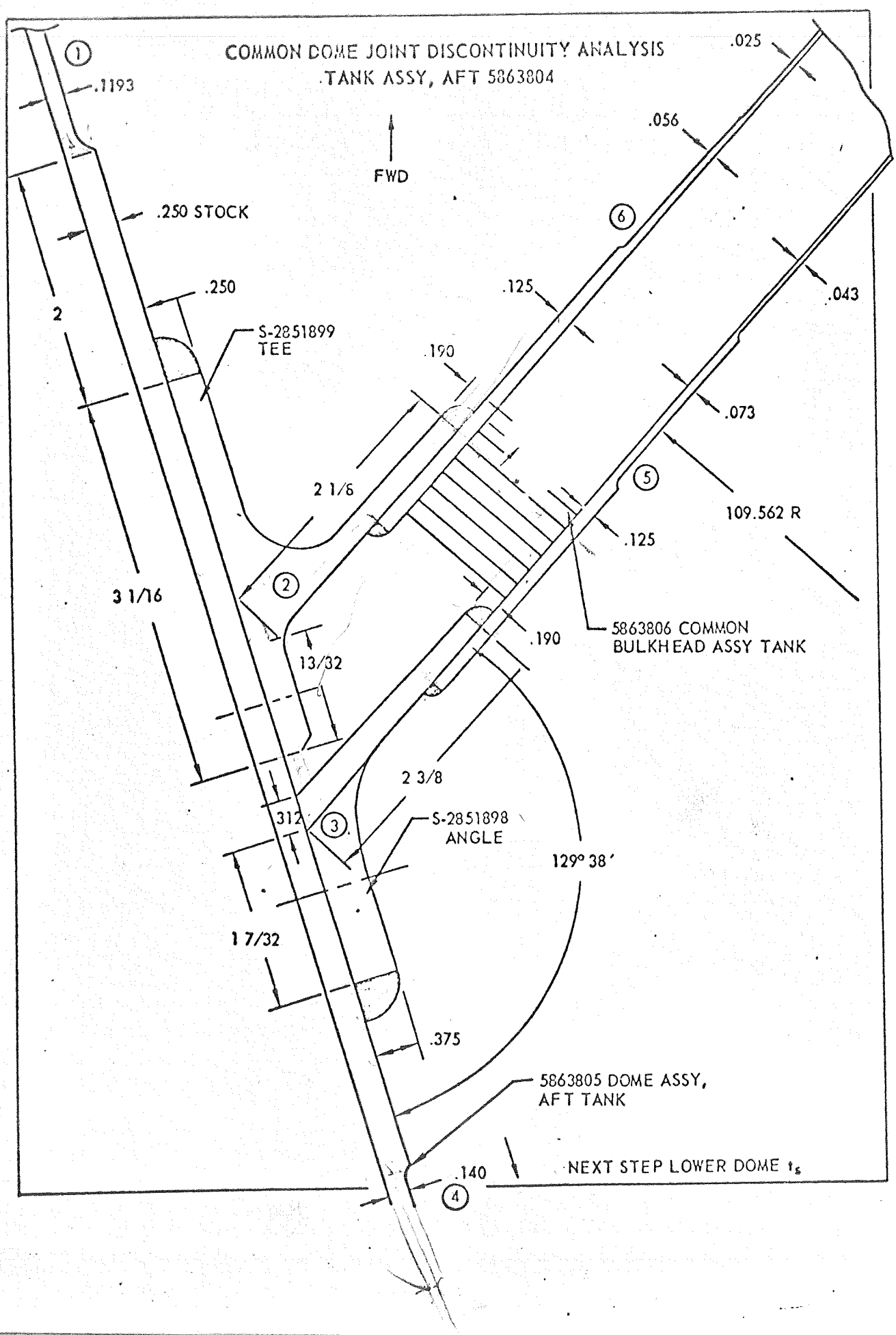
COMMON DOME JOINT DISCONTINUITY ANALYSIS
TANK ASSY, AFT 5863804
FWD
.1193
.250 STOCK
.250
2
S-2851899
TEE
3 1/16
2 1/8
13/32
312
1 7/32
2 3/8
S-2851898
ANGLE
.190
.125
.056
.025
.043
.073
109.562 R
.125
.190
5863806 COMMON
BULKHEAD ASSY TANK
129° 38′
.375
5863805 DOME ASSY,
AFT TANK
.140
NEXT STEP LOWER DOME t_s
1
2
3
4
5
6

SM 42569

COMMON DOME JOINT DISCONTINUITY ANALYSIS

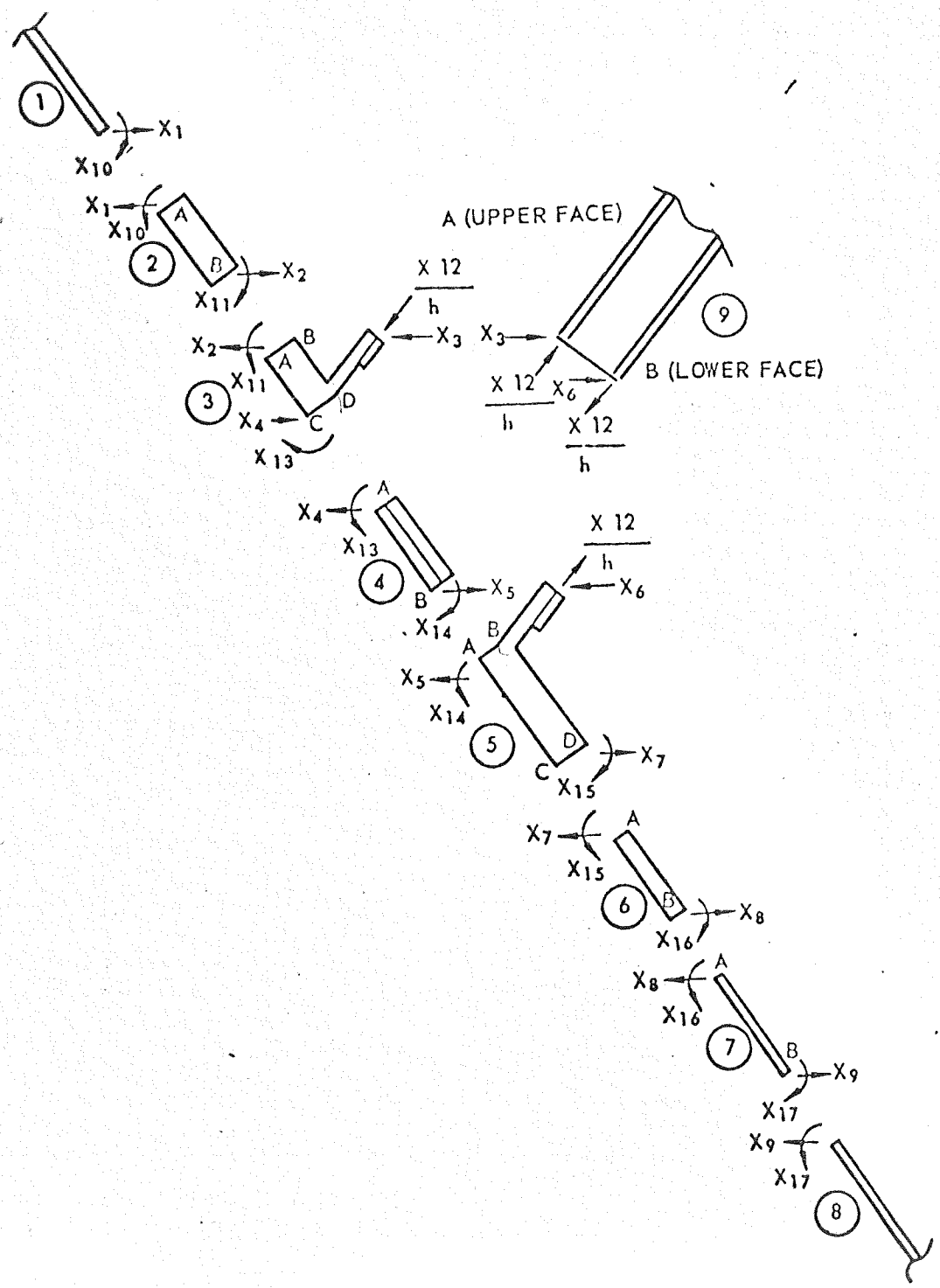

APPENDIX III
PG. III.6.1

LO_2 LOADED & PRESSURIZED
NO LH_2
(LIMIT PRESS. = 37 psid)

5563804 TANK ASSY, AFT

PART 1

$P = 0$ $\quad E = 10.9 \times 10^6$ $\quad r = 101.09$ $\quad \alpha = 66°51'$

$T = -85°F$ (REF 11) $\quad \alpha\Delta T = -190 \times 10^{-5}$ $\quad t = .1193$

$$\lambda_1 = \sqrt[4]{3(.91)\left(\frac{110}{.1193}\right)^2} = 39.028$$

$$K_1 = 1 + \frac{.4(.428)}{2(39.028)} = 1.002$$

$$K_2 = 1.002$$

$$\delta'_{1,1} = \frac{110(39.028)(.919)^2}{10.9 \times 10^6 (.1193)}\left(\frac{1}{1.002} + 1.002\right) = \delta'_{1,1} = .5577 \times 10^{-2}$$

$$\delta'_{1,10} = \frac{-2(39.028)^2(.919)}{10.9(.1193) \times 10^6 (1.002)} = \text{———} \quad \delta'_{1,10} = -.2149 \times 10^{-2}$$

$$\delta'_{1,T} = 0.19(101.09)\,10^{-2} = \text{———} \quad \delta'_{1,T} = +19.2071 \times 10^{-2}$$

$$\delta'_{1,P} = 0$$

$$\delta'_{10,1} = \delta'_{1,10} = \text{———} = \delta'_{10,1} = -.2149 \times 10^{-2}$$

$$\delta'_{10,10} = \frac{4(39.028)^3 \times 10^{-6}}{10.9(.1193)(110)(1.002)} = \text{———} \quad \delta'_{10,10} = +.1659 \times 10^{-2}$$

5863804 TANK ASSY, AFT

PART 2

$P_A = 0$ $\quad E = 11.1 \times 10^6$ PSI $\quad \alpha\Delta T = -.25 \times 10^{-2}$ $\quad r = 101.07$

$T = -150°F$ $\quad t = 0.25$ IN $\quad \nu = .3$ $\quad \alpha = 66° 45'$

$\delta^2_{1,1} = .7434 \times 10^{-2}$

$\delta^2_{1,2} = .3669 \times 10^{-2}$

$\delta^2_{1,10} = .6057 \times 10^{-2}$

$\delta^2_{1,11} = -.6016 \times 10^{-2}$

$\delta^2_{1,T} = +(-25 \times 10^{-4})(101.07) = -25.2675 \times 10^{-2}$

$\delta^2_{2,1} = .3698 \times 10^{-2}$

$\delta^2_{2,2} = .7365 \times 10^{-2}$

$\delta^2_{2,10} = .6030 \times 10^{-2}$

$\delta^2_{2,11} = -.6029 \times 10^{-2}$

$\delta^2_{2,T} = -\delta^2_{1,T} = +25.2675 \times 10^{-2}$

$\delta^2_{10,1} = .6057 \times 10^{-2}$

$\delta^2_{10,2} = .5984 \times 10^{-2}$

$\delta^2_{10,10} = .6608 \times 10^{-2}$

$\delta^2_{10,11} = -.6522 \times 10^{-2}$

$\delta^2_{11,1} = -.6063 \times 10^{-2}$

$\delta^2_{11,2} = -.6029 \times 10^{-2}$

$\delta^2_{11,10} = -.6573 \times 10^{-2}$

$\delta^2_{11,11} = .6613 \times 10^{-2}$

5863804 TANK ASSY, AFT

PART 3

$E = 11.3'(10^6)$ $\quad \alpha\Delta T = -.32(10^{-2})'$ $\quad X_{m_3} = 882'$

$T = -220'$ $\quad r = 99.53'$ $\quad \phi = 25.2'$

$A = 1.701'$ $\quad I = .535'$

$$\frac{r^2}{EAh} = \frac{.0515'}{h}10^{-2} = .0497' \times 10^{-2}$$

$$\frac{r^2}{EIh} = \frac{.1639'}{h}10^{-2} = .1582' \times 10^{-2}$$

$$\delta^3_{2,2} = \left[.0515' + .89'^2(.1639')\right]10^{-2} = .1813' \times 10^{-2}$$

$$\delta^3_{2,3} = \left[.0515' + .89'(.96')\ .1639'\right]10^{-2} = .1915' \times 10^{-2}$$

$$\delta^3_{2,4} = \left[-.0515' + .89'(1.08')(.1639')\right]10^{-2} = +.1060' \times 10^{-2}$$

$$\delta^3_{2,11} = .89'(.1639')10^{-2} = .1459' \times 10^{-2}$$

$$\delta^3_{2,12} = \left[2'(.426')(.0497') - .89'(.1582')(1.22')\right]10^{-2} = -.1294' \times 10^{-2}$$

$$\delta^3_{2,13} = -\delta^3_{2,11} = -.1459' \times 10^{-2}$$

$$\delta^3_{2,T} = -.32'(99.53')10^{-2} = -31.8496' \times 10^{-2}$$

$$\delta^3_{2,m} = -882'(.0515')10^{-2} = -45.4230' \times 10^{-2}$$

$$\delta^3_{3,2} = \delta^3_{2,3} = .1813' \times 10^{-2}$$

$$\delta^3_{3,3} = \left[.0515' + (.96')^2 .1639'\right]10^{-2} = .2026' \times 10^{-2}$$

$$\delta^3_{3,4} = \left[-.0515' + 1.08'(.96').1639'\right]10^{-2} = +.1184' \times 10^{-2}$$

$$\delta^3_{3,11} = .96'(.1639')10^{-2} = .1573' \times 10^{-2}$$

$$\delta^3_{3,12} = \left[2'(.426')(.0497') - .96'(.1582')(1.22')\right]10^{-2} = -.1429' \times 10^{-2}$$

5863804 TANK ASSY, AFT

$$\delta^3_{3,13} = -\delta^3_{3,11}{}' = -.1573 \times 10^{-2}$$

$$\delta^3_{3,T} = \delta^3_{2,T}{}' = -31.8496 \times 10^{-2}$$

$$\delta^3_{3,m} = \delta^3_{2,m}{}' = -45.4230 \times 10^{-2}$$

$$\delta^3_{4,2} = \delta^3_{2,4}{}' = +.1060 \times 10^{-2}$$

$$\delta^3_{4,3} = \delta^3_{3,4}{}' = +.1184 \times 10^{-2}$$

$$\delta^3_{4,4} = \left[.0515 + 1.08^2(.1639)\right] 10^{-2} = .2427 \times 10^{-2}$$

$$\delta^3_{4,11} = 1.08(.1639)\, 10^{-2} = .1770 \times 10^{-2}$$

$$\delta^3_{4,12} = \left[-2(.426)(.0497) - 1.08(.1582)(1.22)\right] 10^{-2} = -.2508 \times 10^{-2}$$

$$\delta^3_{4,13} = -\delta^3_{4,11}{}' = -.1770 \times 10^{-2}$$

$$\delta^3_{4,T} = -\delta^3_{3,T}{}' = +31.8496 \times 10^{-2}$$

$$\delta^3_{4,m} = -\delta^3_{3,m}{}' = +45.4230 \times 10^{-2}$$

$$\delta^3_{11,2} = \delta^3_{2,11}{}' = .1459 \times 10^{-2}$$

$$\delta^3_{11,3} = \delta^3_{3,11}{}' = .1573 \times 10^{-2}$$

$$\delta^3_{11,4} = \delta^3_{4,11}{}' = .1770 \times 10^{-2}$$

$$\delta^3_{11,11} = .1639 \times 10^{-2}$$

$$\delta^3_{11,12} = -.1582(1.22)\, 10^{-2} = -.1930 \times 10^{-2}$$

$$\delta^3_{11,13} = -.1639 \times 10^{-2}$$

5863804 TANK ASSY, AFT

$$\delta^3_{12,2} = \delta_{2,12} = -.1294 \times 10^{-2}$$

$$\delta_{12,3} = \delta_{3,12} = -.1429 \times 10^{-2}$$

$$\delta_{12,4} = \delta_{4,12} = -.2508 \times 10^{-2}$$

$$\delta_{12,11} = \delta_{11,12} = -.1930 \times 10^{-2}$$

$$\delta_{12,12} = \left[2(.426)^2(.0497) + (1.22)^2(.1582)\right] 10^{-2} = .2535 \times 10^{-2}$$

$$\delta_{12,13} = 1.22(.1582)10^{-2} = .1930 \times 10^{-2}$$

$$\delta_{12,T} = -.32(99.53)(.426)10^{-2} = -13.5679 \times 10^{-2}$$

$$\delta_{12,m} = -2(88.2)(.0497)(.426)10^{-2} = -37.3478 \times 10^{-2}$$

$$\delta^3_{13,2} = \delta_{2,13} = -.1459 \times 10^{-2}$$

$$\delta_{13,3} = \delta_{3,13} = -.1573 \times 10^{-2}$$

$$\delta_{13,4} = \delta_{4,13} = -.1770 \times 10^{-2}$$

$$\delta_{13,11} = \delta_{11,13} = -.1639 \times 10^{-2}$$

$$\delta_{13,12} = \delta_{12,13} = +.1930 \times 10^{-2}$$

$$\delta_{13,13} = .1639 \times 10^{-2}$$

5863804 TANK ASSY, AFT

PART 4

$P = 0'$ $E = 11.4(10^6)'$ $\gamma = .3'$ $r = 99.528'$
$T = -250'$ $\alpha\Delta T = -.34(10^{-2})'$ $\alpha = 25.2°'$

SAOB PROGRAM

$$t_e = \left[t_1^3 + t_2^3\right]^{\frac{1}{3}} = \left[2(.25)^3\right]^{\frac{1}{3}} = .315'$$

$\delta^4_{4,4} = .7872 \times 10^{-2}{}'$

$\delta_{4,5} = .3863 \times 10^{-2}{}'$

$\delta_{4,13} = .9404 \times 10^{-2}{}'$

$\delta_{4,14} = -.9374 \times 10^{-2}{}'$

$\delta_{4,T} = -.34(99.528)10^{-2} = -33.8395' \times 10^{-2}$

$\delta^4_{5,4} = .3886 \times 10^{-2}{}'$

$\delta_{5,5} = .7816 \times 10^{-2}{}'$

$\delta_{5,13} = .9391 \times 10^{-2}{}'$

$\delta_{5,14} = -.9370 \times 10^{-2}{}'$

$\delta_{5,T} = -\delta_{4,T} = +33.8395' \times 10^{-2}$

$\delta^4_{13,4} = .9404 \times 10^{-2}{}'$

$\delta_{13,5} = .9336 \times 10^{-2}{}'$

$\delta_{13,13} = 1.5042 \times 10^{-2}{}'$

$\delta_{13,14} = -1.4981 \times 10^{-2}{}'$

$\delta^4_{14,4} = -.9430 \times 10^{-2}{}'$

$\delta_{14,5} = -.9370 \times 10^{-2}{}'$

$\delta_{14,13} = -1.5070 \times 10^{-2}{}'$

$\delta_{14,14} = +1.5051 \times 10^{-2}{}'$

5863804 TANK ASSY, AFT

PART 5

$T = -289'$ $\quad E = 11.58(10^6)'$ $\quad \alpha\Delta T = -.37(10^{-2})'$ $\quad X_{m_5} = 789''$

$A = 1.523'$ $\quad r = 99.10'$ $\quad \phi = 25.2'$

$I = 1.186'$

$$\frac{r^2}{AEh} = \frac{.0557'}{h}10^{-2} = .0538'\times10^{-2}$$

$$\frac{r^2}{IEh} = \frac{.0715'}{h}10^{-2} = .069'\times10^{-2}$$

$$\delta^5_{5,5} = \left[.0557' + .07^2(.0715')\right]10^{-2} = +.0561'\times10^{-2}$$

$$\delta^5_{5,6} = \left[.0557' - .07'(1.81')(.0715')\right]10^{-2} = +.0466'\times10^{-2}$$

$$\delta^5_{5,7} = \left[-.0557' - .07'(1.36')(.0715')\right]10^{-2} = -.0625'\times10^{-2}$$

$$\delta_{5,12} = \left[-2'(426')(.0538') + .07'(-.53')(.069')\right]10^{-2} = -.0484'\times10^{-2}$$

$$\delta_{5,14} = -.07'(.0715')10^{-2} = -.0050'\times10^{-2}$$

$$\delta_{5,15} = -\delta_{5,14} = +.0050'\times10^{-2}$$

$$\delta_{5,T} = -.37'(99.1')10^{-2} = -36.6670'\times10^{-2}$$

$$\delta_{5,m} = -789'(.0557')10^{-2} = -43.9473'\times10^{-2}$$

$$\delta_{6,5} = \delta_{5,6} = .0466'\times10^{-2}$$

$$\delta_{6,6} = \left[.0557' + 1.81^2(.0715')\right]10^{-2} = .2899'\times10^{-2}$$

$$\delta_{6,7} = \left[-.0557' + 1.36'(1.81')(.0715')\right]10^{-2} = +.1203'\times10^{-2}$$

5863804 TANK ASSY, AFT

$$\delta^5_{6,12} = \left[-2(.426).0538 + 1.81(.069)(.53)\right]10^{-2} = +.0204 \times 10^{-2}$$

$$\delta_{6,14} = 1.81(.0715)10^{-2} = .1294 \times 10^{-2}$$

$$\delta_{6,15} = -\delta_{6,14} = -.1294 \times 10^{-2}$$

$$\delta_{6,T} = \delta_{5,T} = -36.6670 \times 10^{-2}$$

$$\delta_{6,m} = \delta_{5,m} = -43.9473 \times 10^{-2}$$

$$\delta^5_{7,5} = \delta_{5,7} = -.0625 \times 10^{-2}$$

$$\delta_{7,6} = \delta_{6,7} = +.1203 \times 10^{-2}$$

$$\delta_{7,7} = \left[.0557 + 1.36^2(.0715)\right]10^{-2} = .1879 \times 10^{-2}$$

$$\delta_{7,12} = \left[2(.426)(.0538) + 1.36(.069)(.53)\right] = +.0955 \times 10^{-2}$$

$$\delta_{7,14} = 1.36(.0715)10^{-2} = .0972 \times 10^{-2}$$

$$\delta_{7,15} = -\delta_{7,14} = -.0972 \times 10^{-2}$$

$$\delta_{7,T} = -\delta_{6,T} = +36.6670 \times 10^{-2}$$

$$\delta_{7,m} = -\delta_{6,m} = +43.9473 \times 10^{-2}$$

$$\delta^5_{12,5} = \delta_{5,12} = -.0484 \times 10^{-2}$$

$$\delta_{12,6} = \delta_{6,12} = +.0204 \times 10^{-2}$$

$$\delta_{12,7} = \delta_{7,12} = +.0955 \times 10^{-2}$$

$$\delta_{12,12} = \left[2(.426)^2(.0538) + .53^2(.069)\right]10^{-2} = +.0389 \times 10^{-2}$$

5863804 TANK ASSY, AFT

$\delta^5_{12,14} = .53(.069)\,10^{-2} = +.0366 \times 10^{-2}$

$\delta_{12,15} = -\delta_{12,14} = -.0366 \times 10^{-2}$

$\delta_{12,T} = .37(99.1)(.426)10^{-2} = +15.6201 \times 10^{-2}$

$\delta_{12,m} = 2(.0538)(.426)(789) = 36.1659 \times 10^{-2}$

$\delta^5_{14,5} = \delta_{5,14} = -.0050 \times 10^{-2}$

$\delta_{14,6} = \delta_{6,14} = .1294 \times 10^{-2}$

$\delta_{14,7} = \delta_{7,14} = .0972 \times 10^{-2}$

$\delta_{14,12} = \delta_{12,14} = +.0366 \times 10^{-2}$

$\delta_{14,14} = .0715(10^{-2})$

$\delta_{14,15} = -.0715(10^{-2})$

$\delta^5_{15,5} = \delta_{5,15} = +.0050 \times 10^{-2}$

$\delta_{15,6} = \delta_{6,15} = -.1294 \times 10^{-2}$

$\delta_{15,7} = \delta_{7,15} = -.0972 \times 10^{-2}$

$\delta_{15,12} = \delta_{12,15} = -.0366 \times 10^{-2}$

$\delta_{15,14} = \delta_{14,15} = -.0715 \times 10^{-2}$

$\delta_{15,15} = .0715 \times 10^{-2}$

5863804 TANK ASSY, AFT

PART 6

$P = 37.0$ PSI $\quad E = 11.58 \times 10^6$ PSI $\quad r = 97.1058 \quad \phi = 28.02°$

$T = -289°F \quad t = .25$ IN $\quad \alpha \Delta T = -37(10^{-4}) \quad \nu = .3$

$$\delta^6_{7,7} = .3058 \times 10^{-2}$$

$$\delta^6_{7,8} = .1497 \times 10^{-2}$$

$$\delta^6_{7,15} = .1219 \times 10^{-2}$$

$$\delta^6_{7,16} = -.1123 \times 10^{-2}$$

$$\delta^6_{7,T} = -37(10^{-4})(97.1058) = -35.929 \times 10^{-2}$$

$$\delta^6_{7,P} = \frac{37.0(110)(.7)(97.106)}{2(11.58)(10^6)(.25)} = +4.7772 \times 10^{-2}$$

$$\delta^6_{8,7} = .1478 \times 10^{-2}$$

$$\delta^6_{8,8} = .2382 \times 10^{-2}$$

$$\delta^6_{8,15} = .1130 \times 10^{-2}$$

$$\delta^6_{8,16} = -.1203 \times 10^{-2}$$

$$\delta^6_{8,T} = -\delta^6_{7,T} = +35.929 \times 10^{-2}$$

$$\delta^6_{8,P} = -\delta^6_{7,P} = -4.7772 \times 10^{-2}$$

$$\delta^6_{15,7} = .1219 \times 10^{-2}$$

$$\delta^6_{15,8} = .1106 \times 10^{-2}$$

$$\delta^6_{15,15} = .0697 \times 10^{-2}$$

$$\delta^6_{15,16} = -.0560 \times 10^{-2}$$

$$\delta^6_{16,7} = -.1147 \times 10^{-2}$$

$$\delta^6_{16,8} = -.1203 \times 10^{-2}$$

$$\delta^6_{16,15} = -.0572 \times 10^{-2}$$

$$\delta^6_{16,16} = .0697 \times 10^{-2}$$

5863804 TANK ASSY, AFT

PART 7

$P = 37.0$ psi $\quad E = 11.58 \times 10^6$ psi $\quad \alpha\Delta T = -37(10^{-9})$ $\quad \alpha = 29.55°$

$T = -289°F$ $\quad t = .140$ in $\quad r = 95.692$ in $\quad \nu = .3$

$\delta^7_{8,8} = 1.5092 \times 10^{-2}$

$\delta^7_{8,9} = .7450 \times 10^{-2}$

$\delta^7_{8,16} = +1.7317 \times 10^{-2}$

$\delta^7_{8,17} = -1.7201 \times 10^{-2}$

$\delta^7_{8,T} = -37(10^{-9})(95.692) = -35.4060 \times 10^{-2}$

$$\delta^7_{8,P} = \frac{(37.0)(110)(95.692)(.7)}{2(11.58)(10^6)(.140)} = 8.4082 \times 10^{-2}$$

$\delta^7_{9,8} = .7508 \times 10^{-2}$

$\delta^7_{9,9} = 1.4952 \times 10^{-2}$

$\delta^7_{9,16} = 1.7241 \times 10^{-2}$

$\delta^7_{9,17} = -1.7237 \times 10^{-2}$

$\delta^7_{9,T} = -\delta^7_{8,T} = +35.4060 \times 10^{-2}$

$\delta^7_{9,P} = -\delta^7_{8,P} = -8.4082 \times 10^{-2}$

$\delta^7_{16,8} = 1.7317 \times 10^{-2}$

$\delta^7_{16,9} = 1.7108 \times 10^{-2}$

$\delta^7_{16,16} = 2.6608 \times 10^{-2}$

$\delta^7_{16,17} = -2.6258 \times 10^{-2}$

$\delta^7_{16,T} = \delta^7_{16,P} = 0$

$\delta^7_{17,8} = -1.7325 \times 10^{-2}$

$\delta^7_{17,9} = -1.7237 \times 10^{-2}$

$\delta^7_{17,16} = -2.6462 \times 10^{-2}$

$\delta^7_{17,17} = 2.6629 \times 10^{-2}$

$\delta^7_{17,T} = \delta^7_{17,P} = 0$

5863804 TANK ASSY, AFT

PART 8

$P = 37.0\ psi$ $\quad E = 11.58 \times 10^6\ PSI$ $\quad \alpha\Delta T = -37(10^{-4})$ $\quad \alpha = 59°\ 42''$

$T = -253°F$ $\quad t = .078\ IN$ $\quad r = 94.974\ IN$ $\quad \tau = .3$

$$\lambda_B = \sqrt[4]{3(.91)\left(\frac{110}{.078}\right)^2} = 48.27$$

$$K_1 = K_2 = 1 - \left(\frac{1-.6}{2(48.27)}\right)(.584) = .998$$

$$\delta^B_{9,9} = \frac{110(48.27)(.863)^2(2)}{11.58(10^6)(.078)} = \qquad \delta^B_{9,9} = .8757 \times 10^{-2}$$

$$\delta^B_{9,17} = \frac{2(48.27)^2(.863)}{.903(10^6)(.998)} = \qquad \delta^B_{9,17} = .4462 \times 10^{-2}$$

$$\delta^B_{9,T} = -37(10^{-4})(94.974) = \qquad \delta^B_{9,T} = -35.1404 \times 10^{-4}$$

$$\delta^B_{9,P} = \frac{37.0(110)^2(.7)(.863)}{2(11.58)(10^6)(.078)} = \qquad \delta^B_{9,P} = 14.9681 \times 10^{-2}$$

$$\delta^B_{17,9} = \delta^B_{9,17} = \qquad \delta^B_{17,9} = .4462 \times 10^{-2}$$

$$\delta^B_{17,17} = \frac{4(48.27)^3}{.9011 \times 10^6(110)} = \qquad \delta^B_{17,17} = .4533 \times 10^{-2}$$

$$\delta^B_{17,T} = \delta^B_{18,P} = 0$$

5863804 TANK ASSY, AFT

PART 9

$P_A = 0'$ $\quad t_A = .025'$ $\quad T_A = -140'°F$ $\quad \alpha\Delta T_A = -.24'(10^{-2})$

$P_B = 37'$ $\quad t_B = .047'$ $\quad T_B = -289'°F'$ $\quad \alpha\Delta T_B = -.37'(10^{-2})'$

$\alpha = 25°\,12''$ $\quad r = 99.55'$ $\quad h = 1.036'$ $\quad E_A = 11.05'(10^6)$

$R = 110'$ $\quad E_B = 11.58'(10^6)$

$E_C = .1'(10^6)$

$$P = \frac{[-.24' + .37']\,10^{-2}}{38.5'\left[\frac{1}{.025'(11.05)'} + \frac{1}{.047'(11.58)'}\right]10^{-6} + \frac{1.036'}{.1'(110)'}10^{-6}} = 6.1846'$$

$$N_{12} = 6.1846'(55') = 340.153'$$

$$M_\phi = -'340.153'(1.036') = -352.4'$$

$$E_F = \frac{[.025'(11.05') + .047'(11.58')]\,10^6}{.025' + .047'} = 11.40'(10^6)$$

$$t_e = \left[\frac{3'(.025')(.047')(1.072' + 1)^2}{.025' + .047'}\right]^{\frac{1}{3}} = .594'$$

$$B = \left[\frac{3'(.91')(110')^2}{(.594')^2}\right]^{\frac{1}{4}} = 17.488'$$

$$K_1 = K_2 = 1' - \frac{.4'(.47)'}{2(17.488)'} = .995'$$

$l = .676'$; $h - l = .36'$

5863804 TANK ASSY, AFT

$$\delta^9_{3,3} = \frac{17.488(110)(.9048)^2(2)}{11.40(10^6)(.594)} = \qquad \delta^9_{3,3} = .0465 \times 10^{-2}$$

$$\delta^9_{3,6} = \delta^9_{3,3} = \qquad \delta^9_{3,6} = .0465 \times 10^{-2}$$

$$\delta^9_{3,12} = -\frac{2(17.488)^2(.9048)10^{-6}}{11.40(.995)(.594)} + \frac{.676(.426)4(17.488)^3}{11.4(.995)(110)(.594)}10^{-6} = \qquad \delta^9_{3,12} = -.0074 \times 10^{-2}$$

$$\delta^9_{3,T} = \frac{-99.55\left[-.24(10^{-8})(.025) + (-.37)(10^{-7})(.047)\right]}{.072} = \qquad \delta^9_{3,T} = +32.3399 \times 10^{-2}$$

$$\delta^9_{3,P} = \frac{-37(110)^2(.7)(.9048)}{2(11.4)(10^6)(.072)} = \qquad \delta^9_{3,P} = -17.2731 \times 10^{-2}$$

$$\delta^9_{6,3} = \delta^9_{3,6} = \qquad \delta^9_{6,3} = .0465 \times 10^{-2}$$

$$\delta^9_{6,6} = \delta^9_{3,3} = \qquad \delta^9_{6,6} = .0465 \times 10^{-2}$$

$$\delta^9_{6,12} = -\frac{2(17.488)^2(.9048)10^{-6}}{11.4(.995)(.594)} - \frac{.36(.426)(4)(17.488)^3}{11.4(.995)(110)(.594)}10^{-6} = \qquad \delta^9_{6,12} = -.0087 \times 10^{-2}$$

$$\delta^9_{6,T} = \delta^9_{3,T} = \qquad \delta^9_{6,T} = +32.3399 \times 10^{-2}$$

$$\delta^9_{6,P} = \delta^9_{3,P} = \qquad \delta^9_{6,P} = -17.2731 \times 10^{-2}$$

$$\delta^9_{12,3} = \delta^9_{3,12} = \qquad \delta^9_{12,3} = -.0074 \times 10^{-2}$$

$$\delta^9_{12,6} = \delta^9_{6,12} = \qquad \delta^9_{12,6} = -.0087 \times 10^{-2}$$

$$\delta^9_{12,12} = \frac{4(17.488)^3(10^{-6})}{11.4(.995)(110)(.594)} = \qquad \delta^9_{12,12} = .0029 \times 10^{-2}$$

$$\delta^9_{12,T} = -\frac{352.4(4)(17.488)^3(10^{-6})}{11.4(.995)(110)(.594)} = \qquad \delta^9_{12,T} = -1.0203 \times 10^{-2}$$

5863804 TANK ASSY, AFT

PART 1

$X_1 = 71.6'$ $\alpha = 66°51'$ $B = 39.028'$

$X_{10} = 74'$ $K_1 = K_2 = 1.002'$ $R = 110'$

$t = .1193$

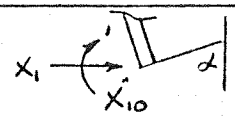

$$\sigma_{\phi_1} = -\frac{X\cos\phi}{t} = -\frac{71.6(.393)}{.1193} = -235$$

$$\sigma_{\theta_1} = -\frac{X}{t}\left(\frac{1}{K_1} + \frac{K_1+K_2}{2}\right)B\sin\phi = -\frac{71.6(2)(39.028)(.9195)}{.1193} = -43,100$$

$$\sigma_{\theta_{10}} = \frac{2X_{10}B^2}{tRK} = \frac{2(74)(39.028)^2}{.1193(110)(1.002)} = 17,144$$

$$\sigma_{\phi_{10}} = -\frac{6X_{10}}{t^2} = -\frac{6(74)}{.1193^2} = -31,200$$

$$\sigma_{\theta_{10}} = \mu\,\sigma_{\phi_{10}} = .3(-31,200) = -9,360$$

$$\sigma_\phi = -235 \pm 31,200 = \begin{matrix} 31,000 \text{ INNER FIBER} \\ -31,435 \text{ OUTER FIBER} \end{matrix}$$

$$\sigma_\theta = -43,100 + 17,144 \pm 9,360 = \begin{matrix} -17,040 \text{ IF} \\ -35,800 \text{ OF} \end{matrix}$$

YIELD:

IF $\sigma_\phi = 37,500$, $\sigma_\theta = -20,600$

OF $\sigma_\phi = -38,000$, $\sigma_\theta = -43,300$

MEMBRANE $\sigma_\phi = \frac{196}{.1193}$

$\sigma_\phi = 1600$

$\sigma_\theta = -1600$

DIS + MEM

$\sigma_\phi = 39,100$

$\sigma_\theta = -22,200$

$\sigma_\phi = -36,400$

$\sigma_\theta = -44,900$

$$M.S. = \frac{F_{ty}}{\sqrt{\frac{(\sigma_\phi - \sigma_\theta)^2 + \sigma_\phi^2 + \sigma_\theta^2}{2}}} - 1$$

PART 2

5863804 TANK ASSY, AFT

$t = .25'$

SA08 PROGRAM

$$\sigma_\phi = \frac{N_\phi}{t} \pm \frac{6M_\phi}{t^2} \qquad \sigma_\theta = \frac{N_\theta}{t} \pm \frac{6M_\theta}{t^2}$$

A

$$\sigma_\phi = \frac{72}{.25} \pm \frac{6(304)}{.25^2} = \begin{matrix} +30{,}300' \text{ IF} \\ -29{,}700' \text{ OF} \end{matrix}$$

$$\sigma_\theta = \frac{-6018}{.25} \pm \frac{6(92)}{.25^2} = \begin{matrix} -15{,}300' \text{ IF} \\ -32{,}900' \text{ OF} \end{matrix}$$

$$\sigma_\phi = 4(28) \pm 96(74) = \begin{matrix} +7{,}210 \text{ IF} \\ -6{,}990' \text{ OF} \end{matrix}$$

$$\sigma_\theta = 4(-4882) \pm 96(24) = \begin{matrix} -17{,}200' \text{ IF} \\ -21{,}800' \text{ OF} \end{matrix}$$

YIELD

A

IF $\sigma_\phi = 36{,}660'$, $\sigma_\theta = -18{,}500'$

OF $\sigma_\phi = -35{,}940'$, $\sigma_\theta = -39{,}800'$

B

IF $\sigma_\phi = 8700'$, $\sigma_\theta = -20{,}800'$

OF $\sigma_\phi = -8{,}500'$, $\sigma_\theta = -26{,}400'$

MEMBRANE

$\sigma_\phi = 780'$

$\sigma_\theta = -780'$

PART 3

5863804 TANK ASSY, AFT

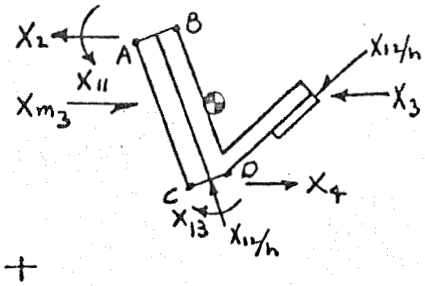

$X_2 = 182'$
$X_3 = 201'$
$X_4 = -491'$
$X_{11} = 304'$
$X_{12} = -374'$
$X_{13} = 563'$
$X_{m_3} = 882'$
$E = 11.3 \times 10^6$
$h = 1.036$

$$\frac{r^2}{EI} = .1639(10^{-2})$$

$$\frac{r^2}{EA} = .0515(10^{-2})$$

$$\theta = \frac{\Sigma M_{CG}\, r^2}{EI}$$

$$\delta = \frac{\Sigma F_H\, r^2}{EA}$$

$$\Sigma M_{CG} = -X_2(.89) - X_3(.96) - X_4(1.08) - X_{11} + \frac{X_{12}}{h}(.72) + \frac{X_{12}}{h}(.50) + X_{13}$$

$$= -182(.89) - 201(.96) + 491(1.08) - 304 - 361(1.22) + 563 = -6.08$$

$$\Sigma F_H = -X_2 - X_3 + X_4 - 2\frac{X_{12}}{h}(.4258) + X_{m_3}$$

$$= -182 - 201 - 491 + 2(361)(.4258) + 882 = 315$$

$$\theta = -6.08(.1639)10^{-2} = .9965(10^{-2})\ \text{RAD} = 34'$$

$$\delta = 315(.0515)10^{-2} = .1622 \rightarrow$$

DISPLACEMENT:
$A = 1.373[\sin(52°22' + 34') - \sin 52°22'] = .00824 \leftarrow$
$B = 1.180[\sin 26°58' - \sin(26°58' - 34')] = .01042 \leftarrow$
$C = 1.232[\sin 24°6' - \sin(24°6' - 34')] = .01115 \leftarrow$
$D = .920[\sin(3°7' + 34') - \sin 3°7'] = .00908 \leftarrow$

TOTAL δ:
$A = .1622 - .00824 = .15396'$ $\quad \epsilon = .00155'$ $\quad \sigma_\theta = 17{,}515$ C
$B = .1622 - .01042 = .15178'$ $\quad \epsilon = .00152'$ $\quad \sigma_\theta = 17{,}176$ C
$C = .1622 + .01115 = .17335'$ $\quad \epsilon = .00174'$ $\quad \sigma_\theta = 19{,}662$ C
$D = .1622 + .00908 = .17128'$ $\quad \epsilon = .00172'$ $\quad \sigma_\theta = 19{,}436$ C

$$\sigma\phi_A = \frac{-6(304)}{.25} = -7{,}300\ C \qquad \sigma\phi_B = +7{,}300\ T$$

$$\sigma\phi_C = \frac{-6(563)}{.25} + \frac{361}{.5} = -12{,}790\ C$$

$$\sigma\phi_D = \frac{+6(563)}{.25} + \frac{361}{.5} = 14{,}234\ T$$

5863804 TANK ASSY, AFT

YIELD

A $\sigma_\phi = -8,800''$
$\sigma_\theta = -21,200'$

B $\sigma_\phi = +8,800'$
$\sigma_\theta = -20,800'$

C $\sigma_\phi = -15,500'$
$\sigma_\theta = -23,900'$

D $\sigma_\phi = +17,200'$
$\sigma_\theta = -23,520'$

MEMBRANE

$\sigma_{\phi_{A,B}} = 400'$

$\sigma_{\theta_{A,B}} = 0'$

$\sigma_{\phi_{C,D}} = 2,900'$

$\sigma_{\theta_{C,D}} = 0'$

5863804 TANK ASSY, AFT

SA08 PROGRAM

PART 4

$$t = \left[.25^3 + .25^3\right]^{\frac{1}{3}} = .315''$$

$$\sigma_\phi = \frac{-177}{.315} \pm \frac{6(-3.6)}{.315^2} = \begin{matrix} -790' \text{ IF} \\ -350' \text{ OF} \end{matrix}$$

$$\sigma_\theta = \frac{-5707}{.315} \pm \frac{6(-1.15)}{.315^2} = \begin{matrix} -18{,}370' \text{ IF} \\ -18{,}230' \text{ OF} \end{matrix}$$

$$\sigma_\phi = 3.2(-209) \pm 60.5(563) = \begin{matrix} 33{,}370' \\ -34{,}710' \end{matrix}$$

$$\sigma_\theta = 3.2(-5541) \pm 60.5(170) = \begin{matrix} -7{,}400' \\ -28{,}000' \end{matrix}$$

YIELD

A IF $\sigma_\phi = -960'$, $\sigma_\theta = -22{,}200'$

A OF $\sigma_\phi = -420'$, $\sigma_\theta = -22{,}100'$

B IF $\sigma_\phi = 40{,}400'$, $\sigma_\theta = -8950'$

B OF $\sigma_\phi = -42{,}000'$, $\sigma_\theta = -33{,}900'$

MEMBRANE $\sigma_\phi = 4600'$, $\sigma_\theta = 0$

5863804 TANK ASSY, AFT

PART 5

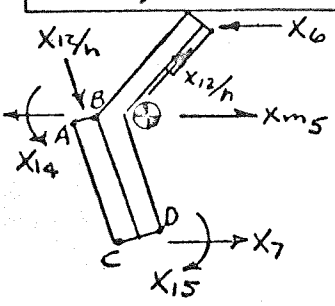

$X_5 = -416'$

$X_6 = 471'$

$X_7 = -201'$

$X_{12} = -374'$

$X_{14} = -4'$

$X_{15} = 415'$

$X_{m_5} = 789'$

$h = 1.036'$

$E = 11.58 \times 10^6$

$$\theta = \frac{\Sigma M_{CG}\, r^2}{EI} = \Sigma M_{CG}\,(.0715)(10^{-2})$$

$$\delta = \frac{\Sigma F_H\, r^2}{EI} = \Sigma F_H\,(.0557)10^{-2}$$

$$\Sigma M_{CG} = X_5(.07) - X_6(1.81) - X_7(1.36) - \frac{X_{12}}{h}(.67 - .14) - X_{14} + X_{15}$$

$$= -416(.07) - 471(1.81) + 201(1.36) + 361(.53) + 4 + 415 = +2.06$$

$$\Sigma F_H = -X_5 - X_6 + X_7 + \frac{X_{12}}{h}(2)(.426) + X_{m_5}$$

$$= 416 - 471 - 201 - 361(2)(.426) + 789 = +225$$

$$\theta = 2.06(.0715)10^{-2} = .00147 \text{ RAD} < 1 \quad \therefore \theta \cong 0$$

$$\delta = 225(.0557)10^{-2} = .125$$

TOTAL DEFLECTION $= .125$, $\epsilon = .00126$, $\sigma_{\theta_{A,B,C,D}} = -14{,}590$ °C

$$\sigma_{\phi_A} = \frac{6(4)}{.125^2} + \frac{361}{.125} = 1828$$

$$\sigma_{\phi_B} = -\frac{6(4)}{.125^2} + \frac{361}{.125} = 1060$$

$$\sigma_{\phi_C} = \frac{-6(415)}{.625^2} = -\sigma_{\phi_D} = -6374$$

YIELD:

A $\sigma_\phi = +2{,}210$, $\sigma_\theta = -17{,}650$

B $\sigma_\phi = +1{,}280$, $\sigma_\theta = -17{,}650$

C $\sigma_\phi = -7{,}710$, $\sigma_\theta = -17{,}650$

D $\sigma_\phi = +7{,}710$, $\sigma_\theta = -17{,}650$

MEMBRANE: $\sigma_{\phi_{A,B}} = 2{,}300$

$\sigma_{\theta_{A,B}} = 0$

$\sigma_{\phi_{C,D}} = 4100$

$\sigma_{\theta_{C,D}} = 0$

K+E ALBANENE 196L TRACING PAPER 69259

5863804 TANK ASSY, AFT

PART 6

SA08 PROGRAM

$t = .25'$

A

$$\sigma_\phi = \frac{-14}{.25} \pm \frac{6(25)}{.25^2} = \begin{matrix} 2345' \text{ IF} \\ -2455' \text{ OF} \end{matrix}$$

$$\sigma_\theta = 4(-1697) \pm 96(4) = \begin{matrix} -6420' \\ -7,180' \end{matrix}$$

B

$$\sigma_\phi = 4(-94) \pm 96(415) = \begin{matrix} 39,420' \\ -40,180' \end{matrix}$$

$$\sigma_\theta = 4(-5280) \pm 96(124) = \begin{matrix} -9,220' \\ -33,020' \end{matrix}$$

YIELD

A

IF $\sigma_\phi = 2840'$, $\sigma_\theta = -7,800'$

OF $\sigma_\phi = -3,000'$, $\sigma_\theta = -8,700'$

B

IF $\sigma_\phi = 47,700'$, $\sigma_\theta = -11,150'$

OF $\sigma_\phi = -48,600'$, $\sigma_\theta = -39,950'$

MEMBRANE

$\sigma_\phi = 10,300'$

$\sigma_\theta = 9400'$

K·E ALBANENE 100L TRACING PAPER 69809

5863804 TANK ASSY, AFT

PART 7

$t = .14'$

SA08 PROGRAM

$$\sigma_\phi = \frac{-5.7}{.14} \pm \frac{6(.2)}{.14^2} = \begin{matrix} +20 \text{ IF} \\ -100 \text{ OF} \end{matrix}$$

$$\sigma_\theta = 7(-568) \pm 306(-.65) = \begin{matrix} -4200 \\ -3800 \end{matrix}$$

$$\sigma_\phi = 7(-14) \pm 306(25) = \begin{matrix} 7500 \\ -7700 \end{matrix}$$

$$\sigma_\theta = 7(-1654) \pm 306(7) = \begin{matrix} -9500 \\ -13{,}700 \end{matrix}$$

YIELD

A
IF $\sigma_\phi = 25$, $\sigma_\theta = -5{,}100$
OF $\sigma_\phi = -120$, $\sigma_\theta = -4{,}600$

B
IF $\sigma_\phi = 9{,}100$, $\sigma_\theta = -11{,}500$
OF $\sigma_\phi = -9{,}300$, $\sigma_\theta = -16{,}600$

MEMBRANE $\sigma_\phi = 18{,}400$, $\sigma_\theta = 16{,}800$

5863804 TANK ASSY, AFT

PART 8

$X_9 = -12'$ $\alpha = 59°42''$ $B = 48.27'$

$X_{17} = .18'$ $K_1 = K_2 = .998'$ $R = 110'$

$t = .078''$

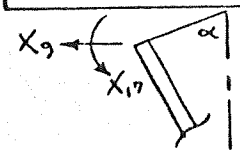

$$\sigma_{\phi_9} = -\frac{12'(.5045)'}{.078'} = -75'$$

$$\sigma_{\theta_9} = -\frac{12'(2)(48.27)'(.863)'}{.078'} = -12{,}800'$$

$$\sigma_{\theta_{17}} = \frac{.18'(2)(48.27)'^2}{.078'(110)(.998)'} = +100'$$

$$\sigma_{\phi'_{17}} = -\frac{6'(.18)'}{.078^2} = -175'$$

$$\sigma_{\theta'_{17}} = -53'$$

$$\sigma_\phi = -75' \pm 175' = \begin{matrix} 100' \\ -250' \end{matrix}$$

$$\sigma_\theta = -12{,}800' + 100' \pm 53' = \begin{matrix} -12{,}650' \\ -12{,}750' \end{matrix}$$

YIELD:

$\sigma_\phi = +120'$

$\sigma_\theta = -15{,}310'$

$\sigma_\phi = -300'$

$\sigma_\theta = -15{,}430'$

MEMBRANE $\sigma_\phi = 33{,}000'$

$\sigma_\theta = 30{,}200'$

5863604 TANK ASSY, AFT

PART 9

$X_3 = 201'$ $\quad t_A = .025'$ $\quad T_A = -140'$

$X_6 = 471'$ $\quad t_B = .047'$ $\quad T_B = -289'$

$X_{12} = -374'$ $\quad \phi = 64°48''$ $\quad E_F = 11.4 \times 10^6$

$h = 1.036$ $\quad r = 99.55'$

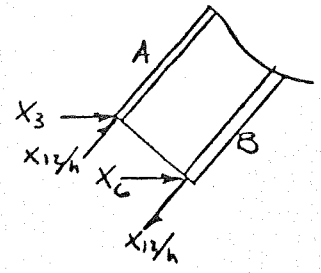

$$\sigma_{\phi A} = \frac{-\frac{X_{12}}{h} - X_3 \cos\phi}{t} = \frac{361' - 201'(.4258)}{.025'} = 11{,}020'$$

$$\sigma_{\phi B} = \frac{\frac{X_{12}}{h} - X_6 \cos\phi}{t} = \frac{-361' - 471'(.4258)}{.047'} = -11{,}950'$$

$$\delta^{9}_{3,3} + \delta^{9}_{6,6} = .0465'(10^{-2})(X_3' + X_6') = .3125'$$

$$\sigma_\theta = \epsilon E_F = \frac{\delta}{r} E_F = \frac{.3125'}{99.55'}(11.4 \times 10^6) = -35{,}790\ C$$

YIELD

A $\sigma_\phi = 13{,}330'$, $\sigma_\theta = -43{,}310'$

B $\sigma_\phi = -14{,}460'$, $\sigma_\theta = -43{,}310'$

MEMBRANE

A $\sigma_\phi = 3300'$, $\sigma_\theta = 3300'$

B $\sigma_\phi = \sigma_\theta = 50{,}600'$

5863804 TANK ASSY, AFT

DEFLECTIONS & ROTATIONS

LO_2 LOADED & PRESSURIZED

NO LH_2 (LIMIT PRESS. = 37 psid)

$\delta_1^1 = .432'$

$\delta_{10}^1 = -.031'$

$\delta_1^2 = -.432'$

$\delta_2^2 = .473'$

$\delta_{10}^2 = .030'$

$\delta_{11}^2 = -.009'$

$\delta_2^3 = -.473'$

$\delta_3^3 = -.490'$

$\delta_4^3 = .491'$

$\delta_{11}^3 = .009'$

$\delta_{12}^3 = -.248'$

$\delta_{13}^3 = -.009'$

$\delta_4^4 = -.491'$

$\delta_5^4 = .493'$

$\delta_{13}^4 = .009'$

$\delta_{14}^4 = .002'$

$\delta_5^5 = -.493'$

$\delta_6^5 = -.495'$

$\delta_7^5 = .490'$

$\delta_{12}^5 = .324'$

$\delta_{14}^5 = -.002'$

$\delta_{15}^5 = .002'$

$\delta_7^6 = -.490'$

$\delta_8^6 = .367'$

$\delta_{15}^6 = -.002'$

$\delta_{16}^6 = .045'$

$\delta_8^7 = -.367'$

$\delta_9^7 = .303'$

$\delta_{16}^7 = -.045'$

$\delta_{17}^7 = .051'$

$\delta_9^8 = -.303'$

$\delta_{17}^8 = -.051'$

$\delta_3^9 = .490'$

$\delta_6^9 = .495'$

$\delta_{12}^9 = -.077'$

FORM 29.8-1 (REV. 6-55)

REV. 3/25/64

DOUGLAS AIRCRAFT COMPANY, INC.

PREPARED BY: GPM
CHECKED BY: G.J.S.
DATE: 2/62
TITLE: DSV-4 PROPELLANT TANK

SM DIVISION

PAGE: 2.3.27
MODEL: DSV-4
REPORT NO: SM 42560

SM 42560

5863804 TANK ASSY, AFT

COMMON DOME JOINT

LO_2 LOADED & PRESSURIZED

NO LH_2 (LIMIT PRESS. = 37 psid)

PART			DISCONTINUITY (YIELD)	MEMBRANE (YIELD)	DISCONTINUITY + MEMBRANE	* M.S.
1	IF	σ_ϕ	37,500'	1600'	39,100'	.13'
		σ_θ	-20,600'	-1600'	-22,200'	
	OF	σ_ϕ	-38,000'	1600'	-36,400'	.46'
		σ_θ	-43,300'	-1600'	-44,900'	
2	A IF	σ_ϕ	36,660'	780'	37,440'	.23'
		σ_θ	-18,500'	-780'	-19,280'	
	A OF	σ_ϕ	-35,940'	780'	-35,160'	.61'
		σ_θ	-39,800'	-780'	-40,580'	
	B IF	σ_ϕ	8,700'	780'	9,480'	1.23'
		σ_θ	-20,800'	-780'	-21,580'	
	B OF	σ_ϕ	-8,500'	780'	-7,720'	1.54'
		σ_θ	-26,400'	-780'	-27,180'	
3	A	σ_ϕ	-8,800'	400'	-8,400'	1.41'
		σ_θ	-21,200'	0'	-21,200'	
	B	σ_ϕ	8,800'	400'	9,200'	.68'
		σ_θ	-20,800'	0'	-20,800'	
	C	σ_ϕ	-15,500'	2,900'	-12,600'	HIGH
		σ_θ	-23,900'	0'	-23,900'	
	D	σ_ϕ	17,200'	2,900'	20,100'	.67'
		σ_θ	-23,520'	0'	-23,520	
4	IF	σ_ϕ	-960'	4,600'	3,640'	1.64'
		σ_θ	-22,200'	0'	-22,200'	
	OF	σ_ϕ	-420'	4,600'	4,180'	1.62'
		σ_θ	-22,100'	0'	-22,100'	
	IF	σ_ϕ	40,400'	4,600'	45,000'	.28'
		σ_θ	-8,950'	0'	-8,950'	
	OF	σ_ϕ	-42,000'	4,600'	-37,400'	.79'
		σ_θ	-33,900'	0'	-33,900'	
5	A	σ_ϕ	2,210'	2,300'	4,510'	HIGH
		σ_θ	-17,650'	0'	-17,650'	
	B	σ_ϕ	1,280'	2,300'	3,580'	HIGH
		σ_θ	-17,650'	0'	-17,650'	

* ALLOWABLES PG 2.3 TO 2.22

K+E ALBANENE 195L TRACING PAPER 69250

FORM 88-8-1 (REV. 6-58)

PREPARED BY: GRH
CHECKED BY: G. J. S.
DATE: 3/62
TITLE: DSV-4 PROPELLANT TANK

DOUGLAS AIRCRAFT COMPANY, INC.

SM DIVISION

PAGE: 8.3.28
MODEL: DSV-4
REPORT NO: SM 42528

5863604 TANK ASSY, AFT

PART			DISCONTINUITY (YIELD)	MEMBRANE	DISCONTINUITY + MEMBRANE	M.S.
5	C	σ_ϕ	-7,710'	4,100'	-3,610'	HIGH
		σ_θ	-17,650'	0'	-17,650'	
	D	σ_ϕ	7,710'	4,100'	11,810'	1.57'
		σ_θ	-17,650'	0'	-17,650'	
6	IF	σ_ϕ	2,840'	10,300	13,140'	HIGH
		σ_θ	-7,800'	9,400	1,600'	
	OF	σ_ϕ	-3,000'	10,300	7,300'	HIGH
		σ_θ	-8,700'	9,400	700'	
	IF	σ_ϕ	47,700'	10,300'	58,000'	.12'
		σ_θ	-11,150'	9,400'	-1,750'	
	OF	σ_ϕ	-48,600'	10,300'	-38,300'	.88'
		σ_θ	-39,950'	9,400'	-30,550'	
7	IF	σ_ϕ	25'	18,400	18,425'	HIGH
		σ_θ	-5,100'	16,800	11,700'	
	OF	σ_ϕ	-120'	18,400	18,280'	HIGH
		σ_θ	-4,600'	16,800	12,200'	
	IF	σ_ϕ	9,100'	18,400'	27,500'	1.61'
		σ_θ	-11,500'	16,800'	5,300'	
	OF	σ_ϕ	-9,300'	18,400'	9,100'	HIGH
		σ_θ	-16,600'	16,800'	200'	
8	IF	σ_ϕ	120'	33,000'	33,120'	1.30'
		σ_θ	-15,310'	30,200'	14,890'	
	OF	σ_ϕ	-300'	33,000'	32,700'	1.33'
		σ_θ	-15,430'	30,200'	14,770'	
9	A	σ_ϕ	13,330'	3,300	16,630'	.21'
		σ_θ	-43,310'	3,300'	-40,010'	
	B	σ_ϕ	-14,460'	50,600'	36,140'	.99'
		σ_θ	-43,310'	50,600'	7,290'	

S.H. 42528

K+E ALBANENE 106L (R) TRACING PAPER 69270

58638C4 TANK ASSY, AFT

DEFLECTIONS & ROTATIONS *

LH_2 LOADED & PRESSURIZED

$NO\ LO_2$ (LIMIT PRESS. = 23 psid)

$\delta_1^1 = .092'$

$\delta_{10}^1 = .008'$

$\delta_1^2 = -.092'$

$\delta_2^2 = .080'$

$\delta_{10}^2 = -.008'$

$\delta_{11}^2 = .004'$

$\delta_2^3 = -.080'$

$\delta_3^3 = -.080'$

$\delta_4^3 = .072'$

$\delta_{11}^3 = -.004'$

$\delta_{12}^3 = .006'$

$\delta_{13}^3 = .004'$

$\delta_4^4 = -.072'$

$\delta_5^4 = .070'$

$\delta_{13}^4 = -.004'$

$\delta_{14}^4 = .003'$

$\delta_5^5 = -.070'$

$\delta_6^5 = -.075'$

$\delta_7^5 = .067'$

$\delta_{12}^5 = -.075'$

$\delta_{14}^5 = -.003'$

$\delta_{15}^5 = .003'$

$\delta_7^6 = -.067'$

$\delta_8^6 = .073'$

$\delta_{15}^6 = -.003'$

$\delta_{16}^6 = -.0003'$

$\delta_8^7 = -.073'$

$\delta_9^7 = .066'$

$\delta_{16}^7 = .0003'$

$\delta_{17}^7 = .009'$

$\delta_9^8 = -.066'$

$\delta_{17}^8 = -.009'$

$\delta_3^9 = .080'$

$\delta_6^9 = .075'$

$\delta_{12}^9 = .069'$

* ANALYSIS METHOD SAME AS PGS. 8.3.2 THRU 8.3.25

FORM 55-6-1 (REV. 6-55)

REV. 3/25/64

PREPARED BY: GRN
CHECKED BY: G.J.S.
DATE: 2/62
TITLE: DSV-4 PROPELLANT TANK

DOUGLAS AIRCRAFT COMPANY, INC.

SM DIVISION

PAGE: 8.3.30
MODEL: DSV-4
REPORT NO: SM 42569

SM 42569

COMMON DOME - LH_2 LOADED & PRESSURIZED. (LIMIT PRESS. = 23 psid) NO LO_2

5863804 TANK ASSY, AFT

PART			DISCONTINUITY (YIELD)	MEMBRANE (YIELD)	DISCONTINUITY + MEMBRANE	M.S.
1	IF	σ_ϕ	-4,120'	13,300'	9,180'	HIGH
		σ_θ	3,920'	13,300'	17,220'	
	OF	σ_ϕ	4,695'	13,300'	17,990'	
		σ_θ	6,700'	13,300'	20,000'	
2 A	IF	σ_ϕ	-7,500'	6,350'	-1,150'	
		σ_θ	8,050'		14,400'	
	OF	σ_ϕ	7,315'		13,665'	
		σ_θ	12,550'		18,900'	
2 B	IF	σ_ϕ	-1,080'		5,270'	
		σ_θ	8,240'		14,590'	
	OF	σ_ϕ	1,040'		7,390'	
		σ_θ	8,980'	6,350'	15,330'	HIGH
3	A	σ_ϕ	1,860'	3,180'	5,040'	1.81'
		σ_θ	24,000'	—	24,000'	
	B	σ_ϕ	-1,860'	3,180'	1,320	1.64'
		σ_θ	23,900'	—	23,900'	
	C	σ_ϕ	7,330'	1,510'	8,840'	1.74'
		σ_θ	25,500'	—	25,500	
	D	σ_ϕ	-9,400'	1,510'	-7,890'	1.05'
		σ_θ	25,330'	—	25,330'	
4 A	IF	σ_ϕ	15,600'	2,400	18,000'	1.98'
		σ_θ	22,160'	—	22,160'	
	OF	σ_ϕ	-14,410'	2,400	-12,010'	1.77'
		σ_θ	13,250'	—	13,250'	
4 B	IF	σ_ϕ	-20,460'	2,400'	-18,060'	1.42'
		σ_θ	10,540'	—	10,540'	
	OF	σ_ϕ	21,840'	2,400'	24,240'	1.55'
		σ_θ	23,340'	—	23,340'	
5	A	σ_ϕ	-25,950'	3,020'	-22,930'	1.05'
		σ_θ	+10,330'	—	10,330'	
	B	σ_ϕ	21,750'	3,020	24,770'	1.81'
		σ_θ	+10,300'	—	10,330'	
	C	σ_ϕ	10,630'	36'	10,666'	HIGH
		σ_θ	+10,720'	—	10,720	
	D	σ_ϕ	-10,630'	36	-10,594'	HIGH
		σ_θ	+10,640'	—	10,640'	

K+E ALBANENE 100L TRACING PAPER

FORM 25-6-1 (REV. 6-59)

PREPARED BY: GRH
CHECKED BY: G.J.S.
DATE: 2/62
TITLE: DSV-4 PROPELLANT TANK

DOUGLAS AIRCRAFT COMPANY, INC.

SM DIVISION

PAGE: 8.3.31
MODEL: DSV-4
REPORT NO SM 42569

5863804 TANK ASSY, AFT

PART			DISCONTINUITY (YIELD)	MEMBRANE (YIELD)	DISCONTINUITY + MEMBRANE	M.S.
6	A	IF σ_ϕ	2,620'	40'	2,660'	HIGH
		σ_θ	8,690'	-40'	8,650'	
		OF σ_ϕ	-2,650'	40'	-2,610'	
		σ_θ	7,110'	-40'	7,070'	
	B	IF σ_ϕ	-10,500'	40'	-10,460'	
		σ_θ	5,280'	-40'	5,240'	
		OF σ_ϕ	10,780'	40'	10,820'	
		σ_θ	11,700'	-40'	11,660'	
7	A	IF σ_ϕ	3,610'	65'	3,675'	
		σ_θ	3,650'	-65'	3,585'	
		OF σ_ϕ	-3,715'	65'	-3,650'	
		σ_θ	1,510'	-65'	1,445'	
	B	IF σ_ϕ	8,370'	65'	8,435'	
		σ_θ	4,350'	-65'	4,285'	
		OF σ_ϕ	-8,440'	65'	8,375'	
		σ_θ	-680'	-65'	-745'	
8		IF σ_ϕ	11,850'	115'	11,965'	
		σ_θ	-5,350'	-115'	-5,465'	
		OF σ_ϕ	-12,040'	115'	-11,925'	HIGH
		σ_θ	-12,510'	-115'	-12,625'	
9	A	σ_ϕ	-18,060'	8,170'	-9,890'	.71'
		σ_θ	29,210'	8,170'	37,380'	
	B	σ_ϕ	14,580'	-38,030'	-23,450'	1.92'
		σ_θ	29,210'	-38,030'	-8,820'	

SM 42569

K-E ALBANENE 100L TRACING PAPER

5863804 TANK ASSY, AFT

DEFLECTIONS & ROTATIONS

S-I BURNOUT *

$\delta_1^1 = .387'$

$\delta_{10}^1 = -.010'$

$\delta_1^2 = -.387'$

$\delta_2^2 = .395'$

$\delta_{10}^2 = .010'$

$\delta_{11}^2 = .003'$

$\delta_2^3 = -.395'$

$\delta_3^3 = -.395'$

$\delta_4^3 = .388'$

$\delta_{11}^3 = -.003'$

$\delta_{12}^3 = -.165'$

$\delta_{13}^3 = .003'$

$\delta_4^4 = -.388'$

$\delta_5^4 = .380'$

$\delta_{13}^4 = -.003'$

$\delta_{14}^4 = .009$

$\delta_5^5 = -.380'$

$\delta_6^5 = -.396'$

$\delta_7^5 = .368'$

$\delta_{12}^5 = .177'$

$\delta_{14}^5 = -.009'$

$\delta_{15}^5 = +.009'$

$\delta_7^6 = -.368'$

$\delta_8^6 = .270'$

$\delta_{15}^6 = -.009'$

$\delta_{16}^6 = .035'$

$\delta_8^7 = -.270'$

$\delta_9^7 = .216'$

$\delta_{16}^7 = -.035'$

$\delta_{17}^7 = .045'$

$\delta_9^8 = -.216'$

$\delta_{17}^8 = -.045'$

$\delta_3^9 = .395'$

$\delta_6^9 = .396'$

$\delta_{12}^9 = -.012'$

* AS DEFINED ON PAGE 5.5

ANALYSIS METHOD SAME AS PGS. 8.3.2 THRU 8.3.25

FORM 38-8-1 (REV. 6-55)

PREPARED BY: GRH
CHECKED BY: G.J.S.
DATE: 2/62

DOUGLAS AIRCRAFT COMPANY, INC.

SM DIVISION

PAGE: 8.3.33
MODEL: DSV-4
REPORT NO: SM 42506

TITLE: DSV-4 PROPELLANT TANK

COMMON DOME S.I BURN OUT

5863804 TANK ASSY, AFT

PART			DISCONTINUITY (YIELD)	MEMBRANE (YIELD)	DISCONTINUITY + MEMBRANE	M.S.
1	IF	σ_ϕ	26,100'	35,600'	61,700'	.06
		σ_θ	-8,990'	12,800'	3,810'	
	OF	σ_ϕ	-26,440'	35,600'	9,160'	HIGH
		σ_θ	-24,750'	12,800'	-11,950'	
2 A	IF	σ_ϕ	21,220'	16,980'	38,200'	.65
		σ_θ	-7,500'	6,110'	-1,390'	
	OF	σ_ϕ	-20,850'	16,980'	-3,870'	HIGH
		σ_θ	-20,100'	6,110'	-13,990'	
2 B	IF	σ_ϕ	6,080'	16,980'	23,060'	1.50
		σ_θ	-10,670'	6,110'	-4,560'	
	OF	σ_ϕ	-5,910'	16,980'	11,070'	HIGH
		σ_θ	-14,400'	6,110'	-8,290'	
3	A	σ_ϕ	-5,260'	8,490'	3,230'	↑
		σ_θ	-3,740'	—	-3,740'	
	B	σ_ϕ	5,260'	8,490'	13,750'	
		σ_θ	-3,850'	—	-3,850'	
	C	σ_ϕ	-6,160'	9,180'	3,020'	
		σ_θ	-2,690'	—	-2,690'	
	D	σ_ϕ	6,560'	9,180	15,740'	
		σ_θ	-2,800'	—	-2,800'	
4 A	IF	σ_ϕ	3,100'	14,600'	17,700'	↓
		σ_θ	-5,000'	—	-5,000'	
	OF	σ_ϕ	-3,520'	14,600'	11,080'	HIGH
		σ_θ	-6,830'	—	-6,830'	
4 B	IF	σ_ϕ	15,780'	14,600'	30,380'	1.03
		σ_θ	-2,140'	—	-2,140'	
	OF	σ_ϕ	-16,270'	14,600'	-1,670'	HIGH
		σ_θ	-11,700'	—	-11,700'	
5	A	σ_ϕ	-4,870'	18,400'	13,530'	HIGH
		σ_θ	-1,780'	—	-1,780'	
	B	σ_ϕ	5,630'	18,400'	24,030'	1.64
		σ_θ	-1,910'	—	-1,910'	
	C	σ_ϕ	-3,850'	7,840'	3,990'	HIGH
		σ_θ	-240'	—	-240'	
	D	σ_ϕ	3,850'	7,840'	11,690'	HIGH
		σ_θ	-555'	—	-555'	

K·E ALBANENE 186L TRACING PAPER 80200

FORM 20-8-1 (REV. 8-59)

PREPARED BY: GRH
CHECKED BY: G.J.S.
DATE: 2/62
TITLE: DSV-4 PROPELLANT TANK

DOUGLAS AIRCRAFT COMPANY, INC.

SM DIVISION

PAGE: 8.3.34
MODEL: DSV-4
REPORT NO: SM 42564

5863804 TANK ASSY, AFT

PART			DISCONTINUITY (YIELD)	MEMBRANE (YIELD)	DISCONTINUITY + MEMBRANE	M.S.
6	A	IF σ_ϕ	3,660'	19,600'	23,260'	HIGH
		IF σ_θ	2,150'	13,500'	15,650'	
		OF σ_ϕ	-3,770'	19,600'	15,830'	HIGH
		OF σ_θ	520'	13,500'	14,020'	
	B	IF σ_ϕ	23,840'	19,600'	43,440'	.64'
		IF σ_θ	-5,740'	13,500'	7,760'	
		OF σ_ϕ	-24,250'	19,600'	-4,650'	HIGH'
		OF σ_θ	-20,000'	13,500'	-6,500'	
7	A	IF σ_ϕ	2,340'	35,000'	37,340'	1.01'
		IF σ_θ	24'	24,200'	24,224'	
		OF σ_ϕ	-2,480'	35,000'	32,520'	1.27'
		OF σ_θ	-953'	24,200'	23,247'	
	B	IF σ_ϕ	11,750'	35,000'	46,750'	.62'
		IF σ_θ	-5,100'	24,200'	19,100'	
		OF σ_ϕ	-11,960'	35,000'	23,040'	HIGH
		OF σ_θ	-11,850'	24,200'	12,350'	
8		IF σ_ϕ	7,625'	62,800'	70,425'	.08'
		IF σ_θ	-14,980'	43,400'	28,420'	
		OF σ_ϕ	-7,890'	62,800'	54,910'	.38'
		OF σ_θ	-19,630'	43,400'	23,770'	
9	A	σ_ϕ	3,510'	34,680	38,190'	1.22'
		σ_θ	-11,760'	34,680	22,920'	
	B	σ_ϕ	-3,870'	21,900'	18,030'	HIGH
		σ_θ	-11,760'	21,900	10,140'	

K+E ALBANENE 195L TRACING PAPER

SM 42569

THRUST STRUCTURE – AFT DOME JOINT
DISCONTINUITY ANALYSIS

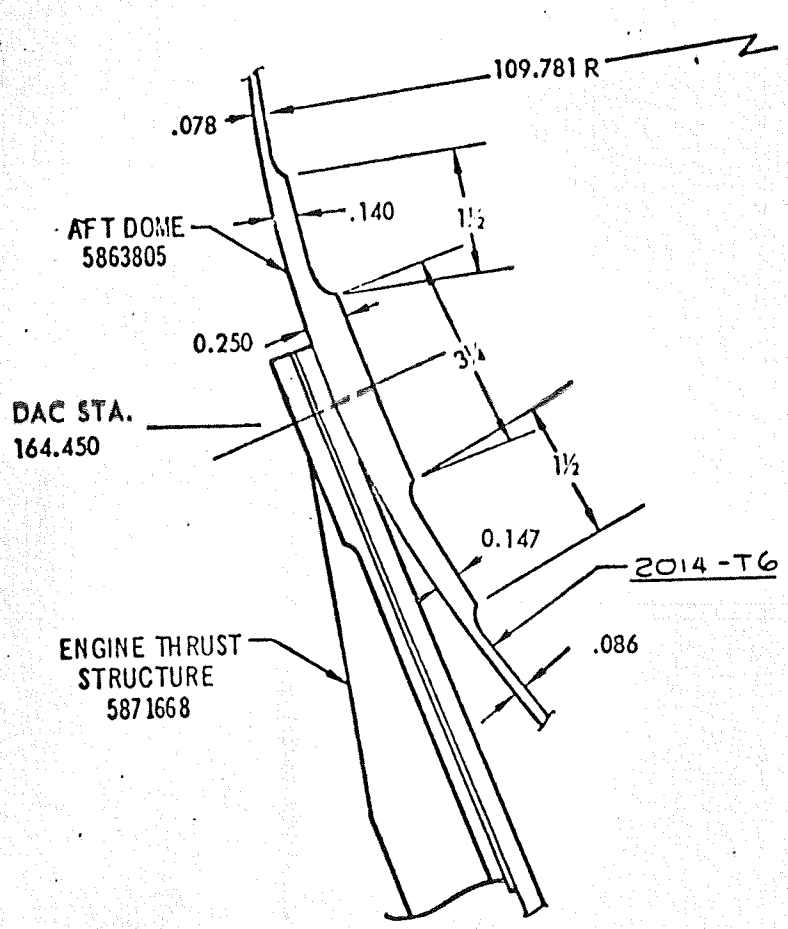

SM42569

AFT DOME-THRUST STRUCTURE JOINT

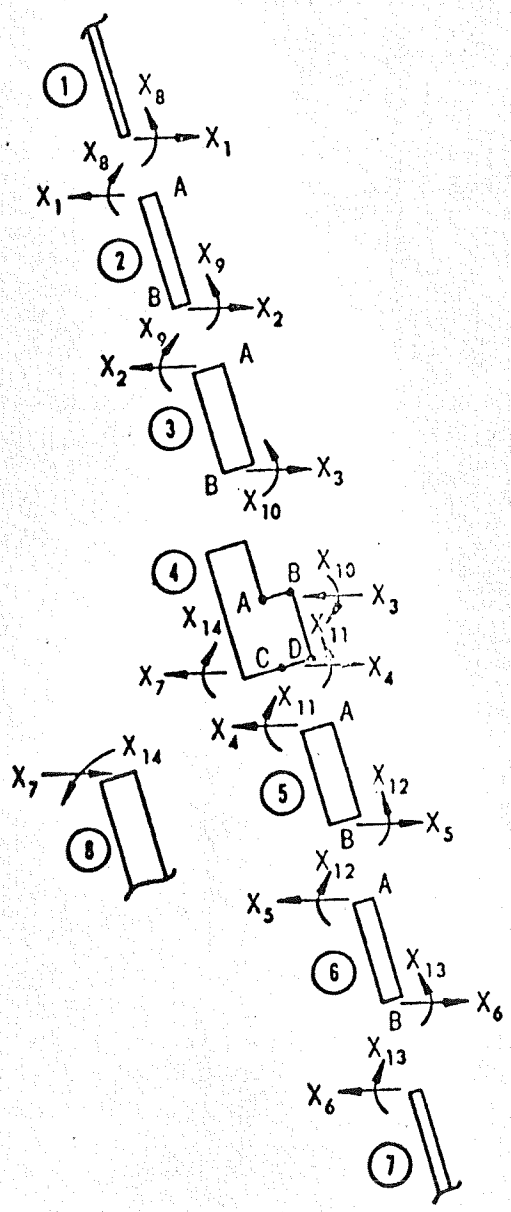

APPENDIX III
PG. III. 7.1

(S-IV FLIGHT)

5871668 THRUST STRUCTURE INSTL

PART 1

$T = -289'$ (REF 10)
$E = 11.6(10^6)$
$\alpha\Delta T = -.37'(10^{-2})$
$R = 109.742$
$\phi = 56° 27'$
$t = .078'$
$P = 51.9'$

$$\beta = \left[3'(1-.09)\left(\frac{109.742'}{.078'}\right)^2\right]^{1/4} = 48.2147'$$

$$K_1 = 1' - \frac{1-.6'}{48.2147'}(.3316') = .9973'$$

$$K_2 = 1' - \frac{1+.6'}{48.2147'}(.3316') = .9890'$$

$$\delta_{1,1} = \frac{48.2147'(109.742')(.8334')^2(.989' + \frac{1}{.9973'})}{11.6'(10^6)(.078')} X_1 = .8090' \times 10^{-2} X_1'$$

$$\delta_{1,8} = \frac{2'(48.2147')^2(.8334')\, X_8}{11.6'(.078')(.9973')10^6} = .4294 \times 10^{-2}\, X_8'$$

$$\delta_{1,T} = +.37'(10^{-2})(109.742')(.8334') = +33.8398' \times 10^{-2}$$

$$\delta_{1,P} = -\frac{51.9'(109.742')^2(.7')(.8334')}{2'(11.6')10^6(.078')} = -20.1503' \times 10^{-2}$$

$$\delta_{8,1} = .4294' \times 10^{-2} X_1'$$

$$\delta_{8,8} = \frac{4'(48.2147')^3(10^{-6})\, X_8}{11.6'(.078')(109.742')(.9973')} = .4527' \times 10^{-2} X_8'$$

5871668 THRUST STRUCTURE INSTL

PART 2

$\delta_{1,1} = 1.3627 \times 10^{-2} X_1$

$\delta_{1,2} = .6708 \times 10^{-2} X_2$

$\delta_{1,8} = -1.6375 \times 10^{-2} X_8$

$\delta_{1,9} = 1.6255 \times 10^{-2} X_9$

$\delta_{1,T} = -37(10^{-2})(109.711)(.8297) = -33.6801 \times 10^{-2}$

$\delta_{1,P} = \dfrac{51.9(109.711)^2(.7)(.8297)}{2(11.6)(.14)\,10^6} = 11.1705 \times 10^{-2}$

$\delta_{2,1} = .6770 \times 10^{-2} X_1$

$\delta_{2,2} = 1.3478 \times 10^{-2} X_2$

$\delta_{2,8} = -1.6300 \times 10^{-2} X_8$

$\delta_{2,9} = 1.6285 \times 10^{-2} X_9$

$\delta_{2,T} = 33.6801 \times 10^{-2}$

$\delta_{2,P} = -11.1705 \times 10^{-2}$

$\delta_{8,1} = -1.6375 \times 10^{-2} X_1$

$\delta_{8,2} = -1.6150 \times 10^{-2} X_2$

$\delta_{8,8} = 2.6359 \times 10^{-2} X_8$

$\delta_{8,9} = -2.5994 \times 10^{-2} X_9$

$\delta_{9,1} = 1.6405 \times 10^{-2} X_1$

$\delta_{9,2} = 1.6285 \times 10^{-2} X_2$

$\delta_{9,8} = -2.6234 \times 10^{-2} X_8$

$\delta_{9,9} = 2.6382 \times 10^{-2} X_9$

K+E ALBANENE® TRACING PAPER 66000

5871668 THRUST STRUCTURE INSTL

PART 3

$\delta_{2,2} = .8121 \times 10^{-2} X_2$

$\delta_{2,3} = .3953 \times 10^{-2} X_3$

$\delta_{2,9} = -1.0820 \times 10^{-2} X_9$

$\delta_{2,10} = 1.0771 \times 10^{-2} X_{10}$

$\delta_{2,T} = -.37(109.656)(.822)10^{-2} = -33.3508 \times 10^{-2}$

$\delta_{2,P} = \dfrac{51.9(109.656)^2(6.7)(.822)}{2(11.6)(.25)\,10^6} = 6.1912 \times 10^{-2}$

$\delta_{3,2} = .3988 \times 10^{-2} X_2$

$\delta_{3,3} = .8038 \times 10^{-2} X_3$

$\delta_{3,9} = -1.0799 \times 10^{-2} X_9$

$\delta_{3,10} = 1.0764 \times 10^{-2} X_{10}$

$\delta_{3,T} = 33.3508 \times 10^{-2}$

$\delta_{3,P} = -6.1912 \times 10^{-2}$

$\delta_{9,2} = -1.0820 \times 10^{-2} X_2$

$\delta_{9,3} = -1.0706 \times 10^{-2} X_3$

$\delta_{9,9} = 1.9337 \times 10^{-2} X_9$

$\delta_{9,10} = -1.9221 \times 10^{-2} X_{10}$

$\delta_{10,2} = 1.0864 \times 10^{-2} X_2$

$\delta_{10,3} = 1.0764 \times 10^{-2} X_3$

$\delta_{10,9} = -1.9388 \times 10^{-2} X_9$

$\delta_{10,10} = 1.9354 \times 10^{-2} X_{10}$

5871668 THRUST STRUCTURE INSTL

PART 4

$N^1 = 1670'_{LIMIT}$

$N^2 = \frac{51.9(109.869)}{2}$

$= 2850'_{LIMIT}$

$N^3 = +1180'$

$T = -289'$ $\quad E = 11.6(10^6)$

$\alpha\Delta T = -.37 \times 10^{-2}$

$a = .086'$
$b = .217'$
$c = .219'$
$d = .364'$
$e = .189'$
$r = 89.797'$
$A = .4374'$
$I = .1134'$

$R = 109.869'$
$r = 89.797'$

$\frac{r^2}{EA} = .1589' \times 10^{-2}$

$\frac{r^2}{EI} = .613' \times 10^{-2}$

$$\delta_{3,3} = \left[.1589' + .219^2(.613')\right] 10^{-2} X_3 = .1883' \times 10^{-2} X_3$$

$$\delta_{3,4} = \left[-.1589' + .219'(.189')(.613')\right] 10^{-2} X_4 = -.1335' \times 10^{-2} X_4$$

$$\delta_{3,7} = \left[.1589' - .219(.364')(.613')\right] 10^{-2} X_7 = +.1100' \times 10^{-2} X_7$$

$$\delta_{3,10} = -.219'(.613')10^{-2} X_{10} = -.1342' \times 10^{-2} X_{10}$$

$$\delta_{3,11} = +.1342' \times 10^{-2} X_{11}$$

$$\delta_{3,14} = -.1342' \times 10^{-2} X_{14}$$

$$\delta_{3,N^3} = +\left[1180'(.5762')(.1589') + 1180'(.217')(.219')(.613')\right] 10^{-2}$$
$$= +(108.0387 + 34.3753)10^{-2} = +142.4140' \times 10^{-2}$$

$$\delta_{3,N^2} = -\left[2850'(.5762')(.1589') + 2850'(.217')(.219')(.613')\right] 10^{-2}$$
$$= -(260.9408 + 83.0251)10^{-2} = -343.9659' \times 10^{-2}$$

$$\delta_{3,N^1} = \left[1670'(.5762')(.1589') - 1670'(.086')(.219')(.613')\right] 10^{-2}$$
$$= (152.9022 - 19.2806)10^{-2} = +133.6216' \times 10^{-2}$$

$$\delta_{3,T} = -.37'(10^{-2})(89.797') = -33.2249' \times 10^{-2}$$

5871668 THRUST STRUCTURE INSTL

$$\delta_{4,3} = -.1335 \times 10^{-2} X_3$$

$$\delta_{4,4} = \left[.1589 + .189^2(.613)\right] 10^{-2} X_4 = +.1808 \times 10^{-2} X_4$$

$$\delta_{4,7} = \left[-.1589 - .364(.189)(.613)\right] 10^{-2} X_7 = -.2011 \times 10^{-2} X_7$$

$$\delta_{4,10} = -.189(.613) 10^{-2} X_{10} = -.1159 \times 10^{-2} X_{10}$$

$$\delta_{4,11} = +.1159 \times 10^{-2} X_{11}$$

$$\delta_{4,14} = -.1159 \times 10^{-2} X_{14}$$

$$\delta_{4,N^3} = \left[-108.0387 + 1180(.217)(.189)(.613)\right] 10^{-2}$$
$$= (-108.0387 + 29.6663) 10^{-2} = -78.3724 \times 10^{-2}$$

$$\delta_{4,N^2} = \left[260.9408 - 2850(.217)(.189)(.613)\right] 10^{-2}$$
$$= (260.9408 - 71.6518) 10^{-2} = 189.2890 \times 10^{-2}$$

$$\delta_{4,N^1} = \left[-152.9022 - 1670(.086)(.189)(.613)\right] 10^{-2}$$
$$= (-152.9022 - 16.6394) 10^{-2} = -169.5416 \times 10^{-2}$$

$$\delta_{4,T} = +.37 \times 10^{-2}(89.797) = +33.2249 \times 10^{-2}$$

$$\delta_{7,3} = +.1100 \times 10^{-2} X_3$$

$$\delta_{7,4} = -.2011 \times 10^{-2} X_4$$

$$\delta_{7,7} = \left[.1589 + .364^2(.613)\right] 10^{-2} = .2401 \times 10^{-2} X_7$$

$$\delta_{7,14} = .364(.613) 10^{-2} = .2231 \times 10^{-2} X_{14}$$

5871663 THRUST STRUCTURE INSTL

$$\delta_{7,N^3} = \left[+108.0387 - 1180(.217)(.364)(.613)\right] 10^{-2}$$

$$= (+108.0387 - 57.1352)10^{-2} = +50.9035 \times 10^{-2}$$

$$\delta_{7,N^2} = \left[-260.9408 + 2850(.217)(.364)(.613)\right] 10^{-2}$$

$$= (-260.9408 + 137.9960)10^{-2} = -122.9448 \times 10^{-2}$$

$$\delta_{7,N^1} = \left[152.9022 + .086(.364)(.613)(1670)\right] 10^{-2}$$

$$= (152.9022 + 32.0462)10^{-2} = 184.9484 \times 10^{-2}$$

$$\delta_{7,T} = -33.2249 \times 10^{-2}$$

$$\delta_{7,10} = +.2231 \times 10^{-2} X_{10}$$

$$\delta_{7,11} = -.2231 \times 10^{-2} X_{11}$$

$$\delta_{10,3} = -.1342 \times 10^{-2} X_3$$

$$\delta_{10,4} = -.1159 \times 10^{-2} X_4$$

$$\delta_{10,7} = +.2231 \times 10^{-2} X_7$$

$$\delta_{10,10} = +.613 \times 10^{-2} X_{10}$$

$$\delta_{10,11} = -.613 \times 10^{-2} X_{11}$$

$$\delta_{10,14} = +.613 \times 10^{-2} X_{14}$$

$$\delta_{10,N^3} = -1180(.217)(.613)10^{-2} = -156.9648 \times 10^{-2}$$

$$\delta_{10,N^2} = +2850(.217)(.613)10^{-2} = +379.1099 \times 10^{-2}$$

$$\delta_{10,N^1} = +1670(.086)(.613) \times 10^{-2} = +88.0391 \times 10^{-2}$$

$\delta_{11,3} = .1342 \times 10^{-2} X_3$

$\delta_{11,4} = .1159' \times 10^{-2} X_4$

$\delta_{11,7} = -.2231 \times 10^{-2} X_7$

$\delta_{11,10} = -.613' \times 10^{-2} X_{10}$

$\delta_{11,11} = .613' \times 10^{-2} X_{11}$

$\delta_{11,14} = -.613' \times 10^{-2} X_{14}$

$\delta_{11,N^3} = +156.9648 \times 10^{-2}$

$\delta_{11,N^2} = -379.1099 \times 10^{-2}$

$\delta_{11,N_1} = -88.0391 \times 10^{-2}$

$\delta_{14,3} = -.1342' \times 10^{-2} X_3$

$\delta_{14,4} = -.1159' \times 10^{-2} X_4$

$\delta_{14,7} = .2231' \times 10^{-2} X_7$

$\delta_{14,10} = .613' \times 10^{-2} X_{10}$

$\delta_{14,11} = -.613' \times 10^{-2} X_{11}$

$\delta_{14,14} = .613' \times 10^{-2} X_{14}$

$\delta_{14,N^3} = -156.9648 \times 10^{-2}$

$\delta_{14,N^2} = +379.1099' \times 10^{-2}$

$\delta_{14,N^1} = +88.0391' \times 10^{-2}$

K+E ALBANENE TRACING PAPER

5871668 THRUST STRUCTURE INSTL

PART 5

$\delta_{4,4} = .7870' \times 10^{-2} X_4$

$\delta_{4,5} = .3827' \times 10^{-2} X_5$

$\delta_{4,11} = -1.0482' \times 10^{-2} X_{11}$

$\delta_{4,12} = 1.0432' \times 10^{-2} X_{12}$

$\delta_{4,T} = -.37'(109.656')(.8124')10^{-2} = -32.9613' \times 10^{-2}$

x $\delta_{4,P} = \dfrac{51.9(109.656')^2(.8124')(.7')}{2'(11.6)'10^6(.25')} = 6.1189' \times 10^{-2}$

$\delta_{5,4} = .3861' \times 10^{-2} X_4$

$\delta_{5,5} = .7786' \times 10^{-2} X_5$

$\delta_{5,11} = -1.0460' \times 10^{-2} X_{11}$

$\delta_{5,12} = 1.0426' \times 10^{-2} X_{12}$

$\delta_{5,T} = 32.9613' \times 10^{-2}$

x $\delta_{5,P} = -6.1189' \times 10^{-2}$

$\delta_{11,4} = -1.0482' \times 10^{-2} X_4$

$\delta_{11,5} = -1.0367' \times 10^{-2} X_5$

$\delta_{11,11} = 1.8732' \times 10^{-2} X_{11}$

$\delta_{11,12} = -1.8615' \times 10^{-2} X_{12}$

$\delta_{12,4} = 1.0526' \times 10^{-2} X_4$

$\delta_{12,5} = 1.0426' \times 10^{-2} X_5$

$\delta_{12,11} = -1.8783' \times 10^{-2} X_{11}$

$\delta_{12,12} = 1.8748' \times 10^{-2} X_{12}$

5871668 THRUST STRUCTURE INSTL

PART 6

$\delta_{5,5} = 1.2202 \times 10^{-2} X_5$

$\delta_{5,6} = .5993 \times 10^{-2} X_6$

$\delta_{5,12} = -1.5114 \times 10^{-2} X_{12}$

$\delta_{5,13} = 1.5001 \times 10^{-2} X_{13}$

$\delta_{5,T} = -.37(10^{-2})(109.708)(.8046) = -32.6603 \times 10^{-2}$

x $\delta_{5,P} = \dfrac{51.9(109.708)^2 (.8046).7}{2(11.6)(10^6)(.147)} = 10.3161 \times 10^{-2}$

$\delta_{6,5} = .6054 \times 10^{-2} X_5$

$\delta_{6,6} = 1.2055 \times 10^{-2} X_6$

$\delta_{6,12} = -1.5046 \times 10^{-2} X_{12}$

$\delta_{6,13} = 1.5023 \times 10^{-2} X_{13}$

$\delta_{6,T} = 32.6603 \times 10^{-2}$

x $\delta_{6,P} = -10.3161 \times 10^{-2}$

$\delta_{12,5} = -1.5114 \times 10^{-2} X_5$

$\delta_{12,6} = -1.4895 \times 10^{-2} X_6$

$\delta_{12,12} = 2.5078 \times 10^{-2} X_{12}$

$\delta_{12,13} = -2.4743 \times 10^{-2} X_{13}$

$\delta_{13,5} = 1.5153 \times 10^{-2} X_5$

$\delta_{13,6} = 1.5023 \times 10^{-2} X_6$

$\delta_{13,12} = -2.4994 \times 10^{-2} X_{12}$

$\delta_{13,13} = 2.5103 \times 10^{-2} X_{13}$

K+E ALBANENE® TRACING PAPER 60006

5871668 THRUST STRUCTURE INSTL

PART 7

$T = -289'$,
$E = 11.6(10^6)$,
$\alpha\Delta T = -.37(10^{-2})$
$R = 109.738'$
$\phi = 53°11'$
$t = .086"$
$P = 51.9'$

$$\beta = \left[3(1-.09)\left(\frac{109.738}{.086}\right)^2\right]^{1/4} = 45.9166$$

$$K_1 = 1 - \frac{(1-.6)(.7486)}{2(45.9166)} = .9967$$

$$K_2 = 1 - \frac{(1+.6)(.7486)}{2(45.9166)} = .9870$$

$$\delta_{6,6} = -\frac{45.9166(109.738)(.6409)(.987+1.0033)X_6}{11.6(10^6)(.086)} = -.6443\times10^{-2}X_6$$

$$\delta_{6,13} = \frac{2(45.9166)^2(.8006)X_{13}}{11.6(10^6)(.086)(.9967)} = .3395\times10^{-2}X_{13}$$

$$\delta_{6,T} = -.37(109.738)(.8006)10^{-2} = -32.5068\times10^{-2}$$

$$\delta_{6,P} = \frac{51.9(109.738)^2(.7)(.8006)}{2(11.6)10^6(.086)} = 17.5553\times10^{-2}$$

$$\delta_{13,6} = .3395\times10^{-2}X_6$$

$$\delta_{13,13} = \frac{4(45.9166)^3(10^{-6})X_{13}}{11.6(.086)(109.738)(.9967)} = .3549\times10^{-2}X_{13}$$

PART 8

$$\delta_{7,7} = 1.319\times10^{-2}X_7$$

$$\delta_{7,14} = -.0689\times10^{-2}X_{14}$$

$$\delta_{14,7} = -.0689\times10^{-2}X_7$$

$$\delta_{14,14} = .0048\times10^{-2}X_{14}$$

5871668 THRUST STRUCTURE INSTL

PART I

$X_1 = 31'$ $\quad \beta = 48.2147'$

$X_8 = -25.7'$ $\quad K_1 = .9973'$ $\quad R = 109.742'$

$t = .078'$ $\quad K_2 = .9890'$

$\phi = 56°27'$

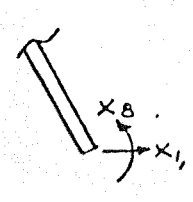

$$\sigma_{\phi_1} = -\frac{X_1 \cos\phi}{t} = -\frac{31'(.5527)}{.078'} = -220'$$

$$\sigma_{\theta_1} = -\frac{X_1}{t}\left(\frac{1}{K_1} + \frac{K_1+K_2}{2}\right)\beta \sin\phi = -\frac{31'}{.078}\left(\frac{1}{.9973} + \frac{1.9863}{2}\right)48.2147(.8334)$$

$$= -31,870'$$

$$\sigma_{\theta_8} = -\frac{X_8(2\beta^2)}{tR\,K_1} = +\frac{25.7'(2)(48.2147)^2}{.078(109.742)(.9973)} = 14,000'$$

$$\sigma_{\phi_8}' = -\frac{6M}{t^2} = +\frac{6(25.7)}{.078^2} = +25,300'$$

$$\sigma_{\theta_8}' = \mu\,\sigma_{\phi_8}' = +7,600'$$

$$\sigma_\phi = -220' \pm 25,300' = \begin{matrix} +25,080' \\ -25,520' \end{matrix}$$

$$\sigma_\theta = -31,870' + 14,000' \pm 7600' = \begin{matrix} -10,270' \\ -25,470' \end{matrix}$$

DISCONTINUITY

IF $\sigma_\phi = 30,300$, $\sigma_\theta = -12,400'$

OF $\sigma_\phi = -30,900'$, $\sigma_\theta = -30,800'$

MEMBRANE:

$$\sigma_\phi = \frac{1180'}{.078'}(1.21) = 18,300'$$

$$\sigma_\theta = \frac{51.9'(109.742)}{2(.078)'}(1.21)$$

$$= 44,200'$$

SM 42569

5871668 THRUST STRUCTURE INSTL

PART 2

A

$$\sigma_\phi = \frac{N_\phi}{t} \pm \frac{6M_\phi}{t^2} = \frac{27.1}{.14} \pm \frac{6(75.2)}{.14^2} = \begin{matrix}23{,}210\\-22{,}830\end{matrix}$$

$$\sigma_\theta = \frac{N_\theta}{t} \pm \frac{6M_\theta}{t^2} = \frac{-1052.2}{.14} \pm \frac{6(22.4)}{.14^2} = \begin{matrix}-660\\-14{,}370\end{matrix}$$

B

$$\sigma_\phi = \frac{17.3}{.14} \pm \frac{6(25.7)}{.0196} = \begin{matrix}7990\\-7740\end{matrix}$$

$$\sigma_\theta = \frac{-936.6}{.14} \pm \frac{6(7.96)}{.0196} = \begin{matrix}-4250\\-9130\end{matrix}$$

YIELD:

A: $\sigma_\phi = 28{,}100$, $\sigma_\theta = -800$; $\sigma_\phi = -27{,}600$, $\sigma_\theta = -17{,}400$

B: $\sigma_\phi = 9{,}700$, $\sigma_\theta = -5{,}100$; $\sigma_\phi = -9{,}400$, $\sigma_\theta = -11{,}050$

MEMBRANE:

$$\sigma_\phi = \frac{1180}{.14}(1.21) = 10{,}200$$

$$\sigma_\theta = \frac{51.9(109.711)(1.21)}{.14(2)} = 24{,}600$$

PART 3

A

$$\sigma_\phi = \frac{30}{.25} \pm \frac{6(132.7)}{.25^2} = \begin{matrix}12{,}860\\-12{,}620\end{matrix}$$

$$\sigma_\theta = 4(53.5) \pm 96(38.1) = \begin{matrix}3870\\-3440\end{matrix}$$

B

$$\sigma_\phi = 4(27.8) \pm 96(75.2) = \begin{matrix}7330\\-7110\end{matrix}$$

$$\sigma_\theta = 4(-431.6) \pm 96(21.6) = \begin{matrix}350\\-3800\end{matrix}$$

YIELD:

A: $\sigma_\phi = 15{,}600$, $\sigma_\theta = 4{,}700$; $\sigma_\phi = -15{,}300$, $\sigma_\theta = -4{,}200$

B: $\sigma_\phi = 8{,}900$, $\sigma_\theta = 420$; $\sigma_\phi = -8{,}600$, $\sigma_\theta = -4{,}600$

MEMBRANE:

$$\sigma_\phi = \frac{1180(1.21)}{.25} = 5{,}710$$

$$\sigma_\theta = \frac{51.9(109.656)1.21}{2(.25)} = 13{,}800$$

K+E ALBANENE® TRACING PAPER 66000

5871668 THRUST STRUCTURE INSTL

PART 4

$X_3 = 52.4$
$X_4 = 13.01$
$X_7 = 1.93$
$X_{10} = -132.68$
$X_{11} = 16.81$
$X_{14} = -340.4$

$N^1 = 1670'$
$N^2 = 2850'$
$N^3 = 1180'$
$E = 11.6\,(10^6)$

$I = .1134'$
$A = .4374'$
$r = 89.797'$

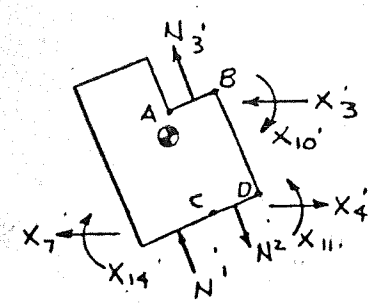

$\theta' = \Sigma M_{CG}\, r^2/EI$ $\quad \delta = \Sigma F_H\, r^2/EA$

$\circlearrowleft +$

$$\Sigma M_{CG} = -X_3'(.219') - X_4'(.189') + X_7'(.364') + X_{10}' - X_{11}' + X_{14}' + N^1(.086') + N^2(.217') - N^3(.217')$$

$$= -52.4'(.219') - 13.01'(.189') + 1.93'(.364') - 132.68' - 16.81' - 340.4' + 1670'(.086') + (.217')(2850' - 1180') = 2.888'\ \curvearrowright$$

$$\Sigma F_H = -X_3' + X_4' - X_7' = -52.4' + 13.01' - 1.93' = -41.3' \leftarrow$$

$$\theta = \frac{2.888'(89.797)^2}{11.6(.1134)10^6} = .0177' = 1°1''\ \curvearrowright \qquad \delta = \frac{-41.3(89.797)^2}{11.6(.4374)10^6} = .0656' \leftarrow$$

DISPLACEMENT:

$A = .1475'[\sin(3°25' + 1°1') - \sin 3°25'] = .0026' \rightarrow$
$B = .3608'[\sin(36°13' + 1°1') - \sin 36°13'] = .0051' \rightarrow$
$C = .3955'[\sin 49°1' - \sin(49°1' - 1°1')] = .0047' \leftarrow$
$D = .5147'[\sin 76°50' - \sin(76°50' - 1°1')] = .0022' \leftarrow$

TOTAL δ:

A	$= .0656' - .0026' = .0630'$	$\epsilon = .000702'$	$\sigma_\theta = 8140'$ T
B	$= .0656' - .0051' = .0605$	$\epsilon = .000674'$	$\sigma_\theta = 7820'$ T
C	$= .0656' + .0047' = .0703$	$\epsilon = .000783'$	$\sigma_\theta = 9080'$ T
D	$= .0656' + .0022' = .0678'$	$\epsilon = .000755'$	$\sigma_\theta = 8760'$ T

$$\sigma_{\phi_A} = -\frac{6'(132.68')}{.25^2} + \frac{1180'}{.25'} = -8020' \qquad \sigma_{\phi_C} = \frac{16.81'(6')}{.25^2} + \frac{2850'}{.25'} = 13{,}010'$$

$$\sigma_{\phi_B} = +17{,}460' \qquad \sigma_{\phi_D} = +9{,}790'$$

YIELD:

A: $\sigma_\phi = -9{,}700'$, $\sigma_\theta = 9{,}850'$

B: $\sigma_\phi = +21{,}100'$, $\sigma_\theta = 9{,}460'$

C: $\sigma_\phi = 15{,}700'$, $\sigma_\theta = 10{,}990'$

D: $\sigma_\phi = 11{,}850'$, $\sigma_\theta = 10{,}600'$

MEMBRANE: $\sigma_\phi = \sigma_\theta = 0'$

SM 42569

5871668 THRUST STRUCTURE INSTL

PART 5

$$\sigma_\phi = \frac{3.3}{.25} \pm \frac{6(-5.5)}{.25^2} = \begin{matrix}-515 \\ 540\end{matrix}$$

A

$$\sigma_\theta = 4(779.7) \pm 96(-3.3) = \begin{matrix}2800 \\ 3440\end{matrix}$$

$$\sigma_\phi = 4(7.6) \pm 96(-16.8) = \begin{matrix}-1580 \\ 1640\end{matrix}$$

B

$$\sigma_\theta = 4(177.3) \pm 96(-6.7) = \begin{matrix}66 \\ 1350\end{matrix}$$

YIELD:

$\sigma_\phi = -620$
$\sigma_\theta = 3400$

A

$\sigma_\phi = 650$
$\sigma_\theta = 4200$

$\sigma_\phi = -1910$
$\sigma_\theta = 80$

B

$\sigma_\phi = 1980$
$\sigma_\theta = 1630$

MEMBRANE

$$\sigma_\phi = \frac{2850(1.21)}{.25} = 13,800$$

$$\sigma_\theta = \frac{51.9(109.656)(1.21)}{2(.25)} = 13,800$$

PART 6

$$\sigma_\phi = \frac{5.6}{.147} \pm \frac{6(4.3)}{.147^2} = \begin{matrix}1230 \\ -1160\end{matrix}$$

$$\sigma_\theta = -\frac{7.6}{.147} \pm \frac{6(.92)}{.147^2} = \begin{matrix}204 \\ -307\end{matrix}$$

$$\sigma_\phi = \frac{3.4}{.147} \pm \frac{6(-5.5)}{.147^2} = \begin{matrix}-1500 \\ 1550\end{matrix}$$

$$\sigma_\theta = \frac{-416.9}{.147} \pm \frac{6(-2)}{.147^2} = \begin{matrix}-3390 \\ -2280\end{matrix}$$

YIELD:

$\sigma_\phi = 1500$
$\sigma_\theta = 250$

$\sigma_\phi = -1400$
$\sigma_\theta = -370$

$\sigma_\phi = -1,800$
$\sigma_\theta = -4,100$

$\sigma_\phi = 1,880$
$\sigma_\theta = -2,760$

MEMBRANE:

$$\sigma_\phi = \frac{2850 \times 1.21}{.147} = 23,500$$

$$\sigma_\theta = \frac{51.9(109.708)(1.21)}{2(.147)} = 23,400$$

SM 42569

5871668 THRUST STRUCTURE INSTL

PART 7

$X_6 = 9.4'$ $\quad \beta = 45.9166'$

$X_{13} = -4.3'$ $\quad K_1 = .9967'$ $\quad R = 109.738'$

$t = .086'$ $\quad K_2 = .9870'$

$\phi = 53°11'$

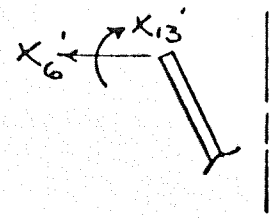

$$\sigma\phi_6 = \frac{9.4'(.599)'}{.086'} = 65'$$

$$\sigma\theta_6 = \frac{9.4'}{.086'}\left(\frac{1}{.9967'} + .9919'\right)(45.9166')(.8006') = 8017'$$

$$\sigma\theta_{13} = \frac{4.3'(2)(45.9166')^2}{.086'(109.738')(.9967')} = 1930'$$

$$\sigma\phi'_{13} = \frac{6'(4.3)'}{.086^2} = 3490'$$

$$\sigma\theta_{13} = .3'\sigma\phi'_{13} = 1047'$$

$$\sigma\phi = 65' \pm (-3490') = \begin{matrix} -3425' \\ +3555' \end{matrix}$$

$$\sigma\theta = 8017' + 1930' \pm (-1047') = \begin{matrix} 8900' \\ 10{,}994' \end{matrix}$$

YIELD; $\sigma\phi = -4150'$

$\sigma\theta = 10{,}800'$

$\sigma\phi = 4{,}300'$

$\sigma\theta = 13{,}300'$

MEMBRANE

$$\sigma\phi = \frac{2850'}{.086'}(1.21) = 40{,}100'$$

$$\sigma\theta = \frac{51.9'(109.738')}{2(.086)'}(1.21)$$

$$= 40{,}100'$$

K+E ALBANENE® TRACING PAPER 60000

5871668 THRUST STRUCTURE INSTL

AFT DOME - THRUST STRUCTURE JOINT

S-IV FLIGHT

DEFLECTIONS & ROTATIONS

$\delta_1^1 = .277'$

$\delta_8^1 = +.017'$

$\delta_1^2 = -.277'$

$\delta_2^2 = +.285'$

$\delta_8^2 = -.017'$

$\delta_9^2 = -.009'$

$\delta_2^3 = -.285'$

$\delta_3^3 = +.271'$

$\delta_9^3 = +.009'$

$\delta_{10}^3 = -.018'$

$\delta_3^4 = -.271'$

$\delta_4^4 = +.263'$

$\delta_7^4 = -.260'$

$\delta_{10}^4 = +.018'$

$\delta_{11}^4 = -.018'$

$\delta_{14}^4 = +.018'$

$\delta_4^5 = -.263'$

$\delta_5^5 = +.244'$

$\delta_{11}^5 = +.018'$

$\delta_{12}^5 = -.017'$

$\delta_5^6 = -.244'$

$\delta_6^6 = +.225'$

$\delta_{12}^6 = +.017'$

$\delta_{13}^6 = -.017'$

$\delta_6^7 = -.225'$

$\delta_{13}^7 = +.017'$

K+E ALBANENE® TRACING PAPER 60000

5871668 THRUST STRUCTURE INSTL

AFT DOME-THRUST STRUCTURE JOINT

S IV FLIGHT

PART			DISCONTINUITY (YIELD)	MEMBRANE (YIELD	DISCONTINUITY + MEMBRANE	* M.S.
1	IF	σ_ϕ	30,300'	18,300'	48,600'	.54'
		σ_θ	-12,400'	44,200'	31,800'	
	OF	σ_ϕ	-30,900'	18,300'	-12,600'	1.93'
		σ_θ	-30,800'	44,200'	13,400'	
2 A	IF	σ_ϕ	28,100'	10,200'	38,300'	.97'
		σ_θ	-800'	24,600'	23,800'	
	OF	σ_ϕ	-27,600'	10,200'	-17,400'	HIGH
		σ_θ	-17,400'	24,600'	7,200'	
2 B	IF	σ_ϕ	9,700'	10,200'	19,900'	↑
		σ_θ	-5,100'	24,600'	19,500'	
	OF	σ_ϕ	-9,400'	10,200'	800'	
		σ_θ	-11,050'	24,600'	13,550'	
3 A	IF	σ_ϕ	15,600'	5,710'	21,310'	
		σ_θ	4,700'	13,800'	18,500'	
	OF	σ_ϕ	-15,300'	5,710'	-9,590'	
		σ_θ	-4,200'	13,800'	9,600'	
3 B	IF	σ_ϕ	8,900'	5,710'	14,610'	
		σ_θ	420'	13,800'	14,220'	
	OF	σ_ϕ	-8,600'	5,710'	-2,890'	
		σ_θ	-4,600'	13,800'	9,200'	
4 A		σ_ϕ	-9,700'	—	-9,700'	
		σ_θ	9,850'	↑	9,850'	
4 B		σ_ϕ	21,100'		21,100'	
		σ_θ	9,460'		9,460'	
4 C		σ_ϕ	15,700'		15,700'	↓
		σ_θ	10,990		10,990	
4 D		σ_ϕ	11,850	↓	11,850	HIGH
		σ_θ	10,600'		10,600'	

* MAT'L 2014-T6 ALLOWABLES PG 2.3 TO 2.22

K+E ALBANENE® TRACING PAPER 60006

FORM 88-8-1 (REV. 8-55)

PREPARED BY: GRH
CHECKED BY: G.J.S.
DATE: 11/62
TITLE: OSV-4 PROPELLANT TANK

DOUGLAS AIRCRAFT COMPANY, INC.

SM DIVISION

PAGE: 8.4.19
MODEL: OSV-4
REPORT NO: SM 42569

5871668 THRUST STRUCTURE INSTL

PART			DISCONTINUITY (YIELD)	MEMBRANE (YIELD)	DISCONTINUITY + MEMBRANE	M.S.
5	A	IF σ_ϕ	-620'	13,800'	13,180'	HIGH
		σ_θ	3400'	↑	17,200'	
		OF σ_ϕ	650'		14,450'	HIGH
		σ_θ	4200'		18,000'	
	B	IF σ_ϕ	-1910'	↓	11,890'	HIGH
		σ_θ	80'		13,880'	
		OF σ_ϕ	1980'		15,780'	HIGH
		σ_θ	1630'	13,800'	15,430'	
6	A	IF σ_ϕ	1500'	23,500	25,000'	1.71'
		σ_θ	250'	23,400	23,650'	
		OF σ_ϕ	-1400'	23,500	22,100'	1.92'
		σ_θ	-370'	23,400	23,030'	
	B	IF σ_ϕ	-1800'	23,500	21,700'	HIGH
		σ_θ	-4100	23,400	19,300'	
		OF σ_ϕ	1880'	23,500	25,380'	1.82'
		σ_θ	-2760'	23,400	20,640'	
7		IF σ_ϕ	-4150'	40,100'	35,950'	.46'
		σ_θ	10,800	40,100'	50,900	
		OF σ_ϕ	4,300'	40,100'	44,400'	.33'
		σ_θ	13,300	40,100'	53,400'	

* MAT'L 2014-T6 ALLOWABLES PG 2.3 TO 2.22

SM 42569

K+E ALBANENE® TRACING PAPER 60000

SM 42569

9.0 CUTOUTS AND OPENINGS

9.1 Configuration

This section determines the effects caused by cutouts in the propellant tanks. Three typical cutouts are considered:

1. Forward LH_2 dome, LH_2 vent.
2. LH_2 Manhole.
3. LO_2 Sump.

The cutouts cause a discontinuity in the propellant tank skin and in the case of the LH_2 vent, external loads are introduced into the tank through the cutout.

9.2 Analysis

The general method of analysis is one of relative deflection. A description of the sign convention and nomenclature used is shown in Appendix III.

SM425693

FWD DOME – HYDROGEN VENT JOINT

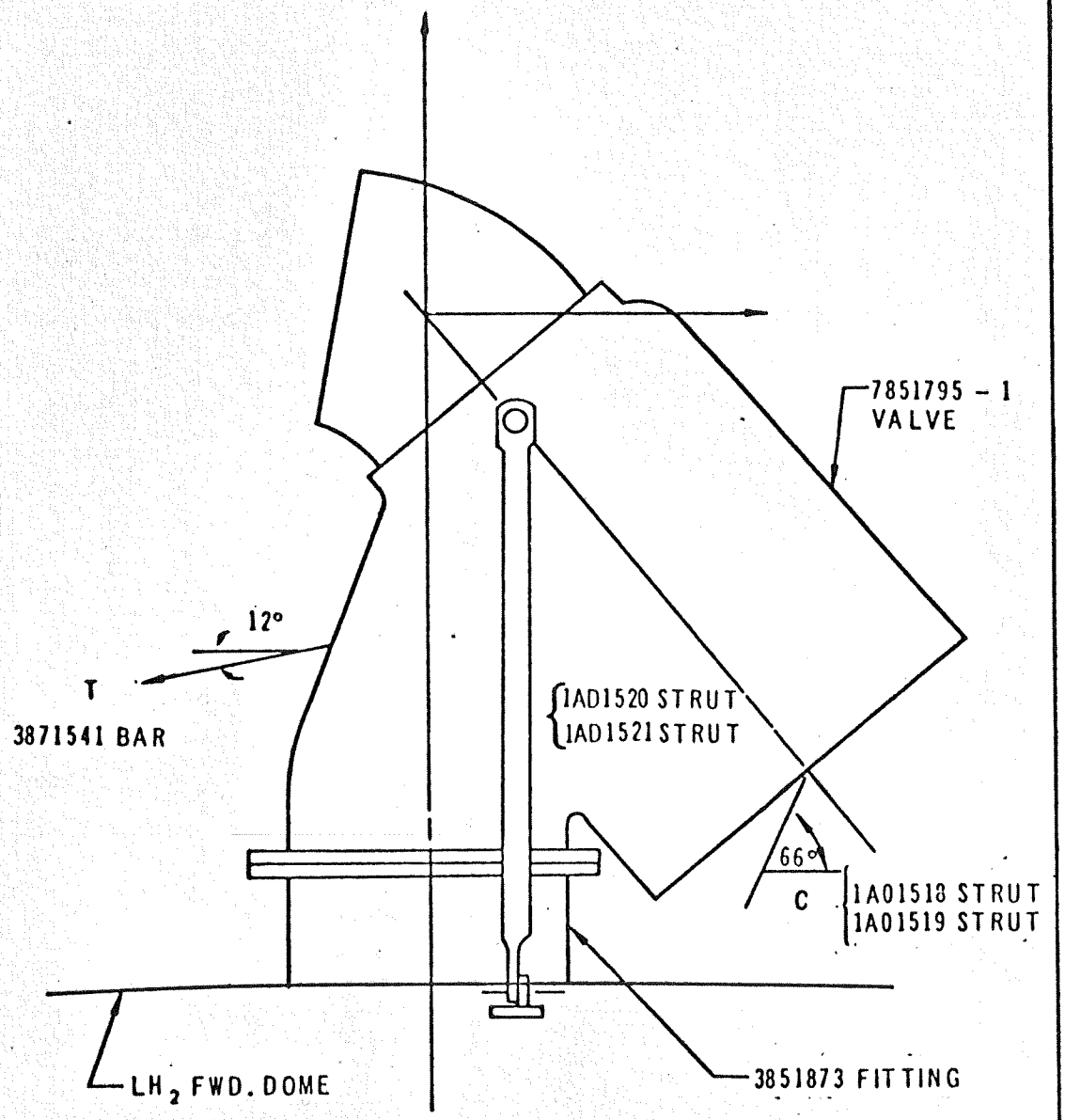

5851533 DOME
LH_2 TANK FWD

DSV – 4 PROPELLANT TANK

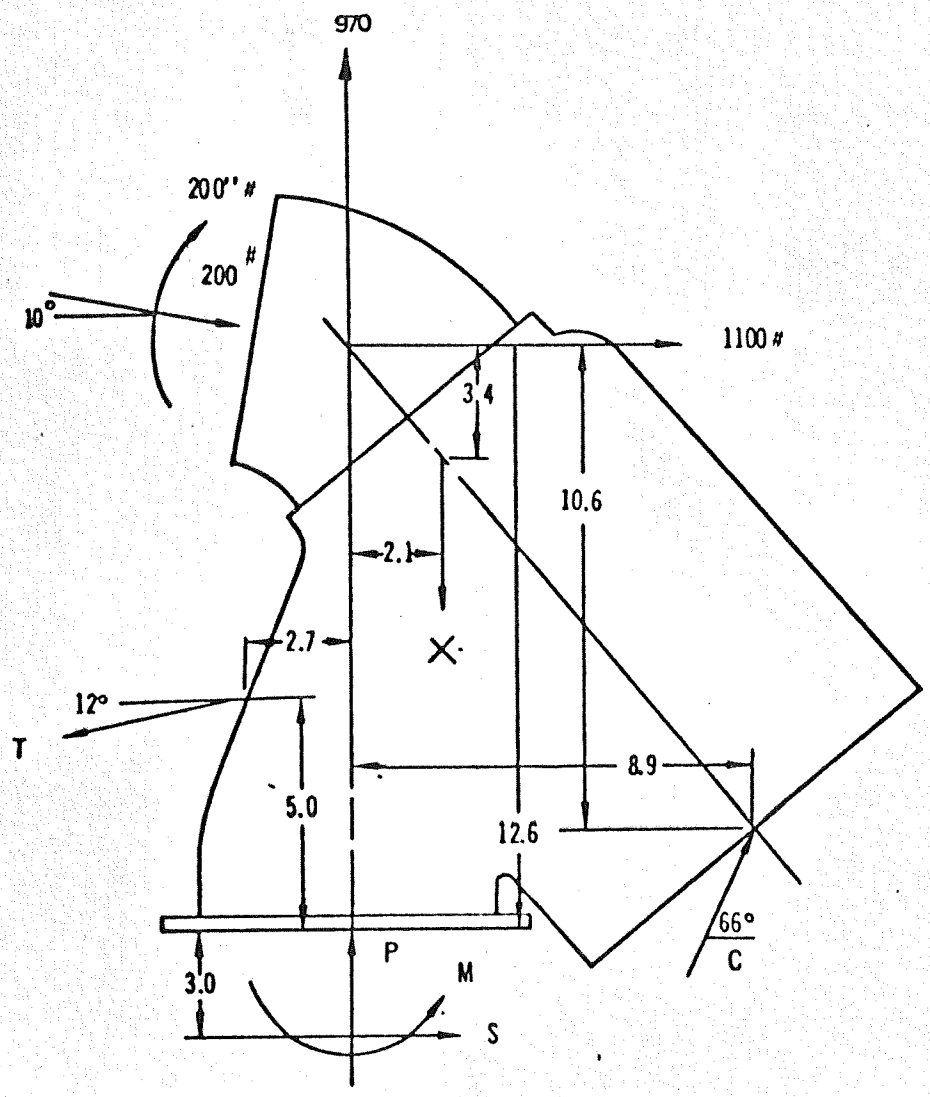

LOAD REF. DAC PROPULSION REPORT 4-1255, IN FLIGHT MISSILE HYDROGEN TANK VENT SYSTEM, MARCH 1962.

5851533 DOME
LH_2 TANK FWD

DSV-4 PROPELLANT TANK

WELDING OF #3851873 TO #5851533 LH_2 DOME

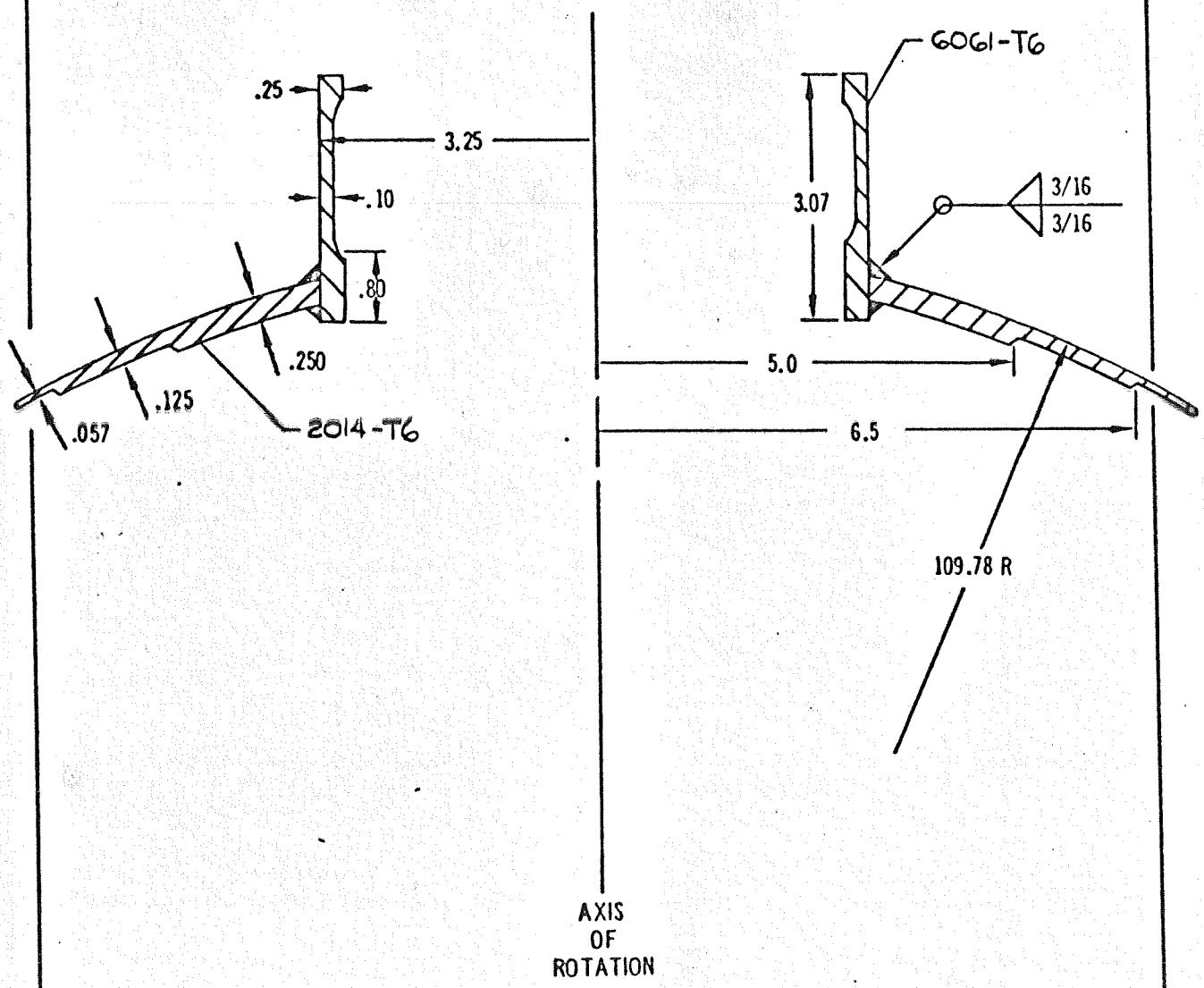

DISCONTINUITY ANALYSIS – PRESSURE ONLY

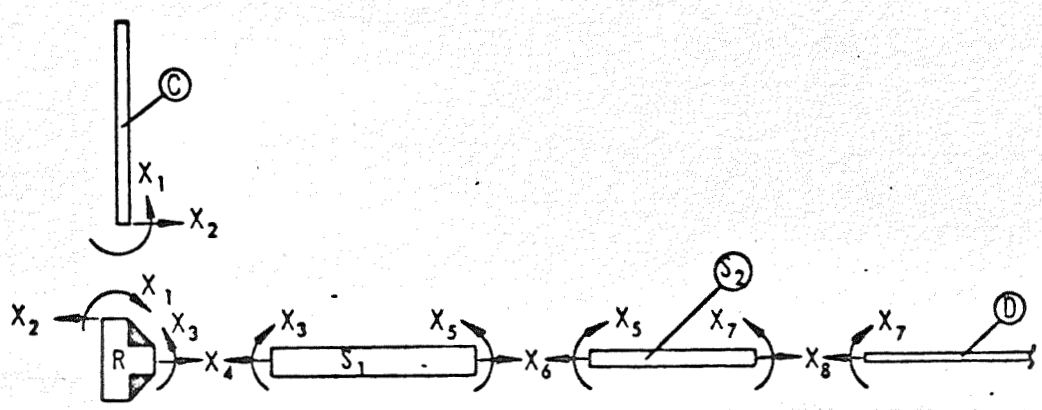

C – SHORT CYLINDER
R – RING
S_1 – SHORT CONE
S_2 – SHORT CONE
D – SPHERICAL DOME

X_{ODD} DISCONTINUITY MOMENT

X_{EVEN} DISCONTINUITY SHEAR

MEMBRANE FORCES ARE NOT SHOWN

DISCONTINUITY ANALYSIS-AXIAL LOAD AND MOMENT WELD ONLY

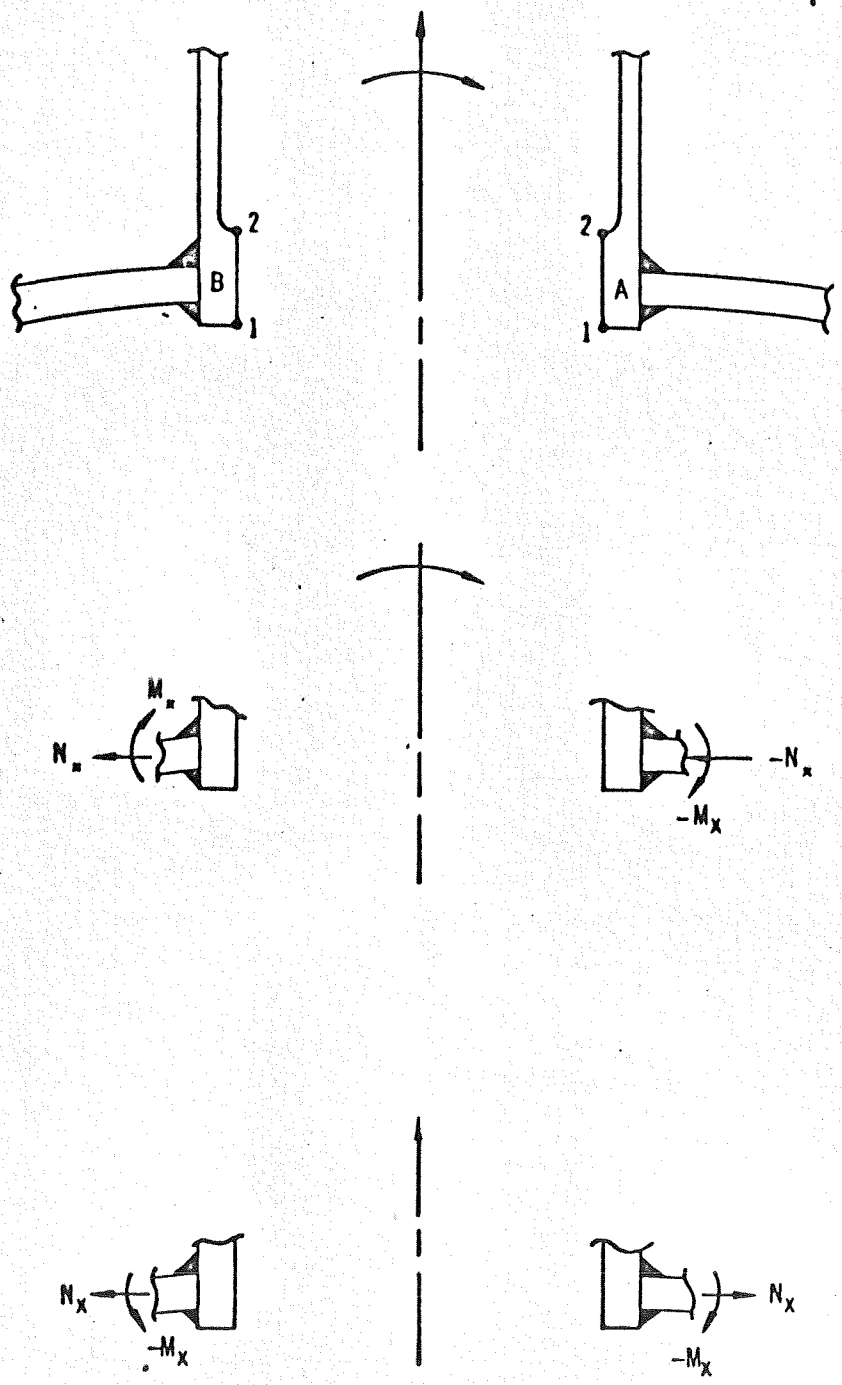

5851533 DOME
LH_2 TANK FWD

SM 42569

EQUATIONS OF STATICS (SEE PG 9.1.1)

$\Sigma F_V = 0$

$$P + C \sin 66^\circ - T \sin 12^\circ - X = -970 + 200 \sin 10^\circ$$

$$P + .914\,C - .208\,T - X = -773$$

$\Sigma F_H = 0$

$$S + C \cos 66^\circ - T \cos 12^\circ = -(1100 + 200 \cos 10^\circ)$$

$$S + .407\,C - .978\,T = -1297$$

$\Sigma M = 0$

$$M - C \cos 66^\circ (5.0) + C \sin 66^\circ (3.1) + T \cos 12^\circ (8.0) + T \sin 12^\circ (2.7) - X (2.1) - 1297 (15.6) - 200 = 0$$

$$M + 6.1\,C + 8.38\,T - 2.1\,X = 20{,}430$$

EQUATIONS FOR INTERNAL WORK

$$U = \Sigma \left[\frac{P^2 L}{2AE} + \frac{L}{2EI} \left(M^2 + LMS + \frac{L^2 S^2}{3} \right) \right]$$

$$U = \frac{5.5\,C^2}{2(.108)(3)10^7} + \frac{40\,T^2}{2(.126)(30)10^6} + \frac{16.5\,X^2}{2(.031)10^7} + \frac{3\,P^2}{2(1.88)(10^7)}$$

$$+ \frac{3}{2(10^7)(8.71)} \left[M^2 + 3M(S) + \frac{9\,S^2}{3} \right]$$

5851533 DOME
LH_2 TANK FWD

$$U = 8.47\,C^2(10^{-7}) + 5.21(10^{-6})T^2 + 92.7(10^{-7})X^2 + .797(10^{-7})P^2 + .172(10^{-7})(M^2 + 3MS + 3S^2)$$

$$\frac{\partial U}{\partial C} = 0 = 16.94\,C + 1.594\,P\left(\frac{\partial P}{\partial C}\right) + .172\left[2M\frac{\partial M}{\partial C} + 3S\frac{\partial M}{\partial C} + 3M\frac{\partial S}{\partial C} + 6S\frac{\partial S}{\partial C}\right]$$

$$\frac{\partial U}{\partial T} = 0 = 105.8\,T + 1.594\,P\left(\frac{\partial P}{\partial T}\right) + .172\left[2M\frac{\partial M}{\partial T} + 3S\frac{\partial M}{\partial T} + 3M\frac{\partial S}{\partial T} + 6S\frac{\partial S}{\partial T}\right]$$

$$\frac{\partial U}{\partial X} = 0 = 185.4\,X + 1.594\,P\left(\frac{\partial P}{\partial X}\right) + .172\left[2M\frac{\partial M}{\partial X} + 3S\frac{\partial M}{\partial X} + 3M\frac{\partial S}{\partial X} + 6S\frac{\partial S}{\partial X}\right]$$

FROM EQUATIONS OF STATICS

$$P = .205\,T + X - .914\,C - 773$$

$$S = .978\,T - .407\,C - 1297$$

$$M = -8.33\,T - 6.1\,C + 2.1\,X + 20{,}430$$

K+E ALBANENE 100L TRACING PAPER 60054

5851533 DOME
LH_2 TANK FWD

$\frac{\partial P}{\partial C} = -.714$ $\quad \frac{\partial P}{\partial T} = .208$ $\quad \frac{\partial P}{\partial X} = 1$

$\frac{\partial S}{\partial C} = -.407$ $\quad \frac{\partial S}{\partial T} = .978$ $\quad \frac{\partial S}{\partial X} = 0$

$\frac{\partial M}{\partial C} = -6.1$ $\quad \frac{\partial M}{\partial T} = -8.38$ $\quad \frac{\partial M}{\partial X} = 2.1$

SUBSTITUTING THESE VALUES,

$$0 = 16.94\,C + 1.594(.208T + X - .714C - 773)(-.714)$$
$$+ .172\Big[2(-8.38T - 6.1C + 2.1X + 20{,}430)(-6.1)$$
$$+ 3(.978T - .407C - 1297)(-6.1) + 3(-8.38T - 6.1C$$
$$+ 2.1X + 20{,}430)(-.407) + 6(.978T - .407C - 1297)(-.407)\Big]$$

$$0 = C(16.94 + 1.332 + 12.800 + 1.282 + 1.282 + .171)$$
$$+ T(-.303 + 17.584 - 3.08 + 1.757 - .911)$$
$$+ X(-1.457 - 4.406 - .4410) + (1126.2 - 42{,}870 + 4082$$
$$- 4290 + 545)$$

$$0 = 33.81\,C + 15.55\,T - 6.30\,X - 41{,}407$$

5851533 DOME
LH_2 TANK FWD

$$0 = 105.8\,T + 1.594(.208\,T + X - .914\,C - 773)(.208)$$
$$+ .172\Big[2(-8.33\,T - 6.1\,C + 2.1\,X + 20{,}430)(-5.33)$$
$$+ 3(.978\,T - .407\,C - 1297)(-8.33) + 3(-8.33\,T - 6.1\,C$$
$$+ 2.1\,X + 20{,}430)(.975) + 6(.978\,T - .407\,C - 1297)(.975)\Big]$$

$$0 = C(-.303 + 17.588 + 1.759 - 3.078 - .414)$$
$$+ T(105.8 + .069 + 29.158 - 4.229 - 4.229 + .983)$$
$$+ X(.332 - 6.054 + 1.060) + (-256 - 58{,}894 + 5608$$
$$+ 10{,}309 - 1309)$$

$$0 = 15.55\,C + 122.55\,T - 4.66\,X - 44{,}542$$

$$0 = 185.4\,X + 1.594(.208\,T + X - .914\,C - 773)(1)$$
$$+ .172\Big[2(-8.33\,T - 6.1\,C + 2.1\,X + 20{,}430)(2.1)$$
$$+ 3(.978\,T - .407\,C - 1297)(-2.1) + 3(-8.33\,T$$
$$- 6.1\,C + 2.1\,X + 20{,}430)(0) + (0)\Big]$$

$$0 = C(-1.457 - 4.406 + .441) + T(.332 - 6.054 - 1.060)$$
$$+ X(185.4 + 1.594 + 1.517) + (-1232 + 14{,}759$$
$$+ 1905)$$

$$0 = -5.42\,C - 6.78\,T + 188.51\,X + 14{,}932$$

SM42569

5851533 DOME
LH_2 TANK FWD

SOLUTION OF THESE EQUATIONS YIELD

$C = 1116$ LB

$T = 220$ LB

$X = -39$ LB

FROM THE EQUATIONS OF STATICS

$P = .208(220) - 39 - .914(1116) - 773$

$= -1786$ LB (LIMIT)

$S = .978(220) - .407(1116) - 1297$

$= -1536$ LB (LIMIT)

$M = -8.38(220) - 6.1(1116) - 2.1(39) + 20{,}430$

$= 11{,}697$ IN-LB (LIMIT)

K+E ALBANENE® TRACING PAPER 70197

5851533 DOME
LH_2 TANK FWD

SM42569

NOMENCLATURE

a — RADIUS OF MIDDLE SURFACE OF INSERTED CYLINDER

h — THICKNESS OF CYLINDER WALL

ℓ — $\left\{R^2 t^2 \div \left[12(1-\mu^2)\right]\right\}^{\frac{1}{4}}$

r — RADIUS OF CURVATURE OF MIDDLE SURFACE OF SPHERICAL SHELL SECTION IN A LATITUDINAL PLANE

s — $r \div \ell$

t — THICKNESS OF SPHERICAL SHELL

u — $a \div \ell$

M — EXTERNAL MOMENT APPLIED TO CYLINDER

M_x — RADIAL MOMENT IN SPHERICAL VESSEL

M_y — TANGENTIAL MOMENT IN SPHERICAL VESSEL

N_x — RADIAL MEMBRANE FORCE IN SPHERICAL SHELL

N_y — TANGENTIAL MEMBRANE FORCE IN SPHERICAL SHELL

R — RADIUS OF MIDDLE PLANE OF SPHERICAL VESSEL

γ — $a \div h$

μ — POISSON'S RATIO

ρ — $t \div h$

P — AXIAL LOAD IN CYLINDER

U — $1.82 \frac{a}{R}\sqrt{\frac{R}{t}}$

5851533 DOME
LH_2 TANK FWD

DISCONTINUITY FORCES & MOMENTS DUE TO EXTERNAL LOADS

DIAGRAM PG 9.1.4

THESE DISCONTINUITY LOADS WILL BE SUPERIMPOSED ON PRESSURE DISCONTINUITY LOADS.

(REF 12 ⇒ METHOD)

THE FOLLOWING GRAPHS ARE APPLICABLE IN THIS RANGE (PP 9.1.13 - 9.1.20)

FOR $u \leq 1$: $R \div t \geq 10$

FOR $u > 1$: $R \div t \geq 2 + 8u$

AND IF

$$u \leq 1.05(\gamma \div \rho)^{\frac{1}{2}}$$

IN THIS CASE

$u = a \div \ell$

$u = 3.05 \div 2.89$

$= \underline{\underline{1.055}}$

$\ell^4 = (110)^2(.25)^2 \div 12(.91)$

$= 69.3$

$\ell = 2.87$

$1.055 \leq 1.05(30.5 \div 2.5)^{\frac{1}{2}}$

≤ 3.68

$\gamma = 3.05 \div .1 = 30.5$

$\rho = .25 \div .1 = 2.5$

$u > 1$

$110 \div .25 \geq 2 + 8(1.055)$

$440 \geq 10.44$

5851533 DOME
LH_2 TANK FWD

$$U = 1.82 \frac{3.2}{110} \sqrt{\frac{110}{.25}} = 1.10$$

FROM THE GRAPHS THE CRITICAL STRESS WILL OCCUR AT THE EDGE OF THE WELD (LOW VALUE OF S IS CRITICAL)

$$S = 1.82 \frac{3.44}{110} \sqrt{\frac{110}{.25}} = 1.20$$

FOR S = 1.20 – REFERENCE – PAGE 9.1.13 – 9.1.20

$$M_x \div \frac{M}{R} \sqrt{\frac{R}{t}} \cos\theta = .058$$

$$M_y \div \frac{M}{R} \sqrt{\frac{R}{t}} \cos\theta = .092$$

$$N_x \div \frac{M}{Rt} \sqrt{\frac{R}{t}} \cos\theta = -.087$$

$$N_y \div \frac{M}{Rt} \sqrt{\frac{R}{t}} \cos\theta = -.22$$

$$M_x \div P = .013$$

$$M_y \div P = .040$$

$$N_x \div \frac{P}{t} = -.0665$$

$$N_y \div \frac{P}{t} = -.185$$

RADIAL MOMENT VS STATION
(EXTERNAL MOMENT)

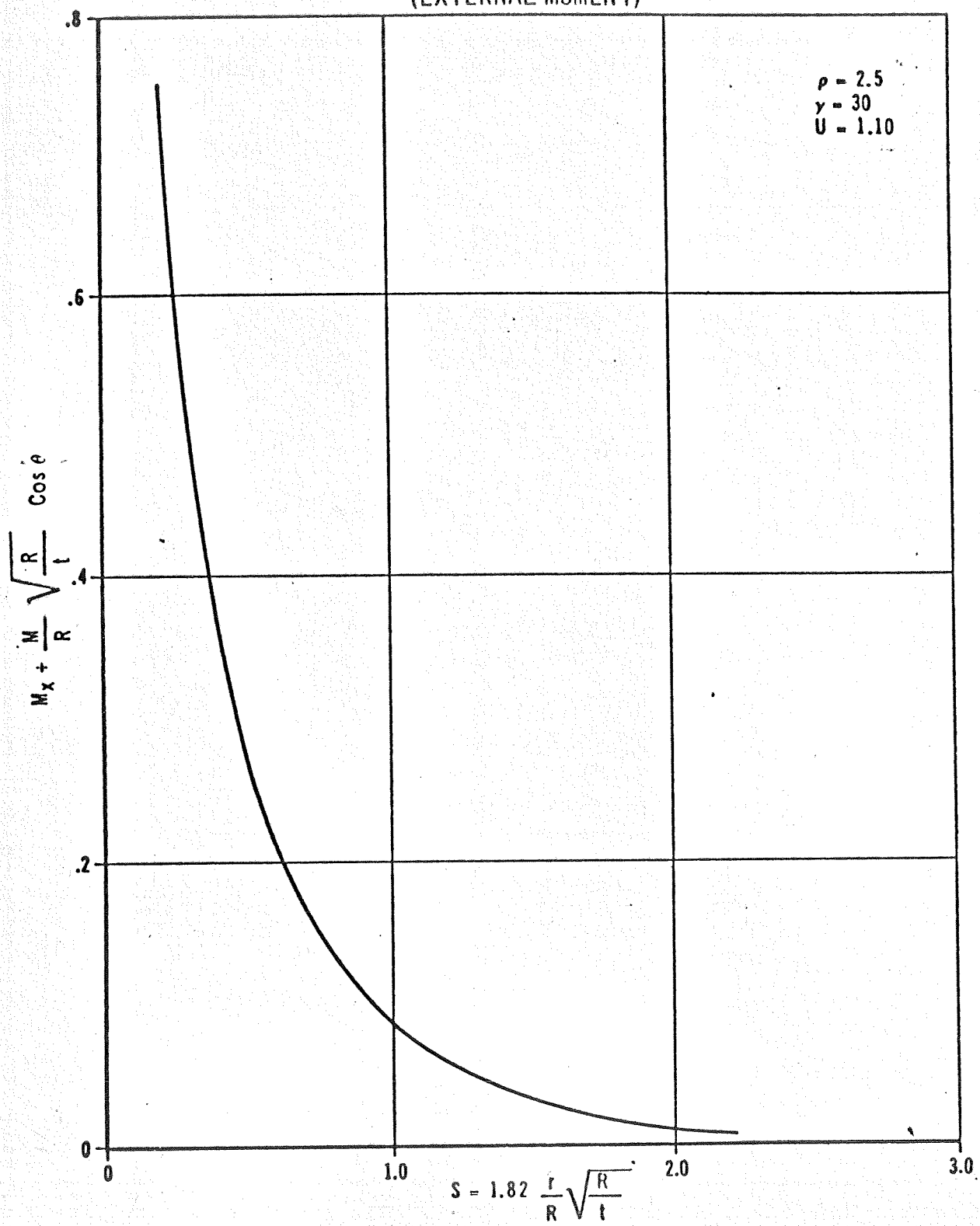

REF. 12

TANGENTIAL MOMENT VS STATION
(EXTERNAL MOMENT)

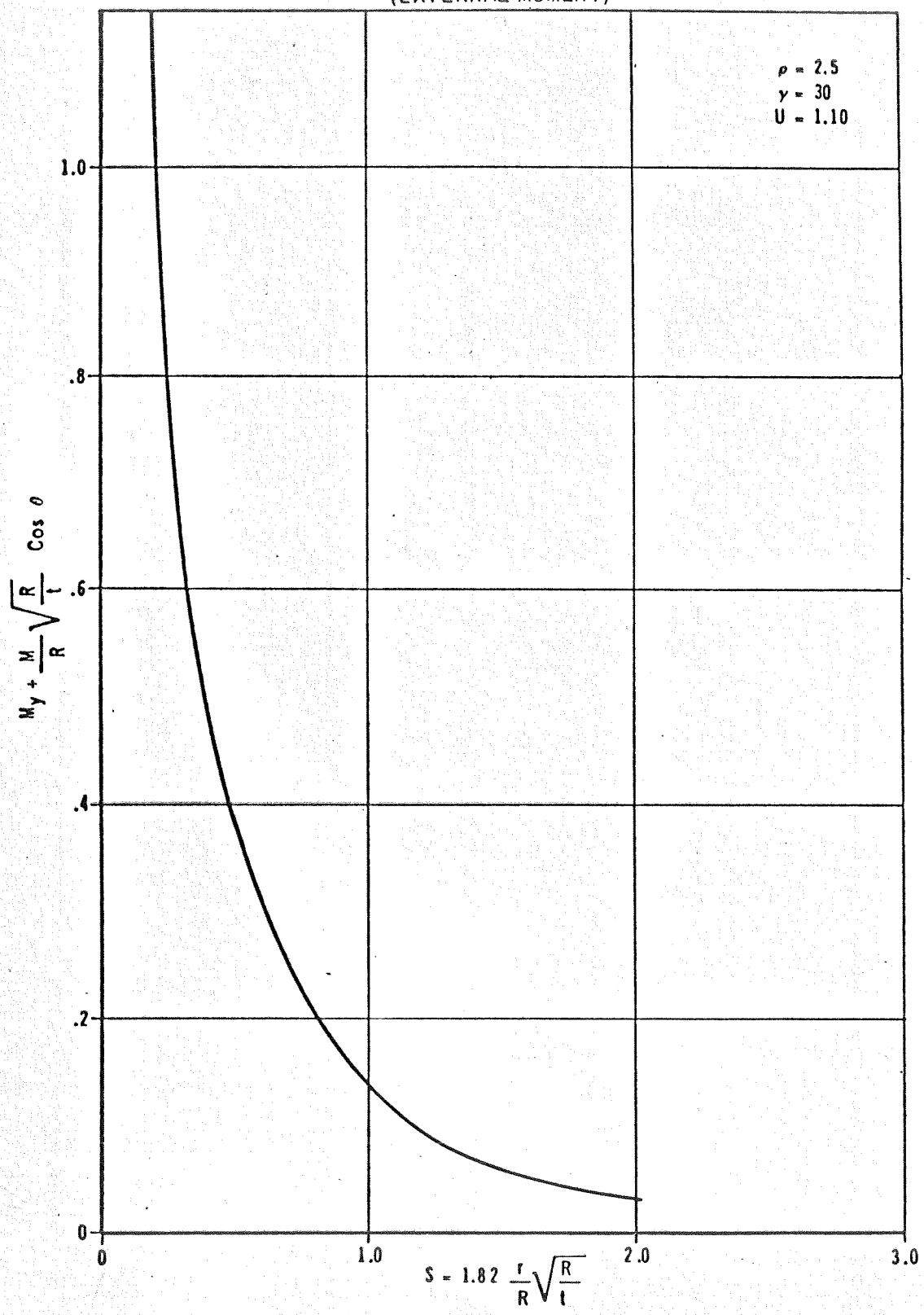

REF. 12

SM 42569

RADIAL MEMBRANE FORCE VS STATION
(EXTERNAL MOMENT)

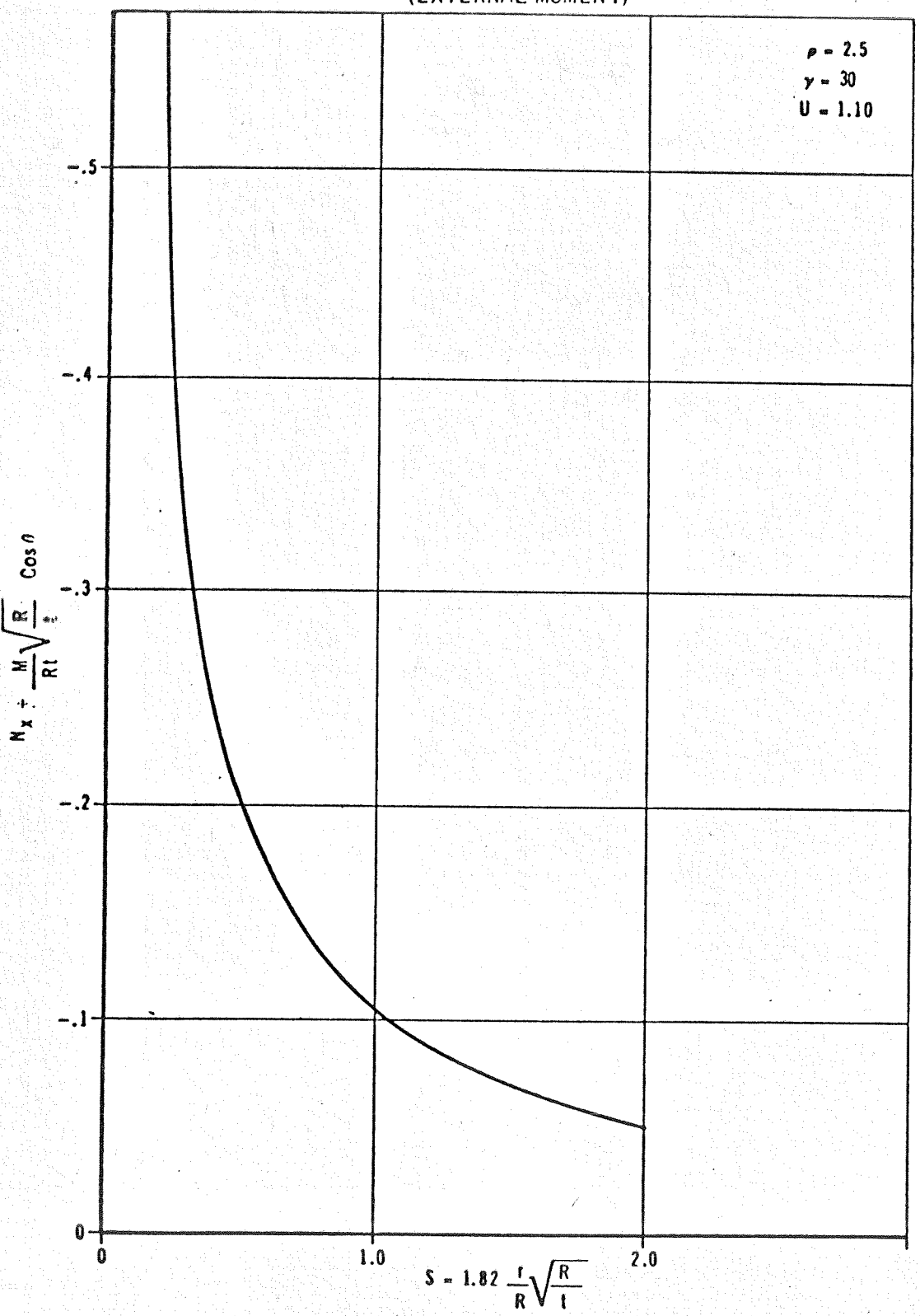

REF. 12

TANGENTIAL MEMBRANE FORCE VS STATION
(EXTERNAL MOMENT)

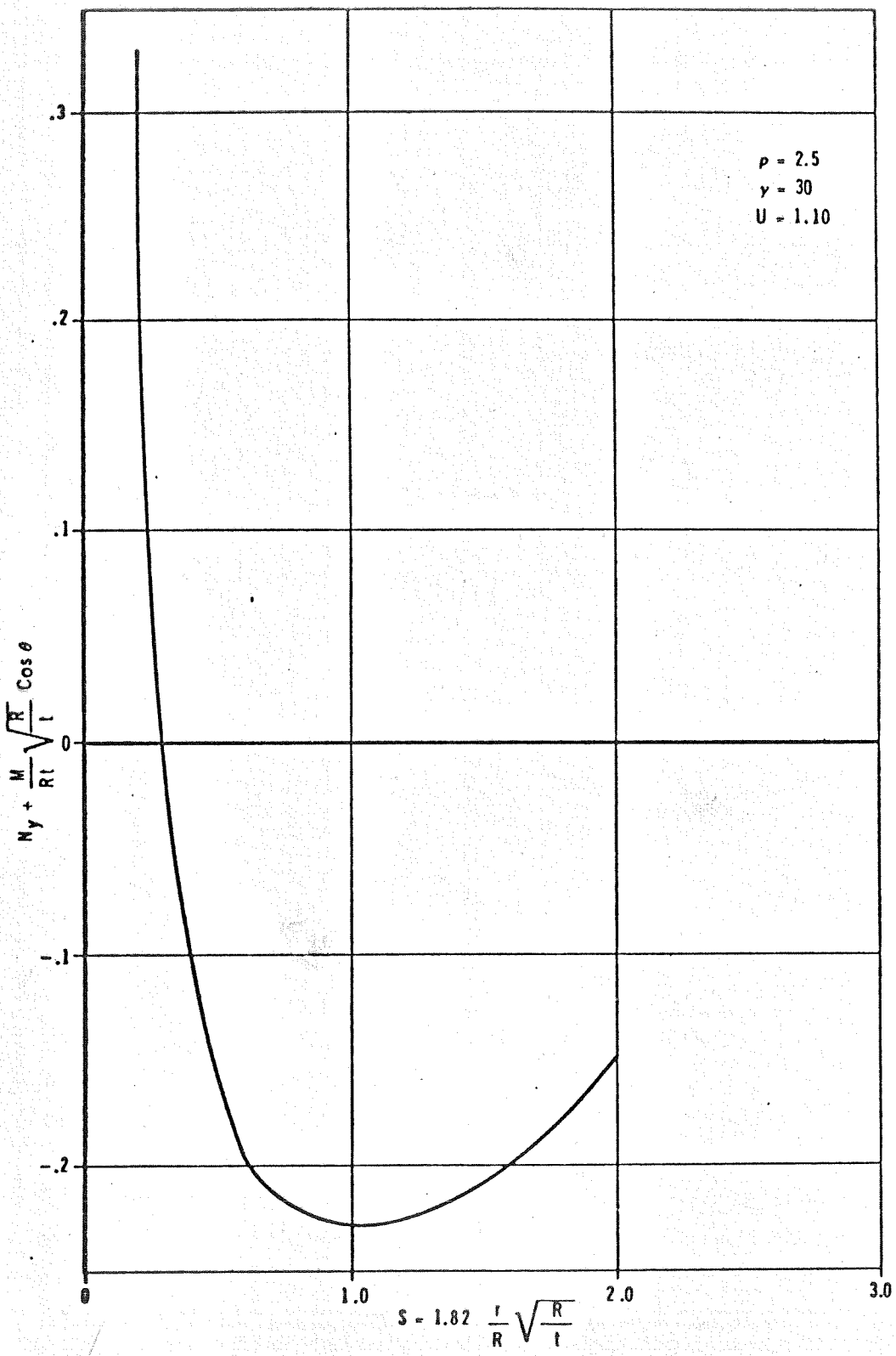

SM42569

REF. 12

RADIAL MOMENT VS STATION
(EXTERNAL AXIAL LOAD)

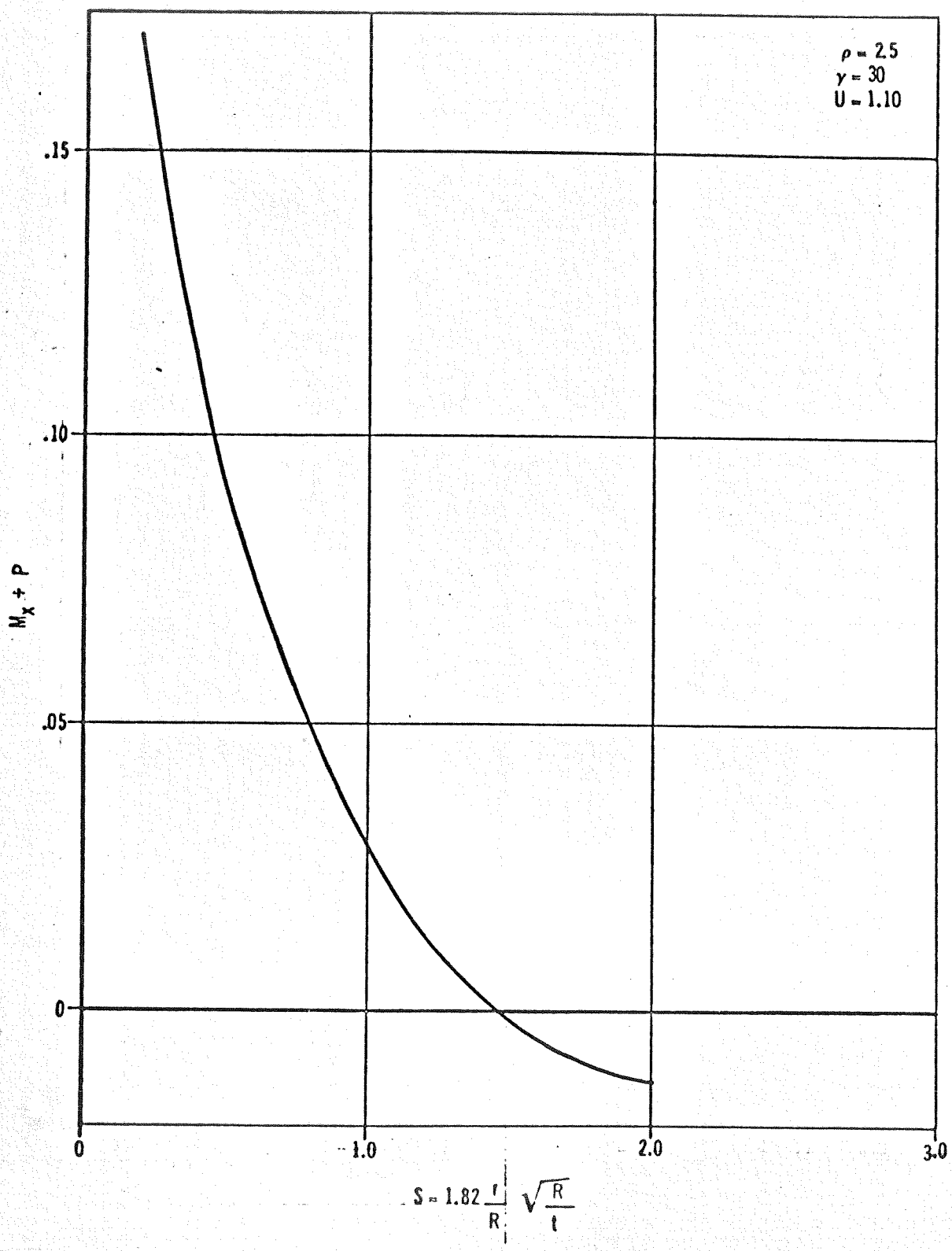

SM42569

REF. 12

RADIAL MOMENT VS STATION
(EXTERNAL AXIAL LOAD)

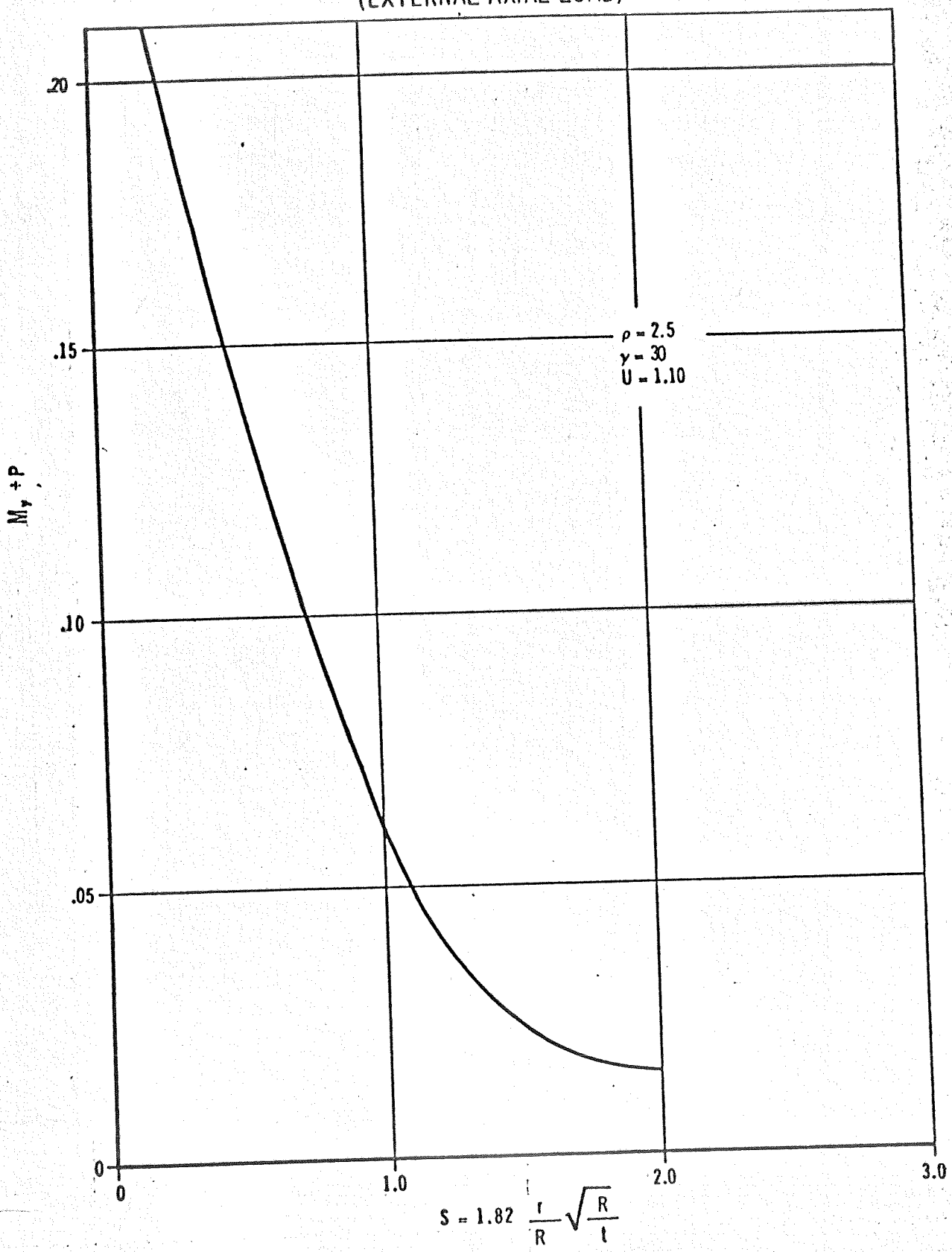

REF. 12

RADIAL MEMBRANE FORCE VS STATION
(EXTERNAL AXIAL LOAD)

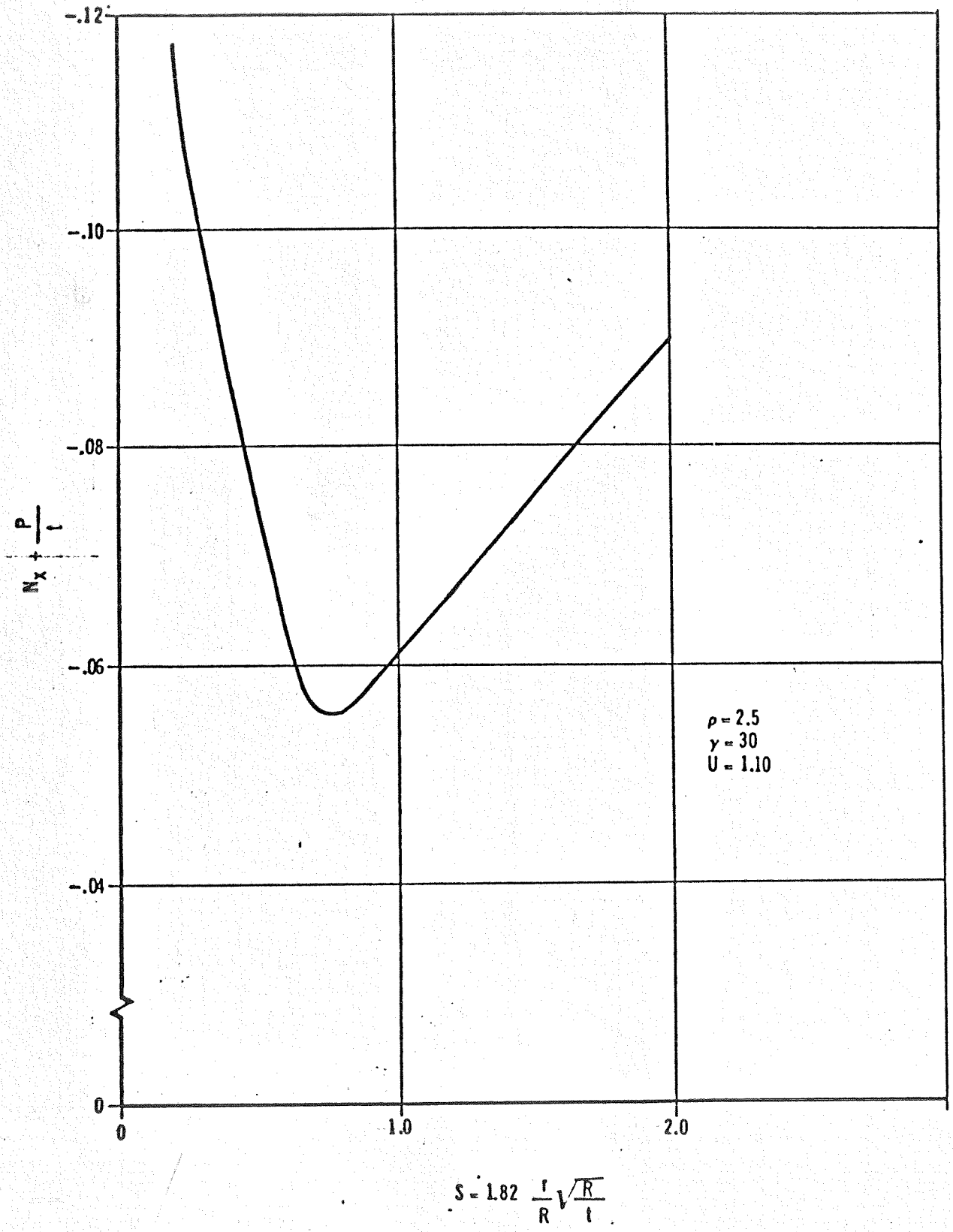

REF. 12

TANGENTIAL MEMBRANE FORCE VS STATION
(EXTERNAL AXIAL FORCE)

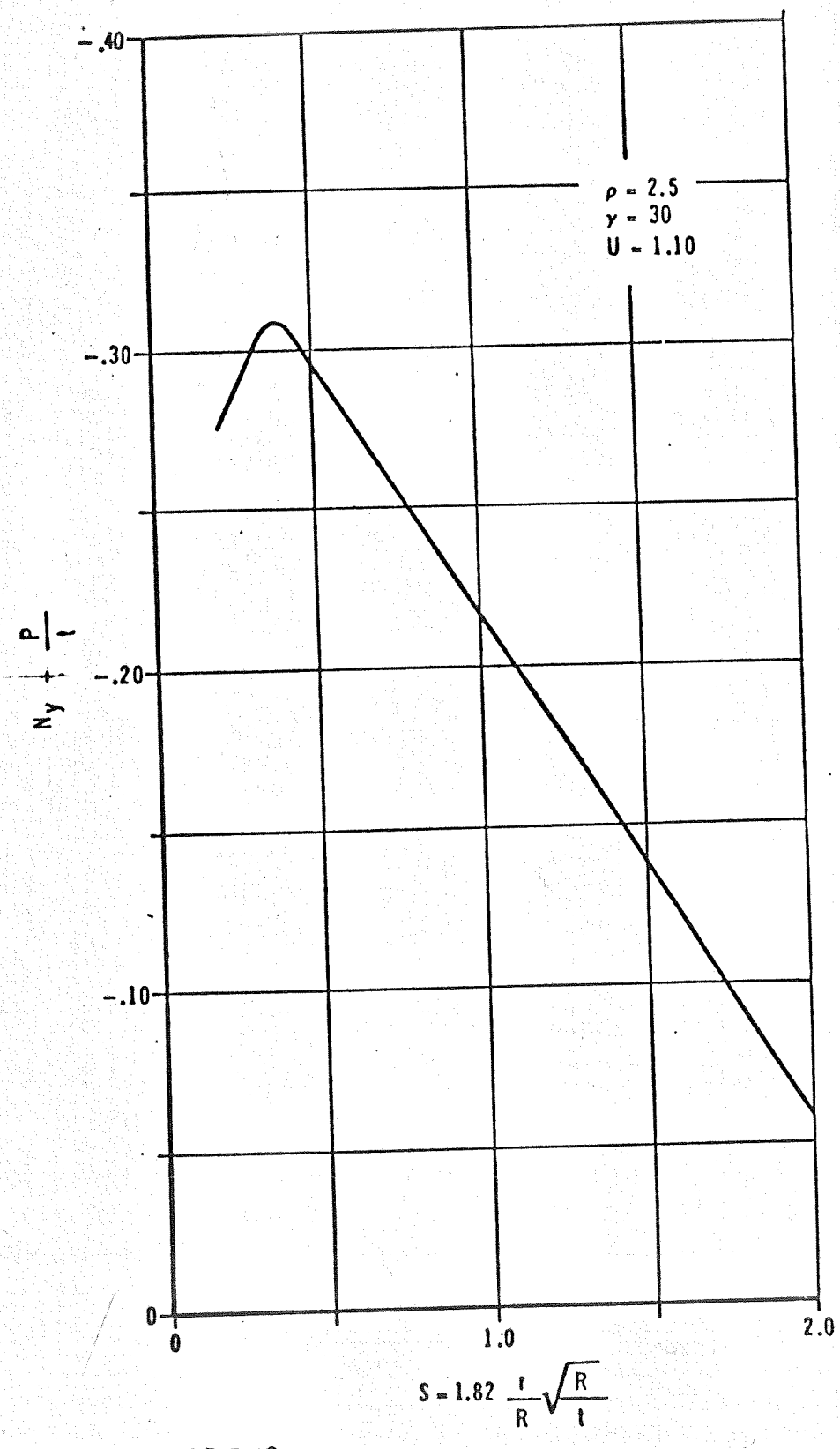

REF. 12

SM42569

5851533 DOME
LH_2 TANK FWD

$$\frac{M}{R}\sqrt{\frac{R}{t}}\cos\theta = \frac{11{,}697^*}{110}\sqrt{\frac{110}{.25}}\cos\theta$$

$$= 2233 \cos\theta$$

$$\frac{M}{Rt}\sqrt{\frac{R}{t}}\cos\theta = \frac{2233}{.25}\cos\theta = 8{,}932\cos\theta$$

$$P = 1786^* - N_c(2\pi r) = 1786 - \pi(3.2)^2(44)$$

$$= 370 \text{ LB}$$

$$\frac{P}{t} = \frac{370}{.25} = 1{,}480$$

$$M_x = .058(2233)\cos\theta = \pm 130\cos\theta$$

$$M_y = .092(2233)\cos\theta = \pm 206\cos\theta$$

$$N_x = -.087(8{,}932)\cos\theta = \mp 777\cos\theta$$

$$N_y = -.22(8{,}932)\cos\theta = \mp 1970\cos\theta$$

$$M_x = .013(370) = 5$$

$$M_y = .040(370) = 15$$

$$N_x = -.0665(1{,}480) = -98$$

$$N_y = -.185(1{,}480) = -274$$

* REF. P 9.1.9

5851533 DOME
LH_2 TANK FWD

SIGN CONVENTION

MOMENT - POSITIVE, COMPRESSION OUTER SURFACE
FORCE - POSITIVE, TENSION

MOMENTS AND FORCES FROM EXTERNAL LOADS

$M_X = 130 - 5 = 125$ IN-#/IN
$= -130 - 5 = -135$ IN-#/IN
$M_Y = 206 - 15 = 191$ IN-#/IN
$= -206 - 15 = -221$ IN-#/IN
$N_X = -777 + 98 = -679$ #/IN
$= +777 + 98 = 875$ #/IN
$N_Y = -1970 + 274 = -1696$ #/IN
$= +1970 + 274 = 2244$ #/IN

THESE FORCES & MOMENTS WILL BE SUPERIMPOSED ON THE PRESSURE DISCONTINUITY ANALYSIS TO GIVE FINAL DISCONTINUITY FORCES & MOMENTS.

A CRITICAL CASE IS OBTAINED BY APPLYING EACH OF THE ABOVE FORCES & MOMENTS AS AN AXISYMMETRIC LOAD AND SOLVING FOR THE MAXIMIUM STRESSES.

K+E ALBANENE TRACING PAPER 70187

5851533 DOME
LH_2 TANK FWD

COMPATIBLE EQUATIONS FOR ROTATIONS & DEFLECTIONS

DIAGRAM P9.1.3

$$X_1\delta_{11} + X_2\delta_{12} + X_3\delta_{13} + X_4\delta_{14} = -N_\phi\delta_{1\phi} - P\delta_{1P}$$

$$X_1\delta_{21} + X_2\delta_{22} + X_3\delta_{23} + X_4\delta_{24} = -N_\phi\delta_{2\phi} - P\delta_{2P}$$

$$X_1\delta_{31} + X_2\delta_{32} + X_3\delta_{33} + X_4\delta_{34} + X_5\delta_{35} + X_6\delta_{36} = -N_\phi\delta_{3\phi} - P\delta_{3P}$$

$$X_1\delta_{41} + X_2\delta_{42} + X_3\delta_{43} + X_4\delta_{44} + X_5\delta_{45} + X_6\delta_{46} = -N_\phi\delta_{4\phi} - P\delta_{4P}$$

$$X_3\delta_{53} + X_4\delta_{54} + X_5\delta_{55} + X_6\delta_{56} + X_7\delta_{57} + X_8\delta_{58} = -N_\phi\delta_{5\phi} - P\delta_{5P}$$

$$X_3\delta_{63} + X_4\delta_{64} + X_5\delta_{65} + X_6\delta_{66} + X_7\delta_{67} + X_8\delta_{68} = -N_\phi\delta_{6\phi} - P\delta_{6P}$$

$$X_5\delta_{75} + X_6\delta_{76} + X_7\delta_{77} + X_8\delta_{78} = -N_\phi\delta_{7\phi} - P\delta_{7P}$$

$$X_5\delta_{85} + X_6\delta_{86} + X_7\delta_{87} + X_8\delta_{88} = -N_\phi\delta_{8\phi} - P\delta_{8P}$$

$$N_\phi\delta_{1\phi} = N_\phi\delta_{2\phi} = N_\phi\delta_{3\phi} = N_\phi\delta_{4\phi} = 0$$

$$P\delta_{5P} = P\delta_{7P} = 0$$

MATRIX ARRANGEMENT OF EQUATIONS

$$\begin{bmatrix}\text{COEFFICIENT}\end{bmatrix}\begin{bmatrix}\text{UNKNOWN}\end{bmatrix} = \begin{bmatrix}\text{CONSTANT}\end{bmatrix}$$

5851533 DOME
LH_2 TANK FWD

SHORT CYLINDER INFLUENCE COEFFICIENTS

$R = 3.20$ IN $\qquad \ell = 2.2$ IN

$t = .10$ IN $\qquad \mu = .3$

$$\beta^4 = \frac{3(1-\mu^2)}{R^2 t^2}$$

$\beta^4 = 26.66 \qquad \beta = 2.27$

$$D = \frac{E t^3}{12(1-\mu^2)} = .00009'16E$$

$\beta\ell = 2.2(2.26) = 4.97$

$$\frac{1}{2D\beta^4\ell} = \frac{93.1}{E} \qquad \frac{1}{2D\beta^4\ell^2} = \frac{42.3}{E}$$

$$\frac{1}{2D\beta^4\ell^3} = \frac{19.2}{E}$$

$$\delta_{11} = 250\left(\frac{19.2}{E}\right) = \frac{4800}{E}$$

$$\delta_{12} = \delta_{21} = 25\left(\frac{42.3}{E}\right) = \frac{1058}{E}$$

$$\delta_{22} = 5.0\left(\frac{93.1}{E}\right) = \frac{465.5}{E}$$

SM42569

5851533 DOME
LH_2 TANK FWD

PRESSURE COEFFICIENTS

$$\delta_p = \frac{R}{Et}(N_\theta - \mu N_\phi) \qquad [\text{HOOKE'S LAW}]$$

$$N_\theta = PR \qquad N_\phi = \frac{PR}{2} \qquad P = 1 \text{ PSI}$$

$$R = 3.20 \text{ IN} \qquad t = .10 \text{ IN.}$$

$$\delta_{1P} = 0 \qquad (\text{No ROTATION})$$

$$\delta_{2P} = \frac{(3.20)^2}{E(.10)}\left(1 - \frac{\mu}{2}\right)$$

$$= \frac{87}{E}$$

5851533 DOME
LH_2 TANK FWD

RING R

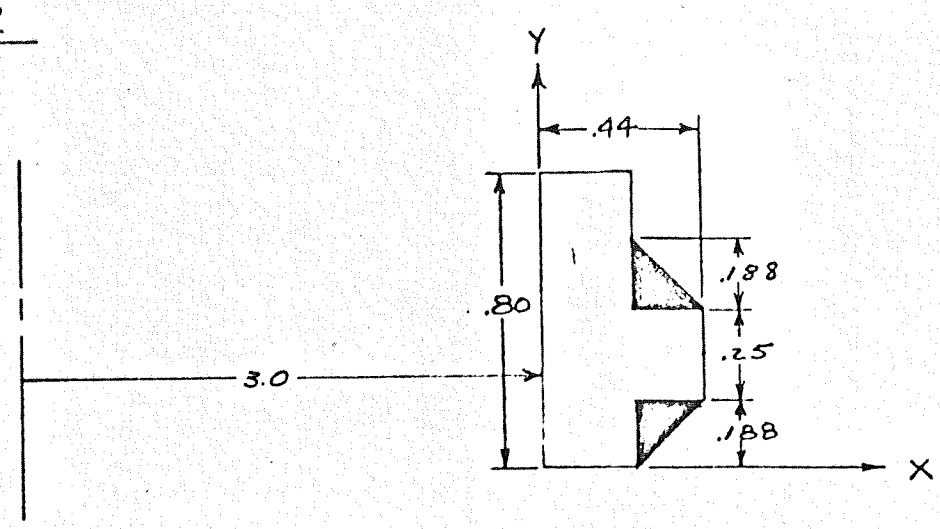

i	b	h	A	Y	AY	AY^2	X	AX	I_o
1	.25	.80	.200	.40	.080	.032	.125	.025	.0106
2	.188	.188	.0177	.125	.0022	.00028	.313	.00555	.00003
3	.188	.250	.0470	.313	.0147	.0046	.344	.0162	.00024
4	.188	.188	.0177	.5007	.0089	.00445	.313	.00555	.00003
			.2824		.1058	.04133		.0523	.0109

$$\bar{Y} = \frac{.1058}{.2824} = .374 \text{ IN.}$$

$$\bar{X} = \frac{.0523}{.2824} = .185 \text{ IN.}$$

$$I_o = .0109 + .04133 - .2824(.374)^2$$

$$= .0126 \text{ IN}^4$$

K+E ALBANENE 195L TRACING PAPER 66064

5851533 DOME
LH_2 TANK FWD

RING R INFLUENCE COEFFICIENTS

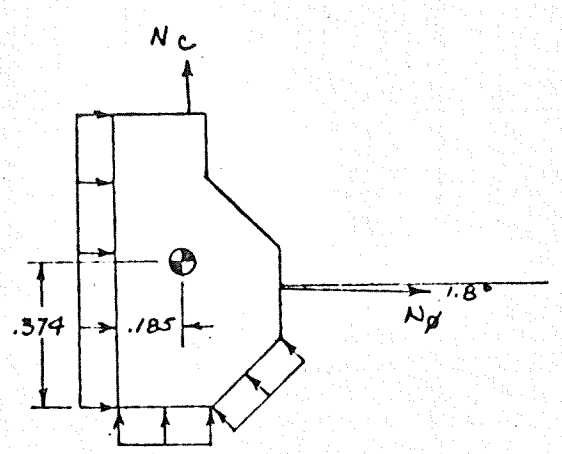

$$\Sigma F_v = 0$$

$$2\pi r N_c + P\pi(R^2 - r^2) - 2\pi R N_\phi \sin 1.8° = 0$$

$r = 3.0$ IN. $\quad P = 44$ PSI $\quad R = 3.44$ IN.

$N_c = \frac{Pr}{2} = 66$ #/IN $\quad R_D = 109.53$ IN.

$$N_\phi = \frac{PR}{2 \sin 1.8°} = 2410 \text{ \#/IN}$$

MOMENT ON RING FROM PRESSURE

$$P(.80 - .188)\left(.188 + \frac{.80 - .188}{2} - .374\right) - P(.44)(.22 - .185)$$
$$- \frac{Pr}{2}(.20 - .185) + \frac{PR_D}{2}(.44 - .185)\sin 1.8° - \frac{Pr}{2}\cos 1.8(.374 - .313)$$
$$= M$$

$$M = P(.0725 - .0154 - .0225 + .436) - 3.339$$
$$= -2.87\ P \quad \text{IN\#/IN}$$

5851533 DOME
LH_2 TANK FWD

RADIAL DEFLECTION

$$\delta = \frac{XR^2}{EA} \qquad X = 1\ \#/IN$$

ROTATION

$$\delta = \frac{XR^2}{EI} \qquad X = 1\ IN\#/IN$$

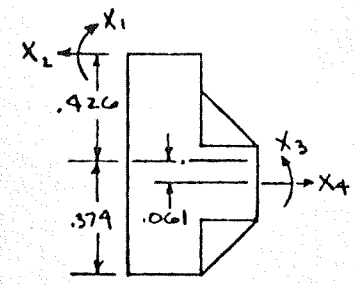

$$\delta_{11} = \delta_{33} = \frac{R^2}{EI} = \frac{3.185^2}{E(.0126)} = \frac{805}{E}$$

$$\delta_{12} = \delta_{21} = -\delta_{11}(.80-.374) = -\frac{343}{E}$$

$$\delta_{13} = -\delta_{11} = \delta_{31} = -\frac{805}{E}$$

$$\delta_{14} = \delta_{41} = -.061\,\delta_{11} = -\frac{49}{E}$$

$$\delta_{22} = \frac{R^2}{EA} + (.80-.374)(-\delta_{21}) = \frac{3.185^2}{E(.282)} + \frac{146}{E} = \frac{182}{E}$$

$$\delta_{23} = \delta_{32} = -\delta_{12} = +\frac{343}{E}$$

$$\delta_{24} = -\frac{R^2}{EA} + (.426)(.061)\,\delta_{11} = -\frac{36}{E} + \frac{21}{E} = -\frac{15}{E}$$

$$\delta_{34} = -\delta_{14} = +\frac{49}{E}$$

$$\delta_{44} = \frac{R^2}{EA} + (.061)^2\,\delta_{11} = \frac{36}{E} + (.044-.185)(\delta_{14})^2 \cong \frac{36}{E}$$

PRESSURE COEFFICIENTS

$$\delta_{1P} = -\delta_{3P} = -2.87(P)(\delta_{11}) = -\frac{2310}{E}$$

$$\delta_{2P} \doteq -\left[(.80-.188) + \frac{109.53}{2}\right]\frac{R^2}{EA} + (.80-.374)\,\delta_{1P} = -\frac{2976}{E}$$

$$\delta_{4P} = \left[(.8-.188) + \frac{109.53}{2}\right]\frac{R^2}{EA} + (\approx 0) = +\frac{1994}{E}$$

5851533 DOME
LH_2 TANK FWD

SHORT CONE INFLUENCE COEFFICIENTS

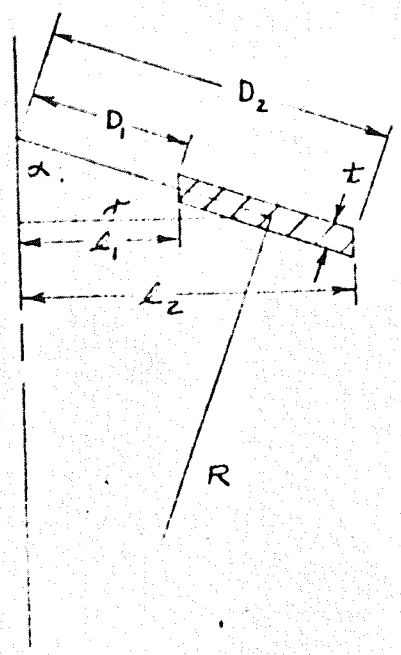

SHORT CONE S_1

$t = .250$ IN.

$r = 4.22$ IN.

$R = 109.655$ IN.

$\cos\alpha = \frac{4.22}{109.655} = .0385$

$\alpha = 87.8°$

$D_1 = \frac{\ell_1}{\sin\alpha} = 3.443$ IN.

$D_2 = \frac{\ell_2}{\sin\alpha} = 5.004$ IN.

SHORT CONE S_2

$t = .125$ IN.

$r = 5.75$ IN.

$R = 109.718$ IN.

$\cos\alpha = \frac{5.75}{109.718} = .0524$

$\alpha = 87°$

$D_1 = \frac{\ell_1}{\sin\alpha} = 5.007$ IN.

$D_2 = \frac{\ell_2}{\sin\alpha} = 6.509$ IN.

K+E ALBANENE 195L TRACING PAPER 66664

5851533 DOME
LH_2 TANK FWD

SHORT CONE S_1

$$\delta_{33} = \frac{7618}{E} \qquad \delta_{53} = -\frac{6395}{E}$$

$$\delta_{34} = -\frac{234}{E} \qquad \delta_{54} = \frac{206}{E}$$

$$\delta_{35} = -\frac{9294}{E} \qquad \delta_{55} = \frac{8928}{E}$$

$$\delta_{36} = -\frac{364}{E} \qquad \delta_{56} = \frac{334}{E}$$

$$\delta_{43} = -\frac{234}{E} \qquad \delta_{63} = -\frac{251}{E}$$

$$\delta_{44} = \frac{50}{E} \qquad \delta_{64} = -\frac{28}{E}$$

$$\delta_{45} = \frac{299}{E} \qquad \delta_{65} = \frac{334}{E}$$

$$\delta_{46} = -\frac{41}{E} \qquad \delta_{66} = \frac{63}{E}$$

SHORT CONE S_2

$$\delta_{55} = \frac{89,131}{E} \qquad \delta_{65} = -\frac{3045}{E}$$

$$\delta_{56} = -\frac{3045}{E} \qquad \delta_{66} = \frac{273}{E}$$

$$\delta_{57} = -\frac{100,415}{E} \qquad \delta_{67} = \frac{3554}{E}$$

$$\delta_{58} = -\frac{4279}{E} \qquad \delta_{68} = -\frac{47}{E}$$

5851533 DOME
LH_2 TANK FWD

$$\delta_{75} = -\frac{77,198}{E} \qquad \delta_{85} = -\frac{3290}{E}$$

$$\delta_{76} = \frac{2733}{E} \qquad \delta_{86} = -\frac{36}{E}$$

$$\delta_{77} = \frac{45,307}{E} \qquad \delta_{87} = \frac{3919}{E}$$

$$\delta_{78} = \frac{3918}{E} \qquad \delta_{88} = \frac{357}{E}$$

PRESSURE COEFFICIENTS

$$\delta_{3P} = \delta_{5P} = \delta_{7P} = 0 \quad \text{(NO ROTATION)}$$

SHORT CONE S_1

$$\delta_P = -\frac{R}{Et}(N_\theta - \mu N_\phi)\sin\phi \quad \text{[HOOKE'S LAW]}$$

$$N_\phi = N_\theta = \frac{PR}{2} \qquad R\sin\phi = r$$

$$t = .25 \text{ IN} \qquad r = 3.44;\ 5.0$$

$$R = 109.66 \text{ IN}$$

5851533 DOME
LH_2 TANK FWD

$$S_{4P} = -\frac{109.66(3.44)}{2E(.25)}(1-.3)$$

$$= -\frac{1056}{2E} = -\frac{528}{E}$$

$$S_{6P} = \frac{109.66(5.0)}{2E(.25)}(1-.3)$$

$$= \frac{1535}{2E} = \frac{768}{E}$$

SHORT CONE S_2

$t = .125$ IN. ; $R = 109.72$ IN. ; $r = 5.0, 6.5$

$$S_{6P} = -\frac{109.72(5.0)}{2E(.125)}(1-.3)$$

$$= -\frac{3072}{2E} = -\frac{1536}{E}$$

$$S_{8P} = \frac{109.72(6.5)}{2E(.125)}(1-.3)$$

$$= \frac{3994}{2E} = \frac{1997}{E}$$

5851533 DOME
LH_2 TANK FWD

SPHERICAL DOME INFLUENCE COEFFICIENTS

$$\delta = \frac{R}{Et}(N_\theta - \mu N_\phi) \quad \text{(HOOKE'S LAW)}$$

$$\delta_{8P} = \frac{-PR^2}{2Et}(1-\mu)\sin\phi \qquad P = 1 \text{ PSI}$$

$$\delta_{8P} = \frac{-(109.75)^2}{2E(.057)}(.7)(.0592) \qquad \sin\phi = \frac{6.5}{109.75} = .0592$$

$$= \frac{-4380}{E}$$

$$\delta_{7P} = 0 \quad \text{(NO ROTATION)}$$

$$\beta^4 = \frac{3(1-\mu^2)R^2}{t^2} = \frac{2.73(109.75)^2}{(.057)^2} = 10,120,963$$

$$\beta = 56.4$$

$$K_1 = 1 - \frac{1-2\mu}{2\beta}\cot\phi = 1 - \frac{.4}{2(56.4)}16.832 = .9403$$

$$K_2 = 1 - \frac{1+2\mu}{2\beta}\cot\phi = 1 - \frac{1.6}{2(56.4)}16.832 = .7612$$

$$\delta_{77} = \frac{4\beta^3}{KEtK_1} = \frac{4(56.4)^3}{(109.75)(.057)(.9403)E} = \frac{121,998}{E}$$

$$\delta_{78} = \frac{2\beta^2\sin\phi}{EtK_1} = -\frac{2(56.4)^2(.0592)}{E(.057)(.9403)} = -\frac{7027}{E}$$

$$\delta_{88} = \frac{\beta R\sin^2\phi}{Et}\left(K_2 + \frac{1}{K_1}\right) = \frac{56.4(109.75)(.0592)^2}{E(.057)}\left(.7612 + \frac{1}{.9403}\right)$$

$$= \frac{694}{E}$$

5851533 DOME
LH_2 TANK FWD

COEFFICIENT MATRIX

$$\delta_{ij} = \delta_{ij}^{1} + \delta_{ij}^{2}$$

$$\delta_{11} = \frac{4800}{E} + \frac{805}{E} = \frac{5605}{E}$$

$$\delta_{12} = \frac{1058}{E} - \frac{343}{E} = \frac{715}{E}$$

$$\delta_{13} = \frac{-805}{E}$$

$$\delta_{14} = -\frac{49}{E}$$

$$\delta_{21} = \frac{1058}{E} - \frac{343}{E} = \frac{715}{E}$$

$$\delta_{22} = \frac{465.5}{E} + \frac{182}{E} = \frac{647.5}{E}$$

$$\delta_{23} = \frac{343}{E}$$

$$\delta_{24} = \frac{-15}{E}$$

$$\delta_{31} = -\frac{805}{E}$$

$$\delta_{32} = \frac{343}{E}$$

$$\delta_{33} = \frac{805}{E} + \frac{7618}{E} = \frac{8423}{E}$$

$$\delta_{34} = \frac{49}{E} - \frac{234}{E} = -\frac{185}{E}$$

$$\delta_{35} = \frac{-9294}{E}$$

$$\delta_{36} = -\frac{364}{E}$$

$$\delta_{41} = -\frac{49}{E}$$

$$\delta_{42} = -\frac{15}{E}$$

K+E ALBANENE® TRACING PAPER 70107

5851533 DOME
LH_2 TANK FWD

$$\delta_{43} = \frac{49}{E} - \frac{234}{E} = -\frac{185}{E}$$

$$\delta_{44} = \frac{36}{E} + \frac{50}{E} = \frac{86}{E}$$

$$\delta_{45} = \frac{299}{E}$$

$$\delta_{46} = -\frac{41}{E}$$

$$\delta_{53} = -\frac{6395}{E}$$

$$\delta_{54} = \frac{206}{E}$$

$$\delta_{55} = \frac{8928}{E} + \frac{89131}{E} = \frac{98,059}{E}$$

$$\delta_{56} = \frac{334}{E} - \frac{3045}{E} = -\frac{2711}{E}$$

$$\delta_{57} = -\frac{100,415}{E}$$

$$\delta_{58} = -\frac{4279}{E}$$

$$\delta_{63} = -\frac{251}{E}$$

$$\delta_{64} = -\frac{28}{E}$$

$$\delta_{65} = \frac{334}{E} - \frac{3045}{E} = -\frac{2711}{E}$$

$$\delta_{66} = \frac{63}{E} + \frac{273}{E} = \frac{336}{E}$$

$$\delta_{67} = \frac{3554}{E}$$

$$\delta_{68} = -\frac{47}{E}$$

$$\delta_{75} = -\frac{77,198}{E}$$

$$\delta_{76} = \frac{2733}{E}$$

$$\delta_{77} = \frac{95307}{E} + \frac{121,998}{E} = \frac{217,305}{E}$$

$$\delta_{78} = \frac{3918}{E} - \frac{7027}{E} = \frac{-3109}{E}$$

$$\delta_{85} = -\frac{3290}{E}$$

$$\delta_{86} = -\frac{36}{E}$$

$$\delta_{87} = \frac{3919}{E} - \frac{7027}{E} = -\frac{3108}{E}$$

$$\delta_{88} = \frac{359}{E} + \frac{694}{E} = \frac{1053}{E}$$

5851533 DOME
LH_2 TANK FWD

CONSTANT MATRIX

$$C_1 = -\left(-\frac{2310}{E}\right)44 + \left[\begin{pmatrix}135\\-125\end{pmatrix} + \begin{pmatrix}679\\-875\end{pmatrix}(.255\,\mathrm{SIN}\,1.8^\circ - .061\,\mathrm{COS}\,1.8^\circ)\right]\left(-\frac{805}{E}\right)$$

$$= \frac{101{,}640}{E} + \begin{bmatrix}135 - 35.987\\-125 + 46.375\end{bmatrix} - \frac{805}{E} = +\frac{21{,}935}{E}\ ;\ +\frac{164{,}933}{E}$$

$$C_2 = -\left(-\frac{1857}{E} + \frac{87}{E}\right)44 + \left[\begin{pmatrix}135\\-125\end{pmatrix} + \begin{pmatrix}679\\-875\end{pmatrix}.255\,\mathrm{SIN}\,1.8 - .061\,\mathrm{COS}\,1.8^\circ\right]\left(\frac{343}{E}\right)$$

$$= +\frac{77{,}880}{E} + \begin{bmatrix}+99.013\\-78.625\end{bmatrix}\left(\frac{343}{E}\right) = \frac{111{,}841}{E}\ ;\ \frac{50{,}912}{E}$$

$$C_3 = -\frac{101{,}640}{E} + \begin{bmatrix}99.013\\-78.625\end{bmatrix}\left(\frac{805}{E}\right) = -\frac{21{,}935}{E}\ ;\ -\frac{164{,}933}{E}$$

$$C_4 = -\left(\frac{1994}{E} - \frac{528}{E}\right)(44) + \begin{bmatrix}99.013\\-78.625\end{bmatrix}\frac{49}{E} = -\frac{59{,}652}{E}\ ;\ -\frac{68{,}357}{E}$$

$$C_5 = 0$$

$$C_6 = +\frac{33{,}792}{E}$$

$$C_7 = 0$$

$$C_8 = +\frac{104{,}852}{E}$$

K+E ALBANENE TRACING PAPER 66666

FORM 29-8-1 (REV. 8-55)

PREPARED BY: GRH
CHECKED BY: DWO
DATE: 1-63
TITLE: DSV-4 PROPELLANT TANK

DOUGLAS AIRCRAFT COMPANY, INC.

SM DIVISION

PAGE: 9.1.37
MODEL: DSV-4
REPORT NO: SM 42569

SM 42569

5851533 DOME
LH_2 TANK FWD

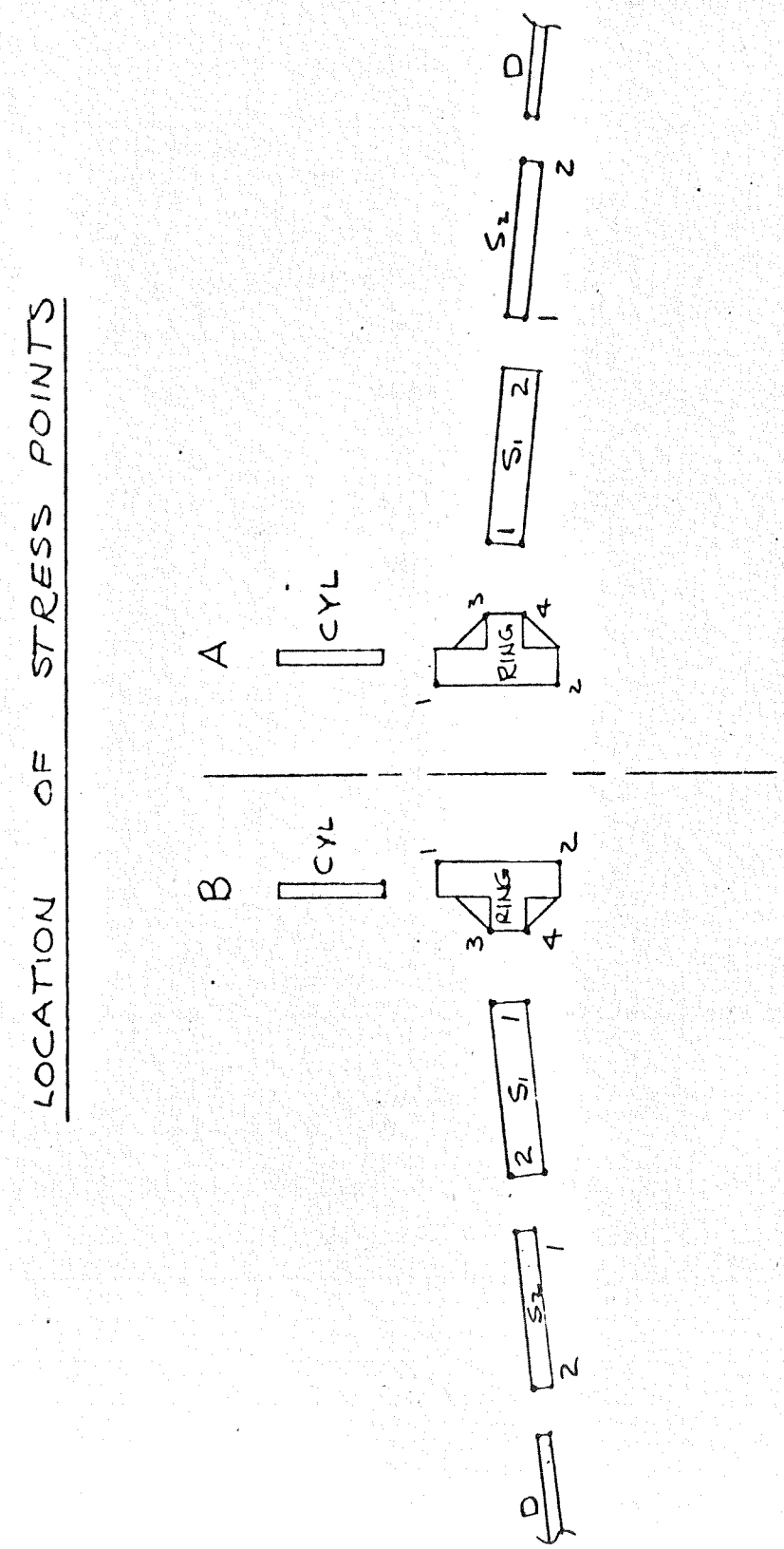

5851533 DOME
LH_2 TANK FWD

SOLUTIONS TO SIMULTANEOUS EQNS.

A)
$X_1 = -21$
$X_2 = 171.7$
$X_3 = 17.9$
$X_4 = -639.5$
$X_5 = 30.8$
$X_6 = 220$

B)
$X_1 = 17.2$
$X_2 = 41.5$
$X_3 = -.4$
$X_4 = -790.4$
$X_5 = 26.6$
$X_6 = 169$

$X_7 = 11.6$
$X_8 = 237.5$

THIS ANALYSIS ASSUMES THAT THE EFFECT OF EXTERNAL LOADS FROM THE HYDROGEN VENT LINE IS LOCAL AND IS CONFINED TO THE REGION OF THE SHELL NEAR THE WELDS. THE ASSUMPTION IS VALID BECAUSE THE SHELL IS QUITE STIFF IN THIS REGION AND WILL QUICKLY DAMP OUT ANY APPLIED LOADS. THE CURVES SUBSTANTIATE THIS ASSUMPTION (PAGES 9.1.13 - 9.1.20).

5851533 DOME
LH_2 TANK FWD

STRESSES IN SHORT CYLINDER

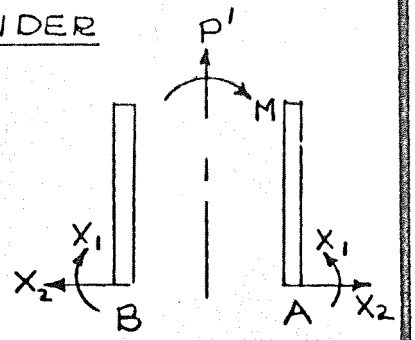

A) $X_1 = -21$ B) $X_1 = 17.2$ $T = -417°F$

$X_2 = 171.7$ $X_2 = 41.5$

$\beta = 2.27$ $R = 3.2$ $P = 44$ PSI

$P' = 370$ $M = 11{,}697$

MERIDIONAL STRESSES

$$\sigma_{\phi_A} = \frac{PR}{2t} + \frac{P'}{2\pi R t} \pm \frac{6X_1}{t^2} + \frac{Mc}{I}$$

$$= \frac{44(3.2)}{.2} + \frac{370}{2\pi(3.2)} \pm \frac{-6(21)}{(.1)^2} - \frac{11{,}697(3.2)}{\pi(3.2)^3(.1)}$$

$$= 704 + 184 \pm (-12{,}600) - 3636$$

$= -15{,}350$ PSI MAX-INNER FIBER AT A

$= +9{,}850$ PSI MAX-OUTER FIBER AT A

$$\sigma_{\phi_B} = 704 + 184 \pm \frac{17.2(6)}{.1^2} + 3689$$

$= 15{,}000$ PSI T IF

$= -5{,}700$ PSI C OF

CIRCUMFERENTIAL STRESSES

$$\sigma_{\theta_A} = \frac{PR}{t} + \frac{X_2}{t} + \frac{X_1(2\beta^2 R)}{t} + \mu\frac{6X_1}{t^2}$$

$$= 44(32) + 1717 - 21(2)(2.27)^2(32) \pm .3(6)(-21)(10)$$

$$= 1408 + 1717 - 6925 \pm (-3780)$$

$= -7580$ PSI C IF

$= -20$ OF

$$\sigma_{\theta_B} = 1408 + 415 + 17.2(2)(2.27)^2(32) \pm .3(6)(17.2)(100)$$

$$= 1408 + 415 + 5670 \pm 3100$$

$= 10{,}600$ PSI T IF

$= 4{,}400$ T OF

SM42569

5851533 DOME
LH_2 TANK FWD

STRESSES IN RING R

DISCONTINUITY FORCES
(PRESSURE)

A) $X_1 = -21$
$X_2 = 172$
$X_3 = 18$
$X_4 = -640$
$N\phi = 2410$
$N_X = 679$

B) $X_1 = 17$
$X_2 = 41.5$
$X_3 = -0.4$
$X_4 = -790$
$N\phi = 2410$
$N_X = 875$

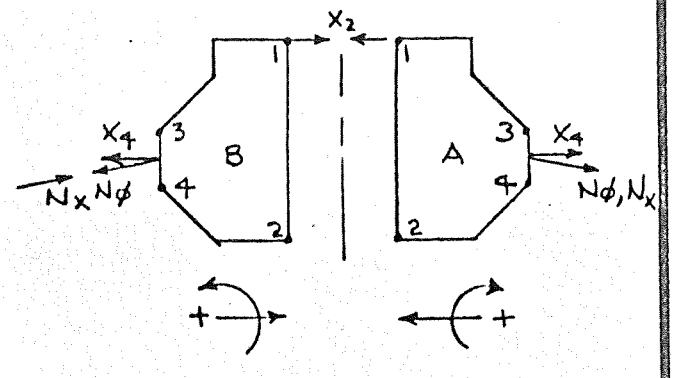

FROM COMPATIBILITY EQUATIONS

$$E\theta_A = X_1\delta_{11} + X_2\delta_{12} + X_3\delta_{13} + X_4\delta_{14} \pm C_1$$
$$= -21(805) + 172(-343) + 18(-805) - 640(-49)$$
$$-21{,}935 = -81{,}000$$

$$E\theta_B = 17(805) + 41.5(-343) - 0.4(-805) - 790(-49)$$
$$-164{,}933 = -126{,}500$$

$$E\delta_{2A} = X_1\delta_{21} + X_2\delta_{22} + X_3\delta_{23} + X_4\delta_{24} \pm C_2$$
$$= -21(-343) + 172(182) + 18(343) - 640(-15)$$
$$-111{,}841 = -57{,}600$$

$$E\delta_{2B} = 17(-343) + 41.5(182) - 0.4(343) - 790(-15)$$
$$-50{,}912 = -37{,}500$$

$$E\delta_{4A} = X_1\delta_{41} + X_2\delta_{42} + X_3\delta_{43} + X_4\delta_{44} \pm C_4$$
$$= -21(-49) + 172(-15) + 18(49) - 640(36)$$
$$+59{,}652 = +35{,}900$$

$$E\delta_{4B} = 17(-49) + 41.5(-15) - 0.4(49) - 790(36)$$
$$+68{,}357 = +38{,}400$$

5851533 DOME
LH_2 TANK FWD

$$\Sigma F_{H_A} = -X_2 + X_4 + N\phi + N_x$$
$$= -172 - 640 + 2410 + 679 = +2277$$

$$\Sigma F_{H_B} = -41.5 - 790 + 2410 - 875 = +704$$

ASSUMING ROTATION ABOUT THE CENTROID

$$r = (x^2 + y^2)^{\frac{1}{2}}$$

$$r_1 = \left[(.8 - .374)^2 + .185^2\right]^{1/2} = .464 \text{ IN}$$

$$r_2 = \left[.374^2 + .185^2\right]^{\frac{1}{2}} = .417 \text{ IN}$$

A) $$\sigma_{\theta_1} = \frac{E\,\delta_2}{ER} = +\frac{57,600}{3.2} = +18,000\ T$$

$$E\,\delta_{\theta_2} = r\,E\theta = .417\,(-81,000/E) = -\frac{33,800}{E}$$

$$\delta_{PT2} = \frac{\Sigma F_H R^2}{EA} + E\,\delta_{\theta_2} = \frac{2277(36) + 33,800}{E} = \frac{115,800}{E}$$

$$\sigma_{\theta_2} = \frac{E\,\delta}{ER} = \frac{115,800}{3.2} = +36,200\ T$$

$$E\,\delta_{\theta}^{3} \simeq E\,\delta_{\theta}^{4} \simeq 0$$

$$\sigma_{\theta_3} = \sigma_{\theta_4} = \frac{\Sigma F_H R^2}{EAR} = \frac{2277(36)}{3.44} = 23,800\ T$$

B) $$\sigma_{\theta_1} = \frac{-37,500}{3.2} = +11,700\ T$$

$$\sigma_{\theta_2} = \frac{.417(+126,500) + 704(36)}{3.2} = 24,400\ T$$

$$\sigma_{\theta_3} = \sigma_{\theta_4} = \frac{704(36)}{3.44} = 7,400\ T$$

5851533 DOME
LH_2 TANK FWD

A) $$\sigma_{\phi_{1,2}} = \frac{N_x \sin 1.8^\circ}{.25} + \frac{PR}{t}$$

$$= + \frac{679(.0314)}{.25} + \frac{44(3.2)}{.25} = +650T$$

$$\sigma_{\phi_{3,4}} = +679(.0314)\frac{1}{.44} + 44(3.2)\frac{1}{.44} = 370T$$

B) $$\sigma_{\phi_{1,2}} = \frac{-875(.0314)}{.25} + \frac{44(3.2)}{.25} = 450T$$

$$\sigma_{\phi_{3,4}} = -\frac{875(.0314)}{.44} + \frac{44(3.2)}{.44} = 260T$$

SM 42569

K+E ALBANENE TRACING PAPER 60806

5851533 DOME
LH_2 TANK FWD

SHORT CONE S_1 STRESSES

A)
$X_3 = 18$
$X_4 = -640$
$X_5 = 31$
$X_6 = 220$
$M_x = 135$
$N_x = 679$
$M_y = 221$
$N_y = 1696$

B)
$X_3 = -.4$
$X_4 = -790$
$X_5 = 27$
$X_6 = 169$
$M_x = 125$
$N_x = 875$
$M_y = 191$
$N_y = 2244$

$$\beta^4 = \frac{3(1-\mu^2)R^2}{t^2} = \frac{2.73(110)^2}{.25^2}$$

$\beta = 27$

$\sin\phi_1 = .0313$

$\sin\phi_2 = .0454$

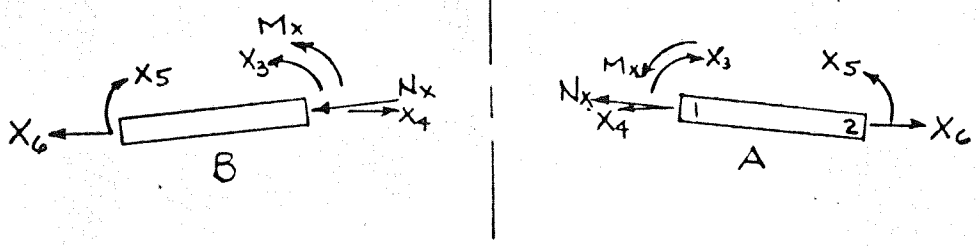

$$\sigma^A_{\phi_1} = \frac{PR}{2t} + \frac{X_4\cos\phi_1}{t} + \frac{N_x}{t} \pm \frac{6X_3}{t^2} \pm \frac{6M_x}{t^2}$$

$$\sigma^A_{\theta_1} = \frac{PR}{2t} - \frac{X_4}{t}\beta\sin\phi_1\left(\frac{1}{K_1} + \frac{K_1+K_2}{2}\right) + \frac{N_y}{t} + \frac{X_3 2\beta^2}{tRK_1} \pm \frac{6M_y}{t^2} \pm \frac{\mu X_3(6)}{t^2}$$

$$\sigma^A_{\phi_2} = \frac{X_6}{t}\cos\phi_2 + \frac{PR}{2t} \pm \frac{6X_5}{t^2}$$

$$\sigma^A_{\theta_2} = \frac{PR}{2t} + \frac{X_6}{t}\beta\sin\phi_2\left(\frac{1}{K_1} + \frac{K_1+K_2}{2}\right) + \frac{X_5 2\beta^2}{tRK} \pm \frac{\mu X_5(6)}{t^2}$$

A) $$\sigma_{\phi_1} = \frac{44(110)}{2(.25)} - \frac{640}{.25} + \frac{679}{.25} \pm \frac{6(18)}{.25^2} \pm (-6)\frac{135}{.25^2}$$

$$= 9680 - 2560 + 2720 \pm 1730 \pm (-13{,}000) = \begin{matrix} -1430 \text{ IF} \\ +21{,}100 \text{ OF} \end{matrix}$$

$$\sigma_{\theta_1} = 9680 + \frac{640}{.25}(27)(.0313)(2) + \frac{1696}{.25} + \frac{18(2)(27)^2}{.25(110)(1)}$$

$$\pm(-6)\frac{221}{.25^2} \pm \frac{.3(18)6}{.25^2}$$

$$= 9680 + 4330 + 6780 + 950 \pm (-21{,}200) \pm 520 = \begin{matrix} +1060 \text{ IF} \\ +42{,}400 \text{ OF} \end{matrix}$$

SM42569

5851533 DOME
LH_2 TANK - FWD

A) $\sigma\phi_2 = \frac{220}{.25} + 9680 \pm \frac{6(31)}{.25^2}$

$= 880 + 9680 \pm 2980 = \begin{matrix} +13,500 \text{ IF} \\ +7,600 \text{ OF} \end{matrix}$

$\sigma\theta_2 = 9680 + \frac{220}{.25}(27)(.0454)(2) + \frac{31(2)(27)^2}{.25(110)(1)} \pm .3\,\frac{31(6)}{.25^2}$

$= 9680 + 2100 + 1640 \pm 890$

$= 14,300 \text{ IF}$
$\quad 12,500 \text{ OF}$

B) $\sigma\phi_1 = 9680 - \frac{790}{.25} - \frac{875}{.25} \pm \frac{(-6)(.4)}{.25^2} \pm \frac{6(125)}{.25^2}$

$= 9680 - 3160 - 3500 \pm (-40) \pm 12,000 = \begin{matrix} 15,000 \text{ IF} \\ -8,900 \text{ OF} \end{matrix}$

$\sigma\theta_1 = 9680 + \frac{790}{.25}(27)(.0313)(2) - \frac{2244}{.25} - \frac{.4(2)(27)^2}{.25(110)(1)}$

$\pm \frac{6(191)}{.25^2} = (-.4)(.3)(6)(16)$

$= 9680 + 5340 - 8980 - 20 \pm 18,300 \pm (-10)$

$= +24,300 \text{ IF}$
$\quad -12,300 \text{ OF}$

$\sigma\phi_2 = \frac{169}{.25} + 9680 \pm \frac{6(27)}{.25^2} = 680 + 9680 \pm 2600$

$= 13,000 \text{ IF}$
$= 7,800 \text{ OF}$

$\sigma\theta_2 = 9680 + \frac{169}{.25}(27)(.0454)(2) + \frac{27(2)(27)^2}{.25(110)(1)} \pm .3(2600)$

$= 9680 + 1660 + 1430 \pm 780$

$= 13,400 \text{ IF}$
$\quad 12,100 \text{ OF}$

K+E ALBANENE® TRACING PAPER 70187

5851533 DOME
LH_2 TANK FWD

SHORT CONE S_2 STRESSES

$X_5 = 30.8$ $\quad \beta = 38$

$X_6 = 220$ $\quad \sin\phi_1 = .0454$

$X_7 = 11.6$ $\quad \sin\phi_2 = .0591$

$X_8 = 237.5$

$$\sigma_{\phi_1} = \frac{PR}{2t} - \frac{X_6 \cos\phi}{t} \pm \frac{6X_5}{t^2}$$

$$= \frac{44(110)}{2(.125)} + \frac{220(.99)}{.125} \pm \frac{6(30.8)}{.125^2} = 19{,}400 + 1740 \pm 11{,}820$$

$$= 33{,}000 \text{ IF}$$

$$= 9{,}320 \text{ OF}$$

$$\sigma_{\phi_2} = 19{,}400 + \frac{237.5(.99)}{.125} \pm \frac{6(11.6)}{.125^2} = 21{,}280 \pm 4450$$

$$= 25{,}700 \text{ IF}$$

$$= 16{,}800 \text{ OF}$$

$$\sigma_{\theta_1} = \frac{PR}{2t} + \frac{2\beta^2 X_5}{RtK_1} - \frac{X_6 \beta \sin\phi_1}{t}\left(\frac{1}{K_1} + \frac{K_1 + K_2}{2}\right) \pm \mu \frac{6X_5}{t^2}$$

$$= 19{,}400 + \frac{2(38)^2(30.8)}{110(.125)1} - \frac{220(38)(.0454)(2)}{.125} \pm 3550$$

$$= 19{,}400 + 6470 - 6100 \pm 3550$$

$$= 23{,}300 \text{ IF}$$

$$= 16{,}200 \text{ OF}$$

$$\sigma_{\theta_2} = 19{,}400 + \frac{2(38)^2(11.6)}{110(.125)(1)} + \frac{237.5(38)(.0591)(2)}{.125} \pm 1300$$

$$= 19{,}400 + 2500 + 8500 \pm 1300$$

$$= 31{,}700 \text{ IF}$$

$$= 29{,}100 \text{ OF}$$

5851533 DOME
LH_2 TANK FWD

SPHERICAL DOME D STRESSES

$X_7 = 11.6 \qquad B = 56.4$

$X_8 = 237.5 \qquad \sin\phi = \frac{6.5}{110} = .0591$

$$\sigma_\phi = \frac{PR}{2t} + \frac{X_8}{t}\cos\phi \pm \frac{6X_7}{t^2}$$

$$= \frac{44(110)}{2(.057)} + \frac{237.5}{.057} \pm \frac{11.6(6)}{.057^2}$$

$$= 42{,}400 + 4160 \pm 21{,}230$$

$$= 67{,}790 \text{ IF}$$
$$25{,}330 \text{ OF}$$

$$\sigma_\theta = \frac{PR}{2t} + \frac{2B^2X_7}{RtK_1} - \frac{X_8 B \sin\phi}{t}\left[\frac{1}{K_1} + \frac{K_1+K_2}{2}\right] \pm \mu\frac{6X_7}{t^2}$$

$$= 42{,}400 + \frac{2(56.4)^2(11.6)}{110(.057)(1)} - \frac{2(237.5)(56.4)(.0591)}{.057}$$

$$\pm .3(21{,}230)$$

$$= 42{,}400 + 11{,}770 - 27{,}770 \pm 6{,}400$$

$$= 32{,}800 \text{ IF}$$
$$20{,}000 \text{ OF}$$

K+E ALBANENE® TRACING PAPER 70187

SM42589

5851533 DOME
LH_2 TANK-FWD

LH_2 VENT - FWD DOME

PART			STRESS (YIELD)	ALLOWABLE	M.S.
CYLINDER	A	σ_ϕ IF σ_θ IF	-18,600 -9,200	51,000	HIGH
		σ_ϕ OF σ_θ OF	11,900 -25	51,000	HIGH
	B	σ_ϕ σ_θ	18,200 12,800	51,000	HIGH
		σ_ϕ σ_θ	-6,900 5,300	51,000	HIGH
RING	A	1 σ_ϕ σ_θ	790 21,800	51,000	1.34
		2 σ_ϕ σ_θ	790 43,800	51,000	.18
		3 σ_ϕ σ_θ	450 28,800	60,000	HIGH
		4 σ_ϕ σ_θ	450 28,800	60,000	HIGH
	B	1 σ_ϕ σ_θ	540 14,200	51,000	HIGH
		2 σ_ϕ σ_θ	540 29,500	51,000	.75
		3 σ_ϕ σ_θ	310 9,000	60,000	HIGH
		4 σ_ϕ σ_θ	310 9,000	60,000	HIGH

$$M.S. = \frac{\sigma^*_{ALLOWABLE}}{\sqrt{\dfrac{(\sigma_\phi - \sigma_\theta)^2 + \sigma_\phi^2 + \sigma_\theta^2}{2}}} - 1$$

* ALLOWABLES PG 2.3 TO 2.22

K+E ALBANENE TRACING PAPER

FORM 28-6-1 (REV. 6-63)

PREPARED BY: GPA
CHECKED BY: DWO
DATE: 1-63
TITLE: DSV-4 PROPELLANT TANK

DOUGLAS AIRCRAFT COMPANY, INC.

SM DIVISION

PAGE: 9.1.43
MODEL: DSV-4
REPORT NO: SM 42569

SM 42569

5851533 DOME
LH_2 TANK-FWD

PART			STRESS (YIELD)	ALLOWABLE	M.S.
SHORT CONE 1	A	1	σ_ϕ IF σ_θ IF	-1,700 1,300	70,000	HIGH
			σ_ϕ OF σ_θ OF	25,500 51,300	70,000	.58
		2	σ_ϕ σ_θ	16,300 17,300	73,500	HIGH
			σ_ϕ σ_θ	9,200 15,100	73,500	HIGH
	B	1	σ_ϕ σ_θ	18,200 29,400	70,000	1.72
			σ_ϕ σ_θ	-10,800 -14,900	70,000	HIGH
		2	σ_ϕ σ_θ	15,700 16,200	73,500	HIGH
			σ_ϕ σ_θ	9,400 14,600	↑	HIGH
SHORT CONE 2		1	σ_ϕ σ_θ	39,900 28,200		1.06
			σ_ϕ σ_θ	11,300 19,600		HIGH
		2	σ_ϕ σ_θ	31,100 38,400		1.08
			σ_ϕ σ_θ	20,300 35,200		1.40
DOME			σ_ϕ σ_θ	82,000 39,700	↓	.04
			σ_ϕ σ_θ	30,600 24,200	73,500	1.62

K+E ALBANENE® TRACING PAPER 00096

3864247 LH_2 TANK
DOOR INSTL

5863800
STRUCTURE ASSY

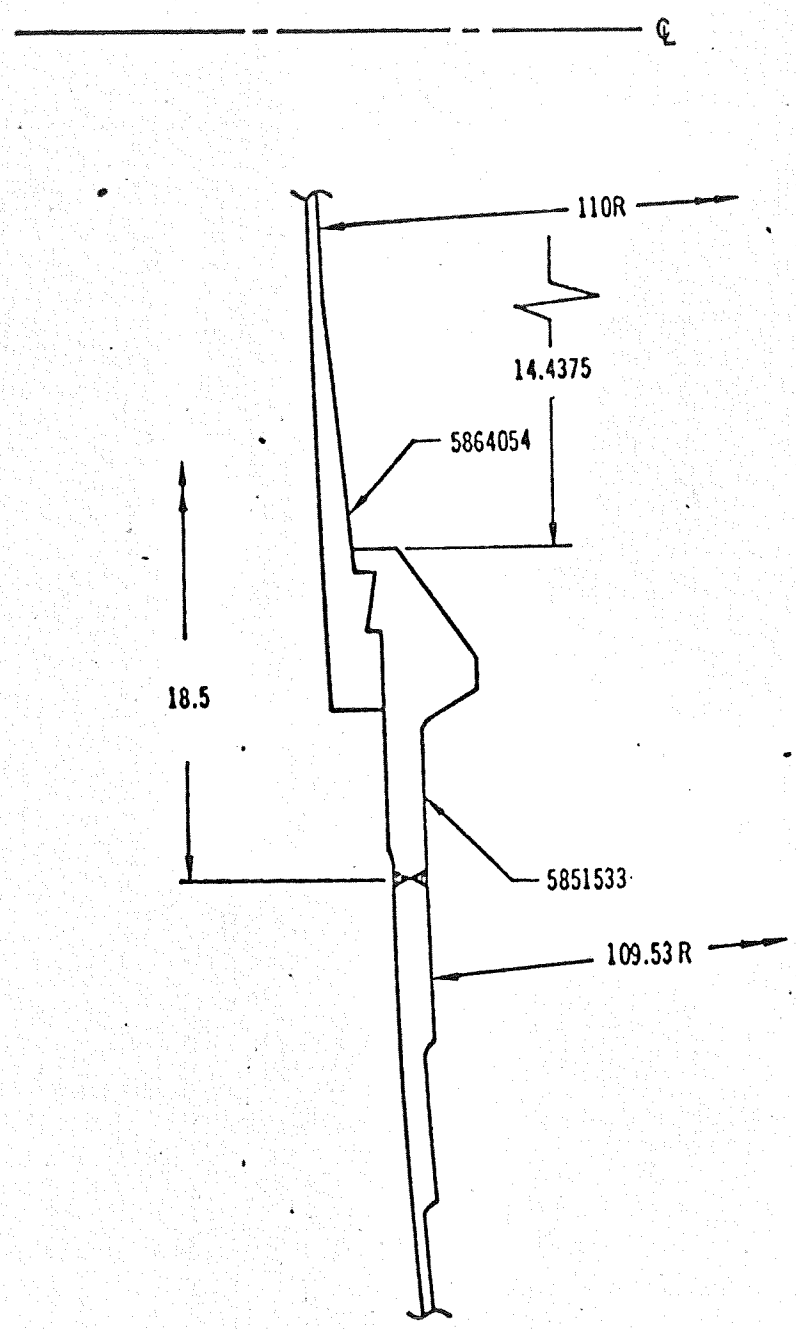

MAT'L 2014-T6

SM42569

5863800
STRUCTURE ASSY

SM425669

FWD DOME – DOOR JOINT

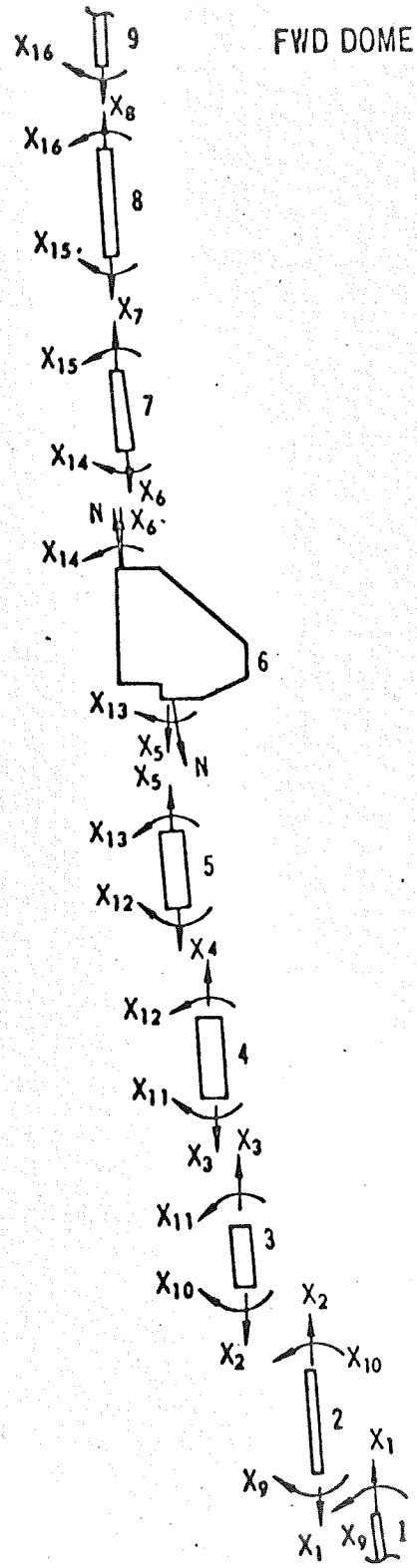

5563800
STRUCTURE ASSY

PART I

$R = 109.75$

$T = -178$

$P = 44$ PSI (NM)

$\alpha \Delta T = -2800 \times 10^{-6}$

$E = 11.2 \times 10^6$

$t = .057$

$\phi = 16°$

$$\beta^4 = 3(1-.09)\frac{109.75^2}{.057^2} = 1011.8 \times 10^4$$

$$\beta^3 = 179{,}416; \quad \beta^2 = 3181; \quad \beta = 56.4$$

$$K_1 = 1 + \frac{1-.6}{2(56.4)}(3.4874) = 1.012$$

$$K_2 = 1 + \frac{1+.6}{2(56.4)}(3.4874) = 1.049$$

$$\delta_{1,1} = X_1 \frac{56.4(109.75)(.0766)(1.049 + .988)}{11.2 \times 10^6 \times .057} = .1501 \times 10^{-2} X_1$$

$$\delta_{1,q} = -X_q \frac{2(3181)(.2756)}{11.2(10^6)(.057)(1.012)} = -.2714 \times 10^{-2} X_q$$

$$\delta_{1,p} = -\frac{44(109.75)^2(.7)(.2756)}{2(11.2)10^6(.057)} = -8.0079 \times 10^{-2}$$

$$\delta_{1,T} = +.28(109.75)(.2756)10^{-2} = +8.4692 \times 10^{-2}$$

$$\delta_{q,1} = -.2714 \times 10^{-2} X_q$$

$$\delta_{q,q} = X_q \frac{4(179{,}416)10^{-6}}{11.2(.057)(109.75)(1.012)} = 1.0121 \times 10^{-2} X_q$$

5863800
STRUCT ASSY

PART 2

$P = 44$ PSI (LM)

$R = 109.75$

$\phi_{AVE} = 14°6'$

$E = 11.2 \times 10^6$

$\alpha\Delta T = -2800 \times 10^{-6}$

$\delta_{1,1} = .1433 \times 10^{-2} X_1$

$\delta_{1,2} = -.0015 \times 10^{-2} X_2$

$\delta_{1,9} = .2713 \times 10^{-2} X_9$

$\delta_{1,10} = .0095 \times 10^{-2} X_{10}$

$$\delta_{1,P} = \frac{44(109.75)^2(.7)(.2436)}{2(11.2)(10^6)(.057)} = +7.0781 \times 10^{-2}$$

$$\delta_{1,T} = -.28(109.75)(.2436) = -7.4858 \times 10^{-2}$$

$\delta_{2,1} = -.0021 \times 10^{-2} X_1$

$\delta_{2,2} = .0776 \times 10^{-2} X_2$

$\delta_{2,9} = -.0095 \times 10^{-2} X_9$

$\delta_{2,10} = -.1973 \times 10^{-2} X_{10}$

$\delta_{2,P} = -7.0781 \times 10^{-2}$

$\delta_{2,T} = +7.4858 \times 10^{-2}$

$\delta_{9,1} = .2713 \times 10^{-2} X_1$

$\delta_{9,2} = -.0068 \times 10^{-2} X_2$

$\delta_{9,9} = +1.0227 \times 10^{-2} X_9$

$\delta_{9,10} = .0204 \times 10^{-2} X_{10}$

$\delta_{10,1} = .0132 \times 10^{-2} X_1$

$\delta_{10,2} = -.1973 \times 10^{-2} X_2$

$\delta_{10,9} = .0286 \times 10^{-2} X_9$

$\delta_{10,10} = 1.0272 \times 10^{-2} X_{10}$

5863800
STRUCTURE ASSY

SM 42569

PART 3

$\delta_{1,2} = .0723 \times 10^{-2} X_2$

$\delta_{2,3} = .0276 \times 10^{-2} X_3$

$\delta_{2,10} = .3450 \times 10^{-2} X_{10}$

$\delta_{2,11} = -.3323 \times 10^{-2} X_{11}$

$\delta_{2,P} = \dfrac{44(109.72)^2(.7)(.1902)}{2(11.2)(10^6)(.125)} = +2.5187 \times 10^{-2}$

$\delta_{2,T} = -.2800(109.72)(.1902)10^{-2} = -5.8432 \times 10^{-2}$

$\delta_{3,2} = .0296 \times 10^{-2} X_2$

$\delta_{3,3} = .0666 \times 10^{-2} X_3$

$\delta_{3,10} = .3401 \times 10^{-2} X_{10}$

$\delta_{3,11} = -.3309 \times 10^{-2} X_{11}$

$\delta_{3,P} = -2.5187 \times 10^{-2}$

$\delta_{3,T} = +5.8432 \times 10^{-2}$

$\delta_{10,2} = .3450 \times 10^{-2} X_2$

$\delta_{10,3} = .3165 \times 10^{-2} X_3$

$\delta_{10,10} = 2.3389 \times 10^{-2} X_{10}$

$\delta_{10,11} = -2.2271 \times 10^{-2} X_{11}$

$\delta_{11,2} = -.3571 \times 10^{-2} X_2$

$\delta_{11,3} = -.3309 \times 10^{-2} X_3$

$\delta_{11,10} = -2.3931 \times 10^{-2} X_{10}$

$\delta_{11,11} = 2.3546 \times 10^{-2} X_{11}$

K+E ALBANENE TRACING PAPER 70083

5863800
STRUCTURE ASSY

PART 4
CONE

$P = 44$ PSI $\quad E = 11.2 \times 10^6$

$T = -185°$ $\quad \alpha\Delta T = -2880 \times 10^{-6}$ $\quad \phi = 10°9'$

$t = .25$ $\quad R = 109.66$

$\delta_{3,3} = .0211 \times 10^{-2} X_3$

$\delta_{3,4} = .0039 \times 10^{-2} X_4$

$\delta_{3,11} = .0853 \times 10^{-2} X_{11}$

$\delta_{3,12} = -.0820 \times 10^{-2} X_{12}$

$\delta_{3,P} = \dfrac{44(109.66^2)(.7)(.1762)}{2\,(11.2)10^6\,(.25)} = 1.1654 \times 10^{-2}$

$\delta_{3\,T} = -.2880(109.66)(.1762)10^{-2} = -5.5648 \times 10^{-2}$

$\delta_{4,3} = .0043 \times 10^{-2} X_3$

$\delta_{4,4} = .0194 \times 10^{-2} X_4$

$\delta_{4,11} = .0847 \times 10^{-2} X_{11}$

$\delta_{4,12} = -.0817 \times 10^{-2} X_{12}$

$\delta_{4,P} = -1.1654 \times 10^{-2}$

$\delta_{4,T} = +5.5648 \times 10^{-2}$

$\delta_{11,3} = .0853 \times 10^{-2} X_3$

$\delta_{11,4} = .0779 \times 10^{-2} X_4$

$\delta_{11,11} = .5755 \times 10^{-2} X_{11}$

$\delta_{11,12} = -.5490 \times 10^{-2} X_{12}$

$\delta_{12,3} = -.0892 \times 10^{-2} X_3$

$\delta_{12,4} = -.0817 \times 10^{-2} X_4$

$\delta_{12,11} = -.5972 \times 10^{-2} X_{11}$

$\delta_{12,12} = +.5801 \times 10^{-2} X_{12}$

K+E ALBANENE TRACING PAPER 70963

5863800
STRUCTURE ASSY

PART 5
CONE

$P = 44$ PSI $\quad E = 11.23 \times 10^6$

$T = -193^\circ \quad \alpha\Delta T = -2950 \times 10^{-6} \quad \phi = 4^\circ 52'$

$t = .375 \quad R = 109.72$

$\delta_{4,4} = .0049 \times 10^{-2} X_4$

$\delta_{4,5} = -.0015 \times 10^{-2} X_5$

$\delta_{4,12} = .0158 \times 10^{-2} X_{12}$

$\delta_{4,13} = -.0149 \times 10^{-2} X_{13}$

$$\delta_{4,P} = -\frac{44\,(109.72)^2(.7)(.0848)}{2\,(11.23)10^6\,(.375)} = .3767 \times 10^{-2}$$

$\delta_{4,T} = -.2950\,(109.72)(.0848)\,10^{-2} = -2.7448 \times 10^{-2}$

$\delta_{5,4} = -.0017 \times 10^{-2} X_4$

$\delta_{5,5} = .0045 \times 10^{-2} X_5$

$\delta_{5,12} = +.0165 \times 10^{-2} X_{12}$

$\delta_{5,13} -.0155 \times 10^{-2} X_{13}$

$\delta_{5,P} = -.3767 \times 10^{-2}$

$\delta_{5,T} = +2.7448 \times 10^{-2}$

$\delta_{12,4} = .0158 \times 10^{-2} X_4$

$\delta_{12,5} = .0145 \times 10^{-2} X_5$

$\delta_{12,12} = .1639 \times 10^{-2} X_{12}$

$\delta_{12,13} = -.1524 \times 10^{-2} X_{13}$

$\delta_{13,4} = -.0170 \times 10^{-2} X_4$

$\delta_{13,5} = -.0155 \times 10^{-2} X_5$

$\delta_{13,12} = -.1737 \times 10^{-2} X_{12}$

$\delta_{13,13} = +.1657 \times 10^{-2} X_{13}$

K+E ALBANENE® TRACING PAPER 70083

5863800
STRUCTURE ASSY

PART 6

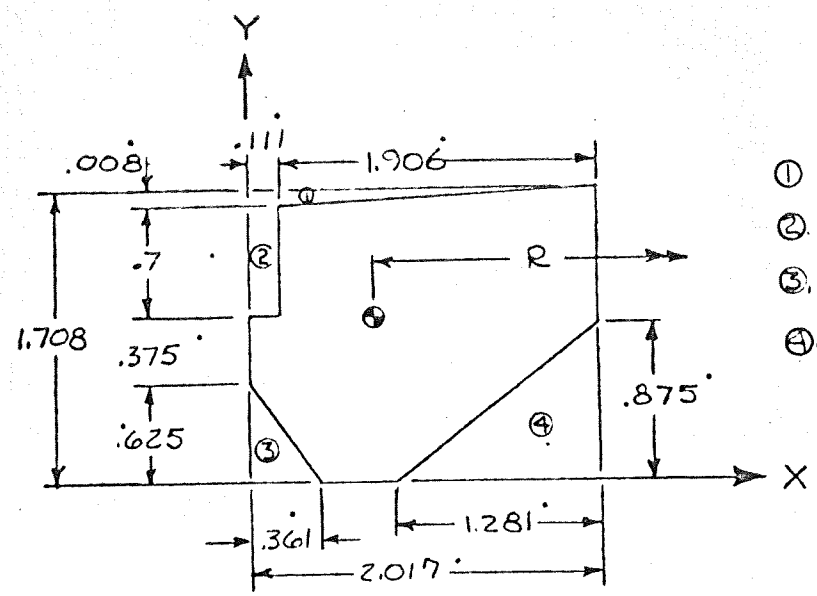

PT	AREA	$\bar{Y}$	$\bar{X}$	$A\bar{X}$	$A\bar{Y}$	$A\bar{Y}^2$	I_{x_0}
–	3.445	.854	1.0085	3.4743	2.942	2.5125	.8375
1	-.0076	1.7053	.7463	-.0057	-.0130	-.0221	-.0000
2	-.0786	1.354	.0555	-.0044	-.1064	-.1441	-.0033
3	-.1128	.2083	.1203	-.0136	-.0235	-.0047	-.0024
4	-.5605	.2916	1.590	-.8910	-.1634	-.0476	-.0238
	2.6855			2.5596	2.6357	2.294	.8080

$$\bar{X} = \frac{2.5596}{2.6855} = .953$$

$$\bar{Y} = \frac{2.6357}{2.6855} = .981$$

$$I_{x_{CG}} = .808 + 2.294 - 2.6855(.981)^2 = .5176$$

$$R = 14.4375 + 2.017 - .953 = 15.502$$

SM42569

5863800
STRUCTURE ASSY

PART 6
RING

- $T = -205°$
- $A = 2.686$
- $I = .518$
- $R = 15.502$

- $a = .1685$
- $b = .047$
- $c = .506$
- $d = .645$
- $E = 11.26 \times 10^6$
- $\alpha \Delta T = -3080 \times 10^{-6}$
- $N_3 = 2420$ LIMIT
- $P = 44$ PSI
- $e = .0555$

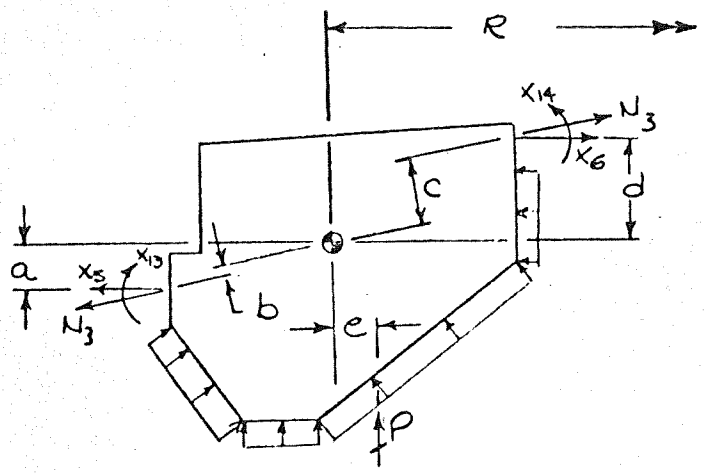

- $\dfrac{R^2}{EA} = \dfrac{15.502^2(10^{-6})}{11.26(2.686)} = .0008 \times 10^{-2}$

- $\dfrac{R^2}{EI} = \dfrac{15.502^2(10^{-6})}{11.26(.518)} = .0041 \times 10^{-2}$

- $\delta_{5,5} = [.0008 + .1685^2(.0041)]\, 10^{-2} X_5 = .0009 \times 10^{-2} X_5$

- $\delta_{5,6} = [-.0008 + .1685(.645)(.0041)]\, 10^{-2} X_6 = -.0004 \times 10^{-2} X_6$

- $\delta_{5,13} = .1685(.0041)\, 10^{-2} X_{13} = .0007 \times 10^{-2} X_{13}$

- $\delta_{5,14} = -.0007\, 10^{-2} X_{14}$

- $\delta_{5,N_3} = .1685(.047 + .506)(.0041)(2420)\, 10^{-2} = .9245 \times 10^{-2}$

- $\delta_{5,T} = -.3080(15.502)(10^{-2}) = -4.7746 \times 10^{-2}$

$\delta_{5,P} = -44(2.017)(.0555)(.0041)(.1685)\, 10^{-2} = -.0034 \times 10^{-2}$.

K+E ALBANENE® TRACING PAPER 70083

SM 42569

5863800
STRUCTURE ASSY

$\delta_{6,P} = -44(2.017)(.0555)(.645)(.0041)10^{-2}$
$= -.0130 \times 10^{-2}$.

$\delta_{6,5} = -.0004 \times 10^{-2} X_5$

$\delta_{6,6} = \left[.0008 + (.645)^2(.0041)\right] 10^{-2} X_6 = .0025 \times 10^{-2} X_6$

$\delta_{6,13} = .645(.0041)10^{-2} X_{13} = .0026 \times 10^{-2} X_{13}$

$\delta_{6,14} = -.0026\, 10^{-2} X_{14}$

$\delta_{6,N_3} = .645(.047 + .506)(2420)(.0041)10^{-2} = 3.5390 \times 10^{-2}$

$\delta_{6,T} = +4.7746 \times 10^{-2}$

$\delta_{13,5} = .0007 \times 10^{-2} X_5$

$\delta_{13,P} = -44(2.017)(.0555)(.0041)(10^{-2}) = -.0202 \times 10^{-2}$

$\delta_{13,6} = .0026 \times 10^{-2} X_6$

$\delta_{13,13} = .0041 \times 10^{-2} X_{13}$

$\delta_{13,14} = -.0041 \times 10^{-2} X_{14}$

$\delta_{13,N_3} = .553(2420)(.0041)10^{-2} = 5.4869 \times 10^{-2}$

$\delta_{14,5} = -.0007 \times 10^{-2} X_5$

$\delta_{14,6} = -.0026 \times 10^{-2} X_6$

$\delta_{14,13} = -.0041 \times 10^{-2} X_{13}$

$\delta_{14,14} = +.0041 \times 10^{-2} X_{14}$

$\delta_{14,N_3} = -5.4869 \times 10^{-2}$

$\delta_{14,P} = +.0202 \times 10^{-2}$.

SM42569

K+E ALBANENE TRACING PAPER 70885

5863800
STRUCTURE ASSY

PART 7
CONE

$P = 44$ PSI $\quad E = 11.25 \times 10^6$

$T = -197 \quad \alpha\Delta T = -3000 \times 10^{-6} \quad \phi = 6°58'$

$t = .164 \quad R = 110.08$

$\delta_{66} = .0093 \times 10^{-2} X_6$

$\delta_{67} = .0071 \times 10^{-2} X_7$

$\delta_{6,14} = .0221 \times 10^{-2} X_{14}$

$\delta_{6,15} = -.0178 \times 10^{-2} X_{15}$

$$\delta_{6P} = \frac{44(110.08)^2(.7)(.1213)}{2(11.25)10^6(.164)} = 1.2269 \times 10^{-2}$$

$\delta_{6,T} = -.3(110.08)(.1213)10^{-2} = -4.0058 \times 10^{-2}$

$\delta_{76} = .0084 \times 10^{-2} X_6$

$\delta_{77} = .0491 \times 10^{-2} X_7$

$\delta_{7,14} = .0655 \times 10^{-2} X_{14}$

$\delta_{7,15} = -.0987 \times 10^{-2} X_{15}$

$\delta_{7,P} = -1.2269 \times 10^{-2}$

$\delta_{7,T} = +4.0058 \times 10^{-2}$

$\delta_{14,6} = .0221 \times 10^{-2} X_6$

$\delta_{14,7} = .0556 \times 10^{-2} X_7$

$\delta_{14,14} = .1203 \times 10^{-2} X_{14}$

$\delta_{14,15} = -.0812 \times 10^{-2} X_{15}$

$\delta_{15,6} = -.0210 \times 10^{-2} X_6$

$\delta_{15,7} = -.0987 \times 10^{-2} X_7$

$\delta_{15,14} = -.0957 \times 10^{-2} X_{14}$

$\delta_{15,15} = .3871 \times 10^{-2} X_{15}$

K+E ALBANENE® TRACING PAPER 70663

5863800
STRUCTURE ASSY

PART 8

$R = 110.03$ $T = -193$

$P = 44$ PSI

$E = 11.23 \times 10^6$

$\alpha \Delta T = -.295 \times 10^{-2}$

$\phi_{AVE} = 5°21'$.

$t = .063$

$\delta_{7,7} = .0401 \times 10^{-2} X_7$. $\delta_{7,P} = \dfrac{44(110.03)^2(.7)(.0932)}{2(11.23)(.063)(10^6)}$

$\delta_{7,8} = -.0002 \times 10^{-2} X_8$ $= 2.4560 \times 10^{-2}$.

$\delta_{7,15} = .1499 \times 10^{-2} X_5$. $\delta_{7,T} = -.295(110.03)(.0932)(10^{-2})$

$\delta_{7,16} = .0037 \times 10^{-2} X_{16}$. $= -3.0252 \times 10^{-2}$.

$\delta_{8,7} = -.0004 \times 10^{-2} X_7$. $\delta_{8,P} = -2.4560 \times 10^{-2}$

$\delta_{8,8} = .0084 \times 10^{-2} X_8$. $\delta_{8,T} = +3.0252 \times 10^{-2}$

$\delta_{8,15} = -.0094 \times 10^{-2} X_{15}$.

$\delta_{8,16} = -.0610 \times 10^{-2} X_{16}$.

$\delta_{15,7} = .1499 \times 10^{-2} X_7$.	$\delta_{16,7} = +.0005 \times 10^{-2} X_7$.
$\delta_{15,8} = -.0017 \times 10^{-2} X_8$.	$\delta_{16,8} = -.0610 \times 10^{-2} X_8$.
$\delta_{15,15} = 1.0988 \times 10^{-2} X_{15}$.	$\delta_{16,15} = +.0953 \times 10^{-2} X_{15}$.
$\delta_{15,16} = .0177 \times 10^{-2} X_{16}$.	$\delta_{16,16} = +.9495 \times 10^{-2} X_{16}$.

K+E ALBANENE TRACING PAPER 91058

5863800
STRUCTURE ASSY

PART 9
SPHERE

$R = 110.03$

$T = -193$

$P = 44$ PSI

$E = 11.23 \times 10^6$

$\alpha \Delta T = -2950 \times 10^{-6}$

$t = .063$

$\phi = 3°$

$\beta^4 = 3(1-.09)\dfrac{110.03^2}{.063^2} = 832.5194 \times 10^4$

$\beta^3 = 154{,}981$; $\beta^2 = 2885.3$; $\beta = 53.714$

$K_1 = 1 - \dfrac{1-.6}{2(53.714)}(19.081) = .929$

$K_2 = 1 - \dfrac{1+.6}{2(53.714)}(19.081) = .7158$

$$\delta_{8,8} = \frac{X_8(53.714)(110.03)(.0027)}{11.23 \times 10^6 \times .063}\left(.7158 + \frac{1}{.929}\right) = .0040 \times 10^{-2} X_8$$

$$\delta_{8,16} = \frac{2(2885.3)(.0523)}{11.23(.063)(.929)} 10^{-6} X_{16} = .0459 \times 10^{-2} X_{16}$$

$$\delta_{8,P} = \frac{44(110.03)^2(.7)(.0523)}{2(11.23)10^6(.063)} = 1.3782 \times 10^{-2}$$

$$\delta_{8,T} = -.2950(110.03)(.0523)10^{-2} = -1.6976 \times 10^{-2}$$

$$\delta_{16,8} = .0459 \times 10^{-2} X_8$$

$$\delta_{16,16} = \frac{4(154{,}981)(10^{-6}) X_{16}}{11.23(.063)(110.03)(.929)} = .8572 \times 10^{-2} X_{16}$$

5863800 STRUCTURE ASSY

PART 1

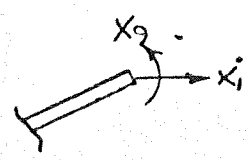

$X_1 = -.14$

$X_g = -.06$ $\quad K_1 = 1.012$

$t = .057$ $\quad K_2 = 1.049$

$\phi = 16°$ $\quad \beta = 56.4$

$E = 11.2 \times 10^6$ $\quad R = 109.75$

$$\sigma_{\phi_1} = -\frac{X_1 \cos\phi}{t} = +\frac{.14(.961)}{.057} = +2$$

$$\sigma_{\theta_1} = -\frac{X_1}{t}\left(\frac{1}{K_1} + \frac{K_1 + K_2}{2}\right)\beta \sin\phi = +\frac{.14}{.057}\left(.988 + \frac{2.061}{2}\right)56.4(.2756)$$

$$= 77$$

$$\sigma_{\theta_g} = X_g \frac{2\beta^2}{ER K_1} = -.06\,\frac{2(3181)}{.057(109.75)(1.012)} = -60$$

$$\sigma'_{\phi_g} = \pm\frac{6X_g}{t^2} = \pm -.06\,\frac{6}{.057^2} = \begin{matrix} -111 & IF \\ +111 & OF \end{matrix}$$

$$\sigma'_{\theta_g} = \mu\,\sigma'_{\phi_g} = .3(\mp 111) = \begin{matrix} -33 & IF \\ +33 & OF \end{matrix}$$

TOTAL: $\sigma_\phi = +2 \pm (-111) = \begin{matrix} -109 & PSI\ C\ IF \\ +113 & PSI\ T\ OF \end{matrix}$

$\sigma_\theta = +17 \pm (-33) = \begin{matrix} -16 \\ +50 \end{matrix}$

YIELD: $\sigma_\phi = -132$
$\sigma_\theta = -20$
$\sigma_\phi = +137$
$\sigma_\theta = +61$

MEMBRANE: $\sigma_{\phi_Y} = \sigma_{\theta_Y} = \frac{2420(1.21)}{.057} = 51{,}400$

SM42569

5863800 STRUCTURE ASSY

PART 4

SA08 PROGRAM

$t = .25$

A) $\sigma_\phi = \frac{-19.2}{.25} \pm \frac{6(4.3)}{.25^2} = 4(-19.2) \pm 96(4.3) = \begin{matrix} +300 \text{ PSI IF} \\ -500 \text{ PSI OF} \end{matrix}$

$\sigma_\theta = 4(2460) \pm 96(15.4) = \begin{matrix} 11{,}150 \\ 8{,}200 \end{matrix}$

B) $\sigma_\phi = 4(-209.2) \pm 96(-32.3) = \begin{matrix} -3900 \\ +2300 \end{matrix}$

$\sigma_\theta = 4(1740.7) \pm 96(7.3) = \begin{matrix} +7700 \\ +6300 \end{matrix}$

MEMBRANE (YIELD) $= \frac{2420(1.21)}{.25} = 11{,}700$ PSI T IF OF

PART 5

SA08 PROGRAM

$t = .375$

A) $\sigma_\phi = -\frac{211.7}{.375} \pm \frac{6(-32.3)}{.375^2} = -2.7(211.7) \pm (42.7)(-32.3)$

$= \begin{matrix} -1950 \text{ IF} \\ +800 \text{ OF} \end{matrix}$

$\sigma_\theta = 2.7(-1941) \pm 42.7(49.2) = \begin{matrix} -3100 \\ -7341 \end{matrix}$

B) $\sigma_\phi = 2.7(115.6) \pm 42.7(-60.2) = \begin{matrix} -2300 \\ 2900 \end{matrix}$

$\sigma_\theta = 2.7(-3294.7) \pm 42.7(59.2) = \begin{matrix} -6400 \\ -11{,}400 \end{matrix}$

MEMBRANE (YIELD) $= 2420(1.21)/.375 = 7800$ PSI T IF OF

K+E ALBANENE® TRACING PAPER 71660

5863800 STRUCTURE ASSY

PART 6 - RING

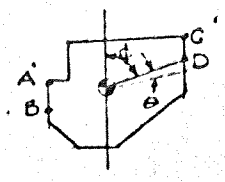

$X_5 = 116$

$X_6 = -721$

$X_{13} = -60$

$X_{14} = 213$

$N = 2420$ (LIM)

$E = 11.26 \times 10^6$

$\frac{R^2}{EA} = .0008 \times 10^{-2}$

$\frac{R^2}{EI} = .0041 \times 10^{-2}$

$R = 15.50$ IN

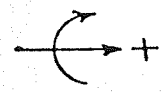

$\Sigma F_H = -X_5 + X_6 = -116 - 721 = -837$

$$\delta_{HORIZ} = \frac{\Sigma F_H R^2}{EA} = 837(.0008)10^{-2} = -.6696 \times 10^{-2}$$

$$\Sigma M_{CG} = X_5 a + X_6 d + X_{13} - X_{14} + N(b+c) - Pe$$

$$= 116(.1685) - 721(.645) - 60 - 213 + 2420(.553)$$

$$- 44(2.017)(.0555) = 135781 - 742.97 = 614.84 \circlearrowleft$$

$$\theta = \frac{\Sigma M R^2}{EI} = 614.84(.0041)10^{-2} = .02521 = 1°27'$$

$r_A = [.953^2 + .09^2]^{\frac{1}{2}} = .953$

$r_B = [.953^2 + .356^2]^{\frac{1}{2}} = 1.017$

$r_C = [1.064^2 + .727^2]^{\frac{1}{2}} = 1.289$

$r_D = [1.064^2 + .455^2] = 1.157$

$$\delta_{ROT} = 2r \sin\frac{\theta}{2} \cos\phi \cong r\theta\cos\phi$$

$\phi + \alpha = 90°$

$\alpha_A = \tan^{-1} \frac{.09}{.953} \simeq 109'$

$\alpha_B = 20°29'$

$\alpha_C = 34°21'$

$\alpha_D = 23°9'$

$\phi_A = 89°51'$

$\phi_B = 69°31'$

$\phi_C = 55°39'$

$\phi_D = 66°51'$

SM42569

5863843 STRUCTURE ASSY

SM42569

PART 6 (CON'T)

DEFLECTION DUE TO ROTATION:

$\delta_A = .953(.0252)(.0201) = .0483 \times 10^{-2} \rightarrow$

$\delta_B = 1.017(.0252)(.3499) = .8968 \times 10^{-2} \leftarrow$

$\delta_C = 1.289(.0252)(.5643) = 1.8328 \times 10^{-2} \rightarrow$

$\delta_D = 1.157(.0252)(.3931) = 1.1463 \times 10^{-2} \rightarrow$

TOTAL DEFLECTION:

A) $\delta = (.6696 - .0483)10^{-2} = .6213 \times 10^{-2} \leftarrow$

B) $\delta = (.6696 + .8968)10^{-2} = 1.5664 \times 10^{-2} \leftarrow$

C) $\delta = (.6696 - 1.8328)10^{-2} = 1.1632 \times 10^{-2} \rightarrow$

D) $\delta = (.6696 - 1.1463)10^{-2} = .4767 \times 10^{-2} \rightarrow$

$\epsilon = \frac{\delta}{R} = .0645\delta$

A) $\epsilon = .0645(.6213)10^{-2} = .0401 \times 10^{-2}$

B) $\epsilon = .0645(1.5664)10^{-2} = .1010 \times 10^{-2}$

C) $\epsilon = .0645(1.1632)10^{-2} = .0750 \times 10^{-2}$

D) $\epsilon = .0645(.4767)10^{-2} = .0307 \times 10^{-2}$

$\sigma = \epsilon E$

LIMIT

$\sigma_{\theta_A} = 11.26(.0401)10^4 = 4500\ T$

$\sigma_{\theta_B} = 11.26(.1010)10^4 = 11,400\ T$

$\sigma_{\theta_C} = 11.26(.0750)10^4 = 8400\ C$

$\sigma_{\theta_D} = 11.26(.0307)10^4 = 3500\ C$

YIELD MEMBRANE

A-B $\sigma_\phi = \sigma_\theta = \frac{2920(1.21)}{.375} = 7800$ PSI T

C-D $\sigma_\phi = \sigma_\theta = \frac{2928}{.272} = 10,800$ PSI T

5863800 STRUCTURE ASSY

PART 7

SA08 PROGRAM

$t_1 = .272'$

$t_2 = .063'$

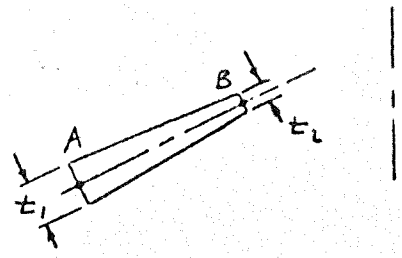

A) $\sigma_\phi = -\frac{715.4}{.272} \pm \frac{6(213)}{.272^2} = \begin{matrix} +14,600 \\ -19,900 \end{matrix}$

$\sigma_\theta = -\frac{6553.6}{.272} \pm \frac{6(96.7)}{.272^2} = \begin{matrix} -16,400 \\ -32,100 \end{matrix}$

B) $\sigma_\phi = -\frac{100.6}{.063} \pm \frac{6(7.6)}{.063^2} = \begin{matrix} +9,900 \\ -13,100 \end{matrix}$

$\sigma_\theta = -\frac{588.9}{.063} \pm \frac{6(1.2)}{.063^2} = \begin{matrix} -7600 \\ -11,200 \end{matrix}$

MEMBRANE (YIELD) $= \frac{2420(1.21)}{\begin{matrix} .272 \\ .063 \end{matrix}} = \begin{matrix} 10,800 \text{ @ A} \\ 46,500 \text{ @ B} \end{matrix}$

PART 8

$t = .063'$

A) $\sigma_\phi = -\frac{116.9}{.063} \pm \frac{6(7.6)}{.063^2} = 15.9(-116.9) \pm 1511.3(7.6) = \begin{matrix} +9,600 \\ -13,300 \end{matrix}$

$\sigma_\theta = 15.9(-1262.3) \pm 1511.3(1.2) = \begin{matrix} -18,260 \\ -21,900 \end{matrix}$

B) $\sigma_\phi = 15.9(-20.9) \pm 1511.3(.25) = \begin{matrix} +46 \\ -700 \end{matrix}$

$\sigma_\theta = 15.9(146.8) \pm 1511.3(-.14) = \begin{matrix} +2100 \\ +2550 \end{matrix}$

MEMBRANE (YIELD) $= \frac{2420(1.21)}{.063} = +46,500$

SM42569

5863800 STRUCTURE ASSY

PART 9

$X_8 = -20.95$

$X_{16} = .25$

$t = .063$

$\phi = 3°$

$E = 11.23 \times 10^6$

$K_1 = .929$

$K_2 = .7158$

$\beta = 53.714°$

$R = 110.03$

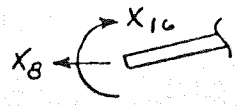

$$\sigma_{\phi_8} = \frac{-20.95(.9986)}{.063} = -300$$

$$\sigma_{\theta_8} = \frac{-20.95}{.063}\left(\frac{1}{.929} + \frac{1.6448}{2}\right) 53.714(.0523) = -1,800$$

$$\sigma_{\theta_{16}} = \frac{.25\,(2)(2885.3)}{.063(110.03)(.929)} = 200$$

$$\sigma_{\phi_{16}}' = \pm \frac{6(.25)}{.063^2} = \pm 400 \text{ psi}$$

$$\sigma_{\theta_{16}}' = \pm 100 \text{ psi}$$

MEMBRANE (YIELD) = 46,500

$$\sigma_{\phi_{TOT}} = -300 \pm 400 = \begin{matrix} +100 \\ -700 \end{matrix}$$

$$\sigma_\theta = -1800 + 200 \pm 100 = \begin{matrix} -1,500 \\ -1,700 \end{matrix}$$

K+E ALBANENE® TRACING PAPER 71060

5863800 STRUCTURE ASSY

SM42569

LH_2 TANK-DOOR JOINT

DEFLECTIONS & ROTATIONS

$\delta_1^1 = +.0042'$

$\delta_9^1 = +.0010'$

$\delta_1^2 = -.0042'$

$\delta_2^2 = +.0201'$

$\delta_9^2 = -.0010'$

$\delta_{10}^2 = -.0228'$

$\delta_2^3 = -.0201'$

$\delta_3^3 = +.0262'$

$\delta_{10}^3 = +.0228'$

$\delta_{11}^3 = -.0199'$

$\delta_3^4 = -.0262'$

$\delta_4^4 = +.0320'$

$\delta_{11}^4 = +.0199'$

$\delta_{12}^4 = -.0221'$

$\delta_4^5 = -.0320'$

$\delta_5^5 = +.0365'$

$\delta_{12}^5 = +.0221'$

$\delta_{13}^5 = -.0256'$

$\delta_5^6 = -.0365'$

$\delta_6^6 = +.0574'$

$\delta_{13}^6 = +.0255'$

$\delta_{14}^6 = -.0255'$

$\delta_6^7 = -.0574'$

$\delta_7^7 = +.0415'$

$\delta_{19}^7 = +.0255'$

$\delta_{15}^7 = +.0930'$

$\delta_7^8 = -.0415'$

$\delta_8^8 = +.0039'$

$\delta_{15}^8 = -.0930'$

$\delta_{16}^8 = +.0074'$

$\delta_8^9 = -.0039'$

$\delta_{16}^9 = -.0074'$

K+E ALBANENE® TRACING PAPER 71608

FORM 33-6-1 (REV. 6-55)

PREPARED BY: GRA
CHECKED BY: G.J.S.
DATE: 11-3
TITLE: DSV-4 PROPELLANT TANK

DOUGLAS AIRCRAFT COMPANY, INC.

SM DIVISION

PAGE: 9.2.21
MODEL: DSV-4
REPORT NO: SM42569

5863800 STRUCTURE ASSY

LH₂ TANK DOOR INSTL

PART			DISCONTINUITY (YIELD)	MEMBRANE (YIELD)	DISCONTINUITY + MEMBRANE	* M.S.
1	INNER FIBER	σ_ϕ	-132	51,400	51,268	.21
		σ_θ	-20		51,380	
	OUTER FIBER	σ_ϕ	137		51,537	.21
		σ_θ	61		51,461	
2	A IF	σ_ϕ	140		51,540	.20
		σ_θ	-40		51,360	
	A OF	σ_ϕ	-145		51,255	.20
		σ_θ	-100		51,300	
	B IF	σ_ϕ	9,300		60,700	.14
		σ_θ	-7,100		44,300	
	B OF	σ_ϕ	-8,100		43,300	.50
		σ_θ	-12,500	51,400	38,900	
3	A IF	σ_ϕ	1,800	23,400	25,200	1.07
		σ_θ	9,700		33,100	
	A OF	σ_ϕ	-1,300		22,100	1.28
		σ_θ	7,000		30,400	
	B IF	σ_ϕ	1,500		25,200	1.24
		σ_θ	6,100		29,500	
	B OF	σ_ϕ	-2,200		21,200	1.52
		σ_θ	3,300	23,400	26,700	
4	A IF	σ_ϕ	400	11,700	12,100	1.84
		σ_θ	13,500		25,200	
	A OF	σ_ϕ	-600		11,100	HIGH
		σ_θ	9,900		21,600	
	B IF	σ_ϕ	-4,700		7,000	HIGH
		σ_θ	9,300		21,000	
	B OF	σ_ϕ	2,800	11,700	14,500	HIGH
		σ_θ	7,600		19,300	

* ALLOWABLES PG. 2.3 TO 2.22

SM42569

K+E ALBANENE TRACING PAPER 71606

FORM 25-6-1 (REV. 6-53)

PREPARED BY: GRH
CHECKED BY: G.J.S.
DATE: 11-3
TITLE: DSV-4 PROPELLANT TANK

DOUGLAS AIRCRAFT COMPANY, INC.

SM DIVISION

PAGE: 9.2.22
MODEL: DSV-4
REPORT NO: SM 42569

5863800 STRUCTURE ASSY

PART			DISCONTINUITY (YIELD)	MEMBRANE	DISCONTINUITY + MEMBRANE	* M.S.
5	A	IF σ_ϕ	-2,400	7,800	5,400	HIGH
		IF σ_θ	-3,800		4,000	
		OF σ_ϕ	1,000		8,800	HIGH.
		OF σ_θ	-8,900		-1,100	
	B	IF σ_ϕ	-2,800		5,000	HIGH.
		IF σ_θ	-7,700		100.	
		OF σ_ϕ	3,500		11,300	HIGH
		OF σ_θ	-13,800	7,800	-6,000	
6	A	σ_ϕ	-	7,800	7,800	HIGH
		σ_θ	5,400		13,200	
	B	σ_ϕ	-		7,800	HIGH
		σ_θ	13,800	7,800	21,600	
	C	σ_ϕ	-	10,800	10,800	HIGH.
		σ_θ	-10,200		600	
	D	σ_ϕ	-		10,800	HIGH.
		σ_θ	-4,200	10,800	6,600	
7	A	IF σ_ϕ	17,700	10,800	28,500	.84
		IF σ_θ	-19,800		-9,000	
		OF σ_ϕ	-24,100		-13,300	1.51
		OF σ_θ	-38,500	10,800	-25,800	
	B	IF σ_ϕ	+12,000	46,500	58,500	.22
		IF σ_θ	-9,200		37,300	
		OF σ_ϕ	+15,900		30,600	.97
		OF σ_θ	-13,600	46,500	32,900	

*ALLOWABLES PG 2.3 TO 2.22

SM 42569

K+E ALBANENE® TRACING PAPER 71696

FORM 20-8-1 (REV. 8-59)

PREPARED BY: [illegible]
CHECKED BY: G.J.S.
DATE: 11-3
TITLE: DSV-4 PROPELLANT TANK

DOUGLAS AIRCRAFT COMPANY, INC.

SM DIVISION

PAGE: 9.2.23
MODEL: DSV-4
REPORT NO SM 42569

SM 42569

5863800 STRUCTURE ASSY

PART			DISCONTINUITY (YIELD)	MEMBRANE (YIELD)	DISCONTINUITY + MEMBRANE	* M.S.
8	A	IF σ_ϕ	11,600	46,500	58,100	.24
		σ_θ	-22,100		24,400	
		OF σ_ϕ	-16,100		30,400	1.33
		σ_θ	-26,500		20,000	
	B	IF σ_ϕ	60		46,560	.31
		σ_θ	2,500		49,000	
		OF σ_ϕ	-850		45,650	.31
		σ_θ	3,100	46,500	49,600	
9		IF σ_ϕ	120	46,500	46,620	.37
		σ_θ	-1,800		44,700	
		OF σ_ϕ	-850		45,650	.39
		σ_θ	-2,100	46,500	44,400	

*ALLOWABLES PG 2.3 TO 2.22

K+E ALBANENE® TRACING PAPER 71050

AFT DOME - SUMP JOINT

The original elastic relative deflection analysis of the liquid oxygen sump indicated a high stress level in the area where part Number 7 connects with part Number 6 (ref. Page 9.3.3). Since the high stress level exceeded the design allowable, a test was conducted to verify the structural integrity of the LOX sump. This test is outlined on Page 9.3.1. The results of the test showed:

1. The liquid oxygen sump had adequate strength.
2. The part 6 to 7 joint deflected plastically to allow the stresses to be relieved.

The relative deflection analysis was again performed using a Secant Modulus of 4×10^6 psi at the joint of 6 to 7 to account for the plastic deflection. This modification resulted in stress conditions which approximate those which were experienced on the test.

The Secant Modulus of 4×10^6 psi violates the criteria of .2% perminant deformation. However, it is a very localized deformation and therefore, the LOX sump is considered to be structurally adequate.

LOX Sump Joint Test

To verify the structural integrity of the joint, a test* was conducted on November 23, 1963 by the DAC Structural Test Section. The results of this test indicated that the joint was capable of supporting approximately 130% of the ultimate flight load.

The test was conducted on a 70 inch segment of the LOX dome which was modified to accept a standard production sump ring and seal. Production welding was used to fasten the ring to the tank. A production sump was then installed and the entire assembly was placed in the DAC cryogenic pressure dome test fixture. The test loading procedure was as follows:

1. A vacuum was pulled on the lower side of the sump.
2. The tank was filled with liquid nitrogen (used instead of LOX for safety reasons).
3. The tank was then pressurized to simulate the pressure history of the LOX sump during static firing at Sacramento. The following schedule was used:
   a. 8 minutes at 39 psid.
   b. 1 minute at zero psig.
   c. 8 minutes at 39 psid.
   d. 1 minute at zero psig.
   e. 3 minutes at 39 psid.
   f. 141 seconds increasing from 39 psid to 75.8 psid (limit pressure). This increase of pressure is to follow a curve which duplicates the increased axial acceleration of trajectory and compensates for variation of ambient pressure with altitude.
   g. Pressure then increased above limit load until failure occurred at about 134 psid (ultimate design pressure is 102.3 psid).

* Ref. STR-108-Q-I-R- dated 11-23-63

5863800
STRUCTURE ASSY

AFT SUMP INSTALLATION – 5864042
S-I BURNOUT CONDITION

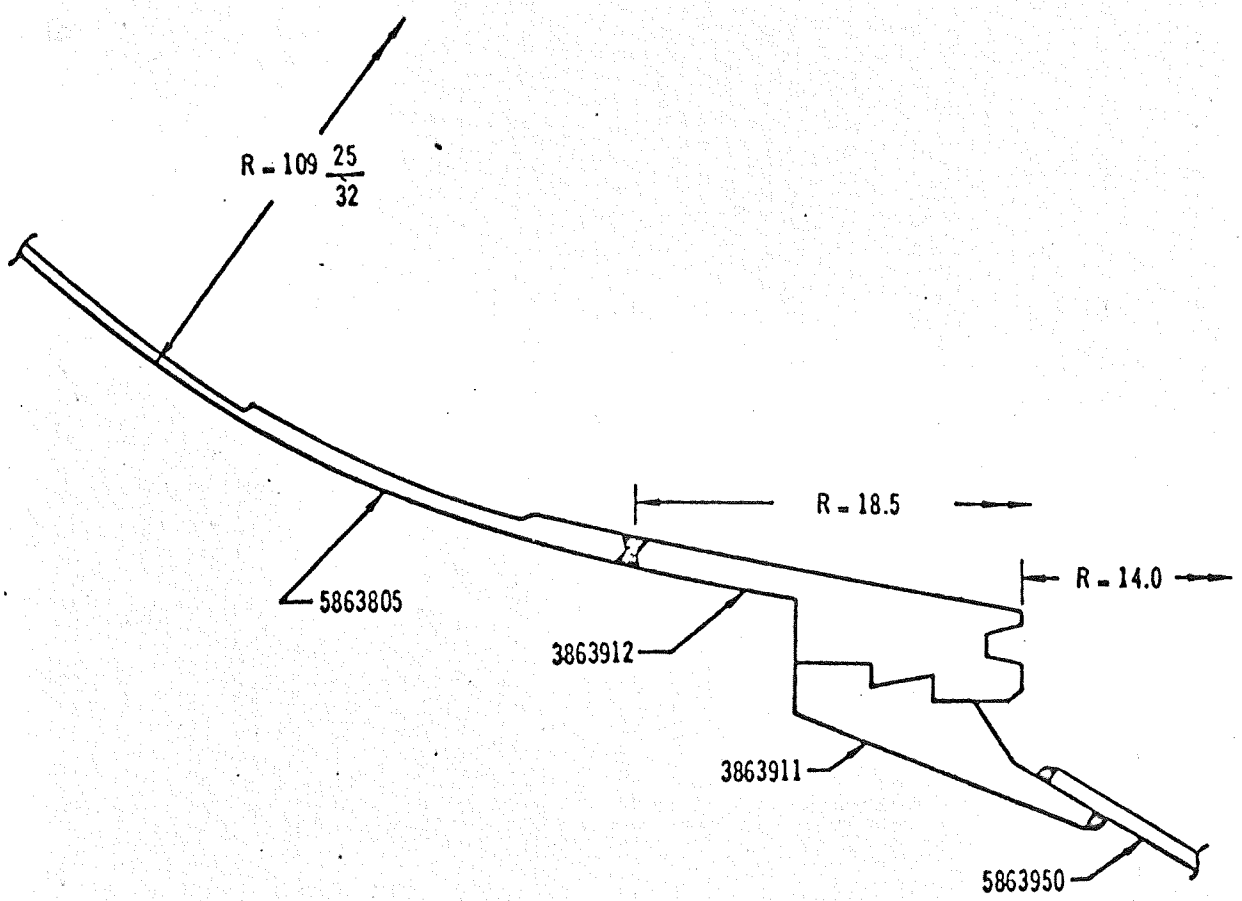

FORM 89-8-1 (REV. 8-53)

PREPARED BY: CRN
CHECKED BY: ME
DATE: 10-3
TITLE:

DOUGLAS AIRCRAFT COMPANY, INC.

SM DIVISION

PAGE: 9.3.4
MODEL: DSV-4
REPORT NO: SM 42569

5863800
STRUCTURE ASSY

SM 42569

AFT DOME - SUMP JOINT

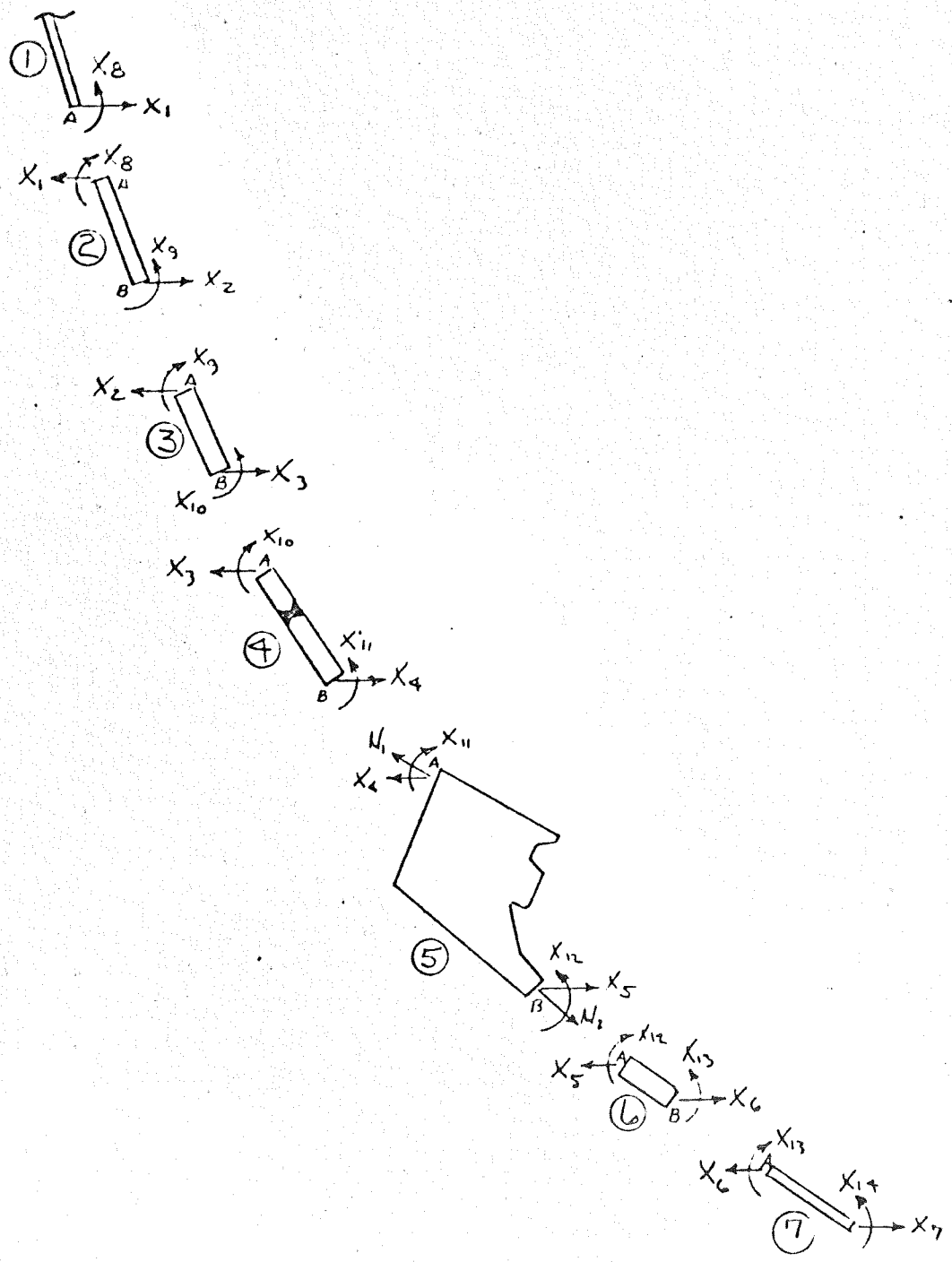

K+E ALBANENE® TRACING PAPER 71050

5863800
STRUCTURE ASSY

PART I - SPHERE

$t = .086$

$R = 109.738$

$E = 11.6 \times 10^6$

$\alpha\Delta T = -2800 \times 10^{-6}$

$T = -298\ °F$

$\alpha = 16°47'$

$P = 75.8^1$ LIM.

$$\beta^4 = 3(.91)\frac{(109.738)^2}{.086^2} = 4.4451 \times 10^6 .$$

$$\beta^3 = 96{,}805 \quad \beta^2 = 2108.3 . \quad \beta = 45.92 .$$

$$K_1 = 1 + \frac{(1-.6)(3.3156)}{2(45.92)} = 1.014 .$$

$$K_2 = 1 + \frac{1.6 \times 3.3156}{2 \times 45.92} = 1.058 .$$

$$\delta_{11} = X_1 \frac{45.92(109.738)(.0334)}{11.6(10^6)(.086)}(1.058 + .9862) = .0861 \times 10^{-2} X_1 .$$

$$\delta_{18} = \frac{2(2108.3)(.28875)}{11.6(10^6)(.086)(1.014)} X_8 = .1204 \times 10^{-2} X_8 .$$

$$\delta_{1,P} = -\frac{75.8(109.738)^2(.7)(.28875)}{2(11.6)(10^6)(.086)} = -9.2473 \times 10^{-2} .$$

$$\delta_{1,T} = +.38(109.738)(.28875)10^{-2} = +12.0410 \times 10^{-2} .$$

$$\delta_{81} = .1204 \times 10^{-2} X_1 ;$$

$$\delta_{8,8} = X_8 \frac{4(96{,}805)(10^{-6})}{11.6(.086)(1.014)(109.738)} = .3488 \times 10^{-2} X_8 .$$

---

[1] NOTE $P = 50 + 105(.0410)(6.0) = 75.8$

FACTOR OF 6.0 IS MAXIMUM ACCELERATION
— REFLECTS SA 8 & 9 VEHICLES

CRITICAL CONDITION : SI BURNOUT

K+E ALBANENE TRACING PAPER 71056

5863800
STRUCTURE ASSY

PART 2

$\delta_{11} = .1146 \times 10^{-2} X_1$.

$\delta_{12} = .0052 \times 10^{-2} X_2$.

$\delta_{18} = -.1686 \times 10^{-2} X_8$.

$\delta_{19} = .0001 \times 10^{-2} X_9$.

$$\delta_{1,P} = \frac{75.8(109.671)(27.984)(.7)}{2(11.6)(.086)(10^6)}$$

$$= 8.1617 \times 10^{-2} .$$

$$\delta_{1,T} = -.3800(27.984)10^{-2}$$

$$= -10.6339 \times 10^{-2} .$$

$\delta_{21} = .0068 \times 10^{-2} X_1$.

$\delta_{22} = .0528 \times 10^{-2} X_2$

$\delta_{28} = .0020 \times 10^{-2} X_8$.

$\delta_{29} = .0970 \times 10^{-2} X_9$.

$\delta_{2,P} = -8.1617 \times 10^{-2}$.

$\delta_{2,T} = +10.6339 \times 10^{-2}$.

$\delta_{81} = -.1686 \times 10^{-2} X_1$.

$\delta_{82} = .0015 \times 10^{-2} X_2$.

$\delta_{88} = .4960 \times 10^{-2} X_8$.

$\delta_{89} = .0310 \times 10^{-2} X_9$.

$\delta_{91} = .0001 \times 10^{-2} X_1$.

$\delta_{92} = .0970 \times 10^{-2} X_2$.

$\delta_{98} = .0405 \times 10^{-2} X_8$.

$\delta_{99} = .3658 \times 10^{-2} X_9$.

5863800
STRUCTURE ASSY

PART 3

$\delta_{22} = .0322 \times 10^{-2} X_2$.

$\delta_{23} = .0120 \times 10^{-2} X_3$.

$\delta_{29} = -.0596 \times 10^{-2} X_9$.

$\delta_{2,10} = .0474 \times 10^{-2} X_{10}$.

$\delta_{2,P} = \dfrac{75.8(109.705)(.7)(22.322)}{2(11.6)(.147)(18)}$

$= 3.8 \times 10^{-2}$.

$\delta_{2,T} = -.38(22.322)10^{-2} = -8.4824 \times 10^{-2}$.

$\delta_{32} = .0143 \times 10^{-2} X_2$.

$\delta_{33} = .0261 \times 10^{-2} X_3$.

$\delta_{39} = -.0500 \times 10^{-2} X_9$.

$\delta_{3,10} = +.0534 \times 10^{-2} X_{10}$.

$\delta_{3,P} = -3.8 \times 10^{-2}$.

$\delta_{3,T} = +8.4824 \times 10^{-2}$.

$\delta_{92} = -.0596 \times 10^{-2} X_2$.

$\delta_{93} = -.0420 \times 10^{-2} X_3$.

$\delta_{99} = .1710 \times 10^{-2} X_9$.

$\delta_{9,10} = -.1032 \times 10^{-2} X_{10}$.

$\delta_{10,2} = .0565 \times 10^{-2}$.

$\delta_{10,3} = .0534 \times 10^{-2}$.

$\delta_{10,9} = -.1230 \times 10^{-2}$.

$\delta_{10,10} = .1705 \times 10^{-2}$.

5863800
STRUCTURE ASSY

PART 4

$\delta_{33} = .0120 \times 10^{-2} X_3$.

$\delta_{34} = .0038 \times 10^{-2} X_4$.

$\delta_{3,10} = -.0242 \times 10^{-2} X_{10}$.

$\delta_{3,11} = .0206 \times 10^{-2} X_{11}$.

$$\delta_{3,P} = \frac{75.8(110.64)(.7)(18.357)}{2(11.6)(.25)10^6}$$

$$= +1.8580 \times 10^{-2} .$$

$$\delta_{3,T} = -.38(18.357)10^{-2}$$

$$= -6.9757 \times 10^{-2} .$$

$\delta_{4,3} = .0048 \times 10^{-2} X_3$.

$\delta_{4,4} = .0086 \times 10^{-2} X_4$.

$\delta_{4,10} = -.0209 \times 10^{-2} X_{10}$.

$\delta_{4,11} = .0200 \times 10^{-2} X_{11}$.

$\delta_{4,P} = -1.8580 \times 10^{-2}$.

$\delta_{4,T} = +6.9757 \times 10^{-2}$.

$\delta_{10,3} = -.0242 \times 10^{-2} X_3$.

$\delta_{10,4} = -.0168 \times 10^{-2} X_4$.

$\delta_{10,10} = .0715 \times 10^{-2} X_{10}$.

$\delta_{10,11} = -.0537 \times 10^{-2} X_{11}$.

$\delta_{11,3} = .0257 \times 10^{-2} X_3$.

$\delta_{11,4} = .0200 \times 10^{-2} X_4$.

$\delta_{11,10} = -.0669 \times 10^{-2} X_{10}$.

$\delta_{11,11} = .0726 \times 10^{-2} X_{11}$.

5863800
STRUCTURE ASSY

PART 5, RING

$N_1 = 4169$ [1] LB/IN LIMIT.

$N_2 = 1106$.

$p = 75.8$ PSI.

$E = 11.0 \times 10^6$.

$\alpha \Delta T = -.3720 \times 10^{-6}$.

$R = 15.0992$.

$I = 1.6368$.

$A = 4.3945$.

$a = 1.3178$. $c = .8448$.

$b = 1.0541$. $d = .3456$.

$r = 1.2445$. $e = .2035$.

$q = 1.5912$. $l = 2.8962$.

$$\frac{R^2}{EA} = \frac{15.0992^2 (10^{-6})}{11.0\,(4.3945)} = .0005 \times 10^{-2}.$$

$$\frac{R^2}{EI} = \frac{15.0992^2 (10^{-6})}{11.0\,(1.6368)} = .0013\,(10^{-2}).$$

$$\delta_{44} = \left[(.0005) + 1.0541^2 (.0013)\right] 10^{-2} X_4 = .0019 \times 10^{-2} X_4.$$

$$\delta_{45} = \left[-.0005 + .0013(1.3178)(1.0541)\right] 10^{-2} X_5 = .0013 \times 10^{-2} X_5.$$

$$\delta_{4,11} = -.0013(1.0541)\,10^{-2} X_{11} = -.0014 \times 10^{-2} X_{11}.$$

$$\delta_{4,12} = +.0014 \times 10^{-2} X_{12}.$$

$$\delta_{4,N_1} = +4169\left[.9875(.0005) + .8448(1.0541)(.0013)\right] 10^{-2}$$
$$= 6.8897 \times 10^{-2}.$$

$$\delta_{4,N_2} = -1106\left[.866(.0005) - (.3456)(1.0541)(.0013)\right] 10^{-2}$$
$$= .0449 \times 10^{-2}$$

$$\delta_{4,p} = -75.8(2.8962)(.2035)(1.0541)(.0013)\,10^{-2} = -.0612 \times 10^{-2}.$$

$$\delta_{4,T} = -.3720(15.0992)\,10^{-2} = -5.6169 \times 10^{-2}.$$

---

1 REF P 5.9, EQN $N\phi_3^4$

5863800
STRUCTURE ASSY

$\delta_{5,T} = +5.6169 \times 10^{-2}$.

$\delta_{55} = [.0005 + .0013(1.3178)^2]10^{-2} X_5 = .0028 \times 10^{-2} X_5$.

$\delta_{54} = .0013 \times 10^{-2} X_4$.

$\delta_{5,11} = -.0013(1.3178)10^{-2} X_{11} = -.0017 \times 10^{-2} X_{11}$.

$\delta_{5,12} = .0017 \times 10^{-2} X_{12}$.

$\delta_{5,N_1} = -4169[.9875(.0005) - .8448(1.3178)(.0013)]10^{-2}$

$= 3.9752 \times 10^{-2}$,

$\delta_{5,N_2} = 1106[.866(.0005) + 1.3178(.3456)(.0013)]10^{-2}$

$= 1.1337 \times 10^{-2}$.

$\delta_{5,P} = -75.8(2.8962)(.2025)(1.3178)(.0013) = -.0765 \times 10^{-2}$.

$\delta_{11,4} = -.0014 \times 10^{-2} X_4$.

$\delta_{11,P} = 44.67475(.0013)10^{-2}$

$= +.0581 \times 10^{-2}$

$\delta_{11,5} = -.0017 \times 10^{-2} X_5$.

$\delta_{11,11} = .0013 \times 10^{-2} X_{11}$.

$\delta_{11,12} = -.0013 \times 10^{-2} X_{12}$.

$\delta_{11,N_1} = -4169(.8448)(.0013)10^{-2} = -4.5786 \times 10^{-2}$.

$\delta_{11,N_2} = -1106(.3456)(.0013)10^{-2} = -.4969 \times 10^{-2}$.

$\delta_{12,4} = .0014 \times 10^{-2} X_4$.

$\delta_{12,P} = -.0581 \times 10^{-2}$.

$\delta_{12,5} = .0017 \times 10^{-2} X_5$.

$\delta_{12,11} = -.0013 \times 10^{-2} X_{11}$.

$\delta_{12,12} = .0013 \times 10^{-2} X_{12}$.

$\delta_{12,N_1} = 4169(.8448)(.0013)10^{-2} = 4.5786 \times 10^{-2}$.

$\delta_{12,N_2} = 1106(.3456)(.0013)10^{-2} = .4969 \times 10^{-2}$.

SM42569

5863800
STRUCTURE ASSY

PART 6

$\delta_{55} = .0182 \times 10^{-2} X_5$.

$\delta_{56} = .0058 \times 10^{-2} X_6$.

$\delta_{5,12} = -.0641 \times 10^{-2} X_{12}$.

$\delta_{5,13} = .0626 \times 10^{-2} X_{13}$.

$$\delta_{5,P} = \frac{75.8(26.183)(13.0915)(.7)}{(11.0)(.291)(10^6)}$$

$= +.5682 \times 10^{-2}$.

$\delta_{5,T} = -.38(13.0915)10^{-2}$

$= -4.9748 \times 10^{-2}$.

$\delta_{65} = .0061 \times 10^{-2} X_5$.

$\delta_{66} = .0227 \times 10^{-2} X_6$.

$\delta_{6,12} = -.0785 \times 10^{-2} X_{12}$.

$\delta_{6,13} = .0769 \times 10^{-2} X_{13}$.

$\delta_{6,P} = -.5682 \times 10^{-2}$.

$\delta_{6,T} = +4.9748 \times 10^{-2}$.

$\delta_{12,5} = -.0641 \times 10^{-2} X_5$.

$\delta_{12,6} = -.0747 \times 10^{-2} X_6$.

$\delta_{12,12} = .3758 \times 10^{-2} X_{12}$.

$\delta_{12,13} = -.3665 \times 10^{-2} X_{13}$.

$\delta_{13,5} = .0658 \times 10^{-2} X_5$.

$\delta_{13,6} = .0769 \times 10^{-2} X_6$.

$\delta_{13,12} = -.3851 \times 10^{-2} X_{12}$.

$\delta_{13,13} = .3797 \times 10^{-2} X_{13}$.

PART 7- CONE

$\delta_{6,6} = .0421 \times 10^{-2}\ X_6$

$\delta_{6,7} = 0$

$\delta_{6,13} = -.0622 \times 10^{-2}\ X_{13}$

$\delta_{6,14} = 0$

$\delta_{6,P} = \dfrac{75.8 \times 25.5334 \times .7 \times 12.7667}{11 \times 10^6 \times .125} = 1.258 \times 10^{-2}$

$\delta_{6,T} = -.38(12.7667) \times 10^{-2} = -4.851 \times 10^{-2}$

$\delta_{7,6} = 0$

$\delta_{7,7} = .0028 \times 10^{-2}\ X_7$

$\delta_{7,13} = 0$

$\delta_{7,14} = .0074 \times 10^{-2}\ X_{14}$

$\delta_{7,P} = \dfrac{75.8 \times 7.5334 \times .7 \times 3.7667}{11 \times 10^6 \times .125} = -.1096 \times 10^{-2}$

$\delta_{7,T} = +.38 \times 3.7667 \times 10^{-2} = 1.431 \times 10^{-2}$

$\delta_{13,6} = -.0622 \times 10^{-2}\ X_6$

$\delta_{13,7} = 0$

$\delta_{13,13} = .1789 \times 10^{-2}\ X_{13}$

$\delta_{13,14} = 0$

$\delta_{14,6} = 0$

$\delta_{14,7} = .0074 \times 10^{-2}\ X_7$

$\delta_{14,13} = 0$

$\delta_{14,14} = .0398 \times 10^{-2}\ X_{14}$

K+E ALBANENE TRACING PAPER 70663

5863E00
STRUCTURE ASSY

AFT SUMP INSTALLATIONS

DEFLECTIONS + ROTATIONS

$\delta_1^1 = .0258$

$\delta_1^2 = -.0258$

$\delta_2^2 = .0372$

$\delta_2^3 = -.0374$

$\delta_3^3 = .0308$

$\delta_3^4 = -.0308$

$\delta_4^4 = .0240$

$\delta_4^5 = -.0240$

$\delta_5^5 = .0667$

$\delta_5^6 = -.0665$

$\delta_6^6 = .0728$

$\delta_6^7 = -.0728$

$\delta_7^7 = \pm .0000$

$\delta_8^1 = -.0026$

$\delta_8^2 = .0026$

$\delta_9^2 = .0018$

$\delta_9^3 = -.0018$

$\delta_{10}^3 = -.0160$

$\delta_{10}^4 = .0160$

$\delta_{11}^4 = .0176$

$\delta_{11}^5 = -.0176$

$\delta_{12}^5 = .0176$

$\delta_{12}^6 = -.0176$

$\delta_{13}^6 = .0135$

$\delta_{13}^7 = -.0135$

$\delta_{14}^7 = -.0273$

K+E ALBANENE TRACING PAPER 71688

5863800
STRUCTURE ASSY

PART 1 - SPHERE

$x_1 = -2.7$ $\quad K_1 = 1.014'$

$x_8 = .2$ $\quad K_2 = 1.058'$

$t = .086$ $\quad B = 45.92$

$\phi = 16°47'$ $\quad R = 109.738'$

$E = 11.6 \times 10^6$

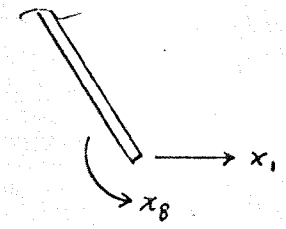

$$\sigma_{\phi_1} = -\frac{x_1 \cos\phi}{t} = \frac{+2.7 \times \cos 16°47'}{.086} = +30'$$

$$\sigma_{\theta_1} = -\frac{x_1}{t}\left(\frac{1}{K_1} + \frac{K_1 + K_2}{2}\right) B \sin\phi = \frac{2.7}{.086}\left(\frac{1}{1.014} + \frac{1.014 + 1.058}{2}\right) 45.92 \times .2888 =$$

$$= +842$$

$$\sigma_{\theta_8} = -\frac{x_8}{tR}\left(\frac{2B^2}{K_1}\right) = -\frac{.2}{.086 \times 109.738}\left(\frac{2 \times 2108.3}{1.014}\right) = -89$$

$$\sigma_{\phi_8}' = \pm\frac{6x_8}{t^2} = \frac{\pm 6 \times .2}{(.086)^2} = \mp 162'$$

$$\sigma_{\theta_8}' = \nu\,\sigma_{\phi_8}' = \mp 49$$

TOTAL: $\sigma_\phi = +30 \mp 162 = \begin{matrix} -132 & \text{I.F} \\ +192 & \text{O.F} \end{matrix}$

$\sigma_\theta = 842 - 89 \mp 49 = \begin{matrix} 704 & \text{I.F.} \\ 802 & \text{O.F.} \end{matrix}$

$$\text{MEMBRANE} = \frac{75.8 \times 109.738}{2 \times .086} = \sigma_\phi = \sigma_\theta = +48{,}361'$$

YIELD $\sigma_\phi = \sigma_\theta = 1.21(48361) = 58517$

SM 42569

5863800
STRUCTURE ASSY

PART 2 CONE

ASSUME THIS PART OF THE TANK A CONE

THEN: $t = .086$ SAC8 PROGRAM

$$\sigma = \frac{N}{t} \pm \frac{6M}{t^2} \qquad \frac{1}{t} = 11.63 \qquad \frac{6}{t^2} = 811$$

A. $\sigma_\phi = -2.6 \times 11.63 \pm (-.2)\,811 = -30 \pm (-162) = \begin{matrix} -192 & IF \\ +132 & OF \end{matrix}$

$\sigma_\theta = -24.1 \times 11.63 \pm (-9.1)\,811 = -280 \pm (-7{,}330) = \begin{matrix} -7{,}660 & IF \\ +7{,}100 & OF \end{matrix}$

B. $\sigma_\phi = 44.1 \times 11.6 \pm 11.5 \times 811 = 512 \pm 9{,}326 = \begin{matrix} +9{,}838 & IF \\ -8{,}814 & OF \end{matrix}$

$\sigma_\theta = -502.6 \times 11.6 \pm 3.5 \times 811 = -5{,}830 \pm 2{,}838 = \begin{matrix} -2{,}992 & IF \\ -8{,}668 & OF \end{matrix}$

MEMBRANE $= \sigma_\theta = \sigma_\phi = \dfrac{75.8\,(109.738)}{2\,(.086)} = +48361$

YIELD $= \sigma_\theta = \sigma_\phi = (1.21)48361) = 58517$

(BECAUSE THIS PORTION OF THE TANK IS A SPHERE THE HOOP & MERIDIONAL STRESSES ARE EQUAL)

5863800
STRUCTURE ASSY

PART 3 CONE

ASSUME THIS PART OF THE TANK A CONE
THEN:

$t = .147 \quad 1/t = 6.8 \quad 6/t^2 = 278$

A- $\sigma_\phi = 44.4 \times 6.8 \pm 11.5 \times 278 = 302 \pm 3{,}197 = \begin{matrix} 3{,}499 & IF \\ -2{,}895 & OF \end{matrix}$

$\sigma_\theta = 659.2 \times 6.8 \pm 3.7 \times 278 = 4{,}482 \pm 1{,}029 = \begin{matrix} +5{,}511 & IF \\ +3{,}453 & OF \end{matrix}$

B- $\sigma_\phi = -112.4 \times 6.8 \pm (-3.2)\,278 = -764 \pm (-890) = \begin{matrix} -1{,}654 & IF \\ +126 & OF \end{matrix}$

$\sigma_\theta = 1302.2 \times 6.8 \pm (-3.3)\,278 = 8{,}855 \pm (-917) = \begin{matrix} 7{,}938 & IF \\ 9{,}772 & OF \end{matrix}$

MEMBRANE $= \sigma_\theta = \sigma_\phi = \frac{PR}{2t} = \frac{75.8(109.738)}{2(.147)} = 28284$ PSI ①

YIELD $= \sigma_\theta = \sigma_\phi = (1.21)\,28284 = 34224$ PSI ①

① BECAUSE THIS PORTION OF THE TANK IS A SPHERE, THE HOOP & MERIDIONAL STRESSES ARE EQUAL

5863800
STRUCTURE ASSY

PART 4 CONE

ASSUME THIS PART OF THE TANK A CONE THEN:

$t = .25 \qquad 1/t = 4 \qquad 6/t^2 = 96$

A - $\sigma_\phi = -113.0 \times 4 \pm (-3.2)\,96 = -452 \pm (-307) = \begin{matrix} -759 & IF \\ -145 & OF \end{matrix}$

$\sigma_\theta = 2{,}822 \times 4 \pm (-12.4)\,96 = 11{,}288 \pm (-1{,}190) = \begin{matrix} 10{,}098 & IF \\ 12{,}478 & OF \end{matrix}$

B - $\sigma_\phi = -1102.8 \times 4 \pm (-375.5)\,96 = -4{,}411 \pm (-36{,}048) = \begin{matrix} -40{,}459 & IF \\ -31637 & OF \end{matrix}$

$\sigma_\theta = 4360.8 \times 4 \pm (-96.9)\,96 = 17{,}443 \pm (-9{,}302) = \begin{matrix} 8{,}141 & IF \\ 26{,}745 & OF \end{matrix}$

MEMBRANE $= \sigma_\theta = \sigma_\phi = \frac{PR}{2t} = \frac{75.8(109.73A)}{2(.25)} = 16772$ PSI ①

YIELD $= \sigma_\theta = \sigma_\phi = 1.21(16772) = 20294$ PSI ①

STRESS @ WELD: (1.5 IN. FROM FT A, TOTAL ELEMENT LENGTH IS 4.0 IN.)

$\sigma_\phi = -328.0 \times 4 \pm (-51.4)\,96 = -1{,}312 \mp 4{,}934 = \begin{matrix} -6{,}246 & IF \\ +3{,}622 & OF \end{matrix}$

$\sigma_\theta = 3490 \times 4 \pm (-26.5)\,96 = 13960 \mp 2544 = \begin{matrix} 11416 & IF \\ 16504 & OF \end{matrix}$

① BECAUSE THIS PORTION OF THE TANK IS A SPHERE THE HOOP & MERIDIONAL STRESSES ARE EQUAL

5863800
STRUCTURE ASSY

PART 5

ASSUME STRESSES @ A + B ARE THE SAME AS FOR PART 4 (B) + PART 6 (A).

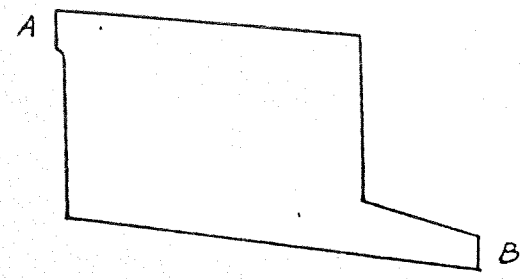

A - σ_ϕ = -40,459 IF
-31637 OF

σ_θ = 8,141 IF
26,745 OF

B - σ_ϕ = 8,971 IF
-11,645 OF

σ_θ = -13,926 IF
-24,546 OF

MEMBRANE: $\sigma_\phi = \sigma_\theta = 0$

5863800
STRUCTURE ASSY

PART 6

CONSIDER THE WELDS TO ACT FOR THE DISCONTINUITY STRESSES:

AT PT A- $t = .3536$ $1/t = 2.83$ $6/t^2 = 48.1$
AT PT B- $t = .1872$ $1/t = 5.35$ $6/t^2 = 171$

A- $\sigma_\phi = -472.4 \times 2.83 \pm 214.3 \times 48.1 = -1,337 \pm 10,308 =$ 8,971 IF / -11,645 OF

$\sigma_\theta = -6777.1 \times 2.83 \pm 110.4 \times 48.1 = -19,236 \pm 5,310 =$ -13,926 IF / -24,546 OF

B- $\sigma_\phi = -175.9 \times 5.35 \pm 78.1 \times 171 = -941 \pm 13,355 =$ +12,414 IF / -14,296 OF

$\sigma_\theta = -4717.6 \times 5.35 \pm 28.9 \times 171 = -25,239 \pm 4,942 =$ -20,297 IF / -30,181 OF

MEMBRANE: $\sigma_\theta = \dfrac{75.8 \times 26.183}{.291} = 6,820$ ②

$\sigma_\phi = \dfrac{1106}{.291} = 3800$ ②

YIELD: $\sigma_\theta = 1.21(6820) = 8252$ PSI

$\sigma_\phi = 1.21(3800) = 4598$ PSI

② ASSUME AVERAGE THICKNESS WORKING TO COMPUTE MEMBRANE STRESSES

5863800
STRUCTURE ASSY

PART 7

$t = .125 \qquad \frac{1}{t} = 8 \qquad \frac{6}{t^2} = 384$

A- $\sigma_\phi = -175.9 \times 8 \pm 78.1 \times 384 = -1{,}407 \pm 29{,}990 = \begin{matrix} 28{,}583 & IF \\ -31{,}397 & OF \end{matrix}$

$\sigma_\theta = -1495.7 \times 8 \pm 24.0 \times 384 = -11{,}966 \pm 9{,}216 = \begin{matrix} -2{,}750 & IF \\ -21{,}182 & OF \end{matrix}$

MEMBRANE: $\sigma_\phi = 1106/.125 = 8{,}848$

$\sigma_\theta = \frac{75.8 \times 25.534}{.125} = 15{,}484$

YIELD:

$\sigma_\phi = 1.21\,(8848) = 10706$ PSI

$\sigma_\theta = 1.21\,(15484) = 18736$ PSI

K+E ALBANENE® TRACING PAPER LA 0814

FORM 25-8-1 (REV. 8-53)

PREPARED BY: [illegible]
CHECKED BY: [illegible]
DATE: 2-24-64
TITLE: DSV-4 PROPELLANT TANK

DOUGLAS AIRCRAFT COMPANY, INC.

SM DIVISION

PAGE: 9.3.21
MODEL: DSV-4
REPORT NO.: SM 42569

LOX SUMP JOINT
(SI BURNOUT)

5863800
STRUCTURE ASSY

PART			DISCONTINUITY LIMIT	MEMBRANE LIMIT	DISCONTINUITY + MEMBRANE LIMIT	DISCONTINUITY + MEMBRANE ULTIMATE
1	IF	σ_t	-132	48,361	40229	65,109
		σ_θ	704		49165	66238
	OF	σ_t	192	48,361	48553	65547
		σ_θ	802		49163	66370
2 A	IF	σ_t	-192	48,361	48169	65,028
		σ_θ	-7,660		40,701	54,946
	OF	σ_t	132	48,361	48,493	65,466
		σ_θ	7,100		55,461	74,872
2 B	IF	σ_t	9,235	48,361	58,199	78,570
		σ_θ	-2,992		45,369	61,248
	OF	σ_t	-8,814	48,361	39,547	53,388
		σ_θ	-8,668		39,693	53,586
3 A	IF	σ_t	3,499	28,284	31,783	42,907
		σ_θ	5,511		33,795	45,623
	OF	σ_t	-2,895	28,284	25,389	34,275
		σ_θ	+3,453		31737	42845
3 B	IF	σ_t	-1,654	28,284	26,630	35,950
		σ_θ	7,938		36,222	48,900
	OF	σ_t	+126	28,284	28,410	38354
		σ_θ	9,772		38,056	51,376
4 A	IF	σ_t	-759	16,772	16,013	21,618
		σ_θ	10,098		26,870	36,274
	OF	σ_t	-145	16,772	16,627	22,446
		σ_θ	12,478		29250	39488
4 (WELD)	IF	σ_t	-6,246	16,772	10,526	14,210
		σ_θ	11416		28188	38054
	OF	σ_t	3,622	16,772	20,394	27,532
		σ_θ	16504		33276	44923
4 B	IF	σ_t	-40,459	16,772	-23,687	-31,977
		σ_θ	8,141		24,913	33,632
	OF	σ_t	-31637	16,772	-14865	-20068
		σ_θ	26,745		43,517	58,748

K+E ALBANENE® LA 0814 TRACING PAPER

FORM 25-5-1 (REV. 8-53)

PREPARED BY: G.J.S.
CHECKED BY: Polczynski
DATE: 2-24-64
TITLE: DSV-4 PROPELLANT TANK

DOUGLAS AIRCRAFT COMPANY, INC.
SM DIVISION

PAGE: 9.3.22
MODEL: DSV-4
REPORT NO.: SM 42569

5863800
STRUCTURE ASSY

PART			DISCONTINUITY LIMIT	MEMBRANE LIMIT	DISCONTINUITY + MEMBRANE LIMIT	DISCONTINUITY + MEMBRANE ULTIMATE
5 A	IF	σ_ϕ	-40,459	0	-40,459	-54,620
		σ_θ	8,141		8,141	10,990
	OF	σ_ϕ	-31637	0	-31637	-42710
		σ_θ	26,745		26,745	36,106
5 B	IF	σ_ϕ	8,971	0	8,971	12,111
		σ_θ	-13,926		-13,926	-18,800
	OF	σ_ϕ	-11,645	0	-11,645	-15,721
		σ_θ	-24,546		-24,546	-33,137
6 A	IF	σ_ϕ	8,971	3,800	12,771	17,24[illegible]
		σ_θ	-13,926	6,820	-7,106	-9,593
	OF	σ_ϕ	-11,645	3,800	-7,845	-10,591
		σ_θ	-24,546	6,820	-17,726	-23,930
6 B	IF	σ_ϕ	12,414	3,800	16,214	21,889
		σ_θ	-20,297	6,820	-13,477	-18,194
	OF	σ_ϕ	-14,296	3,500	-10,496	-14,170
		σ_θ	-30,181	6,820	-23,361	-31,537
7 A	IF	σ_ϕ	28,583	8,848	37,431	50,532
		σ_θ	-2,750	15,484	12,734	17,191
	OF	σ_ϕ	-31,397	8,848	-22,549	-30,441
		σ_θ	-21,182	15,484	-5,698	-7,692

K+E ALBANENE® TRACING PAPER LA 0814

FORM 28-S-1 (REV. 8-53)

PREPARED BY: S. J. S.
CHECKED BY: [illegible]
DATE: 2-24-64
TITLE: DSV-4 PROPELLANT TANK

DOUGLAS AIRCRAFT COMPANY, INC.

SM DIVISION

PAGE: 9.3.23
MODEL: DSV-4
REPORT NO.: SM 42569

FOR BIAXIAL STRESS:
$2\sigma^2 = [(\sigma_\phi - \sigma_\theta)^2 + \sigma_\phi^2 + \sigma_\theta^2]$

5E6 3800
STRUCTURE ASSY

PART			BIAXIAL STRESS	ALLOWABLE STRESS	M.S.
1		IF	65680	78,000	.19
		OF	65963		.18
2	A	IF	60619		.29
		OF	70,640		.10
	B	IF	71,500		.09
		OF	53,487		.46
3	A	IF	44327		.76
		OF	33,912		1.30
	B	IF	43880		.78
		OF	46261		.69
4	A	IF	31,605	78,000	1.47
		OF	34304		1.27
	WELD	IF	33306	44,000 (REF. 35)	.32
		OF	39233		.12
	B	IF	56,824	78,000	.37
		OF	70944		.10
5	A	IF	-60064		.28
		OF	68336		.14
	B	IF	-26,981		1.89
		OF	-28,711		1.72
6	A	IF	23551	78,000	2.31
		OF	-20,169		2.75
	B	IF	34,762	47,400 (REF 36)	.36
		OF	-27359	47,400	.73
7		IF	44,501	47,400	.07
		OF	-27,416	47,400	.73

K+E ALBANENE® TRACING PAPER LA 0814

EQUIPMENT

Presented in this section are the analyses of various equipment components connected to the propellant tank. These components are:

Cold Helium Bottle Installation	10.1.0
Liquid Oxygen Fill Line	10.2.0
Liquid Oxygen Level Sensing Probe	10.3.0
Liquid Hydrogen Level Sensing Probe	10.4.0
Liquid Oxygen Vent Line	10.5.0

The analysis accounts for pressure, dynamic loading, temperature and static loading conditions.

COLD HELIUM BOTTLE INSTALLATION

The structural analysis of the Cold Helium Bottle installation is presented in Reference 34.

FORM 20-0-1 (REV. 8-59)

DOUGLAS AIRCRAFT COMPANY, INC.

PREPARED BY: L C P
CHECKED BY: G. J. S.
DATE: 10-28-62
DIVISION: SM
PAGE: 10.2.0
MODEL: DSV-4
REPORT NO: SM 42 5
TITLE: DSV-4 PROPELLANT TANK

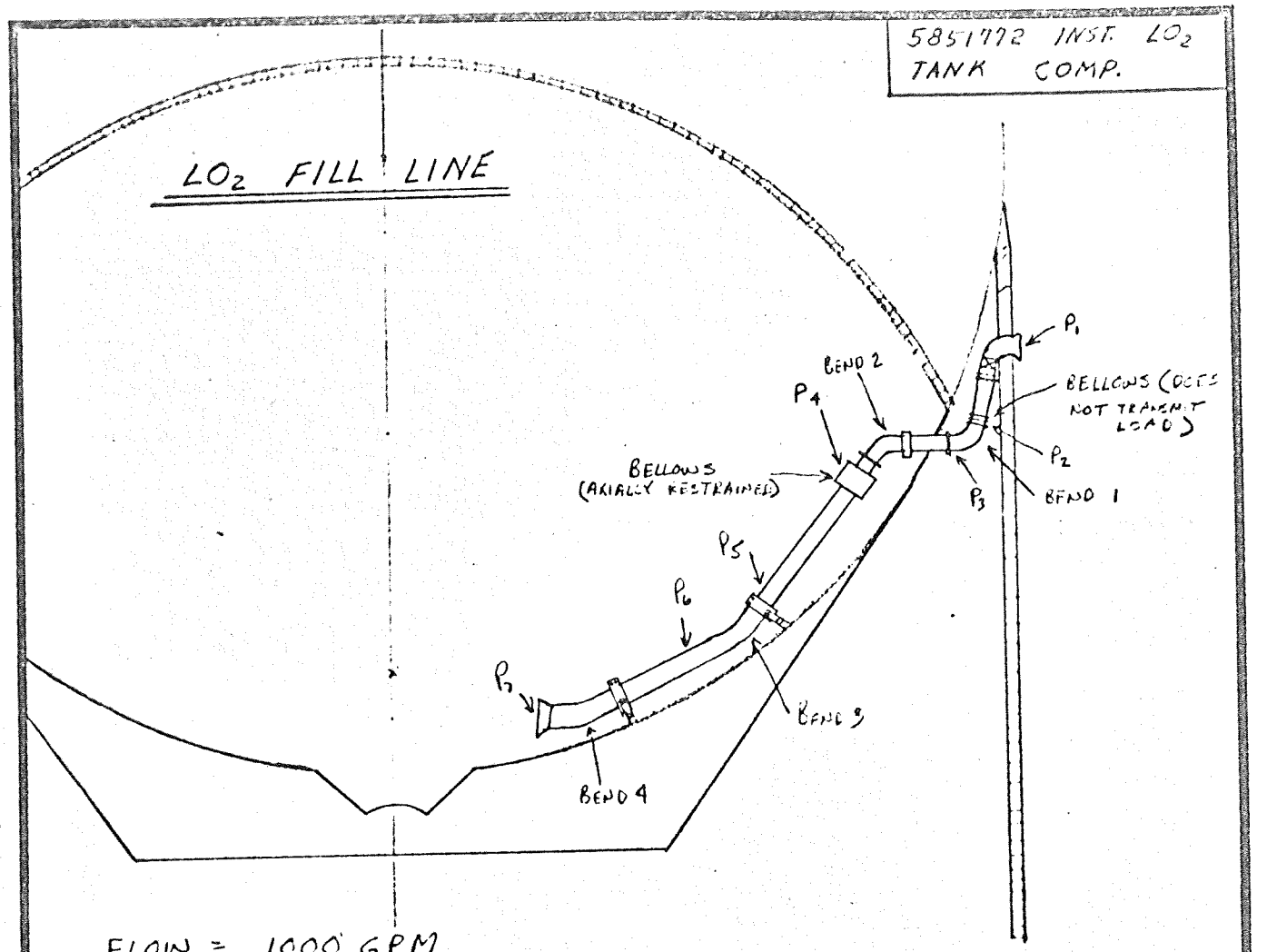

FLOW = 1000 GPM
P_1 = 120 PSIG
P_2 = 106 PSIG
P_3 = 101.5 PSIG
P_4 = 20 PSIG
P_5 = 14 PSIG
P_6 = 7 PSIG
P_7 = 0 PSIG

(REF 15)

MATERIAL: TANK WALL 2014-T6
FITTING 6061-T6

INSIDE DIAMETER OF LINES = 2.875"
INSIDE DIAMETER AT P_4 = 2.18"
MEAN DIAMETER OF EXTERIOR BELLOWS = 3.3"
FITTING DIAMETER = 6.875"

SM42569

K+E ALBANENE TRACING PAPER 70999

5851772 INST. LO_2 TANK COMP.

BEND 1

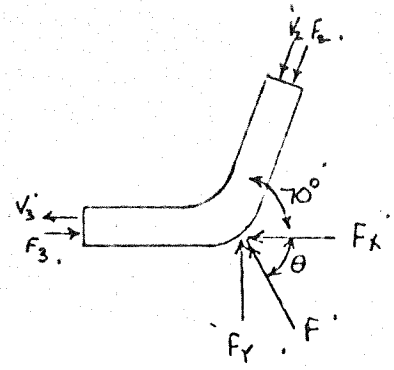

$$V_2 = 1000 \frac{GAL}{MIN} \times \frac{1}{7.48} \frac{FT^3}{GAL} \times \frac{144}{\pi \left(\frac{2.875}{2}\right)^2} \frac{1}{FT^2} \times \frac{1}{60} \frac{MIN}{SEC} = 49.5 \ FT/SEC$$

$$V_3 = V_2$$

$$F_2 = 106 \ PSI \times \pi \left(\frac{3.3}{2}\right)^2 IN^2 = 905 \#$$

$$F_3 = 101.5 \ PSI \times \pi \left(\frac{2.875}{2}\right)^2 IN^2 = 658 \#$$

$$\Sigma F_X \quad F_3 - F_X - F_2 \cos 70^\circ = \frac{W}{g}\left(-V_3 + V_2 \cos 70^\circ\right)$$

$$W = 1000 \frac{GAL}{MIN} \times \frac{1}{7.48} \frac{FT^3}{GAL} \times 71.1 \frac{LBS}{FT^3} \times \frac{1}{60} \frac{MIN}{SEC} = 158.7 \ \#/SEC$$

$$\frac{W}{g} = \frac{158.7 \ \#/SEC}{32.2 \ FT/SEC^2} = 4.92 \ \frac{\# - SEC}{FT}$$

$$658 - F_X - (905)(.342) = 4.92\left(-49.5 + (49.5)(.342)\right)$$

$$F_X = 658 - 310 + 161 = 509 \#$$

$$\Sigma F_Y \quad F_Y - F_2 \sin 70^\circ = \frac{W}{g}\left(0 + V_2 \sin 70^\circ\right)$$

$$F_Y - (905)(.94) = (4.92)(49.5)(.94)$$

$$F_Y = 850 + 229 = 1079 \#$$

$$F = \left(F_X^2 + F_Y^2\right)^{1/2} = \left[(509)^2 + (1079)^2\right]^{1/2} = 1192 \#$$

$$\theta = TAN^{-1} \frac{F_Y}{F_X} = TAN^{-1} \frac{1079}{509} = 64.75^\circ$$

5851772 INSL. LO_2 TANK COMP.

BEND 2

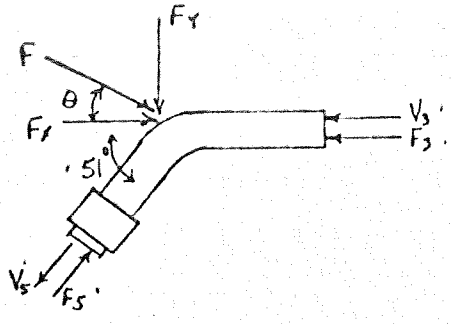

$V_3 = 49.5$ FT/SEC.

$V_5 = 49.5$.

$F_3 = 658$ #

$F_5 = 14 \text{ PSI} \times \pi \left(\frac{2.875}{2}\right)^2 \text{IN}^2 = 90.7$ #

ΣF_X $\quad F_X - F_3 + F_5 \cos 51° = \frac{W}{g}\left(-V_5 \cos 51° + V_3\right)$

$F_X - 658 + (90.7)(.629) = 492\left((-49.5)(.629) + 49.5\right)$

$F_X = 658 - 57 + 90 = 691$ #

ΣF_Y $\quad F_5 \sin 51° - F_Y = \frac{W}{g}\left(-V_5 \sin 51° - 0\right)$

$(90.7)(.777) - F_Y = (492)(-49.5)(.777)$

$F_Y = 70 + 190 = 260$ #

$F = \left(F_X^2 + F_Y^2\right)^{1/2} = \left[(691)^2 + (260)^2\right]^{1/2} = 739$ #

$\theta = \tan^{-1} \frac{F_Y}{F_X} = \tan^{-1} \frac{260}{691} = 20.6°$

K+E ALBANENE TRACING PAPER 70588

SM 42569

5851772 INST. LO_2 TANK COMP.

BEND 3

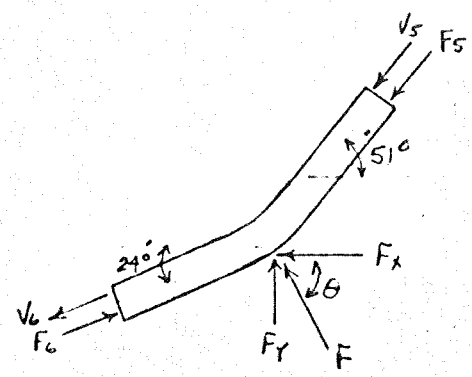

$V_5 = 49.5$ FT/SEC.

$V_6 = 49.5$ FT/SEC

$F_5 = 14 \text{ PSI} \times \pi\left(\frac{2.875}{2}\right)^2 \text{IN}^2 = 90.7\#$

$F_6 = 7 \text{ PSI} \times \pi\left(\frac{2.875}{2}\right)^2 \text{IN}^2 = 45.4\#$

$\Sigma F_X \quad F_6 \cos 24° - F_X - F_5 \cos 51° = \frac{w}{g}\left(-V_6 \cos 24° + V_5 \cos 51°\right)$

$(45.4)(.914) - F_X - (90.7)(.629) = 492\left[(-49.5)(.914) + (49.5)(.629)\right]$

$F_X = 41 - 57 + 69 = 53\#$

$\Sigma F_Y \quad F_Y + F_6 \sin 24° - F_5 \sin 51° = \frac{w}{g}\left(-V_6 \sin 24° + V_5 \sin 51°\right)$

$F_Y + (45.4)(.406) - (90.7)(.777) = 492\left[(-49.5)(.406) + (49.5)(.777)\right]$

$F_Y = -18 + 70 + 90 = 142\#$

$F = \left(F_X^2 + F_Y^2\right)^{1/2} = \left[(53)^2 + (142)^2\right]^{1/2} = 152\#$

$\theta = \tan^{-1}\frac{F_Y}{F_X} = \tan^{-1}\frac{142}{53} = 69.52°$

SM 42569

5851772 INST. LO_2 TANK COMP.

BEND 4

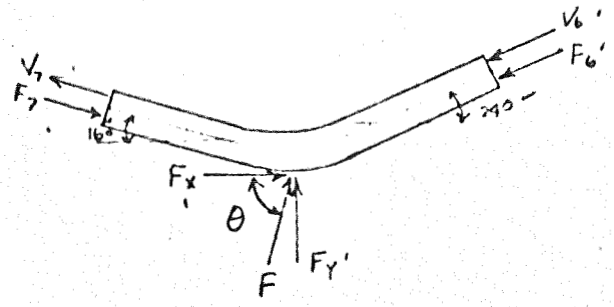

$V_6 = 49.5$ FT/SEC

$V_7 = 49.5$ FT/SEC

$F_6 = 45.4$ #

$F_7 = 0$

ΣF_X $\quad F_X' + F_7' \cos 16° - F_6 \cos 24° = \frac{w}{g}(-V_7 \cos 16° + V_6 \cos 24°)$

$F_X + 0 - (45.4)(.914) = 4.92\left[(-49.5)(.961) + (49.5)(.914)\right]$

$F_X = 41 - 11 = 30$ #

ΣF_Y $\quad F_Y' - F_7' \sin 16° - F_6 \sin 24° = \frac{w}{g}(V_7 \sin 16° + V_6 \sin 24°)$

$F_Y - 0 - (45.4)(.406) = 4.92\left[(49.5)(.276) + (49.5)(.406)\right]$

$F_Y = 18 + 166 = 184$ #

$F = (F_X^2 + F_Y^2)^{1/2} = \left[(30)^2 + (184)^2\right]^{1/2} = 186$ #

$\theta = \tan^{-1}\frac{F_Y}{F_X} = \tan^{-1}\frac{184}{30} = 80.74°$

5851772 INST. LO_2 TANK COMP.

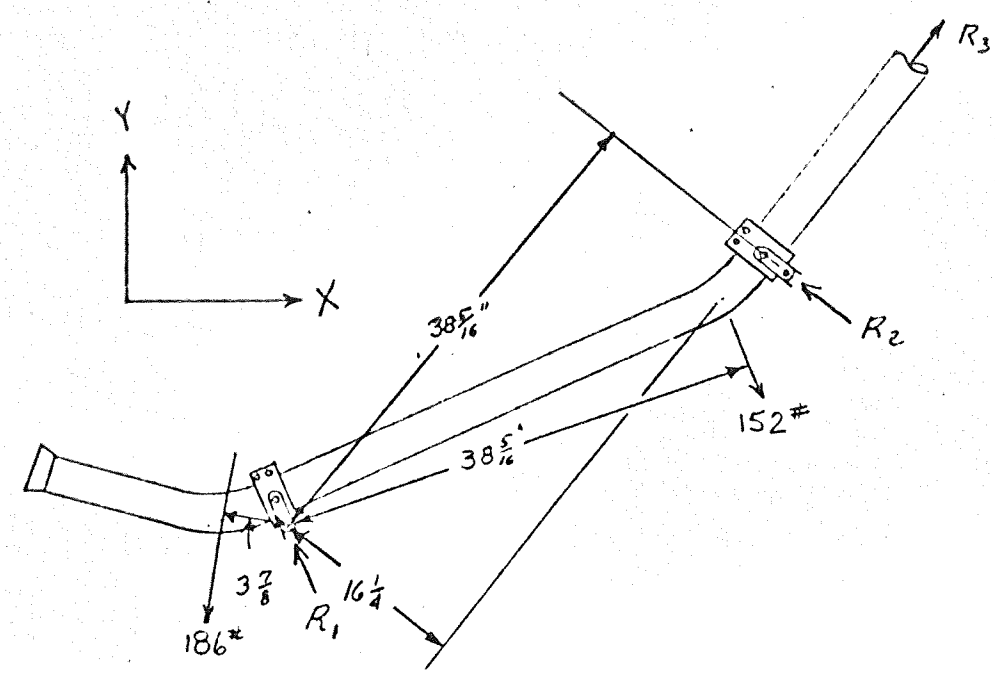

$\Sigma X \quad 0 = -186\cos 80.74^\circ - R_1\cos 66^\circ + 152\cos 69.52^\circ - R_2\cos 39^\circ + R_3\cos 51^\circ$

$\Sigma Y \quad 0 = -186\sin 80.74^\circ + R_1\sin 66^\circ - 152\sin 69.52^\circ + R_2\sin 39^\circ + R_3\sin 51^\circ$

$\Sigma M_{R_1} \quad 0 = (186)(5.875) + 38.3125\,R_2 + 16.25\,R_3 - (152)(38.3125)$

$\Sigma X' \quad 0 = -29.95 - .406\,R_1 + 53.25 - .777\,R_2 + .629\,R_3$

$\Sigma Y' \quad 0 = -183.2 + .914\,R_1 - 142.5 + .629\,R_2 + .777\,R_3$

$2.25\Sigma X' + \Sigma Y' \quad -1.125\,R_2 + 2.192\,R_3 - 273.2 = 0$

$\Sigma M_{R_1} \quad +38.3125\,R_2 + 16.25\,R_3 - 5100 = 0$

$34.05(2.25\Sigma X' + \Sigma Y') + \Sigma M_{R_1} \quad 90.80\,R_3 - 14{,}400 = 0$

$R_3 = 159\#$

$R_2 = 67\#$

$R_1 = 175\#$

SM 42569

5851772 INST. LO_2 TANK COMP.

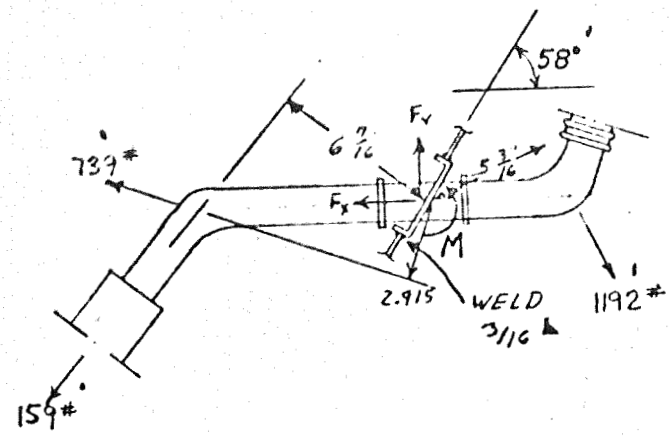

$M = (1192)(5.1875) + (739)(2.915) - (159)(6.4375)$

$M = 6190 + 2150 - 1020$

$M = 7{,}320$ IN-LB

$F_Y = 1192 \sin 64.75° + 159 \sin 51° - 739 \sin 20.6°$

$F_Y = 1078 + 123 - 260$

$F_Y = 941$ #

$F_X = 1192 \cos 64.75° - 739 \cos 20.6° - 159 \cos 51°$

$F_X = 509 - 692 - 100$

$F_X = -283$ #

LOADS IN PLANE OF FITTING:

$F_N = F_X \sin 58° - F_Y \sin 32°$

$F_N = 240 - 499$

$F_N = 259$ # ←

$F_S = F_X \cos 58° + F_Y \cos 32°$

$F_S = 150 + 798$

$F_S = 948$ # ↑

SM-42569

SESTITIZ INST. LO_2 TANK COMP.

REFERENCE: 16

STRESSES AT WELD CONNECTING FITTING TO TANK:

$$u = s = 1.82 \frac{r}{R}\sqrt{\frac{R}{t}} = 1.82 \frac{3.625^*}{110}\sqrt{\frac{110}{.226}} = (1.82)(.0330)(22.05)$$

$$u = s = 1.325$$

* NOTE: $r = \frac{6.875}{2} + 3/16''$ WELD

DUE TO MOMENT:

$$M_X = .125 \frac{M}{R}\sqrt{\frac{R}{t}} = (.125)\frac{M}{110}(22.05) = .0251\,M$$

$$M_Y = .038 \frac{M}{R}\sqrt{\frac{R}{t}} = (.038)\frac{M}{110}(22.05) = .0076\,M$$

$$N_X = -.109 \frac{M}{Rt}\sqrt{\frac{R}{t}} = (-.109)\frac{M}{(110)(.226)}(22.05) = -.0967\,M$$

$$N_Y = -.033 \frac{M}{Rt}\sqrt{\frac{R}{t}} = (-.033)\frac{M}{(110)(.226)}(22.05) = -.0293\,M$$

DUE TO NORMAL LOAD (F_N):

$$M_X = .0514\,F_N$$

$$M_Y = .0149\,F_N$$

$$N_X = -.0897 \frac{F_N}{t} = -.0897 \frac{F_N}{.226} = -.397\,F_N$$

$$N_Y = -.0278 \frac{F_N}{t} = -.0278 \frac{F_N}{.226} = -.123\,F_N$$

DUE TO SHEAR LOAD (F_S):

$$M_X = 0$$

$$M_Y = 0$$

$$N_X = -\frac{F_S}{d} = -\frac{F_S}{6.875} = -.145\,F_S$$

$$N_Y = 0$$

REFERENCE: 17

ALLOWABLES FOR 2014-T6 AS WELDED (AT -298°F):

YIELD = 32,000 PSI

ULTIMATE = 44,200 PSI

THESE ALLOWABLES RESULT FROM THE MOST RECENT DATA. OTHER TANK WELD ALLOWABLES BASED UPON CONSERVATIVE RESULTS.

K+E ALBANENE TRACING PAPER 70663

$$\frac{\text{ULTIMATE}}{\text{YIELD}} = 1.28$$

YIELD F.S. = 1.10
ULTIMATE F.S. = 1.35

$$\frac{U.F.S.}{Y.F.S.} = 1.23$$

∴ YIELD IS CRITICAL CONDITION

$M_{(YIELD)} = (7,320)(1.10) = 8,050$ IN-LB

$F_{N\,(YIELD)} = (259)(1.10) = 285$ #

$F_{S\,(YIELD)} = (948)(110) = 1043$ #

$M_X = (.0251)(8,050) + (.0514)(285) = 202 + 15$

$M_X = 217$ IN-LB/IN

$M_Y = (.0076)(8,050) + (.0149)(285) = 61 + 4$

$M_Y = 65$ IN-LB/IN

$N_X = (-.0967)(8,050) + (-.397)(285) + (-.145)(1,043) = -779 - 113 - 151$

$N_X = -1043$ LB/IN

$N_Y = (-.0293)(8,050) + (-.123)(285) = -236 - 35$

$N_Y = -271$ LB/IN

$$f_X = \pm \frac{6M_X}{t^2} + \frac{N_X}{t} = \pm \frac{(6)(217)}{(.226)^2} - \frac{(1043)}{(.226)} = \pm 25,500 - 4,620$$

$f_X = +20,880$ PSI OR $-30,120$ PSI

$$f_Y = \pm \frac{6M_Y}{t^2} + \frac{N_Y}{t} = \pm \frac{(6)(65)}{(.226)^2} - \frac{(271)}{(.226)} = \pm 7,630 - 1,200$$

$f_Y = +6,430$ PSI OR $-8,830$ PSI

SM 42569

K+E ALBANENE® TRACING PAPER 70888

USING THE EQUATION FOR THE HUBER, HENCKY, VON MISES YIELD CRITERION:

$$(\sigma_2 - \sigma_3)^2 + (\sigma_3 - \sigma_1)^2 + (\sigma_1 - \sigma_2)^2 = 2\sigma_0^2$$

WHERE:

$$\sigma_0 = F_{TY}$$
$$\sigma_1 = f_x$$
$$\sigma_2 = f_y$$
$$\sigma_3 = C$$

$$\therefore \quad f_y^2 + f_x^2 + (f_x - f_y)^2 = 2F_{TY}^2$$

$$\frac{f_y}{f_x} = \frac{-8,830}{-30,120} = .292$$

$$f_y = .292 f_x$$

$$(.292 f_x)^2 + f_x^2 + (.708 f_x)^2 = 2F_{TY}^2$$

$$1.586 f_x^2 = 2F_{TY}^2$$

$$f_x = \left(\frac{2.00}{1.586}\right)^{1/2} F_{TY}$$

$$f_x = 1.123 F_{TY}$$

$$f_x = (1.123)(32,000)$$

$$f_x = 36,000 \text{ PSI}$$

$$M.S. = \frac{36,000}{30,120} - 1 = \underline{+.20}$$

K+E ALBANENE TRACING PAPER 70808

585 1772 - INST. LO_2 TANK COMPONENTS

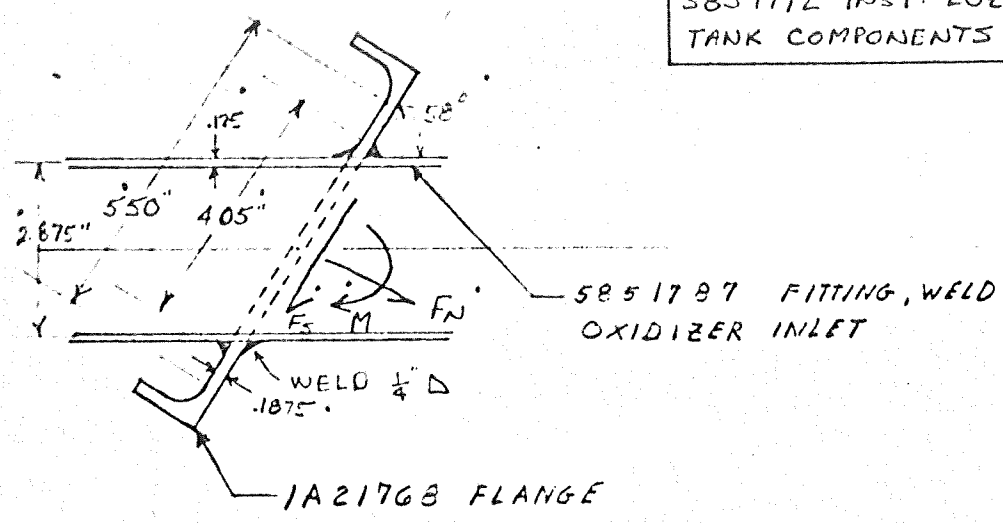

(REF. 18)

STRESS IN FITTING DUE TO F_N:

$$f_{MAX} = \frac{K F_N}{t^2}$$

$a = 2.75"$

$b = 2.025"$

$a/b = 1.358$

$\therefore K = 0.160$

P10.2.8

$$f_{MAX} = \frac{(0.160)(285)}{(.1875)^2} = 1300 \text{ PSI}$$

STRESS IN FITTING DUE TO M:

$$f_{MAX} = \frac{\alpha}{\alpha_2} \frac{M}{at^2}$$

$\beta = \frac{b}{a} = 0.736$

$\therefore \alpha = 48.5$

$\alpha_2 = 114.0$

P10.2.8

$$f_{MAX} = \frac{48.5}{114.0} \times \frac{8050}{(2.75)(.1875)^2} = 35{,}400 \text{ PSI}$$

SM42569

STRESS IN FITTING DUE TO F_s:

$$f = \frac{F_s'}{2bt} = \frac{1043}{(2)(2.025)(.1875)} = 1370 \text{ PSI}$$ (P 10.2.8)

TOTAL STRESS IN FITTING:

$$f_{TOTAL} = 1{,}300 + 35{,}400 + 1{,}370$$

$$f_{TOTAL} = 38{,}070 \text{ PSI}$$

6061-T6 AT -298°F

$F_{TY} = 45{,}000$ PSI

$$M.S. = \frac{45{,}000}{38{,}070} - 1 = +.18$$

STRESS IN TUBE:

DUE TO BENDING

$$f = \frac{Mc}{I}$$

WHERE $I = \pi r^3 t = (\pi)(1.4375)^3(.125) = 1.162$

$c = 1.4375$

$$f = \frac{(8050)(1.4375)}{1.162} = 9{,}940 \text{ PSI}$$

DUE TO AXIAL LOAD

$$f = \frac{F_x}{2\pi r t} = \frac{(283)(1.10)}{(2)(\pi)(1.4375)(.125)} = 276 \text{ PSI}$$

5851772 INST. LO_2 TANK COMPONENTS

DUE TO SHEAR:

$$f = \frac{F_Y}{2\pi r t} = \frac{(948)(1.10)}{(2)(\pi)(1.4375)(.125)} = 917 \text{ PSI}$$

$$f_X = 9{,}940 + 276 = 10{,}216 \text{ PSI}$$

$$f_S = 917 \text{ PSI}$$

$$f_{X_{MAX}} = \frac{f_X}{2} + \sqrt{\left(\frac{f_X}{2}\right)^2 + (f_S)^2}$$

$$= \frac{10{,}216}{2} + \sqrt{\left(\frac{10{,}216}{2}\right)^2 + (917)^2}$$

$$f_{X_{MAX}} = 10{,}300 \text{ PSI}$$

$$M.S. = \frac{45{,}000}{10{,}300} - 1 = \text{HIGH}$$

5851772- INST. LO_2 TANK COMPONENTS

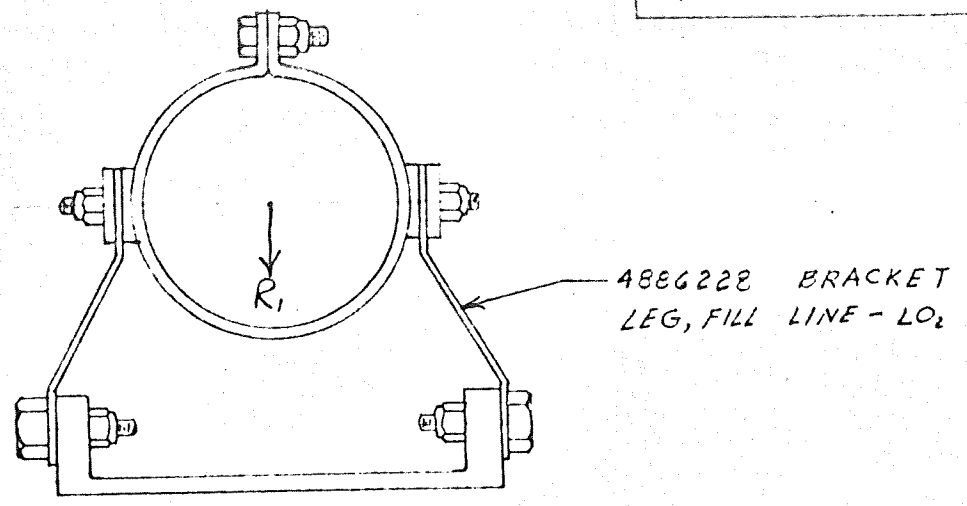

$R_1 = 175 \times 1.10 = 192.5^{\#}$ YIELD (REF PG. 10.2.5)
OR $96.25^{\#}$ ON EACH LEG

ASSUME LEG IS PINNED.

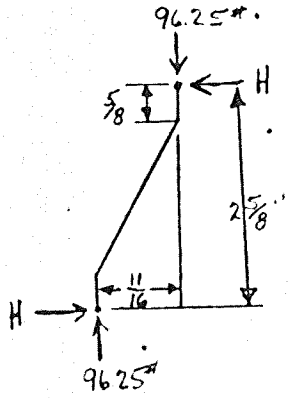

$(2.625)H = (96.25)(.6875)$
$H = 25.2^{\#}$

MAXIMUM MOMENT IS 5/8" DOWN FROM H

$M = (25.2)(.625) = 15.75$ IN-LB

LEG IS .071" THICK AND 1" WIDE

$\therefore \quad I = \frac{1}{12} \times 1 \times (.071)^3 = .0000298 \text{ IN}^4$

$f_b = \frac{Mc}{I} = \frac{(15.75)(.0355)}{.0000298} = 18{,}780$ PSI

SM-42569

5851772 - INST. LO_2 TANK COMPONENTS

AXIAL STRESS

$$f_a = \frac{P}{A} = \frac{96.25}{(.071)(1)} = 1{,}360 \text{ PSI}$$

TOTAL COMPRESSIVE STRESS

$$f_t = f_b + f_a = 18{,}780 + 1{,}360$$

$$f_t = 20{,}140 \text{ PSI}$$

$$M.S. = \frac{45{,}000}{20{,}140} - 1 = +1.24$$

(REF. 19)

FIND COLUMN ALLOWABLE

$$F_{co} = F_{cy}\left(1 + \sqrt{F_{cy}/1{,}333}\right)$$

$$= 45{,}000\left(1 + \frac{\sqrt{45{,}000}}{1{,}333}\right)$$

$$F_{co} = 52{,}100 \text{ PSI}$$

TRANSITIONAL $$\frac{L'}{\rho} = 1.346\pi\sqrt{\frac{E}{F_{co}}}$$

$$= 1.346\pi\sqrt{\frac{11\times10^6}{52{,}100}}$$

$$L'/\rho = 61.5$$

$$\rho = \sqrt{I/A} = \sqrt{\frac{.0000298}{.071}} = .0205$$

$$L/\rho = \frac{2.625}{.0205} = 128$$

∴ USE LONG COLUMN FORMULA

5851772- INST. LO_2 TANK COMPONENTS

$$F_c = \pi^2 E / (L/r)^2$$

$$= \frac{(\pi^2)(11 \times 10^6)}{(128)^2}$$

$$F_c = 6{,}620 \text{ PSI}$$

AXIAL LOAD ON SLANTED SECTION

$$P = 96.25 \cos 26.58^\circ + 25.2 \cos 63.42^\circ$$

$$P = 86.1 + 11.3$$

$$P = 97.4$$

$$f_{c_y} = \frac{97.4}{.071} = 1{,}370 \text{ PSI} \qquad f_{c_u} = \frac{1370 \times 1.35}{1.1} = 1{,}680 \text{ PSI}$$

$$M.S. = \frac{6{,}620}{1{,}680} - 1 = \underline{2.95}$$

K+E ALBANENE® TRACING PAPER 70805

SM 42569

5871234 SUPPORT LO_2 PU. PROBE

LIQUID OXYGEN PU PROBE

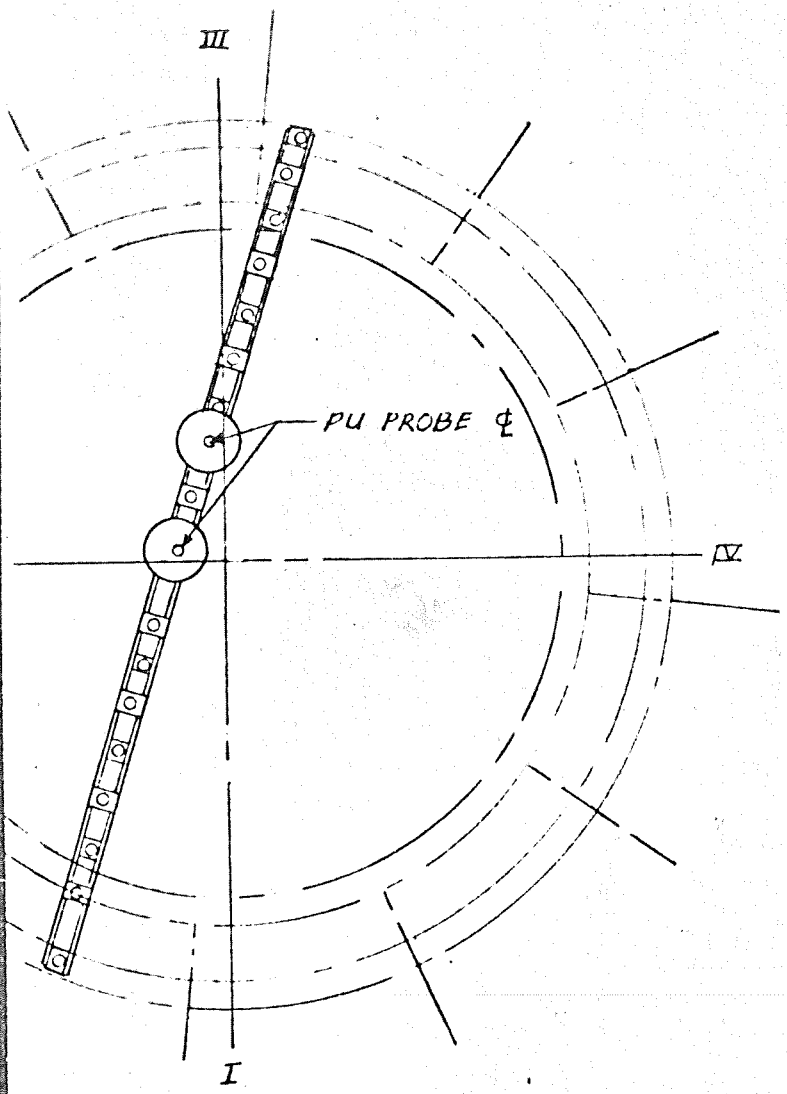

LOOKING FWD

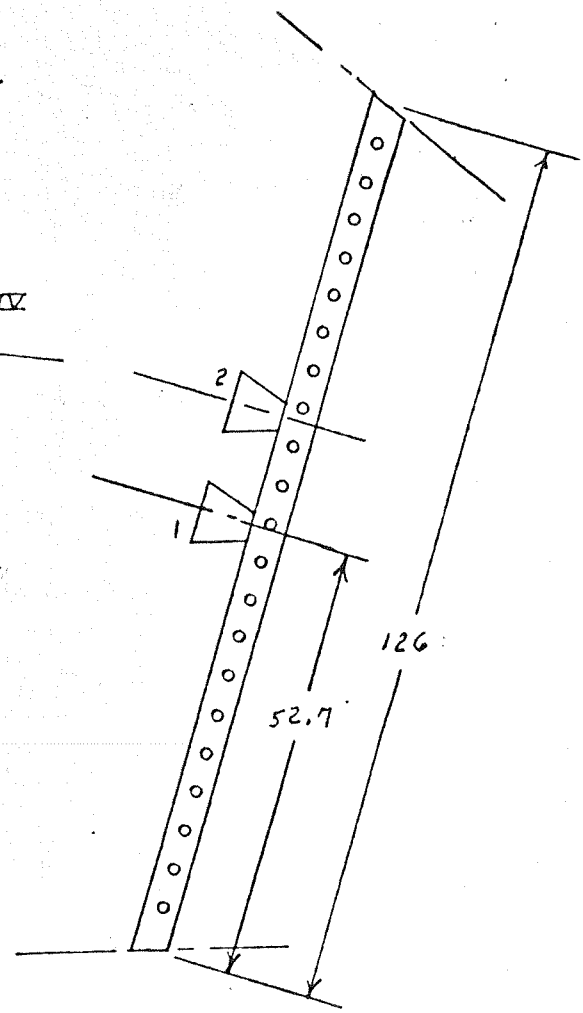

PROBES 1 & 2 HAVE DIFFERENT MASSES AND THEREFORE DIFFERENT f_n. IN THIS CASE THE SIDE LOADS AT SUPPORTS 1 & 2 WILL NOT OCCUR TOGETHER. MAX. SIDE LOAD IS AT 19.6 CPS $P_s = 396$ LB. (REF 28)

ASSUME THAT P_s ACTS AT PROBE 1.

$P_{s_{ULT}} = 396 \times 1.35 = 535$ LB.

SM42569

ASSUME PIN ENDS

5E71234 SUPPORT
LO_2 P.U. PROBE

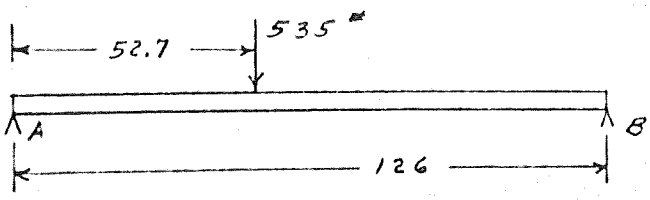

$F_B = \frac{535 \times 52.7}{126} = 223\#$ $\qquad F_A = 312\#$

$M_{MAX} = 312 \times 52.7 = 16{,}400$ IN. LB.

SECTION PROPERTIES OF BEAM: (ABOUT NA)

7075-T6 MATL.

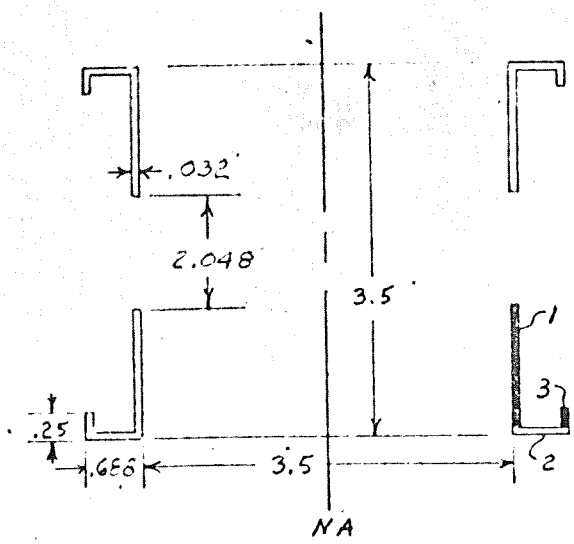

$I_{cc_1} = \frac{.694(.032)^3}{12} = 0$

$I_{cc_2} = \frac{.032(.686)^3}{12} = .0008$

$I_{cc_3} = \frac{.218(.032)^3}{12} = 0$

PART	A	Y	AY	AY^2	I_{cc}	$AY^2 + I_{cc}$
1	.0222	1.766	.0392	.0692	0	.0692
2	.0220	2.094	.0461	.0965	.0008	.0973
3	.0070	2.422	.0170	.0412	0	.0412
	.0512		.1023			.2077

$A = 4 \times .0512 = \quad A = .2048 \text{ IN}^2$

$\bar{Y} = 0$

$I_{NA} = 4 \times .2077 = .8308 \text{ IN}^4$

$\therefore \sigma = \pm M\, c/I = \frac{16{,}400 \times 2.422}{.8308} = 47{,}700$ PSI

FOR 16 MIN OF VIB. (8 MIN. QUAL TEST + 8 MIN FLIGHT)

@ 19.6 CPS $16 \times 60 \times 19.6 = 1.9 \times 10^4$ CYCLES

TEMP = -298°F (REF. 13 PG A.7.n, A.7.fgh)

$\epsilon = 84 \times 10^{-4}$ IN/IN $E = 12 \times 10^6$ PSI

$\therefore \sigma_{ALLOW} = 84 \times 10^{-4} \times 12 \times 10^6 = 101{,}000$ PSI

$M.S. = \frac{101{,}000}{47{,}700} - 1 = \boxed{.112}$

CHECK CRIPPLING ALLOWABLE

PART		b/t	F_{cy} (62,000)	F_{cy} -298 $\left(\frac{80{,}000}{62{,}000}\right)$	$F_{cy} \times b$
1	* FIX	21.7	54,000	69,500	48,300
2	FIX	19.5	57,000	73,600	45,900
3	FREE	6.8	57,500	74,300	16,200
					110,400

$F_{cy}/\Sigma b = 110{,}400/1.536 = 71{,}600$ PSI

* HOLE HAS A CRIMPED LIGHTENING HOLE

$M.S. = \frac{71{,}600}{47{,}700} - 1 = \boxed{.50}$

SINCE END LOADS ARE SMALL, 223# + 312# THE END ATTACHMENTS ARE SAFE BY INSPECTION.

THE P.U. PROBE IS A VENDOR ITEM CALLED OUT PER SPECIFICATION DWG. 7866356 (SENSOR, OXIDIZER MASS).

SM 42569
SM 42569

SM42569

1A27592 STRUT INST. FUEL SENSOR

AFT SUPPORT

1A27599

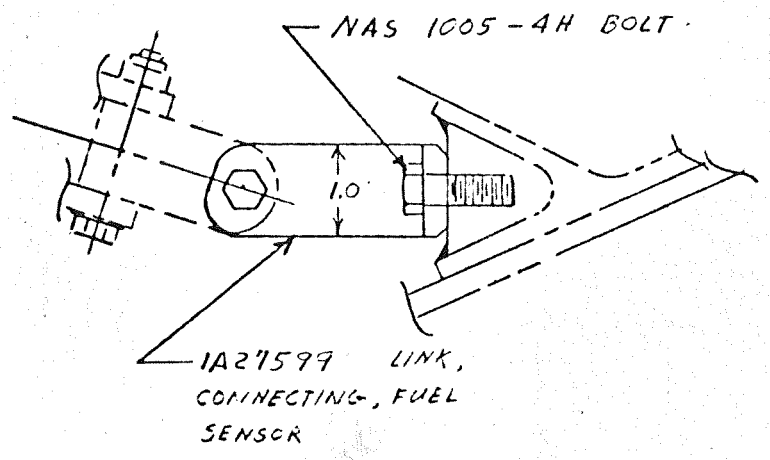

(2024-T4 AL. BAR)

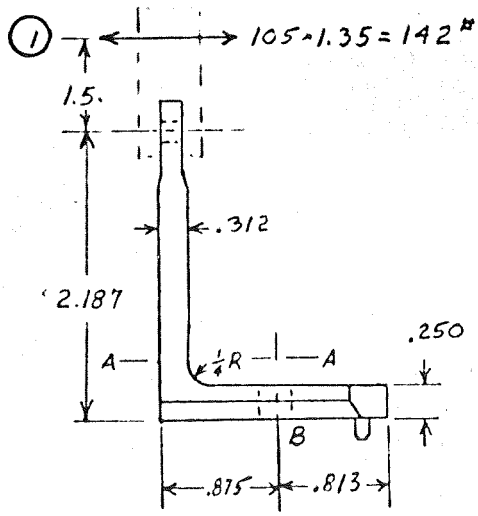

$M_{A-A} = 142(1.5+2.187-.25-.25) = 452$ IN.LB.

$C/I_{AA} = \frac{6}{b\ell^2} = \frac{6}{1(.312)^2} = 61.7$

$\therefore \sigma_{A-A} = 61.7 \times 452 = 27{,}900$ PSI

σ_{ALLOW} (-423°F, 10^4 CYCLES)

$= 45{,}000$ PSI (REF 13)

$M.S. = \frac{45{,}000}{27{,}900} - 1 = \underline{.61}$

BOLT LOAD @ PT B

SINCE BASE TO RIGHT OF BOLT IS SMALLEST (.813) A LOAD TO THE RIGHT WILL BE MOST CRITICAL CASE.

ASSUME SQUARE BEARING DISTRIBUTION

K+E ALBANENE TRACING PAPER 70988

SM42569

IA 27592 STRUT INST.
FUEL SENSOR

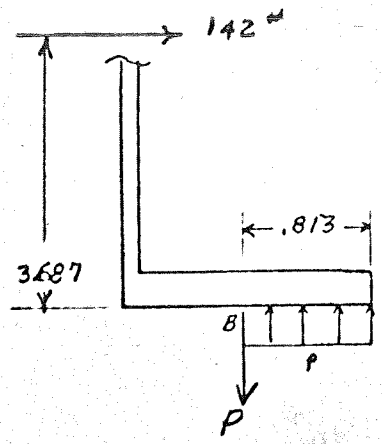

$$M_B = 0 = 142 \times 3.687 - \frac{P \times (.813)^2}{2}$$

$$P = \frac{2 \times 142 \times 3.687}{(.813)^2} = 1{,}580 \text{ LB/IN}$$

$$P = 1{,}580 \times .813 = 1{,}280 \text{ LB.}$$

NAS 1005-4H BOLT
A-286 ST., 140,000 PSI @ R.T.

$\therefore$ @ -423°F $\sigma_{AL} = 239{,}000 \times \frac{140}{155}$ (REF 13)

$\sigma_{AL} = 208{,}000$ PSI

$\therefore$ TENSILE STRENGTH $= 208{,}000 \times .0524$
$= 10{,}900$ LB

$$M.S. = \frac{10{,}900}{1{,}280} - 1 = \boxed{\text{HIGH}}$$

---

(2)

ASSUME SQUARE BEARING DIST.

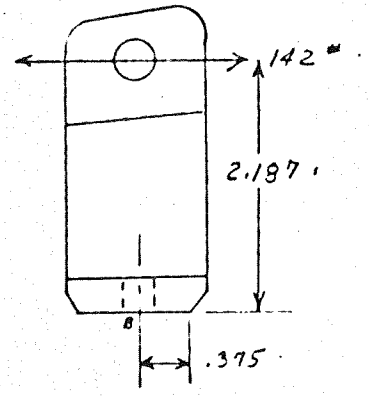

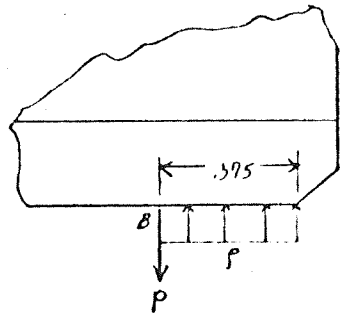

$$M_B = 0 = 142 \times 2.187 - \frac{P(.375)^2}{2}$$

$$P = \frac{2 \times 142 \times 2.187}{(.375)^2} = 4{,}400 \text{ LB/IN}$$

$$\therefore P = 4{,}400 \times .375 = 1{,}650 \text{ LB.}$$

$$M.S. = \frac{10{,}650}{1650} - 1 = \boxed{\text{HIGH}}$$

1A 27592 STRUT
INST. FUEL SENSOR

FWD SUPPORT

1A27598
6061-T6 AL.

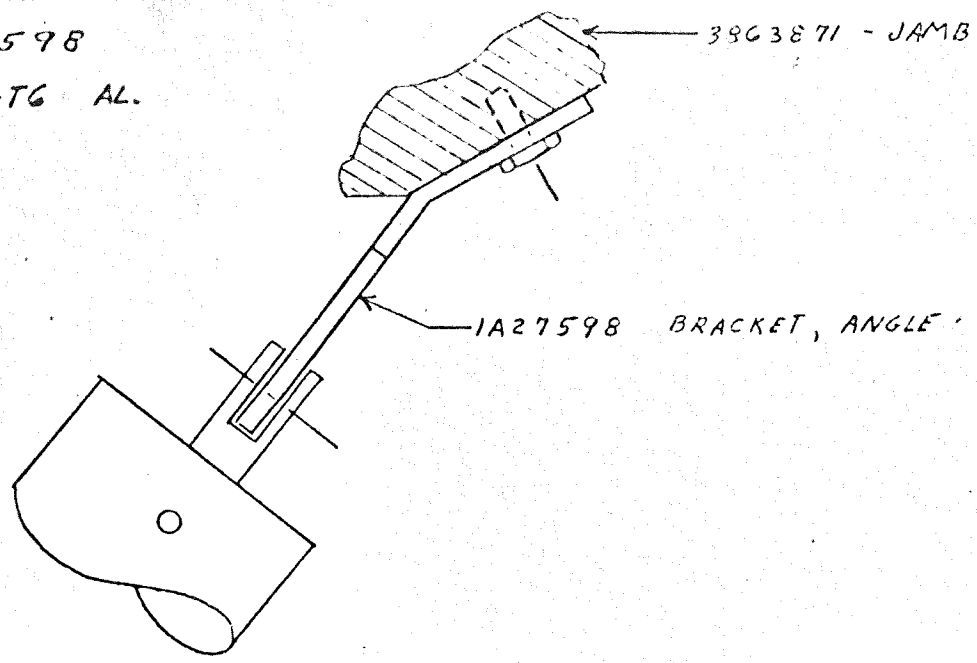

END LOAD = 142 LB. ULT

MOST CRITICAL LOADING CONDITION.

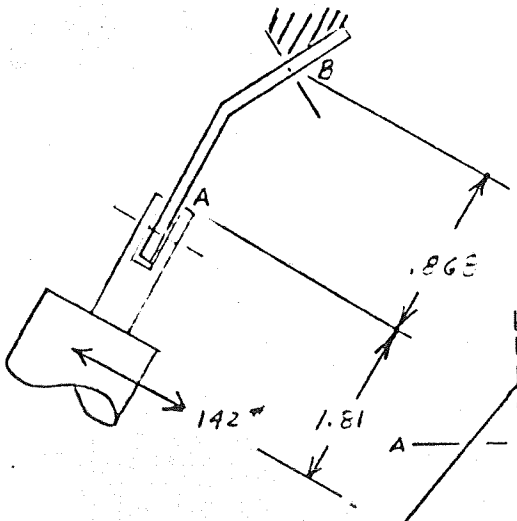

$\therefore M_A = 1.810 \times 142 = 257$ IN.LB.

$M_B = 2.679 \times 142 = 380$ IN.LB.

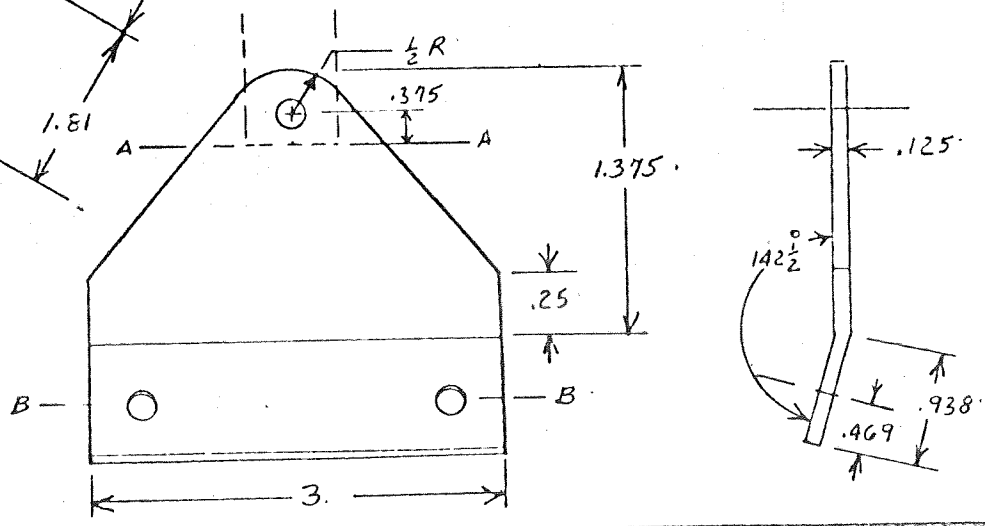

K+E ALBANENE TRACING PAPER 71-596

SM42569

SM42569

SECTION A-A

1A 27592 STRUT
INST. FUEL SENSOR

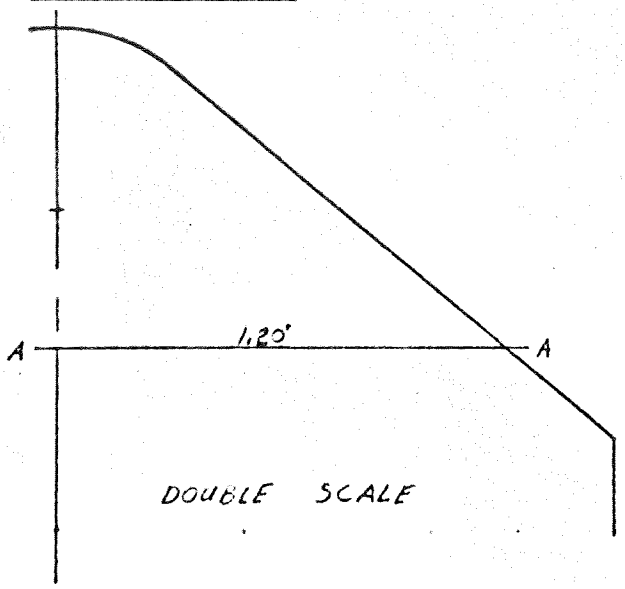

$$\therefore C/I_{AA} = \frac{6}{2.40(.125)^2} = 160 \text{ IN.LB}$$

$$\sigma_{AA} = 257 \times 160 = 41100 \text{ PSI}$$

$$\sigma_{ULT}\ {}_{10^4 \text{ cycles}, -423} = 65{,}000 \text{ PSI (REF. 13)}$$

$$\therefore M.S. = \frac{65{,}000}{41{,}100} - 1 = \boxed{.58}$$

$$C/I_{BB} = \frac{6}{3(.125)^2} = 128$$

$$\sigma_{BB} = 128 \times 380 = 48{,}600 \text{ PSI}$$

$$M.S. = \frac{65{,}000}{48{,}600} - 1 = \boxed{.34}$$

MID. SUPPORTS

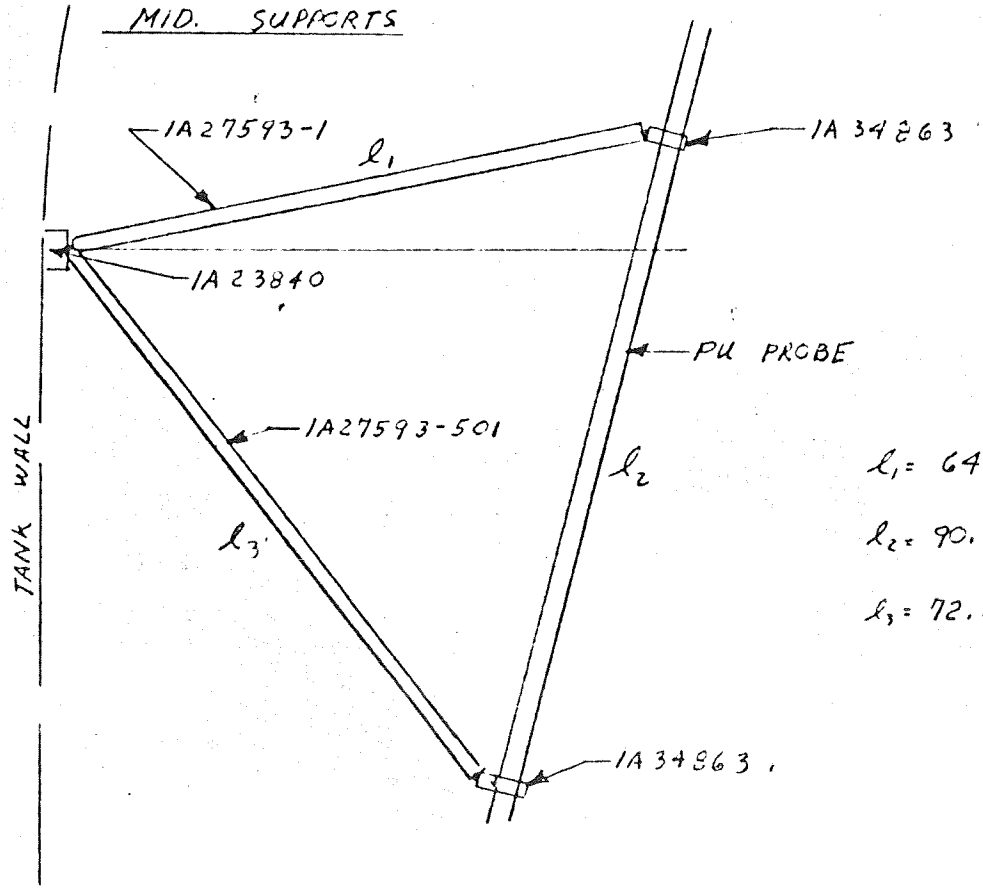

$\ell_1 = 64.250$

$\ell_2 = 90.188$

$\ell_3 = 72.895$

SM 42569

IA27592 STRUT INSTL. FUEL SENSOR

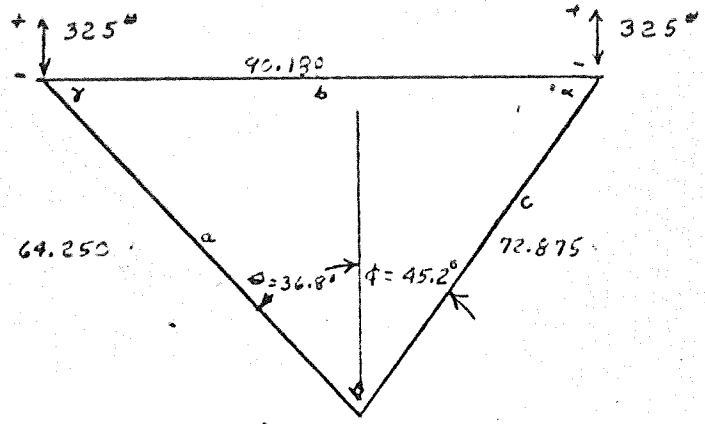

$$S = \frac{90.180 + 64.25 + 72.875}{2} = 113.656$$

$$r = \left[\frac{\overset{49.406}{(113.656 - 64.250)}\overset{23.468}{(113.656 - 90.188)}\overset{40.781}{(113.656 - 72.875)}}{113.656}\right]^{\frac{1}{2}}$$

$$= (416.03)^{\frac{1}{2}} = r = 20.397$$

$$\tan \tfrac{1}{2}\alpha = \frac{20.397}{49.406} = .4125 \qquad \frac{\alpha}{2} = 22.4 \qquad \alpha = 44.8^\circ$$

$$\tan \tfrac{1}{2}\beta = \frac{20.397}{23.468} = .868 \qquad \frac{\beta}{2} = 41.0 \qquad \beta = 82^\circ$$

$$\tan \tfrac{1}{2}\gamma = \frac{20.397}{40.781} = .500 \qquad \frac{\gamma}{2} = 26.6 \qquad \gamma = 53.2^\circ$$

$$\therefore \phi = 90 - 44.8 = 45.2^\circ.$$

$$\theta = 90 - 53.2 = 36.8^\circ.$$

LEG C (72.875) WILL BE MOST CRITICAL BECAUSE OF ITS LENGTH AND FLAT ANGLE.

TOP VIEW:

$$\alpha' = \frac{37.935}{110} = .345 \text{ RAD} = 19.7^\circ$$

$$\alpha'/2 = 9.85^\circ$$

$$2 \times 110 \sin 9.85^\circ = 37.6$$

$$\sin w = \frac{18.8}{72.875} = .258$$

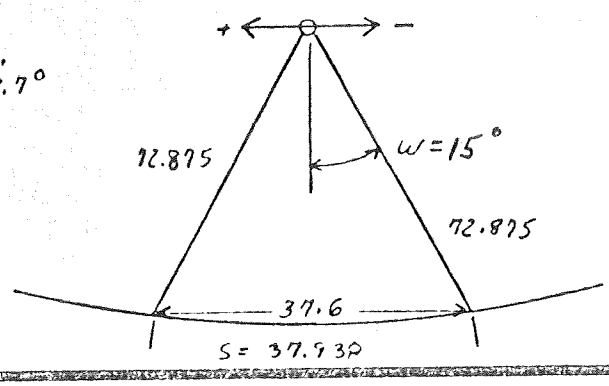

SM 42569

IA27592 STRUT
INSTL. FUEL SENSOR

CASE I

RADIAL LOAD ±325 #LIM (P10.4.5)

162.5# TO EACH LEG.

LOAD IN LEG = $\frac{162.5}{(\cos 15^\circ)(\cos 45.2^\circ)} = \frac{162.5}{.965 \times .705} = \underline{\pm 239\ \#/\text{LEG}_{LIM}}$

CASE II

TANG. LOAD ±325#·LIM

LOAD IN LEG = $\frac{325 \times 72.875 \cos 15^\circ}{37.6 \times \cos 15^\circ} = \pm 630\ \#/\text{LEG}_{LIM}$

CHECK IA27593 STRUT

$1\frac{5}{8} \times .035$ 6061-T6 AL. $\ell = 72.875''$

$F_{cc} = F_{cy}\left(1 + \sqrt{F_{cy}/2000}\right)$ (REF. 19 PG. 3.4.2.1)

$F_{cc} = 51{,}000\left(1 + \sqrt{\frac{51{,}000}{2000}}\right)$ $F_{cy_{-423}} = 51{,}000$ PSI

$E_{-423} = 11 \times 10^6$ PSI

$= 51{,}000(1 + 5.05) = 308{,}000$

$\ell'/\rho = \frac{\ell}{\sqrt{c}\,\rho}$ $c = 1$ $\rho = .562$ $D/t = 46.4$ $A = .175$

$\therefore \ell'/\rho = \frac{72.875}{.562} = 130$

$F_{c\ ALLOW} = 6{,}000 \text{ PSI} \times \frac{11 \times 10^6}{10.5 \times 10^6} = 6{,}300$ PSI (REF 19 PG. 3.4.2.3)

ALLOW P/LEG = 6,300 × .175 = 1,100 LB

MAX LOAD/LEG = 630 × 1.35 = 850

BUCKLING M.S. = $\frac{1100}{850} - 1 = \underline{.29}$

SM42569

1A27596 CLEVIS FUEL SENSOR SUPPORT

1A27592 STRUT INSTL. FUEL SENSOR

303 ST. ST. AQ

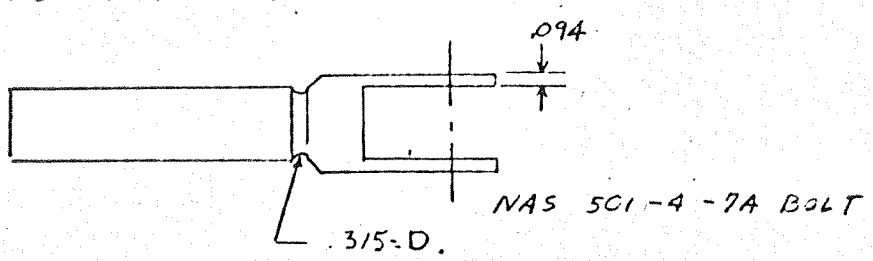

F_{ULT} 303(-423°F) = 240,000 PSI F_Y = 30,000 PSI (REF 13)

YIELD CRITICAL — $30{,}000 \times \frac{\pi}{4}(.315)^2 = 2{,}330$ PSI

YIELD LOAD = 630 × 1.1 = 693 M.S. = $\frac{2{,}330}{693} - 1$ = HIGH

BEARING

NAS-501-4-7A ~ .246" D

BEARING AREA = .246 × 2 × .094 = .0462 IN²

σ_{B_Y} = 693 / .0462 = 15,000 PSI VERY LOW

PART 1A34863 BRACKET ASSEMBLY, FUEL SENSOR SUPPORT, INBOARD

SAFE BY INSPECTION

PART 1A23840 BRACKET ASSEMBLY FUEL SENSOR SUPPORT

TWO CASES; MAX TENSION, MAX SHEAR

LOAD IN STRUT 1A27593-501 = 630

LOAD IN STRUT 1A27593-1 = $\frac{\pm 162.5}{(\cos 15°)(\cos 36.8°)}$ OR $\pm \frac{325 \times 64.250}{37.6}$

= ±207; ±555 ±555 IS MAX CASE

SM 42569

1A27592 STRUT
INSTL. FUEL SENSOR

CASE 1: MAX TENSION

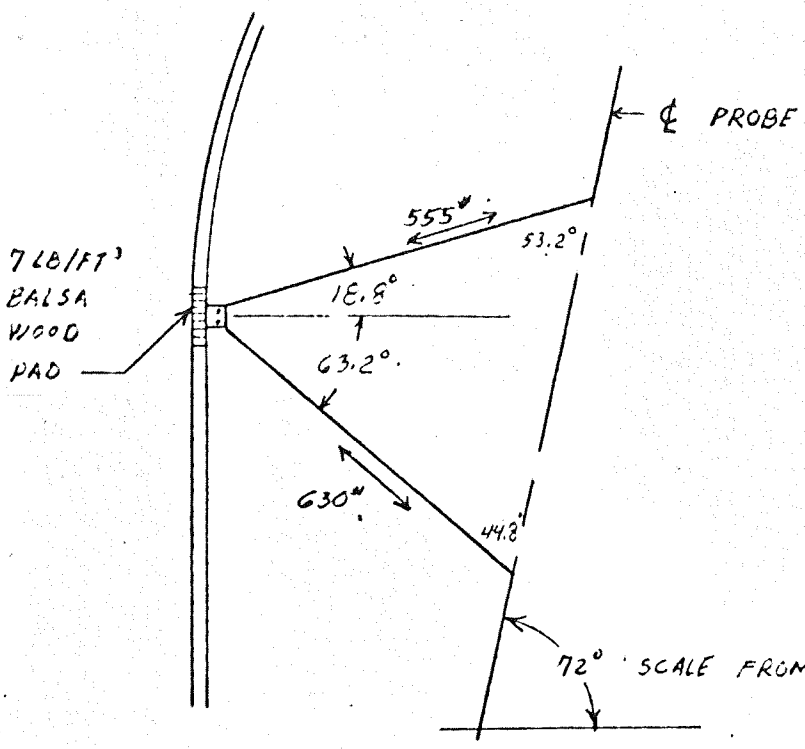

SCALE FROM 5871887 PRINT

$P_T = (555 \overset{525}{\cos 18.8} + 630 \overset{284}{\cos 63.2°}) \cos 15° \times 1.35 = P_T = 1050\ LB_{ULT}$

$P_{S_{LONG.}} = (555 \overset{179}{\sin 18.8°} - 630 \overset{564}{\sin 63.2°}) 1.35 = P_{S_{LONG}} = -520\ LB$

SHEAR AREA $= 2.25 \times 2.375 - (.5)^2 = 5.09\ IN^2$

$\therefore\ \sigma_S = \frac{520}{5.09} = 102\ PSI.$

PAD IS GLUED TO BALSA PAD $\approx 7\ LB/FT^3$ DENSITY

$\sigma_{S_{ALLOW}} = 140 + \frac{(325-140)2}{5} = 214\ PSI$ (REF. 22 PG 10)

SHEAR MS $= \frac{214}{102} - 1 = \boxed{1.10}$

TENSION LOAD ON BOLTS

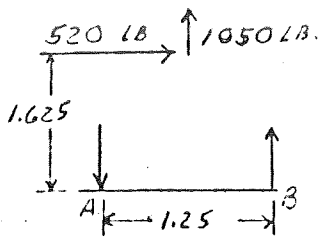

$M_B = 0 = F_A(1.25) - 1050\left(\frac{1.25}{2}\right) - 520 \times 1.625$

$F_A = \frac{656 + 845}{1.25} = 1201^{\#}$

$F_A/STUD = 1201/2 = 605\ LB/STUD$

1A27592 STRUT INSTL. FUEL SENSOR

$\frac{1}{4}$"-28 6061-T6 STUD

AVE. TENSILE STRENGTH = 1,240 LB.

$$M.S._1 = \frac{1240}{605} - 1 = \boxed{1.05}$$

CASE 2: MAX SHEAR

$$P_T = (555 \overset{514}{\cos 18.8^\circ} - 630 \overset{294}{\cos 63.2^\circ}) \cos 15^\circ \times 1.35 = 314 \text{ LB}$$

$$P_S = (555 \overset{179}{\sin 18.8^\circ} + 630 \overset{564}{\sin 63.2^\circ}) 1.35 = 1{,}003 \text{ LB}$$

$$\sigma_S = 1003/5.09 = 197 \text{ PSI} \qquad M.S. = \frac{214}{197} - 1 = \boxed{.08}$$

TENSION LOAD ON BOLTS

$$= \frac{314 \times \frac{1.25}{2} + 1003 \times 1.625}{1.25} = \frac{1833}{1.25} = 1{,}461 \text{ LB}$$

$$\text{LOAD/STUD} = 1461/2 = 731 \qquad M.S. = \frac{1240}{731} - 1 = \boxed{.69}$$

THE PU PROBE IS A VENDOR PART AND IS CALLED OUT PER SPECIFICATION DWG. 7866356 (SENSOR, OXIDIZER MASS).

SM42569

FORM 20-8-1 (REV. 8-63)

PREPARED BY: L.C.R.
CHECKED BY: G.J.S.
DATE: 11-7-63
TITLE: DSV-4 PROPELLANT TANK.

DOUGLAS AIRCRAFT COMPANY, INC.

S.M DIVISION

PAGE: 10.5.0
MODEL: DSV-4
REPORT NO: SM42569

SM42569

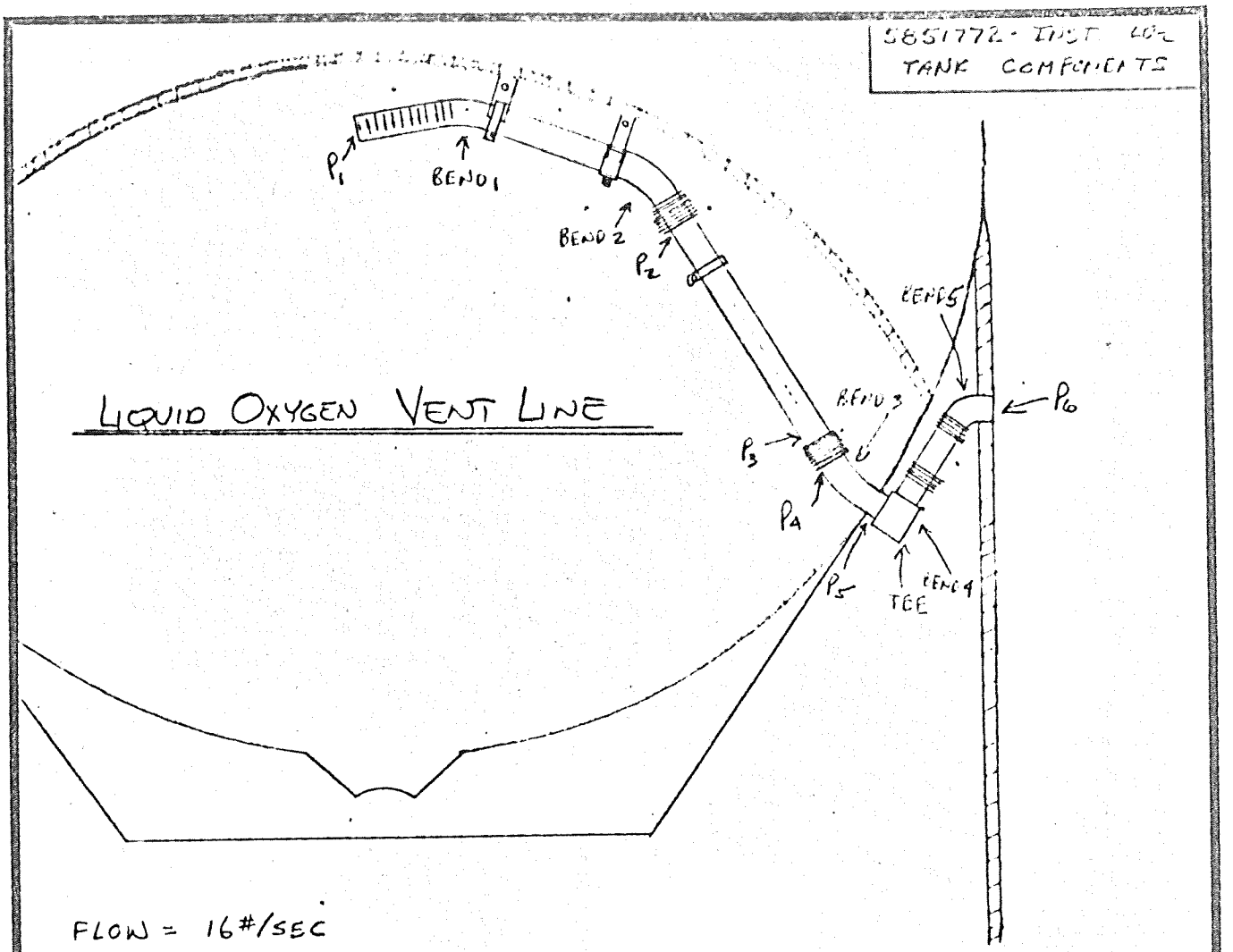

FLOW = 16#/SEC
P_1 = 50.0 PSI
P_2 = 46.13 PSI
P_3 = 41.13 PSI
P_4 = 39.19 PSI
P_5 = 28.71 PSI
P_6 = 7.76 PSI

REFERENCE: 23, 24

R = 118 FT-LB/LB°R FOR MIXTURE OF OXYGEN & HELIUM
T = 183 °R.
COMPRESSIBLE FLOW

TANK MATERIAL - 2014-T6
TEE MATERIAL - 6061-T6
PIPE DIAMETER - 5"

K+E ALBANENE TRACING PAPER 70083

5851772 - INST LO2 TANK COMPONENTS

FIND VELOCITY OF FLOW:

$$PV_{OL} = wRT$$

$$\frac{w}{V_{OL}} = \rho \text{ (DENSITY)}$$

$$\therefore \rho = \frac{P}{RT} = \frac{(50)(144)}{(118)(183)} = .3335 \ \#/FT^3$$

$$V = 16 \ \#/SEC \times \frac{1 \ FT^3}{.3335 \ \#} \times \frac{144}{(\pi)(2.5)^2 \ FT^2}$$

$$V = 352 \ FT/SEC$$

AS PRESSURE CHANGES, DENSITY CHANGES. THEREFORE, THE VELOCITY CHANGES.
THE VELOCITY GIVEN ABOVE IS AT P_1 AND WILL BE CALLED V_1.

$$\therefore V_1 = 352 \ FT/SEC.$$

$$V_2 = \frac{50}{46.13} \times 352 = 381 \ FT/SEC$$

$$V_3 = \frac{50}{41.13} \times 352 = 427 \ FT/SEC$$

$$V_4 = \frac{50}{39.19} \times 352 = 449 \ FT/SEC$$

$$V_5 = \frac{50}{28.71} \times 352 = 613 \ FT/SEC$$

$$V_6 = \frac{50}{7.76} \times \frac{352}{2} = 1132 \ FT/SEC$$

SM 42569

K+E ALBANENE® TRACING PAPER 70983

585 1772-INST. LOX TANK COMPONENTS

BEND 1

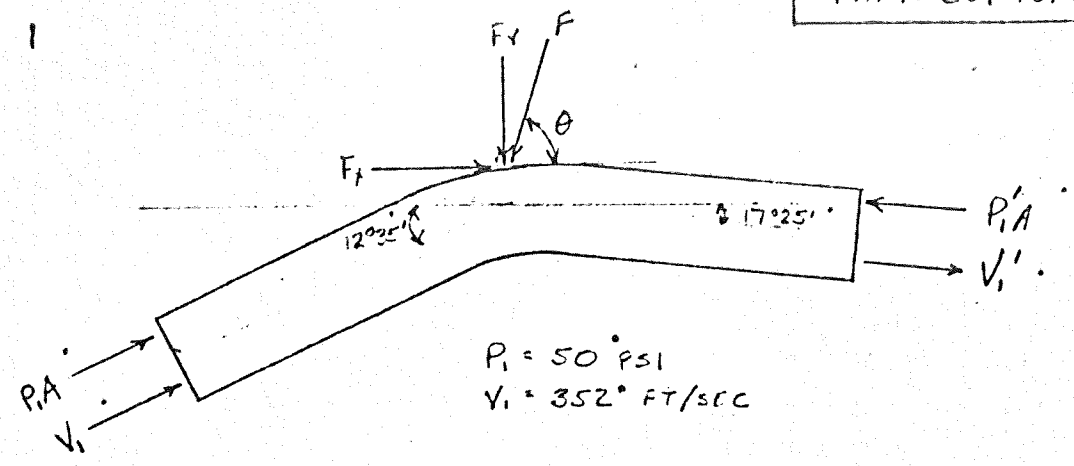

$$P_1' = 50 - \frac{(0.0155)(16.65 + 3.47)}{.643} \times 3.87$$

$$P_1' = 48.12 \text{ PSI}$$

$$A = \frac{\pi d^2}{4} = \frac{(\pi)(4.87)^2}{4} = 18.62 \text{ IN}^2$$

$$V_1' = \frac{50}{48.12} \times 352 = 365 \text{ FT/SEC}$$

ΣX $$F_X + P_1A\cos 12°35' - P_1'A\cos 17°25' = \frac{W}{g}\left(-V_1\cos 12°35' + V_1'\cos 17°25'\right)$$

$$F_X + (932)(.976) - (899)(.954) = \frac{16}{32.2}\left[(352)(.976) + (365)(.954)\right]$$

$$F_X + 910 - 856 = +2$$

$$F_X = -52 \ \#$$

ΣF_Y $$P_1A\sin 12°35' - F_Y + P_1'A\sin 17°25' = \frac{W}{g}\left(-V_1\sin 12°35' - V_1'\sin 17°25'\right)$$

$$(932)(.2175) - F_Y + (899)(.2995) = (.497)\left[(352)(.2175) - (365)(.2995)\right]$$

$$203 - F_Y + 269 = -92$$

$$F_Y = 564 \ \#$$

$$F = (F_X^2 + F_Y^2)^{1/2} = (52^2 + 564^2)^{1/2} = 566 \ \#$$

$$\theta = \tan^{-1}\frac{F_Y}{F_X} = \tan^{-1}\frac{564}{52} = \tan^{-1} 10.83$$

$$\theta = 84°43'$$

SM 42569

5851772 - INST. LO_2 TANK COMPONENTS

BEND 2

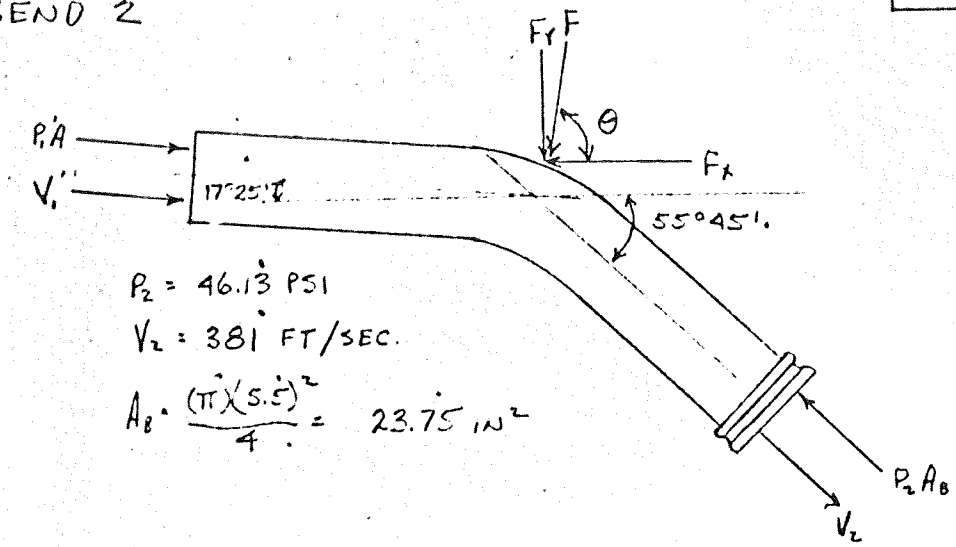

$P_2 = 46.13$ PSI

$V_2 = 381$ FT/SEC.

$A_B = \frac{(\pi)(5.5)^2}{4} = 23.75 \text{ IN}^2$

ΣX $\quad P_1A\cos 17°25' - F_X - P_2A_2\cos 55°45' = \frac{W}{g}(-V_1\cos 17°25' + V_2\cos 55°45')$

$(899)(.954) - F_X - (1097)(.563) = (.497)[(365)(.954) + (381)(.563)]$

$856 - F_X - 617 = -67$

$F_X = 306$ #

ΣY $\quad P_2A_B\sin 55°45' - F_Y - P_1A\sin 17°25' = \frac{W}{g}(+V_1\sin 17°25' - V_2\sin 55°45')$

$(1097)(.826) - F_Y - (899)(.2995) = (.497)[(365)(.2995) - (381)(.826)]$

$906 - F_Y - 269 = -103$

$F_Y = 740$ #

$F = (F_X^2 + F_Y^2)^{1/2} = (306^2 + 740^2)^{1/2} = 803$ #

$\theta = \tan^{-1}\frac{F_Y}{F_X} = \tan^{-1}\frac{740}{306} = \tan^{-1} 2.42$

$\theta = 67° 33'$

SM 42569

5551772 - INST. LO_2 TANK COMPONENTS

BEND 3

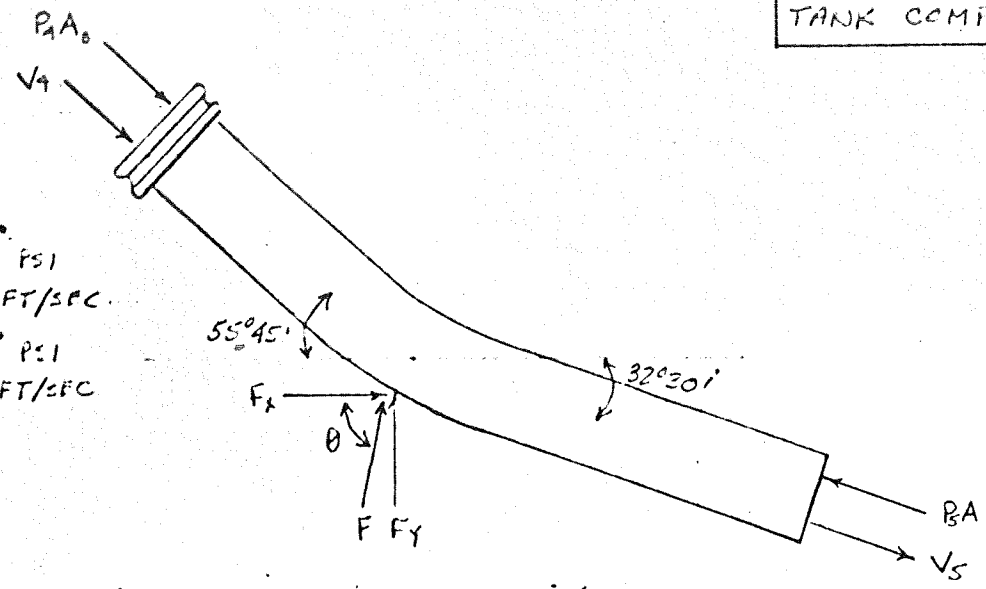

$P_4 = 3919$ PSI
$V_4 = 449$ FT/SEC
$P_5 = 2871$ PSI
$V_5 = 613$ FT/SEC

ΣX $\quad F_X + P_4A_6\cos 55°45' - P_5A\cos 32°30' = \frac{W}{g}(-V_4\cos 55°45' + V_5\cos 32°30')$

$F_X + (931)(.563) - (534)(.844) = (.497)\left[-(449)(.563) + (613)(.844)\right]$

$F_X + 524 - 450 = +132$

$F_X = +58$ #

ΣY $\quad F_Y - P_4A_6\sin 55°45' + P_5A\sin 32°30' = \frac{W}{g}(+V_4\sin 55°45' - V_5\sin 32°30')$

$F_Y - (931)(.826) + (534)(.538) = (.497)\left[(+449)(.826) - (613)(.530)\right]$

$F_Y - 769 + 287 = +20$

$F_Y = 502$ #

$F = (F_X^2 + F_Y^2)^{1/2} = (58^2 + 502^2)^{1/2} = 505$ #

$\theta = \tan^{-1}\frac{F_Y}{F_X} = \tan^{-1}\frac{502}{58} = \tan^{-1} 8.66$

$\theta = 83°24'$

SM 42569

5851772 · INST LO2 TANK COMPONENTS

TEE → 7851777-501

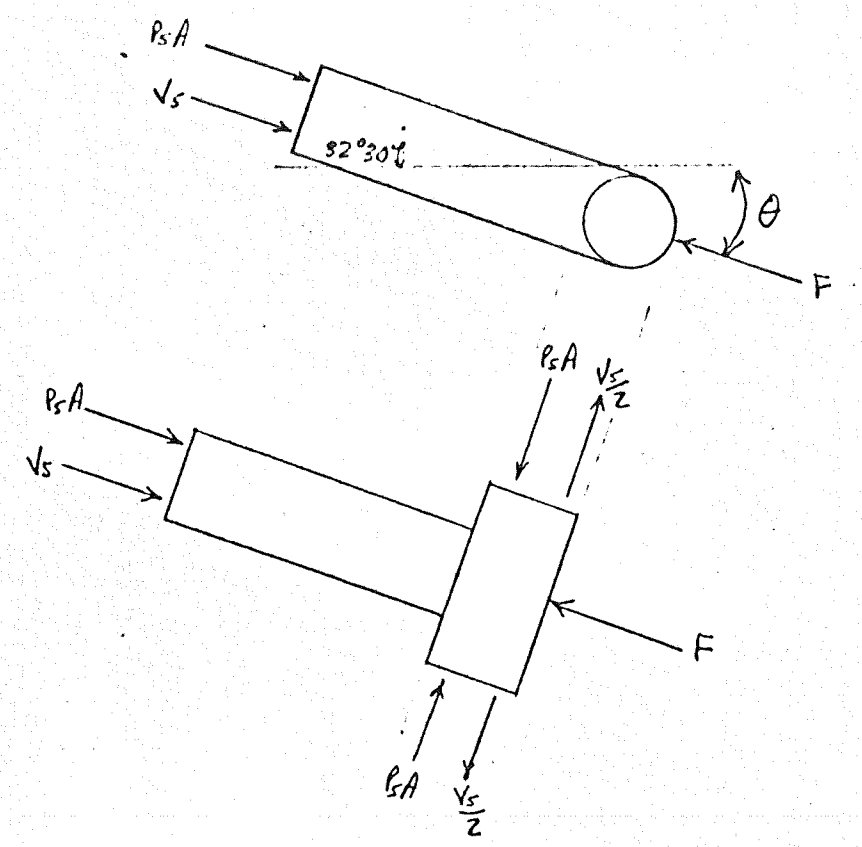

ΣF

$$F - P_sA = \frac{W}{g}(+V_s + 0)$$

$$F - 534 = +305$$

$$F = 839\ \#$$

$$\theta = 32°30'$$

SM42569

K+E ALBANENE® TRACING PAPER 70063

5051772 - INST. LO_2 TANK COMPONENTS

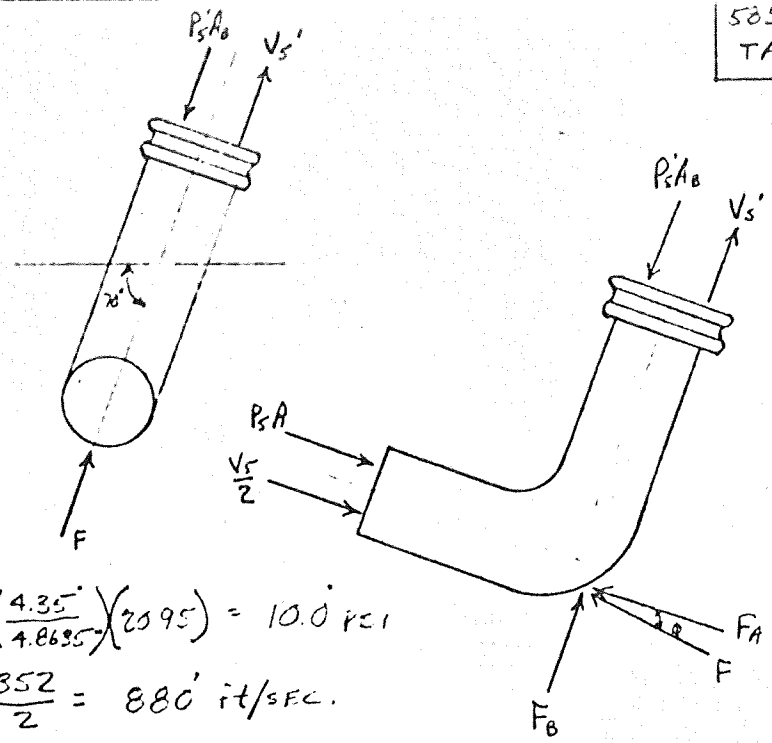

$$P_s' = 28.71 - \left(\frac{4.35}{4.8695}\right)(20.95) = 10.0 \text{ PSI}$$

$$V_s' = \frac{50}{10} + \frac{352}{2} = 880 \text{ ft/sec.}$$

ΣA $\quad P_sA' - F_A' = \frac{W}{2g}\left(-\frac{V_s'}{2} + 0\right)$

$$534 - F_A = -(.248)(307)$$

$$F_A = 610\#$$

ΣB $\quad F_B' - P_s'A_B' = \frac{W}{2g}(0 + V_s')$

$$F_B - 238 = (.248)(+880)$$

$$F_B = 456\#$$

$$F = (F_A^2 + F_B^2)^{1/2} = (610^2 + 456^2)^{1/2} = 761\#$$

$$\phi = \tan^{-1}\frac{F_B}{F_A} = \tan^{-1}\frac{456}{610} = \tan^{-1} .748$$

$$\phi = 36°48'$$

SM42569

5851772 - INST. LO_2 TANK COMPONENTS

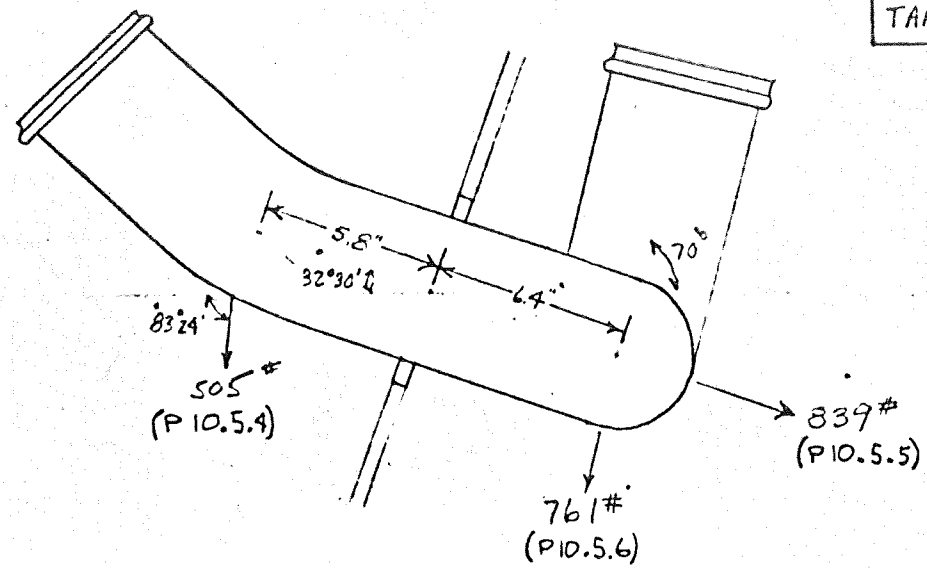

LOADS IMPOSED ON TANK WALL:

AXIAL LOAD

$$P = 839 + 505 \cos 64°06' + (2)(761)(\sin 36°48')(\sin 12°30')$$

$$P = 839 + 221 + 198 = 1258\# \rightarrow$$

SHEAR

$$S = 505 \sin 64°06' + (2)(761)(\sin 36°48')(\cos 12°30')$$

$$S = 455 + 890$$

$$S = 1345\# \downarrow$$

MOMENT

$$M = -(455)(5.8) + (890)(6.4)$$

$$M = -2640 + 5700$$

$$M = +3060 \text{ IN-LB}$$

COMPARISON OF THESE LOADS WITH THOSE IN THE LOX FILL LINE ANALYSIS P. 10.2.8 INDICATES THAT A LARGE MARGIN OF SAFETY EXISTS

INTERNAL BRACKETS ARE SAFE BY INSPECTION.

SM42569

11.0 LIQUID OXYGEN ANTI-SLOSH BAFFLE

11.1 Configuration

The Anti-Slosh Baffle is constructed from .025 inch thick 7075-T6 aluminum, shaped into a cone, braced with frames, and attached to the common bulkhead lock bolts. Its purpose is to prevent the liquid oxygen fluid mass from achieving a slosh mode which would cause large mass transfers in the S-IV vehicle.

11.2 Analysis

The structure was analyzed for elastic buckling of the cone, assuming uniform external pressure, and the end fittings and tank connections. Since the sloshing pressure is low (.04 psi) a very conservative approach was taken for the solution.

SM42569

FORM 28-8-1 (REV. 8-52)

21

PREPARED BY: WHP

CHECKED BY: [illegible]

DATE: 7/24/63

TITLE: DSV-4 PROPELLANT TANK

DOUGLAS AIRCRAFT COMPANY, INC.

SM DIVISION

PAGE: 11.1

MODEL: DSV-4

REPORT NO: SM 42569

SM 42569

586-4135 BAFFLE INSTL, LOX

BAFFLE INSTALLATION - LOX

BASIC ASSUMPTIONS:

1.) LOX PRESSURE ON BAFFLE PEAKS TO .04 PSI (P11.2)

2.) BAFFLE MOUNTED TO RIGID BASE

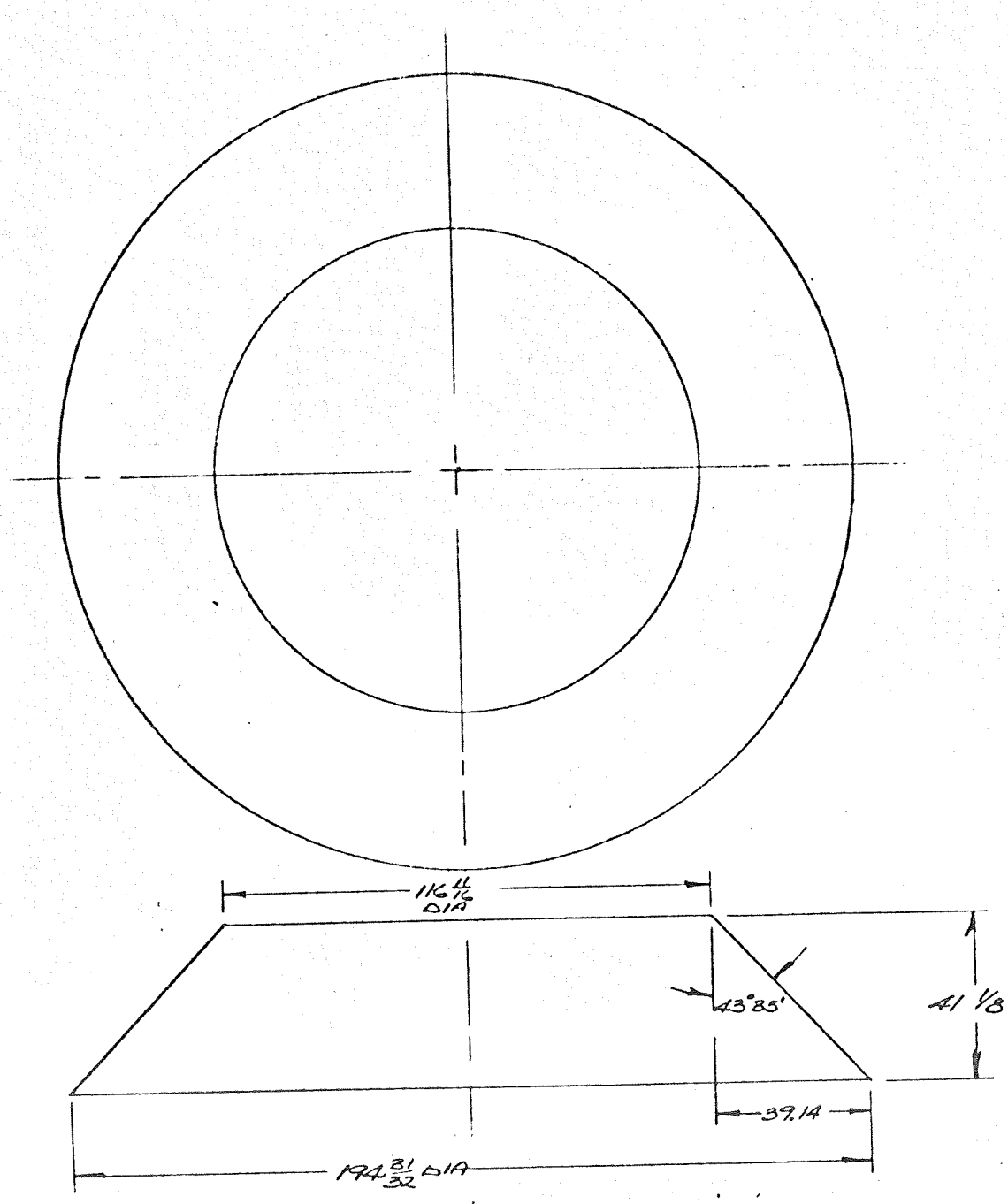

TAN = 39.14/41.125 = .95173

∠ = 43°35''

K+E ALBANENE® TRACING PAPER 70985

5864135 BAFFLE INSTL., LOX

LOX BAFFLE ANALYSIS (CONT)

SKIN CHECK

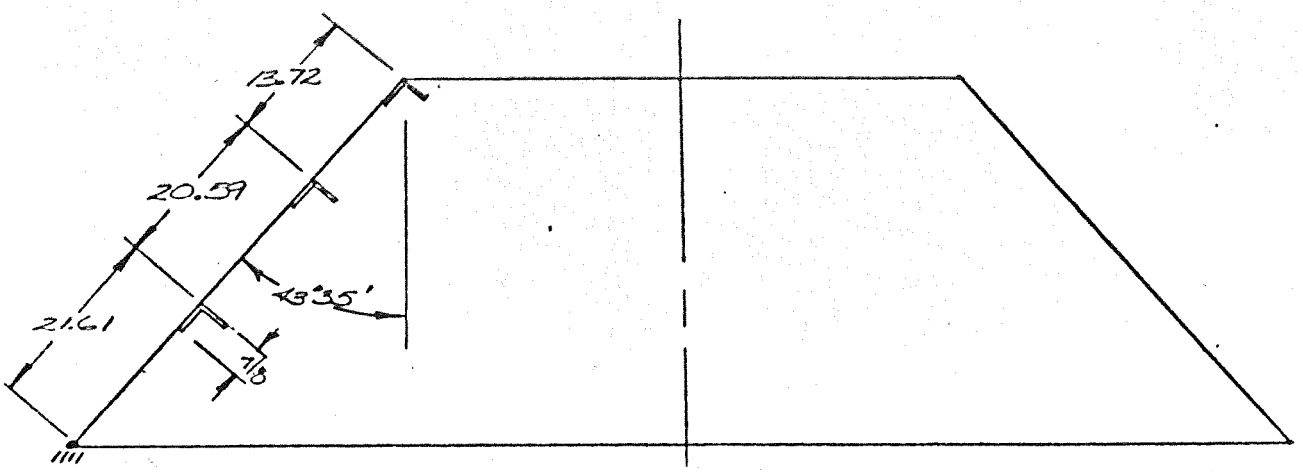

p' = UNIT EXTERNAL PRESSURE AT WHICH ELASTIC BUCKLING OCCURS (REF. 20)

$$= \frac{.807\, E t^2}{L r} \sqrt[4]{\left(\frac{1}{1-U^2}\right)^3 \frac{(t)^2}{r^2}}$$

(ASSUME $r = \frac{194\frac{31}{32}}{2} = 97.484'$ (CONSERVATIVE))

$$= \frac{.807\,(11.6\times10^6)\,(.027)^2}{\underset{(21.61-.9)}{20.74}\;(97.484)} \sqrt[4]{\left(\frac{1}{1-(.3)^2}\right)^3 \frac{(.027)^2}{(97.484)^2}}$$

$= .0604$ PSI (FOR LWR PORTION OF CONE)

p(DYNAMIC PRESSURE LOADING) $= 3.84\times10^{-6} r^2$ (PSI) (REF. 21)

$= 3.84\times10^{-6}(97.484)^2$

$= .04$ PSI

$$M.S. = \frac{(.0604)}{(.04)(1.35)} - 1 = \underline{+.12}$$

NOTE: THIS IS STILL VERY CONSERVATIVE BECAUSE THE CUTOUT AREAS ARE NEGLECTED

K+E ALBANENE TRACING PAPER 70803

LOX BAFFLE ANALYSIS (CONT)

5864135 BAFFLE INSTL., LOX

S_2 = HOOP MEMBRANE STRESS

$= \frac{pR}{t}$ (PSI)

$= \frac{.04\ (97.484)}{.027}$

$= 144$ PSI

$F_{tu} = 70{,}000$ PSI (7075-T6 AL.)

$M.S. = \frac{70000}{144\ (1.35)} - 1 = +$ VERY HIGH

CHECK ON 10L509-T8-13WD LOCKBOLT WITH NAS1080-8 COLLAR (ATTACHES BAFFLE TO BASE) (VIEW B-B ZONE 10)

$\frac{1}{4}$ DIA BOLT

P_A (SINGLE SHEAR) = 6700 LB

ASSUME .04 PSI ACTING ON BAFFLE WITHOUT CUTOUTS

$P = 27{,}650\ (.04) = 1106$ LBS $\quad A = 27{,}650\ in^2$

ASSUME LOAD TAKEN BY ONE BOLT

$M.S = \frac{6700}{1106\ (1.35)} - 1 = +$ HIGH

CHECK ON NAS 1103-3 BOLT - ATTACHES 4866062 FITTING TO BAFFLE SKIN (VIEW B-B, ZONE 10)

6 BOLTS $\quad$ 160,000 - 180,000 ALLOY STEEL

$\frac{1106}{6} = 185$ LBS/BOLT

P_A (SINGLE SHEAR) = 2690 LBS

$M.S. = \frac{2690}{185\ (1.35)} - 1 = +$ HIGH

Appendix I

STATIC TESTS SUMMARY

Structural testing of the Saturn S-IV Propellant Tanks and Common Dome Assembly was conducted at the Douglas Aircraft Company's Santa Monica Plant Structural Test Laboratory. Testing was begun in April 1962 and concluded in June 1962.

Following is a brief summary of the various tests carried out on the aforementioned assembly, and their results:

A. Hydrostatic Test Vehicle Proof Test (Report No. SM-38341). This test was conducted to determine the strength characteristics of the Propellant Tanks and Common Dome under simulated ground loading conditions at ambient temperature, based upon DAC Propulsion Report No. 4-147, dated 17 April 1961. The test article consisted of a 5865999 Tank Assembly and a 5871668 Thrust Structure. The simulated ground loading conditions were as follows:

1) Pressurization of the LOX tank to 10 psig, and application of vertical loads at the six thrust structure engine fittings (1600 lb. each), to simulate the dead weight of the six RL 10-A engines.

2) Pressurization of the LOX Tank to 41.5 psig to provide the Common Dome "limit" pressure.

3) Pressurization of both the LOX and LH_2 tanks (3 and 12.8 psig respectively) to provide a "limit reverse pressure" on the Common Dome.

4) Pressurization of both tanks (54 psig LOX tank, 24 psig LH_2 tank) to obtain the LOX tank "limit" pressures.

5) Both tanks pressurized (40 psig LOX tank, 33.4 psig LH_2 tank) to obtain the LH_2 tank "limit" pressure. Water was employed as the pressurizing medium.

Instrumentation, which was monitored during this test consisted of nine strain gage rosettes located in the area of the joint between

SM42569

the common dome and the aft dome, one strain gage resette on the cylinder, and sixteen deflection potentiometers located so as to provide radial deflections of the aft dome and cylinder.

Maximum meridional stress in the Common Dome due to limit pressure listed in Item 2, was 26,600 psi tension on the .025 skin, and 11,750 psi tension in the .047 skin. Meridional stresses for the Common Dome "reverse limit pressure" were 20,000 psi compression in the .025 skin and 4,290 psi compression in the .047 skin.

The maximum meridional stress in the aft dome due to "limit"pressure, (Item 4) as recorded at the center of a waffle panel, was 13,900 psi tension. The maximum hoop stress in the LH_2 tank cylindrical section due to "limit" pressure, (Item 5) as recorded at the center of a waffle panel, was 30,000 psi tension.

In no case were the recorded deflections of the pressurized tank in excess of .25 inch.

Final inspection of the Propellant Tanks and Common Dome revealed no indication of damage.

B. Cryogenic Test of the Common Bulkhead in the Hydrostatic Vehicle (Report No. SM-41205)

The purpose of this test was to prove the structural integrity of the Common Dome (P/N 5863806) when subjected to "normal limit pressure" (36.8 psig in LOX tank) and "reverse limit pressure" (26.8 psig in LH_2 tank) at cryogenic temperatures. Liquid nitrogen was used as the pressurizing medium.

The test assembly was that which was employed in the "Hydrostatic Test Vehicle Proof Test" (supra). The Common Dome was rejected for production use because of numerous skin buckles in the forward surface (.025 skin). In addition, the bulkhead did not have the 360° perimeter angle to tee weld, as normally provided on production assemblies.

B. (Continued)

The test consisted of two conditions.

The first condition consisted of pressurizing the LOX tank to 36.8 psig with LN_2 and maintaining this pressure for 10 minutes.

The second condition consisted of pressurizing the LH_2 tank to 26.8 psig with LN_2 and maintaining this pressure for 5 minutes.

Instrumentation consisted of temperature sensors located in both LH_2 and LOX tanks, and pressure transducers to check the pressure in the tankage, as well as to monitor the common dome core vacuum.

During pressurization, under the second condition, a slight loss of core vacuum was noted. An investigation showed that approximately 30 percent of the blind rivets, which attach the circumferential "tee section" at the base of the bulkhead to the LOX tank, leaked. Further investigation showed that the welds at the perimeter angle and tee did not leak when a 3 psig pressure was introduced into the core.

Inspection of the common dome after each of the two test conditions revealed no structural damage. Ultrasonic testing on both surfaces of the test item indicated that there was no debonding of the aluminum skin from the honeycomb core.

Originally it was intended that the hydrostatic tank assembly would be pressurized until rupture occurred, however, upon request from NASA, the assembly was diverted for use as the "Dynamics/Hydrostatic" Test Vehicle.

APPENDIX II

Typical Tank Outlet Tests

This appendix outlines two test plans that were established to supplement the analysis presented in Section 9 of this report. The tests are the LH_2 vent, shown on page II.1, and the LO_2 fill line shown on page II.2.

The results of these tests are presented in Reference 33. Both tests verified the structural integrity of the tank outlet configurations.

LH_2 VENT LINE TEST SET-UP

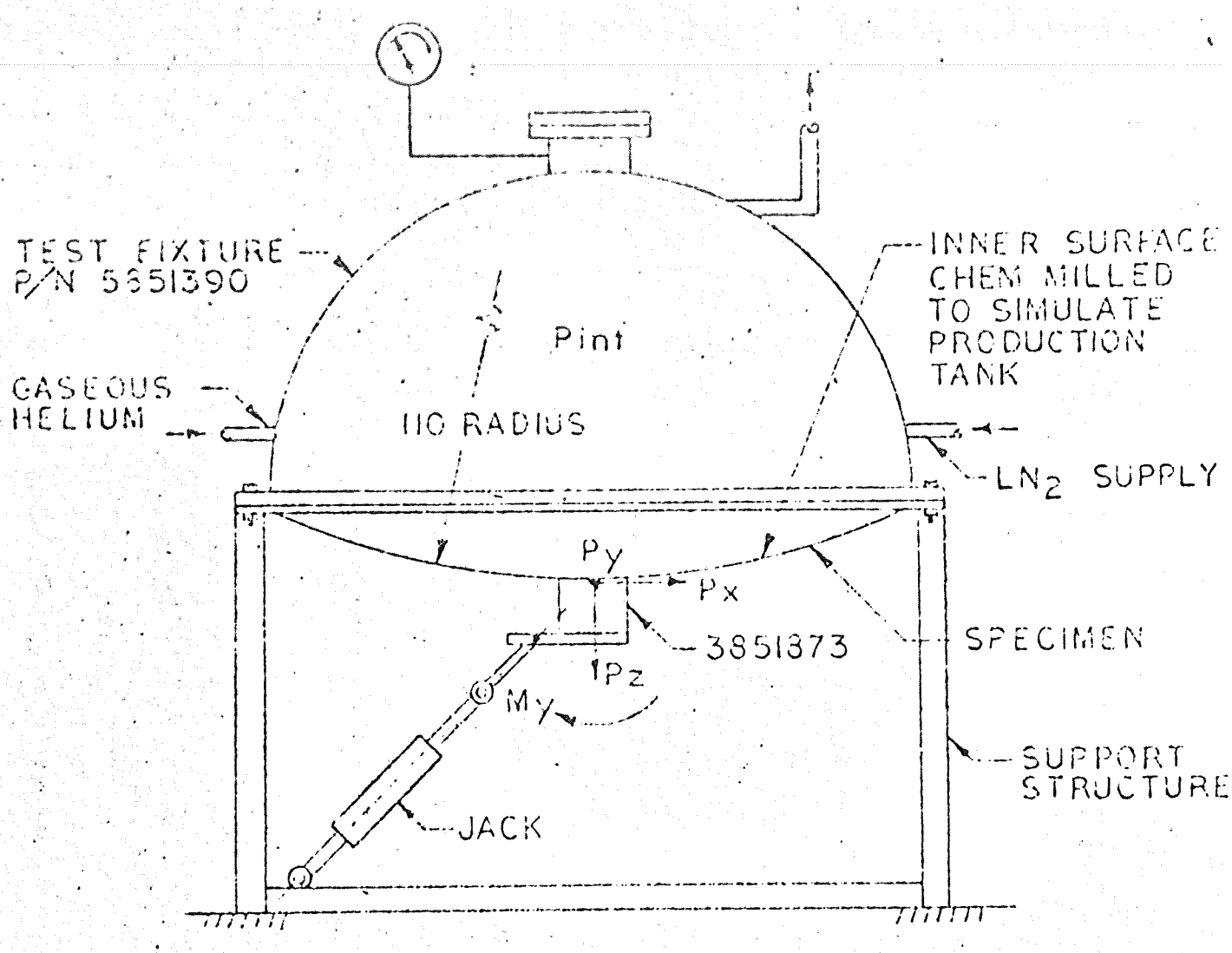

SM42569

LOAD CONDITIONS

Pint = 44 PSIG
Py = 0

Px	0	-395	-790	-1185	-1580	-1975	-2070
Pz	0	458	916	1375	1830	2290	2400 → FAILURE
My	0	3000	6000	9000	12000	15000	15750

(REF. P 9.1.9)

LO_2 FILL LINE TEST SET-UP

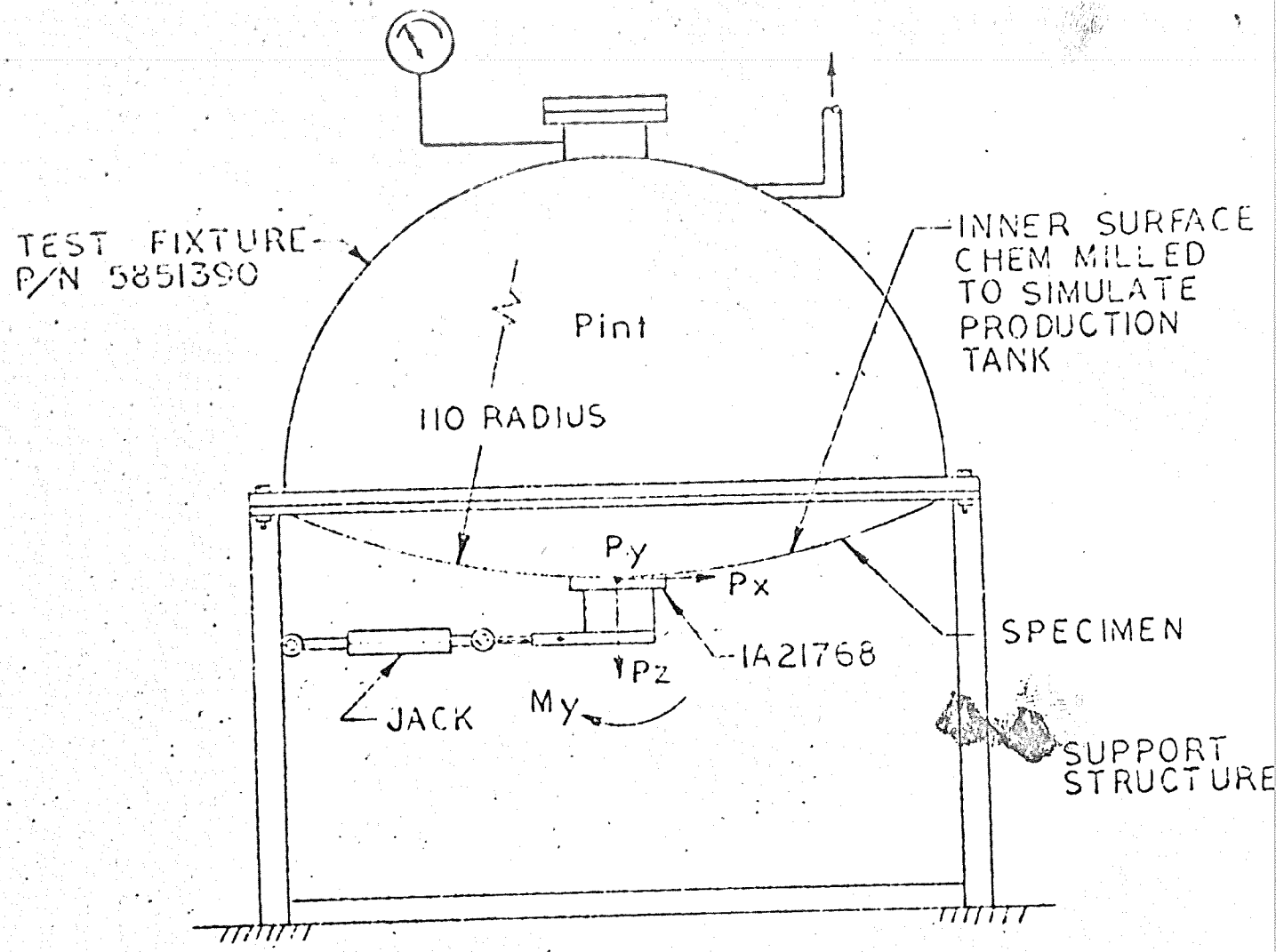

SM42569

LOAD CONDITIONS

Pint = 0 PSIG
Py = 0
Pz = 0

My	0	3000	6000	7310	9,780
Px	0	-389	-779	-950	-1,280

← FAILURE

(REF P 10.2.6)

SM 42569

Appendix III

This section deals with the equation derivations used throughout the analyses. The derivations shown are for the general case, that is, any combination of loads and forces can be substituted into the equations, however, geometry changes are restricted.

These derivations fall into two categories, the membrane load derivations and the relative deflection derivations. The membrane load derivations section Page III.2.0 headed by an introduction that explains the methods, signs, and symbols.

The convention used in the relative deflection analysis is as follows. The deflection of a part is symbolized by δ. This deflection can be either rotation or translation perpendicular to the geometric center line of revolution. The part to be analyzed is idealized by cutting it at various spots. Each segment, resulting from this cutting is given a number 1, 2, ...---n. The deflection of part n is shown as δ^n.

Redundant forces are imposed on the cut surfaces:

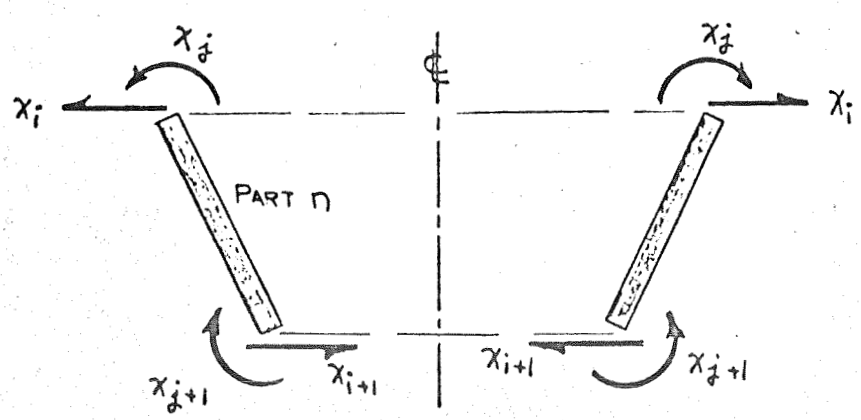

SM 42569

Both moment and shear forces are given the designation of X. The deflection of part n in the direction and position of force X_i would be shown as δ_i^n, or in direction and position of force X_{j+1} as δ_{j+1}^n. If the force causing the deflection was X_i, the deflection in direction and position of X_i would be shown as $\delta_{i,i}^n$. If the force causing the deflection in the direction and position of X_i was X_{j+1} it would be shown as $\delta_{i,j+1}^n$; if it were pressure force it would be shown as $\delta_{i,p}^n$.

It can now be seen that the total deflection in the direction and position of X_i is $\delta_i^n = \delta_{i,i}^n + \delta_{i,(i+1)}^n + \delta_{i,j}^n + \delta_{i,p}^n +$, etc.

When the deflection of all the parts due to all the forces acting on it is determined, simultaneous equations are set up such that their solution will result in values for X_i .....X_j which will cause $\delta_i^n = \delta_i^{n+1}$ AND $\delta_j^n = \delta_j^{n+1}$. When the interface deflections are compatable, the problem has been solved and the redundant force values are known.

SANDWICH SPHERICAL DOME

CORE STRESS

FACE STRESS

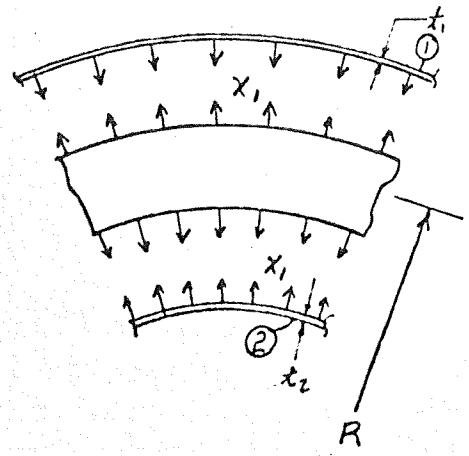

I- THERMAL

$$\delta^1_{1,1} = \frac{X_1 R^2 (1-\nu)}{2 E_1 t_1}$$

$$\delta^1_{1,T} = -\alpha \Delta T_1 R$$

$$\delta^2_{1,1} = \frac{X_1 R^2 (1-\nu)}{2 E_2 t_2}$$

$$\delta^2_{1,T} = \alpha \Delta T_2 R$$

$$\delta_1 = \delta^1_{1,1} + \delta^1_{1,T} + \delta^2_{1,1} + \delta^2_{1,T} = 0$$

$$\therefore \quad X_1 = \frac{(\alpha \Delta T_1 - \alpha \Delta T_2)}{\frac{R(1-\nu)}{2}\left(\frac{1}{E_1 t_1} + \frac{1}{E_2 t_2}\right)} \qquad (1)$$

$$\sigma_1 = -\frac{X_1 R}{2 t_1} = -\frac{(\alpha \Delta T_1 - \alpha \Delta T_2)}{t_1 (1-\nu)\left(\frac{1}{E_1 t_1} + \frac{1}{E_2 t_2}\right)} \qquad (2)$$

$$\sigma_2 = \frac{X_1 R}{2 t_2} = \frac{(\alpha \Delta T_1 - \alpha \Delta T_2)}{t_2 (1-\nu)\left(\frac{1}{E_1 t_1} + \frac{1}{E_2 t_2}\right)} \qquad (3)$$

K+E ALBANENE TRACING PAPER 70663

II - INTERNAL PRESSURE

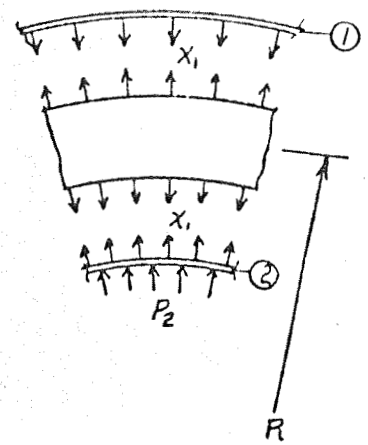

$$\delta^1_{1,1} = \frac{X_1 R^2 (1-\nu)}{2 E_1 I_1}$$

$$\delta^1_{1,P} = 0$$

$$\delta^2_{1,1} = \frac{X_1 R^2 (1-\nu)}{2 E_2 I_2}$$

$$\delta^2_{1,P} = \frac{P_2 R^2 (1-\nu)}{2 E_2 I_2}$$

$$\delta_1 = \delta^1_{1,1} + \delta^1_{1,P} + \delta^2_{1,1} + \delta^2_{1,P} = 0$$

$$X_1 = \frac{-P_2 E_1 I_1}{(E_1 I_1 + E_2 I_2)} \qquad (4)$$

$$\sigma_1 = -\frac{X_1 R}{2 I_1} = \frac{P_2 E_1 R}{2(E_1 I_1 + E_2 I_2)} \qquad (5)$$

$$\sigma_2 = \frac{(P_2 + X_1) R}{2 I_2} = \frac{P_2 E_2 R}{2(E_1 I_1 + E_2 I_2)} \qquad (6)$$

III - EXTERNAL PRESSURE

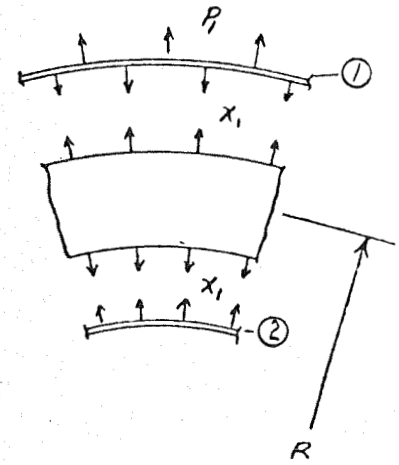

$$\delta^1_{1,1} = \frac{X_1 R^2 (1-\nu)}{2 E_1 I_1}$$

$$\delta^1_{1,P} = \frac{-P_1 R^2 (1-\nu)}{2 E_1 I_1}$$

$$\delta^2_{1,1} = \frac{X_1 R^2 (1-\nu)}{2 E_2 I_2}$$

$$\delta^2_{1,P} = 0$$

$$\delta_1 = \delta^1_{1,1} + \delta^1_{1,P} + \delta^2_{1,1} + \delta^2_{1,P} = 0$$

$$X_1 = \frac{P_1 E_2 I_2}{(E_1 I_1 + E_2 I_2)} \qquad (7)$$

$$\sigma_1 = \frac{(P_1 - X_1) R}{2 I_1} = \frac{P_1 E_1 R}{2(E_1 I_1 + E_2 I_2)} \qquad (8)$$

K+E ALBANENE® TRACING PAPER 70883

$$\sigma_2 = \frac{X_1 R}{2 t_2} = \frac{P_1 E_2 R}{2(E_1 t_1 + E_2 t_2)} \qquad (9)$$

SANDWICH CYLINDER

CORE STRESS

FACE STRESS

I- THERMAL

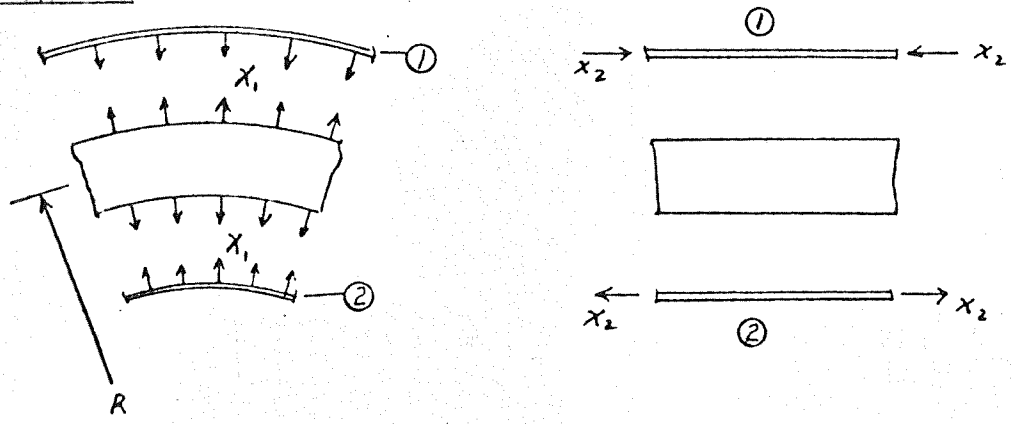

$$\delta^1_{1,1} = \frac{X_1 R^2}{E_1 t_1} \qquad \delta^2_{1,1} = \frac{X_1 R^2}{E_2 t_2}$$

$$\delta^1_{1,2} = \frac{-\nu X_2 R}{E_1 t_1} \qquad \delta^2_{1,2} = \frac{-\nu X_2 R}{E_2 t_2}$$

$$\delta^1_{2,1} = \frac{-\nu X_1 R}{E_1 t_1} \qquad \delta^2_{2,1} = \frac{-\nu X_1 R}{E_2 t_2}$$

$$\delta^1_{2,2} = \frac{X_2}{E_1 t_1} \qquad \delta^2_{2,2} = \frac{X_2}{E_2 t_2}$$

$$\delta^1_{1,T} = -\alpha \Delta T_1 R \qquad \delta^2_{1,T} = \alpha \Delta T_2 R$$

$$\delta^1_{2,T} = -\alpha \Delta T_1 \qquad \delta^2_{2,T} = \alpha \Delta T_2$$

$$\delta_1 = \delta^1_{1,1} + \delta^1_{1,2} + \delta^1_{1,T} + \delta^2_{1,1} + \delta^2_{1,2} + \delta^2_{1,T} = 0$$

$$\delta_2 = \delta^1_{2,1} + \delta^1_{2,2} + \delta^1_{2,T} + \delta^2_{2,1} + \delta^2_{2,2} + \delta^2_{2,T} = 0$$

$$\therefore X_2 = \frac{(\alpha \Delta T_1 - \alpha \Delta T_2)}{(1-\nu)\left(\frac{1}{E_1 t_1} + \frac{1}{E_2 t_2}\right)} \qquad (1)$$

$$X_1 = \frac{(-\alpha \Delta T_1 - \alpha \Delta T_2)}{(1-\nu) R \left(\frac{1}{E_1 t_1} + \frac{1}{E_2 t_2}\right)} \qquad (2)$$

MEMBRANE ANALYSIS

THE OBJECT OF THIS ANALYSIS IS TO DETERMINE THE MEMBRANE STRESSES IN THE SHELL SHOWN IN FIGURE PAGE III.2.2, CAUSED BY INTERNAL PRESSURE AND VERTICAL ACCELERATION LOADS ON THE PROPELLANT FLUID MASSES (NEGLECTING THE MASS OF THE TANK ITSELF). ACCELERATION LOADS ARE DERIVED BY MEANS OF D'ALEMBERT'S PRINCIPLE OF APPLYING REVERSED ACCELERATION BODY FORCES ON THE ELEMENTS OF MASS AND TREATING THE PROBLEM AS AN EQUILIBRIUM ONE (INSTEAD OF $F = ma$, USING $F - ma = 0$).

THE SEQUENCE OF COMPUTATION IS IMPORTANT IN CERTAIN REGIONS, DEPENDING UPON THE FIRING CONDITION, SINCE INTERNAL STRESSES SOMETIMES DEPEND UPON BOUNDARY LOADS FROM ADJACENT ELEMENTS. FOR STRESSES $N_{\phi 4}$, $N_{\phi 5}$ AND $N_{\phi 6}$ THIS IS THE CASE, AND TWO SOLUTIONS HAVE BEEN PROVIDED WHICH ACT AS A CHECK ON THE BOUNDARY LOADS. SINCE N_ϕ AND N_θ ARE POSITIVE FOR TENSION, AND BOUNDARY LOADS HAVE BEEN APPLIED IN CONFORMITY WITH THIS CONVENTION, DIRECT ALGEBRAIC SUBSTITUTION OF THE COMPUTED BOUNDARY LOADS RESULTS IN CORRECT SIGNS.

EQUILIBRIUM IN THE HORIZONTAL DIRECTION AT POINTS WHERE SHELL ELEMENTS JOIN AT AN ANGLE TO EACH OTHER MUST BE ACCOUNTED FOR BY HORIZONTAL SHEARS APPLIED TO ONE OF THE ELEMENTS OR TO A RING AT THE JOINT.

E.G. POINT 3, PAGE III.2.2

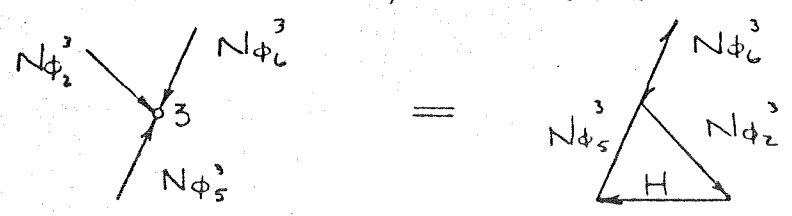

H = REQUIRED SHEAR REACTION FROM ONE ELEMENT (OR RING REACTION) ON POINT.

NOTATION

p_1	GAS PRESSURE IN FUEL TANK, PSIG
p_2	GAS PRESSURE IN OXIDIZER TANK, PSIG
η	VERTICAL ACCELERATION LOAD FACTOR
h_1, h_2, h_3	FILL HEIGHTS GIVEN ON P.III.2.2, INCHES
a	DISTANCE GIVEN ON P.III.2.2, INCHES
S_0, S_1	DISTANCES TO THRUST STRUCTURE CONE APEX GIVEN ON PAGE 14.3, INCHES
R_1, R_2	SPHERICAL RADII GIVEN ON P.14.3, INCHES
d	BASE DIAMETER OF THRUST STRUCTURE, INCHES
γ_1	DENSITY OF FUEL, LBS/IN^3
γ_2	DENSITY OF OXIDIZER, LBS/IN^3
W	WEIGHT OF ENGINES, EQUIPMENT, ETC., LBS.
T_1	THRUST IN CYLINDER DUE TO FIRST STAGE FIRING, LBS/IN.
T_2	THRUST AT BASE OF CONE DUE TO SECOND STAGE FIRING, LBS/IN
$\phi_{1\ldots6}^{1\ldots7}$	MERIDIAN ANGLE IN REGION 1...6 (SUBSCRIPT) GIVEN AT POINT 1...7 (SUPERSCRIPT)
$N_{\phi_{1\ldots6}}^{1\ldots7}$	MERIDIAN LOAD IN REGION 1...6 (SUBSCRIPT) GIVEN AT POINT 1...7 (SUPERSCRIPT), LBS/IN.
$N_{\theta_{1\ldots6}}^{1\ldots7}$	HOOP LOAD IN REGION 1...6 (SUBSCRIPT) GIVEN AT POINT 1...7 (SUPERSCRIPT), LBS/IN.
q	NORMAL PRESSURE AT POINT ON THE SHELL (POSITIVE OUTWARD)
Q	INTEGRAL OF q IN THE VERTICAL DIRECTION OVER A SURFACE

SM 425669

NOTATION, MEMBRANE LOADS

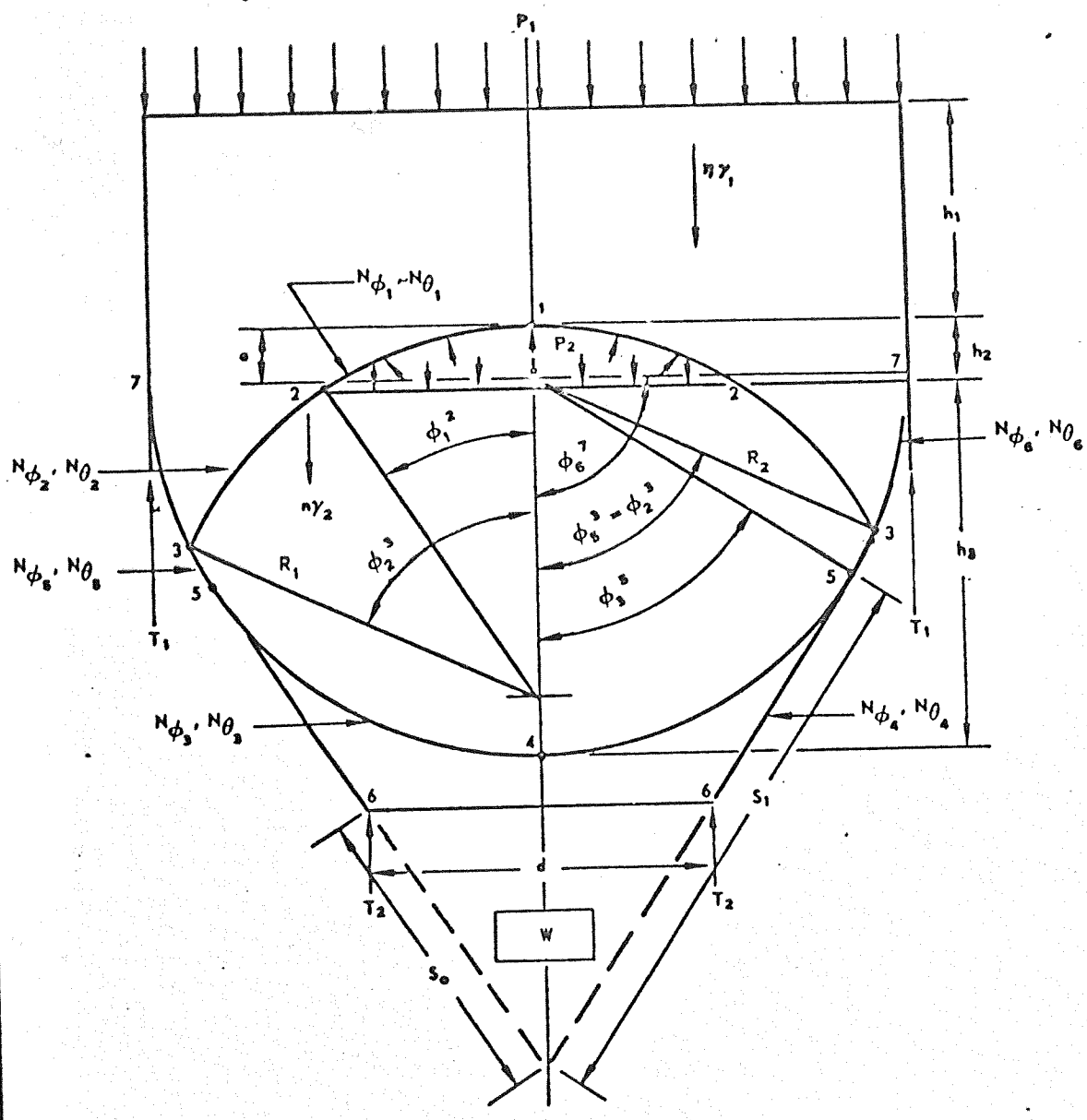

REGION

① - ②

$N_{\phi 1}$

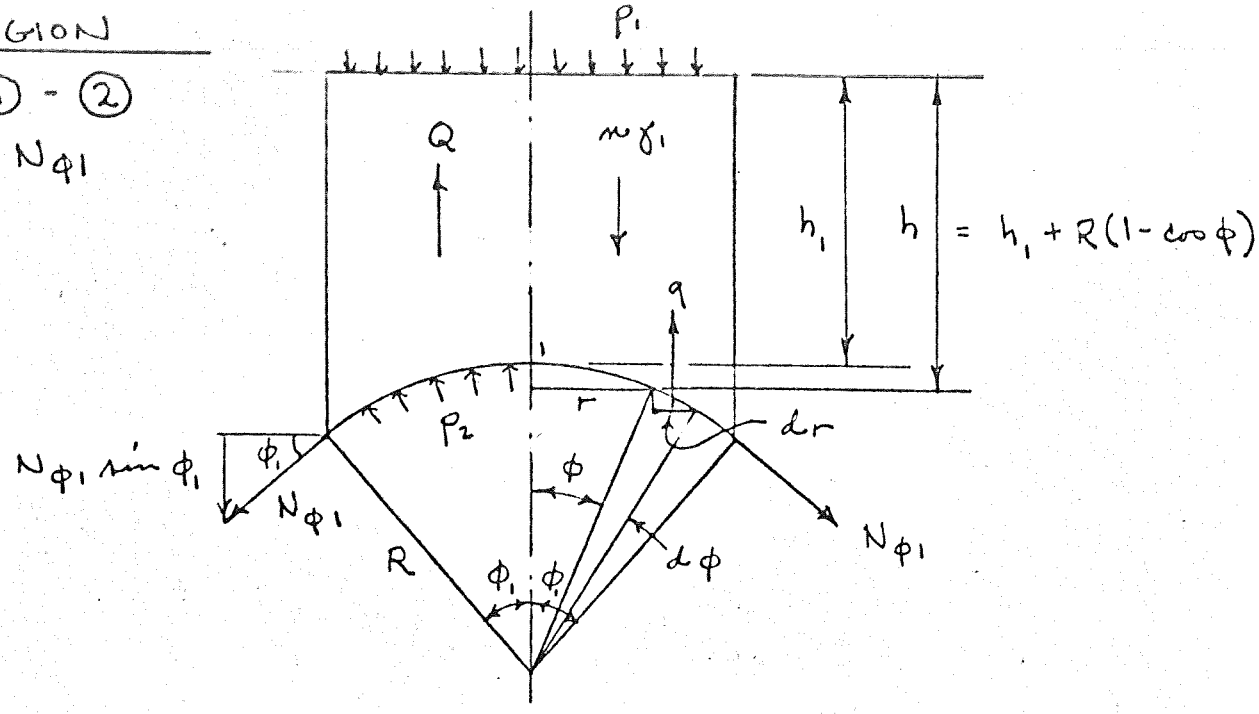

FROM THE GEOMETRY ABOVE :

$r = R\sin\phi \qquad d(R\sin\phi) = R\cos\phi \cdot d\phi$

THE VERTICAL LOADING PRESSURE, q, ACTS ON AN ELEMENTARY ANNULAR RING OF SIZE:

$$dA = 2\pi r\,dr = 2\pi R^2 \sin\phi\cos\phi\,d\phi$$

THE TOTAL VERTICAL PRESSURE LOADING, Q, WILL BE GIVEN BY:

$$\frac{Q}{2\pi R^2} = \int_0^{\phi_1} q\sin\phi\cos\phi\,d\phi \qquad (1)$$

FROM THE ABOVE GEOMETRY,

$$q = p_2 - p_1 - n\gamma_1 h = p_2 - p_1 - n\gamma_1(h_1 + R - R\cos\phi)$$

SUBSTITUTING q INTO EQ. (1):

$$\frac{Q}{2\pi R^2} = \int_0^{\phi_1} \left\{ p_2 - p_1 - n\gamma_1 (h_1 + R - R\cos\phi) \right\} \sin\phi \cos\phi \, d\phi$$

$$= \int_0^{\phi_1} \left\{ p_2 - p_1 - n\gamma_1 (h_1 + R) \right\} \sin\phi \cos\phi \, d\phi$$

$$+ \int_0^{\phi_1} R n \gamma_1 \cos^2\phi \sin\phi \, d\phi$$

$$= \left\{ p_2 - p_1 - n\gamma_1 (h_1 + R) \right\} \left[\frac{\sin^2\phi}{2} \right]_0^{\phi_1}$$

$$- R n \gamma_1 \left[\frac{\cos^3\phi}{3} \right]_0^{\phi_1}$$

$$\frac{Q}{2\pi R^2} = \frac{1}{2} \left\{ p_2 - p_1 - n\gamma_1 (h_1 + R) \right\} \sin^2\phi_1$$

$$- \frac{1}{3} R n \gamma_1 (\cos^3\phi_1 - 1) \qquad (2)$$

FOR VERTICAL EQUILIBRIUM:

$$N_{\phi_1} \sin\phi_1 \cdot 2\pi R \sin\phi_1 - Q = 0 \qquad (3)$$

SUBSTITUTING (2) INTO (3) GIVES:

$$2\pi R \sin^2\phi_1 \, N_{\phi_1} = 2\pi R^2 \cdot \left[\frac{1}{2} \left\{ p_2 - p_1 - n\gamma_1 (h_1 + R) \right\} \sin^2\phi_1 \right.$$

$$\left. - \frac{1}{3} R n \gamma_1 (\cos^3\phi_1 - 1) \right]$$

SOLVING FOR N_{ϕ_1} :

$$N_{\phi_1} = \frac{R}{2}\left\{p_2 - p_1 - n\gamma_1(h_1 + R)\right\} - \frac{R^2}{3} n\gamma_1 \frac{\cos^3\phi_1 - 1}{\sin^2\phi_1} \quad \text{—(4)}$$

THE EQUATION OF NORMAL EQUILIBRIUM OF AN ELEMENT OF A SHELL IS:

$$\frac{N_\phi}{r_1} + \frac{N_\theta}{r_2} = q$$

FOR A SPHERE, $r_2 = r_1 = R$ AND THE EXPRESSION FOR N_θ BECOMES:

$$N_\theta = -N_\phi + qR \quad \text{——— (5)}$$

SUBSTITUTING THE VALUE OF q FROM P. III.2.3 FOR $\phi = \phi_1$,

$$N_{\theta_1} = -N_{\phi_1} + R\left\{p_2 - p_1 - n\gamma_1(h_1 + R - R\cos\phi_1)\right\} \quad \text{—(6)}$$

REGION

② ③

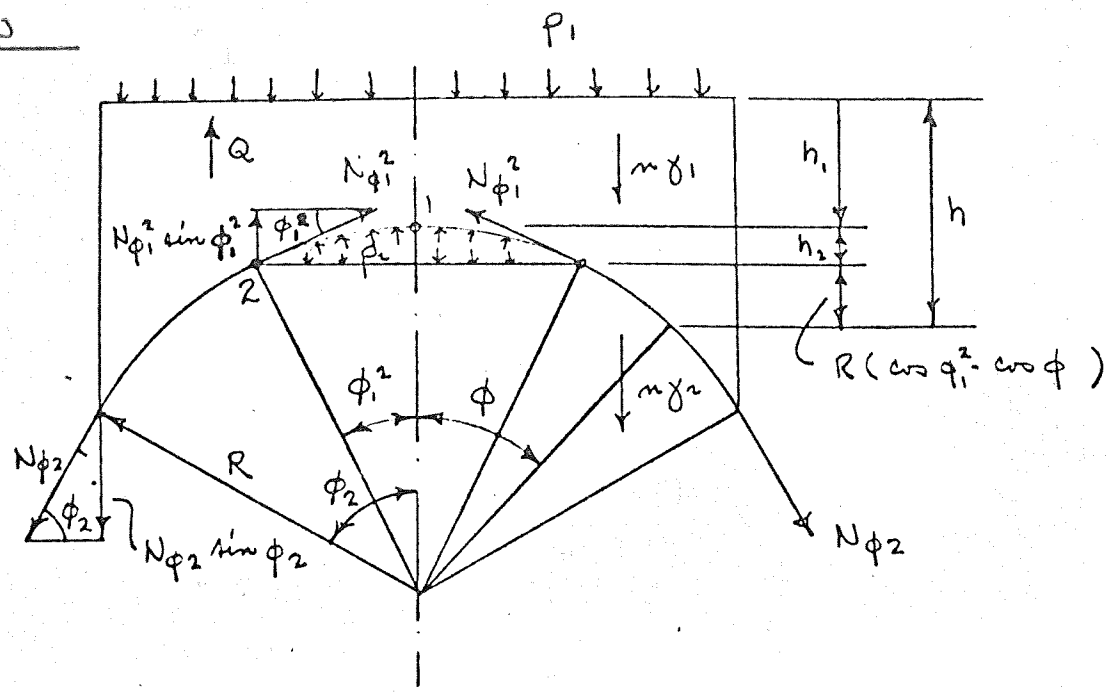

AT DEPTH h, THE PRESSURE ON THE TOP, q_1, IS:

$$q_1 = -p_1 - n\gamma_1 h = -p_1 - n\gamma_1\{h_1 + h_2 + R(\cos\phi_1^2 - \cos\phi)\}$$

THE PRESSURE AT THE BOTTOM, q_2, IS:

$$q_2 = p_2 + n\gamma_2 R(\cos\phi_1^2 - \cos\phi)$$ WHICH IS A HYDROSTATIC UPLIFT.

THE TOTAL RESULTANT PRESSURE, q, IS:

$$q = q_1 + q_2 = p_2 - p_1 + n\gamma_2 R(\cos\phi_1^2 - \cos\phi) - n\gamma_1\{h_1 + h_2 + R(\cos\phi_1^2 - \cos\phi)\}$$

SUBSTITUTING THIS VALUE INTO EQ. (1) FOR THE TOTAL VERTICAL PRESSURE LOADING GIVES:

$$\frac{Q}{2\pi R^2} = \int_{\phi_1^2}^{\phi_2} \Big[p_2 - p_1 + n\gamma_2 R(\cos\phi_1^2 - \cos\phi) - n\gamma_1\{h_1 + h_2 + R(\cos\phi_1^2 - \cos\phi)\}\Big] \sin\phi\cos\phi\, d\phi$$

$$= \int_{\phi_1^2}^{\phi_2} \Big\{ p_2 - p_1 + n\gamma_2 R\cos\phi_1^2 - n\gamma_1(h_1 + h_2 + R\cos\phi_1^2)\Big\} \times \sin\phi\cos\phi\, d\phi$$

$$= \int_{\phi_1^2}^{\phi_2} \Big\{ n\gamma_2 R - n\gamma_1 R \Big\} \cos^2\phi \sin\phi\, d\phi$$

$$= \Big\{ p_2 - p_1 - nR(\gamma_1 - \gamma_2)\cos\phi_1^2 - n\gamma_1(h_1 + h_2)\Big\} \left[\frac{\sin^2\phi}{2}\right]_{\phi_1^2}^{\phi_2}$$

$$- nR(\gamma_1 - \gamma_2)\left[\frac{\cos^3\phi}{3}\right]_{\phi_1^2}^{\phi_2}$$

$$\frac{Q}{2\pi R^2} = \frac{1}{2}\Big\{ p_2 - p_1 - nR(\gamma_1 - \gamma_2)\cos\phi_1^2 - n\gamma_1(h_1 + h_2)\Big\}(\sin^2\phi_2 - \sin^2\phi_1^2)$$

$$- \frac{1}{3} nR(\gamma_1 - \gamma_2)(\cos^3\phi_2 - \cos^3\phi_1^2)$$

FOR VERTICAL EQUILIBRIUM: (P III.2.6)

$$N_{\phi 2} \sin\phi_2 \cdot 2\pi R \sin\phi_2 - N_{\phi 1}^2 \sin\phi_1^2 \cdot 2\pi R \sin\phi_1^2 - Q = 0$$

SUBSTITUTING FOR Q:

$$2\pi R \sin^2\phi_2 N_{\phi 2} - 2\pi R \sin^2\phi_1^2 N_{\phi 1}^2 = 2\pi R^2 \Big[\tfrac{1}{2} \{ p_2 - p_1 - n R(\gamma_1 - \gamma_2)\cos\phi_1^2 - n\gamma_1(h_1 + h_2) \} (\sin^2\phi_2 - \sin^2\phi_1^2) - \tfrac{1}{3} n R(\gamma_1 - \gamma_2)(\cos^3\phi_2 - \cos^3\phi_1^2) \Big].$$

SOLVING FOR $N_{\phi 2}$:

$$\boxed{N_{\phi 2} = N_{\phi 1}^2 \left(\frac{\sin\phi_1^2}{\sin\phi_2}\right)^2 + \frac{R}{2} \left\{ p_2 - p_1 - n R(\gamma_1 - \gamma_2)\cos\phi_1^2 - n\gamma_1(h_1 + h_2) \right\} \left[1 - \left(\frac{\sin\phi_1^2}{\sin\phi_2}\right)^2 \right] - \frac{R^2}{3} n(\gamma_1 - \gamma_2) \frac{\cos^3\phi_2 - \cos^3\phi_1^2}{\sin^2\phi_2}} \quad (7)$$

SUBSTITUTING THE VALUE OF q FROM p. III.2.3 INTO EQ. (5) p. III.2.6 GIVES:

$$\boxed{N_{\theta 2} = -N_{\phi 2} + R \left\{ p_2 - p_1 + n R(\gamma_1 - \gamma_2)(\cos\phi_2 - \cos\phi_1^2) - n\gamma_1(h_1 + h_2) \right\}} \quad - (8)$$

REGION

(4) (5)

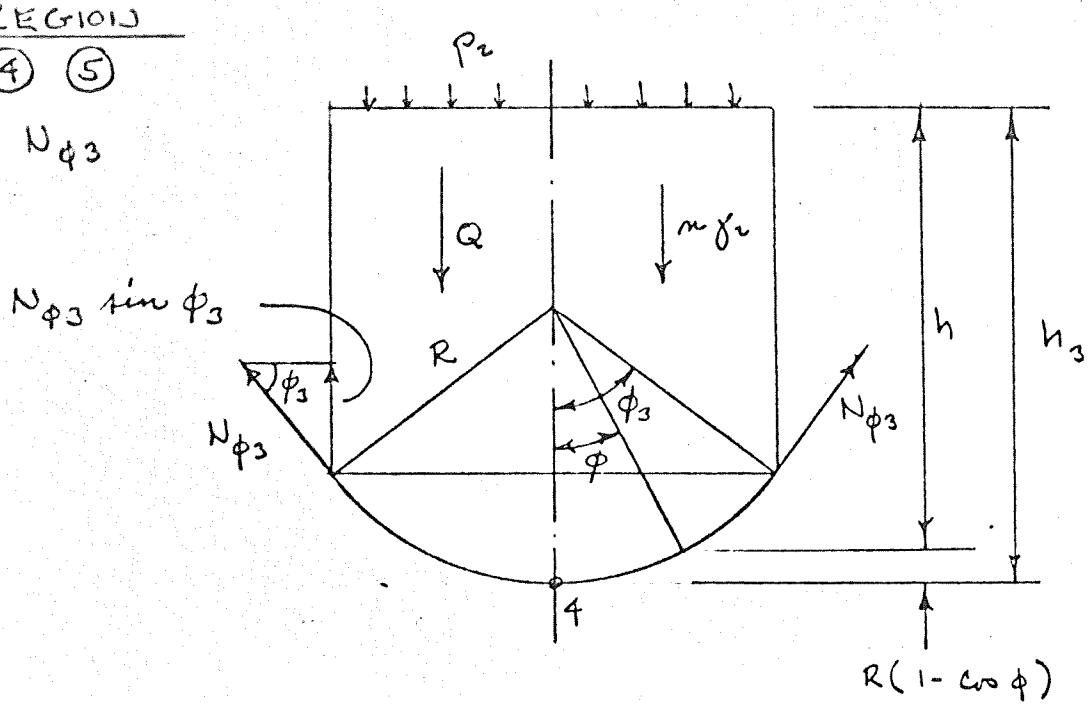

AT DEPTH h, THE PRESSURE q IS:

$$q = p_2 + n\gamma_2 h = p_2 + n\gamma_2 \{h_3 - R(1-\cos\phi)\}$$

FROM EQ. (1) p. III.2.3 THE VERTICAL LOADING IS GIVEN BY:

$$\frac{Q}{2\pi R^2} = \int_0^{\phi_3} \{p_2 + n\gamma_2 (h_3 - R + R\cos\phi)\} \sin\phi \cos\phi \, d\phi$$

$$= \int_0^{\phi_3} \{p_2 + n\gamma_2 (h_3 - R)\} \sin\phi \cos\phi \, d\phi$$

$$+ \int_0^{\phi_3} n\gamma_2 R \cos^2\phi \sin\phi \, d\phi$$

$$\frac{Q}{2\pi R^2} = \left\{ p_2 + n\gamma_2 (h_3 - R) \right\} \left[\frac{\sin^2\phi}{2} \right]_0^{\phi_3}$$

$$- n\gamma_2 R \left[\frac{\cos^3\phi}{3} \right]_0^{\phi_3}$$

$$= \frac{1}{2} \left\{ p_2 + n\gamma_2 (h_3 - R) \right\} \sin^2\phi_3 -$$

$$- \frac{1}{3} n\gamma_2 R (\cos^3\phi_3 - 1)$$

FOR VERTICAL EQUILIBRIUM: (P III.2.9)

$$N_{\phi 3} \sin\phi_3 \cdot 2\pi R \sin\phi_3 - Q = 0$$

SUBSTITUTING THE VALUE FOR Q:

$$2\pi R \sin^2\phi_3 \, N_{\phi 3} = 2\pi R^2 \left[\frac{1}{2} \left\{ p_2 + n\gamma_2 (h_3 - R) \right\} \sin^2\phi_3 - \right.$$
$$\left. - \frac{1}{3} n\gamma_2 R (\cos^3\phi_3 - 1) \right]$$

SOLVING FOR $N_{\phi 3}$:

$$\boxed{N_{\phi 3} = \frac{R}{2} \left\{ p_2 + n\gamma_2 (h_3 - R) \right\} - \frac{R^2}{3} n\gamma_2 \cdot \frac{\cos^3\phi_3 - 1}{\sin^2\phi_3}} \quad - (9)$$

SUBSTITUTING THE VALUE OF q FROM p. III.2.9 INTO EQ. (5) p. III.2.6 GIVES:

$$\boxed{N_{\theta 3} = - N_{\phi 3} + R \left\{ p_2 + n\gamma_2 (h_3 - R + R\cos\phi_3) \right\}} \quad — (10)$$

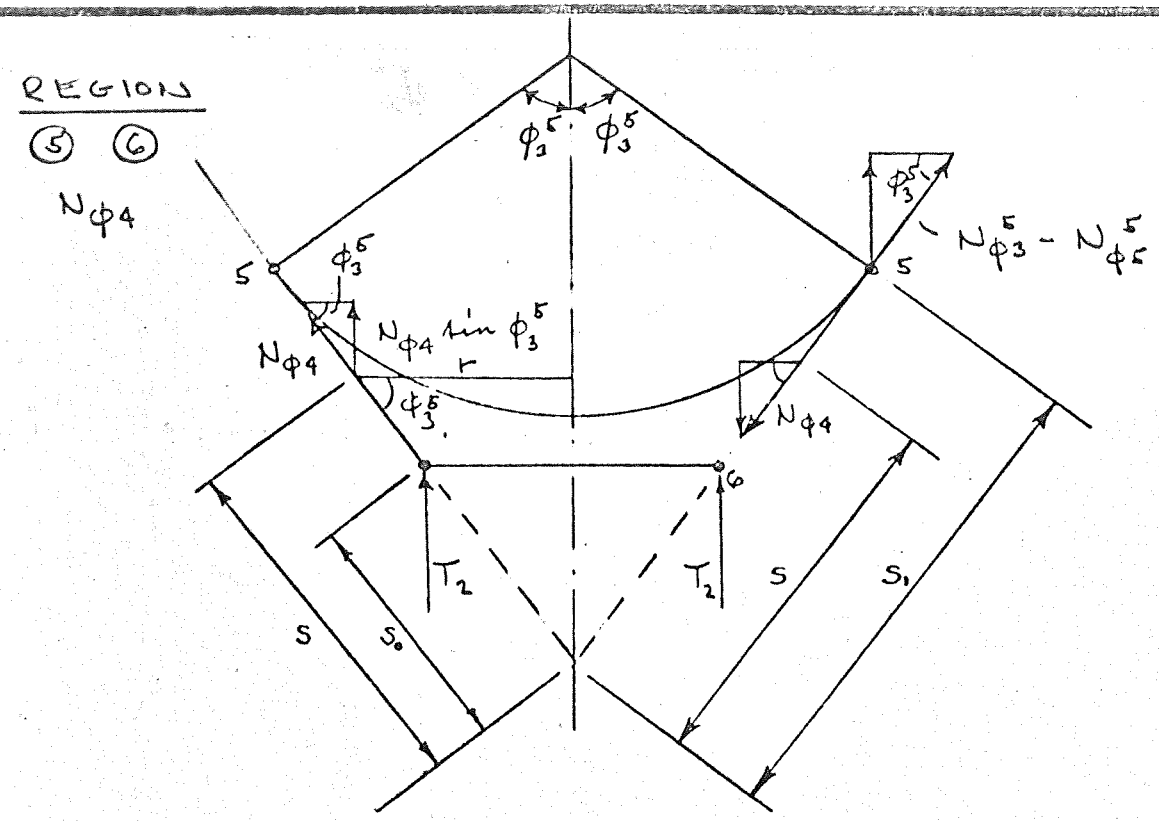

FIRST STAGE FIRING $T_1 \neq 0$ $T_2 = 0$

FOR THIS CASE, $N_{\phi 4} = N_{\theta 4} = 0$

SECOND STAGE FIRING $T_1 = 0$, $T_2 \neq 0$

FOR THIS CASE, $N_{\phi 4}$ CAN BE COMPUTED FROM T_2 OR FROM $N_{\phi 3}^5 - N_{\phi 5}^5$ AT THE TOP EDGE.

a $N_{\phi 4}$ FROM T_2

FROM GEOMETRY $r = s \cos \phi_3^5$

FOR VERTICAL EQUILIBRIUM,

$$N_{\phi 4} \sin \phi_3^5 \cdot 2\pi s \cos \phi_3^5 + T_2 \cdot 2\pi s_0 \cos \phi_3^5 = 0$$

SOLVING FOR $N_{\phi 4}$:

$$\boxed{N_{\phi 4} = -\frac{S_0}{S} \cdot \frac{T_2}{\sin \phi_3^5}} \qquad \text{(11a)}$$

THE EQUATION OF NORMAL EQUILIBRIUM OF A SMALL ELEMENT,

$$\frac{N_\phi}{r_1} + \frac{N_\theta}{r_2} = q$$

FOR A CONE WHERE $r_1 \to \infty$, $r_2 = s \cot \phi_3^5$

GIVES, FOR $q = 0$

$$N_{\theta 4} = 0$$

b $N_{\phi 4}$ FROM $N_{\phi 3}^5 - N_{\phi 5}^5$

THIS IS THE TOP EDGE LOADING OF THE CONE DUE TO EDGE STRESSES IN THE SPHERICAL SECTION.

FROM P III.2.11, FOR VERTICAL EQUILIBRIUM;

$$N_{\phi 4} \sin \phi_3^5 \cdot 2\pi s \cos \phi_3^5 - (N_{\phi 3}^5 - N_{\phi 5}^5) \sin \phi_3^5 \cdot 2\pi s_1 \cos \phi_3^5 = 0$$

SOLVING FOR $N_{\phi 4}$:

$$\boxed{N_{\phi 4} = \frac{s_1}{s} \cdot (N_{\phi 3}^5 - N_{\phi 5}^5)} \qquad \text{(11b)} \quad *$$

* USE VALUES OF $N_{\phi 3}$ AT POINT (5) FROM EQ. (9) P. III.2.10 AND $N_{\phi 5}$ AT POINT (5) FROM (14b) P. III.2.18

REGION ⑤ ③ $N_{\phi 5}$

FIRST STAGE FIRING $T_1 \neq 0$, $T_2 = 0$

FOR THIS CASE, THE EQUATIONS ARE IDENTICAL TO EQ. (9) AND (10),

i.e.,

$$N_{\phi 6} = \frac{R}{2}\left\{p_2 + n\gamma_2(h_3 - R)\right\} - \frac{R^2}{3} n\gamma_2 \cdot \frac{\cos^3\phi_3 - 1}{\sin^2\phi_3} \qquad (12)$$

$$N_{\theta 5} = -N_{\phi 5} + R\left\{p_2 + n\gamma_2(h_3 - R + R\cos\phi_3)\right\} \qquad (13)$$

SECOND STAGE FIRING $T_1 = 0$, $T_2 \neq 0$

FOR THIS CASE, $N_{\phi 5}$ CAN BE COMPUTED FROM $N_{\phi 4}^5$ (AS A FUNCTION OF T_2) AND $N_{\phi 3}^5$ AT THE BOTTOM EDGE OR FROM $N_{\phi 2}^3$ AND $N_{\phi 6}^3$ AT THE TOP EDGE. (THE USE OF TOP OR BOTTOM EDGE LOADING TO COMPUTE INTERNAL FORCES IS ANALOGOUS TO THE USE OF REACTIONS AT THE LEFT OR AT THE RIGHT FOR COMPUTING INTERNAL FORCES ON A SIMPLE BEAM.)

a) $N_{\phi 5}$ AS A FUNCTION OF $N_{\phi 4}^{5}$ AND $N_{\phi 3}^{5}$.

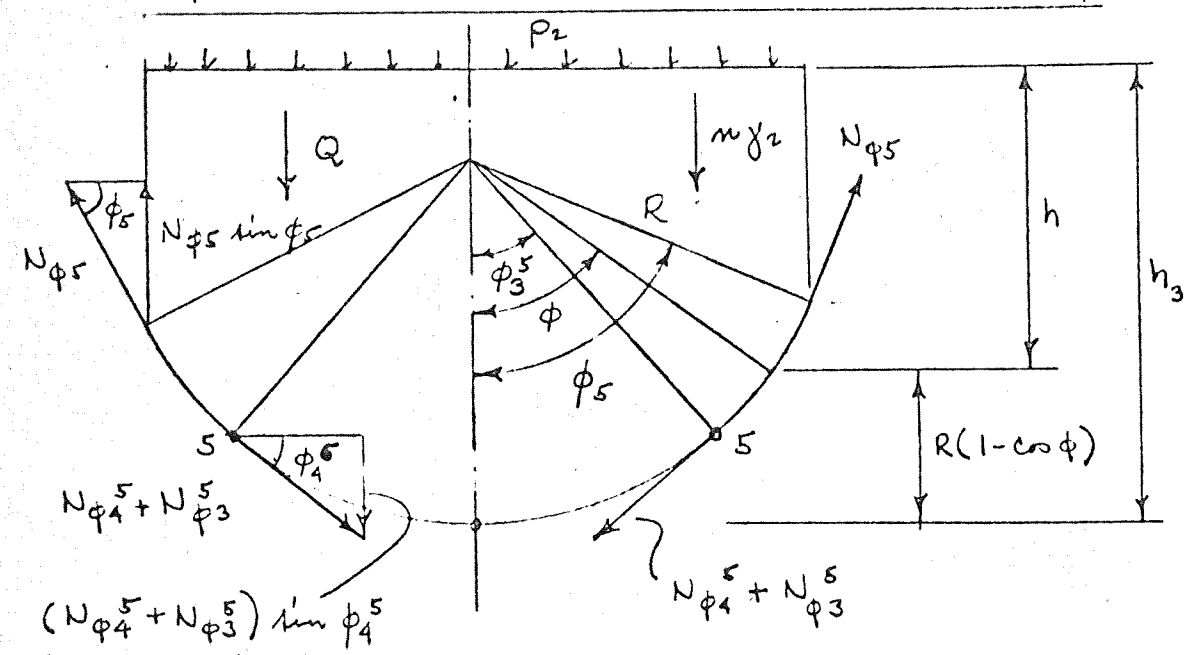

AT DEPTH, h, THE PRESSURE, q, IS GIVEN BY

$$q = p_2 + n\gamma_2 h = p_2 + n\gamma_2(h_3 - R + R\cos\phi)$$

SUBSTITUTING THIS VALUE INTO EQ. (1) P III.2.3

$$\frac{Q}{2\pi R^2} = \int_{\phi_3^5}^{\phi_5} \{p_2 + n\gamma_2(h_3 - R + R\cos\phi)\}\sin\phi\cos\phi\, d\phi$$

$$= \int_{\phi_3^5}^{\phi_5} \{p_2 + n\gamma_2(h_3 - R)\}\sin\phi\cos\phi\, d\phi$$

$$+ \int_{\phi_3^5}^{\phi_5} n\gamma_2 R\cos^2\phi\sin\phi\, d\phi$$

$$\frac{Q}{2\pi R^2} = \left\{ p_2 + n\gamma_2 (h_3 - R) \right\} \left[\frac{\sin^2\phi}{2} \right]_{\phi_3^5}^{\phi_5}$$

$$- n\gamma_2 R \left[\frac{\cos^3\phi}{3} \right]_{\phi_3^5}^{\phi_5}$$

$$= \frac{1}{2} \left\{ p_2 + n\gamma_2 (h_3 - R) \right\} \left(\sin^2\phi_5 - \sin^2\phi_3^5 \right)$$

$$- \frac{n}{3} \gamma_2 R \left(\cos^3\phi_5 - \cos^3\phi_3^5 \right)$$

THE EQUATION OF VERTICAL EQUILIBRIUM IS:

$$N_{\phi 5} \sin\phi_5 \cdot 2\pi R \sin\phi_5 - \left(N_{\phi 4}^5 + N_{\phi 3}^5 \right) \sin\phi_3^5 \cdot 2\pi R \sin\phi_3^5 - Q = 0$$

SUBSTITUTING THE VALUE OF Q:

$$2\pi R \sin^2\phi_5 N_{\phi 5} - 2\pi R \sin^2\phi_3^5 \left(N_{\phi 4}^5 + N_{\phi 3}^5 \right) -$$

$$- 2\pi R^2 \left[\frac{1}{2} \left\{ p_2 + n\gamma_2 (h_3 - R) \right\} \left(\sin^2\phi_5 - \sin^2\phi_3^5 \right) - \right.$$

$$\left. - \frac{n}{3} \gamma_2 R \left(\cos^3\phi_5 - \cos^3\phi_3^5 \right) \right] = 0$$

SOLVING FOR $N_{\phi 5}$:

$$\boxed{N_{\phi 5} = \left(N_{\phi 4}^5 + N_{\phi 3}^5 \right) \left(\frac{\sin\phi_3^5}{\sin\phi_5} \right)^2 + \frac{R}{2} \left\{ p_2 + n\gamma_2 (h_3 - R) \right\} \left\{ 1 - \left(\frac{\sin\phi_3^5}{\sin\phi_5} \right)^2 \right\} - \frac{R^2}{3} n\gamma_2 \cdot \frac{\cos^3\phi_5 - \cos^3\phi_3^5}{\sin^2\phi_5} \quad *}$$

(14a)

* USE VALUES OF $N_{\phi 4}$ AT POINT ⑤ FROM EQ. (11a) p. III.2.12
AND $N_{\phi 3}$ AT POINT ⑤ FROM EQ. (9) p. III.2.10

FROM EQ. (5) p.III.2.5 USING THE VALUE OF q:

$$\boxed{N_{\theta 5} = -N_{\phi 5} + R\left\{p_2 + n\gamma_2(h_3 - R + R\cos\phi_5)\right\}} \qquad (15)$$

b) $N_{\phi 5}$ AS A FUNCTION OF $N_{\phi 2}^3$ AND $N_{\phi 6}^3$

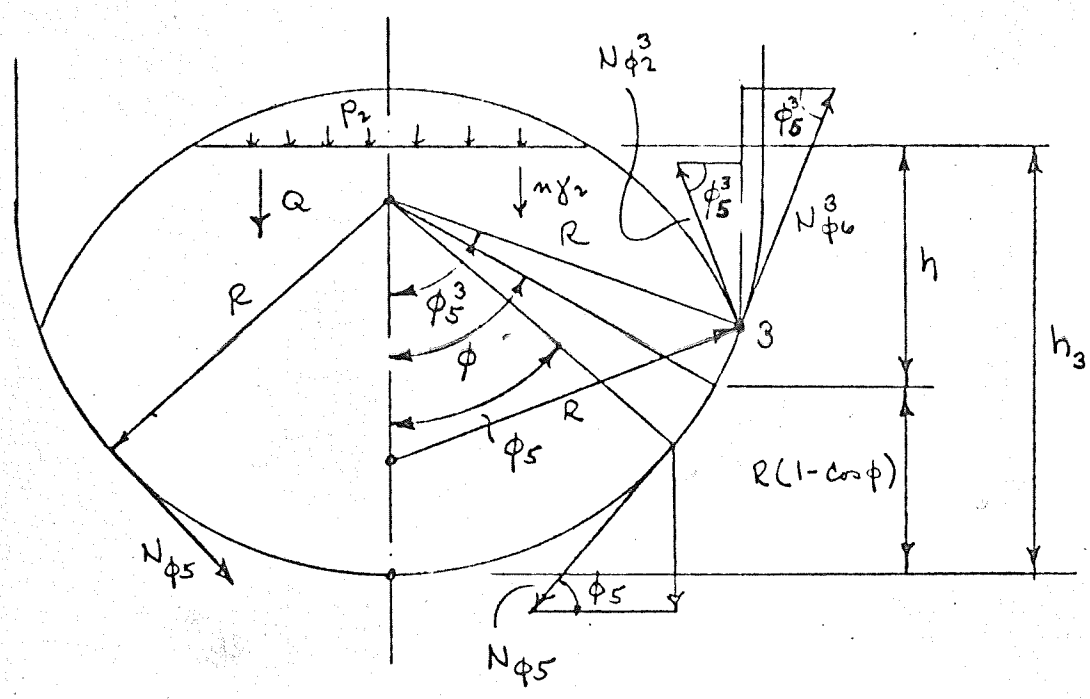

AT DEPTH, h, THE PRESSURE IS GIVEN BY:

$$q = p_2 + n\gamma_2 h = p_2 + n\gamma_2(h_3 - R + R\cos\phi)$$

SUBSTITUTING THIS VALUE INTO EQ. (1) p.III.2.3

$$\frac{Q}{2\pi R^2} = \int_{\phi_5}^{\phi_5^3} \left\{p_2 + n\gamma_2(h_3 - R + R\cos\phi)\right\} \sin\phi \cos\phi \, d\phi$$

$$\frac{Q}{2\pi R^2} = \int_{\phi_5}^{\phi_5^3} \{p_2 + n\gamma_2(h_3 - R)\} \sin\phi \cos\phi \, d\phi$$

$$+ \int_{\phi_5}^{\phi_5^3} n\gamma_2 R \cos^2\phi \sin\phi \, d\phi$$

$$= \{p_2 + n\gamma_2(h_3 - R)\} \left[\frac{\sin^2\phi}{2}\right]_{\phi_5}^{\phi_5^3}$$

$$- n\gamma_2 R \left[\frac{\cos^3\phi}{3}\right]_{\phi_5}^{\phi_5^3}$$

$$= \frac{1}{2}\{p_2 + n\gamma_2(h_3 - R)\}(\sin^2\phi_5^3 - \sin^2\phi_5)$$

$$- \frac{1}{3} n\gamma_2 R (\cos^3\phi_5^3 - \cos^3\phi_5)$$

THE EQUATION OF VERTICAL EQUILIBRIUM IS:

$$N_{\phi 5} \sin\phi_5 \cdot 2\pi R \sin\phi_5 - (N_{\phi 2}^3 + N_{\phi 4}^3) \sin\phi_5^3 \cdot 2\pi R \sin\phi_5^3$$
$$+ Q = 0$$

SUBSTITUTING FOR Q:

$$2\pi R \sin^2\phi_5 N_{\phi 5} - 2\pi R \sin^2\phi_5^3 (N_{\phi 2}^3 + N_{\phi 4}^3)$$

$$+ 2\pi R^2 \Big[\frac{1}{2}\{p_2 + n\gamma_2(h_3 - R)\}(\sin^2\phi_5^3 - \sin^2\phi_5) -$$

$$- \frac{1}{3} n\gamma_2 R (\cos^3\phi_5^3 - \cos^3\phi_5)\Big] = 0$$

SOLVING FOR $N_{\phi 5}$:

$$N_{\phi 5} = \left(N_{\phi 2}^3 + N_{\phi 6}^3\right)\left(\frac{\sin\phi_5^3}{\sin\phi_5}\right)^2 - \frac{R}{2}\left\{p_2 + n\gamma_2(h_3 - \ell)\right\}\left\{\left(\frac{\sin\phi_5^3}{\sin\phi_5}\right)^2 - 1\right\}$$

$$+ \frac{R^2}{3} n\gamma_2 \cdot \frac{\cos^3\phi_5^3 - \cos^3\phi_5}{\sin^2\phi_5} \quad *$$

* USE VALUES OF $N_{\phi 2}$ AT POINT ③ FROM EQ. (7) p III.2.8 AND $N_{\phi 6}$ AT POINT ③ FROM EQ. (17) p. III.2.22 —— (14b)

$N_{\theta 5}$ IS GIVEN, AS BEFORE, BY EQ. (15). p III.2.16

REGION ③ ⑦ $N_{\phi 6}$

FIRST STAGE FIRING

$N_{\phi 6}$ MAY BE OBTAINED FROM $N_{\phi 5}^3$ FROM EQ. (12) p. III.2.13 AND $N_{\phi 2}^3$ EQ. (7) p. III.2.8 OR FROM T_1.

a) FROM $N_{\phi 5}^3$ AND $N_{\phi 2}^3$

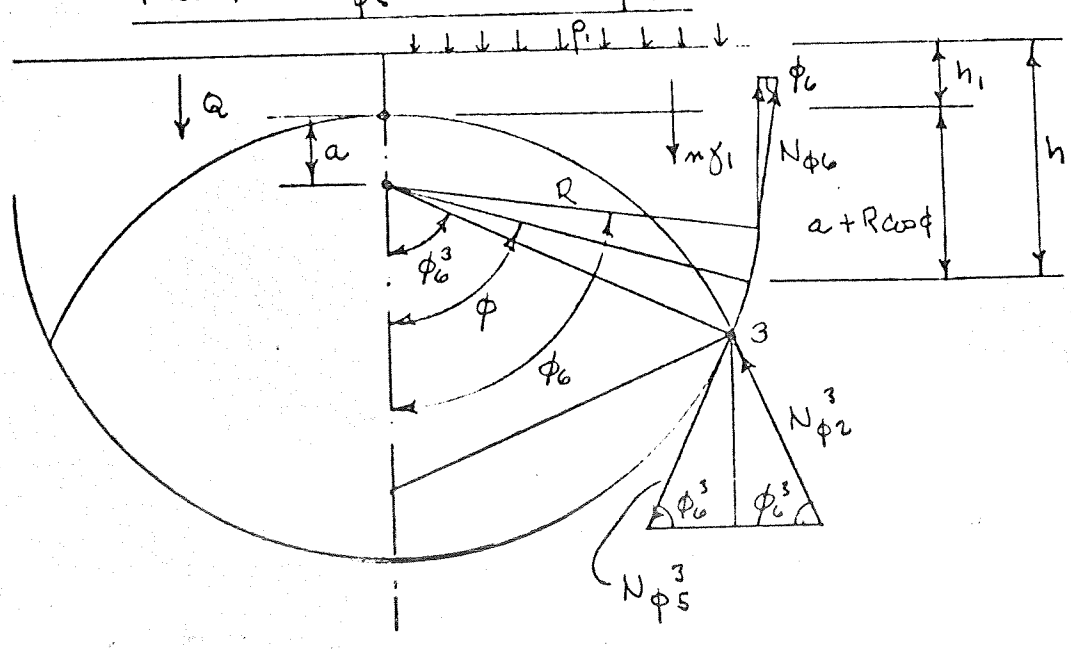

FROM P III.2.18 AT DEPTH, h, THE PRESSURE IS GIVEN BY:

$$q = p_1 + n\gamma_1 h = p_1 + n\gamma_1(h_1 + a + R\cos\phi)$$

SUBSTITUTING INTO EQ. (1) p. III.2.3 FOR THE VERTICAL LOAD, Q:

$$\frac{Q}{2\pi R^2} = \int_{\phi_6^3}^{\phi_6} \{p_1 + n\gamma_1(h_1 + a + R\cos\phi)\} \sin\phi \cos\phi \, d\phi$$

$$= \int_{\phi_6^3}^{\phi_6} \{p_1 + n\gamma_1(h_1 + a)\} \sin\phi \cos\phi \, d\phi + \int_{\phi_6^3}^{\phi_6} n\gamma_1 R \cos^2\phi \sin\phi \, d\phi$$

$$= \{p_1 + n\gamma_1(h_1 + a)\}\left[\frac{\sin^2\phi}{2}\right]_{\phi_6^3}^{\phi_6} - n\gamma_1 R\left[\frac{\cos^3\phi}{3}\right]_{\phi_6^3}^{\phi_6}$$

$$= \frac{1}{2}\left[p_1 + n\gamma_1(h_1 + a)\right](\sin^2\phi_6 - \sin^2\phi_6^3)$$

$$- \frac{1}{3} n\gamma_1 R(\cos^3\phi_6 - \cos^3\phi_6^3)$$

FOR VERTICAL EQUILIBRIUM:

$$N_{\phi 6} \sin\phi_6 \cdot 2\pi R \sin\phi_6 + (N_{\phi 2}^3 - N_{\phi 5}^3)\sin\phi_6^3 \cdot 2\pi R \sin\phi_6^3$$

$$- Q = 0$$

SUBSTITUTING FOR Q:

$$2\pi R \sin^2\phi_6 N_{\phi 6} + 2\pi R \sin^2\phi_6^3 (N_{\phi 2}^3 - N_{\phi 5}^3) -$$

$$- 2\pi R^2\left\{\frac{1}{2}\left[p_1 + n\gamma_1(h_1 + a)\right](\sin^2\phi_6 - \sin^2\phi_6^3) - \frac{1}{3} n\gamma_1 R(\cos^3\phi_6 - \cos^3\phi_6^3)\right\}$$

$$= 0$$

SOLVING FOR $N_{\phi 6}$:

$$N_{\phi 6} = \left(N_{\phi 5}^3 - N_{\phi 2}^3\right)\left(\frac{\sin\phi_6^3}{\sin\phi_6}\right)^2 + \frac{R}{2}\left[p_1 + n\gamma_1(h_1+a)\right]\left\{1 - \left(\frac{\sin\phi_6^3}{\sin\phi_6}\right)^2\right\} - \frac{R^2}{3} n\gamma_1 \cdot \frac{\cos^3\phi_6 - \cos^3\phi_6^3}{\sin^2\phi_6} \quad * \qquad (15a)$$

FROM EQ. (5) p. III.2.5 N_θ IS GIVEN BY

$$N_{\theta 6} = -N_{\phi 6} + R\left\{p_1 + n\gamma_1(h_1 + a + R\cos\phi_6)\right\} \qquad (16)$$

b) FROM T_1

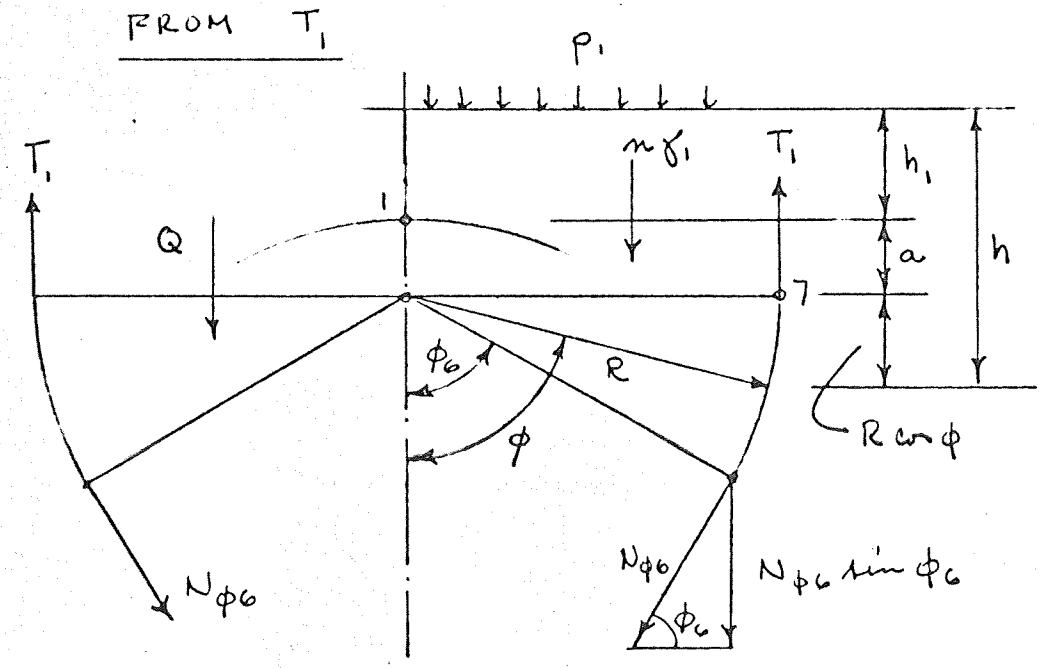

AT DEPTH, h, THE PRESSURE IS GIVEN BY:

$$q = p_1 + n\gamma_1 h = p_1 + n\gamma_1(h_1 + a + R\cos\phi)$$

* USE VALUES OF $N_{\phi 5}$ AT POINT ③ FROM EQ. (12) p. III.2.13 AND $N_{\phi 2}$ AT POINT ③ FROM EQ. (7) p. III.2.8

THE VERTICAL COMPONENT OF LOAD, BY EQ.(1) p.III.2.3 IS GIVEN BY:

$$\frac{Q}{2\pi R^2} = \int_{\phi_6}^{\pi/2} \left\{ p_1 + n\gamma_1 (h_1 + a + R\cos\phi) \right\} \sin\phi \cos\phi \, d\phi$$

$$= \int_{\phi_6}^{\pi/2} \left\{ p_1 + n\gamma_1 (h_1 + a) \right\} \sin\phi \cos\phi \, d\phi + \int_{\phi_6}^{\pi/2} n\gamma_1 R \cos^2\phi \sin\phi \, d\phi$$

$$= \left\{ p_1 + n\gamma_1 (h_1 + a) \right\} \left[\frac{\sin^2\phi}{2} \right]_{\phi_6}^{\pi/2} - n\gamma_1 R \left[\frac{\cos^3\phi}{3} \right]_{\phi_6}^{\pi/2}$$

$$= \frac{1}{2} \left\{ p_1 + n\gamma_1 (h_1 + a) \right\} (1 - \sin^2\phi_6) + \frac{1}{3} n\gamma_1 R \cos^3\phi_6$$

FOR VERTICAL EQUILIBRIUM:

$$N_{\phi 6} \sin\phi_6 \cdot 2\pi R \sin\phi_6 - T_1 \cdot 2\pi R + Q = 0$$

SUBSTITUTING FOR Q:

$$2\pi R \sin^2\phi_6 \, N_{\phi 6} - T_1 \cdot 2\pi R + 2\pi R^2 \left[\frac{1}{2} \left\{ p_1 + n\gamma_1 (h_1 + a) \right\} (1 - \sin^2\phi_6) + \frac{1}{3} n\gamma_1 R \cos^3\phi_6 \right] = 0$$

SOLVING FOR $N_{\phi 6}$:

$$\boxed{N_{\phi 6} = \frac{T_1}{\sin^2\phi_6} - \frac{R}{2} \left\{ p_1 + n\gamma_1 (h_1 + a) \right\} \left[\frac{1 - \sin^2\phi_6}{\sin^2\phi_6} \right] - \frac{R^2}{3} n\gamma_1 \frac{\cos^3\phi_6}{\sin^2\phi_6}} \quad (15b)$$

AND $N_{\theta 6}$ IS GIVEN BY EQ. (16) p III.2.20

SECOND STAGE FIRING

THIS LOAD CONDITION ON REGION ③-⑦ IS OBTAINED FROM SOLUTION (15b) FOR $T_1 = \frac{p_1 R}{2}$

i.e.,

$$\boxed{N_{\phi 6} = \frac{p_1 R}{2} - \frac{n \gamma_1 R}{6} \left\{ 3(h_1 + a) + 2R \cos \phi_6 \right\} \left(\frac{\cos \phi_6}{\sin \phi_6} \right)^2} \quad (17)$$

N_θ IS GIVEN BY EQ (16) p. III.2.20

i.e.,

$$\boxed{N_{\theta 6} = -N_{\phi 6} + R \left\{ p_1 + n \gamma_1 (h_1 + a + R \cos \phi_6) \right\}} \quad -(18)$$

TO COMPLETE THE PROBLEM, STRESSES DUE TO GRAVITY AND ACCELERATION OF THE THIRD STAGE WILL NOW BE CONSIDERED.

FIRST STAGE FIRING

FOR THIS CONDITION, THE LOADS WILL PASS DIRECTLY THROUGH THE OUTER CYLINDRICAL SHELL (i.e, POINT 7)

SECOND STAGE FIRING

FOR THIS CONDITION, THE LOAD PATH WILL BE THROUGH POINTS 4 5 3 AND 7.

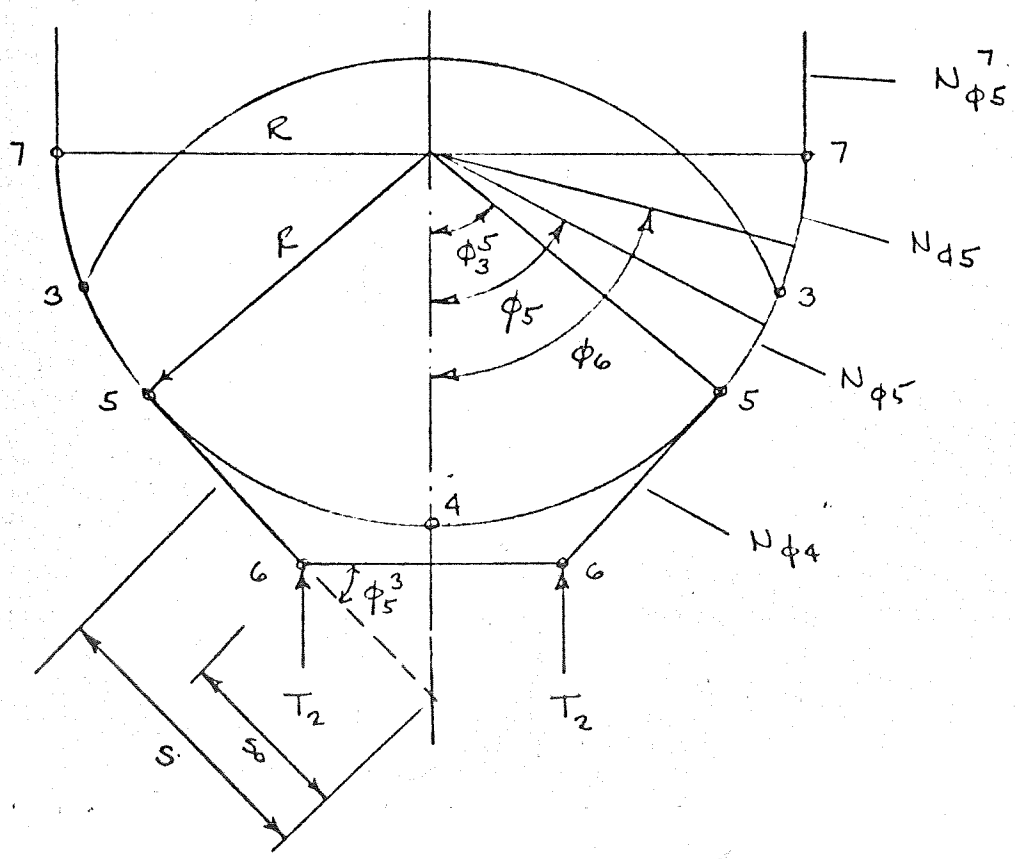

REGION ④-⑤ THIS IS GIVEN BY EQ. (11a) p. III.2.13

$N_{\phi 4}$ i.e.

$$\boxed{N_{\phi 4} = -\frac{S_0}{S} \cdot \frac{T_2}{\sin \phi_3^5}} \qquad (19)$$

AND $N_{\theta 4} = 0$

REGION ⑤-⑦

$N_{\phi 5}$

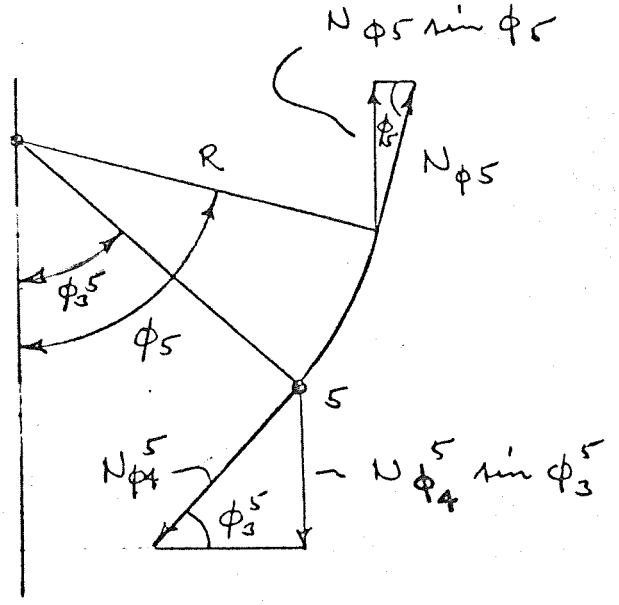

FOR VERTICAL EQUILIBRIUM:

$$N_{\phi 5} \sin \phi_5 \cdot 2\pi R \sin \phi_5 - N_{\phi 4}^5 \sin \phi_3^5 \cdot 2\pi R \sin \phi_3^5 = 0$$

SOLVING FOR $N_{\phi 5}$:

$$\boxed{N_{\phi 5} = N_{\phi 4}^5 \left(\frac{\sin \phi_3^5}{\sin \phi_5} \right)^2} \qquad (20)$$

FROM EQ. (5) p. III.2.5

$$\boxed{N_{\theta 5} = -N_{\phi 5}.} \qquad (21)$$

The following sections of Appendix III contain the general relative deflection equations used throughout this report. A description of the nomenclature is given on Page III.0.0.

The general equations are for:

Forward Interstage to Forward Dome, Joint	III.3.0.1
Forward Dome to Tank, Joint	III.4.0
Aft Skirt to Aft Dome, Joint	III.5.0
Common Bulkhead to Aft Dome, Joint	III.6.0
Thrust Structure to Aft Dome, Joint	III.7.0
LH_2 Tank Door Installation	III.8.0

SM 42563

FWD INTERSTAGE TO FWD LH_2 DOME JOINT

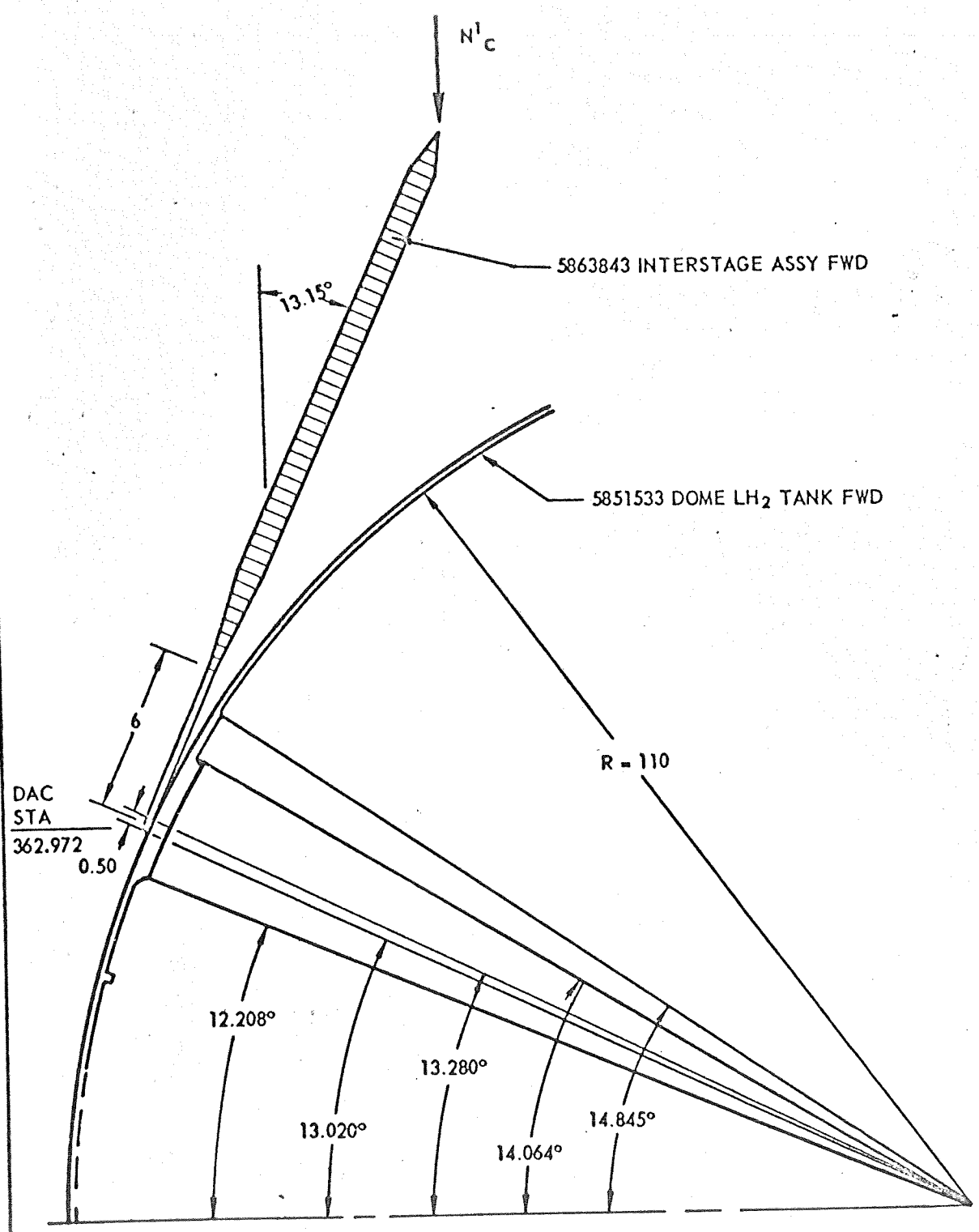

FWD INTERSTAGE TO FWD LH_2 DOME JOINT

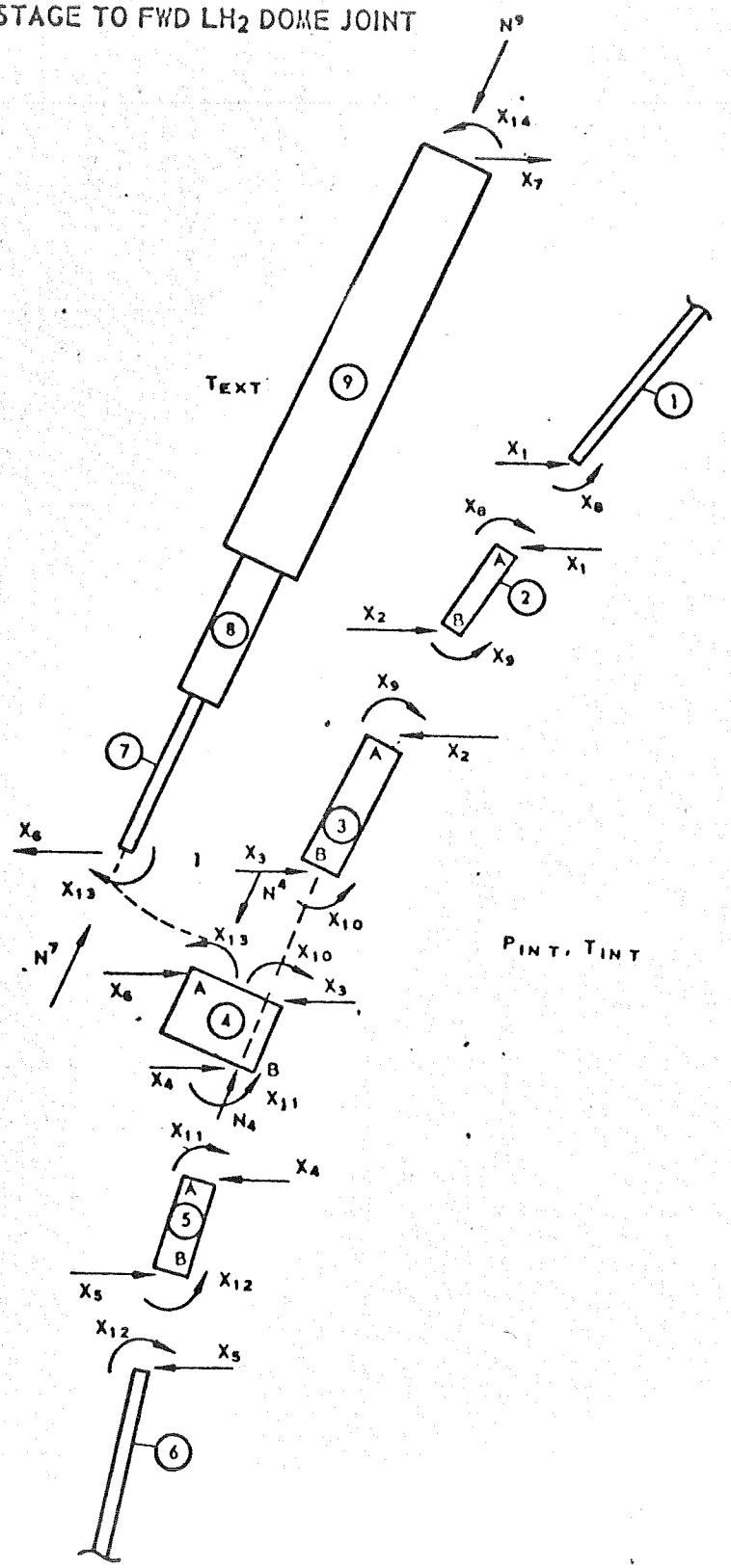

SM 42569

J863800 STRUCT ASSY

PART 1

$$\delta'_{1,1} = \frac{x_1}{E_1 I_1}\left(\beta R \sin^2\phi^{1,2}\right)\left(K_2 + \frac{1}{K_1}\right)$$

$$\delta'_{1,8} = \frac{x_8}{E_1 I_1}\left(\frac{2\beta^2 \sin\phi^{1,2}}{K_1}\right)$$

$$\delta'_{1,T} = -\alpha_1 \Delta T_{1M} R \sin\phi^{1,2}$$

$$\delta'_{1,P} = -\frac{P_{INT} R^2}{2E_1 I_1}(1-\nu)\sin\phi^{1,2}$$

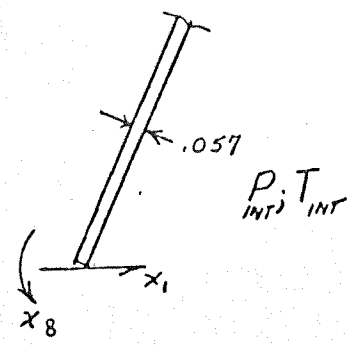

$$\delta'_{8,1} = \delta'_{1,8}$$

$$\delta'_{8,8} = \frac{x_8}{E_1 I_1}\left(\frac{4\beta^3}{R K_1}\right)$$

$$\delta'_{8,P} = 0$$

$$\delta'_{8,T} = 0$$

$$\phi^{1,2} = 90^\circ - 14.845^\circ = \phi^{1,2} = 75.155^\circ$$

$$\beta = \sqrt{3(1-\nu^2)\left(\frac{R}{I_1}\right)^2}$$

$$K_1 = 1 - \frac{1-2\nu}{2\beta}\cot\phi^{1,2}$$

$$K_2 = 1 - \frac{1+2\nu}{2\beta}\cot\phi^{1,2}$$

SM 42569

SM 42569

5863800 STRUCTURE ASSY

PART 2

$x_1 = \bar{x}_1$
$x_2 = -\bar{x}_2$
$x_8 = \bar{x}_3$
$x_9 = -\bar{x}_4$

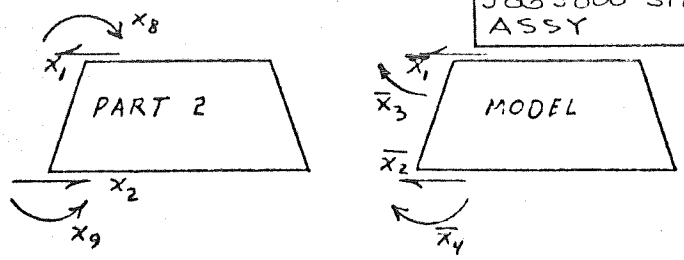

$\delta_{1,1} = + + = +\bar{\delta}_{1,1}$

$\delta_{1,2} = + - = -\bar{\delta}_{1,2}$

$\delta_{1,8} = + + = +\bar{\delta}_{1,3}$

$\delta_{1,9} = + - = -\bar{\delta}_{1,4}$

$\delta_{1,p} = \dfrac{P_{mr} R^2 (1-\nu) \sin \phi^{1,2}}{2 E_2 t_2}$

$\delta_{1,T} = \alpha \Delta T_{mr} R \sin \phi^{1,2}$

$\delta_{2,1} = - + = -\bar{\delta}_{2,1}$

$\delta_{2,2} = - - = +\bar{\delta}_{2,2}$

$\delta_{2,8} = - + = -\bar{\delta}_{2,3}$

$\delta_{2,9} = - - = +\bar{\delta}_{2,4}$

$\delta_{2,p} = -\dfrac{P_m R^2 (1-\nu) \sin \phi^{2,3}}{2 E_2 t_2}$

$\delta_{2,T} = -\alpha \Delta T_m R \sin \phi^{2,3}$

$\delta_{8,1} = + + = +\bar{\delta}_{3,1}$

$\delta_{8,2} = + - = -\bar{\delta}_{3,2}$

$\delta_{8,8} = + + = +\bar{\delta}_{3,3}$

$\delta_{8,9} = + - = -\bar{\delta}_{3,4}$

$\delta_{8,p} = 0$

$\delta_{8,T} = 0$

$\delta_{9,1} = - + = -\bar{\delta}_{4,1}$

$\delta_{9,2} = - - = +\bar{\delta}_{4,2}$

$\delta_{9,8} = - + = -\bar{\delta}_{4,3}$

$\delta_{9,9} = - - = +\bar{\delta}_{4,4}$

$\delta_{9,p} = 0$

$\delta_{9,T} = 0$

$\phi^{1,2} = 90^\circ - 14.845^\circ = \phi^{1,2} = 75.155^\circ$

$\phi^{2,3} = 90^\circ - 14.064^\circ = \phi^{2,3} = 75.936^\circ$

$t_2 = .125''$

$\alpha = 14.454^\circ$

$S_1 = \dfrac{110}{\tan 14.454^\circ} - .625 = S_1 = 426.244$

$S_2 = \dfrac{110}{\tan 14.454^\circ} + .625 = S_2 = 427.494$

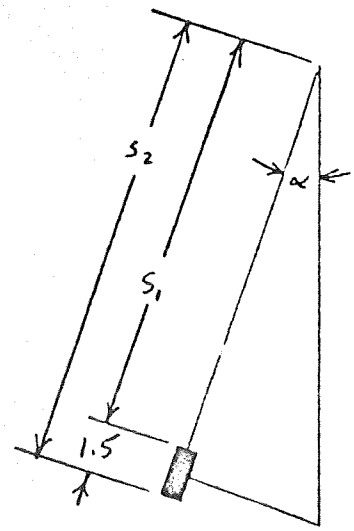

5863800 STRUCTURE ASSY

PART 3

$x_2 = \bar{x}_1$
$x_3 = -\bar{x}_2$
$x_9 = \bar{x}_3$
$x_{10} = -\bar{x}_4$

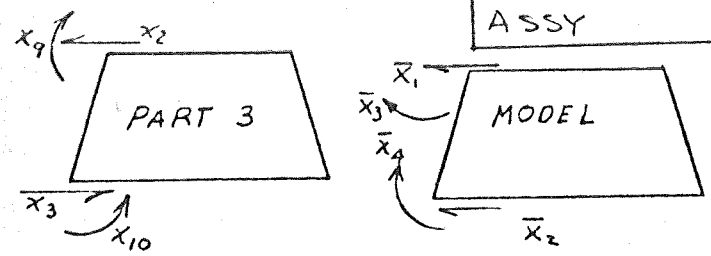

$\delta_{2,2} = + + = \bar{\delta}_{1,1}$
$\delta_{2,3} = + - = -\bar{\delta}_{1,2}$
$\delta_{2,9} = + + = +\bar{\delta}_{1,3}$
$\delta_{2,10} = + - = -\bar{\delta}_{1,4}$
$\delta_{2,P} = \dfrac{P_{IN}\, R^2 (1-\nu) \sin \phi^{2,3}}{2 E_3 I_3}$
$\delta_{2,T} = \alpha \Delta T_{IN}\, R \sin \phi^{2,3}$

$\delta_{3,2} = - + = -\bar{\delta}_{2,1}$
$\delta_{3,3} = - - = +\bar{\delta}_{2,2}$
$\delta_{3,9} = - + = -\bar{\delta}_{2,3}$
$\delta_{3,10} = - - = +\bar{\delta}_{2,4}$
$\delta_{3,P} = -\dfrac{P_{IN}\, R^2 (1-\nu) \sin \phi^{3,4}}{2 E_3 I_3}$
$\delta_{3,T} = -\alpha \Delta T_{IN}\, R \sin \phi^{3,4}$

$\delta_{9,2} = + + = +\bar{\delta}_{3,1}$
$\delta_{9,3} = + - = -\bar{\delta}_{3,2}$
$\delta_{9,9} = + + = +\bar{\delta}_{3,3}$
$\delta_{9,10} = + - = -\bar{\delta}_{3,4}$
$\delta_{9,P} = 0$
$\delta_{9,T} = 0$

$\delta_{10,2} = - + = -\bar{\delta}_{4,1}$
$\delta_{10,3} = - - = +\bar{\delta}_{4,2}$
$\delta_{10,9} = - + = -\bar{\delta}_{4,3}$
$\delta_{10,10} = - - = +\bar{\delta}_{4,4}$
$\delta_{10,P} = 0$
$\delta_{10,T} = 0$

$\phi^{2,3} = 74.376^\circ$
$\phi^{3,4} = 90^\circ - 13.280 = \phi^{3,4} = 76.720^\circ$
$I_3 = .250$
$\alpha = 13.672^\circ$

$S_1 = \dfrac{110}{\tan 13.672^\circ} - .766 = S_1 = 451.611$

$S_2 = \dfrac{110}{\tan 13.672^\circ} + .766 = S_2 = 453.143$

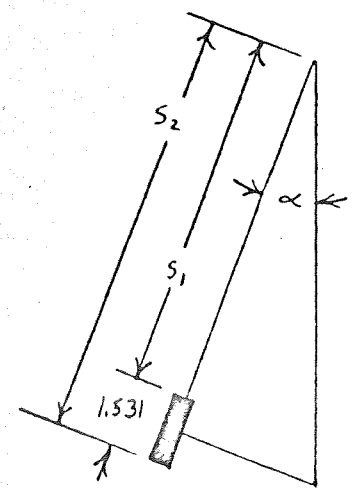

SM 42564

5863800 STRUCT ASSY

PART 4

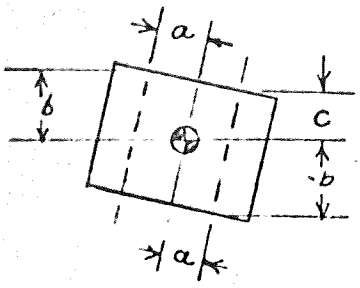

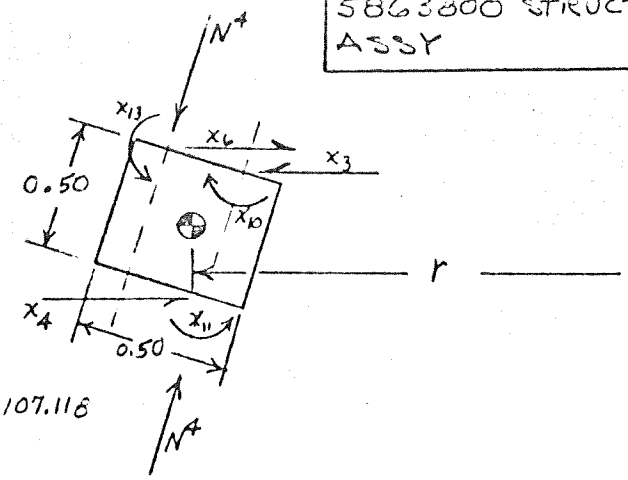

$a = 0.125$ $\qquad r = 110 \cos 13.15^\circ = r = 107.116$

$b = 0.275$

$c = 0.224$ $\qquad I_4 = \frac{(.5)^2}{12}\left[(.5)^2 \cos^2 76.85 + (.5)^2 \sin^2 76.85\right] = I_4 = .0052 \text{ IN}^4$

$$\delta_{3,3} = \frac{x_3 r^2}{E_4 A_4} + \frac{x_3 c^2 r^2}{E_4 I_4}$$

$$\delta_{3,4} = -\frac{x_4 r^2}{E_4 A_4} + \frac{x_4 b c r^2}{E_4 I_4}$$

$$\delta_{3,6} = -\frac{x_6 r^2}{E_4 A_4} - \frac{x_6 b c r^2}{E_4 I_4}$$

$$\delta_{3,10} = -\frac{x_{10} c r^2}{E_4 I_4}$$

$$\delta_{3,11} = \frac{x_{11} c r^2}{E_4 I_4}$$

$$\delta_{3,13} = \frac{x_{13} c r^2}{E_4 I_4}$$

$$\delta_{3,N^4} = \frac{2 N^4 a c r^2}{E_4 I_4}$$

$$\delta_{3,T} = \alpha \Delta T_{IN} r$$

$$\delta_{3,P} = 0$$

$$\delta_{4,3} = \delta_{3,4}$$

$$\delta_{4,4} = \frac{x_4 r^2}{E_4 A_4} + \frac{x_4 b^2 r^2}{E_4 I_4}$$

$$\delta_{4,6} = \frac{x_6 r^2}{E_4 A_4} - \frac{x_6 b^2 r^2}{E_4 I_4}$$

$$\delta_{4,10} = -\frac{x_{10} b r^2}{E_4 I_4}$$

$$\delta_{4,11} = \frac{x_{11} b r^2}{E_4 I_4}$$

$$\delta_{4,13} = \frac{x_{13} b r^2}{E_4 I_4}$$

$$\delta_{4,N^4} = \frac{2 N^4 a b r^2}{E_4 I_4}$$

$$\delta_{4,T} = -\alpha \Delta T_{IN} r$$

$$\delta_{4,P} = 0$$

SM 42569

K+E ALBANENE 196L TRACING PAPER 66079

5863800 STRUCTURE ASSY

$$\delta_{6,3} = \delta_{3,6}$$

$$\delta_{6,4} = \delta_{4,6}$$

$$\delta_{6,6} = \frac{x_6 r^2}{E_4 A_4} + \frac{x_6 b^2 r^2}{E_4 I_4}$$

$$\delta_{6,10} = \frac{x_{10} b r^2}{E_4 I_4}$$

$$\delta_{6,11} = -\frac{x_{11} b r^2}{E_4 I_4}$$

$$\delta_{6,13} = -\frac{x_{13} b r^2}{E_4 I_4}$$

$$\delta_{6,N^4} = -\frac{2 N^4 a b r^2}{E_4 I_4}$$

$$\delta_{6,T} = -\alpha \Delta T_{IN} r$$

$$\delta_{6,P} = 0$$

$$\delta_{10,3} = \delta_{3,10}$$

$$\delta_{10,4} = \delta_{4,10}$$

$$\delta_{10,6} = \delta_{6,10}$$

$$\delta_{10,10} = \frac{x_{10} r^2}{E_4 I_4}$$

$$\delta_{10,11} = -\frac{x_{11} r^2}{E_4 I_4}$$

$$\delta_{10,13} = -\frac{x_{13} r^2}{E_4 I_4}$$

$$\delta_{10,N^4} = \frac{-2 N^4 a r^2}{E_4 I_4}$$

$$\delta_{10,T} = 0$$

$$\delta_{10,P} = 0$$

$$\delta_{11,3} = \delta_{3,11}$$

$$\delta_{11,4} = \delta_{4,11}$$

$$\delta_{11,6} = \delta_{6,11}$$

$$\delta_{11,10} = \delta_{10,11}$$

$$\delta_{11,11} = \frac{x_{11} r^2}{E_4 I_4}$$

$$\delta_{11,13} = \frac{x_{13} r^2}{E_4 I_4}$$

$$\delta_{11,N^4} = \frac{2 N^4 a r^2}{E_4 I_4}$$

$$\delta_{11,T} = 0$$

$$\delta_{11,P} = 0$$

$$\delta_{13,3} = \delta_{3,13}$$

$$\delta_{13,4} = \delta_{4,13}$$

$$\delta_{13,6} = \delta_{6,13}$$

$$\delta_{13,10} = \delta_{10,13}$$

$$\delta_{13,11} = \delta_{11,13}$$

$$\delta_{13,13} = \frac{x_{13} r^2}{E_4 I_4}$$

$$\delta_{13,N^4} = \frac{2 N^4 a r^2}{E_4 I_4}$$

$$\delta_{13,T} = 0$$

$$\delta_{13,P} = 0$$

K·E ALBANENE 196L TRACING PAPER 68075

5863800 STRUCTURE ASSY

PART 5

$x_4 = \bar{x}_1$

$x_5 = -\bar{x}_2$

$x_{11} = \bar{x}_3$

$x_{12} = -\bar{x}_4$

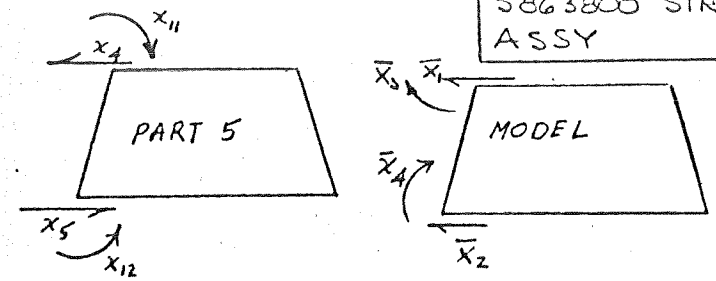

$\delta_{4,4} = + + = + \bar{\delta}_{1,1}$

$\delta_{4,5} = + - = - \bar{\delta}_{1,2}$

$\delta_{4,11} = + + = + \bar{\delta}_{1,3}$

$\delta_{4,12} = + - = - \bar{\delta}_{1,4}$

$$\delta_{4,P} = \frac{P_{IN} R^2 (1-\nu) \sin \phi^{4,5}}{2 E_5 t_5}$$

$\delta_{4,T} = \alpha \Delta T_{IN} R \sin \phi^{4,5}$

$\delta_{5,4} = - + = - \bar{\delta}_{2,1}$

$\delta_{5,5} = - - = + \bar{\delta}_{2,2}$

$\delta_{5,11} = - + = - \bar{\delta}_{2,3}$

$\delta_{5,12} = - - = + \bar{\delta}_{2,4}$

$$\delta_{5,P} = - \frac{P_{IN} R^2 (1-\nu) \sin \phi^{5,6}}{2 E_5 t_5}$$

$\delta_{5,T} = - \alpha \Delta T_{IN} R \sin \phi^{5,6}$

$\delta_{11,4} = + + = \bar{\delta}_{3,1}$

$\delta_{11,5} = + - = - \bar{\delta}_{3,2}$

$\delta_{11,11} = + + = + \bar{\delta}_{3,3}$

$\delta_{11,12} = + - = - \bar{\delta}_{3,4}$

$\delta_{11,P} = 0$

$\delta_{11,T} = 0$

$\delta_{12,4} = - + = - \bar{\delta}_{4,1}$

$\delta_{12,5} = - - = + \bar{\delta}_{4,2}$

$\delta_{12,11} = - + = - \bar{\delta}_{4,3}$

$\delta_{12,12} = - - = + \bar{\delta}_{4,4}$

$\delta_{12,P} = 0$

$\delta_{12,T} = 0$

$\phi^{4,5} = 90° - 13.020° = \phi^{4,5} = 76.980°$

$\phi^{5,6} = 90° - 12.208° = \phi^{5,6} = 77.792°$

$t_5 = .250"$

$\alpha = 12.614°$

$S_1 = \dfrac{110}{\tan 12.614} - .766 = S_1 = 490.678$

$S_2 = \dfrac{110}{\tan 12.614} + .766 = S_2 = 492.210$

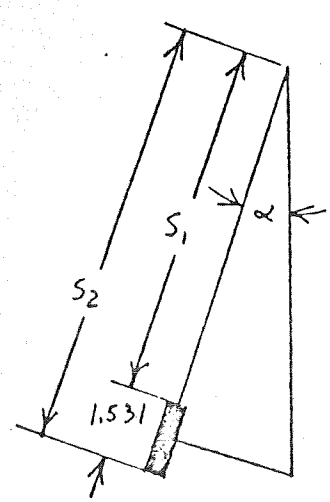

SM 42559

5863800 STRUCTURE ASSY

PART 6

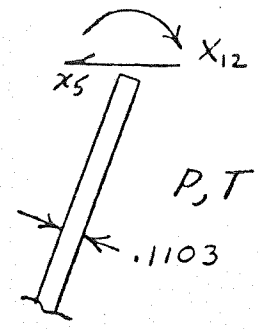

$$\delta^6_{5,5} = \frac{R\,\beta \sin^2\phi^{5,6}}{E_6\, t_6}\left(\frac{1}{K_1} + K_2\right)$$

$$\delta^6_{5,12} = -\frac{2\,\beta^2 \sin\phi^{5,6}}{E_6\, t_6\, K_1}$$

$$\delta^6_{5,P} = \frac{P_N R^2 (1-\nu) \sin\phi^{5,6}}{2 E_6\, t_6}$$

$$\delta^6_{5,T} = \alpha \Delta T_{IN}\, R \sin\phi^{5,6}$$

$$\delta^6_{12,5} = \delta^6_{5,12}$$

$$\delta^6_{12,12} = \frac{4\beta^3}{E_6\, t_6\, R\, K_1}$$

$$\delta^4_{12,P} = 0$$

$$\delta^4_{12,T} = 0$$

$$\phi^{5,6} = 90^\circ - 12.208^\circ = \phi^{5,6} = 77.792^\circ$$

$$\beta = \sqrt[4]{3(1-\nu^2)\left(\frac{R}{t_6}\right)^2}$$

$$K_1 = 1 + \frac{1-2\nu}{2\beta}\cot\phi^{5,6}$$

$$K_2 = 1 + \frac{1-2\nu}{2\beta}\cot\phi^{5,6}$$

SW 42560

K·E ALBANENE 195L TRACING PAPER 68078

FORM 25-8-1 (REV. 8-55)

DOUGLAS AIRCRAFT COMPANY, INC.

PREPARED BY: G. J. S.
CHECKED BY: G. R. T.
DATE: 1-11-62
TITLE: DSV-4 PROPELLANT TANK

SM DIVISION

PAGE: III. 3. 9
MODEL: DSV-4
REPORT NO: SM 42569

SM 42569

5863800 STRUCTURE ASSY

PARTS 7, 8, + 9

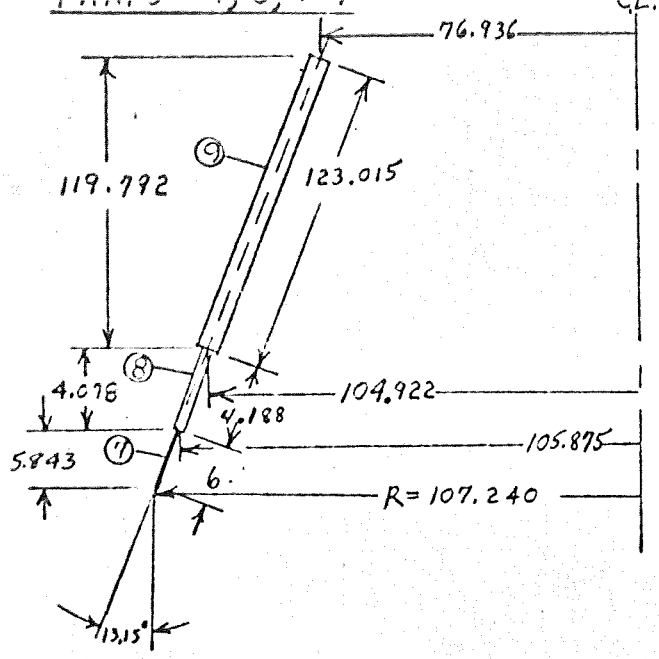

$\tau_7 = .250$

$\tau_8 = .504$

$\tau_9 = .490$

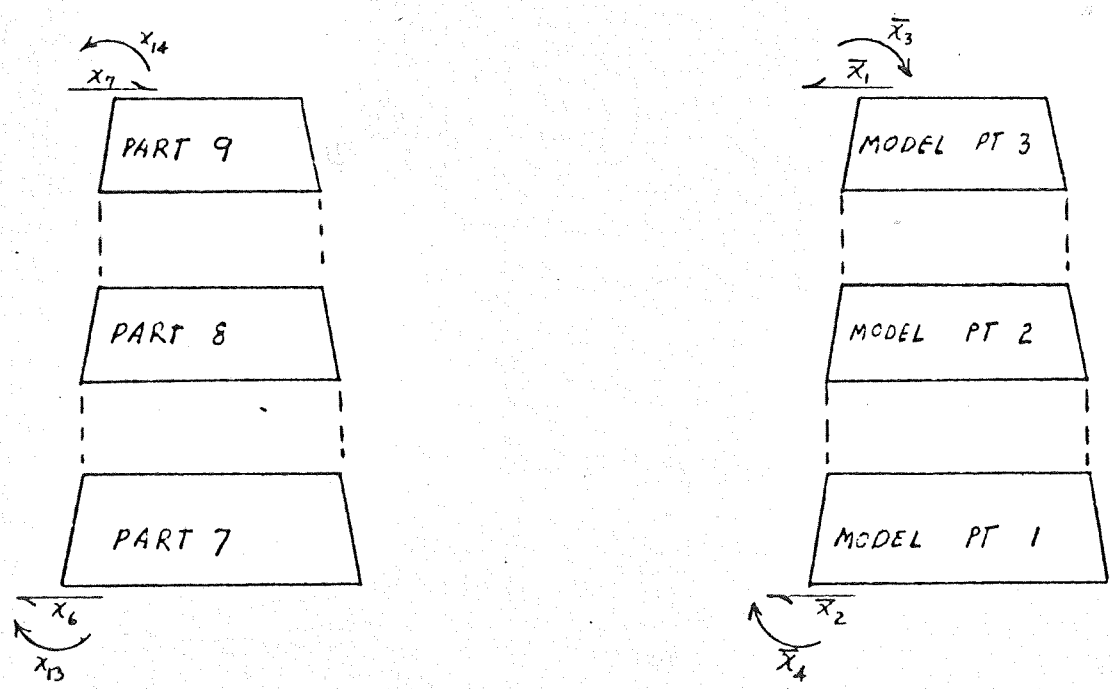

K+E ALBANENE 196L TRACING PAPER 66078

5863800 STRUCTURE ASSY

PROGRAM SA08

$x_7 = -\bar{x}_1$

$x_6 = \bar{x}_2$

$x_{14} = -\bar{x}_3$

$x_{13} = \bar{x}_4$

CONE 1

$R_1 = 105.875$

$R_2 = 107.240$

$\Delta z = 5.843$ $\quad \tau = .250$

CONE 2

$R_1 = 104.922$

$R_2 = 105.875$

$\Delta z = 4.078$ $\quad \tau = .504$

CONE 3

$R_1 = 76.936$

$R_2 = 104.922$

$\Delta z = 119.792$ $\quad \tau = .490$

$\delta_{7,7} = - - = +\bar{\delta}_{1,1}$

$\delta_{7,6} = - + = -\bar{\delta}_{1,2}$

$\delta_{7,14} = - - = +\bar{\delta}_{1,3}$

$\delta_{7,13} = - + = -\bar{\delta}_{1,4}$

$\delta_{7,T} = -\alpha \Delta T_{out} R_{1\,CONE\,3}$

$\delta_{7,P_{out}} = \dfrac{P_{out} R^2_{1\,CONE\,3}(1-\nu)}{2E_9 \tau_9}$

$\delta_{6,7} = + - = -\bar{\delta}_{2,1}$

$\delta_{6,6} = + + = +\bar{\delta}_{2,2}$

$\delta_{6,14} = + - = -\bar{\delta}_{2,3}$

$\delta_{6,13} = + + = +\bar{\delta}_{2,4}$

$\delta_{6,T} = \alpha \Delta T_{out} R_{2\,CONE\,1}$

$\delta_{6,P_{out}} = -\dfrac{P_{out} R^2_{2\,CONE\,1}(1-\nu)}{2E_7 \tau_7}$

$\delta_{14,7} = - - = +\bar{\delta}_{3,1}$

$\delta_{14,6} = - + = -\bar{\delta}_{3,2}$

$\delta_{14,14} = - - = +\bar{\delta}_{3,3}$

$\delta_{14,13} = - + = -\bar{\delta}_{3,4}$

$\delta_{14,T} = 0$

$\delta_{14,P} = 0$

$\delta_{13,7} = + - = -\bar{\delta}_{4,1}$

$\delta_{13,6} = + + = +\bar{\delta}_{4,2}$

$\delta_{13,14} = + - = -\bar{\delta}_{4,3}$

$\delta_{13,13} = + + = +\bar{\delta}_{4,4}$

$\delta_{13,T} = 0$

$\delta_{13,P} = 0$

K+E ALBANENE 105L TRACING PAPER 68078

SM 42569

5863800 STRUCTURE ASSY

δ_1

$$\delta^1_{1,1} + \delta^1_{1,8} + \delta^1_{1,T} + \delta^1_{1,P} + \delta^2_{1,1} + \delta^2_{1,2} + \delta^2_{1,8} + \delta^2_{1,9} + \delta^2_{1,P} + \delta^2_{1,T} = 0$$

δ_2

$$\delta^2_{2,1} + \delta^2_{2,2} + \delta^2_{2,8} + \delta^2_{2,9} + \delta^2_{2,P} + \delta^2_{2,T} + \delta^3_{2,2} + \delta^3_{2,3} + \delta^3_{2,9} + \delta^3_{2,10}$$
$$+ \delta^3_{2,P} + \delta^3_{2,T} = 0$$

δ_3

$$\delta^3_{3,2} + \delta^3_{3,3} + \delta^3_{3,9} + \delta^3_{3,10} + \delta^3_{3,P} + \delta^3_{3,T} + \delta^4_{3,3} + \delta^4_{3,4} + \delta^4_{3,6} + \delta^4_{3,10} + \delta^4_{3,11}$$
$$+ \delta^4_{3,13} + \delta^4_{3,N4} + \delta^4_{3,T} + \delta^4_{3,P} = 0$$

δ_4

$$\delta^4_{4,3} + \delta^4_{4,4} + \delta^4_{4,6} + \delta^4_{4,10} + \delta^4_{4,11} + \delta^4_{4,13} + \delta^4_{4,N4} + \delta^4_{4,T} + \delta^4_{4,P} + \delta^5_{4,4}$$
$$+ \delta^5_{4,5} + \delta^5_{4,11} + \delta^5_{4,12} + \delta^5_{4,P} + \delta^5_{4,T} = 0$$

δ_5

$$\delta^5_{5,4} + \delta^5_{5,5} + \delta^5_{5,11} + \delta^5_{5,12} + \delta^5_{5,P} + \delta^5_{5,T} + \delta^6_{5,5} + \delta^6_{5,12} + \delta^6_{5,P} + \delta^6_{5,T} = 0$$

δ_6

$$\delta^4_{6,3} + \delta^4_{6,4} + \delta^4_{6,6} + \delta^4_{6,10} + \delta^4_{6,11} + \delta^4_{6,13} + \delta^4_{6,N4} + \delta^4_{6,T} + \delta^4_{6,P} + \delta^7_{6,6}$$
$$+ \delta^7_{6,7} + \delta^7_{6,13} + \delta^7_{6,14} + \delta^7_{6,T} + \delta^7_{6,P} = 0$$

δ_7

$$\delta^7_{7,6} + \delta^7_{7,7} + \delta^7_{7,13} + \delta^7_{7,14} + \delta^7_{7,T} + \delta^7_{7,P} = 0$$

K+E ALBANENE 195L TRACING PAPER 68079

δ_8

$$\delta^1_{8,1} + \delta^1_{8,8} + \delta^1_{8,P} + \delta^1_{8,T} + \delta^2_{8,1} + \delta^2_{8,2} + \delta^2_{8,8} + \delta^2_{8,9} + \delta^2_{8,P} + \delta^2_{8,T} = 0$$

δ_9

$$\delta^2_{9,1} + \delta^2_{9,2} + \delta^2_{9,8} + \delta^2_{9,9} + \delta^2_{9,P} + \delta^2_{9,T} + \delta^3_{9,2} + \delta^3_{9,3} + \delta^3_{9,9} + \delta^3_{9,10} + \delta^3_{9,P} + \delta^3_{9,T} = 0$$

δ_{10}

$$\delta^3_{10,2} + \delta^3_{10,3} + \delta^3_{10,9} + \delta^3_{10,10} + \delta^3_{10,P} + \delta^3_{10,T} + \delta^4_{10,3} + \delta^4_{10,9} + \delta^4_{10,6} + \delta^4_{10,10} + \delta^4_{10,11} + \delta^4_{10,13} + \delta^4_{10,N4} + \delta^4_{10,T} + \delta^4_{10,P} = 0$$

δ_{11}

$$\delta^4_{11,3} + \delta^4_{11,4} + \delta^4_{11,6} + \delta^4_{11,10} + \delta^4_{11,11} + \delta^4_{11,13} + \delta^4_{11,N4} + \delta^4_{11,T} + \delta^4_{11,P} + \delta^5_{11,4} + \delta^5_{11,5} + \delta^5_{11,11} + \delta^5_{11,12} + \delta^5_{11,P} + \delta^5_{11,T} = 0$$

δ_{12}

$$\delta^5_{12,4} + \delta^5_{12,5} + \delta^5_{12,11} + \delta^5_{12,12} + \delta^5_{12,P} + \delta^5_{12,T} + \delta^6_{12,5} + \delta^6_{12,12} + \delta^6_{12,P} + \delta^6_{12,T} = 0$$

δ_{13}

$$\delta^4_{13,3} + \delta^4_{13,4} + \delta^4_{13,6} + \delta^4_{13,10} + \delta^4_{13,11} + \delta^4_{13,13} + \delta^4_{13,N4} + \delta^4_{13,T} + \delta^4_{13,P} + \delta^7_{13,6} + \delta^7_{13,7} + \delta^7_{13,13} + \delta^7_{13,14} + \delta^7_{13,T} + \delta^7_{13,P} = 0$$

δ_{14}

$$\delta^7_{14,6} + \delta^7_{14,7} + \delta^7_{14,13} + \delta^7_{14,14} + \delta^7_{14,T} + \delta^7_{14,P} = 0$$

5863800
STRUCTURE ASSY

FWD LH_2 DOME – TANK JOINT

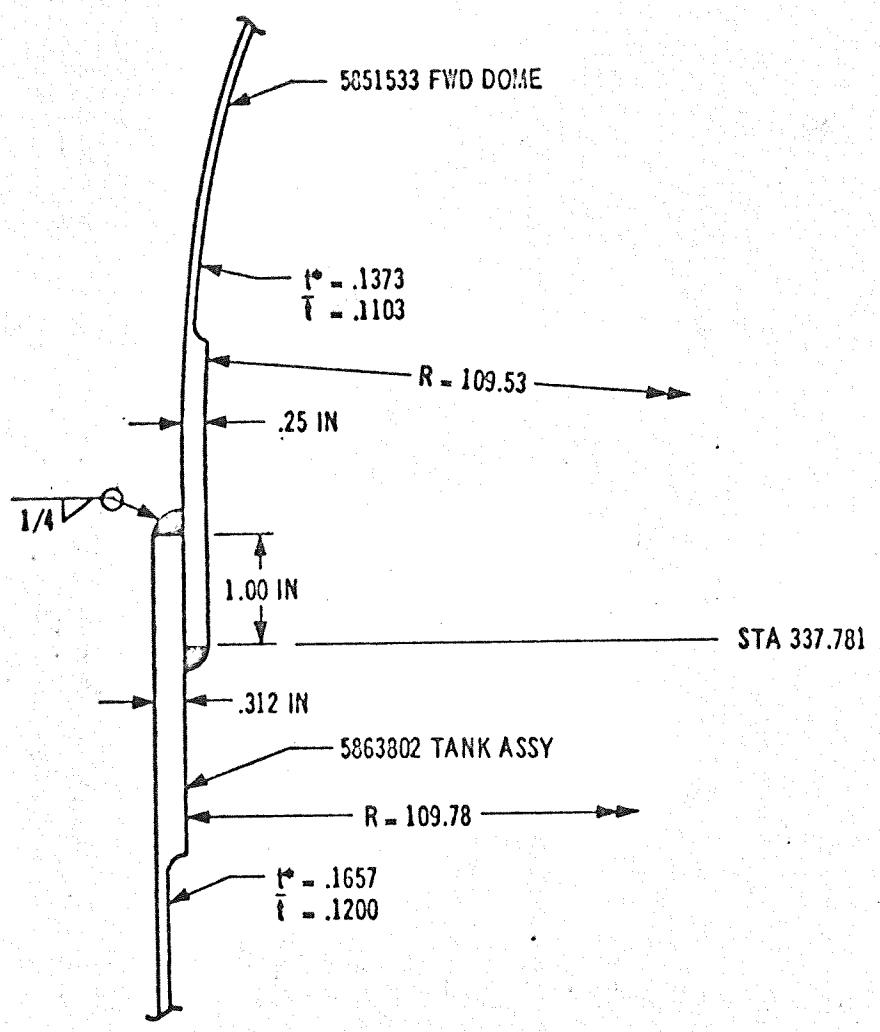

SM 42569

5863800
STRUCTURE ASSY

FWD DOME – TANK JOINT

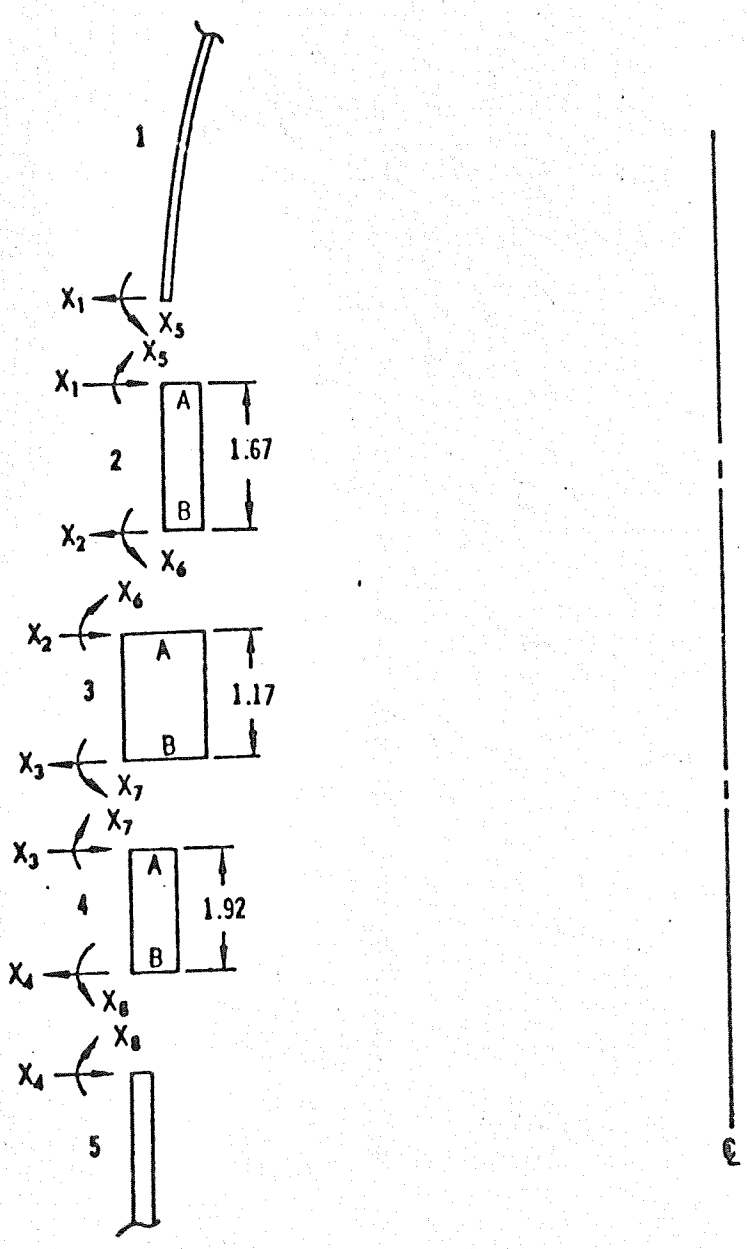

8M42569

5863800
STRUCTURE ASSY

PART 1
SPHERE

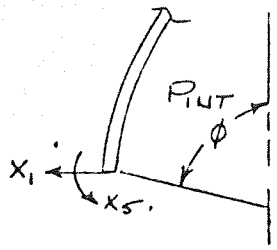

$$\delta_{1,1} = \frac{X_1}{Et^*_1}\beta R \sin^2\phi\left(K_2 + \frac{1}{K_1}\right)$$

$$\delta_{1,5} = \frac{-X_5}{Et^*}\left[\frac{2\beta^2 \sin\phi}{K_1}\right]$$

$$\delta_{1,P} = \frac{PR^2}{2Et}(1-\nu)$$

$$\delta_{1,T} = +\alpha \Delta T R \sin\phi$$

$$\beta = \left[3(1-\nu^2)\left(\frac{R}{t^*_1}\right)^2\right]^{1/4}$$

$$K_1 = 1 - \frac{1-2\nu}{2\beta}\cot\phi$$

$$K_2 = 1 - \frac{1+2\nu}{2\beta}\cot\phi$$

$$\nu = .3$$

$$\delta_{5,1} = \delta_{1,5}$$

$$\delta_{5,5} = \frac{X_5}{Et^*}\left[\frac{4\beta^3}{R K_1}\right]$$

PART 2
SHORT CYLINDER

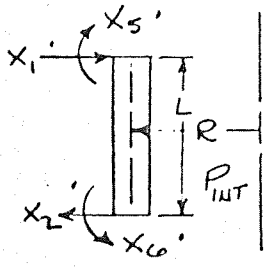

$$\delta_{1,T} = -\alpha \Delta T R$$

$$\delta_{1,1} = \frac{K X_1}{2D\beta^4 L}$$

$$\delta_{1,2} = \frac{-K X_2}{2D\beta^4 L}$$

$$\delta_{1,5} = \frac{K X_5}{2D\beta^4 L^2}$$

$$\delta_{1,6} = \frac{K X_6}{2D\beta^4 L^2}$$

$$\delta_{1,P} = -\frac{PR^2}{Et}\left(1-\frac{\nu}{2}\right)$$

$$\delta_{2,1} = \delta_{1,2}$$

$$\delta_{2,2} = \delta_{1,1}$$

$$\delta_{2,5} = -\delta_{1,6}$$

$$\delta_{2,6} = -\delta_{1,5}$$

$$\delta_{2,P} = -\delta_{1,P}$$

$$\delta_{2,T} = +\alpha \Delta T R$$

K = INFLUENCE COEFFICIENTS FOR SHORT CYLINDERS

$$\beta^4 = \frac{3(1-\nu^2)}{R^2 t^{*2}}$$

$$D = \frac{E t^{*3}}{12(1-\nu^2)}$$

5863800
STRUCTURE ASSY

$\delta_{5,1} = \delta_{1,5}'$

$\delta_{5,2} = \delta_{2,5}'$

$\delta_{5,5} = \dfrac{K X_5'}{2D\beta^4 L^3}$

$\delta_{5,6} = +\dfrac{K X_6}{2D\beta^4 L^3}$

$\delta_{6,1} = \delta_{1,6}'$

$\delta_{6,2} = \delta_{2,6}'$

$\delta_{6,5} = \delta_{5,6}'$

$\delta_{6,6} = \delta_{5,5}'$

PART 3
SHORT CYLINDER

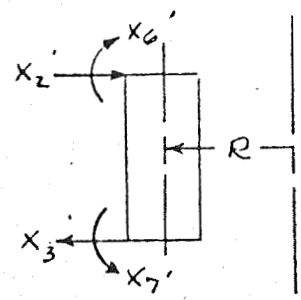

$\delta_{2,2} = \dfrac{K X_2'}{2D\beta^4 L}$

$\delta_{2,3} = \dfrac{-K X_3'}{2D\beta^4 L}$

$\delta_{2,6} = \dfrac{K X_6'}{2D\beta^4 L^2}$

$\delta_{2,7} = +\dfrac{K X_7'}{2D\beta^4 L^2}$

$\delta_{2,P} = \dfrac{-P\rho^2}{E\bar{t}}\left(1 - \dfrac{\nu}{2}\right)$

$\delta_{2,T} = -\alpha \Delta T R'$

$\delta_{3,2} = \delta_{2,3}'$

$\delta_{3,3} = \delta_{2,2}'$

$\delta_{3,6} = -\delta_{2,7}'$

$\delta_{3,7} = -\delta_{2,6}'$

$\delta_{3,P} = -\delta_{2,P}'$

$\delta_{3,T} = +\alpha \Delta T R'$

$\delta_{6,2} = \delta_{2,6}'$

$\delta_{6,3} = \delta_{3,6}'$

$\delta_{6,6} = \dfrac{K X_6'}{2D\beta^4 L^3}$

$\delta_{6,7} = +\dfrac{K X_7'}{2D\beta^4 L^3}$

$\delta_{7,2} = \delta_{2,7}'$

$\delta_{7,3} = \delta_{3,7}'$

$\delta_{7,6} = \delta_{6,7}'$

$\delta_{7,7} = \delta_{6,6}'$

5863800
STRUCTURE ASSY

PART 4
SHORT CYLINDER

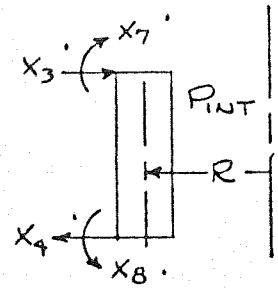

$$\delta_{3,3} = \frac{K X_3'}{2DB^4L}$$

$$\delta_{3,4} = \frac{-K X_4'}{2DB^4L}$$

$$\delta_{3,7} = \frac{K X_7'}{2DB^4L^2}$$

$$\delta_{3,8} = \frac{+K X_8'}{2DB^4L^2}$$

$$\delta_{3,P} = -\frac{PR^2}{E't'}\left(1-\frac{\nu'}{2}\right)$$

$$\delta_{3,T} = -\alpha \Delta T R'$$

$$\delta_{4,3} = \delta_{3,4}'$$

$$\delta_{4,4} = \delta_{3,3}'$$

$$\delta_{4,7} = -\delta_{3,8}'$$

$$\delta_{4,8} = -\delta_{3,7}'$$

$$\delta_{4,P} = -\delta_{3,P}'$$

$$\delta_{4,T} = +\alpha \Delta T R'$$

$$\delta_{7,3} = \delta_{3,7}'$$

$$\delta_{7,4} = \delta_{4,7}'$$

$$\delta_{7,7} = \frac{K X_7'}{2DB^4L^3}$$

$$\delta_{7,8} = \frac{+K X_8'}{2DB^4L^3}$$

$$\delta_{8,3} = \delta_{3,8}'$$

$$\delta_{8,4} = \delta_{4,8}'$$

$$\delta_{8,7} = \delta_{7,8}'$$

$$\delta_{8,8} = \delta_{7,7}'$$

5863800
STRUCTURE ASSY

PART 5

LONG CYLINDER

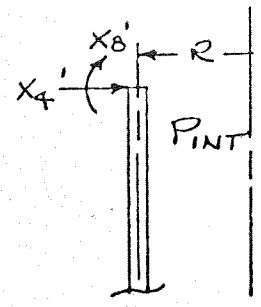

$$\delta_{4,4} = + \frac{X_4'}{2D\lambda^3}$$

$$\delta_{4,8} = + \frac{X_8'}{2D\lambda^2}$$

$$\delta_{4,P} = - \frac{PR^2}{EE}\left(1 - \frac{\nu}{2}\right)$$

$$\delta_{4,T} = -\alpha \Delta T R$$

$$\delta_{8,4} = \delta_{4,8}$$

$$\delta_{8,8} = \frac{X_8}{\lambda D}$$

$$D = \frac{Et^3}{12(1-\nu^2)}$$

$$\lambda = \left[\frac{3(1-\nu^2)}{R^2 t^2}\right]^{1/4}$$

SM 42569

SM 42566

AFT SKIRT TO AFT LO_2 DOME JOINT STRUCTURE ASSY (5863800)

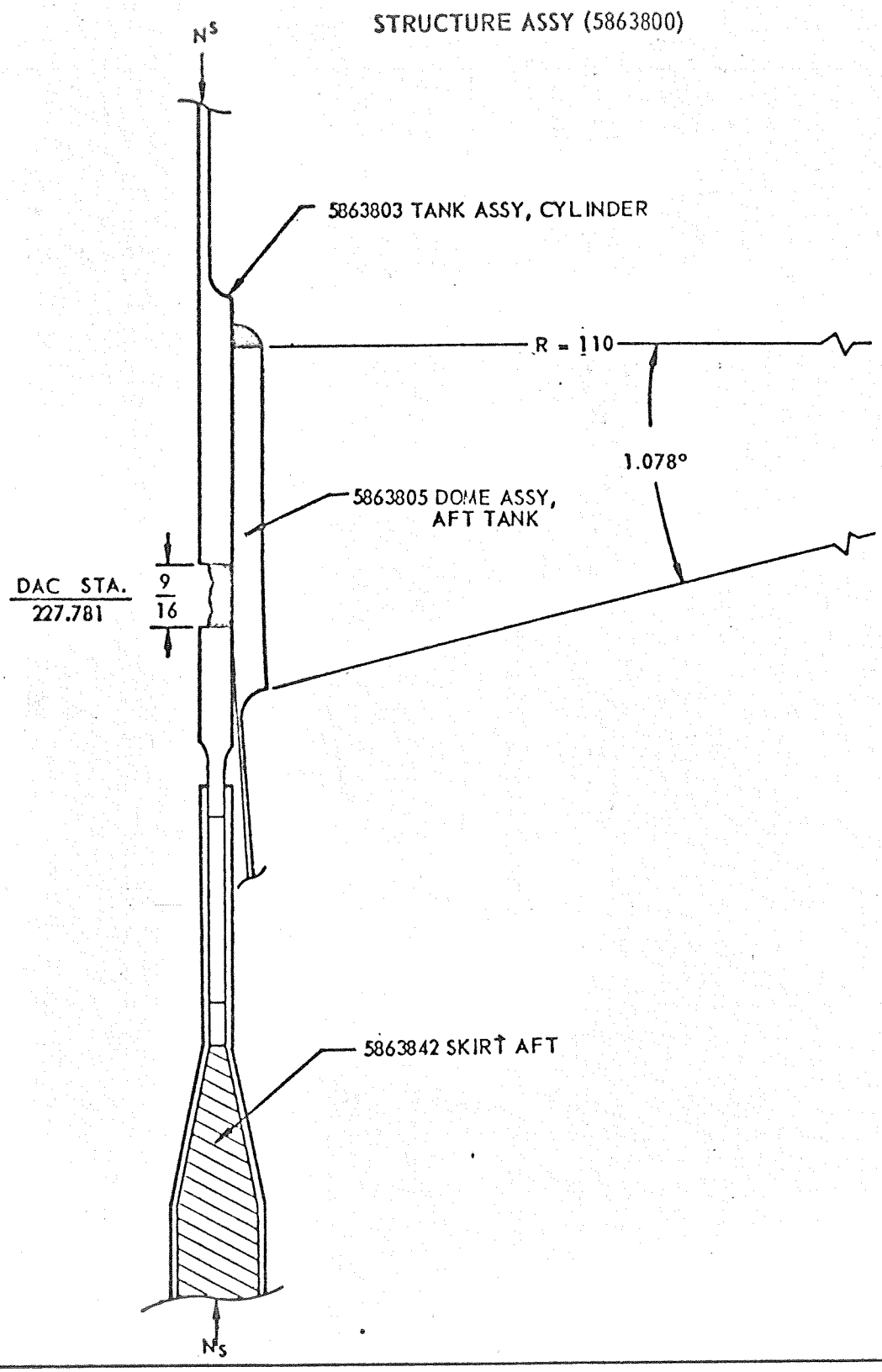

SM 42569

AFT SKIRT TO AFT LO_2 DOME JOINT

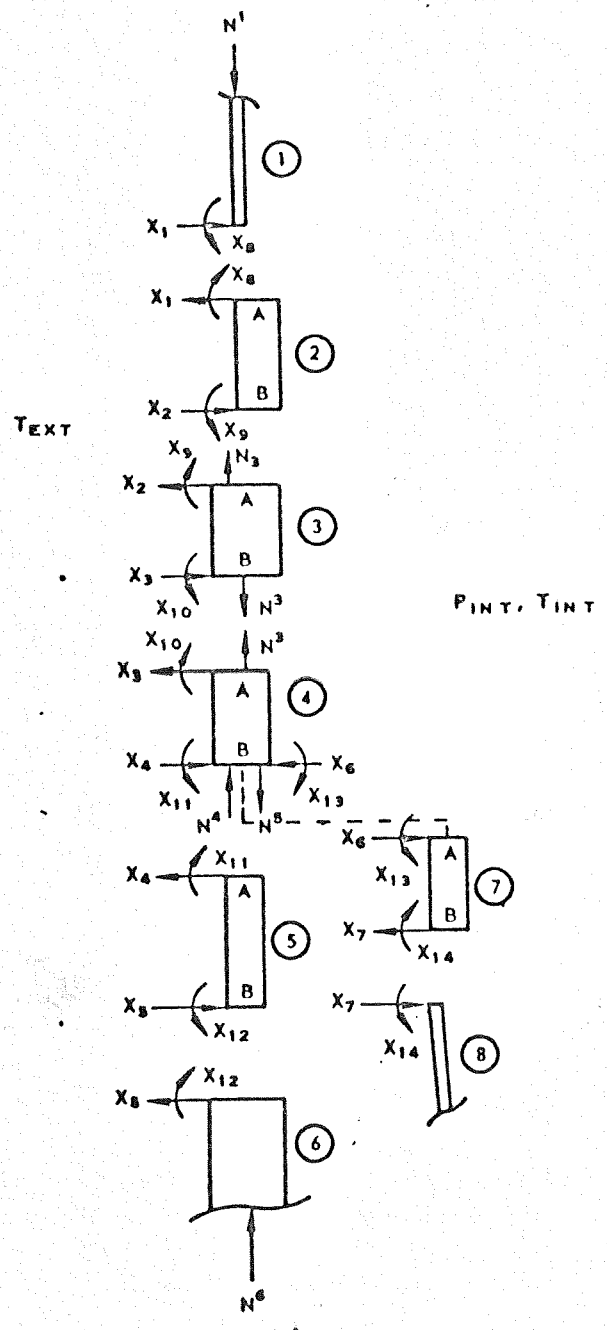

5863800 STRUCTURE ASSY

PART 1

LONG CYLINDER

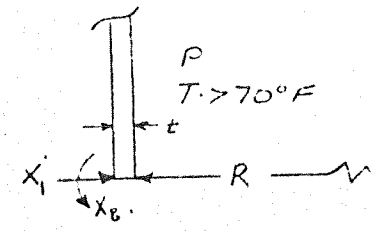

$$\beta = \left[\frac{3(1-\nu^2)}{R^2 t^2}\right]^{1/4}$$

$$D = \frac{Et^3}{12(1-\nu^2)}$$

$$\delta'_{1,1} = +\frac{X_1}{2D\beta^3}$$

$$\delta'_{1,B} = +\frac{X_B}{2D\beta^2}$$

$$\delta'_{1,P} = -\frac{PR^2}{Et}\left(1-\frac{\nu}{2}\right)$$

$$\delta'_{1,T} = -\alpha \Delta T R$$

$$\delta'_{B,1} = \delta'_{1,B}$$

$$\delta'_{B,B} = +\frac{X_B}{\beta D}$$

$$\delta'_{B,P} = \delta'_{B,T} = 0$$

5863800 STRUCTURE ASSY

PART 2

SHORT CYLINDER

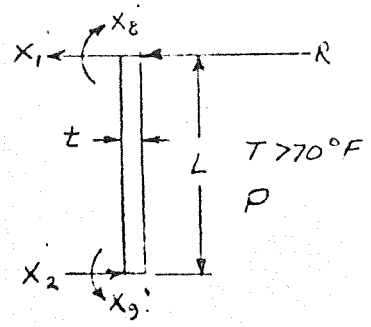

$L = 1.6875'$

$t = .312'$

$$\beta = \left[\frac{3(1-\nu^2)}{R^2 t^2}\right]^{1/4} = \left[\frac{3(1-.3^2)}{110^2(.312)^2}\right]^{1/4}$$

$$= (23.175 \times 10^{-4})^{1/4} = .2194$$

$$\beta L = .2194\ (1.6875) = .3703$$

$$D = \frac{Et^3}{12(1-\nu^2)}$$

$$\delta^2_{1,1} = +\frac{2.0004}{2D\beta^4 L} X_1$$

$$\delta^2_{1,2} = +\frac{.9997}{2D\beta^4 L} X_2$$

$$\delta^2_{1,8} = -\frac{3.0022}{2D\beta^4 L^2} X_8$$

$$\delta^2_{1,9} = +\frac{2.9988}{2D\beta^4 L^2} X_9$$

$$\delta^2_{1,P} = +\frac{PR^2}{Et}\left(1-\frac{\nu}{2}\right)$$

$$\delta^2_{1,T} = +\alpha \Delta T R$$

$$\delta^2_{2,1} = +\delta^2_{1,2}$$

$$\delta^2_{2,2} = +\delta^2_{1,1}$$

$$\delta^2_{2,8} = -\frac{2.9988}{2D\beta^4 L^2} X_8$$

$$\delta^2_{2,9} = +\frac{3.0022}{2D\beta^4 L^2} X_9$$

$$\delta^2_{2,P} = -\frac{PR^2}{Et}\left(1-\frac{\nu}{2}\right)$$

$$\delta^2_{2,T} = -\alpha \Delta T R$$

$$\delta^2_{8,1} = \delta^2_{1,8}$$

$$\delta^2_{8,2} = \delta^2_{2,8}$$

$$\delta^2_{8,8} = +\frac{6.0152}{2D\beta^4 L^3} X_8$$

$$\delta^2_{8,9} = -\frac{5.9948}{2D\beta^4 L^3} X_9$$

$$\delta^2_{9,1} = \delta^2_{1,9}$$

$$\delta^2_{9,2} = \delta^2_{2,9}$$

$$\delta^2_{9,8} = \delta^2_{8,9}$$

$$\delta^2_{9,9} = \delta^2_{8,8}$$

PART 3 SHORT CYLINDER

5863800 STRUCTURE ASSY.

$R = 110''$
$t = .562''$
$\nu = .3''$
$L = 1.3125''$

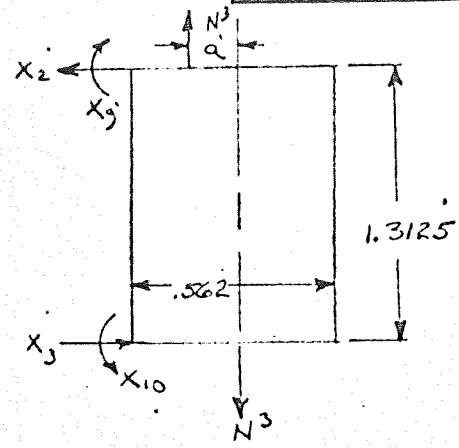

$$\beta^4 = \frac{3(1-\nu^2)}{R^2 t^2} = \frac{3(1-.09)}{110^2(.562)^2}$$

$$= .0007143$$

$$\beta = .1635$$

$$\beta L = .2146$$

$$\delta^3_{2,2} = \frac{1.99844}{20\beta^4 L} X_2$$

$$\delta^3_{2,3} = \frac{.99838}{20\beta^4 L} X_3$$

$$\delta^3_{2,9} = -\frac{2.99721}{20\beta^4 L^2} X_9$$

$$\delta^3_{2,10} = \frac{2.99677}{20\beta^4 L^2} X_{10}$$

$$\delta^3_{2,N^3} = -\frac{2.99721}{20\beta^4 L^2} N^3 a$$

$$\delta^3_{2,P} = +\frac{PR^2(1-\nu/2)}{Et}$$

$$\delta^3_{2,T} = +\alpha \Delta T R$$

$$\delta^3_{3,2} = \delta^3_{2,3}$$

$$\delta^3_{3,3} = \delta^3_{2,2}$$

$$\delta^3_{3,9} = -\delta^3_{2,10}$$

$$\delta^3_{3,10} = -\delta^3_{2,9}$$

$$\delta^3_{3,N^3} = -\frac{2.99677}{20\beta^4 L^2} N^3 a$$

$$\delta^3_{3,P} = -\frac{PR^2(1-\nu/2)}{Et}$$

$$\delta^3_{3,T} = -\alpha \Delta T R$$

5863800 STRUCTURE ASSY

PART 3

$$\delta^3_{9,2} = \delta^3_{2,9}$$

$$\delta^3_{9,3} = \delta^3_{3,9}$$

$$\delta^3_{9,9} = \frac{5.99572}{2D\beta^4 L^3} X_9$$

$$\delta^3_{9,10} = -\frac{5.99316}{2D\beta^4 L^3} X_{10}$$

$$\delta^3_{9,N^3} = \frac{5.99572}{2D\beta^4 L^3} N^3 a$$

$$\delta^3_{10,2} = \delta^3_{2,10}$$

$$\delta^3_{10,3} = \delta^3_{3,10}$$

$$\delta^3_{10,3} = \delta^3_{9,10}$$

$$\delta^3_{10,10} = \delta^3_{9,9}$$

$$\delta^3_{10,N^3} = -\frac{5.99316}{2D\beta^4 L^3} N^3 a$$

SM 42563

K+E ALBANENE 196L TRACING PAPER 60064

SM 42569

PART 4 SHORT CYLINDER

5863800 STRUCTURE ASSY

$T > 70°F$ $\nu = .3$

$R = 110$

$t = .468$

$L = .563$

N^4 = SKIRT LOAD

N^5 = PRESSURE LOAD

N^3 = RESULTANT LOAD

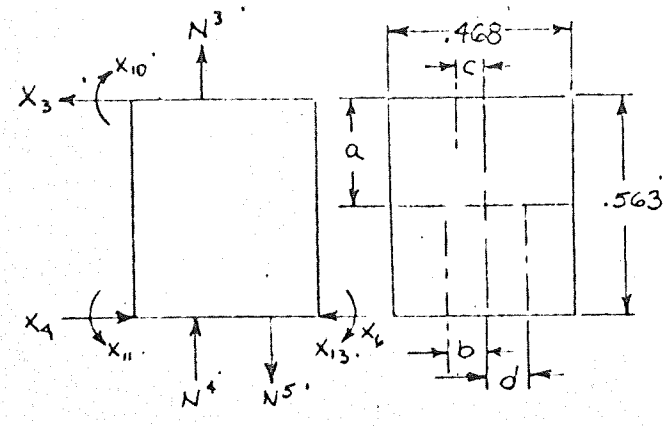

$$\beta^4 = \frac{3(1-\nu^2)}{R^2 t^2}$$

$$\beta^4 = \frac{3(1-.09)}{110^2(.468)^2} = .103 \times 10^{-2}$$

$$\beta = .1792$$

$$\beta L = (.1792 \times .563) = .1008$$

$$D = \frac{Et^3}{12(1-\nu^2)} = \frac{10.3(10^6 \times .468)^3}{12(1-.09)} = 96{,}683.4$$

SM 42569

PART 4

5863800 STRUCTURE ASSY

$$\delta^4_{3,3} = \frac{1.97059}{2D\beta^4 L} X_3$$

$$\delta^4_{3,4} = \frac{.97059}{2D\beta^4 L} X_4$$

$$\delta^4_{3,6} = -\frac{.97059}{2D\beta^4 L} X_6$$

$$\delta^4_{3,10} = -\frac{2.94118}{2D\beta^4 L^2} X_{10}$$

$$\delta^4_{3,11} = +\frac{2.94118}{2D\beta^4 L^2} X_{11}$$

$$\delta^4_{3,13} = -\frac{2.94118}{2D\beta^4 L^2} X_{13}$$

$$\delta^4_{3,N^3} = -\frac{2.94118}{2D\beta^4 L^2} N^3 c$$

$$\delta^4_{3,N^4} = -\frac{2.94118}{2D\beta^4 L^2} N^4 b$$

$$\delta^4_{3,N^5} = -\frac{2.94118}{2D\beta^4 L^2} N^5 d$$

$$\delta^4_{3,P} = \frac{PR^2}{Et}\left(1-\frac{\nu}{2}\right)$$

$$\delta^4_{3,T} = \alpha \Delta T R$$

$$\delta^4_{4,3} = \delta^4_{3,4}$$

$$\delta^4_{4,4} = +\delta^4_{3,3}$$

$$\delta^4_{4,6} = -\delta^4_{4,4}$$

$$\delta^4_{4,10} = -\delta^4_{3,11}$$

$$\delta^4_{4,11} = -\delta^4_{3,10}$$

$$\delta^4_{4,13} = -\delta^4_{4,11}$$

$$\delta^4_{4,N^3} = -\frac{2.94118}{2D\beta^4 L^2} N^3 c$$

$$\delta^4_{4,N^4} = -\frac{2.94118}{2D\beta^4 L^2} N^4 b$$

$$\delta^4_{4,N^5} = -\frac{2.94118}{2D\beta^4 L^2} N^5 d$$

$$\delta^4_{4,P} = -\frac{PR^2}{Et}\left(1-\nu/2\right)$$

$$\delta^4_{4,T} = -\alpha \Delta T R$$

PART 4

5863800 STRUCTURE ASSY

$\delta^4_{6,3} = \delta^4_{3,6}$

$\delta^4_{6,4} = \delta^4_{4,6}$

$\delta^4_{6,6} = \delta^4_{4,4}$

$\delta^4_{6,10} = -\delta^4_{4,10}$

$\delta^4_{6,11} = -\delta^4_{4,11}$

$\delta^4_{6,13} = -\delta^4_{4,13}$

$\delta^4_{6,N^3} = -\delta^4_{4,N^3}$

$\delta^4_{6,N^4} = -\delta^4_{4,N^4}$

$\delta^4_{6,N^5} = -\delta^4_{4,N^5}$

$\delta^4_{6,P} = -\delta^4_{4,P}$

$\delta^4_{6,T} = -\delta^4_{4,T}$

$\delta^4_{10,3} = \delta^4_{3,10}$

$\delta^4_{10,4} = \delta^4_{4,10}$

$\delta^4_{10,6} = \delta^4_{6,10}$

$\delta^4_{10,10} = \dfrac{5.88241}{2D\beta^4 L^3} X_{10}$

$\delta^4_{10,11} = -\dfrac{5.88229}{2D\beta^4 L^3} X_{11}$

$\delta^4_{10,13} = -\delta^4_{10,11}$

$\delta^4_{10,N^3} = \dfrac{5.88241}{2D\beta^4 L^3} N^3 c$

$\delta^4_{10,N^4} = \dfrac{5.88229}{2D\beta^4 L^3} N^4 b$

$\delta^4_{10,N^5} = \dfrac{5.88229}{2D\beta^4 L^3} N^5 d$

SM 42569

K+E ALBANENE 193L TRACING PAPER 66054

PART 4

- $\delta^4_{11,3} = \delta^4_{3,11}$
- $\delta^4_{11,4} = \delta^4_{4,11}$
- $\delta^4_{11,6} = \delta^4_{6,11}$
- $\delta^4_{11,10} = \delta^4_{10,11}$
- $\delta^4_{11,11} = \delta^4_{10,10}$
- $\delta^4_{11,13} = -\delta^4_{11,11}$
- $\delta^4_{11,N^3} = -\frac{5.88229}{20R^4L^3} N^3 c$
- $\delta^4_{11,N^4} = -\frac{5.88241}{20R^4L^3} N^4 b$
- $\delta^4_{11,N^5} = -\frac{5.88241}{20R^4L^3} N^5 d$

- $\delta^4_{13,3} = \delta^4_{3,13}$
- $\delta^4_{13,4} = \delta^4_{4,13}$
- $\delta^4_{13,6} = \delta^4_{6,13}$
- $\delta^4_{13,10} = \delta^4_{10,13}$
- $\delta^4_{13,11} = \delta^4_{11,13}$
- $\delta^4_{13,13} = \delta^4_{11,11}$
- $\delta^4_{13,N^3} = -\delta^4_{11,N^3}$
- $\delta^4_{13,N^4} = -\delta^4_{11,N^4}$
- $\delta^4_{13,N^5} = -\delta^4_{11,N^5}$

K+E ALBANENE 100L TRACING PAPER 68884

5863800 STRUCTURE ASSY

PART 5

LONG CYLINDER

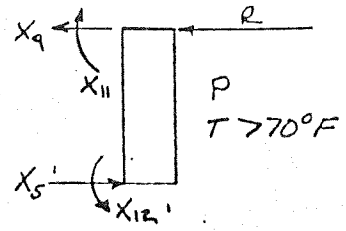

$$\beta = \left[\frac{3(1-\nu^2)}{R^2 t^2}\right]^{1/4}$$

$$D = \frac{E t^3}{12(1-\nu^2)}$$

$$\delta^5_{4,4} = \frac{X_4}{2D\beta^3}$$

$$\delta^5_{4,11} = -\frac{X_{11}}{2D\beta^2}$$

$$\delta^5_{4,p} = +\frac{PR^2}{Et}\left(1-\frac{\nu}{2}\right)$$

$$\delta^5_{4,T} = +\alpha \Delta T R$$

$$\delta^5_{4,5} = \delta^5_{4,12} = 0$$

$$\delta^5_{11,4} = \delta^5_{4,11}$$

$$\delta^5_{11,11} = \frac{X_{11}}{\beta D}$$

$$\delta^5_{11,4} = \delta^5_{11,12} = 0$$

$$\delta^5_{5,5} = +\frac{X_5}{2D\beta^3}$$

$$\delta^5_{5,12} = +\frac{X_{12}}{2D\beta^2}$$

$$\delta^5_{5,p} = -\frac{PR^2}{Et}\left(1-\frac{\nu}{2}\right)$$

$$\delta^5_{5,T} = -\alpha \Delta T R$$

$$\delta^5_{12,5} = \delta^5_{5,12}$$

$$\delta^5_{12,12} = +\frac{X_{12}}{\beta D}$$

PART 6

LONG CYLINDER

$$\beta = \left[\frac{3(1-\gamma^2)}{R^2 t^2}\right]^{1/4}$$

$$D = \frac{E t^3}{12(1-\gamma^2)}$$

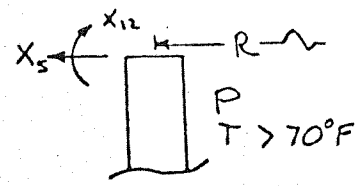

$$\delta^6_{5,5} = \frac{X_5}{2D\beta^3}$$

$$\delta^6_{5,12} = -\frac{X_{12}}{2D\beta^2}$$

$$\delta^6_{5,p} = +\frac{pR^2(1-\frac{\gamma}{2})}{Et}$$

$$\delta^6_{5,T} = +\alpha \Delta T R$$

$$\delta^6_{12,5} = \delta^6_{5,12}$$

$$\delta^6_{12,12} = +\frac{X_{12}}{\beta D}$$

5863800 STRUCTURE ASSY

PART 7

SHORT CYLINDER

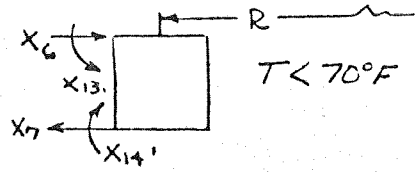

$T < 70°F$

$L = 1.50'$

$t = .25'$

$R = 109.656'$

$$\beta = \left[\frac{3(1-\nu^2)}{R^2 t^2}\right]^{1/4} = \left[\frac{3(1-.3^2)}{109.656^2(.25)^2}\right]^{1/4} = (36.326\times10^{-4})^{1/4} = .2455'$$

$$\beta L = (.2455)(1.50) = .3682$$

$$\delta^7_{6,6} = +\frac{2.0004}{2D\beta^4 L}\chi_6$$

$$\delta^7_{6,7} = +\frac{.9997}{2D\beta^4 L}\chi_7$$

$$\delta^7_{6,13} = -\frac{3.0022}{2D\beta^4 L^2}\chi_{13}$$

$$\delta^7_{6,14} = +\frac{2.9988}{2D\beta^4 L^2}\chi_{14}$$

$$\delta^7_{6,P} = -\frac{PR^2(1-\frac{\nu}{2})}{Et}$$

$$\delta^7_{6,T} = -\alpha\Delta TR$$

$$\delta^7_{7,6} = \delta^7_{6,7}$$

$$\delta^7_{7,7} = \delta^7_{6,6}$$

$$\delta^7_{7,13} = -\delta^7_{6,14}$$

$$\delta^7_{7,14} = -\delta^7_{6,13}$$

$$\delta^7_{7,P} = -\delta^7_{6,P}$$

$$\delta^7_{7,T} = +\alpha\Delta TR$$

$$\delta^7_{13,6} = \delta^7_{6,13}$$

$$\delta^7_{13,7} = \delta^7_{7,13}$$

$$\delta^7_{13,13} = +\frac{6.0150}{2D\beta^4 L^3}\chi_{13}$$

$$\delta^7_{13,14} = \frac{-5.9950}{2D\beta^4 L^3}\chi_{14}$$

$$\delta^7_{14,6} = \delta^7_{6,14}$$

$$\delta^7_{14,7} = \delta^7_{7,14}$$

$$\delta^7_{14,13} = \delta^7_{13,14}$$

$$\delta^7_{14,14} = \delta^7_{13,13}$$

K·E ALBANENE 100L TRACING PAPER 66604

5863800 STRUCTURE ASSY

PART 8

SPHERE

$$\beta = \left[3(1-\gamma^2)\frac{(R)^2}{(t)^2}\right]^{1/4}$$

$$K_1 = 1 - \frac{1-2\gamma}{2\beta}\cot\phi$$

$$K_2 = 1 - \frac{1+2\gamma}{2\beta}\cot\phi$$

$$\phi = 90 - .7838 = 89.2162$$

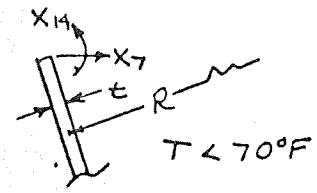

$$\delta^8_{7,7} = \frac{X_7}{Et} R\beta \sin^2\phi \left(\frac{1}{K_1} + K_2\right)$$

$$\delta^8_{7,14} = -\frac{2\beta^2 \sin\phi}{EtK_1} X_{14}$$

$$\delta^8_{7,P} = -\frac{PR^2(1-\gamma)\sin\phi}{2Et}$$

$$\delta^8_{7,T} = -\alpha\Delta T K \sin\phi$$

$$\delta^8_{14,7} = \delta^8_{7,14}$$

$$\delta^8_{14,14} = \frac{4\beta^3 X_{14}}{EtRK_1}$$

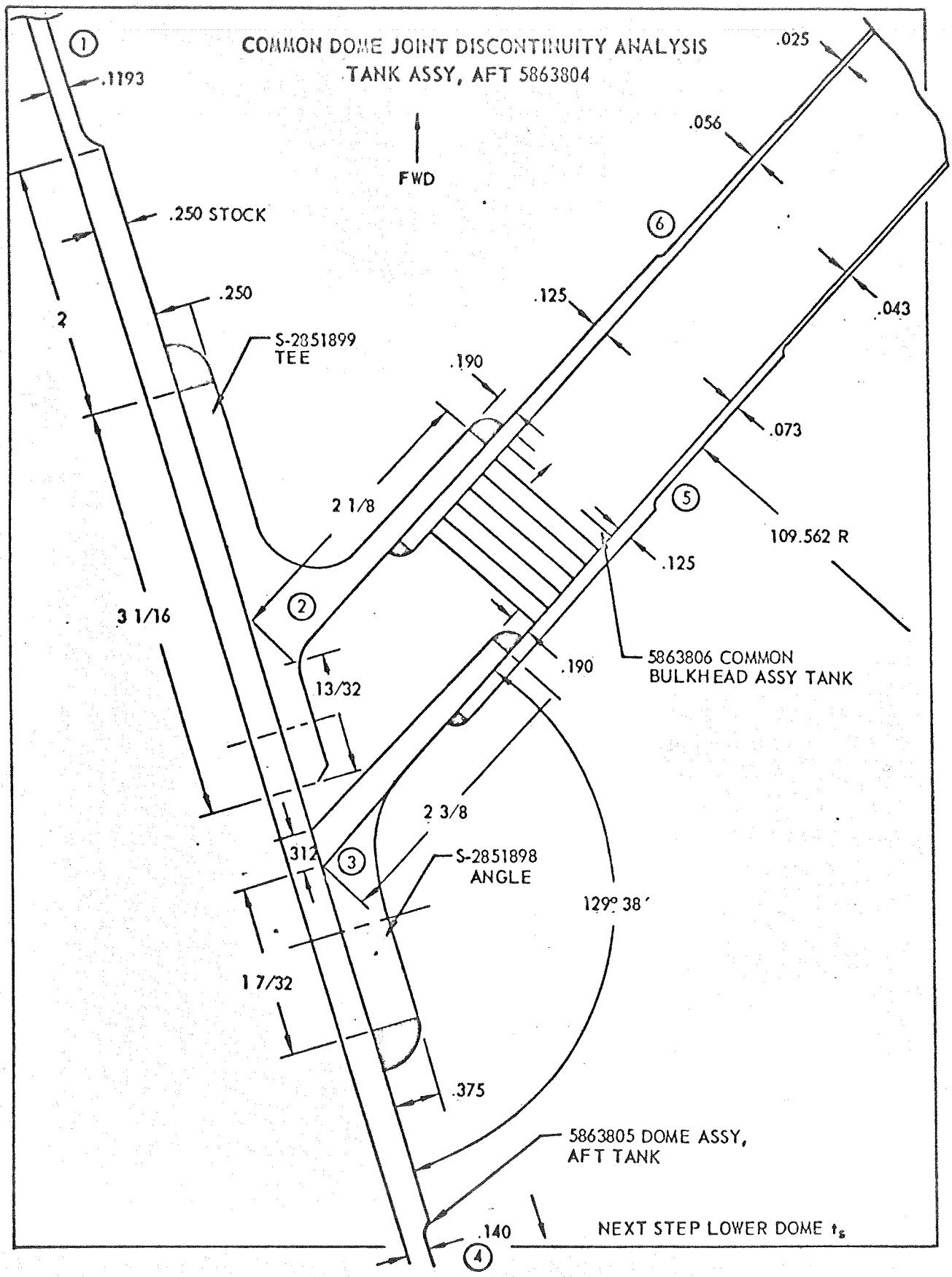
COMMON DOME JOINT DISCONTINUITY ANALYSIS
TANK ASSY, AFT 5863804
FWD
1
.1193
.250 STOCK
.250
2
S-2851899
TEE
3 1/16
2
13/32
2 1/8
.190
.125
6
.056
.025
.043
.073
5
109.562 R
.125
.190
5863806 COMMON
BULKHEAD ASSY TANK
2 3/8
312
3
S-2851898
ANGLE
129° 38′
1 7/32
.375
5863805 DOME ASSY,
AFT TANK
.140
4
NEXT STEP LOWER DOME t_s

COMMON DOME JOINT DISCONTINUITY ANALYSIS

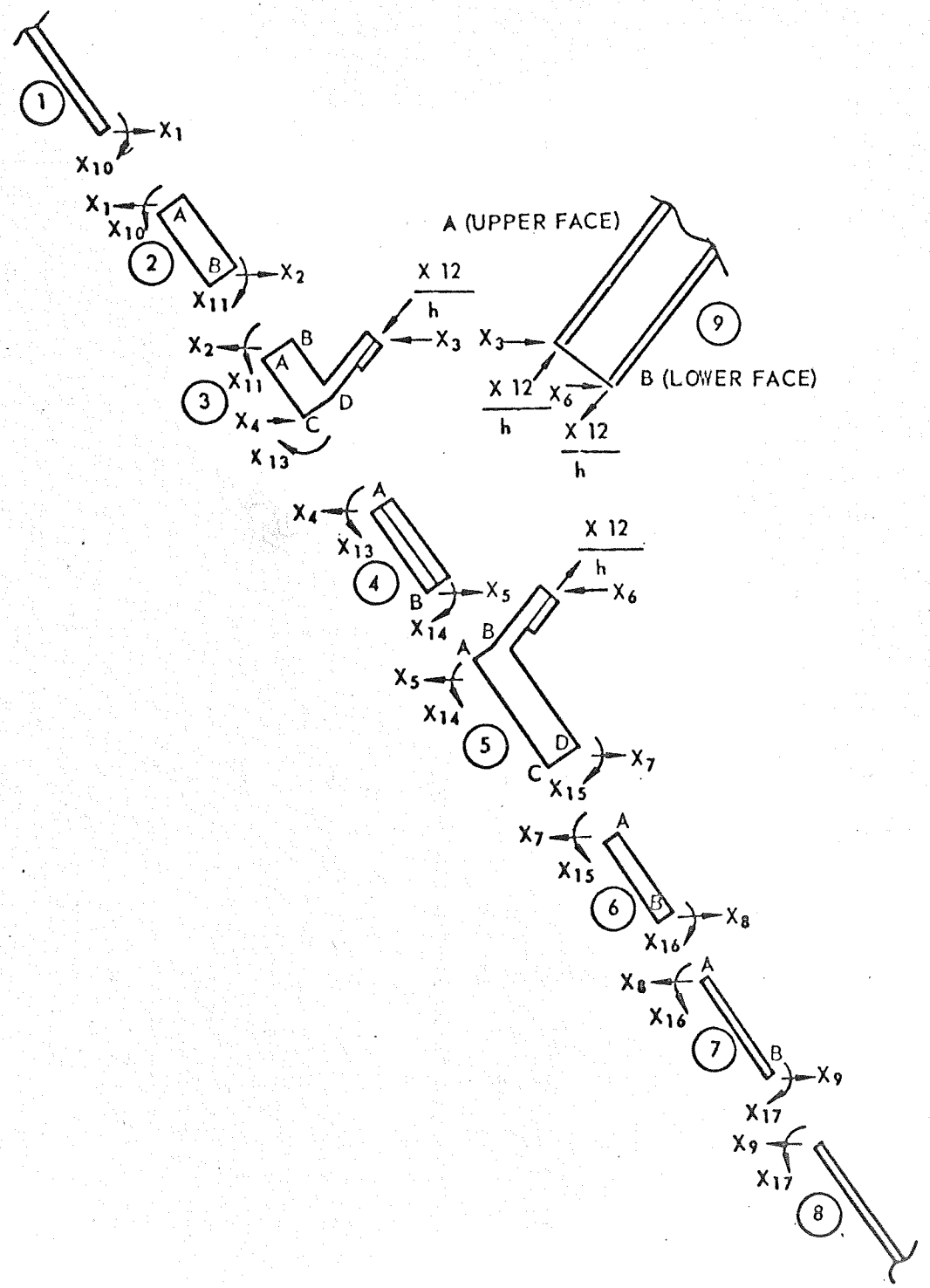

5863804 TANK ASSY, AFT

PART 1 SPHERE

$$\lambda = \sqrt[4]{3(1-\nu^2)\left(\frac{R}{t_1}\right)^2}$$

α = EDGE ANGLE

$0 < \alpha < 90°$

$$K_1 = 1 + \frac{1-2\nu}{2\lambda}\cot\alpha$$

$$K_2 = 1 + \frac{1+2\nu}{2\lambda}\cot\alpha$$

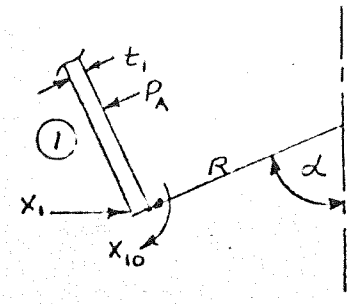

$$\delta'_{1,1} = \frac{R\lambda_1 \sin^2\alpha}{E_1 t_1}\left(\frac{1}{K_1} + K_2\right) X_1$$

$$\delta'_{1,10} = \frac{-2\lambda^2 \sin\alpha}{E_1 t_1 K_1} X_{10}$$

$$\delta'_{1,P_A} = \frac{-P_A R^2}{2E_1 t_1}(1-\nu)\sin\alpha$$

$$\delta'_{1,T_1} = -\alpha_1 \Delta T_1 R \sin\alpha$$

$$\delta'_{10,1} = \frac{-2\lambda_1^2 \sin\alpha}{E_1 t_1 K_1} X_1 = \delta'_{1,10}$$

$$\delta'_{10,10} = \frac{4\lambda_1^3 X_{10}}{E_1 t_1 K_1 R}$$

$$\delta'_{10,P} = \delta'_{10,T} = 0$$

5863804 TANK ASSY, AFT

PART 2 CONE

$X_1 = \bar{X}_2$
$X_2 = -\bar{X}_1$
$X_{10} = \bar{X}_4$
$X_{11} = -\bar{X}_3$

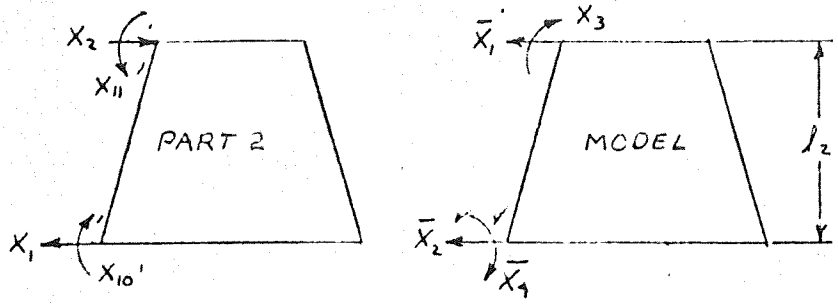

$$\delta^2_{1,1} = + + \bar{\delta}^2_{2,2} = + \bar{\delta}^2_{2,2}$$
$$\delta^2_{1,2} = + - \bar{\delta}^2_{2,1} = - \bar{\delta}_{2,1}$$
$$\delta^2_{1,10} = + + \bar{\delta}^2_{2,4} = + \bar{\delta}^2_{2,4}$$
$$\delta^2_{1,11} = + - \bar{\delta}^2_{2,3} = - \bar{\delta}^2_{2,3}$$
$$\delta^2_{1,T} = + \alpha \Delta T_2 R \sin\alpha$$
$$\delta^2_{1,P} = + \frac{P R^2 (1-\nu)}{2 E_2 t_2} \sin\alpha$$

$$\delta^2_{2,1} = - + \bar{\delta}^2_{1,2} = - \bar{\delta}^2_{1,2}$$
$$\delta^2_{2,2} = + - \bar{\delta}^2_{1,1} = + \bar{\delta}^2_{1,1}$$
$$\delta^2_{2,10} = - + \bar{\delta}^2_{1,4} = - \bar{\delta}^2_{1,4}$$
$$\delta^2_{2,11} = - - \bar{\delta}^2_{1,3} = + \bar{\delta}^2_{1,3}$$
$$\delta^2_{2,T} = - \alpha \Delta T_2 R \sin\alpha$$
$$\delta^2_{2,P} = - \frac{P_A R^2 (1-\nu)}{2 E_2 t_2} \sin\alpha$$

$$\delta^2_{10,1} = + + \bar{\delta}^2_{4,2} = + \bar{\delta}^2_{4,2}$$
$$\delta^2_{10,2} = + - \bar{\delta}^2_{4,1} = - \bar{\delta}^2_{4,1}$$
$$\delta^2_{10,10} = + + \bar{\delta}^2_{4,4} = + \bar{\delta}^2_{4,4}$$
$$\delta^2_{10,11} = + - \bar{\delta}^2_{4,3} = - \bar{\delta}^2_{4,3}$$
$$\delta^2_{10,T} = 0$$
$$\delta^2_{10,P} = 0$$

$$\delta^2_{11,1} = - + \bar{\delta}^2_{3,2} = - \bar{\delta}^2_{3,2}$$
$$\delta^2_{11,2} = - - \bar{\delta}^2_{3,1} = + \bar{\delta}^2_{3,1}$$
$$\delta^2_{11,10} = - + \bar{\delta}^2_{3,4} = - \bar{\delta}^2_{3,4}$$
$$\delta^2_{11,11} = - - \bar{\delta}^2_{3,3} = + \bar{\delta}^2_{3,3}$$
$$\delta^2_{11,T} = 0$$
$$\delta^2_{11,P} = 0$$

SM 42569

PART 3 RING

5863804 TANK ASSY, AFT

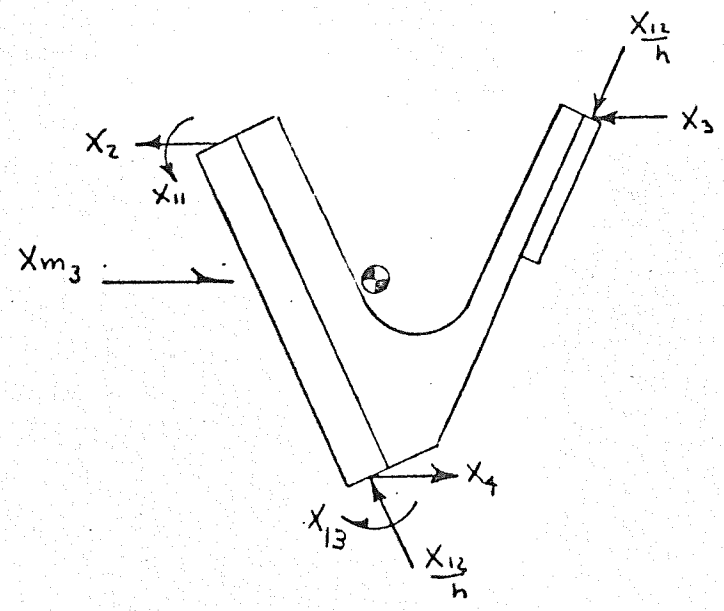

$I_3 = .535$
$A = 1.701$
$d = .89$
$e = 1.08$
$f = .96$
$g = .72$
$i = .50$

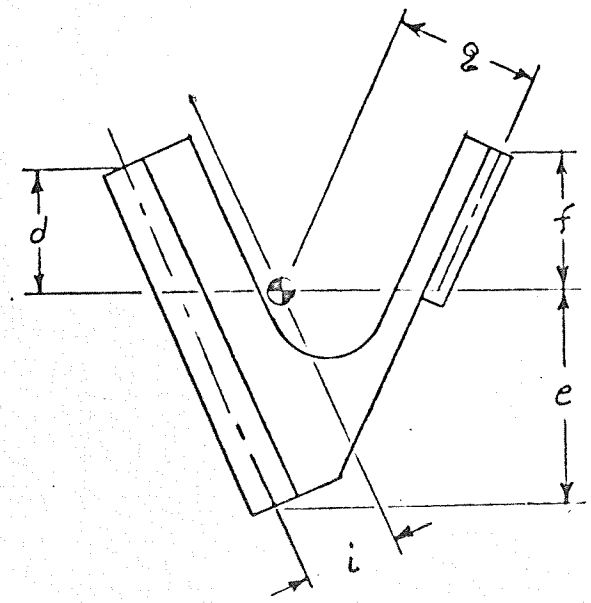

5863804 TANK ASSY, AFT

PART 3 RING

$r = R \sin\alpha \qquad \phi = 90° - \alpha$

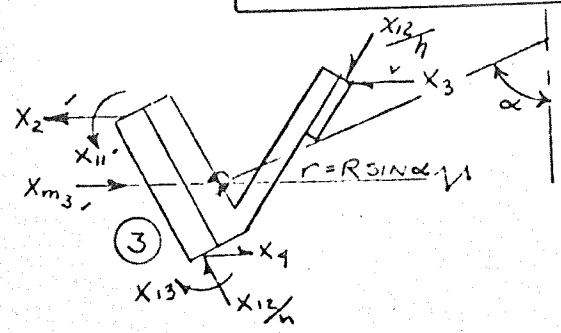

$$\delta^3_{2,2} = \frac{X_2 r^2}{E_3 A_3} + \frac{X_2 d^2 r^2}{E_3 I_3}$$

$$\delta^3_{2,3} = \frac{X_3 r^2}{E_3 A_3} + \frac{X_3 d f r^2}{E_3 I_3}$$

$$\delta^3_{2,4} = -\frac{X_4 r^2}{E_3 A_3} + \frac{X_4 d e r^2}{E_3 I_3}$$

$$\delta^3_{2,11} = \frac{X_{11} d r^2}{E_3 I_3}$$

$$\delta^3_{2,12} = \frac{2 X_{12} \sin\phi\, r^2}{h E_3 A_3} - \frac{X_{12} d g r^2}{h E_3 I_3} - \frac{X_{12} d i r^2}{h E_3 I_3}$$

$$\delta^3_{2,13} = -\frac{X_{13} d r^2}{E_3 I_3}$$

$$\delta^3_{2,T_3} = \alpha \Delta T_3 \sin\phi\, R$$

$$\delta^3_{2,m} = -\frac{X_{m_3} r^2}{E_3 A_3}$$

$$\delta^3_{3,2} = \frac{X_2 r^2}{E_3 A_3} + \frac{X_2 d f r^2}{E_3 I_3}$$

$$\delta^3_{3,3} = \frac{X_3 r^2}{E_3 A_3} + \frac{X_3 f^2 r^2}{E_3 I_3}$$

5863804 TANK ASSY, AFT

PART 3 RING

$$\delta^3_{3,4} = -\frac{X_4 r^2}{E_3 A_3} + \frac{X_4 e f r^2}{E_3 I_3}$$

$$\delta^3_{3,11} = \frac{X_{11} f r^2}{E_3 I_3}$$

$$\delta^3_{3,12} = +\frac{2 X_{12} \sin\phi\, r^2}{h E_3 A_3} - \frac{X_{12} f g r^2}{h E_3 I_3} - \frac{X_{12} f i r^2}{h E_3 I_3}$$

$$\delta^3_{3,13} = -\frac{X_{13} f r^2}{E_3 I_3}$$

$$\delta^3_{3,T_3} = +\alpha \Delta T_3 r$$

$$\delta^3_{3,m} = \frac{-X_{m_3} r^2}{E_3 A_3}$$

$$\delta^3_{4,2} = -\frac{X_2 r^2}{E_3 A_3} + \frac{X_2 d e r^2}{E_3 I_3}$$

$$\delta^3_{4,3} = -\frac{X_3 r^2}{E_3 A_3} + \frac{X_3 e f r^2}{E_3 I_3}$$

$$\delta^3_{4,4} = \frac{+X_4 r^2}{E_3 A_3} + \frac{X_4 e^2 r^2}{E_3 I_3}$$

$$\delta^3_{4,11} = \frac{X_{11} e r^2}{E_3 I_3}$$

5863804 TANK ASSY, AFT

PART 3 RING

$$\delta^3_{4,12} = -\frac{2 X_{12} \sin\phi\, r^2}{h E_3 A_3} - \frac{X_{12}\, g\, e\, r^2}{h E_3 I_3} - \frac{X_{12}\, e\, i\, r^2}{h E_3 I_3}$$

$$\delta^3_{4,13} = \frac{-X_{13}\, e\, r^2}{E_3 I_3}$$

$$\delta^3_{4,T_3} = -\alpha \Delta T_3\, r$$

$$\delta^3_{4,m} = +\frac{X_{m_3} r^2}{E_3 A_3}$$

$$\delta^3_{11,2} = \frac{X_2\, d\, r^2}{E_3 I_3}$$

$$\delta^3_{11,3} = \frac{X_3\, f\, r^2}{E_3 I_3}$$

$$\delta^3_{11,4} = \frac{X_4\, e\, r^2}{E_3 I_3}$$

$$\delta^3_{11,11} = \frac{X_{11}\, r^2}{E_3 I_3}$$

$$\delta^3_{11,12} = -\frac{X_{12}\, g\, r^2}{h E_3 I_3} - \frac{X_{12}\, i\, r^2}{h E_3 I_3}$$

$$\delta^3_{11,13} = -\frac{X_{13}\, r^2}{E_3 I_3}$$

$$\delta^3_{11,T_3} = 0$$

5863804 TANK ASSY, AFT

PART 3 RING

$$\delta^3_{12,2} = \frac{X_2 r^2 \sin\phi}{h A_3 E_3} - \frac{X_2 d g r^2}{h E_3 I_3} + \frac{X_2 r^2 \sin\phi}{h A_3 E_3} - \frac{X_2 d i r^2}{h I_3 E_3}$$

$$\delta^3_{12,3} = \frac{2 X_3 r^2 \sin\phi}{h A_3 E_3} - \frac{X_3 f g r^2}{h E_3 I_3} - \frac{X_3 f i r^2}{h E_3 I_3}$$

$$\delta^3_{12,4} = \frac{-2 X_4 r^2 \sin\phi}{h A_3 E_3} - \frac{X_4 e g r^2}{h E_3 I_3} - \frac{X_4 e i r^2}{h E_3 I_3}$$

$$\delta^3_{12,11} = -\frac{X_{11} r^2 g}{h E_3 I_3} - \frac{X_{11} r^2 i}{h E_3 I_3}$$

$$\delta^3_{12,12} = \frac{X_{12}\, 2 r^2 \sin^2\phi}{h E_3 A_3} + \frac{g r^2}{E_3 I_3}\left(\frac{X_{12}}{h} g + \frac{X_{12}}{h} i\right)^{\checkmark} + \frac{i r^2}{E_3 I_3}\left(\frac{X_{12}}{h} g + \frac{X_{12}}{h} i\right)^{\checkmark}$$

$$\delta^3_{12,13} = \frac{X_{13} r^2 g}{h E_3 I_3} + \frac{X_{13} r^2 i}{h E_3 I_3}$$

$$\delta^3_{12,T} = \alpha_3 \Delta T_3 r \sin\phi^{\checkmark}$$

$$\delta^3_{12,m} = \frac{-2 X_m r^2 \sin\phi}{h E_3 A_3}$$

5863804 TANK ASSY, AFT

PART 3 RING

$$\delta^3_{13,2} = -\frac{X_2' d' r^{2\prime}}{E_3' I_3'}$$

$$\delta^3_{13,3} = -\frac{X_3' f' r^{2\prime}}{E_3' I_3'}$$

$$\delta^3_{13,4} = -\frac{X_4' e' r^{2\prime}}{E_3' I_3'}$$

$$\delta^3_{13,11} = -\frac{X_{11}' r^{2\prime}}{E_3' I_3'}$$

$$\delta^3_{13,13} = \frac{X_{13}' r^{2\prime}}{E_3' I_3'}$$

$$\delta^3_{13,T} = 0$$

$$\delta^3_{13,12} = \frac{X_{12}' r^2}{h E_3 I_3'}(g + l')$$

SM 42562

K+E ALBANENE 195L (5) TRACING PAPER 66078

5863804 TANK ASSY., AFT

PART 4 CONE

$X_4' = \bar{X}_2'$

$X_5' = -\bar{X}_1'$

$X_{13}' = \bar{X}_4'$

$X_{14}' = -\bar{X}_3'$

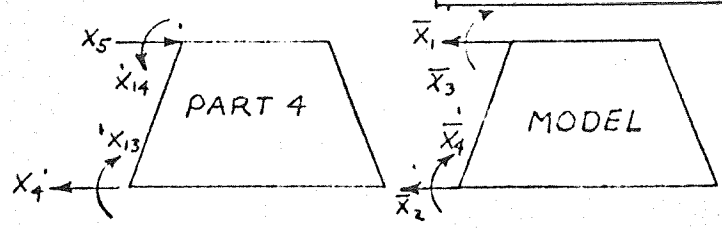

$\delta^4_{4,4} = +\bar{\delta}^4_{2,2}$

$\delta^4_{4,5} = -\bar{\delta}^4_{2,1}$

$\delta^4_{4,13} = +\bar{\delta}^4_{2,4}$

$\delta^4_{4,14} = -\bar{\delta}^4_{2,3}$

$\delta^4_{4,T} = \alpha \Delta T_4 R \sin\alpha$

$\delta^4_{5,4} = -\bar{\delta}^4_{1,2}$

$\delta^4_{5,5} = +\bar{\delta}^4_{1,1}$

$\delta^4_{5,13} = -\bar{\delta}^4_{1,4}$

$\delta^4_{5,14} = +\bar{\delta}^4_{1,3}$

$\delta^4_{5,T} = -\alpha \Delta T_4 R \sin\alpha$

$\delta^4_{13,4} = +\bar{\delta}^4_{4,2}$

$\delta^4_{13,5} = -\bar{\delta}^4_{4,1}$

$\delta^4_{13,13} = +\bar{\delta}^4_{4,4}$

$\delta^4_{13,14} = -\bar{\delta}^4_{4,3}$

$\delta^4_{13,T_A} = 0$

$\delta^4_{14,4} = -\bar{\delta}^4_{3,2}$

$\delta^4_{14,5} = +\bar{\delta}^4_{3,1}$

$\delta^4_{14,13} = -\bar{\delta}^4_{3,4}$

$\delta^4_{14,14} = +\bar{\delta}^4_{3,3}$

$\delta^4_{14,T} = 0$

SM 42569

PART 5 RING

5863804 TANK ASSY, AFT

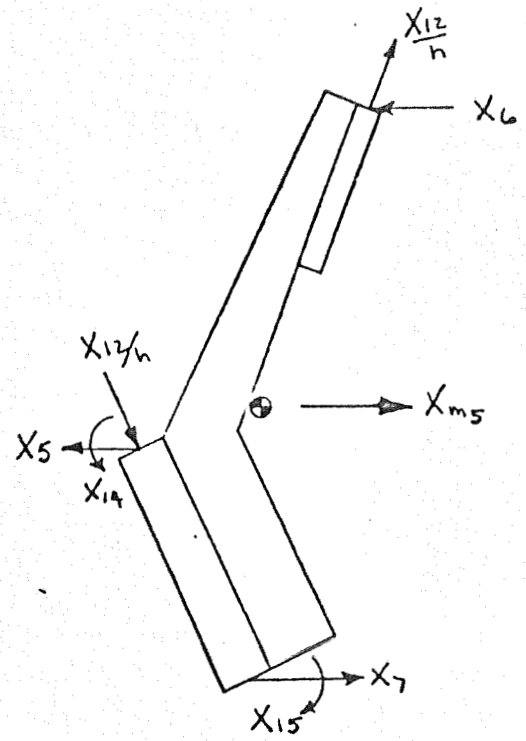

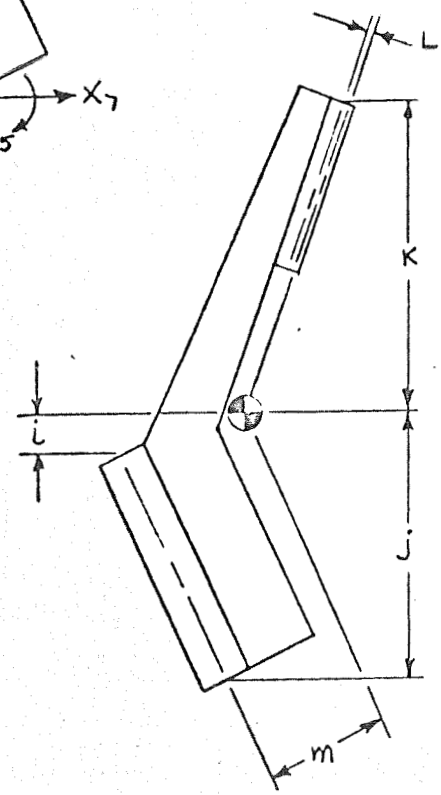

I = 1.186

A = 1.523

i = .07

j = 1.36

K = 1.81

L = .14

m = .67

5863804 TANK ASSY, AFT

PART 5 RING

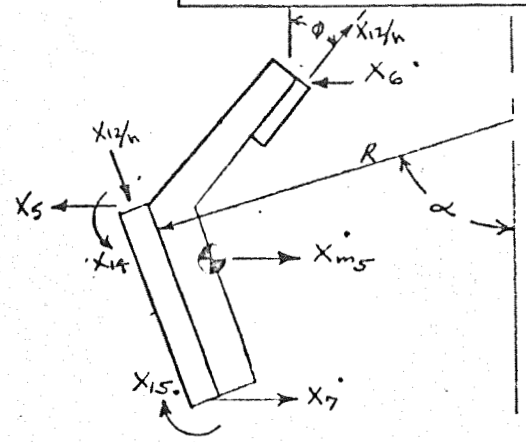

$$\delta^5_{5,5} = \frac{X_5 r^2}{E_5 A_5} + \frac{X_5 i^2 r^2}{E_5 I_5}$$

$$\delta^5_{5,6} = \frac{X_6 r^2}{E_5 A_5} - \frac{X_6 k i r^2}{E_5 I_5}$$

$$\delta^5_{5,7} = -\frac{X_7 r^2}{E_5 A_5} - \frac{X_7 i j r^2}{E_5 I_5}$$

$$\delta^5_{5,12} = -\frac{2 X_{12} \sin\phi\, r^2}{h E_5 A_5} + \frac{X_{12} i l r^2}{h E_5 I_5} - \frac{X_{12} i m r^2}{h E_5 I_5}$$

$$\delta^5_{5,14} = -\frac{X_{14} i r^2}{E_5 I_5}$$

$$\delta^5_{5,15} = \frac{X_{15} r^2 i}{E_5 I_5}$$

$$\delta^5_{5,T_5} = \alpha \Delta T_5 R \sin\alpha$$

$$\delta^5_{5,M} = -\frac{X_m r^2}{E_5 A_5}$$

$$\delta^5_{6,5} = +\frac{X_5 r^2}{E_5 A_5} - \frac{X_5 k i r^2}{E_5 I_5}$$

$$\delta^5_{6,6} = +\frac{X_6 r^2}{E_5 A_5} + \frac{X_6 k^2 r^2}{E_5 I_5}$$

$$\delta^5_{6,7} = -\frac{X_7 r^2}{E_5 A_5} + \frac{X_7 j k r^2}{E_5 I_5}$$

5863804 TANK ASSY, AFT

PART 5 RING

$$\delta^5_{6,12} = \frac{-2 x_{12} \sin\phi\, r^2}{h E_5 A_5} - \frac{x_{12}\, l\, k\, r^2}{h E_5 I_5} + \frac{x_{12}\, k\, m\, r^2}{h E_5 I_5}$$

$$\delta^5_{6,14} = \frac{x_{14}\, k\, r^2}{E_5 I_5}$$

$$\delta^5_{6,15} = -\frac{x_{15}\, k\, r^2}{E_5 I_5}$$

$$\delta^5_{6,T} = +\alpha_5 \Delta T_5 R \sin\alpha$$

$$\delta^5_{6,m} = \frac{-x_{m_5} r^2}{E_5 A_5}$$

$$\delta^5_{7,5} = -\frac{x_5 r^2}{E_5 A_5} - \frac{x_5\, l\, j\, r^2}{E_5 I_5}$$

$$\delta^5_{7,6} = -\frac{x_6 r^2}{E_5 A_5} + \frac{x_6\, j\, k\, r^2}{E_5 I_5}$$

$$\delta^5_{7,7} = \frac{x_7 r^2}{E_5 A_5} + \frac{x_7\, j^2 r^2}{E_5 I_5}$$

$$\delta^5_{7,12} = \frac{2 x_{12} \sin\phi\, r^2}{h E_5 A_5} - \frac{x_{12}\, j\, l\, r^2}{h E_5 I_5} + \frac{x_{12}\, j\, m\, r^2}{h E_5 I_5}$$

$$\delta^5_{7,14} = \frac{x_{14}\, j\, r^2}{E_5 I_5}$$

$$\delta^5_{7,15} = -\frac{x_{15}\, j\, r^2}{E_5 I_5}$$

$$\delta^5_{7,T} = -\alpha_5 \Delta T_5 R \sin\alpha$$

$$\delta^5_{7,m} = \frac{x_{m_5} r^2}{E_5 A_5}$$

5863804 TANK ASSY, AFT

PART 5 RING

$$\delta^5_{12,5} = -\frac{2 x_5 r^2 \sin\phi}{h E_5 A_5} + \frac{x_5 l r^2}{h E_5 I_5} - \frac{x_5 m l r^2}{h E_5 I_5}$$

$$\delta^5_{12,6} = -\frac{2 x_6 r^2 \sin\phi}{h E_5 A_5} - \frac{x_6 k l r^2}{h E_5 I_5} + \frac{x_6 k m r^2}{h E_5 I_5}$$

$$\delta^5_{12,7} = \frac{2 x_7 r^2 \sin\phi}{h E_5 A_5} - \frac{x_7 j l r^2}{h E_5 I_5} + \frac{x_7 j m r^2}{h E_5 I_5}$$

$$\delta^5_{12,12} = \frac{2 x_{12} r^2 \sin^2\phi}{h E_5 A_5} + \left(\frac{x_{12}}{h} l - \frac{x_{12}}{h} m\right)\frac{l r^2}{E_5 I_5} + \left(\frac{x_{12}}{h} m - \frac{x_{12}}{h} l\right)\frac{m r^2}{E_5 I_5}$$

$$\delta^5_{12,14} = -\frac{x_{14} l r^2}{h E_5 I_5} + \frac{x_{14} m r^2}{h E_5 I_5}$$

$$\delta^5_{12,15} = \frac{x_{15} l r^2}{h E_5 I_5} - \frac{x_{15} m r^2}{h E_5 I_5}$$

$$\delta^5_{12,T} = -\alpha_5 \Delta T_5 r \sin\phi$$

$$\delta^5_{12,m} = \frac{2 x_m r^2 \sin\phi}{h E_5 A_5}$$

$$\delta^5_{14,5} = \frac{-x_5 l r^2}{E_5 I_5}$$

$$\delta^5_{14,6} = \frac{x_6 k r^2}{E_5 I_5}$$

$$\delta^5_{14,7} = \frac{x_7 j r^2}{E_5 I_5}$$

5863804 TANK ASSY, AFT

PART 5 RING

$$\delta^5_{14,12} = -\frac{X_{12}\, l\, r^2}{h\, E_5\, I_5} + \frac{X_{12}\, m\, r^2}{h\, E_5\, I_5}$$

$$\delta^5_{14,14} = \frac{X_{14}\, r^2}{E_5\, I_5}$$

$$\delta^5_{14,15} = -\frac{X_{15}\, r^2}{E_5\, I_5}$$

$$\delta^5_{14,T} = 0$$

$$\delta^5_{15\,5} = \frac{X_5\, i\, r^2}{E_5\, I_5}$$

$$\delta^5_{15,6} = -\frac{X_6\, k\, r^2}{E_5\, I_5}$$

$$\delta^5_{15,7} = -\frac{X_7\, j\, r^2}{E_5\, I_5}$$

$$\delta^5_{15,12} = \frac{X_{12}\, l\, r^2}{h\, E_5\, I_5} - \frac{X_{12}\, m\, r^2}{h\, E_5\, I_5}$$

$$\delta^5_{15,14} = \frac{X_{14}\, r^2}{E_5\, I_5}$$

$$\delta^5_{15,15} = \frac{X_{15}\, r^2}{E_5\, I_5}$$

$$\delta^5_{15,T} = 0$$

5863804 TANK ASSY, AFT

PART 6 CONE

$X_7' = \bar{X}_2'$

$X_8' = -\bar{X}_1'$

$X_{15}' = \bar{X}_4'$

$X_{16}' = -\bar{X}_3'$

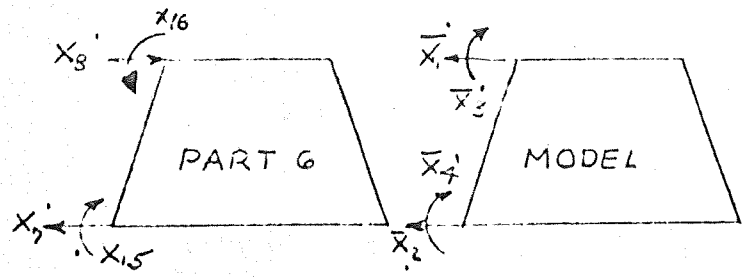

$$\delta^6_{7,7} = +\bar{\delta}^6_{2,2}$$

$$\delta^6_{7,8} = -\bar{\delta}^6_{2,1}$$

$$\delta^6_{7,15} = +\bar{\delta}^6_{2,4}$$

$$\delta^6_{7,16} = -\bar{\delta}^6_{2,3}$$

$$\delta^6_{7,T} = \alpha \Delta T_6 R \sin\alpha$$

$$\delta^6_{7,P} = \frac{P_6 R(1-\nu) R \sin\alpha}{2 E_6 t_6}$$

$$\delta^6_{8,7} = -\bar{\delta}^6_{1,2}$$

$$\delta^6_{8,8} = +\bar{\delta}^6_{1,1}$$

$$\delta^6_{8,15} = -\bar{\delta}^6_{1,4}$$

$$\delta^6_{8,16} = +\bar{\delta}^6_{1,3}$$

$$\delta^6_{8,T} = -\alpha \Delta T_6 R \sin\alpha$$

$$\delta^6_{8,P} = \frac{-P_6 R(1-\nu) R \sin\alpha}{2 E_6 t_6}$$

$$\delta^6_{15,7} = +\bar{\delta}^6_{4,2}$$

$$\delta^6_{15,8} = -\bar{\delta}^6_{4,1}$$

$$\delta^6_{15,15} = +\bar{\delta}^6_{4,4}$$

$$\delta^6_{15,16} = -\bar{\delta}^6_{4,3}$$

$$\delta^6_{15,T} = 0$$

$$\delta^6_{15,P} = 0$$

$$\delta^6_{16,7} = -\bar{\delta}^6_{3,2}$$

$$\delta^6_{16,8} = +\bar{\delta}^6_{3,1}$$

$$\delta^6_{16,15} = -\bar{\delta}^6_{3,4}$$

$$\delta^6_{16,16} = +\bar{\delta}^6_{3,3}$$

$$\delta^6_{16,T} = 0$$

$$\delta^6_{16,P} = 0$$

PART 7 CONE

5863804 TANK ASSY, AFT

$x_8 = +\bar{x}_2$

$x_9 = -\bar{x}_1$

$x_{16} = +\bar{x}_4$

$x_{17} = -\bar{x}_3$

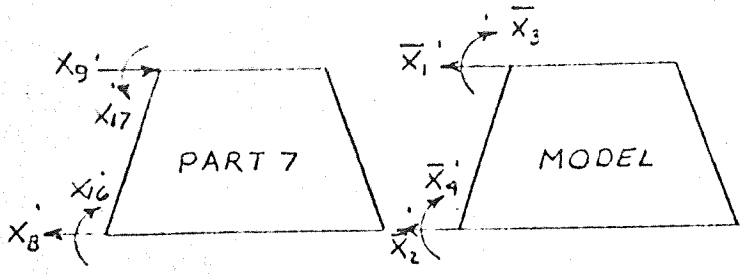

$\delta^7_{8,8} = +\bar{\delta}^7_{2,2}$

$\delta^7_{8,9} = -\bar{\delta}^7_{2,1}$

$\delta^7_{8,16} = +\bar{\delta}^7_{2,4}$

$\delta^7_{8,17} = -\bar{\delta}^7_{2,3}$

$\delta^7_{8,T} = \alpha \Delta T_7 R \sin\alpha$

$\delta^7_{8,P} = \dfrac{PR(1-\nu)R\sin\alpha}{2E_7 t_7}$

$\delta^7_{9,8} = -\bar{\delta}^7_{1,2}$

$\delta^7_{9,9} = +\bar{\delta}^7_{1,1}$

$\delta^7_{9,16} = -\bar{\delta}^7_{1,4}$

$\delta^7_{9,17} = +\bar{\delta}^7_{1,3}$

$\delta^7_{9,T} = -\alpha \Delta T_7 R \sin\alpha$

$\delta^7_{9,P} = -\dfrac{PR(1-\nu)R\sin\alpha}{2E_7 t_7}$

$\delta^7_{16,8} = +\bar{\delta}^7_{4,2}$

$\delta^7_{16,9} = -\bar{\delta}^7_{4,1}$

$\delta^7_{16,16} = +\bar{\delta}^7_{4,4}$

$\delta^7_{16,17} = -\bar{\delta}^7_{4,3}$

$\delta^7_{16,T} = 0$

$\delta^7_{16,P} = 0$

$\delta^7_{17,8} = -\bar{\delta}^7_{3,2}$

$\delta^7_{17,9} = +\bar{\delta}^7_{3,1}$

$\delta^7_{17,16} = -\bar{\delta}^7_{3,4}$

$\delta^7_{17,17} = +\bar{\delta}^7_{3,3}$

$\delta^7_{17,T} = 0$

$\delta^7_{17,P} = 0$

5863804 TANK ASSY, AFT

PART 8

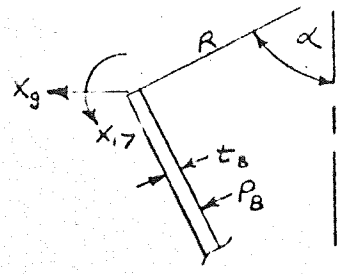

$$\lambda_8 = \sqrt{3(1-\nu^2)\left(\frac{R}{t_8}\right)^2}$$

$$K_1 = 1 - \frac{1-2\nu}{2\lambda}\cot\alpha$$

$$K_2 = 1 - \frac{1-2\nu}{2\lambda}\cot\alpha$$

$$\delta^8_{9,9} = \frac{X_9 R \lambda_8 \sin^2\alpha}{E_8 t_8}\left(\frac{1}{K_1} + K_2\right)$$

$$\delta^8_{9,17} = X_{17}\frac{2\lambda_8^2 \sin\alpha}{E_8 t_8 K_1}$$

$$\delta^8_{9,T} = \alpha \Delta T_8 R \sin\alpha$$

$$\delta^8_{9,P} = \frac{P_8 R^2(1-\nu)}{2E_8 t_8}\sin\alpha$$

$$\delta^8_{17,9} = \frac{X_9 2\lambda_8^2 \sin\alpha}{E_8 t_8 K_1} = \delta^8_{9,17}$$

$$\delta^8_{17,17} = \frac{4\lambda_8^3 X_{17}}{E_8 t_8 R K_1}$$

$$\delta^8_{17,P_8} = \delta^8_{17,T_8} = 0$$

5863804 TANK ASSY, AFT

PART 9

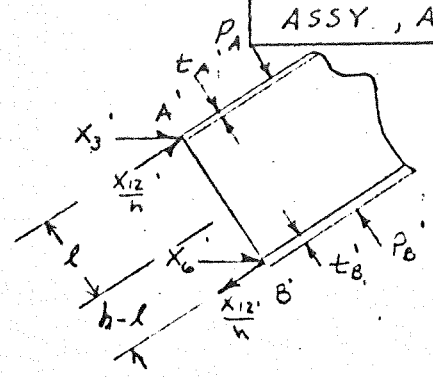

$$\Sigma = \frac{+(\alpha_A \Delta T_A - \alpha_B \Delta T_B) - \frac{h}{R}\alpha_c t_c}{\frac{R}{2}\left(\frac{1}{t_A E_A} + \frac{1}{t_B E_B}\right)(1-\nu) + \frac{h}{E_c R}}$$

$$h = \frac{t_A + t_B}{2} + t_c$$

$$N_{12} = \frac{\Sigma R}{2} \quad ; \quad M_\phi = -N_{12} h$$

$$\lambda_F = 1 - \nu_F^2$$

$$E_F = \frac{t_A E_A + t_B E_B}{t_A + t_B} \quad ; \quad H = E_f (t - t_c)$$

$$D = \frac{E_F t_{F_1} t_{F_2} (t + t_c)^2}{4 \lambda_F (t - t_c)} = \frac{E_F (t_c)^3}{12 \lambda_F}$$

$$t_c = \sqrt[3]{\frac{3 t_{F_1} t_{F_2} (t + t_c)^2}{t - t_c}}$$

$$\beta = \sqrt[4]{3(1-\nu^2)\left(\frac{R}{t_c}\right)^2}$$

$$K_1 = 1 - \frac{1-2\nu}{2\beta} \cot(\phi - \omega)$$

$$K_2 = 1 - \frac{1-2\nu}{2\beta} \cot(\phi - \omega)$$

$$\lambda = \sqrt[4]{\frac{3(1-\nu^2)}{R^2 t_c^2}}$$

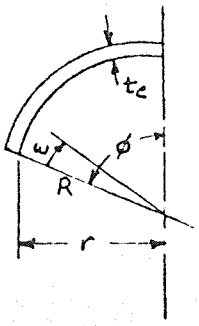

$$\delta_{3,3}^{9} = \frac{X_3}{E_F t_c} \beta R \sin^2\phi \left(K_2 + \frac{1}{K_1}\right)$$

$$\delta_{3,6}^{9} = \frac{X_6}{E_F t_c} \beta R \sin^2\phi \left(K_2 + \frac{1}{K_1}\right)$$

$$\delta_{3,12}^{9} = -\frac{X_{12}}{E_F t_c}\left(\frac{2\beta^2 \sin\phi}{K_1}\right) + \frac{X_{12}\, \ell \cos\phi}{E_F t_c}\left(\frac{4\beta^3}{R K_1}\right)$$

58638.04 TANK ASSY, AFT

PART 9

$$\delta^9_{3,T} = -r\,\frac{\alpha\Delta T_A\, t_A + \alpha\Delta T_B\, t_B}{t_A + t_B}$$

$$\delta^9_{3,P} = -\frac{pR^2(1-\nu)}{2E_F t_F}\sin\phi = -\delta^9_{3,P_A}$$

$$\delta^9_{6,3} = \delta^9_{3,6}$$

$$\delta^9_{6,6} = \frac{X_6}{E_F t_c} BR\sin^2\phi\left(K_2 + \frac{1}{K_1}\right)$$

$$\delta^9_{6,12} = -\frac{X_{12}}{E_F t_c}\left(\frac{2B^2\sin\phi}{K_1}\right) - \frac{X_{12}(h-\ell)\cos\phi}{E_F t_c}\left(\frac{4B^3}{RK_1}\right)$$

$$\delta^9_{6,T} = \delta^9_{3,T}$$

$$\delta^9_{6,P} = \frac{pR^2(1-\nu)}{2E_F t_F}\sin\phi$$

$$\delta^9_{12,3} = \delta^9_{3,12}$$

$$\delta^9_{12,6} = \delta^9_{6,12}$$

$$\delta^9_{12,12} = \frac{4X_{12}B^3}{E_F t_c R K_1}$$

$$\delta^9_{12,T} = \frac{M\phi}{E_F t_c}\left(\frac{4B^3}{RK_1}\right)$$

$$\delta^9_{12,P} = 0$$

SM42569

THRUST STRUCTURE – AFT DOME JOINT
DISCONTINUITY ANALYSIS

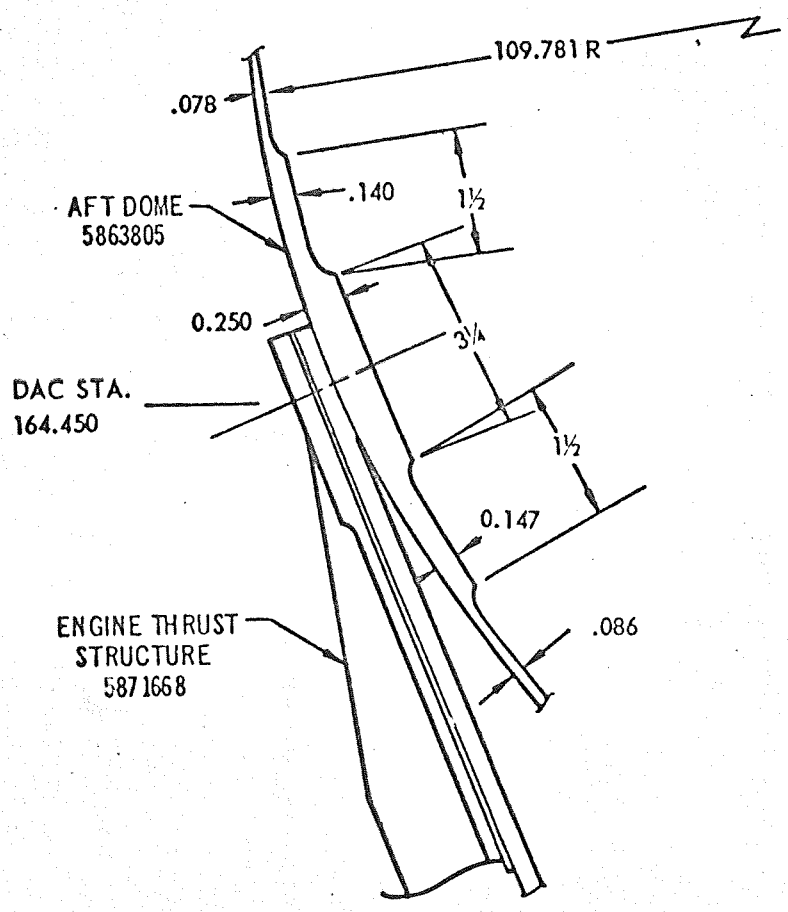

SM42569

AFT DOME-THRUST STRUCTURE JOINT

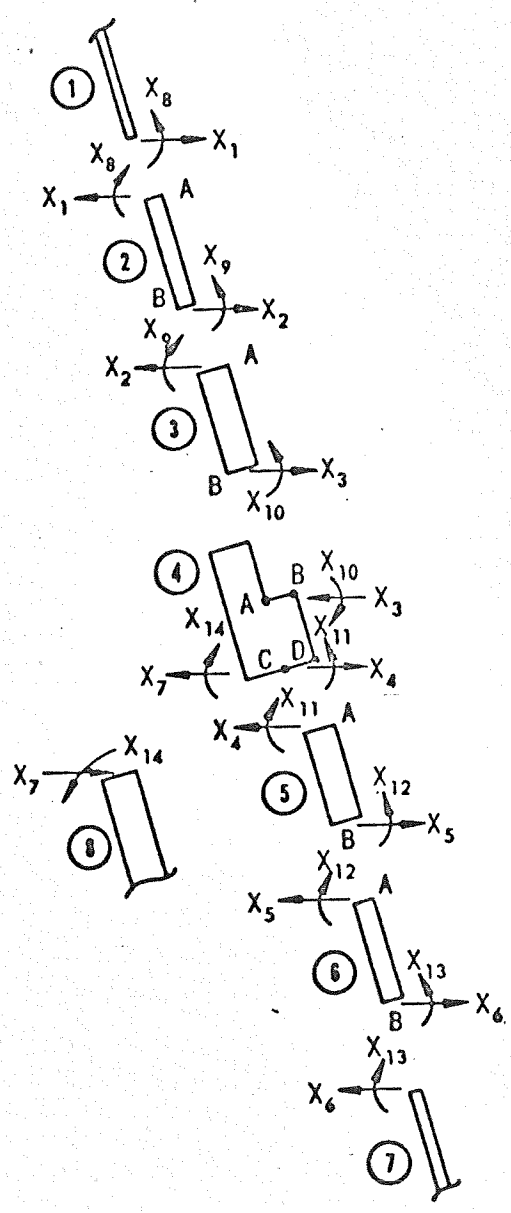

5871668 THRUST STRUCTURE INST'L

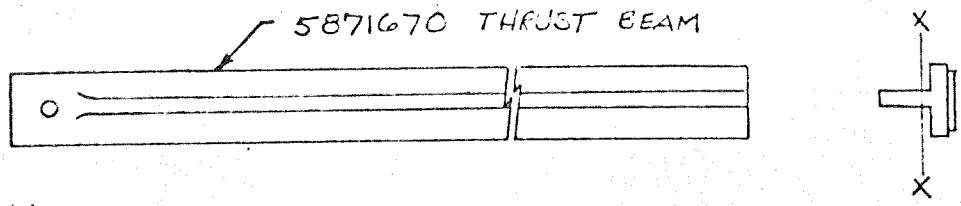

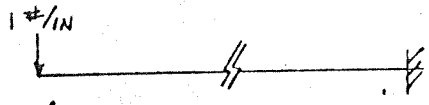

$I_{xx} = .0515$

$L = 28.7$

$T = -298$

$E = 11.6(10^6)$

$\alpha\Delta T = -380(10^{-5})$

$$\delta = \frac{wL^3}{3EI} = \frac{28.7^3\,10^{-6}}{3(11.6)(.0515)} = 1.3190 \times 10^{-2}$$

$$\theta = \frac{28.7^2(.5)}{11.6(.0515)10^6} = .0689 \times 10^{-2}$$

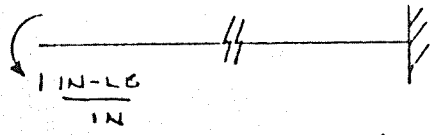

$$\theta = \frac{1(28.7)(10^{-6})}{11.6(.0515)} = .0048 \times 10^{-2}$$

$$\delta = \frac{28.7^2(10^{-6})}{2(11.6)(.0515)} = .0689 \times 10^{-2}$$

5871668 THRUST STRUCTURE INSTL

PART I

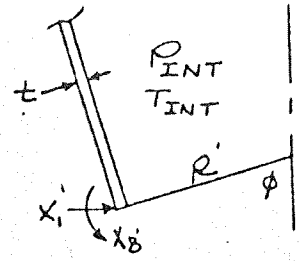

$$\delta_{1,1} = \frac{X_1}{Et} BR\sin^2\phi \left(K_2 + \frac{1}{K_1}\right)$$

$$\delta_{1,8} = \frac{X_8}{Et}\left(\frac{2B^2 \sin\phi}{K_1}\right)$$

$$\delta_{1,T} = -\alpha_1 \Delta T R \sin\phi$$

$$\delta_{1,P} = -\frac{PR^2(1-\mu)\sin\phi}{2Et}$$

$$\delta_{8,1} = \delta_{1,8}$$

$$\delta_{8,8} = \frac{X_8}{Et}\left(\frac{4B^3}{RK_1}\right)$$

$\phi = 56°27'$; $R = 109.742$

$$B = \left[3(1-\mu^2)\frac{R^2}{t^2}\right]^{1/4}$$

$$K_1 = 1 - \frac{1-2\mu}{2B}\cot\phi$$

$$K_2 = 1 - \frac{1+2\mu}{2B}\cot\phi$$

587,668 THRUST STRUCTURE INSTL

PART 2

$X_1 = +\bar{X}_2'$
$X_2 = -\bar{X}_1'$
$X_8 = -\bar{X}_4'$
$X_9 = +\bar{X}_3'$

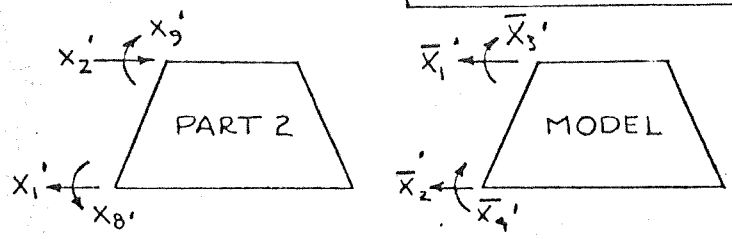

$\delta^2_{1,1} = +\bar{\delta}_{2,2}'$

$\delta^2_{1,2} = -\bar{\delta}_{2,1}'$

$\delta^2_{1,8} = -\bar{\delta}_{2,4}'$

$\delta^2_{1,9} = +\bar{\delta}_{2,3}'$

$\delta^2_{1,P} = \dfrac{PR^2(1-\mu)\sin\phi}{2Et}$

$\delta^2_{1,T} = \alpha\Delta T R \sin\phi$

$\delta^2_{8,1} = -\bar{\delta}_{4,2}'$

$\delta^2_{8,2} = +\bar{\delta}_{4,1}'$

$\delta^2_{8,8} = +\bar{\delta}_{4,4}'$

$\delta^2_{8,9} = -\bar{\delta}_{4,3}'$

$\delta^2_{8,P} = 0$

$\delta^2_{8,T} = 0$

$\delta^2_{2,1} = -\bar{\delta}_{1,2}'$

$\delta^2_{2,2} = +\bar{\delta}_{1,1}'$

$\delta^2_{2,8} = +\bar{\delta}_{1,4}'$

$\delta^2_{2,9} = -\bar{\delta}_{1,3}'$

$\delta^2_{2,P} = -\delta^2_{1,P}$

$\delta^2_{2,T} = -\delta^2_{1,T}$

$\delta^2_{9,1} = +\bar{\delta}_{3,2}'$

$\delta^2_{9,2} = -\bar{\delta}_{3,1}'$

$\delta^2_{9,8} = -\bar{\delta}_{3,4}'$

$\delta^2_{9,9} = +\bar{\delta}_{3,3}'$

$\delta^2_{9,P} = 0$

$\delta^2_{9,T} = 0$

$R_1 = 90.596'$ $\quad R = 109.711'$

$R_2 = 91.433'$ $\quad \phi = 56°4''$

$\Delta Z = 1.245'$

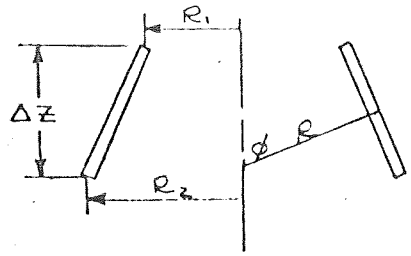

5871668 THRUST STRUCTURE INSTL

PART 3

$X_2 = +\bar{X}_2'$

$X_3 = -\bar{X}_1'$

$X_9 = -\bar{X}_4'$

$X_{10} = +\bar{X}_3'$

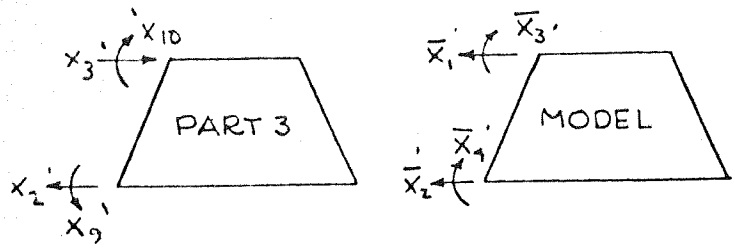

$$\delta^3_{2,2} = +\bar{\delta}_{2,2}'$$
$$\delta^3_{2,3} = -\bar{\delta}_{2,1}'$$
$$\delta^3_{2,9} = -\bar{\delta}_{2,4}'$$
$$\delta^3_{2,10} = +\bar{\delta}_{2,3}'$$
$$\delta^3_{2,P} + \frac{PR^2(1-\mu)\sin\phi}{2Et}$$
$$\delta^3_{2,T} = +\alpha\Delta T R \sin\phi$$

$$\delta^3_{9,2} = -\bar{\delta}_{4,2}'$$
$$\delta^3_{9,3} = +\bar{\delta}_{4,1}'$$
$$\delta^3_{9,9} = +\bar{\delta}_{4,4}'$$
$$\delta^3_{9,10} = -\bar{\delta}_{4,3}'$$
$$\delta^3_{9,P} = 0$$
$$\delta^3_{9,T} = 0$$

$$\delta^3_{3,2} = -\bar{\delta}_{1,2}'$$
$$\delta^3_{3,3} = +\bar{\delta}_{1,1}'$$
$$\delta^3_{3,9} = +\bar{\delta}_{1,4}'$$
$$\delta^3_{3,10} = -\bar{\delta}_{1,3}'$$
$$\delta^3_{3,P} = -\delta^3_{2,P}'$$
$$\delta^3_{3,T} = -\delta^3_{2,T}'$$

$$\delta^3_{10,2} = +\bar{\delta}_{3,2}'$$
$$\delta^3_{10,3} = -\bar{\delta}_{3,1}'$$
$$\delta^3_{10,9} = -\bar{\delta}_{3,4}'$$
$$\delta^3_{10,10} = +\bar{\delta}_{3,3}'$$
$$\delta^3_{10,P} = 0$$
$$\delta^3_{10,T} = 0$$

$R = 109.656$
$\phi = 55°18''$
$R_1 = 89.668'$
$R_2 = 90.447'$
$\Delta Z = 1.117'$

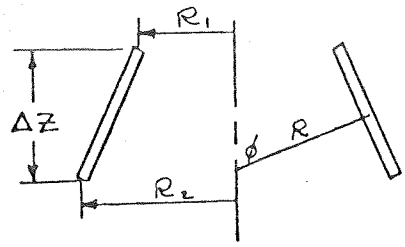

5871668 THRUST STRUCTURE INSTL

PART 4

N^1 = THRUST LOAD

N^2 = PRESSURE LOAD

N^3 = RESULTANT

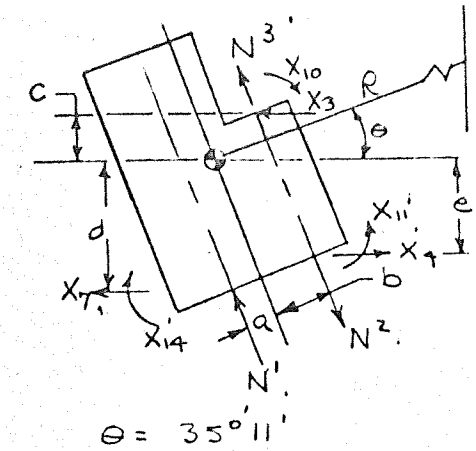

$\theta = 35°11'$

$a = .086$
$b = .217'$
$c = .219'$
$d = .364$
$e = .189'$
$r = R \cos 35°11' = 89.797'$

$$\delta_{3,3} = \left(\frac{r^2}{EA} + \frac{c^2 r^2}{EI}\right) X_3$$

$$\delta_{3,4} = \left(-\frac{r^2}{EA} + \frac{c e r^2}{EI}\right) X_4$$

$$\delta^4_{3,T} = \alpha \Delta T R \sin\theta$$

$$\delta_{3,7} = \left(+\frac{r^2}{EA} - \frac{c d r^2}{EI}\right) X_7$$

$$\delta_{3,10} = -\frac{c r^2}{EI} X_{10}$$

$$\delta_{3,11} = +\frac{c r^2}{EI} X_{11}$$

$$\delta_{3,14} = -\frac{c r^2}{EI} X_{14}$$

$$\delta_{3,N^3} = \frac{N^3 \sin\theta r^2}{EA} + \frac{N^3 b c r^2}{EI}$$

$$\delta_{3,N^2} = -\frac{N^2 \sin\theta r^2}{EA} - \frac{N^2 b c r^2}{EI}$$

$$\delta_{3,N^1} = \frac{N^1 \sin\theta r^2}{EA} - \frac{N^1 a c r^2}{EI}$$

5871668 THRUST STRUCTURE INSTL

$$\delta_{4,3}' = \delta_{3,4}'$$

$$\delta_{4,4} = \left[\frac{r'^2}{E'A'} + \frac{e'^2 r'^2}{E'I'}\right] X_4'$$

$$\delta_{4,7} = \left[-\frac{r'^2}{E'A'} - \frac{d'e'r'^2}{E'I'}\right] X_7'$$

$$\delta_{4,10} = -\frac{e'r'^2}{E'I'} X_{10}'$$

$$\delta_{4,11} = +\frac{e'r'^2}{E'I'} X_{11}'$$

$$\delta_{4,14} = -\frac{e'r'^2}{E'I'} X_{14}'$$

$$\delta_{4,N^3} = -\frac{N^3 \sin\theta\, r'^2}{E'A'} + \frac{N^3 b e' r'^2}{E'I'}$$

$$\delta_{4,N^2} = +\frac{N^2 \sin\theta\, r'^2}{E'A'} - \frac{N^2 b e' r'^2}{E'I'}$$

$$\delta_{4,N^1} = -\frac{N^1 \sin\theta\, r'^2}{E'A'} - \frac{N^1 a e' r'^2}{E'I'}$$

$$\delta_{4,T} = -\alpha \Delta T R \cos\theta$$

5871668 THRUST STRUCTURE INSTL

$$\delta_{7,3}' = \delta_{3,7}'$$

$$\delta_{7,4}' = \delta_{4,7}'$$

$$\delta_{7,7} = \left(\frac{r^{2'}}{E'A'} + \frac{d^2 r^{2'}}{E'I'}\right) X_7'$$

$$\delta_{7,10} = \frac{+d' r^{2'}}{E'I'} X_{10}'$$

$$\delta_{7,11} = \frac{-d' r^{2'}}{E'I'} X_{11}'$$

$$\delta_{7,14} = \frac{+d' r^{2'}}{E'I'} X_{14}'$$

$$\delta_{7,N^3} = + \frac{N^{3'} \sin\theta\, r^{2'}}{E'A'} - \frac{b d' r^{2'} N^{3'}}{E'I'}$$

$$\delta_{7,N^2} = - \frac{N^{2'} \sin\theta\, r^{2'}}{E'A'} + \frac{b d' r^{2'} N^{2'}}{E'I'}$$

$$\delta_{7,N^1} = + \frac{N^{1'} \sin\theta\, r^{2'}}{E'A'} + \frac{d' a' r^{2'} N^{1'}}{E'I'}$$

$$\delta_{7,T} = \alpha' \Delta T' r'$$

5871668 THRUST STRUCTURE INSTL

$$\delta_{10,3} = \delta_{3,10}'$$

$$\delta_{10,4} = \delta_{4,10}'$$

$$\delta_{10,7} = \delta_{7,10}'$$

$$\delta_{10,10} = \frac{X_{10}' r^2}{EI'}$$

$$\delta_{10,11} = -\frac{X_{11}' r^2}{EI'}$$

$$\delta_{10,14} = \frac{X_{14}' r^2}{EI'}$$

$$\delta_{10,N^3} = -\frac{N^3 b' r^2}{EI'}$$

$$\delta_{10,N^2} = \frac{N^2 b' r^2}{EI'}$$

$$\delta_{10,N^1} = \frac{N^1 a' r^2}{EI'}$$

$$\delta_{11,3} = \delta_{3,11}'$$

$$\delta_{11,4} = \delta_{4,11}'$$

$$\delta_{11,7} = \delta_{7,11}'$$

$$\delta_{11,10} = \delta_{10,11}'$$

$$\delta_{11,11} = \frac{X_{11}' r^2}{EI'}$$

$$\delta_{11,14} = -\frac{X_{14}' r^2}{EI'}$$

$$\delta_{11,N^3} = \frac{N^3 b' r^2}{EI'}$$

$$\delta_{11,N^2} = -\frac{N^2 b' r^2}{EI'}$$

$$\delta_{11,N^1} = -\frac{N^1 a' r^2}{EI'}$$

$$\delta_{14,3} = \delta_{3,14}'$$

$$\delta_{14,4} = \delta_{4,14}'$$

$$\delta_{14,7} = \delta_{7,14}'$$

$$\delta_{14,10} = \delta_{10,11}'$$

$$\delta_{14,11} = \delta_{11,14}'$$

$$\delta_{14,14} = \frac{X_{14}' r^2}{EI'}$$

$$\delta_{14,N^3} = -\frac{N^3 b' r^2}{EI'}$$

$$\delta_{14,N^2} = +\frac{N^2 b' r^2}{EI'}$$

$$\delta_{14,N^1} = +\frac{N^1 a' r^2}{EI'}$$

5871668 THRUST STRUCTURE INSTL

PART 5

$X_4 = +\bar{X}_2$

$X_5 = -\bar{X}_1$

$X_{11} = -\bar{X}_4$

$X_{12} = +\bar{X}_3$

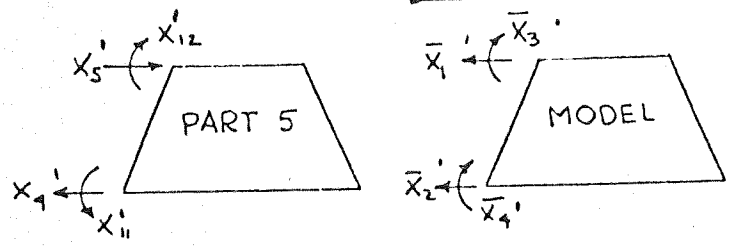

$\delta_{4,4} = +\bar{\delta}_{2,2}$

$\delta_{4,5} = -\bar{\delta}_{2,1}$

$\delta_{4,11} = -\bar{\delta}_{2,4}$

$\delta_{4,12} = +\bar{\delta}_{2,3}$

$\delta_{4,P} = \dfrac{PR^2(1-\mu)\sin\phi}{2Et}$

$\delta_{4,T} = \alpha \Delta T R \sin\phi$

$\delta_{11,4} = -\bar{\delta}_{4,2}$

$\delta_{11,5} = +\bar{\delta}_{4,1}$

$\delta_{11,11} = +\bar{\delta}_{4,4}$

$\delta_{11,12} = -\bar{\delta}_{4,3}$

$\delta_{11,P} = 0$

$\delta_{11,T} = 0$

$\delta_{5,4} = -\bar{\delta}_{1,2}$

$\delta_{5,5} = +\bar{\delta}_{1,1}$

$\delta_{5,11} = +\bar{\delta}_{1,4}$

$\delta_{5,12} = -\bar{\delta}_{1,3}$

$\delta_{5,P} = -\delta_{4,P}$

$\delta_{5,T} = -\delta_{4,T}$

$\delta_{12,4} = +\bar{\delta}_{3,2}$

$\delta_{12,5} = -\bar{\delta}_{3,1}$

$\delta_{12,11} = -\bar{\delta}_{3,4}$

$\delta_{12,12} = +\bar{\delta}_{3,3}$

$\delta_{12,P} = 0$

$\delta_{12,T} = 0$

$R = 109.656$

$\phi = 54°20'$

$R_1 = 88.687$

$R_2 = 89.488$

$\Delta Z = 1.117$

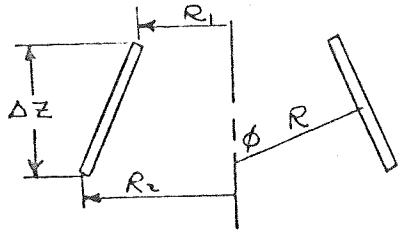

PART 6

5871668 THRUST STRUCTURE INSTL

$X_5 = +\bar{X}_2'$

$X_6 = -\bar{X}_1'$

$X_{12} = -\bar{X}_4'$

$X_{13} = +\bar{X}_3'$

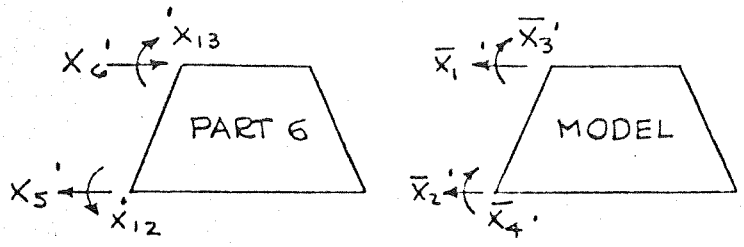

$\delta_{5,5} = +\bar{\delta}_{2,2}'$

$\delta_{5,6} = -\bar{\delta}_{2,1}'$

$\delta_{5,12} = -\bar{\delta}_{2,4}'$

$\delta_{5,13} = +\bar{\delta}_{2,3}'$

$\delta_{5,P} = \dfrac{PR^2(1-\mu)\sin\phi}{2Et}$

$\delta_{5,T} = \alpha\Delta T R \sin\phi$

$\delta_{12,5} = -\bar{\delta}_{4,2}'$

$\delta_{12,6} = +\bar{\delta}_{4,1}'$

$\delta_{12,12} = +\bar{\delta}_{4,4}'$

$\delta_{12,13} = -\bar{\delta}_{4,3}'$

$\delta_{12,T} = 0'$

$\delta_{12,P} = 0'$

$\delta_{6,5} = -\bar{\delta}_{1,2}'$

$\delta_{6,6} = +\bar{\delta}_{1,1}'$

$\delta_{6,12} = +\bar{\delta}_{1,4}'$

$\delta_{6,13} = -\bar{\delta}_{1,3}'$

$\delta_{6,P} = -\delta_{5,P}'$

$\delta_{6,T} = -\delta_{5,T}'$

$\delta_{13,5} = +\bar{\delta}_{3,2}'$

$\delta_{13,6} = -\bar{\delta}_{3,1}'$

$\delta_{13,12} = -\bar{\delta}_{3,4}'$

$\delta_{13,13} = +\bar{\delta}_{3,3}'$

$\delta_{13,P} = 0'$

$\delta_{13,T} = 0'$

$R = 109.708''$

$\phi = 53°34''$

$R_1 = 87.821'$

$R_2 = 86.711'$

$\Delta Z = 1.2068'$

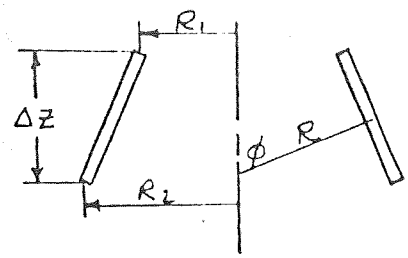

5871668 THRUST STRUCTURE INSTL

PART 7

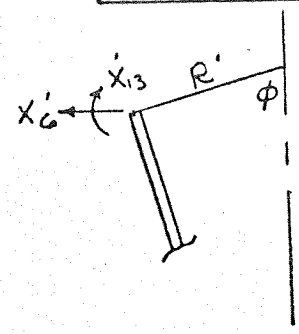

$$\delta^7_{6,6} = -\frac{X_6}{Et} \beta R \sin^2\phi \left(K_2 + \frac{1}{K_1}\right)$$

$$\delta^7_{6,13} = \frac{2\beta^2 \sin\phi}{Et K_1} X_{14}$$

$$\delta^7_{6,P} = \frac{PR^2(1-\mu)\sin\phi}{2Et}$$

$$\delta^7_{6,T} = \alpha \Delta T R \sin\phi$$

$$\delta^7_{13,6} = \delta^7_{6,13}$$

$$\delta^7_{13,13} = \frac{4\beta^3 X_{13}}{EtRK_1}$$

$R = 109.738'$

$\phi = 53°11'$

$$\beta = \left[3(1-\mu^2)\left(\frac{R}{t}\right)^2\right]^{1/4}$$

$$K_1 = 1 - \frac{1-2\mu}{2\beta}\cot\phi$$

$$K_2 = 1 - \frac{1+2\mu}{2\beta}\cot\phi$$

5871668 THRUST STRUCTURE INSTL

PART 8

$$\delta^{8}_{7,7} = 1.3190 \times 10^{-2} X_7'$$

$$\delta^{8}_{7,14} = -.0689 \times 10^{-2} X_{14}'$$

$$\delta^{8}_{14,7} = \delta^{8}_{7,14}$$

$$\delta^{8}_{14,14} = .0048 \times 10^{-2} X_{14}'$$

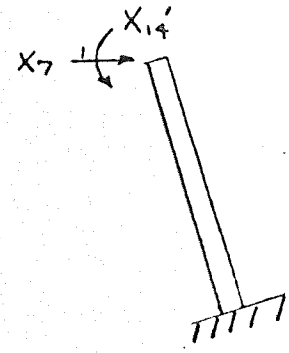

3864247 LH_2 TANK
DOOR INSTL

5863800
STRUCTURE ASSY

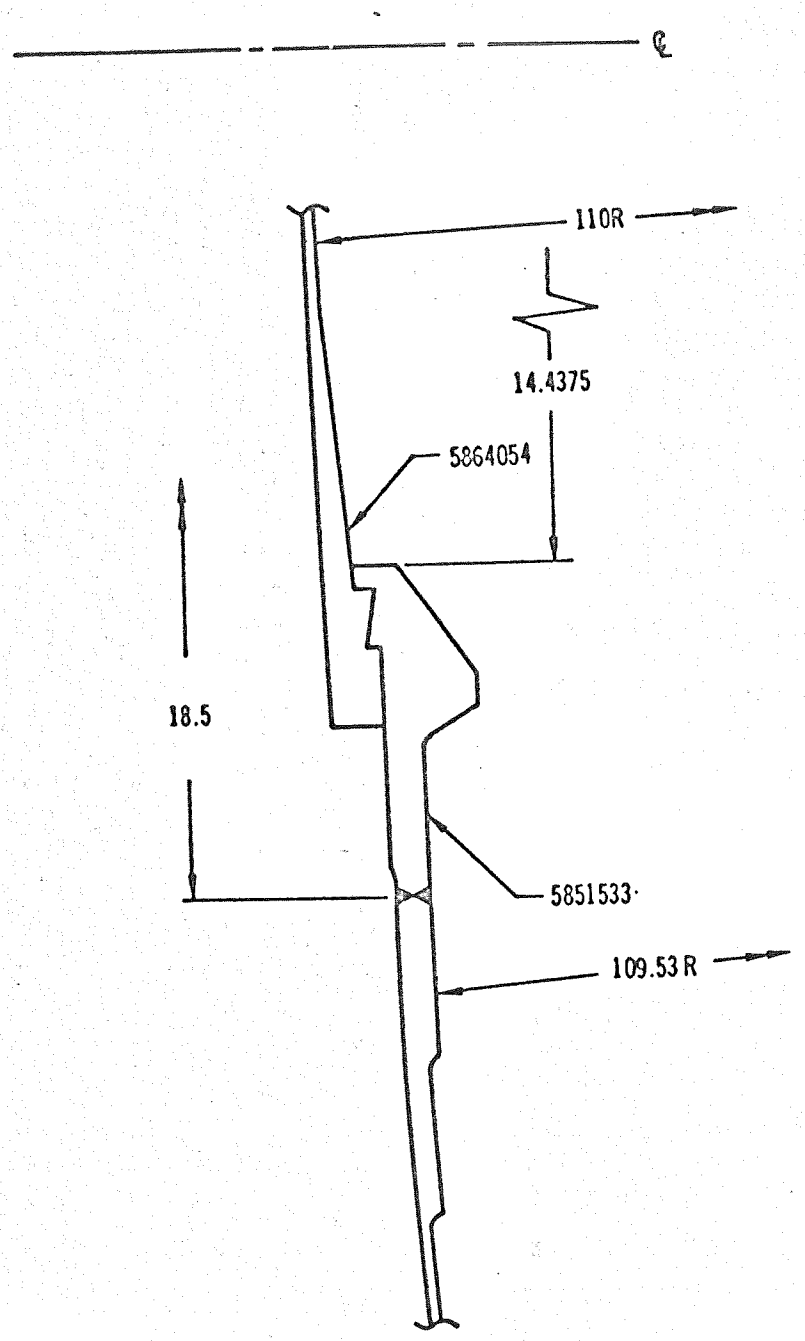

SM42508

5863800
STRUCTURE ASSY

FWD DOME – DOOR JOINT

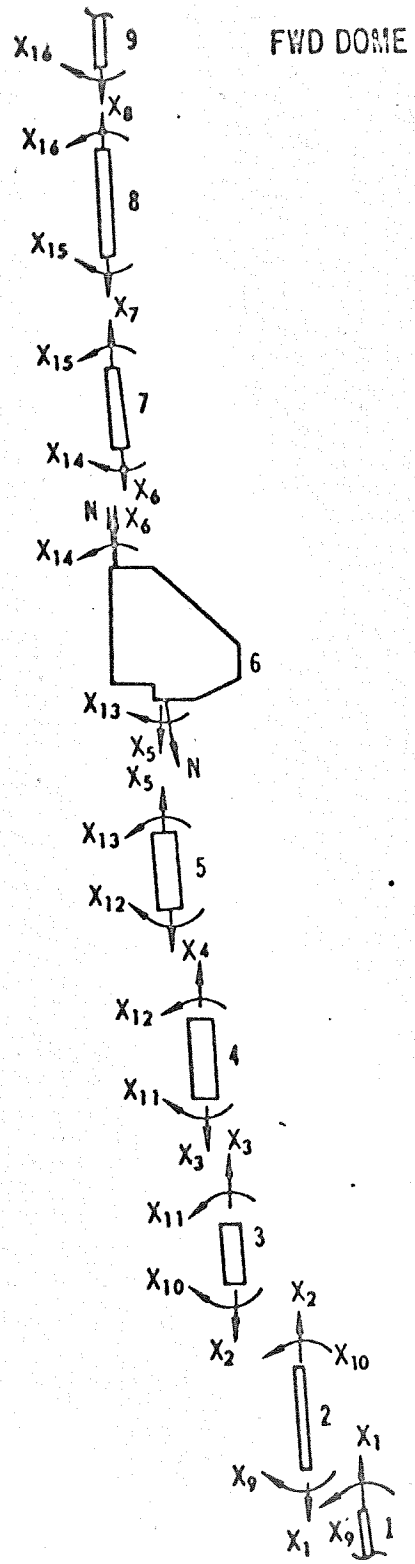

SM42309

5863800
STRUCTURE ASSY

PART 1
SPHERE

$$\beta^4 = 3(1-\nu^2)\frac{R^2}{t^2}$$

$T < 70°$

$$K_1 = 1 + \frac{1-2\nu}{2\beta}\cot\phi$$

$$K_2 = 1 + \frac{1+2\nu}{2\beta}\cot\phi$$

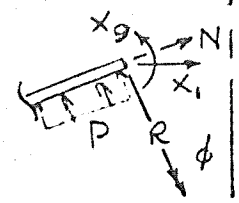

$$\delta_{1,1} = \frac{X_1}{Et}\beta R\sin^2\phi\left(K_2 + \frac{1}{K_1}\right)$$

$$\delta_{1,P} = -\frac{PR^2(1-\nu)}{2Et}\sin\phi$$

$$\delta_{1,9} = -\frac{X_9\, 2\beta^2\sin\phi}{Et K_1}$$

$$\delta_{1,T} = -\alpha\Delta T R\sin\phi$$

$$\delta_{9\,1} = \delta_{1,9}$$

$$\delta_{9,9} = \frac{X_9\, 4\beta^3}{EtRK_1}$$

PART 2
CONE

$$\delta_{11} = +\bar{\delta}_{22}$$

$$\delta_{12} = -\bar{\delta}_{21}$$

$$\delta_{19} = +\bar{\delta}_{24}$$

$$\delta_{1,10} = -\bar{\delta}_{23}$$

$$\delta_{1,P} = \frac{PR^2(1-\nu)}{2Et}\sin\phi$$

$$\delta_{1,T} = +\alpha\Delta T R\sin\phi$$

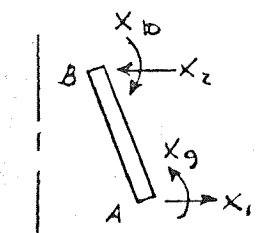

PART

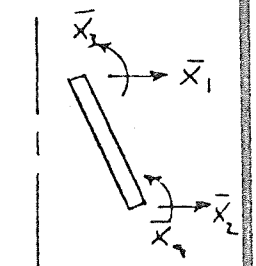

MODEL SAOB PROGRAM

SM 42569

5863800
STRUCTURE ASSY

$\delta_{21} = -\bar{\delta}_{12}$

$\delta_{22} = +\bar{\delta}_{11}$

$\delta_{29} = -\bar{\delta}_{14}$

$\delta_{2,10} = +\bar{\delta}_{13}$

$\delta_{2,P} = -\dfrac{PR^2(1-\nu)}{2Et}\sin\phi$

$\delta_{2,T} = -\alpha\Delta T R \sin\phi$

$\delta_{9,1} = +\bar{\delta}_{42}$	$\delta_{10,1} = -\bar{\delta}_{32}$
$\delta_{9,2} = -\bar{\delta}_{41}$	$\delta_{10,2} = +\bar{\delta}_{31}$
$\delta_{9,9} = +\bar{\delta}_{44}$	$\delta_{10,9} = -\bar{\delta}_{3,4}$
$\delta_{9,10} = -\bar{\delta}_{43}$	$\delta_{10,10} = +\bar{\delta}_{3,3}$

$R_1 = 21.6306$
$R_2 = 30.2515$
$R = 109.75$
$\Delta z = 2.0995$
$t = .057$
$\phi = 14^\circ 6'$

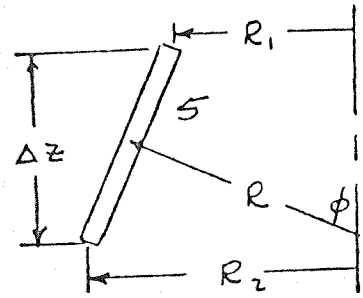

5863800
STRUCTURE ASSY

PART 3

CONE

$\delta_{22} = +\delta_{22}$

$\delta_{23} = -\delta_{21}$

$\delta_{2,10} = +\delta_{24}$

$\delta_{2,11} = -\delta_{23}$

$\delta_{2,P} = \dfrac{PR^2(1-\nu)\sin\phi}{2Et}$

$\delta_{2,T} = \alpha\Delta T R \sin\phi$

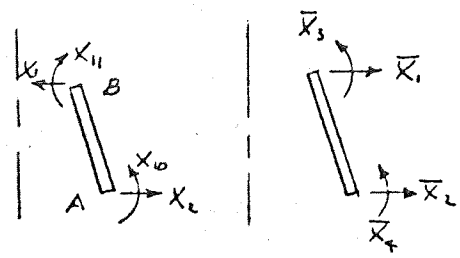

PART MODEL

SA08 PROGRAM

$\delta_{3,2} = -\bar{\delta}_{12}$ $\delta_{3,3} = +\bar{\delta}_{11}$ $\delta_{3,10} = -\bar{\delta}_{14}$ $\delta_{3,11} = +\bar{\delta}_{13}$	$\delta_{3,P} = -\delta_{2,P}$ $\delta_{3,T} = -\delta_{2,T}$
$\delta_{10,2} = +\delta_{42}$ $\delta_{10,3} = -\delta_{41}$ $\delta_{10,10} = +\delta_{44}$ $\delta_{10,11} = -\delta_{43}$	$\delta_{11,2} = -\delta_{32}$ $\delta_{11,3} = +\delta_{31}$ $\delta_{11,10} = -\delta_{34}$ $\delta_{11,11} = +\delta_{33}$

$R_1 = 20.125$

$R_2 = 21.625$

$\Delta Z = .2907$

$t = .125$

$\phi = 10°58'$

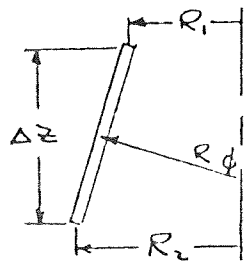

K+E ALBANENE® TRACING PAPER 70083

5863800
STRUCTURE ASSY

PART 4
CONE

$$\delta_{3,3} = +\bar{\delta}_{22}$$
$$\delta_{3,4} = -\bar{\delta}_{21}$$
$$\delta_{3,11} = +\bar{\delta}_{24}$$
$$\delta_{3,12} = -\bar{\delta}_{23}$$
$$\delta_{3,P} = +\frac{PR^2(1-\nu)}{2Et}\sin\phi$$
$$\delta_{3,T} = +\alpha\Delta T R \sin\phi$$

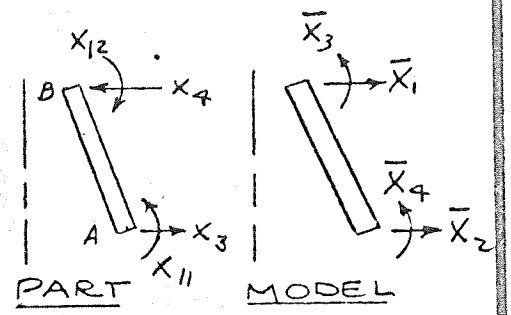

SA08
PROGRAM

$$\delta_{4,3} = -\bar{\delta}_{12}$$
$$\delta_{4,4} = +\bar{\delta}_{11}$$
$$\delta_{4,11} = -\bar{\delta}_{14}$$
$$\delta_{4,12} = +\bar{\delta}_{13}$$
$$\delta_{4,P} = -\delta_{2,P}$$
$$\delta_{4,T} = -\delta_{2,T}$$

$$\delta_{11,3} = +\bar{\delta}_{42}$$
$$\delta_{11,4} = -\bar{\delta}_{41}$$
$$\delta_{11,11} = +\bar{\delta}_{44}$$
$$\delta_{11,12} = -\bar{\delta}_{43}$$

$$\delta_{12,3} = -\bar{\delta}_{32}$$
$$\delta_{12,4} = +\bar{\delta}_{31}$$
$$\delta_{12,11} = -\bar{\delta}_{34}$$
$$\delta_{12,12} = +\bar{\delta}_{33}$$

$R_1 = 18.500$
$R_2 = 20.125$
$R = 109.655$
$\Delta Z = .2909$
$t = .25$
$\phi = 10° 9''$

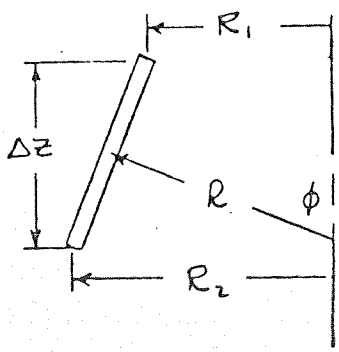

SM42569

K+E ALBANENE® TRACING PAPER 70083

5863800
STRUCTURE ASSY

PART 5
CONE

$$\delta_{4,4} = + \dot{\bar{\delta}}_{22}$$
$$\delta_{4,5} = - \dot{\bar{\delta}}_{21}$$
$$\delta_{4,12} = + \dot{\bar{\delta}}_{24}$$
$$\delta_{4,13} = - \dot{\bar{\delta}}_{23}$$
$$\delta_{4,P} = + \frac{PR^2(1-\nu)}{2Et} \sin\phi$$
$$\delta_{4,T} = + \alpha \Delta T R \sin\phi$$

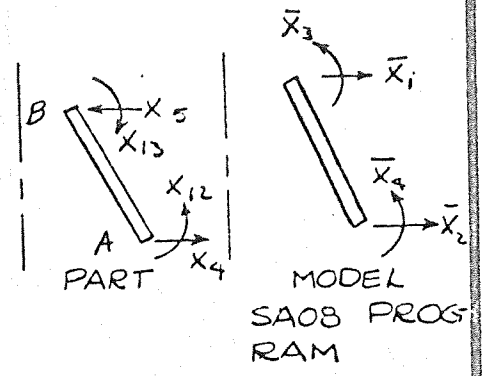

$$\delta_{5,4} = - \dot{\bar{\delta}}_{12}$$
$$\delta_{5,5} = + \dot{\bar{\delta}}_{11}$$
$$\delta_{5,12} = - \dot{\bar{\delta}}_{14}$$
$$\delta_{5,13} = + \dot{\bar{\delta}}_{13}$$
$$\delta_{5,P} = - \dot{\delta}_{3,P}$$
$$\delta_{5,T} = - \dot{\delta}_{3,T}$$

$$\delta_{12,4} = + \dot{\bar{\delta}}_{42}$$
$$\delta_{12,5} = - \dot{\bar{\delta}}_{41}$$
$$\delta_{12,12} = + \dot{\bar{\delta}}_{44}$$
$$\delta_{12,13} = - \dot{\bar{\delta}}_{43}$$

$$\delta_{13,4} = - \dot{\bar{\delta}}_{32}$$
$$\delta_{13,5} = + \dot{\bar{\delta}}_{31}$$
$$\delta_{13,12} = - \dot{\bar{\delta}}_{34}$$
$$\delta_{13,13} = + \dot{\bar{\delta}}_{33}$$

$R_1 = 16.233$
$R_2 = 18.500$
$R = 109.718$
$\Delta Z = .193$
$t = .375$
$\phi = 4° 52'$

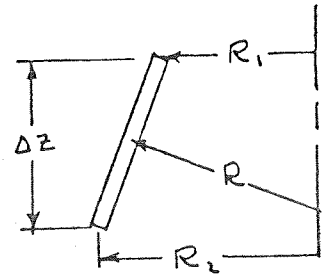

K+E ALBANENE® TRACING PAPER 70983

5863800
STRUCTURE ASSY

PART 6
RING

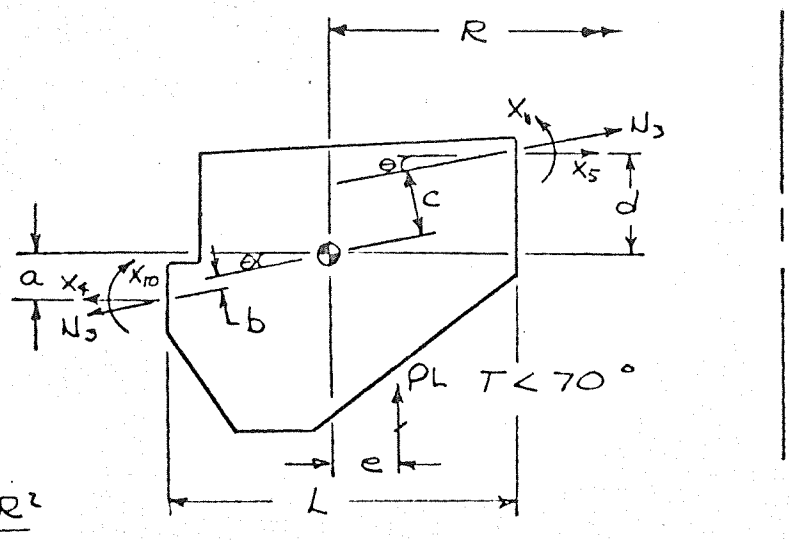

$$\delta_{5,5} = \frac{X_5 R'^2}{EA} + \frac{X_5 a^2 R'^2}{EI}$$

$$\delta_{5,6} = -\frac{X_6 R'^2}{EA} + \frac{X_6 d a R'^2}{EI}$$

$$\delta_{5,13} = + \frac{X_{13} a R'^2}{EI}$$

$$\delta_{5,14} = - \frac{X_{14} a R'^2}{EI}$$

$$\delta_{5,N_3} = + \frac{N_3 a b R'^2}{EI} + \frac{N_3 a c R'^2}{EI}$$

$$\delta_{5,T} = + \alpha \Delta T R' \quad ; \quad \delta_{5,P} = -P_L c \frac{R^2}{EI} a$$

$$\delta_{6,5} = + \delta_{5,6}$$

$$\delta_{6,6} = \frac{X_6 R'^2}{EA} + \frac{X_6 d^2 R'^2}{EI}$$

$$\delta_{6,13} = + \frac{X_{13} d R'^2}{EI}$$

K+E ALBANENE® TRACING PAPER 70889

SM42569

5863800
STRUCTURE ASSY

$$\delta_{6,14} = -\frac{X_{14} d R^2}{EI}$$

$$\delta_{6,N_3} = \frac{N_3\, bd R^2}{EI} + \frac{N_3\, cd R^2}{EI}$$

$$\delta_{6,T} = -\alpha \Delta T R^2 \quad ; \quad \delta_{6,P} = -PL\,de\,\frac{R^2}{EI}$$

$$\delta_{13,5} = \delta_{5,13}$$

$$\delta_{13,6} = \delta_{6,13} \qquad \delta_{13,P} = -PLe\,\frac{R^2}{EI}$$

$$\delta_{13,13} = \frac{X_{13} R^2}{EI}$$

$$\delta_{13,14} = -\frac{X_{14} R^2}{EI}$$

$$\delta_{13,N_3} = \frac{N_3 (b+c) R^2}{EI}$$

$$\delta_{14,5} = \delta_{5,14}$$

$$\delta_{14,6} = \delta_{6,14} \qquad \delta_{14,P} = +PLe\,\frac{R^2}{EI}$$

$$\delta_{14,13} = \delta_{13,14}$$

$$\delta_{14,14} = \frac{X_{14} R^2}{EI}$$

$$\delta_{14,N_3} = -\frac{N_3 (b+c) R^2}{EI}$$

K+E ALBANENE® TRACING PAPER 70983

5863800
STRUCTURE ASSY

PART 7

CONE

$$\delta_{6,6} = +\bar{\delta}_{22}^{\cdot}$$
$$\delta_{6,7} = -\bar{\delta}_{21}^{\cdot}$$
$$\delta_{6,14} = +\bar{\delta}_{24}^{\cdot}$$
$$\delta_{6,15} = -\bar{\delta}_{23}^{\cdot}$$
$$\delta_{6,P} = \frac{PR^2(1-\nu)}{2Et}\sin\phi$$
$$\delta_{6,T} = +\alpha\Delta T R \sin\phi$$

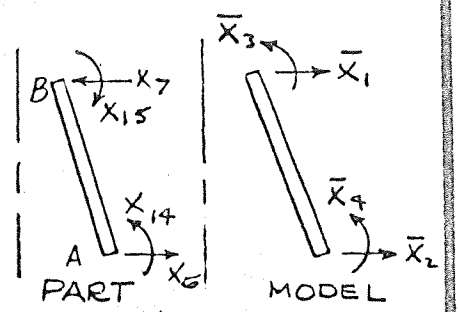

$$\delta_{7,6} = -\bar{\delta}_{12}^{\cdot}$$
$$\delta_{7,7} = +\bar{\delta}_{11}^{\cdot}$$
$$\delta_{7,14} = -\bar{\delta}_{14}^{\cdot}$$
$$\delta_{7,15} = +\bar{\delta}_{13}^{\cdot}$$
$$\delta_{7,P} = -\delta_{5,P}$$
$$\delta_{7,T} = -\delta_{5,T}$$

$$\delta_{14,6} = +\bar{\delta}_{42}^{\cdot}$$
$$\delta_{14,7} = -\bar{\delta}_{41}^{\cdot}$$
$$\delta_{14,14} = +\bar{\delta}_{44}^{\cdot}$$
$$\delta_{14,15} = -\bar{\delta}_{43}^{\cdot}$$

$$\delta_{15,6} = -\bar{\delta}_{32}^{\cdot}$$
$$\delta_{15,7} = +\bar{\delta}_{31}^{\cdot}$$
$$\delta_{15,14} = -\bar{\delta}_{34}^{\cdot}$$
$$\delta_{15,15} = +\bar{\delta}_{33}^{\cdot}$$

$R_1 = 12.2418$
$R_2 = 14.4375$
$R = 110.082$
$\Delta Z = .268$
$t_{AVE} = .164$
$\phi = 6°58'$
$E =$
$E^* = 8.0$

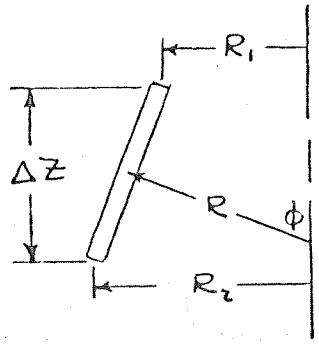

* DENOTES SECANT E, REF P 2.16

K+E ALBANENE® TRACING PAPER 70063

SM42569

5863800
STRUCTURE ASSY

PART 8
CONE

$\delta_{7,7} = +\delta_{22}$

$\delta_{7,8} = -\delta_{21}$

$\delta_{7,15} = +\delta_{29}$

$\delta_{7,16} = -\delta_{23}$

$\delta_{7,P} = \dfrac{PR^2(1-\nu)\sin\phi}{2Et}$

$\delta_{7,T} = \alpha\Delta T R \sin\phi$

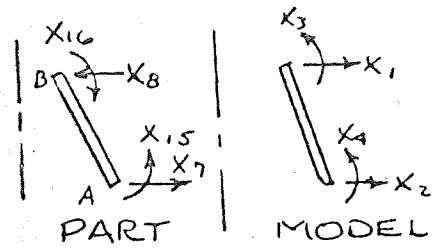

SA08
PROGRAM

$\delta_{87} = -\delta_{12}$

$\delta_{88} = +\delta_{11}$

$\delta_{8,15} = -\delta_{14}$

$\delta_{8,16} = +\delta_{13}$

$\delta_{8,P} = -\delta_{7,P}$

$\delta_{8,T} = -\delta_{7,T}$

$\delta_{15,7} = +\delta_{42}$

$\delta_{15,8} = -\delta_{41}$

$\delta_{15,15} = +\delta_{44}$

$\delta_{15,16} = -\delta_{43}$

$\delta_{16,7} = -\delta_{32}$

$\delta_{16,8} = +\delta_{31}$

$\delta_{16,15} = -\delta_{34}$

$\delta_{16,16} = +\delta_{33}$

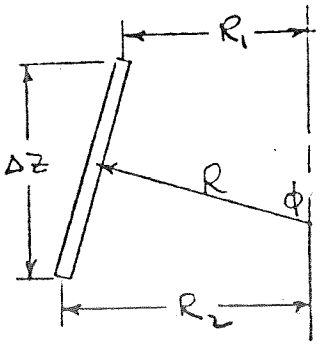

$R_1 = 14.7429$ $\quad \Delta Z = .8417$

$R_2 = 5.7590$ $\quad t = .063$ $\quad E =$

$R = 110.03$ $\quad \phi = 5°21'$ $\quad E^* = 8.0$

* DENOTES SECANT E, REF P 2.16

5863800
STRUCTURE ASSY

PART 9
SPHERE

$$\beta^4 = 3(1-\nu^2)\frac{R^2}{t^2}$$

$$K_1 = 1 - \frac{1-2\nu}{2\beta}\cot\phi$$

$$K_2 = 1 - \frac{1+2\nu}{2\beta}\cot\phi$$

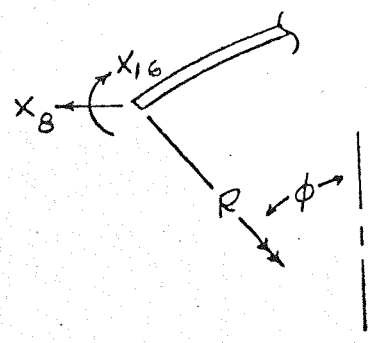

$$\delta_{8,8} = \frac{X_8}{Et}\beta R \sin^2\phi\left(K_2 + \frac{1}{K_1}\right)$$

$$\delta_{8,16} = \frac{X_{16}}{Et}\frac{(2\beta^2 \sin\phi)}{K_1}$$

$$\delta_{8,P} = \frac{PR^2(1-\nu)}{2Et}\sin\phi$$

$$\delta_{8,T} = +\alpha\Delta T R \sin\phi$$

$$\delta_{16,8} = \delta_{8,16}$$

$$\delta_{16,16} = \frac{X_{16}\, 4\beta^3}{Et\, R K_1}$$

SM42569

K+E ALBANENE TRACING PAPER 70083

AFT SUMP INSTALLATION

DWG. NO. 5864042

THE FOLLOWING PAGES PRESENT THE GENERAL RELATIVE DEFLECTION EQUATIONS USED IN THE LOX SUMP ANALYSIS GIVEN ON PAGES 9.3.0 f.f.

REFERENCE PAGE 9.3.4 FOR MATH MODEL.

K+E ALBANENE® TRACING PAPER 71650

5863E00
STRUCTURE ASSY

PART I - SPHERE

$$\beta = \sqrt[4]{3(1-\nu^2)(R/t)^2}$$

$$K_1 = 1 + \frac{1-2\nu}{2\beta}\cot\alpha$$

$$K_2 = 1 + \frac{1+2\nu}{2\beta}\cot\alpha$$

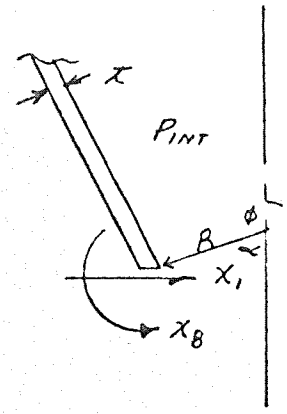

$$\delta'_{1,1} = \frac{\beta R \sin^2\alpha}{Et}\left(K_2 + \frac{1}{K_1}\right) X_1$$

$$\delta'_{1,8} = \frac{2\beta^2 \sin\alpha}{Et K_1} X_8$$

$$\delta'_{1,P} = \frac{-PR^2(1-\nu)\sin\alpha}{2Et}$$

$$\delta'_{1,T} = -\alpha \Delta T R \sin\alpha$$

$$\delta'_{8,1} = \frac{2\beta^2 \sin\alpha}{Et K_1} X_1$$

$$\delta'_{8,8} = \frac{4\beta^3}{Et R K_1} X_8$$

$$\delta'_{8,P} = \delta'_{8,T} = 0$$

K+E ALBANENE® TRACING PAPER 71050

5863800
STRUCTURE ASSY

PART 2 - CONE

$\delta_{11} = +\bar{\delta}_{22}$

$\delta_{12} = -\bar{\delta}_{21}$

$\delta_{18} = -\bar{\delta}_{24}$

$\delta_{19} = +\bar{\delta}_{23}$

$\delta_{1,P} = +\dfrac{R^2 P(1-\nu)}{2Et}\sin\phi$

$\delta_{1,T} = +\alpha \Delta T R \sin\phi$

$X_1 = +\bar{X}_2$

$X_2 = -\bar{X}_1$

$X_8 = -\bar{X}_4$

$X_9 = +\bar{X}_3$

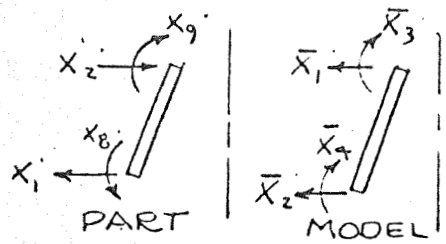

SA08 PROGRAM

$\delta_{21} = -\bar{\delta}_{12}$

$\delta_{22} = +\bar{\delta}_{11}$

$\delta_{28} = +\bar{\delta}_{14}$

$\delta_{29} = -\bar{\delta}_{13}$

$\delta_{2,P} = -\delta_{1,P}$

$\delta_{2,T} = -\delta_{1,T}$

$\delta_{8,1} = -\bar{\delta}_{42}$

$\delta_{8,2} = +\bar{\delta}_{41}$

$\delta_{8,8} = +\bar{\delta}_{44}$

$\delta_{8,9} = -\bar{\delta}_{43}$

$\delta_{9,1} = +\bar{\delta}_{32}$

$\delta_{9,2} = -\bar{\delta}_{31}$

$\delta_{9,8} = -\bar{\delta}_{34}$

$\delta_{9,9} = +\bar{\delta}_{33}$

$R_1 = 24.2806$

$R_2 = 31.6868$

$\Delta Z = 1.9545$

$R\sin\phi = 27.984$

$R = 109.671$

$\phi = 14°47'$

$t = .086$

$E = 11.6 \times 10^6$

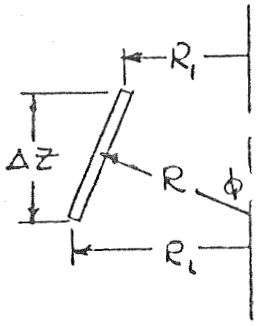

K+E ALBANENE® TRACING PAPER 71050

SM 42569

SM 42569

5863800
STRUCTURE ASSY

PART 3 CONE

$\delta_{2,2} = +\bar{\delta}_{22}$.

$\delta_{2,3} = -\bar{\delta}_{21}$.

$\delta_{2,9} = -\bar{\delta}_{24}$.

$\delta_{2,10} = +\bar{\delta}_{23}$.

$\delta_{2,P} = \dfrac{PR^2(1-\nu)}{2Et} \sin\phi$.

$\delta_{2,T} = +\alpha \Delta T R \sin\phi$ ..

$x_2 = +\bar{x}_2$.

$x_3 = -\bar{x}_1$.

$x_9 = -\bar{x}_4$.

$x_{10} = +\bar{x}_3$ ..

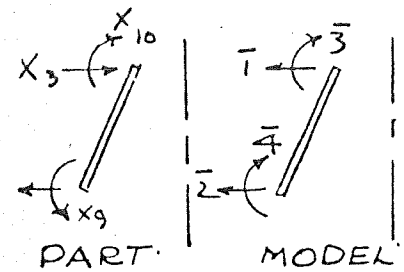

SA08 PROGRAM

$\delta_{3,2} = -\bar{\delta}_{12}$.

$\delta_{3,3} = +\bar{\delta}_{11}$.

$\delta_{3,9} = +\bar{\delta}_{14}$.

$\delta_{3,10} = -\bar{\delta}_{13}$.

$\delta_{3,P} = -\delta_{2,P}$.

$\delta_{3,T} = -\delta_{2,T}$ ..

$\delta_{9,2} = -\bar{\delta}_{42}$.

$\delta_{9,3} = +\bar{\delta}_{41}$.

$\delta_{9,9} = +\bar{\delta}_{44}$.

$\delta_{9,10} = -\bar{\delta}_{43}$ ..

$\delta_{10,2} = +\bar{\delta}_{32}$.

$\delta_{10,3} = -\bar{\delta}_{31}$.

$\delta_{10,9} = -\bar{\delta}_{34}$.

$\delta_{10,10} = +\bar{\delta}_{33}$ ..

$R_1 = 20.3695$.

$R_2 = 24.274$.

$\Delta Z = .8114$.

$R = 109.705$.

$\phi = 11°44'$.

$R \sin\phi = 22.322$.

$t = .147$.

$E = 11.6 \times 10^6$.

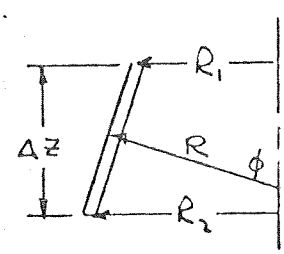

5863800
STRUCTURE ASSY

PART 4 - CONE

$X_3 = +\bar{X}_2$
$X_4 = -\bar{X}_1$
$X_{10} = -\bar{X}_4$
$X_{11} = +\bar{X}_3$

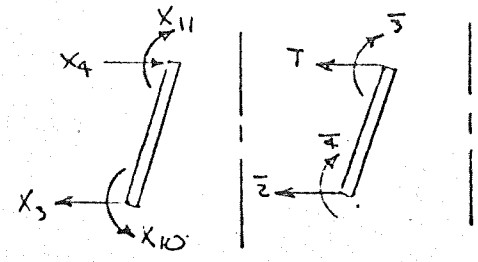

$\delta_{33} = +\bar{\delta}_{22}$.

$\delta_{34} = -\bar{\delta}_{21}$.

$\delta_{3,10} = -\bar{\delta}_{24}$.

$\delta_{3,11} = +\bar{\delta}_{23}$.

$\delta_{3,P} = \dfrac{PR^2(1-\nu)\sin\phi}{2Et}$.

$\delta_{3,T} = \alpha \Delta T R \sin\phi$ ..

$\delta_{43} = -\bar{\delta}_{12}$.

$\delta_{44} = +\bar{\delta}_{11}$.

$\delta_{4,10} = +\bar{\delta}_{14}$.

$\delta_{4,11} = -\bar{\delta}_{13}$.

$\delta_{4,P} = -\delta_{3,P}$.

$\delta_{4,T} = -\delta_{3,T}$ ..

$\delta_{10,3} = -\bar{\delta}_{42}$.

$\delta_{10,4} = +\bar{\delta}_{4,1}$.

$\delta_{10,10} = +\bar{\delta}_{44}$.

$\delta_{10,11} = -\bar{\delta}_{4,3}$ ..

$\delta_{11,3} = +\bar{\delta}_{3,2}$.

$\delta_{11,4} = -\bar{\delta}_{3,1}$.

$\delta_{11,10} = -\bar{\delta}_{3,4}$.

$\delta_{11,11} = +\bar{\delta}_{3,3}$ ..

$R_1 = 16.3437$.

$R_2 = 20.3694$.

$\Delta z = .6778$.

$R = 110.64$.

$\phi = 9°33'$.

$R\sin\phi = 18.357$.

$t = .25$.

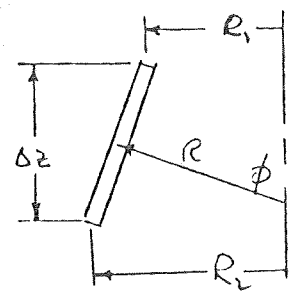

SM 42569

K+E ALBANENE TRACING PAPER 71600

FORM 85-6-1 (REV. 8-55)

PREPARED BY: S.C.Y.
CHECKED BY: COPY
DATE: 6-7-63

DOUGLAS AIRCRAFT COMPANY, INC.

S.M. DIVISION

PAGE: III.9.5
MODEL: D.S.V.-4
REPORT NO: SM42569

TITLE: DSV-4 PROPELLANT TANK

SM42569

Part 5

5863800 Structure Assy.

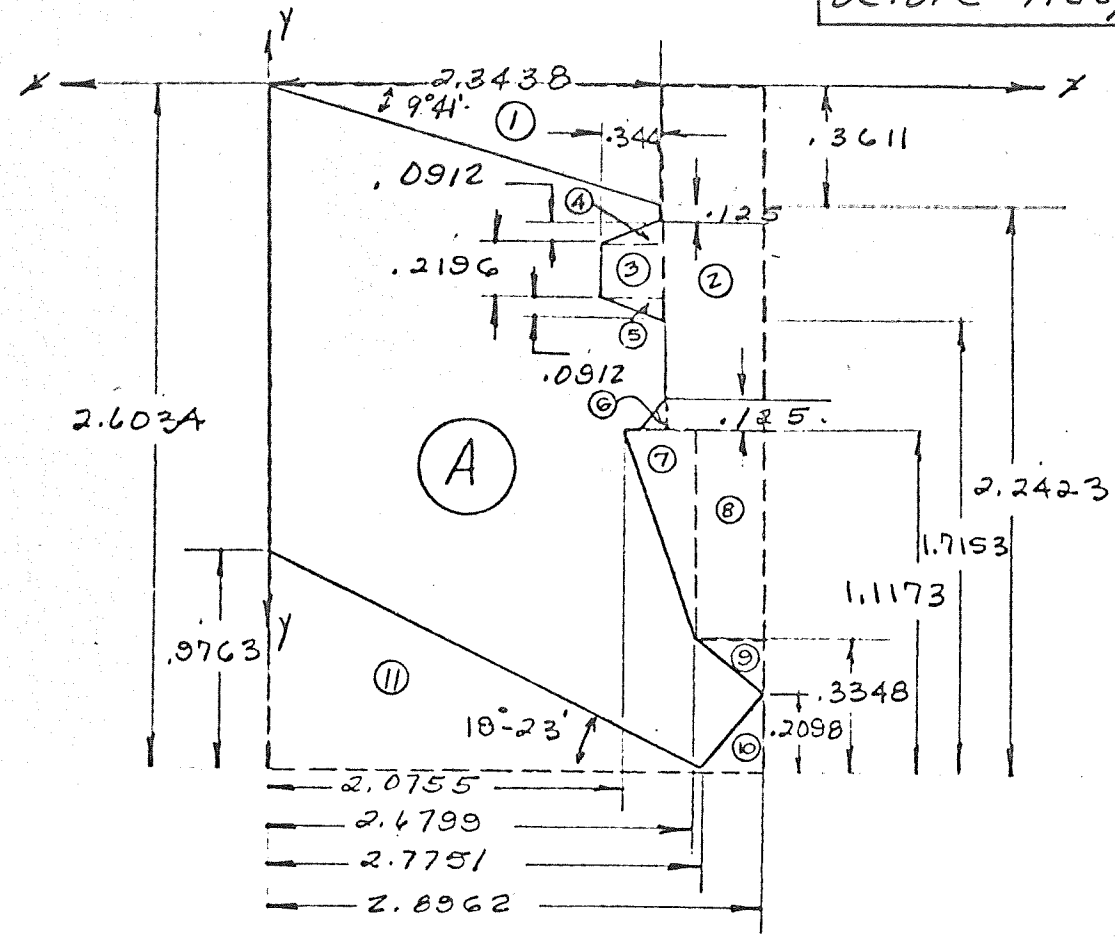

	Sect. No.	Geom. & Dimen.	Area	$\bar{x}$	$\bar{y}$	$A\bar{x}$	$A\bar{y}$	$\bar{y}^2$	$A\bar{y}^2$
	A	Rect. (2.8962"x2.6034")	+7.5400	1.4481	1.3017	10.9187	9.8148	1.6944	12.7758
	1	Triangle (.3611"x.3438")	-.4232	1.5626	.1204	-.6613	-.0510	.0145	-.0061
	2	Rect. (1.4861"x.5624")	-.8209	2.6200	.7431	-2.1508	-.6100	.5522	-.4533
	3	Rect. (.344"x.2196")	-.0755	2.1718	.6871	-.1640	-.0519	.4721	-.0356
	4	Triangle (.344"x.0912")	-.0157	2.2291	.5469	-.0350	-.0086	.2991	-.0047
	5	Triangle (.344"x.0912")	-.0157	2.2291	.8273	-.0350	-.0130	.6844	-.0107
	6	Triangle (.125"x.125")	-.0078	2.3021	1.4444	-.0180	-.0113	2.0863	-.0163
	7	Triangle (.6044"x.7825")	-.2365	2.4784	1.7469	-.5861	-.4131	3.0517	-.7217
	8	Rect. (.7825"x.2163")	-.1693	2.7881	1.8773	-.4720	-.3178	3.5243	-.5967
	9	Triangle (.125"x.2163")	-.0135	2.8241	2.3103	-.0381	-.0312	5.3375	-.0721
	10	Triangle (.2098"x.1211")	-.0127	2.8558	2.5335	-.0363	-.0322	6.4186	-.0815
	11	Triangle (.9763"x2.7751")	-1.3541	.9249	2.2780	-1.2530	-3.086	5.1893	-7.0299
Σ			4.3945			5.4691	5.1887		3.7472

K+E ALBANENE® TRACING PAPER 70883

5863800 Structure Assy.

Sect. No.	$I_{\bar{i}}$
A	+4.2586
1	-0.0031 in^4.
2	-0.1511
3	-0.0003
4	0.0000
5	0.0000
6	0.0000
7	-0.0080
8	-0.0086
9	0.0000
10	0.0000
11	-0.0717
Σ	4.0158 in^4.

Total Area = 4.3945 in.^{2}

$\Sigma A\bar{x} = 5.4691$ in.^{3}

$(4.3945)\bar{x} = 5.4691$

$\therefore \bar{x} = \frac{5.4691}{4.3945} = 1.2445$ in.

$\Sigma A\bar{y} = 5.1887$ in.^{3}

$(4.3945)\bar{y} = 5.1887$

$\therefore \bar{y} = \frac{5.1887}{4.3945} = 1.1807$ in.

$I_{xx} = \Sigma(I_{\bar{x}} + A\bar{y}^2) = 4.0158 + 3.7472$ in^4.

$\therefore I_{xx} = 7.7630$ in^4.

So,

$I_{xx} = I_{\bar{x}} + A\bar{y}^2$ or, $I_{\bar{x}} = I_{xx} - A\bar{y}^2$

$\therefore I_{\bar{x}} = 7.7630 - (4.3945)(1.1807)^2 = 1.6368$ in^4.

K+E ALBANENE® TRACING PAPER 70480

SM 42569

5863800 Structure Assy.

Part 5, Ring

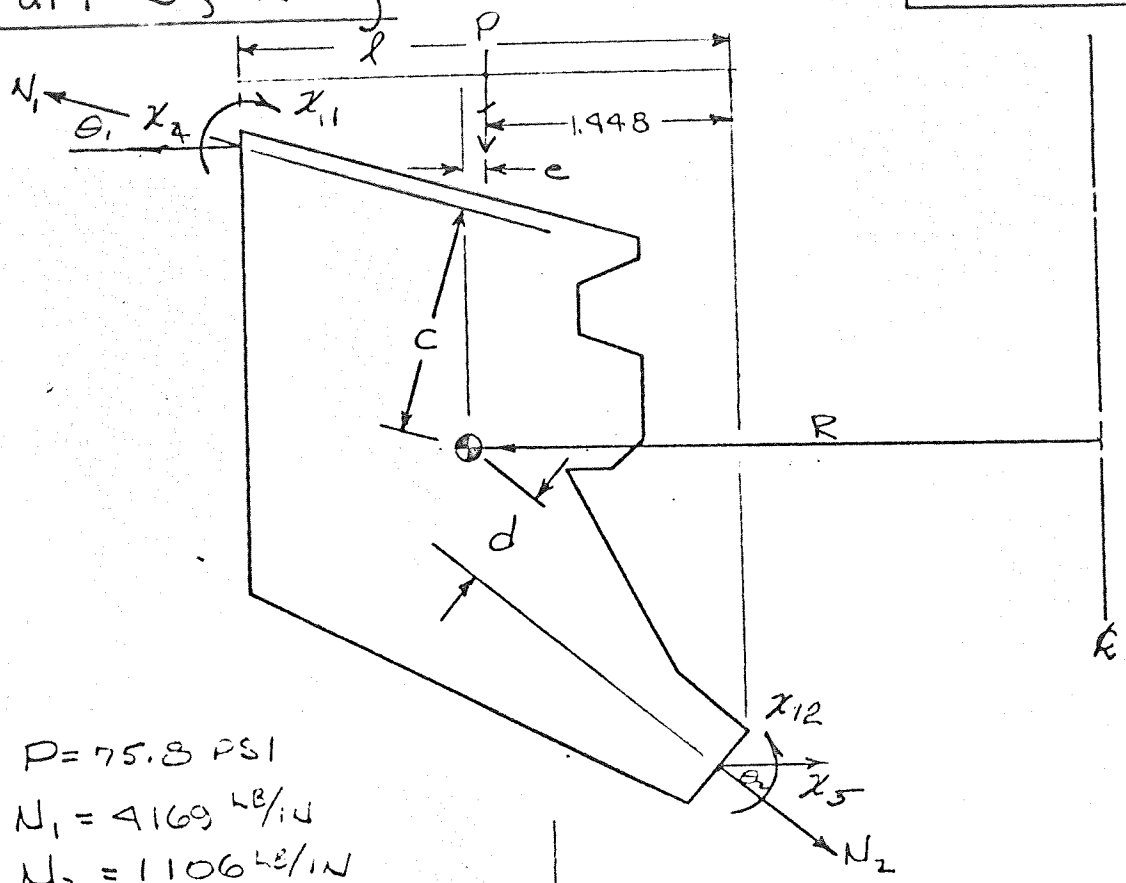

$P = 75.8$ PSI

$N_1 = 4169$ LB/IN

$N_2 = 1106$ LB/IN

$I_{\bar{x}} = 1.6368$ in.^{4}

$A = 4.3945$ in.^{2}

$a = 1.3178$ in.

$b = 1.0541$ in.

$r = 1.2445$ in.

$q = 1.5912$ in.

$c = .8448$ in.

$d = .3456$ in

$\theta_1 = 9°4'$

$\theta_2 = 30°$

$R = 15.0992$

$e = .2035$

$\ell = 2.8962$

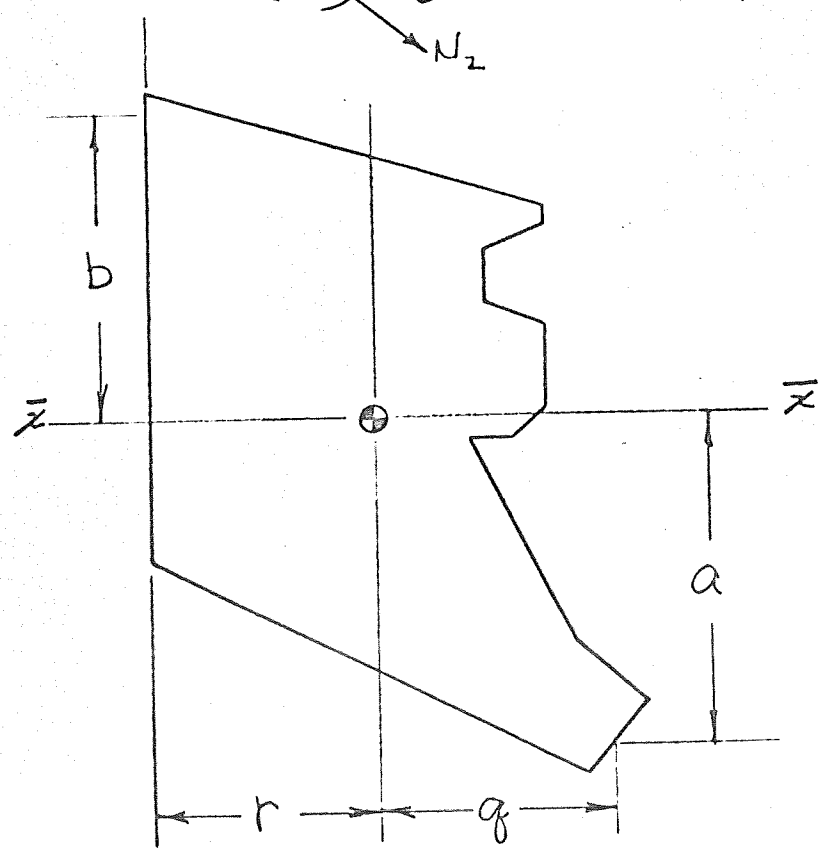

K+E ALBANENE TRACING PAPER 70450

SM 42569

5863800
STRUCTURE ASSY

PART 5 - RING

$$\delta_{4,4} = X_4 \frac{R^2}{EA} + X_4 b^2 \frac{R^2}{EI} .$$

$$\delta_{4,5} = -X_5 \frac{R^2}{EA} + X_5 ab \frac{R^2}{EI} .$$

$$\delta_{4,11} = -X_{11} b \frac{R^2}{EI} .$$

$$\delta_{4,12} = +X_{12} b \frac{R^2}{EI} .$$

$$\delta_{4,N_1} = +N_1 \cos\theta_1 \frac{R^2}{EA} + N_1 bc \frac{R^2}{EI} .$$

$$\delta_{4,N_2} = -N_2 \cos\theta_2 \frac{R^2}{EA} + N_2 bd \frac{R^2}{EI} .$$

$$\delta_{4,P} = -Pfe \frac{R^2}{EI} b .$$

$$\delta_{4,T} = \alpha \Delta T R .$$

$$\delta_{54} = \delta_{45} .$$

$$\delta_{5,T} = -\delta_{4,T} .$$

$$\delta_{55} = X_5 \frac{R^2}{EA} + X_5 a^2 \frac{R^2}{EI} .$$

$$\delta_{5,11} = -X_{11} a \frac{R^2}{EI} .$$

$$\delta_{5,12} = +X_{12} a \frac{R^2}{EI} .$$

$$\delta_{5,N_1} = -N_1 \cos\theta_1 \frac{R^2}{EA} + N_1 ca \frac{R^2}{EI} .$$

$$\delta_{5,N_2} = N_2 \cos\theta_2 \frac{R^2}{EA} + N_2 da \frac{R^2}{EI} .$$

$$\delta_{5,P} = -Pfe \frac{R^2}{EI} a .$$

SM 42569

5863800
STRUCTURE ASSY

$\delta_{11,4} = \delta_{4,11}$.

$\delta_{11,5} = \delta_{5,11}$.

$\delta_{11,11} = + X_{11} \frac{R^2}{EI}$.

$\delta_{11,12} = - X_{12} \frac{R^2}{EI}$.

$\delta_{11,N_1} = - N_1 c \frac{R^2}{EI}$.

$\delta_{11,N_2} = - N_2 d \frac{R^2}{EI}$.

$\delta_{11,P} = + P l e \frac{R^2}{EI}$.

$\delta_{12,4} = \delta_{4,12}$.

$\delta_{12,5} = \delta_{5,12}$.

$\delta_{12,11} = \delta_{11,12}$.

$\delta_{12,12} = X_{12} \frac{R^2}{EI}$,

$\delta_{12,N_1} = + N_1 c \frac{R^2}{EI}$.

$\delta_{12,N_2} = + N_2 d \frac{R^2}{EI}$.

$\delta_{12,P} = - P l e \frac{R^2}{EI}$;

SM42569

5863800
STRUCTURE ASSY

PART 6-CONE

$X_5 = +\bar{X}_2$
$X_6 = -\bar{X}_1$
$X_{12} = -\bar{X}_4$
$X_{13} = +\bar{X}_3$

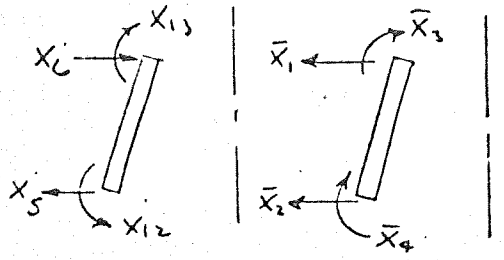

$\delta_{5,5} = +\delta_{22}$.

$\delta_{5,6} = -\delta_{21}$.

$\delta_{5,12} = -\delta_{24}$.

$\delta_{5,13} = +\delta_{23}$.

$\delta_{5,P} = \dfrac{PR^2(1-\frac{\nu}{2})\sin\phi}{Et}$.

$\delta_{5,T} = \alpha \Delta T R \sin\phi$.

$\delta_{65} = -\delta_{12}$.

$\delta_{66} = +\delta_{11}$.

$\delta_{6,12} = +\delta_{14}$.

$\delta_{6,13} = -\delta_{13}$.

$\delta_{6,P} = -\delta_{5,P}$.

$\delta_{6,T} = -\delta_{5,T}$.

$\delta_{12,5} = -\delta_{42}$.

$\delta_{12,6} = +\delta_{41}$.

$\delta_{12,12} = +\delta_{44}$.

$\delta_{12,13} = -\delta_{43}$.

$\delta_{13,5} = +\delta_{32}$.

$\delta_{13,6} = -\delta_{31}$.

$\delta_{13,12} = -\delta_{34}$.

$\delta_{13,13} = +\delta_{33}$.

$R_1 = 12.7667$.

$R_2 = 13.4163$.

$\Delta Z = .3751$.

$R = 26.183$.

$\phi = 30°$.

$R\sin\phi = 13.0915$.

$t_{AVE} = .291$.

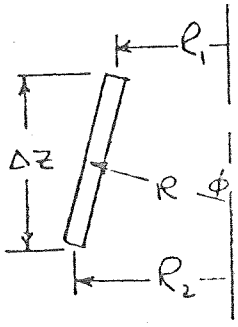

5863800
STRUCTURE ASSY

PART 7 - CONE

$X_6 = +\bar{X}_2$

$X_7 = -\bar{X}_1$

$X_{13} = -\bar{X}_4$

$X_{14} = +\bar{X}_3$

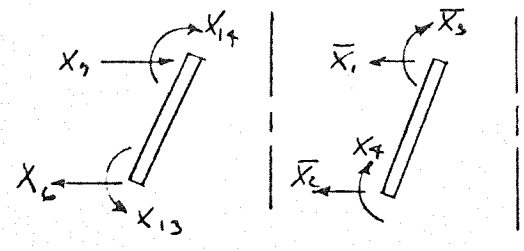

$\delta_{6,6} = +\delta_{22}$.

$\delta_{6,7} = -\delta_{21}$.

$\delta_{6,13} = -\delta_{24}$.

$\delta_{6,14} = +\delta_{23}$.

$\delta_{6,P} = \dfrac{PR^2(1-\nu)\sin\phi}{Et}$.

$\delta_{6,T} = \alpha \Delta T R \sin\phi$.

$\delta_{7,6} = -\delta_{12}$.

$\delta_{7,7} = +\delta_{11}$.

$\delta_{7,13} = +\delta_{14}$.

$\delta_{7,14} = -\delta_{13}$.

$\delta_{7,P} = -\delta_{6,P}$.

$\delta_{7,T} = -\delta_{6,T}$.

$\delta_{13,6} = -\delta_{42}$.

$\delta_{13,7} = +\delta_{41}$.

$\delta_{13,13} = +\delta_{44}$.

$\delta_{13,14} = -\delta_{43}$.

$\delta_{14,6} = +\delta_{32}$.

$\delta_{14,7} = -\delta_{31}$.

$\delta_{14,13} = -\delta_{34}$.

$\delta_{14,14} = +\delta_{33}$.

$R_1 = 3.7667$.

$R_2 = 12.7667$.

$\Delta Z = 5.196$.

$R\sin\phi = 12.7667 = R_2$

$\phi = 30°$.

$R_a = 25.5334 = \dfrac{R_2}{\sin\phi}$

$t = .125$

$R_b = 7.5334$

$R_b = \dfrac{R_1}{\sin\phi}$

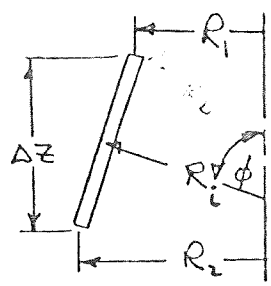

K+E ALBANENE TRACING PAPER 71808

Distribution Sheet

Report SM-42569

S. D. Truhan, A3-120

F. S. Mayer, A3-860

L. S. Mull, A3-860

Strength Section File, A3-860