123

N70-76097
(ACCESSION NUMBER)
338
(PAGES)
CR-113310
(NASA CR OR TMX OR AD NUMBER)
(THRU)
NONE
(CODE)
(CATEGORY)
FACILITY FORM 602

DESIGN EVALUATION/QUALIFICATION TEST OF THE FUEL TANK PRESSURE SWITCH, DOUGLAS AIRCRAFT COMPANY, INC. SPECIFICATION CONTROL NO. 7851860-1, -501, -505, AND -507, FREBANK COMPANY P/N 4640-1, 8015-1, 8015-3, AND 8015-10 MODEL NO. SATURN S-IV

21 OCTOBER 1963
DOUGLAS REPORT SM-43551

Approved by: S. Greene
S. Greene
Chief, S-IV Systems Engineering

Prepared by
Astrionics Branch

Approved by: J. Hilman
J. Hilman
Chief, S-IV Reliability Analysis Section

Prepared for
The National Aeronautics and Space Administration
Contract No. NAS7-1

Approved by: H. D. Golding
H. D. Golding
Chief, S-IV Design Section
Astrionics Branch

SPACE SYSTEMS ENGINEERING | MISSILE & SPACE SYSTEMS DIVISION
DOUGLAS AIRCRAFT COMPANY, INC.

ABSTRACT

This test report, prepared by the Douglas Aircraft Company, Inc., for the National Aeronautics and Space Administration, presents the design evaluation/qualification test results of the fuel tank pressure switches, Douglas Specification Control No. 7851860-1, -501, -505, and -507. The pressure switches are manufactured and tested by the Frebank Company, Glendale, California, as P/N 4640-1, 8015-1, 8015-3, and 8015-10. The switches are used on the Saturn S-IV stage to monitor and maintain liquid hydrogen tank pressure. Electrical, functional, and environmental tests were conducted on the pressure switches by Frebank, according to the requirements in Douglas Specification Control Drawing No. 7851860. The test results are incorporated in this document as Frebank Company Design Evaluation Test Report No. 178, R8015-1, R8015-3, and R8015-10. On the basis of the test data presented in this report, the pressure switches met or exceeded the design requirements and are approved for their intended use on the Saturn S-IV stage.

DESCRIPTORS

Electrical
Environmental
Helium
Liquid Hydrogen
Pressure
Saturn S-IV Stage
Switch
System

INTRODUCTION

Douglas Specification Control Drawing No. 7851860 defines the requirements for fuel tank pressure switches used on the Saturn S-IV stage.

The pressure switches are manufactured and tested by the Frebank Company as P/N 4640-1, 8015-1, 8015-3, and 8015-10, corresponding to Douglas Specification Control No. 7851860-1, -501, -505, and -507. Each component consists of a pressure-sensitive element and two single-pole double-throw switches to open or close an electrical circuit at a preset pressure.

The 7851860-1 pressure switch controls and regulates the flow of gaseous hydrogen from the engines, and the flow of gaseous helium from the ambient system into the liquid hydrogen tank.

The 7851860-501 pressure switch monitors and controls the limit pressure in the fuel tank pressurization system during fill, drain, and countdown.

The 7851860-505 pressure switch monitors and controls the minimum pressure in the fuel tank pressurization system during fill, drain, and countdown.

The 7851860-507 pressure switch controls the flow of gaseous hydrogen from the engines into the liquid hydrogen tank.

The pressure switches are located on the forward dome of the hydrogen tank.

INTRODUCTION (Continued)

The purpose of these tests was to evaluate the design integrity of the switches and to approve them for their intended use on the Saturn S-IV stage.

Frebank Report No. 178, paragraph 5.0, page SM-6 presents the procedures and results as applicable to pressure switch No. 7851860-1, test units serial numbered 101 through 106. Paragraph 6.0, page SM-14 discusses corrective action pertinent to the malfunctions described in paragraph 5.0.

The prevailing problem encountered in the test program was the instability of the actuation and deactuation pressures when low temperature was one of the environmental conditions. This instability was characterized by first-cycle stick (i.e., a discrepancy between the first- and second-cycle actuation pressures) and out-of-tolerance pressures for second and subsequent cycles. Both of these characteristics remained in evidence throughout subsequent tests, although their magnitude at room ambient temperature was not always in excess of the specified tolerances.

Frebank Company evaluated the problem and determined the cause to be the method of separating the belleville springs with fulcrum rings which allowed the springs to act in series. With this series stacking of the belleville springs, the small discrepancies at each spring-spacer interface became additive and the total error was sufficient to cause out-of-tolerance operation under adverse environments. An additional factor entering into the

problem was the positioning of the Klixon switch elements with relation to the travel of the belleville stack. This not only compounded the setting shift discrepancy, but introduced frequent erratic switch element operation.

There has been no entirely adequate explanation for the pressure setting shift of the series belleville stack. Micro-polishing at the spring-spacer interface is considered to have been a contributing factor; but, the means by which low temperature caused a permanent setting shift has not been determined, although there is no question that low temperature was the cause. Test data on six parts each of five similar pressure switch configurations (thirty test parts total) support this conclusion.

Frebank Company proposed to solve the problem by a redesign of the spacer rings which allow the belleville springs to act in parallel, and by use of production test fixtures which would facilitate more accurate positioning of the Klixon elements relative to the travel of the belleville stack. The proposal for the spacer ring redesign was based on development tests which had been conducted on two prototype units which were identical to production parts in all dimensions and materials, but which were set to average pressure values in the low pressure range, rather than to specific values required by any given Douglas Specification Control Drawing.

During high temperature testing at 212°F, the prototype units exhibited a first-cycle stick of ± 0.4 per cent as compared to

the maximum allowable deviation of ± 1.5 per cent. During low temperature testing at -320°F, and subsequent testing at room ambient temperature, the prototype units exhibited a first-cycle stick of ± 0.8 per cent. Repeatability of third and subsequent cycles during these tests was within ± 0.1 per cent of the second-cycle actuation, as compared to the requirement of ± 1.0 per cent. The prototype units were then subjected to service life testing and completed the required 3,000 cycles of operation with repeatability of ± 0.4 per cent. One of the units continued to operate within this limit for a total of 20,000 cycles and the other unit operated within this limit for a total of 11,388 cycles. No erratic switch element operation was experienced during the test program.

On the basis of the test results on the prototype units the spacer ring redesign was approved for incorporation in production parts which would be subjected to limited design evaluation/ qualification testing.

Two additional problems were encountered in the course of the test program. The first of these was the failure of five units to pass the dielectric strength test as indicated in Report No. 178, paragraph 5.5.1, page SM-7. In order to prevent dielectric breakdown from occuring in production units, Frebank Company instituted the inspection procedure included as Appendix 2 to Report No. 178, page SM-57. In addition, the dielectric strength

test is performed on each production unit during the production acceptance test. The second of these problems was the failure of the hermetic seal of two units during the high temperature test as indicated in paragraph 5.8.1, page SM-8. Paragraph 6.2, page SM-15, explains this failure as having been due to porosity of the switch body which allowed the pressure of the switch cavity to equalize with atmospheric pressure. Frebank instituted the inspection procedure of Appendix 3, page SM-59, in order to prevent this from occurring in the production units.

Test units serial numbered 108, 109, and 110 were manufactured to the new design and assembly procedures, and were subjected to the test program reported in Addendum 1 to Report No. 178, page SM-61. The out-of-tolerance operation experienced during vibration, as discussed in paragraph 6.0, page SM-68, is not considered significant since the tests were not only repeated with satisfactory results as stated, but were repeated a second time as reported in Addendum 2, to Report No. 178, page SM-82, again with satisfactory results. At the time the test program of Addendum 1 was completed, it was considered to have demonstrated the integrity of the redesign, although the tests of altitude/temperature, acceleration, shock, and acoustical noise were not repeated.

Tests were subsequently performed on test units serial numbered 124 and 125 in order to assure operation of the redesigned part under the environments of altitude/temperature, acceleration

shock, and acoustical noise. The results are presented in Addendum 3 to Report No. 178, page SM-112, (units 108, 109, and 110 had been subjected to burst pressure and could not be used for further testing).

Life testing was not repeated on the redesigned units since test data on the prototype units verified the service life of the parallel belleville stack and the freedom from erratic switch element operation. The actuation-deactuation time test was accepted on the basis of similarity, since the belleville spring rate is independent of the means by which force is applied. Since the data on the redesigned units revealed no erratic switch element operation and a minimum tendency for the actuation and deactuation points to shift after prolonged operation, the redesign was considered the problem. All other tests were accepted on the basis of similarity since the results could not be affected by the redesign or because no malfunctions occurred to indicate the need for redesign.

Addendum 2 to Report No. 178, page SM-82, presents the procedures and results of additional vibration tests performed on test units serial numbered 124 and 125. This additional testing became necessary after the revision of the Saturn S-IV stage vibration requirements.

Frebank Report No. R8015-1, page SM-146, presents the procedures and results of tests conducted on pressure switch No. 7851860-501,

test units serial numbered 101, 102, and 103. Paragraph 8.0 of Design Evaluation Test Procedure Q8015-1 (see page SM-174) is a statement of similarity and is essential to the qualification of pressure switch No. 7851860-501.

Addendum 1 to Report No. R8015-1, page SM-180, presents the procedures and results of additional vibration tests performed on test units serial numbered 120 and 121. This additional testing became necessary after the revision of the Saturn S-IV stage vibration requirements. Test units serial numbered 101, 102, and 103 were not used for this additional testing since they had previously been subjected to 3 hours of vibration and additional vibration data would not have been valid.

Frebank Report No. R8015-3, page SM-210, presents the procedures and results of tests conducted on pressure switch No. 7851860-505, test units serial numbered 100, 101, and 102. Paragraph 8.0 of Design Evaluation Test Procedure Q8015-3 page SM-238, is a statement of similarity and is essential to the qualification of pressure switch No. 7851860-505.

Addendum 1 to Report No. R8015-3, page SM-244, presents the procedures and results of additional vibration tests performed on test units serial numbered 119 and 120. This additional testing became necessary after the revision of the Saturn S-IV stage vibration requirements. Units serial numbered 100 to 102 were not used for this additional testing since they had been previously subjected to 3 hours of vibration and data from additional vibration tests would not have been valid.

INTRODUCTION (Continued)

Frebank Report No. R8015-10, page SM-274, present the procedures and results of tests performed on pressure switch No. 7851860-507, test units serial numbered 103, 104, and 105. Paragraph 8.0 of Design Evaluation Test Procedure Q8015-10, page SM-317, is a statement of similarity and is essential to the qualification of pressure switch No. 7851860-507.

All tests included in this report were conducted in accordance with Frebank Company's Design Evaluation Test Procedures Q4640-1, Q8015-1, Q8015-3, or Q8015-10 as applicable. These test procedures are included as Appendix 1 to each report. During compilation of this report, it became apparent that paragraph 1.2 in these procedures does not clearly interpret the requirements for first- and second-cycle actuation as specified in Douglas Specification Control Drawing No. 7851860, paragraph 3.5.1 which states: "The pressure switch shall actuate, on pressure increase, at the following values on the second and subsequent cycles of operation.

Dash Number	Actuation Pressure
-1	31.5 ± 0.5 psia
-501	37.25 ± 0.75 psia
-505	34.5 ± 0.5 psia
-507	29.5 ± 0.5 psia

Actuation pressure of the first cycle of any series of tests shall be within ± 0.4 psia of the actuation pressure of the second cycle."

It should be noted that Douglas Specification Control Drawing No. 7851860 specifies a high temperature requirement of +125°F, while several tests included in this report were conducted at a high temperature of +160°F. The high temperature requirement was changed from +160° to +125°F in the L change to Specification Control Drawing No. 7851860, dated May 1962. Frebank Company requested this change on the basis of the inconsistent ability of the design to meet the pressure setting tolerances at the higher temperature. After the maximum expected operating temperature of the pressure switches was determined to be less than +125°F the change was approved by Douglas engineering. As a result of this change in the high temperature requirement during the course of the test program, the initial testing of Douglas P/N 7851860-1 pressure switch was conducted at a high temperature of +160°F, while tests which were repeated at a later date were conducted at a high temperature of +125°F. Those tests performed at +160°F are considered to be in excess of the requirements of Douglas Specification Control Drawing No. 7851860, but since the units met the specified requirements of operation the test results are considered acceptable.

CONCLUSION

Based upon the design evaluation/qualification test results presented in this report, it is the conclusion of the Douglas Aircraft Company, Inc., that the fuel tank pressure switches,

CONCLUSION (Continued)

Douglas Specification Control No. 7851860-1, -501, -505, and -507, manufactured by Frebank Company, successfully met or exceeded the requirements as described in Douglas Specification Control Drawing No. 7851860, and are approved for their intended use on the Saturn S-IV stage.

MASTER TABLE OF CONTENTS

FOR

FREBANK TEST REPORT

Item	Page
FREBANK TEST REPORT NO. 178	SM- 1
SUPPLEMENT 1 TO REPORT NO. 178 Helium Leak Test	SM- 35
SUPPLEMENT 2 TO REPORT NO. 178 (Deleted, see Addendum 1 to Report No. 178)	SM- 38
SUPPLEMENT 3 TO REPORT NO. 178 (Deleted, see Addendum 3 to Report No. 178)	SM- 40
APPENDIX I TO REPORT NO. 178 (Design Evaluation Test Procedure for Report No. 178)	SM- 42
APPENDIX II TO REPORT NO. 178 (Dielectric Strength Test for Report No. 178)	SM- 57
APPENDIX III TO REPORT NO. 178 (Leak Test for Report No. 178)	SM- 59
ADDENDUM I TO REPORT NO. 178 (Design Evaluation Test Report)	SM- 61
ADDENDUM 2 TO REPORT NO. 178 (Vibration Test Report)	SM- 82
APPENDIX 1 TO ADDENDUM 2 (Vibration Test Procedure)	SM-101
ADDENDUM 3 TO REPORT NO. 178 (Repeat Design Evaluation Tests After Redesign)	SM-112
SUPPLEMENT 1 TO ADDENDUM 3 (Altitude/Temperature, Acceleration & Shock)	SM-118
SUPPLEMENT II TO ADDENDUM 3 (Acoustical Noise Test)	SM-137
FREBANK TEST REPORT NO. R8015-1	SM-146
APPENDIX I TO REPORT NO. R8015-1 (Design Evaluation Test Procedure for Report No. R8015-1)	SM-166

MASTER TABLE OF CONTENTS (Continued)

Item	Page
ADDENDUM 1 TO REPORT NO. R8015-1 (Vibration Test Report)	SM-180
APPENDIX 1 TO ADDENDUM 1 (Vibration Test Procedure)	SM-199
FREBANK TEST REPORT NO. R8015-3	SM-210
APPENDIX I TO REPORT NO. R8015-3 (Design Evaluation Test Procedure)	SM-230
ADDENDUM 1 TO REPORT NO. R8015-3 (Vibration Test Report)	SM-244
APPENDIX 1 TO ADDENDUM 1	SM-263
FREBANK TEST REPORT NO. R8015-10	SM-274

TABLE OF CONTENTS

VERIFICATION OF FINAL APPROVAL - 7851860-1

Test Type	Procedure & Results		Data	
	Initial Test Page	Repeat Test Page	Initial Test Page	Repeat Test Page
Functional	SM 65	SM --	SM 72-79	SM --
Actuation Time	SM 7	SM 7	SM 33	SM 33
Proof Pressure	SM 7	SM 13	SM 7	SM 13
Leakage	SM 7	SM 13	SM 36	SM 37
Dielectric Strength	SM 66	SM 68	SM 66	SM 68
Insulation Resistance	SM 8	SM 14	SM 8	SM 14
Contact Resistance	SM 8	SM 14	SM 34	SM 34
High Temperature	SM 66	SM --	SM 72-79	SM --
Low Temperature	SM 66	SM --	SM 72-79	SM --
Thermal Shock	SM 67	SM --	SM 72-79	SM --
Altitude/ Temperature	SM 116	SM --	SM 130-133	SM --
Acceleration	SM 117	SM --	SM 130-133	SM --
Vibration	SM 87	SM --	SM 89-100	SM --
Acoustical Noise	SM 117	SM --	SM 143-144	SM --
Mechanical Shock	SM 117	SM --	SM 130-133	SM --
Service Life	SM 13	SM --	SM 22-32	SM --
Burst	SM 14	SM 14	SM --	SM --

TABLE OF CONTENTS

VERIFICATION OF FINAL APPROVAL - P/N 7851860-501

Test Type	Procedure & Results		Data	
	Initial Test Page	Repeat Test Page	Initial Test Page	Repeat Test Page
Functional	SM 149	SM --	SM 154-165	SM --
Actuation Time	SM 174	SM 175	SM --	SM --
Proof Pressure	SM 150	SM --	SM 150	SM --
Leakage	SM 174	SM 125	SM --	SM --
Dielectric Strength	SM 174	SM 175	SM --	SM --
Insulation Resistance	SM 175	SM 175	SM --	SM --
Contact Resistance	SM 175	SM 175	SM --	SM --
High Temperature	SM 150	SM --	SM 154-165	SM --
Low Temperature	SM 150	SM --	SM 154-165	SM --
Thermal Shock	SM 150	SM --	SM 154-165	SM --
Altitude/ Temperature	SM 175	SM --	SM --	SM --
Acceleration	SM 175	SM --	SM --	SM --
Vibration	SM 185	SM --	SM 187-198	SM --
Acoustical Noise	SM 175	SM --	SM --	SM --
Mechanical Shock	SM 175	SM --	SM --	SM --
Service Life	SM 175	SM --	SM --	SM --
Burst	SM 175	SM --	SM --	SM --

TABLE OF CONTENTS

VERIFICATION OF FINAL APPROVAL - P/N 7851860-505

Test Type	Procedure & Results		Data	
	Initial Test Page	Repeat Test Page	Initial Test Page	Repeat Test Page
Functional	SM 213	SM --	SM 218-229	SM --
Actuation Time	SM 238	SM 239	SM --	SM --
Proof Pressure	SM 214	SM 239	SM 214	SM --
Leakage	SM 238	SM 239	SM --	SM --
Dielectric Strength	SM 238	SM 239	SM --	SM --
Insulation Resistance	SM 239	SM 239	SM --	SM --
Contact Resistance	SM 239	SM 239	SM --	SM --
High Temperature	SM 214	SM --	SM 218-229	SM --
Low Temperature	SM 214	SM --	SM 218-229	SM --
Thermal Shock	SM 214	SM --	SM 218-229	SM --
Altitude/ Temperature	SM 239	SM --	SM --	SM --
Acceleration	SM 239	SM --	SM --	SM --
Vibration	SM 249	SM --	SM 251-262	SM --
Acoustical Noise	SM 239	SM --	SM --	SM --
Mechanical Shock	SM 239	SM --	SM --	SM --
Service Life	SM 239	SM --	SM --	SM --
Burst	SM 239	SM --	SM --	SM --

TABLE OF CONTENTS

VERIFICATION OF FINAL APPROVAL - P/N 7851860-507

Test Type	Procedure & Results		Data	
	Initial Test Page	Repeat Test Page	Initial Test Page	Repeat Test Page
Functional	SM 279	SM --	SM 285-305	SM --
Actuation Time	SM 317	SM 318	SM --	SM --
Proof Pressure	SM 280	SM 318	SM 280	SM --
Leakage	SM 317	SM 318	SM --	SM --
Dielectric Strength	SM 318	SM 319	SM --	SM --
Insulation Resistance	SM 318	SM 319	SM --	SM --
Contact Resistance	SM 318	SM 319	SM --	SM --
High Temperature	SM 280	SM --	SM 285-305	SM --
Low Temperature	SM 281	SM --	SM 285-305	SM --
Thermal Shock	SM 281	SM --	SM 285-305	SM --
Altitude/ Temperature	SM 318	SM --	SM 285-305	SM --
Acceleration	SM 318	SM --	SM --	SM --
Vibration	SM 320	SM --	SM --	SM --
Acoustical Noise	SM 318	SM --	SM --	SM --
Mechanical Shock	SM 318	SM --	SM --	SM --
Service Life	SM 318	SM --	SM --	SM --
Burst	SM 319	SM --	SM --	SM --

FREBANK COMPANY
GLENDALE CALIFORNIA

Engineering Report

DESIGN EVALUATION TEST REPORT
NUMBER 178
FOR
PART NUMBER 4640-1
PRESSURE SWITCH

DAC Specification 7851860-1

Rev. "A" April 4, 1963

DATE April 12, 1962

PREPARED W. L. Webster, Engr'g. Lab.

CHECKED R. M. Frincke, Engr'g. Lab. Supv'r.

APPROVED V. A. Larsen, V.P. Engineering & Sales

Witnessed:

R. B. Sidney, AFQCA

CONTRACT NO.

NO. PAGES -173-

NOTARY PUBLIC LOS ANGELES CO., CALIF.

STATE OF CALIFORNIA
COUNTY OF LOS ANGELES } ss.

V. A. LARSEN, being duly sworn, deposes and says: That the information contained in this report is to the best of his knowledge true and correct in all respects.

SUBSCRIBED and sworn to before me this 20th day of June 1962

Notary Public in and for the County of Los Angeles, State of California

My commission expires November 8 1963

REVISION DATE	FREBANK COMPANY GLENDALE CALIFORNIA	REPORT NO. 178
"A" 4-4-63		PAGE 2

REVISIONS:

Revision "A" dated April 4, 1963: "A"

Revised to conform with DAC verbal request. (N. Godfrey)

Revised by: W. L. Webster
Engr'g. Department

Checked by: R. M. Frincke
Engr'g. Lab. Supervisor

Checked by: C. R. Willis
Project Engineer

Approved by: C. F. Beck, Jr.
Chief Engineer

Note: Revision "A" consisted of the addition of the (-1) to the part number.

N. C. Godfrey
Engineer, Douglas Aircraft
Astrionics Branch

TABLE OF CONTENTS

Item	Page
Title Page	1
Revisions	2
Table of Contents	3
1.0 PURPOSE	4
2.0 REFERENCE	4
3.0 DESCRIPTION OF TEST SPECIMEN	4
4.0 REQUIREMENTS	4
5.0 TEST PROCEDURE AND RESULTS	4
6.0 DISCUSSION	12
Figure 1 -- Frebank Drawing No. A4640-1, "B" Change	15
Figure 2 -- Frebank Drawing No. 4640-1, "C" Change.	16
Figure 3 -- Schematic Diagram - Switch Contact Resistance Test Setup	17
Figure 4 -- Vibration Test Setup	18
Figure 5 -- Service Life Test Setup	19
TABLE I -- Functional Test Results For Units, Serial No.'s 101, 102, 103, 104, 105, and 106	20
Test Unit Serial No. 101	20
Test Unit Serial No. 102	27
Test Unit Serial No. 103	34
Test Unit Serial No. 104	41
Test Unit Serial No. 105	48
Test Unit Serial No. 106	55
TABLE II -- Actuation and Deactuation Time Test Results For Units, Serial No.'s 101, 102, 103, 104, 105, and 106	62
TABLE III -- Contact Resistance Test For Units, Serial No.'s 101, 102, 103, 104, 105, and 106	63

TABLE OF CONTENTS

(continued)

Item	Page
Supplement 1	64
Helium Leak Testing Co. Certifications -- Leak Tests of Frebank Part Number 4640-1 Pressure Switches To Frebank Company Design Evaluation Test Procedure For Engineering Report No. 178	
Supplement 2	67
Garwood Laboratories, Inc. Report No. 2208 Altitude-Temperature, Acceleration, and Shock Tests on Frebank Part Number 4640-1 Pressure Switch To Frebank Company Design Evaluation Test Procedure For Engineering Report No. 178	
Supplement 3	95
Rototest Laboratories Certified Test Report No. 3592-5, Acoustic Testing Of Frebank Part Number 4640-1 Pressure Switch In Accordance With Frebank Company Design Evaluation Test Procedure For Engineering Report No. 178	
APPENDIX I	110
Frebank Company Design Evaluation Test Procedure For Engineering Report No. 178, Part Number 4640-1 Pressure Switch	

TABLE OF CONTENTS

(continued)

Item	Page
APPENDIX II	126
Frebank Company Engineering Directive No. 205, Dielectric Strength Test	
APPENDIX III	128
Frebank Company Engineering Directive No. 208, Leakage Testing Of Bodies	
ADDENDUM I	130
To Design Evaluation Test Report Number 178 For Part Number 4640-1 Pressure Switch, DAC Specification 7851860-1	

1.0 PURPOSE:

To present the results of the design evaluation test program conducted on Frebank Pressure Switch Part Number 4640-1. This test program was conducted in accordance with the Design Evaluation Test plan of Douglas Specification 7851860-1

2.0 REFERENCE:

Douglas Aircraft Company Specification 7851860-1, Rev. "E". "A"

3.0 DESCRIPTION OF TEST SPECIMEN: (Ref. para. 4.1.1.1.3)

Six (6) production units, Part Number 4640-1, Serial Numbers 101, 102, 103, 104, 105, and 106 were subjected to the required test program. This pressure switch is intended for operation in a 44.0 psia system, using gaseous helium and hydrogen as the service media over an ambient temperature range of -100°F to +160°F.

The actuation pressure limits are:

Increasing Pressure: 31.5 ±.5 psia
Decreasing Pressure: 30.5 ±.5 psia

Frebank Assembly Drawing No. A4640-1, "B" Change, and Installation Drawing No. 4640-1, "C" Change, are included for further reference (see Figures 1 and 2, Pages 15 and 16.

4.0 REQUIREMENTS: (Ref. para. 4.1.1.1)

The Design Evaluation Test Requirements were conducted in accordance with Design Evaluation Test Procedure for Engineering Report Number 178, as approved by D.A.C. in their VIR No. M37432. This test procedure is presented as Appendix I.

5.0 TEST PROCEDURE AND RESULTS:

5.1 Functional Test: (Ref. para. 4.1.4) A test stand using gaseous nitrogen per DPS 4.920 as the test medium, employing a 16-inch diameter Bourdon tube gauge with 0.1 psi minimum graduations and a full scale accuracy of 1/5 percent was used for the observation of the pressure settings. A signal light circuit with a 2 ampere inductive load at 28 VDC was used in conjunction with the gauge to indicate pressure switch actuation.

The unit under test was connected to this test stand and the applied pressure was increased and decreased from 14.7 to 32.0 psia, or to the point of switch actuation if over 32.0 psia, to 14.7 psia. The rate of pressure increase from 30.0 psia to actuation and rate of decrease from 31.0 psia to deactuation was approximately 5 psi per minute. The pressures at which the unit became energized and de-energized were observed. All test units successfully completed the functional test and the first five (5) cycles of the test results are recorded in Table I.

5.2 Actuation and Deactuation Time Test: (Ref. para. 3.5.6) This test was conducted using the same equipment as described in the functional test with the addition of a recording oscillograph using galvanometers with a response rate of 0-2500 cps and a 0-100 psi pressure transducer.

The pressure was increased from 14.7 to 32.0 psia at a minimum rate of 10 psi per second. The actuation response time was recorded by the oscillograph. The pressure was decreased from 32.0 to 30 psia at a rate of 10 psi per second minimum. The deactuation response time was recorded by the oscillograph. The response times of all units were within the specified tolerance. The results are recorded in Table II.

5.3 Proof Test: (Ref. para. 4.1.5) This test was conducted using the same equipment as described in the functional test.

A pressure of 66.0 psia was applied for one (1) minute. No failure or leakage occurred as a result of the pressure application.

5.4 Leak Test: (Ref. paragraph 4.1.6) The leak test was conducted by Helium Leak Testing Co. Their certification, dated January 3, 1962, is presented within Supplement 1. No leakage was evidenced as shown on a Consolidated Electrodynamics Mass Spectrometer, adjusted to a sensitivity of 1×10^{-9} cc/sec. of helium.

5.5 Dielectric Strength Test: (Ref. para. 4.1.7) This test was conducted using a 0-4000 volt hypot set at 500 volts per megohm.

1000 VAC RMS at 60 cps was applied to each unit for one (1) minute between the receptacle pins A, B, C, E, F, and G and the body. Five (5) of the six (6) units showed evidence of dielectric breakdown as indicated by the hypot during tests.

5.5.1 Description of Malfunction: Five units, Serial

Numbers 101, 102, 103, 104, and 106, indicated a breakdown at 800, 900, 900, 700, and 800 VAC RMS respectively. The malfunction was due to a breakdown of the insulation of the Part Number 5025-2 Switch Element.

5.6 Insulation Resistance Test: (Ref. para. 4.1.8) This test was conducted using the same equipment described in the Functional Test with the addition of an Associated Research Model 201 Vibrotest at an ambient temperature of +160°F.

While the switch was deactuated, 500 VDC was applied between receptacle pins F and G, and pins B and C. The switch was actuated and 500 VDC was applied between receptacle pins F and E and pins B and A. The switch was deactuated and 500 VDC was applied between receptacle pins A, B, C, E, F, and G and the body. The insulation resistance of all test units was within the specified requirements.

5.7 Contact Resistance Test: (Ref. para. 3.4.4) This test was conducted using the same equipment used in the Functional Test with the addition of the electrical circuit shown in Figure 3.

While the switch was deactuated, 28 VDC at 5 amps was applied between receptacle pins F and E and pins B and A. While the switch was actuated, 28 VDC at 2 amps was applied between receptacle pins F and G and pins B and C. The contact resistance of all units was within the specified tolerance. The results of the test are recorded in Table III.

5.8 High Temperature Test: (Ref. para. 4.1.9) This test was conducted using the same equipment described in the Functional Test while the unit was encased in a Wyle Model DN104 Temperature Chamber, range -320°F to +350°F.

The unit was stabilized at room ambient temperature and the Functional Test of para. 5.1 was conducted. While cycling the unit as described in para. 5.17, the temperature was increased to +160°F, within ten (10) minutes. The temperature was maintained for fifteen minutes and the Functional Test of para. 5.1 was conducted. The temperature was then stabilized at room ambient temperature and the Functional Test of para. 5.1 was conducted. Four (4) test units successfully completed the test.

5.8.1 Description of Malfunction: Serial Numbers 102 and 105 were out of tolerance at Room Temperatures and +160°F. The

results of the test are recorded in Table I, Page 20.

5.9 Low Temperature Test: (Ref. para. 4.1.10) This test was conducted using the same equipment described in the High Temperature Test.

The unit was stabilized at -100°F and maintained for four (4) hours. The Functional Test of para. 5.1 was conducted. The temperature was then stabilized at room ambient temperature and the Functional Test was conducted. The results are recorded in Table I.

5.9.1 Description of Malfunction: At -100°F and room ambient temperature, Serial Numbers 102 and 105 indicated the settings to be out of tolerance.

Serial Number 102 displayed erratic switch element operation at -100°F.

On the decreasing pressure actuation Serial Number 106 was slightly out of tolerance.

The malfunctions of the subject units were not corrected and testing was resumed.

5.10 Thermal Shock Test: (Ref. para. 4.1.11) This test was conducted using the same equipment described in the High Temperature Test.

The unit was stabilized at a temperature of +160°F and the Functional Test of para. 5.1 was conducted. The temperature was reduced to -100°F at a rate of 30°F per second and maintained for fifteen minutes. The Functional Test was conducted. The temperature was then stabilized at room temperature and the Functional Test conducted. The results of the test are recorded in Table I.

5.10.1 Description of Malfunctions: Serial Numbers 102 and 105 did not meet the increasing pressure tolerances.

Serial Number 106 did not meet the decreasing pressure tolerance.

On decreasing pressures, Serial Number 102 displayed erratic switch element operation at -100°F.

The malfunctions of the subject units were not corrected and testing was resumed.

5.11 Altitude Temperature Test: (Ref. para. 4.1.12) The test was conducted by Garwood Laboratories, Inc. Garwood Laboratories, Inc. Report No. 2208 is presented within Supplement 2.

5.11.1 Description of Malfunction: At -100°F Serial Number 102 and 105 exceeded the first and subsequent cycle tolerances.

Serial Number 106 exceeded the actuation pressure tolerance of the first cycle. On the decreasing pressure actuation, Serial Numbers 102, 105, and 106 were out of tolerance.

Serial Numbers 102 and 105 displayed erratic switch element operation at -100°F. The malfunctions of the subject units were not corrected and testing was resumed.

5.12 Acceleration Test: (Ref. para. 4.1.13) The test was conducted by Garwood Laboratories, Inc. Garwood Laboratories, Inc. Report No. 2208 is presented within Supplement 2.

5.12.1 Description of Malfunction: Two units, Serial Number 102 and 105 are permanently out of specification due to failure of the body hermetic seal.

The malfunctions of the subject units were not corrected and testing was resumed.

5.13 Vibration Test: (Ref. para. 4.1.14) The test was conducted using the same equipment as the Functional Test in conjunction with a Mantec Model EP125 Temperature Chamber, range -320°F to +600°F, M.B. Model T-51-MC Amplifier, Model C-10 Excitor and Model M3 Vibration Meter. (Refer to Figure 4, Page 18, for a photograph of the test setup.)

The tests were conducted using a logarithmic octave sweep rate within the frequency limits of Figure 1, of Appendix I, at approximately one (1) minute per octave. The test duration was 30 minutes in each of the three (3) orthogonal axes, shown in Figure 2 of Appendix I, at -100°F, +160°F, and room ambient temperature. During the vibration test, pressure settings were checked in accordance with para. 5.1 at octave intervals of 5, 10, 20, 40, 80, 160, 320, 640, 1280, and 2000 cps. The results are recorded in Table I.

Although no apparent resonances were encountered, the critical point during vibration was determined to be in the X axis at

1230 cps and 10 g acceleration.

5.13.1 Description of Malfunction:

5.13.1.1 Serial Number 101:

1. Exceeded the increasing and decreasing tolerance at -100°F and +160°F.

2. Displayed erratic switch element operation at +160°F.

3. Displayed switch element chatter at +160°F.

5.13.1.2 Serial Number 102:

1. Exceeded the increasing and decreasing pressure tolerance at -100°F, +160°F, and room temperature.

2. Displayed erratic switch element operation at -100°F.

3. Displayed switch element chatter at -100°F.

5.13.1.3 Serial Number 103:

1. Exceeded the decreasing pressure tolerance at +160°F.

2. Exceeded the increasing pressure tolerance at -100°F.

3. Displayed erratic switch element operation at room temperature, +160°F, and -100°F.

4. Displayed switch element chatter at +160°F and -100°F.

5.13.1.4 Serial Number 104:

1. Exceeded the increasing pressure tolerance at -100°F.

2. Displayed erratic switch element operation at +160°F and -100°F.

3. Displayed switch element chatter at +160°F.

5.13.1.5 Serial Number 105:

1. Exceeded the decreasing pressure tolerances at room temperature and +160°F.

2. Exceeded the increasing pressure tolerances at room temperature and +160°F.

3. Displayed erratic switch element operation at room temperature.

4. Displayed switch element chatter at room temperature.

5. One switch element remained actuated after Unit Deactuation. Test not conducted at -100°F and room temperature.

5.13.1.6 Serial Number 106:

1. Exceeded the decreasing pressure tolerances at +160°F and -100°F.

2. Exceeded the increasing pressure tolerances at room temperature.

3. Displayed switch element chatter at room temperature.

5.14 Acoustics Test: (Ref. para. 4.1.15) The test was conducted by Rototest Laboratories. Rototest Laboratories Report 3592-5 is presented as Supplement No. 3. No switch contact chatter was detected.

5.14.1 Description of Malfunction: Serial Number 103 demonstrated erratic switch element operation. Serial Numbers 102, 104, 105, and 106 were reported to be out of tolerance.

5.15 Shock Test: (Ref. para. 4.1.16) The test was conducted by Garwood Laboratories, Inc. Garwood Laboratories, Inc. Report No. 2208 is presented within Supplement No. 2.

5.15.1 Description of Malfunction: On increasing and decreasing pressure, Serial Numbers 102 and 105 were out of tolerance due to failure of the body hermetic seal.

The malfunctions of the subject units were not corrected and testing was resumed.

5.16 Contact Monitoring Test: (Ref. para. 4.1.17) The tests were conducted during the Acceleration, Vibration, Acoustics and Shock Tests using a C.E.C. Model 5-116 Recording Oscillograph using galvanometers having a 0 to 2500 cps response rate.

The results of the tests are reported in the respective paragraphs for the Acceleration, Vibration, Acoustics and Shock Tests.

5.17 Service Life Test: (Ref. para. 4.1.18) The tests were conducted using the same equipment as described in the Functional Test with the addition of a solenoid valve with which to cycle the applied pressure. (Refer to Figure 5, Page 19, for a photograph of the test setup.)

The test units were subjected to 3000 cycles of operation. A cycle consisted of increasing and decreasing the pressure from 14.7 psia to 44 psia to 14.7 psia at a rate of 25 cycles per minute with the rate of pressure increase and decay exceeding 10 psi per second. Following 3000 cycles, the Functional Test was performed. The results of the tests are recorded in Table I.

5.17.1 Description of Malfunction: Serial Numbers 103, 104, and 105 demonstrated erratic switch element operation as shown in Table I. Serial Numbers 102, and 105 exceeded the pressure setting tolerance.

5.18 Repeat of Actuation and Deactuation Time Tests: (Ref. para. 3.5.6) The test equipment and procedure were identical to the initial Actuation and Deactuation Time Test of para. 5.2.

5.18.1 Description of Malfunction: The response time of Serial Numbers 102, and 105 were not recorded due to the actuation pressure of the units exceeding the maximum step-input of 32 psia.

The results of the tests are recorded in Table II, Page 62.

5.19 Repeat of Proof Test: (Ref. para. 4.1.5) The test equipment and procedure were identical to the initial Proof Test of para. 5.3.

No failure or leakage occurred as a result of the pressure application.

5.20 Repeat of Leak Test: (Ref. paragraph 4.1.6) The test was conducted by Helium Leak Testing Co. Their certification, dated March 21, 1962, is presented within Supplement 1, Page 64. No leakage was evidenced as shown on a Consolidated Electrodynamics Mass Spectrometer, adjusted to a sensitivity of 1×10^{-9} cc/sec. of helium.

5.21 Repeat of Dielectric Strength Test: (Ref. para. 4.1.7) The test equipment and procedure were identical to the initial Dielectric Strength Test of para. 5.5.

5.21.1 Description of Malfunction: Five units, Serial Numbers 101, 102, 103, 104, and 106 indicated a breakdown at 750, 900, 700, 750, and 600 respectively. The malfunction was due to a breakdown of the insulation of the Part Number 5025-2 Switch Element.

5.22 Repeat of Insulation Resistance Test: (Ref. para. 4.1.8) The test equipment and procedure were identical to the initial Insulation Resistance Test of para. 5.6.

5.22.1 Description of Malfunction: Serial Number 103 circuit (B-A) could not be measured due to malfunction that occurred during the Vibration Test.

5.23 Repeat of Contact Resistance Test: (Ref. para. 3.4.4) The test equipment and procedure were identical to the initial Contact Resistance Test of para. 5.7.

5.23.1 Description of Malfunction: Serial Number 103 circuit (B-C) could not be measured due to the malfunction that occurred during the Vibration Test.

The high contact resistance of Serial Number 105 occurred as a result of the severe switch element chatter experienced during the Vibration Test.

The results of the test are recorded in Table III.

5.24 Burst Test: (Ref. para. 4.1.19) The test was conducted on a Frebank Model TE 146-1 test stand using a 0 - 5000 psi Heise Pressure Gage.

A minimum pressure of 110 psia was applied to all test units at ambient room temperature. All test units successfully completed the Burst Test without leakage or failure.

A pressure of 1400 psia was applied to all test units at ambient room temperature. All test units successfully completed the Burst Test without leakage or failure.

6.0 DISCUSSION:

Following, is a discussion of the discrepancies in the operation of the subject units during the design evaluation test program.

6.1 Dielectric Strength Test: As a result of this malfunction, Frebank Company Engineering Directive No. 205, Appendix II, Page 126, was issued to inaugurate a more complete inspection of the Part Number 5025-2 switch element. By conforming to this improved inspection procedure, further failures of this type will be eliminated.

6.2 High Temperature Test: Serial No.'s 102 and 105 failed to meet the requirements due to a failure of the hermetic seal of the switch cavity, which allowed the pressure within the unit to equalize with atmospheric pressure. This caused Serial No.'s 102 and 105 to become permanently out of tolerance. As a result of this problem, Frebank Company Engineering Directive No. 208, Appendix III, Page 128, was issued to initiate testing of all body castings for porosity, in addition to the leakage tests normally conducted in accordance with the assembly procedure.

6.3 Low Temperature Test:

6.3.1 Increasing Pressure Settings Over Tolerance, Serial No.'s 102 and 105: The corrective measures described in para. 6.2 would correct this malfunction as experienced in the Low Temperature Test.

6.3.2 Decreasing Pressure Setting Under Tolerance, Serial No. 106: Serial No. 106 was 0.2 to 0.3 psi below the decreasing pressure tolerance. This will be corrected with improved temperature compensation on future units.

6.3.3 Erratic Switch Element Operation; Serial No. 102: This malfunction was due to incorrect positioning of the switch elements relative to the belleville stack travel, and in relation to each other. This problem has been solved by the use of two test fixtures, TA 331 and TA 325, that will accurately measure the position of the switches in relation to each other in the bracket, and also the position relative to the belleville stack travel. The proper application of these fixtures will eliminate further malfunction of this type.

6.4 Thermal Shock Test: The corrective measures described in para. 6.3 would correct the malfunctions as experienced in the Thermal Shock Test.

6.5 Altitude Temperature Test:

6.5.1 First Cycle Malfunction: The first cycle malfunction can be corrected with a spacer ring design improvement using the new Part Number 7565 and 7566 spacer rings. This design improvement, when incorporated in the subject unit, will preclude further failure of this type.

6.6 Acceleration: The corrective measures described in para. 6.2 would correct this malfunction as experienced during Acceleration.

6.7 Vibration Test: The corrective measures described in para. 6.3 would correct the malfunctions experienced during the Vibration Test.

6.8 Acoustics Test: The corrective measures described in para. 6.3 would correct the malfunctions experienced during the Vibration Test.

6.9 Shock Test: The corrective measures described in para. 6.2 would correct the malfunction experienced during the Shock Test.

6.10 Service Life Test: The corrective measures described in paragraphs 6.2 and 6.3.3 would correct the malfunctions experienced during the Service Life Test.

6.11 Repeat of Actuation and Deactuation Time Tests: The corrective measures described in para. 6.2 would correct the malfunctions experienced during the Repeat Actuation and Deactuation Time Test.

6.12 Repeat of Dielectric Strength Test: The corrective measures described in para. 6.1 would correct the malfunctions experienced during the Repeat Dielectric Strength Test.

6.13 Repeat of Insulation Resistance Test: The corrective measures described in para. 6.3.3 would correct the malfunction experienced during the Repeat Insulation Resistance Test.

6.14 Repeat of Contact Resistance Test: The corrective measures described in para. 6.3.3 would correct the malfunction experienced during the Repeat Contact Resistance Test.

REVISIONS			
SYM	DESCRIPTION	DATE	APPROVAL
A	REV. TO INCORP. DETAIL CHANGES	5-61	[illegible]
B	DELETED 2 PCS LLC	10-62	[illegible]

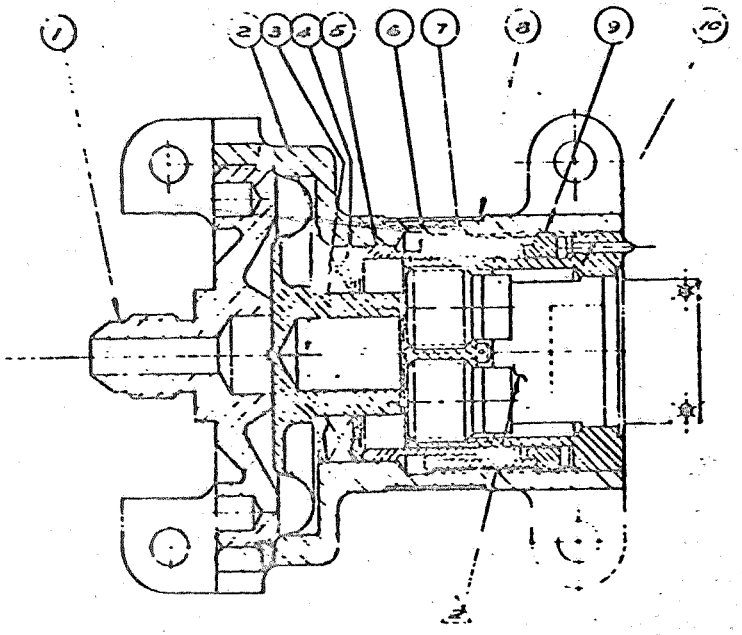

A4640-1
B

	PIN N	NOT USED
(YELLOW)	PIN G	NO
(RED)	PIN F	COM
(GREEN)	PIN E	NC
(YELLOW)	PIN C	NO
(RED)	PIN B	COM
(GREEN)	PIN A	NC
(WHITE)	PIN D	

WIRING DIAGRAM

ITEM NO	REQD	PART NO	DESCRIPTION	MATERIAL	INSTL. SPECS.	NEXT ASSY	USED ON
	1	4828	ELEC ASSY				
9	1	4888	RING, ADJUSTMENT				
8		5017-8	NAMEPLATE				
7	1	4887	RING, CONNECTOR				
6	1	4886	RING, SPACER				
5	1	4885-3	RING, FULCRUM				
4	2	4675	RING, LARGE				
3	2	4674	RING, SMALL				
2	2	3910-2	SPRING, 8 V				
1	1	3910-1	SPRING, 8 V				
1	1	4865	BODY ASSEMBLY				

APPLICATION

PREPARED FOR NASA

NEXT ASSY / USED ON

UNLESS OTHERWISE SPECIFIED

DRAWN G. DESIGN 9/28/61
CHECKED RS 9-28-61
APPROVED [illegible] 9-28-61

TITLE
SWITCH ASSEMBLY

SCALE 2/1 CODE IDENT NO. 4154

FREBANK COMPANY
GLENDALE CALIFORNIA

A4640-1

NOTES:
1. ELECTRICAL WIRING OMITTED FOR CLARITY.
2. FOR ASSEM PROCEDURE USE AP 4640-1
3. FOR ACCEPTANCE TEST USE AT 4640-1

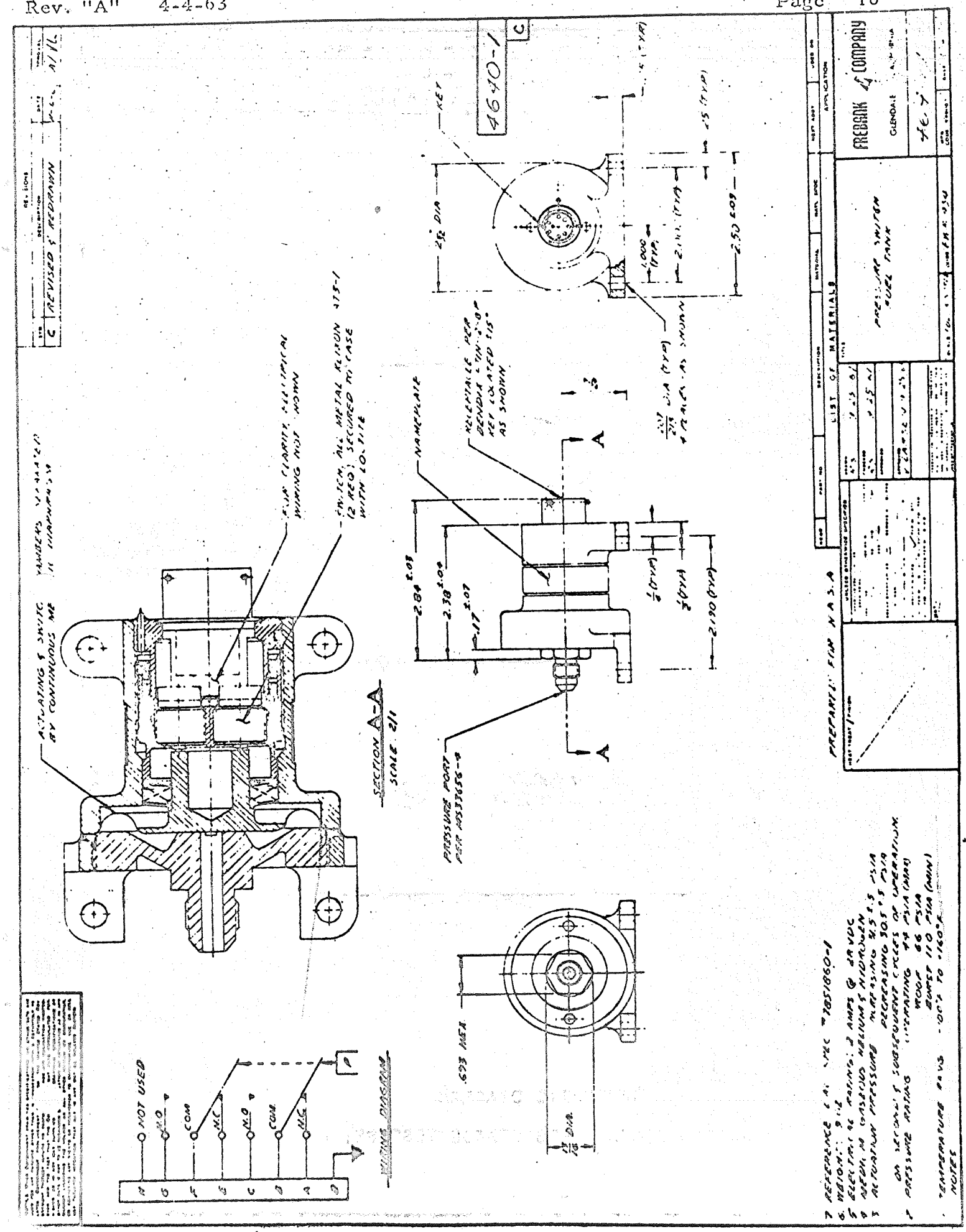
REVISED & REDRAWN
4640-1
KEY
NAMEPLATE
PRESSURE PORT PER MS33656-4
SECTION A-A
SCALE 2/1
ACTUATING & SWITCH BY CONTINUOUS MEAN
FOR CLARITY, ELECTRICAL WIRING NOT SHOWN
SWITCH, ALL METAL KLIXON 475-1 (2 REQ) SECURED TO CASE WITH LOCTITE
NOT USED
N.O.
COM
N.C.
WIRING DIAGRAM
.693 HEX
PREPARED FOR N.A.S.A.
LIST OF MATERIALS
PRESSURE SWITCH FUEL TANK
FREBANK COMPANY
GLENDALE
APPLICATION
REFERENCE LAB SPEC #7851860-1
ELECTRICAL RATING: 2 AMPS @ 28 VDC
MEDIUM GASEOUS HELIUM & HYDROGEN
ACTUATION PRESSURE INCREASING 31.5±.5 PSIA
DECREASING 30.5±.5 PSIA
ON SECOND & SUBSEQUENT CYCLES OF OPERATION
PRESSURE RATING OPERATING 44 PSIA (MAX)
ROOF 66 PSIA
BURST 110 PSIA (MIN)
TEMPERATURE RANGE -100°F TO +160°F
NOTES

Figure 2

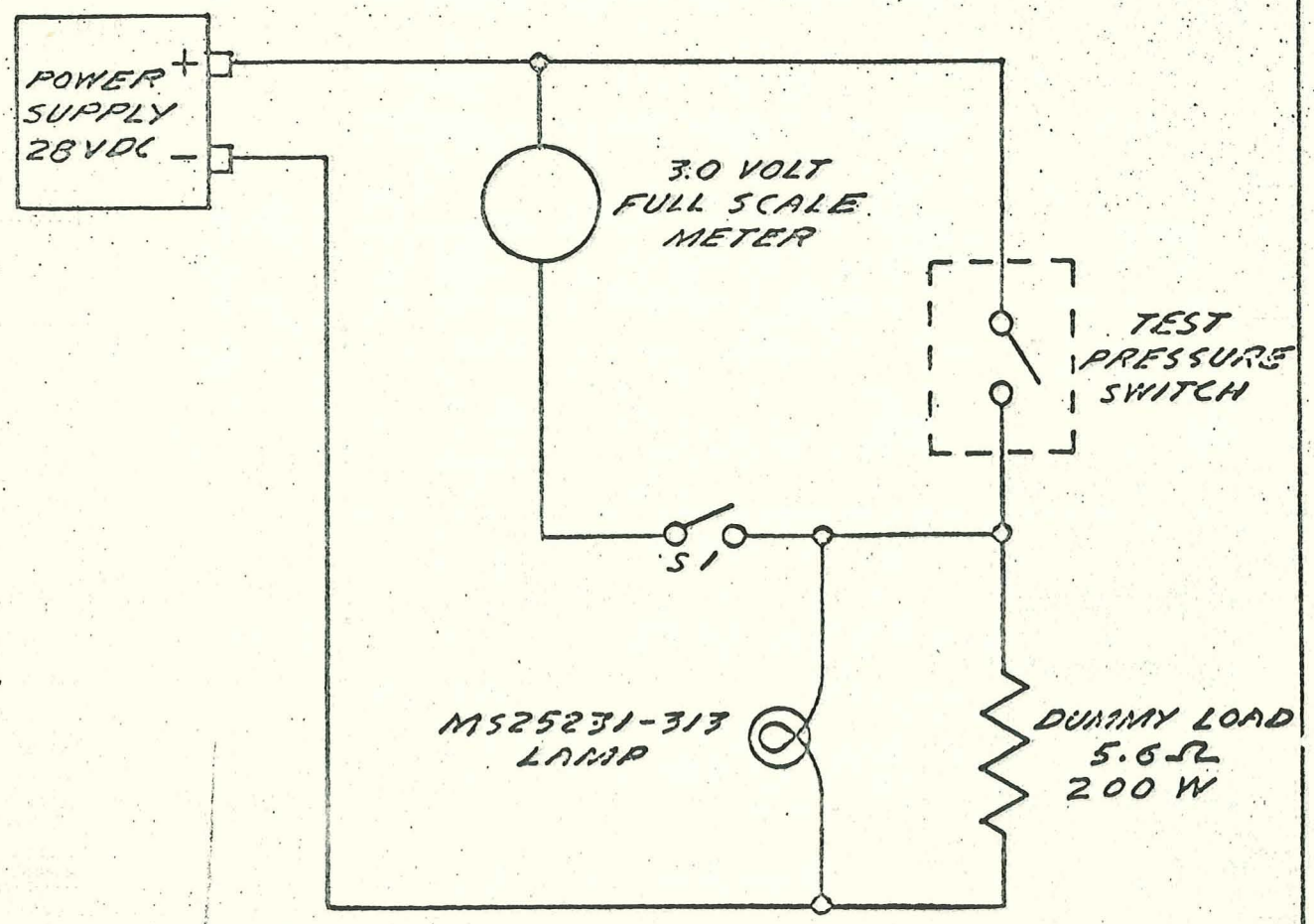

SCHEMATIC DIAGRAM

SWITCH CONTACT RESISTANCE TEST SETUP

FIGURE 3

REVISION DATE	FREBANK COMPANY GLENDALE CALIFORNIA	REPORT NO. 178
		PAGE 18

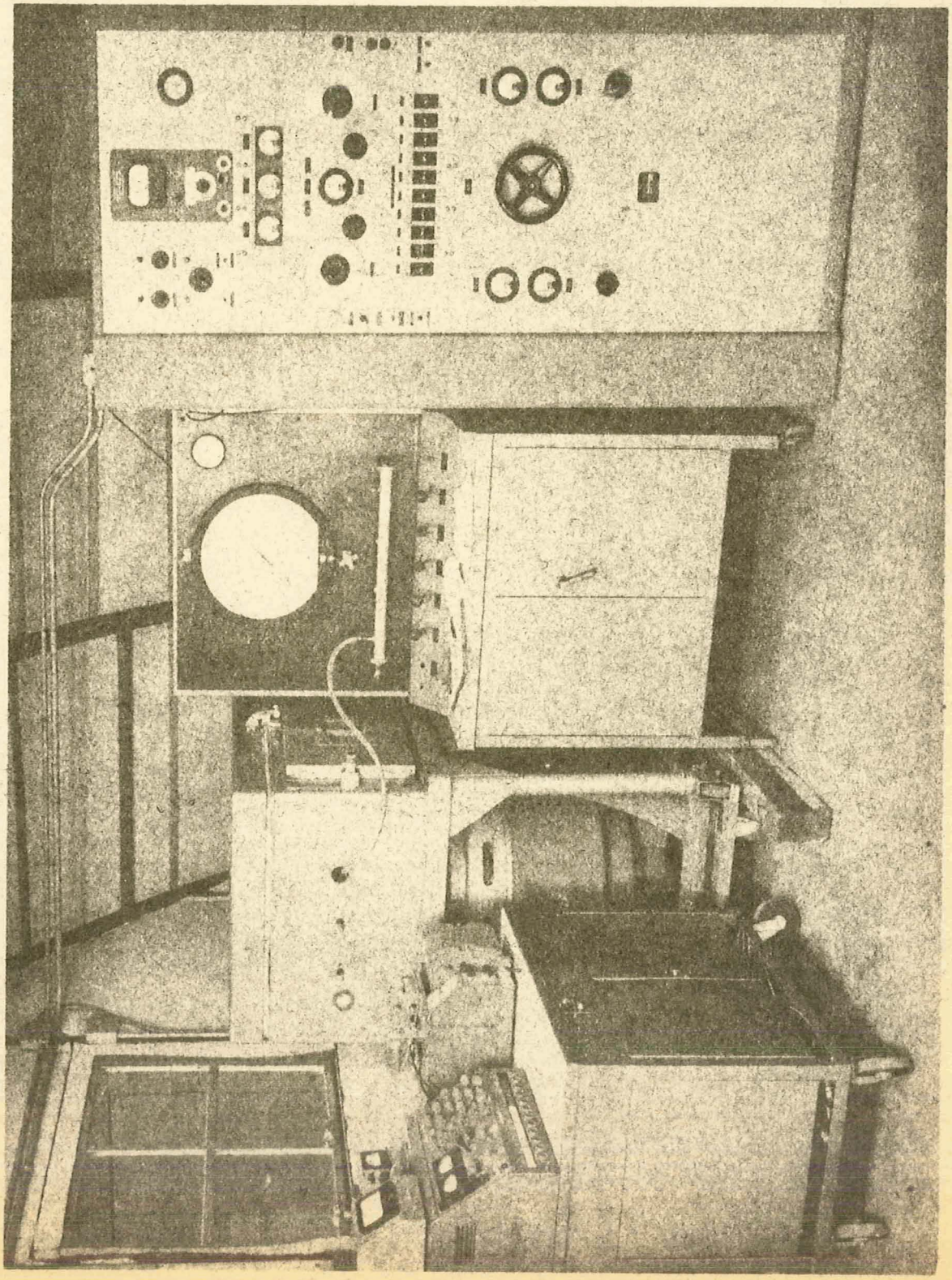

VIBRATION TEST SETUP

Figure 4

REVISION DATE	FREBANK COMPANY GLENDALE CALIFORNIA	REPORT NO. 178
		PAGE 19

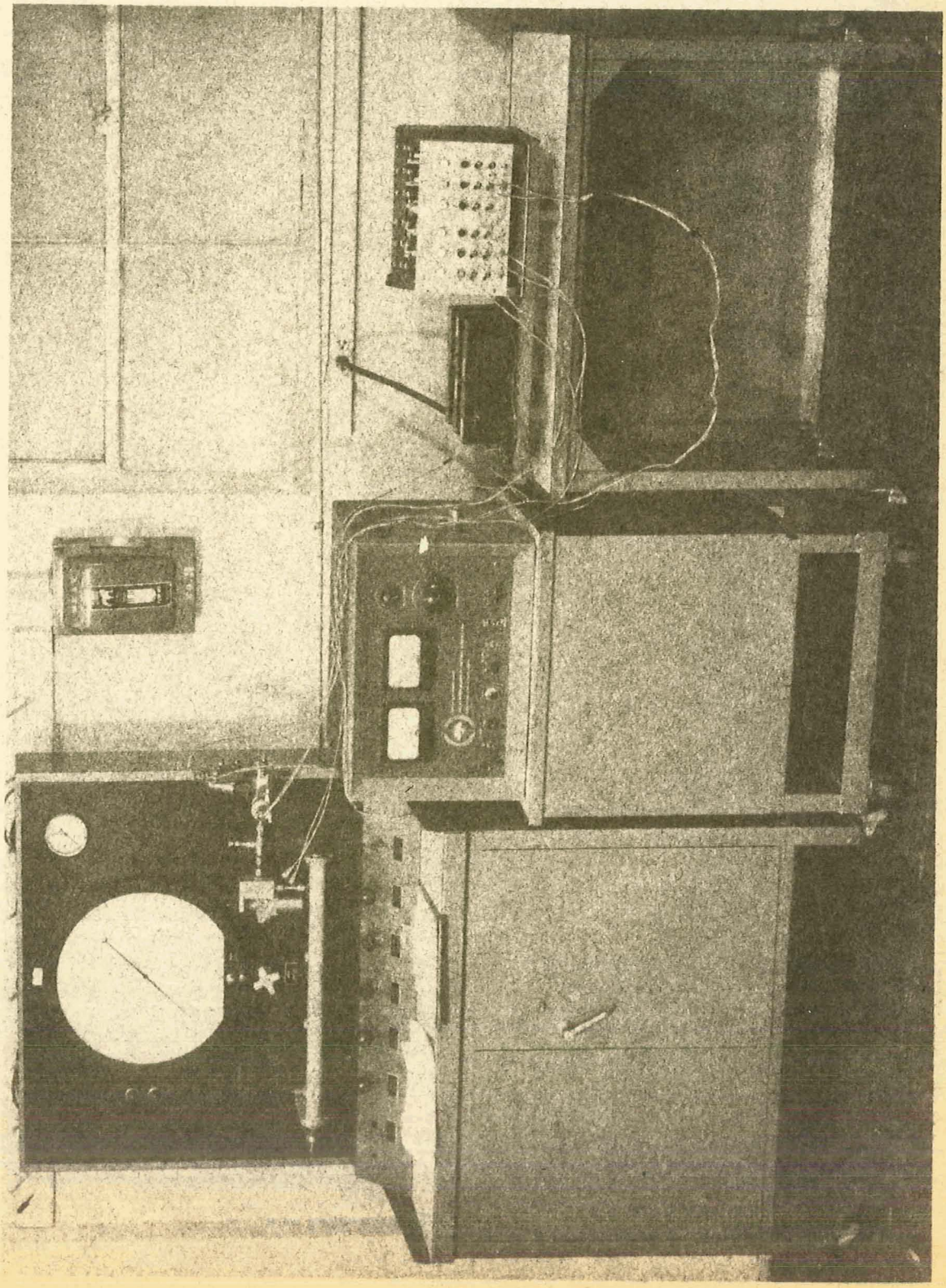

SERVICE LIFE TEST SETUP

Figure 5

TABLE I

FUNCTIONAL TEST RESULTS FOR UNITS
SERIAL NO. 101, 102, 103, 104, 105 & 106
TEST UNIT SERIAL NO. 101

TEST CONDITION	AMBIENT TEMPERATURE °F	INCREASING PRESSURE ACTUATION PSIA	DECREASING PRESSURE ACTUATION PSIA
REQUIREMENTS	-100 TO +160	31 - 32	30 - 31
INITIAL FUNCTION TEST	+79	31.4	30.2
		31.4	30.2
		31.4	30.2
		31.4	30.2
		31.4	30.2
SERVICE LIFE TEST	RT	31.2	30.4
		31.2	30.4
		31.2	30.4
		31.2	30.4
		31.2	30.4

* ACTUATION PRESS. OF 1ST. CYCLE NOT WITHIN TOLERANCE OF ACTUATION PRESS. OF 2ND. CYCLE.
** SETTINGS OUT OF TOLERANCE.
\- CHATTER.
E ERRATIC SWITCH ELEMENT OPERATION.

TEST UNIT SERIAL NUMBER 101

HIGH TEMPERATURE

LOW TEMPERATURE

THERMAL SHOCK

VIBRATION

NOTE: Pages 21 through 26 of report number 178 have been deleted because the data were collected prior to redesign of the part. For equivalent testing of the redesigned part see page SM-112 (high temperature, low temperature, and thermal shock) and page SM-82 (vibration).

TABLE I

FUNCTIONAL TEST RESULTS FOR UNITS
SERIAL NO. 101, 102, 103, 104, 105 & 106
TEST UNIT SERIAL NO. 102

TEST CONDITION	AMBIENT TEMPERATURE °F	INCREASING PRESSURE ACTUATION PSIA	DECREASING PRESSURE ACTUATION PSIA
REQUIREMENTS	-100 TO +160	31 - 32	30 - 31
INITIAL FUNCTION TEST	+79	31.7	30.5
		31.7	30.5
		31.7	30.5
		31.7	30.5
		31.7	30.5
SERVICE LIFE TEST	RT	35.0**	34.3**
		35.0**	34.3**
		35.0**	34.3**
		35.0**	34.3**
		35.0**	34.3**

* ACTUATION PRESS. OF 1ST. CYCLE NOT WITHIN TOLERANCE OF ACTUATION PRESS. OF 2ND. CYCLE.
** SETTINGS OUT OF TOLERANCE.
\- CHATTER.
E ERRATIC SWITCH ELEMENT OPERATION.

TEST UNIT SERIAL NUMBER 102

HIGH TEMPERATURE

LOW TEMPERATURE

THERMAL SHOCK

VIBRATION

NOTE: Pages 28 through 33 of report number 178 have been deleted because the data were collected prior to redesign of the part. For equivalent testing of the redesigned part see page SM-112 (high temperature, low temperature, and thermal shock) and page SM-82 (vibration).

TABLE

FUNCTIONAL TEST RESULTS FOR UNITS
SERIAL NO. 101, 102, 103, 104, 105 & 106
TEST UNIT SERIAL NO. 103

TEST CONDITION	AMBIENT TEMPERATURE °F	INCREASING PRESSURE ACTUATION PSIA	DECREASING PRESSURE ACTUATION PSIA
REQUIREMENTS	-100 TO +160	31 - 32	30 - 31
INITIAL FUNCTION TEST	+79	31.5	30.2
		31.4	30.2.
		31.4	30.2
		31.4	30.2
		31.4	30.2
SERVICE LIFE TEST	RT	31.1E	30.3
		31.1E	30.3
		31.1E	30.3
		31.1E	30.3
		31.1E	30.3

* ACTUATION PRESS. OF 1ST. CYCLE NOT WITHIN TOLERANCE OF ACTUATION PRESS. OF 2ND. CYCLE.
** SETTINGS OUT OF TOLERANCE.
\- CHATTER.
E ERRATIC SWITCH ELEMENT OPERATION.

TEST UNIT SERIAL NUMBER 103

HIGH TEMPERATURE

LOW TEMPERATURE

THERMAL SHOCK

VIBRATION

NOTE: Pages 35 through 40 of report number 178 have been deleted because the data were collected prior to redesign of the part. For equivalent testing of the redesigned part see page SM-112 (high temperature, low temperature, and thermal shock) and page SM-82 (vibration).

TABLE I

FUNCTIONAL TEST RESULTS FOR UNITS
SERIAL NO. 101, 102, 103, 104, 105 & 106
TEST UNIT SERIAL NO. 104

TEST CONDITION	AMBIENT TEMPERATURE °F	INCREASING PRESSURE ACTUATION PSIA	DECREASING PRESSURE ACTUATION PSIA
REQUIREMENTS	-100 TO +160	31 - 32	30 - 31
INITIAL FUNCTION TEST	+79	31.7	30.2
		31.7	30.2
		31.7	30.2
		31.7	30.2
		31.7	30.2
SERVICE LIFE TEST	RT	31.3E	30.3
		31.3E	30.3
		31.3E	30.3
		31.3E	30.3
		31.3E	30.3

* ACTUATION PRESS. OF 1ST. CYCLE NOT WITHIN TOLERANCE OF ACTUATION PRESS. OF 2ND. CYCLE.
** SETTINGS OUT OF TOLERANCE.
\- CHATTER.
E ERRATIC SWITCH ELEMENT OPERATION.

TEST UNIT SERIAL NUMBER 104

HIGH TEMPERATURE

LOW TEMPERATURE

THERMAL SHOCK

VIBRATION

NOTE: Pages 42 through 47 of report number 178 have been deleted because the data were collected prior to redesign of the part. For equivalent testing of the redesigned part see page SM-112 (high temperature, low temperature, and thermal shock) and page SM-82 (vibration).

TABLE I

FUNCTIONAL TEST RESULTS FOR UNITS
SERIAL NO. 101, 102, 103, 104, 105 & 106
TEST UNIT SERIAL NO. 105

TEST CONDITION	AMBIENT TEMPERATURE °F	INCREASING PRESSURE ACTUATION PSIA	DECREASING PRESSURE ACTUATION PSIA
REQUIREMENTS	-100 TO +160	31 - 32	30 - 31
INITIAL FUNCTION TEST	+79	31.5	30.4
		31.4	30.4
		31.4	30.4
		31.4	30.4
		31.4	30.4
SERVICE LIFE TEST	RT	41.4**	40.6**E
		41.4**	40.6**E
		41.4**	40.6**E
		41.4**	40.6**E
		41.4**	40.6**E

* ACTUATION PRESS. OF 1ST. CYCLE NOT WITHIN TOLERANCE OF ACTUATION PRESS. OF 2ND. CYCLE.
** SETTINGS OUT OF TOLERANCE.
\- CHATTER.
E ERRATIC SWITCH ELEMENT OPERATION.

TEST UNIT SERIAL NUMBER 105

HIGH TEMPERATURE

LOW TEMPERATURE

THERMAL SHOCK

VIBRATION

NOTE: Pages 49 through 54 of report number 178 have been deleted because the data were collected prior to redesign of the part. For equivalent testing of the redesigned part see page SM-112 (high temperature, low temperature, and thermal shock) and page SM-82 (vibration).

TABLE I

FUNCTIONAL TEST RESULTS FOR UNITS
SERIAL NO. 101, 102, 103, 104, 105 & 106
TEST UNIT SERIAL NO. 106

TEST CONDITION	AMBIENT TEMPERATURE °F	INCREASING PRESSURE ACTUATION PSIA	DECREASING PRESSURE ACTUATION PSIA
REQUIREMENTS	-100 TO +160	31 - 32	30 - 31
INITIAL FUNCTION TEST	+79	31.7	30.2
		31.7	30.2
		31.7	30.2
		31.7	30.2
		31.7	30.2
SERVICE LIFE TEST	RT	31.6	30.3
		31.6	30.3
		31.6	30.3
		31.6	30.3
		31.6	30.3

* ACTUATION PRESS. OF 1ST. CYCLE NOT WITHIN TOLERANCE OF ACTUATION PRESS. OF 2ND. CYCLE.
** SETTINGS OUT OF TOLERANCE.
— CHATTER.
E ERRATIC SWITCH ELEMENT OPERATION.

TABLE II

ACTUATION & DEACTUATION TIME TEST RESULTS FOR UNITS SERIAL NO. 101, 102, 103, 104, 105 & 106

TEST CONDITION	ACTUATION RESPONSE TIME MILLI-SECONDS	DEACTUATION RESPONSE TIME MILLI-SECONDS
REQUIREMENTS	50 MAXIMUM	50 MAXIMUM
INITIAL TEST		
SERIAL No. 101	2	2
SERIAL No. 102	1	1
SERIAL No. 103	1	2
SERIAL No. 104	3	3
SERIAL No. 105	3	2
SERIAL No. 106	3	1
REPEAT TEST		
SERIAL No. 101	2	3
SERIAL No. 102	- E	-
SERIAL No. 103	1	2
SERIAL No. 104	3	2
SERIAL No. 105	- E	-
SERIAL No. 106	2	1

TABLE III

CONTACT RESISTANCE TEST FOR UNITS
SERIAL NO. 101, 102, 103, 104, 105 & 106

TEST CONDITION	DEACTUATED CONTACTS A & B MILLIOHMS	DEACTUATED CONTACTS E & F MILLIOHMS	ACTUATED CONTACTS B & C MILLIOHMS	ACTUATED CONTACTS F & G MILLIOHMS
REQUIREMENTS	50 MAX.	50 MAX.	50 MAX.	50 MAX.
INITIAL TEST				
SERIAL No. 101	20	30	15	15
SERIAL No. 102	15	20	10	40
SERIAL No. 103	15	10	10	10
SERIAL No. 104	20	25	20	25
SERIAL No. 105	35	30	30	20
SERIAL No. 106	15	10	10	15
REPEAT TEST				
SERIAL No. 101	13	13	15	25
SERIAL No. 102	13	10	8	5
SERIAL No. 103	5	13	0	5
SERIAL No. 104	10	13	13	13
SERIAL No. 105	25	13	25	75
SERIAL No. 106	38	13	13	15

SUPPLEMENT 1

HELIUM LEAK TESTING CO. CERTIFICATIONS

LEAK TESTS OF FREBANK PART NUMBER 4640-1
PRESSURE SWITCHES TO FREBANK COMPANY
DESIGN EVALUATION TEST PROCEDURE
FOR ENGINEERING REPORT NO. 178

The Helium Leak Testing Co.
8635 YOLANDA AVENUE NORTHRIDGE, CALIFORNIA
Dickens 5-2461

TO: Frebank Company
711 W. Broadway
Glendale 4, California

DATE January 3, 1962

ATTN:

YOUR ORDER NUMBER 8713

UNITS TESTED 6 - P/N 4640-1 Pressure Switches S/N 101-106 inclusive

CERTIFICATION

The above described units were tested on January 2, 3, 1962 on a C.E.C. Mass Spectrometer Helium Leak Detector Model #24-110, S/N 536BR17, in accordance with Frebank Design Evaluation Test Procedure #178, paragraph 4.

The Leak Detector was calibrated with Glass Standard Leak #25643.

The sensitivity of the machine was such to detect a leak of less than 1×10^{-9} cc/sec. of helium.

No leakage was detected.

The temperature control and a Potentiometer Model 126W2 was furnished and calibrated by Frebank Co.

J. M. Harris

F. C. Williams, AFQCR

Helium Leak Testing Co.
8635 YOLANDA AVENUE NORTHRIDGE, CALIFORNIA
Dickens 5-2461
TRiangle 3-5482

TO: Frebank Co.
711 W. Broadway
Glendale 4, California

DATE March 21, 1962

ATTN:

YOUR ORDER NUMBER 8956

UNITS TESTED 6 - #4640-1 Pressure switches #S/N 101-106 incl.

CERTIFICATION

The above described units were tested on a C.E.C. Mass Spectrometer Helium Leak Detector Model #24-210 S/N 3, in accordance with Frebank Design Evaluation Test Procedure #178, paragraph 4.

The Leak Detector was calibrated with Glass Standard Leak #25643.

The sensitivity of the machine was such to detect a leak of less than 1×10^{-7} cc/sec. of helium.

No leakage was detected.

The temperature control and a Potentiometer Model 126W was furnished and calibrated by Frebank Co.

J. M. Harris

F. C. Williams, AFQCR

SUPPLEMENT 2

GARWOOD LABORATORIES INC. REPORT NO. 2208

ALTITUDE-TEMPERATURE, ACCELERATION
AND SHOCK TESTS
ON FREBANK PART NUMBER 4640-1 PRESSURE SWITCH
TO FREBANK COMPANY DESIGN EVALUATION TEST
PROCEDURE FOR ENGINEERING REPORT NO. 178

ALTITUDE/TEMPERATURE

ACCELERATION

SHOCK

NOTE: Supplement 2 to report number 178 has been deleted in its entirety because the data were collected prior to redesign of the part. Refer to Addendum 1 page SM-61 for data regarding altitude/temperature, acceleration, and shock tests on the redesigned part.

SUPPLEMENT 3

ROTOTEST LABORATORIES CERTIFIED TEST REPORT NO. 3592-5

ACOUSTIC TESTING OF FREBANK PART NUMBER 4640-1
PRESSURE SWITCH IN ACCORDANCE WITH FREBANK
COMPANY DESIGN EVALUATION TEST PROCEDURE
FOR ENGINEERING REPORT NO. 178

ACOUSTICAL NOISE

NOTE: Supplement 3 has been deleted in its entirety because the data were collected prior to redesign of the part. Refer to Addendum 3 page SM-137 for data regarding acoustical noise tests on the redesigned part.

APPENDIX I

FREBANK COMPANY DESIGN EVALUATION TEST PROCEDURE FOR ENGINEERING REPORT NO. 178 PART NUMBER 4640-1 PRESSURE SWITCH

FREBANK COMPANY
GLENDALE CALIFORNIA

Engineering Report

FREBANK COMPANY

DESIGN EVALUATION TEST PROCEDURE
FOR ENGINEERING REPORT NO. 178

PART NUMBER 4640-1 PRESSURE SWITCH
REVISION "B"

D.A.C. SPECIFICATION 7851860-1 "E"

REV. "B" 1/10/62
REV. "A" 11-15-61

DATE SEPTEMBER 26, 1961

PREPARED R. M. Frincke
R. M. FRINCKE, ENGR'G. LAB. SUPV'R.

CHECKED H. C. Nicolai
H. C. NICOLAI, DESIGN ENGINEER

APPROVED V. A. Larsen
V. A. LARSEN
CHIEF ENGINEER

STATE OF CALIFORNIA
COUNTY OF LOS ANGELES } ss.

_____, being duly sworn, deposes and says: That the information contained in this report is to the best of his knowledge true and correct in all respects.

_____

SUBSCRIBED and sworn to before me this _____ day of _____, 19__

_____
Notary Public in and for the County of Los Angeles, State of California

My commission expires _____ 19__

CONTRACT NO. _____

NO. PAGES ____ -15- _____

REVISION DATE	FREBANK COMPANY GLENDALE CALIFORNIA	REPORT NO. 178
"B" 1/10/62 "A" 11-15-61		PAGE 2

REVISIONS:

REVISION "A" DTD. 11-15-61

REVISED AND REWRITTEN

REVISION "B" DTD. 1/10/62

REVISED TO CONFORM WITH DAC VIR M-36604 "B"

REVISED BY: R. M. Frincke
R. M. FRINCKE, ENG. LAB. SUPV'R.

APPROVED BY: V. A. Larsen
V. A. LARSEN, CHIEF ENGINEER

TABLE OF CONTENTS

ITEM	PAGE
TITLE PAGE	1
REVISION PAGE	2
TABLE OF CONTENTS	3
SUBJECT	4
REFERENCE	4
TEST SPECIMEN	4
TEST CONDITIONS	4
INSTRUMENT ACCURACIES	4
TEST PROCEDURE	4
GENERAL NOTES	4
FIGURE 1. VIBRATION LEVEL CURVE	13
FIGURE 2. AXIS IDENTIFICATION	14
FIGURE 3. CONTACT-MONITORING SYSTEM	15

SUBJECT: DESIGN EVALUATION TESTS OF FREBANK COMPANY PART NUMBER 4640-1 PRESSURE SWITCH.

REFERENCE: (A) DOUGLAS AIRCRAFT COMPANY SPECIFICATION No. 7851860-1 REVISION "E" "B'
(B) DOUGLAS AIRCRAFT COMPANY SPECIFICATION No. DPS 4.920.

TEST SPECIMEN:

SIX PRESSURE SWITCHES SHALL BE SUBJECTED TO THE PROGRAM AS SPECIFIED HEREIN. TWO OF THESE SWITCHES MAY BE PROTOTYPE, BUT FOUR MUST BE PRODUCTION UNITS.

TEST CONDITIONS:

TEST MEDIUM: CLEAN DRY AIR, GASEOUS NITROGEN PER DPS 4.920 AND GASEOUS HELIUM AS REQUIRED.

ELECTRICAL CAPACITY: 2 AMPERES INDUCTIVE AT 28 VOLTS D.C.

AMBIENT TEMPERATURE: 60°F TO 80°F UNLESS OTHERWISE SPECIFIED.

FLUID TEMPERATURE : 60°F TO 80°F UNLESS OTHERWISE SPECIFIED.

INSTRUMENT ACCURACIES:

CALIBRATION PRESSURE GAUGES: 1/5 PERCENT OF FULL SCALE READING.

TEMPERATURE RECORDER: ±5 DEGREES FAHRENHEIT.

ELECTRICAL METERS: ±3 PERCENT OF FULL SCALE READING.

TEST PROCEDURE:

THE TEST PROGRAM IS TO BE CONDUCTED ON EACH UNIT IN THE ORDER SPECIFIED IN THE FOLLOWING PARAGRAPHS.

1. FUNCTIONAL TESTS: (REF. (A) PARA. 4.1.4)

USE GASEOUS NITROGEN PER DPS 4.920. RECORD THE FIRST 5 CYCLES OF PRESSURE SWITCH OPERATION OF EACH SERIES OF TESTS, AS REQUIRED BY THIS SPECIFICATION.

1.1 APPLY 30 PSIA TO PRESSURE PORT. THE SWITCH SHALL REMAIN OPEN BETWEEN PINS B AND C, AND PINS F AND G.

1.2 INCREASE THIS PRESSURE TO 32 PSIA MAXIMUM. SWITCH SHALL CLOSE AT 31.5 ±0.5 PSIA BETWEEN PINS B AND C, AND PINS F AND G. THE RATE OF PRESSURE INCREASE FROM 30 PSIA TO ACTUATION SHALL BE APPROXIMATELY 5 PSI PER MINUTE.

ACTUATION PRESSURE OF THE FIRST CYCLE OF ANY SERIES OF TESTS SHALL BE WITHIN ±0.4 PSI OF THE ACTUATION PRESSURE OF THE SECOND CYCLE.

REPEATABILITY OF THIRD AND SUBSEQUENT ACTUATION POINTS SHALL BE WITHIN ±1 PERCENT OF THE SECOND CYCLE ACTUATION POINT.

1.3 DECREASE THE PRESSURE. SWITCH SHALL OPEN AT 30.5 ±0.5 PSIA BETWEEN PINS B AND C, AND PINS F AND G. THE RATE OF PRESSURE DECREASE FROM 31 PSIA TO DEACTUATION SHALL BE APPROXIMATELY 5 PSI PER MINUTE.

2. ACTUATION AND DEACTUATION TIME: (REF. (A) PARA. 3.5.6)

2.1 APPLY 32 PSIA TO PRESSURE PORT AT 10 PSI PER SECOND MINIMUM. SWITCH SHALL BE FULLY ACTUATED 50 MILLISECONDS AFTER PRESSURE IS APPLIED, AS RECORDED ON A C.E.C. MODEL 5-116 OSCILLOGRAPH.

2.2 REDUCE PRESSURE AT PRESSURE PORT AT 10 PSI PER SECOND MINIMUM TO 30 PSIA. SWITCH TO BE FULLY DEACTUATED 50 MILLISECONDS AFTER PRESSURE IS REDUCED, AS RECORDED ON A C.E.C. MODEL 5-116 OSCILLOGRAPH.

3. PROOF TEST: (REF. (A) PARA. 4.1.5)

USE GASEOUS NITROGEN PER DPS 4.920.

3.1 APPLY 66 PSIA TO PRESSURE PORT. MAINTAIN PRESSURE FOR ONE (1) MINUTE. THERE SHALL BE NO VISUAL EVIDENCE OF DISTORTION OR FAILURE.

4. LEAK TEST: (REF. (A) PARA. 4.1.6)

USE GASEOUS HELIUM.

4.1 APPLY 44 PSIA TO PRESSURE PORT. MAINTAIN THIS PRESSURE FOR ONE (1) MINUTE. THERE SHALL BE NO EXTERNAL LEAKAGE AS EVIDENCED BY THE USE OF A MASS SPECTROMETER. A SENSING PROBE SHALL BE USED FOR THE DETECTION OF GASEOUS HELIUM.

4.2 REPEAT THE TEST OF PARAGRAPHS 3.1 AND 4.1 AT -100°F AND +160°F.

5. DIELECTRIC STRENGTH TEST: (REF. (A) PARA. 4.1.7)

5.1 APPLY 1000 VAC RMS AT 60 CPS FOR ONE (1) MINUTE BETWEEN RECEPTACLE PINS A, B, C, E, F AND G AND THE BODY OF THE UNIT. THERE SHALL BE NO EVIDENCE OF DIELECTRIC LEAKAGE BREAKDOWN AS INDICATED ON AN ASSOCIATED RESEARCH HYPOT, MODEL 404, SET AT 500 VOLTS PER MEGOHM.

6. INSULATION RESISTANCE: (REF. (A) PARA. 4.1.8)

6.1 MEASURE AND RECORD THE INSULATION RESISTANCE BETWEEN RECEPTACLE PINS F AND G, AND PINS B AND C, WITH THE SWITCH DEACTUATED AND BETWEEN PINS F AND E, AND PINS B AND A, WITH THE SWITCH ACTUATED AND BETWEEN PINS A, B, C, E, F AND G AND THE BODY OF THE UNIT. THE INSULATION RESISTANCE SHALL READ NO LESS THAN 100 MEGOHMS WHEN 500 VDC IS APPLIED AT +160°F WITH AN ASSOCIATED RESEARCH MODEL 201 VIBROTEST.

7. CONTACT RESISTANCE: (REF. (A) PARA. 3.4.4)

7.1 MEASURE AND RECORD THE CONTACT RESISTANCE BETWEEN RECEPTACLE PINS F AND E AND PINS B AND A WITH THE SWITCH DEACTUATED AND BETWEEN PINS F AND G AND PINS B AND C WITH THE SWITCH ACTUATED. CONTACT RESISTANCE SHALL NOT EXCEED 50 MILLIOHMS AT 28 VOLTS D.C. AND 2 AMPERES.

8. HIGH TEMPERATURE: (REF. (A) PARA. 4.1.9)

8.1 PLACE THE PRESSURE SWITCH WITHIN THE TEST CHAMBER AND STABILIZE AT ROOM AMBIENT TEMPERATURE. CONDUCT THE FUNCTIONAL TEST OF PARAGRAPHS 1.1, 1.2 AND 1.3.

8.2 WHILE CYCLING THE UNIT AS DESCRIBED IN PARAGRAPH 17.2, THE TEMPERATURE OF THE CHAMBER SHALL BE INCREASED TO +160°F WITHIN TEN MINUTES.

8.3 MAINTAIN THE TEMPERATURE AT +160°F FOR 15 MINUTES AND CONDUCT THE FUNCTIONAL TEST OF PARAGRAPHS 1.1, 1.2 AND 1.3.

8.4 STABILIZE THE PRESSURE SWITCH AT ROOM AMBIENT

TEMPERATURE AND CONDUCT THE FUNCTIONAL TEST OF PARAGRAPHS 1.1, 1.2 AND 1.3.

NOTE: PRESSURE SWITCH OPERATION SHALL BE CONTINUOUS THROUGHOUT THE ENTIRE TEMPERATURE CYCLE. A RELATIVE HUMIDITY OF NOT MORE THAN 15 PERCENT SHALL BE MAINTAINED IN THE TEST CHAMBER.

9. LOW TEMPERATURE: (REF. (A) PARA. 4.1.10)

9.1 PLACE THE PRESSURE SWITCH WITHIN THE TEST CHAMBER AND STABILIZE AT -100°F.

9.2 MAINTAIN THE TEMPERATURE AT -100°F FOR FOUR (4) HOURS AND CONDUCT THE FUNCTIONAL TEST OF PARAGRAPHS 1.1, 1.2 AND 1.3.

9.3 STABILIZE THE PRESSURE SWITCH AT ROOM TEMPERATURE AND CONDUCT THE FUNCTIONAL TEST OF PARAGRAPHS 1.1, 1.2 AND 1.3.

10. THERMAL SHOCK: (REF. (A) PARA. 4.1.11)

10.1 PLACE THE PRESSURE SWITCH WITHIN THE TEST CHAMBER, STABILIZE AT +160°F AND CONDUCT THE FUNCTIONAL TEST OF PARAGRAPHS 1.1, 1.2 AND 1.3.

10.2 REDUCE THE TEMPERATURE TO -100°F IN FIVE MINUTES.

10.3 MAINTAIN THE UNIT AT -100°F FOR NOT LESS THAN 15 MINUTES AND CONDUCT THE FUNCTIONAL TEST OF PARAGRAPHS 1.1, 1.2 AND 1.3.

10.4 STABILIZE THE UNIT AT ROOM TEMPERATURE AND CONDUCT THE FUNCTIONAL TEST OF PARAGRAPHS 1.1, 1.2 AND 1.3.

NOTE: THE RELATIVE HUMIDITY SHALL NOT EXCEED FIFTEEN PERCENT.

11. ALTITUDE TEMPERATURE: (REF. (A) PARA. 4.1.12)

11.1 THE PRESSURE SWITCH SHALL BE SUBJECTED TO AN ALTITUDE TEMPERATURE COMBINATION OF 250,000 FEET AND -100°F FOR A PERIOD OF SUFFICIENT DURATION TO CONDUCT THE FUNCTIONAL TEST OF PARAGRAPHS 1.1, 1.2 AND 1.3.

12. ACCELERATION: (REF. (A) PARA. 4.1.13)

(REFER TO FIGURE 2 FOR AXES IDENTIFICATION.)

12.1 MOST SENSITIVE AXIS:

12.1.1 THE PRESSURE SWITCH SHALL BE MOUNTED ON THE CENTRIFUGE SO THAT THE MOST SENSITIVE AXIS OF THE PRESSURE SWITCH IS PARALLEL TO THE APPLIED ACCELERATION. THE SWITCH SHALL THEN BE SUBJECTED TO 7G ACCELERATION FOR TWELVE MINUTES IN EACH DIRECTION ALONG THIS AXIS.

12.1.2 DURING AND FOLLOWING THE APPLICATION OF ACCELERATION, CONDUCT THE FUNCTIONAL TEST OF PARAGRAPHS 1.1, 1.2 AND 1.3.

12.2 ORTHOGONAL AXIS:

12.2.1 THE PRESSURE SWITCH SHALL NEXT BE SUBJECTED TO AN ACCELERATION OF 7G, TWICE (ONCE IN EACH DIRECTION) ALONG EACH OF THE TWO ORTHOGONAL AXES OF THE PRESSURE SWITCH. THE DURATION OF EACH OF THESE TESTS SHALL BE TWELVE MINUTES.

12.2.2 DURING AND FOLLOWING THE APPLICATION OF ACCELERATION, CONDUCT THE FUNCTIONAL TEST OF PARAGRAPHS 1.1, 1.2 AND 1.3.

13. VIBRATION: (REF. (A) PARA. 4.1.14)

(REFER TO FIGURE 2 FOR AXIS IDENTIFICATION)

13.1 THE PRESSURE SWITCH SHALL BE SUBJECTED TO THE VIBRATION LEVELS SHOWN IN FIGURE 1. THE TESTS ARE TO BE CONDUCTED USING A LOGARITHMIC OCTAVE SWEEP RATE WHICH SWEEPS WITHIN THE FREQUENCY LIMITS OF FIGURE 1 AT ONE (1) MINUTE PER OCTAVE. THE TEST DURATION SHALL BE 30 MINUTES IN EACH OF THREE ORTHOGANAL AXES, ONE OF WHICH SHALL BE THE MOST SENSITIVE AXIS, AT -100°F, +160°F AND ROOM AMBIENT TEMPERATURE.

13.2 DURING AND FOLLOWING THE APPLICATION OF VIBRATION, CONDUCT THE FUNCTIONAL TEST OF PARAGRAPHS 1.1, 1.2 AND 1.3.

14. ACOUSTICS: (REF. (A) PARA. 4.1.15)

14.1 THE PRESSURE SWITCH SHALL BE PLACED IN THE TEST CHAMBER IN SUCH A MANNER THAT ALL SIDES ARE EQUALLY EXPOSED TO DIRECT OR REFLECTED, UNATTENUATED SOUND WAVES. HIGH INTENSITY NOISE SOURCES, FROM 40 TO 10,000 CPS WITH A SOUND PRESSURE LEVEL OF 150 DB SHALL BE USED. DURATION OF THE TEST TO BE TEN MINUTES.

14.2 DURING AND FOLLOWING THE ACOUSTICS TEST, CONDUCT THE FUNCTIONAL TEST OF PARAGRAPHS 1.1, 1.2 AND 1.3.

15. SHOCK: (REF. (A) PARA. 4.1.16)

15.1 SHOCK PULSES SHALL BE DELIVERED THREE TIMES IN EACH DIRECTION, ON EACH OF THREE ORTHOGONAL AXES, ONE OF WHICH SHALL BE THE MOST SENSITIVE AXIS. THE SHOCK PULSES SHALL BE DELIVERED WITH THE UNIT IN THE ACTUATED AND DE-ACTUATED POSITION.

THE FOLLOWING SHOCK PULSE SHALL BE APPLIED:

SAWTOOTH WAVE: 20G AMPLITUDE, 10 MILLISECOND DURATION.

15.2 FOLLOWING THE SHOCK TEST, CONDUCT THE FUNCTIONAL TEST OF PARAGRAPHS 1.1, 1.2 AND 1.3.

16. CONTACT MONITORING: (REF. (A) PARA. 4.1.17)

16.1 THE PRESSURE SWITCH CONTACTS SHALL BE MONITORED DURING ACCELERATION, VIBRATION, ACOUSTICS AND SHOCK TO VERIFY THAT SUBSEQUENT TO SWITCH ACTUATION PER PARA. 1.2, THE CIRCUIT BETWEEN PINS B AND C, AND PINS F AND G, DOES NOT OPEN UNTIL DEACTUATION PER PARA. 1.3 AND TO VERIFY THAT SUBSEQUENT TO SWITCH DEACTUATION PER PARA. 1.3 THE CIRCUIT BETWEEN PINS B AND C, AND PINS F AND G, DOES NOT CLOSE UNTIL SWITCH ACTUATION PER PARA. 1.2. THE CONTACTS SHALL BE MONITORED ON A C.E.C. MODEL 15-116 RECORDING OSCILLOGRAPH USING GALVANOMETERS HAVING A RESPONSE OF 0 TO 2500 CPS. NO CHATTER OF THE SWITCH CONTACTS IS ACCEPTABLE. REFER TO FIGURE 3 FOR A SCHEMATIC DIAGRAM SHOWING THE CONTACT MONITORING SYSTEM.

17. SERVICE LIFE: (REF. (A) PARA. 4.1.18)

17.1 THE PRESSURE SWITCH SHALL BE SUBJECTED TO 3000 CYCLES OF OPERATION WITHOUT FAILURE.

17.2 A CYCLE SHALL CONSIST OF INCREASING AND DECREASING THE PRESSURE FROM 14.7 PSIA TO 44 PSIA TO 14.7 PSIA AT A RATE OF 10 CYCLES PER MINUTE MINIMUM. THE RATE OF PRESSURE INCREASE AND DECAY SHALL BE 10 PSI PER SECOND MINIMUM. AN ELECTRICAL LOAD OF 2 AMPERES INDUCTIVE (L/R = .026) AT 28 VOLTS D.C. SHALL BE APPLIED BETWEEN PINS B AND C AND F AND G THROUGHOUT THE 3000 CYCLES. "B

17.3 FOLLOWING THE SERVICE LIFE TEST CONDUCT THE FUNCTIONAL TEST OF PARAGRAPHS 1.1, 1.2 AND 1.3.

18. ACTUATION AND DEACTUATION TIME: (REF. (A) PARA. 3.5.6)

18.1 REPEAT THE ACTUATION AND DEACTUATION TIME TEST OF PARAGRAPH 2.

19. PROOF TEST: (REF. (A) PARA. 4.1.5)

19.1 REPEAT THE PROOF TEST OF PARA. 3.

20. LEAK TEST: (REF. (A) PARA. 4.1.6)

20.1 REPEAT THE LEAK TEST OF PARA. 4.

21. DIELECTRIC STRENGTH TEST: (REF. (A) PARA. 4.1.7)

21.1 REPEAT THE DIELECTRIC STRENGTH TEST OF PARA. 5.

22. INSULATION RESISTANCE: (REF. (A) PARA. 4.1.8)

22.1 REPEAT THE INSULATION RESISTANCE TEST OF PARA. 6.

23. CONTACT RESISTANCE: (REF. (A) PARA. 3.4.4)

23.1 REPEAT THE CONTACT RESISTANCE TEST OF PARA. 7.

24. BURST TEST: (REF. (A) PARA. 4.1.19)
(USE GASEOUS NITROGEN PER DPS 4.920.)

24.1 APPLY INCREASING PRESSURE TO THE PRESSURE PORT UNTIL THE PRESSURE EXCEEDS 110 PSIA. MINIMUM BURST PRESSURE IS 110 PSIA.

THE PRESSURE SWITCH IS NOT REQUIRED TO OPERATE FOLLOWING THE BURST PRESSURE APPLICATION.

25. FACILITIES: FOLLOWING IS A DESCRIPTION OF THE TEST EQUIPMENT TO BE USED TO CONDUCT EACH TEST AS PROPOSED HEREIN.

25.1 FUNCTIONAL TESTS:

25.1.1 TEST STAND: FREBANK MODEL TE 146-1, 0-5000 PSI.

25.1.2 PRESSURE GAUGE: HEISE 0-100 PSI S/N H-12098.

25.2 ACTUATION AND DEACTUATION TIME:

25.2.1 RECORDING OSCILLOGRAPH: C.E.C. MODEL 15-116 GALVONOMETER RESPONSE 0-2500 CPS.

25.2.2 PRESSURE TRANSDUCER: STATHAM INSTRUMENTS 0-100 PSI, MODEL PG10TC-100-350.

25.3 PROOF TEST:

25.3.1 TEST STAND: FREBANK MODEL TE 146-1, 0-5000 PSI.

25.4 LEAK TEST:

25.4.1 TO BE CONDUCTED BY GARWOOD LABORATORIES, INC.

25.5 DIELECTRIC STRENGTH TEST:

25.5.1 ASSOCIATED RESEARCH MODEL 404 HYPOT 0-4000 VOLTS.

25.6 INSULATION RESISTANCE:

25.6.1 ASSOCIATED RESEARCH MODEL 201 VIBROTEST.

25.7 CONTACT RESISTANCE:

25.7.1 TEST TO BE CONDUCTED USING INSTRUMENTATION NOT YET PROCURED.

25.8 HIGH TEMPERATURE, LOW TEMPERATURE & THERMAL SHOCK:

25.8.1 TEMPERATURE CHAMBER: WYLE MODEL DN104, RANGE -320°F TO +350°F.

25.8.2 TEST STAND: FREBANK MODEL TE 146-1, 0-5000 PSI.

25.8.3 PRESSURE GAUGE: HEISE 0-100 PSI, S/N H-12098.

25.9 ALTITUDE TEMPERATURE:

25.9.1 TO BE CONDUCTED BY GARWOOD LABORATORIES, INC.

25.10 ACCELERATION:

25.10.1 TO BE CONDUCTED BY GARWOOD LABORATORIES, INC.

25.11 VIBRATION:

25.11.1 VIBRATION EQUIPMENT: M.B. MODEL T-51-MC AMPLIFIER, MODEL C-10 EXCITER, MODEL M3 VIBRATION METER.

25.11.2 TEST STAND: FREBANK MODEL TE 146-1, 0-5000 PSI.

25.11.3 PRESSURE GAUGE: HEISE 0-100 PSI, S/N H-12098.

25.11.4 TEMPERATURE CHAMBER: MANTEC MODEL EP 125 RANGE -320 TO +600°F.

25.11.5 RECORDING OSCILLOGRAPH: C.E.C. MODEL 5-116, GALVONOMETER RESPONSE 0-2500 CPS.

25.11.6 PRESSURE TRANSDUCER: STATHAM INSTRUMENTS 0-100 PSI, MODEL PG10TC-100-350.

25.12 ACOUSTICS:

25.12.1 TO BE CONDUCTED BY AMERICAN LABORATORIES OR

ROTOTEST LABORATORIES.

25.13 SHOCK:

25.13.1 TO BE CONDUCTED BY GARWOOD LABORATORIES, INC.

25.14 CONTACT MONITORING:

25.14.1 RECORDING OSCILLOGRAPH: C.E.C. MODEL 5-116, GALVONOMETER RESPONSE 0-2500 CPS.

25.15 SERVICE LIFE:

25.15.1 TEST STAND: FREBANK MODEL TE 146-1, 0-5000 PSI.

25.15.2 PRESSURE GAUGE: HEISE 0-100 PSI, S/N H-12098.

25.16 BURST TEST:

25.16.1 TEST STAND: FREBANK MODEL TE 146-1, 0-5000 PSI.

25.16.2 PRESSURE GAUGE: HEISE 0-200 PSI, S/N H-22949.

26. GENERAL NOTES:

26.1 THE REPORT SHALL BE COMPILED IN A MANNER CONSISTENT WITH CONVENTIONAL ENGINEERING REPORT FORM.

26.2 THE REPORT SHALL DESCRIBE THE TEST METHOD AND CONDITION AND FULLY SUMMARIZE THE TEST RESULTS AND ANY FAILURES OR LIMITATIONS ENCOUNTERED. A DESCRIPTION OF TEST EQUIPMENT AND PHOTOGRAPHS OF TEST SETUPS SHALL ALSO BE INCLUDED.

26.2 THE REPORT SHALL INCLUDE THIS TEST PROCEDURE.

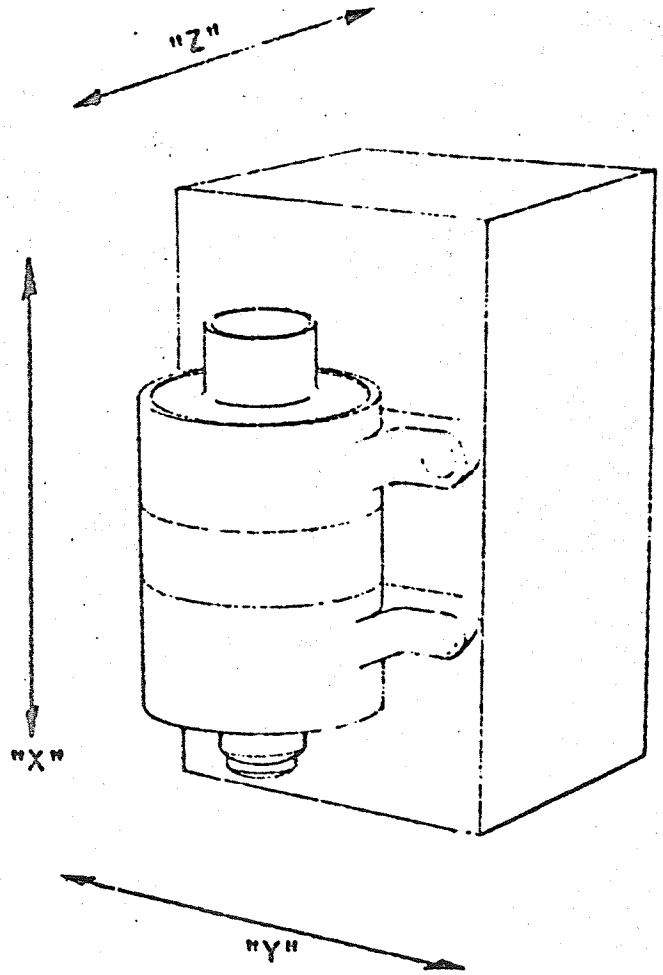

X - MOST SENSITIVE AXIS

Y - ORTHOGONAL AXIS (1)

Z - ORTHOGONAL AXIS (2)

AXIS IDENTIFICATION

FIGURE 2.

REVISION DATE	FREDANK COMPANY GLENDALE CALIFORNIA	REPORT NO 178
"A" 11-15-61		PAGE 15

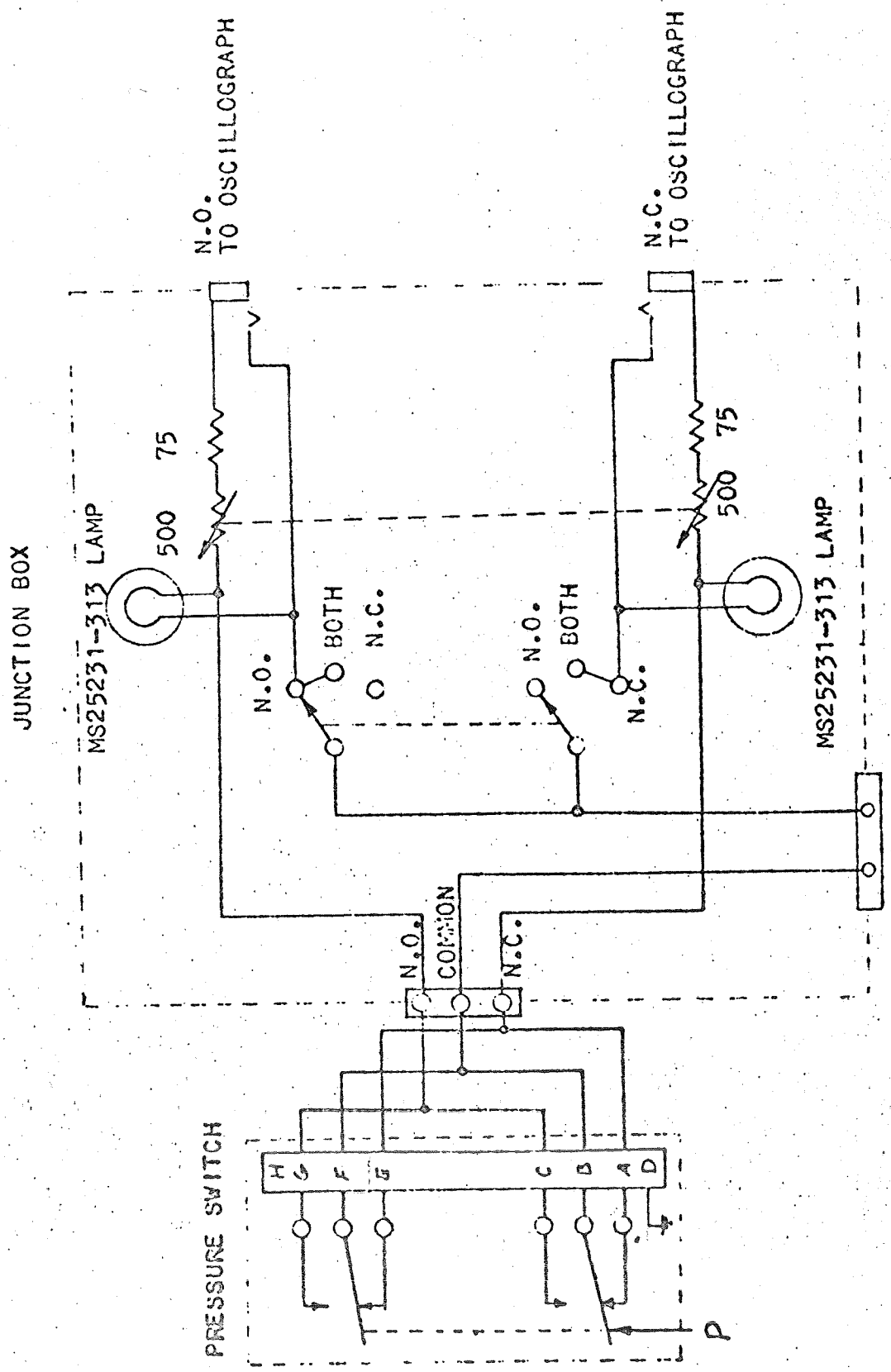

CONTACT MONITORING SYSTEM
FIGURE 3.

APPENDIX II

ENGINEERING DIRECTIVE NO. 205

DIELECTRIC STRENGTH TEST

ORIGINAL ISSUE DATE: 12-15-61

Ø REVISION DATE: 2-28-62

FREBANK COMPANY
711 WEST BROADWAY
GLENDALE 4, CALIF.

ENGINEERING DIRECTIVE NO. 205

SUBJECT: DIELECTRIC STRENGTH TEST

EFFECTIVE IMMEDIATELY

1. ALL ELECTRIC SWITCHES PROCURED TO OUR DRAWING NO. 5025 SHALL BE SUBJECTED TO A RECEIVING INSPECTION TEST CONSISTING OF THE FOLLOWING:

   A. VISUAL INSPECTION FOR INSULATION CRACKS UNDER MICROSCOPE.

   B. DETERMINE DIFFERENTIAL MOVEMENT WITHIN .0001 INCH, RECORD ON THE PLASTIC BOX FOR EACH SWITCH.

   C. SUBJECT SWITCH TO A DIELECTRIC STRENGTH TEST OF 1000 VOLTS RMS FOR 5-10 SECONDS.
   CAUTION: "DO NOT EXCEED 1000 VOLTS OR 10 SECONDS."

2. VISUAL CRACKS PER PARA. 1A ABOVE, SHALL NOT BE CAUSE FOR REJECTION. (SEE PARA. 6, BELOW)

3. SWITCHES NOT PASSING TEST 1C ABOVE, SHALL BE REJECTED AS VENDORS' RESPONSIBILITY.

4. AFTER SOLDERING TO RECEPTACLES AND PROPER POTTING PER APPLICABLE DRAWINGS AND BEFORE INSTALLATION IN FINAL ASSEMBLY REPEAT TEST 1C.

5. FAILURE TO PASS THIS SECOND TEST SHALL BE CAUSE FOR REJECTION SUBJECT TO SALVAGE BY REWORK UNLESS FAILURE CAN BE DETERMINED TO BE IN THE SWITCH PROPER.

6. IMPORTANT: SWITCHES WITH VISUAL CRACKS AS DETERMINED IN 1A, SHALL NOT BE USED IN UNITS WHERE POSSIBLE LEAKAGE OF THEIR HERMETICAL SEAL CAN IN ANY WAY BE THE CAUSE OF UNIT MALFUNCTION.

V. A. Larsen

V. A. LARSEN
CHIEF ENGINEER

VAL/HJE

APPENDIX III

ENGINEERING DIRECTIVE NO. 208

LEAKAGE TESTING OF BODIES

ORIGINAL ISSUE DATE: 3-14-62

Ø REVISION DATE: _____

FREBANK COMPANY
711 WEST BROADWAY
GLENDALE 4, CALIF.

ENGINEERING DIRECTIVE NO. 208

SUBJECT: LEAKAGE TESTING OF BODIES

EFFECTIVE IMMEDIATELY ALL BODIES SUBJECT TO PRESSURE DIFFERENCES UNDER ANY CONDITIONS WHICH WILL AFFECT THE PROPER FUNCTION OF THE UNIT SHALL BE PRESSURE TESTED PER FES-07-002 PRIOR TO FINAL ASSEMBLY TO INSURE THAT THERE IS NO EVIDENCE OF LEAKAGE. BODIES MADE FROM EITHER BAR STOCK OR CASTINGS SHALL BE FULLY MACHINED BEFORE THE LEAKAGE TEST.

THIS DIRECTIVE SHALL ACT AS AN INTERIM MEASURE UNTIL ALL APPLICABLE DRAWINGS ARE REVISED TO CALL OUT ABOVE PROCESS SPECIFICATIONS.

V. A. Larsen

V. A. LARSEN
CHIEF ENGINEER

VAL/HJE
DISTRIBUTION: GENERAL

ADDENDUM I

TO DESIGN EVALUATION TEST REPORT
NUMBER 178
FOR
PART NUMBER 4640-1
PRESSURE SWITCH

FREBANK COMPANY
GLENDALE CALIFORNIA

Engineering Report

ADDENDUM I

TO DESIGN EVALUATION TEST REPORT
NUMBER 178
FOR
PART NUMBER 4640-1
PRESSURE SWITCH

DAC Specification 7851860-1

DATE June 20, 1962

PREPARED W. L. Webster
W. L. Webster, Engr'g. Lab.

CHECKED R. M. Frincke
R. M. Frincke, Engr'g. Lab. Supv'r.

APPROVED V. A. Larsen
V. A. Larsen, V.P.
Engineering & Sales

Witnessed:
R. B. Sidney
R. B. Sidney, AFQCR

CONTRACT NO.

NO. PAGES -43-

NOTARY PUBLIC LOS ANGELES CO., CALIF.

STATE OF CALIFORNIA
COUNTY OF LOS ANGELES } ss.

V. A. LARSEN, being duly sworn, deposes and says: That the information contained in this report is to the best of his knowledge true and correct in all aspects.

V. A. Larsen

SUBSCRIBED and sworn to before me this 20th day of June, 1962

Elizabeth K. Vizcaino
Notary Public in and for the County of Los Angeles, State of California

My commission expires November 8, 1963

REVISIONS:

TABLE OF CONTENTS

Item	Page
Title Page	1
Revisions	2
Table of Contents	3
1.0 PURPOSE	4
2.0 REFERENCES	4
3.0 DESCRIPTION OF TEST SPECIMEN	4
4.0 REQUIREMENTS	4
5.0 TEST PROCEDURE AND RESULTS	4
6.0 DISCUSSION	7
Figure 1 -- Frebank Drawing No. A4640-1, "D" Change	9
Figure 2 -- Frebank Drawing No. 4640-1, "F" Change	10
TABLE I -- Functional Test Results For Units, Serial No.'s 108, 109, and 110	11
Test Unit Serial No. 108	11
Test Unit Serial No. 109	18
Test Unit Serial No. 110	25
TABLE II -- Functional Test Results "Retest" For Units, Serial No.'s 108, 109, 110	32
Test Unit Serial No. 108	32
Test Unit Serial No. 109	37
Test Unit Serial No. 110	39

1.0 PURPOSE:

To present the results of the additional design evaluation tests conducted on the redesigned Frebank Pressure Switch Part Number 4640-1. These tests were conducted in accordance with DAC VIR M38576 and the applicable paragraphs of Douglas Specification 7851860-1, Rev. "E".

2.0 REFERENCES:

Douglas Aircraft Company VIR M38576.
Douglas Aircraft Company Specification 7851860-1, Rev. "E".

3.0 DESCRIPTION OF TEST SPECIMEN: (Ref. para. 4.1.1.1.3)

Three (3) units, Part Number 4640-1, Serial Numbers 108, 109, and 110 were subjected to the required test program.

These pressure switches were assembled in accordance with Frebank Company Drawing No. A4640-1, Change "D", and Frebank Company Drawing No. 4640-1, Change "F". These drawings are included herein as Figures 1 and 2 on Pages 9 and 10.

The actuation pressure limits are:

Increasing Pressure: 31.5 ±0.5 psia
Decreasing Pressure: 30.5 ±0.5 psia

4.0 REQUIREMENTS: (Ref. para. 4.1.1.1)

The Design Evaluation Test Requirements were conducted in accordance with DAC VIR M38576 and the applicable paragraphs of Design Evaluation Test Procedure for Engineering Report Number 178, as approved by D.A.C. in their VIR M37432.

5.0 TEST PROCEDURE AND RESULTS:

5.1 Functional Test: (Ref. para. 4.1.4) A test stand using gaseous nitrogen per DPS 4.920 as the test medium, employing a 16-inch diameter Bourdon tube gauge with 0.1 psi minimum graduations and a full scale accuracy of 1/5 percent was used for the observation of the pressure settings. A signal light circuit with a 2 ampere inductive load at 28 VDC was used in conjunction with the gauge to indicate pressure switch actuation.

The unit under test was connected to this test stand and the applied pressure was increased and decreased from 14.7 to 32 psia, or to the point of switch actuation if over 32 psia, to 14.7 psia. The rate of pressure increase from 30 psia to actuation and rate of decrease from 31 psia to deactuation was approximately 5 psi per minute. The pressures at which the unit became energized and de-energized were observed. All test units successfully completed the functional test and the first five (5) cycles of the test results are recorded in Table I.

5.2 Proof Test: (Ref. para. 4.1.5) This test was conducted using the same equipment as described in the Functional Test.

A pressure of 66 psia was applied for one (1) minute. No failure or leakage occurred as a result of the pressure application.

5.3 Dielectric Strength Test: (Ref. para. 4.1.7) This test was conducted using a 0-4000 volt hypot set at 500 volts per megohm.

1000 VAC RMS at 60 cps was applied to each unit for one (1) minute between the receptacle pins A, B, C, E, F, and G and the body. The units showed no evidence of dielectric breakdown as indicated by the hypot during tests.

5.4 High Temperature Test: (Ref. para. 4.1.9) This test was conducted using the same equipment described in the Functional Test while the unit was encased in a Wyle Model DN104 Temperature Chamber, range -320°F to +350°F.

The unit was stabilized at room ambient temperature and the Functional Test of para. 5.1 was conducted. While cycling the unit, from 14.7 psia to 44 psia to 14.7 psia at a rate of 10 cycles per minute with the rate of pressure increase and decay exceeding 10 psi per second, the temperature was increased to +160°F, within ten (10) minutes. The temperature was maintained for fifteen minutes and the Functional Test of para. 5.1 was conducted. The temperature was then stabilized at room ambient temperature and the Functional Test of para. 5.1 was conducted. All test units successfully completed the test. The results are recorded in Table I.

5.5 Low Temperature Test: (Ref. para. 4.1.10) This test was conducted using the same equipment described in the High Temperature Test.

The unit was stabilized at -100°F and maintained for four (4) hours.

The Functional Test of para. 5.1 was conducted. The temperature was then stabilized at room ambient and the Functional Test was conducted. All test units successfully completed the test. The results are recorded in Table I.

5.6 Thermal Shock Test: (Ref. para. 4.1.11) This test was conducted using the same equipment described in the High Temperature Test.

The unit was stabilized at a temperature of +160°F and the Functional Test of para. 5.1 was conducted. The temperature was reduced to -100°F at a rate in excess of 30°F per second and maintained for fifteen minutes. The Functional Test was conducted. The temperature was then stabilized at room temperature and the Functional Test conducted. All test units successfully completed the test. The results are recorded in Table I.

5.7 Vibration Test: (Ref. para. 4.1.14) The test was conducted using the same equipment as the Functional Test in conjunction with a Mantec Model EP125 Temperature Chamber, range -320°F to +600°F, M.B. Model T-51-MC Amplifier, Model C-10 Excitor and Model M3 Vibration Meter.

The tests were conducted using a logarithmic octave sweep rate within the frequency limits of Figure 1, Appendix I, of Report No. 178, at approximately one (1) minute per octave. The test duration was 30 minutes in each of the three (3) orthogonal axes, shown in Figure 2, Appendix I, of Report No. 178, at -100°F, +160°F, and room ambient temperature. During the vibration test, pressure settings were checked in accordance with para. 5.1 at octave intervals of 5, 10, 20, 40, 80, 160, 320, 640, 1280, and 2000 cps. No switch element chatter occurred at any time, and all Functional Test results were within tolerance, except as noted in paragraph 6. The results are recorded in Tables I and II.

Although no apparent resonances were encountered, the critical point during vibration was determined to be in the X axis at 1280 cps and 20 g acceleration.

5.8 Contact Monitoring Test: (Ref. para. 4.1.17) The tests were conducted during the Vibration Test using a C.E.C. Model 5-116 Recording Oscillograph using galvanometers having a 0 to 2500 cps response rate.

The results of the test are reported in para. 5.7.

5.9 Repeat of Proof Test: (Ref. para. 4.1.5) The test equipment and procedure were identical to the initial Proof Test of para. 5.2.

No failure or leakage occurred as a result of the pressure application.

5.10 Repeat of Dielectric Strength Test: (Ref. para. 4.1.7) The test equipment and procedure were identical to the initial Dielectric Strength Test of para. 5.3.

All test units successfully completed the repeat Dielectric Strength Test.

5.11 Burst Test: (Ref. par. 4.1.19) The test was conducted on a Frebank Model TE 146-1 test stand using a 0 - 5000 psi Heise Pressure Gage.

A minimum pressure of 110 psia was applied to all test units at room ambient temperature. All test units successfully completed the Burst Test without leakage or failure.

6.0 DISCUSSION:

6.1 During the vibration test, the diaphragm in Serial Number 109 ruptured, and allowed pressure to leak into the switch case. The unit was disassembled and the diaphragm was examined to determine the cause of the failure. It was found that the diaphragm failed in a wrinkled area adjacent to the clamped and soldered perimeter. The wrinkles, causing high stresses, were evidently caused during the assembly operation when torque was applied to the Part Number 4868 Fitting. By modifying the assembly technique, this condition has been eliminated. The unit was reassembled, and the test program on Serial Number 109 was again conducted in its entirety. The unit performed satisfactorily throughout the test program except as noted in paragraph 6.2.

6.2 It will be noted in Table I, pages 13, 14, 15, 16, 17, 21, 22, 28, 29, 30, and 31, that all three test units exceeded the specified tolerances during the extreme temperature phases of the vibration test.

6.2.1 Serial Number 108: By comparing the results of the room temperature calibration following thermal shock on page 12 with the room temperature calibration following vibration on page 17,

it can be seen that a 0.3 psi shift of the pressure switch setting occurred during the vibration test. This shift showed up on the first setting recorded during vibration, as shown on page 13. As a result of the pressure setting increase, the subject unit was reset and again subjected to the vibration test. The second vibration test was conducted in accordance with the test procedure except the high temperature portion was performed at +125°F per VIR M39322. The unit completed the test within the specified tolerance. These results are presented in Table II.

6.2.1.1 Corrective Action: All pressure switches are now subjected to a pre-final assembly vibration "shake down" to preclude further setting shift as experienced in this case. In addition, all pressure switches are subjected to a vibration requirement during acceptance testing. The design evaluation test units were not subjected to this acceptance vibration test, as the critical frequency for this test had not yet been determined.

6.2.2 Serial Number 109: It will be noted on pages 21 and 22 of the test data that this unit failed to meet the specified tolerance during vibration at +160°F. The high temperature portion of the vibration test was repeated at +125°F per VIR M39322. The unit completed the test within the specified tolerance. These results are presented in Table II.

6.2.3 Serial Number 110: By comparing the results of the room temperature calibration following thermal shock on page 26 with the room temperature calibration results following vibration on page 31, it can be seen that a 0.3 psi shift of the pressure setting occurred during the vibration test. This shift showed up on the first setting recorded during vibration, as shown on page 27. As a result of the pressure setting increase, the subject unit was reset and again subjected to the vibration test. The second vibration test was conducted in accordance with the test procedure except the high temperature portion was performed at +125°F per VIR M39322. The unit completed the test within the specified tolerance. These results are presented in Table II.

6.2.3.1 Corrective Action: The corrective action described for Serial Number 108 in paragraph 6.2.1.1 would apply equally to Serial Number 110, and all future units.

NOTICE: WHEN GOVERNMENT DRAWINGS, SPECIFICATIONS, OR OTHER DATA ARE USED FOR ANY PURPOSE OTHER THAN IN CONNECTION WITH A DEFINITELY RELATED GOVERNMENT PROCUREMENT OPERATION, THE UNITED STATES GOVERNMENT THEREBY INCURS NO RESPONSIBILITY NOR ANY OBLIGATION WHATSOEVER; AND THE GOVERNMENT MAY HAVE FORMULATED, FURNISHED, OR IN ANY WAY SUPPLIED THE SAID DRAWINGS, SPECIFICATIONS, OR OTHER DATA, IS NOT TO BE REGARDED BY IMPLICATION OR OTHERWISE AS IN ANY MANNER LICENSING THE HOLDER OR ANY OTHER PERSON OR CORPORATION, OR CONVEYING ANY RIGHTS OR PERMISSION TO MANUFACTURE, USE, OR SELL ANY PATENTED INVENTION THAT MAY IN ANY WAY BE RELATED THERETO.

REVISIONS			
SYM.	DESCRIPTION		APPROVAL
D	REDRAWN REMOVED 7645-2, 4886 AND 4887 ADDED 7753; 7566 & 7565 WAS G REQ 7516 WAS 4888	6/7/62	
E	SEE E.O. 1142	5-10-63	

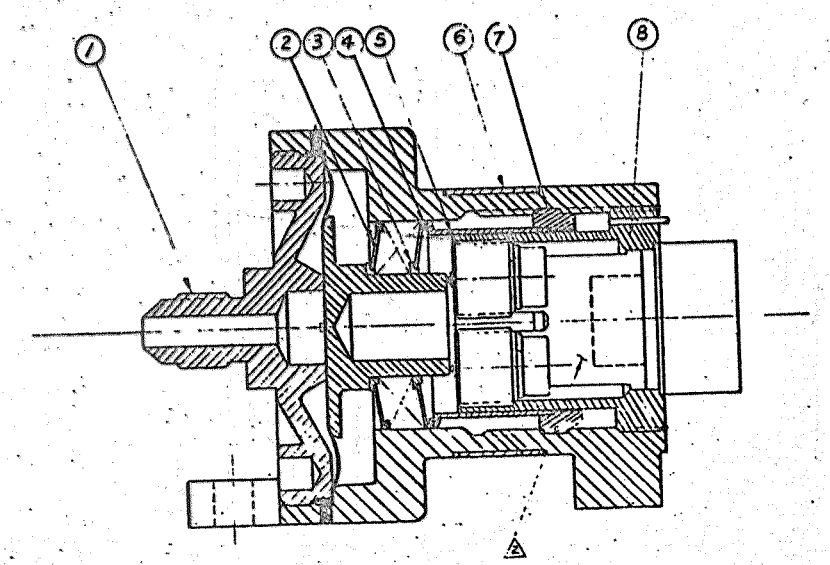

A 4640-1

E

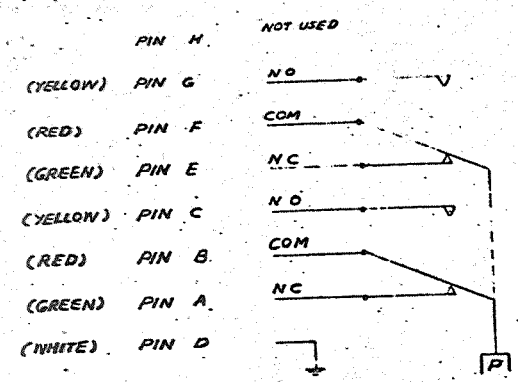

WIRING DIAGRAM

ITEM NO.	REQD.	PART NO.	DESCRIPTION	MATERIAL	MATL. SPEC.
8	1	4828	ELEC. ASS'Y		
7	1	7516	RING, ADJUSTMENT		
6	1	5017-2	NAME PLATE		
5	1	7568-3	RING, LOAD		
4	4	7566	SPACER OUTER		
3	4	7565	SPACER INNER		
2	1	7753	B.V. ASS'Y		
1	1	7614	BODY ASSEMBLY		

LIST OF MATERIALS

NEXT ASSY: 4640-1 USED ON

APPLICATION

PREPARED FOR NASA

HEAT TREAT / FINISH

UNLESS OTHERWISE SPECIFIED

MATL

DRAWN B. Mathias 6-7-62
CHECKED 6-8-62
ENGR
PROJ
V. Harsen 6/8/62

TITLE: SWITCH-ASSEMBLY

FREBANK COMPANY
GLENDALE CALIFORNIA

A 4640-1

SCALE FLCR 454

Figure 1

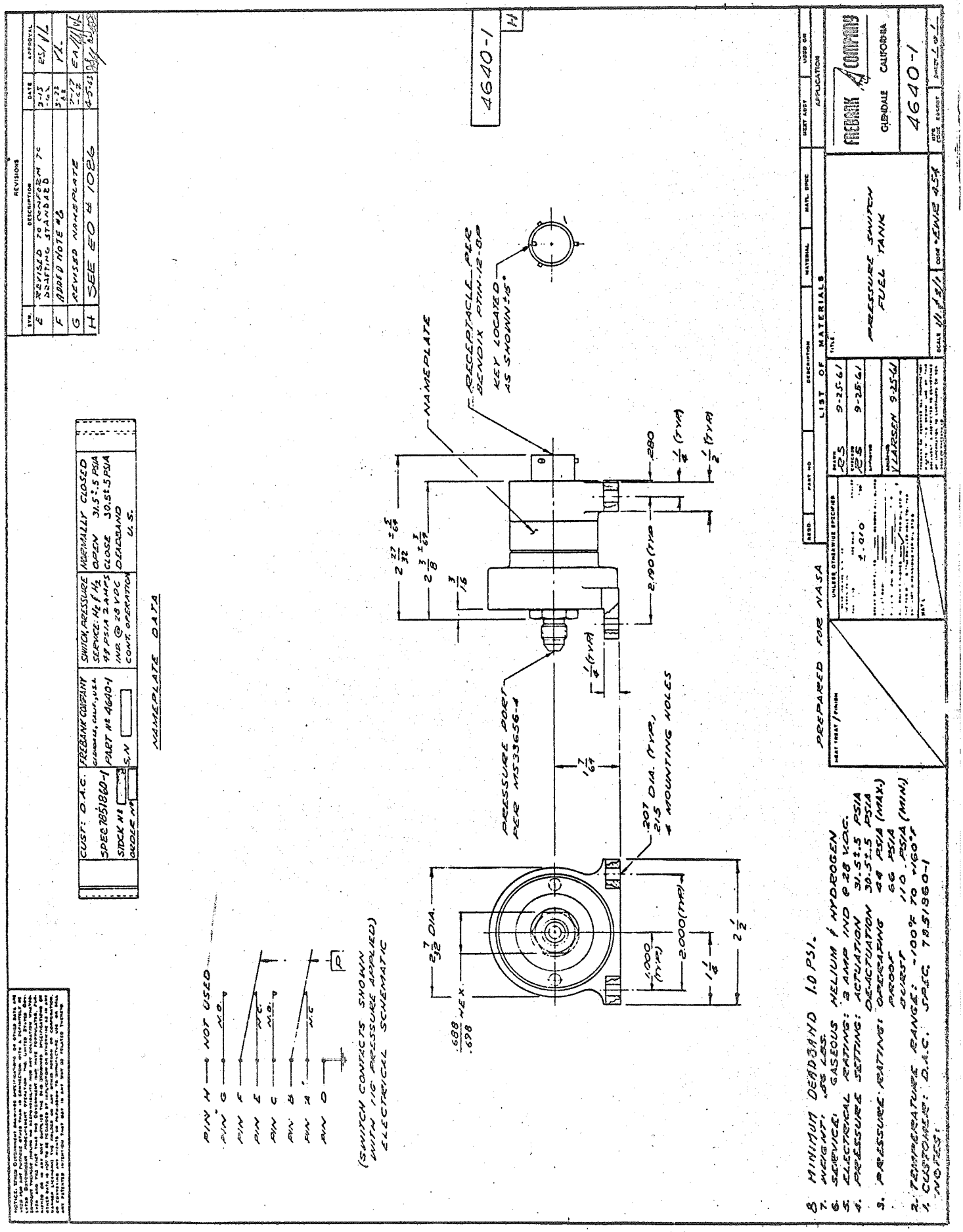
4640-1
NAMEPLATE
RECEPTACLE PER BENDIX PTIN-12-BP
KEY LOCATED AS SHOWN ±15°
PRESSURE PORT PER MS33656-4
.207 DIA. (TYP.) 215 MOUNTING HOLES
NAMEPLATE DATA
PIN H — NOT USED
PIN G — N.O.
PIN F
PIN E — N.C.
PIN C — N.O.
PIN B
PIN A — N.C.
PIN D
(SWITCH CONTACTS SHOWN WITH 116 PRESSURE APPLIED) ELECTRICAL SCHEMATIC
PREPARED FOR NASA
LIST OF MATERIALS
PRESSURE SWITCH FUEL TANK
FREBANK COMPANY
GLENDALE CALIFORNIA
4640-1
REVISIONS
E REVISED TO CONFORM TO DRAFTING STANDARD
F ADDED NOTE #8
G REVISED NAMEPLATE
H SEE EO # 1086
8. MINIMUM DEADBAND 1.0 PSI.
7. WEIGHT: .56 LBS.
6. SERVICE: GASEOUS HELIUM & HYDROGEN
5. ELECTRICAL RATING: 3 AMP IND @ 28 V.D.C.
4. PRESSURE SETTING: ACTUATION 31.5±.5 PSIA
DEACTUATION 30.5±.5 PSIA
3. PRESSURE RATING: OPERATING 44 PSIA (MAX.)
PROOF 66 PSIA
BURST 110 PSIA (MIN.)
2. TEMPERATURE RANGE: -100°F TO +160°F
1. CUSTOMER: D.A.C. SPEC. 7851860-1
NOTES:

Figure 2

TABLE 1

FUNCTIONAL TEST RESULTS FOR UNITS
SERIAL NO. 108, 109 & 110

TEST UNIT SERIAL NO. 108

TEST CONDITION	AMBIENT TEMPERATURE °F	INCREASING PRESSURE ACTUATION PSIA	DECREASING PRESSURE ACTUATION PSIA
REQUIREMENTS	-100 TO +160	31 - 32	30 - 31
INITIAL FUNCTION TEST	+78	31.6	30.4
		31.6	30.4
		31.6	30.4
		31.6	30.4
		31.6	30.4
HIGH TEMPERATURE TEST	+160	31.9	30.9
		31.9	30.9
		31.9	30.9
		31.9	30.9
		31.9	30.9
	+78	31.6	30.4
		31.6	30.4
		31.6	30.4
		31.6	30.4
		31.6	30.4

** SETTINGS OUT OF TOLERANCE.

TABLE I (CONT'D.)
S/N 108

TEST CONDITION	AMBIENT TEMPERATURE °F	INCREASING PRESSURE ACTUATION PSIA	DECREASING PRESSURE ACTUATION PSIA
LOW TEMPERATURE TEST	-100	32.0	30.8
		32.0	30.8
		32.0	30.8
		32.0	30.8
		32.0	30.8
	+78	31.7	30.7
		31.7	30.7
		31.7	30.7
		31.7	30.7
		31.7	30.7
THERMAL SHOCK TEST	+160	32.0	30.9
		32.0	30.9
		32.0	30.9
		32.0	30.9
		32.0	30.9
	-100	32.0	30.7
		32.0	30.7
		32.0	30.7
		32.0	30.7
		32.0	30.7
	+78	31.7	30.7
		31.7	30.7
		31.7	30.7
		31.7	30.7
		31.7	30.7

VIBRATION

NOTE: Vibration test data on S/N 108, presented on pages 13 through 17 of Report No. 178, addendum 1, have been deleted because the test was conducted in accordance with outdated vibration requirements. See page No. SM-82 for vibration testing.

TABLE 1

FUNCTIONAL TEST RESULTS FOR UNITS
SERIAL NO. 108, 109 & 110

TEST UNIT SERIAL NO. 109

TEST CONDITION	AMBIENT TEMPERATURE °F	INCREASING PRESSURE ACTUATION PSIA	DECREASING PRESSURE ACTUATION PSIA
REQUIREMENTS	-100 TO +160	31 - 32	30 - 31
INITIAL FUNCTION TEST	+77	31.4	30.3
		31.4	30.3
		31.4	30.3
		31.4	30.3
		31.4	30.3
HIGH TEMPERATURE TEST	+160	31.8	30.7
		31.8	30.7
		31.8	30.7
		31.8	30.7
		31.8	30.7
	+77	31.4	30.4
		31.4	30.4
		31.4	30.4
		31.4	30.4
		31.4	30.4

** SETTINGS OUT OF TOLERANCE.

TABLE I (CONT'D.)
S/N 109

TEST CONDITION	AMBIENT TEMPERATURE °F	INCREASING PRESSURE ACTUATION PSIA	DECREASING PRESSURE ACTUATION PSIA
LOW TEMPERATURE TEST	-100	31.9	30.6
		31.9	30.6
		31.9	30.6
		31.9	30.6
		31.9	30.6
	+78	31.3	30.3
		31.3	30.3
		31.3	30.3
		31.3	30.3
		31.3	30.3
THERMAL SHOCK TEST	+160	31.8	30.8
		31.8	30.8
		31.8	30.8
		31.8	30.8
		31.8	30.8
	-100	31.8	30.4
		31.8	30.4
		31.8	30.4
		31.8	30.4
		31.8	30.4
	+79	31.4	30.3
		31.4	30.3
		31.4	30.3
		31.4	30.3
		31.4	30.3

VIBRATION

NOTE: Vibration test data on S/N 109, presented on pages 20 through 24 of Report No. 178, addendum 1, have been deleted because the test was conducted in accordance with outdated vibration requirements. See page No. SM-82 for vibration testing.

TABLE 1

FUNCTIONAL TEST RESULTS FOR UNITS
SERIAL NO. 108, 109 & 110

TEST UNIT SERIAL NO. 110

TEST CONDITION	AMBIENT TEMPERATURE °F	INCREASING PRESSURE ACTUATION PSIA	DECREASING PRESSURE ACTUATION PSIA
REQUIREMENTS	-100 TO +160	31 - 32	30 - 31
INITIAL FUNCTION TEST	+78	31.2	30.1
		31.2	30.1
		31.2	30.1
		31.2	30.1
		31.2	30.1
HIGH TEMPERATURE TEST	+160	31.2	30.1
		31.2	30.1
		31.2	30.1
		31.2	30.1
		31.2	30.1
	+78	31.3	30.0
		31.3	30.0
		31.3	30.0
		31.3	30.0
		31.3	30.0

** SETTINGS OUT OF TOLERANCE.

TABLE I (CONT'D.)
S/N 110

TEST CONDITION	AMBIENT TEMPERATURE °F	INCREASING PRESSURE ACTUATION PSIA	DECREASING PRESSURE ACTUATION PSIA
LOW TEMPERATURE TEST	-100	31.8	30.5
		31.8	30.5
		31.8	30.5
		31.8	30.5
		31.8	30.5
	+78	31.1	30.0
		31.1	30.0
		31.1	30.0
		31.1	30.0
		31.1	30.0
THERMAL SHOCK TEST	+160	31.2	30.1
		31.2	30.1
		31.2	30.1
		31.2	30.1
		31.2	30.1
	-100	31.8	30.4
		31.8	30.4
		31.8	30.4
		31.8	30.4
		31.8	30.4
	+78	31.2	30.0
		31.2	30.0
		31.2	30.0
		31.2	30.0
		31.2	30.0

VIBRATION

NOTE: Vibration test data on S/N 110, presented on pages 27 through 43 of Report No. 178, addendum 1, have been deleted because the test was conducted in accordance with outdated vibration requirements. See page No. SM-82 for vibration testing.

TABLE II, VIBRATION RETEST S/N 108, 109, 110

NOTE: Table II has been deleted in its entirety since the vibration test data were collected in accordance with outdated requirements. See Addendum 2 to Report No. 178, page SM-82, for vibration testing of the redesigned part per revised requirements.

ADDENDUM 2

TO FREBANK COMPANY

DESIGN EVALUATION TEST REPORT

NO. 178

VIBRATION TEST REPORT

FOR

FREBANK COMPANY PART NUMBER

4640-1

PRESSURE SWITCH

FREBANK COMPANY
GLENDALE CALIFORNIA

Engineering Report

VIBRATION TEST REPORT

FOR

PART NUMBER 4640-1

PRESSURE SWITCH

DAC SPECIFICATION 7851860-1

DATE MAY 9, 1963

PREPARED R. M. Frincke
R. M. FRINCKE, ENGR'G. LAB. SUPV'R.

CHECKED C. R. Willis
C. R. WILLIS, PROJECT ENGINEER

APPROVED Charles F. Beck, Jr.
CHARLES F. BECK, JR.
CHIEF ENGINEER

STATE OF CALIFORNIA
COUNTY OF LOS ANGELES } ss.

CHARLES F. BECK, JR. being duly sworn, deposes and says: That the information contained in this report is to the best of his knowledge true and correct in all respects.

SUBSCRIBED and sworn to before me this 13 day of MAY, 1963

Notary Public in and for the County of Los Angeles, State of California

My commission expires NOVEMBER 8, 1963

CONTRACT NO.

NO. PAGES -29-

REVISION DATE

FREBANK COMPANY
GLENDALE CALIFORNIA

VTR-4640-1

PAGE 2.0

REVISIONS

TABLE OF CONTENTS

		PAGE
1.0	PURPOSE	4.0
2.0	REFERENCE	4.0
3.0	DESCRIPTION OF TEST SPECIMEN	4.0
4.0	REQUIREMENTS	4.0
5.0	TEST PROCEDURE AND RESULTS	4.0
	5.1 FUNCTIONAL TEST	4.0
	5.2 VIBRATION TEST	5.0
	5.3 CONTACT MONITORING TEST	6.0

TABLE

VIBRATION TEST RESULTS FOR UNITS, SERIAL No.'s 124 AND 125	7.0

APPENDIX I

FREBANK COMPANY VIBRATION TEST PROCEDURE FOR FREBANK COMPANY PART NUMBER 4640-1 PRESSURE SWITCH	19.0

1.0 PURPOSE

TO PRESENT THE RESULTS OF THE VIBRATION TEST PROGRAM CONDUCTED ON FREBANK PRESSURE SWITCH PART NUMBER THIS TEST PROGRAM WAS CONDUCTED IN ACCORDANCE WITH FREBANK COMPANY VIBRATION TEST PROCEDURE FOR FREBANK COMPANY PART NUMBER 4640-1 PRESSURE SWITCH.

2.0 REFERENCE

DOUGLAS AIRCRAFT COMPANY SPECIFICATION 7851860-1 REV. "R".

3.0 DESCRIPTION OF TEST SPECIMEN

TWO (2) PRODUCTION UNITS, PART NUMBER 4640-1 SERIAL NUMBERS 124 & 125 WERE SUBJECTED TO THE REQUIRED TEST PROGRAM.

4.0 REQUIREMENTS

THE VIBRATION TEST REQUIREMENTS WERE CONDUCTED IN ACCORDANCE WITH FREBANK COMPANY VIBRATION TEST PROCEDURE FOR FREBANK COMPANY PART NUMBER 4640-1 PRESSURE SWITCH.

5.0 TEST PROCEDURE AND RESULTS

5.1 FUNCTIONAL TEST

A TEST STAND USING CLEAN DRY AIR AS THE TEST MEDIUM, EMPLOYING A 12-INCH DIAMETER BOURDON TUBE GAUGE WITH 0.2 PSI MINIMUM GRADUATIONS AND A FULL SCALE ACCURACY OF 1/5 PERCENT WAS USED FOR THE OBSERVATION OF THE PRESSURE SETTINGS. A SIGNAL LIGHT CIRCUIT WITH A 2 AMPERE INDUCTIVE LOAD AT 28 VDC WAS USED IN CONJUNCTION WITH THE GAUGE TO INDICATE PRESSURE SWITCH ACTUATION.

THE UNIT UNDER TEST WAS CONNECTED TO THIS TEST STAND AND THE APPLIED PRESSURE WAS INCREASED AND DECREASED FROM 14.7 PSIA TO THE POINT OF PRESSURE SWITCH ACTUATION TO 14.7 PSIA. THE RATE OF INCREASE FROM 30 PSIA TO ACTUATION AND RATE OF DECREASE FROM 31 PSIA TO DE-ACTUATION WAS APPROXIMATELY 5 PSI PER MINUTE. THE PRESSURES AT WHICH THE CIRCUITS BECAME ENERGIZED AND DE-ENERGIZED WERE OBSERVED. BOTH TEST UNITS SUCCESSFULLY COMPLETED THE FUNCTIONAL TEST AND THE FIRST FIVE (5) CYCLES OF THE TEST RESULTS ARE RECORDED IN TABLE I.

5.2 VIBRATION TEST

THE TEST WAS CONDUCTED USING THE SAME EQUIPMENT AS THE FUNCTIONAL TEST IN CONJUNCTION WITH A MANTEC MODEL EP125 TEMPERATURE CHAMBER, RANGE -320°F TO +600°F, M.B. MODEL T-51-MC AMPLIFIER, MODEL C-10 EXCITOR AND MODEL M3 VIBRATION METER. THE TESTS WERE CONDUCTED USING A LOGARITHMIC OCTAVE SWEEP RATE WITHIN THE FREQUENCY LIMITS OF FIGURE 1, OF APPENDIX I, AT APPROXIMATELY 3.5 MINUTES PER OCTAVE, WITH A PAUSE AT THE END OF EACH OCTAVE TO CONDUCT A ONE (1) CYCLE FUNCTIONAL TEST. THE TEST DURATION WAS ONE HOUR IN EACH OF THE THREE ORTHOGONAL AXES, SHOWN IN FIGURE 2 OF APPENDIX I, AT -100°F, +125°F, AND ROOM AMBIENT TEMPERATURE. THIS MADE A TOTAL OF NINE HOURS FOR EACH UNIT UNDER VIBRATORY CONDITIONS. DURING AND FOLLOWING THE VIBRATION TEST, PRESSURE SETTINGS WERE CHECKED IN ACCORDANCE WITH PARA. 5.1 AT OCTAVE INTERVALS OF 5, 10, 20, 40, 80, 160,

320, 640, 1280, AND 2000 CPS. THE RESULTS ARE RECORDED IN TABLE 1.

NO APPARENT RESONANCES WERE ENCOUNTERED DURING VIBRATION.

NO SWITCH CHATTER OCCURRED AT ANY TIME DURING THE VIBRATION TEST.

5.3 CONTACT MONITORING TEST

DURING THE VIBRATION TEST, THE CONTACTS WERE MONITORED USING A C.E.C. MODEL 5-116 RECORDING OSCILLOGRAPH USING GALVANOMETERS HAVING A 0 TO 2500 CPS RESPONSE RATE.

THE RESULTS OF THE CONTACT MONITORING TEST ARE REPORTED IN PARAGRAPH 5.2.

TABLE I

VIBRATION TEST RESULTS FOR

TEST UNIT SERIAL NO. 124

TEST CONDITION		AMBIENT TEMPERATURE °F	INCREASING PRESSURE ACTUATION PSIA	DECREASING PRESSURE ACTUATION PSIA
REQUIREMENTS		-100 To +125	31.0 - 32.0	30.0 - 31.0
INITIAL FUNCTION TEST		+78	31.7	30.3
			31.7	30.3
			31.7	30.3
			31.7	30.3
			31.7	30.3
VIBRATION TEST				
FREQUENCY (CPS)	AXIS			
5	X	-100	31.9	30.1
10			31.8	30.0
20			31.8	30.1
40			31.8	30.1
80			31.8	30.1
160			31.7	30.1
320			31.7	30.1
640			31.7	30.1
1280			31.7	30.1
2000			31.7	30.1

TABLE I (CONT'D.)

S/N 124

VIBRATION TEST FREQUENCY (CPS)	AXIS	AMBIENT TEMPERATURE °F	INCREASING PRESSURE ACTUATION PSIA	DECREASING PRESSURE ACTUATION PSIA
5	Y	-100	31.7	30.0
10			31.7	30.0
20			31.7	30.0
40			31.7	30.0
80			31.8	30.0
160			31.8	30.1
320			31.8	30.1
640			31.8	30.1
1280			31.8	30.1
2000			31.8	30.1
5	Z	-100	31.7	30.0
10			31.7	30.0
20			31.7	30.0
40			31.7	30.0
80			31.7	30.0
160			31.7	30.0
320			31.7	30.0
640			31.7	30.0
1280			31.6	30.0
2000			31.6	30.0

TABLE I (CONT'D.)

S/N 124

VIBRATION TEST FREQUENCY (CPS)	AXIS	AMBIENT TEMPERATURE °F	INCREASING PRESSURE ACTUATION PSIA	DECREASING PRESSURE ACTUATION PSIA
5	X	+78	31.9	30.4
10			31.9	30.4
20			31.8	30.5
40			31.9	30.4
80			31.8	30.4
160			31.7	30.5
320			31.7	30.6
640			31.7	30.6
1280			31.6	30.5
2000			31.7	30.5
5	Y	+78	31.9	30.4
10			31.9	30.4
20			31.9	30.4
40			31.9	30.4
80			31.8	30.4
160			31.8	30.3
320			31.8	30.3
640			31.8	30.4
1280			31.8	30.4
2000			31.8	30.4

TABLE ' (CONT'D.)

S/N 124

VIBRATION TEST FREQUENCY (CPS)	AXIS	AMBIENT TEMPERATURE °F	INCREASING PRESSURE ACTUATION PSIA	DECREASING PRESSURE ACTUATION PSIA
5	Z	+78	31.9	30.2
10			31.8	30.4
20			31.8	30.3
40			31.9	30.4
80			31.8	30.4
160			31.9	30.4
320			31.9	30.5
640			31.8	30.5
1280			31.7	30.6
2000			31.7	30.5
5	X	+125	32.0	30.5
10			32.0	30.6
20			31.9	30.6
40			31.9	30.6
80			31.9	30.6
160			31.8	30.8
320			31.9	30.8
640			31.8	30.8
1280			31.8	30.8
2000			31.8	30.7

TABLE I (CONT'D.)

S/N 124

		AMBIENT TEMPERATURE °F	INCREASING PRESSURE ACTUATION PSIA	DECREASING PRESSURE ACTUATION PSIA
VIBRATION TEST				
FREQUENCY (CPS)	AXIS			
5	Y	+125	32.0	30.7
10			32.0	30.6
20			32.0	30.6
40			32.0	30.6
80			32.0	30.6
160			32.0	30.6
320			32.0	30.6
640			32.0	30.6
1280			32.0	30.6
2000			32.0	30.6
5	Z	+125	32.0	30.6
10			32.0	30.6
20			32.0	30.6
40			32.0	30.6
80			32.0	30.6
160			32.0	30.6
320			32.0	30.6
640			31.9	30.6
1280			31.8	30.7
2000			31.8	30.6

TABLE I (CONT'D.)

S/N 124

TEST CONDITION	AMBIENT TEMPERATURE °F	INCREASING PRESSURE ACTUATION PSIA	DECREASING PRESSURE ACTUATION PSIA
FUNCTIONAL TEST FOLLOWING VIBRATION TEST	+78	31.8	30.4
		31.8	30.4
		31.8	30.4
		31.8	30.4
		31.8	30.4

TABLE I

VIBRATION TEST RESULTS FOR

TEST UNIT SERIAL NO. 125

TEST CONDITION		AMBIENT TEMPERATURE °F	INCREASING PRESSURE ACTUATION PSIA	DECREASING PRESSURE ACTUATION PSIA
REQUIREMENTS		-100 To +125	31.0 - 32.0	30.0 - 31.0
INITIAL FUNCTION TEST		+78	31.6	30.3
			31.6	30.3
			31.6	30.3
			31.6	30.3
			31.6	30.3
VIBRATION TEST				
FREQUENCY (CPS)	AXIS			
5	X	-100	31.8	30.0
10			31.8	30.2
20			31.7	30.2
40			31.6	30.2
80			31.6	30.2
160			31.6	30.2
320			31.5	30.2
640			31.4	30.3
1280			31.3	30.2
2000			31.5	30.1

TABLE I (CONT'D.)

S/N 125

VIBRATION TEST

FREQUENCY (CPS)	AXIS	AMBIENT TEMPERATURE °F	INCREASING PRESSURE ACTUATION PSIA	DECREASING PRESSURE ACTUATION PSIA
5	Y	-100	31.8	30.1
10			31.6	30.1
20			31.6	30.1
40			31.6	30.1
80			31.6	30.1
160			31.6	30.1
320			31.6	30.1
640			31.6	30.1
1280			31.6	30.1
2000			31.5	30.1
5	Z	-100	31.7	30.1
10			31.5	30.1
20			31.7	30.2
40			31.5	30.2
80			31.6	30.3
160			31.5	30.3
320			31.5	30.3
640			31.5	30.3
1280			31.4	30.4
2000			31.4	30.3

TABLE I (CONT'D.)

S/N 125

VIBRATION TEST FREQUENCY (CPS)	AXIS	AMBIENT TEMPERATURE °F	INCREASING PRESSURE ACTUATION PSIA	DECREASING PRESSURE ACTUATION PSIA
5	X	+78	31.8	30.3
10			31.7	30.3
20			31.7	30.4
40			31.7	30.3
80			31.6	30.4
160			31.4	30.6
320			31.5	30.4
640			31.5	30.5
1280			31.5	30.5
2000			31.6	30.5
5	Y	+78	31.7	30.3
10			31.7	30.3
20			31.7	30.3
40			31.7	30.3
80			31 6	30.3
160			31.6	30.3
320			31.6	30.3
640			31.6	30.3
1280			31.6	30.3
2000			31.6	30.3

TABLE I (CONT'D.)

S/N 125

VIBRATION TEST FREQUENCY (CPS)	AXIS	AMBIENT TEMPERATURE °F	INCREASING PRESSURE ACTUATION PSIA	DECREASING PRESSURE ACTUATION PSIA
5	Z	+78	31.7	30.3
10			31.6	30.3
20			31.6	30.3
40			31.7	30.4
80			31.7	30.4
160			31.8	30.4
320			31.7	30.4
640			31.6	30.4
1280			31.7	30.4
2000			31.6	30.4
5	X	+125	31.8	30.5
10			31.8	30.5
20			31.8	30.6
40			31.8	30.6
80			31.8	30.6
160			31.6	30.8
320			31.7	30.7
640			31.7	30.7
1280			31.6	30.8
2000			31.8	30.6

TABLE I (CONT'D.)

S/N 125

VIBRATION TEST FREQUENCY (CPS)	AXIS	AMBIENT TEMPERATURE °F	INCREASING PRESSURE ACTUATION PSIA	DECREASING PRESSURE ACTUATION PSIA
5	Y	+125	32.0	30.6
10			31.9	30.6
20			31.9	30.6
40			31.9	30.6
80			31.8	30.6
160			31.8	30.6
320			31.9	30.6
640			31.9	30.6
1280			31.9	30.7
2000			31.9	30.6
5	Z	+125	31.9	30.6
10			31.8	30.6
20			31.8	30.6
40			31.8	30.6
80			31.8	30.6
160			31.8	30.6
320			31.8	30.6
640			31.8	30.6
1280			31.8	30.6
2000			31.8	30.6

TABLE I (CONT'D.)

S/N 125

TEST CONDITION	AMBIENT TEMPERATURE °F	INCREASING PRESSURE ACTUATION PSIA	DECREASING PRESSURE ACTUATION PSIA
FUNCTIONAL TEST FOLLOWING VIBRATION TEST	+78	31.6	30.3
		31.6	30.3
		31.6	30.3
		31.6	30.3
		31.6	30.3

APPENDIX I

FREBANK COMPANY

VIBRATION TEST PROCEDURE

FOR FREBANK COMPANY

PART NUMBER 4640-1

PRESSURE SWITCH

FREBANK COMPANY
GLENDALE CALIFORNIA

Engineering Report

FREBANK COMPANY
VIBRATION TEST PROCEDURE

FOR FREBANK COMPANY PART NO.

4640-1

PRESSURE SWITCH

DAC SPECIFICATION 7851860-1

DATE MARCH 27, 1963

PREPARED R. M. Frincke
R. M. FRINCKE, ENGR'G. LAB. SUPV'R.

CHECKED C. R. Willis
C. R. WILLIS, PROJECT ENGINEER

APPROVED
C. F. BECK, JR.
CHIEF ENGINEER

STATE OF CALIFORNIA
COUNTY OF LOS ANGELES } ss

, being duly sworn, deposes and says: That the information contained in this report is to the best of his knowledge true and correct in all respects.

SUBSCRIBED and sworn to before me this day of , 19

Notary Public in and for the County of Los Angeles, State of California

My commission expires , 19

CONTRACT NO.

NO. PAGES -10-

REVISION DATE	FREBANK COMPANY GLENDALE CALIFORNIA	4640-1
		PAGE 2.0

REVISIONS

TABLE OF CONTENTS

		PAGE
	SUBJECT	4.0
	REFERENCE	4.0
	TEST SPECIMEN	4.0
	TEST CONDITIONS	4.0
	TEST MEDIUM	4.0
	INSTRUMENT ACCURACIES	4.0
	TEST PROCEDURE	5.0
1.0	FUNCTIONAL TESTS	5.0
2.0	VIBRATION	6.0
3.0	CONTACT MONITORING	6.0
4.0	GENERAL NOTES	7.0

FIGURES

1.	VIBRATION LEVEL CURVE	8.0
2.	AXIS IDENTIFICATION	9.0
3.	CONTACT MONITORING SYSTEM	10.0

SUBJECT

VIBRATION TESTS OF FREBANK COMPANY PART NUMBER 4640-1 PRESSURE SWITCH.

REFERENCE

(A)

DOUGLAS AIRCRAFT COMPANY SPECIFICATION NO. 7851860-1

TEST SPECIMEN

TWO (2) PRESSURE SWITCHES SHALL BE SUBJECTED TO THE PROGRAM AS SPECIFIED HEREIN. BOTH OF THESE SWITCHES MUST BE PRODUCTION UNITS.

TEST CONDITIONS

TEST MEDIUM

CLEAN DRY AIR AND GASEOUS HELIUM AS REQUIRED.

ELECTRICAL CAPACITY:	2 AMPERES INDUCTIVE AT 28 VOLTS D.C.
AMBIENT TEMPERATURE:	60°F. TO 80°F. UNLESS OTHERWISE SPECIFIED
FLUID TEMPERATURE:	60°F. TO 80°F. UNLESS OTHERWISE SPECIFIED.

INSTRUMENT ACCURACIES

CALIBRATION PRESSURE GAUGES:	1/5 PERCENT OF FULL SCALE READING.
TEMPERATURE RECORDER:	±5 DEGREES FAHRENHEIT.
ELECTRICAL METERS:	±3 PERCENT OF FULL SCALE READING.

TEST PROCEDURE

THE TEST PROGRAM IS TO BE CONDUCTED ON EACH UNIT IN THE ORDER SPECIFIED IN THE FOLLOWING PARAGRAPHS.

1.0 FUNCTIONAL TESTS (REF. (A) PARA. 4.1.4)

USE CLEAN DRY AIR. RECORD THE FIRST FIVE (5) CYCLES OF PRESSURE SWITCH OPERATION OF EACH SERIES OF TESTS, AS REQUIRED BY THIS SPECIFICATION.

1.1

APPLY 30 PSIA TO PRESSURE PORT. THE SWITCH SHALL REMAIN OPEN BETWEEN PINS B AND C AND PINS F AND G.

1.2

INCREASE THE PRESSURE TO 32 PSIA MAXIMUM. THE SWITCH SHALL CLOSE AT 31.5±0.5PSIA BETWEEN PINS B AND C AND PINS F AND G. THE RATE OF PRESSURE INCREASE FROM 30 PSIA TO ACTUATION SHALL BE APPROXIMATELY 5 PSI PER MINUTE.

ACTUATION PRESSURE OF THE FIRST CYCLE OF ANY SERIES OF TESTS SHALL BE WITHIN ±0.4PSI OF THE ACTUATION PRESSURE OF THE SECOND CYCLE.

REPEATABILITY OF THIRD AND SUBSEQUENT ACTUATION POINTS SHALL BE WITHIN ±1 PERCENT OF THE SECOND CYCLE ACTUATION POINT.

1.3

DECREASE THE PRESSURE. THE SWITCH SHALL OPEN AT 30.5±0.5 PSIA

BETWEEN PINS B AND C AND PINS F AND G. THE RATE OF PRESSURE DECREASE FROM 31 PSIA TO DEACTUATION SHALL BE APPROXIMATELY 5 PSI PER MINUTE.

2.0 VIBRATION (REF. (A) PARA. 4.1.14)

(REFER TO FIGURE 2 FOR AXIS IDENTIFICATION).

2.1

THE PRESSURE SWITCH SHALL BE MOUNTED TO FIXTURE TE-317, INSTALLED ON A VIBRATION EXCITER AND SUBJECTED TO THE LEVELS SHOWN IN FIGURE 1. THE TESTS SHALL BE CONDUCTED USING A LOGARITHMIC SWEEP RATE OF 3.5 MINUTES PER OCTAVE. THE TEST DURATION SHALL BE ONE (1) HOUR IN EACH OF THE THREE (3) ORTHOGANAL AXES, ONE OF WHICH SHALL BE THE MOST SENSITIVE AXIS, AT -100 ROOM AMBIENT TEMPERATURE, AND +125°F. TOTAL VIBRATION TIME SHALL BE 9 HOURS FOR EACH PRESSURE SWITCH.

2.2

THE UNIT SHALL BE MONITORED FOR EVIDENCE OF ANY RESONANCE. ALL RESONANCES SHALL BE RECORDED.

2.3

DURING AND FOLLOWING THE APPLICATION OF VIBRATION, CONDUCT THE FUNCTIONAL TEST OF PARAGRAPH 1.

3.0 CONTACT MONITORING (REF. (A) PARA. 4.1.17)

3.1

THE PRESSURE SWITCH CONTACTS SHALL BE MONITORED DURING

VIBRATION TO VERIFY THAT SUBSEQUENT TO SWITCH ACTUATION PER PARA. 1.2, THE CIRCUIT BETWEEN PINS B AND C AND PINS F AND G, DOES NOT OPEN UNTIL DEACTUATION PER PARA. 1.3 AND TO VERIFY THAT SUBSEQUENT TO SWITCH DEACTUATION PER PARA. 1.3 THE CIRCUIT BETWEEN PINS B AND C AND PINS F AND G, DOES NOT CLOSE UNTIL SWITCH ACTUATION PER PARA. 1.2. THE CONTACTS SHALL BE MONITORED ON A C.E.C. MODEL 5-116 RECORDING OSCILLOGRAPH USING GALVANOMETERS HAVING A RESPONSE TO 0 TO 2500 CPS.

NO CHATTER OF THE SWITCH CONTACTS IS ACCEPTABLE. REFER TO FIGURE 3 FOR A SCHEMATIC DIAGRAM SHOWING THE CONTACT MONITORING SYSTEM.

4.0 GENERAL NOTES

4.1

THE REPORT SHALL BE COMPILED IN A MANNER CONSISTENT WITH CONVENTIONAL ENGINEERING REPORT FORM.

4.2

THE REPORT SHALL DESCRIBE THE TEST METHOD AND CONDITION AND FULLY SUMMARIZE THE TEST RESULTS AND ANY FAILURES OR LIMITATIONS ENCOUNTERED. A DESCRIPTION OF TEST EQUIPMENT SHALL ALSO BE INCLUDED.

4.3

THE REPORT SHALL INCLUDE THIS TEST PROCEDURE.

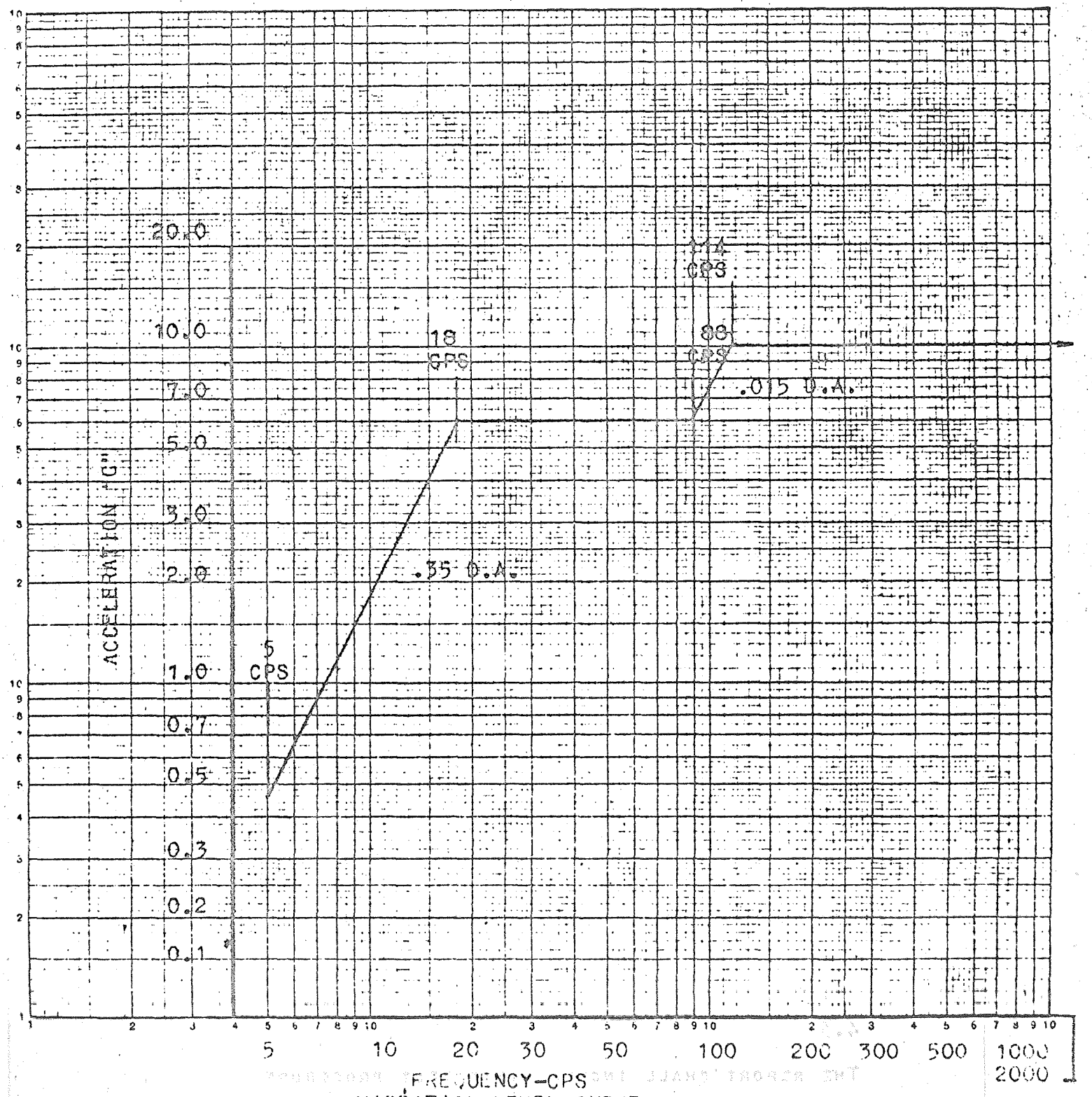

VIBRATION LEVEL CURVE

FIGURE 1.

REVISION DATE	FREBANK COMPANY GLENDALE CALIFORNIA	4640-1
		PAGE 9.0

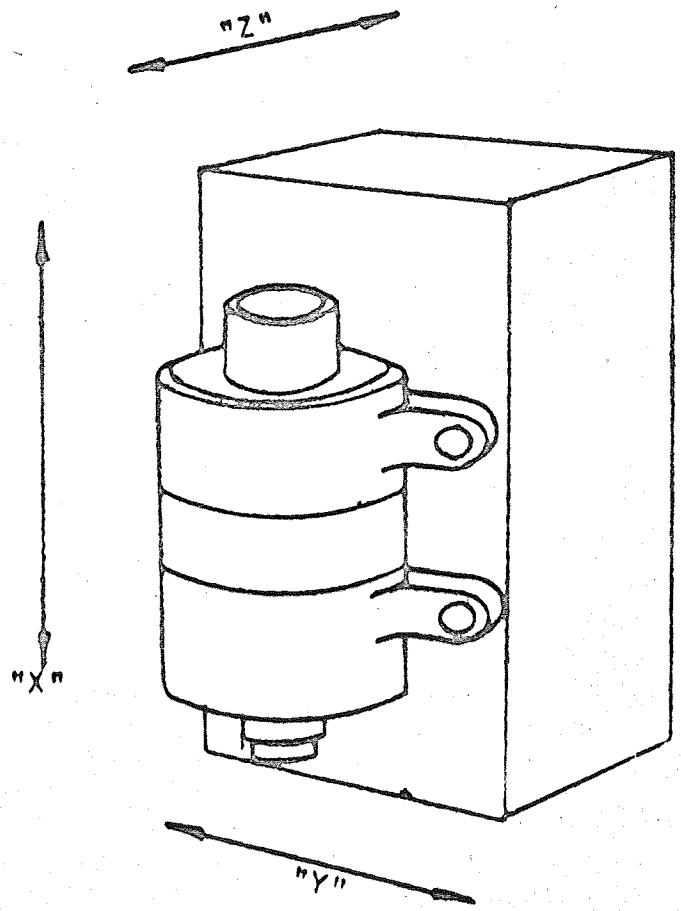

"X" - MOST SENSITIVE AXIS
"Y" - ORTHOGONAL AXIS (1)
"Z" - ORTHOGONAL AXIS (2)

AXIS IDENTIFICATION

FIGURE 2.

REVISION DATE

FREDOOK COMPANY
GLENDALE CALIFORNIA

4640-1

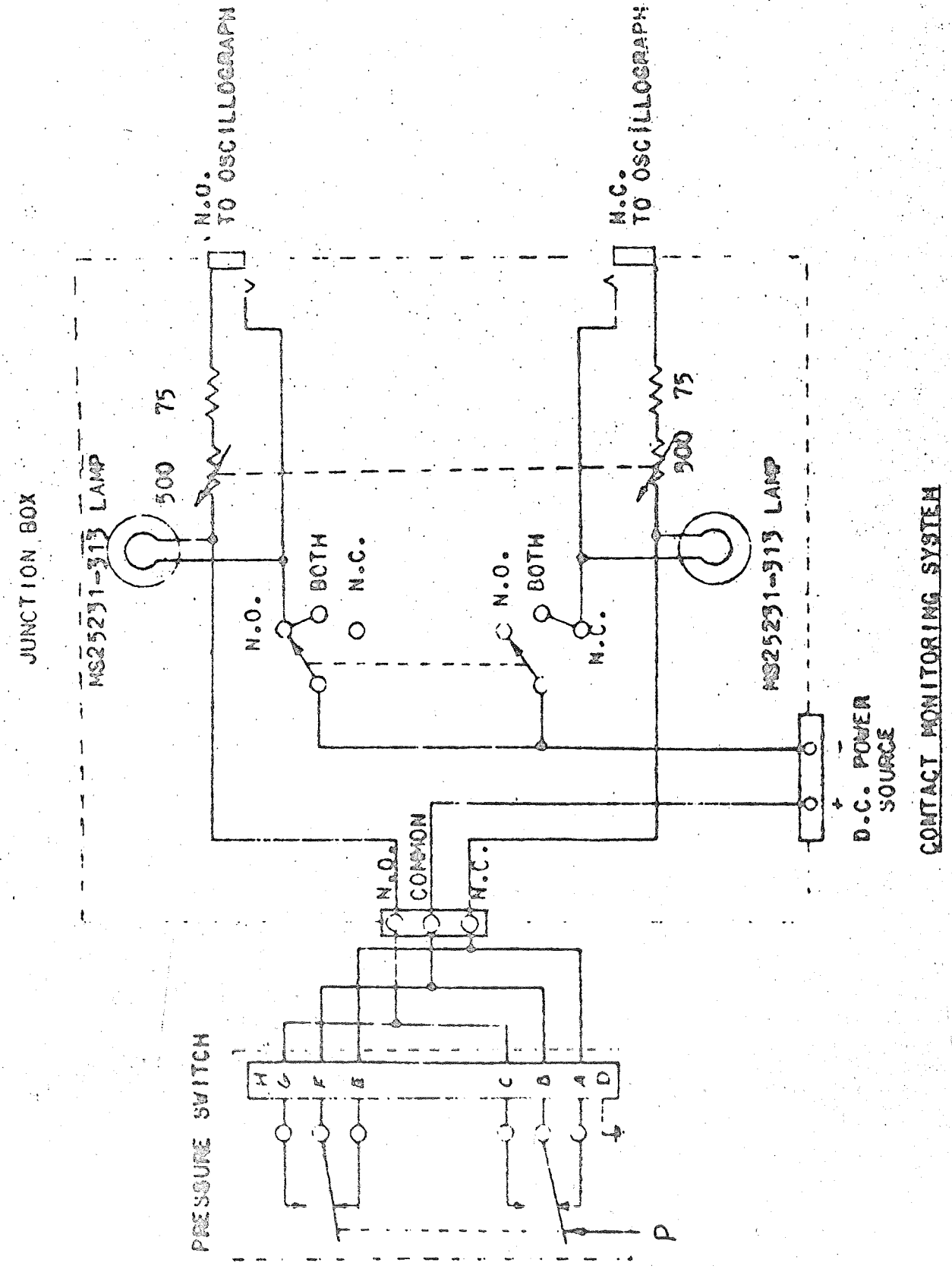

ADDENDUM 3

TO FREBANK COMPANY

ENGINEERING REPORT

NO. 178

REPEAT

DESIGN EVALUATION TESTS

FOR

PART NUMBER 4640-1

PRESSURE SWITCH

(ALTITUDE TEMPERATURE TEST)

(ACCELERATION TEST)

(ACOUSTICS TEST)

(SHOCK TEST)

FREBANK COMPANY
GLENDALE CALIFORNIA

Engineering Report

REPEAT
DESIGN EVALUATION TESTS
FOR
PART NUMBER 4640-1
PRESSURE SWITCH
(ALTITUDE TEMPERATURE, ACCELERATION, ACOUSTICS & SHOCK TESTS)

DAC SPECIFICATION 7851860-1

DATE MAY 20, 1963

PREPARED R. M. Frincke
R. M. FRINCKE, ENGR'G. LAB. SUPV'R.

CHECKED C. R. Willis
C. R. WILLIS, PROJECT ENGINEER

APPROVED Charles F. Beck, Jr.
CHARLES F. BECK, JR.
CHIEF ENGINEER

CONTRACT NO.

NO. PAGES -30-

STATE OF CALIFORNIA
COUNTY OF LOS ANGELES } ss.

CHARLES F. BECK, JR., being duly sworn, deposes and says: That the information contained in this report is to the best of his knowledge true and correct in all respects.

Charles F. Beck, Jr.

SUBSCRIBED and sworn to before me this 22nd day of May, 1963

Elizabeth R. Vigoure

Notary Public in and for the County of Los Angeles, State of California

My commission expires November 8, 1963

NOTARY PUBLIC LOS ANGELES COUNTY, CALIF.

REVISIONS

TABLE OF CONTENTS

		PAGE
1.0	PURPOSE	4.0
2.0	REFERENCE	4.0
3.0	DESCRIPTION OF TEST SPECIMEN	4.0
4.0	REQUIREMENTS	4.0
5.0	TEST PROCEDURE AND RESULTS	4.0
	5.1 ALTITUDE TEMPERATURE TEST	4.0
	5.2 ACCELERATION TEST	5.0
	5.3 ACOUSTICS TEST	5.0
	5.4 SHOCK TEST	5.0
	5.5 RESULTS	5.0
SUPPLEMENT I		6.0
	GARWOOD LABORATORIES INC. REPORT NUMBER 2565 ALTITUDE TEMPERATURE, ACCELERATION AND SHOCK TESTS ON FREBANK PART NUMBER 4640-1 PRESSURE SWITCH; TO FREBANK COMPANY DESIGN EVALUATION TEST PROCEDURE FOR ENGINEERING REPORT NO. 178.	
SUPPLEMENT II		22.0
	ROTOTEST LABORATORIES INC. REPORT NUMBER 4634 ACOUSTIC NOISE TESTING OF PRESSURE SWITCH PART NUMBER 4640-1.	

1.0 PURPOSE

TO PRESENT THE RESULTS OF THE REPEAT DESIGN EVALUATION TEST CONDUCTED ON FREBANK PRESSURE SWITCH PART NUMBER 4640-1

2.0 REFERENCE

(A) DOUGLAS AIRCRAFT COMPANY SPECIFICATION NUMBER 7851860-1 REVISION "R".

3.0 DESCRIPTION OF TEST SPECIMEN

TWO (2) PRODUCTION UNITS, PART NUMBER 4640-1 SERIAL NUMBERS 124 AND 125 WERE SUBJECTED TO THE REQUIRED TEST PROGRAM.

4.0 REQUIREMENTS

THE REPEAT DESIGN EVALUATION TEST WAS CONDUCTED IN ACCORDANCE WITH FREBANK COMPANY DESIGN EVALUATION TEST PROCEDURE FOR ENGINEERING REPORT NO. 178, PART NUMBER 4640-1 PRESSURE SWITCH; PARA. 11 ALTITUDE TEMPERATURE, PARA. 12 ACCELERATION, PARA. 14 ACOUSTICS, AND PARA. 15, SHOCK.

5.0 TEST PROCEDURE AND RESULTS

5.1 ALTITUDE TEMPERATURE TEST: REF. (A) PARA. 4.1.12.

THE ALTITUDE TEMPERATURE TEST WAS CONDUCTED IN IT'S ENTIRETY BY GARWOOD LABORATORIES, INC. REFER TO GARWOOD LABORATORIES REPORT NUMBER 2565 FOR THE RESULTS OF THE ALTITUDE TEMPERATURE TEST. THIS REPORT IS PRESENTED AS SUPPLEMENT I.

5.2 ACCELERATION TEST: REF. (A) PARA. 4.1.13.

THE ACCELERATION TEST WAS CONDUCTED IN IT'S ENTIRETY BY GARWOOD LABORATORIES, INC. REFER TO GARWOOD LABORATORIES REPORT NUMBER 2565 FOR THE RESULTS OF THE ACCELERATION TEST. THIS REPORT IS PRESENTED AS SUPPLEMENT I.

5.3 ACOUSTICS TEST: REF. (A) PARA. 4.1.15.

THE ACOUSTICS TEST WAS CONDUCTED IN IT'S ENTIRETY AT ROTOTEST LABORATORIES INC. THE FUNCTIONAL TESTS, BEFORE, DURING, AND FOLLOWING THE ACOUSTICS EXPOSURE WERE CONDUCTED BY FREBANK COMPANY PERSONNEL. ROTOTEST LABORATORIES INC. FURNISHED THE ACOUSTICS ENVIRONMENT AND RELATED EQUIPMENT AS DESCRIBED IN THEIR TEST REPORT NUMBER 4634. REFER TO ROTOTEST LABORATORIES REPORT NUMBER 4634 FOR THE RESULTS OF THE ACOUSTICS TEST. THIS REPORT IS PRESENTED AS SUPPLEMENT II.

5.4 SHOCK TEST: REF. (A) PARA. 4.1.16.

THE SHOCK TEST WAS CONDUCTED IN IT'S ENTIRETY BY GARWOOD LABORATORIES, INC. REFER TO GARWOOD LABORATORIES REPORT NUMBER 2565 FOR THE RESULTS OF THE SHOCK TEST. THIS REPORT IS PRESENTED AS SUPPLEMENT I.

5.5 RESULTS

BOTH PRESSURE SWITCHES OPERATED WITHOUT MALFUNCTION AT ALL TIMES DURING THE TEST PROGRAM.

SUPPLEMENT I

GARWOOD LABORATORIES INC.
REPORT NUMBER 2565
ALTITUDE TEMPERATURE, ACCELERATION,
AND SHOCK TESTS

ON

FREBANK P/N 4640-1, PRESSURE SWITCH
TO FREBANK COMPANY
DESIGN EVALUATION TEST PROCEDURE
FOR ENGINEERING REPORT NO. 178

GARWOOD LABORATORIES, INC.
708 SOUTH VAIL AVE.
MONTEBELLO, CALIF.

TEST REPORT

May 15, 1963

REPORT NO. 2565
ALTITUDE-TEMPERATURE, ACCELERATION AND SHOCK TESTS ON FREBANK P/N 4640-1, PRESSURE SWITCH, TO FREBANK COMPANY DESIGN EVALUATION TEST PROCEDURE FOR ENGINEERING REPORT NO. 178

Mfg. By: Frebank Company
711 W. Broadway, Glendale 4, California

Test By: A. B. Judd	Concurred: H. A. Lindberg
Report By: W. B. Hume	USAF Quality Control Representative

County of Los Angeles
State of California } ss. J. L. Garwood, being first duly sworn, deposes and says: that the information contained in this report has been obtained as the result of complete and carefully conducted tests, and is to the best of his knowledge and belief, true and correct in all respects.

Subscribed and sworn to before me on this 15th day of May 1963.

Notary in and for the County and State
Elsie [illegible]
My Commission expires [illegible], 1963

J. L. Garwood, Mechanical Engineer

GARWOOD LABORATORIES, INC.
708 SOUTH VAIL AVE.
MONTEBELLO, CALIF.

TEST REPORT

TABLE OF CONTENTS

PARA.		PAGE
	TITLE PAGE	1
	TABLE OF CONTENTS	2
1.	REFERENCES	3
2.	DESCRIPTION OF UNITS TESTED	3
3.	PURPOSE	3
4.	CONCLUSIONS	4
5.	TEST METHODS AND RESULTS	
5.1	FUNCTIONAL TEST	4
5.2	ALTITUDE TEMPERATURE TEST	5
5.3	ACCELERATION TEST	6
5.4	SHOCK TEST	8
FIGURE		
1.	SCHEMATIC DIAGRAM OF FUNCTIONAL TEST SETUP	10
2.	TEST EQUIPMENT LIST	11
TABLE		
1.	FUNCTIONAL TEST DATA SHEET, S/N 124	12 - 13
2.	FUNCTIONAL TEST DATA SHEET, S/N 125	14 - 15

GARWOOD LABORATORIES, INC.
708 SOUTH VAIL AVE.
MONTEBELLO, CALIF.

TEST REPORT

1. REFERENCES

Abbreviated Form	Full Reference Description
P.O. 10226	Purchase Order No. 10226 dated 5-10-63 from Frebank Company.
DETP 178	Frebank Company Design Evaluation Test Procedure for Engineering Report No. 178, Part Number 4640-1, Pressure Switch, Revision "B" dated 1-10-62.

2. DESCRIPTION OF UNITS TESTED

The units submitted for test were two samples of Frebank P/N 4640-1, S/N's 124 and 125. The units were pressure actuated devices each of which contained two SPDT switches. Each unit was fitted with an electrical connector and with a pressure port of 1/4" tube size. The switch body was cylindrical in shape, and four mounting lugs were attached. The units were designed to actuate on increasing pressure at 31.5 ± 0.5 PSIA and to deactuate at 30.5 ± 0.5 PSIA on decreasing pressure.

3. PURPOSE

The purpose of this test program was to subject the units to the following tests of DETP 178:

Para.	Test
11.	Altitude Temperature
12.	Acceleration
15.	Shock

The pressurizing fluid for the program was to be clean dry air. The Functional Test, Para. 1., was to be performed on the units during and/or after the tests listed above.

4. CONCLUSIONS

The units were subjected to the tests as required. Both specimens operated without malfunction throughout the test program. There was no evidence of damage to either unit as a result of the test conditions. Performance of the units was within the required specification limits at all times during the program. See Tables 1 and 2. There was no chatter or other interruption of circuit continuity during either the Acceleration or Shock Tests. Both units were considered to have passed the tests to which they were subjected in this Laboratory.

5. TEST METHODS AND RESULTS

5.1 FUNCTIONAL TEST

5.1.1 Requirements -- DETP 178, Para. 1.

5.1.2 Methods -- This test was required on numerous occasions during the program to demonstrate satisfactory operation of the units during and/or after subjecting the samples to the environmental conditions. The occasions on which this test was performed are listed in Tables 1 and 2 of this report. The test was conducted in the following manner:

5.1.2.1 Test Setup -- The unit under test was installed in the setup diagrammed in Figure 1 of this report. Clean dry air was used as the pressurizing medium. The sample was subjected to five cycles of operation on each occasion as indicated in the Tables.

5.1.2.2 Non-Actuation -- Air pressure on the pressure port was gradually raised from zero to 30 PSIA. With 30 PSIA maintained, the signal lights were observed to determine that the switch remained open between pins B and C and between pins F and G. If no actuation of the switch occurred at this pressure, notation was made in the appropriate place on the data sheet.

GARWOOD LABORATORIES, INC.
708 SOUTH VAIL AVE.
MONTEBELLO, CALIF.

TEST REPORT

5.1.2.3 Actuation Pressure -- The air pressure was gradually raised until the switch actuated as evidenced by the signal lights. The rate of pressure increase from 30 PSIA to actuation was approximately 5 PSI per minute. Actuation pressure was recorded and was compared to the specification requirement for actuation at 31.5 ± 0.5 PSIA. Actuation pressure during the first cycle was to be within ±0.4 PSI of the actuation pressure during the second cycle of any series. Repeatability of the third and subsequent actuation points was to be within ±1 percent of the second cycle actuation pressure.

5.1.2.4 Deactuation Pressure -- After actuation during each of 5 cycles, the pressure on the unit was gradually reduced until deactuation occurred as evidenced by a change in the signal lights. The rate of pressure decrease from 31 PSIA to deactuation was approximately 5 PSI per minute. The deactuation pressure was recorded and was compared to the specification requirement for opening between pins B and C and between pins F and G at 30.5 ± 0.5 PSIA.

5.1.3 Results -- Actuation and deactuation values during the program were within the specifications tolerances at all times. See Tables 1 and 2 of this report. The units were considered to have passed the Functional Test on the occasions of its performance in this Laboratory.

5.2 ALTITUDE TEMPERATURE TEST

5.2.1 Requirements -- DETP 178, Para. 11.

5.2.2 Methods -- In turn, each of the units was installed in a vacuum tight container. The electrical connections were brought out through a bulkhead connector in the wall of the container. Pressure was applied through a bulkhead fitting. Electrical and pressure connections were made to the Functional Test setup to allow check-out of the unit during the test. A thermocouple junction was attached to the body of the test specimen to allow monitoring of the unit temperature. A port in the chamber was coupled to the vacuum pump, and provisions were made to monitor the pressure within the test container with a thermocouple vacuum gage. The entire container was cooled with liquid nitrogen until temperature stabilization at -100°F occurred as measured by the thermocouple on the body of the specimen. The pressure within the test container then was reduced to a pressure (1.747×10^{-2} mm Hg.) equivalent to 250,000' altitude. Under these conditions, the unit was subjected to the Functional Test described in Para. 5.1 of this report, and the results were recorded.

GARWOOD LABORATORIES, INC.
708 SOUTH VAIL AVE.
MONTEBELLO, CALIF.

TEST REPORT

5.2.3 Results -- Examination of each unit at the conclusion of the test disclosed no apparent damage as a result of the test conditions. Performance of the units was within specification limits during the test. See Tables 1 and 2. The two test units were considered to have passed the Altitude Temperature Test as conducted in this Laboratory.

5.3 ACCELERATION TEST

5.3.1 Requirements -- DETP 178, Para. 12.

5.3.2 Methods

5.3.2.1 Acceleration Specimen Axis Identification:

X Axis + -- Parallel to longitudinal axis of switch body and with the pressure port toward the center of rotation.

X Axis - -- As above but with the pressure port away from the center of centrifuge rotation.

Y Axis + -- In a radial direction with relation to the cylindrical switch body and with the mount toward the center of rotation.

Y Axis - -- As above but with the mount away from the center of centrifuge rotation.

Z Axis + -- In a radial direction with relation to the cylindrical switch body and with the mount down on the centrifuge boom.

Z Axis - -- As above with the mount up or with the body of the unit turned 180° from Z + in the horizontal plane.

5.3.2.2 Setup for Test -- In turn, each of the specimens was mounted on the centrifuge boom. The pressure line from the port of the specimen was brought out to the Functional Test setup through a rotating pressure joint in the axis of centrifuge rotation. The electrical connections were brought out to the Functional Test setup through slip rings. A continuity monitor was installed in the electrical system as shown in Figure 1. The continuity monitor was designed to trip during any momentary loss of continuity in the system with a sustained signal which was visible to the personnel conducting the test. The device had a response of better than 400 microseconds which was equal to or more sensitive than the 2500 CPS requirement of DETP 178.

GARWOOD LABORATORIES, INC.
708 SOUTH VAIL AVE.
MONTEBELLO, CALIF.

TEST REPORT

5.3.2.3 Conduct of Test -- The unit was mounted on the centrifuge with the most sensitive axis (X) parallel to the applied acceleration force. The centrifuge was started, and the rotational speed was increased until 7 g's acceleration were applied to the unit. This acceleration level then was maintained for a period of 12 minutes. During the period of application of acceleration, the unit was subjected to the Functional Test described in Para. 5.1.2, and the results were recorded. During half of the remainder of the 12 minute period, the pressure was increased until the unit actuated and then was maintained at that value. The contact monitoring device was switched into the circuit for indication of any opening of the circuit between pins B and C and between F and G in excess of 400 microseconds. During the second half of the remainder of the 12 minute period, the pressure was reduced to and maintained at deactuation. The contact monitor was observed during this period for any interruption in the closed contacts B-A and F-E. This entire procedure was repeated with acceleration applied in the reverse direction of the X axis and then successively in the plus and minus directions of the Y and Z axes. This resulted in a total of 6 periods of acceleration of 12 minutes on each of the two test specimens. At the conclusion of the Acceleration Test on each unit, the Functional Test was performed with each unit at rest, and the results were recorded.

5.3.3 Results -- Examination of each unit at the conclusion of the test disclosed no apparent damage as a result of the test conditions. Neither unit malfunctioned at any time during application of acceleration or when subjected to the Functional Test at the conclusion of acceleration. Performance of both units was within the specification requirements at all times. See Tables 1 and 2. There was no chatter of the switch contacts at any time during application of the required acceleration force. Both units were considered to have passed the Acceleration Test with associated Functional Tests as conducted in this Laboratory.

5.4 SHOCK TEST

5.4.1 Requirements -- DETP 178, Para. 15.

5.4.2 Methods

5.4.2.1 Shock Specimen Axis Identification:

X Axis -- Parallel to longitudinal axis of switch body (Sensitive Axis).
Y Axis -- Normal to the plane of mounting.
Z Axis -- Mutually perpendicular to the X and Y axes.

5.4.2.2 Setup for Test -- In turn, each of the units was bolted to a jig of thick magnesium plate by the mounting lugs on the switch body. This assembly was secured on the table of the shock machine. The pressure port of the unit was connected by a length of flexible pressure hose to the Functional Test setup. The electrical connector was connected by suitable wiring to the Functional Test setup. An accelerometer was attached near the mounting point of the unit to allow monitoring of the shock pulses on a calibrated oscilloscope during the test. The contact monitoring device was installed in the circuit in a manner identical to that previously described for the Acceleration Test to monitor contact chatter as required by Para. 16. of DETP 178.

5.4.2.3 Conduct of Test -- Air pressure on the port of the unit was increased until the unit actuated. The actuation pressure then was maintained. The continuity monitor was switched into the system to monitor continuity between pins B and C and between pins F and G as shown in Figure 1. Under these conditions, the unit was subjected to the required shock pulse. Pressure was then decreased until the unit deactuated, and the pressure at deactuation was maintained. In this condition, the continuity monitor checked the normally closed switch circuit. A total of three shock pulses were applied with actuation pressure applied, and an additional total of three shocks were applied with deactuation pressure applied. Each shock pulse was a sawtooth wave with a linear increase from 0 to 35 g's in 10 milliseconds. The shock wave decayed from 35 G's almost instantaneously at the end of 10 milliseconds. This procedure was repeated on the remaining axes of each unit for a total of 6 shocks (3 actuated and 3 deactuated) in the plus direction and 6 shocks in the minus direction on each of the 3 axes. This resulted in a total of 36 shock on each specimen. The continuity monitoring device was observed during each shock for indication of loss of continuity for a period greater than 400 microseconds. At the conclusion of the test, each unit was subjected to the Functional Test, and the results were recorded.

5.4.3 Results -- Examination of each of the two units at the conclusion of the test disclosed no external evidence of damage as a result of the test conditions. There was no indication of loss of switch continuity, chatter or inadvertent action at any time as a result of the shock pulses. The performance characteristics of the units were within the specification limits during the Functional Test at the conclusion of the Shock Test. There was no indication that the test conditions had caused a change in performance of either unit. Both samples were considered to have passed the Shock Test with subsequent Functional Test as conducted in this Laboratory.

SCHEMATIC DIAGRAM OF FUNCTIONAL TEST SETUP

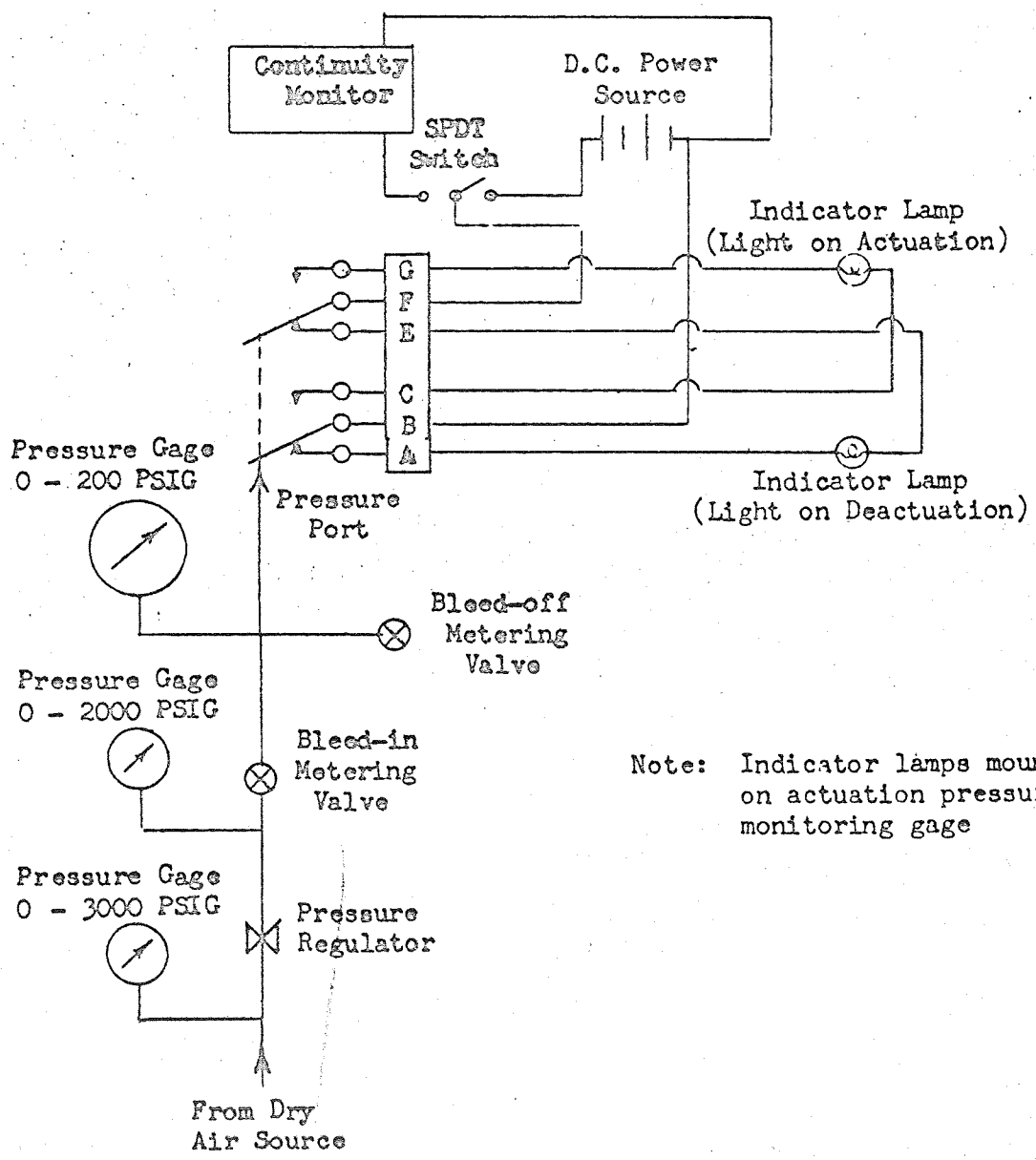

Note: Indicator lamps mounted on actuation pressure monitoring gage

TEST EQUIPMENT LIST

-Accelerometer: Endevco Model 2213, S/N 5225. 19.36 millivolts/peak G. Used for monitoring shock pulses.

-Centrifuge: Wright Engineering Model 20. Sustained acceleration to 50 G's. Fitted with pressure and electrical connections.

-Compressor: Ingersoll-Rand 4R15, Air pressure to 5000 PSIG. With Robbins Aviation dehydration and oil removal filters to 0.1 micron. For test air supply.

-Continuity Monitor: Garwood Thyratron continuity monitoring device. Unit designed to give sustained indication of any loss of circuit continuity in excess of 400 microseconds.

-Metering Valves (2): Robbins Aviation Model SSKG250-4T, 1/4". Used for metering air in and out of the Functional Test setup to control pressure.

-Oscilloscope: DuMont Model 401. For display of shock pulses.

-Pressure Gage: Heise 12" Test Gage, 0 - 200 PSIG, ±1/5%. For readout of actuation and deactuation pressures.

-Pressure Gage: Helicoid 6W2000, 0 - 2000 PSIG, 6", ±1/2%. For determination of system pressure upstream of the metering valves.

-Pressure Gage: Ashcroft 6" Test Gage, 0 - 3000 PSIG, ±1/2%. For monitoring pressure of supply air.

-Pressure Regulator: Futurecraft Model 40062, 0 - 3000 PSIG inlet pressure, regulation as desired to approximately 2500 PSIG. Used for regulation of air to a convenient level upstream of metering valves.

-Shock Machine: Vulcan Model VG-1. Machine adjustable for half sine, square wave or sawtooth shock with intensity and duration as required. Intensity and duration of pulse calibrated at time of test.

-Thermocouple Bridge: Thermotest Model T-1, S/N 1-148, -155°F to +460°F with iron constantan thermocouples. Accuracy ±2°F.

-Vacuum System: Veeco Model VE-401A, S/N 401. Ultimate vacuum 5×10^{-7} torr. Regulated to 1.747×10^{-2} torr for simulation of 250,000' altitude. Equipped with calibrated thermocouple vacuum gages for monitoring evacuation of system.

GARWOOD LABORATORIES, INC.
708 SOUTH VAIL AVE.
MONTEBELLO, CALIF.

TEST REPORT

FUNCTIONAL TEST DATA SHEET

P/N 4640-1, S/N 124

Conditions →		Apply gradually increasing air pressure to switch port. Determine that switch remains open at 30 PSIA. Increase pressure at approximately 5 PSI/minute from 30 PSIA. Record actuation pressure. Decrease pressure at approximately 5 PSI/minute. Record deactuation pressure. Repeat for total of 5 cycles.				
Measure or Check For →		Switch not actuated on rising pressure	Actuation Pressure, 1st Cycle	Actuation Pressure, 2nd Cycle	Actuation Pressure, 3rd, 4th & 5th Cycles	Deactuation Pressure
Spec. Requires →		at 30 PSIA	31-32 & ±0.4 PSI of 2nd Cycle	31 - 32	± 1% of 2nd Cycle	30 - 31
TESTS ↓ Units of Measure →		"O.K."	PSIA	PSIA	PSIA	PSIA
Initial Functional Test	1	O.K.	31.8			30.4
	2	O.K.		31.8		30.4
	3	O.K.			31.8	30.4
	4	O.K.			31.8	30.4
	5	O.K.			31.8	30.4
During Altitude Temperature Test at 250,000 feet and -100°F	1	O.K.	31.9			30.1
	2	O.K.		31.9		30.1
	3	O.K.			31.9	30.1
	4	O.K.			31.8	30.1
	5	O.K.			31.8	30.1
During Accelerations: X Axis (Sensitive) with port toward center of rotation	1	O.K.	31.6			30.2
	2	O.K.		31.6		30.2
	3	O.K.			31.6	30.2
	4	O.K.			31.6	30.2
	5	O.K.			31.6	30.2
X Axis (Sensitive) with port away from center of rotation	1	O.K.	31.8			30.4
	2	O.K.		31.8		30.4
	3	O.K.			31.8	30.4
	4	O.K.			31.8	30.4
	5	O.K.			31.8	30.4
Y Axis (Radially) with mount toward center of rotation	1	O.K.	31.8			30.3
	2	O.K.		31.8		30.3
	3	O.K.			31.8	30.3
	4	O.K.			31.8	30.3
	5	O.K.			31.8	30.3
Y Axis (Radially) with mount away from center of rotation	1	O.K.	31.8			30.4
	2	O.K.		31.8		30.4
	3	O.K.			31.8	30.4
	4	O.K.			31.8	30.4
	5	O.K.			31.8	30.4

FUNCTIONAL TEST DATA SHEET (Cont'd)

P/N 4640-1, S/N 124

TESTS		Conditions →	Apply gradually increasing air pressure to switch port. Determine that switch remains open at 30 PSIA. Increase pressure at approximately 5 PSI/minute from 30 PSIA. Record actuation pressure. Decrease pressure at approximately 5 PSI/minute. Record deactuation pressure. Repeat for total of 5 cycles.				
		Measure or Check For →	Switch not actuated on rising pressure	Actuation Pressure, 1st Cycle	Actuation Pressure, 2nd Cycle	Actuation Pressure, 3rd, 4th & 5th Cycles	Deactuation Pressure
		Spec. Requires →	at 30 PSIA	31 - 32 & ± 0.4 PSI of 2nd Cycle	31 - 32	± 1% of 2nd Cycle	30 - 31
		Units of Measure →	"O.K."	PSIA	PSIA	PSIA	PSIA
During Acceleration: Z Axis (Radially) with mount down	1	O.K.	31.8				30.3
	2	O.K.			31.8		30.3
	3	O.K.				31.8	30.3
	4	O.K.				31.8	30.3
	5	O.K.				31.8	30.3
Z Axis (Radially) with mount up	1	O.K.	31.7				30.4
	2	O.K.			31.7		30.4
	3	O.K.				31.7	30.4
	4	O.K.				31.7	30.4
	5	O.K.				31.7	30.4
After Acceleration Test	1	O.K.	31.8				30.3
	2	O.K.			31.8		30.3
	3	O.K.				31.8	30.3
	4	O.K.				31.8	30.3
	5	O.K.				31.8	30.3
After Shock Test	1	O.K.	31.8				30.4
	2	O.K.			31.8		30.4
	3	O.K.				31.8	30.4
	4	O.K.				31.8	30.4
	5	O.K.				31.8	30.4

GARWOOD LABORATORIES, INC.
708 SOUTH VAIL AVE.
MONTEBELLO, CALIF.

TEST REPORT

FUNCTIONAL TEST DATA SHEET

P/N 4640-1, S/N 125

Conditions →		Apply gradually increasing air pressure to switch port. Determine that switch remains open at 30 PSIA. Increase pressure at approximately 5 PSI/minute from 30 PSIA. Record actuation pressure. Decrease pressure at approximately 5 PSI/minute. Record deactuation pressure. Repeat for total of 5 cycles.				
Measure or Check For →		Switch not actuated on rising pressure	Actuation Pressure, 1st Cycle	Actuation Pressure, 2nd Cycle	Actuation Pressure, 3rd, 4th & 5th Cycles	Deactuation Pressure
Spec. Requires →		at 30 PSIA	31 - 32 & ±0.4 PSI of 2nd Cycle	31 - 32	± 1% of 2nd Cycle	30 - 31
TESTS ↓ Units of Measure →		"O.K."	PSIA	PSIA	PSIA	PSIA
Initial Functional Test	1	O.K.	31.6			30.3
	2	O.K.		31.6		30.3
	3	O.K.			31.6	30.3
	4	O.K.			31.6	30.3
	5	O.K.			31.6	30.3
During Altitude Temperature Test at 250,000 feet and -100°F	1	O.K.	31.6			30.2
	2	O.K.		31.6		30.2
	3	O.K.			31.6	30.2
	4	O.K.			31.6	30.2
	5	O.K.			31.6	30.2
During Acceleration: X Axis (Sensitive) with port toward center of rotation	1	O.K.	31.5			30.2
	2	O.K.		31.5		30.2
	3	O.K.			31.5	30.2
	4	O.K.			31.5	30.2
	5	O.K.			31.5	30.2
X Axis (Sensitive) with port away from center of rotation	1	O.K.	31.7			30.4
	2	O.K.		31.7		30.4
	3	O.K.			31.7	30.4
	4	O.K.			31.7	30.4
	5	O.K.			31.7	30.4
Y Axis (Radially) with mount toward center of rotation	1	O.K.	31.6			30.2
	2	O.K.		31.6		30.2
	3	O.K.			31.6	30.2
	4	O.K.			31.6	30.2
	5	O.K.			31.6	30.2
Y Axis (Radially) with mount away from ter of rotation	1	O.K.	31.6			30.3
	2	O.K.		31.6		30.3
	3	O.K.			31.6	30.3
	4	O.K.			31.6	30.3
	5	O.K.			31.6	30.3

GARWOOD LABORATORIES, INC.
708 SOUTH VAIL AVE.
MONTEBELLO, CALIF.

TEST REPORT

FUNCTIONAL TEST DATA SHEET (Cont'd)

P/N 4640-1, S/N 125

TESTS		Switch not actuated on rising pressure	Actuation Pressure, 1st Cycle	Actuation Pressure, 2nd Cycle	Actuation Pressure, 3rd, 4th & 5th Cycles	Deactuation Pressure
Conditions →		Apply gradually increasing air pressure to switch port. Determine that switch remains open at 30 PSIA. Increase pressure at approximately 5 PSI/minute from 30 PSIA. Record actuation pressure. Decrease pressure at approximately 5 PSI/minute. Record deactuation pressure. Repeat for total of 5 cycles.				
Measure or Check For →		Switch not actuated on rising pressure	Actuation Pressure, 1st Cycle	Actuation Pressure, 2nd Cycle	Actuation Pressure, 3rd, 4th & 5th Cycles	Deactuation Pressure
Spec. Requires →		at 30 PSIA	31 - 32 & ±0.4 PSI of 2nd Cycle	31 - 32	± 1% of 2nd Cycle	30 - 31
Units of Measure →		"O.K."	PSIA	PSIA	PSIA	PSIA
During Acceleration: Z Axis (Radially) with mount down	1	O.K.	31.6			30.3
	2	O.K.		31.6		30.3
	3	O.K.			31.6	30.3
	4	O.K.			31.6	30.3
	5	O.K.			31.6	30.3
Z Axis (Radially) with mount up	1	O.K.	31.7			30.3
	2	O.K.		31.7		30.3
	3	O.K.			31.7	30.3
	4	O.K.			31.7	30.3
	5	O.K.			31.7	30.3
After Acceleration Test	1	O.K.	31.6			30.3
	2	O.K.		31.6		30.3
	3	O.K.			31.6	30.3
	4	O.K.			31.6	30.3
	5	O.K.			31.6	30.3
After Shock Test	1	O.K.	31.6			30.3
	2	O.K.		31.6		30.3
	3	O.K.			31.6	30.3
	4	O.K.			31.6	30.3
	5	O.K.			31.6	30.3

GARWOOD LABORATORIES, INC.
708 SOUTH VAIL AVE.
MONTEBELLO, CALIF.
TEST REPORT

ALTITUDE TEMPERATURE TEST

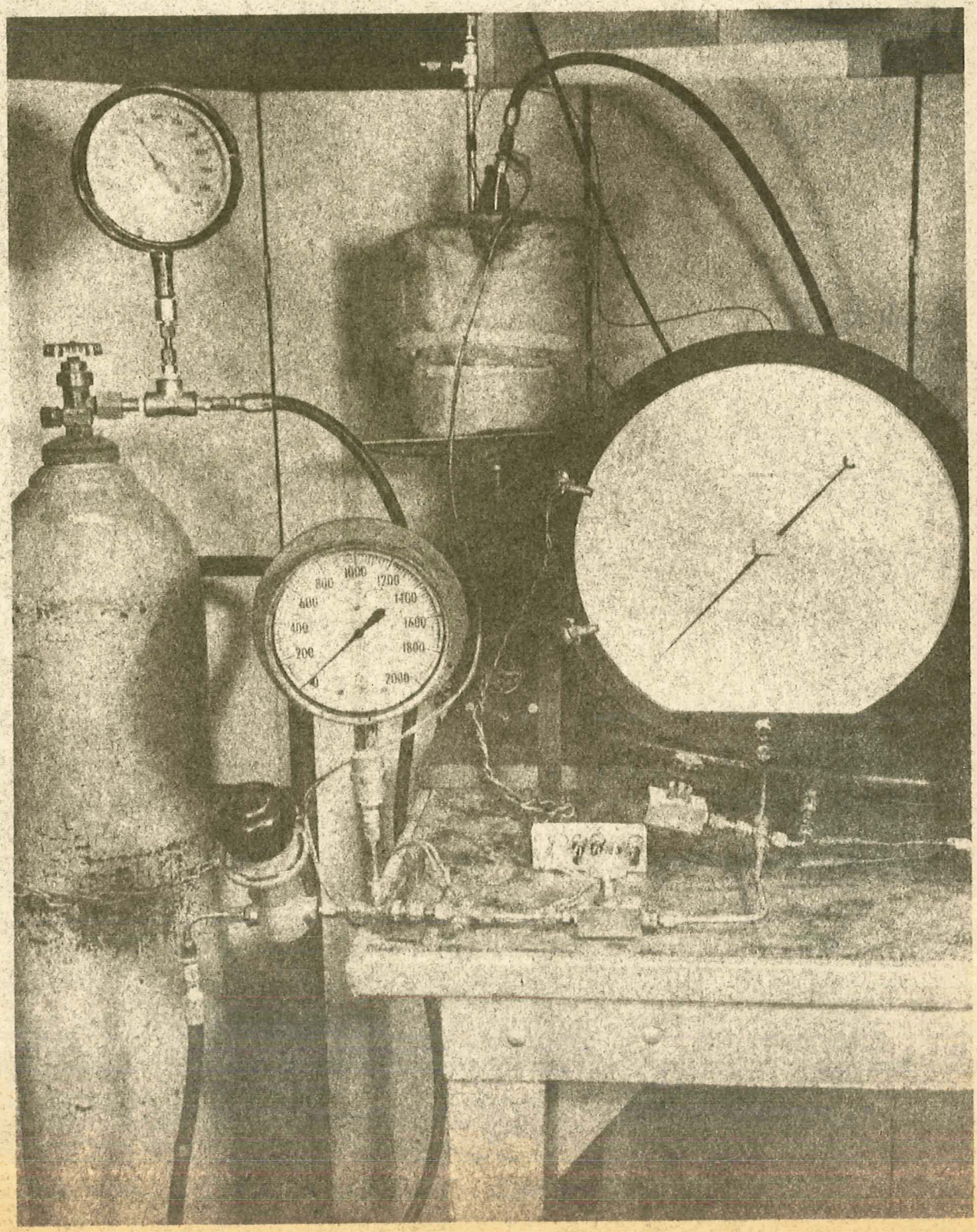

GARWOOD LABORATORIES, INC.
708 SOUTH VAIL AVE.
MONTEBELLO, CALIF.
TEST REPORT

ACCELERATION TEST SETUP

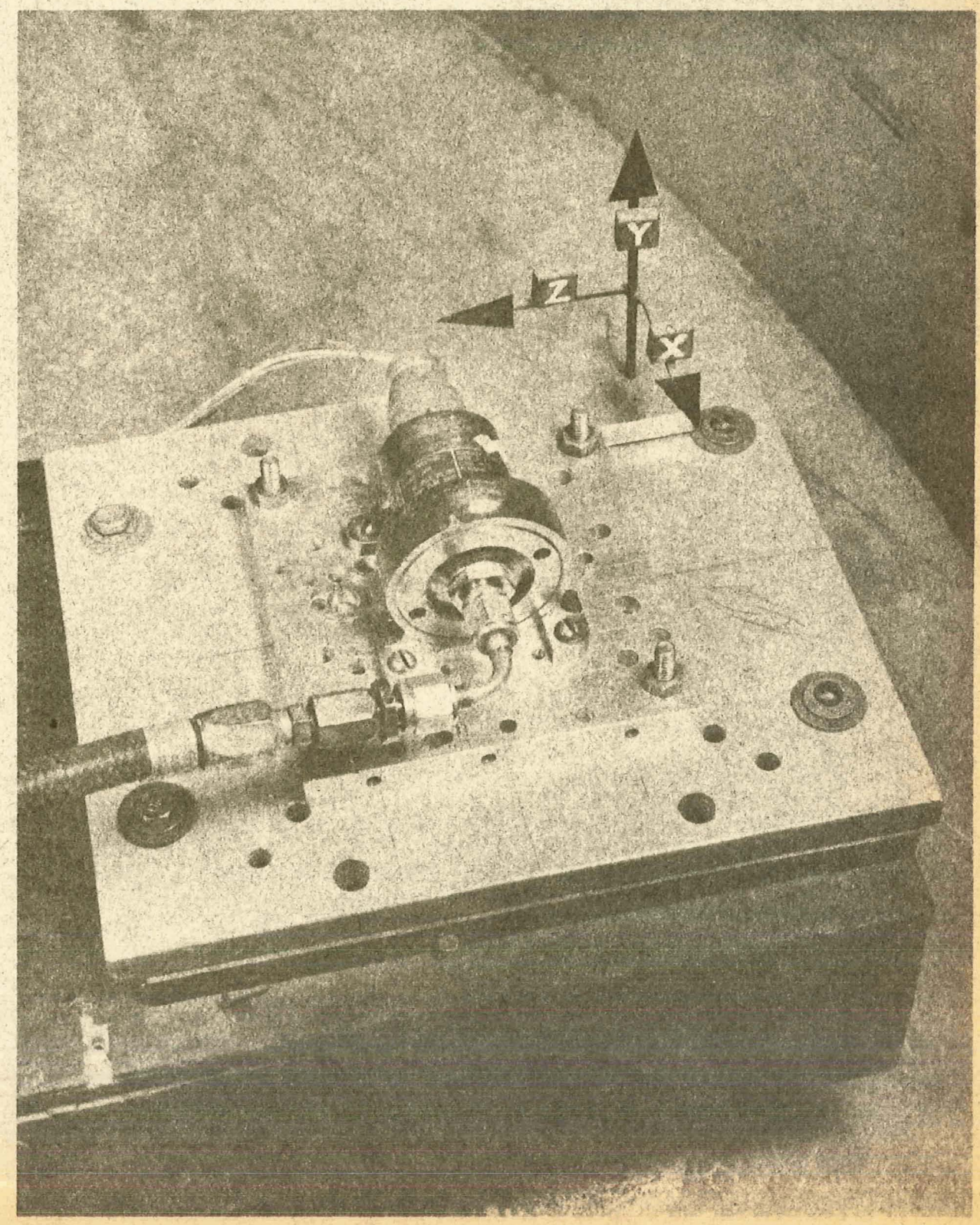

GARWOOD LABORATORIES, INC.
708 SOUTH VAIL AVE.
MONTEBELLO, CALIF.

TEST REPORT

SHOCK TEST SETUP

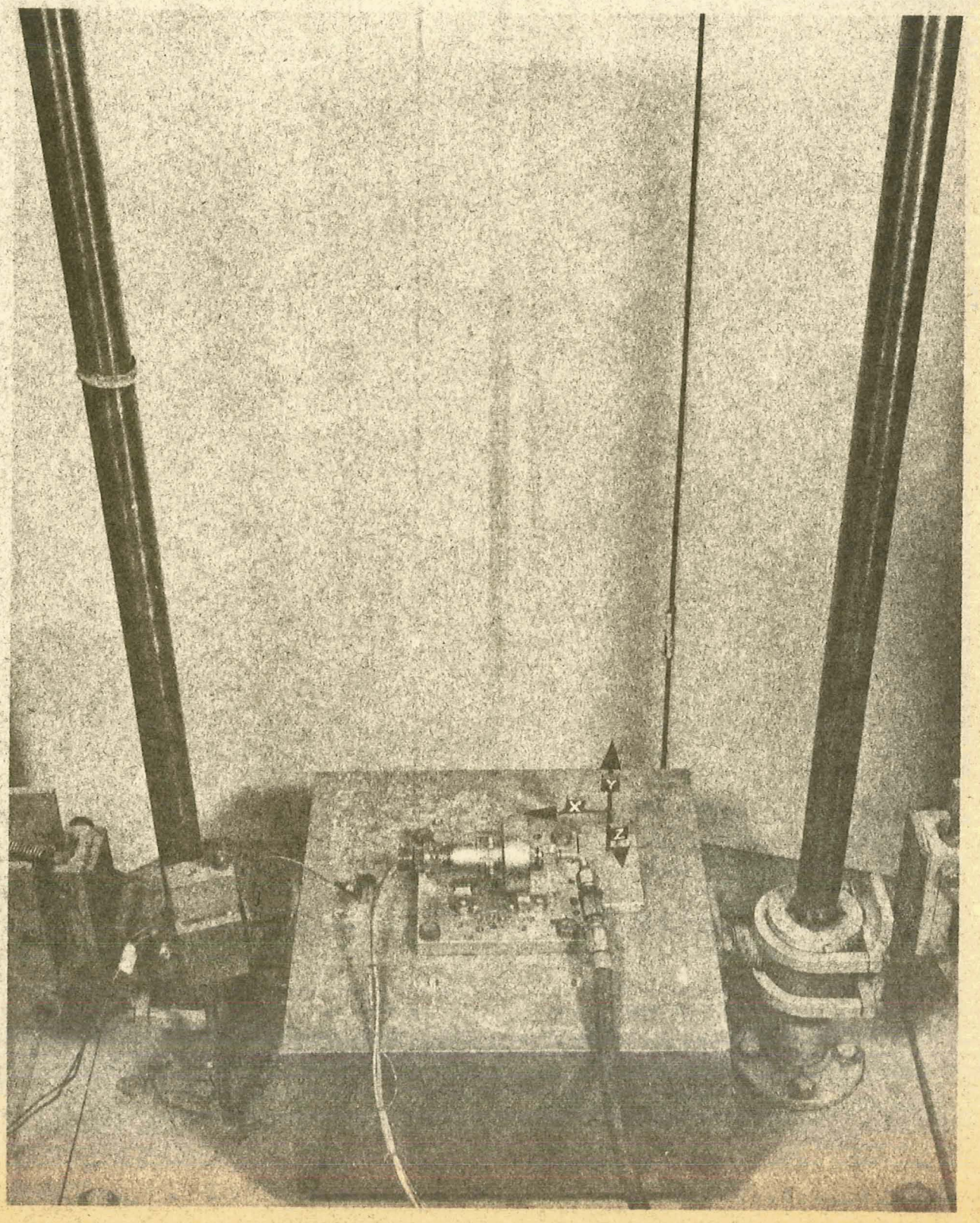

SUPPLEMENT II

ROTOTEST LABORATORIES INC.
REPORT NUMBER 4634
ACOUSTIC NOISE TESTING
OF
PRESSURE SWITCH
PART NUMBER 4640-1

Service To:	Report No. 4634
FREBANK COMPANY 711 WEST BROADWAY GLENDALE, CALIFORNIA	Purchase Order No. 102 Contract No. NAS7-1 Date MAY 16, 1963

CERTIFIED TEST REPORT

ACOUSTICS TESTING

OF

PRESSURE SWITCH

PART NO. 4640-1

rototest laboratories
2803 Los Flores Boulevard
Lynwood, California
NEvada 6-9238

COUNTY OF LOS ANGELES) SS
STATE OF CALIFORNIA)

VERN L. SANDBERG, LABORATORY SUPERVISOR, being duly sworn, deposes and says: That the information contained in this report is the result of complete and carefully conducted tests and is to the best of his knowledge true and correct in all respects.

Vern L. Sandberg

SUBSCRIBED and sworn to before me this 16TH day of MAY, 1963

William [illegible]

Notary Public in and for the County of Los Angeles, State of California.
My commission expires MAY 18, 1966

Tests Conducted By:
JACK H. MOODY

Carl J. Lundberg AFQCR

TEST WITNESSED UNDER GOVERNMENT SURVEILLANCE

Certified By: A. McKendry
Quality Control Engineer

Form QC-11
1/1/59

rototest laboratories, inc.
2803 Los Flores Boulevard
Lynwood, California
NEvada 6-9238

Page No 0.0

Report No 4634

ADMINISTRATIVE DATA

DATE: MAY 16, 1963

NAME OF PART: PRESSURE SWITCH

PURPOSE OF TEST: ACOUSTICS TESTING

MANUFACTURER: FREBANK COMPANY

MANUFACTURER'S TYPE OR PART NO.: 4640-1

DRAWING, SPECIFICATION OR EXHIBIT: FREBANK COMPANY DESIGN EVALUATION TEST PROCEDURE FOR ENGINEERING REPORT NO. 178, REVISION "B" DATED 1/10/62

QUANTITY OF ITEMS TESTED: TWO (2) SAMPLES

SECURITY CLASSIFICATION OF ITEMS: UNCLASSIFIED

DATE TEST COMPLETED: 5/15/63

TEST CONDUCTED BY: ROTOTEST LABORATORIES, INC.

DISPOSITION OF SPECIMENS: THE SAMPLES WERE RETURNED TO FREBANK COMPANY.

SIGNATURES:

Vern L. Sandberg

VERN L. SANDBERG
LABORATORY SUPERVISOR

SAMPLE IDENTIFICATION:

MANUFACTURER'S PART NUMBER	SERIAL NUMBER
4640-1	124
	125

rototest laboratories, inc.
2803 Los Flores Boulevard
Lynwood, California
NEvada 6-9238

1. ACOUSTIC NOISE

2 SAMPLES

REFERENCE: FREBANK COMPANY DESIGN EVALUATION TEST PROCEDURE FOR ENGINEERING REPORT NO. 178, PARAGRAPHS 14, 14.1 AND 14.2; FREBANK COMPANY PURCHASE ORDER NO. 102

REQUIREMENT: FREBANK COMPANY DESIGN EVALUATION TEST PROCEDURE FOR ENGINEERING REPORT NO. 178

"14. ACOUSTICS: (REF. (A) PARA. 4.1.15)"

"14.1 THE PRESSURE SWITCH SHALL BE PLACED IN THE TEST CHAMBER IN SUCH A MANNER THAT ALL SIDES ARE EQUALLY EXPOSED TO DIRECT OR REFLECTED, UNATTENUATED SOUND WAVES. HIGH INTENSITY NOISE SOURCES, FROM 40 TO 10,000 CPS WITH A SOUND PRESSURE LEVEL OF 150 DB SHALL BE USED. DURATION OF THE TEST TO BE TEN MINUTES."

"14.2 DURING AND FOLLOWING THE ACOUSTICS TEST, CONDUCT THE FUNCTIONAL TEST OF PARAGRAPHS 1.1, 1.2 AND 1.3."

FREBANK COMPANY PURCHASE ORDER NO. 102

"THIS PURCHASE ORDER IS ISSUED TO COVER THE COST TO CONDUCT THE ACOUSTICS TEST, IN ACCORDANCE WITH FREBANK DESIGN EVALUATION TEST PROCEDURE FOR ENGINEERING REPORT NO 178, REV. "B", PARAGRAPH 14 FOR FREBANK PART NUMBER 4640-1 PRESSURE SWITCH.

ABOVE TEST TO BE CONDUCTED ON TWO (2) EACH FREBANK PART NUMBERS 4640-1, SERIAL NUMBERS 124 AND 125."

PROCEDURE: EACH TEST SPECIMEN WAS INDIVIDUALLY PLACED IN THE ROTOTEST LABORATORIES ACOUSTIC NOISE TEST CHAMBER AND SUBJECTED TO A 10 MINUTE NOISE EXPOSURE. THE ACOUSTIC NOISE FREQUENCY SPECTRUM COVERED THE RANGE OF 37.5 - 10,000 CPS WITH AN OVERALL (WIDEBAND) SOUND PRESSURE LEVEL OF 147 DB. THE OCTAVE BAND LEVELS WERE ADJUSTED "FLAT".

IN EACH CASE THE REQUIRED PERFORMANCE MEASUREMENTS OF FREBANK TEST PROCEDURE NO. 178 PARAGRAPH 1, FUNCTIONAL TESTS, WERE CONDUCTED PRIOR TO, DURING, AND FOLLOWING THE TEST EXPOSURE. IN ADDITION TO THE PERFORMANCE TESTS, THE SAMPLE CONTACTS WERE MONITORED FOR EVIDENCE OF CONTACT CHATTER AND DYNAMIC CONTACT FLUCTUATIONS DURING THE NOISE EXPOSURE.

THE PERFORMANCE TESTING WAS CONDUCTED BY FREBANK COMPANY PERSONNEL, WITH ASSISTANCE FROM AND WITNESSING BY ROTOTEST LABORATORIES PERSONNEL.

rototest laboratories, inc.
2803 Los Flores Boulevard
Lynwood, California
NEvada 6-9238

1. ACOUSTIC NOISE - CONTINUED

PROCEDURE: - CONTINUED

AXIS OF EXPOSURE

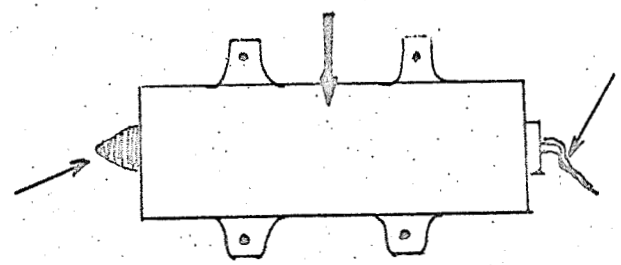

EQUIPMENT:

TO MEASURE	SYMBOL	UNIT	APPARATUS	CALIBRATION DATE
AMBIENT TEMPERATURE	TA	°C	MERCURY THERMOMETER, 0/200 x 1°C	LAST 4/29/63 DUE 6/29/63
OCTAVE BAND FREQUENCY RANGE	OB FREQ	CPS	SPECIFIED REQUIREMENT	
OCTAVE BAND SOUND PRESSURE LEVEL	OBL	DB	GENERAL RADIO OCTAVE NOISE ANALYZER, MODEL 1550A, S.N. 611	LAST 1/7/63 DUE 7/7/63
TOTAL SOUND PRESSURE LEVEL	SPL	DB	GENERAL RADIO SOUND LEVEL METER, MODEL 1551A, S.N. 2087;	SAME
			GENERAL RADIO RANDOM NOISE GENERATOR, MODEL 1390A, S.N. 872;	SAME
			ALTEC LANSING HIGH INTENSITY MICROPHONE, MODEL 180BR20, 180 ± 1DB;	BEFORE USE
			GENERAL RADIO SOUND LEVEL CALIBRATOR, MODEL 1552B, S.N. 3303	SAME
TO PROVIDE EXPOSURE	--	--	ROTOTEST LABORATORIES ACOUSTIC NOISE FACILITY, S.N. F-7049	
DURATION OF EXPOSURE	M	MINUTE	STANDARD ELECTRIC CLOCK, 0/60 MIN., 0/60 SECONDS	
CONTACT MONITORING	--	--	TEKTRONIX OSCILLOSCOPE, DUAL TRACE, TYPE 535, S.N. 2333	LAST 4/10/63 DUE 7/10/63

NOTE: PRESSURE MEASURING EQUIPMENT LISTED BELOW FURNISHED BY FREBANK COMPANY.

INCREASE PRESSURE	PSIA	PSI	MARTIN-DECKER PRESSURE GAUGE, S.N. 1145, 0/100 x 0.2 PSI
DECREASE PRESSURE	PSIA	PSI	SAME

rototest laboratories, inc.
2803 Los Flores Boulevard
Lynwood, California
NEvada 6-9238

1. ACOUSTIC NOISE - CONTINUED

RESULTS:

(ACOUSTIC NOISE EXPOSURE TABLE)

DATE: 5/15/63; TIME: 4:00PM; TA: 26°C

OB FREQ CPS	OBL DB	SPL DB	M MINUTE	SAMPLE S.N. (P/N 4640-1)	COMMENT
37.5-10000		150^{+0}_{-3}	10	124, 125	SPECIFIED
37.5-75	138	147	10	124	SAMPLE INSTALLED IN ACOUSTIC NOISE TEST CHAMBER AND SUBJECTED TO 10 MINUTE EXPOSURE. SAMPLE PERFORMANCE TEST CONDUCTED DURING EXPOSURE. FOLLOWING PERFORMANCE CHECKS SAMPLE CONTACTS MONITORED FOR EVIDENCE OF CONTACT CHATTER AND DYNAMIC CONTACT FLUCTUATIONS. NO CONTACT CHATTER-NO DYNAMIC CONTACT FLUCTUATIONS.
75-150	138				
150-300	138				
300-600	138				
600-1200	138				
1200-2400	138				
2400-4800	138				
4800-10000	138				
SAME	SAME	SAME	SAME	125	SAME

VISUAL INSPECTION

A VISUAL EXAMINATION OF EACH SAMPLE DISCLOSED NO VISIBLE EVIDENCE OF DAMAGE AS A RESULT OF THE ACOUSTIC NOISE ENVIRONMENT.

JACK H. MOODY
ROTOTEST LABORATORIES

FREBANK COMPANY
ENGINEERING LABORATORY
TEST DATA

REPORT NO. 4634

TYPE OF INVESTIGATION: DESIGN EVALUATION PART NO.: 4640-1

REQUESTED BY: D.A.C. FLUID: DRY AIR UNIT S/N: 125

PREPARED BY: G. MCCLUNG TYPE UNIT: P/SW DATE: 5/15/63

FOR REPORT NO.: CUSTOMER & SPEC.: -- W.O. NO.: --

DESCRIPTION OF TEST: ACOUSTIC NOISE - 37.5-10,000 CPS

147 DB

MEASUREMENTS CONDUCTED -- ACOUSTIC NOISE EXPOSURE OF 147 DB

QTP PARA. No.	S/N	↑ PSIA *	↓ PSIA **	ΔP PSI
BEFORE ACOUSTICS				
1	125	31.7	30.4	1.3
		31.6	30.3	1.3
		31.6	30.3	1.3
		31.6	30.3	1.3
		31.6	30.3	1.3
DURING ACOUSTICS				
1	125	31.6	30.3	1.3
		31.6	30.3	1.3
		31.6	30.3	1.3
		31.6	30.3	1.3
		31.6	30.3	1.3
AFTER ACOUSTICS				
1	125	31.6	30.3	1.3
		31.6	30.3	1.3
		31.6	30.3	1.3
		31.6	30.3	1.3
		31.6	30.3	1.3

Editor's Note:

* Actuation on increasing pressure

** Deactuation on decreasing pressure

FREBANK COMPANY
ENGINEERING LABORATORY
TEST DATA

REPORT NO. 4634

TYPE OF INVESTIGATION: DESIGN EVALUATION PART NO.: 4640-1

REQUESTED BY: D.A.C. FLUID: DRY AIR UNIT S/N: 124

PREPARED BY: G. McCLUNG TYPE UNIT: P/SW DATE: 5/15/63

FOR REPORT NO.: CUSTOMER & SPEC.: -- W.O. NO.: --

DESCRIPTION OF TEST: ACOUSTIC NOISE - 37.5 - 10,000 CPS
147 DB

MEASUREMENTS CONDUCTED ACOUSTIC NOISE EXPOSURE OF 147 DB

QTP PARA. No.	S/N	↑ PSIA	↓ PSIA	ΔP PSI
BEFORE ACOUSTICS				
1	124	31.8	30.4	1.4
		31.9	30.4	1.5
		31.8	30.4	1.4
		31.8	30.4	1.4
		31.8	30.4	1.4
DURING ACOUSTICS				
1	124	31.8	30.4	1.4
		31.8	30.4	1.4
		31.8	30.4	1.4
		31.8	30.4	1.4
		31.8	30.4	1.4
AFTER ACOUSTICS				
1	124	31.8	30.4	1.4
		31.8	30.4	1.4
		31.8	30.4	1.4
		31.8	30.4	1.4
		31.8	30.4	1.4

rototest laboratories, inc.
2803 Los Flores Boulevard
Lynwood, California
NEvada 6-9238

1. ACOUSTIC NOISE - CONTINUED

CONCLUSIONS: ROTOTEST LABORATORIES FURNISHED THE TEST ENVIRONMENT ONLY AND ALL MEASUREMENTS WERE CONDUCTED BY FREBANK CO. USING FREBANK EQUIPMENT. NO CONCLUSIONS WERE DRAWN ON PART OF ROTOTEST LABORATORIES. HOWEVER, ROTOTEST LABORATORIES DOES VERIFY THAT THE SAMPLES DID FUNCTION NORMALLY AND THAT NO EVIDENCE OF CONTACT CHATTER OR PHYSICAL DAMAGE WAS NOTED.

JACK H. MOODY
TEST ENGINEER - ROTOTEST LABORATORIES

5/16/63
VS

FREBANK COMPANY
GLENDALE CALIFORNIA

Engineering Report

DESIGN EVALUATION TEST REPORT
NUMBER R8015-1
FOR
PART NUMBER 8015-1
PRESSURE SWITCH

DAC Specification 7851860-501 "L"

Rev. "A" April 4, 1963

DATE June 26, 1962

PREPARED W. L. Webster, Engr'g. Lab.

CHECKED R. M. Frincke, Engr'g. Lab. Supv'r.

APPROVED V. A. Larsen, V.P.
Engineering & Sales

Witnessed:

R. B. Sidney, AFOCR

CONTRACT NO.

NO. PAGES -42-

NOTARY PUBLIC LOS ANGELES CO. CALIF.

STATE OF CALIFORNIA
COUNTY OF LOS ANGELES } ss.

V. A. LARSEN, being duly sworn, deposes and says: That the information contained in this report is to the best of his knowledge true and correct in all respects.

SUBSCRIBED and sworn to before me this 26th day of June, 1962

Notary Public in and for the County of Los Angeles, State of California

My commission expires November 8, 1963

REVISION DATE	FREBANK COMPANY GLENDALE CALIFORNIA	REPORT NO. R8015-1
"A" 4-4-63		PAGE 2

REVISIONS:

Revision "A" dated April 4, 1963: "A"

Revised to conform with DAC verbal request. (N. Godfrey)

Revised by: W. L. Webster
Engr'g. Department

Checked by: R. M. Frincke
Engr'g. Lab. Supervisor

Checked by: C. R. Willis
Project Engineer

Approved by: C. F. Beck, Jr.
Chief Engineer

Note: Revision "A" consisted of the addition of the (-501) to the part number.

N. C. Godfrey
Engineer, Douglas Aircraft
Astrionics Branch

TABLE OF CONTENTS

Item	Page
Title Page	1
Revisions	2
Table of Contents	3
1.0 PURPOSE	4
2.0 REFERENCE	4
3.0 DESCRIPTION OF TEST SPECIMEN	4
4.0 REQUIREMENTS	4
5.0 TEST PROCEDURE AND RESULTS	4
Figure 1 -- Frebank Drawing No. P8015-1, "C" Change	7
Figure 2 -- Frebank Drawing No. 8015-1, "C" Change	8
TABLE I -- Functional Test Results For Units, Serial No.'s 101, 102, and 103	9
Test Unit Serial No. 101	9
Test Unit Serial No. 102	16
Test Unit Serial No. 103	23
APPENDIX I	30
Frebank Company Design Evaluation Test Procedure Q8015-1 For Frebank Company Part No. 8015-1 Pressure Switch, Revision "C"	

1.0 PURPOSE:

To present the results of the design evaluation test program conducted on Frebank Pressure Switch Part Number 8015-1. This test program was conducted in accordance with the Design Evaluation Test plan of Douglas Specification 7851860-501, Rev. "L". "A'

2.0 REFERENCE:

Douglas Aircraft Company Specification 7851860-501, Rev. "L". "A'

3.0 DESCRIPTION OF TEST SPECIMEN: (Ref. para. 4.1.1.1.3)

Three (3) production units, Part Number 8015-1, Serial Numbers 101, 102, and 103 were subjected to the required test program. This pressure switch is intended for operation in a 44.0 psia system, using gaseous helium and hydrogen as the service medium over an ambient temperature range of -100°F to +125°F.

The actuation pressure limits are:

Increasing Pressure: 37.25 ±0.75 psia
Decreasing Pressure: 35.75 ±0.75 psia

Frebank Assembly Drawing No. P8015-1 and Installation Drawing No. 8015-1 are included for further reference (see Figures 1 and 2, Pages 7 and 8.

4.0 REQUIREMENTS: (Ref. para. 4.1.1.1)

The Design Evaluation Test Requirements were conducted in accordance with Design Evaluation Test Procedure for Engineering Report Number Q8015-1, Rev. "C", as approved by D.A.C. in their VIR No. M39312. This test procedure is presented as Appendix I.

5.0 TEST PROCEDURE AND RESULTS:

5.1 Functional Test: (Ref. para. 4.1.4) A test stand using clean dry air as the test medium, employing a 12-inch diameter Bourdon tube gauge with 0.2 psi minimum graduations and a full scale accuracy of 1/5 percent was used for the observation of the pressure settings. A signal light circuit with a 2 ampere inductive load at 28 VDC was used in conjunction with the gauge to indicate pressure switch actuation.

The unit under test was connected to this test stand and the applied pressure was increased and decreased from 14.7 to 38.0 psia. The rate of pressure increase from 35.0 psia to actuation and rate of decrease from 37.0 psia to deactuation was approximately 5.0 psi per minute. The pressures at which the unit became energized and de-energized were observed. All test units successfully completed the functional test and the first five (5) cycles of the test results are recorded in Table I.

5.2 Proof Test: (Ref. para. 4.1.5) This test was conducted using the same equipment as described in the functional test.

A pressure of 66 psia was applied for one (1) minute. No failure or leakage occurred as a result of the pressure application.

5.3 High Temperature Test: (Ref. para. 4.1.9) This test was conducted using the same equipment described in the Functional Test while the unit was encased in a Wyle Model DN104 Temperature Chamber, range -320°F to +350°F.

The unit was stabilized at room ambient temperature and the Functional Test of para. 5.1 was conducted. While cycling the unit (a cycle consisted of increasing and decreasing the pressure from 14.7 psia to 38.0 psia to 14.7 psia at a rate of 3 cycles per minute minimum; the rate of pressure increase and decay was 50 psi per second minimum), the temperature of the chamber was increased to +125°F, within ten (10) minutes. The temperature was maintained for fifteen minutes and the Functional Test of para. 5.1 was conducted. The temperature was then stabilized at room ambient temperature and the Functional Test of para. 5.1 was conducted. All test units successfully completed the test. The results of the test are recorded in Table I.

5.4 Low Temperature Test: (Ref. para. 4.1.10) This test was conducted using the same equipment described in the High Temperature Test.

The unit was stabilized at -100°F and maintained for four (4) hours. The Functional Test of para. 5.1 was conducted. The temperature was then stabilized at room ambient temperature and the Functional Test was conducted. The results are recorded in Table I.

5.5 Thermal Shock Test: (Ref. para. 4.1.11) This test was conducted using the same equipment described in the High Temperature Test.

The unit was stabilized at a temperature of +125°F and the Functional Test of para. 5.1 was conducted. The temperature was reduced to -100°F at a rate of 30°F per second and maintained for fifteen minutes. The Functional Test was conducted. The temperature was then stabilized at room temperature and the Functional Test conducted. The results of the test are recorded in Table I.

5.6 Vibration Test: (Ref. para. 4.1.14) The test was conducted using the same equipment as the Functional Test in conjunction with a Mantec Model EP125 Temperature Chamber, range -320°F to +600°F, M.B. Model T-51-MC Amplifier, Model C-10 Excitor and Model M3 Vibration Meter.

The tests were conducted using a logarithmic octave sweep rate within the frequency limits of Figure 1, of Appendix I, at approximately one (1) minute per octave. The test duration was 30 minutes in each of the three (3) orthogonal axes, shown in Figure 2 of Appendix I, at -100°F, +125°F, and room ambient temperature. During and following the vibration test, pressure settings were checked in accordance with para. 5.1 at octave intervals of 5, 10, 20, 40, 80, 160, 320, 640, 1280, and 2000 cps. The results are recorded in Table I.

Although no apparent resonances were encountered, the critical point during vibration was determined to be in the X axis at 1280 cps and 20 g acceleration.

No switch chatter occurred at any time during the vibration test.

5.7 Contact Monitoring Test: (Ref. para. 4.1.17) The tests were conducted during the Vibration Test using a C.E.C. Model 5-116 Recording Oscillograph using galvanometers having a 0 to 2500 cps response rate.

The results of the Contact Monitoring Test are reported in paragraph 5.6.

REVISIONS			
SYM	DESCRIPTION	DATE	APPROVAL
C	REDRAWN. DELETE 7645-2, 4887, 4886; ADD 7756 B.V. ASSY; 7516 WAS 4888. 7565 & 7566 6 REQD WAS 3 REQD	6-20-62	
D	SEE E.O. 1143		

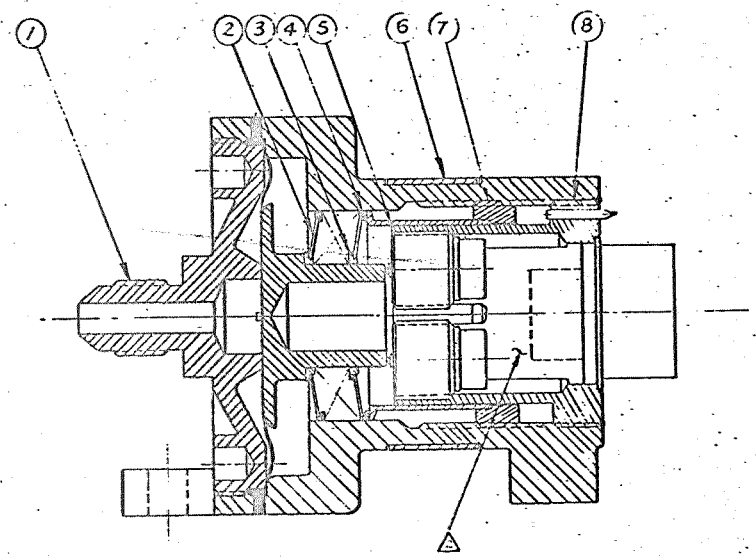

P8015-1

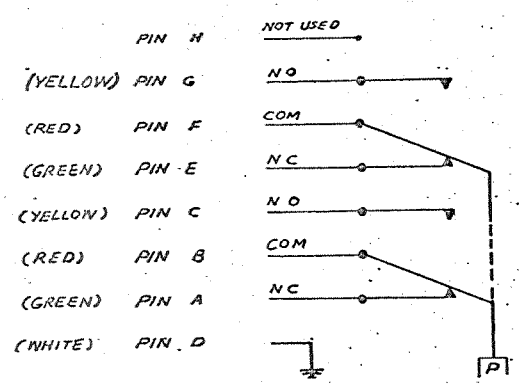

WIRING DIAGRAM

PREPARED FOR NASA

ITEM NO.	REQD.	PART NO.	DESCRIPTION	MATERIAL	MATL. SPEC.
8	1	4738	ELEC. ASS'Y		
7	1	7516	RING, ADJUSTMENT		
6	1	5017-5	NAMEPLATE		
5	1	7568-3	RING, LOAD		
4	6	7566	SPACER OUTER		
3	6	7565	SPACER INNER		
2	1	7756	B.V. ASS'Y		
1	1	7614	BODY ASSEMBLY		

LIST OF MATERIALS

NEXT ASSY | USED ON: 8015-1

APPLICATION

△ ELECTRICAL WIRING OMITTED FOR CLARITY.
1. FOR ASS'Y PROCEDURE USE A8015-1
FOR TEST PROCEDURE USE T8015-1
NOTES.

HEAT TREAT / FINISH

UNLESS OTHERWISE SPECIFIED

DRAWN Y. WANG 6-20-62
CHECKED 6-21-62
APPROVED 6-25-62

TITLE SWITCH-ASSEMBLY

FREBANK COMPANY
GLENDALE, CALIFORNIA

P8015-1

SCALE 2/1 CODE EWR 483A MFG CODE REPORT SHEET 1 OF 1

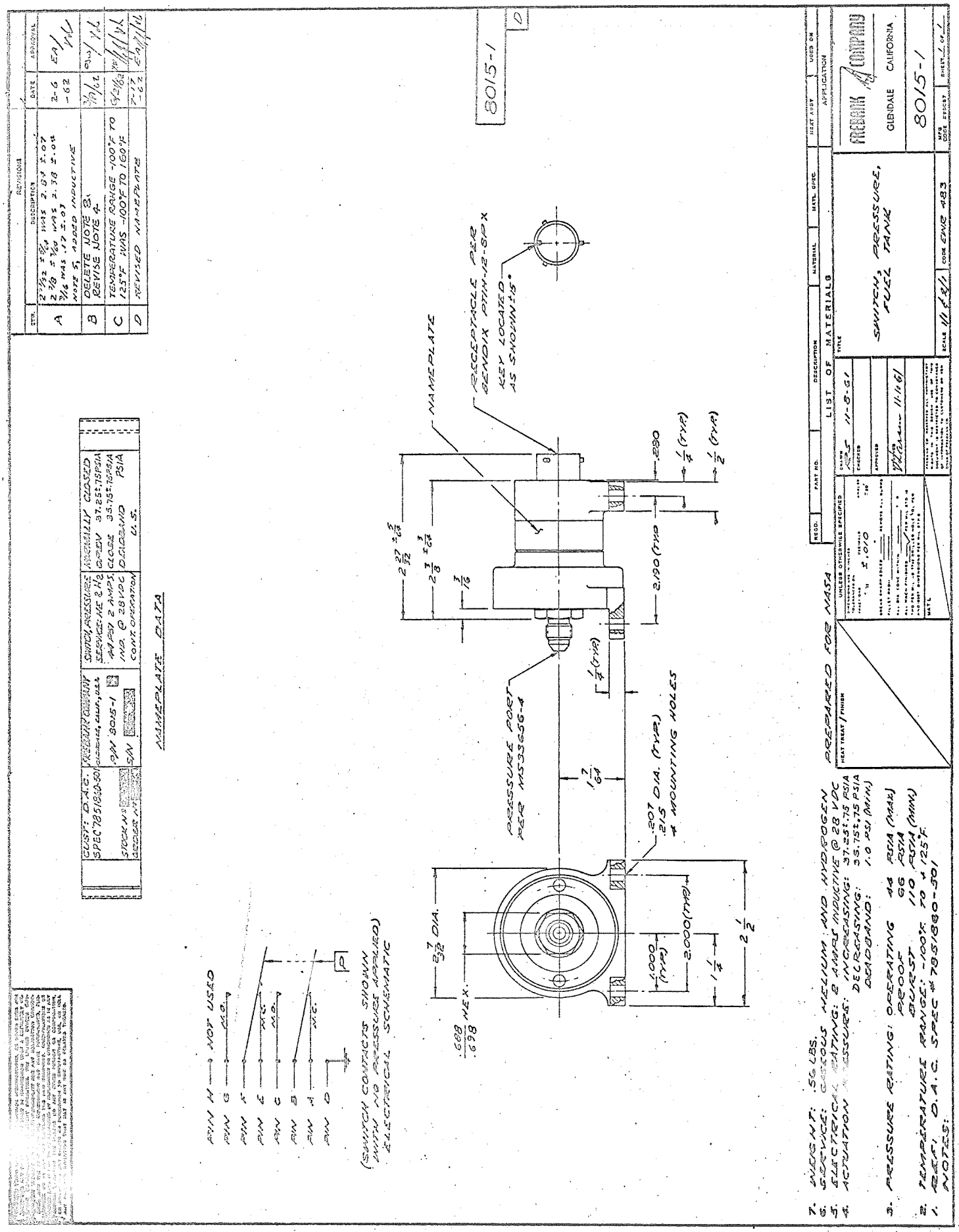
REVISIONS
SYM. DESCRIPTION DATE APPROVAL
A 2 27/32 ± 5/64 WAS 2.84 ±.07
2 7/8 ± 3/64 WAS 2.38 ±.04
3/16 WAS .17 ±.07
NOTE 5, ADDED INDUCTIVE
2-6 -62
B DELETE NOTE 8, REVISE NOTE 4
C TEMPERATURE RANGE -100°F TO 125°F WAS -100°F TO 160°F
D REVISED NAMEPLATE
8015-1
NAMEPLATE
RECEPTACLE PER BENDIX PTIH-12-8PX
KEY LOCATED AS SHOWN ±15°
PRESSURE PORT PER MS33656-4
.207 DIA. (TYP.) .215 4 MOUNTING HOLES
2.190 (TYP)
.280
1/4 (TYP)
1/2 (TYP)
2 27/32 ± 5/64
2 7/8 ± 3/64
3/16
1 7/64
2 7/32 DIA.
.688 / .698 HEX.
1.000 (TYP)
2.000 (TYP)
1 1/4
2 1/2
PIN H — NOT USED
PIN G N.O.
PIN F
PIN E N.C.
PIN C N.O.
PIN B
PIN A N.C.
PIN D
(SWITCH CONTACTS SHOWN WITH NO PRESSURE APPLIED) ELECTRICAL SCHEMATIC
NAMEPLATE DATA
CUST: D.A.C. SPEC 7851860-501
FREBANK COMPANY GLENDALE, CALIF., U.S.A.
P/N 8015-1
S/N
SWITCH, PRESSURE SERVICE: HE & H2 44 PSI 2 AMPS. IND. @ 28 VDC CONT. OPERATION
NORMALLY CLOSED OPEN 37.25±.75 PSIA CLOSE 35.75±.75 PSIA DEADBAND PSIA U.S.
PREPARED FOR NASA
LIST OF MATERIALS
REQD. PART NO. DESCRIPTION MATERIAL MATL. SPEC. HEAT ASSY USED ON
APPLICATION
FREBANK COMPANY
GLENDALE CALIFORNIA
8015-1
SWITCH, PRESSURE, FUEL TANK
DRAWN RS 11-8-61
CHECKED
APPROVED
SCALE 1/1 & 2/1
CODE EWR 483
SHEET 1 OF 1
UNLESS OTHERWISE SPECIFIED
HEAT TREAT / FINISH
MATL
7. WEIGHT: .56 LBS.
6. SERVICE: GASEOUS HELIUM AND HYDROGEN
5. ELECTRICAL RATING: 2 AMPS INDUCTIVE @ 28 VDC
4. ACTUATION PRESSURES: INCREASING: 37.25±.75 PSIA
DECREASING: 35.75±.75 PSIA
DEADBAND: 1.0 PSI (MIN.)
3. PRESSURE RATING: OPERATING 44 PSIA (MAX.)
PROOF 66 PSIA
BURST 110 PSIA (MIN.)
2. TEMPERATURE RANGE: -100°F TO +125°F
1. REF: D.A.C. SPEC # 7851860-501
NOTES:
8015-4

Figure 2

TABLE 1

FUNCTIONAL TEST RESULTS FOR UNITS
SERIAL NO. 101, 102 & 103

TEST UNIT SERIAL NO. 101

TEST CONDITION	AMBIENT TEMPERATURE °F	INCREASING PRESSURE ACTUATION PSIA	DECREASING PRESSURE ACTUATION PSIA
REQUIREMENTS	-100 TO +125	36.5 - 38.0	35.0 - 36.5
INITIAL FUNCTION TEST	+78	37.5	36.2
		37.5	36.2
		37.5	36.2
		37.5	36.2
		37.5	36.2
HIGH TEMPERATURE TEST	+78	37.5	36.2
		37.5	36.2
		37.5	36.2
		37.5	36.2
		37.5	36.2
	+125	37.8	36.4
		37.8	36.4
		37.8	36.4
		37.8	36.4
		37.8	36.4
	+78	37.7	36.2
		37.5	36.2
		37.5	36.2
		37.5	36.2
		37.5	36.2

TABLE I (CONT'D.)
S/N 101

TEST CONDITION	AMBIENT TEMPERATURE °F	INCREASING PRESSURE ACTUATION PSIA	DECREASING PRESSURE ACTUATION PSIA
LOW TEMPERATURE TEST	-100	37.8	36.0
		37.7	36.0
		37.7	36.0
		37.7	36.0
		37.7	36.0
	+78	37.5	36.1
		37.5	36.1
		37.5	36.1
		37.5	36.1
		37.5	36.1
THERMAL SHOCK TEST	+125	37.6	36.4
		37.6	36.4
		37.6	36.4
		37.6	36.4
		37.6	36.4
	-100	37.8	36.0
		37.7	36.0
		37.7	36.0
		37.7	36.0
		37.7	36.0
	+78	37.6	36.2
		37.5	36.2
		37.5	36.2
		37.5	36.2
		37.5	36.2

VIBRATION

NOTE: Vibration test data on S/N 101, presented on pages 11 through 14 of Report No. R8015-1 have been deleted because the test was conducted in accordance with out-dated vibration requirements. See page No. SM-82 for vibration testing.

TABLE I (CONT'D.)
S/N 101

	AMBIENT TEMPERATURE °F	INCREASING PRESSURE ACTUATION PSIA	DECREASING PRESSURE ACTUATION PSIA
REPEAT FUNCTIONAL TEST	+78	37.7	36.4
		37.7	36.4
		37.7	36.4
		37.7	36.4
		37.7	36.4

TABLE 1

FUNCTIONAL TEST RESULTS FOR UNITS
SERIAL NO. 101, 102 & 103

TEST UNIT SERIAL NO. 102

TEST CONDITION	AMBIENT TEMPERATURE °F	INCREASING PRESSURE ACTUATION PSIA	DECREASING PRESSURE ACTUATION PSIA
REQUIREMENTS	-100 TO +125	36.5 - 38.0	35.0 - 36.5
INITIAL FUNCTION TEST	+78	37.2	35.5
		37.2	35.5
		37.2	35.5
		37.2	35.5
		37.2	35.5
HIGH TEMPERATURE TEST	+78	37.2	35.5
		37.2	35.5
		37.2	35.5
		37.2	35.5
		37.2	35.5
	+125	37.4	35.9
		37.4	35.9
		37.4	35.9
		37.4	35.9
		37.4	35.9
	+78	37.4	35.6
		37.2	35.5
		37.2	35.5
		37.2	35.5
		37.2	35.5

TABLE I (CONT'D.)
S/N 102

TEST CONDITION	AMBIENT TEMPERATURE °F	INCREASING PRESSURE ACTUATION PSIA	DECREASING PRESSURE ACTUATION PSIA
LOW TEMPERATURE TEST	-100	37.5	35.6
		37.4	35.4
		37.4	35.4
		37.4	35.4
		37.4	35.4
	+78	37.2	35.4
		37.2	35.4
		37.2	35.4
		37.2	35.4
		37.2	35.4
THERMAL SHOCK TEST	+125	37.4	35.7
		37.3	35.7
		37.3	35.7
		37.3	35.7
		37.3	35.7
	-100	37.5	35.5
		37.4	35.4
		37.4	35.4
		37.4	35.4
		37.4	35.4
	+78	37.2	35.4
		37.2	35.4
		37.2	35.4
		37.2	35.4
		37.2	35.4

VIBRATION

NOTE: Vibration test data on S/N 102, presented on pages 18 through 21 of Report No. R8015-1 have been deleted because the test was conducted in accordance with out-dated vibration requirements. See page No. SM-82 for vibration testing.

TABLE I (CONT'D.)
S/N 102

	AMBIENT TEMPERATURE °F	INCREASING PRESSURE ACTUATION PSIA	DECREASING PRESSURE ACTUATION PSIA
REPEAT FUNCTIONAL TEST	+78	37.3	35.6
		37.3	35.6
		37.3	35.6
		37.3	35.6
		37.3	35.6

TABLE 1

FUNCTIONAL TEST RESULTS FOR UNITS
SERIAL NO. 101, 102 & 103

TEST UNIT SERIAL NO. 103

TEST CONDITION	AMBIENT TEMPERATURE °F	INCREASING PRESSURE ACTUATION PSIA	DECREASING PRESSURE ACTUATION PSIA
REQUIREMENTS	-100 TO +125	36.5 - 38.0	35.0 - 36.5
INITIAL FUNCTION TEST	+78	37.2	35.5
		37.2	35.5
		37.2	35.5
		37.2	35.5
		37.2	35.5
HIGH TEMPERATURE TEST	+78	37.2	35.5
		37.2	35.5
		37.2	35.5
		37.2	35.5
		37.2	35.5
	+125	37.7	36.2
		37.7	36.2
		37.7	36.2
		37.7	36.2
		37.7	36.2
	+78	37.6	35.5
		37.2	35.5
		37.2	35.5
		37.2	35.5
		37.2	35.5

TABLE I (CONT'D.)
S/N 103

TEST CONDITION	AMBIENT TEMPERATURE °F	INCREASING PRESSURE ACTUATION PSIA	DECREASING PRESSURE ACTUATION PSIA
LOW TEMPERATURE TEST	-100	38.0	35.6
		37.6	35.6
		37.6	35.6
		37.6	35.6
		37.6	35.6
	+78	37.0	35.4
		37.0	35.4
		37.0	35.4
		37.0	35.4
		37.0	35.4
THERMAL SHOCK TEST	+125	37.3	35.7
		37.2	35.7
		37.2	35.7
		37.2	35.7
		37.2	35.7
	-100	38.0	35.6
		37.6	35.6
		37.6	35.6
		37.6	35.6
		37.6	35.6
	+78	37.0	35.4
		37.0	35.4
		37.0	35.4
		37.0	35.4
		37.0	35.4

VIBRATION

NOTE: Vibration test data on S/N 103, presented on pages 25 through 28 of Report No. R8015-1 have been deleted because the test was conducted in accordance with out-dated vibration requirements. See page No. SM-82 for vibration testing.

TABLE I (CONT'D.)
S/N 103

	AMBIENT TEMPERATURE °F	INCREASING PRESSURE ACTUATION PSIA	DECREASING PRESSURE ACTUATION PSIA
REPEAT FUNCTIONAL TEST	+78	37.0	35.4
		37.0	35.4
		37.0	35.4
		37.0	35.4
		37.0	35.4

REVISION DATE
FREDARK COMPANY
GLENDALE CALIFORNIA
REPORT NO. R8015-1
PAGE 29

APPENDIX I

FREBANK COMPANY DESIGN EVALUATION
TEST PROCEDURE Q8015-1
FOR FREBANK COMPANY
PART NO. 8015-1 PRESSURE SWITCH
REVISION "C"

FREBANK COMPANY
GLENDALE CALIFORNIA

Engineering Report

FREBANK COMPANY
DESIGN EVALUATION TEST PROCEDURE
Q8015-1
FOR FREBANK COMPANY PART NO.
8015-1
PRESSURE SWITCH
REVISION "C"

D.A.C. SPECIFICATION #7851860-501 "L"

REV. "C" DTD. 6-26-62
REV. "B" DTD. 4-26-62
REV. "A" DTD. 3-26-62
DATE FEBRUARY 19, 1962

PREPARED E. P. Amorino
E. P. AMORINO, TEST ENGINEER

CHECKED R. M. Frincke
R. M. FRINCKE, ENGR'G. LAB. SUPV'R.

APPROVED V. A. Larsen
V. A. LARSEN
CHIEF ENGINEER

STATE OF CALIFORNIA
COUNTY OF LOS ANGELES } ss.

_____, being duly sworn, deposes and says: That the information contained in this report is to the best of his knowledge true and correct in all respects.

V. A. Larsen

SUBSCRIBED and sworn to before me this _____ day of _____, 19__

Notary Public in and for the County of Los Angeles, State of California

My commission expires _____ 19__

CONTRACT NO. _____

NO. PAGES -12-

REVISION DATE	FREBANK COMPANY GLENDALE CALIFORNIA	REPORT NO. C8015-1
"B" 4-26-62 "A" 3-26-62		PAGE 2

REVISIONS

REVISION "A" DTD. 3-26-62

REVISED TO CONFORM WITH DAC VIR M-38010 "A"

REVISED BY: W. L. Webster
W. L. WEBSTER, ENG. LAB.

CHECKED BY: R. M. Frincke
R. M. FRINCKE, ENG. LAB. SUPV'R.

APPROVED BY: V. A. Larsen
V. A. LARSEN, CHIEF ENG.

REVISION "B" DTD. 4-26-62
REVISED TO CONFORM WITH DAC VIR M38701 "B"

(DELETED PARA. 8.6 THERMAL SHOCK TEST).

REVISED BY: W. L. Webster
W. L. WEBSTER, ENG. LAB.

CHECKED BY: R. M. Frincke
R. M. FRINCKE, ENG. LAB. SUPV'R.

APPROVED BY: V. A. Larsen
V. A. LARSEN, CHIEF ENG.

REVISION DATE	FREDANK COMPANY GLENDALE CALIFORNIA	REPORT NO. 08015-1
"C" 6-26-62		PAGE 2A

REVISIONS

REVISION "C" DTD. 6-26-62

REVISED TO CONFORM WITH DAC VIR M-39312 (CHANGED HIGH TEMPERATURE FROM +160°F TO +125°F, PARAGRAPHS 3.0, 5.0 & 6.0.) "C"

REVISED BY: W. L. Webster
W. L. WEBSTER, ENGR'G. LAB.

CHECKED BY: R. M. Frincke
R. M. FRINCKE, ENGR'G. LAB. SUPV'R

APPROVED BY: V. A. Larsen
V. A. LARSEN, CHIEF ENGINEER

TABLE OF CONTENTS

ITEM	PAGE
TITLE PAGE	1
REVISION PAGE	2
TABLE OF CONTENTS	3
SUBJECT	4
REFERENCE	4
TEST SPECIMEN	4
TEST CONDITIONS	4
INSTRUMENT ACCURACIES	4
TEST PROCEDURE	4
1.0 FUNCTIONAL TESTS	5
2.0 PROOF TEST	5
3.0 HIGH TEMPERATURE	5
4.0 LOW TEMPERATURE	6
5.0 THERMAL SHOCK	6
6.0 VIBRATION	6
7.0 CONTACT MONITORING	7
8.0 STATEMENT OF SIMILARITY	7
9.0 FACILITIES	8
10.0 GENERAL NOTES	9
FIGURE 1. VIBRATION LEVEL CURVE	10
FIGURE 2. AXIS IDENTIFICATION	11
FIGURE 3. CONTACT MONITORING SYSTEM	12

SUBJECT:

DESIGN EVALUATION TESTS OF FREBANK COMPANY PART NO. 8015-1 PRESSURE SWITCH.

REFERENCE:

(A)
DOUGLAS AIRCRAFT COMPANY SPECIFICATION NO. 7851860-501 "C"
REVISION "L".

TEST SPECIMEN:

THREE (3) PRESSURE SWITCHES SHALL BE SUBJECTED TO THE PROGRAM AS SPECIFIED HEREIN. ONE (1) OF THESE SWITCHES MAY BE PROTOTYPE, BUT TWO (2) MUST BE PRODUCTION UNITS.

TEST CONDITIONS:

TEST MEDIUM: CLEAN DRY AIR AND GASEOUS HELIUM AS REQUIRED.

ELECTRICAL CAPACITY: 2 AMPERES INDUCTIVE AT 28 VOLTS D.C.
AMBIENT TEMPERATURE: 60°F TO 80°F UNLESS OTHERWISE SPECIFIED.
FLUID TEMPERATURE: 60°F TO 80°F UNLESS OTHERWISE SPECIFIED.

INSTRUMENT ACCURACIES:

CALIBRATION PRESSURE GAUGES: 1/5 PERCENT OF FULL SCALE READING.
TEMPERATURE RECORDER: ±5 DEGREES FAHRENHEIT.
ELECTRICAL METERS: ±3 PERCENT OF FULL SCALE READING.

TEST PROCEDURE:

THE TEST PROGRAM IS TO BE CONDUCTED ON EACH UNIT IN THE ORDER SPECIFIED IN THE FOLLOWING PARAGRAPHS.

1.0 FUNCTIONAL TESTS: (REF. (A) PARA. 4.1.4)

USE CLEAN DRY AIR. RECORD THE FIRST 5 CYCLES OF PRESSURE SWITCH OPERATION OF EACH SERIES OF TESTS, AS REQUIRED BY THIS SPECIFICATION.

1.1 APPLY 35 PSIA TO PRESSURE PORT. THE SWITCH SHALL REMAIN OPEN BETWEEN PINS B AND C AND PINS F AND G.

1.2 INCREASE THIS PRESSURE TO 38 PSIA MAXIMUM. SWITCH SHALL CLOSE AT 37.25 ±.75 PSIA BETWEEN PINS B AND C AND PINS F AND G. THE RATE OF PRESSURE INCREASE FROM 35 PSIA TO ACTUATION SHALL BE APPROXIMATELY 5 PSI PER MINUTE.

ACTUATION PRESSURE OF THE FIRST CYCLE OF ANY SERIES OF TESTS SHALL BE WITHIN ±0.4 PSI OF THE ACTUATION PRESSURE OF THE SECOND CYCLE.

REPEATABILITY OF THIRD AND SUBSEQUENT ACTUATION POINTS SHALL BE WITHIN ±1 PERCENT OF THE SECOND CYCLE ACTUATION POINT.

1.3 DECREASE THE PRESSURE. SWITCH SHALL OPEN AT 35.75 ±.75 PSIA BETWEEN PINS B AND C AND PINS F AND G. THE RATE OF PRESSURE DECREASE FROM 37 PSIA TO DE-ACTUATION SHALL BE APPROXIMATELY 5 PSI PER MINUTE.

2.0 PROOF TEST: (REF. (A) PARA. 4.1.5) USE CLEAN DRY AIR.

2.1 APPLY 66 PSIA TO PRESSURE PORT. MAINTAIN PRESSURE FOR ONE (1) MINUTE. THERE SHALL BE NO VISUAL EVIDENCE OF DISTORTION OR FAILURE.

3.0 HIGH TEMPERATURE: (REF. (A) PARA. 4.1.9)

3.1 PLACE THE PRESSURE SWITCH WITHIN THE TEST CHAMBER AND STABILIZE AT ROOM AMBIENT TEMPERATURE. CONDUCT THE FUNCTIONAL TEST OF PARAGRAPHS 1.1, 1.2 AND 1.3.

3.2 WHILE CYCLING THE UNIT (A CYCLE SHALL CONSIST OF INCREASING AND DECREASING THE PRESSURE FROM 14.7 PSIA TO 38 PSIA TO 14.7 PSIA AT A RATE OF 3 CYCLES PER MINUTE MINIMUM. THE RATE OF PRESSURE INCREASE AND DECAY SHALL BE 50 PSI PER SECOND MINIMUM). THE TEMPERATURE OF THE CHAMBER SHALL BE INCREASED TO +125°F WITHIN TEN (10) MINUTES. "A" "C"

3.3 MAINTAIN THE TEMPERATURE AT +125°F FOR 15 MINUTES AND CONDUCT THE FUNCTIONAL TEST OF PARAGRAPHS 1.1, 1.2 AND 1.3. "C"

3.4 STABILIZE THE PRESSURE SWITCH AT ROOM AMBIENT TEMPERATURE AND CONDUCT THE FUNCTIONAL TEST OF PARAGRAPHS 1.1, 1.2 AND 1.3.

NOTE: PRESSURE SWITCH OPERATION SHALL BE CONTINUOUS THROUGHOUT THE ENTIRE TEMPERATURE CYCLE. A RELATIVE HUMIDITY OF NOT MORE THAN 15 PERCENT SHALL BE MAINTAINED IN THE TEST CHAMBER.

4.0 LOW TEMPERATURE: (REF. (A) PARA. 4.1.10)

4.1 PLACE THE PRESSURE SWITCH WITHIN THE TEST CHAMBER AND STABILIZE AT -100°F.

4.2 MAINTAIN THE TEMPERATURE AT -100°F FOR FOUR (4) HOURS AND CONDUCT THE FUNCTIONAL TEST OF PARAGRAPHS 1.1, 1.2 AND 1.3.

4.3 STABILIZE THE PRESSURE SWITCH AT ROOM TEMPERATURE AND CONDUCT THE FUNCTIONAL TEST OF PARAGRAPHS 1.1, 1.2 AND 1.3.

5.0 THERMAL SHOCK: (REF. (A) PARA. 4.1.11) "A" "C"

5.1 PLACE THE PRESSURE SWITCH WITHIN THE TEST CHAMBER, STABILIZE AT +125°F AND CONDUCT THE FUNCTIONAL TEST OF PARAGRAPHS 1.1, 1.2 AND 1.3.

5.2 REDUCE THE TEMPERATURE TO -100°F AT THE RATE OF 30°F PER SECOND.

5.3 MAINTAIN THE UNIT AT -100°F FOR NOT LESS THAN 15 MINUTES AND CONDUCT THE FUNCTIONAL TEST OF PARAGRAPHS 1.1, 1.2 AND 1.3.

5.4 STABILIZE THE UNIT AT ROOM TEMPERATURE AND CONDUCT THE FUNCTIONAL TEST OF PARAGRAPHS 1.1, 1.2 AND 1.3.

6.0 VIBRATION: (REF. (A) PARA. 4.1.14) "A"

(REFER TO FIGURE 2 FOR AXIS IDENTIFICATION). "C"

6.1 THE PRESSURE SWITCH SHALL BE SUBJECTED TO THE VIBRATION LEVELS SHOWN IN FIGURE 1. THE TESTS ARE TO BE CONDUCTED USING A LOGARITHMIC OCTAVE SWEEP RATE WHICH SWEEPS WITHIN THE FREQUENCY LIMITS OF FIGURE 1 AT ONE (1) MINUTE PER OCTAVE. THE TEST DURATION SHALL BE 30 MINUTES AT -100°F., +125°F AND ROOM AMBIENT TEMPERATURE, IN EACH OF THREE (3) ORTHOGANAL AXES, ONE OF WHICH SHALL BE THE MOST SENSITIVE AXIS.

6.2 DURING AND FOLLOWING THE APPLICATION OF VIBRATION, CONDUCT THE FUNCTIONAL TEST OF PARAGRAPH 1.

7.0 CONTACT MONITORING: (REF. (A) PARA. 4.1.17)

7.1 THE PRESSURE SWITCH CONTACTS SHALL BE MONITORED DURING VIBRATION TO VERIFY THAT SUBSEQUENT TO SWITCH ACTUATION PER PARA. 1.2, THE CIRCUIT BETWEEN PINS B AND C AND PINS F AND G, DOES NOT OPEN UNTIL DEACTUATION PER PARA. 1.3 AND TO VERIFY THAT SUBSEQUENT TO SWITCH DEACTUATION PER PARA. 1.3 THE CIRCUIT BETWEEN PINS B AND C AND PINS F AND G, DOES NOT CLOSE UNTIL SWITCH ACTUATION PER PARA. 1.2. THE CONTACTS SHALL BE MONITORED ON A C.E.C. MODEL 5-116 RECORDING OSCILLOGRAPH USING GALVANOMETERS HAVING A RESPONSE OF 0 TO 2500 CPS.

NO CHATTER OF THE SWITCH CONTACTS IS ACCEPTABLE. REFER TO FIGURE 3 FOR A SCHEMATIC DIAGRAM SHOWING THE CONTACT MONITORING SYSTEM.

8.0 STATEMENT OF SIMILARITY:

FREBANK COMPANY PART NUMBER 4640-1 IS REQUIRED TO MEET THE DESIGN EVALUATION TEST REQUIREMENTS IN ACCORDANCE WITH D.A.C. SPECIFICATION 7851860-1. PART NUMBER 8015-1 IS REQUIRED TO MEET THE DESIGN EVALUATION TEST REQUIREMENTS IN ACCORDANCE WITH D.A.C. SPECIFICATION 7851860-501. PART NUMBER 8015-1 IS IDENTICAL TO PART NUMBER 4640-1 EXCEPT FOR THE PRESSURE SETTINGS AND THE QUANTITY OF BELLEVILLE SPRINGS USED TO OBTAIN THE PRESSURE SETTINGS. THEREFORE, THE FOLLOWING TESTS CONDUCTED ON P/N 4640-1 CAN BE CONSIDERED EQUALLY APPLICABLE TO P/N 8015-1.

THE PRESSURE SETTINGS ARE PRESENTED FOR REFERENCE AS FOLLOWS:

PART NO.	SPEC. NO.	INCREASING PRESSURE PSIA	DECREASING PRESSURE PSIA
4640-1	7851860-1	31.5 ±.5	30.5 ±.5
8015-1	7851860-501	37.25 ±.75	35.75 ±.75

FOLLOWING, ARE THE TESTS THAT ARE ASSUMED TO BE EQUIVALENT ON THE BASIS OF SIMILARITY. THESE TESTS ARE LISTED IN THE ORDER IN WHICH THEY WERE CONDUCTED ON P/N 4640-1.

8.1 ACTUATION & DEACTUATION TIME: (REF. (A) PARA. 3.5.6.)

8.2 LEAK TEST: (REF. (A) PARA. 4.1.6)

8.3 DIELECTRIC STRENGTH TEST: (REF. (A) PARA. 4.1.7)

8.4 INSULATION RESISTANCE: (REF. (A) PARA. 4.1.8)

8.5 CONTACT RESISTANCE: (REF. (A) PARA. 3.4.4)

8.6 ALTITUDE TEMPERATURE: (REF. (A) PARA. 4.1.12)

8.7 ACCELERATION: (REF. (A) PARA. 4.1.13)

8.8 ACOUSTICS: (REF. (A) PARA. 4.1.15)

8.9 SHOCK: (REF. (A) PARA. 4.1.16)

8.10 SERVICE LIFE: (REF. (A) PARA. 4.1.19)

8.11 ACTUATION & DEACTUATION TIME: (REF. (A) PARA. 3.5.6)

8.12 PROOF TEST: (REF. (A) PARA. 4.1.15)

8.13 LEAK TEST: (REF. (A) PARA. 4.1.16)

8.14 DIELECTRIC STRENGTH TEST: (REF. (A) PARA. 4.1.7)

8.15 INSULATION RESISTANCE: (REF. (A) PARA. 4.1.8)

8.16 CONTACT RESISTANCE: (REF. (A) PARA. 3.4.4)

8.17 BURST TEST: (REF. (A) PARA. 4.1.19)

9.0 FACILITIES:

FOLLOWING IS A DESCRIPTION OF THE TEST EQUIPMENT TO BE USED TO CONDUCT EACH TEST AS PROPOSED HEREIN.

9.1 FUNCTIONAL TESTS:

9.1.1 TEST STAND: FREBANK MODEL TE-146-1, 0-5000 PSI.

9.1.2 PRESSURE GAUGE: MARTIN-DECKER 0-600 PSI SERIAL NO. 969.

9.2 PROOF TEST:

9.2.1 TEST STAND: FREBANK MODEL TE-146-1, 0-5000 PSI.

9.3 HIGH TEMPERATURE, LOW TEMPERATURE & THERMAL SHOCK: "A"

9.3.1 TEMPERATURE CHAMBER: WYLE MODEL DN104, RANGE -320°F TO +350°F.

9.3.2 TEST STAND: FREBANK MODEL TE-146-1, 0-5000 PSI.

9.3.3 PRESSURE GAUGE: MARTIN-DECKER 0-600 PSI, SERIAL NO. 969.

9.4 VIBRATION:

9.4.1 VIBRATION EQUIPMENT: M.B. MODEL T-51-MC AMPLIFIER, MODEL C-10 EXCITER, MODEL M3 VIBRATION METER.

9.4.2 TEST STAND: FREBANK MODEL TE 146-1, 0-5000 PSI.

9.4.3 PRESSURE GAUGE: MARTIN-DECKER 0-600 PSI, SERIAL NO. 969.

9.4.4 TEMPERATURE CHAMBER: MANTEC MODEL EP 125 RANGE -320 TO +600°F.

9.4.5 RECORDING OSCILLOGRAPH: C.E.C. MODEL 5-116, GALVANOMETER RESPONSE 0-2500 CPS.

9.4.6 PRESSURE TRANSDUCER: STATHAM INSTRUMENTS 0-500 PSI, MODEL PG10TC-500-350.

10.0 GENERAL NOTES:

10.1 THE REPORT SHALL BE COMPILED IN A MANNER CONSISTENT WITH CONVENTIONAL ENGINEERING REPORT FORM.

10.2 THE REPORT SHALL DESCRIBE THE TEST METHOD AND CONDITION AND FULLY SUMMARIZE THE TEST RESULTS AND ANY FAILURES OR LIMITATIONS ENCOUNTERED. A DESCRIPTION OF TEST EQUIPMENT AND PHOTOGRAPHS OF TEST SETUPS SHALL ALSO BE INCLUDED.

10.3 THE REPORT SHALL INCLUDE THIS TEST PROCEDURE.

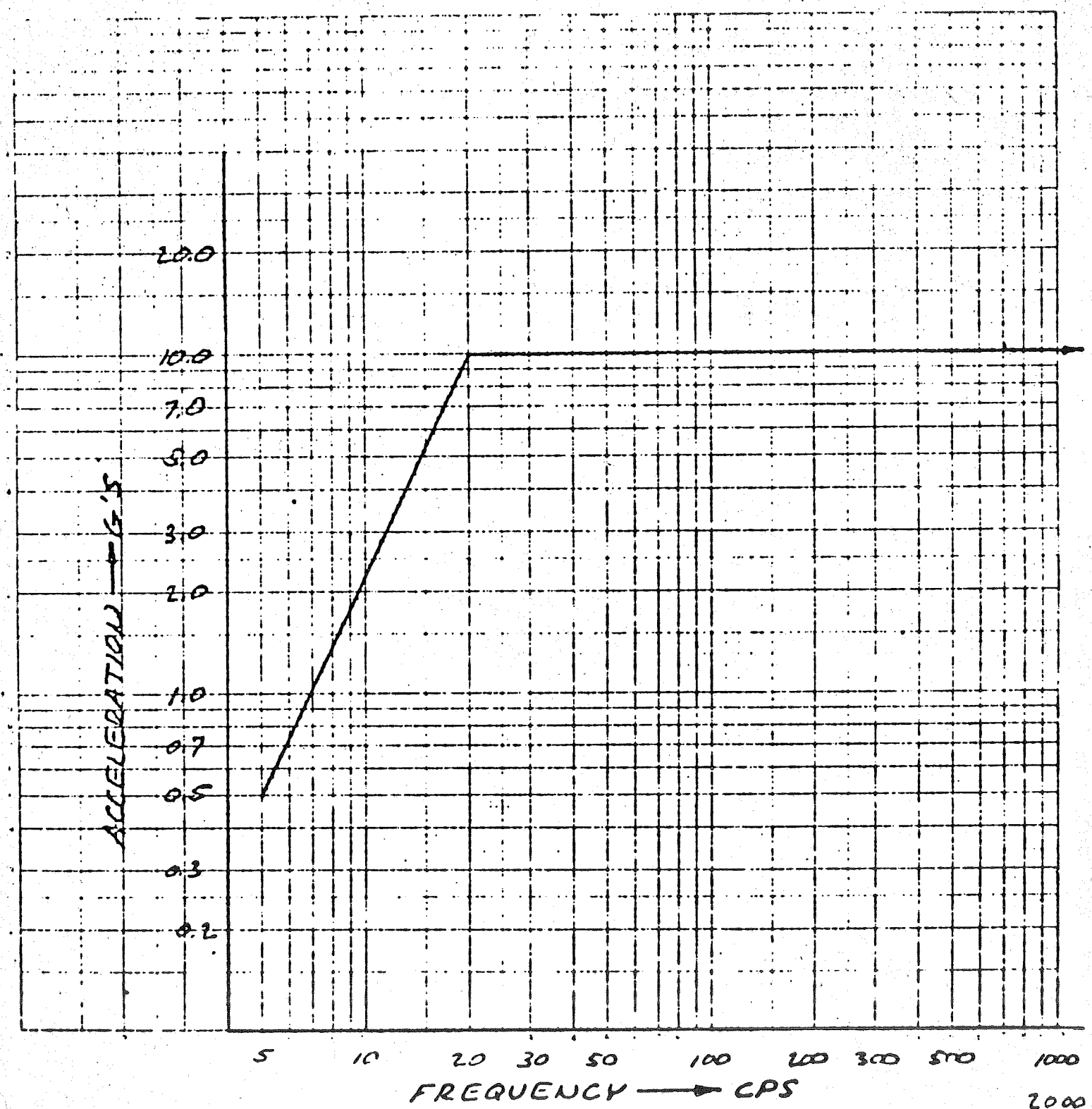

VIBRATION LEVEL CURVE

FIGURE 1.

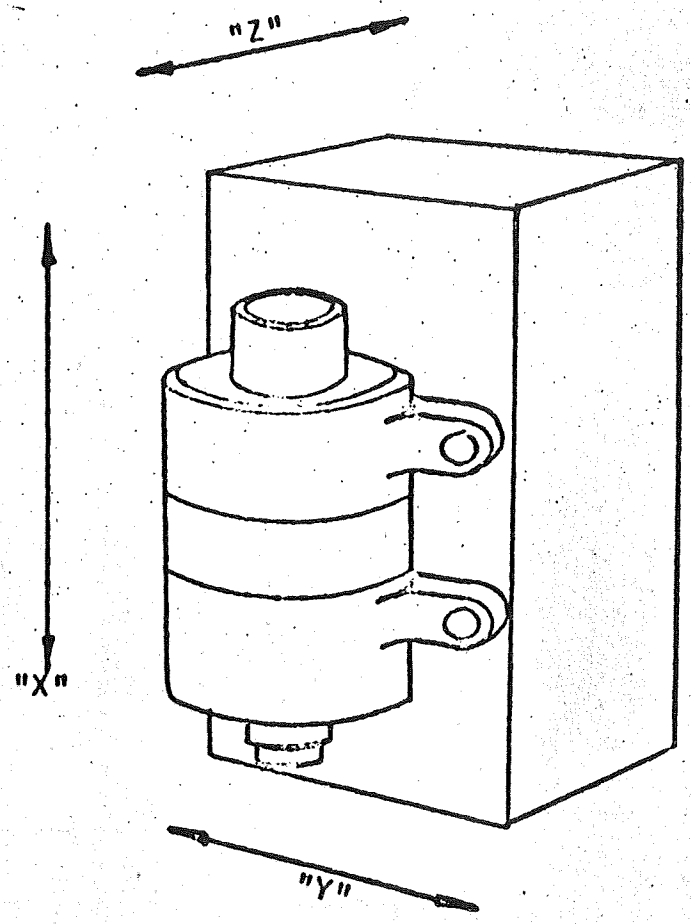

"X" - MOST SENSITIVE AXIS
"Y" - ORTHOGONAL AXIS (1)
"Z" - ORTHOGONAL AXIS (2)

AXIS IDENTIFICATION

FIGURE 2.

REVISION DATE

FREDANK COMPANY
GLENDALE CALIFORNIA

REPORT NO. Q8015-1
PAGE 12

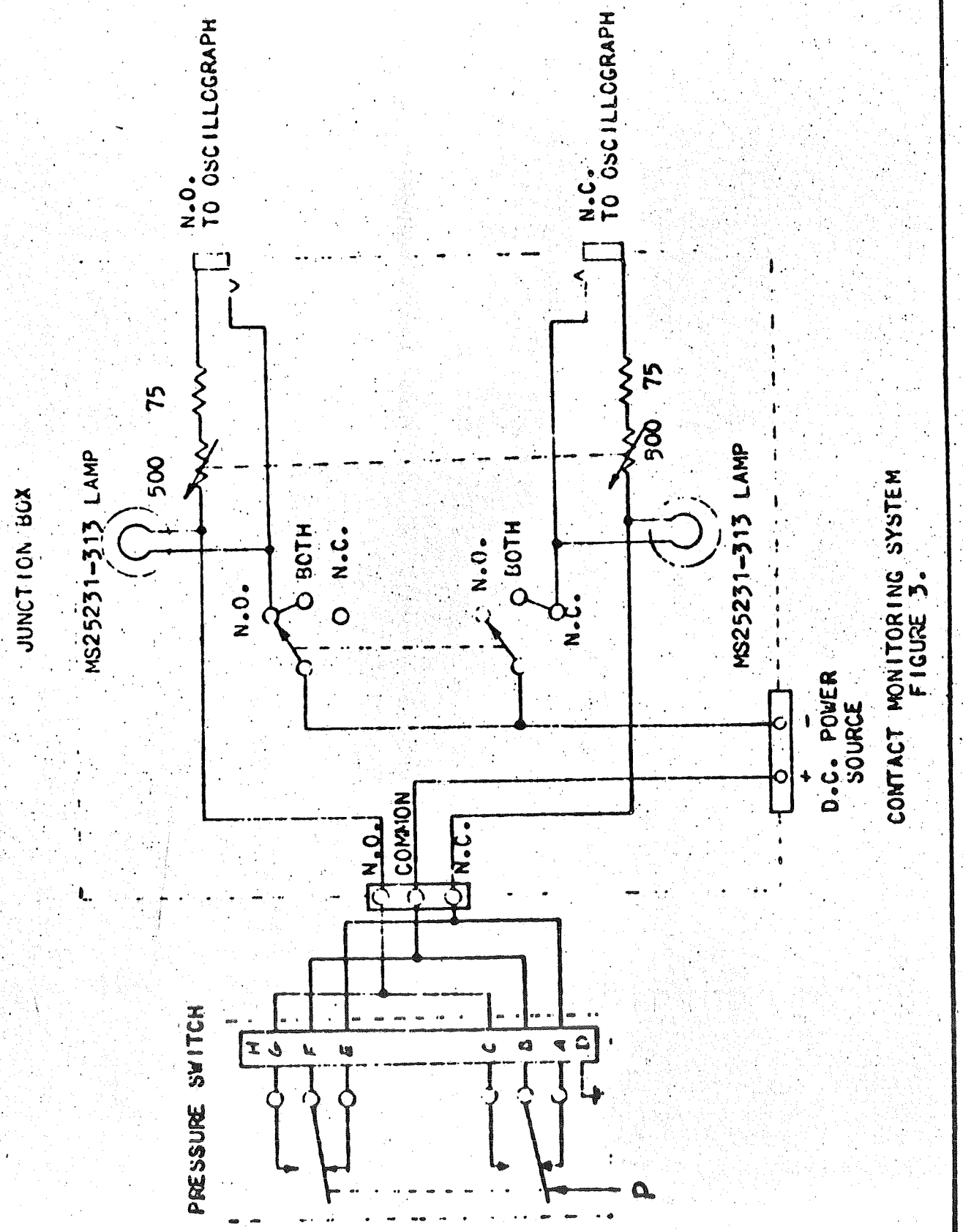

CONTACT MONITORING SYSTEM
FIGURE 3.

ADDENDUM 1

TO FREBANK COMPANY

ENGINEERING REPORT

R8015-1

VIBRATION TEST REPORT

FOR

FREBANK COMPANY PART NUMBER

8015-1

PRESSURE SWITCH

SM-181

FREBANK COMPANY
GLENDALE CALIFORNIA

Engineering Report

VIBRATION TEST REPORT

FOR

PART NUMBER 8015-1

PRESSURE SWITCH

DAC SPECIFICATION 7851860-501

DATE JUNE 3, 1963

PREPARED R. M. Frincke
R. M. FRINCKE, ENGR'G. LAB. SUPV'R.

CHECKED C. R. Willis
C. R. WILLIS, PROJECT ENGINEER

APPROVED Charles F. Beck, Jr.
CHARLES F. BECK, JR.
CHIEF ENGINEER

STATE OF CALIFORNIA
COUNTY OF LOS ANGELES } ss.

CHARLES F. BECK, JR., being duly sworn, deposes and says: That the information contained in this report is to the best of his knowledge true and correct in all respects.

Charles F. Beck, Jr.

SUBSCRIBED and sworn to before me this 5th day of June 1963

Elizabeth [illegible]
Notary Public in and for the County of Los Angeles, State of California

My commission expires November 8 1963

CONTRACT NO.

NO. PAGES -29-

REVISION DATE	FREBANK COMPANY GLENDALE CALIFORNIA	VTR 8015-1 PAGE 2.0

REVISIONS

TABLE OF CONTENTS

		PAGE
1.0	PURPOSE	4.0
2.0	REFERENCE	4.0
3.0	DESCRIPTION OF TEST SPECIMEN	4.0
4.0	REQUIREMENTS	4.0
5.0	TEST PROCEDURE AND RESULTS	4.0
	5.1 FUNCTIONAL TEST	4.0
	5.2 VIBRATION TEST	5.0
	5.3 CONTACT MONITORING TEST	6.0

TABLE

VIBRATION TEST RESULTS FOR UNITS, SERIAL No.'s 120 AND 121	7.0

APPENDIX I

FREBANK COMPANY VIBRATION TEST PROCEDURE FOR FREBANK COMPANY PART NUMBER 8015-1 PRESSURE SWITCH	19.0

1.0 PURPOSE

TO PRESENT THE RESULTS OF THE VIBRATION TEST PROGRAM CONDUCTED ON FREBANK PRESSURE SWITCH PART NUMBER 8015-1. THIS TEST PROGRAM WAS CONDUCTED IN ACCORDANCE WITH FREBANK COMPANY VIBRATION TEST PROCEDURE FOR FREBANK COMPANY PART NUMBER 8015-1 PRESSURE SWITCH.

2.0 REFERENCE

DOUGLAS AIRCRAFT COMPANY SPECIFICATION 7851860-501 "R".

3.0 DESCRIPTION OF TEST SPECIMEN

TWO (2) PRODUCTION UNITS, PART NUMBER 8015-1 SERIAL NUMBERS 120 & 121 WERE SUBJECTED TO THE REQUIRED TEST PROGRAM.

4.0 REQUIREMENTS

THE VIBRATION TEST REQUIREMENTS WERE CONDUCTED IN ACCORDANCE WITH FREBANK COMPANY VIBRATION TEST PROCEDURE FOR FREBANK COMPANY PART NUMBER 8015-1 PRESSURE SWITCH.

5.0 TEST PROCEDURE AND RESULTS

5.1 FUNCTIONAL TEST

A TEST STAND USING CLEAN DRY AIR AS THE TEST MEDIUM, EMPLOYING A 12-INCH DIAMETER BOURDON TUBE GAUGE WITH 0.2 PSI MINIMUM GRADUATIONS AND A FULL SCALE ACCURACY OF 1/5 PERCENT WAS USED FOR THE OBSERVATION OF THE PRESSURE SETTINGS. A SIGNAL LIGHT CIRCUIT WITH A 2 AMPERE INDUCTIVE LOAD AT 28 VDC WAS USED IN CONJUNCTION WITH THE GAUGE TO INDICATE PRESSURE SWITCH ACTUATION.

THE UNIT UNDER TEST WAS CONNECTED TO THIS TEST STAND AND THE APPLIED PRESSURE WAS INCREASED AND DECREASED FROM 14.7 PSIA TO THE POINT OF PRESSURE SWITCH ACTUATION TO 14.7 PSIA. THE RATE OF INCREASE FROM 35 PSIA TO ACTUATION AND RATE OF DECREASE FROM 37 PSIA TO DE-ACTUATION WAS APPROXIMATELY 5 PSI PER MINUTE. THE PRESSURES AT WHICH THE CIRCUITS BECAME ENERGIZED AND DE-ENERGIZED WERE OBSERVED. BOTH TEST UNITS SUCCESSFULLY COMPLETED THE FUNCTIONAL TEST AND THE FIRST FIVE (5) CYCLES OF THE TEST RESULTS ARE RECORDED IN TABLE I.

5.2 VIBRATION TEST

THE TEST WAS CONDUCTED USING THE SAME EQUIPMENT AS THE FUNCTIONAL TEST IN CONJUNCTION WITH A MANTEC MODEL EP125 TEMPERATURE CHAMBER, RANGE -320°F TO +600°F, M.B. MODEL T-51-MC AMPLIFIER, MODEL C-10 EXCITOR AND MODEL M3 VIBRATION METER. THE TESTS WERE CONDUCTED USING A LOGARITHMIC OCTAVE SWEEP RATE WITHIN THE FREQUENCY LIMITS OF FIGURE 1, OF APPENDIX I, AT APPROXIMATELY 3.5 MINUTES PER OCTAVE, WITH A PAUSE AT THE END OF EACH OCTAVE TO CONDUCT A ONE (1) CYCLE FUNCTIONAL TEST. THE TEST DURATION WAS ONE HOUR IN EACH OF THE THREE ORTHOGONAL AXES, SHOWN IN FIGURE 2 OF APPENDIX I, AT -100°F, +125°F AND ROOM AMBIENT TEMPERATURE. THIS MADE A TOTAL OF NINE HOURS FOR EACH UNIT UNDER VIBRATORY CONDITIONS. DURING AND FOLLOWING THE VIBRATION TEST, PRESSURE SETTINGS WERE CHECKED IN ACCORDANCE WITH PARA. 5.1 AT OCTAVE INTERVALS OF 5, 10, 20, 40, 80, 160,

320, 640, 1280, AND 2000 CPS. THE RESULTS ARE RECORDED IN TABLE 1.

NO APPARENT RESONANCES WERE ENCOUNTERED DURING VIBRATION.

NO SWITCH CHATTER OCCURRED AT ANY TIME DURING THE VIBRATION TEST.

5.3 CONTACT MONITORING TEST

DURING THE VIBRATION TEST, THE CONTACTS WERE MONITORED USING A C.E.C. MODEL 5-116 RECORDING OSCILLOGRAPH USING GALVANOMETERS HAVING A 0 TO 2500 CPS RESPONSE RATE.

THE RESULTS OF THE CONTACT MONITORING TEST ARE REPORTED IN PARAGRAPH 5.2.

REVISION DATE

FREBANK COMPANY
GLENDALE, CALIFORNIA

VTR 8015-1

PAGE 7.0

TABLE I

VIBRATION TEST RESULTS FOR

TEST UNIT SERIAL NO. 120

TEST CONDITION		AMBIENT TEMPERATURE °F	INCREASING PRESSURE ACTUATION PSIA	DECREASING PRESSURE ACTUATION PSIA
REQUIREMENTS		-100 TO +125	36.5 TO 38.0	35.0 TO 36.5
INITIAL FUNCTION TEST		+76	37.4	35.2
			37.2	35.2
			37.2	35.3
			37.2	35.3
			37.2	35.3
VIBRATION TEST				
FREQUENCY (CPS)	AXIS			
5	X	-100	37.4	35.0
10			37.2	35.0
20			37.1	35.1
40			37.1	35.1
80			37.2	35.1
160			37.2	35.2
320			37.1	35.1
640			37.1	35.2
1280			37.0	35.1
2000			37.1	35.0

TABLE I (CONT'D.)

S/N 120

VIBRATION TEST FREQUENCY (CPS)	~~AXIS~~	AMBIENT TEMPERATURE °F	INCREASING PRESSURE ACTUATION PSIA	DECREASING PRESSURE ACTUATION PSIA
5	Y	-100	37.4	35.0
10			37.3	35.0
20			37.3	35.0
40			37.4	35.0
80			37.3	35.0
160			37.3	35.0
320			37.4	35.0
640			37.4	35.0
1280			37.3	35.0
2000			37.4	35.0
5	Z	-100	37.4	35.0
10			37.5	35.0
20			37.5	35.0
40			37.4	35.0
80			37.4	35.0
160			37.4	35.1
320			37.4	35.1
640			37.5	35.0
1280			37.3	35.1
2000			37.4	35.0

TABLE I (CONT'D.)

S/N 120

VIBRATION TEST FREQUENCY (CPS)	AXIS	AMBIENT TEMPERATURE °F	INCREASING PRESSURE ACTUATION PSIA	DECREASING PRESSURE ACTUATION PSIA
5	X	+76	37.2	35.3
10			37.2	35.3
20			37.2	35.3
40			37.2	35.3
80			37.2	35.4
160			37.1	35.5
320			37.1	35.4
640			37.1	35.4
1280			37.1	35.4
2000			37.1	35.4
5	Y	+76	37.2	35.3
10			37.2	35.3
20			37.2	35.3
40			37.2	35.3
80			37.2	35.3
160			37.2	35.3
320			37.3	35.4
640			37.3	35.4
1280			37.2	35.4
2000			37.2	35.4

TABLE I (CONT'D.)

S/N 120

VIBRATION TEST FREQUENCY (CPS)	AXIS	AMBIENT TEMPERATURE °F	INCREASING PRESSURE ACTUATION PSIA	DECREASING PRESSURE ACTUATION PSIA
5	Z	+76	37.3	35.3
10			37.2	35.3
20			37.2	35.3
40			37.2	35.3
80			37.2	35.3
160			37.2	35.3
320			37.2	35.3
640			37.3	35.3
1280			37.2	35.4
2000			37.2	35.4
5	X	+125	37.4	35.6
10			37.4	35.6
20			37.4	35.6
40			37.4	35.7
80			37.4	35.7
160			37.3	35.8
320			37.4	35.8
640			37.4	35.7
1280			37.3	35.8
2000			37.4	35.8

REVISION DATE
FREBANK COMPANY
BLENDALE CALIFORNIA
VTR 8015-1
PAGE 10.0
SM-190

TABLE I (CONT'D.)

S/N 120

VIBRATION TEST FREQUENCY (CPS)	AXIS	AMBIENT TEMPERATURE °F	INCREASING PRESSURE ACTUATION PSIA	DECREASING PRESSURE ACTUATION PSIA
5	Y	+125	37.6	35.6
10			37.6	35.6
20			37.6	35.6
40			37.6	35.6
80			37.6	35.6
160			37.6	35.7
320			37.6	35.7
640			37.6	35.7
1280			37.5	35.8
2000			37.6	35.7
5	Z	+125	37.6	35.7
10			37.6	35.7
20			37.6	35.7
40			37.6	35.7
80			37.6	35.7
160			37.6	35.7
320			37.6	35.8
640			37.6	35.8
1280			37.6	35.8
2000			37.6	35.8

TABLE I (CONT'D.)

S/N 120

TEST CONDITION	AMBIENT TEMPERATURE °F	INCREASING PRESSURE ACTUATION PSIA	DECREASING PRESSURE ACTUATION PSIA
FUNCTIONAL TEST FOLLOWING VIBRATION TEST	+76	37.4	35.3
		37.3	35.3
		37.3	35.3
		37.3	35.3
		37.3	35.3

TABLE I

VIBRATION TEST RESULTS FOR

TEST UNIT SERIAL NO. 121

TEST CONDITION		AMBIENT TEMPERATURE °F	INCREASING PRESSURE ACTUATION PSIA	DECREASING PRESSURE ACTUATION PSIA
REQUIREMENTS		-100 TO +125	36.5 TO 38.0	35.0 TO 36.5
INITIAL FUNCTION TEST		+76	37.6	35.4
			37.4	35.4
			37.4	35.4
			37.4	35.4
			37.4	35.4
VIBRATION TEST				
FREQUENCY (CPS)	AXIS			
5	X	-100	38.0	35.4
10			37.8	35.4
20			37.7	35.4
40			37.8	35.4
80			37.8	35.5
160			37.6	35.7
320			37.8	35.5
640			37.7	35.6
1280			37.7	35.6
2000			37.5	35.5

TABLE I (CONT'D.)

S/N 121

VIBRATION TEST FREQUENCY (CPS)	AXIS	AMBIENT TEMPERATURE °F	INCREASING PRESSURE ACTUATION PSIA	DECREASING PRESSURE ACTUATION PSIA
5	Y	-100	37.9	35.4
10			37.8	35.4
20			37.9	35.4
40			37.9	35.4
80			37.9	35.4
160			37.9	35.4
320			37.8	35.4
640			37.8	35.5
1280			37.8	35.4
2000			37.8	35.4
5	Z	-100	38.0	35.4
10			38.0	35.4
20			38.0	35.4
40			38.0	35.4
80			38.0	35.4
160			38.0	35.4
320			38.0	35.4
640			38.0	35.4
1280			38.0	35.4
2000			38.0	35.4

TABLE I (CONT'D.)

S/N 121

VIBRATION TEST FREQUENCY (CPS)	AXIS	AMBIENT TEMPERATURE °F	INCREASING PRESSURE ACTUATION PSIA	DECREASING PRESSURE ACTUATION PSIA
5	X	+76	37.6	35.4
10			37.5	35.4
20			37.4	35.5
40			37.5	35.5
80			37.6	35.5
160			37.5	35.5
320			37.5	35.6
640			37.5	35.6
1280			37.5	35.6
2000			37.5	35.6
5	Y	+76	37.6	35.4
10			37.5	35.4
20			37.6	35.4
40			37.6	35.4
80			37.6	35.4
160			37.6	35.4
320			37.6	35.4
640			37.6	35.4
1280			37.5	35.5
2000			37.5	35.4

REVISION DATE
FREBANK COMPANY
GLENDALE CALIFORNIA
VTR 8015-1
PAGE 15.0
SM-195

TABLE 1 (CONT'D.)

S/N 121

VIBRATION TEST

FREQUENCY (CPS)	AXIS	AMBIENT TEMPERATURE °F	INCREASING PRESSURE ACTUATION PSIA	DECREASING PRESSURE ACTUATION PSIA
5	Z	+76	37.6	35.5
10			37.6	35.5
20			37.6	35.5
40			37.5	35.4
80			37.5	35.4
160			37.5	35.5
320			37.5	35.5
640			37.5	35.5
1280			37.5	35.5
2000			37.5	35.5
5	X	+125	37.6	35.6
10			37.6	35.6
20			37.6	35.6
40			37.6	35.6
80			37.6	35.7
160			37.5	35.8
320			37.5	35.8
640			37.5	35.8
1280			37.6	35.8
2000			37.5	35.8

TABLE I (CONT'D.)

S/N 121

VIBRATION TEST

FREQUENCY (CPS)	AXIS	AMBIENT TEMPERATURE °F	INCREASING PRESSURE ACTUATION PSIA	DECREASING PRESSURE ACTUATION PSIA
5	Y	+125	37.7	35.7
10			37.7	35.7
20			37.7	35.7
40			37.7	35.7
80			37.7	35.7
160			37.7	35.7
320			37.7	35.7
640			37.7	35.7
1280			37.6	35.8
2000			37.6	35.7
5	Z	+125	37.7	35.7
10			37.7	35.7
20			37.7	35.7
40			37.7	35.7
80			37.7	35.7
160			37.7	35.7
320			37.7	35.7
640			37.7	35.7
1280			37.6	35.8
2000			37.6	35.8

TABLE I (C T'D.)

S/N 121

TEST CONDITION	AMBIENT TEMPERATURE °F	INCREASING PRESSURE ACTUATION PSIA	DECREASING PRESSURE ACTUATION PSIA
FUNCTIONAL TEST FOLLOWING VIBRATION TEST	+76	37.8	35.6
		37.6	35.5
		37.6	35.5
		37.6	35.5
		37.6	35.5

APPENDIX I

FREBANK COMPANY

VIBRATION TEST PROCEDURE

FOR FREBANK COMPANY

PART NUMBER 8015-1

PRESSURE SWITCH

FREBANK COMPANY
GLENDALE CALIFORNIA

Engineering Report

FREBANK COMPANY
VIBRATION TEST PROCEDURE

FOR FREBANK COMPANY PART NO.
8015-1
PRESSURE SWITCH
DAC SPECIFICATION No. 7851860-501

"A" JUNE 3, 1963
DATE MARCH 27, 1963

PREPARED R. M. Frincke
R. M. FRINCKE, ENGR'G. LAB. SUPV'R.

CHECKED C.R. Willis
C. R. WILLIS, PROJECT ENGINEER

APPROVED
C. F. BECK, JR.
CHIEF ENGINEER

STATE OF CALIFORNIA
COUNTY OF LOS ANGELES } ss.

_____, being duly sworn, deposes and says: That the information contained in this report is to the best of his knowledge true and correct in all respects.

_____

SUBSCRIBED and sworn to before me this _____ day of _____, 19__

_____
Notary Public in and for the County of Los Angeles, State of California

My commission expires _____ 19__

CONTRACT NO. _____

NO. PAGES -10-

REVISION DATE	FREBANK COMPANY GLENDALE CALIFORNIA	8015-1
JUNE 3, 1963		PAGE 2.0

REVISIONS

REVISION "A" DTD. JUNE 3, 1963

CORRECTED REFERENCE SPECIFICATION PARAGRAPH NUMBERS

R. M. FRINCKE, ENGR'G. LAB. SUPV'R	C. R. WILLIS, PROJECT ENG'R.	C. F. BECK, JR. CHIEF ENGINEER

TABLE OF CONTENTS

		PAGE
	SUBJECT	4.0
	REFERENCE	4.0
	TEST SPECIMEN	4.0
	TEST CONDITIONS	4.0
	TEST MEDIUM	4.0
	INSTRUMENT ACCURACIES	4.0
	TEST PROCEDURE	5.0
1.0	FUNCTIONAL TESTS	5.0
2.0	VIBRATION	6.0
3.0	CONTACT MONITORING	6.0
4.0	GENERAL NOTES	7.0

FIGURES

1.	VIBRATION LEVEL CURVE	8.0
2.	AXIS IDENTIFICATION	9.0
3.	CONTACT MONITORING SYSTEM	10.0

SUBJECT

VIBRATION TESTS OF FREBANK COMPANY PART NUMBER 8015-1 PRESSURE SWITCH.

REFERENCE

(A)

DOUGLAS AIRCRAFT COMPANY SPECIFICATION No. 7851860-501

TEST SPECIMEN

TWO (2) PRESSURE SWITCHES SHALL BE SUBJECTED TO THE PROGRAM AS SPECIFIED HEREIN. BOTH OF THESE SWITCHES MUST BE PRODUCTION UNITS.

TEST CONDITIONS

TEST MEDIUM

CLEAN DRY AIR AND GASEOUS HELIUM AS REQUIRED.

ELECTRICAL CAPACITY:	2 AMPERES INDUCTIVE AT 28 VOLTS D.C.
AMBIENT TEMPERATURE:	60°F. TO 80°F. UNLESS OTHERWISE SPECIFIED
FLUID TEMPERATURE:	60°F. TO 80°F. UNLESS OTHERWISE SPECIFIED.

INSTRUMENT ACCURACIES

CALIBRATION PRESSURE GAUGES:	1/5 PERCENT OF FULL SCALE READING.
TEMPERATURE RECORDER:	±5 DEGREES FAHRENHEIT.
ELECTRICAL METERS:	+3 PERCENT OF FULL SCALE READING.

TEST PROCEDURE

THE TEST PROGRAM IS TO BE CONDUCTED ON EACH UNIT IN THE ORDER SPECIFIED IN THE FOLLOWING PARAGRAPHS.

1.0 FUNCTIONAL TESTS (REF. (A) PARA. 4.1.4)

USE CLEAN DRY AIR. RECORD THE FIRST FIVE (5) CYCLES OF PRESSURE SWITCH OPERATION OF EACH SERIES OF TESTS, AS REQUIRED BY THIS SPECIFICATION.

1.1

APPLY 35 PSIA TO PRESSURE PORT. THE SWITCH SHALL REMAIN OPEN BETWEEN PINS B AND C AND PINS F AND G.

1.2

INCREASE THE PRESSURE TO 38 PSIA MAXIMUM. THE SWITCH SHALL CLOSE AT 37.25±.75 PSIA BETWEEN PINS B AND C AND PINS F AND G. THE RATE OF PRESSURE INCREASE FROM 35 PSIA TO ACTUATION SHALL BE APPROXIMATELY 5 PSI PER MINUTE.

ACTUATION PRESSURE OF THE FIRST CYCLE OF ANY SERIES OF TESTS SHALL BE WITHIN ±0.4 PSI OF THE ACTUATION PRESSURE OF THE SECOND CYCLE.

REPEATABILITY OF THIRD AND SUBSEQUENT ACTUATION POINTS SHALL BE WITHIN ±1 PERCENT OF THE SECOND CYCLE ACTUATION POINT.

1.3

DECREASE THE PRESSURE. THE SWITCH SHALL OPEN AT 35.75±.75

BETWEEN PINS B AND C AND PINS F AND G. THE RATE OF PRESSURE DECREASE FROM 37 PSIA TO DEACTUATION SHALL BE APPROXIMATELY 5 PSI PER MINUTE.

2.0 VIBRATION (REF. (A) PARA. 4.1.14)

(REFER TO FIGURE 2 FOR AXIS IDENTIFICATION).

2.1

THE PRESSURE SWITCH SHALL BE MOUNTED TO FIXTURE TE-317, INSTALLED ON A VIBRATION EXCITER AND SUBJECTED TO THE LEVELS SHOWN IN FIGURE 1. THE TESTS SHALL BE CONDUCTED USING A LOGARITHMIC SWEEP RATE OF 3.5 MINUTES PER OCTAVE. THE TEST DURATION SHALL BE ONE (1) HOUR IN EACH OF THE THREE (3) ORTHOGANAL AXES, ONE OF WHICH SHALL BE THE MOST SENSITIVE AXIS, AT -100, ROOM AMBIENT TEMPERATURE, AND +125°F. TOTAL VIBRATION TIME SHALL BE 9 HOURS FOR EACH PRESSURE SWITCH.

2.2

THE UNIT SHALL BE MONITORED FOR EVIDENCE OF ANY RESONANCE. ALL RESONANCES SHALL BE RECORDED.

2.3

DURING AND FOLLOWING THE APPLICATION OF VIBRATION, CONDUCT THE FUNCTIONAL TEST OF PARAGRAPH 1.

3.0 CONTACT MONITORING (REF. (A) PARA. 4.1.17)

3.1

THE PRESSURE SWITCH CONTACTS SHALL BE MONITORED DURING

VIBRATION TO VERIFY THAT SUBSEQUENT TO SWITCH ACTUATION PER PARA. 1.2, THE CIRCUIT BETWEEN PINS B AND C AND PINS F AND G, DOES NOT OPEN UNTIL DEACTUATION PER PARA. 1.3 AND TO VERIFY THAT SUBSEQUENT TO SWITCH DEACTUATION PER PARA. 1.3 THE CIRCUIT BETWEEN PINS B AND C AND PINS F AND G, DOES NOT CLOSE UNTIL SWITCH ACTUATION PER PARA. 1.2. THE CONTACTS SHALL BE MONITORED ON A C.E.C. MODEL 5-116 RECORDING OSCILLOGRAPH USING GALVANOMETERS HAVING A RESPONSE TO 0 TO 2500 CPS.

NO CHATTER OF THE SWITCH CONTACTS IS ACCEPTABLE. REFER TO FIGURE 3 FOR A SCHEMATIC DIAGRAM SHOWING THE CONTACT MONITORING SYSTEM.

4.0 GENERAL NOTES

4.1

THE REPORT SHALL BE COMPILED IN A MANNER CONSISTENT WITH CONVENTIONAL ENGINEERING REPORT FORM.

4.2

THE REPORT SHALL DESCRIBE THE TEST METHOD AND CONDITION AND FULLY SUMMARIZE THE TEST RESULTS AND ANY FAILURES OR LIMITATIONS ENCOUNTERED. A DESCRIPTION OF TEST EQUIPMENT SHALL ALSO BE INCLUDED.

4.3

THE REPORT SHALL INCLUDE THIS TEST PROCEDURE.

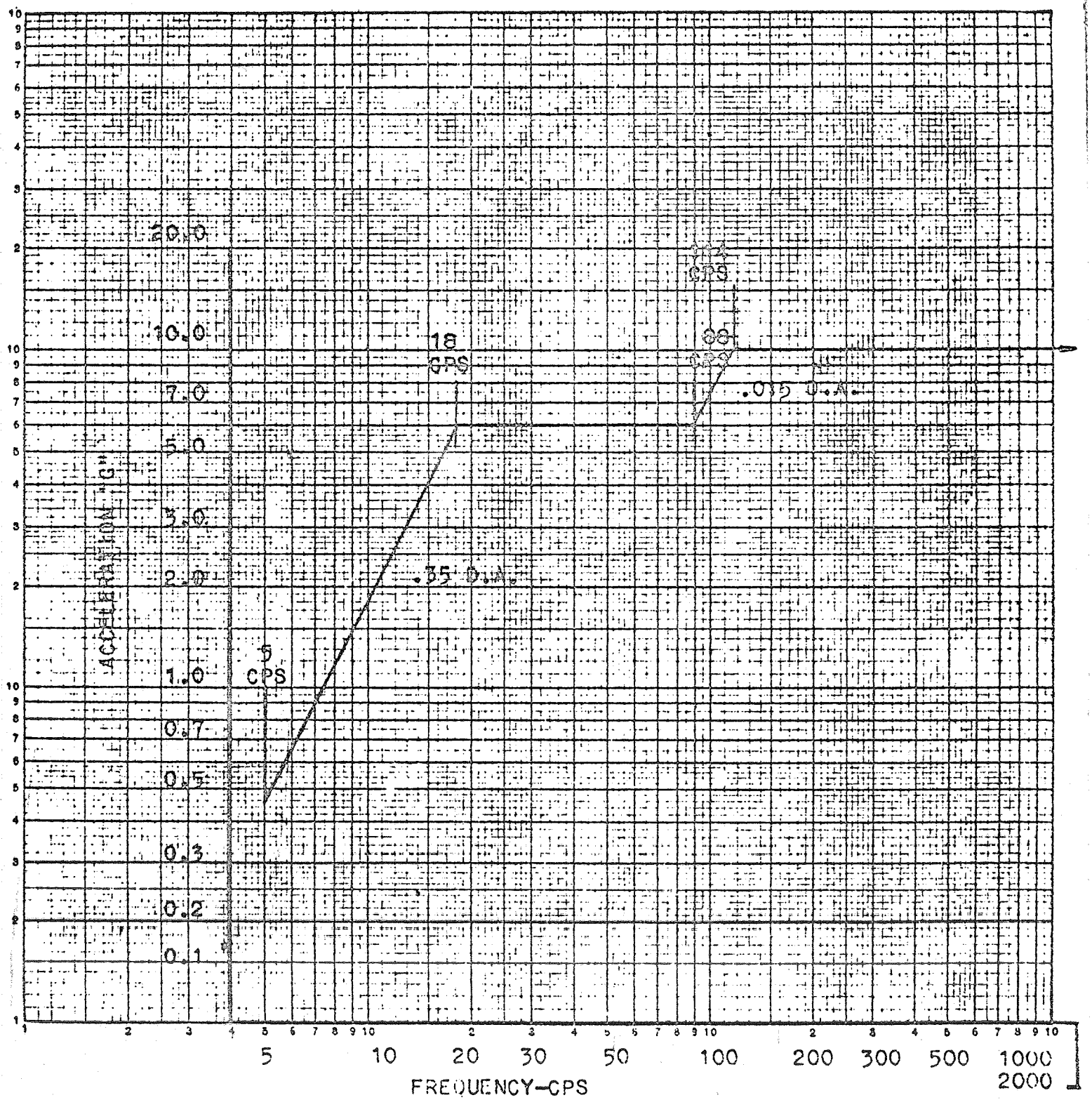

VIBRATION LEVEL CURVE

FIGURE 1.

REVISION DATE	FREBANK COMPANY GLENDALE CALIFORNIA	8015-1 PAGE 9.0

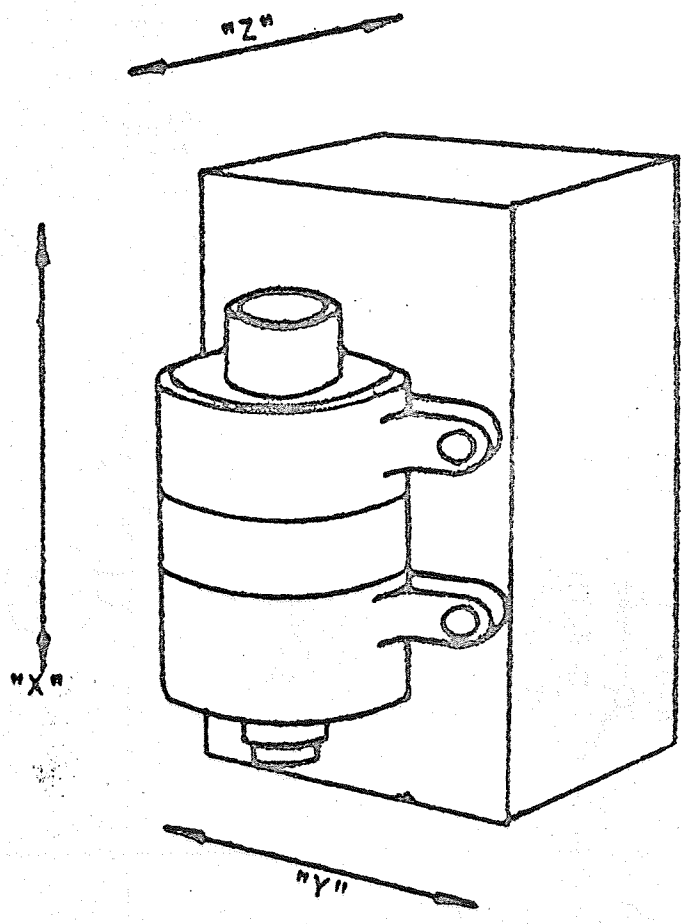

"X" - MOST SENSITIVE AXIS
"Y" - ORTHOGONAL AXIS (1)
"Z" - ORTHOGONAL AXIS (2)

AXIS IDENTIFICATION

FIGURE 2.

REVISION DATE

FREBURK COMPANY
GLENDALE CALIFORNIA

8015-1

PAGE 10.0

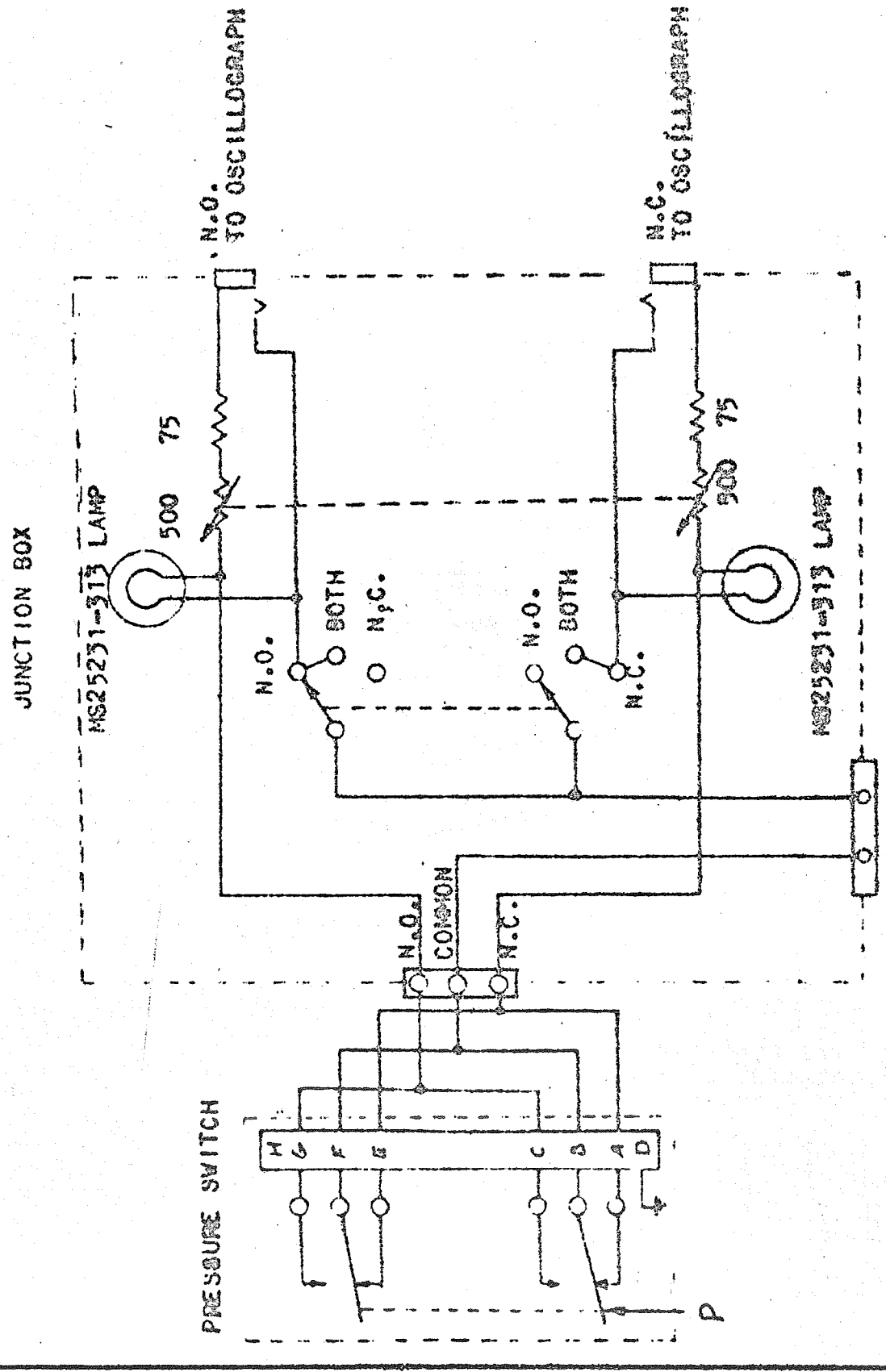

CONTACT MONITORING SYSTEM
FIGURE 3.

FREBANK COMPANY
GLENDALE CALIFORNIA

Engineering Report

DESIGN EVALUATION TEST REPORT
NUMBER R8015-3
FOR
PART NUMBER 8015-3
PRESSURE SWITCH

DAC Specification 7851860-505, Rev. "L"

Rev. "A" dtd 4-4-63

DATE June 20, 1962

PREPARED W. L. Webster, Eng'r. Lab.

CHECKED R. M. Frincke, Engr'g. Lab. Supv'r.

APPROVED V. A. Larsen, V.P.
Engineering & Sales

Witnessed:

R. B. Sidney, AFOCR

CONTRACT NO.

NO. PAGES -42-

NOTARY PUBLIC LOS ANGELES CO. CALIF.

STATE OF CALIFORNIA
COUNTY OF LOS ANGELES } ss.

V. A. LARSEN, being duly sworn, deposes and says: That the information contained in this report is to the best of his knowledge true and correct in all respects.

SUBSCRIBED and sworn to before me this 20th day of June, 1962

Notary Public in and for the County of Los Angeles, State of California

My commission expires November 8, 1963

REVISION DATE	FREBANK COMPANY GLENDALE CALIFORNIA	REPORT NO. R8015-3
"A" 4-4-63		PAGE 2

REVISIONS:

Revision "A" dated April 4, 1963: "A"

Revised to conform with DAC verbal request. (N. Godfrey)

Revised by: W. L. Webster
Engr'g. Department

Checked by: R. M. Frincke
Engr'g. Lab. Supervisor

Checked by: C. R. Willis
Project Engineer

Approved by: C. F. Beck, Jr.
Chief Engineer

Note: Revision "A" consisted of the addition of the (-1) to the part number.

N. C. Godfrey
Engineer, Douglas Aircraft
Astrionics Branch

TABLE OF CONTENTS

Item	Page
Title Page	1
Revisions	2
Table of Contents	3
1.0 PURPOSE	4
2.0 REFERENCE	4
3.0 DESCRIPTION OF TEST SPECIMEN	4
4.0 REQUIREMENTS	4
5.0 TEST PROCEDURE AND RESULTS	4
Figure 1 -- Frebank Drawing No. P8015-3, "B" Change	7
Figure 2 -- Frebank Drawing No. 8015-3, "C" Change	8
TABLE I -- Functional Test Results For Units, Serial No.'s 100, 101, and 102	9
Test Unit Serial No. 100	9
Test Unit Serial No. 101	16
Test Unit Serial No. 102	23
APPENDIX I	30
Frebank Company Design Evaluation Test Procedure Q8015-3 For Frebank Company Part No. 8015-3, Pressure Switch, Revision "C"	

1.0 PURPOSE:

To present the results of the design evaluation test program conducted on Frebank Pressure Switch Part Number 8015-3. This test program was conducted in accordance with the Design Evaluation Test plan of Douglas Specification 7851860-505, Rev. "L". "A"

2.0 REFERENCE:

Douglas Aircraft Company Specification 7851860-505, Rev. "L". "A"

3.0 DESCRIPTION OF TEST SPECIMEN: (Ref. para. 4.1.1.1.3)

Three (3) production units, Part Number 8015-3, Serial Numbers 100, 101, and 102 were subjected to the required test program. This pressure switch is intended for operation in a 44.0 psia system, using gaseous helium and hydrogen as the service medium over an ambient temperature range of -100°F to +125°F.

The actuation pressure limits are:

Increasing Pressure: 34.5 ±0.5 psia
Decreasing Pressure: 33.5 ±0.5 psia

Frebank Assembly Drawing No. F8015-3 and Installation Drawing No. 8015-3 are included for further reference (see Figures 1 and 2, Pages 7 and 8.

4.0 REQUIREMENTS: (Ref. para. 4.1.1.1)

The Design Evaluation Test Requirements were conducted in accordance with Design Evaluation Test Procedure for Engineering Report Number Q8015-3, Rev. "C", as approved by D.A.C. in their VIR No. M39310. This test procedure is presented as Appendix I.

5.0 TEST PROCEDURE AND RESULTS:

5.1 Functional Test: (Ref. para. 4.1.4) A test stand using clean dry air as the test medium, employing a 12-inch diameter Bourdon tube gauge with 0.2 psi minimum graduations and a full scale accuracy of 1/5 percent was used for the observation of the pressure settings. A signal light circuit with a 2 ampere inductive load at 28 VDC was used in conjunction with the gauge to indicate pressure switch actuation.

The unit under test was connected to this test stand and the applied pressure was increased and decreased from 14.7 to 35.0 psia. The rate of pressure increase from 32.0 psia to actuation and rate of decrease from 35.0 psia to deactuation was approximately 5.0 psi per minute. The pressures at which the unit became energized and de-energized were observed. All test units successfully completed the functional test and the first five (5) cycles of the test results are recorded in Table I.

5.2 Proof Test: (Ref. para 4.1.5) This test was conducted using the same equipment as described in the functional test.

A pressure 66.0 psia was applied for one (1) minute. No failure or leakage occurred as a result of the pressure application.

5.3 High Temperature Test: (Ref. para. 4.1.9) This test was conducted using the same equipment described in the Functional Test while the unit was encased in a Wyle Model DN104 Temperature Chamber, range -320°F to +350°F.

The unit was stabilized at room ambient temperature and the Functional Test of para. 5.1 was conducted. While cycling the unit (a cycle consisted of increasing and decreasing the pressure from 14.7 psia to 35.0 psia to 14.7 psia at a rate of 3 cycles per minute minimum; the rate of pressure increase and decay was 50 psi per second minimum), the temperature of the chamber was increased to 125°F, within ten (10) minutes. The temperature was maintained for fifteen minutes and the Functional Test of para. 5.1 was conducted. The temperature was then stabilized at room ambient temperature and the Functional Test of para. 5.1 was conducted. All test units successfully completed the test. The results of the test are recorded in Table I.

5.4 Low Temperature Test: (Ref. para. 4.1.10) This test was conducted using the same equipment described in the High Temperature Test.

The unit was stabilized at -100°F and maintained for four (4) hours. The Functional Test of para. 5.1 was conducted. The temperature was then stabilized at room ambient temperature and the Functional Test was conducted. The results are recorded in Table I.

5.5 Thermal Shock Test: (Ref. para. 4.1.11) This test was conducted using the same equipment described in the High Temperature Test.

The unit was stabilized at a temperature of +125°F and the Functional Test of para. 5.1 was conducted. The temperature was reduced to -100°F at a rate of 30°F per second and maintained for fifteen minutes. The Functional Test was conducted. The temperature was then stabilized at room temperature and the Functional Test conducted. The results of the test are recorded in Table I.

5.6 Vibration Test: (Ref. para. 4.1.14) The test was conducted using the same equipment as the Functional Test in conjunction with a Mantec Model EP125 Temperature Chamber, range -320°F to +600°F, M.B. Model T-51-MC Amplifier, Model C-10 Excitor and Model M3 Vibration Meter.

The tests were conducted using a logarithmic octave sweep rate within the frequency limits of Figure 1, of Appendix I, at approximately one (1) minute per octave. The test duration was 30 minutes in each of the three (3) orthogonal axes, shown in Figure 2 of Appendix I, at -100°F, +125°F, and room ambient temperature. During and following the vibration test, pressure settings were checked in accordance with para. 5.1 at octave intervals of 5, 10, 20, 40, 80, 160, 320, 640, 1280, and 2000 cps. The results are recorded in Table I.

Although no apparent resonances were encountered, the critical point during vibration was determined to be in the X axis at 1280 cps and 20 g acceleration.

No switch chatter occurred at any time during the vibration test.

5.7 Contact Monitoring Test: (Ref. para. 4.1.17) The tests were conducted during the Vibration Test using a C.E.C. Model 5-116 Recording Oscillograph using galvanometers having a 0 to 2500 cps response rate.

The results of the Contact Monitoring Test are reported in paragraph 5.6.

REVISIONS			
SYM.	DESCRIPTION	DATE	APPROVAL
C	REDRAWN-CHG PICTURE TO SHOW RADIUS ON RETAINER	7-5-62	
D	SEE E.O. 1144	5.10.63	BM

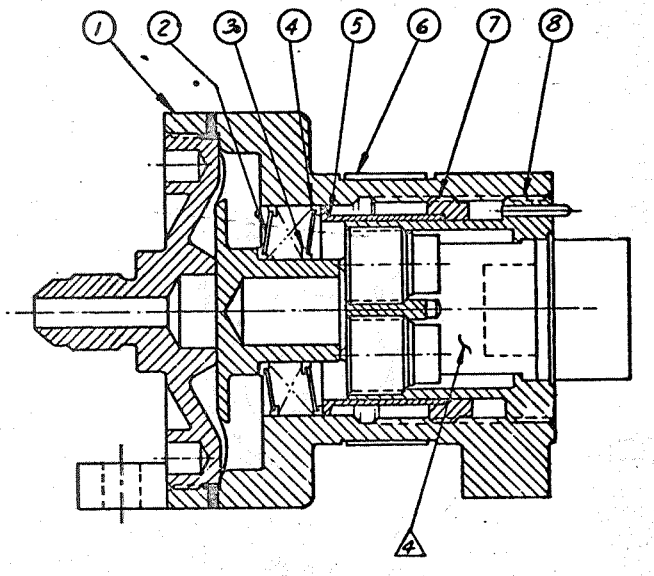

P8015-3

D

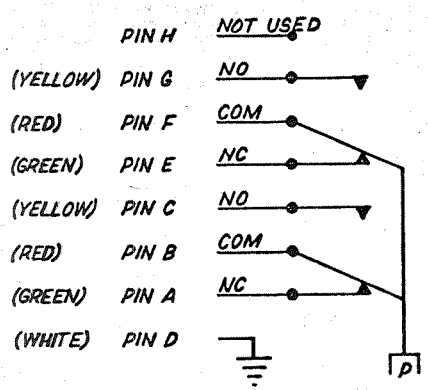

8	1	7604	ELEC ASSY
7	1	7516	RING-ADJUSTMENT
6	1	5017-8	NAMEPLATE
5	1	7568-3	RING-LOAD
4	4	7566	SPACER-OUTER
3	4	7565	SPACER-INNER
2	1	7754	B.V.ASSY
1	1	7614	BODY ASSY
	REQD.	PART NO.	DESCRIPTION

MATERIAL | MATL. SPEC.

LIST OF MATERIALS

NEXT ASSY | USED ON: 8015-3

APPLICATION

PREPARED FOR NASA

HEAT TREAT / FINISH

UNLESS OTHERWISE SPECIFIED

DRAWN E.A. 1-30-62

CHECKED

APPROVED

APPROVED V. LARSEN 1-31-62

MATL

TITLE SWITCH-ASSEMBLY

FREBANK COMPANY
GLENDALE CALIFORNIA

P8015-3

SCALE 2/1 | CODE EWF-ASA | MFG CODE 29097 | SHEET 1 OF 1

4. ELECTRICAL WIRING OMITTED FOR CLARITY.
3. FOR ASSEMBLY PROCEDURE USE A8015-3.
2. FOR TEST PROCEDURE USE T8015-3.
1. CUSTOMER-DAC.

NOTES:

P8015-6

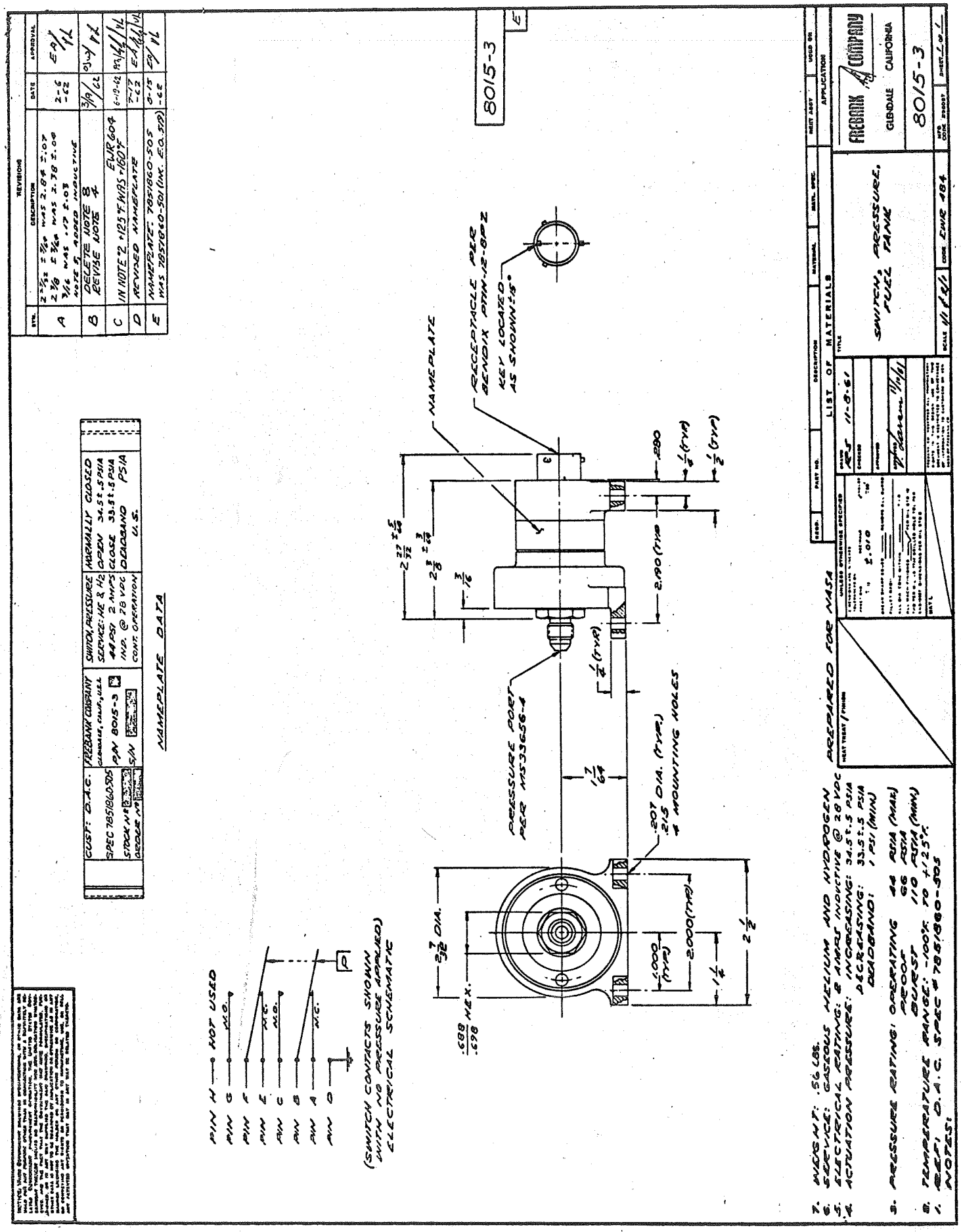
8015-3
NAMEPLATE
RECEPTACLE PER BENDIX PTIN-12-8PZ
KEY LOCATED AS SHOWN ±15°
PRESSURE PORT PER MS33656-4
.207 DIA. (TYP.) .215 4 MOUNTING HOLES
NAMEPLATE DATA
CUST: D.A.C.
SPEC 7851860-505
FREBANK COMPANY
P/N 8015-3
SWITCH, PRESSURE
SERVICE: HE & H2
44 PSI 2 AMPS
IND. @ 28 VDC
CONT. OPERATION
NORMALLY CLOSED
OPEN 34.5±.5 PSIA
CLOSE 33.5±.5 PSIA
DEADBAND PSIA
U.S.
PIN H — NOT USED
PIN G — N.O.
PIN F
PIN E — N.C.
PIN C — N.O.
PIN B
PIN A — N.C.
PIN D
(SWITCH CONTACTS SHOWN WITH NO PRESSURE APPLIED) ELECTRICAL SCHEMATIC
PREPARED FOR NASA
LIST OF MATERIALS
SWITCH, PRESSURE, FUEL TANK
FREBANK COMPANY
GLENDALE CALIFORNIA
8015-3
EWR 484
11-8-61
7. WEIGHT: .56 LBS.
6. SERVICE: GASEOUS HELIUM AND HYDROGEN
5. ELECTRICAL RATING: 2 AMPS INDUCTIVE @ 28 VDC
4. ACTUATION PRESSURE: INCREASING: 34.5±.5 PSIA
DECREASING: 33.5±.5 PSIA
DEADBAND: 1 PSI (MIN)
3. PRESSURE RATING: OPERATING 44 PSIA (MAX)
PROOF 66 PSIA
BURST 110 PSIA (MIN)
2. TEMPERATURE RANGE: -100°F. TO +125°F.
1. REF: D.A.C. SPEC # 7851860-505
NOTES:

Figure 2

TABLE 1

FUNCTIONAL TEST RESULTS FOR UNITS
SERIAL NO. 100, 101 & 102

TEST UNIT SERIAL NO. 100

TEST CONDITION	AMBIENT TEMPERATURE °F	INCREASING PRESSURE ACTUATION PSIA	DECREASING PRESSURE ACTUATION PSIA
REQUIREMENTS	-100 TO +125	34 - 35	33 - 34
INITIAL FUNCTION TEST	+78	34.1	33.0
		34.1	33.0
		34.1	33.0
		34.1	33.0
		34.1	33.0
HIGH TEMPERATURE TEST	+78	34.1	33.0
		34.1	33.0
		34.1	33.0
		34.1	33.0
		34.1	33.0
	+125	34.4	33.3
		34.4	33.3
		34.4	33.3
		34.4	33.3
		34.4	33.3
	+78	34.2	33.0
		34.2	33.0
		34.2	33.0
		34.2	33.0
		34.2	33.0

TABLE I (CONT'D.)
S/N 100

TEST CONDITION	AMBIENT TEMPERATURE °F	INCREASING PRESSURE ACTUATION PSIA	DECREASING PRESSURE ACTUATION PSIA
LOW TEMPERATURE TEST	-100	34.8	33.2
		34.8	33.2
		34.8	33.2
		34.8	33.2
		34.8	33.2
	+78	34.2	33.0
		34.1	33.0
		34.1	33.0
		34.1	33.0
		34.1	33.0
THERMAL SHOCK TEST	+125	34.4	33.3
		34.4	33.3
		34.4	33.3
		34.4	33.3
		34.4	33.3
	-100	34.6	33.2
		34.6	33.2
		34.6	33.2
		34.6	33.2
		34.6	33.2
	+78	34.2	33.0
		34.1	33.0
		34.1	33.0
		34.1	33.0
		34.1	33.0

VIBRATION

NOTE: Vibration test data on S/N 100, presented on pages 11 through 14 of Report No. R8015-3 have been deleted because the test was conducted in accordance with out-dated vibration requirements. See page No. SM-82 for vibration testing.

TABLE I (CONT'D.)
S/N 100

	AMBIENT TEMPERATURE °F	INCREASING PRESSURE ACTUATION PSIA	DECREASING PRESSURE ACTUATION PSIA
REPEAT FUNCTIONAL TEST	+78	34.2	33.2
		34.2	33.2
		34.2	33.2
		34.2	33.2
		34.2	33.2

TABLE 1

FUNCTIONAL TEST RESULTS FOR UNITS
SERIAL NO. 100, 101 & 102

TEST UNIT SERIAL NO. 101

TEST CONDITION	AMBIENT TEMPERATURE °F	INCREASING PRESSURE ACTUATION PSIA	DECREASING PRESSURE ACTUATION PSIA
REQUIREMENTS	-100 TO +125	34 - 35	33 - 34
INITIAL FUNCTION TEST	+78	34.0	33.0
		34.0	33.0
		34.0	33.0
		34.0	33.0
		34.0	33.0
HIGH TEMPERATURE TEST	+78	34.1	33.0
		34.1	33.0
		34.1	33.0
		34.1	33.0
		34.1	33.0
	+125	34.2	33.1
		34.2	33.1
		34.2	33.1
		34.2	33.1
		34.2	33.1
	+78	34.2	33.0
		34.0	33.0
		34.0	33.0
		34.0	33.0
		34.0	33.0

TABLE I (CONT'D.)
S/N 101

TEST CONDITION	AMBIENT TEMPERATURE °F	INCREASING PRESSURE ACTUATION PSIA	DECREASING PRESSURE ACTUATION PSIA
LOW TEMPERATURE TEST	-100	34.6	33.2
		34.5	33.2
		34.5	33.2
		34.5	33.2
		34.5	33.2
	+78	34.1	33.0
		34.0	33.0
		34.0	33.0
		34.0	33.0
		34.0	33.0
THERMAL SHOCK TEST	+125	34.2	33.1
		34.2	33.1
		34.2	33.1
		34.2	33.1
		34.2	33.1
	-100	34.6	33.3
		34.5	33.2
		34.5	33.2
		34.5	33.2
		34.5	33.2
	+78	34.1	33.0
		34.0	33.0
		34.0	33.0
		34.0	33.0
		34.0	33.0

VIBRATION

NOTE: Vibration test data on S/N 101, presented on pages 18 through 21 of Report No. R8015-3 have been deleted because the test was conducted in accordance with out-dated vibration requirements. See page No. SM-82 for vibration testing.

TABLE I (CONT'D.)
S/N 101

	AMBIENT TEMPERATURE °F	INCREASING PRESSURE ACTUATION PSIA	DECREASING PRESSURE ACTUATION PSIA
REPEAT FUNCTIONAL TEST	+78	34.1	33.0
		34.1	33.0
		34.1	33.0
		34.1	33.0
		34.1	33.0

TABLE 1

FUNCTIONAL TEST RESULTS FOR UNITS
SERIAL NO. 100, 101 & 102

TEST UNIT SERIAL NO. 102

TEST CONDITION	AMBIENT TEMPERATURE °F	INCREASING PRESSURE ACTUATION PSIA	DECREASING PRESSURE ACTUATION PSIA
REQUIREMENTS	-100 To +125	34 - 35	33 - 34
INITIAL FUNCTION TEST	+78	34.3	33.1
		34.3	33.1
		34.3	33.1
		34.3	33.1
		34.3	33.1
HIGH TEMPERATURE TEST	+78	34.3	33.1
		34.3	33.1
		34.3	33.1
		34.3	33.1
		34.3	33.1
	+125	34.3	33.0
		34.3	33.0
		34.3	33.0
		34.3	33.0
		34.3	33.0
	+78	34.3	33.1
		34.3	33.1
		34.3	33.1
		34.3	33.1
		34.3	33.1

TABLE I (CONT'D.)
S/N 102

TEST CONDITION	AMBIENT TEMPERATURE °F	INCREASING PRESSURE ACTUATION PSIA	DECREASING PRESSURE ACTUATION PSIA
LOW TEMPERATURE TEST	-100	34.8	33.1
		34.8	33.1
		34.8	33.1
		34.8	33.1
		34.8	33.1
	+78	34.3	33.1
		34.3	33.1
		34.3	33.1
		34.3	33.1
		34.3	33.1
THERMAL SHOCK TEST	+125	34.3	33.1
		34.3	33.1
		34.3	33.1
		34.3	33.1
		34.3	33.1
	-100	34.9	33.1
		34.8	33.1
		34.8	33.1
		34.8	33.1
		34.8	33.1
	+78	34.3	33.1
		34.3	33.1
		34.3	33.1
		34.3	33.1
		34.3	33.1

VIBRATION

NOTE: Vibration test data on S/N 102, presented on pages 25 through 28 of Report No. R8015-3 have been deleted because the test was conducted in accordance with out-dated vibration requirements. See page No. SM-82 for vibration testing.

TABLE I (CONT'D.)
S/N 102

	AMBIENT TEMPERATURE °F	INCREASING PRESSURE ACTUATION PSIA	DECREASING PRESSURE ACTUATION PSIA
REPEAT FUNCTIONAL TEST	+78	34.6	33.6
		34.6	33.6
		34.6	33.6
		34.6	33.6
		34.6	33.6

APPENDIX I

FREBANK COMPANY DESIGN EVALUATION TEST PROCEDURE Q8015-3 FOR FREBANK COMPANY PART NO. 8015-3 PRESSURE SWITCH REVISION "C"

FREBANK COMPANY
GLENDALE CALIFORNIA

Engineering Report

FREBANK COMPANY
DESIGN EVALUATION TEST PROCEDURE
Q8015-3
FOR FREBANK COMPANY PART NO.
8015-3

PRESSURE SWITCH
REVISION "C"

D.A.C. SPECIFICATION NO. 7851860-505 "L"

REV. "C" 6-20-62
REV. "B" DTD. 4-26-62
REV. "A" DTD. 3-26-62
DATE FEBRUARY 19, 1962

PREPARED E. P. Amormino
E.P. AMORMINO, TEST ENGINEER

CHECKED R. M. Frincke
R. M. FRINCKE, ENGR'G. LAB. SUPV'R.

APPROVED V. A. Larsen
V. A. LARSEN
CHIEF ENGINEER

STATE OF CALIFORNIA
COUNTY OF LOS ANGELES } ss.

_____, being duly sworn, deposes and says: That the information contained in this report is to the best of his knowledge true and correct in all respects.

_____

SUBSCRIBED and sworn to before me this _____ day of _____, 19___

_____
Notary Public in and for the County of Los Angeles, State of California

My commission expires _____ 19___

CONTRACT NO. _____

NO. PAGES -12-

◊ REVISION DATE	FREBANK COMPANY GLENDALE CALIFORNIA	REPORT NO. Q8015-3
"B" 4-26-62 "A" 3-26-62		PAGE 2

REVISIONS

REVISION "A" DTD. 3-26-62

REVISED TO CONFORM WITH DAC VIR M-38011

REVISED BY: W. L. Webster
W. L. WEBSTER, ENG. LAB.

CHECKED BY: R. M. Frincke
R. M. FRINCKE, ENG. LAB. SUPV'R.

APPROVED BY: V. A. Larsen
V. A. LARSEN, CHIEF ENG.

REVISION "B" DTD. 4-26-62

REVISED TO CONFORM WITH DAC VIR 38699

(DELETED PARA. 8.6 THERMAL SHOCK TEST)

"B

REVISED BY: W. L. Webster
W. L. WEBSTER, ENG. LAB.

CHECKED BY: R. M. Frincke
R. M. FRINCKE, ENG. LAB. SUPV'R.

APPROVED BY: V. A. Larsen
V. A. LARSEN, CHIEF ENG.

REVISION DATE	FREBANK COMPANY GLENDALE CALIFORNIA	REPORT NO. C8015-3
"C" 6-20-62		PAGE 2A

REVISIONS

REVISION "C" DTD. 6-20-62

REVISED TO CONFORM WITH DAC VIR M-39310
(CHANGED HIGH TEMPERATURE FROM +160°F TO +125°F,
PARAGRAPHS 3.0, 5.0 & 6.0) "C"

REVISED BY: W. L. Webster
W. L. WEBSTER, ENG. LAB.

CHECKED BY: R. M. Frincke
R. M. FRINCKE,
ENG. LAB. SUPV'R.

APPROVED BY: V. A. Larsen
V. A. LARSEN, CHIEF ENGINEER

TABLE OF CONTENTS

ITEM	PAGE
TITLE PAGE	1
REVISION PAGE	2 & 2A
TABLE OF CONTENTS	3
SUBJECT	4
REFERENCE	4
TEST SPECIMEN	4
TEST CONDITIONS	4
INSTRUMENT ACCURACIES	4
TEST PROCEDURE	4
1.0 FUNCTIONAL TESTS	5
2.0 PROOF TEST	5
3.0 HIGH TEMPERATURE	5
4.0 LOW TEMPERATURE	6
5.0 THERMAL SHOCK	6
6.0 VIBRATION	6
7.0 CONTACT MONITORING	7
8.0 STATEMENT OF SIMILARITY	7
9.0 FACILITIES	8
10.0 GENERAL NOTES	9
FIGURE 1. VIBRATION LEVEL CURVE	10
FIGURE 2. AXIS IDENTIFICATION	11
FIGURE 3. CONTACT MONITORING SYSTEM	12

"A"

SUBJECT:

DESIGN EVALUATION TESTS OF FREBANK COMPANY PART NO. 8015-3 PRESSURE SWITCH.

REFERENCE:

(A)
DOUGLAS AIRCRAFT COMPANY SPECIFICATION NO. 7851860-505 "C"
REVISION "L".

TEST SPECIMEN:

THREE (3) PRESSURE SWITCHES SHALL BE SUBJECTED TO THE PROGRAM AS SPECIFIED HEREIN. ONE (1) OF THESE SWITCHES MAY BE PROTOTYPE, BUT TWO (2) MUST BE PRODUCTION UNITS.

TEST CONDITIONS:

TEST MEDIUM: CLEAN DRY AIR AND GASEOUS HELIUM AS REQUIRED.

ELECTRICAL CAPACITY: 2 AMPERES INDUCTIVE AT 28 VOLTS D.C.
AMBIENT TEMPERATURE: 60°F TO 80°F UNLESS OTHERWISE SPECIFIED.
FLUID TEMPERATURE: 60°F TO 80°F UNLESS OTHERWISE SPECIFIED.

INSTRUMENT ACCURACIES:

CALIBRATION PRESSURE GAUGES: 1/5 PERCENT OF FULL SCALE READING.
TEMPERATURE RECORDER: ±5 DEGREES FAHRENHEIT.
ELECTRICAL METERS: +3 PERCENT OF FULL SCALE READING.

TEST PROCEDURE:

THE TEST PROGRAM IS TO BE CONDUCTED ON EACH UNIT IN THE ORDER SPECIFIED IN THE FOLLOWING PARAGRAPHS.

1.0 FUNCTIONAL TESTS: (REF. (A) PARA. 4.1.4)

USE CLEAN DRY AIR. RECORD THE FIRST 5 CYCLES OF PRESSURE SWITCH OPERATION OF EACH SERIES OF TESTS, AS REQUIRED BY THIS SPECIFICATION.

1.1 APPLY 32 PSIA TO PRESSURE PORT. THE SWITCH SHALL REMAIN OPEN BETWEEN PINS B AND C AND PINS F AND G.

1.2 INCREASE THIS PRESSURE TO 35 PSIA MAXIMUM. SWITCH SHALL CLOSE AT 34.5 ±.5 PSIA BETWEEN PINS B AND C AND PINS F AND G. THE RATE OF PRESSURE INCREASE FROM 32 PSIA TO ACTUATION SHALL BE APPROXIMATELY 5 PSI PER MINUTE.

ACTUATION PRESSURE OF THE FIRST CYCLE OF ANY SERIES OF TESTS SHALL BE WITHIN ±0.4 PSI OF THE ACTUATION PRESSURE OF THE SECOND CYCLE.

REPEATABILITY OF THIRD AND SUBSEQUENT ACTUATION POINTS SHALL BE WITHIN ±1 PERCENT OF THE SECOND CYCLE ACTUATION POINT.

1.3 DECREASE THE PRESSURE. SWITCH SHALL OPEN AT 33.5 ±.5 PSIA BETWEEN PINS B AND C AND PINS F AND G. THE RATE OF PRESSURE DECREASE FROM 35 PSIA TO DEACTUATION SHALL BE APPROXIMATELY 5 PSI PER MINUTE.

2.0 PROOF TEST: (REF. (A) PARA. 4.1.5) USE CLEAN DRY AIR.

2.1 APPLY 66 PSIA TO PRESSURE PORT. MAINTAIN PRESSURE FOR ONE (1) MINUTE. THERE SHALL BE NO VISUAL EVIDENCE OF DISTORTION OR FAILURE.

3.0 HIGH TEMPERATURE: (REF. (A) PARA. 4.1.9)

3.1 PLACE THE PRESSURE SWITCH WITHIN THE TEST CHAMBER AND STABILIZE AT ROOM AMBIENT TEMPERATURE. CONDUCT THE FUNCTIONAL TEST OF PARAGRAPHS 1.1, 1.2 AND 1.3.

3.2 WHILE CYCLING THE UNIT (A CYCLE SHALL CONSIST OF INCREASING AND DECREASING THE PRESSURE FROM 14.7 PSIA TO 35 PSIA TO 14.7 PSIA AT A RATE OF 3 CYCLES PER MINUTE MINIMUM. THE RATE OF PRESSURE INCREASE AND DECAY SHALL BE 50 PSI PER SECOND MINIMUM), THE TEMPERATURE OF THE CHAMBER SHALL BE INCREASED TO +125°F WITHIN TEN (10) MINUTES.

3.3 MAINTAIN THE TEMPERATURE AT +125°F FOR 15 MINUTES AND CONDUCT THE FUNCTIONAL TEST OF PARAGRAPHS 1.1, 1.2 AND 1.3.

3.4 STABILIZE THE PRESSURE SWITCH AT ROOM AMBIENT TEMPERATURE AND CONDUCT THE FUNCTIONAL TEST OF PARAGRAPHS 1.1, 1.2 AND 1.3.

NOTE: PRESSURE SWITCH OPERATION SHALL BE CONTINUOUS THROUGHOUT THE ENTIRE TEMPERATURE CYCLE. A RELATIVE HUMIDITY OF NOT MORE THAN 15 PERCENT SHALL BE MAINTAINED IN THE TEST CHAMBER.

4.0 LOW TEMPERATURE: (REF. (A) PARA. 4.1.10)

4.1 PLACE THE PRESSURE SWITCH WITHIN THE TEST CHAMBER AND STABILIZE AT -100°F.

4.2 MAINTAIN THE TEMPERATURE AT -100°F FOR FOUR (4) HOURS AND CONDUCT THE FUNCTIONAL TEST OF PARAGRAPHS 1.1, 1.2 AND 1.3.

4.3 STABILIZE THE PRESSURE SWITCH AT ROOM TEMPERATURE AND CONDUCT THE FUNCTIONAL TEST OF PARAGRAPHS 1.1, 1.2 AND 1.3.

5.0 THERMAL SHOCK: (REF. (A) PARA. 4.1.11)

5.1 PLACE THE PRESSURE SWITCH WITHIN THE TEST CHAMBER, STABILIZE AT +125°F AND CONDUCT THE FUNCTIONAL TEST OF PARAGRAPHS 1.1, 1.2 AND 1.3.

5.2 REDUCE THE TEMPERATURE OF -100°F AT THE RATE OF 30°F PER SECOND.

5.3 MAINTAIN THE UNIT AT -100°F FOR NOT LESS THAN 15 MINUTES AND CONDUCT THE FUNCTIONAL TEST OF PARAGRAPHS 1.1, 1.2 AND 1.3.

5.4 STABILIZE THE UNIT AT ROOM TEMPERATURE AND CONDUCT THE FUNCTIONAL TEST OF PARAGRAPHS 1.1, 1.2 AND 1.3.

6.0 VIBRATION: (REF. (A) PARA. 4.1.14)

(REFER TO FIGURE 2 FOR AXIS IDENTIFICATION).

6.1 THE PRESSURE SWITCH SHALL BE SUBJECTED TO THE VIBRATION LEVELS SHOWN IN FIGURE 1. THE TESTS ARE TO BE CONDUCTED USING A LOGARITHMIC OCTAVE SWEEP RATE WHICH SWEEPS WITHIN THE FREQUENCY LIMITS OF FIGURE 1 AT ONE (1) MINUTE PER OCTAVE. THE TEST DURATION SHALL BE 30 MINUTES AT -100°F., +125°F AND ROOM AMBIENT TEMPERATURE, IN EACH OF THREE (3) ORTHOGANAL AXES, ONE OF WHICH SHALL BE THE MOST SENSITIVE AXIS.

6.2 DURING AND FOLLOWING THE APPLICATION OF VIBRATION, CONDUCT THE FUNCTIONAL TEST OF PARAGRAPH 1.

7.0 CONTACT MONITORING: (REF. (A) PARA. 4.1.17)

7.1 THE PRESSURE SWITCH CONTACTS SHALL BE MONITORED DURING VIBRATION TO VERIFY THAT SUBSEQUENT TO SWITCH ACTUATION PER PARA. 1.2, THE CIRCUIT BETWEEN PINS B AND C AND PINS F AND G, DOES NOT OPEN UNTIL DEACTUATION PER PARA. 1.3 AND TO VERIFY THAT SUBSEQUENT TO SWITCH DEACTUATION PER PARA. 1.3 THE CIRCUIT BETWEEN PINS B AND C AND PINS F AND G, DOES NOT CLOSE UNTIL SWITCH ACTUATION PER PARA. 1.2. THE CONTACTS SHALL BE MONITORED ON A C.E.C. MODEL 5-116 RECORDING OSCILLOGRAPH USING GALVANOMETERS HAVING A RESPONSE OF 0 TO 2500 CPS.

NO CHATTER OF THE SWITCH CONTACTS IS ACCEPTABLE. REFER TO FIGURE 3 FOR A SCHEMATIC DIAGRAM SHOWING THE CONTACT MONITORING SYSTEM.

8.0 STATEMENT OF SIMILARITY:

FREBANK COMPANY PART NUMBER 4640-1 IS REQUIRED TO MEET THE DESIGN EVALUATION TEST REQUIREMENTS IN ACCORDANCE WITH D.A.C. SPECIFICATION 7851860-1. PART NUMBER 8015-3 IS REQUIRED TO MEET THE DESIGN EVALUATION TEST REQUIREMENTS IN ACCORDANCE WITH D.A.C. SPECIFICATION 7851860-505. PART NUMBER 8015-3 IS IDENTICAL TO PART NUMBER 4640-1 EXCEPT FOR THE PRESSURE SETTINGS AND THE QUALITY OF BELLEVILLE SPRINGS USED TO OBTAIN THE PRESSURE SETTINGS. THEREFORE, THE FOLLOWING TESTS CONDUCTED ON P/N 4640-1 CAN BE CONSIDERED EQUALLY APPLICABLE TO P/N 8015-3.

THE PRESSURE SETTINGS ARE PRESENTED FOR REFERENCE AS FOLLOWS:

PART NO.	SPEC. NO.	INCREASING PRESSURE PSIA	DECREASING PRESSURE PSIA
4640-1	7851860-1	31.5 ±.5	30.5 ±.5
8015-3	7851860-505	34.5 ±.5	33.5 ±.5

FOLLOWING, ARE THE TESTS THAT ARE ASSUMED TO BE EQUIVALENT ON THE BASIS OF SIMILARITY. THESE TESTS ARE LISTED IN THE ORDER IN WHICH THEY WERE CONDUCTED ON P/N 4640-1.

8.1 ACTUATION & DEACTUATION TIME: (REF. (A) PARA. 3.5.6.)

8.2 LEAK TEST: (REF. (A) PARA. 4.1.6)

8.3 DIELECTRIC STRENGTH TEST: (REF. (A) PARA. 4.1.7)

8.4 INSULATION RESISTANCE: (REF. (A) PARA. 4.1.8)

8.5 CONTACT RESISTANCE: (REF. (A) PARA. 3.4.4)

8.6 ALTITUDE TEMPERATURE: (REF. (A) PARA. 4.1.12)

8.7 ACCELERATION: (REF. (A) PARA. 4.1.13)

8.8 ACOUSTICS: (REF. (A) PARA. 4.1.15)

8.9 SHOCK: (REF. (A) PARA. 4.1.16)

8.10 SERVICE LIFE: (REF. (A) PARA. 4.1.18)

8.11 ACTUATION & DEACTUATION TIME: (REF. (A) PARA. 3.5.6)

8.12 PROOF TEST: (REF. (A) PARA. 4.1.5)

8.13 LEAK TEST: (REF. (A) PARA. 4.1.6)

8.14 DELECTRIC STRENGTH TEST: (REF. (A) PARA. 4.1.7)

8.15 INSULATION RESISTANCE: (REF. (A) PARA. 4.1.8)

8.16 CONTACT RESISTANCE: (REF. (A) PARA. 3.4.4)

8.17 BURST TEST: (REF. (A) PARA. 4.1.19)

9.0 FACILITIES:

FOLLOWING IS A DESCRIPTION OF THE TEST EQUIPMENT TO BE USED TO CONDUCT EACH TEST AS PROPOSED HEREIN.

9.1 FUNCTIONAL TESTS:

9.1.1 TEST STAND: FREBANK MODEL TE-146-1, 0-5000 PSI.

9.1.2 PRESSURE GAUGE: MARTIN-DECKER 0-600 PSI SERIAL NO. 969.

9.2 PROOF TEST:

9.2.1 TEST STAND: FREBANK MODEL TE-146-1, 0-5000 PSI.

9.3 HIGH TEMPERATURE, LOW TEMPERATURE & THERMAL SHOCK:

9.3.1 TEMPERATURE CHAMBER: WYLE MODEL DN104, RANGE -320°F TO +350°F.

9.3.2 TEST STAND: FREBANK MODEL TE-146-1, 0-5000 PSI.

9.3.3 PRESSURE GAUGE: MARTIN-DECKER 0-600 PSI, SERIAL NO. 969.

9.4 VIBRATION:

9.4.1 VIBRATION EQUIPMENT: M.B. MODEL T-51-MC AMPLIFIER, MODEL C-10 EXCITER, MODEL M3 VIBRATION METER.

9.4.2 TEST STAND: FREBANK MODEL TE 146-1, 0-5000 PSI.

9.4.3 PRESSURE GAUGE: MARTIN-DECKER 0-600 PSI, SERIAL NO. 969.

9.4.4 TEMPERATURE CHAMBER MANTEC MODEL EP 125 RANGE -320 TO +600°F.

9.4.5 RECORDING OSCILLOGRAPH: C.E.C. MODEL 5-116, GALVANOMETER RESPONSE 0-2500 CPS.

9.4.6 PRESSURE TRANSDUCER: STATHAM INSTRUMENTS 0-500 PSI, MODEL PG10TC-500-350.

10.0 GENERAL NOTES:

10.1 THE REPORT SHALL BE COMPILED IN A MANNER CONSISTENT WITH CONVENTIONAL ENGINEERING REPORT FORM.

10.2 THE REPORT SHALL DESCRIBE THE TEST METHOD AND CONDITION AND FULLY SUMMARIZE THE TEST RESULTS AND ANY FAILURES OR LIMITATIONS ENCOUNTERED. A DESCRIPTION OF TEST EQUIPMENT AND PHOTOGRAPHS OF TEST SETUPS SHALL ALSO BE INCLUDED.

10.3 THE REPORT SHALL INCLUDE THIS TEST PROCEDURE.

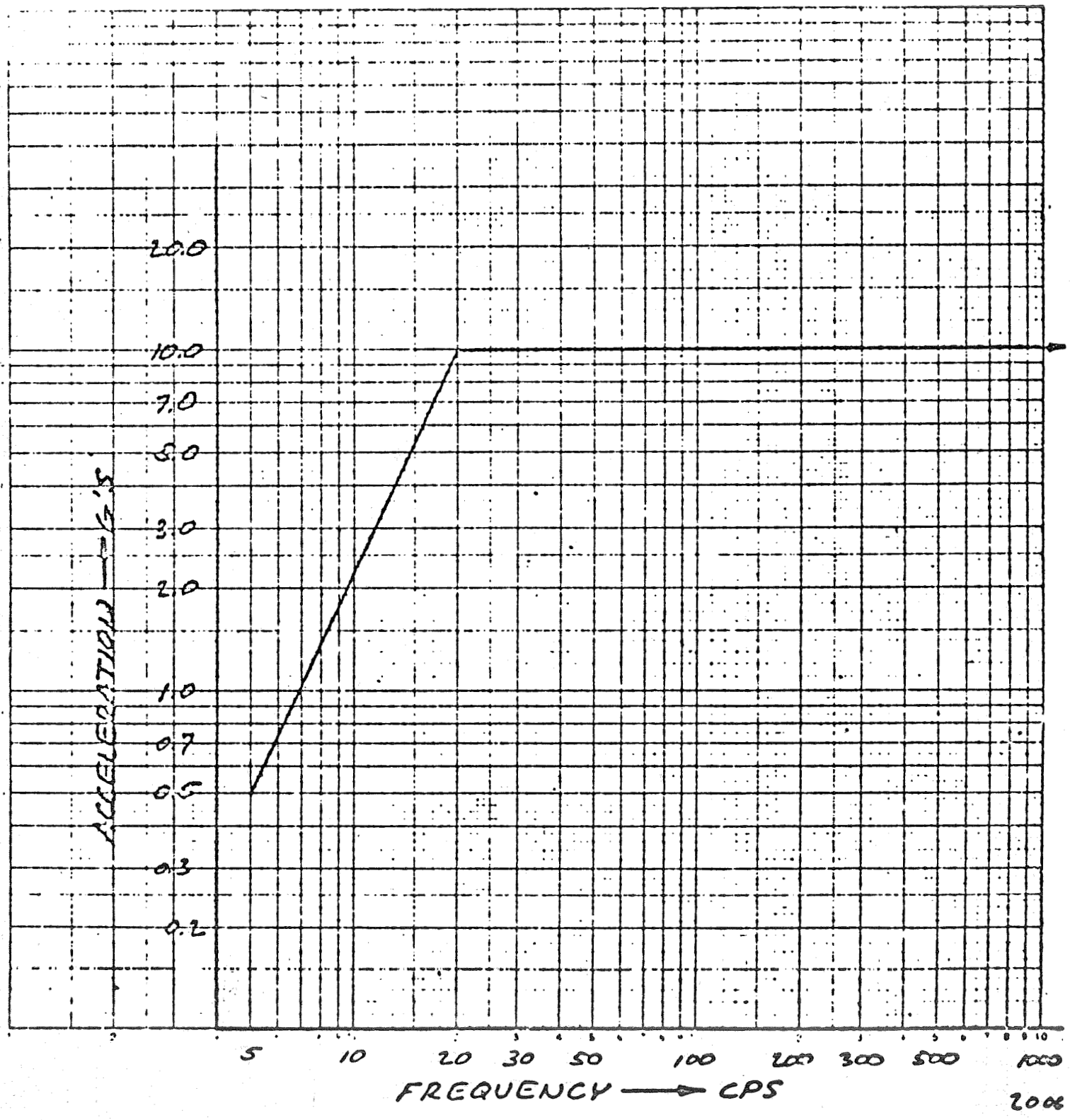

VIBRATION LEVEL CURVE

FIGURE 1

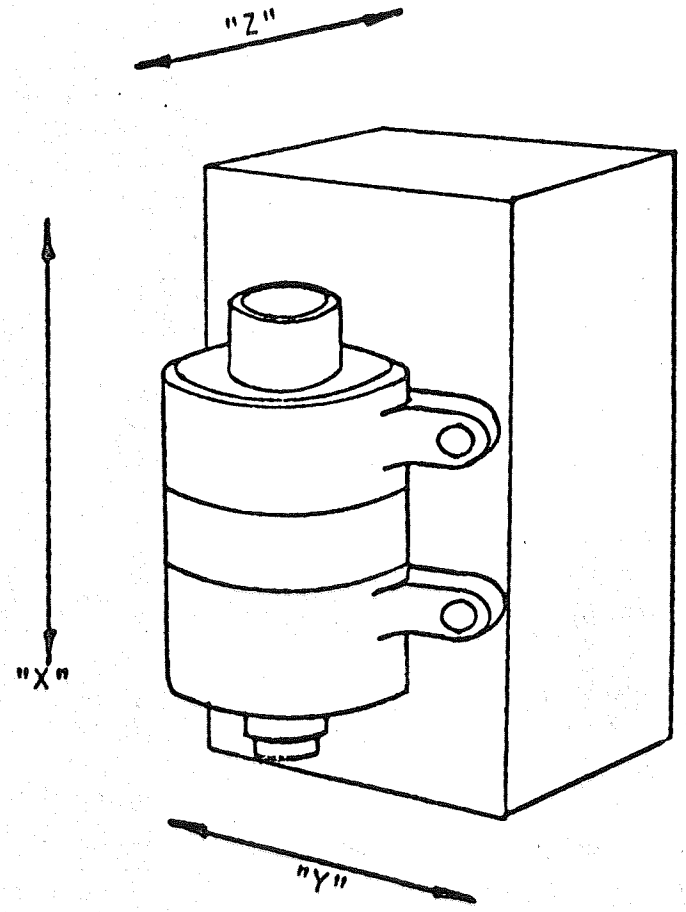

"X" - MOST SENSITIVE AXIS
"Y" - ORTHOGONAL AXIS (1)
"Z" - ORTHOGONAL AXIS (2)

AXIS IDENTIFICATION

FIGURE 2.

REVISION DATE

FREDARK COMPANY
GLENDALE CALIFORNIA

REPORT NO. 08015-3

PAGE 12

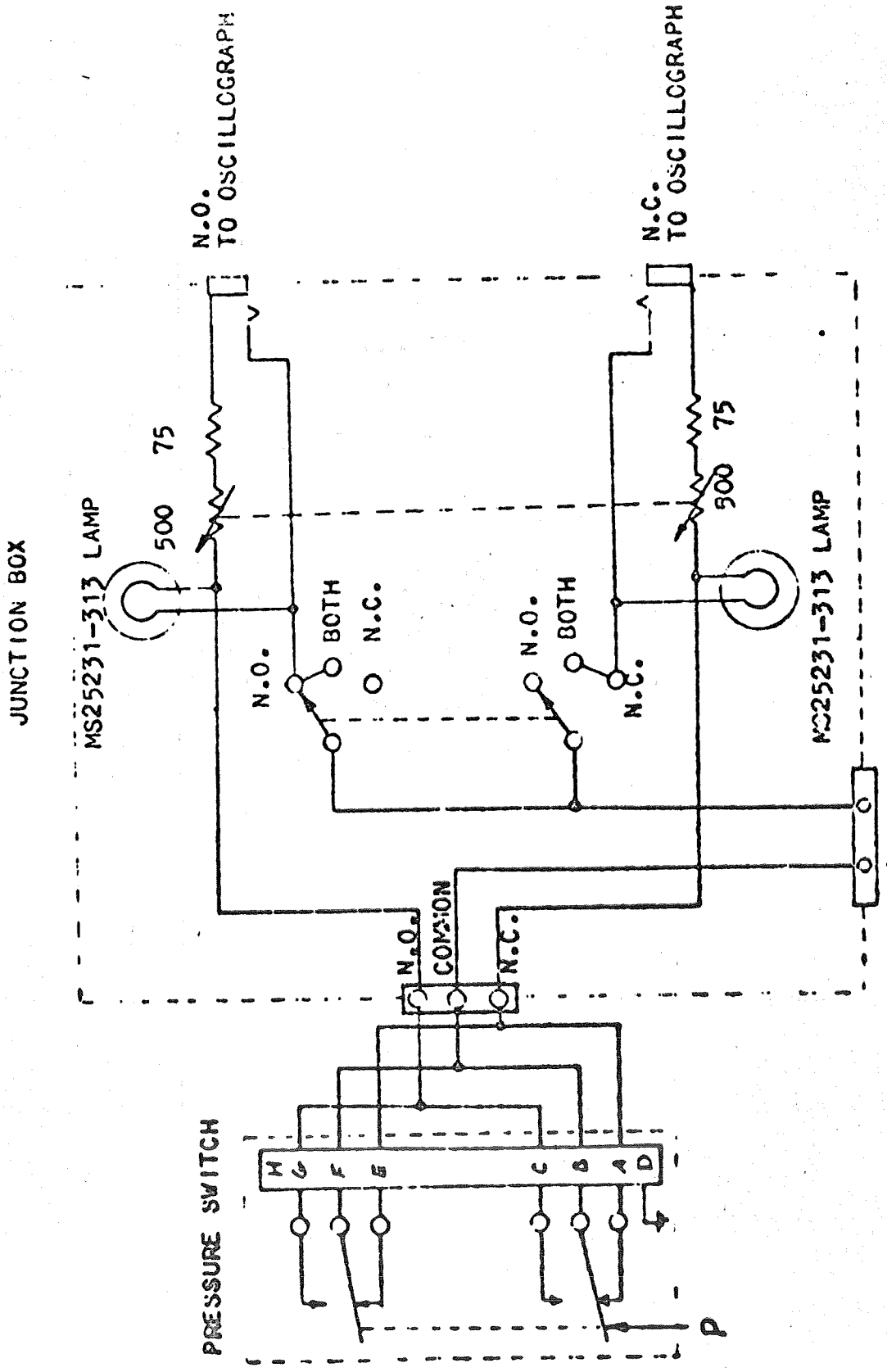

CONTACT MONITORING SYSTEM
FIGURE 3.

REVISION DATE	FREBANK COMPANY GLENDALE CALIFORNIA	VTR-8015-3
		PAGE 0.0

ADDENDUM 1

TO FREBANK COMPANY

ENGINEERING REPORT

R8015-3

VIBRATION TEST REPORT

FOR

FREBANK COMPANY PART NUMBER

8015-3

PRESSURE SWITCH

FREBANK COMPANY
GLENDALE CALIFORNIA

Engineering Report

VIBRATION TEST REPORT

FOR

PART NUMBER 8015-3

PRESSURE SWITCH

DAC SPECIFICATION No. 7851860-505

DATE APRIL 29, 1963

PREPARED R. M. Frincke
R. M. FRINCKE, ENGR'G. LAB. SUPV'R.

CHECKED C. R. Willis
C. R. WILLIS, PROJECT ENGINEER

APPROVED Charles F. Beck, Jr.
CHARLES F. BECK, JR.
CHIEF ENGINEER

STATE OF CALIFORNIA
COUNTY OF LOS ANGELES } ss.

CHARLES F. BECK, JR. being duly sworn, deposes and says: That the information contained in this report is to the best of his knowledge true and correct in all respects.

Charles F. Beck, Jr.

SUBSCRIBED and sworn to before me this 30th day of April, 1963

Elizabeth K. Viggers
Notary Public in and for the County of Los Angeles, State of California

My commission expires November 8, 1963

U. P. Egge AFDOR

CONTRACT NO.

NO. PAGES -29-

REVISION DATE	FREBANK COMPANY GLENDALE, CALIFORNIA	VTR-8015-3 PAGE 2.0

REVISIONS

TABLE OF CONTENTS

		PAGE
1.0	PURPOSE	4.0
2.0	REFERENCE	4.0
3.0	DESCRIPTION OF TEST SPECIMEN	4.0
4.0	REQUIREMENTS	4.0
5.0	TEST PROCEDURE AND RESULTS	4.0
	5.1 FUNCTIONAL TEST	4.0
	5.2 VIBRATION TEST	5.0
	5.3 CONTACT MONITORING TEST	6.0

TABLE

I	VIBRATION TEST RESULTS FOR UNITS, SERIAL No.'s 119 AND 120.	7.0

APPENDIX I

	FREBANK COMPANY VIBRATION TEST PROCEDURE FOR FREBANK COMPANY PART NUMBER 8015-3 PRESSURE SWITCH	19.0

1.0 PURPOSE

TO PRESENT THE RESULTS OF THE VIBRATION TEST PROGRAM CONDUCTED ON FREBANK PRESSURE SWITCH PART NUMBER 8015-3. THIS TEST PROGRAM WAS CONDUCTED IN ACCORDANCE WITH FREBANK COMPANY VIBRATION TEST PROCEDURE FOR FREBANK COMPANY PART NUMBER 8015-3 PRESSURE SWITCH.

2.0 REFERENCE

DOUGLAS AIRCRAFT COMPANY SPECIFICATION 7851860-505 "N".

3.0 DESCRIPTION OF TEST SPECIMEN

TWO (2) PRODUCTION UNITS, PART NUMBER 8015-3 SERIAL NUMBERS 119 & 120 WERE SUBJECTED TO THE REQUIRED TEST PROGRAM.

4.0 REQUIREMENTS

THE VIBRATION TEST REQUIREMENTS WERE CONDUCTED IN ACCORDANCE WITH FREBANK COMPANY VIBRATION TEST PROCEDURE FOR FREBANK COMPANY PART NUMBER 8015-3 PRESSURE SWITCH.

5.0 TEST PROCEDURE AND RESULTS

5.1 FUNCTIONAL TEST

A TEST STAND USING CLEAN DRY AIR AS THE TEST MEDIUM, EMPLOYING A 12-INCH DIAMETER BOURDON TUBE GAUGE WITH 0.2 PSI MINIMUM GRADUATIONS AND A FULL SCALE ACCURACY OF 1/5 PERCENT WAS USED FOR THE OBSERVATION OF THE PRESSURE SETTINGS. A SIGNAL LIGHT CIRCUIT WITH A 2 AMPERE INDUCTIVE LOAD AT 28 VDC WAS USED IN CONJUNCTION WITH THE GAUGE TO INDICATE PRESSURE SWITCH ACTUATION.

THE UNIT UNDER TEST WAS CONNECTED TO THIS TEST STAND AND THE APPLIED PRESSURE WAS INCREASED AND DECREASED FROM 14.7 PSIA TO THE POINT OF PRESSURE SWITCH ACTUATION TO 14.7 PSIA. THE RATE OF INCREASE FROM 32 PSIA TO ACTUATION AND RATE OF DECREASE FROM 35 PSIA TO DE-ACTUATION WAS APPROXIMATELY 5 PSI PER MINUTE. THE PRESSURES AT WHICH THE CIRCUITS BECAME ENERGIZED AND DE-ENERGIZED WERE OBSERVED. BOTH TEST UNITS SUCCESSFULLY COMPLETED THE FUNCTIONAL TEST AND THE FIRST FIVE (5) CYCLES OF THE TEST RESULTS ARE RECORDED IN TABLE I.

5.2 VIBRATION TEST

THE TEST WAS CONDUCTED USING THE SAME EQUIPMENT AS THE FUNCTIONAL TEST IN CONJUNCTION WITH A MANTEC MODEL EP125 TEMPERATURE CHAMBER, RANGE -320°F TO +600°F, M.B. MODEL T-51-MC AMPLIFIER, MODEL C-10 EXCITOR AND MODEL M3 VIBRATION METER. THE TESTS WERE CONDUCTED USING A LOGARITHMIC OCTAVE SWEEP RATE WITHIN THE FREQUENCY LIMITS OF FIGURE 1, OF APPENDIX I, AT APPROXIMATELY 3.5 MINUTES PER OCTAVE, WITH A PAUSE AT THE END OF EACH OCTAVE TO CONDUCT A ONE (1) CYCLE FUNCTIONAL TEST. THE TEST DURATION WAS ONE HOUR IN EACH OF THE THREE ORTHOGONAL AXES, SHOWN IN FIGURE 2 OF APPENDIX I, AT -100°F, +125°F AND ROOM AMBIENT TEMPERATURE. THIS MADE A TOTAL OF NINE HOURS FOR EACH UNIT UNDER VIBRATORY CONDITIONS. DURING AND FOLLOWING THE VIBRATION TEST, PRESSURE SETTINGS WERE CHECKED IN ACCORDANCE WITH PARA. 5.1 AT OCTAVE INTERVALS OF 5, 10, 20, 40, 80, 160,

320, 640, 1280, AND 2000 CPS. THE RESULTS ARE RECORDED IN TABLE 1.

NO APPARENT RESONANCES WERE ENCOUNTERED DURING VIBRATION.

NO SWITCH CHATTER OCCURRED AT ANY TIME DURING THE VIBRATION TEST.

5.3 CONTACT MONITORING TEST

DURING THE VIBRATION TEST, THE CONTACTS WERE MONITORED USING A C.E.C. MODEL 5-116 RECORDING OSCILLOGRAPH USING GALVANOMETERS HAVING A 0 TO 2500 CPS RESPONSE RATE.

THE RESULTS OF THE CONTACT MONITORING TEST ARE REPORTED IN PARAGRAPH 5.2.

TABLE I

VIBRATION TEST RESULTS FOR

TEST UNIT SERIAL NO. 119

TEST CONDITION		AMBIENT TEMPERATURE °F	INCREASING PRESSURE ACTUATION PSIA	DECREASING PRESSURE ACTUATION PSIA
REQUIREMENTS		-100 To +125	34.0 - 35.0	33.0 - 34.0
INITIAL FUNCTION TEST		+78	34.5	33.1
			34.5	33.1
			34.5	33.1
			34.5	33.1
			34.5	33.1
VIBRATION TEST				
FREQUENCY (CPS)	AXIS			
5	X	-100	34.8	33.3
10			34.8	33.3
20			34.8	33.3
40			34.8	33.3
80			34.8	33.3
160			34.8	33.4
320			34.9	33.4
640			34.9	33.4
1280			34.8	33.4
2000			34.9	33.4

TABLE I (CONT'D.)

S/N 119

VIBRATION TEST FREQUENCY (CPS)	AXIS	AMBIENT TEMPERATURE °F	INCREASING PRESSURE ACTUATION PSIA	DECREASING PRESSURE ACTUATION PSIA
5	Y	-100	35.0	33.2
10			35.0	33.3
20			35.0	33.3
40			35.0	33.3
80			35.0	33.3
160			34.9	33.4
320			34.9	33.4
640			34.9	33.4
1280			34.9	33.3
2000			34.9	33.3
5	Z	-100	35.0	33.3
10			35.0	33.3
20			35.0	33.3
40			35.0	33.3
80			35.0	33.3
160			35.0	33.4
320			35.0	33.3
640			35.0	33.3
1280			35.0	33.3
2000			35.0	33.3

TABLE I (CONT'D.)

S/N 119

		AMBIENT TEMPERATURE °F	INCREASING PRESSURE ACTUATION PSIA	DECREASING PRESSURE ACTUATION PSIA
VIBRATION TEST				
FREQUENCY (CPS)	AXIS			
5	X	+78	34.6	33.2
10			34.6	33.2
20			34.6	33.2
40			34.6	33.2
80			34.6	33.2
160			34.6	33.2
320			34.4	33.3
640			34.4	33.3
1280			34.4	33.2
2000			34.5	33.2
5	Y	+78	34.6	33.1
10			34.6	33.1
20			34.6	33.1
40			34.6	33.1
80			34.6	33.2
160			34.6	33.2
320			34.6	33.2
640			34.6	33.2
1280			34.6	33.2
2000			34.6	33.2

TABLE ' (CONT'D.)

S/N 119

		AMBIENT TEMPERATURE °F	INCREASING PRESSURE ACTUATION PSIA	DECREASING PRESSURE ACTUATION PSIA
VIBRATION TEST				
FREQUENCY (CPS)	AXIS			
5	Z	+78	34.7	33.2
10			34.7	33.2
20			34.7	33.2
40			34.7	33.2
80			34.7	33.2
160			34.7	33.2
320			34.7	33.2
640			34.7	33.2
1280			34.7	33.2
2000			34.7	33.2
5	X	+125	34.7	33.2
10			34.7	33.2
20			34.6	33.3
40			34.7	33.3
80			34.7	33.3
160			34.6	33.4
320			34.5	33.5
640			34.5	33.5
1280			34.5	33.5
2000			34.5	33.5

TABLE I (CONT'D.)

S/N 119

VIBRATION TEST FREQUENCY (CPS)	AXIS	AMBIENT TEMPERATURE °F	INCREASING PRESSURE ACTUATION PSIA	DECREASING PRESSURE ACTUATION PSIA
5	Y	+125	34.6	33.3
10			34.5	33.3
20			34.5	33.3
40			34.5	33.3
80			34.5	33.3
160			34.5	33.3
320			34.5	33.3
640			34.5	33.3
1280			34.5	33.3
2000			34.5	33.3
5	Z	+125	34.5	33.3
10			34.5	33.3
20			34.5	33.3
40			34.5	33.3
80			34.5	33.3
160			34.5	33.3
320			34.5	33.3
640			34.5	33.3
1280			34.5	33.2
2000			34.5	33.2

TABLE I (CONT'D.)

S/N 119

TEST CONDITION	AMBIENT TEMPERATURE °F	INCREASING PRESSURE ACTUATION PSIA	DECREASING PRESSURE ACTUATION PSIA
FUNCTIONAL TEST FOLLOWING VIBRATION TEST	+78	34.5	33.3
		34.5	33.2
		34.5	33.2
		34.5	33.2
		34.5	33.2

FREDRIK COMPANY
REVISION DATE

TABLE I

VIBRATION TEST RESULTS FOR

TEST UNIT SERIAL NO. 120

TEST CONDITION		AMBIENT TEMPERATURE °F	INCREASING PRESSURE ACTUATION PSIA	DECREASING PRESSURE ACTUATION PSIA
REQUIREMENTS		-100 To +125	34.0 - 35.0	33.0 - 34.0
INITIAL FUNCTION TEST		+78	34.8	33.3
			34.7	33.3
			34.7	33.3
			34.7	33.3
			34.7	33.3
VIBRATION TEST				
FREQUENCY (CPS)	AXIS			
5	X	-100	35.0	33.3
10			35.0	33.4
20			35.0	33.4
40			35.0	33.4
80			35.0	33.4
160			35.0	33.5
320			35.0	33.4
640			35.0	33.5
1280			34.8	33.6
2000			34.9	33.4

TABLE I (CONT'D.)

S/N 120

VIBRATION TEST FREQUENCY (CPS)	AXIS	AMBIENT TEMPERATURE °F	INCREASING PRESSURE ACTUATION PSIA	DECREASING PRESSURE ACTUATION PSIA
5	Y	-100	35.0	33.2
10			35.0	33.2
20			35.0	33.2
40			35.0	33.2
80			35.0	33.3
160			35.0	33.3
320			35.0	33.3
640			35.0	33.3
1280			35.0	33.2
2000			35.0	33.2
5	Z	-100	35.0	33.2
10			35.0	33.2
20			35.0	33.2
40			35.0	33.2
80			35.0	33.2
160			35.0	33.4
320			35.0	33.3
640			35.0	33.3
1280			35.0	33.3
2000			35.0	33.2

TABLE I (CONT'D.)

S/N 120

VIBRATION TEST FREQUENCY (CPS)	AXIS	AMBIENT TEMPERATURE °F	INCREASING PRESSURE ACTUATION PSIA	DECREASING PRESSURE ACTUATION PSIA
5	X	+78	34.6	33.1
10			34.6	33.1
20			34.6	33.1
40			34.6	33.2
80			34.6	33.2
160			34.6	33.2
320			34.4	33.3
640			34.4	33.3
1280			34.4	33.3
2000			34.4	33.2
5	Y	+78	34.7	33.1
10			34.6	33.1
20			34.6	33.1
40			34.6	33.1
80			34.6	33.1
160			34.6	33.1
320			34.6	33.1
640			34.6	33.2
1280			34.6	33.1
2000			34.6	33.1

TABLE I (CONT'D.)

S/N 120.

VIBRATION TEST FREQUENCY (CPS)	AXIS	AMBIENT TEMPERATURE °F	INCREASING PRESSURE ACTUATION PSIA	DECREASING PRESSURE ACTUATION PSIA
5	Z	+78	34.7	33.1
10			34.7	33.1
20			34.7	33.1
40			34.7	33.1
80			34.7	33.2
160			34.6	33.2
320			34.6	33.2
640			34.6	33.1
1280			34.6	33.1
2000			34.6	33.1
5	X	+125	34.7	33.3
10			34.7	33.3
20			34.7	33.3
40			34.7	33.3
80			34.7	33.3
160			34.6	33.4
320			34.5	33.5
640			34.8	33.8
1280			34.8	33.8
2000			34.8	33.8

TABLE I (CONT'D.)

S/N 120

VIBRATION TEST FREQUENCY (CPS)	AXIS	AMBIENT TEMPERATURE °F	INCREASING PRESSURE ACTUATION PSIA	DECREASING PRESSURE ACTUATION PSIA
5	Y	+125	35.0	33.6
10			34.9	33.5
20			34.9	33.6
40			34.9	33.5
80			34.9	33.5
160			34.9	33.6
320			34.9	33.6
640			34.9	33.6
1280			34.8	33.7
2000			34.8	33.7
5	Z	+125	34.9	33.6
10			34.9	33.6
20			34.9	33.6
40			34.9	33.6
80			34.9	33.6
160			34.9	33.6
320			34.9	33.6
640			34.9	33.6
1280			34.9	33.7
2000			34.8	33.7

TABLE I (CONT'D.)

S/N 120

TEST CONDITION	AMBIENT TEMPERATURE °F	INCREASING PRESSURE ACTUATION PSIA	DECREASING PRESSURE ACTUATION PSIA
FUNCTIONAL TEST FOLLOWING VIBRATION TEST	+78	34.9	33.7
		34.8	33.6
		34.8	33.6
		34.8	33.6
		34.8	33.6

APPENDIX I

FREBANK COMPANY

VIBRATION TEST PROCEDURE

FOR FREBANK COMPANY

PART NUMBER 8015-3

PRESSURE SWITCH

FREBANK COMPANY
GLENDALE CALIFORNIA

Engineering Report

FREBANK COMPANY
VIBRATION TEST PROCEDURE

FOR FREBANK COMPANY PART NO.
8015-3

PRESSURE SWITCH

DAC SPECIFICATION NO. 7851860-505

DATE MARCH 27, 1963

PREPARED R. M. Frincke
R. M. FRINCKE, ENGR'G. LAB. SUPV'R.

CHECKED C. R. Willis
C. R. WILLIS, PROJECT ENGINEER

APPROVED
C. F. BECK, JR.
CHIEF ENGINEER

STATE OF CALIFORNIA
COUNTY OF LOS ANGELES } ss

, being duly sworn, deposes and says: That the information contained in this report is to the best of his knowledge true and correct in all respects.

SUBSCRIBED and sworn to before me this day of 19

Notary Public in and for the County of Los Angeles, State of California

My commission expires 19

CONTRACT NO.

NO. PAGES -10-

REVISION DATE	FREBANK COMPANY	5-3
		PAGE 2.

REVISIONS

TABLE OF CONTENTS

		PAGE
	SUBJECT	4.0
	REFERENCE	4.0
	TEST SPECIMEN	4.0
	TEST CONDITIONS	4.0
	TEST MEDIUM	4.0
	INSTRUMENT ACCURACIES	4.0
	TEST PROCEDURE	5.0
1.0	FUNCTIONAL TESTS	5.0
2.0	VIBRATION	6.0
3.0	CONTACT MONITORING	6.0
4.0	GENERAL NOTES	7.0

FIGURES

1.	VIBRATION LEVEL CURVE	8.0
2.	AXIS IDENTIFICATION	9.0
3.	CONTACT MONITORING SYSTEM	10.0

SUBJECT

VIBRATION TESTS OF FREBANK COMPANY PART NUMBER 8015-3 PRESSURE SWITCH.

REFERENCE

(A)

DOUGLAS AIRCRAFT COMPANY SPECIFICATION NO. 7851860-505

TEST SPECIMEN

TWO (2) PRESSURE SWITCHES SHALL BE SUBJECTED TO THE PROGRAM AS SPECIFIED HEREIN. BOTH OF THESE SWITCHES MUST BE PRODUCTION UNITS.

TEST CONDITIONS

TEST MEDIUM

CLEAN DRY AIR AND GASEOUS HELIUM AS REQUIRED.

ELECTRICAL CAPACITY:	2 AMPERES INDUCTIVE AT 28 VOLTS D.C.
AMBIENT TEMPERATURE:	60°F. TO 80°F. UNLESS OTHERWISE SPECIFIED
FLUID TEMPERATURE:	60°F. TO 80°F. UNLESS OTHERWISE SPECIFIED.

INSTRUMENT ACCURACIES

CALIBRATION PRESSURE GAUGES:	1/5 PERCENT OF FULL SCALE READING.
TEMPERATURE RECORDER:	±5 DEGREES FAHRENHEIT.
ELECTRICAL METERS:	±3 PERCENT OF FULL SCALE READING.

TEST PROCEDURE

THE TEST PROGRAM IS TO BE CONDUCTED ON EACH UNIT IN THE ORDER SPECIFIED IN THE FOLLOWING PARAGRAPHS.

1.0 FUNCTIONAL TESTS (REF. (A) PARA. 4.1.4)

USE CLEAN DRY AIR. RECORD THE FIRST FIVE (5) CYCLES OF PRESSURE SWITCH OPERATION OF EACH SERIES OF TESTS, AS REQUIRED BY THIS SPECIFICATION.

1.1

APPLY 32 PSIA TO PRESSURE PORT. THE SWITCH SHALL REMAIN OPEN BETWEEN PINS B AND C AND PINS F AND G.

1.2

INCREASE THE PRESSURE TO 35 PSIA MAXIMUM. THE SWITCH SHALL CLOSE AT 34.5±.5 PSIA BETWEEN PINS B AND C AND PINS F AND G. THE RATE OF PRESSURE INCREASE FROM 32 PSIA TO ACTUATION SHALL BE APPROXIMATELY 5 PSI PER MINUTE.

ACTUATION PRESSURE OF THE FIRST CYCLE OF ANY SERIES OF TESTS SHALL BE WITHIN ±0.4PSI OF THE ACTUATION PRESSURE OF THE SECOND CYCLE.

REPEATABILITY OF THIRD AND SUBSEQUENT ACTUATION POINTS SHALL BE WITHIN ±1 PERCENT OF THE SECOND CYCLE ACTUATION POINT.

1.3

DECREASE THE PRESSURE. THE SWITCH SHALL OPEN AT 33.5±.5 PSIA

BETWEEN PINS B AND C AND PINS F AND G. THE RATE OF PRESSURE DECREASE FROM 35 PSIA TO DEACTUATION SHALL BE APPROXIMATELY 5 PSI PER MINUTE.

2.0 VIBRATION (REF. (A) PARA. 4.1.14)

(REFER TO FIGURE 2 FOR AXIS IDENTIFICATION).

2.1

THE PRESSURE SWITCH SHALL BE MOUNTED TO FIXTURE TE-317, INSTALLED ON A VIBRATION EXCITER AND SUBJECTED TO THE LEVELS SHOWN IN FIGURE 1. THE TESTS SHALL BE CONDUCTED USING A LOGARITHMIC SWEEP RATE OF 3.5 MINUTES PER OCTAVE. THE TEST DURATION SHALL BE ONE (1) HOUR IN EACH OF THE THREE (3) ORTHOGANAL AXES, ONE OF WHICH SHALL BE THE MOST SENSITIVE AXIS, AT -100 ROOM AMBIENT TEMPERATURE, AND +125°F. TOTAL VIBRATION TIME SHALL BE 9 HOURS FOR EACH PRESSURE SWITCH.

2.2

THE UNIT SHALL BE MONITORED FOR EVIDENCE OF ANY RESONANCE. ALL RESONANCES SHALL BE RECORDED.

2.3

DURING AND FOLLOWING THE APPLICATION OF VIBRATION, CONDUCT THE FUNCTIONAL TEST OF PARAGRAPH 1.

3.0 CONTACT MONITORING (REF. (A) PARA. 4.1.17)

3.1

THE PRESSURE SWITCH CONTACTS SHALL BE MONITORED DURING

VIBRATION TO VERIFY THAT SUBSEQUENT TO SWITCH ACTUATION PER PARA. 1.2, THE CIRCUIT BETWEEN PINS B AND C AND PINS F AND G, DOES NOT OPEN UNTIL DEACTUATION PER PARA. 1.3 AND TO VERIFY THAT SUBSEQUENT TO SWITCH DEACTUATION PER PARA. 1.3 THE CIRCUIT BETWEEN PINS B AND C AND PINS F AND G, DOES NOT CLOSE UNTIL SWITCH ACTUATION PER PARA. 1.2. THE CONTACTS SHALL BE MONITORED ON A C.E.C. MODEL 5-116 RECORDING OSCILLOGRAPH USING GALVANOMETERS HAVING A RESPONSE TO 0 TO 2500 CPS.

NO CHATTER OF THE SWITCH CONTACTS IS ACCEPTABLE. REFER TO FIGURE 3 FOR A SCHEMATIC DIAGRAM SHOWING THE CONTACT MONITORING SYSTEM.

4.0 GENERAL NOTES

4.1

THE REPORT SHALL BE COMPILED IN A MANNER CONSISTENT WITH CONVENTIONAL ENGINEERING REPORT FORM.

4.2

THE REPORT SHALL DESCRIBE THE TEST METHOD AND CONDITION AND FULLY SUMMARIZE THE TEST RESULTS AND ANY FAILURES OR LIMITATIONS ENCOUNTERED. A DESCRIPTION OF TEST EQUIPMENT SHALL ALSO BE INCLUDED.

4.3

THE REPORT SHALL INCLUDE THIS TEST PROCEDURE.

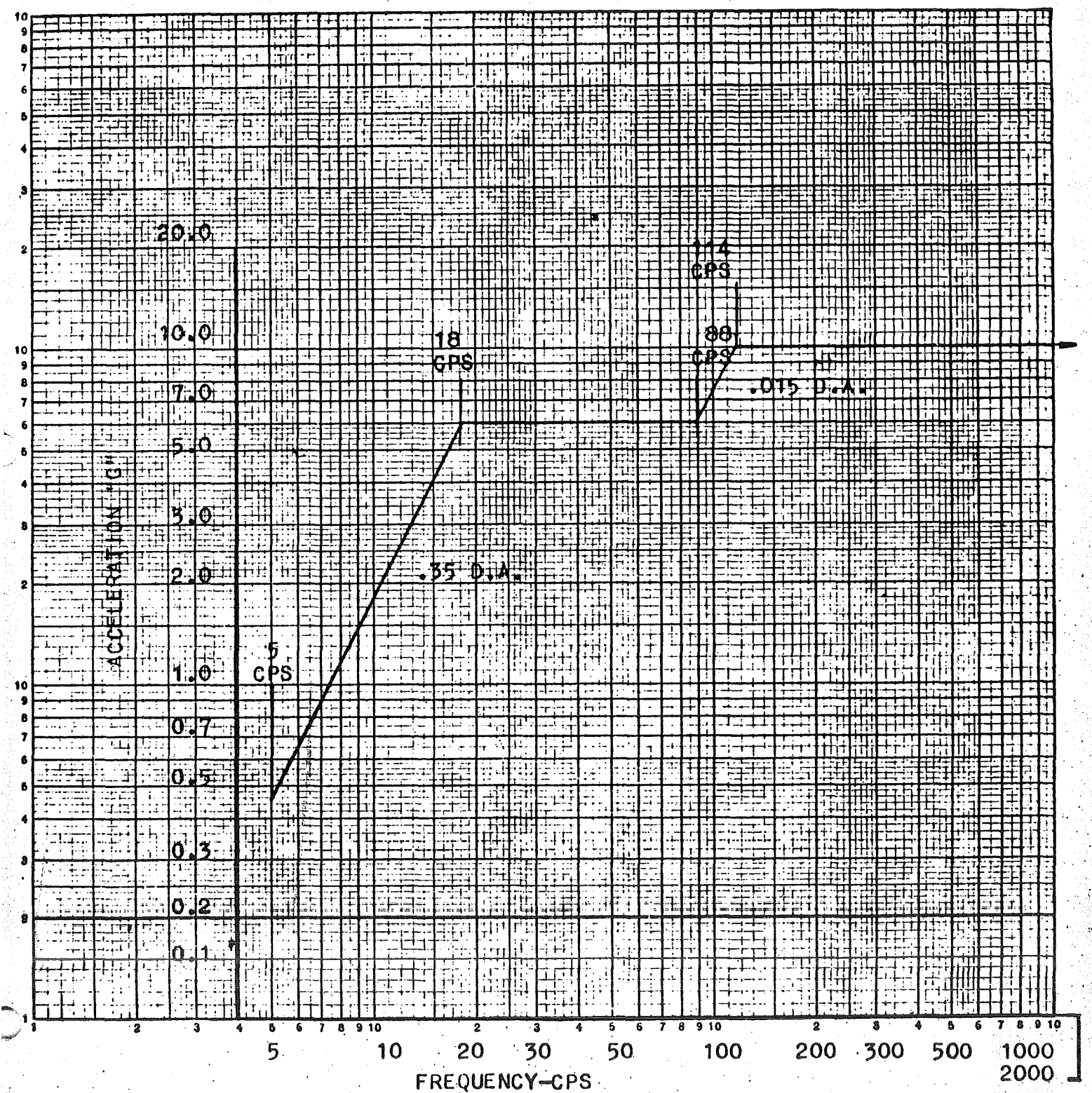

VIBRATION LEVEL CURVE

FIGURE 1.

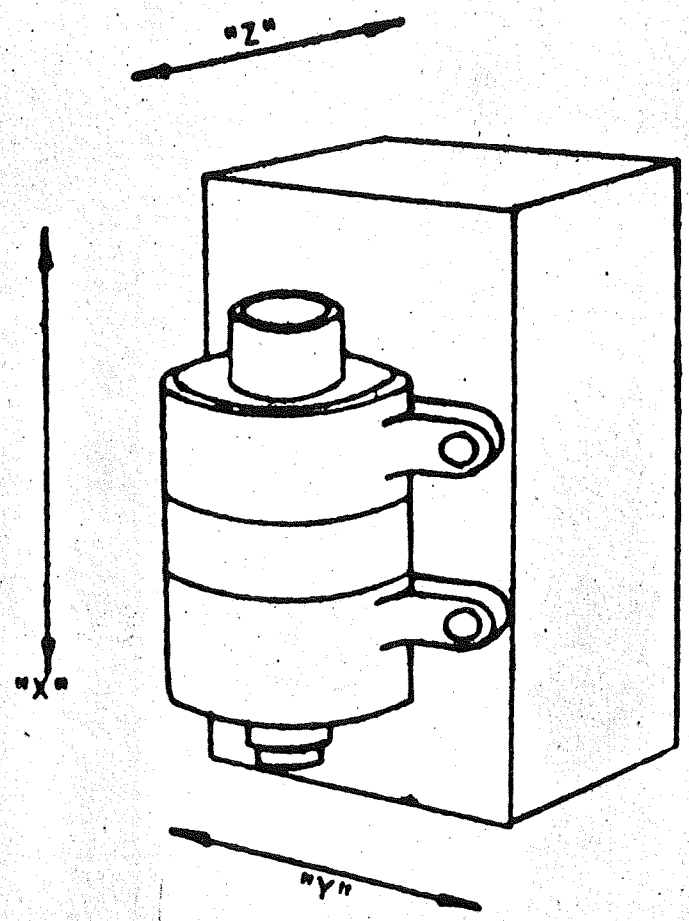

"X" - MOST SENSITIVE AXIS
"Y" - ORTHOGONAL AXIS (1)
"Z" - ORTHOGONAL AXIS (2)

AXIS IDENTIFICATION

FIGURE 2.

FREDRIK COMPANY
GLENDALE CALIFORNIA

8015-3

10.0

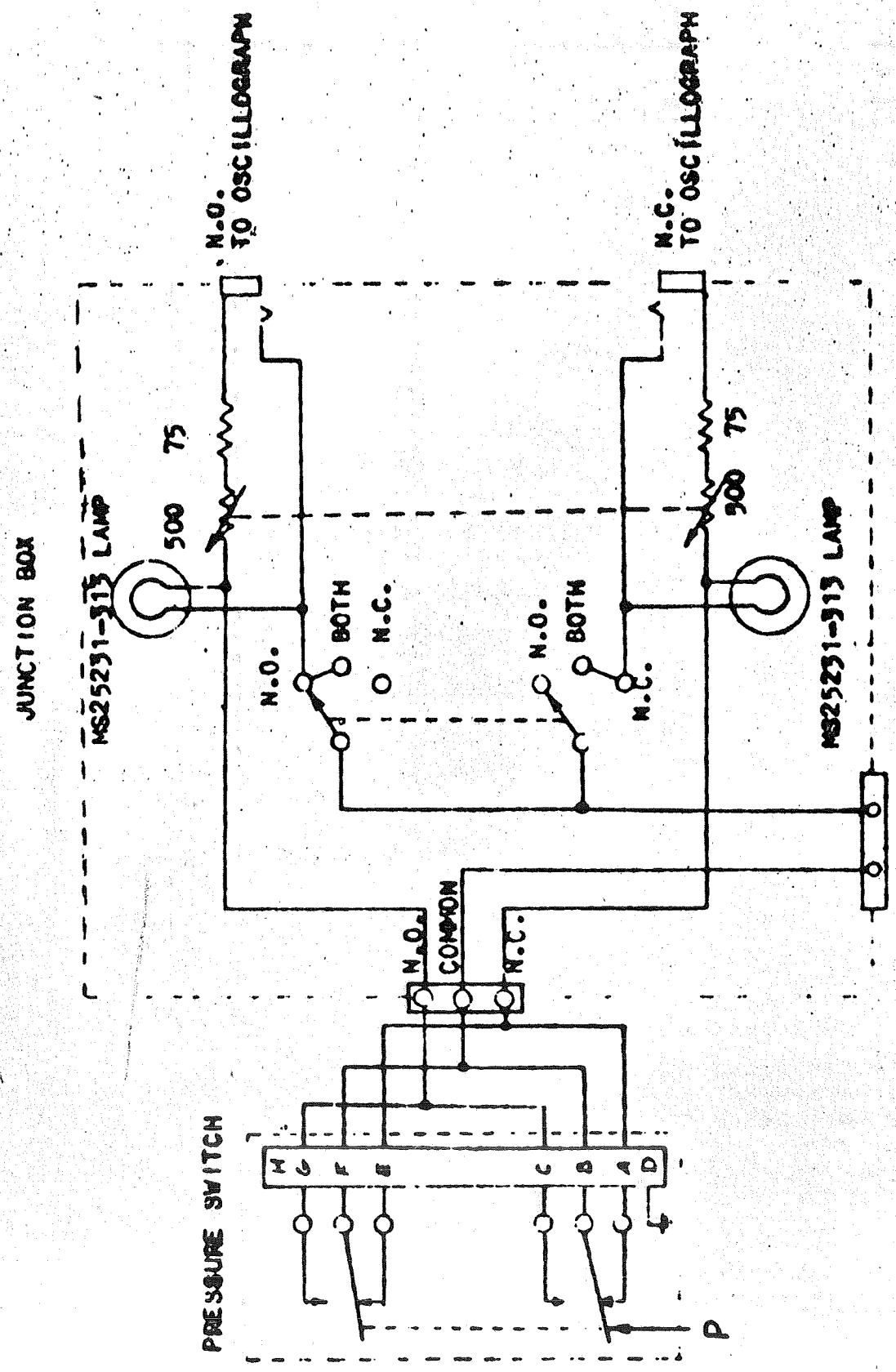

CONTACT MONITORING SYSTEM

FIGURE 3.

SM-274

FREBANK COMPANY
GLENDALE CALIFORNIA

Engineering Report

DESIGN EVALUATION TEST REPORT
NUMBER R8015-10
FOR
PART NUMBER 8015-10
PRESSURE SWITCH

DAC Specification 7851860-507, Rev. "N"

DATE June 26, 1963

PREPARED R. M. Frincke
R. M. Frincke, Engr'g. Lab. Supv'r.

CHECKED C. G. Witten
C. G. Witten, Project Engineer

APPROVED Charles F. Beck, Jr.
Charles F. Beck, Jr.
Chief Engineer

CONTRACT NO.

NO. PAGES -50-

STATE OF CALIFORNIA
COUNTY OF LOS ANGELES } ss.

CHARLES F. BECK, JR., being duly sworn, deposes and says: That the information contained in this report is to the best of his knowledge true and correct in all respects.

Charles F. Beck, Jr.

SUBSCRIBED and sworn to before me this 28th day of June, 19 63

Notary Public in and for the County of Los Angeles, State of California

My commission expires November 8, 19 63

REVISION DATE	FREBANK COMPANY GLENDALE CALIFORNIA	REPORT NO. R8015-10
		PAGE 2.0

REVISIONS:

TABLE OF CONTENTS

		Page
1.0	PURPOSE	4.0
2.0	REFERENCE	4.0
3.0	DESCRIPTION OF TEST SPECIMEN	4.0
4.0	REQUIREMENTS	4.0
5.0	TEST PROCEDURE AND RESULTS	5.0
	5.1 Functional Test	5.0
	5.2 Proof Test	6.0
	5.3 High Temperature Test	6.0
	5.4 Low Temperature Test	7.0
	5.5 Thermal Shock Test	7.0
	5.6 Vibration Test	7.0
	5.7 Contact Monitoring Test	8.0

FIGURES

1	Frebank Drawing No. P8015-10, "B" Change	9.0
2	Frebank Drawing No. 8015-10, "A" Change	10.0

TABLE

I	Functional Test Results For Units, Serial No.'s 103, 104, and 105.	11.0

TABLE OF CONTENTS

	Page
Test Unit Serial No. 103	11.0
Test Unit Serial No. 104	18.0
Test Unit Serial No. 105	25.0

APPENDIX

I	Frebank Company Design Evaluation Test Procedure Q8015-10 For Frebank Company Part No. 8015-10 Pressure Switch, Revision "A"	32.0

1.0 PURPOSE

To present the results of the design evaluation test program conducted on Frebank Pressure Switch Part Number 8015-10. This test program was conducted in accordance with the Design Evaluation Test plan of Douglas Specification 7851860-507, Rev. "N".

2.0 REFERENCE

Douglas Aircraft Company Specification 7851860-507, Rev. "N".

3.0 DESCRIPTION OF TEST SPECIMEN (Ref. para. 4.1.1.1.3)

Three (3) production units, Part Number 8015-10 Serial Numbers 103, 104, and 105 were subjected to the required test program. This pressure switch is intended for operation in a 44.0 psia system, using gaseous helium and hydrogen as the service medium over an ambient temperature range of -100°F to +125°F.

The actuation pressure limits are:

Increasing Pressure: 29.5 ± .5 psia
Decreasing Pressure: 27.5 ± .5 psia

Frebank Assembly Drawing No. P8015-10 and Installation Drawing No. 8015-10 are included for further reference (see Figures 1 and 2, Pages 9.0 and 10.0).

4.0 REQUIREMENTS (Ref. para. 4.1.1.1)

The Design Evaluation Test requirements were conducted in accordance with Design Evaluation Test Procedure for Engineering Report Number Q8015-10 Rev. "B", as approved by D.A.C. in their VIR No. M45353. This test procedure is presented as Appendix I.

5.0 TEST PROCEDURE AND RESULTS

5.1 Functional Test (Ref. para. 4.1.4)

A test stand using clean dry air as the test medium, employing a 12-inch diameter Bourdon tube gauge with 0.2 psi minimum graduations and a full scale accuracy of 1/5 percent was used for the observation of the pressure settings. A signal light circuit with a 2 ampere inductive load at 28 VDC was used in conjunction with the gauge to indicate pressure switch actuation.

The unit under test was connected to this test stand and the applied pressure was increased and decreased from 14.7 to 30.0 psia. The rate of pressure increase from 28.5psia to actuation and rate of decrease from 28.5psia to deactuation was approximately 5.0 psi per minute. The pressures at which the unit became energized and de-energized were observed. All test units successfully completed the functional test, and the first five (5) cycles of the test results are recorded in Table I.

5.2 Proof Test (Ref. para. 4.1.5)

This test was conducted using the same equipment as described in the functional test.

A pressure of 66 psia was applied for one (1) minute. No failure or leakage occurred as a result of the pressure application.

5.3 High Temperature Test (Ref. para. 4.1. 9)

This test was conducted using the same equipment described in the Functional Test while the unit was encased in a Wyle Model DN104 Temperature Chamber, range -320°F to +350°F.

The unit was stabilized at room ambient temperature and the Functional Test of para. 5.1 was conducted. While cycling the unit (a cycle consisted of increasing and decreasing the pressure from 14.7 psia to 30.0 psia to 14.7 at a rate of 3 cycles per minute minimum; the rate of pressure increase and decay was 50 psi per second minimum), the temperature of the chamber was increased to +125°F, within two (2) minutes. The temperature was maintained for fifteen minutes and the Functional Test of para. 5.1 was conducted. The temperature was then stabilized at room ambient temperature and the Functional Test of para. 5.1 was conducted. All test units successfully completed the test. The results of the test are recorded in Table I.

5.4 Low Temperature Test (Ref. para. 4.1.10)

This test was conducted using the same equipment described in the High Temperature Test.

The unit was stabilized at -100°F and maintained for six (6) hours. The Functional Test of para. 5.1 was conducted. The temperature was then stabilized at room ambient temperature and the Functional Test was conducted. The results are recorded in Table I.

5.5 Thermal Shock Test (Ref. para. 4.1.11)

This test was conducted using the same equipment described in the High Temperature Test.

The unit was stabilized at a temperature of +125°F and the Functional Test of para. 5.1 was conducted. The temperature was reduced to -100°F at a rate of approximately 30°F per second and maintained for fifteen minutes. The Functional Test was conducted. The temperature was then stabilized at room temperature and the Functional Test conducted. The results of the test are recorded in Table I.

5.6 Vibration Test (Ref. para. 4.1.14)

The test was conducted using the same equipment as the Functional Test in conjunction with a Mantec Model EP125 Temperature Chamber, range -320°F to +600°F, M.B. Model T-51-MC Amplifier, Model C-10 Excitor and Model M3 Vibration Meter.

ENG'R. FORM 10

The tests were conducted using a logarithmic octave sweep rate within the frequency limits of Figure 1, of Appendix I, at approximately 3.5 minutes per octave. The test duration was one hour in each of the three orthogonal axes, shown in Figure 2 of Appendix I, at -100°F, +125°F, and room ambient temperature. This made a total of nine hours for each unit under vibratory conditions. During and following the vibration test, pressure settings were checked in accordance with para. 5.1 at octave intervals of 5, 10, 20, 40, 80, 160, 320, 640, 1280, and 2000 cps. The results are recorded in Table I.

No apparent resonances were encountered during vibration.
No switch chatter occurred at any time during the vibration test.

5.7 Contact Monitoring Test: (Ref. para. 4.1.17)

The tests were conducted during the Vibration Test using a C.E.C. Model 5-116 Recording Oscillograph using galvanometers having a 0 to 2500 cps response rate.

The results of the Contact Monitoring Test are reported in paragraph 5.6.

5.8 Results:

The three pressure switches operated without malfunction at all times during the test program.

NOTICE: When Government drawings, specifications, or other data are used for any purpose other than in connection with a definitely related Government procurement operation, the United States Government thereby incurs no responsibility nor any obligation whatsoever; and the fact that the Government may have formulated, furnished, or in any way supplied the said drawings, specifications or other data is not to be regarded by implication or otherwise as in any manner licensing the holder or any other person or corporation, or conveying any rights or permission to manufacture, use, or sell any patented invention that may in any way be related thereto.

Frebank Co. reserves all proprietary rights in this design. Use of this document is restricted to conveyance of information to customers or vendors of Frebank Co.

REVISIONS

SYM	DESCRIPTION	DATE	APPROVED
A	SEE E.O. 1148	5.10.63	EM LRB
B	SEE E.O. 1196	6.28.63	DM CHD

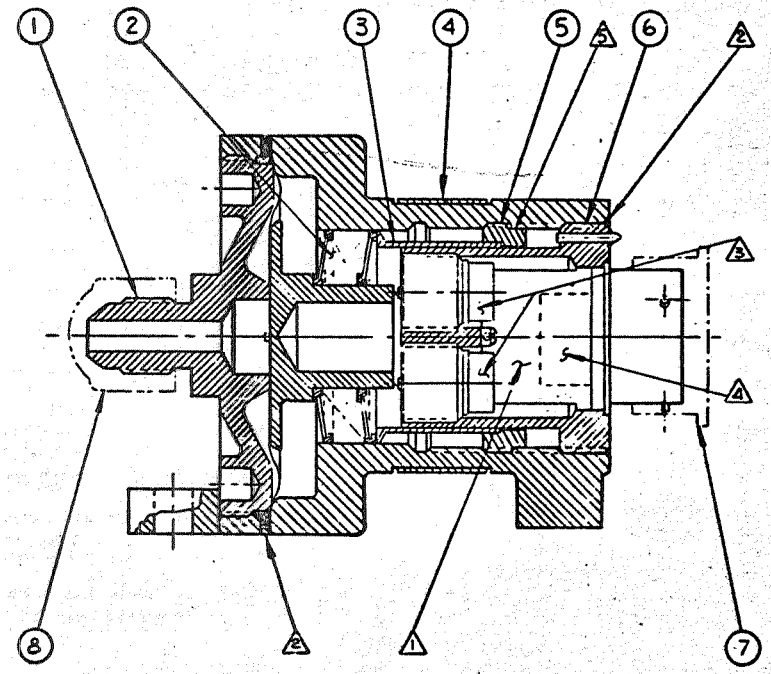

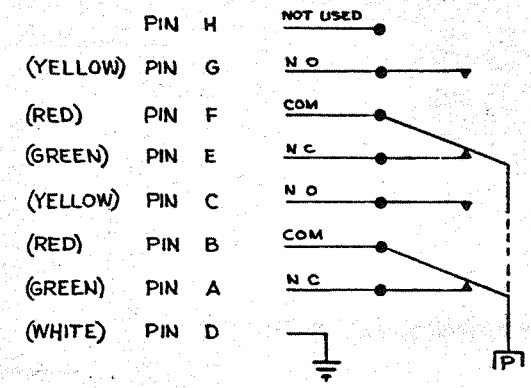

SCHEMATIC

QTY REQD	PART NO.	DESCRIPTION	MATERIAL	MATERIAL SPECIFICATION	CODE IDENT	SYM	ITEM NO.
1	SC-4(S)	CAP, SHIPPER			5		8
1	EC-12	CAP, SHIPPER			6		7
1	7605	ELECTRICAL ASSEMBLY					6
1	7516	RING, NUT					5
1	5017-11	NAMEPLATE					4
(B) 1	7568-3	RING, LOAD					3
1	7784	BELLEVILLE ASSEMBLY					2
1	7614	BODY ASSEMBLY					1

LIST OF MATERIAL

5 MAY BE PURCHASED FROM TUBING SEAL CAP CO., SAN GABRIEL, CALIF., OR EQUIV

6 MAY BE PURCHASED FROM PROTECTIVE CLOSURES INC., BUFFALO 23, N.Y., OR EQUIV.

5 LOCTITE PER FES02-015

4 EPOXY PER FES02-020

3 EPOXY PER FES02-013

2 SOLDER PER MIL-S-6872 WITH SOLDER PER QQ-S-571 (Sn 60)

1 ELECTRICAL WIRING OMITTED FOR CLARITY.

NOTES:

NEXT ASSY	FINAL ASSY	NEXT	FINAL
—	8015-10	—	1
APPLICATION		QTY REQD	

MATERIAL & SPEC:

FINISH & SPEC:

ADDITIONAL PROCESSING:

EWR—483J | TP—8015-10 | AP—8015-10

CUSTOMER D.A.C

CUSTOMER SPECIFICATION 7851860

UNLESS OTHERWISE SPECIFIED DIMENSIONS ARE IN INCHES
TOLERANCES:
.XX ± .03 ANGLES
.XXX ± .015 ± 30'
REMOVE ALL BURRS. —
BREAK SHARP EDGES —
FILLET RADII —.
ALL MACH FINISHES ✓
DRILLED HOLE TOL PER AND10387
THREADS PER MIL-S-7742

⊙	CONCENTRICITY	—
⊥	PERPENDICULARITY	—
∥	PARALLELISM	—
⌒	FLATNESS	—
⌒	STRAIGHTNESS	—

DRAWN	J C	3-25-63
CHECKED	R. Edwards	3-29-63
PROJECT	C. R. Wilk	4/1/63
APPROVED		
DESIGN ACTIVITY APP		4/2/63
OTHER ACTIVITY APP.		

FREBANK COMPANY
711 WEST BROADWAY • GLENDALE, CALIFORNIA

TITLE
SWITCH, PRESSURE ASSEMBLY

CODE IDENT NO.	DWG SIZE	DWG NO.
98087	C	P8015-10

SCALE: 2/1 WEIGHT — SHEET 1 OF 1

P8015-10 B

SM-283 Report No. R8015-10 Page 9.0

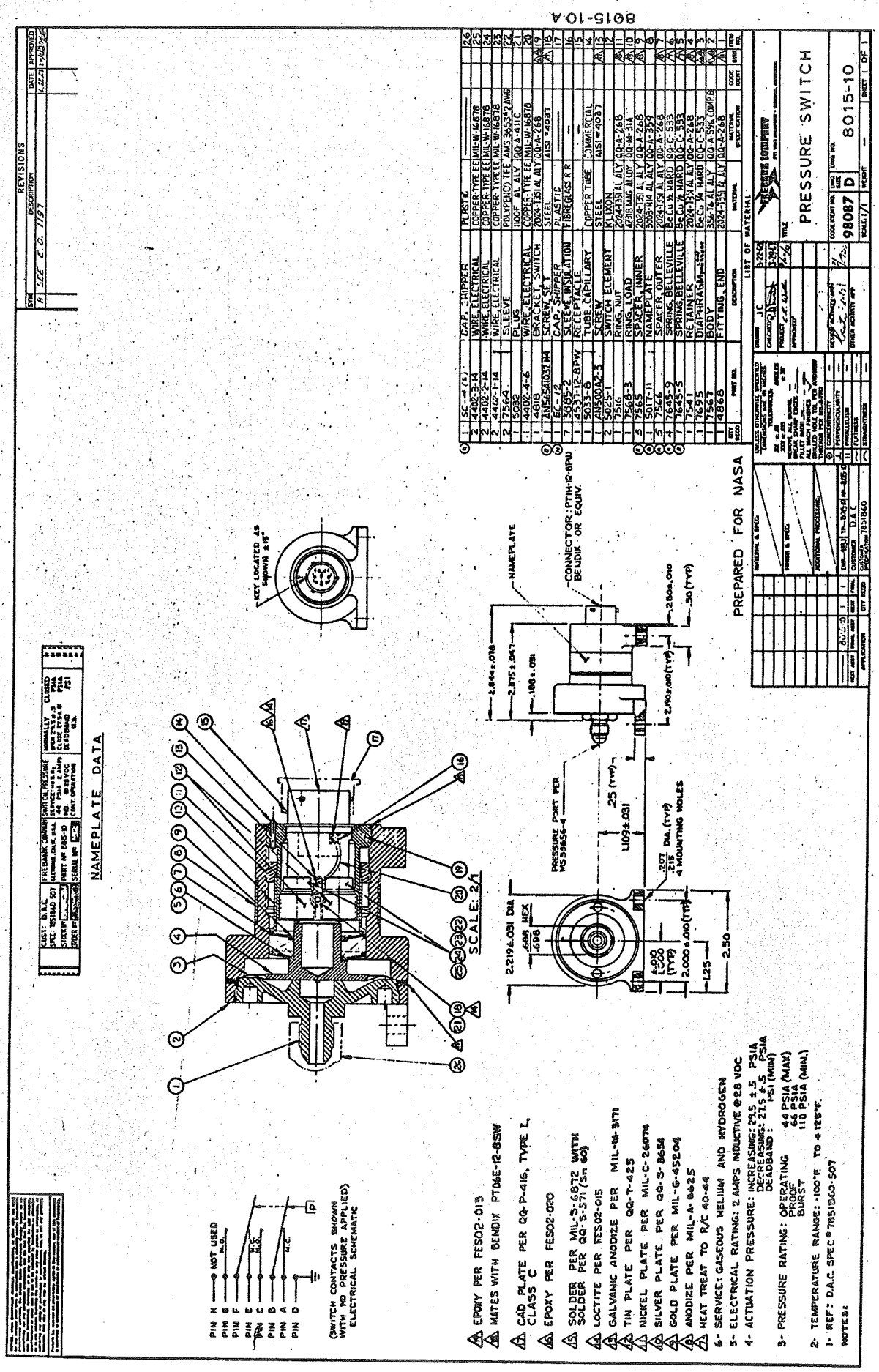
8015-10.A
REVISIONS
PREPARED FOR NASA
LIST OF MATERIAL
PRESSURE SWITCH
8015-10
98087 D
NAMEPLATE DATA
SCALE: 2/1
KEY LOCATED AS SHOWN ±15°
CONNECTOR: PT1H-12-8PW BENDIX OR EQUIV.
NAMEPLATE
PRESSURE PORT PER MS33656-4
4 MOUNTING HOLES
PIN H NOT USED
PIN G N.O.
PIN F
PIN E N.C.
PIN C N.O.
PIN B
PIN A N.C.
PIN D
(SWITCH CONTACTS SHOWN WITH NO PRESSURE APPLIED) ELECTRICAL SCHEMATIC
EPOXY PER FES02-013
MATES WITH BENDIX PT06E-12-8SW
CAD PLATE PER QQ-P-416, TYPE I, CLASS C
EPOXY PER FES02-020
SOLDER PER MIL-S-6872 WITH SOLDER PER QQ-S-571 (Sn 60)
LOCTITE PER FES02-015
GALVANIC ANODIZE PER MIL-M-8171
TIN PLATE PER QQ-T-425
NICKEL PLATE PER MIL-C-26074
SILVER PLATE PER QQ-S-365a
GOLD PLATE PER MIL-G-45204
ANODIZE PER MIL-A-8625
HEAT TREAT TO R/C 40-44
6- SERVICE: GASEOUS HELIUM AND HYDROGEN
5- ELECTRICAL RATING: 2 AMPS INDUCTIVE @28 VDC
4- ACTUATION PRESSURE: INCREASING: 29.5 ±.5 PSIA
DECREASING: 27.5 ±.5 PSIA
DEADBAND: 1 PSI (MIN)
3- PRESSURE RATING: OPERATING 44 PSIA (MAX)
PROOF 66 PSIA
BURST 110 PSIA (MIN.)
2- TEMPERATURE RANGE: -100°F TO +125°F.
1- REF: D.A.C. SPEC #7851860-507
NOTES:

Figure 2

TABLE I

FUNCTIONAL TEST RESULTS FOR UNITS
SERIAL NO. 103, 104 & 105
TEST UNIT SERIAL NO. 103

TEST CONDITION	AMBIENT TEMPERATURE °F.	INCREASING PRESSURE ACTUATION PSIA	DECREASING PRESSURE ACTUATION PSIA
REQUIREMENTS	-100 To +125	29 - 30	27 - 28
INITIAL FUNCTION TEST	+78	29.4	27.5
		29.4	27.5
		29.4	27.5
		29.4	27.5
		29.4	27.5
HIGH TEMPERATURE TEST	+78	29.4	27.5
		29.4	27.5
		29.4	27.5
		29.4	27.5
		29.4	27.5
	+125	29.9	27.9
		29.8	27.9
		29.8	27.9
		29.8	27.9
		29.8	27.9
	+78	29.6	27.6
		29.4	27.6
		29.4	27.6
		29.4	27.6
		29.4	27.6

TABLE I (CONT'D.)
S/N 103

TEST CONDITION	AMBIENT TEMPERATURE °F.	INCREASING PRESSURE ACTUATION PSIA	DECREASING PRESSURE ACTUATION PSIA
LOW TEMPERATURE TEST	-100	29.7	27.3
		29.5	27.3
		29.5	27.3
		29.5	27.3
		29.5	27.3
	+78	29.4	27.4
		29.4	27.4
		29.4	27.4
		29.4	27.4
		29.4	27.4
THERMAL SHOCK TEST	+125	29.8	27.9
		29.8	27.9
		29.8	27.9
		29.8	27.9
		29.8	27.9
	-100	29.6	27.3
		29.4	27.3
		29.4	27.3
		29.4	27.3
		29.4	27.3
	+78	29.6	27.6
		29.5	27.5
		29.4	27.5
		29.4	27.5
		29.4	27.5

TABLE I (CONT'D.)
S/N 103

VIBRATION TEST FREQUENCY (CPS)	AXIS	AMBIENT TEMPERATURE °F.	INCREASING PRESSURE ACTUATION PSIA	DECREASING PRESSURE ACTUATION PSIA
5	X	-100	29.5	27.2
10			29.5	27.2
20			29.5	27.3
40			29.5	27.3
80			29.5	27.3
160			29.5	27.3
320			29.5	27.3
640			29.4	27.4
1280			29.5	27.3
2000			29.2	27.3
5	Y	-100	29.5	27.2
10			29.5	27.2
20			29.6	27.2
40			29.6	27.2
80			29.6	27.2
160			29.5	27.2
320			29.4	27.2
640			29.2	27.3
1280			29.4	27.2
2000			29.2	27.2

TABLE I (CONT'D.)

S/N 103

VIBRATION TEST FREQUENCY (CPS)	AXIS	AMBIENT TEMPERATURE °F.	INCREASING PRESSURE ACTUATION PSIA	DECREASING PRESSURE ACTUATION PSIA
5	Z	-100	29.4	27.2
10			29.4	27.2
20			29.4	27.2
40			29.4	27.2
80			29.3	27.1
160			29.3	27.1
320			29.3	27.1
640			29.4	27.1
1280			29.3	27.1
2000			29.2	27.1
5	X	+125	29.8	27.8
10			29.8	27.9
20			29.8	28.0
40			29.9	28.0
80			29.9	28.0
160			29.8	28.0
320			29.8	28.0
640			29.8	28.0
1280			29.8	28.0
2000			29.7	28.0

TABLE I (CONT'D.)
S/N 103

VIBRATION TEST FREQUENCY (CPS)	AXIS	AMBIENT TEMPERATURE °F.	INCREASING PRESSURE ACTUATION PSIA	DECREASING PRESSURE ACTUATION PSIA
5	Y	+125	30.0	27.9
10			29.9	27.9
20			29.9	27.9
40			29.9	28.0
80			29.9	28.0
160			29.9	28.0
320			29.9	28.0
640			29.9	27.9
1280			29.8	28.0
2000			29.7	27.9
5	Z	+125	29.9	27.9
10			29.8	27.9
20			29.8	27.9
40			29.8	27.9
80			29.8	27.9
160			29.9	27.9
320			29.9	28.0
640			29.9	28.0
1280			29.9	28.0
2000			29.8	28.0

TABLE I (CONT'D.)

S/N 103

VIBRATION TEST FREQUENCY (CPS)	AXIS	AMBIENT TEMPERATURE °F.	INCREASING PRESSURE ACTUATION PSIA	DECREASING PRESSURE ACTUATION PSIA
5	X	+78	29.5	27.3
10			29.3	27.3
20			29.3	27.5
40			29.3	27.4
80			29.3	27.4
160			29.3	27.4
320			29.2	27.4
640			29.2	27.4
1280			29.2	27.4
2000			29.1	27.4
5	Y	+78	29.4	27.4
10			29.4	27.4
20			29.4	27.4
40			29.5	27.4
80			29.4	27.4
160			29.4	27.4
320			29.4	27.4
640			29.4	27.3
1280			29.4	27.3
2000			29.3	27.3

TABLE I (CONT'D.)

S/N 103

		AMBIENT TEMPERATURE °F.	INCREASING PRESSURE ACTUATION PSIA	DECREASING PRESSURE ACTUATION PSIA
VIBRATION TEST				
FREQUENCY (CPS)	AXIS			
5	Z	+78	29.5	27.5
10			29.4	27.5
20			29.4	27.5
40			29.4	27.4
80			29.4	27.4
160			29.4	27.5
320			29.5	27.6
640			29.5	27.6
1280			29.5	27.6
2000			29.5	27.6
FINAL FUNCTIONAL TEST		+78	29.4	27.4
			29.4	27.4
			29.4	27.4
			29.4	27.4
			29.4	27.4

TABLE I

FUNCTIONAL TEST RESULTS FOR UNITS
SERIAL NO. 103, 104 & 105
TEST UNIT SERIAL NO. 104

TEST CONDITION	AMBIENT TEMPERATURE °F.	INCREASING PRESSURE ACTUATION PSIA	DECREASING PRESSURE ACTUATION PSIA
REQUIREMENTS	-100 To +125	29 - 30	27 - 28
INITIAL FUNCTION TEST	+78	29.6	27.7
		29.5	27.7
		29.5	27.7
		29.5	27.7
		29.5	27.7
HIGH TEMPERATURE TEST	+78	29.5	27.7
		29.5	27.7
		29.5	27.7
		29.5	27.7
		29.5	27.7
	+125	29.7	27.9
		29.6	27.8
		29.6	27.8
		29.6	27.8
		29.6	27.8
	+78	29.6	27.8
		29.5	27.7
		29.5	27.7
		29.5	27.7
		29.5	27.7

TABLE I (CONT'D.)

S/N 104

TEST CONDITION	AMBIENT TEMPERATURE °F.	INCREASING PRESSURE ACTUATION PSIA	DECREASING PRESSURE ACTUATION PSIA
LOW TEMPERATURE TEST	-100	30.0	27.8
		29.8	27.8
		29.8	27.8
		29.8	27.8
		29.8	27.8
	+78	29.6	27.6
		29.5	27.6
		29.5	27.6
		29.5	27.6
		29.5	27.6
THERMAL SHOCK TEST	+125	29.7	27.8
		29.6	27.8
		29.6	27.8
		29.6	27.8
		29.6	27.8
	-100	29.9	27.6
		29.8	27.6
		29.8	27.6
		29.8	27.6
		29.8	27.6
	+78	29.6	27.7
		29.5	27.7
		29.5	27.7
		29.5	27.7
		29.5	27.7

TABLE I (CONT'D.)

S/N 104

VIBRATION TEST FREQUENCY (CPS)	AXIS	AMBIENT TEMPERATURE °F.	INCREASING PRESSURE ACTUATION PSIA	DECREASING PRESSURE ACTUATION PSIA
5	X	-100	29.6	27.5
10			29.6	27.5
20			29.6	27.6
40			29.7	27.6
80			29.6	27.6
160			29.6	27.6
320			29.6	27.6
640			29.6	27.6
1280			29.6	27.6
2000			29.4	27.6
5	Y	-100	29.6	27.4
10			29.6	27.4
20			29.6	27.4
40			29.6	27.4
80			29.6	27.4
160			29.6	27.4
320			29.6	27.4
640			29.6	27.4
1280			29.6	27.4
2000			29.6	27.4

TABLE I (CONT'D.)
S/N 104

VIBRATION TEST

FREQUENCY (CPS)	AXIS	AMBIENT TEMPERATURE °F.	INCREASING PRESSURE ACTUATION PSIA	DECREASING PRESSURE ACTUATION PSIA
5	Z	-100	29.7	27.6
10			29.6	27.5
20			29.7	27.5
40			29.7	27.5
80			29.6	27.5
160			29.6	27.5
320			29.7	27.5
640			29.7	27.5
1280			29.6	27.5
2000			29.4	27.5
5	X	+125	29.6	27.8
10			29.6	27.8
20			29.5	27.8
40			29.6	27.8
80			29.6	27.8
160			29.6	27.9
320			29.6	27.9
640			29.5	27.9
1280			29.6	27.9
2000			29.4	27.8

TABLE I (CONT'D.)

S/N 104

VIBRATION TEST FREQUENCY (CPS)	AXIS	AMBIENT TEMPERATURE °F.	INCREASING PRESSURE ACTUATION PSIA	DECREASING PRESSURE ACTUATION PSIA
5	Y	+125	29.4	27.5
10			29.4	27.5
20			29.4	27.5
40			29.4	27.5
80			29.4	27.5
160			29.4	27.5
320			29.4	27.5
640			29.3	27.6
1280			29.4	27.6
2000			29.3	27.6
5	Z	+125	29.5	27.6
10			29.4	27.6
20			29.4	27.6
40			29.4	27.6
80			29.4	27.6
160			29.4	27.6
320			29.4	27.6
640			29.4	27.6
1280			29.4	27.6
2000			29.3	27.6

TABLE I (CONT'D.)

S/N 104

VIBRATION TEST FREQUENCY (CPS)	AXIS	AMBIENT TEMPERATURE °F.	INCREASING PRESSURE ACTUATION PSIA	DECREASING PRESSURE ACTUATION PSIA
5	X	+78	29.5	27.5
10			29.5	27.5
20			29.4	27.5
40			29.4	27.5
80			29.4	27.5
160			29.4	27.6
320			29.4	27.5
640			29.4	27.6
1280			29.2	27.6
2000			29.1	27.5
5	Y	+78	29.4	27.5
10			29.4	27.5
20			29.6	27.5
40			29.5	27.5
80			29.4	27.5
160			29.4	27.5
320			29.4	27.5
640			29.4	27.5
1280			29.4	27.5
2000			29.2	27.5

TABLE I (CONT'D.)

S/N 104

		AMBIENT TEMPERATURE °F.	INCREASING PRESSURE ACTUATION PSIA	DECREASING PRESSURE ACTUATION PSIA
VIBRATION TEST				
FREQUENCY (CPS)	AXIS			
5	Z	+78	29.5	27.5
10			29.4	27.5
20			29.4	27.5
40			29.4	27.5
80			29.4	27.5
160			29.4	27.5
320			29.4	27.5
640			29.4	27.5
1280			29.3	27.6
2000			29.2	27.5
FINAL FUNCTIONAL TEST		+78	29.4	27.5
			29.4	27.5
			29.4	27.5
			29.4	27.5
			29.4	27.5

TABLE I

FUNCTIONAL TEST RESULTS FOR UNITS
SERIAL NO. 103, 104 & 105
TEST UNIT SERIAL NO. 105

TEST CONDITION	AMBIENT TEMPERATURE °F.	INCREASING PRESSURE ACTUATION PSIA	DECREASING PRESSURE ACTUATION PSIA
REQUIREMENTS	-100 To +125	29 - 30	27 - 28
INITIAL FUNCTION TEST	+78	29.5	27.8
		29.4	27.8
		29.4	27.8
		29.4	27.8
		29.4	27.8
HIGH TEMPERATURE TEST	+78	29.4	27.8
		29.4	27.8
		29.4	27.8
		29.4	27.8
		29.4	27.8
	+125	29.6	28.0
		29.5	27.9
		29.5	27.9
		29.5	27.9
		29.5	27.9
	+78	29.5	27.8
		29.4	27.8
		29.4	27.8
		29.4	27.8
		29.4	27.8

TABLE I (CONT'D.)
S/N 105

TEST CONDITION	AMBIENT TEMPERATURE °F.	INCREASING PRESSURE ACTUATION PSIA	DECREASING PRESSURE ACTUATION PSIA
LOW TEMPERATURE TEST	-100	29.9	27.7
		29.8	27.7
		29.8	27.7
		29.8	27.7
		29.8	27.7
	+78	29.4	27.6
		29.4	27.6
		29.4	27.6
		29.4	27.6
		29.4	27.6
THERMAL SHOCK TEST	+125	29.6	27.9
		29.5	27.9
		29.5	27.9
		29.5	27.9
		29.5	27.9
	-100	29.9	27.7
		29.8	27.7
		29.8	27.7
		29.8	27.7
		29.8	27.7
	+78	29.5	27.8
		29.4	27.7
		29.4	27.7
		29.4	27.7
		29.4	27.7

TABLE I (CONT'D.)

S/N 105

VIBRATION TEST

FREQUENCY (CPS)	AXIS	AMBIENT TEMPERATURE °F.	INCREASING PRESSURE ACTUATION PSIA	DECREASING PRESSURE ACTUATION PSIA
5	X	-100	29.8	27.8
10			29.8	27.8
20			29.9	27.8
40			30.0	27.8
80			29.8	27.8
160			29.8	27.8
320			29.8	27.8
640			29.6	27.8
1280			29.6	27.8
2000			29.6	27.8
5	Y	-100	29.8	27.7
10			29.8	27.7
20			29.8	27.7
40			29.8	27.7
80			29.8	27.7
160			29.9	27.8
320			29.9	27.8
640			29.8	27.8
1280			29.8	27.8
2000			29.8	27.8

TABLE I (CONT'D.)

S/N 105

VIBRATION TEST FREQUENCY (CPS)	AXIS	AMBIENT TEMPERATURE °F.	INCREASING PRESSURE ACTUATION PSIA	DECREASING PRESSURE ACTUATION PSIA
5	Z	-100	29.9	27.8
10			29.9	27.8
20			29.9	27.8
40			29.9	27.8
80			29.9	27.8
160			29.9	27.8
320			29.9	27.8
640			29.9	27.8
1280			29.9	27.8
2000			29.8	27.8
5	X	+125	29.6	28.0
10			29.6	28.0
20			29.6	28.0
40			29.7	28.0
80			29.7	28.0
160			29.6	28.0
320			29.7	28.0
640			29.6	28.0
1280			29.6	28.0
2000			29.6	28.0

TABLE I (CONT'D.)

S/N 105

VIBRATION TEST FREQUENCY (CPS)	AXIS	AMBIENT TEMPERATURE °F.	INCREASING PRESSURE ACTUATION PSIA	DECREASING PRESSURE ACTUATION PSIA
5	Y	+125	29.5	27.9
10			29.5	27.9
20			29.5	27.9
40			29.5	27.9
80			29.5	27.9
160			29.5	27.9
320			29.5	27.9
640			29.5	27.9
1280			29.5	27.9
2000			29.5	27.9
5	Z	+125	29.6	27.9
10			29.5	27.9
20			29.6	27.9
40			29.6	27.9
80			29.6	27.9
160			29.6	27.9
320			29.6	27.9
640			29.6	28.0
1280			29.6	28.0
2000			29.6	28.0

TABLE I (CONT'D.)

S/N 105

VIBRATION TEST FREQUENCY (CPS)	AXIS	AMBIENT TEMPERATURE °F.	INCREASING PRESSURE ACTUATION PSIA	DECREASING PRESSURE ACTUATION PSIA
5	X	+78	29.5	27.7
10			29.4	27.7
20			29.4	27.8
40			29.4	27.8
80			29.4	27.8
160			29.3	27.8
320			29.5	27.8
640			29.4	27.8
1280			29.4	27.9
2000			29.3	27.8
5	Y	+78	29.5	27.8
10			29.5	27.7
20			29.5	27.7
40			29.5	27.7
80			29.5	27.8
160			29.5	27.8
320			29.5	27.8
640			29.5	27.8
1280			29.5	27.8
2000			29.4	27.8

TABLE I (CONT'D.)

S/N 105

		AMBIENT TEMPERATURE °F.	INCREASING PRESSURE ACTUATION PSIA	DECREASING PRESSURE ACTUATION PSIA
VIBRATION TEST				
FREQUENCY (CPS)	AXIS			
5	Z	+78	29.5	27.7
10			29.5	27.7
20			29.4	27.7
40			29.4	27.8
80			29.5	27.8
160			29.5	27.8
320			29.4	27.7
640			29.4	27.7
1280			29.4	27.8
2000			29.4	27.8
FINAL FUNCTIONAL TEST		+78	29.4	27.7
			29.4	27.7
			29.4	27.7
			29.4	27.7
			29.4	27.7

APPENDIX 1

FREBANK COMPANY

DESIGN EVALUATION TEST PROCEDURE Q8015-10

FOR FREBANK COMPANY PART NO. 8015-10

PRESSURE SWITCH

REVISION "B"

FREBANK COMPANY
GLENDALE CALIFORNIA

Engineering Report

FREBANK COMPANY
DESIGN EVALUATION TEST PROCEDURE
Q8015-10
FOR FREBANK COMPANY PART NO.
8015-10
PRESSURE SWITCH
DAC SPECIFICATION NO. 7851860-507

REV. "B" JUNE 5, 1963
REV. "A" MAY 10, 1963
DATE MARCH 28, 1963

PREPARED R. M. Frincke
R. M. FRINCKE, ENGR'G. LAB. SUPV'R.

CHECKED C. R. Willis
C. R. WILLIS, PROJECT ENGINEER

APPROVED
C. F. BECK, JR.
CHIEF ENGINEER

STATE OF CALIFORNIA
COUNTY OF LOS ANGELES } ss.

being duly sworn, deposes and says: That the information contained in this report is to the best of his knowledge true and correct in all respects.

SUBSCRIBED and sworn to before me this day of , 19

Notary Public in and for the County of Los Angeles, State of California

My commission expires 19

CONTRACT NO.

NO. PAGES -17-

REVISION DATE	FREBANK COMPANY GLENDALE CALIFORNIA	Q8015-10
"B" 6/5/63 "A" 5/10/63		PAGE 2.0

REVISIONS

REVISION "A" DTD. MAY 10, 1963

REVISED TO COMPLY WITH DAC REQUEST PER VIR M-44277 "A"

R. M. FRINCKE	C. R. WILLIS	CHARLES F. BECK, JR.
ENGR'G. LAB. SUPV'R.	PROJECT ENGINEER	CHIEF ENGINEER

REVISION "B" DTD. JUNE 5, 1963

REVISED TO COMPLY WITH DAC REQUEST PER VIR M-44865

R. M. FRINCKE	C. R. WILLIS	CHARLES F. BECK, JR.
ENGR'G. LAB. SUPV'R	PROJECT ENGINEER	CHIEF ENGINEER

TABLE OF CONTENTS

		PAGE
	SUBJECT	4.0
	REFERENCE	4.0
	TEST SPECIMEN	4.0
	TEST CONDITIONS	4.0
	TEST MEDIUM	4.0
	INSTRUMENT ACCURACIES	4.0
	TEST PROCEDURE	5.0
1.0	FUNCTIONAL TESTS	5.0
2.0	PROOF TEST	6.0
3.0	HIGH TEMPERATURE	6.0
4.0	LOW TEMPERATURE	7.0
5.0	THERMAL SHOCK	7.0
6.0	VIBRATION	8.0
7.0	CONTACT MONITORING	9.0
8.0	STATEMENT OF SIMILARITY	10.0
9.0	FACILITIES	12.0
	9.1 FUNCTIONAL TESTS	12.0
	9.1.1 TEST STAND	12.0
	9.1.2 PRESSURE GAUGE	12.0
	9.2 PROOF TEST	12.0
	9.2.1 TEST STAND	12.0
	9.3 HIGH TEMPERATURE, LOW TEMPERATURE & THERMAL SHOCK	12.0
	9.3.1 TEMPERATURE CHAMBER	12.0

TABLE OF CONTENTS

PAGE

9.3.2 TEST STAND 13.0
9.3.3 PRESSURE GAUGE 13.0
9.4 VIBRATION 13.0
9.4.1 VIBRATION EQUIPMENT 13.0
9.4.2 TEST STAND 13.0
9.4.3 PRESSURE GAUGE 13.0
9.4.4 TEMPERATURE CHAMBER 13.0
9.4.5 RECORDING OSCILLOGRAPH 13.0
10.0 GENERAL NOTES 13.0

FIGURES

1. VIBRATION LEVEL CURVE 15.0
2. AXIS IDENTIFICATION 16.0
3. CONTACT MONITORING SYSTEM 17.0

SUBJECT

DESIGN EVALUATION TESTS OF FREBANK COMPANY PART NUMBER 8015-10 PRESSURE SWITCH.

REFERENCE

(A)
DOUGLAS AIRCRAFT COMPANY SPECIFICATION NO. 7851860-507 REVISION "N".

TEST SPECIMEN

THREE (3) PRESSURE SWITCHES SHALL BE SUBJECTED TO THE PROGRAM AS SPECIFIED HEREIN. ONE (1) OF THESE SWITCHES MAY BE PROTOTYPE, BUT TWO (2) MUST BE PRODUCTION UNITS.

TEST CONDITIONS

TEST MEDIUM

CLEAN DRY AIR AND GASEOUS HELIUM AS REQUIRED.

ELECTRICAL CAPACITY:	2 AMPERES INDUCTIVE AT 28 VOLTS D.C.
AMBIENT TEMPERATURE:	60°F TO 80°F UNLESS OTHERWISE SPECIFIED.
FLUID TEMPERATURE:	60°F TO 80°F UNLESS OTHERWISE SPECIFIED.

INSTRUMENT ACCURACIES

CALIBRATION PRESSURE GAUGES:	1/5 PERCENT OF FULL SCALE READING.
TEMPERATURE RECORDER:	±5 DEGREES FAHRENHEIT.
ELECTRICAL METERS:	+3 PERCENT OF FULL SCALE READING.

TEST PROCEDURE

THE TEST PROGRAM IS TO BE CONDUCTED ON EACH UNIT IN THE ORDER SPECIFIED IN THE FOLLOWING PARAGRAPHS.

1.0 FUNCTIONAL TESTS (REF. (A) PARA. 4.1.4)

USE CLEAN DRY AIR. RECORD THE FIRST FIVE (5) CYCLES OF PRESSURE SWITCH OPERATION OF EACH SERIES OF TESTS, AS REQUIRED BY THIS SPECIFICATION.

1.1

APPLY 27 PSIA TO PRESSURE PORT. THE SWITCH SHALL REMAIN OPEN BETWEEN PINS B AND C AND PINS F AND G.

1.2

INCREASE THE PRESSURE TO 30 PSIA MAXIMUM. THE SWITCH SHALL CLOSE AT 29.5±0.5 PSIA BETWEEN PINS B AND C AND PINS F AND G ON THE SECOND AND SUBSEQUENT CYCLES OF OPERATION. THE RATE OF PRESSURE INCREASE FROM 28.5 PSIA TO ACTUATION SHALL BE APPROXIMATELY FIVE (5) PSI PER MINUTE. "B"

ACTUATION PRESSURE OF THE FIRST CYCLE OF ANY SERIES OF TESTS SHALL BE WITHIN ±0.4 PSI OF THE ACTUATION PRESSURE OF THE SECOND CYCLE.

REPEATABILITY OF THIRD AND SUBSEQUENT ACTUATION POINTS SHALL BE WITHIN ±1 PERCENT OF THE SECOND CYCLE ACTUATION POINT.

1.3

DECREASE THE PRESSURE. THE SWITCH SHALL OPEN AT 27.5±0.5 PSIA

BETWEEN PINS B AND C AND PINS F AND G. THE RATE OF PRESSURE DECREASE FROM 28.5 PSIA TO DEACTUATION SHALL BE APPROXIMATELY FIVE (5) PSI PER MINUTE.

2.0 PROOF TEST (REF. (A) PARA. 4.1.5)

USE CLEAN DRY AIR.

2.1

APPLY 66 PSIA TO PRESSURE PORT. MAINTAIN PRESSURE FOR ONE (1) MINUTE. THERE SHALL BE NO VISUAL EVIDENCE OF DISTORTION OR FAILURE.

3.0 HIGH TEMPERATURE (REF. (A) PARA. 4.1.9) "A"

3.1

PLACE THE PRESSURE SWITCH WITHIN THE TEST CHAMBER AND STABILIZE AT ROOM AMBIENT TEMPERATURE. CONDUCT THE FUNCTIONAL TEST OF PARAGRAPHS 1.1, 1.2 AND 1.3.

3.2

WHILE CYCLING THE UNIT (A CYCLE SHALL CONSIST OF INCREASING AND DECREASING THE PRESSURE FROM 14.7 PSIA TO 30 PSIA TO 14.7 PSIA AT A RATE OF THREE (3) CYCLES PER MINUTE MINIMUM. THE RATE OF PRESSURE INCREASE AND DECAY SHALL BE 50 PSI PER SECOND MINIMUM), THE TEMPERATURE OF THE CHAMBER SHALL BE INCREASED TO +125°F WITHIN TWO (2) MINUTES.

3.3

MAINTAIN THE TEMPERATURE AT +125°F FOR 15 MINUTES AND CON-

DUCT THE FUNCTIONAL TEST OF PARAGRAPHS 1.1, 1.2 AND 1.3.

3.4

STABILIZE THE PRESSURE SWITCH AT ROOM AMBIENT TEMPERATURE AND CONDUCT THE FUNCTIONAL TEST OF PARAGRAPHS 1.1, 1.2 AND 1.3

NOTE

PRESSURE SWITCH OPERATION SHALL BE CONTINUOUS THROUGHOUT THE ENTIRE TEMPERATURE CYCLE. A RELATIVE HUMIDITY OF NOT MORE THAN 15 PERCENT SHALL BE MAINTAINED IN THE TEST CHAMBER.

4.0 LOW TEMPERATURE (REF. (A) PARA. 4.1.10) "A"

4.1

PLACE THE PRESSURE SWITCH WITHIN THE TEST CHAMBER AND STABILIZE AT -100°F.

4.2

MAINTAIN THE TEMPERATURE AT -100°F FOR SIX (6) HOURS AND CONDUCT THE FUNCTIONAL TEST OF PARAGRAPHS 1.1, 1.2 AND 1.3.

4.3

STABILIZE THE PRESSURE SWITCH AT ROOM TEMPERATURE AND CONDUCT THE FUNCTIONAL TEST OF PARAGRAPHS 1.1, 1.2 AND 1.3.

5.0 THERMAL SHOCK (REF. (A) PARA. 4.1.11) "A"

5.1

PLACE THE PRESSURE SWITCH WITHIN THE TEST CHAMBER, STABILIZE AT +125°F AND CONDUCT THE FUNCTIONAL TEST OF PARAGRAPHS 1.1,

1.2 AND 1.3.

5.2

REDUCE THE TEMPERATURE TO -100°F AT THE RATE OF 30°F PER SECOND.

5.3

MAINTAIN THE UNIT AT -100°F FOR NOT LESS THAN 15 MINUTES AND CONDUCT THE FUNCTIONAL TEST OF PARAGRAPHS 1.1, 1.2 AND 1.3.

5.4

STABILIZE THE UNIT AT ROOM TEMPERATURE AND CONDUCT THE FUNCTIONAL TEST OF PARAGRAPHS 1.1, 1.2 AND 1.3.

6.0 VIBRATION (REF. (A) PARA. 4.1.14)

(REFER TO FIGURE 2 FOR AXIS IDENTIFICATION).

6.1

THE PRESSURE SWITCH SHALL BE MOUNTED TO FIXTURE TE-317, INSTALLED ON A VIBRATION EXCITER AND SUBJECTED TO THE LEVELS SHOWN IN FIGURE 1. THE TESTS SHALL BE CONDUCTED USING A LOGARITHMIC SWEEP RATE OF 3.5 MINUTES PER OCTAVE. THE TEST DURATION SHALL BE ONE (1) HOUR IN EACH OF THE THREE (3) ORTHOGANAL AXES, ONE OF WHICH SHALL BE THE MOST SENSITIVE AXIS, AT -100°F, ROOM AMBIENT TEMPERATURE, AND +125°F. TOTAL VIBRATION TIME SHALL BE 9 HOURS.

6.2

DURING AND FOLLOWING THE APPLICATION OF VIBRATION, CONDUCT THE FUNCTIONAL TEST OF PARAGRAPH 1.

7.0 CONTACT MONITORING (REF. (A) PARA. 4.1.17) "A"

7.1

THE PRESSURE SWITCH CONTACTS SHALL BE MONITORED DURING VIBRATION TO VERIFY THAT SUBSEQUENT TO SWITCH ACTUATION PER PARA. 1.2, THE CIRCUIT BETWEEN PINS B AND C AND PINS F AND G, DOES NOT OPEN UNTIL DEACTUATION PER PARA. 1.3 AND TO VERIFY THAT SUBSEQUENT TO SWITCH DEACTUATION PER PARA. 1.3 THE CIRCUIT BETWEEN PINS B AND C AND PINS F AND G, DOES NOT CLOSE UNTIL SWITCH ACTUATION PER PARA. 1.2. THE CONTACTS SHALL BE MONITORED ON A C.E.C. MODEL 5-116 RECORDING OSCILLOGRAPH USING GALVANOMETERS HAVING A RESONSE OF 0 TO 2500 CPS.

NO CHATTER OF THE SWITCH CONTACTS IS ACCEPTABLE. REFER TO FIGURE 3 FOR A SCHEMATIC DIAGRAM SHOWING THE CONTACT MONITORING SYSTEM.

8.0 STATEMENT OF SIMILARITY

FREBANK COMPANY PART NUMBER 4640-1 IS REQUIRED TO MEET THE DESIGN EVALUATION TEST REQUIREMENTS IN ACCORDANCE WITH D.A.C. SPECIFICATION 7851860-1. PART NUMBER 8015-10 IS REQUIRED TO MEET THE DESIGN EVALUATION TEST REQUIREMENTS IN ACCORDANCE WITH D.A.C. SPECIFICATION 7851860-507 PART NUMBER 8015-10 IS IDENTICAL TO PART NUMBER 4640-1 EXCEPT FOR THE PRESSURE SETTINGS AND THE QUANTITY OF BELLEVILLE SPRINGS USED TO OBTAIN THE PRESSURE SETTINGS. THEREFORE, THE FOLLOWING TESTS CONDUCTED ON P/N 4640-1 CAN BE CONSIDERED EQUALLY APPLICABLE TO P/N 8015-10.

THE PRESSURE SETTINGS ARE PRESENTED FOR REFERENCE AS FOLLOWS:

PART NO.	SPEC. NO.	INCREASING PRESSURE PSIA	DECREASING PRESSURE PSIA
4640-1	7851860-1	31.5±0.5	30.5±0.5
8015-10	7851860-507	29.5±0.5	27.5±0.5

FOLLOWING. ARE THE TESTS THAT ARE ASSUMED TO BE EQUIVALENT ON THE BASIS OF SIMILARITY. THESE TESTS ARE LISTED IN THE ORDER IN WHICH THEY WERE CONDUCTED ON P/N 4640-1.

8.1

ACTUATION & DEACTUATION TIME (REF. (A) PARA. 3.5.6).

8.2

LEAK TEST (REF. (A) PARAGRAPHS 4.1.6 & 4.1.7).

8.3

DIELECTRIC STRENGH TEST (REF. (A) PARA. 4.1.7) "A"

8.4

INSULATION RESISTANCE (REF. (A) PARA. 4.1.8) "A"

8.5

CONTACT RESISTANCE (REF. (A) PARA. 3.4.4).

8.6

ALTITUDE TEMPERATURE (REF. (A) PARA. 4.1.12) "A"

8.7

ACCELERATION (REF. (A) PARA. 4.1.13) "A"

8.8

ACOUSTICS (REF. (A) PARA. 4.1.15) "A"

8.9

SHOCK (REF. (A) PARA. 4.1.16) "A"

8.10

SERVICE LIFE (REF. (A) PARA. 3.5.9).

8.11

ACTUATION & DEACTUATION TIME (REF. (A) PARA. 3.5.6).

8.12

PROOF TEST (REF. (A) PARA. 4.1.5).

8.13

LEAK TEST (REF. (A) PARAGRAPHS 4.1.6 & 4.1.7).

8.14

DIELECTRIC STRENGTH TEST (REF. (A) PARA. 4.1.7) "A"

8.15

INSULATION RESISTANCE (REF. (A) PARA. 4.1.8) "A"

8.16

CONTACT RESISTANCE (REF. (A) PARA. 3.4.4).

8.17

BURST TEST (REF. (A) PARA. 4.1.19).

9.0 FACILITIES

FOLLOWING IS A DESCRIPTION OF THE TEST EQUIPMENT TO BE USED TO CONDUCT EACH TEST AS PROPOSED HEREIN.

9.1 FUNCTIONAL TESTS

9.1.1 TEST STAND

FREBANK MODEL TE-146-1, 0-150 PSI.

9.1.2 PRESSURE GAUGE

MARTIN-DECKER 0-100 PSI, SERIAL NO. 1053.

9.2 PROOF TEST

9.2.1 TEST STAND

FREBANK MODEL TE-146-1, 0-150 PSI.

9.3 HIGH TEMPERATURE, LOW TEMPERATURE & THERMAL SHOCK

9.3.1 TEMPERATURE CHAMBER

WYLE MODEL DN104, RANGE -320°F TO +350°F.

9.3.2 TEST STAND

FREBANK MODEL TE-146-1, 0-150 PSI.

9.3.3 PRESSURE GAUGE

MARTIN-DECKER 0-100 PSI, SERIAL NO. 1053.

9.4 VIBRATION

9.4.1 VIBRATION EQUIPMENT

M. B. MODEL T-51-MC AMPLIFIER, MODEL C-10 EXCITER, MODEL M3 VIBRATION METER.

9.4.2 TEST STAND

FREBANK MODEL TE-146-1, 0-150 PSI.

9.4.3 PRESSURE GAUGE

MARTIN-DECKER 0-100 PSI, SERIAL NO. 1053.

9.4.4 TEMPERATURE CHAMBER

MANTEC MODEL EP125 RANGE -320 TO +600°F.

9.4.5 RECORDING OSCILLOGRAPH

C. E. C. MODEL 5-116 GALVANOMETER RESPONSE 0-2500 CPS.

10.0 GENERAL NOTES

10.1

THE REPORT SHALL BE COMPILED IN A MANNER CONSISTENT WITH CONVENTIONAL ENGINEERING REPORT FORM.

10.2

THE REPORT SHALL DESCRIBE THE TEST METHOD AND CONDITION AND

FULLY SUMMARIZE THE TEST RESULTS AND ANY FAIAURES OR LIMITATIONS ENCOUNTERED. A DESCRIPTION OF TEST EQUIPMENT SHALLALSO BE INCLUDED.

10.3

THE REPORT SHALL INCLUDE THIS TEST PROCEDURE.

REVISION DATE	FREBANK COMPANY GLENDALE CALIFORNIA	REPORT NO. Q8015-10
		PAGE 16.0

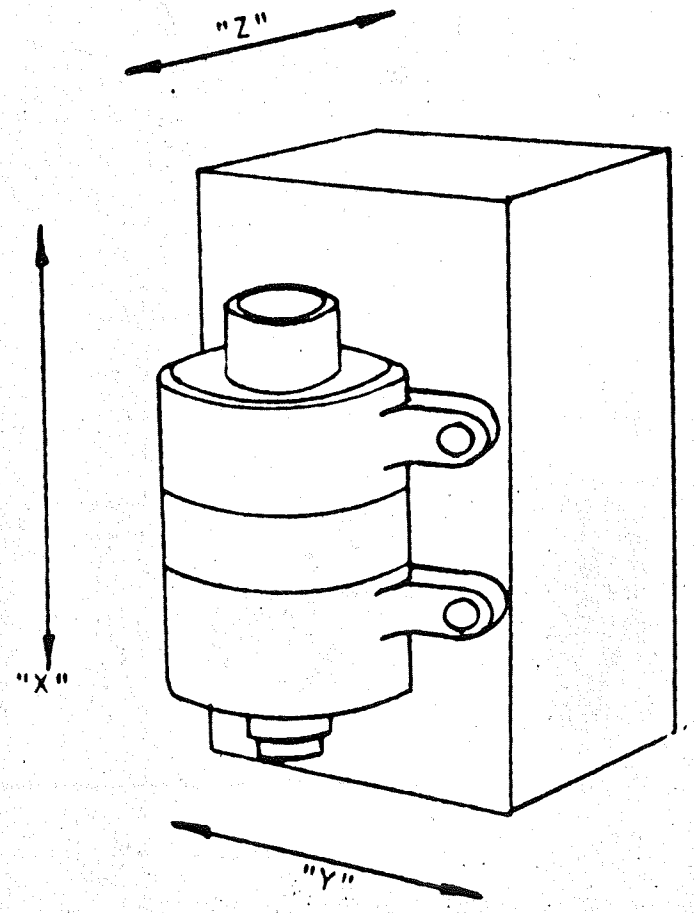

"X" – MOST SENSITIVE AXIS
"Y" – ORTHOGONAL AXIS (1)
"Z" – ORTHOGONAL AXIS (2)

AXIS IDENTIFICATION

FIGURE 2.

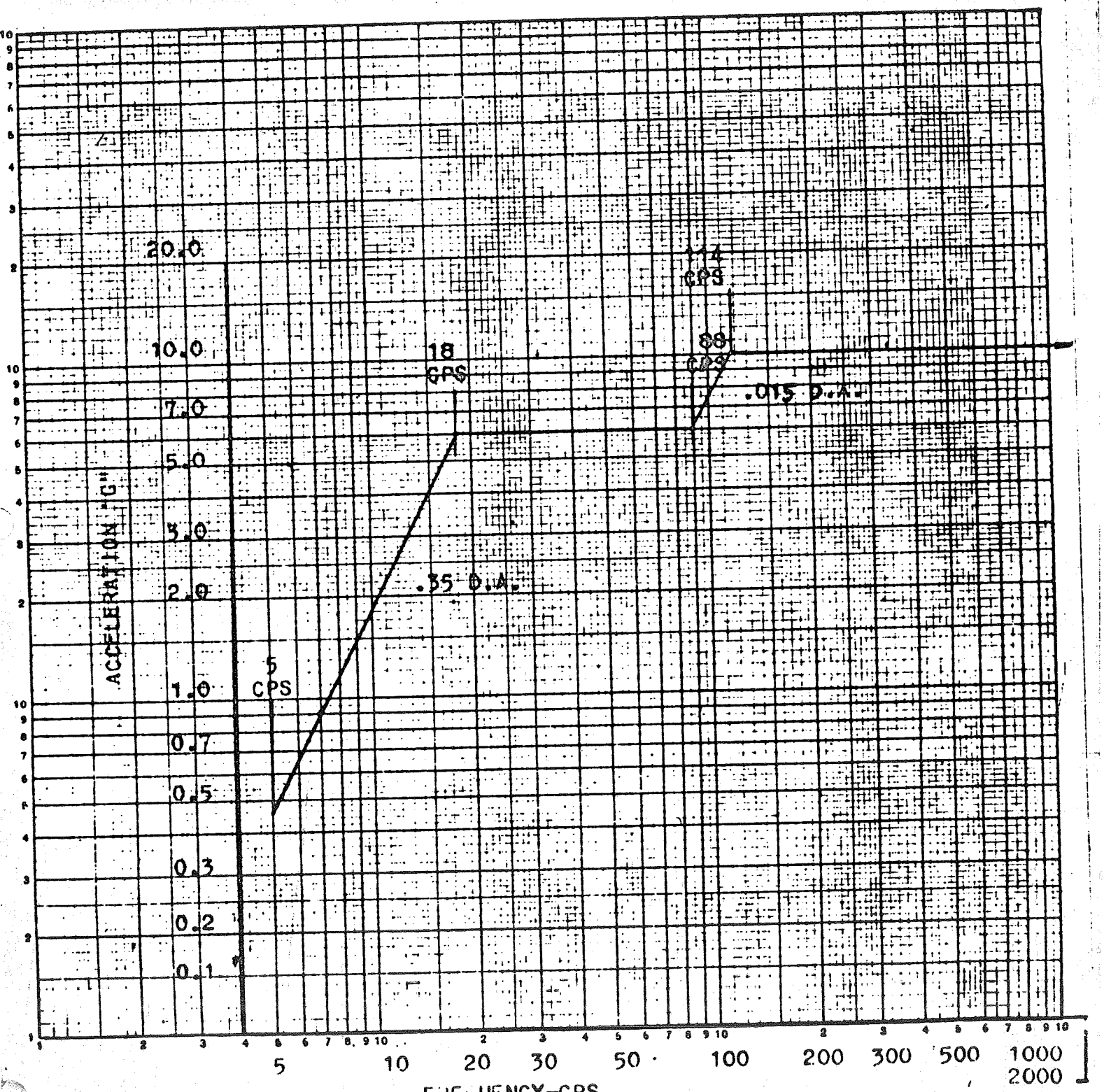

VIBRATION LEVEL CURVE

FIGURE 1.

REVISION DATE	FREBANK COMPANY GLENDALE CALIFORNIA	REPORT NO Q8015-10
		PAGE 17.0

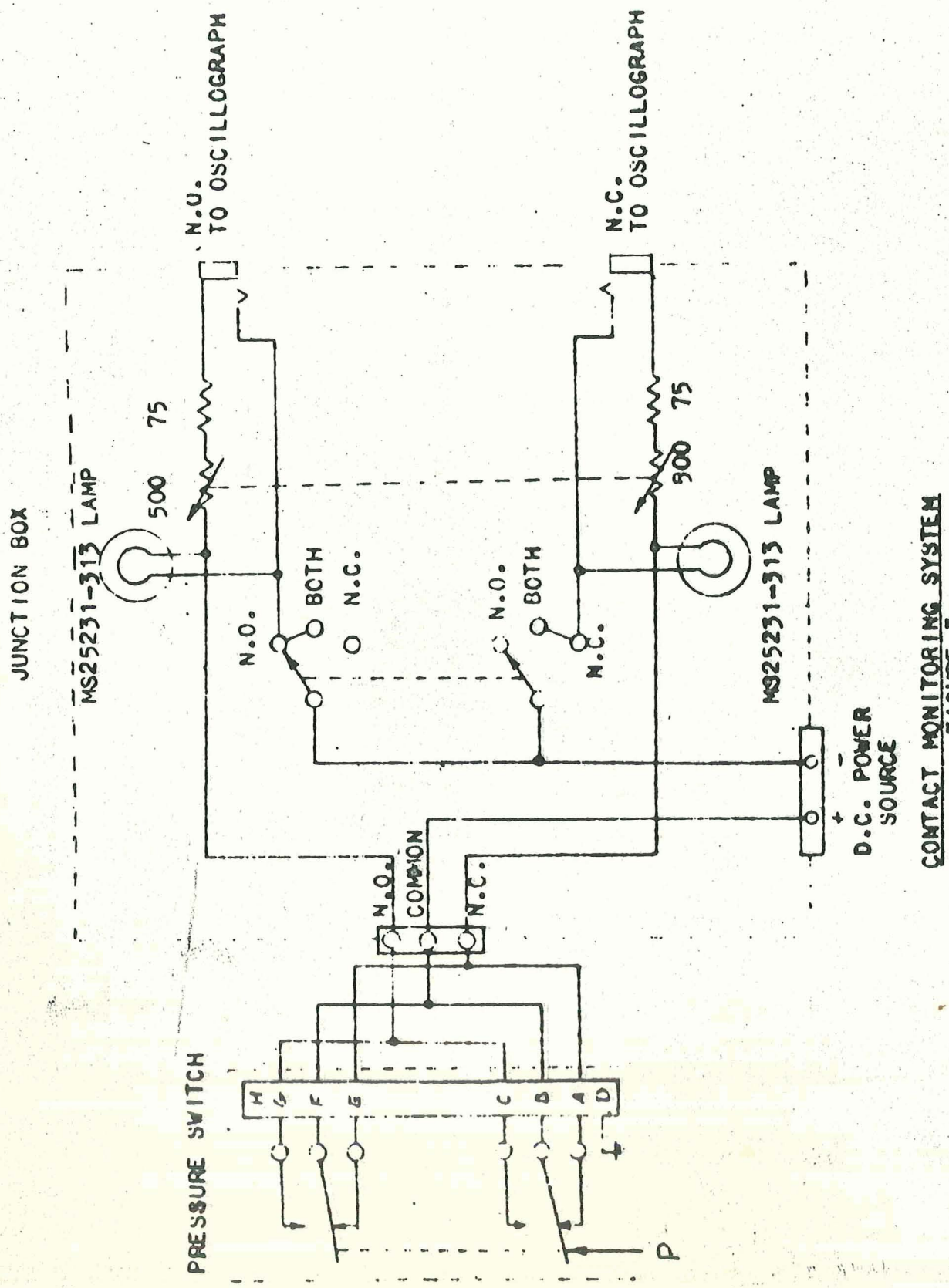

CONTACT MONITORING SYSTEM
FIGURE 3.