FORM 60-495 (REV. 6-63)

179

Model DSV-4B

Report No. SM-46531

# S-IVB STAGE THRUST STRUCTURE INFLUENCE COEFFICIENT

December 9, 1963

DOUGLAS

Prepared for the National Aeronautics and Space Administration
Under Contract NAS 7-101


Prepared by: T. S. Osa
T. S. Osa
Strength Section
Analytical Branch
Saturn Engineering

Approved by: C. O. Stephens
C. O. Stephens
Chief, Strength Section
Saturn Engineering



FACILITY FORM 602

N70-76125 (ACCESSION NUMBER) (THRU)
58 (PAGES) NONE (CODE)
CR-113278 (NASA CR OR TMX OR AD NUMBER) (CATEGORY)



DOUGLAS PROPRIETARY RIGHTS ARE INCLUDED IN THE INFORMATION DISCLOSED HEREIN. NEITHER THIS DOCUMENT NOR THE INFORMATION DISCLOSED HEREIN BE REPRODUCED OR TRANSFERRED TO OTHER DOCUMENTS OR USED OR DISCLOSED TO OTHERS FOR MANUFACTURING OR FOR ANY OTHER PURPOSE EXCEPT AS CALLY AUTHORIZED IN WRITING BY DOUGLAS AIRCRAFT COMPANY INC. THIS DOES NOT APPLY TO INFORMATION FURNISHED BY VENDORS OR OTHERS OUTSIDE

## ABSTRACT

This report presents deflection influence coefficients of the S-IVB Thrust Casting and Thrust Structure from which the spring rate is calculated for axial loads applied simultaneously at the gimbal point and at an actuator attachment. The Redundant Force Analysis Method is used to determine the structural behavior and the deflections for various locations of an applied load.

DESCRIPTORS

S-IVB

Influence Coefficient

Casting

Structure

Spring Rate

Redundant Force Method

**Page intentionally left blank**

FORM 25-S-9
(REV. 4-51)

PREPARED BY _____ DOUGLAS AIRCRAFT COMPANY

PAGE 111

DATE _____ _____ DIVISION

MODEL SM 46531

REPORT NO. SM 4653

TITLE _____

| | | | | | | REVISION SHEET | | |
|---|---|---|---|---|---|---|---|---|
| CHANGE LETTER | DATE | CHANGED BY | CHECKED BY | PAGES CHANGED | PAGES ADDED | BRIEF REASON | APPR. BY | APPR. BY |
| | | | | | | | | |

# PREFACE

This Technical Report was prepared as requested by MSFC at the Vehicle Dynamics and Control Working Group Meeting held at MSFC on November 20, 1963. The report is transmitted to partially fulfill the requirements of Contract Number NAS 7-101 as noted in Douglas Aircraft Company Report SM-41410: Data Submittal Document Saturn S-IVB System, Item 3.8, dated March 1962.

The purpose of the report is to present an analytical substantiation of the Thrust Casting and Thrust Structure Spring Rate by the Redundant Force Analysis Method.

TABLE OF CONTENTS


| Paragraph | | Page |
|---|---|---|
| 1. | INTRODUCTION | 1 |
| 2. | BASIC PRINCIPLES OF REDUNDANT FORCE METHOD | 4 |
| 2.1 | Idealization of the Structure | 5 |
| 2.2 | Analytical Procedure | 5 |
| 2.3 | Determination of Boundary Condition | 10 |
| 3. | ANALYTICAL RESULTS | 13 |
| 3.1 | Effective Spring Rate | 15 |
| 3.2 | Other Applications of Influence Coefficient | 15 |

APPENDIX A IBM PRINT-OUTS OF INPUT AND AUTOMATIC COMPUTATIONS

## LIST OF ILLUSTRATIONS


| Figure | | Page |
|---|---|---|
| 1. | S-IVB Thrust Structure, Engine, and Engine Actuating System | 2 |
| 2. | View of Thrust Structure, Thrust Casting, and Hydraulic Actuator | 3 |
| 3. | Idealized Structure - Thrust Casting | 6 |
| 4. | Idealized Structure - Thrust Structure | 7 |
| 5. | Bending Restraint of a Typical Bar No. 66 | 8 |
| 6. | Diagram of Structure for Boundary Condition Study | 11 |
| 7. | Moment of Inertia and Rotation at Gimbal Point | 12 |
| 8. | Load Number and Corresponding Load Condition for Influence Coefficient | 14 |

# LIST OF TABLES


| Table | | Page |
|---|---|---|
| 1 | Unit Deflection Influence Coefficient | 13 |
| 2 | Coordinates | 13 |
| 10 | Joint External Reactions | A 1 |
| 20 | Joint External Loads | A 3 |
| 30 | Bar External Reactions | A 4 |
| 50 | Bars | A 5 |
| 60 | Panels | A 8 |
| 90 | Joint Coordinates | A 9 |
| 91 | Direction Numbers | A 11 |
| 100 | Bar Properties | A 12 |
| 101 | Panel Properties | A 17 |
| 102 | Panel K Factors | A 18 |
| 103 | Matrices Formed on Tape | A 20 |
| 104 | Phase IV Matrix Row Format | A 21 |
| 105 | Tape Matrix Compiler | A 32 |
| 106 | Matrix 8831 | A 33 |
| 107 | Matrix 8841 | A 34 |

## REFERENCES

1. SM-30470, Analyst's Manual for the Redundant Force Stress Analysis for IBM 709 Computer. December 20, 1960.

2. SM-41410, Data Submittal Document, Saturn S-IVB System. March 1962.

## 1.0 INTRODUCTION

It is essential that in the development of the Servo-Actuator Control System, an accurate prediction of the spring rates of the thrust structure, engine, and the hydraulic actuating system (see Figure 2) be available. The data is required to determine the resonant frequency of the engine-structure-actuator spring mass system. Then, the servo valve's pressure feedback network can be properly sized so that artificial damping of the resonant frequency may be accomplished. Figure 1 is an illustration of the related mechanism and structure. The engine and piping have been removed from Figure 2 to illustrate the actuator attachment to the gimbal casting. It should be noted that the engine is supported by the thrust structure like a cantilevered beam.

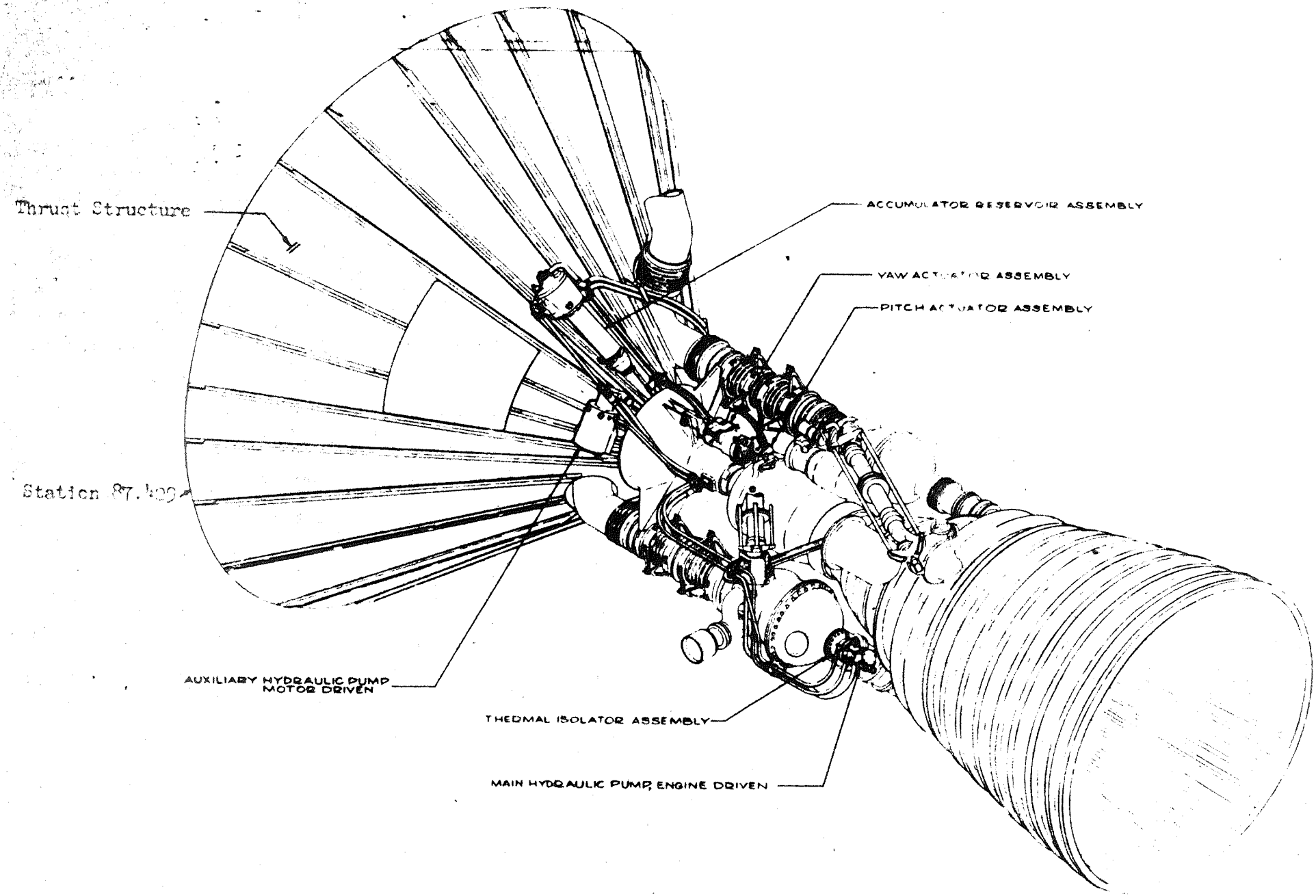


Figure 1. S-IVB Thrust Structure, Engine, and Engine Actuating System



SW 43531

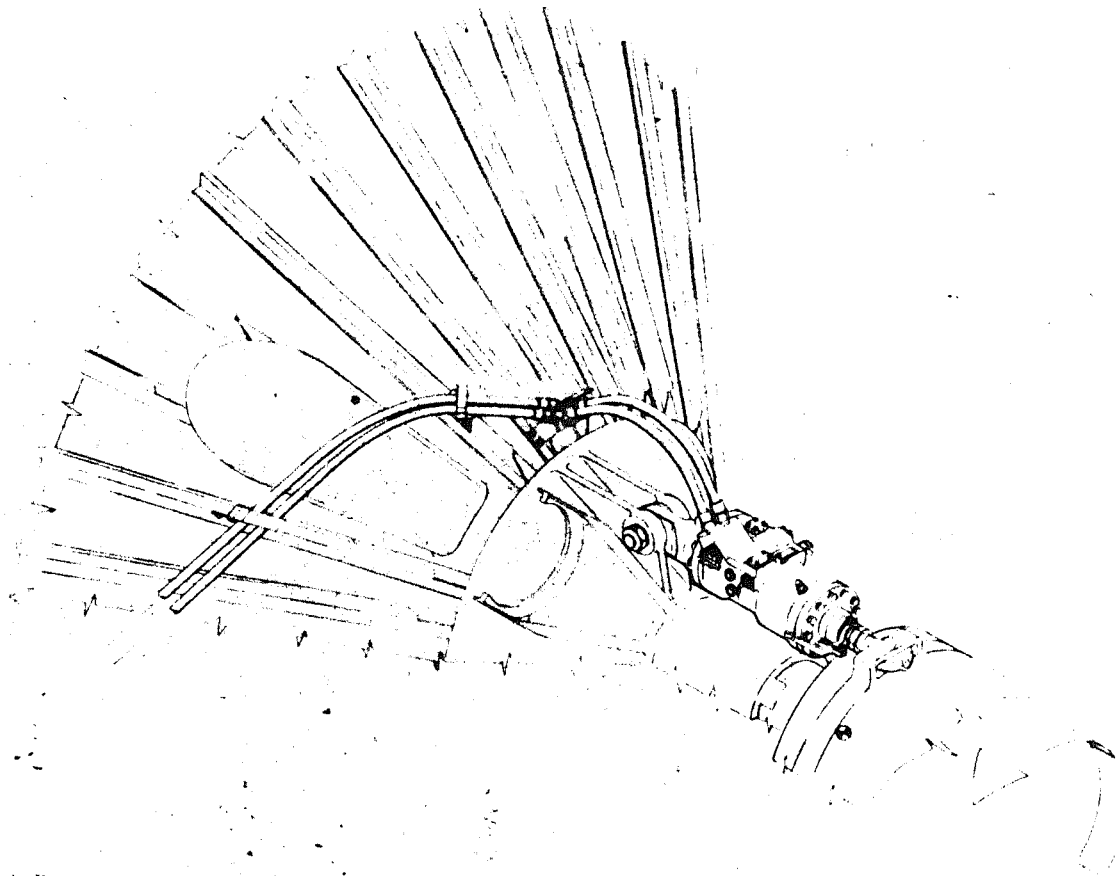

Figure 2. View of Thrust Structure, Thrust Casting, and Hydraulic Actuator.

SM 46531

## 2.0 BASIC PRINCIPLES OF REDUNDANT FORCE METHOD (Ref. 1)

The method of analysis is by the matrix formulation of the equilibrium equations, and the Maxwell-Mohr equations. First, the actual structure is replaced by an idealized discrete structure, a structure composed of a finite number of members connected at a finite number of joints, as discussed in Reference 1. The idealized structure is cut automatically by the computer program which selects its own redundants, optimized to yield well-conditioned matrix equations. Hence, the forces at the cuts are small compared to other forces in the structure.

The machine then breaks the statically determinate structure into free bodies, writes and solves the equation of equilibrium, and writes and solves the Maxwell-Mohr continuity equations. A principal assumption is that the structure is linear; the relationships between external load, support displacement, internal force and deflection of the structure is linear.

SM-30470 (Reference 1) describes the general use of the Redundant Force Method.

## 2.1 Idealization of the Structure

The basic problem involved in analyzing the structure in question by the redundant force method is that of assuming an efficient idealization of the complex structure within the maximum limit of equations allowable within the program. The idealization of the gimbal casting is outlined in Figure 3, and the idealization of the thrust structure in Figure 4. The structure idealized in this study lies within the semicircle enclosed by the +X coordinate within the YZ plane. This YZ plane is a plane of symmetry and the -X coordinate section is a mirror image of the +X portion. Each stringer and its effective width of skin was assumed to carry only axial loads. In the aft two bays of the thrust structure idealization, stringers and their effective skin portions were uniformly lumped into a single bar to reduce the number of equations. The values determined by using this procedure are not effected appreciably since the structure is farthest from the point of load application and the load will have distributed itself before reaching this area.

## 2.2 Analytical Procedure

The schematic diagrams (Figures 3 and 4) of the idealized structure show the external loads and reactions listed in Table 10, 20, and 30 in Appendix "A". The direction cosines of the vectors are in Table 91. The structure is idealized into bars and panels. The skin panels are attached to the bars at the mid-points of each panel edge from where the shear is transmitted. The bars can carry bending restraints as well as axial loads and is noted in Table 50. The ring frames were assumed to carry in-plane bending and a typical bar is illustrated in Figure 5.

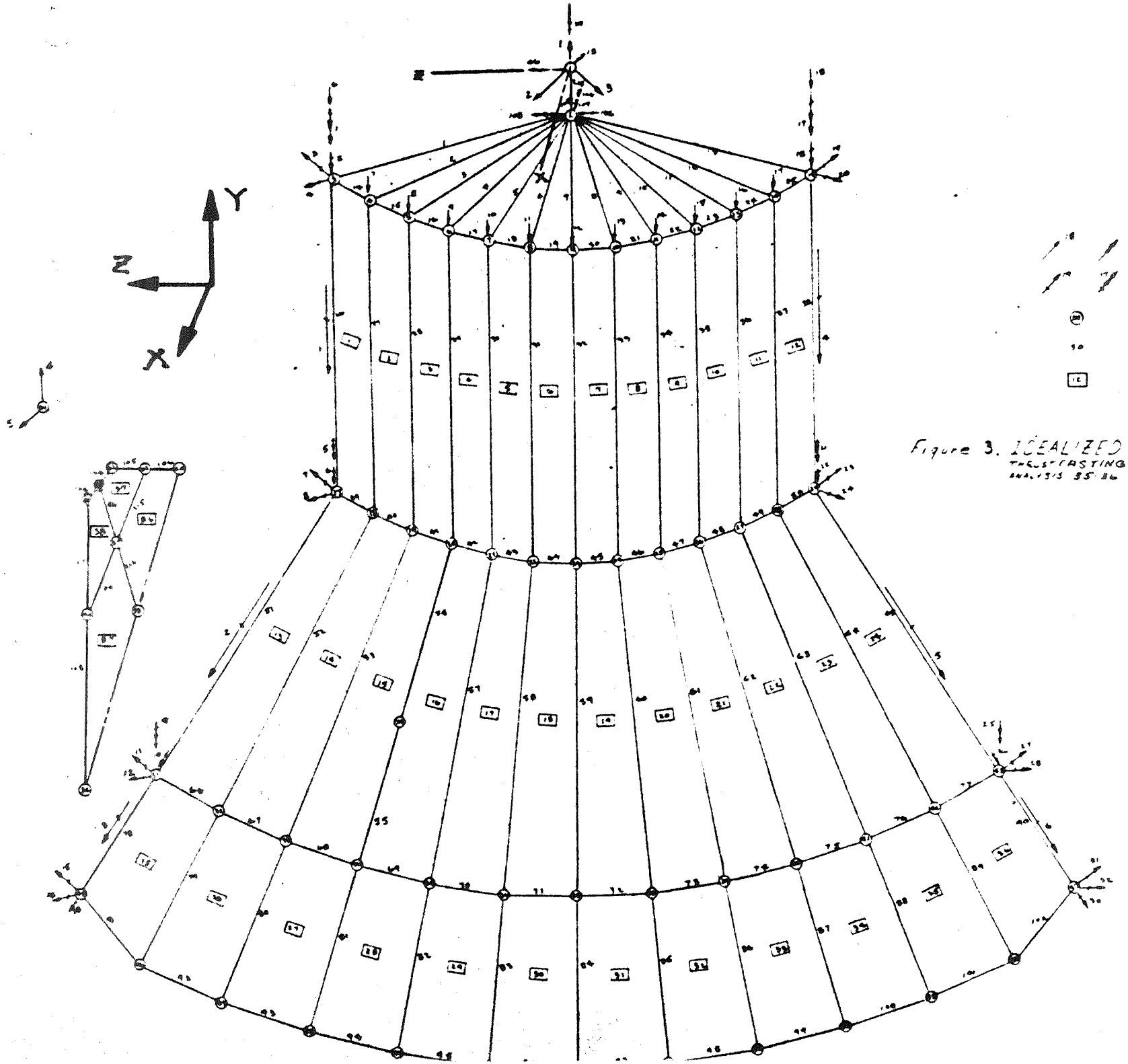


Figure 3. IDEALIZED STRUCTURE
THRUST TESTING
ANALYSIS 85-86

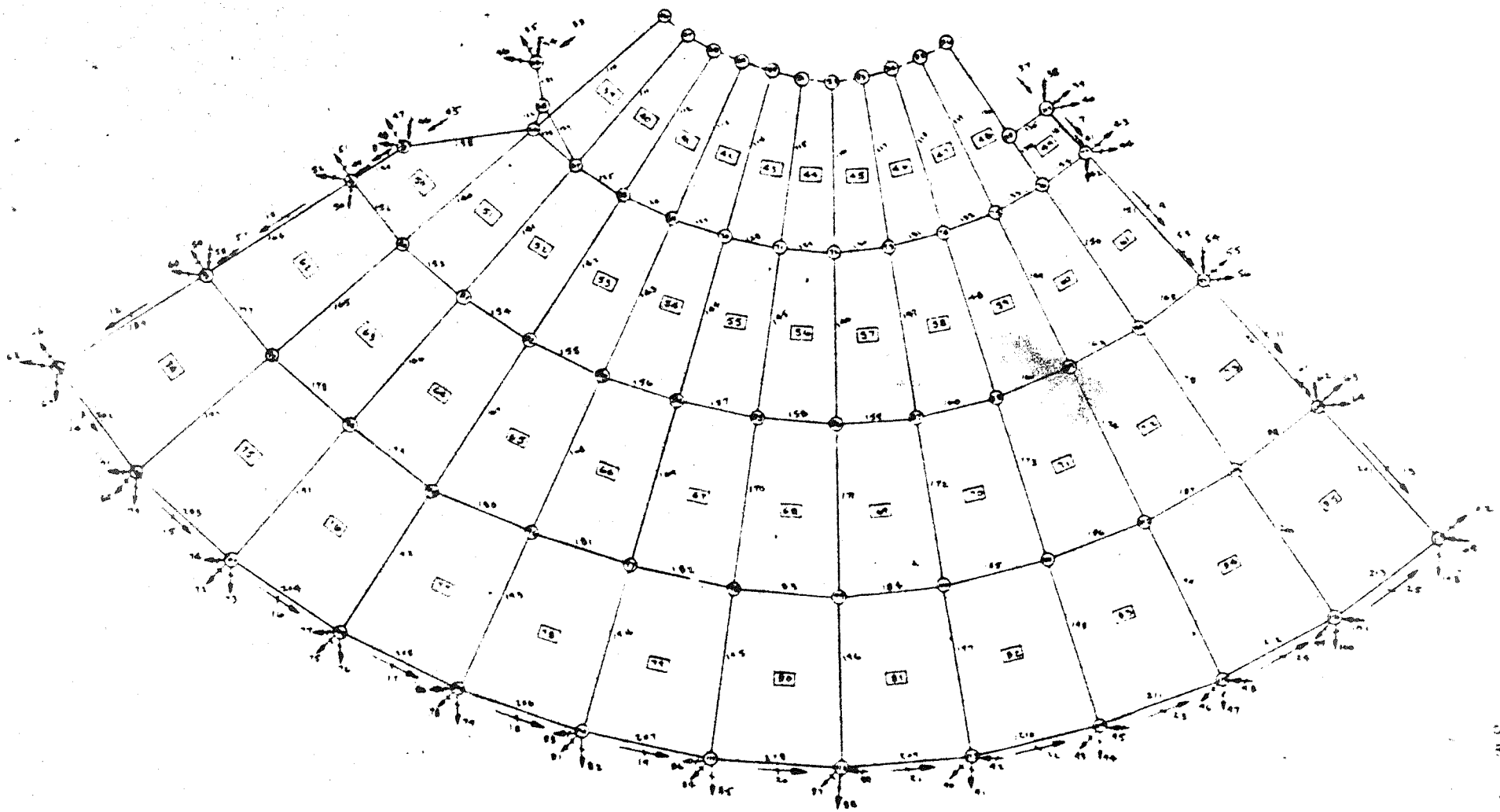


Figure 4. IDEALIZED STRUCTURE
Thrust Structure
Analysis 35-36



SM 46531

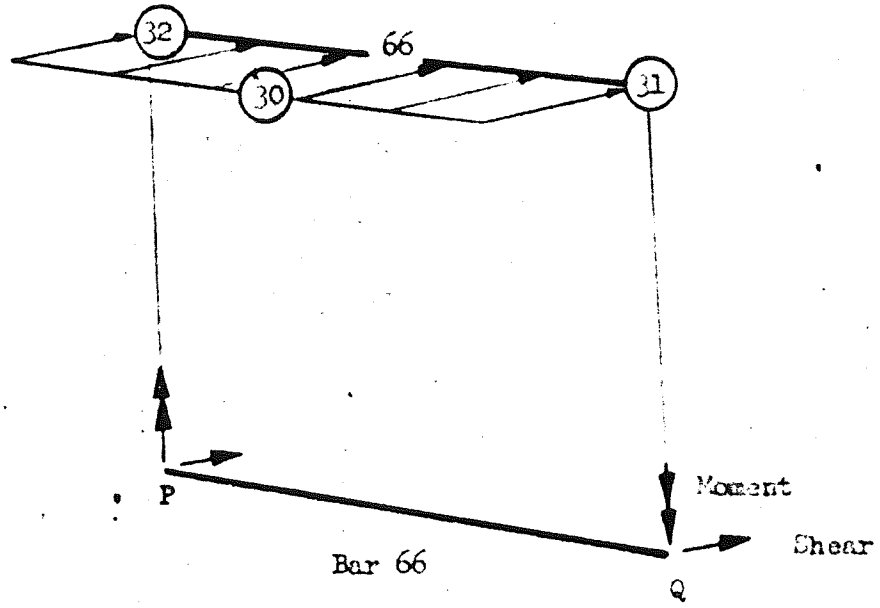


Figure 5. Bending Restraint* of a Typical Bar. No. 66

* See Figure 17, Reference 1.

Table 60 describes the four corners of each of the panels listed. The point coordinates are in Table 90. The section properties of the bars and panels are contained in Tables 100 and 101.

Tables 102 thru 107 are the printed output of the automatic computations. Tables 106 and 107 are the deflection influence coefficient matrices. Matrix 8831 identifies the one-kip influence coefficient for the +X coordinate portion of the structure; Matrix 8841 identifies the -X portion. $\delta_1$ due to the load $P_1$ has been modified to $855 \times 10^{-9}$ inch/pound to reflect (1) the beam type of idealization for the flat plate of the gimbal casting interface, and (2) the effect of a uniform load at the interface rather than a point load at the engine gimbal point.

## 2.3 Determination of Boundary Condition

A brief study was made to determine a suitable boundary condition for this analysis.

In this study the thrust structure and the aft bulkhead were assumed to act as a cantilevered beam (Reference Figure 6). By applying a unit moment at the engine gimbal point and varying the length of the beam we were able to determine the rotational effects at the gimbal point.

The results of this study are shown in Figure 7 with the moment of inertia and rotation at the gimbal point plotted as ordinates, and the station (Reference Figure 6) plane as the abscissa. The figure shows that the rotation of the gimbal point does not vary appreciably from approximately station 87.429, which is the tangent point of the aft bulkhead and thrust structure, to the tangent point of the aft bulkhead and aft skirt section station 186.147. Therefore station 87.429 was used as the upper boundary in the analytical math model.

The plotted moment of inertia for the thrust structure only considered the skin area. The stringer properties were omitted in the computations. Thus, this preliminary study is conservative as the rotation curve (Reference Figure 7) would have flattened out much more if the stringers properties were included.

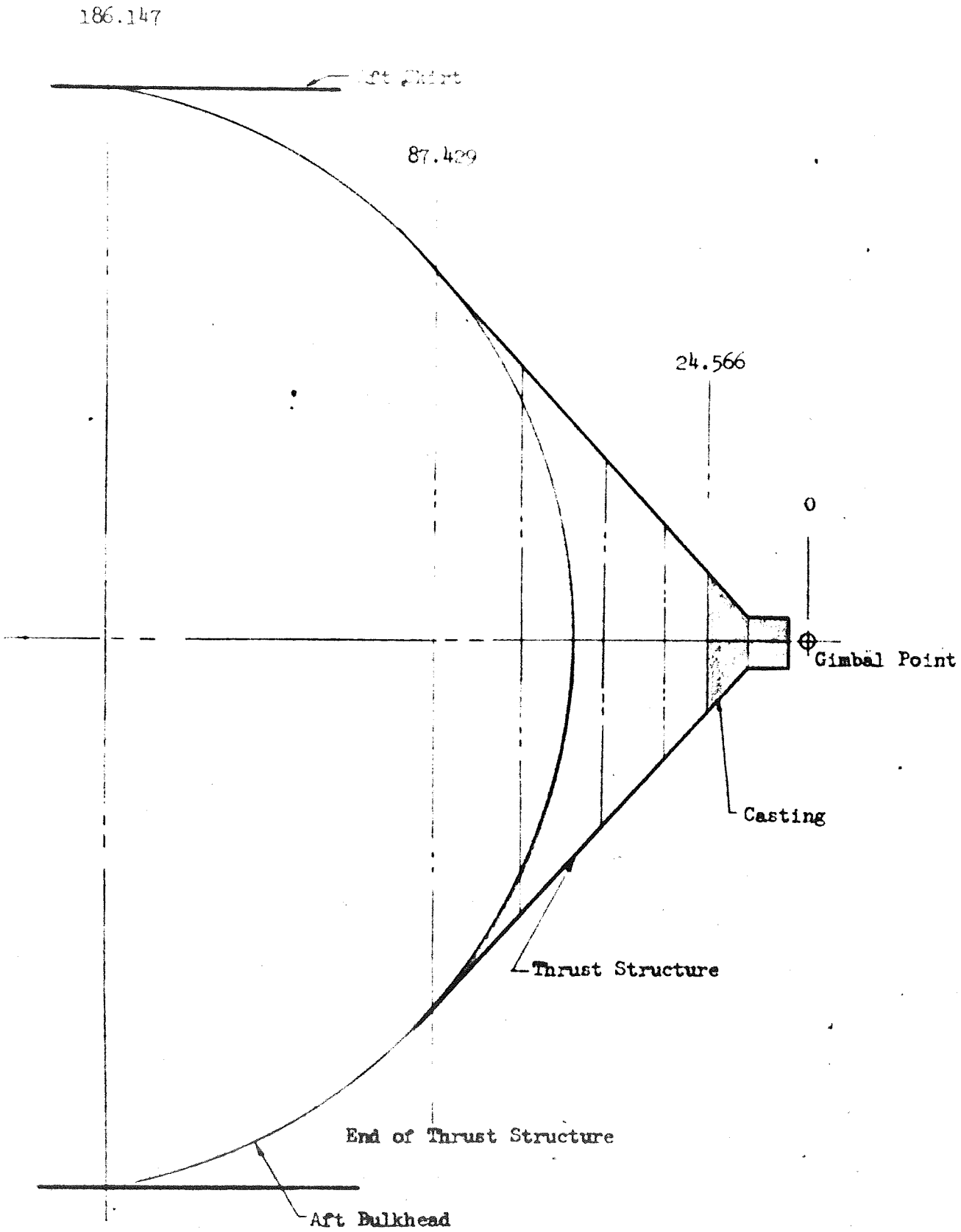


Figure 6. Diagram of Structure for Boundary Condition Study.



DOUGLAS

Figure 7. Moment of Inertia and Rotation at Gimbal Point.

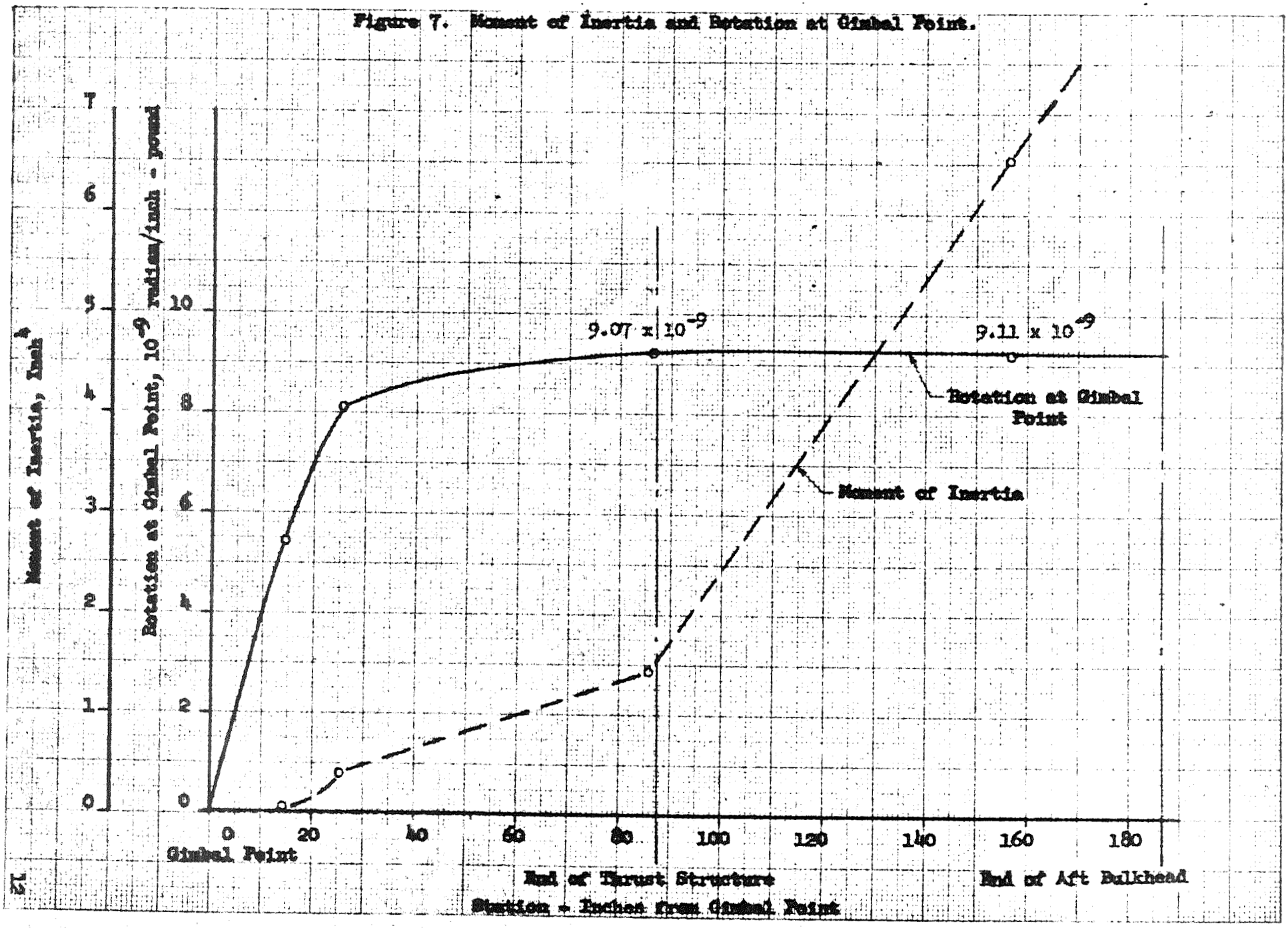

## 3. ANALYTICAL RESULTS

The resulting influence coefficients, the deflections at each load application point due to the unit load are tabulated below.

Table 1. Unit Deflection Influence Coefficient

Deflection, $\times 10^{-9}$ inch

| | $\delta_1$ | $\delta_2$ | $\delta_4$ | $\delta_5$ | $\delta_7$ | $\delta_9$ | $\delta_{10}$ |
|---|---|---|---|---|---|---|---|
| $P_1$ | 855 | - 10 | 706 | - 2 | - 10 | 706 | - 2 |
| $P_2$ | -10 | 4844 | -1398 | 1029 | - 40 | 64 | 166 |
| $P_4$ | 706 | - 1398 | 3108 | 404 | 64 | - 25 | -276 |
| $P_5$ | - 2 | 1029 | 404 | 1673 | 166 | -276 | - 89 |
| $P_7$ | -10 | - 40 | 64 | 166 | 4844 | -1398 | 1029 |
| $P_9$ | 706 | 64 | -25 | -276 | -1398 | 3108 | 404 |
| $P_{10}$ | - 2 | 166 | - 276 | - 89 | 1029 | 404 | 1673 |

Table 2. Coordinates.

| Point | X | Y | Z |
|---|---|---|---|
| Gimbal | 0 | 0 | 0 |
| Yaw Actuator | 8.396931 | -15.6 | 8.396931 |
| Pitch Actuator | -8.396931 | -15.6 | 8.396931 |

* Refer to Figure 8 for location of deflection points.

Figure 6. Load No. and Corresponding Load Condition for Influence Coefficient.

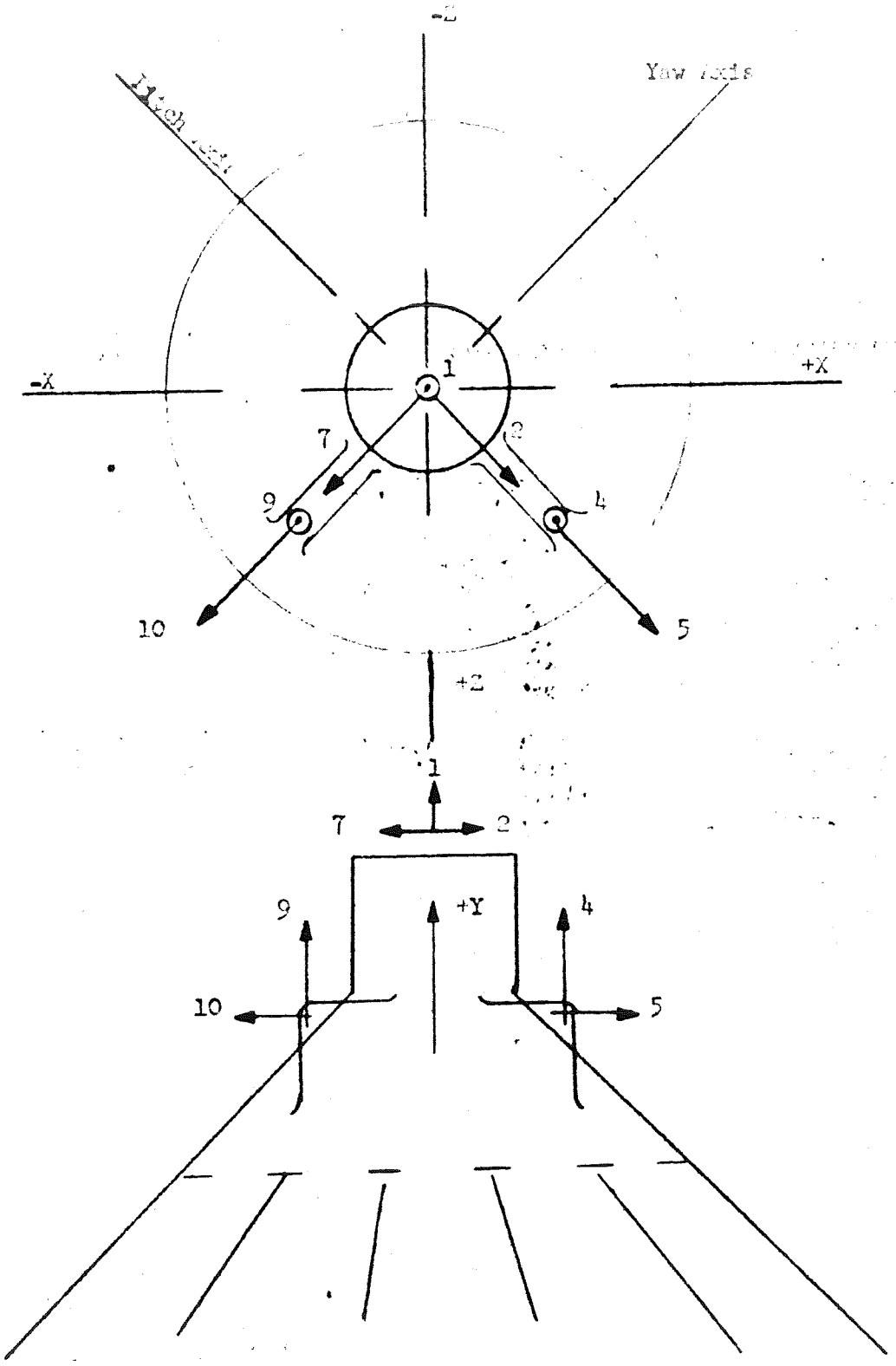


Note:

Loads 1, 2, and 7 act at the engine gimbal point,
Loads 4 and 5 act at the yaw actuator attachment lug of the thrust casting,
Loads 9 and 10 at the pitch actuator attachment lug of the thrust casting.

3.1 Effective Spring Rate

An approximate solution of the effective spring rate is determined as follows:

When an upward unit load, $P_1$, is applied at the gimbal point, the deflection at the gimbal point is given by Table 1 as,

$\delta_{11} = 855 \times 10^{-9}$ inch

The deflection at the yaw actuator in direction 4 from Table 1 is, $\delta_{41} = 706 \times 10^{-9}$ inch

For an upward load, $P_4$, applied at the yaw actuator,

$\delta_{14} = 706 \times 10^{-9}$ inch

$\delta_{44} = 3108 \times 10^{-9}$ inch

The sum of the deflections for forces at 1 and 4 (Reference Figure 8) due to $-P_1$ acting simultaneously with $P_4$,

| | $\delta_1$ | | $\delta_4$ |
|---|---|---|---|
| $-P_1$ | $-855 \times 10^{-9}$ inch | | $-706 \times 10^{-9}$ inch |
| $P_4$ | 706 | | 3108 |
| | $-149 \times 10^{-9}$ inch | | $2402 \times 10^{-9}$ inch |
| | | (-) | -149 |
| | | | $2551 \times 10^{-9}$ inch |

The effective spring rate,

$$K_e = \frac{1}{2551 \times 10^{-9}} = 392{,}000 \text{ lb/inch}$$

3.2 Other applications of Influence Coefficient.

The results from Table 1 can be used to modify the spring constant by considering radial deflections due to both axial and radial loads.

# APPENDIX A

## IBM PRINT-OUTS OF INPUT AND AUTOMATIC COMPUTATIONS

| | |
|---|---|
| Table 10 thru 101 | Table Load Sheet of Input. |
| Table 102 thru 107 | Output of Automatic Computations. |

TABLE 10 . 108 ENTRIES . JOINT EXTERNAL REACTIONS

| FORCE NO. | TYPE | JOINT | POINT | DIR. NO. | C DLTA | FORCE NO. | TYPE | JOINT | POINT | DIR.NO. | C DLTA |
|---|---|---|---|---|---|---|---|---|---|---|---|
| 1 | 2 | 3 | 0 | 4 | 0 | 49 | 1 | 79 | 0 | 7 | 0 |
| 2 | 1 | 3 | 0 | 4 | 0 | 50 | 2 | 79 | 0 | 4 | 0 |
| 3 | 1 | 3 | 0 | 2 | 0 | 51 | 1 | 79 | 0 | 2 | 0 |
| 4 | 1 | 3 | 0 | 5 | 0 | 52 | 1 | 79 | 0 | 9 | 0 |
| 5 | 2 | 17 | 0 | 4 | 0 | 53 | 1 | 91 | 0 | 8 | 0 |
| 6 | 1 | 17 | 0 | 4 | 0 | 54 | 2 | 91 | 0 | 4 | 0 |
| 7 | 1 | 17 | 0 | 2 | 0 | 55 | 1 | 91 | 0 | 2 | 0 |
| 8 | 1 | 17 | 0 | 5 | 0 | 56 | 1 | 91 | 0 | 10 | 0 |
| 9 | 2 | 31 | 0 | 4 | 0 | 57 | 1 | 92 | 0 | 7 | 0 |
| 10 | 1 | 31 | 0 | 7 | 0 | 58 | 2 | 92 | 0 | 4 | 0 |
| 11 | 1 | 31 | 0 | 2 | 0 | 59 | 1 | 92 | 0 | 2 | 0 |
| 12 | 1 | 31 | 0 | 9 | 0 | 60 | 1 | 92 | 0 | 9 | 0 |
| 13 | 1 | 1 | 0 | 1 | 0 | 61 | 1 | 104 | 0 | 8 | 0 |
| 14 | 1 | 45 | 0 | 7 | 0 | 62 | 2 | 104 | 0 | 4 | 0 |
| 15 | 1 | 45 | 0 | 2 | 0 | 63 | 1 | 104 | 0 | 2 | 0 |
| 16 | 1 | 45 | 0 | 9 | 0 | 64 | 1 | 104 | 0 | 10 | 0 |
| 17 | 2 | 15 | 0 | 4 | 0 | 65 | 1 | 117 | 0 | 5 | 0 |
| 18 | 1 | 15 | 0 | 4 | 0 | 66 | 1 | 105 | 0 | 2 | 0 |
| 19 | 1 | 15 | 0 | 2 | 0 | 67 | 1 | 105 | 0 | 4 | 0 |
| 20 | 1 | 15 | 0 | 6 | 0 | 68 | 1 | 105 | 0 | 5 | 0 |
| 21 | 2 | 29 | 0 | 4 | 0 | 69 | 1 | 106 | 0 | 1 | 0 |
| 22 | 1 | 29 | 0 | 4 | 0 | 70 | 1 | 106 | 0 | 4 | 0 |
| 23 | 1 | 29 | 0 | 2 | 0 | 71 | 1 | 106 | 0 | 5 | 0 |
| 24 | 1 | 29 | 0 | 6 | 0 | 72 | 1 | 107 | 0 | 1 | 0 |
| 25 | 2 | 43 | 0 | 4 | 0 | 73 | 1 | 107 | 0 | 4 | 0 |
| 26 | 1 | 43 | 0 | 8 | 0 | 74 | 1 | 107 | 0 | 5 | 0 |
| 27 | 1 | 43 | 0 | 2 | 0 | 75 | 1 | 108 | 0 | 1 | 0 |
| 28 | 1 | 43 | 0 | 10 | 0 | 76 | 1 | 108 | 0 | 4 | 0 |
| 29 | 1 | 1 | 0 | 3 | 0 | 77 | 1 | 108 | 0 | 5 | 0 |
| 30 | 1 | 57 | 0 | 8 | 0 | 78 | 1 | 109 | 0 | 1 | 0 |
| 31 | 1 | 57 | 0 | 2 | 0 | 79 | 1 | 109 | 0 | 4 | 0 |
| 32 | 1 | 57 | 0 | 10 | 0 | 80 | 1 | 109 | 0 | 5 | 0 |
| 33 | 1 | 64 | 0 | 7 | 0 | 81 | 1 | 110 | 0 | 1 | 0 |
| 34 | 2 | 64 | 0 | 4 | 0 | 82 | 1 | 110 | 0 | 4 | 0 |
| 35 | 1 | 64 | 0 | 2 | 0 | 83 | 1 | 110 | 0 | 5 | 0 |
| 36 | 1 | 64 | 0 | 9 | 0 | 84 | 1 | 111 | 0 | 1 | 0 |
| 37 | 1 | 119 | 0 | 8 | 0 | 85 | 1 | 111 | 0 | 4 | 0 |
| 38 | 2 | 119 | 0 | 4 | 0 | 86 | 1 | 111 | 0 | 5 | 0 |
| 39 | 1 | 119 | 0 | 2 | 0 | 87 | 1 | 112 | 0 | 1 | 0 |
| 40 | 1 | 119 | 0 | 10 | 0 | 88 | 1 | 112 | 0 | 4 | 0 |
| 41 | 1 | 77 | 0 | 8 | 0 | 89 | 1 | 112 | 0 | 5 | 0 |
| 42 | 2 | 77 | 0 | 4 | 0 | 90 | 1 | 113 | 0 | 1 | 0 |
| 43 | 1 | 77 | 0 | 2 | 0 | 91 | 1 | 113 | 0 | 4 | 0 |
| 44 | 1 | 77 | 0 | 10 | 0 | 92 | 1 | 113 | 0 | 5 | 0 |
| 45 | 1 | 78 | 0 | 7 | 0 | 93 | 1 | 114 | 0 | 1 | 0 |
| 46 | 1 | 1 | 0 | 5 | 0 | 94 | 1 | 114 | 0 | 4 | 0 |
| 47 | 1 | 78 | 0 | 2 | 0 | 95 | 1 | 114 | 0 | 5 | 0 |
| 48 | 1 | 78 | 0 | 9 | 0 | 96 | 1 | 115 | 0 | 1 | 0 |



Table 10

REDUNDANT FORCE STRESS ANALYSIS PROG. A05. ANALYSIS 35 CASE 36 RUN 1

TABLE 10 . 108 ENTRIES . JOINT EXTERNAL REACTIONS

| FORCE NO. | TYPE | JOINT | POINT | DIR. NO. | C DLTA | FORCE NO. | TYPE | JOINT | POINT | DIR.NO. | C DLTA |
|---|---|---|---|---|---|---|---|---|---|---|---|
| 97 | 1 | 115 | 0 | 4 | 0 | 103 | 1 | 117 | 0 | 4 | 0 |
| 98 | 1 | 115 | 0 | 5 | 0 | 104 | 1 | 2 | 0 | 1 | 0 |
| 99 | 1 | 116 | 0 | 1 | 0 | 105 | 1 | 2 | 0 | 3 | 0 |
| 100 | 1 | 116 | 0 | 4 | 0 | 106 | 1 | 2 | 0 | 5 | 0 |
| 101 | 1 | 116 | 0 | 5 | 0 | 107 | 2 | 2 | 0 | 1 | 0 |
| 102 | 1 | 117 | 0 | 2 | 0 | 108 | 2 | 2 | 0 | 5 | 0 |



Table 10

REDUNDANT FORCE STRESS ANALYSIS PROG. A05.0 ANALYSIS 35 CASE 36 RUN 1

TABLE 20 . 18 ENTRIES . JOINT EXTERNAL LOADS

| FORCE NO. | TYPE | JOINT | POINT | DIR. NO. | C DLTA | FORCE NO. | TYPE | JOINT | POINT | DIR.NO. | C DLTA |
|---|---|---|---|---|---|---|---|---|---|---|---|
| 1 | 1 | 1 | 0 | 3 | 1 | 10 | 1 | 7 | 0 | 4 | 1 |
| 2 | 1 | 1 | 0 | 11 | 1 | 11 | 1 | 8 | 0 | 4 | 1 |
| 3 | 1 | 1 | 0 | 12 | 1 | 12 | 1 | 9 | 0 | 4 | 1 |
| 4 | 1 | 61 | 0 | 3 | 1 | 13 | 1 | 10 | 0 | 4 | 1 |
| 5 | 1 | 61 | 0 | 11 | 1 | 14 | 1 | 11 | 0 | 4 | 1 |
| 6 | 1 | 3 | 0 | 4 | 1 | 15 | 1 | 12 | 0 | 4 | 1 |
| 7 | 1 | 4 | 0 | 4 | 1 | 16 | 1 | 13 | 0 | 4 | 1 |
| 8 | 1 | 5 | 0 | 4 | 1 | 17 | 1 | 14 | 0 | 4 | 1 |
| 9 | 1 | 6 | 0 | 4 | 1 | 18 | 1 | 15 | 0 | 4 | 1 |



SM 46531

TABLE 30 . 25 ENTRIES . BAR EXTERNAL REACTIONS

| FORCE NO. | JOINT M | JOINT N | C DLTA | FORCE NO. | JOINT M | JOINT N | C DLTA | FORCE NO. | JOINT M | JOINT N | C DLTA |
|---|---|---|---|---|---|---|---|---|---|---|---|
| 1 | 3 | 17 | 0 | 10 | 79 | 92 | 0 | 18 | 109 | 110 | 0 |
| 2 | 17 | 31 | 0 | 11 | 91 | 104 | 0 | 19 | 110 | 111 | 0 |
| 3 | 31 | 45 | 0 | 12 | 92 | 105 | 0 | 20 | 111 | 112 | 0 |
| 4 | 15 | 29 | 0 | 13 | 104 | 117 | 0 | 21 | 112 | 113 | 0 |
| 5 | 29 | 43 | 0 | 14 | 105 | 106 | 0 | 22 | 113 | 114 | 0 |
| 6 | 43 | 57 | 0 | 15 | 106 | 107 | 0 | 23 | 114 | 115 | 0 |
| 7 | 119 | 77 | 0 | 16 | 107 | 108 | 0 | 24 | 115 | 116 | 0 |
| 8 | 78 | 79 | 0 | 17 | 108 | 109 | 0 | 25 | 116 | 117 | 0 |
| 9 | 77 | 91 | 0 | | | | | | | | |



Table 30

TABLE 50 . 216 ENTRIES . BARS

| BAR NO. | P | Q | C | FORCES TP | TQ | BNP | BNQ | BTP | BTQ | T | BAR NO. | P. | Q | C | FORCES TP | TQ | BNP | BNQ | BTP | BTQ | T |
|---|---|---|---|---|---|---|---|---|---|---|---|---|---|---|---|---|---|---|---|---|---|
| 1 | 2 | 3 | 1 | 1 | 1 | 1 | 1 | 0 | 0 | 0 | 49 | 27 | 28 | 16 | 1 | 1 | 1 | 1 | 0 | 0 | 0 |
| 2 | 2 | 4 | 1 | 1 | 1 | 1 | 1 | 0 | 0 | 0 | 50 | 28 | 29 | 16 | 1 | 1 | 1 | 1 | 0 | 0 | 0 |
| 3 | 2 | 5 | 1 | 1 | 1 | 1 | 1 | 0 | 0 | 0 | 51 | 17 | 31 | 0 | 1 | 1 | 0 | 0 | 0 | 0 | 0 |
| 4 | 2 | 6 | 1 | 1 | 1 | 1 | 1 | 0 | 0 | 0 | 52 | 18 | 32 | 0 | 1 | 1 | 0 | 0 | 0 | 0 | 0 |
| 5 | 2 | 7 | 1 | 1 | 1 | 1 | 1 | 0 | 0 | 0 | 53 | 19 | 33 | 0 | 1 | 1 | 0 | 0 | 0 | 0 | 0 |
| 6 | 2 | 8 | 1 | 1 | 1 | 1 | 1 | 0 | 0 | 0 | 54 | 20 | 58 | 16 | 1 | 1 | 0 | 1 | 0 | 0 | 0 |
| 7 | 2 | 9 | 1 | 1 | 1 | 1 | 1 | 0 | 0 | 0 | 55 | 58 | 34 | 16 | 1 | 1 | 1 | 0 | 0 | 0 | 0 |
| 8 | 2 | 10 | 1 | 1 | 1 | 1 | 1 | 0 | 0 | 0 | 56 | 59 | 61 | 0 | 1 | 1 | 0 | 0 | 0 | 0 | 0 |
| 9 | 2 | 11 | 1 | 1 | 1 | 1 | 1 | 0 | 0 | 0 | 57 | 21 | 35 | 0 | 1 | 1 | 0 | 0 | 0 | 0 | 0 |
| 10 | 2 | 12 | 1 | 1 | 1 | 1 | 1 | 0 | 0 | 0 | 58 | 22 | 36 | 0 | 1 | 1 | 0 | 0 | 0 | 0 | 0 |
| 11 | 2 | 13 | 1 | 1 | 1 | 1 | 1 | 0 | 0 | 0 | 59 | 23 | 37 | 0 | 1 | 1 | 0 | 0 | 0 | 0 | 0 |
| 12 | 2 | 14 | 1 | 1 | 1 | 1 | 1 | 0 | 0 | 0 | 60 | 24 | 38 | 0 | 1 | 1 | 0 | 0 | 0 | 0 | 0 |
| 13 | 2 | 15 | 1 | 1 | 1 | 1 | 1 | 0 | 0 | 0 | 61 | 25 | 39 | 0 | 1 | 1 | 0 | 0 | 0 | 0 | 0 |
| 14 | 3 | 4 | 2 | 1 | 1 | 1 | 1 | 0 | 0 | 0 | 62 | 26 | 40 | 0 | 1 | 1 | 0 | 0 | 0 | 0 | 0 |
| 15 | 4 | 5 | 2 | 1 | 1 | 1 | 1 | 0 | 0 | 0 | 63 | 27 | 41 | 0 | 1 | 1 | 0 | 0 | 0 | 0 | 0 |
| 16 | 5 | 6 | 2 | 1 | 1 | 1 | 1 | 0 | 0 | 0 | 64 | 28 | 42 | 0 | 1 | 1 | 0 | 0 | 0 | 0 | 0 |
| 17 | 6 | 7 | 2 | 1 | 1 | 1 | 1 | 0 | 0 | 0 | 65 | 29 | 43 | 0 | 1 | 1 | 0 | 0 | 0 | 0 | 0 |
| 18 | 7 | 8 | 2 | 1 | 1 | 1 | 1 | 0 | 0 | 0 | 66 | 31 | 32 | 120 | 1 | 1 | 1 | 1 | 0 | 0 | 0 |
| 19 | 8 | 9 | 2 | 1 | 1 | 1 | 1 | 0 | 0 | 0 | 67 | 32 | 33 | 120 | 1 | 1 | 1 | 1 | 0 | 0 | 0 |
| 20 | 9 | 10 | 2 | 1 | 1 | 1 | 1 | 0 | 0 | 0 | 68 | 33 | 34 | 120 | 1 | 1 | 1 | 1 | 0 | 0 | 0 |
| 21 | 10 | 11 | 2 | 1 | 1 | 1 | 1 | 0 | 0 | 0 | 69 | 34 | 35 | 120 | 1 | 1 | 1 | 1 | 0 | 0 | 0 |
| 22 | 11 | 12 | 2 | 1 | 1 | 1 | 1 | 0 | 0 | 0 | 70 | 35 | 36 | 120 | 1 | 1 | 1 | 1 | 0 | 0 | 0 |
| 23 | 12 | 13 | 2 | 1 | 1 | 1 | 1 | 0 | 0 | 0 | 71 | 36 | 37 | 120 | 1 | 1 | 1 | 1 | 0 | 0 | 0 |
| 24 | 13 | 14 | 2 | 1 | 1 | 1 | 1 | 0 | 0 | 0 | 72 | 37 | 38 | 120 | 1 | 1 | 1 | 1 | 0 | 0 | 0 |
| 25 | 14 | 15 | 2 | 1 | 1 | 1 | 1 | 0 | 0 | 0 | 73 | 38 | 39 | 120 | 1 | 1 | 1 | 1 | 0 | 0 | 0 |
| 26 | 3 | 17 | 2 | 1 | 1 | 1 | 0 | 0 | 0 | 0 | 74 | 39 | 40 | 120 | 1 | 1 | 1 | 1 | 0 | 0 | 0 |
| 27 | 4 | 18 | 2 | 1 | 1 | 1 | 0 | 0 | 0 | 0 | 75 | 40 | 41 | 120 | 1 | 1 | 1 | 1 | 0 | 0 | 0 |
| 28 | 5 | 19 | 2 | 1 | 1 | 1 | 0 | 0 | 0 | 0 | 76 | 41 | 42 | 120 | 1 | 1 | 1 | 1 | 0 | 0 | 0 |
| 29 | 6 | 20 | 2 | 1 | 1 | 1 | 0 | 0 | 0 | 0 | 77 | 42 | 43 | 120 | 1 | 1 | 1 | 1 | 0 | 0 | 0 |
| 30 | 7 | 21 | 2 | 1 | 1 | 1 | 0 | 0 | 0 | 0 | 78 | 31 | 45 | 0 | 1 | 1 | 0 | 0 | 0 | 0 | 0 |
| 31 | 8 | 22 | 2 | 1 | 1 | 1 | 0 | 0 | 0 | 0 | 79 | 32 | 46 | 0 | 1 | 1 | 0 | 0 | 0 | 0 | 0 |
| 32 | 9 | 23 | 2 | 1 | 1 | 1 | 0 | 0 | 0 | 0 | 80 | 33 | 47 | 0 | 1 | 1 | 0 | 0 | 0 | 0 | 0 |
| 33 | 10 | 24 | 2 | 1 | 1 | 1 | 0 | 0 | 0 | 0 | 81 | 34 | 48 | 0 | 1 | 1 | 0 | 0 | 0 | 0 | 0 |
| 34 | 11 | 25 | 2 | 1 | 1 | 1 | 0 | 0 | 0 | 0 | 82 | 35 | 49 | 0 | 1 | 1 | 0 | 0 | 0 | 0 | 0 |
| 35 | 12 | 26 | 2 | 1 | 1 | 1 | 0 | 0 | 0 | 0 | 83 | 36 | 50 | 0 | 1 | 1 | 0 | 0 | 0 | 0 | 0 |
| 36 | 13 | 27 | 2 | 1 | 1 | 1 | 0 | 0 | 0 | 0 | 84 | 37 | 51 | 0 | 1 | 1 | 0 | 0 | 0 | 0 | 0 |
| 37 | 14 | 28 | 2 | 1 | 1 | 1 | 0 | 0 | 0 | 0 | 85 | 38 | 52 | 0 | 1 | 1 | 0 | 0 | 0 | 0 | 0 |
| 38 | 15 | 29 | 2 | 1 | 1 | 1 | 0 | 0 | 0 | 0 | 86 | 39 | 53 | 0 | 1 | 1 | 0 | 0 | 0 | 0 | 0 |
| 39 | 17 | 18 | 16 | 1 | 1 | 1 | 1 | 0 | 0 | 0 | 87 | 40 | 54 | 0 | 1 | 1 | 0 | 0 | 0 | 0 | 0 |
| 40 | 18 | 19 | 16 | 1 | 1 | 1 | 1 | 0 | 0 | 0 | 88 | 41 | 55 | 0 | 1 | 1 | 0 | 0 | 0 | 0 | 0 |
| 41 | 19 | 20 | 16 | 1 | 1 | 1 | 1 | 0 | 0 | 0 | 89 | 42 | 56 | 0 | 1 | 1 | 0 | 0 | 0 | 0 | 0 |
| 42 | 20 | 21 | 16 | 1 | 1 | 1 | 1 | 0 | 0 | 0 | 90 | 43 | 57 | 0 | 1 | 1 | 0 | 0 | 0 | 0 | 0 |
| 43 | 21 | 22 | 16 | 1 | 1 | 1 | 1 | 0 | 0 | 0 | 91 | 45 | 46 | 0 | 1 | 1 | 0 | 0 | 0 | 0 | 0 |
| 44 | 22 | 23 | 16 | 1 | 1 | 1 | 1 | 0 | 0 | 0 | 92 | 46 | 47 | 121 | 1 | 1 | 1 | 1 | 0 | 0 | 0 |
| 45 | 23 | 24 | 16 | 1 | 1 | 1 | 1 | 0 | 0 | 0 | 93 | 47 | 48 | 121 | 1 | 1 | 1 | 1 | 0 | 0 | 0 |
| 46 | 24 | 25 | 16 | 1 | 1 | 1 | 1 | 0 | 0 | 0 | 94 | 48 | 49 | 121 | 1 | 1 | 1 | 1 | 0 | 0 | 0 |
| 47 | 25 | 26 | 16 | 1 | 1 | 1 | 1 | 0 | 0 | 0 | 95 | 49 | 50 | 121 | 1 | 1 | 1 | 1 | 0 | 0 | 0 |
| 48 | 26 | 27 | 16 | 1 | 1 | 1 | 1 | 0 | 0 | 0 | 96 | 50 | 51 | 121 | 1 | 1 | 1 | 1 | 0 | 0 | 0 |



Table 50

TABLE 50 . 216 ENTRIES . BARS

| BAR NO. | P | Q | C | FORCES TP | TQ | BNP | BNQ | BTP | BTQ | T | BAR NO. | P | Q | C | FORCES TP | TQ | BNP | BNQ | BTP | BTQ | T |
|---|---|---|---|---|---|---|---|---|---|---|---|---|---|---|---|---|---|---|---|---|---|
| 97 | 51 | 52 | 121 | 1 | 1 | 1 | 1 | 0 | 0 | 0 | 145 | 71 | 85 | 0 | 1 | 1 | 0 | 0 | 0 | 0 | 0 |
| 98 | 52 | 53 | 121 | 1 | 1 | 1 | 1 | 0 | 0 | 0 | 146 | 72 | 86 | 0 | 1 | 1 | 0 | 0 | 0 | 0 | 0 |
| 99 | 53 | 54 | 121 | 1 | 1 | 1 | 1 | 0 | 0 | 0 | 147 | 73 | 87 | 0 | 1 | 1 | 0 | 0 | 0 | 0 | 0 |
| 100 | 54 | 55 | 121 | 1 | 1 | 1 | 1 | 0 | 0 | 0 | 148 | 74 | 88 | 0 | 1 | 1 | 0 | 0 | 0 | 0 | 0 |
| 101 | 55 | 56 | 121 | 1 | 1 | 1 | 1 | 0 | 0 | 0 | 149 | 75 | 89 | 0 | 1 | 1 | 0 | 0 | 0 | 0 | 0 |
| 102 | 56 | 57 | 0 | 1 | 1 | 0 | 0 | 0 | 0 | 0 | 150 | 76 | 90 | 0 | 1 | 1 | 0 | 0 | 0 | 0 | 0 |
| 103 | 60 | 61 | 0 | 1 | 1 | 0 | 0 | 0 | 0 | 0 | 151 | 77 | 91 | 0 | 1 | 1 | 0 | 0 | 0 | 0 | 0 |
| 104 | 61 | 62 | 0 | 1 | 1 | 0 | 0 | 0 | 0 | 0 | 152 | 79 | 80 | 125 | 1 | 1 | 1 | 1 | 0 | 0 | 0 |
| 105 | 62 | 63 | 0 | 1 | 1 | 0 | 0 | 0 | 0 | 0 | 153 | 80 | 81 | 125 | 1 | 1 | 1 | 1 | 0 | 0 | 0 |
| 106 | 63 | 20 | 0 | 1 | 1 | 0 | 0 | 0 | 0 | 0 | 154 | 81 | 82 | 125 | 1 | 1 | 1 | 1 | 0 | 0 | 0 |
| 107 | 60 | 122 | 0 | 1 | 1 | 0 | 0 | 0 | 0 | 0 | 155 | 82 | 83 | 125 | 1 | 1 | 1 | 1 | 0 | 0 | 0 |
| 108 | 122 | 34 | 0 | 1 | 1 | 0 | 0 | 0 | 0 | 0 | 156 | 83 | 84 | 125 | 1 | 1 | 1 | 1 | 0 | 0 | 0 |
| 109 | 59 | 122 | 0 | 1 | 0 | 0 | 0 | 0 | 0 | 0 | 157 | 84 | 85 | 125 | 1 | 1 | 1 | 1 | 0 | 0 | 0 |
| 110 | 46 | 66 | 0 | 1 | 1 | 0 | 0 | 0 | 0 | 0 | 158 | 85 | 86 | 125 | 1 | 1 | 1 | 1 | 0 | 0 | 0 |
| 111 | 47 | 67 | 0 | 1 | 1 | 0 | 0 | 0 | 0 | 0 | 159 | 86 | 87 | 125 | 1 | 1 | 1 | 1 | 0 | 0 | 0 |
| 112 | 48 | 68 | 0 | 1 | 1 | 0 | 0 | 0 | 0 | 0 | 160 | 87 | 88 | 125 | 1 | 1 | 1 | 1 | 0 | 0 | 0 |
| 113 | 49 | 69 | 0 | 1 | 1 | 0 | 0 | 0 | 0 | 0 | 161 | 88 | 89 | 125 | 1 | 1 | 1 | 1 | 0 | 0 | 0 |
| 114 | 50 | 70 | 0 | 1 | 1 | 0 | 0 | 0 | 0 | 0 | 162 | 89 | 90 | 125 | 1 | 1 | 1 | 1 | 0 | 0 | 0 |
| 115 | 51 | 71 | 0 | 1 | 1 | 0 | 0 | 0 | 0 | 0 | 163 | 90 | 91 | 125 | 1 | 1 | 1 | 1 | 0 | 0 | 0 |
| 116 | 52 | 72 | 0 | 1 | 1 | 0 | 0 | 0 | 0 | 0 | 164 | 79 | 92 | 0 | 1 | 1 | 0 | 0 | 0 | 0 | 0 |
| 117 | 53 | 73 | 0 | 1 | 1 | 0 | 0 | 0 | 0 | 0 | 165 | 80 | 93 | 0 | 1 | 1 | 0 | 0 | 0 | 0 | 0 |
| 118 | 54 | 74 | 0 | 1 | 1 | 0 | 0 | 0 | 0 | 0 | 166 | 81 | 94 | 0 | 1 | 1 | 0 | 0 | 0 | 0 | 0 |
| 119 | 55 | 75 | 0 | 1 | 1 | 0 | 0 | 0 | 0 | 0 | 167 | 82 | 95 | 0 | 1 | 1 | 0 | 0 | 0 | 0 | 0 |
| 120 | 56 | 118 | 44 | 1 | 1 | 0 | 1 | 0 | 0 | 0 | 168 | 83 | 96 | 0 | 1 | 1 | 0 | 0 | 0 | 0 | 0 |
| 121 | 64 | 65 | 124 | 1 | 1 | 1 | 1 | 0 | 0 | 0 | 169 | 84 | 97 | 0 | 1 | 1 | 0 | 0 | 0 | 0 | 0 |
| 122 | 65 | 66 | 124 | 1 | 1 | 1 | 1 | 0 | 0 | 0 | 170 | 85 | 98 | 0 | 1 | 1 | 0 | 0 | 0 | 0 | 0 |
| 123 | 65 | 67 | 124 | 1 | 1 | 1 | 1 | 0 | 0 | 0 | 171 | 86 | 99 | 0 | 1 | 1 | 0 | 0 | 0 | 0 | 0 |
| 124 | 66 | 67 | 124 | 1 | 1 | 1 | 1 | 0 | 0 | 0 | 172 | 87 | 100 | 0 | 1 | 1 | 0 | 0 | 0 | 0 | 0 |
| 125 | 67 | 68 | 124 | 1 | 1 | 1 | 1 | 0 | 0 | 0 | 173 | 88 | 101 | 0 | 1 | 1 | 0 | 0 | 0 | 0 | 0 |
| 126 | 68 | 69 | 124 | 1 | 1 | 1 | 1 | 0 | 0 | 0 | 174 | 89 | 102 | 0 | 1 | 1 | 0 | 0 | 0 | 0 | 0 |
| 127 | 69 | 70 | 124 | 1 | 1 | 1 | 1 | 0 | 0 | 0 | 175 | 90 | 103 | 0 | 1 | 1 | 0 | 0 | 0 | 0 | 0 |
| 128 | 70 | 71 | 124 | 1 | 1 | 1 | 1 | 0 | 0 | 0 | 176 | 91 | 104 | 0 | 1 | 1 | 0 | 0 | 0 | 0 | 0 |
| 129 | 71 | 72 | 124 | 1 | 1 | 1 | 1 | 0 | 0 | 0 | 177 | 92 | 93 | 126 | 1 | 1 | 1 | 1 | 0 | 0 | 0 |
| 130 | 72 | 73 | 124 | 1 | 1 | 1 | 1 | 0 | 0 | 0 | 178 | 93 | 94 | 126 | 1 | 1 | 1 | 1 | 0 | 0 | 0 |
| 131 | 73 | 74 | 124 | 1 | 1 | 1 | 1 | 0 | 0 | 0 | 179 | 94 | 95 | 126 | 1 | 1 | 1 | 1 | 0 | 0 | 0 |
| 132 | 74 | 75 | 124 | 1 | 1 | 1 | 1 | 0 | 0 | 0 | 180 | 95 | 96 | 126 | 1 | 1 | 1 | 1 | 0 | 0 | 0 |
| 133 | 75 | 76 | 124 | 1 | 1 | 1 | 1 | 0 | 0 | 0 | 181 | 96 | 97 | 126 | 1 | 1 | 1 | 1 | 0 | 0 | 0 |
| 134 | 76 | 77 | 124 | 1 | 1 | 1 | 1 | 0 | 0 | 0 | 182 | 97 | 98 | 126 | 1 | 1 | 1 | 1 | 0 | 0 | 0 |
| 135 | 119 | 118 | 123 | 1 | 1 | 1 | 0 | 0 | 0 | 0 | 183 | 98 | 99 | 126 | 1 | 1 | 1 | 1 | 0 | 0 | 0 |
| 136 | 118 | 76 | 44 | 1 | 1 | 1 | 0 | 0 | 0 | 0 | 184 | 99 | 100 | 126 | 1 | 1 | 1 | 1 | 0 | 0 | 0 |
| 137 | 119 | 77 | 0 | 1 | 1 | 0 | 0 | 0 | 0 | 0 | 185 | 100 | 101 | 126 | 1 | 1 | 1 | 1 | 0 | 0 | 0 |
| 138 | 66 | 78 | 0 | 1 | 1 | 0 | 0 | 0 | 0 | 0 | 186 | 101 | 102 | 126 | 1 | 1 | 1 | 1 | 0 | 0 | 0 |
| 139 | 78 | 79 | 0 | 1 | 1 | 0 | 0 | 0 | 0 | 0 | 187 | 102 | 103 | 126 | 1 | 1 | 1 | 1 | 0 | 0 | 0 |
| 140 | 66 | 80 | 0 | 1 | 1 | 0 | 0 | 0 | 0 | 0 | 188 | 103 | 104 | 126 | 1 | 1 | 1 | 1 | 0 | 0 | 0 |
| 141 | 67 | 81 | 0 | 1 | 1 | 0 | 0 | 0 | 0 | 0 | 189 | 92 | 105 | 0 | 1 | 1 | 0 | 0 | 0 | 0 | 0 |
| 142 | 68 | 82 | 0 | 1 | 1 | 0 | 0 | 0 | 0 | 0 | 190 | 93 | 106 | 0 | 1 | 1 | 0 | 0 | 0 | 0 | 0 |
| 143 | 69 | 83 | 0 | 1 | 1 | 0 | 0 | 0 | 0 | 0 | 191 | 94 | 107 | 0 | 1 | 1 | 0 | 0 | 0 | 0 | 0 |
| 144 | 70 | 84 | 0 | 1 | 1 | 0 | 0 | 0 | 0 | 0 | 192 | 95 | 108 | 0 | 1 | 1 | 0 | 0 | 0 | 0 | 0 |

REDUNDANT FORCE STRESS ANALYSIS PROG. A05.0 ANALYSIS 35 CASE 36 RUN 1

TABLE 50 . 216 ENTRIES .

BARS

| BAR NO. | P | Q | C | FORCES TP | TQ | BNP | BNQ | BTP | BTQ | T |
|---|---|---|---|---|---|---|---|---|---|---|
| 193 | 96 | 109 | 0 | 1 | 1 | 0 | 0 | 0 | 0 | 0 |
| 194 | 97 | 110 | 0 | 1 | 1 | 0 | 0 | 0 | 0 | 0 |
| 195 | 98 | 111 | 0 | 1 | 1 | 0 | 0 | 0 | 0 | 0 |
| 196 | 99 | 112 | 0 | 1 | 1 | 0 | 0 | 0 | 0 | 0 |
| 197 | 100 | 113 | 0 | 1 | 1 | 0 | 0 | 0 | 0 | 0 |
| 198 | 101 | 114 | 0 | 1 | 1 | 0 | 0 | 0 | 0 | 0 |
| 199 | 102 | 115 | 0 | 1 | 1 | 0 | 0 | 0 | 0 | 0 |
| 200 | 103 | 116 | 0 | 1 | 1 | 0 | 0 | 0 | 0 | 0 |
| 201 | 104 | 117 | 0 | 1 | 1 | 0 | 0 | 0 | 0 | 0 |
| 202 | 105 | 106 | 0 | 1 | 1 | 0 | 0 | 0 | 0 | 0 |
| 203 | 106 | 107 | 0 | 1 | 1 | 0 | 0 | 0 | 0 | 0 |
| 204 | 107 | 108 | 0 | 1 | 1 | 0 | 0 | 0 | 0 | 0 |
| 205 | 108 | 109 | 0 | 1 | 1 | 0 | 0 | 0 | 0 | 0 |
| 206 | 109 | 110 | 0 | 1 | 1 | 0 | 0 | 0 | 0 | 0 |
| 207 | 110 | 111 | 0 | 1 | 1 | 0 | 0 | 0 | 0 | 0 |
| 208 | 111 | 112 | 0 | 1 | 1 | 0 | 0 | 0 | 0 | 0 |
| 209 | 112 | 113 | 0 | 1 | 1 | 0 | 0 | 0 | 0 | 0 |
| 210 | 113 | 114 | 0 | 1 | 1 | 0 | 0 | 0 | 0 | 0 |
| 211 | 114 | 115 | 0 | 1 | 1 | 0 | 0 | 0 | 0 | 0 |
| 212 | 115 | 116 | 0 | 1 | 1 | 0 | 0 | 0 | 0 | 0 |
| 213 | 116 | 117 | 0 | 1 | 1 | 0 | 0 | 0 | 0 | 0 |
| 214 | 1 | 2 | 3 | 1 | 1 | 0 | 1 | 0 | 1 | 0 |
| 215 | 59 | 63 | 0 | 1 | 0 | 0 | 0 | 0 | 0 | 0 |
| 216 | 59 | 58 | 0 | 1 | 1 | 0 | 0 | 0 | 0 | 0 |



Table 50

SM 40531

TABLE 60 . 87 ENTRIES . PANELS

| PANEL NO. | D | E | F | G | PANEL NO. | D | E | F | G |
|---|---|---|---|---|---|---|---|---|---|
| 1 | 3 | 4 | 18 | 17 | 45 | 52 | 53 | 73 | 72 |
| 2 | 4 | 5 | 19 | 18 | 46 | 53 | 54 | 74 | 73 |
| 3 | 5 | 6 | 20 | 19 | 47 | 54 | 55 | 75 | 74 |
| 4 | 6 | 7 | 21 | 20 | 48 | 55 | 56 | 76 | 75 |
| 5 | 7 | 8 | 22 | 21 | 49 | 118 | 113 | 77 | 76 |
| 6 | 8 | 9 | 23 | 22 | 50 | 78 | 66 | 80 | 79 |
| 7 | 9 | 10 | 24 | 23 | 51 | 66 | 67 | 81 | 80 |
| 8 | 10 | 11 | 25 | 24 | 52 | 67 | 68 | 82 | 81 |
| 9 | 11 | 12 | 26 | 25 | 53 | 68 | 69 | 83 | 82 |
| 10 | 12 | 13 | 27 | 26 | 54 | 69 | 70 | 84 | 83 |
| 11 | 13 | 14 | 28 | 27 | 55 | 70 | 71 | 85 | 84 |
| 12 | 14 | 15 | 29 | 28 | 56 | 71 | 72 | 86 | 85 |
| 13 | 17 | 18 | 32 | 31 | 57 | 72 | 73 | 87 | 86 |
| 14 | 18 | 19 | 33 | 32 | 58 | 73 | 74 | 88 | 87 |
| 15 | 19 | 20 | 34 | 33 | 59 | 74 | 75 | 89 | 88 |
| 16 | 20 | 21 | 35 | 34 | 60 | 75 | 76 | 90 | 89 |
| 17 | 21 | 22 | 36 | 35 | 61 | 76 | 77 | 91 | 90 |
| 18 | 22 | 23 | 37 | 36 | 62 | 79 | 80 | 93 | 92 |
| 19 | 23 | 24 | 38 | 37 | 63 | 80 | 81 | 94 | 93 |
| 20 | 24 | 25 | 39 | 38 | 64 | 81 | 82 | 95 | 94 |
| 21 | 25 | 26 | 40 | 39 | 65 | 82 | 83 | 96 | 95 |
| 22 | 26 | 27 | 41 | 40 | 66 | 83 | 84 | 97 | 96 |
| 23 | 27 | 28 | 42 | 41 | 67 | 84 | 85 | 98 | 97 |
| 24 | 28 | 29 | 43 | 42 | 68 | 85 | 86 | 99 | 98 |
| 25 | 31 | 32 | 46 | 45 | 69 | 86 | 87 | 100 | 99 |
| 26 | 32 | 33 | 47 | 46 | 70 | 87 | 88 | 101 | 100 |
| 27 | 33 | 34 | 48 | 47 | 71 | 88 | 89 | 102 | 101 |
| 28 | 34 | 35 | 49 | 48 | 72 | 89 | 90 | 103 | 102 |
| 29 | 35 | 36 | 50 | 49 | 73 | 90 | 91 | 104 | 103 |
| 30 | 36 | 37 | 51 | 50 | 74 | 92 | 93 | 106 | 105 |
| 31 | 37 | 38 | 52 | 51 | 75 | 93 | 94 | 107 | 106 |
| 32 | 38 | 39 | 53 | 52 | 76 | 94 | 95 | 108 | 107 |
| 33 | 39 | 40 | 54 | 53 | 77 | 95 | 96 | 109 | 108 |
| 34 | 40 | 41 | 55 | 54 | 78 | 96 | 97 | 110 | 109 |
| 35 | 41 | 42 | 56 | 55 | 79 | 97 | 98 | 111 | 110 |
| 36 | 42 | 43 | 57 | 56 | 80 | 98 | 99 | 112 | 111 |
| 37 | 62 | 63 | 59 | 61 | 81 | 99 | 100 | 113 | 112 |
| 38 | 60 | 61 | 59 | 122 | 82 | 100 | 101 | 114 | 113 |
| 39 | 46 | 47 | 67 | 66 | 83 | 101 | 102 | 115 | 114 |
| 40 | 47 | 48 | 68 | 67 | 84 | 102 | 103 | 116 | 115 |
| 41 | 48 | 49 | 69 | 68 | 85 | 103 | 104 | 117 | 116 |
| 42 | 49 | 50 | 70 | 69 | 86 | 63 | 20 | 58 | 59 |
| 43 | 50 | 51 | 71 | 70 | 87 | 59 | 58 | 34 | 122 |
| 44 | 51 | 52 | 72 | 71 | | | | | |

TABLE 90 . 126 ENTRIES POINT COORDINATES

| N | X | Y | Z | N | X | Y | Z |
|---|---|---|---|---|---|---|---|
| 1 | 0.000000 | 0.000000 | 0.000000 | 49 | 13.355436 | -24.566000 | 7.710724 |
| 2 | 0.000000 | -3.500000 | 0.000000 | 50 | 14.896038 | -24.566000 | 3.991379 |
| 3 | 0.000000 | -3.500000 | 5.250000 | 51 | 15.421447 | -24.566000 | 0.000000 |
| 4 | 1.358805 | -3.500000 | 5.071133 | 52 | 14.896038 | -24.566000 | -3.991379 |
| 5 | 2.625000 | -3.500000 | 4.546658 | 53 | 13.355436 | -24.566000 | -7.710724 |
| 6 | 3.712328 | -3.500000 | 3.712328 | 54 | 10.904659 | -24.566000 | -10.904659 |
| 7 | 4.546658 | -3.500000 | 2.625000 | 55 | 7.710724 | -24.566000 | -13.355436 |
| 8 | 5.071133 | -3.500000 | 1.358805 | 56 | 3.991379 | -24.566000 | -14.896038 |
| 9 | 5.250000 | -3.500000 | 0.000000 | 57 | 0.000000 | -24.048384 | -16.000000 |
| 10 | 5.071133 | -3.500000 | -1.358805 | 58 | 6.884840 | -18.000000 | 6.884840 |
| 11 | 4.546658 | -3.500000 | -2.625000 | 59 | 7.568375 | -16.771750 | 7.568375 |
| 12 | 3.712328 | -3.500000 | -3.712328 | 60 | 8.717959 | -16.054000 | 8.717959 |
| 13 | 2.625000 | -3.500000 | -4.546658 | 61 | 8.396931 | -15.600000 | 8.396931 |
| 14 | 1.358805 | -3.500000 | -5.071133 | 62 | 7.135447 | -13.816000 | 7.135447 |
| 15 | 0.000000 | -3.500000 | -5.250000 | 63 | 5.478335 | -13.816000 | 5.478335 |
| 16 | 0.000000 | -13.816000 | 0.000000 | 64 | 0.000000 | -40.250000 | 11.850000 |
| 17 | 0.000000 | -13.816000 | 5.404000 | 65 | 8.380000 | -40.250000 | 16.250000 |
| 18 | 1.398663 | -13.816000 | 5.219885 | 66 | 7.911523 | -40.250000 | 29.526226 |
| 19 | 2.702000 | -13.816000 | 4.680026 | 67 | 15.283833 | -40.250000 | 26.472516 |
| 20 | 3.821222 | -13.816000 | 3.821222 | 68 | 21.614702 | -40.250000 | 21.614702 |
| 21 | 4.680026 | -13.816000 | 2.702000 | 69 | 26.472516 | -40.250000 | 15.283833 |
| 22 | 5.219885 | -13.816000 | 1.398663 | 70 | 29.526226 | -40.250000 | 7.911523 |
| 23 | 5.404000 | -13.816000 | 0.000000 | 71 | 30.567666 | -40.250000 | 0.000000 |
| 24 | 5.219885 | -13.816000 | -1.398663 | 72 | 29.526226 | -40.250000 | -7.911523 |
| 25 | 4.680026 | -13.816000 | -2.702000 | 73 | 26.472516 | -40.250000 | -15.283833 |
| 26 | 3.821222 | -13.816000 | -3.821222 | 74 | 21.614702 | -40.250000 | -21.614702 |
| 27 | 2.702000 | -13.816000 | -4.680026 | 75 | 15.283833 | -40.250000 | -26.472516 |
| 28 | 1.398663 | -13.816000 | -5.219885 | 76 | 7.911523 | -40.250000 | -29.526226 |
| 29 | 0.000000 | -13.816000 | -5.404000 | 77 | 0.000000 | -40.250000 | -30.567666 |
| 30 | 0.000000 | -20.503500 | 0.000000 | 78 | 0.000000 | -50.623850 | 40.585812 |
| 31 | 0.000000 | -20.503500 | 12.329000 | 79 | 0.000000 | -55.938000 | 45.717748 |
| 32 | 3.190992 | -20.503500 | 11.908951 | 80 | 11.832668 | -55.938000 | 44.160144 |
| 33 | 6.164500 | -20.503500 | 10.677284 | 81 | 22.858874 | -55.938000 | 39.592941 |
| 34 | 8.717959 | -20.503500 | 8.717959 | 82 | 32.327477 | -55.938000 | 32.327477 |
| 35 | 10.677284 | -20.503500 | 6.164500 | 83 | 39.592941 | -55.938000 | 22.858874 |
| 36 | 11.908951 | -20.503500 | 3.190992 | 84 | 44.160144 | -55.938000 | 11.832668 |
| 37 | 12.329000 | -20.503500 | 0.000000 | 85 | 45.717748 | -55.938000 | 0.000000 |
| 38 | 11.908951 | -20.503500 | -3.190992 | 86 | 44.160144 | -55.938000 | -11.832668 |
| 39 | 10.677284 | -20.503500 | -6.164500 | 87 | 39.592941 | -55.938000 | -22.858874 |
| 40 | 8.717959 | -20.503500 | -8.717959 | 88 | 32.327477 | -55.938000 | -32.327477 |
| 41 | 6.164500 | -20.503500 | -10.677284 | 89 | 22.858874 | -55.938000 | -39.592941 |
| 42 | 3.190992 | -20.503500 | -11.908951 | 90 | 11.832668 | -55.938000 | -44.160144 |
| 43 | 0.000000 | -20.503500 | -12.329000 | 91 | 0.000000 | -55.938000 | -45.717748 |
| 44 | 0.000000 | -24.566000 | 0.000000 | 92 | 0.000000 | -71.500000 | 60.746150 |
| 45 | 0.000000 | -22.660174 | 14.562500 | 93 | 15.722319 | -71.500000 | 58.676529 |
| 46 | 3.991379 | -24.566000 | 14.896038 | 94 | 30.373075 | -71.500000 | 52.607988 |
| 47 | 7.710724 | -24.566000 | 13.355436 | 95 | 42.954210 | -71.500000 | 42.954210 |
| 48 | 10.904659 | -24.566000 | 10.904659 | 96 | 52.607988 | -71.500000 | 30.373075 |



Table 90

SM 4353

TABLE 90 . 126 ENTRIES

POINT COORDINATES

| N | X | Y | Z | N | X | Y | Z |
|---|---|---|---|---|---|---|---|
| 97 | 58.676529 | -71.500000 | 15.722319 | 112 | 73.535255 | -87.429000 | -19.703700 |
| 98 | 60.746150 | -71.500000 | 0.000000 | 113 | 65.929971 | -87.429000 | -38.064484 |
| 99 | 58.676529 | -71.500000 | -15.722319 | 114 | 53.831555 | -87.429000 | -53.831555 |
| 100 | 52.607988 | -71.500000 | -30.373075 | 115 | 38.064484 | -87.429000 | -65.929971 |
| 101 | 42.954210 | -71.500000 | -42.954210 | 116 | 19.703700 | -87.429000 | -73.535255 |
| *102 | 30.373075 | -71.500000 | -52.607988 | 117 | 0.000000 | -87.429000 | -76.128969 |
| 103 | 15.722319 | -71.500000 | -58.676529 | 118 | 6.387433 | -34.152310 | -23.838241 |
| 104 | 0.000000 | -71.500000 | -60.746150 | 119 | 0.000000 | -34.152310 | -24.679057 |
| 105 | 0.000000 | -87.429000 | 76.128969 | 120 | 0.000000 | -20.503500 | 0.000000 |
| 106 | 19.703700 | -87.429000 | 73.535255 | 121 | 0.000000 | -24.566000 | 0.000000 |
| 107 | 38.064484 | -87.429000 | 65.929971 | 122 | 8.717959 | -18.397500 | 8.717959 |
| 108 | 53.831555 | -87.429000 | 53.831555 | 123 | 0.000000 | -34.152310 | 0.000000 |
| 109 | 65.929971 | -87.429000 | 38.064484 | 124 | 0.000000 | -40.250000 | 0.000000 |
| 110 | 73.535255 | -87.429000 | 19.703700 | 125 | 0.000000 | -55.938000 | 0.000000 |
| 111 | 76.128969 | -87.429000 | 0.000000 | 126 | 0.000000 | -71.500000 | 0.000000 |



Table 90

SM 46631

REDUNDANT FORCE STRESS ANALYSIS PROG. A05.0 ANALYSIS 35 CASE 36 RUN 1

TABLE 91 . 12 ENTRIES DIRECTION NUMBERS

| N | X | Y | Z | N | X | Y | Z |
|---|---|---|---|---|---|---|---|
| 1 | 1.000000 | 0.000000 | 0.000000 | 7 | 0.000000 | -78.832000 | 81.631000 |
| 2 | -1.000000 | 0.000000 | 0.000000 | 8 | 0.000000 | -78.832000 | -81.631000 |
| 3 | 0.000000 | 1.000000 | 0.000000 | 9 | 0.000000 | 81.631000 | 78.832000 |
| 4 | 0.000000 | -1.000000 | 0.000000 | 10 | 0.000000 | 81.631000 | -78.832000 |
| 5 | 0.000000 | 0.000000 | 1.000000 | 11 | 1.000000 | 0.000000 | 1.000000 |
| 6 | 0.000000 | 0.000000 | -1.000000 | 12 | 1.000000 | 0.000000 | -1.000000 |

TABLE 100 . 216 ENTRIES . BAR PROPERTIES

| BAR NO. | A | KN | SECTION PROPERTIES KT | IN | IT | J | MATERIAL PROPERTIES E | G |
|---|---|---|---|---|---|---|---|---|
| 1 | 0.6950 | 1.0000 | 0.0000 | 0.12550 | 0.00000 | 0.00000 | 10400000 | 3850000 |
| 2 | 1.3900 | 1.0000 | 0.0000 | 0.25100 | 0.00000 | 0.00000 | 10400000 | 3850000 |
| 3 | 1.3900 | 1.0000 | 0.0000 | 0.25100 | 0.00000 | 0.00000 | 10400000 | 3850000 |
| 4 | 1.3900 | 1.0000 | 0.0000 | 0.25100 | 0.00000 | 0.00000 | 10400000 | 3850000 |
| 5 | 1.3900 | 1.0000 | 0.0000 | 0.25100 | 0.00000 | 0.00000 | 10400000 | 3850000 |
| 6 | 1.1500 | 1.0000 | 0.0000 | 0.16160 | 0.00000 | 0.00000 | 10400000 | 3850000 |
| 7 | 0.9180 | 1.0000 | 0.0000 | 0.07220 | 0.00000 | 0.00000 | 10400000 | 3850000 |
| 8 | 1.1500 | 1.0000 | 0.0000 | 0.16160 | 0.00000 | 0.00000 | 10400000 | 3850000 |
| 9 | 1.3900 | 1.0000 | 0.0000 | 0.25100 | 0.00000 | 0.00000 | 10400000 | 3850000 |
| 10 | 1.3900 | 1.0000 | 0.0000 | 0.25100 | 0.00000 | 0.00000 | 10400000 | 3850000 |
| 11 | 1.3900 | 1.0000 | 0.0000 | 0.25100 | 0.00000 | 0.00000 | 10400000 | 3850000 |
| 12 | 1.3900 | 1.0000 | 0.0000 | 0.25100 | 0.00000 | 0.00000 | 10400000 | 3850000 |
| 13 | 0.6950 | 1.0000 | 0.0000 | 0.12550 | 0.00000 | 0.00000 | 10400000 | 3850000 |
| 14 | 5.5000 | 1.0000 | 0.0000 | 4.47800 | 0.00000 | 0.00000 | 10400000 | 3850000 |
| 15 | 5.5000 | 1.0000 | 0.0000 | 4.47800 | 0.00000 | 0.00000 | 10400000 | 3850000 |
| 16 | 5.5000 | 1.0000 | 0.0000 | 4.47800 | 0.00000 | 0.00000 | 10400000 | 3850000 |
| 17 | 5.5000 | 1.0000 | 0.0000 | 4.47800 | 0.00000 | 0.00000 | 10400000 | 3850000 |
| 18 | 5.5000 | 1.0000 | 0.0000 | 4.47800 | 0.00000 | 0.00000 | 10400000 | 3850000 |
| 19 | 5.5000 | 1.0000 | 0.0000 | 4.47800 | 0.00000 | 0.00000 | 10400000 | 3850000 |
| 20 | 5.5000 | 1.0000 | 0.0000 | 4.47800 | 0.00000 | 0.00000 | 10400000 | 3850000 |
| 21 | 5.5000 | 1.0000 | 0.0000 | 4.47800 | 0.00000 | 0.00000 | 10400000 | 3850000 |
| 22 | 5.5000 | 1.0000 | 0.0000 | 4.47800 | 0.00000 | 0.00000 | 10400000 | 3850000 |
| 23 | 5.5000 | 1.0000 | 0.0000 | 4.47800 | 0.00000 | 0.00000 | 10400000 | 3850000 |
| 24 | 5.5000 | 1.0000 | 0.0000 | 4.47800 | 0.00000 | 0.00000 | 10400000 | 3850000 |
| 25 | 5.5000 | 1.0000 | 0.0000 | 4.47800 | 0.00000 | 0.00000 | 10400000 | 3850000 |
| 26 | 0.5350 | 1.0000 | 0.0000 | 0.02940 | 0.00000 | 0.00000 | 10400000 | 3850000 |
| 27 | 1.0700 | 1.0000 | 0.0000 | 0.05890 | 0.00000 | 0.00000 | 10400000 | 3850000 |
| 28 | 1.0700 | 1.0000 | 0.0000 | 0.05890 | 0.00000 | 0.00000 | 10400000 | 3850000 |
| 29 | 1.0700 | 1.0000 | 0.0000 | 0.05890 | 0.00000 | 0.00000 | 10400000 | 3850000 |
| 30 | 1.0700 | 1.0000 | 0.0000 | 0.05890 | 0.00000 | 0.00000 | 10400000 | 3850000 |
| 31 | 1.0700 | 1.0000 | 0.0000 | 0.05890 | 0.00000 | 0.00000 | 10400000 | 3850000 |
| 32 | 1.0700 | 1.0000 | 0.0000 | 0.05890 | 0.00000 | 0.00000 | 10400000 | 3850000 |
| 33 | 1.0700 | 1.0000 | 0.0000 | 0.05890 | 0.00000 | 0.00000 | 10400000 | 3850000 |
| 34 | 1.0700 | 1.0000 | 0.0000 | 0.05890 | 0.00000 | 0.00000 | 10400000 | 3850000 |
| 35 | 1.0700 | 1.0000 | 0.0000 | 0.05890 | 0.00000 | 0.00000 | 10400000 | 3850000 |
| 36 | 1.0700 | 1.0000 | 0.0000 | 0.05890 | 0.00000 | 0.00000 | 10400000 | 3850000 |
| 37 | 1.0700 | 1.0000 | 0.0000 | 0.05890 | 0.00000 | 0.00000 | 10400000 | 3850000 |
| 38 | 0.5350 | 1.0000 | 0.0000 | 0.02940 | 0.00000 | 0.00000 | 10400000 | 3850000 |
| 39 | 9.4800 | 1.0000 | 0.0000 | .1714+2 | 0.00000 | 0.00000 | 10400000 | 3850000 |
| 40 | 9.4800 | 1.0000 | 0.0000 | .1714+2 | 0.00000 | 0.00000 | 10400000 | 3850000 |
| 41 | 9.4800 | 1.0000 | 0.0000 | .1714+2 | 0.00000 | 0.00000 | 10400000 | 3850000 |
| 42 | 9.4800 | 1.0000 | 0.0000 | .1714+2 | 0.00000 | 0.00000 | 10400000 | 3850000 |
| 43 | 9.4800 | 1.0000 | 0.0000 | .1714+2 | 0.00000 | 0.00000 | 10400000 | 3850000 |
| 44 | 9.4800 | 1.0000 | 0.0000 | .1714+2 | 0.00000 | 0.00000 | 10400000 | 3850000 |
| 45 | 9.4800 | 1.0000 | 0.0000 | .1714+2 | 0.00000 | 0.00000 | 10400000 | 3850000 |
| 46 | 9.4800 | 1.0000 | 0.0000 | .1714+2 | 0.00000 | 0.00000 | 10400000 | 3850000 |
| 47 | 9.4800 | 1.0000 | 0.0000 | .1714+2 | 0.00000 | 0.00000 | 10400000 | 3850000 |
| 48 | 9.4800 | 1.0000 | 0.0000 | .1714+2 | 0.00000 | 0.00000 | 10400000 | 3850000 |



Table 100

46531

TABLE 100 . 216 ENTRIES . BAR PROPERTIES

| BAR NO. | A | KN | SECTION PROPERTIES KT | JN | IT | J | MATERIAL PROPERTIES E | G |
|---|---|---|---|---|---|---|---|---|
| 49 | 9.4800 | 1.0000 | 0.0000 | .1714+2 | 0.00000 | 0.00000 | 10400000 | 3850000 |
| 50 | 9.4800 | 1.0000 | 0.0000 | .1714+2 | 0.00000 | 0.00000 | 10400000 | 3850000 |
| 51 | 0.9800 | 0.0000 | 0.0000 | 0.00000 | 0.00000 | 0.00000 | 10400000 | 0 |
| 52 | 1.9600 | 0.0000 | 0.0000 | 0.00000 | 0.00000 | 0.00000 | 10400000 | 0 |
| 53 | 1.9600 | 0.0000 | 0.0000 | 0.00000 | 0.00000 | 0.00000 | 10400000 | 0 |
| 54 | 2.8000 | 1.0000 | 0.0000 | 0.59650 | 0.00000 | 0.00000 | 10400000 | 3850000 |
| 55 | 2.8000 | 1.0000 | 0.0000 | 0.59650 | 0.00000 | 0.00000 | 10400000 | 3850000 |
| 56 | 3.0000 | 0.0000 | 0.0000 | 0.00000 | 0.00000 | 0.00000 | 10400000 | 0 |
| 57 | 1.9600 | 0.0000 | 0.0000 | 0.00000 | 0.00000 | 0.00000 | 10400000 | 0 |
| 58 | 1.9600 | 0.0000 | 0.0000 | 0.00000 | 0.00000 | 0.00000 | 10400000 | 0 |
| 59 | 1.9600 | 0.0000 | 0.0000 | 0.00000 | 0.00000 | 0.00000 | 10400000 | 0 |
| 60 | 1.9600 | 0.0000 | 0.0000 | 0.00000 | 0.00000 | 0.00000 | 10400000 | 0 |
| 61 | 1.9600 | 0.0000 | 0.0000 | 0.00000 | 0.00000 | 0.00000 | 10400000 | 0 |
| 62 | 1.9600 | 0.0000 | 0.0000 | 0.00000 | 0.00000 | 0.00000 | 10400000 | 0 |
| 63 | 1.9600 | 0.0000 | 0.0000 | 0.00000 | 0.00000 | 0.00000 | 10400000 | 0 |
| 64 | 1.9600 | 0.0000 | 0.0000 | 0.00000 | 0.00000 | 0.00000 | 10400000 | 0 |
| 65 | 0.9800 | 0.0000 | 0.0000 | 0.00000 | 0.00000 | 0.00000 | 10400000 | 0 |
| 66 | 6.4500 | 1.0000 | 0.0000 | 8.49200 | 0.00000 | 0.00000 | 10400000 | 3850000 |
| 67 | 6.4500 | 1.0000 | 0.0000 | 8.49200 | 0.00000 | 0.00000 | 10400000 | 3850000 |
| 68 | 6.4500 | 1.0000 | 0.0000 | 8.49200 | 0.00000 | 0.00000 | 10400000 | 3850000 |
| 69 | 6.4500 | 1.0000 | 0.0000 | 8.49200 | 0.00000 | 0.00000 | 10400000 | 3850000 |
| 70 | 6.4500 | 1.0000 | 0.0000 | 8.49200 | 0.00000 | 0.00000 | 10400000 | 3850000 |
| 71 | 6.4500 | 1.0000 | 0.0000 | 8.49200 | 0.00000 | 0.00000 | 10400000 | 3850000 |
| 72 | 6.4500 | 1.0000 | 0.0000 | 8.49200 | 0.00000 | 0.00000 | 10400000 | 3850000 |
| 73 | 6.4500 | 1.0000 | 0.0000 | 8.49200 | 0.00000 | 0.00000 | 10400000 | 3850000 |
| 74 | 6.4500 | 1.0000 | 0.0000 | 8.49200 | 0.00000 | 0.00000 | 10400000 | 3850000 |
| 75 | 6.4500 | 1.0000 | 0.0000 | 8.49200 | 0.00000 | 0.00000 | 10400000 | 3850000 |
| 76 | 6.4500 | 1.0000 | 0.0000 | 8.49200 | 0.00000 | 0.00000 | 10400000 | 3850000 |
| 77 | 6.4500 | 1.0000 | 0.0000 | 8.49200 | 0.00000 | 0.00000 | 10400000 | 3850000 |
| 78 | 1.2000 | 0.0000 | 0.0000 | 0.00000 | 0.00000 | 0.00000 | 10400000 | 0 |
| 79 | 2.4100 | 0.0000 | 0.0000 | 0.00000 | 0.00000 | 0.00000 | 10400000 | 0 |
| 80 | 2.4100 | 0.0000 | 0.0000 | 0.00000 | 0.00000 | 0.00000 | 10400000 | 0 |
| 81 | 2.4100 | 0.0000 | 0.0000 | 0.00000 | 0.00000 | 0.00000 | 10400000 | 0 |
| 82 | 2.4100 | 0.0000 | 0.0000 | 0.00000 | 0.00000 | 0.00000 | 10400000 | 0 |
| 83 | 2.4100 | 0.0000 | 0.0000 | 0.00000 | 0.00000 | 0.00000 | 10400000 | 0 |
| 84 | 2.4100 | 0.0000 | 0.0000 | 0.00000 | 0.00000 | 0.00000 | 10400000 | 0 |
| 85 | 2.4100 | 0.0000 | 0.0000 | 0.00000 | 0.00000 | 0.00000 | 10400000 | 0 |
| 86 | 2.4100 | 0.0000 | 0.0000 | 0.00000 | 0.00000 | 0.00000 | 10400000 | 0 |
| 87 | 2.4100 | 0.0000 | 0.0000 | 0.00000 | 0.00000 | 0.00000 | 10400000 | 0 |
| 88 | 2.4100 | 0.0000 | 0.0000 | 0.00000 | 0.00000 | 0.00000 | 10400000 | 0 |
| 89 | 2.4100 | 0.0000 | 0.0000 | 0.00000 | 0.00000 | 0.00000 | 10400000 | 0 |
| 90 | 1.2000 | 0.0000 | 0.0000 | 0.00000 | 0.00000 | 0.00000 | 10400000 | 0 |
| 91 | 2.3100 | 0.0000 | 0.0000 | 0.00000 | 0.00000 | 0.00000 | 10400000 | 0 |
| 92 | 2.6600 | 1.0000 | 0.0000 | 1.83200 | 0.00000 | 0.00000 | 10400000 | 3850000 |
| 93 | 2.6600 | 1.0000 | 0.0000 | 1.83200 | 0.00000 | 0.00000 | 10400000 | 3850000 |
| 94 | 2.6600 | 1.0000 | 0.0000 | 1.83200 | 0.00000 | 0.00000 | 10400000 | 3850000 |
| 95 | 2.6600 | 1.0000 | 0.0000 | 1.83200 | 0.00000 | 0.00000 | 10400000 | 3850000 |
| 96 | 2.6600 | 1.0000 | 0.0000 | 1.83200 | 0.00000 | 0.00000 | 10400000 | 3850000 |

TABLE 100 . 216 ENTRIES . BAR PROPERTIES

| BAR NO. | A | KN | SECTION PROPERTIES KT | IN | IT | J | MATERIAL PROPERTIES E | G |
|---|---|---|---|---|---|---|---|---|
| 97 | 2.6600 | 1.0000 | 0.0000 | 1.83200 | 0.00000 | 0.00000 | 10400000 | 3850000 |
| 98 | 2.6600 | 1.0000 | 0.0000 | 1.83200 | 0.00000 | 0.00000 | 10400000 | 3850000 |
| 99 | 2.6600 | 1.0000 | 0.0000 | 1.83200 | 0.00000 | 0.00000 | 10400000 | 3850000 |
| 100 | 2.6600 | 1.0000 | 0.0000 | 1.83200 | 0.00000 | 0.00000 | 10400000 | 3850000 |
| 101 | 2.6600 | 1.0000 | 0.0000 | 1.83200 | 0.00000 | 0.00000 | 10400000 | 3850000 |
| 102 | 2.3100 | 0.0000 | 0.0000 | 0.00000 | 0.00000 | 0.00000 | 10400000 | 0 |
| 103 | 3.0000 | 0.0000 | 0.0000 | 0.00000 | 0.00000 | 0.00000 | 10400000 | 0 |
| 104 | 3.0000 | 0.0000 | 0.0000 | 0.00000 | 0.00000 | 0.00000 | 10400000 | 0 |
| 105 | 1.5000 | 0.0000 | 0.0000 | 0.00000 | 0.00000 | 0.00000 | 10400000 | 0 |
| 106 | 2.0000 | 0.0000 | 0.0000 | 0.00000 | 0.00000 | 0.00000 | 10400000 | 0 |
| 107 | 1.5000 | 0.0000 | 0.0000 | 0.00000 | 0.00000 | 0.00000 | 10400000 | 0 |
| 108 | 2.0000 | 0.0000 | 0.0000 | 0.00000 | 0.00000 | 0.00000 | 10400000 | 0 |
| 109 | 1.7500 | 0.0000 | 0.0000 | 0.00000 | 0.00000 | 0.00000 | 10400000 | 0 |
| 110 | 0.9210 | 0.0000 | 0.0000 | 0.00000 | 0.00000 | 0.00000 | 10400000 | 0 |
| 111 | 0.9040 | 0.0000 | 0.0000 | 0.00000 | 0.00000 | 0.00000 | 10400000 | 0 |
| 112 | 0.7140 | 0.0000 | 0.0000 | 0.00000 | 0.00000 | 0.00000 | 10400000 | 0 |
| 113 | 0.7140 | 0.0000 | 0.0000 | 0.00000 | 0.00000 | 0.00000 | 10400000 | 0 |
| 114 | 0.7140 | 0.0000 | 0.0000 | 0.00000 | 0.00000 | 0.00000 | 10400000 | 0 |
| 115 | 0.8100 | 0.0000 | 0.0000 | 0.00000 | 0.00000 | 0.00000 | 10400000 | 0 |
| 116 | 0.8990 | 0.0000 | 0.0000 | 0.00000 | 0.00000 | 0.00000 | 10400000 | 0 |
| 117 | 0.8100 | 0.0000 | 0.0000 | 0.00000 | 0.00000 | 0.00000 | 10400000 | 0 |
| 118 | 0.7140 | 0.0000 | 0.0000 | 0.00000 | 0.00000 | 0.00000 | 10400000 | 0 |
| 119 | 0.9040 | 0.0000 | 0.0000 | 0.00000 | 0.00000 | 0.00000 | 10400000 | 0 |
| 120 | 0.9210 | 1.0000 | 0.0000 | 0.06670 | 0.00000 | 0.00000 | 10400000 | 3850000 |
| 121 | 0.8210 | 1.0000 | 0.0000 | 3.83000 | 0.00000 | 0.00000 | 10400000 | 3850000 |
| 122 | 0.3270 | 1.0000 | 0.0000 | 0.36600 | 0.00000 | 0.00000 | 10400000 | 3850000 |
| 123 | 0.5100 | 1.0000 | 0.0000 | 0.41200 | 0.00000 | 0.00000 | 10400000 | 3850000 |
| 124 | 0.2990 | 1.0000 | 0.0000 | 0.30500 | 0.00000 | 0.00000 | 10400000 | 3850000 |
| 125 | 0.8870 | 1.0000 | 0.0000 | 4.23600 | 0.00000 | 0.00000 | 10400000 | 3850000 |
| 126 | 0.8870 | 1.0000 | 0.0000 | 4.23600 | 0.00000 | 0.00000 | 10400000 | 3850000 |
| 127 | 0.8870 | 1.0000 | 0.0000 | 4.23600 | 0.00000 | 0.00000 | 10400000 | 3850000 |
| 128 | 0.8870 | 1.0000 | 0.0000 | 4.23600 | 0.00000 | 0.00000 | 10400000 | 3850000 |
| 129 | 0.8870 | 1.0000 | 0.0000 | 4.23600 | 0.00000 | 0.00000 | 10400000 | 3850000 |
| 130 | 0.8870 | 1.0000 | 0.0000 | 4.23600 | 0.00000 | 0.00000 | 10400000 | 3850000 |
| 131 | 0.8870 | 1.0000 | 0.0000 | 4.23600 | 0.00000 | 0.00000 | 10400000 | 3850000 |
| 132 | 0.8870 | 1.0000 | 0.0000 | 4.23600 | 0.00000 | 0.00000 | 10400000 | 3850000 |
| 133 | 0.8870 | 1.0000 | 0.0000 | 4.23600 | 0.00000 | 0.00000 | 10400000 | 3850000 |
| 134 | 0.8870 | 1.0000 | 0.0000 | 4.23600 | 0.00000 | 0.00000 | 10400000 | 3850000 |
| 135 | 0.3710 | 1.0000 | 0.0000 | 0.03330 | 0.00000 | 0.00000 | 10400000 | 3850000 |
| 136 | 0.6210 | 1.0000 | 0.0000 | 0.06670 | 0.00000 | 0.00000 | 10400000 | 3850000 |
| 137 | 0.6090 | 0.0000 | 0.0000 | 0.00000 | 0.00000 | 0.00000 | 10400000 | 0 |
| 138 | 0.3710 | 0.0000 | 0.0000 | 0.00000 | 0.00000 | 0.00000 | 10400000 | 0 |
| 139 | 0.3000 | 0.0000 | 0.0000 | 0.00000 | 0.00000 | 0.00000 | 10400000 | 0 |
| 140 | 1.2500 | 0.0000 | 0.0000 | 0.00000 | 0.00000 | 0.00000 | 10400000 | 0 |
| 141 | 1.0800 | 0.0000 | 0.0000 | 0.00000 | 0.00000 | 0.00000 | 10400000 | 0 |
| 142 | 0.9250 | 0.0000 | 0.0000 | 0.00000 | 0.00000 | 0.00000 | 10400000 | 0 |
| 143 | 1.0600 | 0.0000 | 0.0000 | 0.00000 | 0.00000 | 0.00000 | 10400000 | 0 |
| 144 | 1.0600 | 0.0000 | 0.0000 | 0.00000 | 0.00000 | 0.00000 | 10400000 | 0 |



SM 46531

TABLE 100 . 216 ENTRIES . BAR PROPERTIES

| BAR NO. | A | KN | SECTION PROPERTIES KT | IN | IT | J | MATERIAL PROPERTIES E | G |
|---|---|---|---|---|---|---|---|---|
| 145 | 1.1100 | 0.0000 | 0.0000 | 0.00000 | 0.00000 | 0.00000 | 10400000 | 0 |
| 146 | 1.1600 | 0.0000 | 0.0000 | 0.00000 | 0.00000 | 0.00000 | 10400000 | 0 |
| 147 | 1.1100 | 0.0000 | 0.0000 | 0.00000 | 0.00000 | 0.00000 | 10400000 | 0 |
| 148 | 0.9250 | 0.0000 | 0.0000 | 0.00000 | 0.00000 | 0.00000 | 10400000 | 0 |
| 149 | 1.0000 | 0.0000 | 0.0000 | 0.00000 | 0.00000 | 0.00000 | 10400000 | 0 |
| 150 | 1.2300 | 0.0000 | 0.0000 | 0.00000 | 0.00000 | 0.00000 | 10400000 | 0 |
| 151 | 0.3540 | 0.0000 | 0.0000 | 0.00000 | 0.00000 | 0.00000 | 10400000 | 0 |
| 152 | 0.8870 | 1.0000 | 0.0000 | 4.23600 | 0.00000 | 0.00000 | 10400000 | 3850000 |
| 153 | 0.8870 | 1.0000 | 0.0000 | 4.23600 | 0.00000 | 0.00000 | 10400000 | 3850000 |
| 154 | 0.8870 | 1.0000 | 0.0000 | 4.23600 | 0.00000 | 0.00000 | 10400000 | 3850000 |
| 155 | 0.8870 | 1.0000 | 0.0000 | 4.23600 | 0.00000 | 0.00000 | 10400000 | 3850000 |
| 156 | 0.8870 | 1.0000 | 0.0000 | 4.23600 | 0.00000 | 0.00000 | 10400000 | 3850000 |
| 157 | 0.8870 | 1.0000 | 0.0000 | 4.23600 | 0.00000 | 0.00000 | 10400000 | 3850000 |
| 158 | 0.8870 | 1.0000 | 0.0000 | 4.23600 | 0.00000 | 0.00000 | 10400000 | 3850000 |
| 159 | 0.8870 | 1.0000 | 0.0000 | 4.23600 | 0.00000 | 0.00000 | 10400000 | 3850000 |
| 160 | 0.8870 | 1.0000 | 0.0000 | 4.23600 | 0.00000 | 0.00000 | 10400000 | 3850000 |
| 161 | 0.8870 | 1.0000 | 0.0000 | 4.23600 | 0.00000 | 0.00000 | 10400000 | 3850000 |
| 162 | 0.8870 | 1.0000 | 0.0000 | 4.23600 | 0.00000 | 0.00000 | 10400000 | 3850000 |
| 163 | 0.8870 | 1.0000 | 0.0000 | 4.23600 | 0.00000 | 0.00000 | 10400000 | 3850000 |
| 164 | 0.4000 | 0.0000 | 0.0000 | 0.00000 | 0.00000 | 0.00000 | 10400000 | 0 |
| 165 | 1.1200 | 0.0000 | 0.0000 | 0.00000 | 0.00000 | 0.00000 | 10400000 | 0 |
| 166 | 1.4400 | 0.0000 | 0.0000 | 0.00000 | 0.00000 | 0.00000 | 10400000 | 0 |
| 167 | 1.0600 | 0.0000 | 0.0000 | 0.00000 | 0.00000 | 0.00000 | 10400000 | 0 |
| 168 | 1.0200 | 0.0000 | 0.0000 | 0.00000 | 0.00000 | 0.00000 | 10400000 | 0 |
| 169 | 1.0200 | 0.0000 | 0.0000 | 0.00000 | 0.00000 | 0.00000 | 10400000 | 0 |
| 170 | 1.0800 | 0.0000 | 0.0000 | 0.00000 | 0.00000 | 0.00000 | 10400000 | 0 |
| 171 | 1.1400 | 0.0000 | 0.0000 | 0.00000 | 0.00000 | 0.00000 | 10400000 | 0 |
| 172 | 1.0800 | 0.0000 | 0.0000 | 0.00000 | 0.00000 | 0.00000 | 10400000 | 0 |
| 173 | 1.0200 | 0.0000 | 0.0000 | 0.00000 | 0.00000 | 0.00000 | 10400000 | 0 |
| 174 | 1.1000 | 0.0000 | 0.0000 | 0.00000 | 0.00000 | 0.00000 | 10400000 | 0 |
| 175 | 1.1600 | 0.0000 | 0.0000 | 0.00000 | 0.00000 | 0.00000 | 10400000 | 0 |
| 176 | 0.4430 | 0.0000 | 0.0000 | 0.00000 | 0.00000 | 0.00000 | 10400000 | 0 |
| 177 | 0.8770 | 1.0000 | 0.0000 | 4.13300 | 0.00000 | 0.00000 | 10400000 | 3850000 |
| 178 | 0.8770 | 1.0000 | 0.0000 | 4.13300 | 0.00000 | 0.00000 | 10400000 | 3850000 |
| 179 | 0.8770 | 1.0000 | 0.0000 | 4.13300 | 0.00000 | 0.00000 | 10400000 | 3850000 |
| 180 | 0.8770 | 1.0000 | 0.0000 | 4.13300 | 0.00000 | 0.00000 | 10400000 | 3850000 |
| 181 | 0.8770 | 1.0000 | 0.0000 | 4.13300 | 0.00000 | 0.00000 | 10400000 | 3850000 |
| 182 | 0.8770 | 1.0000 | 0.0000 | 4.13300 | 0.00000 | 0.00000 | 10400000 | 3850000 |
| 183 | 0.8770 | 1.0000 | 0.0000 | 4.13300 | 0.00000 | 0.00000 | 10400000 | 3850000 |
| 184 | 0.8770 | 1.0000 | 0.0000 | 4.13300 | 0.00000 | 0.00000 | 10400000 | 3850000 |
| 185 | 0.8770 | 1.0000 | 0.0000 | 4.13300 | 0.00000 | 0.00000 | 10400000 | 3850000 |
| 186 | 0.8770 | 1.0000 | 0.0000 | 4.13300 | 0.00000 | 0.00000 | 10400000 | 3850000 |
| 187 | 0.8770 | 1.0000 | 0.0000 | 4.13300 | 0.00000 | 0.00000 | 10400000 | 3850000 |
| 188 | 0.8770 | 1.0000 | 0.0000 | 4.13300 | 0.00000 | 0.00000 | 10400000 | 3850000 |
| 189 | 0.8070 | 0.0000 | 0.0000 | 0.00000 | 0.00000 | 0.00000 | 10400000 | 0 |
| 190 | 1.6600 | 0.0000 | 0.0000 | 0.00000 | 0.00000 | 0.00000 | 10400000 | 0 |
| 191 | 1.6800 | 0.0000 | 0.0000 | 0.00000 | 0.00000 | 0.00000 | 10400000 | 0 |
| 192 | 1.6900 | 0.0000 | 0.0000 | 0.00000 | 0.00000 | 0.00000 | 10400000 | 0 |



SM 46531

TABLE 100 . 216 ENTRIES . BAR PROPERTIES

| BAR NO. | A | KN | SECTION PROPERTIES KT | IN | IT | J | MATERIAL PROPERTIES E | G |
|---|---|---|---|---|---|---|---|---|
| 193 | 1.6900 | 0.0000 | 0.0000 | 0.00000 | 0.00000 | 0.00000 | 10400000 | 0 |
| 194 | 1.6900 | 0.0000 | 0.0000 | 0.00000 | 0.00000 | 0.00000 | 10400000 | 0 |
| 195 | 1.6900 | 0.0000 | 0.0000 | 0.00000 | 0.00000 | 0.00000 | 10400000 | 0 |
| 196 | 1.6900 | 0.0000 | 0.0000 | 0.00000 | 0.00000 | 0.00000 | 10400000 | 0 |
| 197 | 1.6900 | 0.0000 | 0.0000 | 0.00000 | 0.00000 | 0.00000 | 10400000 | 0 |
| 198 | 1.6900 | 0.0000 | 0.0000 | 0.00000 | 0.00000 | 0.00000 | 10400000 | 0 |
| 199 | 1.6800 | 0.0000 | 0.0000 | 0.00000 | 0.00000 | 0.00000 | 10400000 | 0 |
| 200 | 1.6600 | 0.0000 | 0.0000 | 0.00000 | 0.00000 | 0.00000 | 10400000 | 0 |
| 201 | 0.8070 | 0.0000 | 0.0000 | 0.00000 | 0.00000 | 0.00000 | 10400000 | 0 |
| 202 | 1.0300 | 0.0000 | 0.0000 | 0.00000 | 0.00000 | 0.00000 | 10400000 | 0 |
| 203 | 1.0300 | 0.0000 | 0.0000 | 0.00000 | 0.00000 | 0.00000 | 10400000 | 0 |
| 204 | 1.0300 | 0.0000 | 0.0000 | 0.00000 | 0.00000 | 0.00000 | 10400000 | 0 |
| 205 | 1.0300 | 0.0000 | 0.0000 | 0.00000 | 0.00000 | 0.00000 | 10400000 | 0 |
| 206 | 1.0300 | 0.0000 | 0.0000 | 0.00000 | 0.00000 | 0.00000 | 10400000 | 0 |
| 207 | 1.0300 | 0.0000 | 0.0000 | 0.00000 | 0.00000 | 0.00000 | 10400000 | 0 |
| 208 | 1.0300 | 0.0000 | 0.0000 | 0.00000 | 0.00000 | 0.00000 | 10400000 | 0 |
| 209 | 1.0300 | 0.0000 | 0.0000 | 0.00000 | 0.00000 | 0.00000 | 10400000 | 0 |
| 210 | 1.0300 | 0.0000 | 0.0000 | 0.00000 | 0.00000 | 0.00000 | 10400000 | 0 |
| 211 | 1.0300 | 0.0000 | 0.0000 | 0.00000 | 0.00000 | 0.00000 | 10400000 | 0 |
| 212 | 1.0300 | 0.0000 | 0.0000 | 0.00000 | 0.00000 | 0.00000 | 10400000 | 0 |
| 213 | 1.0300 | 0.0000 | 0.0000 | 0.00000 | 0.00000 | 0.00000 | 10400000 | 0 |
| 214 | .100+2 | 1.0000 | 1.0000 | .1000+3 | .1000+3 | 0.00000 | 10400000 | 385000 |
| 215 | 1.7500 | 0.0000 | 0.0000 | 0.00000 | 0.00000 | 0.00000 | 10400000 | 0 |
| 216 | 4.0000 | 0.0000 | 0.0000 | 0.00000 | 0.00000 | 0.00000 | 10400000 | 0 |



Table 100

TABLE 101 . 87 ENTRIES . PANEL PROPERTIES

| PANEL NO. | G | T | PANEL NO. | G | T |
|---|---|---|---|---|---|
| 1 | 3850000 | 0.813 | 45 | 3850000 | 0.063 |
| 2 | 3850000 | 0.813 | 46 | 3850000 | 0.063 |
| 3 | 3850000 | 0.813 | 47 | 3850000 | 0.063 |
| 4 | 3850000 | 0.813 | 48 | 3850000 | 0.063 |
| 5 | 3850000 | 0.813 | 49 | 3850000 | 0.063 |
| 6 | 3850000 | 0.813 | 50 | 3850000 | 0.048 |
| 7 | 3850000 | 0.813 | 51 | 3850000 | 0.032 |
| 8 | 3850000 | 0.813 | 52 | 3850000 | 0.032 |
| 9 | 3850000 | 0.813 | 53 | 3850000 | 0.032 |
| 10 | 3850000 | 0.813 | 54 | 3850000 | 0.032 |
| 11 | 3850000 | 0.813 | 55 | 3850000 | 0.032 |
| 12 | 3850000 | 0.813 | 56 | 3850000 | 0.032 |
| 13 | 3850000 | 0.875 | 57 | 3850000 | 0.032 |
| 14 | 3850000 | 0.875 | 58 | 3850000 | 0.032 |
| 15 | 3850000 | 0.875 | 59 | 3850000 | 0.032 |
| 16 | 3850000 | 0.875 | 60 | 3850000 | 0.032 |
| 17 | 3850000 | 0.875 | 61 | 3850000 | 0.048 |
| 18 | 3850000 | 0.875 | 62 | 3850000 | 0.048 |
| 19 | 3850000 | 0.875 | 63 | 3850000 | 0.032 |
| 20 | 3850000 | 0.875 | 64 | 3850000 | 0.032 |
| 21 | 3850000 | 0.875 | 65 | 3850000 | 0.032 |
| 22 | 3850000 | 0.875 | 66 | 3850000 | 0.032 |
| 23 | 3850000 | 0.875 | 67 | 3850000 | 0.032 |
| 24 | 3850000 | 0.875 | 68 | 3850000 | 0.032 |
| 25 | 3850000 | 0.711 | 69 | 3850000 | 0.032 |
| 26 | 3850000 | 0.711 | 70 | 3850000 | 0.032 |
| 27 | 3850000 | 0.711 | 71 | 3850000 | 0.032 |
| 28 | 3850000 | 0.711 | 72 | 3850000 | 0.032 |
| 29 | 3850000 | 0.711 | 73 | 3850000 | 0.048 |
| 30 | 3850000 | 0.711 | 74 | 3850000 | 0.050 |
| 31 | 3850000 | 0.711 | 75 | 3850000 | 0.050 |
| 32 | 3850000 | 0.711 | 76 | 3850000 | 0.050 |
| 33 | 3850000 | 0.711 | 77 | 3850000 | 0.050 |
| 34 | 3850000 | 0.711 | 78 | 3850000 | 0.050 |
| 35 | 3850000 | 0.711 | 79 | 3850000 | 0.050 |
| 36 | 3850000 | 0.711 | 80 | 3850000 | 0.050 |
| 37 | 3850000 | 1.000 | 81 | 3850000 | 0.050 |
| 38 | 3850000 | 1.000 | 82 | 3850000 | 0.050 |
| 39 | 3850000 | 0.063 | 83 | 3850000 | 0.050 |
| 40 | 3850000 | 0.063 | 84 | 3850000 | 0.050 |
| 41 | 3850000 | 0.063 | 85 | 3850000 | 0.050 |
| 42 | 3850000 | 0.063 | 86 | 3850000 | 1.000 |
| 43 | 3850000 | 0.063 | 87 | 3850000 | 1.000 |
| 44 | 3850000 | 0.063 | | | |



Table 101

SM 46531

## Table 102

PANEL K FACTORS

| PANEL NO. | K1 | | K2 | | K3 | | K4 | | K5 | |
|---|---|---|---|---|---|---|---|---|---|---|
| 1 | -.90141235 | -6 | .73133457 | +1 | .97150269 | +0 | -.87545415 | -6 | .73133457 | +1 |
| 2 | .49743130 | -6 | .73133851 | +1 | .97150256 | +0 | .48377881 | -6 | .73133851 | +1 |
| 3 | -.58107044 | -6 | .73132616 | +1 | .97150296 | +0 | -.56083354 | -6 | .73132616 | +1 |
| 4 | .58107044 | -6 | .73132618 | +1 | .97150296 | +0 | .56083354 | -6 | .73132618 | +1 |
| 5 | -.49743179 | -6 | .73133850 | +1 | .97150256 | +0 | -.48377882 | -6 | .73133850 | +1 |
| 6 | .90141235 | -6 | .73133458 | +1 | .97150268 | +0 | .87545414 | -6 | .73133459 | +1 |
| 7 | -.90141235 | -6 | .73133457 | +1 | .97150269 | +0 | -.87545415 | -6 | .73133457 | +1 |
| 8 | .49743180 | -6 | .73133850 | +1 | .97150256 | +0 | .48377881 | -6 | .73133850 | +1 |
| 9 | -.58107043 | -6 | .73132616 | +1 | .97150296 | +0 | -.56083353 | -6 | .73132616 | +1 |
| 10 | .58107044 | -6 | .73132618 | +1 | .97150296 | +0 | .56083354 | -6 | .73132618 | +1 |
| 11 | -.49743179 | -6 | .73133850 | +1 | .97150256 | +0 | -.48377882 | -6 | .73133850 | +1 |
| 12 | .90141235 | -6 | .73133458 | +1 | .97150270 | +0 | .87545415 | -6 | .73133459 | +1 |
| 13 | .39151094 | -6 | .29911192 | +1 | .43831606 | -0 | .17144659 | -6 | .29911129 | +1 |
| 14 | -.33561997 | -6 | .29911361 | +1 | .43831620 | -0 | -.14777374 | -6 | .29911362 | +1 |
| 15 | .18068228 | -6 | .29910855 | +1 | .43831609 | -0 | .79738432 | -7 | .29910848 | +1 |
| 16 | -.18068229 | -6 | .29910848 | +1 | .43831611 | -0 | -.79738430 | -7 | .29910855 | +1 |
| 17 | .33561995 | -6 | .29911362 | +1 | .43831619 | -0 | .14777377 | -6 | .29911360 | +1 |
| 18 | -.39151096 | -6 | .29911129 | +1 | .43831608 | -0 | -.17144657 | -6 | .29911192 | +1 |
| 19 | .39151094 | -6 | .29911192 | +1 | .43831608 | -0 | .17144660 | -6 | .29911130 | +1 |
| 20 | -.33561997 | -6 | .29911361 | +1 | .43831620 | -0 | -.14777374 | -6 | .29911362 | +1 |
| 21 | .18068228 | -6 | .29910855 | +1 | .43831609 | -0 | .79738433 | -7 | .29910848 | +1 |
| 22 | -.18068229 | -6 | .29910848 | +1 | .43831610 | -0 | -.79738428 | -7 | .29910855 | +1 |
| 23 | .33561995 | -6 | .29911362 | +1 | .43831619 | -0 | .14777377 | -6 | .29911360 | +1 |
| 24 | -.39151096 | -6 | .29911129 | +1 | .43831608 | -0 | -.17144657 | -6 | .29911192 | +1 |
| 25 | -.12607628 | -0 | .83474201 | +0 | .92729508 | +0 | -.16121084 | -0 | .12334963 | +1 |
| 26 | .12374157 | -6 | .12682246 | +1 | .79947090 | +0 | .99202912 | -7 | .12682249 | +1 |
| 27 | -.11959428 | -6 | .12682036 | +1 | .79947110 | +0 | -.95941385 | -7 | .12682033 | +1 |
| 28 | .11959427 | -6 | .12682033 | +1 | .79947110 | +0 | .95941392 | -7 | .12682036 | +1 |
| 29 | -.12374158 | -6 | .12682248 | +1 | .79947090 | +0 | -.99202904 | -7 | .12682246 | +1 |
| 30 | .80369855 | -7 | .12682158 | +1 | .79947105 | +0 | .63324428 | -7 | .12682178 | +1 |
| 31 | -.80369859 | -7 | .12682178 | +1 | .79947104 | +0 | -.63324423 | -7 | .12682158 | +1 |
| 32 | .12374157 | -6 | .12682246 | +1 | .79947090 | +0 | .99202912 | -7 | .12682249 | +1 |
| 33 | -.11959428 | -6 | .12682036 | +1 | .79947111 | +0 | -.95941386 | -7 | .12682033 | +1 |
| 34 | .11959427 | -6 | .12682033 | +1 | .79947110 | +0 | .95941392 | -7 | .12682036 | +1 |
| 35 | -.12374158 | -6 | .12682248 | +1 | .79947091 | +0 | -.99202905 | -7 | .12682246 | +1 |
| 36 | .18988970 | -0 | .12590506 | +1 | .79834594 | +0 | .14722922 | -0 | .12299394 | +1 |
| 37 | .00000000 | +0 | .10765741 | +1 | .70710523 | +0 | -.00000000 | +0 | .17836793 | +1 |
| 38 | .00000000 | +0 | .72074448 | +0 | .27925579 | -0 | -.00000000 | +0 | .10192839 | +1 |
| 39 | -.10502174 | -6 | .27323749 | +1 | .50450194 | +0 | -.53304076 | -7 | .27323752 | +1 |
| 40 | .11660203 | -6 | .27323291 | +1 | .50450189 | +0 | .58552729 | -7 | .27323285 | +1 |
| 41 | -.11660203 | -6 | .27323286 | +1 | .50450190 | +0 | -.58552727 | -7 | .27323291 | +1 |
| 42 | .10502174 | -6 | .27323752 | +1 | .50450195 | +0 | .53304080 | -7 | .27323749 | +1 |
| 43 | -.78803739 | -7 | .27323547 | +1 | .50450198 | +0 | -.39121450 | -7 | .27323603 | +1 |
| 44 | .78803738 | -7 | .27323603 | +1 | .50450198 | +0 | .39121452 | -7 | .27323547 | +1 |
| 45 | -.10502174 | -6 | .27323749 | +1 | .50450194 | +0 | -.53304076 | -7 | .27323752 | +1 |
| 46 | .11660203 | -6 | .27323291 | +1 | .50450189 | +0 | .58552729 | -7 | .27323285 | +1 |
| 47 | -.11660203 | -6 | .27323285 | +1 | .50450189 | +0 | -.58552726 | -7 | .27323291 | +1 |

Table 102

Panel K Factors

Table 102

PANEL K FACTORS

| PANEL NO. | K1 | | K2 | | K3 | | K4 | | K5 | |
|---|---|---|---|---|---|---|---|---|---|---|
| 48 | .10502174 | -6 | .27323752 | +1 | .50450195 | +0 | .53304080 | -7 | .27323749 | +1 |
| 49 | -.73505560 | -7 | .10622961 | +1 | .80735821 | +0 | -.58755287 | -7 | .10622983 | +1 |
| 50 | -.11161602 | -7 | .28880365 | -0 | .41419007 | -0 | -.28506742 | -7 | .11320028 | +1 |
| 51 | -.91275815 | -8 | .18273784 | +1 | .66861710 | +0 | -.67506459 | -8 | .18273787 | +1 |
| 52 | .97472384 | -7 | .18273479 | +1 | .66861708 | +0 | .63330735 | -7 | .18273474 | +1 |
| 53 | -.97472388 | -7 | .18273475 | +1 | .66861708 | +0 | -.63330732 | -7 | .18273479 | +1 |
| 54 | .91275813 | -8 | .18273786 | +1 | .66861709 | +0 | .67506459 | -8 | .18273784 | +1 |
| 55 | .64983396 | -7 | .18273647 | +1 | .66861700 | +0 | .43060230 | -7 | .18273685 | +1 |
| 56 | -.64983398 | -7 | .18273685 | +1 | .66861699 | +0 | -.43060227 | -7 | .18273646 | +1 |
| 57 | -.91275815 | -8 | .18273784 | +1 | .66861709 | +0 | -.67506458 | -8 | .18273786 | +1 |
| 58 | .97472384 | -7 | .18273479 | +1 | .66861709 | +0 | .63330736 | -7 | .18273474 | +1 |
| 59 | -.97472388 | -7 | .18273474 | +1 | .66861708 | +0 | -.63330732 | -7 | .18273479 | +1 |
| 60 | .91275813 | -8 | .18273787 | +1 | .66861710 | +0 | .67506459 | -8 | .18273785 | +1 |
| 61 | .64983396 | -7 | .18273647 | +1 | .66861700 | +0 | .43060230 | -7 | .18273685 | +1 |
| 62 | .48941873 | -7 | .13642376 | +1 | .75260323 | +0 | .36503521 | -7 | .13642348 | +1 |
| 63 | -.28439721 | -7 | .13642450 | +1 | .75260319 | +0 | -.19034258 | -7 | .13642453 | +1 |
| 64 | -.42863224 | -7 | .13642222 | +1 | .75260319 | +0 | -.31845628 | -7 | .13642218 | +1 |
| 65 | .42863224 | -7 | .13642219 | +1 | .75260322 | +0 | .31845631 | -7 | .13642222 | +1 |
| 66 | .28439721 | -7 | .13642453 | +1 | .75260320 | +0 | .19034259 | -7 | .13642450 | +1 |
| 67 | -.48941875 | -7 | .13642348 | +1 | .75260321 | +0 | -.36503519 | -7 | .13642376 | +1 |
| 68 | .48941873 | -7 | .13642376 | +1 | .75260323 | +0 | .36503521 | -7 | .13642348 | +1 |
| 69 | -.23439721 | -7 | .13642450 | +1 | .75260320 | +0 | -.19034258 | -7 | .13642453 | +1 |
| 70 | -.42863224 | -7 | .13642222 | +1 | .75260320 | +0 | -.31845628 | -7 | .13642218 | +1 |
| 71 | .42863224 | -7 | .13642219 | +1 | .75260322 | +0 | .31845631 | -7 | .13642222 | +1 |
| 72 | .28439721 | -7 | .13642453 | +1 | .75260320 | +0 | .19034259 | -7 | .13642450 | +1 |
| 73 | -.48941875 | -7 | .13642348 | +1 | .75260322 | +0 | -.36503520 | -7 | .13642377 | +1 |
| 74 | -.55197107 | -8 | .11142483 | +1 | .79793738 | +0 | -.41294973 | -8 | .11142460 | +1 |
| 75 | .27547786 | -8 | .11142543 | +1 | .79793738 | +0 | .17780022 | -8 | .11142544 | +1 |
| 76 | .23890488 | -8 | .11142356 | +1 | .79793735 | +0 | .33335755 | -8 | .11142353 | +1 |
| 77 | -.23890489 | -8 | .11142353 | +1 | .79793734 | +0 | -.33335755 | -8 | .11142356 | +1 |
| 78 | -.27547786 | -8 | .11142544 | +1 | .79793738 | +0 | -.17780022 | -8 | .11142543 | +1 |
| 79 | .55197107 | -8 | .11142460 | +1 | .79793739 | +0 | .41294975 | -8 | .11142483 | +1 |
| 80 | -.55197107 | -8 | .11142483 | +1 | .79793739 | +0 | -.41294974 | -8 | .11142460 | +1 |
| 81 | .27547786 | -8 | .11142543 | +1 | .79793738 | +0 | .17780022 | -8 | .11142544 | +1 |
| 82 | .23890489 | -8 | .11142356 | +1 | .79793734 | +0 | .33335756 | -8 | .11142353 | +1 |
| 83 | -.23890489 | -8 | .11142353 | +1 | .79793734 | +0 | -.33335755 | -8 | .11142356 | +1 |
| 84 | -.27547786 | -8 | .11142544 | +1 | .79793738 | +0 | -.17780022 | -8 | .11142543 | +1 |
| 85 | .55197107 | -8 | .11142460 | +1 | .79793741 | +0 | .41294976 | -8 | .11142483 | +1 |
| 86 | .00000000 | +0 | .19007675 | +1 | .74550180 | +0 | -.00000000 | +0 | .26958080 | +1 |
| 87 | .00000000 | +0 | .15070136 | +1 | .14414519 | +1 | -.00000000 | +0 | .24077041 | +1 |

Table 102

Panel K Factors

Table 103

```
MATRICES FORMED ON TAPE UNIT AU3      ID  35    CASE  36
      TAPE HEADER MATRIX NO. 200
                  MATRIX NO. 201    NAME PF,PO  SORT ROW     I,J 449 X 666

MATRICES FORMED ON TAPE UNIT AU4      ID  35    CASE  36
      TAPE HEADER MATRIX NO. 300
                  MATRIX NO. 203    NAME TF     SORT COL     I,J 864 X 648
                  MATRIX NO. 205    NAME PFC    SORT COL     I,J 313 X 648
                  MATRIX NO. 206    NAME POC    SORT COL     I,J 313 X  18
                  MATRIX NO. 313    NAME C DLTA SORT COL     I,J  18 X  18
                  MATRIX NO. 400    NAME C      SORT COL     I,J 864 X 864
```



Table 103

SM 46531

Table 104

REDUNDANT FORCE STRESS ANALYSIS PROG. A05.0 ANALYSIS 35 CASE 36 RUN 1

JOINT EXTERNAL REACTIONS

PHASE IV MATRIX ROW FORMAT .

| FORCE (ROW) | JOINT NO. | POINT NO. | DIR. NO. | REFERENCE | FORCE (ROW) | JOINT NO. | POINT NO. | DIR. NO. | REFERENCE |
|---|---|---|---|---|---|---|---|---|---|
| 1 | 3 | | 4 | JME | 55 | 91 | | 2 | JFE |
| 2 | 3 | | 4 | JFE | 56 | 91 | | 10 | JFE |
| 3 | 3 | | 2 | JFE | 57 | 92 | | 7 | JFE |
| 4 | 3 | | 5 | JFE | 58 | 92 | | 4 | JME |
| 5 | 17 | | 4 | JME | 59 | 92 | | 2 | JFE |
| 6 | 17 | | 4 | JFE | 60 | 92 | | 9 | JFE |
| 7 | 17 | | 2 | JFE | 61 | 104 | | 8 | JFE |
| 8 | 17 | | 5 | JFE | 62 | 104 | | 4 | JME |
| 9 | 31 | | 4 | JME | 63 | 104 | | 2 | JFE |
| 10 | 31 | | 7 | JFE | 64 | 104 | | 10 | JFE |
| 11 | 31 | | 2 | JFE | 65 | 117 | | 5 | JFE |
| 12 | 31 | | 9 | JFE | 66 | 105 | | 2 | JFE |
| 13 | 1 | | 1 | JFE | 67 | 105 | | 4 | JFE |
| 14 | 45 | | 7 | JFE | 68 | 105 | | 5 | JFE |
| 15 | 45 | | 2 | JFE | 69 | 106 | | 1 | JFE |
| 16 | 45 | | 9 | JFE | 70 | 106 | | 4 | JFE |
| 17 | 15 | | 4 | JME | 71 | 106 | | 5 | JFE |
| 18 | 15 | | 4 | JFE | 72 | 107 | | 1 | JFE |
| 19 | 15 | | 2 | JFE | 73 | 107 | | 4 | JFE |
| 20 | 15 | | 6 | JFE | 74 | 107 | | 5 | JFE |
| 21 | 29 | | 4 | JME | 75 | 108 | | 1 | JFE |
| 22 | 29 | | 4 | JFE | 76 | 108 | | 4 | JFE |
| 23 | 29 | | 2 | JFE | 77 | 108 | | 5 | JFE |
| 24 | 29 | | 6 | JFE | 78 | 109 | | 1 | JFE |
| 25 | 43 | | 4 | JME | 79 | 109 | | 4 | JFE |
| 26 | 43 | | 8 | JFE | 80 | 109 | | 5 | JFE |
| 27 | 43 | | 2 | JFE | 81 | 110 | | 1 | JFE |
| 28 | 43 | | 10 | JFE | 82 | 110 | | 4 | JFE |
| 29 | 1 | | 3 | JFE | 83 | 110 | | 5 | JFE |
| 30 | 57 | | 8 | JFF | 84 | 111 | | 1 | JFE |
| 31 | 57 | | 2 | JFE | 85 | 111 | | 4 | JFE |
| 32 | 57 | | 10 | JFE | 86 | 111 | | 5 | JFE |
| 33 | 64 | | 7 | JFE | 87 | 112 | | 1 | JFE |
| 34 | 64 | | 4 | JME | 88 | 112 | | 4 | JFE |
| 35 | 64 | | 2 | JFE | 89 | 112 | | 5 | JFE |
| 36 | 64 | | 9 | JFE | 90 | 113 | | 1 | JFE |
| 37 | 119 | | 8 | JFE | 91 | 113 | | 4 | JFE |
| 38 | 119 | | 4 | JME | 92 | 113 | | 5 | JFE |
| 39 | 119 | | 2 | JFE | 93 | 114 | | 1 | JFE |
| 40 | 119 | | 10 | JFE | 94 | 114 | | 4 | JFE |
| 41 | 77 | | 8 | JFE | 95 | 114 | | 5 | JFE |
| 42 | 77 | | 4 | JME | 96 | 115 | | 1 | JFE |
| 43 | 77 | | 2 | JFE | 97 | 115 | | 4 | JFE |
| 44 | 77 | | 10 | JFE | 98 | 115 | | 5 | JFE |
| 45 | 78 | | 7 | JFE | 99 | 116 | | 1 | JFE |
| 46 | 1 | | 5 | JFE | 100 | 116 | | 4 | JFE |
| 47 | 78 | | 2 | JFE | 101 | 116 | | 5 | JFE |



Table 104

SM 46531

Table 104

REDUNDANT FORCE STRESS ANALYSIS PROG. A0..0 ANALYSIS 35 CASE 36 RUN 1

JOINT EXTERNAL REACTIONS

PHASE IV MATRIX ROW FORMAT .

| FORCE (ROW) | JOINT NO. | POINT NO. | DIR. NO. | REFERENCE | FORCE (ROW) | JOINT NO. | POINT NO. | DIR. NO. | REFERENCE |
|---|---|---|---|---|---|---|---|---|---|
| 48 | 78 | | 9 | JFE | 102 | 117 | | 2 | JFE |
| 49 | 79 | | 7 | JFE | 103 | 117 | | 4 | JFE |
| 50 | 79 | | 4 | JME | 104 | 2 | | 1 | JFE |
| 51 | 79 | | 2 | JFE | 105 | 2 | | 3 | JFE |
| 52 | 79 | | 9 | JFE | 106 | 2 | | 5 | JFE |
| 53 | 91 | | 8 | JFE | 107 | 2 | | 1 | JME |
| 54 | 91 | | 4 | JME | 108 | 2 | | 5 | JME |

Table 104

REDUNDANT FORCE STRESS ANALYSIS PROG. A05.0 ANALYSIS 35 CASE 36 RUN 1

BAR EXTERNAL REACTIONS

PHASE IV MATRIX ROW FORMAT .

| FORCE (ROW) | BAR NO. | DEFINING M | POINTS N | REFERENCE | FORCE (ROW) | BAR NO. | DEFINING M | POINTS N | REFERENCE |
|---|---|---|---|---|---|---|---|---|---|
| 109 | 26 | 3 | 17 | BE | 122 | 202 | 105 | 106 | BE |
| 110 | 51 | 17 | 31 | BE | 123 | 203 | 106 | 107 | BE |
| 111 | 78 | 31 | 45 | BE | 124 | 204 | 107 | 108 | BE |
| 112 | 38 | 15 | 29 | BE | 125 | 205 | 108 | 109 | BE |
| 113 | 65 | 29 | 43 | BE | 126 | 206 | 109 | 110 | BE |
| 114 | 90 | 43 | 57 | BE | 127 | 207 | 110 | 111 | BE |
| 115 | 137 | 119 | 77 | BE | 128 | 208 | 111 | 112 | BE |
| 116 | 139 | 78 | 79 | BE | 129 | 209 | 112 | 113 | BE |
| 117 | 151 | 77 | 91 | BE | 130 | 210 | 113 | 114 | BE |
| 118 | 164 | 79 | 92 | BE | 131 | 211 | 114 | 115 | BE |
| 119 | 176 | 91 | 104 | BE | 132 | 212 | 115 | 116 | BE |
| 120 | 189 | 92 | 105 | BE | 133 | 213 | 116 | 117 | BE |
| 121 | 201 | 104 | 117 | BE | | | | | |

Table 104

REDUNDANT FORCE STRESS ANALYSIS PROG. A05.0 ANALYSIS 35 CASE 36 RUN 1

BAR FORCES

PHASE IV MATRIX ROW FORMAT .

| FORCE (ROW) | BAR NO. | DEFINING P | DEFINING Q | POINTS C | REFERENCE | FORCE (ROW) | BAR NO. | DEFINING P | DEFINING Q | POINTS C | REFERENCE |
|---|---|---|---|---|---|---|---|---|---|---|---|
| 134 | 1 | 2 | 3 | 1 | BAP | 181 | 48 | 26 | 27 | 16 | BAP |
| 135 | 2 | 2 | 4 | 1 | BAP | 182 | 49 | 27 | 28 | 16 | BAP |
| 136 | 3 | 2 | 5 | 1 | BAP | 183 | 50 | 28 | 29 | 16 | BAP |
| 137 | 4 | 2 | 6 | 1 | BAP | 184 | 51 | 17 | 31 | | BAP |
| 138 | 5 | 2 | 7 | 1 | BAP | 185 | 52 | 18 | 32 | | BAP |
| 139 | 6 | 2 | 8 | 1 | BAP | 186 | 53 | 19 | 33 | | BAP |
| 140 | 7 | 2 | 9 | 1 | BAP | 187 | 54 | 20 | 58 | 16 | BAP |
| 141 | 8 | 2 | 10 | 1 | BAP | 188 | 55 | 58 | 34 | 16 | BAP |
| 142 | 9 | 2 | 11 | 1 | BAP | 189 | 56 | 59 | 61 | | BAP |
| 143 | 10 | 2 | 12 | 1 | BAP | 190 | 57 | 21 | 35 | | BAP |
| 144 | 11 | 2 | 13 | 1 | BAP | 191 | 58 | 22 | 36 | | BAP |
| 145 | 12 | 2 | 14 | 1 | BAP | 192 | 59 | 23 | 37 | | BAP |
| 146 | 13 | 2 | 15 | 1 | BAP | 193 | 60 | 24 | 38 | | BAP |
| 147 | 14 | 3 | 4 | 2 | BAP | 194 | 61 | 25 | 39 | | BAP |
| 148 | 15 | 4 | 5 | 2 | BAP | 195 | 62 | 26 | 40 | | BAP |
| 149 | 16 | 5 | 6 | 2 | BAP | 196 | 63 | 27 | 41 | | BAP |
| 150 | 17 | 6 | 7 | 2 | BAP | 197 | 64 | 28 | 42 | | BAP |
| 151 | 18 | 7 | 8 | 2 | BAP | 198 | 65 | 29 | 43 | | BAP |
| 152 | 19 | 8 | 9 | 2 | BAP | 199 | 66 | 31 | 32 | 120 | BAP |
| 153 | 20 | 9 | 10 | 2 | BAP | 200 | 67 | 32 | 33 | 120 | BAP |
| 154 | 21 | 10 | 11 | 2 | BAP | 201 | 68 | 33 | 34 | 120 | BAP |
| 155 | 22 | 11 | 12 | 2 | BAP | 202 | 69 | 34 | 35 | 120 | BAP |
| 156 | 23 | 12 | 13 | 2 | BAP | 203 | 70 | 35 | 36 | 120 | BAP |
| 157 | 24 | 13 | 14 | 2 | BAP | 204 | 71 | 36 | 37 | 120 | BAP |
| 158 | 25 | 14 | 15 | 2 | BAP | 205 | 72 | 37 | 38 | 120 | BAP |
| 159 | 26 | 3 | 17 | 2 | BAP | 206 | 73 | 38 | 39 | 120 | BAP |
| 160 | 27 | 4 | 18 | 2 | BAP | 207 | 74 | 39 | 40 | 120 | BAP |
| 161 | 28 | 5 | 19 | 2 | BAP | 208 | 75 | 40 | 41 | 120 | BAP |
| 162 | 29 | 6 | 20 | 2 | BAP | 209 | 76 | 41 | 42 | 120 | BAP |
| 163 | 30 | 7 | 21 | 2 | BAP | 210 | 77 | 42 | 43 | 120 | BAP |
| 164 | 31 | 8 | 22 | 2 | BAP | 211 | 78 | 31 | 45 | | BAP |
| 165 | 32 | 9 | 23 | 2 | BAP | 212 | 79 | 32 | 46 | | BAP |
| 166 | 33 | 10 | 24 | 2 | BAP | 213 | 80 | 33 | 47 | | BAP |
| 167 | 34 | 11 | 25 | 2 | BAP | 214 | 81 | 34 | 48 | | BAP |
| 168 | 35 | 12 | 26 | 2 | BAP | 215 | 82 | 35 | 49 | | BAP |
| 169 | 36 | 13 | 27 | 2 | BAP | 216 | 83 | 36 | 50 | | BAP |
| 170 | 37 | 14 | 28 | 2 | BAP | 217 | 84 | 37 | 51 | | BAP |
| 171 | 38 | 15 | 29 | 2 | BAP | 218 | 85 | 38 | 52 | | BAP |
| 172 | 39 | 17 | 18 | 16 | BAP | 219 | 86 | 39 | 53 | | BAP |
| 173 | 40 | 18 | 19 | 16 | BAP | 220 | 87 | 40 | 54 | | BAP |
| 174 | 41 | 19 | 20 | 16 | BAP | 221 | 88 | 41 | 55 | | BAP |
| 175 | 42 | 20 | 21 | 16 | BAP | 222 | 89 | 42 | 56 | | BAP |
| 176 | 43 | 21 | 22 | 16 | BAP | 223 | 90 | 43 | 57 | | BAP |
| 177 | 44 | 22 | 23 | 16 | BAP | 224 | 91 | 45 | 46 | | BAP |
| 178 | 45 | 23 | 24 | 16 | BAP | 225 | 92 | 46 | 47 | 121 | BAP |
| 179 | 46 | 24 | 25 | 16 | BAP | 226 | 93 | 47 | 48 | 121 | BAP |
| 180 | 47 | 25 | 26 | 16 | BAP | 227 | 94 | 48 | 49 | 121 | BAP |

Table 104

REDUNDANT FORCE STRESS ANALYSIS PROG. A05.0 ANALYSIS 35 CASE 36 RUN 1

BAR FORCES

PHASE IV MATRIX ROW FORMAT .

| FORCE (ROW) | BAR NO. | DEFINING P | POINTS Q | POINTS C | REFERENCE | FORCE (ROW) | BAR NO. | DEFINING P | POINTS Q | POINTS C | REFERENCE |
|---|---|---|---|---|---|---|---|---|---|---|---|
| 228 | 95 | 49 | 50 | 121 | BAP | 275 | 142 | 68 | 82 | | BAP |
| 229 | 96 | 50 | 51 | 121 | BAP | 276 | 143 | 69 | 83 | | BAP |
| 230 | 97 | 51 | 52 | 121 | BAP | 277 | 144 | 70 | 84 | | BAP |
| 231 | 98 | 52 | 53 | 121 | BAP | 278 | 145 | 71 | 85 | | BAP |
| 232 | 99 | 53 | 54 | 121 | BAP | 279 | 146 | 72 | 86 | | BAP |
| 233 | 100 | 54 | 55 | 121 | BAP | 280 | 147 | 73 | 87 | | BAP |
| 234 | 101 | 55 | 56 | 121 | BAP | 281 | 148 | 74 | 88 | | BAP |
| 235 | 102 | 56 | 57 | | BAP | 282 | 149 | 75 | 89 | | BAP |
| 236 | 103 | 60 | 61 | | BAP | 283 | 150 | 76 | 90 | | BAP |
| 237 | 104 | 61 | 62 | | BAP | 284 | 151 | 77 | 91 | | BAP |
| 238 | 105 | 62 | 63 | | BAP | 285 | 152 | 79 | 80 | 125 | BAP |
| 239 | 106 | 63 | 20 | | BAP | 286 | 153 | 80 | 81 | 125 | BAP |
| 240 | 107 | 60 | 122 | | BAP | 287 | 154 | 91 | 82 | 125 | BAP |
| 241 | 108 | 122 | 34 | | BAP | 288 | 155 | 92 | 83 | 125 | BAP |
| 242 | 109 | 59 | 122 | | BAP | 289 | 156 | 83 | 84 | 125 | BAP |
| 243 | 110 | 46 | 66 | | BAP | 290 | 157 | 84 | 85 | 125 | BAP |
| 244 | 111 | 47 | 67 | | BAP | 291 | 158 | 85 | 86 | 125 | BAP |
| 245 | 112 | 48 | 68 | | BAP | 292 | 159 | 86 | 87 | 125 | BAP |
| 246 | 113 | 49 | 69 | | BAP | 293 | 160 | 87 | 88 | 125 | BAP |
| 247 | 114 | 50 | 70 | | BAP | 294 | 161 | 88 | 89 | 125 | BAP |
| 248 | 115 | 51 | 71 | | BAP | 295 | 162 | 89 | 90 | 125 | BAP |
| 249 | 116 | 52 | 72 | | BAP | 296 | 163 | 90 | 91 | 125 | BAP |
| 250 | 117 | 53 | 73 | | BAP | 297 | 164 | 79 | 92 | | BAP |
| 251 | 118 | 54 | 74 | | BAP | 298 | 165 | 80 | 93 | | BAP |
| 252 | 119 | 55 | 75 | | BAP | 299 | 166 | 81 | 94 | | BAP |
| 253 | 120 | 56 | 118 | 44 | BAP | 300 | 167 | 82 | 95 | | BAP |
| 254 | 121 | 64 | 65 | 124 | BAP | 301 | 168 | 83 | 96 | | BAP |
| 255 | 122 | 65 | 66 | 124 | BAP | 302 | 169 | 84 | 97 | | BAP |
| 256 | 123 | 65 | 67 | 124 | BAP | 303 | 170 | 85 | 98 | | BAP |
| 257 | 124 | 66 | 67 | 124 | BAP | 304 | 171 | 86 | 99 | | BAP |
| 258 | 125 | 67 | 68 | 124 | BAP | 305 | 172 | 87 | 100 | | BAP |
| 259 | 126 | 68 | 69 | 124 | BAP | 306 | 173 | 88 | 101 | | BAP |
| 260 | 127 | 69 | 70 | -124 | BAP | 307 | 174 | 89 | 102 | | BAP |
| 261 | 128 | 70 | 71 | 124 | BAP | 308 | 175 | 90 | 103 | | BAP |
| 262 | 129 | 71 | 72 | 124 | BAP | 309 | 176 | 91 | 104 | | BAP |
| 263 | 130 | 72 | 73 | 124 | BAP | 310 | 177 | 92 | 93 | 126 | BAP |
| 264 | 131 | 73 | 74 | 124 | BAP | 311 | 178 | 93 | 94 | 126 | BAP |
| 265 | 132 | 74 | 75 | 124 | BAP | 312 | 179 | 94 | 95 | 126 | BAP |
| 266 | 133 | 75 | 76 | 124 | BAP | 313 | 180 | 95 | 96 | 126 | BAP |
| 267 | 134 | 76 | 77 | 124 | BAP | 314 | 181 | 96 | 97 | 126 | BAP |
| 268 | 135 | 119 | 118 | 123 | BAP | 315 | 182 | 97 | 98 | 126 | BAP |
| 269 | 136 | 118 | 76 | 44 | BAP | 316 | 183 | 98 | 99 | 126 | BAP |
| 270 | 137 | 119 | 77 | | BAP | 317 | 184 | 99 | 100 | 126 | BAP |
| 271 | 138 | 66 | 78 | | BAP | 318 | 185 | 100 | 101 | 126 | BAP |
| 272 | 139 | 78 | 79 | | BAP | 319 | 186 | 101 | 102 | 126 | BAP |
| 273 | 140 | 66 | 80 | | BAP | 320 | 187 | 102 | 103 | 126 | BAP |
| 274 | 141 | 67 | 81 | | BAP | 321 | 188 | 103 | 104 | 126 | BAP |



SM 4653

REDUNDANT FORCE STRESS ANALYSIS PROG. A05.0 ANALYSIS 35 CASE 36 RUN 1

BAR FORCES

PHASE IV MATRIX ROW FORMAT .

| FORCE (ROW) | BAR NO. | DEFINING P | DEFINING Q | POINTS C | REFERENCE | FORCE (ROW) | BAR NO. | DEFINING P | DEFINING Q | POINTS C | REFERENCE |
|---|---|---|---|---|---|---|---|---|---|---|---|
| 322 | 189 | 92 | 105 | | BAP | 369 | 7 | 2 | 9 | 1 | BS NP |
| 323 | 190 | 93 | 106 | | BAP | 370 | 7 | 2 | 9 | 1 | BS NQ |
| 324 | 191 | 94 | 107 | | BAP | 371 | 8 | 2 | 10 | 1 | BAQ |
| 325 | 192 | 95 | 108 | | BAP | 372 | 8 | 2 | 10 | 1 | BS NP |
| 326 | 193 | 96 | 109 | | BAP | 373 | 8 | 2 | 10 | 1 | BS NQ |
| 327 | 194 | 97 | 110 | | BAP | 374 | 9 | 2 | 11 | 1 | BAQ |
| 328 | 195 | 98 | 111 | | BAP | 375 | 9 | 2 | 11 | 1 | BS NP |
| 329 | 196 | 99 | 112 | | BAP | 376 | 9 | 2 | 11 | 1 | BS NQ |
| 330 | 197 | 100 | 113 | | BAP | 377 | 10 | 2 | 12 | 1 | BAQ |
| 331 | 198 | 101 | 114 | | BAP | 378 | 10 | 2 | 12 | 1 | BS NP |
| 332 | 199 | 102 | 115 | | BAP | 379 | 10 | 2 | 12 | 1 | BS NQ |
| 333 | 200 | 103 | 116 | | BAP | 380 | 11 | 2 | 13 | 1 | BAQ |
| 334 | 201 | 104 | 117 | | BAP | 381 | 11 | 2 | 13 | 1 | BS NP |
| 335 | 202 | 105 | 106 | | BAP | 382 | 11 | 2 | 13 | 1 | BS NQ |
| 336 | 203 | 106 | 107 | | BAP | 383 | 12 | 2 | 14 | 1 | BAQ |
| 337 | 204 | 107 | 108 | | BAP | 384 | 12 | 2 | 14 | 1 | BS NP |
| 338 | 205 | 108 | 109 | | BAP | 385 | 12 | 2 | 14 | 1 | BS NQ |
| 339 | 206 | 109 | 110 | | BAP | 386 | 13 | 2 | 15 | 1 | BAQ |
| 340 | 207 | 110 | 111 | | BAP | 387 | 13 | 2 | 15 | 1 | BS NP |
| 341 | 208 | 111 | 112 | | BAP | 388 | 13 | 2 | 15 | 1 | BS NQ |
| 342 | 209 | 112 | 113 | | BAP | 389 | 14 | 3 | 4 | 2 | BAQ |
| 343 | 210 | 113 | 114 | | BAP | 390 | 14 | 3 | 4 | 2 | BS NP |
| 344 | 211 | 114 | 115 | | BAP | 391 | 14 | 3 | 4 | 2 | BS NQ |
| 345 | 212 | 115 | 116 | | BAP | 392 | 15 | 4 | 5 | 2 | BAQ |
| 346 | 213 | 116 | 117 | | BAP | 393 | 15 | 4 | 5 | 2 | BS NP |
| 347 | 214 | 1 | 2 | 3 | BAP | 394 | 15 | 4 | 5 | 2 | BS NQ |
| 348 | 215 | 59 | 63 | | BAP | 395 | 16 | 5 | 6 | 2 | BAQ |
| 349 | 216 | 59 | 58 | | BAP | 396 | 16 | 5 | 6 | 2 | BS NP |
| 350 | 1 | 2 | 3 | 1 | BAQ | 397 | 16 | 5 | 6 | 2 | BS NQ |
| 351 | 1 | 2 | 3 | 1 | BS NP | 398 | 17 | 6 | 7 | 2 | BAQ |
| 352 | 1 | 2 | 3 | 1 | BS NQ | 399 | 17 | 6 | 7 | 2 | BS NP |
| 353 | 2 | 2 | 4 | 1 | BAQ | 400 | 17 | 6 | 7 | 2 | BS NQ |
| 354 | 2 | 2 | 4 | 1 | BS NP | 401 | 18 | 7 | 8 | 2 | BAQ |
| 355 | 2 | 2 | 4 | 1 | BS NQ | 402 | 18 | 7 | 8 | 2 | BS NP |
| 356 | 3 | 2 | 5 | 1 | BAQ | 403 | 18 | 7 | 8 | 2 | BS NQ |
| 357 | 3 | 2 | 5 | 1 | BS NP | 404 | 19 | 8 | 9 | 2 | BAQ |
| 358 | 3 | 2 | 5 | 1 | BS NQ | 405 | 19 | 8 | 9 | 2 | BS NP |
| 359 | 4 | 2 | 6 | 1 | BAQ | 406 | 19 | 8 | 9 | 2 | BS NQ |
| 360 | 4 | 2 | 6 | 1 | BS NP | 407 | 20 | 9 | 10 | 2 | BAQ |
| 361 | 4 | 2 | 6 | 1 | BS NQ | 408 | 20 | 9 | 10 | 2 | BS NP |
| 362 | 5 | 2 | 7 | 1 | BAQ | 409 | 20 | 9 | 10 | 2 | BS NQ |
| 363 | 5 | 2 | 7 | 1 | BS NP | 410 | 21 | 10 | 11 | 2 | BAQ |
| 364 | 5 | 2 | 7 | 1 | BS NQ | 411 | 21 | 10 | 11 | 2 | BS NP |
| 365 | 6 | 2 | 8 | 1 | BAQ | 412 | 21 | 10 | 11 | 2 | BS NQ |
| 366 | 6 | 2 | 8 | 1 | BS NP | 413 | 22 | 11 | 12 | 2 | BAQ |
| 367 | 6 | 2 | 8 | 1 | BS NQ | 414 | 22 | 11 | 12 | 2 | BS NP |
| 368 | 7 | 2 | 9 | 1 | BAQ | 415 | 22 | 11 | 12 | 2 | BS NQ |

REDUNDANT FORCE STRESS ANALYSIS PROG. A05.0 ANALYSIS 35 CASE 36 RUN 1

BAR FORCES

PHASE IV MATRIX ROW FORMAT .

| FORCE (ROW) | BAR NO. | DEFINING P | DEFINING Q | POINTS C | REFERENCE | FORCE (ROW) | BAR NO. | DEFINING P | DEFINING Q | POINTS C | REFERENCE |
|---|---|---|---|---|---|---|---|---|---|---|---|
| 416 | 23 | 12 | 13 | 2 | BAQ | 463 | 43 | 21 | 22 | 16 | BAQ |
| 417 | 23 | 12 | 13 | 2 | BS NP | 464 | 43 | 21 | 22 | 16 | BS NP |
| 418 | 23 | 12 | 13 | 2 | BS NQ | 465 | 43 | 21 | 22 | 16 | BS NQ |
| 419 | 24 | 13 | 14 | 2 | BAQ | 466 | 44 | 22 | 23 | 16 | BAQ |
| 420 | 24 | 13 | 14 | 2 | BS NP | 467 | 44 | 22 | 23 | 16 | BS NP |
| 421 | 24 | 13 | 14 | 2 | BS NQ | 468 | 44 | 22 | 23 | 16 | BS NQ |
| 422 | 25 | 14 | 15 | 2 | BAQ | 469 | 45 | 23 | 24 | 16 | BAQ |
| 423 | 25 | 14 | 15 | 2 | BS NP | 470 | 45 | 23 | 24 | 16 | BS NP |
| 424 | 25 | 14 | 15 | 2 | BS NQ | 471 | 45 | 23 | 24 | 16 | BS NQ |
| 425 | 26 | 3 | 17 | 2 | BAQ | 472 | 46 | 24 | 25 | 16 | BAQ |
| 426 | 26 | 3 | 17 | 2 | BS NP | 473 | 46 | 24 | 25 | 16 | BS NP |
| 427 | 27 | 4 | 18 | 2 | BAQ | 474 | 46 | 24 | 25 | 16 | BS NQ |
| 428 | 27 | 4 | 18 | 2 | BS NP | 475 | 47 | 25 | 26 | 16 | BAQ |
| 429 | 28 | 5 | 19 | 2 | BAQ | 476 | 47 | 25 | 26 | 16 | BS NP |
| 430 | 28 | 5 | 19 | 2 | BS NP | 477 | 47 | 25 | 26 | 16 | BS NQ |
| 431 | 29 | 6 | 20 | 2 | BAQ | 478 | 48 | 26 | 27 | 16 | BAQ |
| 432 | 29 | 6 | 20 | 2 | BS NP | 479 | 48 | 26 | 27 | 16 | BS NP |
| 433 | 30 | 7 | 21 | 2 | BAQ | 480 | 48 | 26 | 27 | 16 | BS NQ |
| 434 | 30 | 7 | 21 | 2 | BS NP | 481 | 49 | 27 | 28 | 16 | BAQ |
| 435 | 31 | 8 | 22 | 2 | BAQ | 482 | 49 | 27 | 28 | 16 | BS NP |
| 436 | 31 | 8 | 22 | 2 | BS NP | 483 | 49 | 27 | 28 | 16 | BS NQ |
| 437 | 32 | 9 | 23 | 2 | BAQ | 484 | 50 | 28 | 29 | 16 | BAQ |
| 438 | 32 | 9 | 23 | 2 | BS NP | 485 | 50 | 28 | 29 | 16 | BS NP |
| 439 | 33 | 10 | 24 | 2 | BAQ | 486 | 50 | 28 | 29 | 16 | BS NQ |
| 440 | 33 | 10 | 24 | 2 | BS NP | 487 | 51 | 17 | 31 | | BAQ |
| 441 | 34 | 11 | 25 | 2 | BAQ | 488 | 52 | 18 | 32 | | BAQ |
| 442 | 34 | 11 | 25 | 2 | BS NP | 489 | 53 | 19 | 33 | | BAQ |
| 443 | 35 | 12 | 26 | 2 | BAQ | 490 | 54 | 20 | 58 | 16 | BAQ |
| 444 | 35 | 12 | 26 | 2 | BS NP | 491 | 54 | 20 | 58 | 16 | BS NQ |
| 445 | 36 | 13 | 27 | 2 | BAQ | 492 | 55 | 58 | 34 | 16 | BAQ |
| 446 | 36 | 13 | 27 | 2 | BS NP | 493 | 55 | 58 | 34 | 16 | BS NP |
| 447 | 37 | 14 | 28 | 2 | BAQ | 494 | 56 | 59 | 61 | | BAQ |
| 448 | 37 | 14 | 28 | 2 | BS NP | 495 | 57 | 21 | 35 | | BAQ |
| 449 | 38 | 15 | 29 | 2 | BAQ | 496 | 58 | 22 | 36 | | BAQ |
| 450 | 38 | 15 | 29 | 2 | BS NP | 497 | 59 | 23 | 37 | | BAQ |
| 451 | 39 | 17 | 18 | 16 | BAQ | 498 | 60 | 24 | 38 | | BAQ |
| 452 | 39 | 17 | 18 | 16 | BS NP | 499 | 61 | 25 | 39 | | BAQ |
| 453 | 39 | 17 | 18 | 16 | BS NQ | 500 | 62 | 26 | 40 | | BAQ |
| 454 | 40 | 18 | 19 | 16 | BAQ | 501 | 63 | 27 | 41 | | BAQ |
| 455 | 40 | 18 | 19 | 16 | BS NP | 502 | 64 | 28 | 42 | | BAQ |
| 456 | 40 | 18 | 19 | 16 | BS NQ | 503 | 65 | 29 | 43 | | BAQ |
| 457 | 41 | 19 | 20 | 16 | BAQ | 504 | 66 | 31 | 32 | 120 | BAQ |
| 458 | 41 | 19 | 20 | 16 | BS NP | 505 | 66 | 31 | 32 | 120 | BS NP |
| 459 | 41 | 19 | 20 | 16 | BS NQ | 506 | 66 | 31 | 32 | 120 | BS NQ |
| 460 | 42 | 20 | 21 | 16 | BAQ | 507 | 67 | 32 | 33 | 120 | BAQ |
| 461 | 42 | 20 | 21 | 16 | BS NP | 508 | 67 | 32 | 33 | 120 | BS NP |
| 462 | 42 | 20 | 21 | 16 | BS NQ | 509 | 67 | 32 | 33 | 120 | BS NQ |

Table 104

REDUNDANT FORCE STRESS ANALYSIS PROG. A05.0 ANALYSIS 35 CASE 36 RUN 1

BAR FORCES

PHASE IV MATRIX ROW FORMAT .

| FORCE (ROW) | BAR NO. | DEFINING P | DEFINING Q | POINTS C | REFERENCE | FORCE (ROW) | BAR NO. | DEFINING P | DEFINING Q | POINTS C | REFERENCE |
|---|---|---|---|---|---|---|---|---|---|---|---|
| 510 | 68 | 33 | 34 | 120 | BAQ | 557 | 93 | 47 | 48 | 121 | BAQ |
| 511 | 68 | 33 | 34 | 120 | BS NP | 558 | 93 | 47 | 48 | 121 | BS NP |
| 512 | 68 | 33 | 34 | 120 | BS NQ | 559 | 93 | 47 | 48 | 121 | BS NQ |
| 513 | 69 | 34 | 35 | 120 | BAQ | 560 | 94 | 48 | 49 | 121 | BAQ |
| 514 | 69 | 34 | 35 | 120 | BS NP | 561 | 94 | 48 | 49 | 121 | BS NP |
| 515 | 69 | 34 | 35 | 120 | BS NQ | 562 | 94 | 48 | 49 | 121 | BS NQ |
| 516 | 70 | 35 | 36 | 120 | BAQ | 563 | 95 | 49 | 50 | 121 | BAQ |
| 517 | 70 | 35 | 36 | 120 | BS NP | 564 | 95 | 49 | 50 | 121 | BS NP |
| 518 | 70 | 35 | 36 | 120 | BS NQ | 565 | 95 | 49 | 50 | 121 | BS NQ |
| 519 | 71 | 36 | 37 | 120 | BAQ | 566 | 96 | 50 | 51 | 121 | BAQ |
| 520 | 71 | 36 | 37 | 120 | BS NP | 567 | 96 | 50 | 51 | 121 | BS NP |
| 521 | 71 | 36 | 37 | 120 | BS NQ | 568 | 96 | 50 | 51 | 121 | BS NQ |
| 522 | 72 | 37 | 38 | 120 | BAQ | 569 | 97 | 51 | 52 | 121 | BAQ |
| 523 | 72 | 37 | 38 | 120 | BS NP | 570 | 97 | 51 | 52 | 121 | BS NP |
| 524 | 72 | 37 | 38 | 120 | BS NQ | 571 | 97 | 51 | 52 | 121 | BS NQ |
| 525 | 73 | 38 | 39 | 120 | BAQ | 572 | 98 | 52 | 53 | 121 | BAQ |
| 526 | 73 | 38 | 39 | 120 | BS NP | 573 | 98 | 52 | 53 | 121 | BS NP |
| 527 | 73 | 38 | 39 | 120 | BS NQ | 574 | 98 | 52 | 53 | 121 | BS NQ |
| 528 | 74 | 39 | 40 | 120 | BAQ | 575 | 99 | 53 | 54 | 121 | BAQ |
| 529 | 74 | 39 | 40 | 120 | BS NP | 576 | 99 | 53 | 54 | 121 | BS NP |
| 530 | 74 | 39 | 40 | 120 | BS NQ | 577 | 99 | 53 | 54 | 121 | BS NQ |
| 531 | 75 | 40 | 41 | 120 | BAQ | 578 | 100 | 54 | 55 | 121 | BAQ |
| 532 | 75 | 40 | 41 | 120 | BS NP | 579 | 100 | 54 | 55 | 121 | BS NP |
| 533 | 75 | 40 | 41 | 120 | BS NQ | 580 | 100 | 54 | 55 | 121 | BS NQ |
| 534 | 76 | 41 | 42 | 120 | BAQ | 581 | 101 | 55 | 56 | 121 | BAQ |
| 535 | 76 | 41 | 42 | 120 | BS NP | 582 | 101 | 55 | 56 | 121 | BS NP |
| 536 | 76 | 41 | 42 | 120 | BS NQ | 583 | 101 | 55 | 56 | 121 | BS NQ |
| 537 | 77 | 42 | 43 | 120 | BAQ | 584 | 102 | 56 | 57 | | BAQ |
| 538 | 77 | 42 | 43 | 120 | BS NP | 585 | 103 | 60 | 61 | | BAQ |
| 539 | 77 | 42 | 43 | 120 | BS NQ | 586 | 104 | 61 | 62 | | BAQ |
| 540 | 78 | 31 | 45 | | BAQ | 587 | 105 | 62 | 63 | | BAQ |
| 541 | 79 | 32 | 46 | | BAQ | 588 | 106 | 63 | 20 | | BAQ |
| 542 | 80 | 33 | 47 | | BAQ | 589 | 107 | 60 | 122 | | BAQ |
| 543 | 81 | 34 | 48 | | BAQ | 590 | 108 | 122 | 34 | | BAQ |
| 544 | 82 | 35 | 49 | | BAQ | 591 | 110 | 46 | 66 | | BAQ |
| 545 | 83 | 36 | 50 | | BAQ | 592 | 111 | 47 | 67 | | BAQ |
| 546 | 84 | 37 | 51 | | BAQ | 593 | 112 | 48 | 68 | | BAQ |
| 547 | 85 | 38 | 52 | | BAQ | 594 | 113 | 49 | 69 | | BAQ |
| 548 | 86 | 39 | 53 | | BAQ | 595 | 114 | 50 | 70 | | BAQ |
| 549 | 87 | 40 | 54 | | BAQ | 596 | 115 | 51 | 71 | | BAQ |
| 550 | 88 | 41 | 55 | | BAQ | 597 | 116 | 52 | 72 | | BAQ |
| 551 | 89 | 42 | 56 | | BAQ | 598 | 117 | 53 | 73 | | BAQ |
| 552 | 90 | 43 | 57 | | BAQ | 599 | 118 | 54 | 74 | | BAQ |
| 553 | 91 | 45 | 46 | | BAQ | 600 | 119 | 55 | 75 | | BAQ |
| 554 | 92 | 46 | 47 | 121 | BAQ | 601 | 120 | 56 | 118 | 44 | BAQ |
| 555 | 92 | 46 | 47 | 121 | BS NP | 602 | 120 | 56 | 118 | 44 | BS NQ |
| 556 | 92 | 46 | 47 | 121 | BS NQ | 603 | 121 | 64 | 65 | 124 | BAQ |



CM 46531

REDUNDANT FORCE STRESS ANALYSIS PROG. A0..0 ANALYSIS 35 CASE 36 RUN 1

BAR FORCES

PHASE IV MATRIX ROW FORMAT .

| FORCE (ROW) | BAR NO. | DEFINING P | POINTS Q | C | REFERENCE | FORCE (ROW) | BAR NO. | DEFINING P | POINTS Q | C | REFERENCE |
|---|---|---|---|---|---|---|---|---|---|---|---|
| 604 | 121 | 64 | 65 | 124 | BS NP | 651 | 139 | 78 | 79 | | BAQ |
| 605 | 121 | 64 | 65 | 124 | BS NQ | 652 | 140 | 66 | 80 | | BAQ |
| 606 | 122 | 65 | 66 | 124 | BAQ | 653 | 141 | 67 | 81 | | BAQ |
| 607 | 122 | 65 | 66 | 124 | BS NP | 654 | 142 | 68 | 82 | | BAQ |
| 608 | 122 | 65 | 66 | 124 | BS NQ | 655 | 143 | 69 | 83 | | BAQ |
| 609 | 123 | 65 | 67 | 124 | BAQ | 656 | 144 | 70 | 84 | | BAQ |
| 610 | 123 | 65 | 67 | 124 | BS NP | 657 | 145 | 71 | 85 | | BAQ |
| 611 | 123 | 65 | 67 | 124 | BS NQ | 658 | 146 | 72 | 86 | | BAQ |
| 612 | 124 | 66 | 67 | 124 | BAQ | 659 | 147 | 73 | 87 | | BAQ |
| 613 | 124 | 66 | 67 | 124 | BS NP | 660 | 148 | 74 | 88 | | BAQ |
| 614 | 124 | 66 | 67 | 124 | BS NQ | 661 | 149 | 75 | 89 | | BAQ |
| 615 | 125 | 67 | 68 | 124 | BAQ | 662 | 150 | 76 | 90 | | BAQ |
| 616 | 125 | 67 | 68 | 124 | BS NP | 663 | 151 | 77 | 91 | | BAQ |
| 617 | 125 | 67 | 68 | 124 | BS NQ | 664 | 152 | 79 | 80 | 125 | BAQ |
| 618 | 126 | 68 | 69 | 124 | BAQ | 665 | 152 | 79 | 80 | 125 | BS NP |
| 619 | 126 | 68 | 69 | 124 | BS NP | 666 | 152 | 79 | 80 | 125 | BS NQ |
| 620 | 126 | 68 | 69 | 124 | BS NQ | 667 | 153 | 80 | 81 | 125 | BAQ |
| 621 | 127 | 69 | 70 | 124 | BAQ | 668 | 153 | 80 | 81 | 125 | BS NP |
| 622 | 127 | 69 | 70 | 124 | BS NP | 669 | 153 | 80 | 81 | 125 | BS NQ |
| 623 | 127 | 69 | 70 | 124 | BS NQ | 670 | 154 | 81 | 82 | 125 | BAQ |
| 624 | 128 | 70 | 71 | 124 | BAQ | 671 | 154 | 81 | 82 | 125 | BS NP |
| 625 | 128 | 70 | 71 | 124 | BS NP | 672 | 154 | 81 | 82 | 125 | BS NQ |
| 626 | 128 | 70 | 71 | 124 | BS NQ | 673 | 155 | 82 | 83 | 125 | BAQ |
| 627 | 129 | 71 | 72 | 124 | BAQ | 674 | 155 | 82 | 83 | 125 | BS NP |
| 628 | 129 | 71 | 72 | 124 | BS NP | 675 | 155 | 82 | 83 | 125 | BS NQ |
| 629 | 129 | 71 | 72 | 124 | BS NQ | 676 | 156 | 83 | 84 | 125 | BAQ |
| 630 | 130 | 72 | 73 | 124 | BAQ | 677 | 156 | 83 | 84 | 125 | BS NP |
| 631 | 130 | 72 | 73 | 124 | BS NP | 678 | 156 | 83 | 84 | 125 | BS NQ |
| 632 | 130 | 72 | 73 | 124 | BS NQ | 679 | 157 | 84 | 85 | 125 | BAQ |
| 633 | 131 | 73 | 74 | 124 | BAQ | 680 | 157 | 84 | 85 | 125 | BS NP |
| 634 | 131 | 73 | 74 | 124 | BS NP | 681 | 157 | 84 | 85 | 125 | BS NQ |
| 635 | 131 | 73 | 74 | 124 | BS NQ | 682 | 158 | 85 | 86 | 125 | BAQ |
| 636 | 132 | 74 | 75 | 124 | BAQ | 683 | 158 | 85 | 86 | 125 | BS NP |
| 637 | 132 | 74 | 75 | 124 | BS NP | 684 | 158 | 85 | 86 | 125 | BS NQ |
| 638 | 132 | 74 | 75 | 124 | BS NQ | 685 | 159 | 86 | 87 | 125 | BAQ |
| 639 | 133 | 75 | 76 | 124 | BAQ | 686 | 159 | 86 | 87 | 125 | BS NP |
| 640 | 133 | 75 | 76 | 124 | BS NP | 687 | 159 | 86 | 87 | 125 | BS NQ |
| 641 | 133 | 75 | 76 | 124 | BS NQ | 688 | 160 | 87 | 88 | 125 | BAQ |
| 642 | 134 | 76 | 77 | 124 | BAQ | 689 | 160 | 87 | 88 | 125 | BS NP |
| 643 | 134 | 76 | 77 | 124 | BS NP | 690 | 160 | 87 | 88 | 125 | BS NQ |
| 644 | 134 | 76 | 77 | 124 | BS NQ | 691 | 161 | 88 | 89 | 125 | BAQ |
| 645 | 135 | 119 | 118 | 123 | BAQ | 692 | 161 | 88 | 89 | 125 | BS NP |
| 646 | 135 | 119 | 118 | 123 | BS NP | 693 | 161 | 88 | 89 | 125 | BS NQ |
| 647 | 136 | 118 | 76 | 44 | BAQ | 694 | 162 | 89 | 90 | 125 | BAQ |
| 648 | 136 | 118 | 76 | 44 | BS NP | 695 | 162 | 89 | 90 | 125 | BS NP |
| 649 | 137 | 119 | 77 | | BAQ | 696 | 162 | 89 | 90 | 125 | BS NQ |
| 650 | 138 | 66 | 78 | | BAQ | 697 | 163 | 90 | 91 | 125 | BAQ |



CM 40531

Table 104 REDUNDANT FORCE STRESS ANALYSIS PROG. A05.0 ANALYSIS 35 CASE 36 RUN 1

BAR FORCES

PHASE IV MATRIX ROW FORMAT .

| FORCE (ROW) | BAR NO. | DEFINING P | POINTS Q | POINTS C | REFERENCE | FORCE (ROW) | BAR NO. | DEFINING P | POINTS Q | POINTS C | REFERENCE |
|---|---|---|---|---|---|---|---|---|---|---|---|
| 698 | 163 | 90 | 91 | 125 | BS NP | 738 | 185 | 100 | 101 | 126 | BS NP |
| 699 | 163 | 90 | 91 | 125 | BS NQ | 739 | 185 | 100 | 101 | 126 | BS NQ |
| 700 | 164 | 79 | 92 | | BAQ | 740 | 186 | 101 | 102 | 126 | BAQ |
| 701 | 165 | 80 | 93 | | BAQ | 741 | 186 | 101 | 102 | 126 | BS NP |
| 702 | 166 | 81 | 94 | | BAQ | 742 | 186 | 101 | 102 | 126 | BS NQ |
| 703 | 167 | 82 | 95 | | BAQ | 743 | 187 | 102 | 103 | 126 | BAQ |
| 704 | 168 | 83 | 96 | | BAQ | 744 | 187 | 102 | 103 | 126 | BS NP |
| 705 | 169 | 84 | 97 | | BAQ | 745 | 187 | 102 | 103 | 126 | BS NQ |
| 706 | 170 | 85 | 98 | | BAQ | 746 | 188 | 103 | 104 | 126 | BAQ |
| 707 | 171 | 86 | 99 | | BAQ | 747 | 188 | 103 | 104 | 126 | BS NP |
| 708 | 172 | 87 | 100 | | BAQ | 748 | 188 | 103 | 104 | 126 | BS NQ |
| 709 | 173 | 88 | 101 | | BAQ | 749 | 189 | 92 | 105 | | BAQ |
| 710 | 174 | 89 | 102 | | BAQ | 750 | 190 | 93 | 106 | | BAQ |
| 711 | 175 | 90 | 103 | | BAQ | 751 | 191 | 94 | 107 | | BAQ |
| 712 | 176 | 91 | 104 | | BAQ | 752 | 192 | 95 | 108 | | BAQ |
| 713 | 177 | 92 | 93 | 126 | BAQ | 753 | 193 | 96 | 109 | | BAQ |
| 714 | 177 | 92 | 93 | 126 | BS NP | 754 | 194 | 97 | 110 | | BAQ |
| 715 | 177 | 92 | 93 | 126 | BS NQ | 755 | 195 | 98 | 111 | | BAQ |
| 716 | 178 | 93 | 94 | 126 | BAQ | 756 | 196 | 99 | 112 | | BAQ |
| 717 | 178 | 93 | 94 | 126 | BS NP | 757 | 197 | 100 | 113 | | BAQ |
| 718 | 178 | 93 | 94 | 126 | BS NQ | 758 | 198 | 101 | 114 | | BAQ |
| 719 | 179 | 94 | 95 | 126 | BAQ | 759 | 199 | 102 | 115 | | BAQ |
| 720 | 179 | 94 | 95 | 126 | BS NP | 760 | 200 | 103 | 116 | | BAQ |
| 721 | 179 | 94 | 95 | 126 | BS NQ | 761 | 201 | 104 | 117 | | BAQ |
| 722 | 180 | 95 | 96 | 126 | BAQ | 762 | 202 | 105 | 106 | | BAQ |
| 723 | 180 | 95 | 96 | 126 | BS NP | 763 | 203 | 106 | 107 | | BAQ |
| 724 | 180 | 95 | 96 | 126 | BS NQ | 764 | 204 | 107 | 108 | | BAQ |
| 725 | 181 | 96 | 97 | 126 | BAQ | 765 | 205 | 108 | 109 | | BAQ |
| 726 | 181 | 96 | 97 | 126 | BS NP | 766 | 206 | 109 | 110 | | BAQ |
| 727 | 181 | 96 | 97 | 126 | BS NQ | 767 | 207 | 110 | 111 | | BAQ |
| 728 | 182 | 97 | 98 | 126 | BAQ | 768 | 208 | 111 | 112 | | BAQ |
| 729 | 182 | 97 | 98 | 126 | BS NP | 769 | 209 | 112 | 113 | | BAQ |
| 730 | 182 | 97 | 98 | 126 | BS NQ | 770 | 210 | 113 | 114 | | BAQ |
| 731 | 183 | 98 | 99 | 126 | BAQ | 771 | 211 | 114 | 115 | | BAQ |
| 732 | 183 | 98 | 99 | 126 | BS NP | 772 | 212 | 115 | 116 | | BAQ |
| 733 | 183 | 98 | 99 | 126 | BS NQ | 773 | 213 | 116 | 117 | | BAQ |
| 734 | 184 | 99 | 100 | 126 | BAQ | 774 | 214 | 1 | 2 | 3 | BAQ |
| 735 | 184 | 99 | 100 | 126 | BS NP | 775 | 214 | 1 | 2 | 3 | BS TQ |
| 736 | 184 | 99 | 100 | 126 | BS NQ | 776 | 214 | 1 | 2 | 3 | BS NQ |
| 737 | 185 | 100 | 101 | 126 | BAQ | 777 | 216 | 59 | 58 | | BAQ |

REDUNDANT FORCE STRESS ANALYSIS PROG. A05.0 ANALYSIS 35 CASE 36 RUN 1

PANEL FORCES

PHASE IV MATRIX ROW FORMAT .

| FORCE (ROW) | PANEL NO. | PANEL D | PANEL E | CORNERS F | CORNERS G | REFERENCE |
|---|---|---|---|---|---|---|
| 778 | 1 | 3 | 4 | 18 | 17 | PDE |
| 779 | 2 | 4 | 5 | 19 | 18 | PDE |
| 780 | 3 | 5 | 6 | 20 | 19 | PDE |
| 781 | 4 | 6 | 7 | 21 | 20 | PDE |
| 782 | 5 | 7 | 8 | 22 | 21 | PDE |
| 783 | 6 | 8 | 9 | 23 | 22 | PDE |
| 784 | 7 | 9 | 10 | 24 | 23 | PDE |
| 785 | 8 | 10 | 11 | 25 | 24 | PDE |
| 786 | 9 | 11 | 12 | 26 | 25 | PDE |
| 787 | 10 | 12 | 13 | 27 | 26 | PDE |
| 788 | 11 | 13 | 14 | 29 | 27 | PDE |
| 789 | 12 | 14 | 15 | 29 | 28 | PDE |
| 790 | 13 | 17 | 18 | 32 | 31 | PDE |
| 791 | 14 | 18 | 19 | 33 | 32 | PDE |
| 792 | 15 | 19 | 20 | 34 | 33 | PDE |
| 793 | 16 | 20 | 21 | 35 | 34 | PDE |
| 794 | 17 | 21 | 22 | 36 | 35 | PDE |
| 795 | 18 | 22 | 23 | 37 | 36 | PDE |
| 796 | 19 | 23 | 24 | 38 | 37 | PDE |
| 797 | 20 | 24 | 25 | 39 | 38 | PDE |
| 798 | 21 | 25 | 26 | 40 | 39 | PDE |
| 799 | 22 | 26 | 27 | 41 | 40 | PDE |
| 800 | 23 | 27 | 28 | 42 | 41 | PDE |
| 801 | 24 | 28 | 29 | 43 | 42 | PDE |
| 802 | 25 | 31 | 32 | 46 | 45 | PDE |
| 803 | 26 | 32 | 33 | 47 | 46 | PDE |
| 804 | 27 | 33 | 34 | 48 | 47 | PDE |
| 805 | 28 | 34 | 35 | 49 | 48 | PDE |
| 806 | 29 | 35 | 36 | 50 | 49 | PDE |
| 807 | 30 | 36 | 37 | 51 | 50 | PDE |
| 808 | 31 | 37 | 38 | 52 | 51 | PDE |
| 809 | 32 | 38 | 39 | 53 | 52 | PDE |
| 810 | 33 | 39 | 40 | 54 | 53 | PDE |
| 811 | 34 | 40 | 41 | 55 | 54 | PDE |
| 812 | 35 | 41 | 42 | 56 | 55 | PDE |
| 813 | 36 | 42 | 43 | 57 | 56 | PDE |
| 814 | 37 | 62 | 63 | 59 | 61 | PDE |
| 815 | 38 | 60 | 61 | 59 | 122 | PDE |
| 816 | 39 | 46 | 47 | 67 | 66 | PDE |
| 817 | 40 | 47 | 48 | 69 | 67 | PDE |
| 818 | 41 | 48 | 49 | 69 | 68 | PDE |
| 819 | 42 | 49 | 50 | 70 | 69 | PDE |
| 820 | 43 | 50 | 51 | 71 | 70 | PDE |
| 821 | 44 | 51 | 52 | 72 | 71 | PDE |
| 822 | 45 | 52 | 53 | 73 | 72 | PDE |
| 823 | 46 | 53 | 54 | 74 | 73 | PDE |
| 824 | 47 | 54 | 55 | 75 | 74 | PDE |
| 825 | 48 | 55 | 56 | 76 | 75 | PDE |
| 826 | 49 | 118 | 119 | 77 | 76 | PDE |
| 827 | 50 | 78 | 66 | 80 | 79 | PDE |
| 828 | 51 | 66 | 67 | 81 | 80 | PDE |
| 829 | 52 | 67 | 68 | 82 | 81 | PDE |
| 830 | 53 | 68 | 69 | 83 | 82 | PDE |
| 831 | 54 | 69 | 70 | 84 | 83 | PDE |
| 832 | 55 | 70 | 71 | 85 | 84 | PDE |
| 833 | 56 | 71 | 72 | 86 | 85 | PDE |
| 834 | 57 | 72 | 73 | 87 | 86 | PDE |
| 835 | 58 | 73 | 74 | 88 | 87 | PDE |
| 836 | 59 | 74 | 75 | 89 | 88 | PDE |
| 837 | 60 | 75 | 76 | 90 | 89 | PDE |
| 838 | 61 | 76 | 77 | 91 | 90 | PDE |
| 839 | 62 | 79 | 80 | 93 | 92 | PDE |
| 840 | 63 | 80 | 81 | 94 | 93 | PDE |
| 841 | 64 | 81 | 82 | 95 | 94 | PDE |
| 842 | 65 | 82 | 83 | 96 | 95 | PDE |
| 843 | 66 | 83 | 84 | 97 | 96 | PDE |
| 844 | 67 | 84 | 85 | 98 | 97 | PDE |
| 845 | 68 | 85 | 86 | 99 | 98 | PDE |
| 846 | 69 | 86 | 87 | 100 | 99 | PDE |
| 847 | 70 | 87 | 88 | 101 | 100 | PDE |
| 848 | 71 | 88 | 89 | 102 | 101 | PDE |
| 849 | 72 | 89 | 90 | 103 | 102 | PDE |
| 850 | 73 | 90 | 91 | 104 | 103 | PDE |
| 851 | 74 | 92 | 93 | 106 | 105 | PDE |
| 852 | 75 | 93 | 94 | 107 | 106 | PDE |
| 853 | 76 | 94 | 95 | 108 | 107 | PDE |
| 854 | 77 | 95 | 96 | 109 | 108 | PDE |
| 855 | 78 | 96 | 97 | 110 | 109 | PDE |
| 856 | 79 | 97 | 98 | 111 | 110 | PDE |
| 857 | 80 | 99 | 99 | 112 | 111 | PDE |
| 858 | 81 | 99 | 100 | 113 | 112 | PDE |
| 859 | 82 | 100 | 101 | 114 | 113 | PDE |
| 860 | 83 | 101 | 102 | 115 | 114 | PDE |
| 861 | 84 | 102 | 103 | 116 | 115 | PDE |
| 862 | 85 | 103 | 104 | 117 | 116 | PDE |
| 863 | 86 | 63 | 20 | 58 | 59 | PDE |
| 864 | 87 | 59 | 58 | 34 | 122 | PDE |

Table 105

Tape Matrix Compiler

```
00000 6123536
00000 6133536
0000088113536
0000088213536
0000010=8811+8821
0001011=8811-8821
0002012=10X612
0003013=11X612
0004014=10X613
0005015=11X613
0006016=12+15
0007017=13+14
000808831=.5M16
000908841=.5M17
000008831XC
000008841XC
```

## Table 106

MATRIX 8831 I 18 J 10 RUN 00 CASE 3536 SORT COL COMPUTED NOV173 PAGE 1

| | | ROW | | ROW | | ROW | | ROW | | ROW | | ROW | |
|---|---|---|---|---|---|---|---|---|---|---|---|---|---|
| COL | 1 | 1 | +.152246 -2 | 2 | -.987619 -5 | 3 | +.987619 -5 | 4 | +.706976 -3 | 5 | -.135068 -5 | 6 | -.781040 -3 |
| | | 7 | -.780865 -3 | 8 | -.780252 -3 | 9 | -.779113 -3 | 10 | -.777842 -3 | 11 | -.770165 -3 | 12 | -.762278 -3 |
| | | 13 | -.768532 -3 | 14 | -.774762 -3 | 15 | -.774930 -3 | 16 | -.775071 -3 | 17 | -.775308 -3 | 18 | -.775278 -3 |
| COL | 2 | 1 | -.986511 -5 | 2 | +.484453 -2 | 3 | +.396451 -4 | 4 | -.139707 -2 | 5 | +.102925 -2 | 6 | +.670801 -3 |
| | | 7 | +.834581 -3 | 8 | +.941823 -3 | 9 | +.984742 -3 | 10 | +.962289 -3 | 11 | +.864991 -3 | 12 | +.711206 -3 |
| | | 13 | +.526379 -3 | 14 | +.301962 -3 | 15 | +.513669 -4 | 16 | -.202360 -3 | 17 | -.442772 -3 | 18 | -.650898 -3 |
| COL | 3 | 1 | +.986511 -5 | 2 | +.396451 -4 | 3 | +.484453 -2 | 4 | -.655454 -4 | 5 | -.167362 -3 | 6 | -.670801 -3 |
| | | 7 | -.462092 -3 | 8 | -.222614 -3 | 9 | +.307742 -4 | 10 | +.281337 -3 | 11 | +.505775 -3 | 12 | +.690666 -3 |
| | | 13 | +.844637 -3 | 14 | +.942378 -3 | 15 | +.965725 -3 | 16 | +.922179 -3 | 17 | +.814264 -3 | 18 | +.650898 -3 |
| COL | 4 | 1 | +.703960 -3 | 2 | -.140034 -2 | 3 | -.623033 -4 | 4 | +.310775 -2 | 5 | +.404543 -3 | 6 | -.100358 -2 |
| | | 7 | -.110569 -2 | 8 | -.117975 -2 | 9 | -.121910 -2 | 10 | -.122027 -2 | 11 | -.118450 -2 | 12 | -.111555 -2 |
| | | 13 | -.101931 -2 | 14 | -.903620 -3 | 15 | -.774707 -3 | 16 | -.643054 -3 | 17 | -.515887 -3 | 18 | -.403458 -3 |
| COL | 5 | 1 | -.244017 -5 | 2 | +.102802 -2 | 3 | -.166201 -3 | 4 | +.405273 -3 | 5 | +.167322 -2 | 6 | -.917891 -5 |
| | | 7 | -.419491 -4 | 8 | -.709574 -4 | 9 | -.928853 -4 | 10 | -.106015 -3 | 11 | -.109818 -3 | 12 | -.105316 -3 |
| | | 13 | -.940998 -4 | 14 | -.777679 -4 | 15 | -.576396 -4 | 16 | -.350003 -4 | 17 | -.104849 -4 | 18 | +.135504 -4 |
| COL | 6 | 1 | +.152246 -2 | 2 | -.987619 -5 | 3 | +.987619 -5 | 4 | +.706976 -3 | 5 | -.135068 -5 | 6 | -.781040 -3 |
| | | 7 | -.780865 -3 | 8 | -.780252 -3 | 9 | -.779113 -3 | 10 | -.777842 -3 | 11 | -.770165 -3 | 12 | -.762278 -3 |
| | | 13 | -.768532 -3 | 14 | -.774762 -3 | 15 | -.774930 -3 | 16 | -.775071 -3 | 17 | -.775308 -3 | 18 | -.775278 -3 |
| COL | 7 | 1 | -.986511 -5 | 2 | -.396451 -4 | 3 | -.484453 -2 | 4 | +.655454 -4 | 5 | +.167362 -3 | 6 | +.670801 -3 |
| | | 7 | +.462092 -3 | 8 | +.222614 -3 | 9 | -.307742 -4 | 10 | -.281337 -3 | 11 | -.505775 -3 | 12 | -.690666 -3 |
| | | 13 | -.844637 -3 | 14 | -.942378 -3 | 15 | -.965725 -3 | 16 | -.922179 -3 | 17 | -.814264 -3 | 18 | -.650898 -3 |
| COL | 8 | 1 | +.986511 -5 | 2 | -.484453 -2 | 3 | -.396451 -4 | 4 | +.139707 -2 | 5 | -.102925 -2 | 6 | -.670801 -3 |
| | | 7 | -.834581 -3 | 8 | -.941823 -3 | 9 | -.984742 -3 | 10 | -.962289 -3 | 11 | -.864991 -3 | 12 | -.711206 -3 |
| | | 13 | -.526379 -3 | 14 | -.301962 -3 | 15 | -.513669 -4 | 16 | +.202360 -3 | 17 | +.442772 -3 | 18 | +.650898 -3 |
| COL | 9 | 1 | +.703960 -3 | 2 | +.623033 -4 | 3 | +.140034 -2 | 4 | -.253164 -4 | 5 | -.276681 -3 | 6 | -.100358 -2 |
| | | 7 | -.861971 -3 | 8 | -.749894 -3 | 9 | -.616246 -3 | 10 | -.490541 -3 | 11 | -.380099 -3 | 12 | -.292037 -3 |
| | | 13 | -.231717 -3 | 14 | -.202737 -3 | 15 | -.206829 -3 | 16 | -.243543 -3 | 17 | -.311294 -3 | 18 | -.403458 -3 |
| COL | 10 | 1 | -.244017 -5 | 2 | +.166201 -3 | 3 | -.102802 -2 | 4 | -.276000 -3 | 5 | -.889804 -4 | 6 | -.917891 -5 |
| | | 7 | +.238750 -4 | 8 | +.540656 -4 | 9 | +.789680 -4 | 10 | +.968003 -4 | 11 | +.107094 -3 | 12 | +.109729 -3 |
| | | 13 | +.105315 -3 | 14 | +.947892 -4 | 15 | +.791676 -4 | 16 | +.596742 -4 | 17 | +.368012 -4 | 18 | +.135504 -4 |

# Table 107

MATRIX 8841 I 13 J 10 RUN 30 CASE 3536 SORT COL COMPUTED NOV173 PAGE 1

| | | ROW | | ROW | | ROW | | ROW | | ROW | | ROW | |
|---|---|---|---|---|---|---|---|---|---|---|---|---|---|
| COL | 1 | 1 | +.152246 -2 | 2 | -.987619 -5 | 3 | +.987619 -5 | 4 | +.706976 -3 | 5 | -.135068 -5 | 6 | -.781040 -3 |
| | | 7 | -.780865 -3 | 8 | -.780252 -3 | 9 | -.779113 -3 | 10 | -.777842 -3 | 11 | -.770165 -3 | 12 | -.762278 -3 |
| | | 13 | -.768532 -3 | 14 | -.774762 -3 | 15 | -.774930 -3 | 16 | -.775071 -3 | 17 | -.775308 -3 | 18 | -.775278 -3 |
| COL | 2 | 1 | -.986511 -5 | 2 | -.396451 -4 | 3 | -.484453 -2 | 4 | +.655454 -4 | 5 | +.167362 -3 | 6 | +.670801 -3 |
| | | 7 | +.462092 -3 | 8 | +.222814 -3 | 9 | -.307742 -4 | 10 | -.281337 -3 | 11 | -.505775 -3 | 12 | -.690666 -3 |
| | | 13 | -.844637 -3 | 14 | -.942378 -3 | 15 | -.965725 -3 | 16 | -.922179 -3 | 17 | -.814264 -3 | 18 | -.650898 -3 |
| COL | 3 | 1 | +.986511 -5 | 2 | -.484453 -2 | 3 | -.396451 -4 | 4 | +.139707 -2 | 5 | -.102925 -2 | 6 | -.670801 -3 |
| | | 7 | -.834581 -3 | 8 | -.941823 -3 | 9 | -.984742 -3 | 10 | -.962289 -3 | 11 | -.864391 -3 | 12 | -.711206 -3 |
| | | 13 | -.526379 -3 | 14 | -.301962 -3 | 15 | -.513669 -4 | 16 | +.202360 -3 | 17 | +.442772 -3 | 18 | +.650898 -3 |
| COL | 4 | 1 | +.703965 -3 | 2 | +.623033 -4 | 3 | +.140034 -2 | 4 | -.253164 -4 | 5 | -.276681 -3 | 6 | -.100358 -2 |
| | | 7 | -.861471 -3 | 8 | -.749694 -3 | 9 | -.616246 -3 | 10 | -.490541 -3 | 11 | -.390099 -3 | 12 | -.292037 -3 |
| | | 13 | -.231717 -3 | 14 | -.202737 -3 | 15 | -.206829 -3 | 16 | -.243543 -3 | 17 | -.311294 -3 | 18 | -.403458 -3 |
| COL | 5 | 1 | -.244017 -5 | 2 | +.166201 -3 | 3 | -.102802 -2 | 4 | -.276000 -3 | 5 | -.889804 -4 | 6 | -.917891 -5 |
| | | 7 | +.238755 -4 | 8 | +.543658 -4 | 9 | +.789680 -4 | 10 | +.968003 -4 | 11 | +.107094 -3 | 12 | +.109729 -3 |
| | | 13 | +.105315 -3 | 14 | +.947692 -4 | 15 | +.791676 -4 | 16 | +.596742 -4 | 17 | +.368012 -4 | 18 | +.135504 -4 |
| COL | 6 | 1 | +.152246 -2 | 2 | -.987619 -5 | 3 | +.987619 -5 | 4 | +.706976 -3 | 5 | -.135068 -5 | 6 | -.781040 -3 |
| | | 7 | -.780865 -3 | 8 | -.780252 -3 | 9 | -.779113 -3 | 10 | -.777842 -3 | 11 | -.770165 -3 | 12 | -.762278 -3 |
| | | 13 | -.768532 -3 | 14 | -.774762 -3 | 15 | -.774930 -3 | 16 | -.775071 -3 | 17 | -.775308 -3 | 18 | -.775278 -3 |
| COL | 7 | 1 | -.986511 -5 | 2 | +.484453 -2 | 3 | +.396451 -4 | 4 | -.139707 -2 | 5 | +.102925 -2 | 6 | +.670801 -3 |
| | | 7 | +.834581 -3 | 8 | +.941823 -3 | 9 | +.984742 -3 | 10 | +.962289 -3 | 11 | +.864391 -3 | 12 | +.711206 -3 |
| | | 13 | +.526379 -3 | 14 | +.301962 -3 | 15 | +.513669 -4 | 16 | -.202360 -3 | 17 | -.442772 -3 | 18 | -.650898 -3 |
| COL | 8 | 1 | +.986511 -5 | 2 | +.396451 -4 | 3 | +.484453 -2 | 4 | -.655454 -4 | 5 | -.167362 -3 | 6 | -.670801 -3 |
| | | 7 | -.462092 -3 | 8 | -.222814 -3 | 9 | +.307742 -4 | 10 | +.281337 -3 | 11 | +.505775 -3 | 12 | +.690666 -3 |
| | | 13 | +.844637 -3 | 14 | +.942378 -3 | 15 | +.965725 -3 | 16 | +.922179 -3 | 17 | +.814264 -3 | 18 | +.650898 -3 |
| COL | 9 | 1 | +.703965 -3 | 2 | -.140034 -2 | 3 | -.623033 -4 | 4 | +.310775 -2 | 5 | +.404543 -3 | 6 | -.100358 -2 |
| | | 7 | -.110569 -2 | 8 | -.117975 -2 | 9 | -.121910 -2 | 10 | -.122027 -2 | 11 | -.118450 -2 | 12 | -.111555 -2 |
| | | 13 | -.101931 -2 | 14 | -.905020 -3 | 15 | -.774707 -3 | 16 | -.643054 -3 | 17 | -.515887 -3 | 18 | -.403458 -3 |
| COL | 10 | 1 | -.244017 -5 | 2 | +.102802 -2 | 3 | -.166201 -3 | 4 | +.405273 -3 | 5 | +.167322 -2 | 6 | -.917891 -5 |
| | | 7 | -.419491 -4 | 8 | -.709574 -4 | 9 | -.928853 -4 | 10 | -.106015 -3 | 11 | -.109818 -3 | 12 | -.105316 -3 |
| | | 13 | -.940998 -4 | 14 | -.777679 -4 | 15 | -.576396 -4 | 16 | -.353003 -4 | 17 | -.104849 -4 | 18 | +.135504 -4 |