[redacted]

CR-66356

STUDY OF THE INFLUENCE OF SIZE OF A MANNED LIFTING BODY ENTRY VEHICLE ON RESEARCH POTENTIAL AND COST

FINAL REPORT

Part V. Systems Integration

Declassified by authority of NASA
Classification Change Notices No. 205
Dated ** 8/3/78

N70-76677
(ACCESSION NUMBER) (THRU)
124 None
(PAGES) (CODE)
CR-66356
(NASA CR OR TMX OR AD NUMBER) (CATEGORY)
FACILITY FORM 602

[redacted] DOCUMENT-[redacted] UNCLASSIFIED
CLASSIFICATION CHANGED
UNCLASSIFIED
TO
By Authority of NASA TD70-428 8-10-70

Prepared by

MARTIN MARIETTA

for

NATIONAL AERONAUTICS AND SPACE ADMINISTRATION

[redacted] U. S. Government Agencies and Contractors Only

[redacted] C67-4818

90

CR-66356

STUDY OF THE INFLUENCE OF SIZE OF A MANNED LIFTING BODY ENTRY VEHICLE ON RESEARCH POTENTIAL AND COST

FINAL REPORT

Part V. Systems Integration

May 1967 [redacted]

Distribution of this report is provided in the interest of information exchange. Responsibility for the contents resides in the author or organization that prepared it.

[redacted]

[redacted] DOCUMENT [redacted] UNCLASSIFIED

[redacted]

Prepared Under Contract No. NAS 1-6209 by

MARTIN MARIETTA CORPORATION

Baltimore, Maryland 21203

for

NATIONAL AERONAUTICS AND SPACE ADMINISTRATION

[redacted] U. S. Government Agencies and Contractors Only

PRECEDING PAGE BLANK NOT FILMED.

FOREWORD

This document is a part of the final report on a "Study of the Influence of Size of a Manned Lifting Body Entry Vehicle on Research Potential and Cost," conducted by the Martin Marietta Corporation, Baltimore Division, for the National Aeronautics and Space Administration, Langley Research Center, under Contract NAS 1-6209 dated April 1966. The final report is presented in eight parts:

I.	Summary	CR-66352
II.	Research Program Experiments	CR-66353
III.	Flight Performance	CR-66354
IV.	Candidate Entry Vehicle Designs	CR-66355
V.	Systems Integration	CR-66356
VI.	Research Vehicle Size Selection and Program Definition	CR-66357
VII.	Selected Entry Vehicle Design	CR-66358
VIII.	Alternative Approaches	CR-66359

The study was managed at Martin Marietta by:

Robert L. Lohman--Study Manager

Rudolph C. Haefeli--Assistant Study Manager

The principal contributors to the study were James McCown, Robert Schwab, Ray Sorrell and James Vaeth; Mr. Louis Sheldahl also made a major contribution to the study as Study Manager during the first quarter.

DECLASSIFIED

ABSTRACT (Total Study)

This study presents data—based upon a developed logic, task definitions, vehicle criteria, system analyses and design, and concepts of operation and implementation—with which the usefulness and cost of an entry flight research program can be evaluated.

The study defines 52 specific research tasks of value in developing operational lifting body systems, primarily for near-earth missions. Parametric design and performance data are evolved within a matrix of 5 vehicle sizes (with 1, 2, 4, 6 and 8 men) and 4 boosters (GLV, Titan III–2, Titan III–5 and Saturn IB) for all flight phases, from launch to landing. The design studies include vehicle arrangements, weight, aerodynamic heating and subsystem details. Systems integration analyses yield both design data, subsystem tradeoffs, and development and operations plans; and they lead, in turn, to cost effectiveness analyses which become the primary basis for vehicle and program selection.

A 25-foot long, 3-man vehicle weighing 12,342 pounds is selected for a research program of 9 manned (plus 2 unmanned) flights. This vehicle performs the maximum number of tasks and affords the highest research value per unit cost and the lowest cost per unit of payload in orbit; the estimated program cost is $1 billion. A detailed preliminary design of this vehicle is accomplished, including layout drawings and descriptions of each subsystem to identify available hardware as well as future options. Modifications for secondary research objectives—rendezvous and docking and supercircular entry —are considered.

The study also includes a brief examination of 2 smaller unmanned vehicles as alternate approaches to reduce cost.

DECLASSIFIED

DECLASSIFIED

CONTENTS

		Page
	FOREWORD	iii
	SUMMARY	vii
I.	INTRODUCTION	1
II.	MISSION PROFILES AND FLIGHT PERFORMANCE	3
	A. Mission Profiles	5
	B. Ascent, Entry and Landing Performance	15
III.	DEVELOPMENT PROGRAM PLANS	41
	A. Development Plan Inputs	41
	B. Development Plan Definition for Various Vehicle Sizes and Flight Programs	48
	C. Detailed Schedules for Baseline Plan--11 Flights	79
	D. Variations from Baseline Plan: Effects of Size and Number of Flights	80
IV.	GSE and FACILITY REQUIREMENTS	83
	A. General Approach Used in Definition of Requirements	83
	B. Facility Requirements	83
	C. Ground Support Equipment for Entry Vehicle	87
V.	INTERFACE REQUIREMENTS	101
	A. Definition of Interface for Study	101
	B. Entry Vehicle to Ground Support Equipment	101
	C. Entry Vehicle to Launch Vehicle	101
	D. Entry Vehicle to Retro Adapter Section	101
	E. Entry Vehicle to Ground Links (RF)	102
VI.	CREW TASK ANALYSIS	103
	A. Analysis Approach	103
	B. Crew Skills	103
	C. Basic Flight Crew Tasks	104
	D. Research Task Crew Requirements	104
	E. Problem Areas	104
VII.	PROGRAM DEVELOPMENT PLANS--D/3 RESEARCH VEHICLE AND PROGRAM	107
	A. Research Task Planning	107
	B. Schedules	107
	C. Hardware Utilization	109
	D. Refurbishment	109
VIII.	MISSION RELIABILITY AND CREW SAFETY	111
	A. Summary and Approach	111
	B. Mission Reliability Analysis	111
	C. Apportionment	113
	REFERENCES	123

DECLASSIFIED

PRECEDING PAGE BLANK NOT FILMED

SUMMARY

Part V of the final report on the "Study of the Influence of Size of a Manned Lifting Body on Research Potential and Cost" combines systems integration data and research program planning information to aid entry vehicle design and costing. Mission profiles were established as a basis for design criteria and subsystem performance requirements. A nominal 3-orbit mission has been selected to best meet the needs for manned lifting entry vehicle research. In a typical research flight, the entry vehicle is launched by a Titan III from Kennedy Space Center on an azimuth of 68.5 degrees into an elliptical 80/200 nautical miles (148/370 km) orbit. Entry is begun at an entry angle of -1.5° over the western Pacific Ocean after two complete orbits. The deorbit point is varied so as to allow entry tests of various L/D ratios and crossrange maneuvers and landing at Edwards AFB, California. Crossrange flight is accomplished by reducing the number of orbits and/or increasing the launch azimuth angle. Alternative return from the first, second, fourth and fifth orbits is possible with the addition of Eglin AFB as an alternate landing site. In the event of mission abort during ascent, the entry vehicle is separated from the launch vehicle and glides at $C_{L_{max.}}$ to a parachute landing at sea. Possibilities of landing in Africa following ascent abort are avoided by using the abort thrust in posigrade and retrograde directions. Abort from any flight phase is followed by maneuvering of the entry vehicle to a horizontal landing at Edwards AFB, alternate sites such as Eglin AFB, or to an emergency recovery site at sea by parachute descent.

Reliability, crew safety, sequence of events, functional flow and crew task analyses aided in the design of entry vehicle subsystems and in the development of GSE requirements, operational plans and facility requirements -- all major inputs to the cost analyses. A mission reliability and crew safety apportionment was established to help provide better balanced subsystem designs. An overall entry vehicle reliability of 0.95 and a crew safety value of 0.995 was assigned as a design goal. Following subsystem design analysis, the selected entry vehicle design was assessed to have a reliability of 0.973 and a crew safety value of 0.9954. Reliability analysis was based on component data from Gemini spacecraft and launch vehicle, Apollo command module and the PRIME entry vehicle.

Crew task analysis indicates that for 50 to 100 percent of the capacity of a single crew member (depending on flight phase) is required to perform the basic mission without research tasks. A 90 percent capacity occurs near the first entry pull-out with the addition of a normal complement of research tasks, a total of three crew members are required.

Development and operations plans were derived from functional flow diagrams, subsystem preliminary designs, sequence of events and historical schedule performance data from several space programs. Emphasis was placed in the integrated test program as the major pacing activity. USAF PRIME and NASA Gemini programs were major sources for planning extrapolation. A baseline program for a medium sized entry vehicle (C/3) was

prepared and closely examined for effects of entry vehicle size and number of research flights. No appreciable effect was seen in the development phase of the program due to either variable. Thus, the program for the selected D/3 vehicle and the nine-manned flight plan was directly derived from the baseline plan. The first research flight was planned to take place 35 months after start of a six-month Final Definition Phase.

Refurbishment and recycle procedures were examined for the spacecraft. A 51-day factory evaluation and refurbishment cycle is required with 78 additional days needed for normal factory acceptance and flight preparation at the launch site. Three manned entry vehicles support a program of five manned flights. The selected flight plan of nine manned flights requires only one additional vehicle.

Facility requirements have been established for the factory, launch, and recovery sites and world wide mission support stations. Almost all major facilities are already in existence. New facilities and modifications required consist of (1) Mobile Service Tower and umbilical tower modifications, (2) a data link between Titan III launch control center and Saturn Central Instrumentation, (3) acquisition of a teletype link between MSC and FRC, Edwards AFB, and (4) a UHF command transmitter and antenna at FRC Edwards. Ground support equipment requirements were defined to the subsystem unit level. Two complete sets and a partial set of checkout equipment provide adequate support to the research program.

DECLASSIFIED

I. INTRODUCTION

The purpose of the study work reported in this volume is to provide realistic input data for cost and research effectiveness analysis, to define important elements of the lifting entry research program, and to provide for the study of the necessary systems integration tools for realistic and effective entry vehicle design.

In order to define research flight environment and to prepare mission support plans, mission profiles and flight performance data were prepared. This work includes the entire mission profiles from ascent through landing, sequence of events, abort profiles, parachute recovery performance and aerodynamic inputs to the entry vehicle.

Program plans were developed from baseline entry vehicle subsystem designs, mission flight profiles, functional flow diagrams and research objectives--all constrained by a definite set of guidelines and ground rules. A baseline plan was developed early in the study to provide costing data for the vehicle size versus research accomplishment tradeoff. It was found at this point that entry vehicle size had little effect on this baseline plan and the preflight development program was unaffected by the flight test program magnitude. Consequently, this baseline plan was updated as the study yielded more detailed information and was ultimately used as the basis for the selected research program plan.

Ground support equipment and facility requirements were identified in order to make the properly detailed costing inputs. Only minor changes to the baseline support equipment were required for various entry vehicle sizes. Since the Titan-III-C is a standard launch vehicle, GSE is not treated. The modifications to the selected Titan III launch complex No. 40 are defined, however. Refurbishment is given detailed treatment in this study because of the sparsity of historical performance and cost data and because landing base recovery of the HL-10 entry vehicle allows full advantage to be taken of reuse.

The system integration analyses described in this report include mission profile and flight performance functional flow diagrams, sequence of events, hardware utilization matrix, systems interface matrix, crew task analyses and mission reliability/crew safety apportionment and assessment. These analyses results yield both design data and the checks and balances necessary for uniform design comparison in the tradeoffs. They provide inputs for the design descriptions presented in Parts IV and VII for the research planning discussed in Part II, and for the cost and effectiveness analysis of Part VI.

DECLASSIFIED

DECLASSIFIED

Code	Flight condition
H	Entry flying to heel of footprint using reverse-roll modulation for maximum heating rates and airloads.
I	Entry flying to near heel of footprint using reverse-roll modulation.
J	Superorbital speed entry with high total heating.
K	Superorbital speed entry with high heating rate.
S	Special synergetic maneuver, but without thrust--a skipping entry.

The recommended flight test program consists of 11 flights, 2 unmanned and 9 manned. In this program, the desired research data is accumulated by utilizing six entry conditions (A, B, C, F, G, I) in the pattern as follows:

Flight no.	Entry conditions	Crew status	Number of orbits	Launch azimuth, deg	Orbit inclination, deg
1	A	Unmanned	Suborbital	Special	Special
2	B	Unmanned	3	65.8	35.7
3	C	Manned	3	65.8	35.7
4	C	Manned	3	65.8	35.7
5	C	Manned	3	65.8	35.7
6	F	Manned	2	65.8	35.7
7	F	Manned	2	65.8	35.7
8	F	Manned	2	65.8	35.7
9	G	Manned	1	77.7	31.0
10	G	Manned	1	77.7	31.0
11	I	Manned	3	65.8	35.7

This flight test program can be divided into three general classes of missions: a single special suborbital situation for systems integration demonstration and abort environment qualification, one orbit mission using orbits inclined 31.05° on which maximum crossranging capability can be demonstrated (2 of the 11 flights), and 2 and 3 orbit missions using orbits inclined 35.7° (8 of the 11 flights). The majority of the entry research experiments is conducted using the 35.7° inclination.

In particular, details of the following missions are presented in the following analysis:

(1) A 3-orbit mission using entry condition C. This applies to the first manned flight and also to selected subsequent flights.

DECLASSIFIED

DECLASSIFIED

(2) A 1-orbit mission using entry condition G. This crossrange flight exercises full guidance and navigation capabilities.

(3) A 15-orbit mission using entry condition C. This long duration mission could be used, for example, to fulfill a secondary objective experiment--rendezvous and docking.

(4) Rendezvous mission.

(5) Supercircular entry velocity mission.

Ascent, entry and landing performance specifically related to the recommended D/3 configuration are presented for the integrated mission profiles. These include details of entry using entry conditions C, D (and B) and G with selected angle-of-attack and bank angle programs. These programs relate to the recommended primary and backup guidance systems functions described in Part VII, Selected Entry Vehicle Design. The data apply to an oblate rotating earth using the 1959 ARDC atmosphere.

Abort, parachute recovery, and aerodynamic interface requirements (between entry vehicle and launch vehicle) are also discussed in this section.

A. MISSION PROFILES

1. Three-orbit Mission--Entry Condition C

This 3-orbit mission serves as the cornerstone for the entry research flight program. It meets various range safety, crew safety and research objectives such as:

(1) Launch within range safety launch azimuth constraints and within ETR ascent tracking capabilities

(2) Provision for a nominal entry flight to a preselected landing site during daylight on each orbit

(3) Provision of time after insertion into orbit for crew to prepare for experiments (set-up, calibrate equipment)

(4) Provision for abort safety for all flight phases and on-the-pad

(5) Utilization of applicable Gemini and Apollo manned flight operations backgrounds.

The orbit ground trace, including tracking coverage, and landing footprints for this mission are shown in figure 2 using entry condition C. Further tracking time coverage and an altitude profile are presented in figure 3.

All of the network stations used in the entry research flight program are listed in table 1, including three communications ships (communications are discussed in Part VII). Continuous voice and telemetry contact is available throughout the entire flight utilizing satellite relays.

Launch is from the Eastern Test Range (ETR) at a launch azimuth of 65.8° east of north for a subsequent landing at FRC (Edwards AFB) or from an alternative landing site near the east coast, such as Eglin AFB. The launch vehicle (LV) is a Titan III without a transtage (Stage 3). The ascent does not require programmed yaw steering.

The ascent trajectory using the Titan III-2 passes just north of Bermuda. The spent SRM's (solid rocket motors, Stage 0) are separated and impact approximately 37 nautical miles (66.5 km) downrange. The expended Stage 1 impacts approximately 620 nautical miles (1.15 Mm) downrange, west and southwest of Bermuda. Bermuda is not within the impact zone for the expended Stage 1. Stage 2 is inserted into orbit with the payload. A separation velocity of about 20 fps (6.1 m/sec) from the payload provides sufficient separation from the expended sustainer stage to preclude re-contact between the two objects.

Time histories of ascent performance parameters are shown in a later section. Orbit insertion is at an altitude of 80 nautical mile (148 km) (perigee for subsequent orbits) with an overspeed to achieve a 200-nautical mile (370 km) apogee altitude. Some pertinent insertion parameters are:

Time	470 sec after liftoff
Altitude	80 n. mi. (148 km)
Velocity (inertial)	25 860 fps (7.9 km/sec)
Flight-path angle	Zero
Latitude	32.65° N
Longitude	67.17° W

The insertion at 80 nautical miles (148 km) is selected to alleviate possible ascent abort and subsequent entry vehicle flight environments. Insertion at higher altitudes would increase abort accelerations, loads and heating rates. Lower altitudes may compromise ascent guidance precision and result in excessive orbit decay rates. The apogee at 200 nautical miles (370 km) is selected to be substantially below radiation hazards and to alleviate requirements for the redundant deorbit propulsion system while providing for multiple backup deorbit safety.

The entry vehicle, together with the portion of the adapter containing the deorbit motors, is separated from the launch vehicle's upper stage (Stage 2)

TABLE 1

CAPABILITIES OF NETWORK STATIONS

Station	Communications Capability							
	Unified S-band	UHF command	C-band tracking	PCM telemetry ground station	Telemetry recorder	VHF communications	Flight controlled display consoles	COMSAT terminals
Cape Kennedy	D	•	FPS-16	•	•	•	•	
Wallops Island, Virginia		•	FPQ-6	•	•	•	•	
Bermuda	S	DRUL	FPQ-6	•	•	•		
Grand Bahama Island	S	DRUL	TPQ-18	•	•	•		
Antigua	S	DRUL	FPQ-6	•	•	•		
Grand Canary Island	S	•	MPS-26	•	•	•	•	•
Ascension Island	D		TPQ-18		•	•		•
Pretoria, Africa			MPS-25		•			
Tananarive, Madagascar					•	•		
Carnarvon, Australia	D	•	FPQ-6	•	•	•	•	•
Canton Island					•	•		
Kauai Island, Hawaii	D	•	FPS-16	•	•	•	•	
Point Arguello, California			FPS-16		•	•		
Guaymas, Mexico	S			•	•	•	•	
White Sands, New Mexico			FPS-16			•		
Corpus Christi, Texas	D	•		•	•	•	•	
Eglin, Florida			FPS-16		•	•		
Edwards AFB, California		ADD	FPS-16	•	•	•		
Deorbit ship (Indian Ocean)	S	•	FPS-16	•	•			•
Pre-blackout ship (Pacific)	S	•	FPS-16	•	•			•
Post-blackout ship (Pacific)		•	FPS-16	•	•			•

D-dual USB S-single USB DRUL-downrange up link
ADD-digital command buffer and FRW-2

immediately after achieving orbit insertion. The initial elliptical orbital elements are as follows:

Perigee altitude	80 n. mi. (148 km)
Apogee altitude	200 n. mi. (370 km)
Inclination	35.7°
Period	89.43 min. (5.36 ksec)
Eccentricity	0.003568

There are no requirements for in-orbit maneuvers, although, of course, the attitude control system is continuously active. As the deorbit phase approaches, the vehicle is oriented such that the deorbit thrust is applied in a retrograde direction to decelerate the orbiting configuration. Guidance updates from ground stations are obtained.

The deorbit occurs during the third revolution within 10° central angle of apogee, near the southern tip of Africa. The thrusting requirements are minimum and not much different for deorbits anywhere within 20° of apogee. Deorbit parameters are:

Time	225 min. after liftoff
Altitude	192.5 n. mi. (357 km)
Latitude	29.0° S (geodetic)
Longitude	51.1° E
Deorbit velocity	130 fps (39.6 m/sec)

The deorbit phase of flight includes return from the deorbit point apogee to the atmosphere which is defined to begin at 400 000 feet (122 km). During this time (deorbit phase), the vehicle is oriented to its entry attitude and the deorbit motor adapter section is jettisoned.

Entry begins northeast of Australia with the following conditions:

Time	256 min. after liftoff
Altitude	400 000 ft (122 km)
Flight-path angle (inertial)	-1.5°
Velocity (inertial)	25 860 fps (7.9 km/sec)
Latitude	5.63° S (geodetic)
Longitude	159.3° E

DECLASSIFIED

Time histories of entry parameters are presented in detail in a later section. Approximately 20 minutes of flight time are available for entry experiments in the important altitude-velocity environment between 180 000 to 300 000 feet (55 km to 91.5 km) and between 10 000 to 25 000 fps (3.05 km/sec to 7.65 km/sec). For the present mission, using entry condition C, there are no appreciable crossrange requirements. The orbital parameters and deorbit position provide for a straight-in landing at FRC (Edwards AFB) 287 minutes after liftoff. The landing footprints (fig. 1) for various lift-to-drag ratios (L/D) show the extent of potential maneuverability. They pertain to entries using HL-10 aerodynamics with viscous corrections and with varying angle-of-attack during each entry to maintain the desired L/D fraction (Part III, Flight Performance).

The anticipated communications blackout time shown in figure 3 is approximately 20 minutes. It is based on conservative calculations which include augmentations of the plasma electrons by the ablator heat protection material.

Table 2 illustrates some facets of the mission recovery plan which substantiate the selection of this mission for conducting the primary research tasks. Although the basic mission is planned for 3 orbits with a landing at FRC (Edwards AFB), the crossranging maneuver required to return to FRC on the 2nd through the 5th orbits is well within the capability of the D/3 vehicle. The crossrange maneuver required to land at FRC on the 4th orbit is nearly identical to the requirement on the 3rd orbit (nominal condition), thus providing a mission backup capability. The addition of an alternate landing site near the east coast of the United States, such as Eglin AFB, Florida, extends this landing capability to the 1st orbit and provides backup landing capability on the 2nd through the 4th orbits.

Proper selection of the launch time from KSC provides a daylight recovery capability from each orbit into one of the two identified landing sites as shown in table 2.

TABLE 2

BASIC RESEARCH MISSION, RECOVERY PLAN

9:00 a.m. ETR Launch; i = 35.7°

Landing site	Performance parameter		Orbit Number				
			1	2	3	4	5
Primary: Edwards AFB, California	Cross-range	n. mi.		250	10	10	250
		km		463	18.5	18.5	463
	Local landing time	hr:min.		9:26 a.m.	11:00 a.m.	12:34 p.m.	2:08 p.m.
Alternate: Eglin AFB, Florida	Cross-range	n. mi.	168	320	192	192	
		km	311.1	592.6	355.6	355.6	
	Local landing range	hr:min.	10:06 a.m.	11:40 a.m.	1:14 p.m.	2:48 p.m.	

NOTE: All times are local mean solar times

DECLASSIFIED

A description of the missions for entry conditions B, F, and I would be very similar to the preceding discussion for entry condition C. The medium crossrange requirement of entry condition F is obtained by entering on the 2nd orbit. A 250-nautical mile (463 km) crossrange maneuver is required to return to FRC on this orbit. Entry conditions B and D are identical, except the designation B refers to the unmanned flight whereas D is manned.

2. One-Orbit Mission--Entry Condition G

This mission constitutes a demonstration of the principal justification for lifting entry vehicles, i.e., maximum practical crossrange maneuverability. All the range safety, crew safety and research objectives discussed for the 3-orbit mission are met.

The orbit ground trace, including coverage and landing footprint for this mission, is shown in figure 4. Launch is from ETR at a launch azimuth of 77.7° east of north. The Titan III launch vehicle inserts the D/3 entry vehicle into a perigee condition at 80 nautical miles (148 km) with sufficient overspeed to coast to a 200 nautical mile (370 km) apogee altitude.

Deorbit occurs 46 minutes after liftoff, approximately 10° before first apogee is reached.

There is a 38-minute interval between insertion and deorbit during which time booster separation, entry vehicle altitude orientation, and guidance checks are performed. Any "in-orbit" operations for setup and calibration of research equipment are also performed. Although the short interval would be unacceptable on an early flight, entry condition G is flown for the first time on the 9th flight. The data from the first 8 flights then provide a statistical and operational basis for establishing insertion parameter tolerances and onboard guidance and navigation precision. The program then is in a status to have a high confidence in onboard flight procedures and is less dependent on ground update of guidance.

The deorbit point, 34° S latitude and 77° E longitude, is located about midway between the range of tracking coverage from Tananarive and Carnarvon. Entry occurs about 91 minutes after liftoff at a position 6° S latitude and 194° E longitude. Touchdown at FRC occurs approximately 27 minutes after entry. A crossrange maneuver of 600 nautical miles (1.1 Mm) is accomplished during the entry (final crossrange depends on error analyses of guidance and navigation, Part IV). The solid line footprint boundary shown in figure 4 represents maneuver capabilities with angles-of-attack corresponding to 88 percent $L/D_{max.}$, a typical, but conservative, estimate for practical attainable crossrange. This allows for various tolerances in entry such as L/D, atmospheric density, winds, and guidance and navigation. This 88 percent $L/D_{max.}$ boundary passes through FRC and extends eastward well beyond the alternate landing site in northern Florida. The dashed-line footprint corresponds to 100 percent $L/D_{max.}$, the capability of the HL-10 configuration with nominal aerodynamics and entry parameters.

DECLASSIFIED

The altitude-time profile for the one-orbit mission is shown in figure 5, Line-of-site contact times from the applicable tracking and communication stations are also shown. Coverage of the entry vehicle is available during 50 percent of the mission. Voice and data links are maintained continuously throughout the mission using satellite relays.

One of the reasons for selecting the one-orbit mission for accomplishing the maximum crossrange maneuver is safety for emergency orbital returns. The primary landing site can be reached using the maneuver capability of the D/3 configuration on each of three immediately subsequent orbits. The crossrange maneuvers required on the 2nd and 3rd orbit into FRC are less than the maneuver required on the planned first orbit. The maneuver required on the 4th orbit is the same as that for the planned first orbit. These landing possibilities provide a valuable mission safety capability.

Additional time for in-orbit experiment preparation could be made available by altering the mission duration from 1 to 4 orbits because the required crossrange maneuver into Edwards from the 4th orbit is about the same as from the 1st orbit. A disadvantage of planning 4 orbits is having no backup return capability into the primary landing site on subsequent orbits.

3. Fifteen-Orbit Mission--Entry Condition C

The recommended 11-flight research program does not demand long orbital flight phases. However, other future plans, in addition to the secondary objective of rendezvous and docking experiments, may require longer orbit times. Aspects of a typical 23-hour mission are shown in figure 6. Launch from ETR at an azimuth of 110° E of N is used to provide a nominal crossrange entry to FRC on the 15th orbit. Backup landing opportunities are on the 16th and 17th orbits at FRC and on the 13th, 14th and 15th orbits at Eglin AFB.

An elliptic orbit (80/200 n. mi.) (148/370 km) is again utilized (fig. 7). Some propulsion for orbit maintenance may be desired, otherwise apogee altitude diminishes toward the end of the day.

Table 3 presents recovery data for this mission. Alternate landing sites at Wheelus, Libya and at a Pacific ship located south of Japan are added. The Wheelus site is at the shore of the Mediterranean Sea. If political restrictions exist for this site, it would be possible to utilize a ship recovery off-shore in nearby international waters.

The Pacific ship is located at 30° N latitude and 128° E longitude. As shown in table 3, with the selected primary and three alternate landing sites, daylight recovery is possible on each one of the first 17 orbits. Maneuver requirements are well within the crossrange capability of the entry vehicle. Launch is at 3:00 p.m. local time for the tabulated example.

4. Rendezvous

Problems that medium L/D type vehicles may have in rendezvous, docking, and transfer of men and equipment in near-earth operations were explored as

DECLASSIFIED

FR 14471-5

TABLE 3

LONG DURATION MISSION RECOVERY PLAN

3:00 p.m. ETR Launch; i = 34.06°

Landing site	Performance parameter		Orbit Number 1	2	3	4	5	6	7	8	9	10	11	12	13	14	15	16	17
Primary:	Cross-range	n. mi.	145	480													80	118	410
		km	268.5	890													148.5	218.8	760
Edwards AFB, California	Local landing time	hr:min.	1:52 p.m.	3:26 p.m.													11:48 a.m.	1:22 p.m.	2:56 p.m.
Alternate:	Cross-range	n. mi.	450											210	95	210	50	355	
		km	834											389	176.3	389	92.7	658	
Eglin AFB, Florida	Local landing time	hr:min.	4:06 p.m.											9:20 a.m.	10:54 a.m.	12:28 p.m.	2:02 p.m.	3:36 p.m.	
Emergency:	Cross-range	n. mi.								524	100	69	46	423					
		km								972	185.5	128	85.4	785					
Wheelus, Libya Africa	Local landing time	hr:min.								8:50 a.m.	10:24 a.m.	11:58 a.m.	1:32 p.m.	3:06 p.m.					
Emergency:	Cross-range	n. mi.			209	152	237	28	435										
		km			388	282	440	51.9	806										
Pacific Ship	Local landing time	hr:min.			9:31 a.m.	11:05 a.m.	12:39 p.m.	2:13 p.m.	5:47 p.m.										

NOTE: All times are local mean solar times.

DECLASSIFIED

a task for secondary study objectives. A configuration modification to accomplish rendezvous and docking experiments was therefore studied. The D/3 vehicle was modified for aft tunnel egress, and a rendezvous velocity and cargo module was added (fig. 8). The Titan III-5 launch vehicle used provides sufficient payload capability (27 400 lb) (12.4 Mg) such that 4000 pounds (1.81 Mg) of cargo can be orbited for transfer experiments and operations.

A typical mission altitude profile (fig. 9) was generated to provide a basis for subsystem design. The actual mission profile, of course, depends specifically on the altitude and other ephemerides of the target space station. For this example, the target is assumed to reside at 100 nautical miles (185 km). The rendezvous vehicle (D/3) is inserted at 80 nautical miles (148 km) with an overspeed to reach 140 nautical miles (259 km). An inclination of 35° is assumed. The orbit is circularized and used for fast catch-up phasing (the target catches up with the D/3). After a time interval to achieve appropriate phasing with the target, an orbit transfer is made to a slow catch-up parking orbit (the target is ahead of the D/3). Based on successful Gemini terminal rendezvous techniques, the final orbit transfer is completed by approaching the target from below, using a series of short duration propulsion impulses. The docking is completed and crew and equipment transfer is carried out. Following these experiments, the D/3 separates, deorbits and returns with a normal entry to a landing at FRC.

The duration of the mission depends on many parameters such as launch time, launch window tolerances and detailed definition of the in-orbit experiments. The configuration permits up to 24 hours from launch to touchdown.

The following velocity requirements were used to define the rendezvous propulsion module with number keys related to those shown on figure 9.

	Operation	Velocity increment, fps	(m/s)
1.	Insertion by launch vehicle	--	--
2.	Circularize fast catch-up orbit	146	(45)
3.	Plane change (0.1°)	45	(14)
4.	Initiate orbit change	108	(33)
5.	Complete orbit change	108	(33)
6.	Initiate terminal rendezvous	36	(11)
7.	Midcourse guidance allowance	50	(15)
8.	Complete terminal rendezvous	36	(11)
9.	Docking	20	(6)
10.	Station departure	20	(6)
	Contingency (10% margin plus 150 fps (45.7 m/sec) for other target altitudes)	221	(67)
	Total	790	(241)
	Deorbit and return	520	(159)

DECLASSIFIED

For estimating thrust levels for the rendezvous velocity module, an acceleration level of 0.5 g was chosen for the large orbit transfers and 0.03 g for the vernier docking maneuver. These representative levels are selected based on other studies such as Gemini and Apollo applications.

No rendezvous experiment has been defined in the present study because the present research task definitions were restricted to entry experiments. Nevertheless, one of the entry experiments requires some rendezvous capability prior to entry. The HF-1, Pilot Control/Landing of Vehicle after Prolonged Zero G, is an entry task which utilizes a pilot who has an immediate prior history of 30 days or more in a zero-g space station.

5. Supercircular

A second task for secondary study objectives was related to supercircular velocity entry experiments. A mission configuration was therefore studied making use of the Saturn IB launch vehicle (fig. 10). The entry vehicle was modified in several ways. One crewman was removed to save weight. To the resulting D/2 was added heat protection and control actuation power for the more severe environment. A supercircular velocity module was designed to contain enough propellant to match the Saturn IB payload capability of 35 300 pounds (16 Mg).

A typical mission profile (fig. 11) was generated to provide a basis for subsystem design. This mission utilizes a 200-nautical mile (370 km) circular orbit from which deorbit with concurrent acceleration to supercircular speeds is accomplished. This altitude is selected sufficiently high so that the acceleration phase is completed before reaching the altitude of 400 000 feet (122 km) on the descent. A 3-orbit trajectory, shown in figure 12, is chosen to be similar to the basic entry research mission (inclination 35.7°). The deorbit propulsion supplies about 1 g acceleration with an ideal velocity increment of 7300 fps (2.22 km/sec) for the present concept. Some of this energy is used to counteract centripetal acceleration, so that the entry speed is about 29 000 fps (8.85 km/sec), or 3000 fps (914 m/sec) larger than a normal entry.

If an alternate acceleration trajectory were used, the entry speed could be larger, but at the expense of increasing apogee and time from deorbit. For example, the thrust could be applied in a direction to achieve near-horizontal acceleration, permitting an elliptic orbit with apogee near 15 000 nautical miles (27.8 Mm) and a 7-hour (25.2-ksec) period. The entry speed could then approach 33 000 fps (10 km/sec) for the same propulsion capability.

The potential entry velocity obtainable within the payload capability of 4 launch vehicles is shown in figure 13. These data are estimated assuming a velocity module using storable propellants with a specific impulse of 310 seconds (N_2O_4-UDMH), and a propellant fraction of 0.85. For the Saturn V data, a two-stage velocity module is assumed. The entry velocity potential shown here for Titan III-5 is about the same as for Saturn IB, partly because

the larger diameter of Saturn requires a heavier transition section (approximately 2800 pounds (1.27 Mg) more), and partly because Saturn has a higher abort hazard (larger TNT equivalent) requiring larger abort motors.

The mission profiles (figs. 11 and 12) are for entry condition K which is used to expose the D/2 to high heating rates. Angles of attack corresponding to $L/D_{max.}$ are used during the initial entry to obtain a low pull-up altitude. The normal flight control following pull-up might include roll modulation to prevent any appreciable skip. Pitch modulation might also be employed to establish a desired load factor environment. The trajectory shown here uses a -6° entry flight path angle. This is well within the flight corridor for entry speeds between 28 000 and 34 000 fps (8.54 and 10.4 km/sec).

The entry environments resulting from supercircular speeds have various research applications. Primary interest is in convective heating distributions, heat shield performance, and aerodynamic characteristics. At speeds above 29 000 fps (8.83 km/sec) radiation heating might be measured; the radiative heating rates near the stagnation point then may exceed 2 Btu/ft^2-sec (22.6 kw/m^2) and be measurable. One of the entry research tasks (FM-9) requires this radiation measurement (Measure Gas-Cap Radiation Heat Transfer).

B. ASCENT, ENTRY AND LANDING PERFORMANCE

1. Ascent

The entry research flight test program uses several launch vehicles. A launch vehicle in the "Little Joe II" class is required for the two preliminary unmanned $q_{max.}$ abort tests, launching from White Sands to suborbital test flight condition. All flights in the basic 11-flight research program could be made within the payload capability of the Titan-III-2 launch vehicle. This booster has uprated core with strap-on 2-segment, 120-inch diameter (3.05 m) solid propellant rocket motors (SRM) and no transtage. The launch vehicle guidance system, normally located in the transtage, is placed on the equipment shelf of the upper stage (Stage 2). The mission profiles are described in this section using the Titan III-2 for the primary entry research missions. Near the end of this study, however, information was received that the Air Force no longer had plans to acquire and develop the Titan III-2. The next least expensive and applicable launch vehicle currently under consideration is the Titan III-5, a similar vehicle but with 5-segment SRMs. This became the recommended launch vehicle for the entry research program. The Titan III-5 is also the selected launch vehicle for a proposed secondary objective mission requiring rendezvous and docking of the D/3 configuration with a target vehicle already in orbit. The proposed secondary objective using supercircular entry velocities requires the Titan III-5, Saturn IB or Saturn V launch vehicles.

Typical ascent trajectories for three of these launch vehicles are shown in figures 14 through 16. These trajectories all assume launch from ETR, with a launch azimuth of 65.8° E of N, and perigee insertion into an 80/200 nautical mile (148/370 km) orbit. The payload weight specified for each booster is the minimum performance payload capability of that launch vehicle, having taken into account normal performance degradations.

Values of some ascent trajectory parameters bearing on the design and selection of the entry vehicle are summarized in the following table:

	Launch vehicle		
	Titan III-2	Titan III-5	Saturn IB
Time to insertion (sec)	470.13	496.3	603.5
Peak dynamic pressure (psf)	713.4 (34.2 $\frac{kN}{m^2}$)	653.6 (31.3 $\frac{kN}{m^2}$)	672. (32.2 $\frac{kN}{m^2}$)
Peak acceleration (g)	4.33	4.34	
Range to insertion (n. mi.)	736.4 (1.36 Mm)	853.3 (1.58 Mm)	995.2 (1.84 Mm)
Payload capability (lb)	16 940 (7.68 Mg)	27 390 (12.4 Mg)	35 310 (16 Mg)

Some general effects of switching from Titan III-2 to Titan III-5 for the recommended research program are summarized below:

Payload capability	10 450 lb (4.73 Mg) greater
Launch environment	
Maximum dynamic pressure	9% less
Peak load factor	Unchanged
Range to insertion	132 n. mi. (244 km) farther
Total time to insertion	26 sec longer
Cost of LV per launch	$5 x 10^6 more

The additional payload capability is available for such possibilities as steering to alleviate abort environment, adding an orbit-maneuvering propulsion module, or piggyback satellites or spacecraft. The farther range to insertion requires some adjustments in details of abort system operation. The additional cost of Titan III-5 is small compared to the overall program cost, and is included in the cost analysis of Part VI.

Figure 17 summarizes the payload capability of GLV, Titan III-2, Titan III-5 and Saturn IB as a function of launch azimuth heading for insertion into an 80/200 nautical mile (148/370 km) orbit. The weight of the D/3 entry vehicle and its booster adapter (transition cone) is shown on the right together with bars showing relative payload margins.

DECLASSIFIED

2. Entry

Details of the primary and backup, guidance and navigation schemes are discussed in Section F, 5 of Part IV. The primary entry guidance utilizes preprogrammed velocity and altitude data based on reference entry trajectories. The function of the guidance system during entry is to identify deviations from the reference trajectory due to dispersions and to make suitable corrections to programmed angle-of-attack and bank angles.

Specific reference entry trajectories for three of the entry conditions to be used in the basic research flight program with D/3 are included in this section. The data are shown in figure 18 for entry condition C, figure 19 for entry condition D (and B), and figure 20 for entry condition G. The open-loop angle-of-attack and bank angle programs with which these trajectories are computed are also included in figure 21 for entry condition C, figure 22 for entry condition D (and B), and figure 23 for entry condition G. The nominal conditions at the 400 000-foot (122 km) entry altitude for all flights in the basic research program are the same. The inertial velocity is 25 860 fps (7.88 km/sec) and the inertial entry angle is -1.5°.

Entry condition C represents an entry to a position near the center of the landing footprint with nominal zero crossrange. Consequently, the nominal bank angle throughout the entry is zero. Beginning at entry altitude, the D/3 is trimmed at an attitude corresponding to an angle-of-attack of 52°. This angle-of-attack provides maximum lift coefficient and is maintained until the bottom of the first skip. This position is where the relative flight path angle has first become zero. Here the angle-of-attack is decreased to 26°, the angle for maximum hypersonic L/D. This pitch maneuver minimizes the altitude amplitude of the subsequent phugoid. (This is a desirable, but not necessary, maneuver during entry and can be tolerated for entry condition C because this condition does not exercise the maximum ranging potential of the entry vehicle.) At the top of the first skip, defined where the relative flight path angle again becomes zero, the angle of attack is increased to 45°. This nominal angle (mid L/D) is maintained for the greater part of the entry and equilibrium glide until the Mach number reduces to 2.4. The flight mode is then switched to the front side of the L/D curve, angle-of-attack of 15°, in preparation for landing approach with conventional commands. At Mach 0.6 the angle-of-attack is reduced to 12°, the middle of the controllable range; the capability of the entry vehicle to make final guidance corrections by extending or decreasing range is about equal. The remaining flare and landing maneuver will be discussed separately later. Table 4 identifies the code description and units used in printouts of digital simulations for Entry Condition C which are reproduced in table 5. Both metric and English units are included. The tabular data are presented at some selected times during entry as follows:

Time, sec	Significance
0	Initial entry condition.
299.2	Bottom of the first skip (maximum heating rate and maximum hypersonic load factor generally occur near this point).

DECLASSIFIED

DECLASSIFIED

Time, sec	Significance
540	A typical near equilibrium glide condition.
1420	Approximately the point where the entry vehicle emerges from the communication blackout region.
1624.5	Generally the point h = 135 000 feet (41.1 km) where the bank angle program is terminated for an entry condition requiring a crossrange maneuver.
1860	Near the high-key window for the final landing approach.
1960	Near the low-key window for the final landing approach.
2011.7	Sea level touchdown.

Similar printout data is included for entry conditions B (and D) (table 6) and for G (table 7). Entry conditions B (and D) is similar to C except it proceeds downrange toward the toe of the footprint. Entry condition G, however, is a near maximum crossrange condition and requires a different mission description as follows.

The selected mission profile for entry condition G utilizes a one-orbit trajectory with an orbit inclination of 31.04°. Location at entry is approximately 193.8° east of Greenwich and 6° south of the equator. Here the initial angle-of-attack is 26° $(L/D_{max.})$ and the bank angle is 65° (left turn). These angles are maintained until reaching the top of the first skip. The angle of attack is then increased to 37° and the bank angle reduced to 40°. At an altitude of 135 000 feet (41.1 km), the bank angle is reduced to zero and the entry proceeds as in condition C. The significant differences between conditions G and C are the absence of modulations to reduce the altitude skipping amplitude, and the use of a nominal 3-step roll program. Both measures improve the crossranging capability. Table 7 shows a digital printout of specific times during the reference trajectory for entry condition G.

The research flight environments available using the above typical flight conditions can be summarized as follows:

DECLASSIFIED

DECLASSIFIED

Parameter	Units	Entry condition C	Entry condition B (& D)	Entry condition G
Crossrange	n. mi. (km)	10 (18.5)	10 (18.5)	600 (1410)
Heating rate, $\dot{q}_s$	Btu/ft^2-sec (MW/m^2)	96.5 (1.1)	134 (1.52)	177 (2.01)
Total heating, Q_t	Btu/ft^2 (GJ/m^2)	86 000 (0.977)	108 400 (1.23)	88 600 (1.01)
Load factor, n_{tot}	g	1.38	1.42	1.58

TABLE 4

DIGITAL SIMULATION OUTPUT FORMAT

Variable number	Variable name	Description	Units English	Units Metric
1	TPROB	Problem time	sec	sec
2	ALTUDE	Altitude	ft	m
3	RVEC	Radius vector (abs value)	ft	m
4	VEL(R)	Relative speed	fps	m/sec
5	VEL(I)	Inertial speed	fps	m/sec
6	ROLL V	Roll angle	deg	rad
7	CL	Lift coefficient	none	none
8	CD	Drag coefficient	none	none
9	WEIGHT	Weight	lb	N
10	MACH NO.	Mach number	none	none
11	SPEDOT	Rate of change of relative speed	fps	m/sec
12	Q. CONV	Convective heating rate	Btu/sq ft-sec	J/sq m
13	Q. CONV	Convective heat input	Btu/sq ft	J/sq m
14	TPHASE	Phase time	sec	sec
15	LONG	Longitude	deg	rad
16	INCL	Orbit inclination	deg	rad
17	GAM(R)	Relative flight path angle	deg	rad
18	GAM(I)	Inertial flight path angle	deg	rad
19	ALPHA	Angle of attack	deg	rad
20	LIFT	Lift	lb	N
21	DRAG	Drag	lb	N
22	L/D	Lift-to-drag ratio	none	none
23	DYNPRS	Dynamic pressure	lb/sq ft	N/sq m
24	GAMDOT	Rate of change of relative flight path angle	deg/sec	rad/sec
25	Q. RAD	Radiative heat rate	Btu/sq ft-sec	J/sq m-sec
26	Q. RAD	Radiative heat input	Btu/sq ft	J/sq m
27		Unit designation	none	none
28	GEDLAT	Geodetic latitude	deg	rad
29	TURN	Turn angle	deg	rad
30	GECLAT	Geocentric latitude	deg	rad
31	HEAD R	Relative heading	deg	rad
32	HEAD I	Inertial heading	deg	rad
33	BETA	Side slip angle	deg	rad
34	L/W	Lift-to-weight ratio	none	none
35	D/W	Drag-to-weight ratio	none	none
		Side force-to-weight ratio	none	none
36	N TOT	Total acceleration	none	none
37	REYNLD	Reynolds number	none	none
		Yaw thrust angle	deg	rad
		Specific impulse	sec	sec
38	HEADOT	Rate of change of relative heading	deg/sec	rad/sec
39	Q. C+R	Total heat rate	Btu/sq ft-sec	J/sq m-sec
40	Q. C+R	Total heat input	Btu/sq ft	J/sq m

DECLASSIFIED

TABLE 5

TYPICAL DIGITAL OUTPUT, ENTRY CONDITION C

```
TPROB   0.                  TPHASE 0.                   METRIC 0.10000000E 01
ALTUDE  0.12192000E 06      LONG   0.27803094E 01       GEDLAT-0.98262031E-01
                                                        TURN   0.23033917E-02
RVEC    0.64998510E 07      INCL   0.62506392E 00       GECLAT-0.97608593E-01
VEL(R)  0.75028920E 04      GAM(R)-0.27503536E-01       HEAD R 0.91592030E 00
VEL(I)  0.78821277E 04      GAM(I)-0.26179938E-01       HEAD I 0.95239128E 00
ROLL V  0.                  ALPHA  0.90757116E 00       BETA  -0.
CL      0.18619998E 00      LIFT   0.13208829E 01       L/W    0.24059819E-04
CD      0.12242999E 01      DRAG   0.86850538E 01       D/W    0.15819784E-03
WEIGHT  0.54900026E 05      L/D    0.15208689E 00       N TOT  0.16001698E-03
MACHNO  0.16442465E 02      DYNPRS 0.34088410E 00       REYNLD 0.25301257E 02
SPEDOT  0.26113964E 00      GAMDOT 0.14695537E-04       HEADOT-0.10205111E-03
Q.CONV  0.17355506E 05      Q.RAD  0.                   Q.C+R  0.17355506E 05
Q CONV  0.                  Q RAD  0.                   Q C+R  0.
                                                                  ------
TPROB   0.                  TPHASE 0.                   ENGL.  0.10000000E 01
ALTUDE  0.40000000E 06      LONG   0.15930000E 03       GEDLAT-0.56299996E 01
                                                        TURN   0.13197462E 00
RVEC    0.21324970E 08      INCL   0.35813524E 02       GECLAT-0.55925604E 01
VEL(R)  0.24615787E 05      GAM(R)-0.15758365E 01       HEAD R 0.52478368E 02
VEL(I)  0.25859999E 05      GAM(I)-0.14999999E 01       HEAD I 0.54568001E 02
ROLL V  0.                  ALPHA  0.51999997E 02       BETA  -0.
CL      0.18619998E 00      LIFT   0.29694629E 00       L/W    0.24059819E-04
CD      0.12242999E 01      DRAG   0.19524778E 01       D/W    0.15819784E-03
WEIGHT  0.12342000E 05      L/D    0.15208689E 00       N TOT  0.16001698E-03
MACHNO  0.16442465E 02      DYNPRS 0.71195125E-02       REYNLD 0.25301257E 02
SPEDOT  0.85675737E 00      GAMDOT 0.84199223E-03       HEADOT-0.58470977E-02
Q.CONV  0.15292636E 01      Q.RAD  0.                   Q.C+R  0.15292636E 01
Q CONV  0.                  Q RAD  0.                   Q C+R  0.
-------------------------------------------------------------------------------
-------------------------------------------------------------------------------
TPROB   0.29920637E 03      TPHASE 0.29920637E 03       METRIC 0.10000000E 01
ALTUDE  0.73616280E 05      LONG   0.30547320E 01       GEDLAT 0.11522276E 00
                                                        TURN   0.41301087E-01
RVEC    0.64514710E 07      INCL   0.62374696E 00       GECLAT 0.11445837E 00
VEL(R)  0.72808373E 04      GAM(R)-0.36379788E-11       HEAD R 0.91924132E 00
VEL(I)  0.76577097E 04      GAM(I)-0.34589365E-11       HEAD I 0.95626144E 00
ROLL V  0.                  ALPHA  0.90757116E 00       BETA  -0.
CL      0.46128593E 00      LIFT   0.15131442E 05       L/W    0.27561851E 00
CD      0.65823583E 00      DRAG   0.21591939E 05       D/W    0.39329616E 00
WEIGHT  0.54900026E 05      L/D    0.70079127E 00       N TOT  0.48025767E 00
MACHNO  0.26098485E 02      DYNPRS 0.15762757E 04       REYNLD 0.25520212E 06
SPEDOT-0.38613640E 01       GAMDOT 0.30230149E-03       HEADOT 0.12061948E-03
Q.CONV  0.10934217E 07      Q.RAD  0.                   Q.C+R  0.10934217E 07
Q CONV  0.11857701E 09      Q RAD  0.                   Q C+R  0.11857701E 09
                                                                  ------
TPROB   0.29920637E 03      TPHASE 0.29920637E 03       ENGL.  0.10000000E 01
ALTUDE  0.24152323E 06      LONG   0.17502325E 03       GEDLAT 0.66017779E 01
                                                        TURN   0.23663780E 01
RVEC    0.21166244E 08      INCL   0.35738068E 02       GECLAT 0.65579815E 01
VEL(R)  0.23887261E 05      GAM(R)-0.20844083E-09       HEAD R 0.52668648E 02
VEL(I)  0.25123719E 05      GAM(I)-0.19818246E-09       HEAD I 0.54789745E 02
ROLL V  0.                  ALPHA  0.51999997E 02       BETA  -0.
CL      0.46128593E 00      LIFT   0.34016836E 04       L/W    0.27561851E 00
CD      0.65823583E 00      DRAG   0.48540612E 04       D/W    0.39329616E 00
WEIGHT  0.12342000E 05      L/D    0.70079127E 00       N TOT  0.48025767E 00
MACHNO  0.26098485E 02      DYNPRS 0.32921203E 02       REYNLD 0.25520212E 06
SPEDOT-0.12668517E 02       GAMDOT 0.17320600E-01       HEADOT 0.69109874E-02
Q.CONV  0.96345797E 02      Q.RAD  0.                   Q.C+R  0.96345797E 02
Q CONV  0.10448297E 05      Q RAD  0.                   Q C+R  0.10448297E 05
-------------------------------------------------------------------------------
```

DECLASSIFIED

TABLE 5.--Continued

TYPICAL DIGITAL OUTPUT, ENTRY CONDITION C

TPROB	0.53999999E 03	TPHASE	0.18048628E 02	METRIC	0.40000000E 01
ALTUDE	0.81398047E 05	LONG	0.32748200E 01	GEDLAT	0.27357298E 00
				TURN	0.11370692E 01
RVEC	0.64579845E 07	INCL	0.62271467E 00	GECLAT	0.27183123E 00
VEL(R)	0.70759943E 04	GAM(R)	-0.90064888E-03	HEAD R	0.96885812E 00
VEL(I)	0.74543222E 04	GAM(I)	-0.85493838E-03	HEAD I	0.10033235E 01
ROLL V	0.	ALPHA	0.78539811E 00	BETA	-0.
CL	0.39622914E 00	LIFT	0.33042944E 04	L/W	0.60187567E-01
CD	0.55017968E 00	DRAG	0.45881421E 04	D/W	0.83572792E-01
WEIGHT	0.54900026E 05	L/D	0.72018135E 00	N TOT	0.10299007E 00
MACHNO	0.27425473E 02	DYNPRS	0.40073233E 03	REYNLD	0.76613520E 05
SPEDOT	-0.82044031E 00	GAMDOT	-0.52955029E-04	HEADOT	0.29290247E-03
Q.CONV	0.51932879E 06	Q.RAD	0.	Q.C+R	0.51932879E 06
Q CONV	0.30148273E 09	Q RAD	0.	Q C+R	0.30148273E 09

TPROB	0.53999999E 03	TPHASE	0.18048628E 02	ENGL.	0.40000000E 01
ALTUDE	0.26705396E 06	LONG	0.18763337E 03	GEDLAT	0.15674577E 02
				TURN	0.65149266E 02
RVEC	0.21187614E 08	INCL	0.35678922E 02	GECLAT	0.15574782E 02
VEL(R)	0.23215205E 05	GAM(R)	-0.51603379E-01	HEAD R	0.55511481E 02
VEL(I)	0.24456438E 05	GAM(I)	-0.48984361E-01	HEAD I	0.57486202E 02
ROLL V	0.	ALPHA	0.44999997E 02	BETA	-0.
CL	0.39622914E 00	LIFT	0.74283495E 03	L/W	0.60187567E-01
CD	0.55017968E 00	DRAG	0.10314554E 04	D/W	0.83572792E-01
WEIGHT	0.12342000E 05	L/D	0.72018135E 00	N TOT	0.10299007E 00
MACHNO	0.27425473E 02	DYNPRS	0.83694688E 01	REYNLD	0.76613520E 05
SPEDOT	-0.26917333E 01	GAMDOT	-0.30340996E-02	HEADOT	0.16782075E-01
Q.CONV	0.45760151E 02	Q.RAD	0.	Q.C+R	0.45760151E 02
Q CONV	0.26564857E 05	Q RAD	0.	Q C+R	0.26564857E 05

TPROB	0.14200000E 04	TPHASE	0.89804862E 03	METRIC	0.40000000E 01
ALTUDE	0.53670313E 05	LONG	0.40919242E 01	GEDLAT	0.60164767E 00
				TURN	0.14636874E-01
RVEC	0.64249954E 07	INCL	0.61552147E 00	GECLAT	0.59851815E 00
VEL(R)	0.35594539E 04	GAM(R)	-0.14214603E-01	HEAD R	0.14007999E 01
VEL(I)	0.39414597E 04	GAM(I)	-0.12836845E-01	HEAD I	0.14174165E 01
ROLL V	0.	ALPHA	0.78539811E 00	BETA	-0.
CL	0.42032663E 00	LIFT	0.38915550E 05	L/W	0.70884671E 00
CD	0.49747726E 00	DRAG	0.46058588E 05	D/W	0.83895500E 00
WEIGHT	0.54900026E 05	L/D	0.84491625E 00	N TOT	0.10983211E 01
MACHNO	0.10580152E 02	DYNPRS	0.44489696E 04	REYNLD	0.10832448E 07
SPEDOT	-0.80955212E 01	GAMDOT	-0.80496616E-04	HEADOT	0.46317146E-03
Q.CONV	0.39180772E 06	Q.RAD	0.	Q.C+R	0.39180772E 06
Q CONV	0.92675374E 09	Q RAD	0.53510285E 04	Q C+R	0.92675908E 09

TPROB	0.14200000E 04	TPHASE	0.89804862E 03	ENGL.	0.40000000E 01
ALTUDE	0.17608371E 06	LONG	0.23444999E 03	GEDLAT	0.34471872E 02
				TURN	0.83863112E 00
RVEC	0.21079381E 08	INCL	0.35266782E 02	GECLAT	0.34292564E 02
VEL(R)	0.11677998E 05	GAM(R)	-0.81443675E 00	HEAD R	0.80259926E 02
VEL(I)	0.12931298E 05	GAM(I)	-0.73549706E 00	HEAD I	0.81211985E 02
ROLL V	0.	ALPHA	0.44999997E 02	BETA	-0.
CL	0.42032663E 00	LIFT	0.87485860E 04	L/W	0.70884671E 00
CD	0.49747726E 00	DRAG	0.10354383E 05	D/W	0.83895500E 00
WEIGHT	0.12342000E 05	L/D	0.84491625E 00	N TOT	0.10983211E 01
MACHNO	0.10580152E 02	DYNPRS	0.92918663E 02	REYNLD	0.10832448E 07
SPEDOT	-0.26560109E 02	GAMDOT	-0.46121163E-02	HEADOT	0.26537770E-01
Q.CONV	0.34523756E 02	Q.RAD	0.	Q.C+R	0.34523756E 02
Q CONV	0.81660003E 05	Q RAD	0.47150066E 00	Q C+R	0.81660474E 05

DECLASSIFIED

DECLASSIFIED

TABLE 5. --Continued

TYPICAL DIGITAL OUTPUT, ENTRY CONDITION C

TPROB	0.16244751E 04	TPHASE	0.11025237E 04	METRIC	0.40000000E 01
ALTUDE	0.41148000E 05	LONG	0.41942701E 01	GEDLAT	0.61290714E 00
				TURN	0.68168397E 00
RVEC	0.64122482E 07	INCL	0.61382419E 00	GECLAT	0.60975106E 00
VEL(R)	0.17253091E 04	GAM(R)	-0.37956543E-01	HEAD R	0.14784473E 01
VEL(I)	0.21070718E 04	GAM(I)	-0.31077055E-01	HEAD I	0.14952328E 01
ROLL V	0.	ALPHA	0.78539811E 00	BETA	-0.
CL	0.45434739E 00	LIFT	0.47980327E 05	L/W	0.87395938E 00
CD	0.51409771E 00	DRAG	0.54290123E 05	D/W	0.98889203E 00
WEIGHT	0.54900026E 05	L/D	0.88377634E 00	N TOT	0.13197395E 01
MACHNO	0.52940196E 01	DYNPRS	0.50745462E 04	REYNLD	0.26800578E 07
SPEDOT	-0.93335140E 01	GAMDOT	-0.24625749E-03	HEADOT	0.28864535E-03
Q.CONV	0.87917092E 05	Q.RAD	0.	Q.C+R	0.87917092E 05
Q CONV	0.97401635E 09	Q RAD	0.53510285E 04	Q C+R	0.97402169E 09

TPROB	0.16244751E 04	TPHASE	0.11025237E 04	ENGL.	0.40000000E 01
ALTUDE	0.13500000E 06	LONG	0.24031397E 03	GEDLAT	0.35116993E 02
				TURN	0.39057614E 02
RVEC	0.21037560E 08	INCL	0.35169535E 02	GECLAT	0.34936162E 02
VEL(R)	0.56604631E 04	GAM(R)	-0.21747497E 01	HEAD R	0.84708794E 02
VEL(I)	0.69129653E 04	GAM(I)	-0.17805841E 01	HEAD I	0.85670529E 02
ROLL V	0.	ALPHA	0.44999997E 02	BETA	-0.
CL	0.45434739E 00	LIFT	0.10786406E 05	L/W	0.87395938E 00
CD	0.51409771E 00	DRAG	0.12204905E 05	D/W	0.98889203E 00
WEIGHT	0.12342000E 05	L/D	0.88377634E 00	N TOT	0.13197395E 01
MACHNO	0.52940196E 01	DYNPRS	0.10598410E 03	REYNLD	0.26800578E 07
SPEDOT	-0.30621765E 02	GAMDOT	-0.14109515E-01	HEADOT	0.16538160E-01
Q.CONV	0.77467290E 01	Q.RAD	0.	Q.C+R	0.77467290E 01
Q CONV	0.85824502E 05	Q RAD	0.47150066E 00	Q C+R	0.85824973E 05

TPROB	0.18600000E 04	TPHASE	0.11632933E 03	METRIC	0.60000000E 01
ALTUDE	0.13856790E 05	LONG	0.42329809E 01	GEDLAT	0.61518520E 00
				TURN	-0.35071306E 00
RVEC	0.63849112E 07	INCL	0.61220058E 00	GECLAT	0.61202394E 00
VEL(R)	0.27502251E 03	GAM(R)	-0.36399394E 00	HEAD R	0.15316941E 01
VEL(I)	0.64543933E 03	GAM(I)	-0.15228392E 00	HEAD I	0.15550475E 01
ROLL V	0.	ALPHA	0.26179937E 00	BETA	-0.
CL	0.21613044E 00	LIFT	0.39638890E 05	L/W	0.72202049E 00
CD	0.13787327E 00	DRAG	0.25286321E 05	D/W	0.46058913E 00
WEIGHT	0.54900026E 05	L/D	0.15676021E 01	N TOT	0.85642042E 00
MACHNO	0.93208247E 00	DYNPRS	0.88130777E 04	REYNLD	0.34339704E 08
SPEDOT	-0.10451298E 01	GAMDOT	-0.72420432E-02	HEADOT	0.23379468E-03
Q.CONV	0.22202092E 04	Q.RAD	0.	Q.C+R	0.22202092E 04
Q CONV	0.98026003E 09	Q RAD	0.53510285E 04	Q C+R	0.98026538E 09

TPROB	0.18600000E 04	TPHASE	0.11632933E 03	ENGL.	0.60000000E 01
ALTUDE	0.45461911E 05	LONG	0.24253194E 03	GEDLAT	0.35247515E 02
				TURN	-0.20094378E 02
RVEC	0.20947872E 08	INCL	0.35076510E 02	GECLAT	0.35066389E 02
VEL(R)	0.90230481E 03	GAM(R)	-0.20855317E 02	HEAD R	0.87759610E 02
VEL(I)	0.21175831E 04	GAM(I)	-0.87252260E 01	HEAD I	0.89097661E 02
ROLL V	0.	ALPHA	0.14999998E 02	BETA	-0.
CL	0.21613044E 00	LIFT	0.89111769E 04	L/W	0.72202049E 00
CD	0.13787327E 00	DRAG	0.56845910E 04	D/W	0.46058913E 00
WEIGHT	0.12342000E 05	L/D	0.15676021E 01	N TOT	0.85642042E 00
MACHNO	0.93208247E 00	DYNPRS	0.18406496E 03	REYNLD	0.34339704E 08
SPEDOT	-0.34289036E 01	GAMDOT	-0.41493850E 00	HEADOT	0.13395448E-01
Q.CONV	0.19563157E 00	Q.RAD	0.	Q.C+R	0.19563157E 00
Q CONV	0.86374658E 05	Q RAD	0.47150066E 00	Q C+R	0.86375129E 05

DECLASSIFIED

DECLASSIFIED

TABLE 5. --Concluded

TYPICAL DIGITAL OUTPUT, ENTRY CONDITION C

TPROB	0.19600000E 04	TPHASE	0.15951263E 02	METRIC	0.70000000E 01
ALTUDE	0.46074055E 04	LONG	0.42369118E 01	GEDLAT	0.61527393E 00
				TURN	-0.53402282E 00
RVEC	0.63756600E 07	INCL	0.61212356E 00	GECLAT	0.61211246E 00
VEL(R)	0.19418843E 03	GAM(R)	-0.55209766E 00	HEAD R	0.15577717E 01
VEL(I)	0.55525545E 03	GAM(I)	-0.18446783E 00	HEAD I	0.15668512E 01
ROLL V	0.	ALPHA	0.20943949E 00	BETA	-0.
CL	0.13889412E 00	LIFT	0.41863807E 05	L/W	0.76254726E 00
CD	0.89570633E-01	DRAG	0.26997310E 05	D/W	0.49175473E 00
WEIGHT	0.54900026E 05	L/D	0.15506658E 01	N TOT	0.90735938E 00
MACHNO	0.60282671E 00	DYNPRS	0.14483613E 05	REYNLD	0.69233656E 08
SPEDOT	0.30829054E 00	GAMDOT	-0.42419538E-02	HEADOT	0.29000791E-03
Q.CONV	0.13437401E 04	Q.RAD	0.	Q.C+R	0.13437401E 04
Q CONV	0.98042757E 09	Q RAD	0.53510285E 04	Q C+R	0.98043290E 09

TPROB	0.19600000E 04	TPHASE	0.15951263E 02	ENGL.	0.70000000E 01
ALTUDE	0.15116160E 05	LONG	0.24275716E 03	GEDLAT	0.35252599E 02
				TURN	-0.30597254E 02
RVEC	0.20917520E 08	INCL	0.35072096E 02	GECLAT	0.35071460E 02
VEL(R)	0.63710114E 03	GAM(R)	-0.31632866E 02	HEAD R	0.89253743E 02
VEL(I)	0.18217042E 04	GAM(I)	-0.10569228E 02	HEAD I	0.89773960E 02
ROLL V	0.	ALPHA	0.11999999E 02	BETA	-0.
CL	0.13889412E 00	LIFT	0.94113583E 04	L/W	0.76254726E 00
CD	0.89570633E-01	DRAG	0.60692369E 04	D/W	0.49175473E 00
WEIGHT	0.12342000E 05	L/D	0.15506658E 01	N TOT	0.90735938E 00
MACHNO	0.60282671E 00	DYNPRS	0.30249656E 03	REYNLD	0.69233656E 08
SPEDOT	0.10114519E 01	GAMDOT	-0.24304605E 00	HEADOT	0.16616229E-01
Q.CONV	0.11840235E 00	Q.RAD	0.	Q.C+R	0.11840235E 00

TPROB	0.20116994E 04	TPHASE	0.67650705E 02	METRIC	0.70000000E 01
ALTUDE	0.11627197E-05	LONG	0.42385384E 01	GEDLAT	0.61528132E 00
				TURN	-0.28003824E 00
RVEC	0.63710525E 07	INCL	0.61212011E 00	GECLAT	0.61211984E 00
VEL(R)	0.17169461E 03	GAM(R)	-0.36028168E 00	HEAD R	0.15728081E 01
VEL(I)	0.54427802E 03	GAM(I)	-0.11143994E 00	HEAD I	0.15713939E 01
ROLL V	0.	ALPHA	0.20943949E 00	BETA	-0.
CL	0.14757273E 00	LIFT	0.55450886E 05	L/W	0.10100352E 01
CD	0.61401655E-01	DRAG	0.23071852E 05	D/W	0.42025269E 00
WEIGHT	0.54900026E 05	L/D	0.24033998E 01	N TOT	0.10939760E 01
MACHNO	0.50456288E 00	DYNPRS	0.18056119E 05	REYNLD	0.89537445E 08
SPEDOT	-0.66721352E 00	GAMDOT	0.44346605E-02	HEADOT	0.29410841E-03
Q.CONV	0.11501144E 04	Q.RAD	0.	Q.C+R	0.11501144E 04
Q CONV	0.98049790E 09	Q RAD	0.53510285E 04	Q C+R	0.98050325E 09

TPROB	0.20116994E 04	TPHASE	0.67650705E 02	ENGL.	0.70000000E 01
ALTUDE	0.38146973E-05	LONG	0.24285036E 03	GEDLAT	0.35253023E 02
				TURN	-0.16045009E 02
RVEC	0.20902404E 08	INCL	0.35071899E 02	GECLAT	0.35071883E 02
VEL(R)	0.56330254E 03	GAM(R)	-0.20642620E 02	HEAD R	0.90115265E 02
VEL(I)	0.17856890E 04	GAM(I)	-0.63850387E 01	HEAD I	0.90034239E 02
ROLL V	0.	ALPHA	0.11999999E 02	BETA	-0.
CL	0.14757273E 00	LIFT	0.12465855E 05	L/W	0.10100352E 01
CD	0.61401655E-01	DRAG	0.51867587E 04	D/W	0.42025269E 00
WEIGHT	0.12342000E 05	L/D	0.24033998E 01	N TOT	0.10939760E 01
MACHNO	0.50456288E 00	DYNPRS	0.37710991E 03	REYNLD	0.89537445E 08
SPEDOT	-0.21890208E 01	GAMDOT	0.25408733E 00	HEADOT	0.16851170E-01
Q.CONV	0.10134121E 00	Q.RAD	0.	Q.C+R	0.10134121E 00
Q CONV	0.86395618E 05	Q RAD	0.47150066E 00	Q C+R	0.86396089E 05

DECLASSIFIED

TABLE 6

TYPICAL DIGITAL OUTPUT, ENTRY CONDITION D

```
TPROB   0.                  TPHASE 0.                   METRIC 0.10000000E 01
ALTUDE  0.12192000E 06      LONG   0.24818581E 01       GEDLAT-0.31415924E 00
                                                        TURN   0.22453859E-01
RVEC    0.64980289E 07      INCL   0.62219010E 00       GECLAT-0.31219111E 00
VEL(R)  0.75008920E 04      GAM(R)-0.27510871E-01       HEAD R 0.99208442E 00
VEL(I)  0.78821277E 04      GAM(I)-0.26179938E-01       HEAD I 0.10233913E 01
ROLL V  0.                  ALPHA  0.45378558E 00       BETA  -0.
CL      0.98799998E-01      LIFT   0.70050310E 00       L/W    0.12759631E-04
CD      0.66149995E 00      DRAG   0.46901091E 01       D/W    0.85430114E-04
WEIGHT  0.54900026E 05      L/D    0.14935753E 00       N TOT  0.86377731E-04
MACHNO  0.16438081E 02      DYNPRS 0.34070238E 00       REYNLD 0.25294513E 02
SPEDOT  0.26850431E 00      GAMDOT 0.14859869E-04       HEADOT-0.35657062E-03
Q.CONV  0.17333280E 05      Q.RAD  0.                   Q.C+R  0.17333280E 05
Q CONV  0.                  Q RAD  0.                   Q C+R  0.
                                                                  ------

TPROB   0.                  TPHASE 0.                   ENGL.  0.10000000E 01
ALTUDE  0.40000000E 06      LONG   0.14219999E 03       GEDLAT-0.17999999E 02
                                                        TURN   0.12865114E 01
RVEC    0.21318993E 08      INCL   0.35648866E 02       GECLAT-0.17887233E 02
VEL(R)  0.24609225E 05      GAM(R)-0.15762568E 01       HEAD R 0.56842250E 02
VEL(I)  0.25859999E 05      GAM(I)-0.14999999E 01       HEAD I 0.58636001E 02
ROLL V  0.                  ALPHA  0.25999999E 02       BETA  -0.
CL      0.98799998E-01      LIFT   0.15747936E 00       L/W    0.12759631E-04
CD      0.66149995E 00      DRAG   0.10543785E 01       D/W    0.85430114E-04
WEIGHT  0.12342000E 05      L/D    0.14935753E 00       N TOT  0.86377731E-04
MACHNO  0.16438081E 02      DYNPRS 0.71157174E-02       REYNLD 0.25294513E 02
SPEDOT  0.88091966E 00      GAMDOT 0.85140776E-03       HEADOT-0.20429992E-01
Q.CONV  0.15273050E 01      Q.RAD  0.                   Q.C+R  0.15273050E 01
Q CONV  0.                  Q RAD  0.                   Q C+R  0.
-----------------------------------------------------------------------------
-----------------------------------------------------------------------------
TPROB   0.31262022E 03      TPHASE 0.31262022E 03       METRIC 0.10000000E 01
ALTUDE  0.69598439E 05      LONG   0.27840552E 01       GEDLAT-0.10167235E 00
                                                        TURN  -0.40649474E-02
RVEC    0.64475150E 07      INCL   0.62157081E 00       GECLAT-0.10099654E 00
VEL(R)  0.73835142E 04      GAM(R)-0.18189894E-11       HEAD R 0.91988426E 00
VEL(I)  0.77608124E 04      GAM(I)-0.17305578E-11       HEAD I 0.95641232E 00
ROLL V  0.                  ALPHA  0.45378558E 00       BETA  -0.
CL      0.23612828E 00      LIFT   0.14168152E 05       L/W    0.25807223E 00
CD      0.23071877E 00      DRAG   0.13843572E 05       D/W    0.25216001E 00
WEIGHT  0.54900026E 05      L/D    0.10234463E 01       N TOT  0.36081289E 00
MACHNO  0.25335430E 02      DYNPRS 0.28832830E 04       REYNLD 0.42726787E 06
SPEDOT-0.24689058E 01       GAMDOT 0.30732665E-03       HEADOT-0.10772842E-03
Q.CONV  0.15225508E 07      Q.RAD  0.46081284E 03       Q.C+R  0.15230117E 07
Q CONV  0.16332510E 09      Q RAD  0.18099810E 05       Q C+R  0.16334320E 09
                                                                  ------
TPROB   0.31262022E 03      TPHASE 0.31262022E 03       ENGL.  0.10000000E 01
ALTUDE  0.22834134E 06      LONG   0.15951461E 03       GEDLAT-0.58253968E 01
                                                        TURN  -0.23290432E 00
RVEC    0.21153265E 08      INCL   0.35613383E 02       GECLAT-0.57866757E 01
VEL(R)  0.24224128E 05      GAM(R)-0.10422042E-09       HEAD R 0.52705486E 02
VEL(I)  0.25461983E 05      GAM(I)-0.99153656E-10       HEAD I 0.54798389E 02
ROLL V  0.                  ALPHA  0.25999999E 02       BETA  -0.
CL      0.23612828E 00      LIFT   0.31851274E 04       L/W    0.25807223E 00
CD      0.23071877E 00      DRAG   0.31121588E 04       D/W    0.25216001E 00
WEIGHT  0.12342000E 05      L/D    0.10234463E 01       N TOT  0.36081289E 00
MACHNO  0.25335430E 02      DYNPRS 0.60218619E 02       REYNLD 0.42726787E 06
SPEDOT-0.81000849E 01       GAMDOT 0.17608520E-01       HEADOT-0.61723835E-02
Q.CONV  0.13415809E 03      Q.RAD  0.40604075E-01       Q.C+R  0.13419869E 03
Q CONV  0.14391233E 05      Q RAD  0.15948472E 01       Q C+R  0.14392827E 05
-----------------------------------------------------------------------------
```

DECLASSIFIED

TABLE 6.--Continued

TYPICAL DIGITAL OUTPUT, ENTRY CONDITION D

TPROB	0.61436026E 03	TPHASE	0.29974004E 03	METRIC	0.30000000E 01
ALTUDE	0.91768538E 05	LONG	0.30509276E 01	GEDLAT	0.10482547E 00
				TURN	0.37423670E-02
RVEC	0.64696713E 07	INCL	0.62051956E 00	GECLAT	0.10412901E 00
VEL(R)	0.71403030E 04	GAM(R)	0.45474735E-12	HEAD R	0.92012954E 00
VEL(I)	0.75190259E 04	GAM(I)	0.43184236E-12	HEAD I	0.95793799E 00
ROLL V	0.	ALPHA	0.45378558E 00	BETA	-0.
CL	0.20043758E 00	LIFT	0.21004976E 03	L/W	0.38260464E-02
CD	0.34267592E 00	DRAG	0.35910928E 03	D/W	0.65411586E-02
WEIGHT	0.54900026E 05	L/D	0.58491876E 00	N TOT	0.75779540E-02
MACHNO	0.27521449E 02	DYNPRS	0.50357608E 02	REYNLD	0.94461079E 04
SPEDOT	-0.68182746E-01	GAMDOT	-0.10663296E-03	HEADOT	0.10767521E-03
Q.CONV	0.18824880E 06	Q.RAD	0.	Q.C+R	0.18824880E 06
Q CONV	0.35462808E 09	Q RAD	0.34931184E 05	Q C+R	0.35466301E 09

TPROB	0.61436026E 03	TPHASE	0.29974004E 03	ENGL.	0.30000000E 01
ALTUDE	0.30107789E 06	LONG	0.17480528E 03	GEDLAT	0.60060576E 01
				TURN	0.21442183E 00
RVEC	0.21225955E 08	INCL	0.35553152E 02	GECLAT	0.59661529E 01
VEL(R)	0.23426191E 05	GAM(R)	0.26055104E-10	HEAD R	0.52719539E 02
VEL(I)	0.24668720E 05	GAM(I)	0.24742745E-10	HEAD I	0.54885804E 02
ROLL V	0.	ALPHA	0.25999999E 02	BETA	-0.
CL	0.20043758E 00	LIFT	0.47221065E 02	L/W	0.38260464E-02
CD	0.34267592E 00	DRAG	0.80730979E 02	D/W	0.65411586E-02
WEIGHT	0.12342000E 05	L/D	0.58491876E 00	N TOT	0.75779540E-02
MACHNO	0.27521449E 02	DYNPRS	0.10517406E 01	REYNLD	0.94461079E 04
SPEDOT	-0.22369667E 00	GAMDOT	-0.61096188E-02	HEADOT	0.61693350E-02
Q.CONV	0.16587360E 02	Q.RAD	0.	Q.C+R	0.16587360E 02
Q CONV	0.31247708E 05	Q RAD	0.30779273E 01	Q C+R	0.31250786E 05

TPROB	0.17200000E 04	TPHASE	0.11056397E 04	METRIC	0.40000000E 01
ALTUDE	0.53317326E 05	LONG	0.40441614E 01	GEDLAT	0.58909140E 00
				TURN	0.59673609E 00
RVEC	0.64248909E 07	INCL	0.61127926E 00	GECLAT	0.58599336E 00
VEL(R)	0.37393679E 04	GAM(R)	-0.19083958E-01	HEAD R	0.13663614E 01
VEL(I)	0.41222834E 04	GAM(I)	-0.17311078E-01	HEAD I	0.13855892E 01
ROLL V	0.	ALPHA	0.66322508E 00	BETA	-0.
CL	0.36315816E 00	LIFT	0.38563275E 05	L/W	0.70242824E 00
CD	0.36896075E 00	DRAG	0.39179444E 05	D/W	0.71365172E 00
WEIGHT	0.54900026E 05	L/D	0.98427316E 00	N TOT	0.10013512E 01
MACHNO	0.11095362E 02	DYNPRS	0.51027015E 04	REYNLD	0.11793889E 07
SPEDOT	-0.68207695E 01	GAMDOT	-0.32827276E-04	HEADOT	0.46718492E-03
Q.CONV	0.46652436E 06	Q.RAD	0.	Q.C+R	0.46652436E 06
Q CONV	0.11527907E 10	Q RAD	0.70235432E 05	Q C+R	0.11528609E 10

TPROB	0.17200000E 04	TPHASE	0.11056397E 04	ENGL.	0.40000000E 01
ALTUDE	0.17492561E 06	LONG	0.23171338E 03	GEDLAT	0.33752451E 02
				TURN	0.34190459E 02
RVEC	0.21079038E 08	INCL	0.35023721E 02	GECLAT	0.33574947E 02
VEL(R)	0.12268267E 05	GAM(R)	-0.10934302E 01	HEAD R	0.78286743E 02
VEL(I)	0.13524552E 05	GAM(I)	-0.99185174E 00	HEAD I	0.79388415E 02
ROLL V	0.	ALPHA	0.37999998E 02	BETA	-0.
CL	0.36315816E 00	LIFT	0.86693692E 04	L/W	0.70242824E 00
CD	0.36896075E 00	DRAG	0.88078895E 04	D/W	0.71365172E 00
WEIGHT	0.12342000E 05	L/D	0.98427316E 00	N TOT	0.10013512E 01
MACHNO	0.11095362E 02	DYNPRS	0.10657214E 03	REYNLD	0.11793889E 07
SPEDOT	-0.22377852E 02	GAMDOT	-0.18808644E-02	HEADOT	0.26767724E-01
Q.CONV	0.41107340E 02	Q.RAD	0.	Q.C+R	0.41107340E 02
Q CONV	0.10157703E 06	Q RAD	0.61887267E 01	Q C+R	0.10158322E 06

DECLASSIFIED

DECLASSIFIED

TABLE 6.--Continued

TYPICAL DIGITAL OUTPUT, ENTRY CONDITION D

TPROB	0.19536428E 04	TPHASE	0.13392826E 04	METRIC	0.40000000E 01
ALTUDE	0.41148000E 05	LONG	0.41676228E 01	GEDLAT	0.60569161E 00
				TURN	-0.54383858E 00
RVEC	0.64123926E 07	INCL	0.60901976E 00	GECLAT	0.60255238E 00
VEL(R)	0.19270314E 04	GAM(R)	-0.30455174E-01	HEAD R	0.14573214E 01
VEL(I)	0.23100684E 04	GAM(I)	-0.25404145E-01	HEAD I	0.14762122E 01
ROLL V	0.	ALPHA	0.66322508E 00	BETA	-0.
CL	0.38337743E 00	LIFT	0.50506284E 05	L/W	0.91996957E 00
CD	0.37892076E 00	DRAG	0.49919161E 05	D/W	0.90927517E 00
WEIGHT	0.54900026E 05	L/D	0.10117615E 01	N TOT	0.12934935E 01
MACHNO	0.59129936E 01	DYNPRS	0.63305425E 04	REYNLD	0.29934088E 07
SPEDOT	-0.86258841E 01	GAMDOT	0.85011283E-04	HEADOT	0.30408140E-03
Q.CONV	0.12455390E 06	Q.RAD	0.	Q.C+R	0.12455390E 06
Q CONV	0.12197224E 10	Q RAD	0.70235432E 05	Q C+R	0.12197927E 10

TPROB	0.19536428E 04	TPHASE	0.13392826E 04	ENGL.	0.40000000E 01
ALTUDE	0.13500000E 06	LONG	0.23878720E 03	GEDLAT	0.34703573E 02
				TURN	-0.31159655E 02
RVEC	0.21038033E 08	INCL	0.34894262E 02	GECLAT	0.34523708E 02
VEL(R)	0.63222814E 04	GAM(R)	-0.17449529E 01	HEAD R	0.83498363E 02
VEL(I)	0.75789647E 04	GAM(I)	-0.14555503E 01	HEAD I	0.84580733E 02
ROLL V	0.	ALPHA	0.37999998E 02	BETA	-0.
CL	0.38337743E 00	LIFT	0.11354264E 05	L/W	0.91996957E 00
CD	0.37892076E 00	DRAG	0.11222274E 05	D/W	0.90927517E 00
WEIGHT	0.12342000E 05	L/D	0.10117615E 01	N TOT	0.12934935E 01
MACHNO	0.59129936E 01	DYNPRS	0.13221613E 03	REYNLD	0.29934088E 07
SPEDOT	-0.28300145E 02	GAMDOT	0.48707877E-02	HEADOT	0.17422581E-01
Q.CONV	0.10974946E 02	Q.RAD	0.	Q.C+R	0.10974946E 02
Q CONV	0.10747466E 06	Q RAD	0.61887267E 01	Q C+R	0.10748084E 06

TPROB	0.22200000E 04	TPHASE	0.10834135E 03	METRIC	0.60000000E 01
ALTUDE	0.14470377E 05	LONG	0.42170878E 01	GEDLAT	0.60932941E 00
				TURN	0.22753781E 00
RVEC	0.63856422E 07	INCL	0.60651768E 00	GECLAT	0.60618159E 00
VEL(R)	0.28679017E 03	GAM(R)	-0.32245027E 00	HEAD R	0.15188316E 01
VEL(I)	0.66075819E 03	GAM(I)	-0.13797842E 00	HEAD I	0.15492072E 01
ROLL V	0.	ALPHA	0.26179937E 00	BETA	-0.
CL	0.23981439E 00	LIFT	0.43434921E 05	L/W	0.79116504E 00
CD	0.16107234E 00	DRAG	0.29173246E 05	D/W	0.53138930E 00
WEIGHT	0.54900026E 05	L/D	0.14888614E 01	N TOT	0.95305651E 00
MACHNO	0.97196441E 00	DYNPRS	0.87033381E 04	REYNLD	0.32520617E 08
SPEDOT	-0.21221039E 01	GAMDOT	-0.50398113E-02	HEADOT	0.22746564E-03
Q.CONV	0.24147530E 04	Q.RAD	0.	Q.C+R	0.24147530E 04
Q CONV	0.12295428E 10	Q RAD	0.70235432E 05	Q C+R	0.12296130E 10

TPROB	0.22200000E 04	TPHASE	0.10834135E 03	ENGL.	0.60000000E 01
ALTUDE	0.47474990E 05	LONG	0.24162134E 03	GEDLAT	0.34912003E 02
				TURN	0.13036956E 02
RVEC	0.20950270E 08	INCL	0.34750903E 02	GECLAT	0.34731646E 02
VEL(R)	0.94091262E 03	GAM(R)	-0.18475040E 02	HEAD R	0.87022642E 02
VEL(I)	0.21678418E 04	GAM(I)	-0.79055812E 01	HEAD I	0.88763034E 02
ROLL V	0.	ALPHA	0.14999998E 02	BETA	-0.
CL	0.23981439E 00	LIFT	0.97645588E 04	L/W	0.79116504E 00
CD	0.16107234E 00	DRAG	0.65584067E 04	D/W	0.53138930E 00
WEIGHT	0.12342000E 05	L/D	0.14888614E 01	N TOT	0.95305651E 00
MACHNO	0.97196441E 00	DYNPRS	0.18177300E 03	REYNLD	0.32520617E 08
SPEDOT	-0.69622832E 01	GAMDOT	-0.28875991E 00	HEADOT	0.13032821E-01
Q.CONV	0.21277361E 00	Q.RAD	0.	Q.C+R	0.21277361E 00
Q CONV	0.10833997E 06	Q RAD	0.61887267E 01	Q C+R	0.10834615E 06

DECLASSIFIED

DECLASSIFIED

TABLE 6. --Concluded

TYPICAL DIGITAL OUTPUT, ENTRY CONDITION D

TPROB	0.23399999E 04	TPHASE	0.28828067E 02	METRIC	0.70000000E 01
ALTUDE	0.32557728E 04	LONG	0.42217636E 01	GEDLAT	0.60947707E 00
				TURN	-0.10084340E 00
RVEC	0.63744246E 07	INCL	0.60635675E 00	GECLAT	0.60632891E 00
VEL(R)	0.19448969E 03	GAM(R)	-0.56060877E 00	HEAD R	0.15501749E 01
VEL(I)	0.55636214E 03	GAM(I)	-0.18695630E 00	HEAD I	0.15645831E 01
ROLL V	0.	ALPHA	0.20943949E 00	BETA	-0.
CL	0.13954206E 00	LIFT	0.48637559E 05	L/W	0.88593083E 00
CD	0.87459599E-01	DRAG	0.30484152E 05	D/W	0.55526738E 00
WEIGHT	0.54900026E 05	L/D	0.15955031E 01	N TOT	0.10455598E 01
MACHNO	0.59375828E 00	DYNPRS	0.16748993E 05	REYNLD	0.77840573E 08
SPEDOT	-0.24197716E 00	GAMDOT	0.21950513E-02	HEADOT	0.28955317E-03
Q.CONV	0.14493927E 04	Q.RAD	0.	Q.C+R	0.14493927E 04
Q CONV	0.12297447E 10	Q RAD	0.70235432E 05	Q C+R	0.12298149E 10

TPROB	0.23399999E 04	TPHASE	0.28828067E 02	ENGL.	0.70000000E 01
ALTUDE	0.10681669E 05	LONG	0.24188924E 03	GEDLAT	0.34920464E 02
				TURN	-0.57779012E 01
RVEC	0.20913466E 08	INCL	0.34741683E 02	GECLAT	0.34740088E 02
VEL(R)	0.63808955E 03	GAM(R)	-0.32120517E 02	HEAD R	0.88818479E 02
VEL(I)	0.18253351E 04	GAM(I)	-0.10711808E 02	HEAD I	0.89644012E 02
ROLL V	0.	ALPHA	0.11999999E 02	BETA	-0.
CL	0.13954206E 00	LIFT	0.10934158E 05	L/W	0.88593083E 00
CD	0.87459599E-01	DRAG	0.68531100E 04	D/W	0.55526738E 00
WEIGHT	0.12342000E 05	L/D	0.15955031E 01	N TOT	0.10455598E 01
MACHNO	0.59375828E 00	DYNPRS	0.34980999E 03	REYNLD	0.77840573E 08
SPEDOT	-0.79388834E 00	GAMDOT	0.12576717E 00	HEADOT	0.16590175E-01
Q.CONV	0.12771182E 00	Q.RAD	0.	Q.C+R	0.12771182E 00
Q CONV	0.10835775E 06	Q RAD	0.61887267E 01	Q C+R	0.10836394E 06

TPROB	0.23787777E 04	TPHASE	0.67605760E 02	METRIC	0.70000000E 01
ALTUDE	0.58135986E-06	LONG	0.42229768E 01	GEDLAT	0.60949209E 00
				TURN	-0.28780213E 00
RVEC	0.63711686E 07	INCL	0.60634947E 00	GECLAT	0.60634390E 00
VEL(R)	0.17097016E 03	GAM(R)	-0.34971184E 00	HEAD R	0.15614189E 01
VEL(I)	0.54554396E 03	GAM(I)	-0.10758467E 00	HEAD I	0.15680193E 01
ROLL V	0.	ALPHA	0.20943949E 00	BETA	-0.
CL	0.14776434E 00	LIFT	0.55055326E 05	L/W	0.10028301E 01
CD	0.60779965E-01	DRAG	0.22645928E 05	D/W	0.41249451E 00
WEIGHT	0.54900026E 05	L/D	0.24311357E 01	N TOT	0.10843523E 01
MACHNO	0.50243393E 00	DYNPRS	0.17904069E 05	REYNLD	0.89159648E 08
SPEDOT	-0.68865903E 00	GAMDOT	0.38303374E-02	HEADOT	0.29292461E-03
Q.CONV	0.11349301E 04	Q.RAD	0.	Q.C+R	0.11349301E 04
Q CONV	0.12297968E 10	Q RAD	0.70235432E 05	Q C+R	0.12298671E 10

TPROB	0.23787777E 04	TPHASE	0.67605760E 02	ENGL.	0.70000000E 01
ALTUDE	0.19073486E-05	LONG	0.24195875E 03	GEDLAT	0.34921324E 02
				TURN	-0.16489847E 02
RVEC	0.20902784E 08	INCL	0.34741265E 02	GECLAT	0.34740946E 02
VEL(R)	0.56092573E 03	GAM(R)	-0.20037013E 02	HEAD R	0.89462711E 02
VEL(I)	0.17898424E 04	GAM(I)	-0.61641476E 01	HEAD I	0.89840892E 02
ROLL V	0.	ALPHA	0.11999999E 02	BETA	-0.
CL	0.14776434E 00	LIFT	0.12376929E 05	L/W	0.10028301E 01
CD	0.60779965E-01	DRAG	0.50910072E 04	D/W	0.41249451E 00
WEIGHT	0.12342000E 05	L/D	0.24311357E 01	N TOT	0.10843523E 01
MACHNO	0.50243393E 00	DYNPRS	0.37393426E 03	REYNLD	0.89159648E 08
SPEDOT	-0.22593800E 01	GAMDOT	0.21946216E 00	HEADOT	0.16783344E-01
Q.CONV	0.10000326E 00	Q.RAD	0.	Q.C+R	0.10000326E 00
Q CONV	0.10836235E 06	Q RAD	0.61887267E 01	Q C+R	0.10836854E 06

DECLASSIFIED

TABLE 7

TYPICAL DIGITAL OUTPUT, ENTRY CONDITION G

```
TPROB  0.                  TPHASE 0.                  METRIC 0.10000000E 01
ALTUDE 0.12192000E 06      LONG   0.33824480E 01     GEDLAT-0.10398671E 00
                                                      TURN   0.24137795E-02
RVEC   0.64998266E 07      INCL   0.54181908E 00     GECLAT-0.10329573E 00
VEL(R) 0.74800211E 04      GAM(R)-0.27587652E-01      HEAD R 0.10059122E 01
VEL(I) 0.78821276E 04      GAM(I)-0.26179938E-01      HEAD I 0.10379473E 01
ROLL V-0.11344640E 01      ALPHA  0.45378558E 00     BETA  -0.
CL     0.98799998E-01      LIFT   0.69661026E 00     L/W    0.12688723E-04
CD     0.66149995E 00      DRAG   0.46640453E 01     D/W    0.84955363E-04
WEIGHT 0.54900026E 05      L/D    0.14935752E 00     N TOT  0.85897715E-04
MACHNO 0.16392344E 02      DYNPRS 0.33880904E 00     REYNLD 0.25224132E 02
SPEDOT 0.26238423E 00      GAMDOT 0.14722909E-04     HEADOT-0.11437901E-03
Q.CONV 0.17189307E 05      Q.RAD  0.                 Q.C+R  0.17189307E 05
Q CONV 0.                  Q RAD  0.                 Q C+R  0.
                                                                   ------
TPROB  0.                  TPHASE 0.                  ENGL.  0.10000000E 01
ALTUDE 0.40000000E 06      LONG   0.19379999E 02     GEDLAT-0.59579997E 01
                                                      TURN   0.13829938E 00
RVEC   0.21324890E 08      INCL   0.31043946E 02     GECLAT-0.59184096E 01
VEL(R) 0.24540752E 05      GAM(R)-0.15806561E 01      HEAD R 0.57634525E 02
VEL(I) 0.25859999E 05      GAM(I)-0.14999999E 01      HEAD I 0.59470001E 02
ROLL V-0.64999999E 02      ALPHA  0.25999999E 02     BETA  -0.
CL     0.98799998E-01      LIFT   0.15660422E 00     L/W    0.12688723E-04
CD     0.66149995E 00      DRAG   0.10485191E 01     D/W    0.84955363E-04
WEIGHT 0.12342000E 05      L/D    0.14935752E 00     N TOT  0.85897715E-04
MACHNO 0.16392344E 02      DYNPRS 0.70761741E-02     REYNLD 0.25224132E 02
SPEDOT 0.86084066E 00      GAMDOT 0.84356056E-03     HEADOT-0.65534347E-02
Q.CONV 0.15146190E 01      Q.RAD  0.                 Q.C+R  0.15146190E 01
Q CONV 0.                  Q RAD  0.                 Q C+R  0.
-----------------------------------------------------------------------------
-----------------------------------------------------------------------------
TPROB  0.38230484E 03      TPHASE 0.38230484E 03     METRIC 0.10000000E 01
ALTUDE 0.63563604E 05      LONG   0.37512634E 01     GEDLAT 0.13854969E 00
                                                      TURN  -0.25186946E 01
RVEC   0.64412942E 07      INCL   0.60042771E 00     GECLAT 0.13763415E 00
VEL(R) 0.70435718E 04      GAM(R)-0.45474735E-12      HEAD R 0.94789827E 00
VEL(I) 0.74264176E 04      GAM(I)-0.43130427E-12      HEAD I 0.98445588E 00
ROLL V-0.11344640E 01      ALPHA  0.45378558E 00     BETA  -0.
CL     0.23799931E 00      LIFT   0.28388029E 05     L/W    0.51708660E 00
CD     0.22484957E 00      DRAG   0.26819557E 05     D/W    0.48851696E 00
WEIGHT 0.54900026E 05      L/D    0.10584824E 01     N TOT  0.71135601E 00
MACHNO 0.22778254E 02      DYNPRS 0.57316754E 04     REYNLD 0.80695770E 06
SPEDOT-0.47958487E 01      GAMDOT 0.15386736E-03     HEADOT-0.50843757E-03
Q.CONV 0.19368577E 07      Q.RAD  0.17201913E 04     Q.C+R  0.19385779E 07
Q CONV 0.30010036E 09      Q RAD  0.13961391E 06     Q C+R  0.30023997E 09
                                                                   ------
TPROB  0.38230484E 03      TPHASE 0.38230484E 03     ENGL.  0.10000000E 01
ALTUDE 0.20854201E 06      LONG   0.21493156E 03     GEDLAT 0.79383125E 01
                                                      TURN  -0.14431057E 03
RVEC   0.21132855E 08      INCL   0.34401973E 02     GECLAT 0.78858550E 01
VEL(R) 0.23108831E 05      GAM(R)-0.26055104E-10      HEAD R 0.54310570E 02
VEL(I) 0.24364887E 05      GAM(I)-0.24711914E-10      HEAD I 0.56405167E 02
ROLL V-0.64999999E 02      ALPHA  0.25999999E 02     BETA  -0.
CL     0.23799931E 00      LIFT   0.63818828E 04     L/W    0.51708660E 00
CD     0.22484957E 00      DRAG   0.60292762E 04     D/W    0.48851696E 00
WEIGHT 0.12342000E 05      L/D    0.10584824E 01     N TOT  0.71135601E 00
MACHNO 0.22778254E 02      DYNPRS 0.11970854E 03     REYNLD 0.80695770E 06
SPEDOT-0.15734412E 02      GAMDOT 0.88159504E-02     HEADOT-0.29131327E-01
Q.CONV 0.17066433E 03      Q.RAD  0.15157298E 00     Q.C+R  0.17081590E 03
Q CONV 0.26443051E 05      Q RAD  0.12301944E 02     Q C+R  0.26455353E 05
-----------------------------------------------------------------------------
```

DECLASSIFIED

TABLE 7. --Continued

TYPICAL DIGITAL OUTPUT, ENTRY CONDITION G

TPROB	0.50494984E 03	TPHASE	0.12064500E 03	METRIC	0.30000000E 01
ALTUDE	0.66692404E 05	LONG	0.38560208E 01	GEDLAT	0.21699316E 00
				TURN	-0.24763116E 01
RVEC	0.64438444E 07	INCL	0.65593272E 00	GECLAT	0.21558566E 00
VEL(R)	0.65818716E 04	GAM(R)	0.18189894E-11	HEAD R	0.90551525E 00
VEL(I)	0.69487778E 04	GAM(I)	0.17229440E-11	HEAD I	0.94630224E 00
ROLL V	-0.11344640E 01	ALPHA	0.45378558E 00	BETA	-0.
CL	0.23719725E 00	LIFT	0.16664685E 05	L/W	0.30354645E 00
CD	0.22736554E 00	DRAG	0.15973942E 05	D/W	0.29096459E 00
WEIGHT	0.54900026E 05	L/D	0.10432419E 01	N TOT	0.42047691E 00
MACHNO	0.21930355E 02	DYNPRS	0.33760549E 04	REYNLD	0.53428937E 06
SPEDOT	-0.28617428E 01	GAMDOT	-0.13085967E-03	HEADOT	-0.20109836E-03
Q.CONV	0.12856683E 07	Q.RAD	0.11283292E 03	Q.C+R	0.12857811E 07
Q CONV	0.49348633E 09	Q RAD	0.23484957E 06	Q C+R	0.49372118E 09

TPROB	0.50494984E 03	TPHASE	0.12064500E 03	ENGL.	0.30000000E 01
ALTUDE	0.21880710E 06	LONG	0.22093372E 03	GEDLAT	0.12432792E 02
				TURN	-0.14188220E 03
RVEC	0.21141221E 08	INCL	0.37582176E 02	GECLAT	0.12352148E 02
VEL(R)	0.21594067E 05	GAM(R)	0.10422042E-09	HEAD R	0.51882202E 02
VEL(I)	0.22797827E 05	GAM(I)	0.98717418E-10	HEAD I	0.54219125E 02
ROLL V	-0.64999999E 02	ALPHA	0.25999999E 02	BETA	-0.
CL	0.23719725E 00	LIFT	0.37463702E 04	L/W	0.30354645E 00
CD	0.22736554E 00	DRAG	0.35910850E 04	D/W	0.29096459E 00
WEIGHT	0.12342000E 05	L/D	0.10432419E 01	N TOT	0.42047691E 00
MACHNO	0.21930355E 02	DYNPRS	0.70510375E 02	REYNLD	0.53428937E 06
SPEDOT	-0.93889201E 01	GAMDOT	-0.74977066E-02	HEADOT	-0.11522087E-01
Q.CONV	0.11328541E 03	Q.RAD	0.99421634E-02	Q.C+R	0.11329535E 03
Q CONV	0.43483067E 05	Q RAD	0.20693541E 02	Q C+R	0.43503761E 05

TPROB	0.61999999E 03	TPHASE	0.11505016E 03	METRIC	0.40000000E 01
ALTUDE	0.70006177E 05	LONG	0.39474785E 01	GEDLAT	0.28812942E 00
				TURN	-0.24641122E 01
RVEC	0.64464281E 07	INCL	0.68754388E 00	GECLAT	0.28630509E 00
VEL(R)	0.61619170E 04	GAM(R)	-0.73215149E-03	HEAD R	0.89331594E 00
VEL(I)	0.65194040E 04	GAM(I)	-0.69200446E-03	HEAD I	0.93668739E 00
ROLL V	-0.69813170E 00	ALPHA	0.66322508E 00	BETA	-0.
CL	0.35690043E 00	LIFT	0.14099297E 05	L/W	0.25681802E 00
CD	0.38422984E 00	DRAG	0.15178941E 05	D/W	0.27648368E 00
WEIGHT	0.54900026E 05	L/D	0.92887224E 00	N TOT	0.37735756E 00
MACHNO	0.21234069E 02	DYNPRS	0.18983332E 04	REYNLD	0.33951502E 06
SPEDOT	-0.27153654E 01	GAMDOT	-0.17540783E-03	HEADOT	0.18715554E-08
Q.CONV	0.83718670E 06	Q.RAD	0.	Q.C+R	0.83718670E 06
Q CONV	0.61230963E 09	Q RAD	0.23620019E 06	Q C+R	0.61254583E 09

TPROB	0.61999999E 03	TPHASE	0.11505016E 03	ENGL.	0.40000000E 01
ALTUDE	0.22967906E 06	LONG	0.22617386E 03	GEDLAT	0.16508599E 02
				TURN	-0.14118323E 03
RVEC	0.21149699E 08	INCL	0.39393362E 02	GECLAT	0.16404073E 02
VEL(R)	0.20216264E 05	GAM(R)	-0.41949190E-01	HEAD R	0.51183233E 02
VEL(I)	0.21389121E 05	GAM(I)	-0.39648935E-01	HEAD I	0.53668234E 02
ROLL V	-0.39999999E 02	ALPHA	0.37999998E 02	BETA	-0.
CL	0.35690043E 00	LIFT	0.31696480E 04	L/W	0.25681802E 00
CD	0.38422984E 00	DRAG	0.34123617E 04	D/W	0.27648368E 00
WEIGHT	0.12342000E 05	L/D	0.92887224E 00	N TOT	0.37735756E 00
MACHNO	0.21234069E 02	DYNPRS	0.39647513E 02	REYNLD	0.33951502E 06
SPEDOT	-0.89086792E 01	GAMDOT	-0.10050128E-01	HEADOT	0.10723222E-06
Q.CONV	0.73767890E 02	Q.RAD	0.	Q.C+R	0.73767890E 02
Q CONV	0.53953067E 05	Q RAD	0.20812551E 02	Q C+R	0.53973879E 05

DECLASSIFIED

TABLE 7. --Continued

TYPICAL DIGITAL OUTPUT, ENTRY CONDITION G

```
TPROB   0.97999999E 03    TPHASE 0.47505016E 03    METRIC 0.40000000E 01
ALTUDE  0.53086692E 05    LONG   0.41860848E 01    GEDLAT 0.48335414E 00
                                                   TURN  -0.23107527E 01
RVEC    0.64266343E 07    INCL   0.87297665E 00    GECLAT 0.48059612E 00
VEL(R)  0.40635329E 04    GAM(R)-0.22432034E-01    HEAD R 0.73995638E 00
VEL(I)  0.43544812E 04    GAM(I)-0.20932992E-01    HEAD I 0.81050554E 00
ROLL V-0.69813170E 00     ALPHA  0.66322508E 00    BETA  -0.
CL      0.36317182E 00    LIFT   0.46806684E 05    L/W    0.85258153E 00
CD      0.36892744E 00    DRAG   0.47548487E 05    D/W    0.86609343E 00
WEIGHT  0.54900026E 05    L/D    0.98439902E 00    N TOT  0.12153243E 01
MACHNO  0.12057218E 02    DYNPRS 0.61932382E 04    REYNLD 0.13172526E 07
SPEDOT-0.82971548E 01     GAMDOT-0.73758059E-04    HEADOT-0.10266954E-02
Q.CONV  0.61481674E 06    Q.RAD  0.12990742E 03    Q.C+R  0.61494665E 06
Q CONV  0.92380209E 09    Q RAD  0.29696428E 06    Q C+R  0.92409904E 09
                                                                  ------
TPROB   0.97999999E 03    TPHASE 0.47505016E 03    ENGL.  0.40000000E 01
ALTUDE  0.17416894E 06    LONG   0.23984499E 03    GEDLAT 0.27694152E 02
                                                   TURN  -0.13239638E 03
RVEC    0.21084758E 08    INCL   0.50017877E 02    GECLAT 0.27536129E 02
VEL(R)  0.13331801E 05    GAM(R)-0.12852609E 01    HEAD R 0.42396377E 02
VEL(I)  0.14286356E 05    GAM(I)-0.11993721E 01    HEAD I 0.46438547E 02
ROLL V-0.39999999E 02     ALPHA  0.37999998E 02    BETA  -0.
CL      0.36317182E 00    LIFT   0.10522561E 05    L/W    0.85258153E 00
CD      0.36892744E 00    DRAG   0.10689325E 05    D/W    0.86609343E 00
WEIGHT  0.12342000E 05    L/D    0.98439902E 00    N TOT  0.12153243E 01
MACHNO  0.12057218E 02    DYNPRS 0.12934848E 03    REYNLD 0.13172526E 07
SPEDOT-0.27221637E 02     GAMDOT-0.42260254E-02    HEADOT-0.58825316E-01
Q.CONV  0.54173979E 02    Q.RAD  0.11446666E-01    Q.C+R  0.54185425E 02
Q CONV  0.81399921E 05    Q RAD  0.26166719E 02    Q C+R  0.81426087E 05
-----------------------------------------------------------------------
TPROB   0.11743064E 04    TPHASE 0.66935664E 03    METRIC 0.40000000E 01
ALTUDE  0.41148000E 05    LONG   0.42470368E 01    GEDLAT 0.56099136E 00
                                                   TURN  -0.19405631E 01
RVEC    0.64132680E 07    INCL   0.11277778E 01    GECLAT 0.55797080E 00
VEL(R)  0.21510921E 04    GAM(R)-0.41290349E-01    HEAD R 0.36976683E 00
VEL(I)  0.23239856E 04    GAM(I)-0.38216984E-01    HEAD I 0.52973878E 00
ROLL V-0.69813170E 00     ALPHA  0.66322508E 00    BETA  -0.
CL      0.36924848E 00    LIFT   0.60614713E 05    L/W    0.11040941E 01
CD      0.36743577E 00    DRAG   0.60317143E 05    D/W    0.10986739E 01
WEIGHT  0.54900026E 05    L/D    0.10049334E 01    N TOT  0.15575969E 01
MACHNO  0.66005121E 01    DYNPRS 0.78882630E 04    REYNLD 0.33414599E 07
SPEDOT-0.10402461E 02     GAMDOT-0.25597956E-03    HEADOT-0.30757083E-02
Q.CONV  0.17616799E 06    Q.RAD  0.                Q.C+R  0.17616799E 06
Q CONV  0.99992903E 09    Q RAD  0.30164711E 06    Q C+R  0.10002306E 10
                                                                  ------
TPROB   0.11743064E 04    TPHASE 0.66935664E 03    ENGL.  0.40000000E 01
ALTUDE  0.13500000E 06    LONG   0.24333729E 03    GEDLAT 0.32142438E 02
                                                   TURN  -0.11118607E 03
RVEC    0.21040906E 08    INCL   0.64616909E 02    GECLAT 0.31969372E 02
VEL(R)  0.70573888E 04    GAM(R)-0.23657627E 01    HEAD R 0.21186079E 02
VEL(I)  0.76246250E 04    GAM(I)-0.21896719E 01    HEAD I 0.30351796E 02
ROLL V-0.39999999E 02     ALPHA  0.37999998E 02    BETA  -0.
CL      0.36924848E 00    LIFT   0.13626729E 05    L/W    0.11040941E 01
CD      0.36743577E 00    DRAG   0.13559833E 05    D/W    0.10986739E 01
WEIGHT  0.12342000E 05    L/D    0.10049334E 01    N TOT  0.15575969E 01
MACHNO  0.66005121E 01    DYNPRS 0.16474980E 03    REYNLD 0.33414599E 07
SPEDOT-0.34128809E 02     GAMDOT-0.14666548E-01    HEADOT-0.17622510E 00
Q.CONV  0.15522871E 02    Q.RAD  0.                Q.C+R  0.15522871E 02
Q CONV  0.88107772E 05    Q RAD  0.26579341E 02    Q C+R  0.88134352E 05
-----------------------------------------------------------------------
```

DECLASSIFIED

TABLE 7. --Continued

TYPICAL DIGITAL OUTPUT, ENTRY CONDITION G

TPROB	0.13186453E 04	TPHASE	0.	METRIC	0.60000000E 01
ALTUDE	0.28769628E 05	LONG	0.42510312E 01	GEDLAT	0.59167718E 00
				TURN	-0.11543800E 01
RVEC	0.64002923E 07	INCL	0.14474354E 01	GECLAT	0.58857249E 00
VEL(R)	0.72578097E 03	GAM(R)	-0.15441053E 00	HEAD R	-0.41641627E 00
VEL(I)	0.67248775E 03	GAM(I)	-0.16675759E 00	HEAD I	0.14848690E 00
ROLL V	0.	ALPHA	0.26179937E 00	BETA	-0.
CL	0.20866544E 00	LIFT	0.24887835E 05	L/W	0.45333073E 00
CD	0.17436332E 00	DRAG	0.20796570E 05	D/W	0.37880855E 00
WEIGHT	0.54900026E 05	L/D	0.11967278E 01	N TOT	0.59076617E 00
MACHNO	0.24000152E 01	DYNPRS	0.57313726E 04	REYNLD	0.81231336E 07
SPEDOT	-0.22490376E 01	GAMDOT	-0.70345616E-02	HEADOT	0.50947571E-04
Q.CONV	0.14477565E 05	Q.RAD	0.	Q.C+R	0.14477565E 05
Q CONV	0.10108831E 10	Q RAD	0.30164711E 06	Q C+R	0.10111848E 10

TPROB	0.13186453E 04	TPHASE	0.	ENGL.	0.60000000E 01
ALTUDE	0.94388545E 05	LONG	0.24356614E 03	GEDLAT	0.33900605E 02
				TURN	-0.66141105E 02
RVEC	0.20998335E 08	INCL	0.82931939E 02	GECLAT	0.33722720E 02
VEL(R)	0.23811712E 04	GAM(R)	-0.88470714E 01	HEAD R	-0.23858895E 02
VEL(I)	0.22063247E 04	GAM(I)	-0.95545064E 01	HEAD I	0.85076731E 01
ROLL V	0.	ALPHA	0.14999998E 02	BETA	-0.
CL	0.20866544E 00	LIFT	0.55950079E 04	L/W	0.45333073E 00
CD	0.17436332E 00	DRAG	0.46752551E 04	D/W	0.37880855E 00
WEIGHT	0.12342000E 05	L/D	0.11967278E 01	N TOT	0.59076617E 00
MACHNO	0.24000152E 01	DYNPRS	0.11970221E 03	REYNLD	0.81231336E 07
SPEDOT	-0.73787326E 01	GAMDOT	-0.40305069E 00	HEADOT	0.29190808E-02
Q.CONV	0.12756765E 01	Q.RAD	0.	Q.C+R	0.12756765E 01
Q CONV	0.89072980E 05	Q RAD	0.26579341E 02	Q C+R	0.89099559E 05

TPROB	0.14400000E 04	TPHASE	0.12135463E 03	METRIC	0.60000000E 01
ALTUDE	0.12448607E 05	LONG	0.42467483E 01	GEDLAT	0.59979926E 00
				TURN	-0.11623933E 01
RVEC	0.63838105E 07	INCL	0.85165269E 00	GECLAT	0.59667425E 00
VEL(R)	0.26549435E 03	GAM(R)	-0.44309646E 00	HEAD R	-0.40840301E 00
VEL(I)	0.38132598E 03	GAM(I)	-0.30312601E 00	HEAD I	0.92122193E 00
ROLL V	0.	ALPHA	0.26179937E 00	BETA	-0.
CL	0.19505713E 00	LIFT	0.41589207E 05	L/W	0.75754543E 00
CD	0.13013373E 00	DRAG	0.27746529E 05	D/W	0.50540172E 00
WEIGHT	0.54900026E 05	L/D	0.14988976E 01	N TOT	0.91066238E 00
MACHNO	0.89979051E 00	DYNPRS	0.10245581E 05	REYNLD	0.41354496E 08
SPEDOT	-0.79776260E 00	GAMDOT	-0.52801108E-02	HEADOT	0.73833798E-04
Q.CONV	0.22185025E 04	Q.RAD	0.	Q.C+R	0.22185025E 04
Q CONV	0.10119590E 10	Q RAD	0.30164711E 06	Q C+R	0.10122606E 10

TPROB	0.14400000E 04	TPHASE	0.12135463E 03	ENGL.	0.60000000E 01
ALTUDE	0.40841887E 05	LONG	0.24332075E 03	GEDLAT	0.34365966E 02
				TURN	-0.66600231E 02
RVEC	0.20944260E 08	INCL	0.48796104E 02	GECLAT	0.34186916E 02
VEL(R)	0.87104449E 03	GAM(R)	-0.25387557E 02	HEAD R	-0.23399769E 02
VEL(I)	0.12510695E 04	GAM(I)	-0.17367842E 02	HEAD I	0.52782129E 02
ROLL V	0.	ALPHA	0.14999998E 02	BETA	-0.
CL	0.19505713E 00	LIFT	0.93496257E 04	L/W	0.75754543E 00
CD	0.13013373E 00	DRAG	0.62376680E 04	D/W	0.50540172E 00
WEIGHT	0.12342000E 05	L/D	0.14988976E 01	N TOT	0.91066238E 00
MACHNO	0.89979051E 00	DYNPRS	0.21398552E 03	REYNLD	0.41354496E 08
SPEDOT	-0.26173313E 01	GAMDOT	-0.30252806E 00	HEADOT	0.42303650E-02
Q.CONV	0.19548119E 00	Q.RAD	0.	Q.C+R	0.19548119E 00
Q CONV	0.89167779E 05	Q RAD	0.26579341E 02	Q C+R	0.89194358E 05

DECLASSIFIED

TYPICAL DIGITAL OUTPUT, ENTRY CONDITION G

```
TPROB  0.15114862E 04    TPHASE 0.                  METRIC 0.70000000E 01
ALTUDE 0.59999272E 04    LONG   0.42456471E 01     GEDLAT 0.60192098E 00
                                                    TURN  -0.11668829E 01
RVEC   0.63773196E 07    INCL   0.74391917E 00     GECLAT 0.59879080E 00
VEL(R) 0.18986541E 03    GAM(R)-0.39906828E 00     HEAD R-0.40391342E 00
VEL(I) 0.36163897E 03    GAM(I)-0.20544142E 00     HEAD I 0.10991124E 01
ROLL V 0.                ALPHA  0.20943949E 00     BETA  -0.
CL     0.13897759E 00    LIFT   0.34411598E 05     L/W    0.62680563E 00
CD     0.89293703E-01    DRAG   0.22109601E 05     D/W    0.40272533E 00
WEIGHT 0.54900026E 05    L/D    0.15564097E 01     N TOT  0.74503220E 00
MACHNO 0.59999786E 00    DYNPRS 0.11898223E 05     REYNLD 0.59858195E 08
SPEDOT-0.17583113E 00    GAMDOT-0.15157479E-01     HEADOT 0.52797406E-04
Q.CONV 0.11608447E 04    Q.RAD  0.                 Q.C+R  0.11608447E 04
Q CONV 0.10120788E 10    Q RAD  0.30164711E 06     Q C+R  0.10123804E 10
                                                                  ------
TPROB  0.15114862E 04    TPHASE 0.                  ENGL.  0.70000000E 01
ALTUDE 0.19684801E 05    LONG   0.24325766E 03     GEDLAT 0.34487532E 02
                                                    TURN  -0.66857465E 02
RVEC   0.20922964E 08    INCL   0.42623429E 02     GECLAT 0.34308186E 02
VEL(R) 0.62291801E 03    GAM(R)-0.22864928E 02     HEAD R-0.23142534E 02
VEL(I) 0.11864796E 04    GAM(I)-0.11770926E 02     HEAD I 0.62974499E 02
ROLL V 0.                ALPHA  0.11999999E 02     BETA  -0.
CL     0.13897759E 00    LIFT   0.77360350E 04     L/W    0.62680563E 00
CD     0.89293703E-01    DRAG   0.49704360E 04     D/W    0.40272533E 00
WEIGHT 0.12342000E 05    L/D    0.15564097E 01     N TOT  0.74503220E 00
MACHNO 0.59999786E 00    DYNPRS 0.24849957E 03     REYNLD 0.59858195E 08
SPEDOT-0.57687380E 00    GAMDOT-0.86845955E 00     HEADOT 0.30250685E-02
Q.CONV 0.10228670E 00    Q.RAD  0.                 Q.C+R  0.10228670E 00
Q CONV 0.89178341E 05    Q RAD  0.26579341E 02     Q C+R  0.89204920E 05
-----------------------------------------------------------------------
                                                                  ------
TPROB  0.15784703E 04    TPHASE 0.66984122E 02     METRIC 0.70000000E 01
ALTUDE-0.                LONG   0.42448264E 01     GEDLAT 0.60351968E 00
                                                    TURN  -0.11711168E 01
RVEC   0.63712879E 07    INCL   0.72370352E 00     GECLAT 0.60038563E 00
VEL(R) 0.17176366E 03    GAM(R)-0.36345342E 00     HEAD R-0.39967951E 00
VEL(I) 0.35855839E 03    GAM(I)-0.17113469E 00     HEAD I 0.11389241E 01
ROLL V 0.                ALPHA  0.20943949E 00     BETA  -0.
CL     0.14755446E 00    LIFT   0.55488628E 05     L/W    0.10107227E 01
CD     0.61460913E-01    DRAG   0.23112698E 05     D/W    0.42099669E 00
WEIGHT 0.54900026E 05    L/D    0.24007855E 01     N TOT  0.10948966E 01
MACHNO 0.50476581E 00    DYNPRS 0.18070646E 05     REYNLD 0.89573455E 08
SPEDOT-0.67213089E 00    GAMDOT 0.43145010E-02     HEADOT 0.43464208E-04
Q.CONV 0.11516392E 04    Q.RAD  0.                 Q.C+R  0.11516392E 04
Q CONV 0.10121682E 10    Q RAD  0.30164711E 06     Q C+R  0.10124698E 10
                                                                  ------
TPROB  0.15784703E 04    TPHASE 0.66984122E 02     ENGL.  0.70000000E 01
ALTUDE-0.                LONG   0.24321064E 03     GEDLAT 0.34579130E 02
                                                    TURN  -0.67100051E 02
RVEC   0.20903176E 08    INCL   0.41465157E 02     GECLAT 0.34399562E 02
VEL(R) 0.56352908E 03    GAM(R)-0.20824347E 02     HEAD R-0.22899949E 02
VEL(I) 0.11763726E 04    GAM(I)-0.98052955E 01     HEAD I 0.65255545E 02
ROLL V 0.                ALPHA  0.11999999E 02     BETA  -0.
CL     0.14755446E 00    LIFT   0.12474340E 05     L/W    0.10107227E 01
CD     0.61460913E-01    DRAG   0.51959411E 04     D/W    0.42099669E 00
WEIGHT 0.12342000E 05    L/D    0.24007855E 01     N TOT  0.10948966E 01
MACHNO 0.50476581E 00    DYNPRS 0.37741330E 03     REYNLD 0.89573455E 08
SPEDOT-0.22051539E 01    GAMDOT 0.24720269E 00     HEADOT 0.24903157E-02
Q.CONV 0.10147557E 00    Q.RAD  0.                 Q.C+R  0.10147557E 00
Q CONV 0.89186213E 05    Q RAD  0.26579341E 02     Q C+R  0.89212792E 05
-----------------------------------------------------------------------
```

DECLASSIFIED

Figure 24 (entry condition K) shows a typical supercircular entry condition. This condition is an inertial entry velocity of 30 000 fps (9.14 km/sec), and an inertial entry angle of -6°. The control laws used in the simulation of this condition differ from those described for the previous entry condition. The difference is in the use of bank angle modulation, starting at the bottom of the first skip, to maintain a constant altitude while decelerating to an equilibrium flight condition. A principal experiment associated with the supercircular velocity entry condition is to measure and to determine the effects of high heat transfer rates, both radiative and convective. For this reason, the supercircular entries will be flown near $L/D_{max.}$.

3. Landing

In a typical return from orbit, the D/3 will be flying toward the landing site at an altitude of 80 000 feet (24.4 km) and a relative airspeed of 2200 fps (0.67 km/sec) when it reaches the high-key window in the final landing pattern. Gross heading angle and position adjustments will be made by the entry vehicle at this time.

At the mid-key window, figure 25, the entry vehicle banks to initiate a turn to align with the runway. At the mid-key point, the entry vehicle is about 15 nautical miles (27.8 km) uprange of the runway, and about 3 minutes to touchdown. A load factor of 1.2 g is maintained during the turn, resulting in a turning radius of about 5 nautical miles (9.25 km). The amount of turning required depends upon the preceding orbit conditions.

By the time the low-key window is reached, the entry vehicle is aligned with the runway, approximately 3 nautical miles (5.55 km) uprange of the touchdown point, and at an altitude of about 7000 feet (2.13 km) above the runway.

The final 20 seconds of the landing trajectory before touchdown is shown on figure 26. Twenty seconds before touchdown the D/3 is at an altitude of 3860 feet (1.18 km) and 1.55 nautical miles (2.87 km) uprange of the touchdown point. The relative flight path angle will be -30° and the indicated airspeed will be 331 knots (170 m/sec). FRC pilots have expressed a preference for an indicated airspeed in excess of 300 knots (154 m/sec) at this point in the landing maneuver. The runway altitude at Edwards AFB is 2300 feet (701 m) above sea level. Therefore, the height above the touchdown point is about 1560 feet (475 m) at the start of the final flare.

A 2g pullup is maintained by increasing angle-of-attack as airspeed decreases, until the sink rate is reduced to less than 13 fps (4 m/sec). At this point, the entry vehicle is 151 feet (46 m) above the runway and 0.79 nautical mile (1.47 km) uprange from the touchdown point. The time to touchdown is about 11 seconds.

The landing gears are deployed about 5 seconds before touchdown and are completely extended in 2 seconds. In the last second before touchdown, some leveling off of the vehicle can be expected because of ground effects on the aerodynamic characteristics.

DECLASSIFIED

Touchdown occurs at a velocity of about 226 knots (116 m/sec) at an angle-of-attack of about 20°. Slide-out, using a drag chute is generally completed in 22 seconds after touchdown, covering a runway distance of approximately 2600 feet (793 m) from touchdown.

4. Sequence of Events

A sequence of events relating time to specific occurrences during the basic 3-orbit mission (entry condition C) is tabulated in table 8. Time is shown as hours, minutes and seconds before and after liftoff with the initial event (propellant loading) occurring 10 hours and 50 minutes (39 ksec) before liftoff, and the final event (crew egress) occurring 4 hours, 58 minutes and 30 seconds (17.9 ksec) after liftoff. The sequence of entry vehicle subsystem operations, crew tasks and ground operations is discussed later (pp 72 to 79).

5. Abort

The entry vehicle systems designed for emergency abort situations include two abort motors, two deorbit motors and a complete vehicle parachute recovery system. These systems, when used in conjunction with the launch vehicle malfunction detection system, the entry vehicle guidance and control system, pilot displays, and logic for the guidance computer, provide adequate abort capability beginning on the pad and through orbit insertion. Once in orbit, the abort procedure is identical to a normal deorbit event.

Figure 27 describes the abort techniques. There are four abort modes, each selected to cope with a specific period during the ascent phase. Recovery from any of these abort modes could be accomplished using the complete vehicle recovery chute system or by the conventional horizontal landing approach, if a suitable landing strip can be located within the available maneuver envelope. Horizontal landing on the African continent will, most likely, not be desirable for political reasons. Except for possible horizontal landings in Bermuda and KSC, following a launch abort very early in the launch trajectory, the majority of the abort recoveries can be expected to employ the chute recovery system and a vertical water landing. The maneuver capability of the entry vehicle will be employed predominantly to locate the recovery touchdown point to facilitate crew and entry vehicle pick-up.

During Mode 1, the KSC Range Safety guidelines will not permit the shutdown of the launch vehicle engines until such time that assurances exist that the booster will fall back into the water and not on land. Dynamic pressure during this period is sufficiently low that separation between the entry vehicle and the launch vehicle can be readily attained by firing the abort and deorbit motors sequentially. A pitch and roll maneuver is required during the abort trajectory to avoid aerodynamic stalling (for the off-the-pad abort) and subsequent fall-back into the fireball and overpressure environment. The apogee altitude following a pad abort is in excess of 1500 feet (0.458 km) and provides

TABLE 8

SEQUENCE OF EVENTS, ENTRY CONDITION C

Time	Event	Time	Event
-10:50:20	Propellant loading	3:08:47	Deorbit guidance update-Bermuda
-7:00:00	G&C computer checks	3:36:34	Maximum elevation ∢ Pretoria
-7:00:00	Instrumentation checks	3:40:00	Final research instrumentation calibration
-7:00:00	Communication checks	3:41:00	Rotate entry vehicle for deorbit (-180°)
-6:00:00	EC/LS checks	3:44:00	Start deorbit countdown
-3:00:00	Start ordnance connections and checks	3:44:42	Initiate deorbit thrusting
-2:00:00	Complete all ordnance checks	3:45:00	Pass deorbit ship
-1:50:00	Start leak checks	3:48:00	Rotate entry vehicle for entry attitude
-1:30:00	Insert flight crew in entry vehicle	3:56:43	Maximum elevation ∢ Carnarvon
-1:20:00	Transfer entry vehicle power	4:15:54	Enter atmosphere at 400K ft
-1:10:00	Retire MST (Mobile Service Tower)	4:16:00	Maximum elevation ∢ entry tracking ship
-0:30:00	Complete entry vehicle and launch vehicle checkouts	4:16:00	Start data recorders for experiments pre-communication blackout transmissions
-0:00:00	Liftoff	4:16:34	Enter communication blackout
+0:00:10	End vertical rise, start roll program	4:18:54	280K ft altitude
+0:00:20	End roll program	4:20:54	Pitch entry vehicle from 52° to 26° ∢ attack
+0:00:23	SRM shutdown; Stage I start	4:24:54	Pitch entry vehicle from 26° to 45° ∢ attack
+0:00:33	Jettison SRM's	4:30:00	Maximum elevation ∢ Hawaii
+0:02:00	Start closed loop guidance	4:36:54	200K ft altitude
+0:04:08	Stage I shutdown, Stage II start	4:39:33	Exit communications blackout
+0:04:08	Stage I separation	4:40:33	Pass post-blackout ship
+0:07:40	Stage II shutdown	4:41:33	FRC C-band track acquisition
+0:07:50	Separate Stage II from entry vehicle	4:42:00	High-key window
+0:07:50	Confirm Separation	4:42:33	Begin supersonic flight, Mach 6
+0:08:18	Maximum elevation ∢ Bermuda Station	4:41:54	Overfly U.S. Coast (Pt. Arguello)
+0:19:05	Maximum elevation ∢ Canary Island	4:43:00	Visual contact with FRC area
0:54:49	Maximum elevation ∢ Carnarvon	4:44:54	Pitch entry vehicle 45° to 15° ∢ attack
1:33:51	Maximum elevation ∢ White Sands	4:46:33	Enter transonic flight, Mach 1.2
1:35:08	Maximum elevation ∢ Corpus Christi	4:47:00	Jettison canopy heat shield
1:38:53	Maximum elevation ∢ Cape Kennedy	4:47:36	Exit transonic flight, Mach 0.8
1:42:31	Maximum elevation ∢ Bermuda	4:48:00	Pass mid-key point
1:53:11	Maximum elevation ∢ Canary Island	4:48:30	Pass low-key point
2:21:55	Maximum elevation ∢ Carnarvon	4:48:30	Start final approach
2:23:00	Maximum elevation ∢ Post-Blackout Ship	4:49:00	Initiate flare-out
2:57:11	Maximum elevation ∢ Pt. Arguello	4:49:18	Extend landing gear
2:57:46	Maximum elevation ∢ FRC(Edwards AFB)	4:49:20	Touchdown
2:59:52	Maximum elevation ∢ White Sands	4:49:30	End slide-out
3:01:38	Maximum elevation ∢ Corpus Christi	4:52:30	Crew egress
3:05:30	Maximum elevation ∢ Cape Kennedy		

adequate time for deploying the vehicle recovery chutes and reaching equilibrium descent rates before landing.

During Mode 2, launch vehicle engine shutdown is permitted and is required, especially at the time of maximum launch dynamic pressure. Jettisoning of the adapter and spent solid propellant abort motors is accomplished immediately after burnout. The abort trajectory then proceeds to a horizontal landing at Bermuda or to a vertical parachute landing at a designated offshore recovery area.

The dynamic pressure environment during the Mode 3 and Mode 4 phases of the launch trajectory is practically negligible. The probability of structural failure due to airloads is minimal. Most malfunctions requiring abort during these two modes will, therefore, not have the same urgency as in the first two abort modes. Warning and reaction times for these modes may be such that the crew can delay initiation of abort to a more advantageous time for recovery operations.

Ascent aborts at or near a relative velocity of 23 000 fps (7 km/sec) could result in an African landing which is not desirable. Figure 28 shows how African landings can be avoided by utilizing the existing abort and deorbit motors which provide a velocity change up to 570 fps (174 m/sec).

Retrograde thrust followed by entry at $C_{L_{max.}}$ allows abort to occur at as high as 23 070 fps (7 km/sec) and 448 seconds (t_2) after liftoff. Landings up to this time will occur outside the 3 nautical mile (5.55 km) limit on the west coast of Africa, as shown on the right side of this chart.

For abort above 448 seconds, posigrade thrust with subsequent entry at $L/D_{max.}$ will result in touchdown outside the 3 nautical mile (5.55 km) limit on the east coast of Africa; above 452 seconds (V_I = 23 500 fps) (V_I = 7.17 km/sec), no posigrade thrust is required to avoid landing in Africa.

Initial conditions for an 80/200 nautical mile (148/370 km) orbit can be achieved at abort above 459 seconds (t_4), using the abort rocket motors for up to 310 fps (94.5 m/sec) increase in velocity and saving the deorbit motors for orbit return.

Various trajectory considerations related to abort are discussed in Part III in the Flight, Abort Analyses. Propulsion system descriptions are presented in Part IV, and in Part VII, Selected Entry Vehicle Design.

6. Flight Recovery Concepts

In the event of an abort during launch or while in orbit, capability of recovery by parachute is available to the pilot. Horizontal landing to a designated runway is also possible at least once each orbit if abort can be delayed.

DECLASSIFIED

The parachute recovery sequence is shown in figure 29. Just prior to chute deployment, the vehicle flight path angle is changed (α = +20°) to allow correct alignment for chute deployment. Initially, the vehicle structure (a continuous skin design) above each main wheel compartment where the main chute canisters are stored is cut and released by pyrotechnic shape charges. The aft end of each canister is rotated to protrude above the vehicle outer skin surface by positioning actuators. Next, the pilot chute ejection mortars fire, extracting the pilot chutes which provide the drag necessary to extract the main chute packs. The main chute risers generate a resisting force to the chute package as it is being accelerated by the pilot chute. This force fails the riser tie-down to the chute pack, opening the chute pack and extracting the main chute suspension lines and canopy. The main chutes are extracted in a 2.5 percent of full chute canopy reefed condition. The main chute at this time is anchored to the vehicle aft structure in a manner that the chute forces act through the vehicle center of gravity, reducing vehicle perturbations.

The chutes remain in a reefed condition and anchored until predicted terminal velocity dynamic pressure, q, is reached whereupon a q switch activates de-reefing and mooring release allowing chute riser and harness cable to tear through ablative material to its final forward anchorage point which positions the vehicle in a tail down 70° inclination for land or water impact. NASA studies show that this attitude will result in low load factors and an upright position in a water landing. For land based recovery, this attitude permits maximum structural deformation for high impact energy absorption and low g. During pad abort the q switch will not be activated thereby permitting the chutes to bypass the reefing cycle. Studies show that at a minimum pad abort boost altitude of 1500 feet (458 m) ample time exists for full chute deployment and vehicle deceleration.

During the horizontal landing recovery mode, crosswinds can be a problem in maintaining runway alignment after touchdown. The results of a digital landing study are shown in figure 30. This study shows that for a skid friction coefficient of 0.4, a rudder setting of +20°, and a deceleration chute in a steady 20 knot (10.25 m/sec) crosswind, the vehicle would not deviate laterally more than 50 feet (15.2 m) from the runway centerline. The resulting stopping distance is 2621 feet (800 m). Pilot rudder control can be employed to eliminate slight oscillations due to varying crosswind velocity.

7. Landing Hazard Analysis

The hazard to the population surrounding the primary landing site at FRC (Edwards AFB) and the possible alternate at Eglin AFB for a typical manned maneuverable entry vehicle has been analyzed in an independent study. Summary results of this study are included here because of their relevance to the entry research program. An overall mission reliability of 90 percent was assumed, and population densities were taken from Rand McNally Commercial Atlas and Marketing Guide for 1966.

Two malfunction categories were analyzed: (1) ballistic impact which would follow complete loss of control of the entry vehicle and a tumbling motion, and (2) normal flight to an erroneous landing point. The second

category requires a stable controlled vehicle having a malfunction in the guidance system that is equivalent to an erroneous trajectory program. This assumes that the astronauts do not detect this malfunction and therefore cannot take corrective action. This unlikely situation is arbitrarily chosen to yield 2 percent of the expected malfunctions.

The total hazard for an approach to Edwards AFB from the west is 0.3720 x 10^{-6} (casualties per flight) for a ballistic impact and 0.0074 x 10^{-6} for a normal flight to an erroneous landing point. Figure 31 shows the footprint coverage as a function of distance from touchdown.

The total hazard for an approach from the west to Eglin AFB is 0.3376 x 10^{-6} for a ballistic impact and 0.0013 x 10^{-6} for a normal flight to an erroneous landing point. The footprint coverage as a function of distance from touchdown is shown in figure 32.

The significance of the hazard can be related to a number of flights per year. For example, 10 flights per year into Edwards could result in one casualty of the civilian population every 575 000 years (18.1 tsec). Even with 10 flights every day, the average casualties would be only about one every 160 years (5.0 gsec).

8. Aerodynamic Interface

The entry vehicle and adapter should be mounted on the launch vehicle with an orientation which minimizes structural loads. Based on available wind tunnel data, the present study estimated the desired orientation between the centerlines of the entry vehicle and the launch vehicle (the incidence angle) with the goal of minimizing total bending moments at the adapter/entry vehicle interface. Only static loads were used in this analysis, but these included normal and axial airloads in addition to inertial loads. The design of the launch vehicle allows for a level of dynamic loads in wind environments with specific guidance and autopilot characteristics.

A detailed design effort would include additional wind tunnel tests and structural analyses to complete the complex aerodynamic interface criteria and specifications. In the present analysis, preliminary aerodynamic data of reference 1 were used.

Parametric force and moment data as functions of angles of attack and incidence are shown in figures 33 and 34 for Titan and Saturn adapters, respectively. It is assumed that the boosters will fly up to a 6° angle-of-attack at the time of maximum airloads. The incidence for which the moments are equal for both positive and negative 6° angle-of-attack was selected as optimum. The optimums were:

$i = 2.5°$ for Titan
$i = 3.3°$ for Saturn

Table 9 summarizes loads as functions of vehicle size for maximum dynamic pressures representative of nominal ascent flights. This table does not include axial inertial loads which are dependent on payload weight and trajectory acceleration.

TABLE 9

INTERFACE LOADS

Vehicle size	Titan III (1)			Saturn IB (2)		
	Moment ft-lb (kmN)	Axial force lb (kN)	Normal force lb (kN)	Moment ft-lb (kmN)	Axial force lb (kN)	Normal force lb (kN)
A	105 500 (142.9)	22 650 (100.9)	25 740 (114.2)	92 100 (124.9)	7 480 (33.2)	26 480 (117.8)
B	126 800 (171.7)	25 660 (114.0)	29 160 (129.5)	110 850 (150.0)	8 480 (37.6)	30 000 (133.3)
C	169 300 (229.6)	31 050 (138.0)	35 280 (156.8)	147 680 (200.0)	10 260 (45.5)	36 290 (161.3)
D	206 200 (279.8)	35 480 (157.8)	40 320 (179.0)	180,320 (248.0)	11 720 (52.2)	41 470 (184.0)
E	242 200 (328.2)	39 440 (175.6)	44 820 (199.0)	211 670 (286.2)	13 030 (58.0)	46 100 (204.2)

NOTES:

(1) q = 900 psf (43.2 kN/m^2), 25° adapter

(2) q = 805 psf (38.6 kN/m^2), 35° adapter

(3) Axial load does not include inertial load

DECLASSIFIED

DECLASSIFIED

PRECEDING PAGE BLANK NOT FILMED

III. DEVELOPMENT PROGRAM PLANS

This section examines the major functions, activities, events and physical resources required to implement the total Lifting Entry Research Program. These elements were transformed into flow charts, schedule plans, equipment and facility lists, test plans, refurbishment plans and facility utilization charts. The data were finally resolved into cost mathematical model inputs for the purpose of computing total program costs of a variety of vehicle sizes and research programs.

A baseline technique was used in this study because of the great amount of program commonality among the various combinations of entry vehicle sizes and flight programs. Most subsystem development was determined to be independent of entry vehicle size. Because the Titan III-5 launch vehicle was designated for all entry vehicle sizes, the launch, orbital and mission support operations are also independent of entry vehicle size. Entry vehicle design, development, fabrication and testing are nearly common to all sizes of entry vehicles. Further, the basic program up to the first research flight is almost identical for flight programs ranging from 5 to 15 orbital/entry missions. Because of this, a single baseline program plan from program definition phase ATP through a nominal number of 11 research entry flights was prepared. Minor modifications and additions to this baseline plan were then applied to generate cost data for 12 entry vehicle size and flight program size combinations.

In general, the development program plans were built upon the experience of recent and current space programs with well established precedents. Where new concepts of implementation were required, substudies were conducted to examine several feasible approaches.

A. DEVELOPMENT PLAN INPUTS

The first step in the development of a total program plan was to establish a set of ground rules and constraints based on the study work statement and certain additional requirements felt to be critical to the study. The next step was the preparation of sequential operational plans (functional flow diagrams) to help define test programs, support equipment and program facilities. Various sources of data, such as recent and current space programs, study reports, were then examined for performance schedules, test programs, development and operational support, facilities required and other inputs pertinent to program scoping and costing. Finally, concurrent programs that would relate to the HL-10 Entry Research Program by either supporting or facility sharing were identified.

1. Ground Rules and Constraints

The following ground rules and constraints were established to help reduce the number of variables in the final cost and effectiveness analysis and to assure uniformity in the nonvariable inputs.

General program philosophy and approach. - The entire Entry Research Program is assumed to be normally paced, that is: medium level priority for procurement of time sensitive items; completion of missions (entry research) to be time-critical only insofar as costs are concerned; and disciplined schedule and cost control. In general, single shift engineering and fabrication are assumed in the first phases of the program with multiple shifts partially employed during major systems tests, launch site preparation, and certain critical phases of flight data reduction. Reliability and crew safety are treated similarly to the Gemini program in terms of analysis, documentation and demonstration. Some schedule overlap is permitted. For example, basic structural design is initiated before all wind tunnel testing has been completed or engineering systems tests on a complete prototype entry vehicle are initiated before all component qualification tests are complete.

Support programs considered. - Three programs are considered to make significant inputs into the HL-10 Entry Research Program: (1) USAF PRIME hypersonic re-entry program, (2) the air-launch program at FRC, Edwards using the HL-10 glide vehicle, and (3) the Apollo program. Although this study does not require a specific calendar start date, it is assumed that pertinent data from the three named sources will be available during or before the Program Definition Phase.

Pertinent USAF PRIME program data would consist chiefly of heat shield performance prediction correlation, effect of ablation containments and general confirmation of performance prediction techniques for hypersonic medium L/D vehicles. The HL-10 air-launch program at FRC, Edwards is also assumed to provide some useful subsonic and transonic performance correlation data even though the D canopy version is not being flown at present.

Many of the entry vehicle subsystems designated in this study are identical, or very similar, to items in the Apollo Command Module and the LM; Earth orbital and entry performance data is assumed to be available at the beginning of the Entry Research Program.

Concurrent programs using common facilities. - Major facilities such as FRC, Edwards, Kennedy Space Center, Merritt Island, Saturn IB and Titan III complexes, the MCC (Mission Control Center) at MSC-Houston and the MSFN (Manned Space Flight Network) will be able to support the HL-10 Entry Research Program during the 1969 to 1974 time period. This is based on analysis of the latest Titan III launch operations plans, Saturn IB and Apollo plans for 1967 through 1972, and the operating capacity of MCC-Houston and MSFN. It is further assumed that one or more B-52 aircraft will be available for modification to carry the operational sized HL-10 air-launch vehicle. General facilities that currently support the X-15 and other NASA programs are also assumed to be available to support the HL-10 air-launch and terminal landing operations.

Program authority to proceed. - Schedule plans for this study are predicated on a variable start date. In general, schedules in this study are shown in terms of months or weeks after authority to proceed. In some instances,

DECLASSIFIED

however, cost analysis depends upon absolute calendar times to evaluate dollar inflation trends, cost of launch vehicles as a function of number produced and other time dependent cost factors. For these exceptions, it is assumed that Phase B, the Final Definition Phase, will start in January 1968.

Integrated test approach. - The test philosophy is one of technical adequacy and maximum obtainable crew safety at minimum cost. Therefore, all tests are planned to assure a high probability of accomplishing the defined research with the lowest possible risk to the flight crew. Time is considered critical only where cost and/or safety are involved. Development test objectives are to obtain basic design and environmental data, evaluate performance of prototype hardware, screen piece parts and components, qualify components by operation under environmental stress and evaluate subsystem interaction and compatibility by operation of test vehicles. Operation test objectives are acceptance of flight articles at both component and entry vehicle levels, final preparation and evaluation of the entry vehicle at the launch site, and evaluation of the entry vehicle after return and prior to refurbishment. The integrated test plan encompasses inspection, monitoring, documentation and test procedure controls as necessary to maintain and assess entry vehicle and GSE quality. Multiple use of test facilities and test articles is applied wherever feasible. In general, reliability tests will be designed to demonstrate adequate environment and operating life margins and functional performance within tolerance. Demonstration of specific reliability numbers at confidence levels is not considered in the integrated test plan. Tests phases are generally to be planned such that outputs of one test which are critical to another test are connected in series to the inputs of that test.

Number of research flights. - The number of unmanned and manned entry research flights is variable in the cost and effectiveness analysis for size selection. A plan of two unmanned and five manned flights is singled out as a basic reference plan as stated in the study statement of work.

Two unmanned flights. - The two unmanned flights recommended in the study statement of work will apply to all flight programs evaluated in this study since their primary purpose is to qualify the entry vehicle for manned flight.

Refurbishment and recycle limitations. - Each manned vehicle will have reuse capability with turnaround time (recovery at FRC to launch at KSC) 3 months as stated in the guidelines and constraints of the statement of work. These guidelines are expanded to allow refurbishment of unmanned entry vehicles for backup to the flight plan providing adequate configuration control and reliability discipline. Also, the 3-month turnaround time is considered to be a design capability and may be expanded in the early turnaround cycles if warranted by reason of research value or anticipated learning curves. A limit of 4 turnaround cycles is arbitrarily imposed due to limited information on spacecraft reuse.

Spares and backup vehicles. - A backup entry vehicle will be maintained in current configuration and systems checkout status at the factory site. In the event of mission abort, the backup vehicle will be delivered to KSC for

normal processing and launch preparations consistent with launch vehicle and operations constraints. Spare components and modules will be maintained at the entry vehicle factory and at KSC to provide support consistent with estimated failure rates and wear out under assembly and testing environments.

Wind tunnel program constraints. - The additional wind tunnel tests in the development plan are integrated with tests completed as of 1966 by LRC and their contractors. No additional wind tunnel tests are assumed prior to the start of the HL-10 Entry Research Program. A summary of completed tests is shown in figure 53.

Facility utilization assumptions. - Facility utilization is based upon the following assumptions.

Launch: The Titan III, Pad 40 or Saturn IB, Pads 34 and 37, will be available for launch operation for whichever launch vehicle is selected. Pre-erection checkout will be at Merritt Island facilities in either case.

Recovery: The main recovery site will be FRC, Edwards AFB. Existing and planned facilities such as runways, service buildings, tracking, communication, and high speed digital computers are assumed to be available on a time-shared basis. Eglin AFB in Florida is designated as the alternate landing site. Existing facilities are also assumed to be available on a time-shared basis. The NASA and USAF abort recovery, instrumentation and tracking ships are considered available to support the HL-10 research flights subject to Apollo and USAF MOL program constraints.

Refurbishment: No facilities exist for entry vehicle refurbishment. It is assumed that refurbishment facilities (other than checkout, test and other equipment peculiar to the entry vehicle) at the factory will be funded out of the entry vehicle contractor's capital. Should refurbishment be considered at the KSC launch site or FRC recovery site, facilities peculiar to the HL-10 will be considered as part of the program cost.

Transportation: Transportation of the entry vehicle and adapter from factory to launch site and from recovery site to refurbishment site is considered as available through Government bill of lading.

Program direction and operations. - For the purpose of this study it is a assumed that the HL-10 Entry Research Program will be completely procured and directed by NASA. The Titan III launch vehicle will be procured from USAF in a manner similar to the Gemini program. Specific organizational relationships pertinent to this study are assumed as outlined below.

NASA program direction: Program planning and costing assumes that overall direction will be by NASA. USAF will support the program with range facilities and operations, launch vehicle provision, some of the flight crews and possibly some experiments. Program direction of the various launch vehicle, entry vehicle and support contractors will be carried out by a NASA program office. This office will also coordinate the various agencies involved in planning and operations, including MCC-Houston, MSFN, launch operations at KSC, the National Range, and FRC, Edwards.

DECLASSIFIED

Entry vehicle and launch vehicle contractors: The major procurement will be with the entry vehicle and launch vehicle contractors. For the purposes of costing, a prime entry vehicle contractor with subcontractors and no associate contractors is assumed. The Titan III will be procured by NASA from USAF in the same manner as the Gemini launch vehicle. Technical monitoring of the contractors by NASA includes system specification, development and qualification testing, configuration control, reliability assessment and buy-off inspection and acceptance.

NASA-range-contractor relationships: These interfaces and relationships are considered to be similar to those that were developed for the Gemini program.

Facility activation and modification: Activation engineering will be done by the entry vehicle and launch vehicle contractors under a NASA approved specification.

Mission operations: The NASA launch operations director will have control of the launch vehicle and entry vehicle up to pad clearance (liftoff), at which point the MCC flight director will take control. This control is maintained until FRC acquires UHF link with the entry vehicle at which time a terminal flight director will take over the operations. Abort recovery forces (both Air Force Rescue Service and Navy Recovery Forces) will be under MCC control during the mission.

Data recovery and analysis: A full set of data tapes from ground stations, ships and from the entry vehicle will be made available to the entry vehicle contractor for evaluation. Research data tapes will also be provided for research task contractors, should they be designated.

Abort demonstration approach. - Crew safety requires that mission abort, at critical phases of the program, be fully demonstrated by unmanned flights. Three critical abort conditions are considered: (1) abort from the launch pad, (2) abort at high altitude and velocity prior to injection into orbit. One successful demonstration of each abort condition is considered to meet demonstration requirements.

B-52 air-launch program approach: Air launched subsonic glide tests with the appropriate sized entry vehicle configuration are indicated in the study statement of work as one of the elements of the test plan. Because of extensive amount of flying qualities, aerodynamic performance and flight controls data available from transonic and low supersonic flight tests, and because of the relatively low cost of air-launch flights, both free glide and powered air-launch flights are to be planned. The air-launch vehicle will be full size with complete control system capabilities and essentially in transonic-subsonic configuration. Furthermore, because of the value of using this vehicle for pilot visibility, flare-out, touchdown and slide-out evaluation, the pilot station, visibility and landing gear arrangements will match those of the entry vehicle. Also the current M2-F2 and HL-10 air-launch vehicles will have completed testing by the time the aforementioned air-launched vehicle starts flight tests.

DECLASSIFIED

DECLASSIFIED

2. Sequential Operational Plans

Purpose and application. - Sequential operational plans (functional flow diagrams) were constructed as an aid to system design, interface definition, program planning, GSE requirements definition, and crew task analysis.

Top level functional flow. - Top level flow is shown in figure 35. Functions begin with the entry and launch vehicles and their GSE developed and produced. The top level diagram uses numerically coded functions with (1.0) describing the final mission function (land and recover entry vehicle). Preceding functions are assigned larger code numbers.

First level functional flow. - Each top level function is expanded into first level functions, coded by an ascending decimal system. Figures 36 through 47 show expansions of 13 top level functions. Landing and recovery of the entry vehicle, shown in figure 36, starts just prior to touchdown when photo tracking of vehicle attitude, direction and velocity is initiated. After touchdown and slideout, pilot egress and on-runway securing are accomplished and are followed by in-hangar postflight servicing, data removal and return to the factory. Entry flight, shown in figure 37, starts after deorbit retrograde thrusting and proceeds with pre-entry preparations to hypersonic maneuvering where various hypersonic experiments are conducted. This flight phase is continued through transonic flight, approach to FRC, Edwards AFB, and final touchdown at FRC. Figure 38 outlines functions during the deorbit phase, starting with receipt of updated deorbit data from MCC and ending with entry into the sensible atmosphere (400 000 ft, 122 km). The major functions performed in orbit are shown in figure 39. Figure 40 includes separating the launch vehicle from the entry vehicle and retro of the launch vehicle away from the entry vehicle. Functions from liftoff to insertion are shown for both the launch vehicle and the entry vehicle in figure 41. Figures 42 and 43 show preparation and test functions performed at the launch site on the launch vehicle and entry vehicle in mated and demated configurations. Activation of world tracking and communication system modifications for the HL-10 research program, including software and readiness exercises, is diagrammed in figure 44. Landing site readiness exercises, however, are singled out and shown as first level flow in figure 45. Refurbishment and recycling the entry vehicle is shown in figure 46 as the process starting with receipt of the entry vehicle at FRC and ending with delivery of the entry vehicle to the launch site. Activation of both GSE and HL-10 peculiar facilities or modifications is summarized in figure 47. The air-launch test program at FRC is shown in figure 48.

Second level functional flow. - In general, second level functional flow was not required to define program planning and GSE requirements. However, selected flow charts were useful in defining crew tasks and functional interfaces. Examples of two second level functional flow diagrams are shown in figure 49, terminal guidance flight functions, and figure 50, automatic retrofire sequence.

DECLASSIFIED

DECLASSIFIED

3. Planning Input Sources

Aside from obvious efficiency and flexibility, mathematical model costing techniques were selected for this study because results yielded showed generally good correlation with real-world program cost performance. The results from such mathematical models, however, are only as accurate as the input data. Other than entry vehicle subsystem weight and complexity, the major inputs have to do with numbers of test and flight vehicles, schedule span time and number of refurbishments. Consequently, cost mathematical model inputs had to be based as much as possible on current or recent program performance. The following sources were used to develop program plans for the HL-10 research vehicle.

PRIME program data. - The USAF program PRIME (Precision Recovery Including Maneuvering Entry) is a four-flight lifting vehicle program using the SV-5D configuration. A relatively small unmanned vehicle is evaluated during entry from simulated orbital conditions. The Martin Marietta Corporation is prime contractor for the entry vehicle and general systems integration. The Atlas (SLV-3) launch vehicle is used. First hand program schedule cost and technical performance has been available for extrapolation to HL-10 research program planning data.

Gemini program. - Both planned and actual program performance of both the spacecraft and the launch vehicle were used extensively in estimating program schedules, facilities, and test articles. Spacecraft development phasing, mission operations and launch site operations were particularly applied to the HL-10 Entry Research program. Level of effort in reliability and safety on Gemini was used as a model for planning in this study.

Titan III launch vehicle. - Launch preparations and payload integration data relative to Titan III were obtained from Martin Marietta Corporation and USAF documents (ref. 2). Current facility status and scope of facility modification were obtained from examination of drawings and internal documents and by on-site briefings and inspections. Man-rating improvements of the vehicle and launch complex were obtained from Titan III-M (Manned Orbital Laboratory) specifications.

X-15 flight research program. - The program planning data for both the air-launch flights and actual entry vehicle landing from orbit have been extrapolated from X-15 operations data as a point of departure. Also, some inputs for refurbishment, maintenance and turnaround were obtained from X-15 failure data over the first 100 flights.

M2-F2 and HL-10 air-launch flight program. - Planning and schedule data, B-52 attachment adaptation, and ground operating equipment information were used to supplement the X-15 data in the formulation of FRC operations plans for the HL-10 D/3 vehicle.

Apollo and Saturn planning reports. - Since many Apollo facilities at KSC will be utilized for the HL-10 program, recently published planning documents and study reports relative to the present Apollo and follow-on Apollo programs were used (ref. 3).

DECLASSIFIED

DECLASSIFIED

B. DEVELOPMENT PLAN DEFINITION FOR VARIOUS VEHICLE SIZES AND FLIGHT PROGRAMS

Program plans developed in this study encompass the last two phases of a typical three-phase program: (A) Conceptual Design-Feasibility and Preliminary Definition, (B) Final Definition Phase and, (C) Vehicle Development and Flight Operations.

1. Final Definition Phase

A six-month Final Definition Phase (B) has been established as part of the costing input. This phase includes the following tasks:

System Engineering:

- Functional flow analysis--top to third level
- Tradeoff studies--first to fourth level
- Final environmental and design criteria
- Subsystem specifications
- Select baseline design
- Preliminary interface specifications
- Schematic block diagrams of subsystems and system
- Performance and trajectory analyses
- Wind tunnel tests.

Specifications:

- Specification tree
- Program specification
- System specification
- Qualification and acceptance specification
- Applicable documentation.

Program Planning:

- Program management plan including PERT and configuration control

DECLASSIFIED

DECLASSIFIED

Development plan--design, test, systems integration

Production plan--tooling, fabrication, assembly

Procurement plan

Quality assurance plan--quality, reliability, safety

Facilities plan--requirements, utilization

Logistics plan--spares, transportation, publications

Operations plan--flight operations, launch support, recovery

Integrated test plan--all program test activity.

2. Baseline Development Plan and Flight Operations

Phase (C), Vehicle Development and Flight Operations, has been defined as a baseline plan with variations for different vehicle sizes and flight plans. Early in the study it was determined that the Titan III with two-segment SRM and without transtage could adequately launch all the candidate sizes. As a result entry vehicle size had very little effect on the development and flight operations. The number of entry research flights was the major variable in altering the baseline plan.

As stated in section III-2, the entire Vehicle Development and Flight Operations program is normally paced with technical performance and cost the primary incentive goals. Schedule performance is considered critical only insofar as cost is affected.

The schedule plan for phase (C) was developed expressly to produce accurate inputs for the cost mathematical model (COCOM). Emphasis was, therefore, placed on pacing development items since development span time is one of the critical cost inputs. Tests at the component, subsystem and entry vehicle level are also emphasized because they provide critical planning milestones that control next steps. Development phase flow of the major program pacing items is shown in figure 51.

3. Integrated Test Plan

Because of the significant cost associated with test articles, the association of GSE with testing and the large number of tests which pace the program schedule, an integrated test plan was prepared as the major framework for the development and flight operations plan. This test plan, as illustrated in flow diagram form in figure 52, covers testing of small parts up to the completed entry vehicle. The plan also ranges from the earliest tests (wind tunnel program) to operations (entry research) flights.

DECLASSIFIED

DECLASSIFIED

The general test approach is evaluation of functional performance of the entry vehicle and its components under environmental simulation, where feasible as early in the program as possible. Wherever practical, tests whose outputs feed another test will be programmed in series with that test. In the interest of shorter overall schedule spans and attendant lower costs, some risk is assumed in overlapping these kinds of tests. For example, it would be ideal to wait until all components are qualification tested before starting the systems verification test on a complete entry vehicle; however, two months additional time is consumed. By overlapping these programs by two months, about 90 percent of the qualification tests are complete before starting the system test. The probability of changes in component design due to qualification test failure at the time systems verification tests start is acceptably low.

Reliability testing by large statistical sample sizes will be confined to a few critical components and piece parts. Emphasis is on life and environmental level and demonstration of specified margins.

Because of the reliability goals and the crew safety requirements imposed on the mission, the test program will be characterized by comprehensive documentation and other controls such as those on GSE and procedure changes.

Various tests within the integrated test plan are briefly described below:

Subsystem development tests. - This category of tests includes material evaluation and screening tests, plasma arc tests of heat shield material samples, hot gas blast tests of heat shield joints and other elements, structural elements where basic design data is required, and evaluation of new fabrication processes. Subsystems such as guidance and navigation and communications will require circuit breadboard tests, performance tests of functional models (not the final packaged configuration), and antenna pattern tests using full-scale models. The several subloops of the EC/LS subsystem will be breadboarded and tested for basic performance characteristics. The reaction control subsystem will also be breadboarded for performance of pneumatic tests. Impact tests of the main struts and nose wheel strut and friction-wear tests will be carried out during landing gear development. Extensive breadboard circuit tests of the malfunction detection system will be conducted to assure solution of any interface or switching logic problem early in the entry vehicle development phase. The emergency recovery chute will initially be tested using bomb drops to obtain early data on basic performance, opening loads, reefing and deployment. Basic thrust and impulse performance and initial reliability tests of the abort and deorbit motors are also included under subsystem development tests. An entry vehicle cabin mockup will be utilized for task evaluation display and control effectiveness measurements and ingress/egress tests. This mockup will be integrated with computers so that real time mission functions can be evaluated. In general, all the above development tests are planned to be conducted in the first six to eight months of the Vehicle Development and Flight Operations Phase (C).

Wind tunnel tests. - The wind tunnel test program for the HL-10 Entry Research Vehicle actually extends from the Final Definition Phase (B) into the Vehicle Development and Flight Operations Phase (C). A total of 18 major

DECLASSIFIED

DECLASSIFIED

tests have already been conducted at Langley Research Center on various configurations with and without canopies and at Ames Research Center using the full-scale HL-10 air-launch vehicle.

A series of tests on models of the final configuration are planned to be initiated early in the Final Definition Phase and will obtain data on ground effects, gear-down effects, canopy cover off characteristics, aerodynamic forces and moments in abort configuration, effects of heat shield recession, and detailed control effectivity evaluations. Tests continuing into Phase C include pressure and heat distribution, force and hinge moments for the entry vehicle plus adapter, launch vehicle airloads and transonic buffet forces, damping derivative and drop vehicle separation tests.

The wind tunnel test program is summarized in figure 53 which lists speed range, model description, test purpose and facility recommended. Also listed are pertinent tests already completed at Langley Research Center on the various HL-10 configurations.

Subsystem test stands. - The major subsystems of the entry vehicle will be functionally simulated using early engineering models of the components. These tests emphasize functionally identical components and permit the use of unqualified units in order to secure functional characteristics data early in subsystem development. A test stand with guidance and navigation, autopilot, actuators and simulated surfaces will be assembled and functional tests conducted. The complete entry vehicle electrical system with dummy loads will be simulated in a test stand to evaluate regulation, power transfer and transient effects. Overall functional performance characteristics of the communications and instrumentation subsystems will be determined using a breadboard-type test stand in which antennas are to be simulated. The environmental control and life support system will be evaluated in a special simulated cabin including crew stations and the prototype EC/LS equipment. This functional mockup is planned for both ambient pressure testing and vacuum chamber installation. The reaction control subsystem will be simulated with actual prototype propellant tanks, pressurization, regulation and thrust units cold and hot flow testing at a remote test site. A crew station mockup with operating displays together with the guidance and control subsystem and real-time computer will permit the crew to evaluate simulated missions. This test stand is to operate under normal room conditions.

Combined systems functional test stand. - The above described test stands, assembled on portable frames, are then to be interconnected electrically to provide a systems functional test stand. This arrangement is planned to provide early investigation and evaluation of subsystem interactions, interfaces, malfunction detection and combined performance tolerances. Preliminary evaluation of electromagnetic interference will be done on this test stand with emphasis on conducted interference and transients. Crew members will take part in the final phases of this test program.

Environmental control system altitude tests. - The EC/LS test stand, described previously, will be modified for insertion into an altitude chamber (1/10 psia, 5.16 mm Hg) following the functional tests at ambient pressure.

The altitude chamber is to be fully man-rated for mission simulation tests with crew. This setup will be maintained in the altitude chamber throughout the development and early phases of the flight program to support EC/LS design evaluation requirements.

Landing assist captive propulsion tests. - A test stand will be provided to evaluate flow, pressurization, thrust, and thrust control of the landing assist engine and propellant supply system (H_2O_2). This test stand will be located at the same remote test facility as the RCS test stand.

Static canopy shield and seat ejection tests. - This test is conducted with simulated upper body section, canopy and seat installations fixed to the ground. Seats with dummy personnel will be ejected and the canopy jettisoned. Functional sequencing, motions, accelerations and trajectories will be measured. These tests are prerequisite to dynamic sled tests described below. Seat ejection tests apply to A and B size entry vehicles only.

Dynamic slideout tests. - The Norair HL-10 air-launch vehicle will be modified with the skid-wheel configuration and nose gear to evaluate slideout characteristics, main and nose gear impact loads and drag chute deployment. Six landings (from subsonic glide flights) are planned.

Parachute recovery system demonstrations. - Two boiler plate entry vehicles simulating aerodynamic shape, weight and moment of inertia will be constructed with necessary interfaces to accept the emergency parachute system. Three successful drop tests are required to fully qualify the system. The full-scale test vehicles will be adapted to the B-52 carrier aircraft pylon which will be installed for the manned air-launch program (figs. 59, 60 and 61). Tests will be conducted over water. The boiler plate test vehicle will be designed with flotation gear and aids to facilitate recovery.

Dynamic seat ejection and canopy shield jettison tests. - The entry vehicle crown structure, canopy and seat installations will be mounted on a rocket driven sled to evaluate hatch removal, seat ejection and canopy jettisoning under dynamic pressure environment. Qualified ejection seats with dummy personnel will be utilized. A prototype canopy and shield will be used to demonstrate proper trajectories and fin clearance. Seat ejection tests apply only to the A and B size entry vehicles.

Component qualification tests. - All entry vehicle components not qualified by previous usage in equal or greater environments will be given a series of qualification tests in which margins in environmental and operating life are demonstrated.

Two or three identical production units will be used to enable adequate schedule pacing. The entry vehicle contractor is to provide extensive monitoring of subcontractor's tests. Critical components such as flight controls, inertial reference unit, EC/LS components, voice communication, emergency recovery and others that affect flight safety will be subjected to reliability tests in which 4 to 6 test articles will be tested to failure. Rigid management controls will be applied to the qualification test program with buyer approval of specifications, procedures and reports.

DECLASSIFIED

Structural tests. - Static loads and heat will be applied to a complete entry vehicle structure without heat shield. Entry aerodynamic loads, landing loads and structural heating inputs will be applied. Control surfaces, hatches, internal structure and fittings will be tested in separate fixtures. A second entry vehicle structure with simulated heat shield and simulated equipment components will first be mounted on an adapter structure and be subjected to launch loads. The test article will then be used for resonance testing in which vibration modes, structural damping and control system transfer functions will be measured.

Drop tests. - The static test article previously used for heat and entry load tests will be outfitted with a prototype landing gear and simulated mass for landing impact testing. Free drop tests (zero forward velocity) will simulate touchdown sinking speed and drag loads by means of inclined impact platforms. Final utilization of this test vehicle is planned for water impact tests to evaluate structural integrity and acceleration inputs to the crew members.

Systems verification test. - Final evaluation of subsystem design and interaction effects is accomplished with a complete entry vehicle with flight-ready subsystems. Only exceptions are a simulated heat shield, simulated pyrotechnics and propellants. Initially, this test vehicle will be mated with the checkout equipment for continuity checks and, later, power-on checks. Then, each subsystem will undergo detail checking in which the GSE, the entry vehicle and test procedures are evaluated for compatibility. Finally, all subsystems are run together in simulated flight tests. Crew members will be inserted in the spacecraft during these tests. The system verification test vehicle will be maintained in proper configuration status throughout the program for checkout of subsystem or component changes prior to incorporation in flight vehicles and for critical system troubleshooting.

Thermal-vacuum mission simulation tests. - Because of limitations in the operation of the EC/LS in ambient environment and to gain better knowledge on heat balance of the entry vehicle during orbit, tests will be conducted on the system verification vehicle in thermal-vacuum chamber. Solar heat and heat shield heat transfer will be simulated by conducting heat blankets. The system tests and flight simulations will be conducted unmanned by remote control with the GSE. The vacuum chamber is planned to operate between 10^{-5} and 10^{-6} torr.

Component flight acceptance tests. - Each functional component (i.e., black box) to be assembled into every flight vehicle will be subjected to component flight acceptance tests. The component will be made to function in all flight and test modes under critical environments (vibration, temperature, vacuum) and to perform within specified limits under specified range of inputs.

Entry vehicle acceptance tests. - Each entry vehicle will be subjected to subsystem functional tests in room environment subsequent to installation in a higher altitude chamber. A complete systems check will be conducted prior to chamber pump down. After chamber pump down, a brief simulated flight test will be conducted by remote control from GSE to be followed by a cabin leak check. Successful performance of all systems in mission sequence constitutes final acceptance.

DECLASSIFIED

Automatic landing system evaluation tests. - The Norair HL-10 air-launch vehicle will be equipped with prototype receiver, decoder and antenna equipment of the system to be installed on unmanned entry vehicles. The pilot will monitor and override the automatic system if necessary. Final evaluation of this system will be carried out on the HL-10, D/3 air-launch vehicle program.

Water recovery and evacuation tests. - A boiler plate-type test vehicle with prototype hatches, crew support and recovery aids will be constructed to match actual flotation characteristics in order to demonstrate emergency egress, flotation and recovery aids. This test article will be used periodically for training purposes.

Pad abort test. - A prototype entry vehicle structure, adapter and launch vehicle adapter will be installed at the Apollo White Sands Test Range to demonstrate abort sequence, separation, thrusting and flight stability during off-pad abort. The entry vehicle will have a simulated heat shield, subsystems and crew. All electrical and mechanical systems involved in abort on both sides of the separation plane will be actual flight hardware. Attitude reference and control, actuators and control surfaces will be prototype units. Acceleration, attitude, induced environment and sequencing signals will be measured. Ground units will optically track the entry vehicle. Emergency parachute recovery will be used to recover the vehicle. One successful demonstration is required.

Maximum dynamic pressure abort test. - An entry test vehicle similar to the pad abort vehicle described above will be adapted to the Little Joe II launch vehicle to demonstrate abort sequencing, separation, thrusting and flight stability of the entry vehicle during maximum dynamic pressure conditions. The test is planned to be conducted at the Apollo White Sands test site. Two Little Joe II vehicles (in surplus inventory at the time of this report) would be consigned to this test although only one successful flight is required. Rework of the entry vehicle adapter and increased fin surface are required. Little Joe II rocket motor cutoff pressure switch initiates the separation and thrusting sequence. Ground radar tracking and telemetry receiving are required to support the test. The emergency parachute recovery system will be used to recover the vehicle. As in the pad abort test, one successful demonstration is required. A concept of the HL-10, D/3 abort test vehicle mounted on the Little Joe II launch vehicle is shown in figure 54.

4. Procurement Plan

The procurement plan for this study is based on the assumption that the entry vehicle structure, heat shield, control surfaces and actuators, internal furnishings and approximately 15 percent of the entry vehicle subsystems will be designed and fabricated by the entry vehicle contractor. The adapter and 60 percent of the GSE is also assumed to be built by this contractor.

A team of engineers, contract and procurement specialists will process the detail subsystem performance and qualification specifications into the proper purchase orders and subcontracts. Approximately 90 percent of the

DECLASSIFIED

TABLE 10

ENTRY VEHICLE HARDWARE UTILIZATION CHART

Entry vehicle components and subassemblies		Component utilization in tests and test articles for n-flight program																											
		Subsystem development test stands																											
System	Component	Flight controls	Guidance and navigation	Combined guidance and control/flight control	Electrical power	Communications	Instrumentation and data handling	EC/LS simulated cabin	RCS test stand	Crew station and displays	Combined systems functional test stand	Component qualification tests	Manned EC/LS altitude chamber tests	Landing assist engine test stand	Dynamic landing slideout tests	**Recovery chute demonstration tests	Structural load and heat tests--vehicle A	Dynamic load and resonance tests--vehicle B	Landing gear dynamic drop tests	Water impact and flotation tests	Water recovery evacuation tests	Entry vehicle-GSE checkout compatibility tests	Systems verification test--vehicle C	Thermal vacuum and mission simulation tests	Component flight acceptance tests	Pad abort test vehicle	Maximum Q abort test vehicle	Air-launch test vehicle--subsonic	Air-launch test vehicle--supersonic	Unmanned research flight vehicles	Manned research flight vehicles
Instrumentation and data handling	Sensors						P				D	2F						S	(S)	(S)		F	(F)	(F)	(nF)		S	A	A	2F	(n-2)F
	Remote multiplexing units						P				(P)	2F						S	(S)	(S)		F	(F)	(F)	(nF)		S			2F	
	Central multiplexing unit						P				(P)	2F						S	(S)	(S)		F	(F)	(F)	(nF)		S	A	A	2F	
	Tape recorder electronics and transports						P				(P)	2F						S	(S)	(S)		F	(F)	(F)	(nF)		S	A	A	2F	
Navigation guidance and control system	Inertial measuring unit (N-16)		P	(P)							(P)	F						S	(S)	(S)		F	(F)	(F)	(nF)		S			2F	
	Computer (D-103)		P	(P)							(P)	F						S	(S)	(S)		F	(F)	(F)	(nF)		S			2F	
	Horizon scanners (2)		P	(P)							(P)	2F						S	(S)	(S)		F	(F)	(F)	(nF)		S			2F	
	Backup guidance: ARTIS, GUP, IPS		P	(P)							(P)	2F						S	(S)	(S)		F	(F)	(F)	(nF)	P	P		A	2F	
	Autopilot electronics and command coupler	P		(P)							(P)	3F						S	(S)	(S)		F	(F)	(F)	(nF)	P	P	P	P	2F	
	Hand controller	P		(P)							(P)	2F						S	(S)	(S)		F	(F)	(F)	(nF)		S	P	P	2F	
	Elevon and flap bias surface actuators	P		(P)							(P)	3F						S	(S)	(S)		F	(F)	(F)	(nF)	P	P	P	P	2F	
EC/LS	Supercritical and high pressure O_2 tanks							P				F	(P)					S	(S)	(S)		F	(F)	(F)	(nF)		S	A	A	2F	
	Suit compressor, valves and regulator							P				2F	(P)					S	(S)	(S)		F	(F)	(F)	(nF)		S	A	A	2F	
	CO_2 and odor separator							P				2F	(P)					S	(S)	(S)		F	(F)	(F)	(nF)		S			2F	
	Heat exchanger and H_2O separator							P				2F	(P)					S	(S)	(S)		F	(F)	(F)	(nF)		S			2F	
	Equipment cold plates							P				2F	(P)					S	(S)	(S)		F	(F)	(F)	(nF)		S			2F	
	Cabin heat exchanger and fan							P				2F	(P)					S	(S)	(S)		F	(F)	(F)	(nF)		S	A	A	2F	
	Coolant accumulator and pump							P				2F	(P)					S	(S)	(S)		F	(F)	(F)	(nF)		S			2F	
	Regenerative heat exchanger							P				2F	(P)					S	(S)	(S)		F	(F)	(F)	(nF)		S			2F	
	Water tank							P				2F	(P)					S	(S)	(S)		F	(F)	(F)	(nF)		S			2F	
Communications	Audio center--HF transceiver and antenna					P						2F						S	(S)	(S)		F	(F)	(F)	(nF)		S	A	A	2F	
	VHF beacon and antenna					P						2F						S	(S)	(S)		F	(F)	(F)	(nF)		S			2F	
	VHF voice transceiver, antenna, coax switch, diplexer					P						2F						S	(S)	(S)		F	(F)	(F)	(nF)		S	P	P	2F	
	UHF command receiver and antenna					P					(P)	2F						S	(S)	(S)		F	(F)	(F)	(nF)	D	D			2F	
	S-band telemetry transmitter, coax switch, triplexer					P						2F						S	(S)	(S)		F	(F)	(F)	(nF)		D		P	2F	
	C-band beacon, antenna, phase shifter, coax switch					P						2F						S	(S)	(S)		F	(F)	(F)	(nF)		S			2F	
	K-band beacon and antenna					P						2F						S	(S)	(S)		F	(F)	(F)	(nF)		S			2F	(n-2)F
	Autopilot adapter (command decoder)*					P					(P)	2F						S	(S)	(S)		F	(F)	(F)	(nF)	P	P		P	2F	
Electrical power	Batteries: (7) HB-70 and (6) LB-100				P						(P)	4F						S	(S)	(S)		F	(F)	(F)	(nF)	D	D	A	A	2F	(n-2)F
	Relays, switches and control units				P						(P)	2F						S	(S)	(S)		F	(F)	(F)	(nF)	D	D	A	A	2F	(n-2)F

TABLE 10. --Concluded

ENTRY VEHICLE HARDWARE UTILIZATION CHART

Entry vehicle components and subassemblies		Component utilization in tests and test articles for n-flight program																											
		Subsystem development test stands																											
System	Component	Flight controls	Guidance and navigation	Combined guidance and control/flight control	Electrical power	Communications	Instrumentation and data handling	EC/LS simulated cabin	RCS test stand	Crew station and displays	Combined systems functional test stand	Component qualification tests	Manned EC/LS altitude chamber tests	Landing assist engine test stand	Dynamic landing slideout tests	**Recovery chute demonstration tests	Structural load and heat tests--vehicle A	Dynamic load and resonance tests--vehicle B	Landing gear dynamic drop tests	Water impact and flotation tests	Water recovery evacuation tests	Entry vehicle--GSE checkout compatibility tests	Systems verification test--vehicle C	Thermal vacuum and mission simulation tests	Component flight acceptance tests	Pad abort test vehicle	Maximum Q abort test vehicle	Air drop test vehicle--subsonic	Air drop test vehicle--supersonic	Unmanned research flight vehicles	Manned research flight vehicles
Hydraulics	Motor pumps (2)	P		(P)							(P)	3F						S	(S)	(S)		F	(F)	(F)	(nF)	P	P	P	P	2F	(n-2)F
	Accumulators (2)	P		(P)							(P)	2F						(F)	S	(S)		F	(F)	(F)	(nF)	P	P	P	P	2F	↓
	Servo-actuators--(2) rudder, (2) elevon	P		(P)							(P)	3F						(F)	S	(S)		F	(F)	(F)	(nF)	P	P	P	P		
Crew systems	Displays, lights and controls									P	(P)	F	D					S	(S)	(S)	S	F	(F)	(F)	(nF)		S	A	A	2F	
	Seats*									P		F	D					S	(S)	(S)	S		(S)	(S)	(nF)		S	A	A	2S	
	Survival, food, water, hygiene																	S	(S)	(S)											
	Indirect vision system											F						S	(S)	(S)								P	P		
Reaction control system	H_2O_2 tanks and valves								P			2F		D				S	(S)	(S)		F	(F)	(F)	(nF)		S	A	A	2F	
	H_2O_2 pressurization subsystem								P			2F		D				S	(S)	(S)		F	(F)	(F)	(nF)		S	A	A	2F	
	Thrustor units								P			3F						S	(S)	(S)		F	(F)	(F)	(nF)		S			2F	
	RCS and landing assist controls								P		(P)	2F		P				S	(S)	(S)		F	(F)	(F)	(nF)		S			2F	
Propulsion system	Abort and deorbit SRM's											12F						S	(S)	(S)		D	D	D		P	P			2F	
	Landing assist motor and controls								D			3F						S	(S)	(S)		F	(F)	(F)	(nF)		S	P	A	2F	
Emergency recovery system	Main parachutes with pilot chute**											10F				3F		S	(S)	(S)				S		P	P			2F	
	Canisters, sequencers, fittings, doors											2F				3F	F	S	(S)	(S)	-	F	(F)	(F)		P	P			2F	
Structure and heat shield	Body airframe																F	F	(F)	(F)		F	(F)	(F)		P	P	A	A	2F	
	Heat shield--panels, nose cap, fillers																	S	S	(S)		S	(S)	(S)		S	S	S	S	2F	
	Control surfaces with heat shield	S															F	F	S	(S)		F	(F)	(S)		P	P	P	P	2F	
	Landing gear and drag chute											2F			(F)		S	F	(F)	(S)		F	(F)	(F)			S	P	P	2F	↓
	Canopy and windows											2F					F	F	S	(S)	S	F	(F)	(F)		S	S	P	P	2F	(n-2)F
Boilerplate structure without heat shield															✓	2															
Simulated entry vehicle equipment--1 set (weight and c.g.)																					✓					✓					
Boilerplate structure with simulated heat shield																					✓										
Cabin mockup structure													✓																		
Test stand simulating component interfaces		✓		(✓)			✓	✓	✓																						

A = Special design for air drop tests D = Functional simulation F = Flight rated component P = Prototype component S = Simulated component (weight, shape, c.g.)

( ) = Reuse test article--do not add *Entry vehicle sizes A and B only **Entry vehicle sizes C, D and E only n = Total number of flights

ER 12471-5

DECLASSIFIED

subcontracts are assumed to be negotiated as fixed cost. Comprehensive controls associated with man-rated systems are planned to be applied to each major subcontractor: configuration and performance specification change control, test procedure and report approval, buyer acceptance by on-site quality assurance representative, serialization of delivered items and piece-part manufacture and lot identification by suppliers of critical components or assemblies.

Because of the "top down" historical aspects of the cost mathematical models used in these studies, specific inputs related to procurement administration and individual procurement costs are not required as inputs. However, the numbers of subsystems and major components required for tests, spares and delivered entry vehicles are direct or indirect inputs into the cost analyses. A detailed breakdown of the major components utilized throughout the entry research program is shown in table 10.

5. Manufacturing and Quality Assurance Plan

As stated in section C above, costing methods used in this study do not require detailed manpower and material descriptions. Fabrication, tooling, assembly and quality control requirements for entry vehicles, including Gemini, PRIME and Apollo, are factored into cost models of this study. As a result, HL-10 entry vehicle costs for fabrication and quality control reflect corresponding costs of Gemini (influence of man-rated systems and their fabrication) and PRIME (influence of heat fabrication processes) as adjusted for weight and system complexity. Advanced fabrication and processing facilities, normally associated with the manufacture of highly reliable and complex assemblies in limited production, are assumed to be available for the HL-10 at no cost to the contract.

6. Logistic Support Plans

This plan outlines the support activities which were identified in the course of the study for the research entry vehicle program. The basic activities include:

Methods of transportation

Material and spare parts (including refurbishment)

Procedural data for operation and maintenance

Contractor supporting services.

Functional plans. - These activities will be developed into functional plans during the development period of the program, and will be implemented during subsequent phases. The development of the functional plans will require that detailed support analysis be conducted concurrent with system definition and design. The detailed support analysis will provide a basis for selection for each of the plans and will assure that the support plans are mutually complementary.

The paragraphs which follow describe the policies established for each of these activities which are to be implemented during the design development phase.

Transportation plans. - Transportation plans are required to control hardware movements to meet test, operation, and refurbishment schedules; to assure availability of the transport medium; and to prescribe packaging and handling techniques. The detailed transportation plan, defining organizational responsibilities, methods, and schedules will be prepared during the design/development phase.

Transportation requirements include all transfers of major components between the contractor and the using sites. Figure 55 illustrates major entry vehicle transfers from launch through recovery.

Local movements (within the boundaries of contractor, launch site, or recovery site) are not considered here; nor are routine shipments of materials or parts included. Transportation of the test and operational launch vehicles (Little Joe II and Titan III) and other GFE are not considered within the scope of this plan. The following movements constitute the primary areas of concern:

Hardware	From	To	Method	Remarks
GSE (various) and special tools	Contractor	FRC, KSC	Truck, air and rail	Prior to first flights
Entry vehicle boiler plates (2) and launch vehicle adapters	Contractor	White Sands	Air, truck	B377-VPG aircraft is suitable
Entry vehicle test vehicles (2) and air-launch adapters	Contractor	FRC	Air, truck	B377-VPG aircraft is is suitable
Orbital entry vehicle (20) and launch vehicle adapters	Contractor	KSC	Air, truck	B377-VPG aircraft is suitable
Training simulators	Contractor	FRC	Truck, air and rail	

High speed transportation of the entry vehicle is desirable to minimize time-in-transport and exposure to contamination or damage. Air shipment is to be preferred since a minimum of disassembly, preservation, and packaging of the entry vehicle is required.

Material support plan. - A material support plan will be prepared during the design development phase to provide for the selection, procurement, stockage, control, and issue of parts for the GSE, training simulators, test vehicles, and orbital entry vehicles. The material support function includes planning of scope and schedules, selection and acquisition of support resources, and application and control of support material.

DECLASSIFIED

The contractor will establish the spares philosophy on the basis of the test, maintenance, and repair policies. A method of quantitative prediction will be developed. Consideration should be given to simulation evaluation techniques for quantitative determinations. Special planning emphasis will be placed on the identification, stocking, and control of parts which are most essential to the assembly, checkout, and launch operations.

Control plan. - A control plan will define the methods of managing the stock balances to assure a continually up-to-date inventory from a standpoint of quantities on-hand, quantities on-order, configuration status, shelf-life data, etc. Control will not be limited to historical performance but will consider quantitative usage prediction techniques. Mechanized data processing control methods shall be investigated.

Inventory control. - Inventory management will be developed for the issue of parts as well as for the receipt of and repair or disposition of inoperative parts. This system will include the efficient movement of hardware to the appropriate repair facility, monitoring of repair progress, and expeditious return of repaired parts to inventory.

TABLE 11

TECHNICAL DATA SUPPORT

Operation	System tests and troubleshooting	Maintenance and repair	Parts identification	Operating	Familiarization	Countdown/launch	Flight/performance	Ground handling and transportation	Inspection and refurbishment	Drawings and schematics
Unmanned tests	X	X	X			X				X
Air-launch tests	Ⓧ	Ⓧ	Ⓧ		X		X			X
Orbital vehicles	Ⓧ	Ⓧ	Ⓧ		X	Ⓧ	Ⓧ	X	X	X
Contractor training simulators		X	X	X						X
GSE		X	X	X						X

Ⓧ = data prepared for each vehicle flight.

X = data prepared for groups of vehicles or equipment.

DECLASSIFIED

DECLASSIFIED

Technical data. - Technical data for support of test and operational activities will be developed during the design/development phase in order to be available with the hardware. The types of data required are summarized in table 11, and are subsequently described.

Systems test and troubleshooting data: The systems checkout data for the manned and unmanned vehicles will be prepared for use in the final assembly, all systems test, and refurbishment areas at the factory as well as for use at the launch site for receiving, preparation, and prelaunch tests. Testing schedules and sequence charts will be developed from design reliability and maintenance criteria. Troubleshooting procedures will be prepared to localize to the level of replacement and/or repair as determined from supportability/maintainability analysis.

Maintenance and repair data: Maintenance and repair data will be required to restore a faulty system, assembly, or component to operating condition using the spare parts, tools, and equipment allocations. This data is developed in conjunction with system test and troubleshooting data (for airborne systems) and operation data (for GSE and simulators).

Parts identification: Parts identification data is a tabulation of components for each configuration of vehicle, simulator, and GSE. This tabulation is also a summary of spares determinations, configuration status data, maintenance significant components, and similar identifications. Parts identification data will be prepared for all vehicles and GSE.

Operating data: Instructions for operating training simulators and GSE will be required. Malfunction detection and troubleshooting procedures will be included.

Familiarization data: This data will be prepared to describe the missions and objectives of the overall program in addition to the flight vehicle, GSE, facilities--etc. Also included will be program interfaces with launch and recovery facilities, mission control, tracking and communications network, and recovery procedures. An index of pertinent manuals, handbooks, reports, drawings, lists, etc., will be included.

Countdown/launch data: Procedures for conducting the final vehicle tests, combined launch vehicle tests, and launching process will be required for vehicles launched from Cape Kennedy.

Flight/performance data: Operational data will be developed for unmanned and manned orbital flights.

Ground handling and transportation data: These data will be prepared to define the recovery handling operations, local handling and movement methods, packaging and processing, and transportation procedures for truck and air movements.

Inspection and refurbishment data: The inspection and refurbishment procedures will be prepared for use at the refurbishment site.

DECLASSIFIED

DECLASSIFIED

Data medium. - The manner of data collection and presentation will be defined in detail during the program design phase. A mechanized collection system capable of selective retrieval of data should be investigated as a means to provide data tailored to each vehicle flight. Types of data which should be selectively prepared for each flight include systems test, maintenance, parts identification, and countdown and launch data. Other data which are less mission critical and which do not change significantly from flight to flight will be prepared to cover groups of vehicles and equipment.

Style and format. - Data will be packaged into technical manuals in the manner which permits maximum utility and ease of handling. Most important considerations are technical accuracy and completeness, and legibility and availability of data.

Contractor support services. - The contractor will establish the necessary organization at the contractor's site, launch site and landing site to accomplish test, training of contractor personnel, and orbital launch activities. Management controls, administrative procedures, and lines of communication will be established. Technical training and certification programs will be implemented to assure the technical competency and proficiency of the contractor personnel responsible for supporting the research vehicle from factory through launch and refurbishment.

The contractor will plan for support of boiler plate tests, air-drop vehicle tests at FRC, launch operations at Cape Kennedy, recovery operations at the landing site and refurbishment activity for orbital entry vehicles.

7. Refurbishment and Turnaround Cycle Plan

Cost of refurbishment is considered to be an important element of this study, not so much for the net savings gained by reuse, but because of the uniqueness of this process in space flight. At the time of this writing, only a few spacecraft, in isolated instances, have been reused (i.e., MOL-Gemini and Mercury). Even in these unmanned cases, there was no deliberate program of reuse in terms of planned multiple refurbishment cycles. Consequently, there is little or no usable data for historical cost modeling. Refurbishment planning and costing, therefore, must be accomplished from the bottom up, e.g., plans, facilities, manpower, schedules, processes, etc. Three assumptions are made in planning the reuse cycle:

(1) The maximum number of recycles per entry vehicle will not exceed four.

(2) The entry vehicle shall be designed with the capability of turnaround in three months.

(3) The purpose of entry vehicle reuse is to reduce program cost and to obtain technical data on the refurbishment processing and performance on recycled vehicles.

The following ground rules were followed during the course of the entry vehicle design and are reflected in the refurbishment processes and plans of this study:

(1) The entry vehicle structure is designed to retain strength integrity and dimensional stability through at least five reuse cycles after the first flight.

(2) Functional equipment components are designed to have the life of six flights plus a 50-percent life margin for manufacturing tolerance buildup and fatigue cycle variance.

(3) Supplementary test points are provided in the entry vehicle system circuitry to allow fault isolation in the detail equivalent to typical bench checks. (This permits evaluation of units in place and avoids breaking of electrical and fluid interfaces.)

(4) Components are located so that removal of other units are not required to gain access to that component.

(5) Items replaced during planned maintenance, such as fuses, filter cartridges and other one shot items, are to be accessible from the inside of the entry vehicle.

(6) The landing gear is designed to limit the loads on the entry vehicle and equipment so that strength integrity and dimensional stability is retained after each landing.

(7) Pyrotechnic and gas generator cartridges are installed such that no damage or deterioration occurs to the adjacent structure or equipment.

(8) Ablative panel installation during refurbishment is identical to the new vehicle process after removal of old panels and structural inspection.

The refurbishment plan described in the sections to follow is based on the approach selected from the brief tradeoff analysis below:

Refurbishment trade analysis. - Three refurbishment concepts have been investigated: (1) refurbishment and integration of the entry vehicle at the factory site, (2) factory refurbishment with integration at KSC, and (3) integration and refurbishment of the entry vehicle at KSC. For the purposes of this discussion, refurbishment is defined as inspection, evaluation and replacement functions. Integration is defined as GSE, adapter mating and compatibility checking, and general subsystem checkout with the GSE.

GSE cost, refurbishment time, and facility requirements in terms of floor area have been estimated for the three refurbishment concepts shown above and summarized in the tradeoff summary chart (table 12). Concept A, factory integration and refurbishment, is selected because of its lowest GSE cost, lowest schedule time and minimum floor area requirements.

DECLASSIFIED

TABLE 12

EFFECT OF INTEGRATION AND REFURBISHMENT CONCEPTS ON GSE COST AND FACILITIES REQUIREMENTS

	Concept A* factory integrate factory refurbish	Concept B Cape integrate factory refurbish	Concept C Cape integrate Cape refurbish
GSE cost (millions of dollars)	100.2	108.0	118.2
Flow time--factory test through launch (days) 2 shifts	72	80	91
Facilities floor area requirements (ft^2)	73 600	81 500	101 000
Advantages	Lowest cost minimum handling. Minimum Cape facilities. Greatest efficiency	Simple rocket propulsion installation	Simple rocket propulsion installation
Disadvantages	Restricted rocket propulsion installation	Maximum handling	Higher cost
		Additional white room facilities needed.	

* Recommended concept.

Refurbishment and turnaround cycle. - The total turnaround cycle is planned for two phases: factory operations and launch operations. Operations of the recovery site are limited to ordnance safing, gas depressurization as required for transport, data tape removal and a one-day postflight inspection. Upon return to the factory, four major functions take place: (1) evaluation including inspection and subsystem functional checks, (2) refurbishment of the entry vehicle, (3) reconfiguration of the entry vehicle for the assigned research tasks of the next flight, and (4) system testing. Launch site operations consist of two phases: (1) industrial area activities and (2) pad operations. Launch site functions are expected to be identical to those for a new entry vehicle. Schedule span times would be expected to follow learning curve reductions for both new and refurbished vehicles in the same way.

Factory evaluation: After complete visual inspection and photo documentation in the factory receiving area, the entry vehicle will move to a heat shield removal position where all panels are unbolted and samples sent to the

DECLASSIFIED

laboratory for analysis. The undershield structure will be inspected for cracks, hot spots, corrosion, etc. Access panels, floor panels and seats will then be removed for inspection of equipment and structure. Avionics subsystems will be given functional checks with power-on to determine drift, degradation and out-of-tolerance conditions resulting from entry flight.

Factory refurbishment: The RCS, landing assist and EC/LS components will be drained, purged, pressure checked and serviced with replaceables such as filters, squib valves, etc., and then given functional checks. The hydraulic system will be drained, flushed and purged and checked for contamination. After replacement of filter elements and fluid, pressure and operating checks will be made. It is recommended that the main surface hinge bearings be replaced after each flight. If laboratory checks show no degradation or dimensional change after flight, this step may be discontinued in later flights. Emergency recovery parachutes will be removed at the factory and replaced at the launch site industrial area. Landing gear skid brushes will be removed and replaced. After functional checkout of the telemetry and instrumentation system in the previous flight mode, the new measurements will be "patched in." At this point, experiment equipment will be removed and reconfigured for the next flight. As the subsystems are refurbished, new heat shield panels will be prefitted, trimmed, and installed on the airframe. Aerodynamic surfaces will be reinstalled and hydraulic checks made.

Factory system testing: System testing of the refurbished entry vehicles will follow identical procedures of new entry vehicles. Combined systems acceptance tests will be run after power-on checks. Next, a simulated mission test will be conducted in ambient room environment, to be followed by another simulated mission in a high-altitude chamber. After successful completion of these tests, the entry vehicle will be transported to Cape Kennedy.

Launch site industrial area activities: The refurbished entry vehicle is to be processed in the Manned Space Operations and Checkout (MSOC) building in the same sequence as for new entry vehicles. Functions at this location start with entry vehicle receiving and inspection for any damage incurred during transport for the factory. Next, the entry vehicle is moved to the altitude chamber facility at the MSOC building, mated to checkout GSE, and evaluated by a simulated mission test in the chamber. Pyrotechnics and parachute installations are made in the respective facilities at Merritt Island. Final inspection, cleanup, weight and balance and preparations for transport to Launch Pad 40 complete the industrial area activities.

Launch pad: Launch pad functions, as in the case of new entry vehicles, will include GSE/entry vehicle electrical mate, entry vehicle/launch vehicle mechanical and electrical mate, simulated flight (entry vehicle only), launch vehicle-entry vehicle countdown, H_2O_2 and other support servicing, final systems simulated flight, L-1 day preparations and final countdown.

Refurbishment requirements for entry vehicle systems. - Each component and subassembly defined for each entry vehicle system will be evaluated and assigned to one of the following planned maintenance categories: functionally tested in place, removed from the entry vehicle and bench tested, removed

DECLASSIFIED

from the entry vehicle and refurbished, and removed and replaced with a new item. Percentage of components of each subsystem in these four categories is summarized in table 13. These planned turnaround functions will be applied on every successive turnaround of an entry vehicle. As more is learned about post-turnaround flight performance, turnaround without replacement of some items may be expected. For instance, the aerodynamic surface hinge bearings may ultimately be changed every other or every third flight, after flight data becomes available. Random failures and failures due to unexpected wearout modes will require additional replacements beyond the planned maintenance. These replacements should be relatively low based on the reliability assessments quoted in section VIII. Spares inventories will be increased about 15 percent over programs without entry vehicle reuse to support unplanned replacements.

TABLE 13

REFURBISHMENT REQUIREMENTS FOR HL-10 ENTRY VEHICLES

Entry vehicle subsystem or assembly	Percent of subsystem recycled			
	Functional test in place	Remove from entry vehicle and bench test	Remove and refurbish item	Remove and replace item
Structure	97	0	0	3***
Heat shield	0	0	0	100
Control surfaces	60	Bench tested if out of tolerance or malfunctioning	0	40**
Landing gear	85		0	15
Electronic flight control	100		0	0
Guidance and navigation	100		0	0
Hydraulics	95		0	5
EC/LS	95		3	2
Reaction control	98		0	2
Electrical power and control	85		9	6
Communications	78		2	20*
Instrumentation and displays	95		0	5
Crew support	75		5	20
Emergency recovery	10	0	0	90
Visibility	100	0	0	0

* Antennas
** Bearings
*** Landing gear doors

Refurbishment and turnaround schedules. - Detailed time phasing of the refurbishment and turnaround activities are shown in figure 56 for the factory refurbishment and test and in figure 57 for the launch site preparations of the entry vehicle. Refurbishment and turnaround span times are summarized in table 14.

TABLE 14

TURNAROUND CYCLE SUMMARY

	Calendar days	Work days	Man-hours
Refurbishment	50	36	8 200
System test	32	26	20 000
Industrial area	12	8	155 000
Launch pad	35	24	
Total	129	94	183 200

Manpower estimates for the entry vehicle turnaround are based on Gemini and USAF PRIME programs for factory system test and launch site activities as normal spacecraft operational functions. Manpower for heat shield refurbishment is based on processes required to remove the spent heat shield, fit, trim, and fasten the new one onto the airframe, fill gaps and inspection of each step. Other subsystem refurbishment manpower is based on X-15 experience and the data from table 13. The 129-day recycle time represents the span time for the first few turnaround cycles. This time can be expected to be reduced to 90 days in an operational turnaround cycle.

Entry vehicle turnaround plan. - The recycle span times determined by detailed schedule plans were used to prepare recycle plans for a range of entry research flight plans. A master recycle plan, shown in figure 58, may be applied to programs of from 4 to 21 flights by reading the sequence of flights from left to right. The first entry vehicle orbited and recovered is scheduled for a suborbital abort demonstration. This unmanned flight is terminated by sea recovery and, because of the severe flight environmental and the salt water soaking, the entry vehicle is not reused. The second unmanned flight is terminated by land landing at FRC, Edwards AFB. This entry vehicle is refurbished and held as a backup vehicle. Each entry vehicle is fully inspected and evaluated whether or not it is slated for reuse. The turnaround plan for two unmanned and five manned flights calls for two unmanned and three manned entry vehicles. Only one additional vehicle is required to support four additional flights. A total of six entry vehicles are required to service a 21-flight research program without exceeding four reuses on any single entry vehicle.

DECLASSIFIED

8. Air-Launch Test Program

Air-launch flight tests with full-scale HL-10 D/3 canopy vehicles are an integral part of the overall entry research program. Transonic, subsonic performance and other types of data obtained from these tests are directly applicable to 13 of the 51 research tasks. The cost of one transonic air-launch flight is less than 1/50 of an orbital entry flight.

Two air-launch vehicles are planned. The first vehicle will be limited to free glide subsonic missions; the second vehicle equipped with a liquid propulsion system for transonic and low supersonic flight capability. Two air-launch vehicles also provide the earliest opportunity for subsonic flight testing (simpler vehicle systems) and the advantage of two vehicles to support the more advanced phases of the flight test program.

Test objectives. - The primary objective of the air-launch flight test is to evaluate subsonic and transonic aerodynamic performance and handling qualities including the landing maneuver. To be fully effective, those tests must be completed in advance of the first orbital entry flights.

Three secondary objectives are: (1) to evaluate subsystems performance and reliability in transonic-to-landing environment, (2) to check out compatibility and flight performance of various entry vehicle modifications during the orbital entry program, and (3) to obtain preliminary research data prior to orbital entry flights on experiments which are critical in transonic or subsonic flight.

Although crew training costs are excluded from this study, plans include utilization of the air-launch vehicles for advanced crew training and proficiency flights. Subsonic free glide flights would be used for this purpose.

Contributions of the air-launch flights to 13 of the 51 research tasks are listed below:

(1) Task HF-1: Pilot control and vehicle landing after prolonged zero-g environment. Two factors are considered to have a degrading effect on pilot performance during entry and landing of a maneuvering entry spacecraft: (1) prolonged zero gravity and (2) extended periods without benefit of flight proficiency activity. The second factor can be evaluated relative to transonic flight, approach and landing by use of the HL-10 air-launch vehicle (powered for transonic flight). The subject pilot would reduce or eliminate the usual proficiency flights and/or simulator practice for 30-day periods or longer and then make an HL-10 air-launch flight. His performance would then be compared with that during an air-launch flight immediately preceded by simulator and/or aircraft (i.e., F-106) flights.

(2) Task HF-2: Crew biomedical and performance monitoring. Air-launch flights enable evaluation of biomedical sensors during transonic and subsonic flight, and landing. In addition, performance of flight tasks can be evaluated by physiological responses to preplanned tasks.

(3) Task FC-4: Flight control actuation experiment. The electromechanical control system would be evaluated in transonic, subsonic and landing maneuvers on the drop vehicle well in advance of the entry experiment. Air-launch tests, in turn, would be preceded by simulator evaluation and life-cycle tests of the actuator. In effect, transonic and subsonic flight with the electromechanical actuator would be well substantiated prior to actual entry flights, allowing concentration on hypersonic flight.

(4) Task PP-3: Landing assist propulsion. This task covers performance evaluation of instant L/D and go-around propulsion systems after orbital and entry environment exposure. A major portion of this task is really performed by means of the air-launch test vehicle. The selected size, D/3, permits installation of either a turbojet or a turborocket engine.

(5) Task EV-2: Evaluate reuse capability and refurbishment requirements. This task, as applied to entry flights, is supplemented by the air-launch program. Even though B-52 air-launches limit exposure and operation to that of transonic and subsonic flight, considerable data is obtained on those subsystems installed in the air-launch craft. The practical limit to entry vehicle reuses is about 10 while a drop vehicle may be used on the order of 100 times.

(6) Task FM-3: Evaluate flying qualities. It is planned to obtain considerable flying quality data in the trans/subsonic speeds with the air-launch vehicle than with the entry vehicles. More pilots can evaluate the qualities and be evaluated by use of these vehicles since the cost per flight for air-launch vehicles is about 1/100 of the orbit-to-entry flights. Further advantage is gained by comparing actual handling qualities of the vehicle with those of the simulator, thus providing a better simulator for more effective training and research.

(7) Task FM-4: Measure control effectiveness and damping derivatives. The air-launch vehicle would have the same applications as stated in item 6 for transonic and subsonic flight.

(8) Task FM-6: Measure stability and control at various cg locations. Center of gravity variations would be simulated in the air-launch vehicle by ballast. Transonic and subsonic flying qualities would be evaluated for fore and aft cg positions.

(9) Task FM-2: Evaluate aerodynamic characteristics. A limited amount of transonic and subsonic data could be obtained from the air-launch vehicle tests to supplement FM-2, such as aerodynamic characteristics with simulated ablator recessions and/or surface distortions, and instrument performance checks.

(10) Task GN-6: Terminal navigation and guidance techniques. The air-launch vehicle, equipped with auxiliary propulsion, terminal guidance avionics and automatic landing equipment would evaluate terminal

DECLASSIFIED

guidance from Mach 1.5 to landing and therefore supplement the actual entry flights. Pilot training in the use of terminal guidance techniques would also be accomplished with this vehicle as a check on the simulator design.

(11) Task GN-7: Air data measurements. Air-launch tests will be an important part of Task GN-7 since the evaluation is mainly concerned with after peak heating and altitudes below 130 000 feet (39.6 km). Air-launches with the rocket powered HL-10 vehicle will permit evaluation of air data systems from about 70 000 feet (21.3 km) to landing.

(12) Task FC-1: Flight control system evaluation. Prototype flight control systems will be installed in the air-launch vehicle for preliminary evaluation in the transonic and subsonic speed ranges to establish confidence in the system prior to orbital entry flights.

(13) Task FC-2: Adaptive flight control system. Evaluation of the adaptive flight control system in subsonic and transonic flights of the air-launch test vehicle help establish confidence and safe procedures prior to orbital entry flights.

Flight plan. - A total of 30 free and powered air-launch flights are planned to meet the primary and secondary objectives stated above. Twenty free glide and 10 powered flights are to be accomplished within a 10-month time span. Flight profiles will range from medium and low L/D (steep) to high L/D (shallow) approaches. Early flights will operate at lower wing loading, then build up to 55 lb/ft^2 (270 kg/m^2).

Specific flight objectives for each flight have been developed from the applicable research tasks. A preliminary flight plan is shown in table 15 for 30 flights.

Air-launch vehicle description. - The air-launch vehicle supporting the entry research program will be full scale matching the aerodynamic outer lines of the actual entry vehicles. Airframe structure will be similar to the entry vehicle except for the nose section forward of the pilot. Dummy heat shield panels will be attached to the structural skin. The pilot will have an ejection seat and jettisonable canopy. In addition to the normal SAS fly-by-wire system, a direct mechanical link system will be provided as backup. Inertial platform, computer and other orbital guidance and navigation equipment will not be required in these test vehicles except in special evaluation flights. Communication equipment will be limited to voice, telemetry and tracking beacon. A cabin conditioning and pilot oxygen subsystem will replace the more complex entry vehicle EC/LS. Pilot displays and instruments will be similar to the entry vehicle installation except where the ejection seat dictates a change. Electrical power will be a battery system designed to the air-launch test mission. Propulsion will include the H_2O_2 landing assist system with thrustors slightly relocated to allow for the main rocket engine.

DECLASSIFIED

TABLE 15

B-52 AIR-LAUNCH FLIGHT PLAN

Task supplemented by air-launch test	Glide flights																				Powered flights									
	1	2	3	4	5	6	7	8	9	10	11	12	13	14	15	16	17	18	19	20	21	22	23	24	25	26	27	28	29	30
HF-1													X	X	X	X													X	X
HF-2									X	X																				
PC-4									X	X	X	X															X	X		
PP-3																	X	X	X	X										
EV-2	X	X	X	X	X	X	X	X	X	X	X	X	X	X	X	X	X	X	X	X	X	X	X	X	X	X	X	X	X	X
FM-3	X	X	X	X	X	X	X	X													X	X	X	X	X	X				
FM-4						X	X	X																	X	X				
FM-6													X	X									X	X						
FM-2				X	X																				X					
GN-6							X	X																X		X	X			
GN-7		X	X																			X	X							
FC-1	X	X	X	X	X																X	X	X	X	X					
FC-2						X		X																		X				
Automatic landing							X	X																						

DECLASSIFIED

Several major differences in the airframe structure will result from propulsion tank installation near the c.g. of the entry vehicle, ejection seat support bulkhead and carrier aircraft support points. Dummy heat shield panels will be attached to the aluminum skin. The single pilot will have an ejection seat and jettisonable canopy. Control surfaces and landing gear installations will be identical. Gross weight of the air-launch vehicle will be adjustable by ballast tanks from about 80 to 100 percent of the entry vehicle landing weight. Because of the smaller pressurized cabin structure, deletion of major equipment items, lightweight simulated heat shield, and elimination of two crew stations, approximately 1800 pounds (825 kg) of ballast would be required on the free glide vehicle. Installation of the main propulsion system is expected to use most of the 1800 pound (825 kg) difference.

Carrier aircraft and HL-10 drop vehicle interfaces. - Limited study has been made to analyze requirements for airlifting the entry vehicle to altitude for drop flight tests. The B-52, C-141, and C-5A aircraft were considered as carrier aircraft candidates. Evaluation proved the B-52 best suited for the task from the standpoint of availability, performance, clearances, and structural margin. The availability of the C-5A is considered poor in the time frame of the proposed drop tests. Vehicle size E, however, poses some major problems in clearance (folding fin and/or telescoping pylon would be required) on the B-52 while the C-5A would better accommodate this size.

Three techniques for mounting the HL-10 A, B, C, D and E size entry vehicles were studied. Figure 59 shows the five entry vehicles mounted to the existing B-52 with the X-15 pylon. Note the interference of the fin of all sizes necessitating folding of the C, D and E fins and some modification of the pylon for all entry vehicle sizes.

This particular concept allows sufficient ground clearance to land the B-52 with HL-10 attached, gear down. By compromising the gear down requirement and accepting minimal clearance of 7 inches (17.7 cm) above static ground line (max. B-52 takeoff weight) and by transfer of fuel to the opposite B-52 wing, center fin clearance without folding is possible for the A, B, C and D sizes. Figure 60 shows the D entry vehicle mounted on a new pylon designed expressly for the HL-10. If late model B-52 aircraft are used, only minimal wing beef-up is required for this pylon.

A third technique of attachment is a retractable pylon design in which the HL-10 would be held to the B-52 at a +9° angle of incidence as illustrated in figure 61. Just prior to release from the B-52, the HL-10 would be lowered to the -0.5° incidence angle and released. This approach allows about 19 inches (48.3 cm) ground clearance for the D-size vehicle.

The folded fin concept poses some major problems of lateral stability just after release from the carrier aircraft; thorough wind tunnel testing would be required. The second concept provides only minimal ground clearance for the HL-10 but is the simplest engineering solution. The probability of landing with HL-10 gear down is very low and can further be reduced by an interlock with the B-52 interface. The technique of retracting the HL-10 at positive incidence while attached to the B-52 provides both ample ground clearance and

DECLASSIFIED

DECLASSIFIED

fin clearance. Engineering problems are introduced, however. The extendable pylon in the extended position must have high torsional (HL-10 roll) stiffness. Further, stability and trim problems are introduced to the B-52. For purposes of cost evaluation, the second concept of minimum ground clearance with the new pylon has been selected.

9. Flight Operations Plan

Flight operations are defined in this study as the implementation of the research flight plan through the use of the developed entry vehicles, GSE support facilities, launch vehicles and operating personnel. The phased approach, as applied to the flight operations plan, starts with support facility preparations and proceeds to launch vehicle and entry vehicle preparations, the research flight mission and data processing. Maximum utilization of currently operating mission support facilities is emphasized. Mission Control Center, Houston; selected Gemini and Apollo tracking and communication stations; the Manned Space Flight Network; the Merritt Island facilities at KSC; Titan III Complex 40; the Air Rescue Service (USAF); FRC, Edwards AFB operations; Eglin AFB and three tracking/communications ships.

The detailed flight objectives and mission profiles are derived in research value and flight loading analysis of Part VI of this report. This analysis provides optimal (maximum research value) loading of research tasks on a series of flights of different entry profiles. Although experiment equipment, crew tasks and the entry profile differ from flight to flight, the overall operation from launch preparation to flight data analysis is essentially the same for each flight.

Launch control through countdown liftoff and umbilical clearance would be by the Launch Control Center at the Titan III Vertical Integration building. Mission Control Center at Houston would then take control through boost, insertion, orbit, deorbit, entry to the point where FRC, Edwards radars acquire the entry vehicle and the terminal guidance mode is established. Then, FRC, Edwards takes control in the same manner as for an X-15 mission.

Activation of operations facilities. - No extensive activation of facilities for flight operations is required in this program. Activation of man-rating modifications at the Titan III launch site and the terminal guidance radar, computer, command buffer linkup at FRC, Edwards are the two major activations. Facility interface and performance specifications will control checkout process for activation of each facility. Facility activation tasks are listed below:

Demonstration of man-rating modifications at Titan III, Complex 40

Readiness of Mobile Service Tower "white room" modifications

Operational readiness at RF Link-Titan III Launch Control to Merritt Island

Working areas and utility services for entry vehicle at MSOC

DECLASSIFIED

DECLASSIFIED

Integration of display changes at MOCR, Houston

Readiness of AN/FRW-2, Computer, AN/FPS-16 and buffer equipment at FRC, Edwards

Readiness of automatic landing system at FRC, Edwards

Readiness of crew support van at FRC

Integration of AN/FPS-16, Computer, AN/FRW-2 and buffer equipment at Eglin AFB (alternate landing site).

Entry vehicle preparation at Merritt Island, KSC. - Entry vehicle receiving inspection, adapter mating, servicing, and checkout prior to erection on the launch complex are planned to take place at the Manned Spacecraft Operations and Checkout facility with some support operations of the Fluid Test Support Building, the Ordnance Storage facility, the Parachute Building and the Central Instrumentation facility. After delivery from the factory by air carrier to the Cape Kennedy "skid strip," the entry vehicle will be transported directly to the MSOC for receiving inspection. The entry vehicle will be mated to the GSE and subsystem tests performed. In this same facility, the adapter will be mated to the entry vehicle and the whole unit installed in the large vacuum chamber for final leak checks. Finally, the entry vehicle will be serviced, Class C ordnance and parachutes installed, and the entry vehicle prepared for transport to the Titan III Launch Complex 40. Telemetry data from the subsystem and mission simulation in the MSOC facility will be transmitted by RF link to the Central Instrumentation facility.

Titan III integrated launch system operations. - Because of the research and development orientation of the HL-10 entry research program, the entry vehicle will bypass the normal payload integration function at the Vertical Integration Building and be moved directly to Launch Complex 40 and immediately raised for mating to the Titan III-C launch vehicle. Launch checkout GSE, mounted in vans, will already be in position at the pad. After electrical and mechanical mating, umbilical drop checks will be conducted. System checks, servicing and entry vehicle simulated flight tests will be conducted in parallel with launch vehicle tests. Integral launch vehicle and entry vehicle tests, joint simulated flight tests, flight readiness review, propellant loading and final countdown checks follow. A summary of launch site operations is shown in table 16.

Launch, orbit, deorbit, entry and landing. - All the manned research flights follow a sequence of operations described below.

Launch: After propellant loading, subsystem checks, ordnance connections and final leak checks, the flight crew members ascend the umbilical tower via the high speed elevator, cross over to the white room surrounding the entry vehicle and enter the vehicle through the top hatch. They proceed to check out the entry vehicle subsystems and monitor displays. After electrical power transfer from GSE to entry vehicle, the mobile service tower is retired. Final launch vehicle and entry vehicle checks are made after which automatic countdown proceeds to launch vehicle ignition and liftoff. At this point, flight control shifts from the Titan III flight control center to MCC at Houston. After

DECLASSIFIED

TABLE 16

LAUNCH SITE OPERATIONS SUMMARY

Function	Facility used
Entry vehicle pyrotechnic installation	Pyrotechnic Installation Building
Entry vehicle deorbit/abort motor installation	Pyrotechnic Installation Building
Subsystem tests	MSOC Building
Entry vehicle flight simulation in vacuum check	MSOC Building
Launch vehicle core staging	Titan III Vertical Integration Building
Launch vehicle solid rocket motor installation	Titan III Solid Rocket Motor Installation Building
Entry vehicle-launch vehicle mating	Titan III Launch Complex 40
Range communication checks	Complex 40, CKAFS Central Control
H_2O_2 loading in entry vehicle	Complex 40
Flight crew insertion and escape	Umbilical Tower, Complex 40

liftoff the flight crew continues to monitor the entry vehicle subsystems and launch vehicle malfunction detection displays. At the same time, Cape Kennedy tracking data is computed by MCC-Houston. After launch vehicle staging and Stage II cutoff the entry vehicle reaction control system is turned on and the Titan III-C second stage is separated.

Orbit: At the insertion point, Bermuda communications is in contact with the entry vehicle and insertion tracking data is relayed to MCC. Onboard orbit data from the guidance computer and subsystem performance status are reported to MCC via Bermuda. At the same time, the flight test engineer begins final preparations and calibrations of the experiments. The first orbit is in contact with communication stations at Canary Islands, Carnarvon, White Sands, Corpus Christi and Cape Kennedy. After completing the second orbit, the pilot commander receives deorbit update data from MCC via Bermuda.

Deorbit: After passing Pretoria, the deorbit attitude is established and the deorbit countdown initiated. Deorbit thrusting and adapter separation are confirmed by telemetry and voice message to the deorbit tracking and communication ship positioned directly below. The entry vehicle is then rotated to the entry attitude and data is telemetered to the Carnarvon station.

Entry: The tracking acquisition message is transmitted from Carnarvon tracking radars to the entry tracking ship located East of Australia. At this same time, entry experiments are turned on and data recorded in the entry vehicle. The entry vehicle enters the sensible atmosphere at 400 000 feet (122 km) over the entry tracking ship. The last telemetry and voice transmissions from the entry vehicle before communications blackout are made at

DECLASSIFIED

this point. About 2-1/2 minutes after passing over the entry tracking ship, communications blackout should start and 30 seconds later the entry vehicle will have descended to 280 000 feet (85.4 km) at which time aerodynamic control takes effect. The entry vehicle, still under communications blackout, is skin tracked from Hawaii radars as it passes the 250 000-foot (76.3 km) mark. Some 400 nautical miles (741 km) west of the west coast of the United States, the entry vehicle emerges from blackout and communication is re-established from a postblackout ship east of this point. This tracking ship acquires the entry vehicle and begins computing trajectory data. Point Arguello station radars acquire the entry shortly after this. After the entry vehicle passes Point Arguello, the AN/FPS-16 radar at FRC, Edwards acquires the entry vehicle and coded steering commands are automatically transmitted to the entry vehicle in its terminal guidance phase. After reaching the high key point, the entry vehicle descends to Mach 6 and the air data system is initiated.

Visual contact with FRC should occur next. At about Mach 2 the pilot pitches the entry vehicle to the positive slope portion of the L/D versus α. During transonic flight which follows, the canopy heat shield cover is jettisoned. Mid and low key points are crossed during the last subsonic portion of the entry flight and the final landing approach executed by the pilot. Mission control is transferred to FRC when the entry vehicle is acquired by FRC radar.

Landing: After the final runway approach is made, the flareout is executed by the pilot. Several seconds before touchdown the landing gear is lowered and, after slideout starts, the braking parachute is released and the entry vehicle slides to a stop. The crew proceeds to secure the vehicle, vent the cabin and open the top hatch. The crew support van moves into position as the ground crew assists the flight crew in opening the top hatch and egressing the entry vehicle.

The flight mission from countdown at the launch site to landing is summarized in a sequence of events model in table 17.

Recovery operations at FRC, Edwards and Eglin AFB. - Support operations at FRC, Edwards start with the B-52 air-launch flights in the latter phases of entry vehicle development. Two B-52 aircraft outfitted with special carrier pylons are planned. The HL-10 air-launch vehicles will operate in a manner similar to the Norair HL-10 and M2-F2 vehicles. The automatic landing system used in the unmanned entry flights will be checked out using the air-launch vehicles for final demonstration. Various fly-by tests with the entry vehicle transponder are planned to check out tracking and command procedures, exercising the AN/FPS-16 radar linked to the computer, command buffer and AN/FRW-2 transmitter as an operating system.

After landing, the entry vehicle is prepared for transfer to the operations hangar. Here, data tape is removed and dispatched to the central data reduction center (entry vehicle contractor's plant) and components designated to be shipped separately are removed. After an external and cabin inspection, the entry vehicle is to be air transported to the entry vehicle contractor's plant.

DECLASSIFIED

DECLASSIFIED

TABLE 17

SEQUENCE OF EVENTS MODEL, ENTRY CONDITION C

Time	Event	Entry vehicle subsystem functions	Crew tasks	GSE and GOSS functions
-10:50:00	Propellant loading	RCS and landing assist start valves closed		H_2O_2 load and metering units
- 7:00:00	Guidance and control computer checks	Primary and backup systems ON		Guidance and control test consoles and simulators
	Instrumentation checks	Transducers energized, Multiplexers ON		MILO ground station; calibration units
	Communication checks	HF, VHF, S-band, C-band, UHF ON		Antenna couplers; beacon interrogators
- 6:00:00	EC/LS checks			EC/LS checkout console; coolant, O_2 units
- 3:00:00	Start ordnance connections and checks		Crew medical checks and suiting	Pyrotechnic testers, simulators
- 2:00:00	Complete all ordnance checks	Resume switching functions	Crew van to pad area	
- 1:50:00	Start leak checks	EC/LS and propulsion high pressure system		Propulsion and EC/LS leak checkers
- 1:30:00	Insert flight crew in entry vehicle	Start hatch button-up	Crew enter entry vehicle; check subsystem	
- 1:20:00	Transfer entry vehicle power		Monitor displays	Power and control monitor console
- 1:10:00	Refire MST	Entry vehicle subsystems on standby power	Start final entry vehicle checkout	Umbilical lanyards installed
- 0:30:00	Complete entry vehicle and launch vehicle checkouts	Arm entry vehicle ordnance	Monitor MDS status to LCC	Operate GSE at pad--all systems
- 0:00:00	Liftoff	Start guidance programmer	Monitor MDS status to MCC	Start KSC tracking and T/M receive
+ 0:00:10	End vertical rise; start roll	Subsystems in launch status	Monitor entry vehicle status to MCC	HF, VHF voice to entry vehicle
+ 0:00:20	End roll program		Monitor entry vehicle system and MDS	MCC compute trajectory
+ 0:00:23	SRM shutdown; Stage 1 start			
+ 0:00:33	Jettison SRM's			
+ 0:02:00	Start closed loop guidance			
+ 0:04:08	Stage 1 shutdown; Stage 2 start			
	Stage 1 separation			
+ 0:07:40	Stage 2 shutdown	Start RCS		Bermuda tracking
+ 0:07:50	Separate Stage 2 from entry vehicle	Stabilize entry vehicle attitude	Monitor separation	Bermuda tracking
	Confirm separation	VHF transmission	Contact Bermuda	Start orbital data computation
+ 0:08:18	Maximum elevation angle Bermuda station	HF, VHF, S-band transmission	Voice entry vehicle status, OK orbit	Bermuda tracking, transmitting, receiving
+ 0:19:05	Maximum elevation angle Canary Islands	All subsystems in orbit mode	Entry vehicle and crew status--voice/telemetry	Track and communicate
+ 0:54:49	Maximum elevation angle Carnarvon			
+ 1:33:51	Maximum elevation angle White Sands			
+ 1:35:08	Maximum elevation angle Corpus Christi			
+ 1:38:53	Maximum elevation angle Kennedy			
+ 1:42:31	Maximum elevation angle Bermuda			
+ 1:53:11	Maximum elevation angle Canary Islands			
+ 2:21:55	Maximum elevation angle Carnarvon			
+ 2:23:00	Maximum elevation angle post-blackout ship			
+ 2:57:11	Maximum elevation angle Pt. Arguello			
+ 2:57:46	Maximum elevation angle FRC, Edwards AFB			
+ 2:59:52	Maximum elevation angle White Sands			
+ 3:01:38	Maximum elevation angle Corpus Christi			

DECLASSIFIED

DECLASSIFIED

TABLE 17.--Concluded

SEQUENCE OF EVENTS MODEL, ENTRY CONDITION C

Time	Event	Entry vehicle subsystem functions	Crew tasks	GSE and GOSS functions
+ 3:05:30	Maximum elevation angle Cape Kennedy	HF, VHF, S-band transmission All subsystems in orbit mode	Entry vehicle and crew status--voice/telemetry	Track and communicate
+ 3:08:47	Deorbit guidance update Bermuda	Update guidance computer		Deorbit update message
+ 3:36:34	Maximum elevation angle Pretoria	HF, VHF, S-band transmission	Entry vehicle and crew status--voice/telemetry	
+ 3:40:00	Final research instrumentation calibration	All subsystems in orbit mode	Conduct pre-entry calibration	
+ 3:41:00	Rotate entry vehicle for deorbit (-180°)	Att ref system and horizon scan used	Control entry vehicle attitude	
+ 3:44:00	Start deorbit countdown	Deorbit sequencer ON	Conduct deorbit count	
+ 3:44:42	Initiate deorbit thrusting	Fire deorbit engines	Maintain entry vehicle attitude	
+ 3:45:30	Pass deorbit ship	Eject adapter. Telemetry transmitting	Report retrofire to MCC	Confirm deorbit via telemetry
+ 3:48:00	Rotate entry vehicle for entry attitude	Att ref system and RCS	Operate attitude control	Entry vehicle attitude data to Carnarvon
+ 3:56:43	Maximum elevation angle Carnarvon	Telemetry transmission	Report entry vehicle status	Track and communicate
+ 4:15:54	Enter atmosphere at 400k feet (122 km)	Telemetry transmission	Report entry vehicle status	Track entry vehicle
	Maximum elevation angle entry tracking ship	Hydraulic motor pumps ON	Steer to display commands	
+ 4:16:00	Start data recorders for experiments	Entry vehicle subsystems in entry mode	Monitor experimental data	
	Pre-communication blackout transmissions	Telemetry transmission		
+ 4:16:34	Enter communication blackout	Data on tape only		
+ 4:18:54	280k ft altitude (85 km)	Aerodynamic control of entry vehicle starts		
+ 4:20:54	Pitch entry vehicle from 52°α to 26°α		Control entry vehicle attitude	Acquire entry vehicle (skin track) Hawaii
+ 4:24:54	Pitch entry vehicle from 26°α to 45°α	Biasing surfaces activated	Control entry vehicle attitude	
+ 4:30:00	Maximum elevation angle Hawaii		Monitor critical experiments	Skin track; start contact entry vehicle
+ 4:36:54	200k ft (61 km) altitude			
+ 4:39:33	Exit communications blackout			Post-blackout ship track
+ 4:40:33	Pass post-blackout ship	Telemetry transmitted	Entry vehicle and crew status to FRC	FRC lock on entry vehicle and send UHF commands to entry vehicle
+ 4:41:33	FRC C-band track acquisition			
+ 4:42:30	High key point		Receive voice steering data	
+ 4:42:33	Begin Mach 6 to 1.2 range	Switch to air data system		
+ 4:41:54	Overfly U.S. coast (Pt. Arguello)		Entry vehicle and crew status to FRC	Track entry vehicle
+ 4:43:00	Visual contact with FRC area			
+ 4:44:54	Pitch entry vehicle from 45°α to 150°α	Biasing surfaces actuated	Change entry vehicle attitude	
+ 4:46:33	Enter transonic flight Mach 1.2			
+ 4:47:00	Jettison canopy heat shield	Pilot seat in landing position	Check temperature and jettison shield	
+ 4:47:36	Exit transonic flight Mach 0.8			
+ 4:48:00	Pass mid key point			
+ 4:48:30	Pass low key point			
+ 4:48:30	Start final approach	Arm landing assist motor		FRC optical tracking
+ 4:49:00	Initiate flare--out	Apply landing assist thrust if required	Visual runway sighting	
+ 4:49:18	Extend landing gear			
+ 4:49:20	Touchdown		Steer entry vehicle; deploy drag chute	
+ 4:49:30	End slide out	Vent cabin	Secure entry vehicle systems	Entry vehicle service and crew support van
+ 4:52:30	Crew egress			Crew egress equipment Removal of data tapes

DECLASSIFIED

Recovery operations at Eglin AFB are similar to FRC, Edwards AFB except that entry vehicle handling equipment is limited to that necessary for crew safety. Handling and shipping equipment will be flown from FRC, Edwards within 24 hours.

Emergency recovery operations. - Pad abort recovery is accomplished by steering the entry vehicle over water just off shore from Complex 40. Navy recovery forces will transfer the flight crew. The entry vehicle will be transported by ship or "Flying Crane" helicopter. Recovery from $q_{max.}$ abort is accomplished by the same sort of rescue operation.

High altitude/velocity abort results in a high or low L/D entry followed by parachute landing at sea. The entry vehicle is designed for flotation and crew support for five days without aid. Air rescue aircraft should be on site within 2 to 3 hours with auxiliary flotation equipment and paramedical aid if required. No recovery ships will be stationed to support abort recovery in this plan. Surface rescue and entry vehicle retrieval will be accomplished by designated Navy vessels within a 750-nautical mile (1.39-Mm) range (about two days steaming). Communications to these ships will be via standard naval operational links. Excessive sea state in the critical abort areas will be cause to delay the flight. Launchings are planned to permit at least four hours daylight in the launch abort recovery areas.

Mission abort from orbit results in either a terminally guided return and runway landing at either FRC, Edwards or Eglin AFB depending on the orbit. The probability of aborting the mission and landing at any other location is estimated to be sufficiently low to preclude any operational requirement to support such landings.

Emergency crew recovery from entry flight below about Mach 2 will be accomplished by ejecting a drogue parachute to stabilize the entry vehicle and reduce speed to subsonic conditions below 30 000 feet (9.14 km). At this point, the A and B size vehicles will initiate seat ejections. The C, D and E sizes (3 or more crew members) will deploy a main parachute. Land impact of the larger sized entry vehicles will cause structural damage but the crew will be protected from serious injury. Helicopter and land rescue will be provided.

Data recovery and processing. - Flight data is collected from five major sources: (1) entry vehicle subsystem performance and research data recorded on magnetic tape aboard the entry vehicle, (2) entry vehicle subsystem and research data transmitted to various ground stations, (3) voice transmissions recorded at MCC, (4) ground tracking data recorded and computed at the various tracking stations, and (5) data accumulated from inspections and laboratory specimen analyses of the entry vehicle after landing. Because of the short time span between data reduction and the next flight, earliest possible dispatch of telemetry and ground tracking data tapes to the central data facility for analysis is accomplished by air courier. The telemetry tapes and tracking data (tapes and printout) will be duplicated at the originating stations. Previously developed computer programs will be used to reconstruct the trajectory from tracking data and compare these results with the onboard results. Diagnostic data on entry vehicle tape and from ground telemetry will be reduced

DECLASSIFIED

and examined for any off-nominal performance that would cause changes or adjustments for the next flight. Research data will be processed in the same facility. Results will be compared with the predicted values to determine changes, if any, that would be needed in the succeeding flights. Data processing will be automated from the raw tape to the final data presentation to maximize the time between available results and the succeeding flight.

Unmanned flights. - Unmanned flights differ operationally from manned flights in several ways. One major difference is the automatic landing technique in the unmanned system demonstration flight. Terminal guidance ground commands control the unmanned entry vehicle to the final approach after which the automatic landing control commands the entry vehicle through touchdown and slideout. The automatic landing system is fully described in Part IV of this report. In approaching the west coast of the United States, the unmanned entry vehicle will be interrogated by ground base roll and pitch commands. If the entry vehicle responds correctly, the flight into Edwards will continue; if not, a termination command will be sent to kill lift and impact in restricted waters.

10. Baseline Communication Coverage

Communications coverage in support of the baseline mission is less extensive than the Gemini system because of the limited mission events in orbit. Emphasis is on launch, deorbit and entry phases of the mission. Coverage of the three-orbit mission is shown in figure 2. Tracking coverage boundaries are constant 5° elevation angle limits and are modified to account for orbital altitudes of each pass. Figure 3 relates the elevation look angles as a function of the mission time at each station.

The Manned Space Flight Net (MSFN) will support the entry research flight mission. That portion of the network to be used on this mission is illustrated in the network diagram of figure 62. Three of the five Apollo tracking ships will be used to track and communicate with the entry vehicle at deorbit, preblackout and postblackout points. A supplemental satellite communications network of 40 kilobit capability is planned. Note the added link between Houston and FRC, Edwards.

C. DETAILED SCHEDULES FOR BASELINE PLAN - 11 FLIGHTS

Scheduling of both the developmental and operational tasks discussed in previous sections has been prepared. The Authority to Proceed is the reference starting point. Figure 63 is a chart of 74 development program tasks. Operational phase scheduling is shown in figure 64. Time spans for the various program tasks were derived from similar tasks of other completed programs such as Gemini and PRIME. These schedules are normally paced and include the effects of design changes, test failures and span time estimation accuracy as extrapolated from recent space programs. An 11 flight program (2 unmanned, 9 manned) is used as a baseline plan. As few as 5 and up to 21 flights can be applied to this schedule by simply deleting from or adding to the 11-flight schedule.

DECLASSIFIED

DECLASSIFIED

An example of subsystem development and qualification is shown for the Navigation and Guidance Subsystem in figure 65. It is from planning schedules such as these that the development time spans for each subsystem were derived.

D. VARIATIONS FROM BASELINE PLAN: EFFECTS OF SIZE AND NUMBER OF FLIGHTS

The effect of entry vehicle size on the research program plan and schedule was explored by examining possible changes in each detailed element within each program task. The structural complexity of the range of airframe sizes from A to E were found to be the same. Except for physical size or capacity, nearly all the subsystems of the entry vehicle were unchanged with vehicle size. Three exceptions in subsystem design are noted below:

(1) The A and B size vehicles have ejection seats for emergency crew recovery after mission abort. Vehicle sizes C, D and E have large 3-canopy parachute systems for recovery of the whole entry vehicle with crew. Ejection seats require fixed station ejection tests and rocket sled ejection demonstrations. The larger vehicles require parachute development programs and recovery demonstration test involving full-scale boiler plate entry vehicles.

(2) The EC/LS is larger and more complex for the large size entry vehicles with crew sizes of 3 and more. Development span for these more complex subsystems will be slightly longer for the larger vehicles.

(3) Crew displays other than the pilot's station grow in complexity with vehicle size. Development and production testing of displays is slightly more extensive on the C, D and E vehicles.

None of the exceptions cited above cause any appreciable change in the major milestone completions, i.e., entry vehicle delivery and first launch.

The number of research flights, however, have a direct influence on the overall entry research program. The number of launch vehicle adapters as well as the duration of flight testing increases in proportion to the number of manned research missions flown. Again, as in vehicle size, number of flights have no discernible influence on the development program since all the ground rules, constraints and guidelines adopted for this study apply to all flight plan sizes.

The influence of number of research flights on program procurement, refurbishment and program duration is summarized in table 18.

DECLASSIFIED

DECLASSIFIED

TABLE 18

PROGRAM REQUIREMENTS VERSUS NUMBER OF RESEARCH FLIGHTS

Requirement	Total number of research flights							
Total number of research flights	5	7	9	11	13	15	17	21
Number of manned flights	3	5	7	9	11	13	15	19
Number of entry vehicles built	3	4	5	6	6	7	7	7
Number of refurbishments	1	2	3	4	6	7	9	13
Number of launch vehicles	5	7	9	11	13	15	17	21
Number of adapters	5	7	9	11	13	15	17	21
Duration of flight test program (months)	9	15	19	23	27	31	35	43
Total program duration (months)	44	50	54	58	62	66	70	78

DECLASSIFIED

DECLASSIFIED

DECLASSIFIED

PRECEDING PAGE BLANK NOT FILMED.

IV. GSE AND FACILITY REQUIREMENTS

A. GENERAL APPROACH USED IN DEFINITION OF REQUIREMENTS

One of the main objectives used to establish ground support equipment (GSE) and facility requirements for this program was to develop a reliable ground support system for minimum cost. In this respect, a major effort has been directed toward maximum utilization of existing hardware.

The required GSE and facilities must be available and adequate to assure scheduled checkout and launch of each entry vehicle for research flights. The GSE must have the ability to handle, store, transport, inspect, install, erect, test, service, adjust, safeguard, actuate, maintain, launch, guide, record and control the entry vehicle system.

Automatic checkout GSE shall be provided to perform final subsystem checks, combined systems test and automatic countdowns on each research entry vehicle.

B. FACILITY REQUIREMENTS

1. Manufacturing Site

Major facilities required for the manufacturing phase are as follows:

(1) Entry vehicle manufacturing area for detail fabrication and assembly of the entry vehicle (existing).

(2) Entry vehicle test area for supporting the integration of equipment and the production acceptance testing of the entry vehicle (existing).

(3) Manufacturing area for supporting the checkout of components and subsystems (existing).

(4) Entry vehicle refurbishment and reconfiguration area (existing).

(5) GSE manufacturing area for detail fabrication and assembly of all new or modified GSE.

(6) GSE test area for functional and reliability testing of all GSE before mating with the entry vehicle (existing).

(7) Space chamber for extension of production acceptance testing of the entry vehicle under simulated space environment (existing).

DECLASSIFIED

2. Launch Site

The following facilities are required at the launch site:

(1) Operations and checkout buildings for supporting the operational and functional checkout of the entry vehicle system, subsystems, and components (existing).

(2) Fluid complex for extension of functional system and subsystem checkout (existing).

(3) Space chamber for performing complete functional checkout and simulating mission profiles under space environments (existing).

(4) Launch pad for supporting preparation and launch operation (existing - program modified).

(5) Storage facilities for logistics, and ordnance (existing).

(6) Parachute building for storage and checking of parachutes (existing).

(7) Range support (existing).

Either Titan III Complex 40 or 41 can be used with only minor changes required to accommodate the entry vehicle. Complex 40 is recommended for use on this program based on availability and its capability to accommodate the erection and the de-erection of the entry vehicle. Man-rated installations such as water sprinklers, hazard alarm system, crew escape provisions and a crew-waiting clean room must be added on the complex. See figures 66 through 70 for Complex 40 arrangement and Titan III facilities.

One of the major facilities on the complex requiring changes is the Mobile Service Tower (fig. 71). The environmentally controlled room must be extended downward to working level No. 9. Gaps should be sealed and the entire room refurbished. Also, retractable service platforms must be added to working level No. 9. Service platforms at levels 10, 11 and 12 require modification.

Consideration has been given to requirements for this program on a Saturn IB Complex which would be used to comply with secondary objective facility needs. Saturn Launch Complexes 34 and 37 are compatible with the entry vehicle launched by Saturn IB vehicles; only minor modifications are required to the mobile service tower. These consist of modifying or replacing three levels of retractable service platforms, and adding a soft liner to the existing silo shells, to provide for maintenance of white room atmosphere inside the unsealed silo. Man-rated installations similar to those required on Titan III Complex 40 should be included.

The umbilical tower and umbilical mast are compatible with entry vehicle requirements. In addition to the GSE to be installed on each, a crew-waiting clean room should be provided at the 225.5 foot (68.9 m) level on the umbilical tower.

DECLASSIFIED

DECLASSIFIED

A crew evacuation system to readily accommodate a large group of personnel is required to supplement the elevator. Such provisions will be added to the umbilical tower and umbilical mast as shown in figure 72.

NASA-KSC existing facilities are compatible with entry vehicle servicing and storage requirements. Adequate space is evident in the MSOC facility to accommodate the entry vehicle along with other current programs.

Receiving-inspection, operational and functional checkout of the entry vehicle system, subsystems, and components will be performed in the MSOC facility. One of the large existing space chambers in the MSOC can be used for performing simulated mission profiles with the entry vehicle under space environments.

The existing Fluid Test Support Building will be used for extension of entry vehicle fluid subsystems checkout.

Entry vehicle logistic support can be accommodated in the existing Spacecraft Spares and Equipment Building. Also, entry vehicle ordnance storage can be shared with other ordnance in the existing Ordnance Storage Facility.

The existing Parachute Building can be shared for storage and checking of entry vehicle emergency recovery chutes. Refer to figure 73 for KSC Facility locations.

The Titan III Vertical Integration Building (VIB) is normally used to check out the Titan III launch vehicle and the payload combined prior to delivery to the launch complex. On this program, only the Titan III launch vehicle will be prepared in the VIB while the entry vehicle is being prepared in the MSOC facility. The launch vehicle and entry vehicle will be mated at the complex, using existing erection facilities. This arrangement is considered to be more efficient and less time consuming.

A RF data link is required between Titan III Launch Control Center in the VIB and the Saturn Central Instrumentation Facility at KSC. This link would provide telemetry data, during countdown and launch, from the entry vehicle to the NASA Instrumentation Facility.

Other existing support facilities to be used are:

KSC Facilities	CKAFS Facilities
Cryogenic Test	Hanger L
Flight Crew Support	Liquid Fuel Storage
Environmental Systems Test	Solid Propellant Storage
RF Systems Test	Solid Rocket Motor Assembly Bldg.
Pyrotechnic Installation	Launch Control Center
	Transporter/Thrust Mount
	Water Distribution System
	Power Distribution System

DECLASSIFIED

DECLASSIFIED

3. Mission Control Center--Houston

Tracking and flight mission control facilities are required at Manned Space Center-Houston. Existing facilities are compatible with entry vehicle equipment. Mission Operating Control Room No. 1 or 2 can be shared with the Apollo program for HL-10 orbital mission control functions. Current program planning and support facilities can be shared.

Facility modifications required for the HL-10 program are mission display changes and the addition of a voice and teletype communication link from MSC to FRC Edwards AFB.

4. Primary Landing Site--FRC Edwards

Minimum facilities will be required at FRC during entry vehicle air-launch flight phase and subsequent orbital landing phases of the entire program. Facilities required are as follows:

(1) Entry vehicle servicing hangar (existing).

(2) Flight crew support van (new).

(3) Operation office (existing).

(4) Terminal guidance control facility equipped with necessary radar, communications, computers--etc., suitable for unmanned and manned orbital landing flights (existing--program modified).

(5) Telemetry receiving facility (existing).

5. Alternate Landing Site Facilities--Eglin AFB

To establish an alternate landing site for the HL-10 program, the following basic facility requirements must be provided.

(1) The landing site must contain aircraft landing and servicing facilities similar to those of Edwards AFB. Facilities in this category include terminal guidance control systems which have suitable capability to handle emergency landing procedures of the HL-10, telemetry recording equipment, flight crew support and hangar space for servicing and storing the entry vehicle.

(2) Entry vehicle transportation, handling and servicing GSE will not be on station at the alternate site; if required, it will be flown in from the launch site, the manufacturing site or the primary landing site.

(3) Emergency landing support procedures will be provided which define the services, support and handling of the crew and entry vehicle under such emergency conditions.

DECLASSIFIED

DECLASSIFIED

6. Telecommunication Ground Support Facilities

(1) Downrange communications, instrumentation and tracking subsystems shall be provided to fulfill the requirements of the orbital phase of the mission. These subsystems should include C-band tracking, uhf voice command, vhf telemetry and hf air-to-ground voice communication.

(2) Existing Apollo downrange land tracking and instrumentation stations are compatible with the HL-10 receiving and transmitting equipment; therefore they should be used. In addition, three tracking and communication ships will be required at sea; one for deorbit, one for entry, and one for post-blackout.

(3) No new land stations are required; however, a new uhf command transmitter (AN/FRW-2) is required at the primary landing site (Edwards). Refer to figure 74 for complete telecommunications ground support facilities required.

7. Abort Recovery and Telemetry Ships

Provisions for abort recovery and rescue of the entry vehicle and crew at sea will be accomplished by aircraft and ships assigned for the purpose.

Facility requirements discussed in the above sections are summarized in table 19.

C. GROUND SUPPORT EQUIPMENT FOR ENTRY VEHICLE

1. GSE Design Approach

This section describes the GSE plan which has been developed to meet the operational support requirements of the HL-10 program. The following criteria were used to determine GSE provisioning:

(1) All GSE is deliverable.

(2) All GSE design and implementation are simplified by assuming all operations will be conducted by skilled engineers and technicians.

(3) GSE is to be selected and/or designed to minimize cost.

(4) Maximum use will be made of available GSE (GFP).

(5) Same GSE design to be used in all test areas--manufacturing, launch site, and primary landing site.

(6) Titan III Complex 40 or 41 at Cape Kennedy Air Force Station will be used for all launches.

DECLASSIFIED

TABLE 19

HL-10 MAJOR OPERATIONAL FACILITIES

Location	Existing facilities used	New facilities required
NASA-Center	Program offices	None
Manufacturing Site	Design, manufacturing, test, refurbish	To be furnished by contractor
John F. Kennedy Space Center, NASA and Cape Kennedy Air Force Station	Manned spacecraft operations and checkout (MSOC) Fluid test facilities Titan III launch complex 40 LTR services Titan III vertical integration building Titan III launch control center (LCC) Flight crew support Spares, parachute and ordnance storage	1) RF data link between T-III LCC and Saturn central instrument. 2) Modify MST in environment controlled room 3) Add clean room and crew evacuation system to umbilical tower
Downrange	Communications, instrumentation and tracking land stations. 5 tracking ships	None
Manned Space Flight Center, NASA	Mission control center - MOCR No. 1 or No. 2	Voice and teletype link between MSFC and FRC
Goddard Space Flight Center, NASA	Communication and data distribution center	None
Flight Research Center - EAFB, NASA	Spacecraft servicing hangar and runways Operations office and computer Guidance control facility Radar tracking and telemetry station	Add uhf command system
Eglin Air Force Base	Hangar, offices, runways Radar tracking and telemetry station Computer	None

DECLASSIFIED

(7) Entry vehicle receiving-inspection and preparation at the launch site will be performed in existing NASA facilities at John F. Kennedy Space Center.

(8) Automatic checkout and countdown GSE is to be used.

(9) Based on Gemini program success, scope of subsystem functional testing at launch site to be reduced.

(10) Entry vehicle to be transported on GSE dollies rather than on a trailer.

(11) The entry vehicle system and all subsystems shall be thoroughly tested and checked out with GSE to assure maximum launch readiness prior to delivery to the launch site.

(12) Entry vehicle refurbishment will be performed at the manufacturing site.

2. GSE Description and Utilization

The initial list of supporting equipment, as defined in tables 20 through 35, was generated in terms of the major types of equipment, such as checkout, auxiliary, handling and servicing. To reduce the development time and cost, each equipment requirement in the above categories was analyzed and compared to equipment utilized on current space programs to determine if the existing design was adequate or if the configuration was required. A considerable amount of information was obtained concerning the utilization potential of existing designs. Typical examples of such information are: the Gemini and PRIME AGE system, and the Apollo ACE system for servicing and checkout. Following is a brief description of each GSE system.

Propulsion system. - GSE units are provided for hydrogen peroxide (H_2O_2) conditioning, functional checkout, and servicing at the factory and at the launch pad. GSE requirements for the factory and launch site are similar. An H_2O_2 metering unit, H_2O_2 drain tank, GN_2 servicing unit and associated hoses, lines and adapter kits are required at both locations. GSE for servicing the entry vehicle at the launch site also includes provisions for emergency dumping of the H_2O_2 propellant in the event of an extended launch hold.

During H_2O_2 conditioning tests at the factory and launch site, GSE is used to measure and monitor temperature and pressure, as well as to drain and purge the H_2O_2 system with GN_2.

Communication system. - GSE for communications checkout and monitoring at the factory, launch site and primary landing site includes bench testing units for hf, vhf, uhf and C- and S-band systems testing; also, C- and S-band transponder and telemetry checkout and monitor sets, command (uhf) system checkout and monitor set, voice communication (vhf, hf) test and recorder sets, adapters and antenna hats.

DECLASSIFIED

and monitor sets, command (uhf) system checkout and monitor set, voice communication (vhf, hf) test and recorder sets, adapters and antenna hats.

Guidance and control system. - Guidance and control GSE consists of a G&C computer checkout, recorder and monitoring set, inertial measuring unit checkout and calibration set, computer analog output test and monitor unit, autopilot simulator and test units, backup guidance system test unit and switching logic test unit.

Electrical power system. - An entry vehicle d-c power supply control and monitor unit, d-c power backup battery rack, power supply test unit, and battery servicing kit are required at the factory and launch site for all phases of testing.

Telemetry and instrumentation system. - GSE for telemetry and instrumentation receiving, recording, and control at both factory and launch site includes PCM telemetry ground station, telemetry control console, S-band telemetry receiver, telemetry tape recorder and digital printer, PCM telemetry decommutator, and entry vehicle instrumentation test and calibration set. Also included are entry vehicle simulator, countdown display system, telemetry remote power supply unit, antenna and coupling equipment and logic switching unit.

Pilot escape system. - GSE for the pilot escape system is to be provided for entry vehicle sizes A and B only. An ejection seat functional test fixture will be required for supporting the ejection seat in the horizontal position and simulating flight loads for checkout of the harness release mechanisms. It also provides for checkout of the man/seat separator, and facilitiates transfer of the seat to the entry vehicle. In addition, an ejection seat installation assembly will be used to transfer the seat from test fixture and into the crew compartment of the entry vehicle.

Parachute recovery GSE (entry vehicle sizes C, D and E only). - GSE for parachute recovery of the entry vehicle consists of a recovery sequence checker and a recovery system simulator.

Pyrotechnic system. - Pyrotechnic system servicing equipment includes the GSE required to install and de-arm the pyrotechnic devices. Dummy abort/separation rockets are used at the factory during rocket alignment checks. Flight abort separation rocket installation and alignment, and pyrotechnic buildup functions will be performed in the Pyrotechnic Installations Building at KSC.

Pyrotechnic checks at the launch site will be similar to those at the factory. Pyrotechnic shorting plugs and de-arming equipment are installed to render the entry vehicle safe. Prior to launch, pyrotechnic shorting plugs and safety devices are removed and the pyrotechnic devices armed. GSE associated with pyrotechnic servicing and checkout is designed to meet safety requirements as delineated in AFETR-M127-1, Range Safety Manual.

DECLASSIFIED

Weight, balance and alignment system. - GSE required for weight and balance of the entry vehicle includes a weight and balance fixture designed to receive the complete entry vehicle for weighing and locating the center of gravity of the vehicle; holding, alignment, and locating fixtures to facilitate alignment and rigging of the entry vehicle in the weight and balance fixture, and an optical alignment tool kit for aligning the entry vehicle retrorockets and guidance equipment.

Crew transfer system. - Consists of a crewman transfer van with provisions for transporting suited crewmen from the Aeromedical Facility to the launch pad at the launch site, and from the entry vehicle to medical facilities at the primary landing site. This van can be a standard 20-foot (6.1 m) trailer van. It also must accommodate doctors and suit technicians who must be in attendance at all times.

Sequential systems. - The GSE in this group constitutes the automatic checkout equipment used to perform final subsystem checks, combined systems test and automatic countdowns. The major equipment consists of sequence control monitor and recorder consoles, sequential testing consoles, systems test conductor console, switching logic unit, crewman checkout simulator, entry vehicle simulator, launch vehicle simulator, and entry vehicle to adapter simulators.

The entry vehicle simulator is an electrical unit providing signal sources and loads duplicating launch vehicle circuit functions appearing at the interfaces. Used to validate the launch vehicle prior to entry vehicle/launch vehicle mate. The launch vehicle simulator provides signal sources and loads duplicating entry vehicle circuit functions appearing at the interface. It is used to validate the entry vehicle prior to entry vehicle/launch vehicle mate.

The entry vehicle to adapter simulators are panels of equipment which provide signals and loads at the adapter/entry vehicle interface for subsystem level of compatibility testing of one module when the other is not available.

Environmental control and life systems. - GSE for EC/LS servicing at both factory and launch site includes high and low pressure component test benches, gaseous oxygen carts, water servicing units, entry vehicle coolant servicing unit, O_2 sampling kits, high pressure hoses, cryogenic O_2 servicing consoles, a cryogenic transfer system, ground cooling unit with ducting, ECS checkout console, leak detector, and an ECS package transfer dolly.

Aeromedical system. - An aeromedical monitor and record console is required for monitoring and recording the biomedical data and time correlations. A 4-channel electrocardio scope displays EKG traces in parallel.

Cabling and umbilical equipment. - Cabling and umbilical GSE consists of the many electrical cables used to carry electrical power and test input signals between checkout, operating and servicing GSE and the entry vehicle system. Also includes electrical junction boxes, the umbilical disconnect set at the entry vehicle interface, and an umbilical cable tester used to perform the pre-launch checkout of umbilical signal paths from the entry vehicle to GSE and provides calibration of the GSE monitoring circuits.

DECLASSIFIED

Ground handling and transportation GSE. - The entry vehicle ground handling and transportation GSE includes all dollies, slings, adapters and tow bars used for ground transportation. Entry vehicle and adapter covers, and special handling kit are included. Personnel protective clothing, crew egress pad, cockpit sill and canopy guards, and cockpit entry ladders comprise some of the handling GSE. Also, maintenance platforms, entry vehicle to B-52 launch adapter, entry vehicle support assemblies, and landing gear damper test fixture are included.

Aerodynamic controls GSE. - Control surface systems GSE consists of control surface protractors used to check deflection angles of the entry vehicle control surfaces, a hydraulic servicing unit, and a control surface electric simulator which is an electronic rack containing panel displays which simulate entry vehicle control surface movement upon receipt of a signal from the entry vehicle. Tables 20 through 35 show detail initial GSE requirements and usage. Indication is shown were selected end items are similar to existing GSE used on other programs. If this existing equipment can be made available as GFP to this program, it can be refurbished or modified to suit, and used with a possible substantial cost and time saving to the program.

The total GSE shown is equivalent to three complete sets.

TABLE 20

PROPULSION SYSTEM GSE REQUIREMENTS

	Units required		
		Launch Site	
	Factory	KSC	Complex
*Checkout unit, propulsion system	2	1	1
*Checkout adapter kits, propulsion	2	1	1
*Component console, propulsion	2	1	
*Checkout kit, adapter	2		
*Metering unit, H_2O_2	1		1
*Servicing unit, O_2/GN_2	2		1
*Pressurization unit, nitrogen	1	1	1
Propulsion system control and monitor	2		1
Drain tank, H_2O_2, 50 gal	1		1
GSE adapter kit and panels	1		1
H_2O_2 temperature conditioning unit	1	1	1

* Similar to Gemini spacecraft AGE

DECLASSIFIED

TABLE 21

COMMUNICATIONS SYSTEM GSE REQUIREMENTS

	Units required			
		Launch site		Landing site
	Factory	KSC	Complex	
Test bench, hf and audio	2			
Test bench, "S" and "C" beacons	2			
Test stations, entry vehicle communications	2	1		
Test bench, entry vehicle beacons	2			
Test set, transponder	1			
*Mobile antenna tester	1		1	
*C-band beacon checkout and monitor	1		1	1
*Frequency monitor	1	1	1	1
*C- and S-band beacon interrogator	1		1	
*Communications recorder and test set	1	1	1	1
*Antenna rotation	1		1	
*RF monitor	1	1	1	1
*UHF command checkout and monitor	1	1	1	1
Adapter unit, interface	1		1	
Console, astronaut communications	1	1	1	1
S-band telemetry checkout and monitor set	1		1	1
Command buffer				1

* Similar to Gemini spacecraft AGE

TABLE 22

GUIDANCE AND CONTROL SYSTEM GSE REQUIREMENTS

	Units required			
		Launch site		Landing site
	Factory	KSC	Complex	
* Test console, computer systems	2	1	1	
*Computer data recording system	2	1	1	
*Recorder assembly, guidance control	2	1	1	
*Test console, platform, inertial unit	2	1		
*Test console and simulator	2	1	1	
*Attitude indicator	1	1		
*Test console, inertial measuring unit	1	1	1	
Test unit, computer analog output	1		1	
Test unit, autopilot	2	1	1	
Autopilot simulator unit	1		1	
Test unit, backup guidance system	1		1	
Logic unit, switching	1	1	1	
Automatic landing aid				1

* Similar to Gemini spacecraft AGE

DECLASSIFIED

TABLE 23

ELECTRICAL POWER SYSTEM GSE REQUIREMENTS

	Units required		
		Launch site	
	Factory	KSC	Complex
*External power system, control and monitor	2	1	1
*Power supply control rack, DC	2		1
*Battery rack, DC power backup	1		1
*Power supply test, entry vehicle	2	1	1
*Battery rack, external power control	1		1
*Console assembly, power and control monitor	2	1	1
Battery servicing kit	2	1	1

* Similar to Gemini spacecraft AGE

TABLE 24

AERODYNAMIC CONTROLS SYSTEM GSE REQUIREMENTS

	Units required		
		Launch site	
	Factory	KSC	Complex
Protractors, control surface	1		1
Hydraulic servicing unit	1	1*	1*
Simulator, control surface, elect.	1		1
Kit, ground handling and protective	1		1
GSE adapter kit, interface	1	1	1

*Share one unit

DECLASSIFIED

TABLE 25

TELEMETRY AND INSTRUMENTATION SYSTEM GSE REQUIREMENTS

	Units required		
		Launch site	
	Factory	KSC	Complex
* Ground station PCM telemetry	1		1
* Console assembly, telemetry control	1		1
* Decommutator, PCM telemetry	1		1
* Telemetry magnetic tape recorder	2		2
* Printer, digital	1		1
Test set, entry vehicle instrumentation	1	1	1
Calibration chamber, CO_2 PP transducer	1		
Simulator, entry module	1		
* Display system, countdown	1	1	1
* Power supply, telemetry remote unit	1		1
Telemetry receiver, S-band	2		2
Antenna and coupling equipment	2		2
Logic switching unit	1		1

* Similar to Gemini spacecraft AGE

TABLE 26

PILOT ESCAPE SYSTEM GSE REQUIREMENTS

	Units required		
		Launch site	
	Factory	KSC	Complex
Fixture, functional, test ejection seat	1		
Installation assembly, ejection seat	1		

Note: One ejection seat will be installed on air-launch flight vehicles only (2).

TABLE 27

PARACHUTE RECOVERY SYSTEM GSE REQUIREMENTS

	Units required		
		Launch site	
	Factory	KSC	Complex
Recovery sequence checker	1		1
Recovery system simulator	1		1

DECLASSIFIED

TABLE 28

PYROTECHNIC SYSTEM GSE REQUIREMENTS

	Units required		
		Launch site	
	Factory	KSC	Complex
* Tester, portable pyrotechnic	2	1	1
* Kit assembly, tester pyrotechnic continuity	2	1	1
* Squib simulator, portable	1		1
Work stand, abort/separation rockets	1	1	1
Fixture, flexible linear shaped charges	1	1	
GSE adapter kit and panels	1	1	1
Shield assembly, entry module/adapter	1	1	1
* Similar to Gemini spacecraft AGE			

TABLE 29

WEIGHT, BALANCE AND ALIGNMENT SYSTEM GSE REQUIREMENTS

	Units required		
		Launch site	
	Factory	KSC	Complex
Fixture, weight and balance	1	1	
Kit, adapter, c.g. locating fixture	1	1	
Fixture, alignment, entry vehicle	1	1	
Kit, holding fixtures	1	1	
Fixture, alignment, platform	1	1	
Tool kit-optical alignment	1	1	

TABLE 30

CREW TRANSFER GSE REQUIREMENTS

	Units required			
		Launch site		Landing site
	Factory	KSC	Complex	
Trailer van, crew transfer		1		

DECLASSIFIED

TABLE 31

SEQUENTIAL SYSTEMS GSE REQUIREMENTS

	Units required		
		Launch site	
	Factory	KSC	Complex
* Console, sequence control monitor	1	1	1
* Recorder, entry vehicle sequence	1	1	1
* Console, sequential testing	1	1	1
Simulator, crewman checkout (1)	1		1
Tester assembly, control relay panel	1		
Simulator, booster/entry vehicle	1 (2)		1 (3)
Simulator, entry vehicle/booster	1		1
Console, system test conductor	1		1
Simulator, entry vehicle/adapter	1		
Logic unit, switching	1		1

* Similar to Gemini spacecraft AGE

Notes: (1) Required for unmanned flights only.

(2) Used at launch vehicle vendor factory.

(3) Used at launch vehicle complex facilities.

TABLE 32

ENVIRONMENTAL CONTROL SYSTEM GSE REQUIREMENTS

	Units required		
		Launch site	
	Factory	KSC	Complex
* Cart, gaseous oxygen	2	1	1
* Panel assembly, GOX high pressure	2	1	1
* Servicing unit, entry vehicle coolant	2	1	1
ECS component test bench, low pressure	1	1	
ECS component test bench, high pressure	1	1	
* Cooling unit ground prelaunch	2		1
* Servicing unit, water	1		1
* ECS checkout console	2		1
* Cabin leak detector	2	1	1
Coolant component test bench	1	1	
Dolly, ECS package transfer	1	1	
* Sampling kit, O_2 high pressure	1		1
Terminal box, gas (O_2)	1		1
LOX control console	1		1
LOX control box	1		1
* High vacuum maintenance unit	1	1	1
* LOX servicing unit	1		1
GSE adapter kit and hoses	2	1	1
Air conditioning ducting	1		1
Fixture, installation, ECS package	1	1	

* Similar to Gemini spacecraft AGE

DECLASSIFIED

TABLE 33

AEROMEDICAL SYSTEM GSE REQUIREMENTS

	Units required		
		Launch site	
	Factory	KSC	Complex
Console, aeromedical monitor and record	1		1

TABLE 34

HL-10 CABLING GSE REQUIREMENTS

	Units required		
		Launch site	
	Factory	KSC	Complex
Signal cable set	2	1*	1
Power cable set	2	1*	1
Electrical junction box (2)	1		1
Umbilical disconnect set	1		1
Umbilical cable tester	1		1

*Partial cable set

TABLE 35

GROUND HANDLING AND TRANSPORTATION SYSTEM GSE REQUIREMENTS

	Units required			
		Launch site		Landing site
	Factory	KSC	Complex	
Dollies, entry vehicle transportation (3)	4 sets	1		1
Dolly, adapter	3	1		
Kit, slings, adapters, handling lines	3	1		1
Tow bar, entry vehicle	4	1		1
Kit, special handling equipment	3	1		1
Cover, entry vehicle	3	1		1
Cover, adapter	3	1		
Protective clothing, toxic gas, personnel			4	
Egress pad, hot cockpit, crew				2
Maintenance platform set, vertical position	1		1	
Launch adapter, B-52/entry vehicle				2
Cockpit sill guard, entry vehicle, portable	1	1*	1*	
Canopy guard, entry vehicle, portable	1	1*	1*	1
Support assemblies, MST, entry vehicle			1	
Ladder, cabin entry (launch configuration)	1	1	1	
Ladder, cabin entry (horizontal position)	2	1		1
Dollies, heat shield	2	1	1	
Mobile rack, entry vehicle equipment doors	1	1		1
Yoke assembly, vertical hoist, entry vehicle	1	1	1	
Test fixture, landing gear damper	1			
Post-recovery kit				4
Recovered vehicle shipping equipment				8

*Shared

DECLASSIFIED

3. Final Definition Phase

The primary objective of this phase will be to define, to the level possible, the final equipment and facilities required to support the preparation, checkout, launch operations and recovery for the entry vehicle. To establish these requirements, the following approach will be pursued: determine test requirements for all entry vehicle subsystems; define the preliminary test plans and concepts to be followed in implementing these requirements; and establish the facilities and equipment requirements as dictated by the test requirements, plans and concepts.

The equipment defined in this manner will be the GSE tree, which includes all checkout, auxiliary, handling, and servicing gear. The final task will then be to define the equipment concepts which are preliminary to establishing the basic philosophy and approaches to be followed in the detail design phase.

4. Development Philosophy

The proposed design for the entry vehicle GSE is based upon the utilization of existing equipment as applicable, and the application of current design techniques, and is tempered by the fact that the equipment is program-peculiar and is used on a small number of vehicles. Therefore, it should not be over-designed to obtain sophistication or general purpose status.

Emphasis will be placed on the sequential design of end items so that the total system can be developed in a building block manner.

5. Development Tasks

The tasks required to develop the GSE are the continuation of the work begun in the final definition phase and the additional tasks associated with implementing the detail equipment design. The major tasks are detailed below.

Test requirements and plans. - These two tasks establish the basic and detail requirements for the GSE. Each entry vehicle functional system and subsystem is analyzed in detail to determine the tests and test tolerances to be used in the functional testing to verify operation within design limits and flight readiness. The test plans describe the overall sequence of test operations from factory assembly and checkout through preparations at KSC to the launch pad. Both of these efforts require continual updating to reflect changes made in the course of design.

System design requirements and block diagrams. - The requirements generated in the preceding section are folded into the basic ACE system, and the requirements for the entry vehicle adaptive equipment are identified along with the attendant component, auxiliary, handling, and servicing equipment. Superimposed on these requirements for equipment design are the system design considerations which typically consist of dynamic and static self-test

DECLASSIFIED

capability, power distribution, grounding, manual input and override provisions, interlocking and safety features, etc. Equipped with this integrated set of requirements, the system is block diagrammed to identify the functional end items necessary to satisfy the total system design.

End item design requirements. - This task consists of the preparation of detail design requirements for each item of GSE to the level which permits the detail designer to implement the equipment. The requirements include description of operation, block diagrams, interface definition and detail performance requirements.

Facilities design requirements. - This task requires the preparation of detailed design criteria for all the facilities modifications required at the launch site.

Operating concepts, operation and test procedures. - The purpose of this task is to document the detailed operation of each end item of GSE and to describe the total system operation. The role of each end item in all modes of operation, such as automatic, semi-automatic, manual, emergency overrides, and so forth, will be explained.

Cable installation design requirements. - This task involves the preparation of electrical cable design and installation requirements to support the GSE at the various checkout locations.

Transportation and handling. - This task will consist of defining the mode of transportation and handling of the entry vehicle during shipping and drop test operations. It involves preparation of installation designs of entry vehicle on-ground and air transporters.

6. Problem Areas

In the past, the development of GSE has been a problem because design cannot commence until the system to be tested or serviced has progressed toward the final configuration; and yet, the GSE must be designed, fabricated tested and certified in time to check out the system at the end of the manufacturing phase. The development plan submitted here does not offer a total solution to this problem, but it does provide an optimum approach by using previously developed equipment (ACE, etc.), early generation of preliminary test and equipment requirements (FDP), and the sequential release of design drawings to implement a building block technique.

DECLASSIFIED

V. INTERFACE REQUIREMENTS

A. DEFINITION OF INTERFACE FOR STUDY

The recognition of organization, physical, and software interfaces is considered to be an important element in this study because of the effect on program operations and cost. Final interfaces will be developed and documented into an acceptable functional plan during the development period of the program, and will be implemented during subsequent phases. Organizational interfaces are those approved management and technical functions performed by each agency assigned to this program. Physical interfaces include hardware connections between GSE and facilities; entry vehicle to GSE structural, mechanical and electrical connections; entry vehicle to adapter, and entry vehicle to launch vehicle connections. Software interfaces support the RF ground links to the entry vehicle during flight. A summary of hardware and software interface requirements is shown in figure 75.

B. ENTRY VEHICLE TO GROUND SUPPORT EQUIPMENT

Entry vehicle to GSE interfaces include all those GSE connections to the entry vehicle which are associated with handling, checkout, and servicing of the entry vehicle. These interfaces will be performed at the factory and at the launch site. Only handling and servicing interfaces will take place at the landing site.

C. ENTRY VEHICLE TO LAUNCH VEHICLE

Both mechanical and electrical interfaces will exist at the mating plane of the entry vehicle and launch vehicle. To transmit launch loads from the entry vehicle to launch vehicle adapters, mechanical fasteners will be used to effect the splice. A mechanical automatic entry vehicle alignment feature will be incorporated at the mating plane. Electrical mating of the entry vehicle to launch vehicle signaling system will also occur at the mating plane. Electrical power and signal GSE umbilical connections will interface at the launch vehicle adapter, and also at the entry vehicle to launch vehicle separation plane.

D. ENTRY VEHICLE TO RETRO ADAPTER SECTION

Electrical power, signal and grounding cables which interfaced at the entry vehicle to launch vehicle mating plane will also interface at the entry vehicle to retro adapter mating surfaces. In addition, the electrical cables and plumbing lines routed from the entry vehicle to the retrorockets will be interfaced at the separation plane. These interfaces, along with the mechanical

DECLASSIFIED

interfaces, will demate upon separation of the retro adapter from the entry vehicle in orbital flight.

E. ENTRY VEHICLE TO GROUND LINKS (RF)

The entry vehicle will be in contact with selected ground stations at all times via telecommunications and radar tracking. The interfaces involved with the contacts include vhf/hf voice communications; ground to entry vehicle S-band telemetry link; uhf command link and C-band tracking link. Also included is a rescue beacon link from the entry vehicle to search vehicles on the surface.

DECLASSIFIED

VI. CREW TASK ANALYSIS

A. ANALYSIS APPROACH

Two entry vehicle resources were considered in the research effectiveness and cost tradeoff study. These resources are the weight available to carry research task equipment and crew available to do research tasks in flight. Crew participation available for research is defined as the number of crew carried less the manpower required to operate the entry vehicle with no experiments aboard. Since the flight, from launch to landing, requires varying levels of crew participation, the total time was separated into 12 segments varying from 90 minutes duration to 2 minutes depending on the criticality of the event. Detail crew functions were established during each of these segments using the sequence of events data from table 8. This was first done for the basic crew tasks required to fly the entry vehicle with no experiments and then followed by crew function analysis for each experiment. Crew participation values were expressed as crew utilization ratios, that is, the percentage of a crew member required to perform a given function within a given time segment as an average. For example, a crew utilization ratio of 0.5 during an interval of 5 minutes represents 2.5 man-minutes of effort at an average level of 50 percent of a man's capacity to do experimental flight tasks.

B. CREW SKILLS

The general approach to crew task loading is shown in figure 76 in which activity levels of tasks were determined from research task description in the framework of the mission and the time spans determined from the flight profile and time sequences. Final output is the total research mission description and crew size required for a given set of research tasks.

Crew skills considered for basic and research flight tasks are as follows:

(1) Experimental pilot

(2) Research flight test engineer

(3) Orbital and entry navigation

(4) Biomedical research.

Because of the short mission time and relatively low entry decelerations, biomedical crew tasks are not critical. Orbital and entry navigation are closely associated with the pilot's entry flight tasks. Therefore, only two crew skills were selected: (1) experimental pilot and (2) research flight test engineer. It is assumed that crews will be cross-trained in these two skills. Vehicles of one-man size will, of course, carry a pilot. Larger vehicles will carry a pilot plus the balance of crew stations filled by research flight test engineers.

DECLASSIFIED

C. BASIC FLIGHT CREW TASKS

Basic flight crew utilization never exceeds one man launch and orbit tasks utilize 0.5 man while a peak of 0.9 man is reached in the interval between 280 000 feet (85.4 km) altitude and pullout. Full utilization of the pilot is estimated during the interval between Mach 2 and landing. A summary of crew functions and crew utilization ratios is shown for basic tasks in the bottom of table 36. Each crew utilization ratio was determined by a more detailed breakdown of crew activities within a given flight interval. Figure 77 shows a detailed breakdown for the interval between 400 000 feet (122 km) and 280 000 feet (85.4 km) altitude, 180 seconds.

D. RESEARCH TASK CREW REQUIREMENTS

Because crew utilization in research tasks had a very strong influence on vehicle size, it was considered important to establish a criterion for determining crew requirements. Crew requirements to monitor research data in flight was considered only when some decision resulting from these observations could enhance the results or improve experiment success. Automation in experiment operation and data collection is utilized wherever possible. Crew utilization ratios were determined by methods described in subsection C. above. Crew activities for research tasks included: instrument monitoring, experiment termination and switchover decision-making, operation experiment equipment, entry vehicle controlling, experiment pre-entry checkout and status reporting to pilot or MCC. Each of the 52 research tasks were examined for crew participation. Summarized results are shown in table 36.

Note that 27 out of the 52 research tasks require crew participation. In general, the peak crew activity level occurs from 280 000 feet (85.4 km) altitude down to the point where Mach 6 is reached. If all 27 experiments requiring crew activity were loaded on the same flight, a crew of 5 would be required during the interval from 280 000 feet (85.4 km) altitude to pullout. It is shown in Part VI, that only a fraction of these 27 experiments are actually loaded on any one flight.

E. PROBLEM AREAS

Further depth of detail in analysis requires extensive analysis and evaluation with flight simulators for complete validation of each crew function when integrated with the entire mission. It is recognized that crew utilization during research flights has a critical effect on size selection and that this study is limited to best estimates of each crew function segment. It is recommended that further effort be initiated to experimentally obtain crew utilization factors through real time flight simulators using a full scale crew station simulator.

TABLE 36

CREW UTILIZATION REQUIREMENTS

Research task		Ascent	1st orbit	2nd orbit	3rd orbit	Deorbit and exo-atmospheres	400 000 to 280 000 ft (122 to 85 km)	280 000 ft (85 km) to pullout	Pullout to 200 000 ft (61 km)	200 000 ft (61 km) to M = 6	M = 6 to M = 2	M = 2 to M = 0.8	Approach flare and landing
		0 - 8 min	8 - 98 min	98 - 188 min	188 - 229 min	229 - 257 min	257 - 262 min	260 - 262 min	262 - 284 min	284 - 287 min	284 - 287 min	287 - 289 min	289 - 291 min
1	SM-1												
2	FM-8												
3	FM-3								Control .4	Control .3			
4	FM-2						1st flight 0 Other flights .5	1st flight 0 Other flights .5	1st flight 0 Other flights 5	1st flight 0 Other flights .5			
5	FM-7												
6	FM-5												
7	GN-4												
8	FM-4					Attitude control .1	Attitude control .1	Attitude control .1	(see FM-3) 0	(see FM-3) 0	(see FM-3) 0		
9	GN-5		Read/compare .1	Read/compare .1	Read/compare .1	Read/compare .2	Manual guidance 1.0	Manual guidance 1.0	Manual guidance .8	Manual guidance .5			
10	FM-13							(see FM-2) 0	(see FM-2) 0	(see FM-2) 0			
11	EV-2												
12	SM-6						Vary gap monitor temperature .1	Vary gap monitor temperature .1	Vary gap monitor temperature .1	Vary gap monitor temperature .1			
13	GN-1			Verifications .1		Verifications .1	Compare .1	Compare .1	Verifications .3				
14	FC-1								Control .2	Control .3			
15	SM-2												
16	FM-17								Operate boundary layer tripper .3				
17	SM-8												
18	GN-6									First flight .1 Other flights .8	First flight .1 Other flights .8	First flight .1 Other flights .8	First flight .1 Other flights .8
19	FM-14						(see FM-2) 0	(see FM-2) 0	(see FM-2) 0	(see FM-2) 0			
20	SM-7												
21	FM-6				Transfer ballast .2		Control attitude Adjust SAS gains .2	Control attitude .2	Control attitude Adjust SAS gains .4	Control attitude Adjust SAS gains .3	Control attitude Adjust SAS gains .2		
22	FM-12												
23	GN-2												
24	SM-5												
25	SM-17												
26	SM-3												
27	SM-9						Vary attitude read temperature .2	Vary attitude read temperature .2	Vary attitude read temperature .1				
28	FC-2			C/o adapt. FCS .1					Monitor FCS Switch if required .1	Monitor FCS Switch if required .1			
29	GN-3		Align/read .3	Align/read .3	Align/read .3	Align/read .1							
30	FC-3			C/o computer .1		C/o computer .1			Control modes Monitor FCF .1	Control modes Monitor FCS .1			

TABLE 36. --Concluded

CREW UTILIZATION REQUIREMENTS

Research task	Ascent 0 - 8 min	1st orbit 8 - 98 min	2nd orbit 98 - 188 min	3rd orbit 188 - 229 min	Deorbit and exo-atmospheres 229 - 257 min	400 000 to 280 000 ft (122 to 85 km) 257 - 262 min	280 000 ft (85 km) to pullout 260 - 262 min	Pullout to 200 000 ft (61 km) 262 - 284 min	200 000 ft (61 km) to M = 6 284 - 287 min	M = 6 to M = 2 284 - 287 min	M = 2 to M = 0.8 287 - 289 min	Approach flare and landing 289 - 291 min
31 FM-15												
32 PP-3								C/o engine .4				Open inlet start engine 1.0
33 PP-2						Operate jets Monitor response .1	Operate jets Monitor response .5	Operate jets Monitor response .3	Operate jets Monitor response .2			
34 GN-7												
35 SM-14												
36 HF-2												
37 FC-4				C/o actuator .1			Monitor system Switch if required .1	Monitor system Switch if required .1	Monitor system Switch if required .1	Monitor system Switch if required .1		
38 SM-10												
39 SM-12												
40 SM-13												
41 PP-1			Control entry vehicle attitude .2									
42 SM-16												
43 AV-2							Communicate monitor .2	Communicate monitor .2				
44 SM-11						Start pumps .1	Monitor flow rate .2	Monitor flow rate .2	Monitor flow rate .2	Monitor flow rate .2		
45 HF-1			Crew transfer EVA* 1.0		Exchange crew 0 New pilot .6	Exchange crew 0 New pilot .8	Exchange crew 0 New pilot .8	Exchange crew 0 New pilot .7	Exchange crew 0 New pilot .8	Exchange crew 0 New pilot .8	Exchange crew 0 New pilot 1.0	Exchange crew 0 New pilot 1.0
46 FM-16												
47 SM-15					Pressurize system .1	Monitor system .1	Adjust flow rate 1.0	Adjust flow rate .8	Adjust flow rate .2			
48 FM-9												
49 FM-18							Extend and jettison antenna .5	Extend and jettison antenna .5				
50 AV-1												
51 FM-19				α and ϕ manual program .5	Check entry condition .4	α and ϕ reprogram .2	α and ϕ reprogram .3					
52 SM-18		EVA** 1.0	EVA* 1.0									
PP-6, SM-19, EV-1, FM-1, FM-20, BL-4, BL-10, BL-11 Normal flight tasks	Monitor MDS communicate with MCC .5	Attitude control flight status .5	Orbit determination flight status .5	Orbit determination entry flight preparation .4	Adapter separation retro sequence attitude control .6	Communicate flight status attitude control .8	Flight path status attitude control .9	Flight path and attitude control .7	Flight path and attitude control communicate .8	Flight path and attitude control communicate .8	Flight path and attitude control communicate 1.0	Flight path attitude control communicate 1.0

*Entry vehicle attitude

ED 1 447 1-5

DECLASSIFIED

VII. PROGRAM DEVELOPMENT PLANS--D/3 RESEARCH VEHICLE AND PROGRAM

In addition to entry vehicle and subsystem weight data, a major source of costing input data is the program development plan. This plan, encompassing schedules, vehicles and hardware to be procured and facility requirements, is derived directly from the baseline development plan in Section III of this volume. This baseline plan is required to be modified only by the following items:

(1) Ejection seat development and testing must be deleted, retaining the main recovery parachute system.

(2) Adjustments must be made for the slightly longer development time for the 3-crew station systems: displays, controls and EC/LS installation.

(3) Water recovery egress tests are required for the D/3 vehicle.

A. RESEARCH TASK PLANNING

Although the research experiments are not directly costed in this study, allowance has been made for final research definition, research equipment procurement, and experiment integration. This includes adequate scheduling during refurbishment of the entry vehicle for reconfiguring to meet the requirements of the experiment plan. Eight of the 51 research tasks require long lead times in development of the experimental equipment. Table 37 lists these research tasks. Hypersonic guidance, digital flight control mechanization and landing assist (go-around capability) experiments are the most critical with regard to lead time. These tasks require initiation of development before the final definition phase is completed.

B. SCHEDULES

Schedule pacing for the overall research program is termed "normal" with the following characteristics:

(1) Medium priority on procurement of components and materials, Range support and facility allocation.

(2) Single shift operations at factory except for special or extended period tests or fabrication processes.

(3) Multiple shift operations at the launch complex as required to support the integrated launch vehicle-entry vehicle launch preparations and countdown.

(4) Crew safety goals are to be achieved by design analysis and quality assurance disciplines with demonstration by tests of proper statistical design.

DECLASSIFIED

TABLE 37

RESEARCH TASKS REQUIRING LONG LEAD DEVELOPMENT

Code	Research task description	Equipment requirement	Estimated lead time*
GN-5	Hypersonic guidance techniques	Experimental displays and computer	36
FC-2	Adaptive flight control system	Adaptive autopilot	34
FM-12	Boundary layer survey	Special boundary layer probes	32
FC-3	Digital flight control mechanization	Experimental digital flight controller	36
FC-4	Flight control actuation	Experimental high-rate electro-mechanical actuator	28
PP-3	Landing assist propulsion	Experimental turbo-rocket engine installation with retractable air scoop. (alternate: conventional turbo-jet)	(54)** (30)
SM-13	Heat shield instrumentation sensor studies	Experimental heat flux and recession gages	30
SM-15	Transpiration cooling system	Transpiration injection and shield-experimental panel	32

*Months from initiation of equipment development to first research flight.
**PP-3 task will be accomplished on the 10th and 11th flight.

DECLASSIFIED

(5) Mission reliability goals are to be achieved by design analysis and quality assurance disciplines with readiness demonstration through qualification and environmental acceptance tests.

(6) Time spans planned to complete any work breakdown item are considered to be means of the probability distribution.

The baseline schedules shown in figures 63 and 64 have been modified by the changes cited above. Since the baseline plan was for 11 flights and is only slightly modified, the selected program schedules may also be obtained from figures 63 and 64.

C. HARDWARE UTILIZATION

Component, subsystem and complete entry vehicles required for testing, unmanned and manned flights have an important influence on total program costs. The entry vehicle hardware utilization chart, table 10, was developed to provide data on any entry vehicle size and flight plan. For the selected D/3 vehicle and 11-flight program, hardware utilization is obtained by letting n = 11 and using vehicle size C.

D. REFURBISHMENT

Refurbishment and turnaround of the D/3 vehicle for the 11-flight plan may be extracted from the baseline plan discussed in Section III. The D/3 vehicle will require removal and replacement of the main and extraction parachutes (the smaller vehicles with ejection seats have ordnance and seat parachutes replaced). Crew emergency recovery is the only major difference in refurbishment due to vehicle size. The turnaround cycle span time is unchanged from the baseline plan. The recycle plan for the 11-flight program is shown in figure 78. Note that two different entry vehicles are reflown twice and are given three postflight evaluations. The vehicle is reflown once and evaluated twice. These other vehicles, while not reflown, are evaluated after the flight and therefore provide valuable data as to the capability to be reflown.

DECLASSIFIED

DECLASSIFIED

DECLASSIFIED

PRECEDING PAGE BLANK NOT FILMED

VIII. MISSION RELIABILITY AND CREW SAFETY

A. SUMMARY AND APPROACH

Two principal requirements determine the form and scope of reliability analysis for the HL-10. These are mission reliability, for which overall reliability and contribution of each subsystem are required, and safety analysis for which certain failure modes are identified. For crew safety analysis, failures are classified into three modes: (1) those that have no safety effect (usually those affecting mission objectives only); (2) those requiring emergency action; and (3) those causing catastrophe or loss of crew.

Early in the program a mission success goal of 0.95 and a crew safety goal of 0.995 were established. Based on the latest subsystem designs the final reliability analysis shows both vehicle success and safety goals were met. Figure 79 presents the results of the mission success analysis. While all subsystems did not meet their initial reliability allocation, it is seen that the overall success probability of 0.972 exceeds the 0.95 goal.

The crew safety analysis, considering the time periods of boost, orbit, and terminal phases, has resulted in an estimate of 0.99539 versus the 0.995 goal.

B. MISSION RELIABILITY ANALYSIS

1. Assessment

The basic premise of the following analysis is that the entry vehicle is comprised of a number of individual subsystems arranged in a manner such that the product of the subsystem probabilities is equivalent to the overall vehicle success probability. Each subsystem has been analyzed to account for its redundancies, and the basic elements of each subsystem were arranged into reliability logic diagrams according to their function. From these diagrams, equations defining the probability of successful operation were derived. Utilizing component reliability data the probabilities of success for the boost, orbit, and terminal phases were computed. From these computations, the overall entry vehicle success probability was calculated.

Following is a brief description of each subsystem and the reliability considerations which led to the development of the logic diagrams.

Navigation and guidance subsystem. - This subsystem consists of two independently parallel sets of inertial guidance units and computer programmers. Each guidance system is supplied data from a common pair of redundant horizon scanners. This system in an emergency can be backed up by ground tracking and communications. This backup is not considered for mission reliability (which assumes an emergency terminates a mission). Its availability, however, reduces to a negligible value the contribution of the guidance system's failure probability to crew safety. Figure 80 presents the logic diagram and derived probability of success equation.

Structure and heat shield. - The level of effort for the reliability analysis prevented a detailed study of these components. However, the data from the structural analyses of the Gemini Launch Vehicle and the reliability analyses done on the PRIME program indicated that the goal of 0.99 could be met.

Reaction control subsystem. - The RCS is a positive expulsion, pressure fed, monopropellent subsystem. Pressure control is normally by automatic regulation but has a "bang-bang" backup in the event of regulator failure.

This system receives control signals for each of the three pairs of control motors from three redundant channels of the electronic flight control system. In each case, the third channel provides a comparison or "voting" function, so that if the primary signal fails to compare, control will be switched to the secondary channel. The logic diagram and equation are shown in figure 81.

Control actuation subsystem. - Redundant control signals from the electronic flight controller supply hydraulic servovalves and a transfer and voting valve. Signal selection upstream of the voting valve is similar to the RCS signal selection described above. The primary and secondary channels supply the two sections of tandem actuators, with redundant hydraulic power supplies for the sections. Thus, this system is completely redundant (except for low probability common failure modes of the tandem actuators). The logic diagram and equation are shown in figure 82.

Electrical subsystem. - Two independent power circuits are used, the electrical flight control power (high current) bus and the electrical-electronic (low current) bus. The latter is powered by four batteries (1 reserve) during boost and orbit and by two (1 reserve) during entry. The former is powered by seven batteries (two reserve) during boost and entry. The logic diagram and equation are shown in figure 83.

Environmental control/life support subsystem. - This subsystem affords an oxygen atmosphere for the crew, supplies coolant for environmentally protected equipment, and serves to filter and purify the cabin atmosphere.

Although this system is designed with considerable redundancy for crew safety, very little is applicable to mission reliability, since the mission would be terminated as a result of most failures, even though a backup is still available. The logic diagram and equation are shown in figure 84.

Communication, tracking, and telemetry subsystem. - This subsystem consists of redundant C-band transponders for tracking, vhf and hf voice communications, and two transmitters, a playback recorder and transmitter for mission data. The logic diagram and equation are shown in figure 85.

Landing subsystem. - This subsystem consists of three wheel-skid assemblies and associated deployment gear. This system is not redundant but a safe (crew survival) landing is assumed if the nose gear should fail to extend or collapse on touchdown. This feature is considered in the crew safety analysis but not for mission success. The logic diagram and equation are shown in figure 86.

DECLASSIFIED

Abort and deorbit subsystems: The abort subsystem consists of two solid bottles located on the adapter section of the entry vehicle. The bottles are carried into orbit with the entry vehicle. These units afford a manual backup to the two redundant solid deorbit motors. The logic diagram and equation are shown in figure 87.

The results of the reliability assessment are presented in table 38. Each subsystem has been analyzed for the boost, orbit, and terminal phase. The overall entry vehicle reliability is taken as the product of the individual subsystem reliabilities and is estimated as 0.97275. Table 39 lists the baseline mission features used for the analysis. Table 40 is a listing of the failure rate and probability data and sources used for the assessment.

C. APPORTIONMENT

1. Technique

An overall mission success value of 95 percent has been established as a design goal for the HL-10 entry vehicle subsystems. Based on a preliminary reliability assessment of the typical subsystems, this overall goal has been broken down by subsystem and phase. The three phases chosen for analysis were the boost phase, orbit phase, and entry phase.

The baseline mission has been divided into:

(1) Boost phase--from liftoff to orbit insertion.

(2) Orbit--from insertion to retrofire.

(3) Entry--from retrofire to touchdown.

Times for these phases were obtained from the Titan III-C burn time, 3-revolution missions, and entry from an 80/200-nautical mile (148/370 km) orbit.

A reliability block diagram for each subsystem considered was then derived. Not all components of a subsystem are operative during all three phases. The sophistication of computing conditional probabilities during these nonoperative periods was not considered. Only the operating failure rates were used.

Using the appropriate values from tables 39 and 40, an assessment of each subsystem was made for each of the three phases of operation. The subsystem estimates were then combined in series to represent the system estimate, i.e.,

$$R_{total} = R_1 \times R_2 \times R_3 \ldots \times R_n \text{ for n subsystems}$$

taking logarithms

$$\log R_{total} = \log R_1 + \log R_2 + \ldots \log R_n \text{ or } R_{total} = \text{antilog}\left[\log R_1 + \ldots \log R_n\right]$$

DECLASSIFIED

DECLASSIFIED

TABLE 38

FAILURE RATES FOR COMPONENTS

Subsystem	Component name	Failure rate x 10^6 or * reliability	Reference	Component type
Electrical	Battery	217	5 and 9	E
	Relay	30	9	EM
Navigation and guidance	Horizon scanner	73.8	2	E
	Primary unit	500	2	E
	Secondary unit	333	2	E
Electronic flight control	Gyros	6.5	10	EM
	RC electronics	53.7	10	E
	CA electronics	9.1	10	E
Reaction control	N_2 tank	0.999999*	4	M
	Burst disc	0.9999*	4	M
	Squid valve	0.9999*	2	M
	Filter	0.999997*	4	M
	Heat exchanger	1	1	M
	Pressure switch	1	(est)	EM
	Pressure regulator	2.14	4	
	Solenoid valve	11	3	
	H_2 tank	0.35	2	M
	Lines and fittings	(negl)	4	M
Control actuation	Hydraulic power	1411	3	EM
	Transfer valve	16.5	(est)	M
	Actuator	51.5	9	EM
	Hydraulic servo	7.4	(est)	EM
EC/LS	Tank	1	1	M
	Heater and controls	0.01	2	E
	Valve	0.1	1	M
	Shutoff valve	10	1	M
	Pressure valve	20	1	M
	Heat exchanger	1	1	M
	Compressor	20	1	EM
	Reservoir	1	1	M
	Inverter	40	4	E
	Fan	0.1	1	EM
	Odor absorber	1	1	M
	Pump	20	1	EM
	Cold plates	1	1	M

E = Electrical M = Mechanical EM = Electromechanical

DECLASSIFIED

TABLE 38. - Concluded

FAILURE RATES FOR COMPONENTS

Subsystem	Component name	Failure rate x 10^6 or reliability*	Reference	Component type
Landing	Gas generator	0.9999*	2	EM
	Actuator	0.9999*	2	M
	Shock strut	0.11	2	M
	Wheel assembly	0.9995*	2	M
	Jettison unit	0.997*	2	M
	Mortar	0.9998*	2	EM
	Chute	0.999*	2	M
Communications and telemetry	Transponder	235	5	E
	Coax switch	0.9998*	2	EM
	Command system	35.5	7	E
	Vhf transceiver	22.5	8	E
	Hf transceiver	10.6	8	E
	Diplexer	13.5	2	E
	Triplexer	13.5	2	E
	Transmitter	173.4	5	E
	Recorder	1156	6	EM
Deorbit	Relay	0.999996*	9	EM
	Squib	0.9999*	2	EM
	Igniter	0.99999*	(est)	EM
	Motor	0.9967*	11	M
Recovery	Primacord	0.99997*	3	M
	Canister	0.9999	2	M
	Pilot chute	0.9990	2	M
	Mortar	0.9998	2	EM
	Main chute	0.9960	2	M

References

1. Garret AiResearch Mfg. Div., Report SS-804, pg. A-2
2. McDonnell Report B831, Vol. V, "Mission Requirements of Lifting Systems"
3. M-63-3 (Rev. 2) Martin Marietta, Denver, "Engineering Reliability Policy & Procedures Manual"
4. Bell Aerosystems Co. Technical Note No. 8500-902007, "Reaction Control Design Data for MOL"
5. PRIME (SV-5D)
6. Manned Mars Flyby System Study NASA X65-19710
7. Apollo Command System (Motorola)
8. Apollo "Black II" (Collins)
9. Titan (Martin Marietta, Baltimore and Denver)
10. PILOT SAS-Sperry Phoenix 671882 Report
11. Aerojet-General Corp. NPP 671882 Report

DECLASSIFIED

TABLE 39

K_{OP} FACTORS

Baseline mission parameters

Orbit: 80 to 200 n. mi (144 to 360 km) (35.7° inclination)

Period: 89.43 min.

Deorbit: T-0 + 229 min.

Deorbit velocity: 130 fps (39.7 m/sec)

Time, retrofire to 400 000 feet (122 km): 28 min.

Time, 400 000 to 0 feet (122 to 0 km): 27 min.

K_{OP} factors for failure rates

Equipment type	Boost	Phase Orbit	Entry
Mechanical	500	1	100
Electromechanical	100	1	20
Electronic	15	1	3
Phase time (hr)	0.1156	4.5	1

DECLASSIFIED

TABLE 40

HL-10 RELIABILITY ASSESSMENT BY MISSION PHASE

Subsystem	Boost (liftoff to insertion)	Orbit (insertion to retrofire)	Entry (retrofire to touchdown)	Total
Structures and heat shield				0.99
Electrical power	>0.99999	0.99999	>0.99999	0.99999
Guidance and navigation	0.99944	0.99991	0.99640	0.99575
Reaction control (including flight controller electronics)	-	0.99975	0.99998	0.99973
Control system/actuation (including flight controller electronics)	0.99917	-	0.99925	0.99846
EC/LS	0.99774	0.99912	0.99794	0.99481
Communications, tracking and telemetry	0.99996	0.99991	0.99994	0.99981
Landing	-	-	0.99391	0.99391
Deorbit	-	-	~1.0	~1.0
Total	0.99632	0.99868	0.97763	0.97275

Doing this for each phase, the overall mission success goal is expressed as:

$$R_{\text{mission success}} = R_{\text{boost}} R_{\text{orbit}} R_{\text{entry}}$$

or

$$\log R_{ms} = \log R_b + \log R_o + \log R_e.$$

Divide by $\log R_b$ and solve for the $\log R_b$ goal:

$$\log R_{b_{goal}} = \log R_{ms} / \left[1 + \log R_o / \log R_b + \log R_e / \log R_b\right]$$

The $\log R_o / \log R_b$ and $\log R_e / \log R_b$ ratios are known from the assessment so that once $\log R_{b_{goal}}$ is determined, these ratios can be used to get $\log R_{o_{goal}}$ and $\log R_{e_{goal}}$.

This analysis results in three goals: for the boost, orbit and entry phases.

In a similar manner, each phase is made up of the individual subsystems.

$$R_{\text{boost}} = R_{1_{\text{boost}}} \times R_{2_{\text{boost}}} \times R_{3_{\text{boost}}} \ldots \times R_{n_{\text{boost}}} \quad \text{for n subsystems.}$$

Taking logarithms, dividing by $\log R_{n_{\text{boost}}}$, and solving for $\log R_{n_{\text{boost}_{goal}}}$:

$$\log R_{n_{\text{boost}_{goal}}} = \log R_{\text{boost}_{goal}} \Big/ \left[\left(\log R_{1_{\text{boost}}} + \log R_{2_{\text{boost}}} + \ldots \log R_{n_{\text{boost}}}\right) \Big/ \log R_{n_{\text{boost}}}\right]$$

Using the ratios of $\log R_1 / \log R_n$, etc., solve for the remaining subsystem reliability goals.

Table 41 summarizes the apportionment results by subsystem and by phase.

2. Crew Safety Analysis

Crew safety is, in effect, independent of mission objectives. As the classification of failure modes indicates, failures affecting mission only are not failures for crew safety. Thus, the reliability of several of the subsystems is higher with respect to crew safety than with respect to mission objectives.

DECLASSIFIED

TABLE 41

HL-10 BASELINE APPORTIONMENT

Subsystem	Boost phase	Orbit phase	Entry phase	Total
Structure and heat shield				0.99
Electrical power	0.999990	0.999990	0.999990	0.999970
Guidance and navigation	0.999992	0.989260	0.991980	0.981320
Reaction control	0.999993	0.986000	0.997400	0.983430
Control actuation	0.999990	0.999990	0.997220	0.997200
EC/LS	0.999800	0.999660	0.998670	0.998130
Landing	0.999990	0.999990	0.999080	0.999080
Deorbit	1.0	1.0	0.999960	0.999960
Total	0.999800	0.975000	0.984400	0.95 (overall goal)

The communications, tracking, and telemetry subsystems have no crew safety significance except as a backup for the guidance and navigation subsystem for normal deorbit operation. The result is that failure of any of these subsystems has negligible safety effect.

The reaction control subsystem, the control actuation subsystem, and the electrical subsystem are essential to crew safety. The reliability estimate of these subsystems is 0.99818, and the probability of failure is 0.00182.

In the landing subsystem, failure of the nose wheel (unless there is also a chute failure) would not be a crew hazard. Also, failure of the locking and jettisoning unit is not significant for a normal landing (no overshoot). The main wheels and associated components, assumed essential to crew safety for horizontal (normal) landing, have a reliability of 0.9986.

The recovery subsystem is required for emergency landing only and was not included in mission reliability analysis. The logic diagram and equation are shown in figure 88. A water landing is assumed, requiring two of the four main chutes for safety, since this is expected to be achieveable for emergency. The four chutes do, however, provide for a safe landing on hard surface.

The EC/LS is the only subsystem having failure modes requiring emergency return. The components having this mode are the two oxygen sources and the components associated with suit conditioning. The probability of failure of these is 0.00198. The water source and the components associated with the cooling system are essential to entry and their failure, the probability of which is 0.00157, would prevent a successful return.

DECLASSIFIED

DECLASSIFIED

The deorbit subsystem is considered especially critical since failure would strand the crew in orbit. As shown under "Mission Reliability Analysis" (subsection B) this subsystem has multiple redundancy and extremely small probability of failure. The more significant factor for deorbit is the reaction control system which is required for orientation. The reliability estimate of this system is 0.99973.

Figure 89 is a block diagram of crew safety logic. The probabilities are additive (each excludes the others). The crew hazards are as follows:

Boost hazard, P_B	0.00151
Boost recovery hazard, P_{BR}	0.00000
Orbit hazard, P_O	0.00036
Landing hazard, P_{LH}	0.00139
Entry hazard, P_{EH}	0.00135
Orbit recovery hazard, P_{OR}	0.00000
Total hazard	0.00461
Crew safety	0.99539

Crew safety may also be determined by summing the safe return probabilities, providing a check, as follows:

Safe recovery boost, R_{BR}	0.00142
Safe landing, R_{SL}	0.99342
Safe recovery, orbit, R_{OR}	0.00055
Total crew safety	0.99539

The effect of failure of the booster may be evaluated in a very simple manner. A failure in the latter part of boost when abort is, in most cases, not required, actually improves crew safety since return is essentially the same as a normal entry and the shorter time results in less probability of failure of the essential systems. Using a conservative estimate of booster failure requiring abort motors as 0.0344, and a probability of failure of abort motors as 0.0067, the abort hazard is 0.00023. The inclusion of this effect reduces all the hazards previously listed by the probability of no booster failure, or 1 - 0.0344 = 0.9656. Thus the total hazard as listed becomes 0.9656 x 0.00461 = 0.00445, plus 0.00023 abort hazard, resulting in 0.00468 total hazard, and 0.99532 total crew safety.

3. Overall Mission Success Analysis

The above computations for mission success probability are based on the entry vehicle and adapter systems only. Utilizing Saturn I B and Titan III-C

DECLASSIFIED

(man-rated) reliability data obtained from NASA and the Air Force for this study, table 42 was derived.

TABLE 42

MISSION SUCCESS PROBABILITIES INCLUDING EFFECTS OF BOOSTER RELIABILITY

Launch vehicle reliability	Total mission success probability from liftoff to entry vehicle touchdown
0.90	0.8755
0.97	0.9436

PRECEDING PAGE BLANK NOT FILMED.

DECLASSIFIED

REFERENCES

1. McShera, and Campbell: Aerodynamic Characteristics from Mach 1.50 to 2.86 of a Lifting Entry Vehicle Alone, with Adapter Sections, and with a Saturn Launch Vehicle, TMX-1125, July 1965.

2. Titan III Standard Space Launch System, Definition for Payload Contractors SSDCR-65-18 (Rev. 1).

3. Checkout and Launch Systems Engineering Study for Apollo Applications Program (AAP) (Final Report under Contract NAS 10-2947), May 1966 TRW Systems.

DECLASSIFIED

DECLASSIFIED

DECLASSIFIED

PRECEDING PAGE BLANK NOT FILMED [redacted]

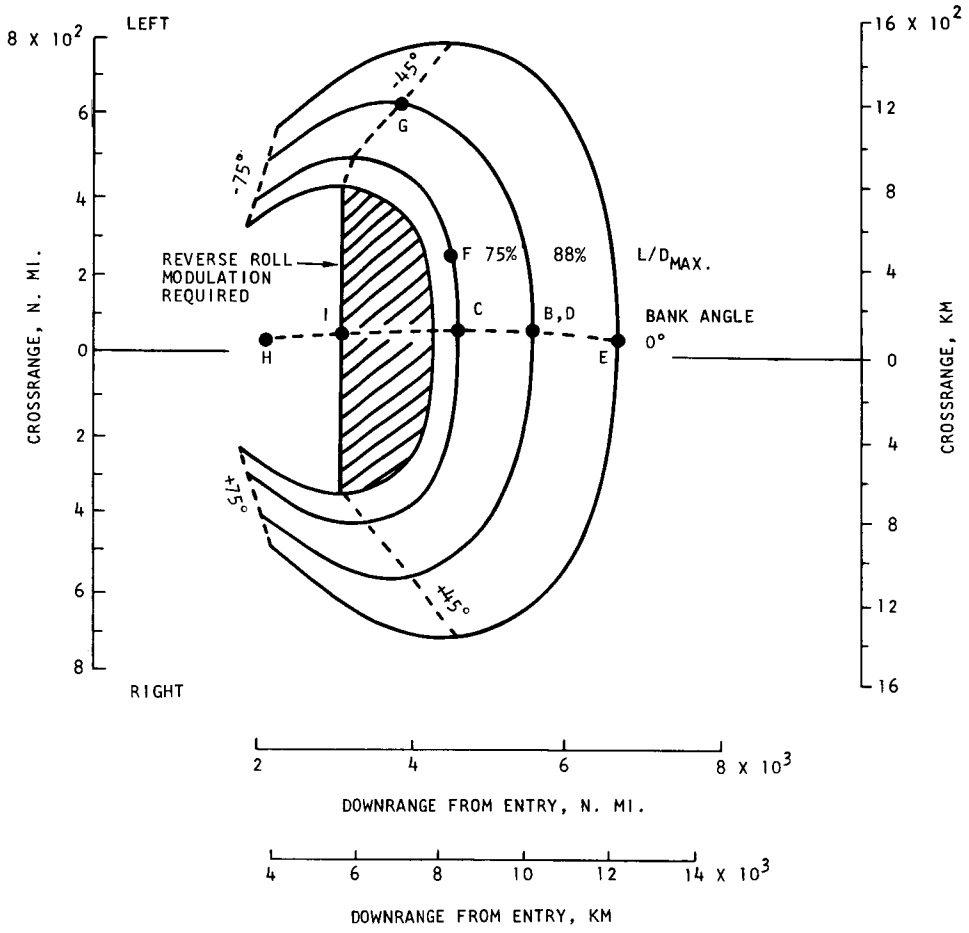

FIGURE 1. ENTRY CONDITIONS

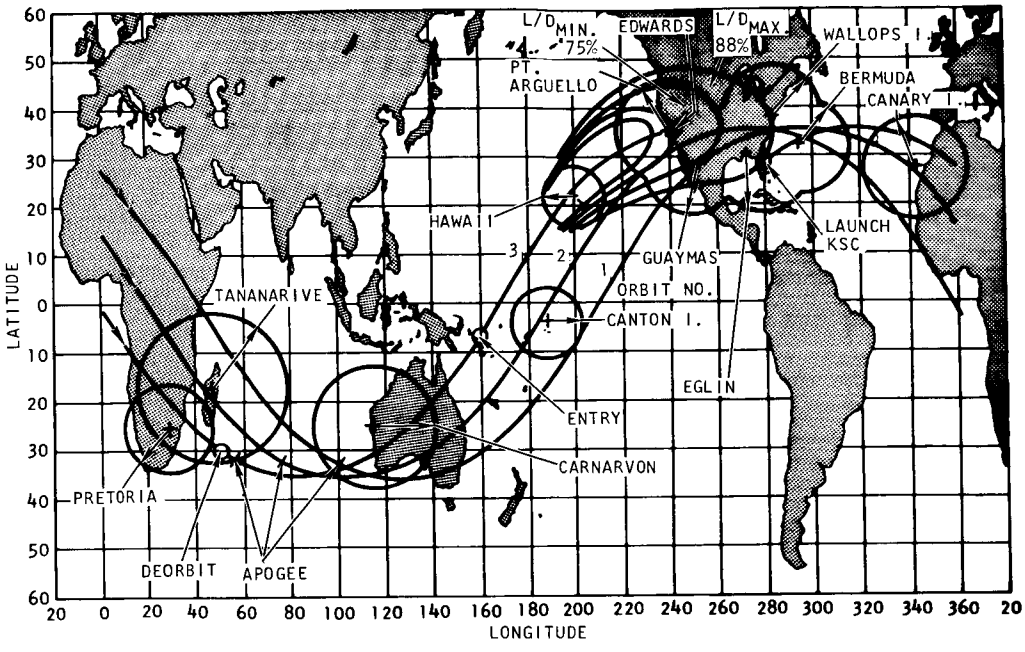

FIGURE 2. BASIC RESEARCH MISSION, ORBIT GROUND TRACE

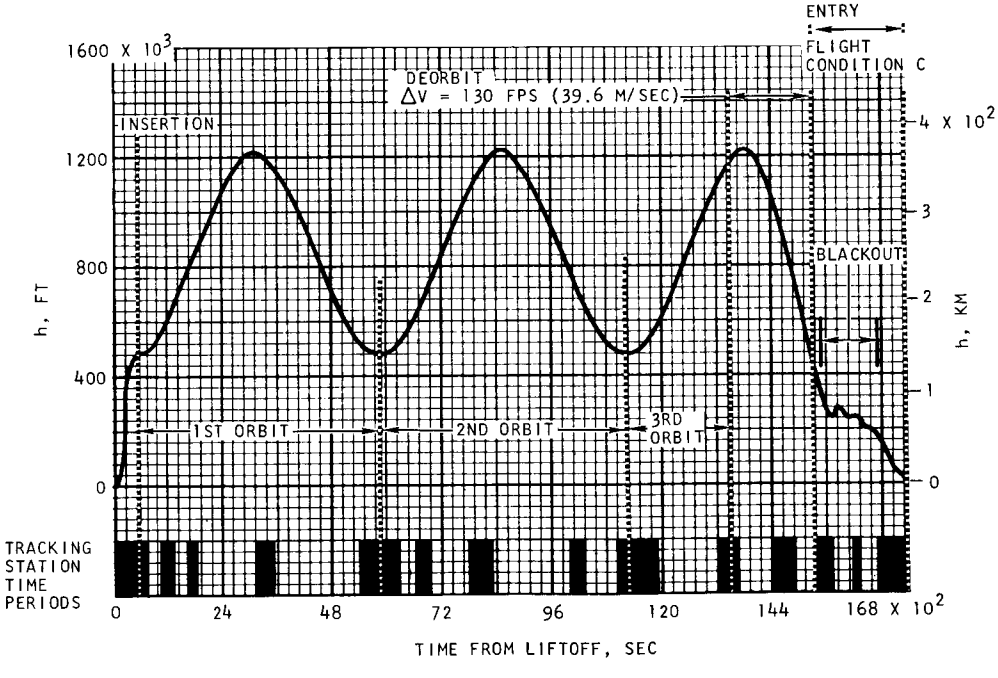

FIGURE 3. BASIC RESEARCH MISSION, ALTITUDE PROFILE

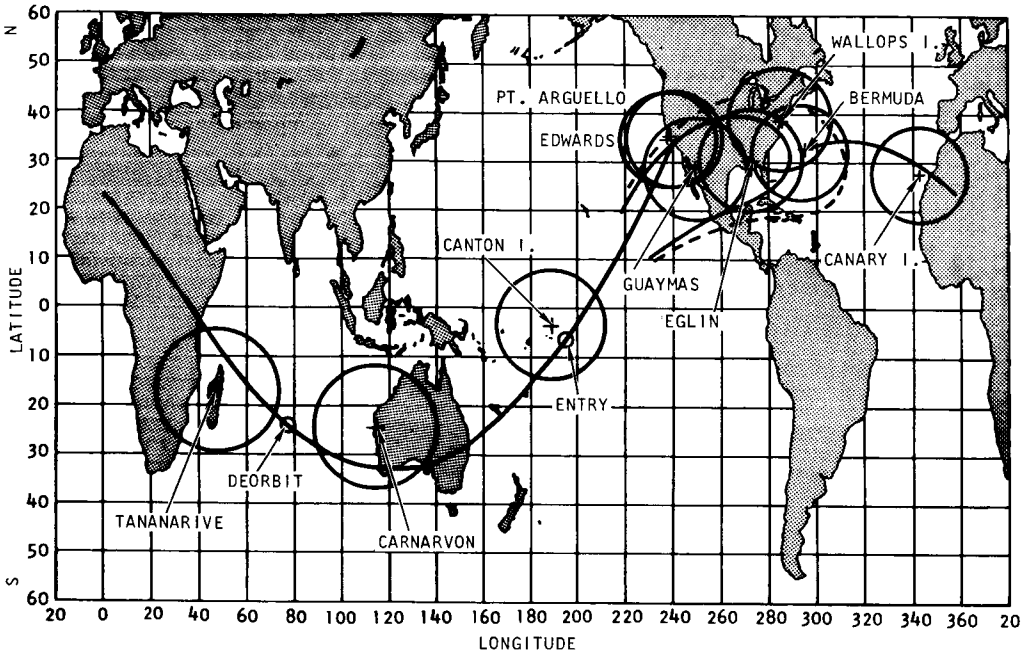

FIGURE 4. ONE-ORBIT MISSION GROUND TRACE USING ENTRY CONDITION G

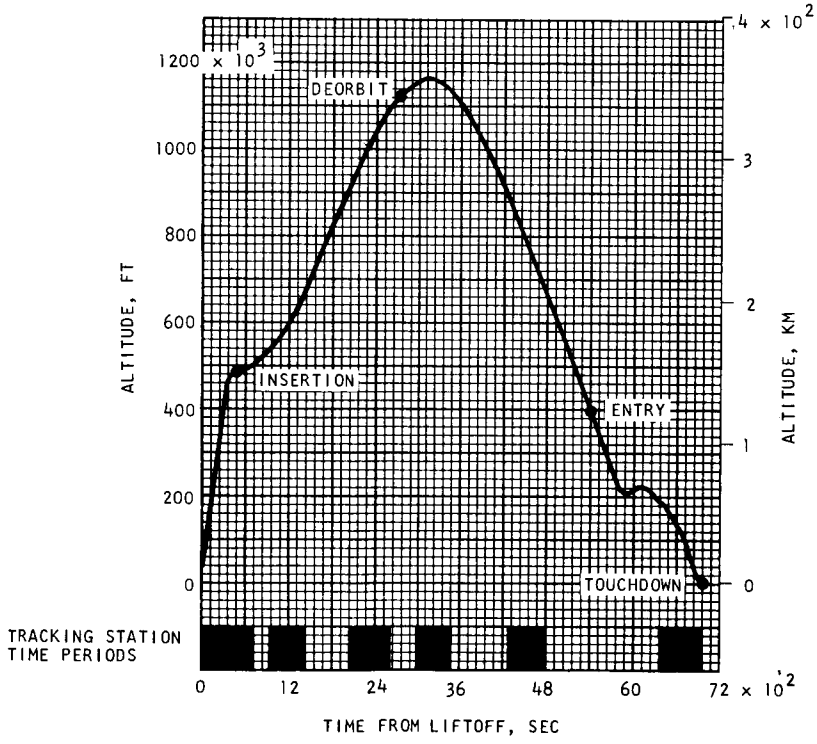

FIGURE 5. ONE-ORBIT MISSION ALTITUDE PROFILE USING ENTRY CONDITION G

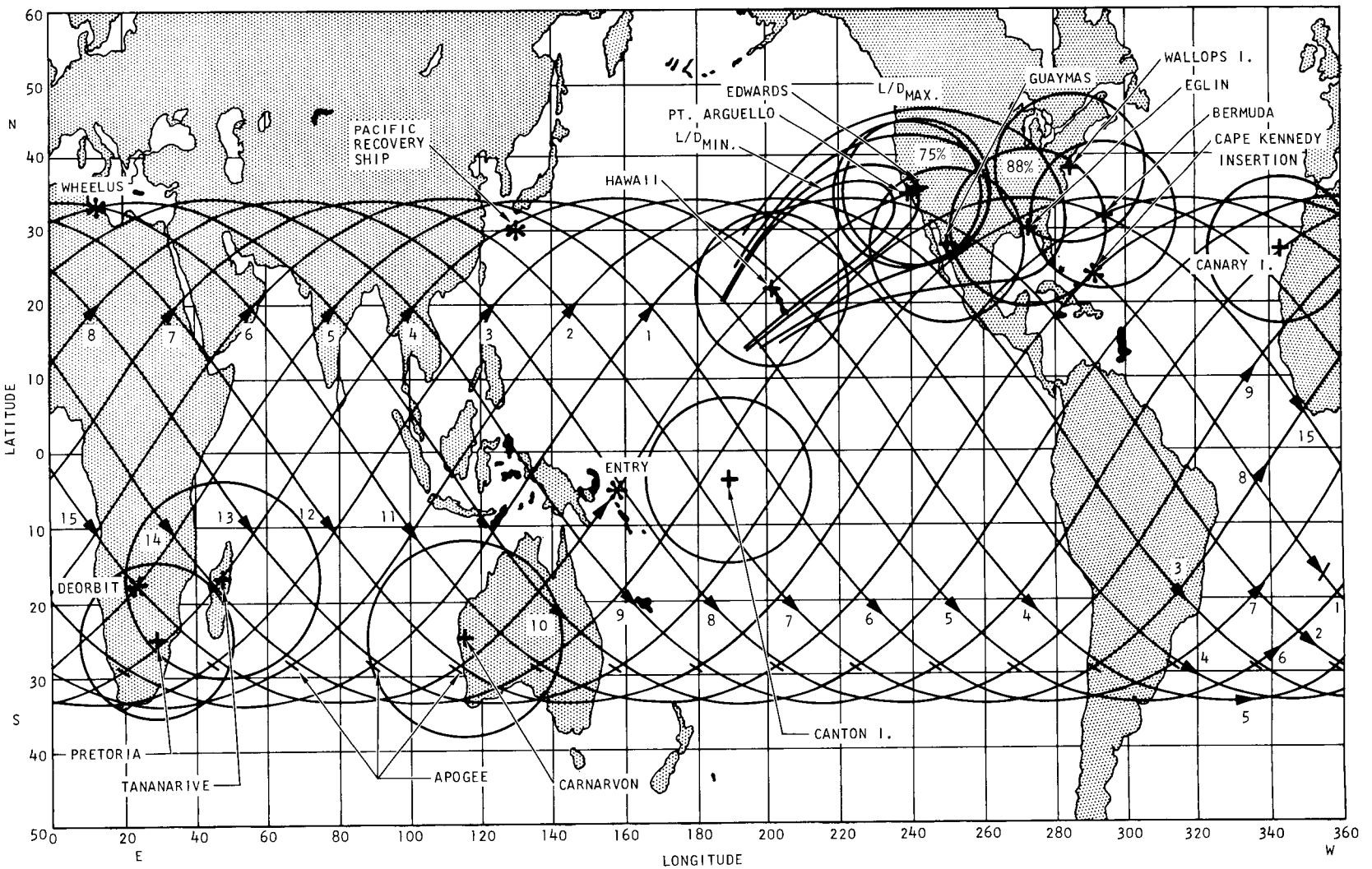

FIGURE 6. LONG DURATION MISSION, ORBIT GROUND TRACE

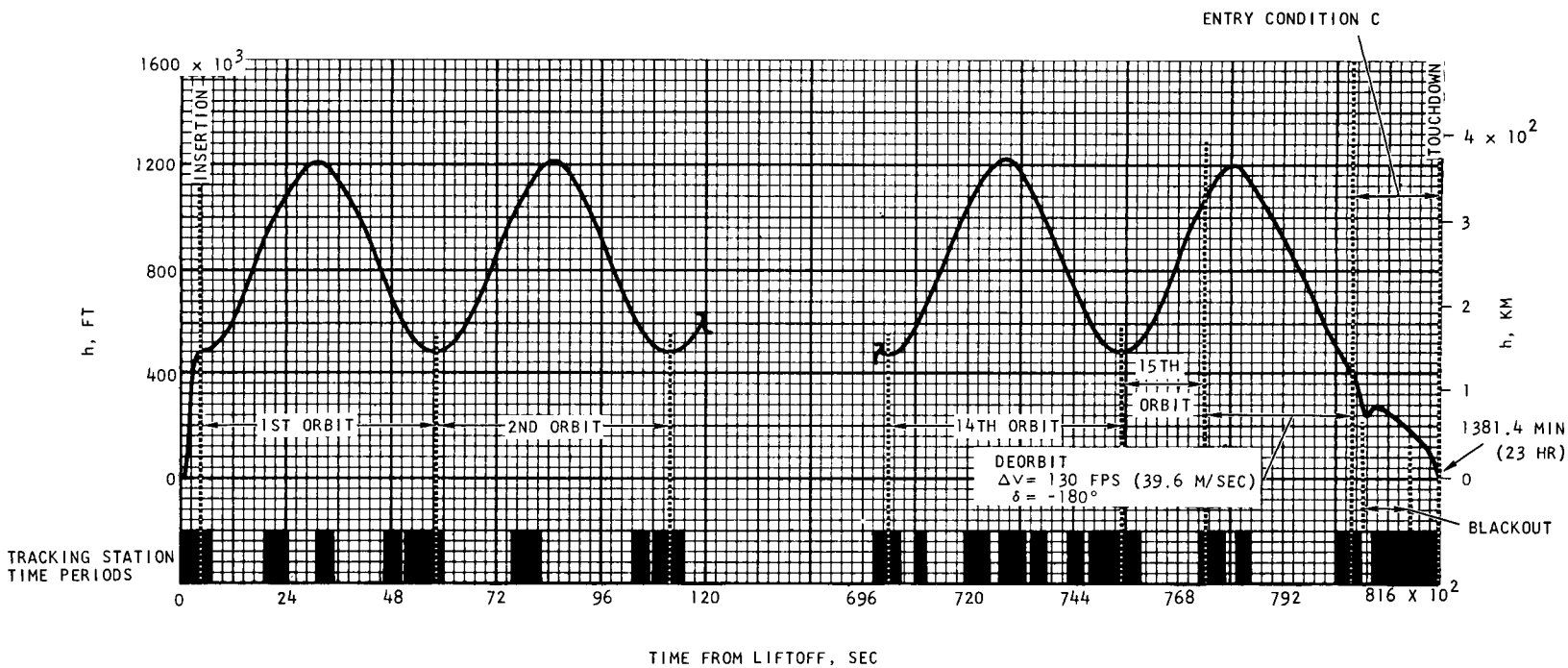

FIGURE 7. LONG DURATION MISSION, ALTITUDE PROFILE

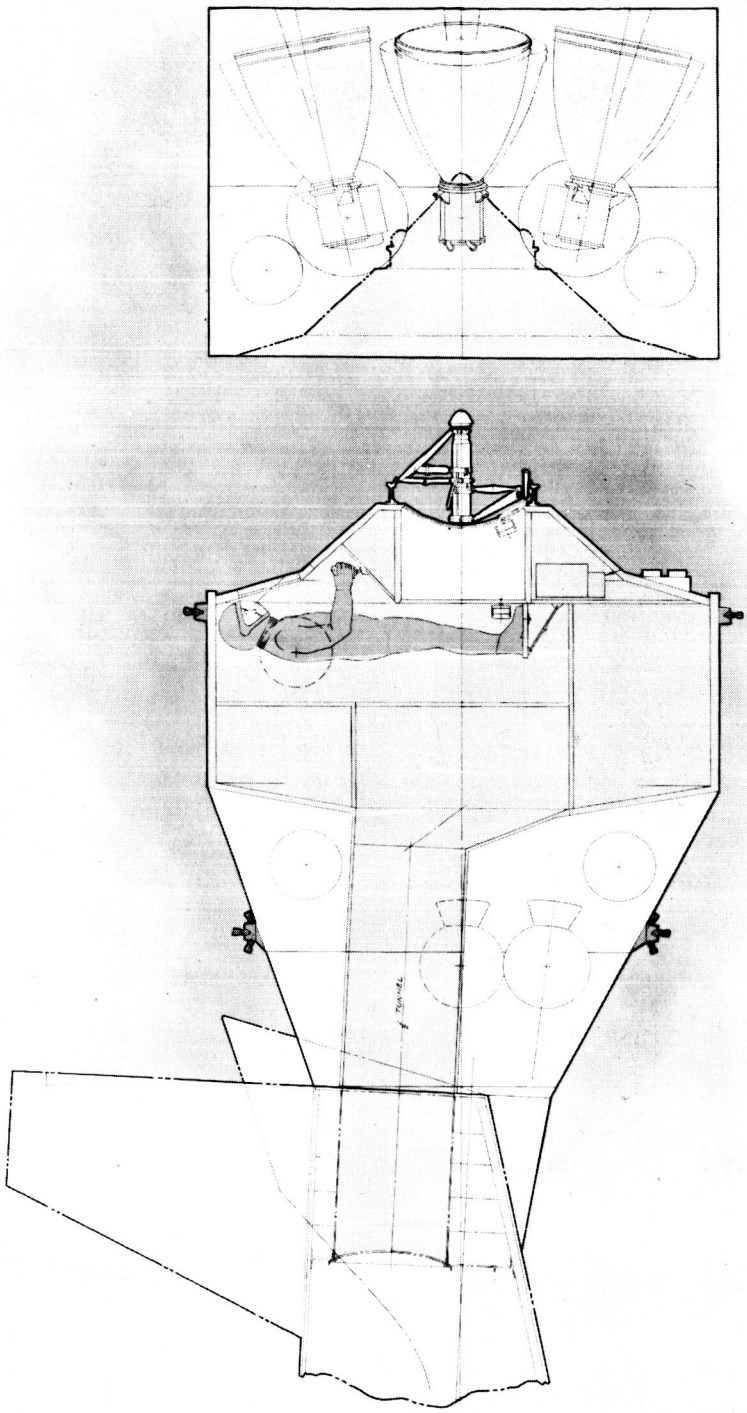

FIGURE 8. RENDEZVOUS AND DOCKING EXPERIMENT

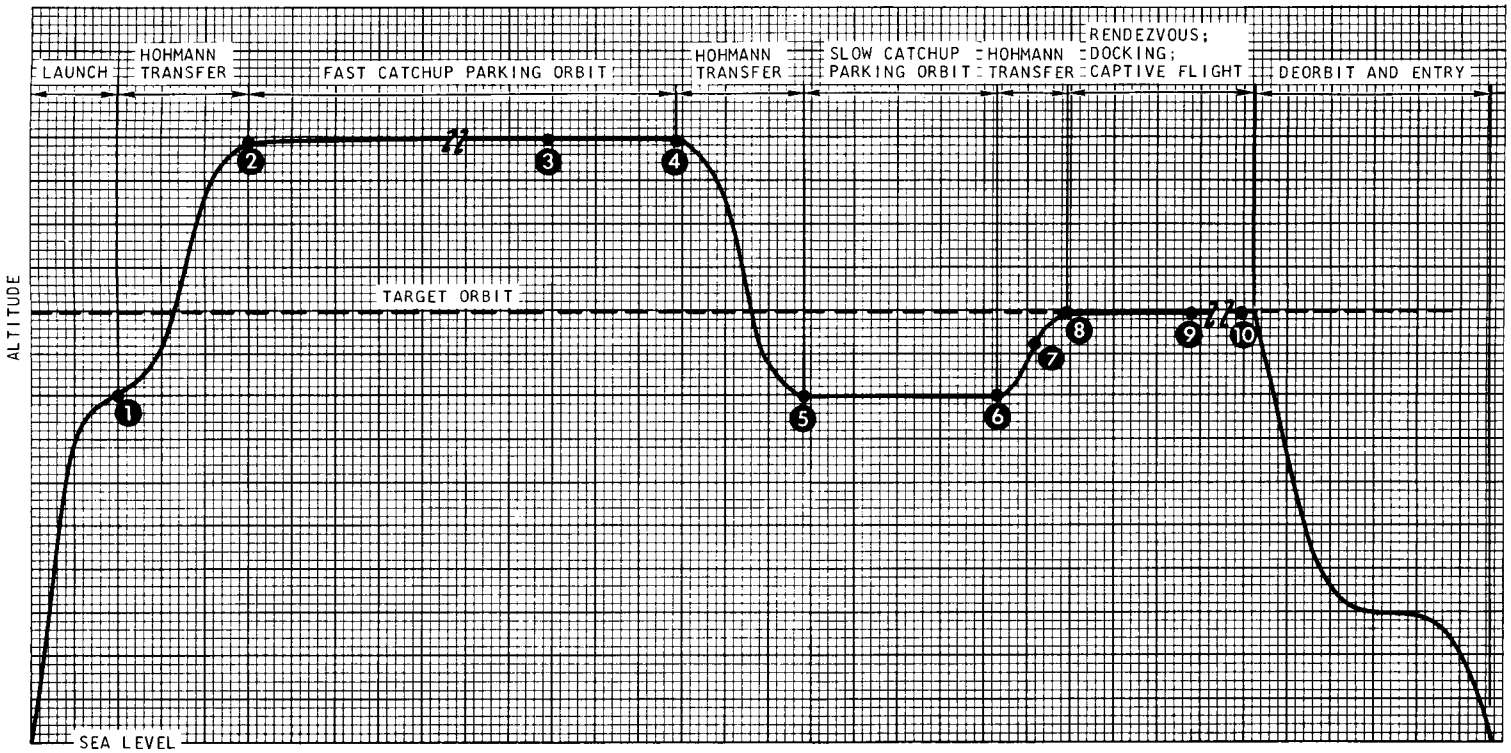

FIGURE 9. TYPICAL RENDEZVOUS MISSION ALTITUDE PROFILE

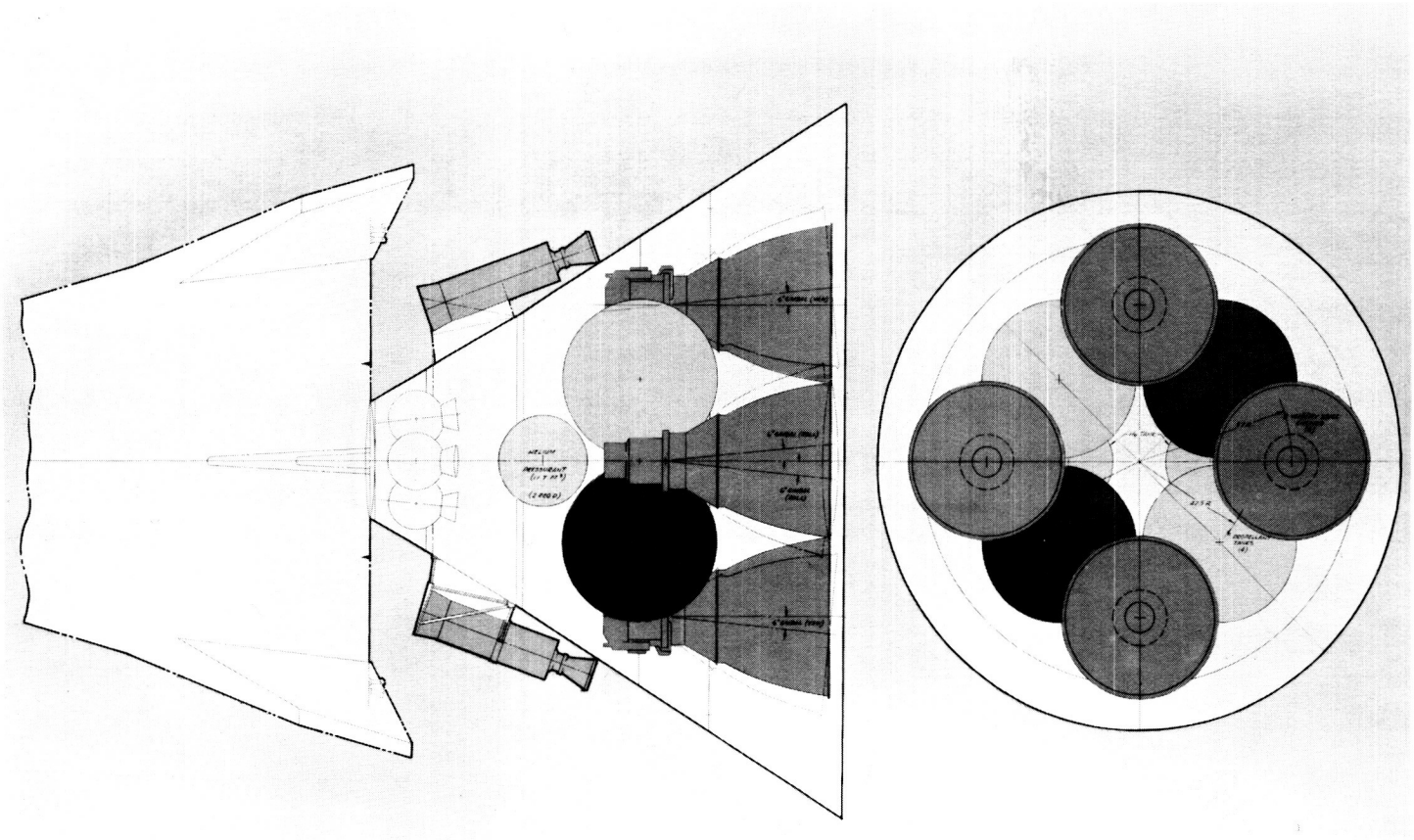

FIGURE 10. SUPERCIRCULAR ENTRY VELOCITY EXPERIMENT

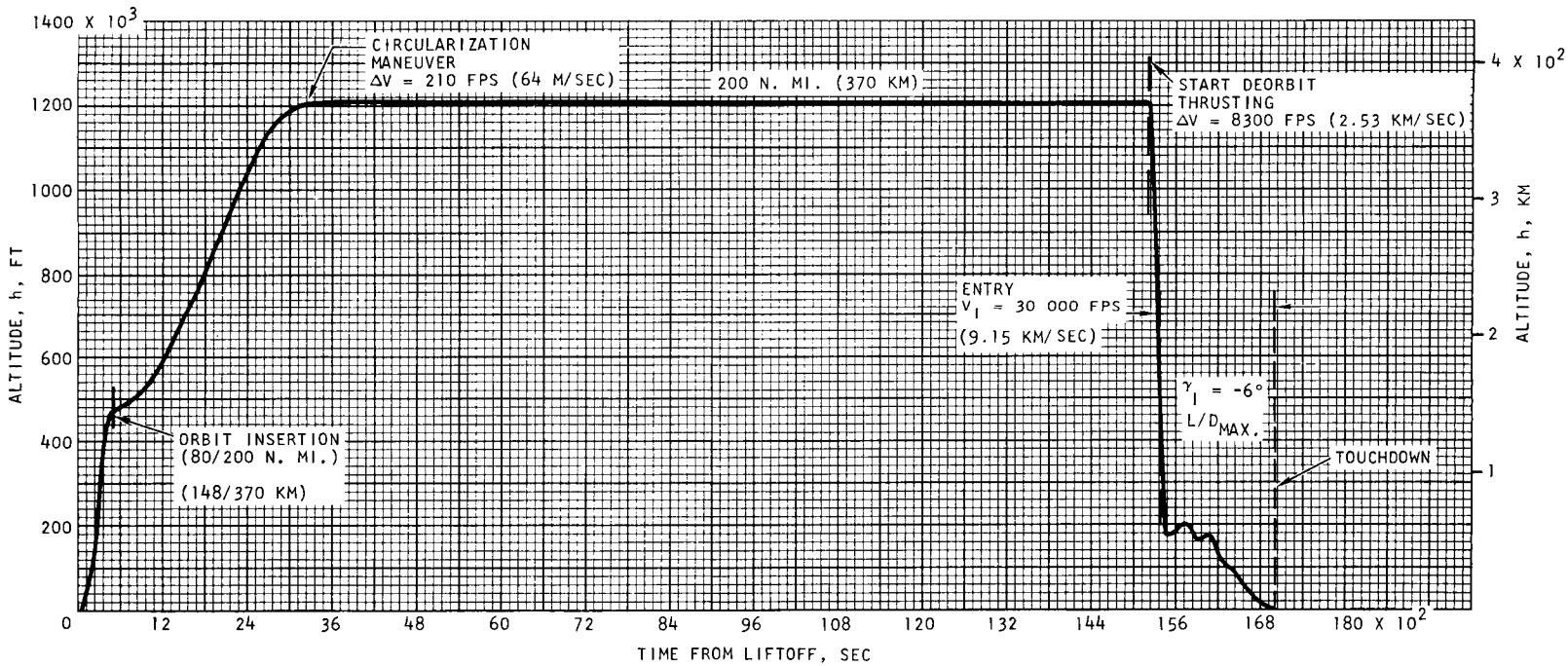

FIGURE 11. ALTITUDE PROFILE FOR SUPERCIRCULAR VELOCITY, ENTRY CONDITION K

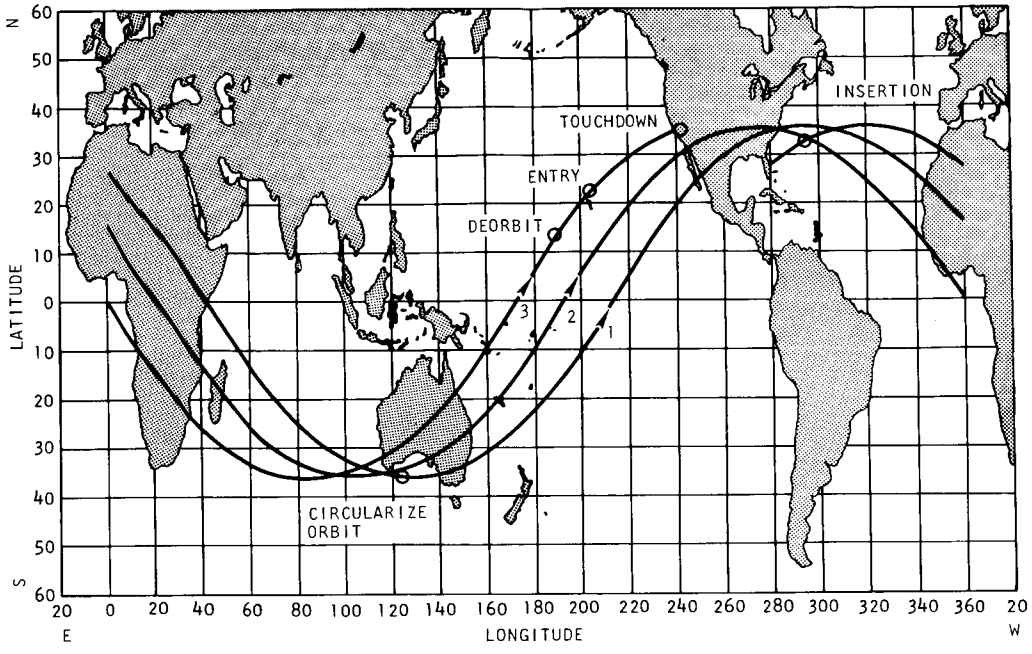

FIGURE 12. SUPERCIRCULAR VELOCITY MISSION, ORBIT GROUND TRACE

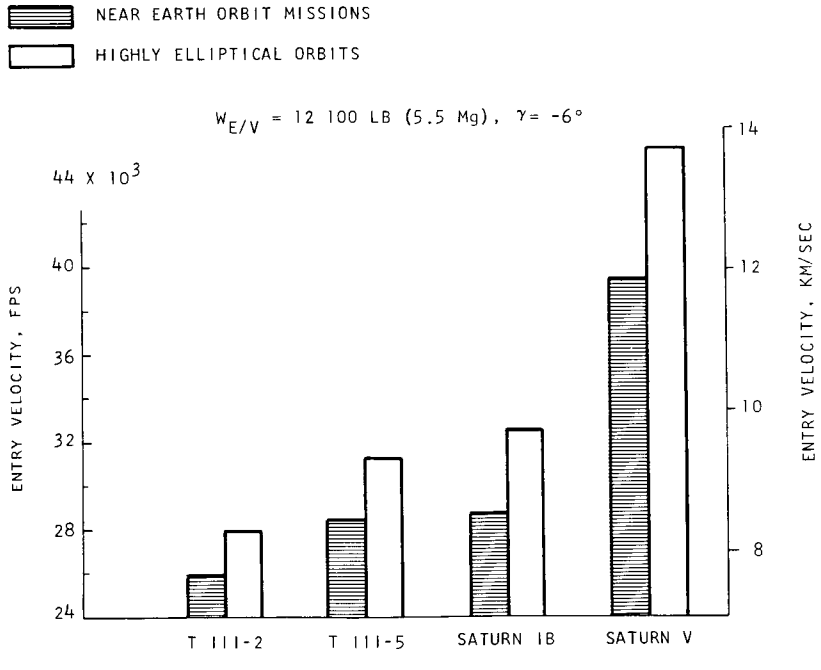

FIGURE 13. ENTRY VELOCITY POTENTIAL

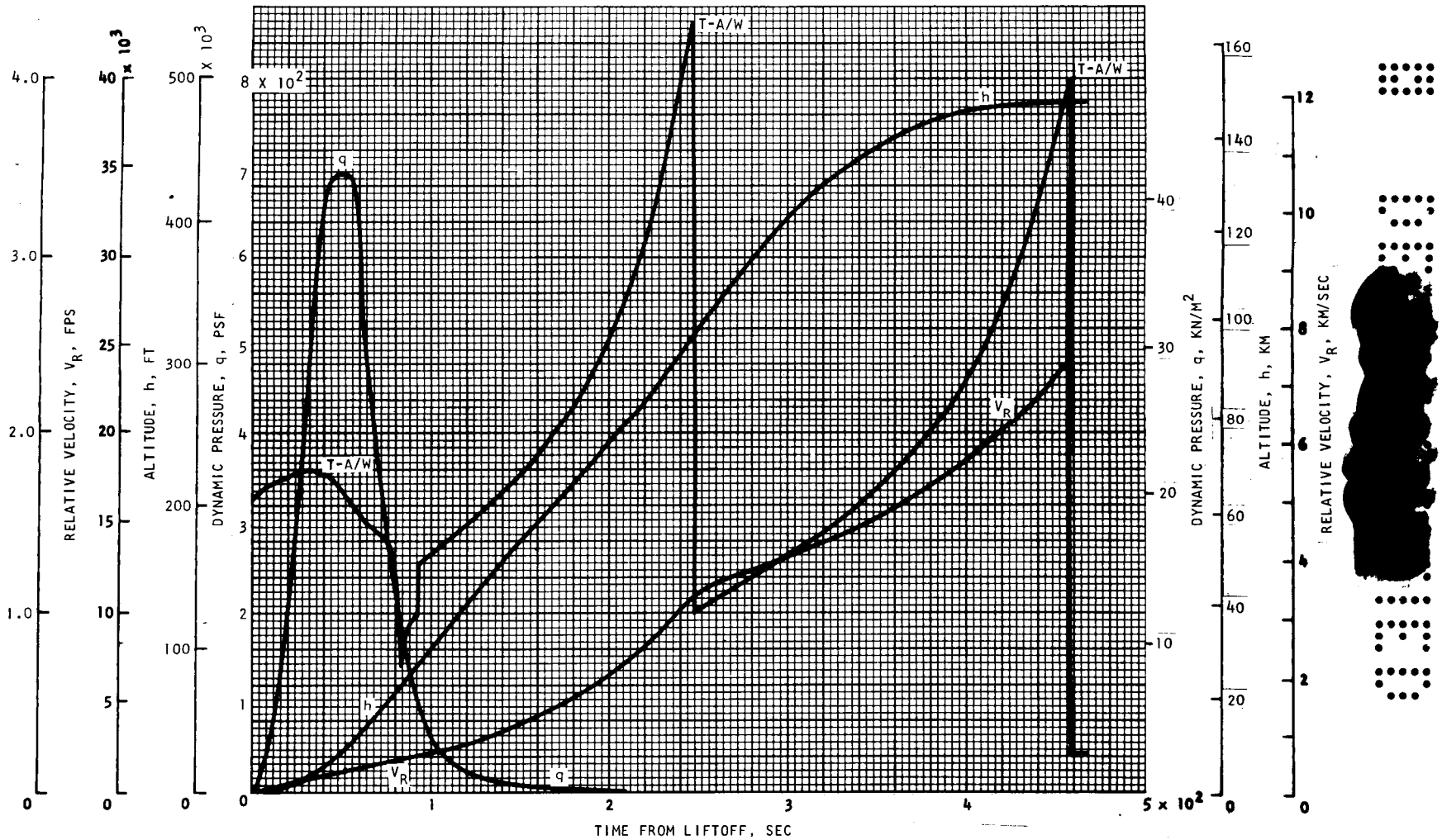

FIGURE 14. TITAN III-2 ASCENT TRAJECTORY

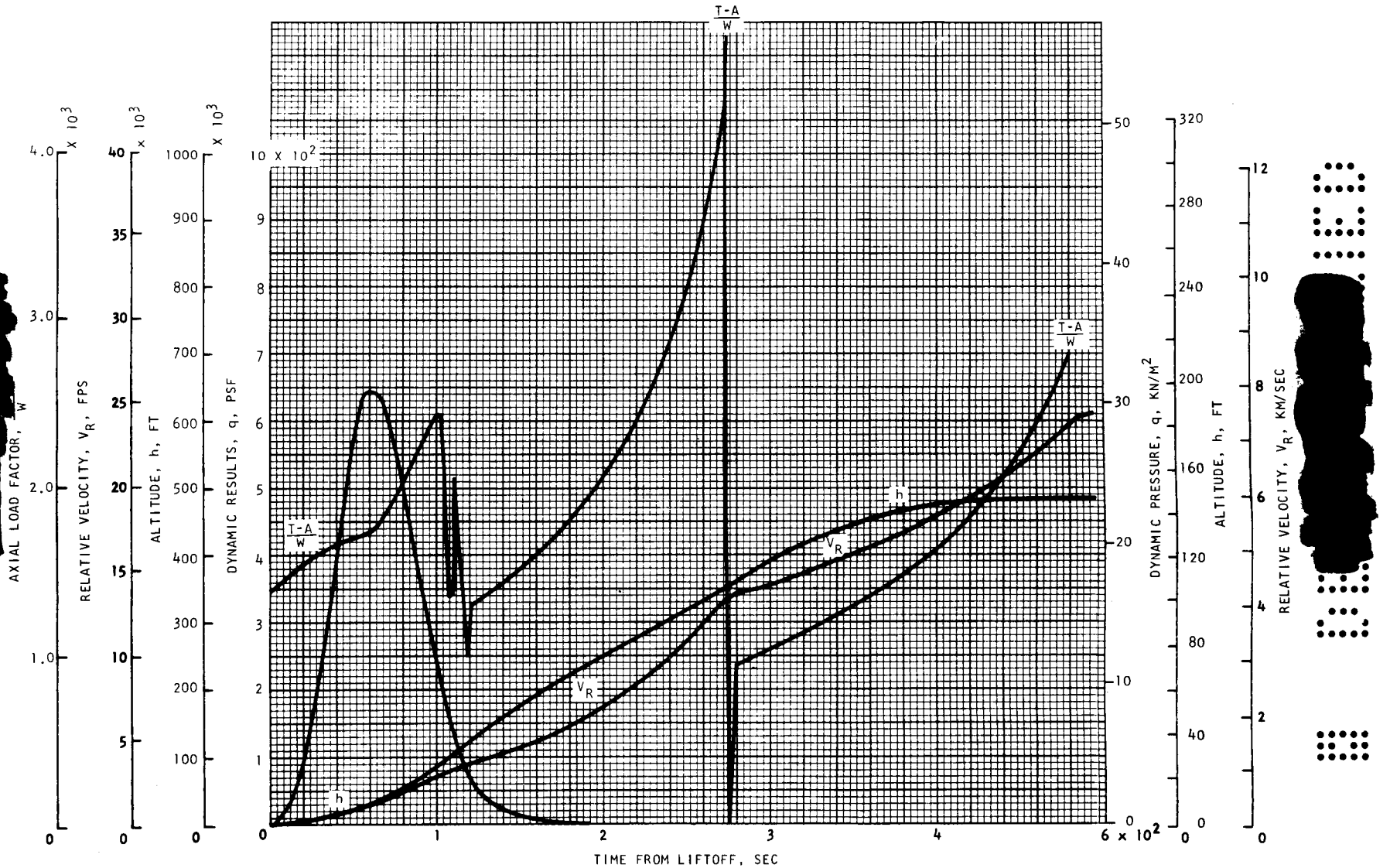

FIGURE 15. TITAN III-5 ASCENT TRAJECTORY

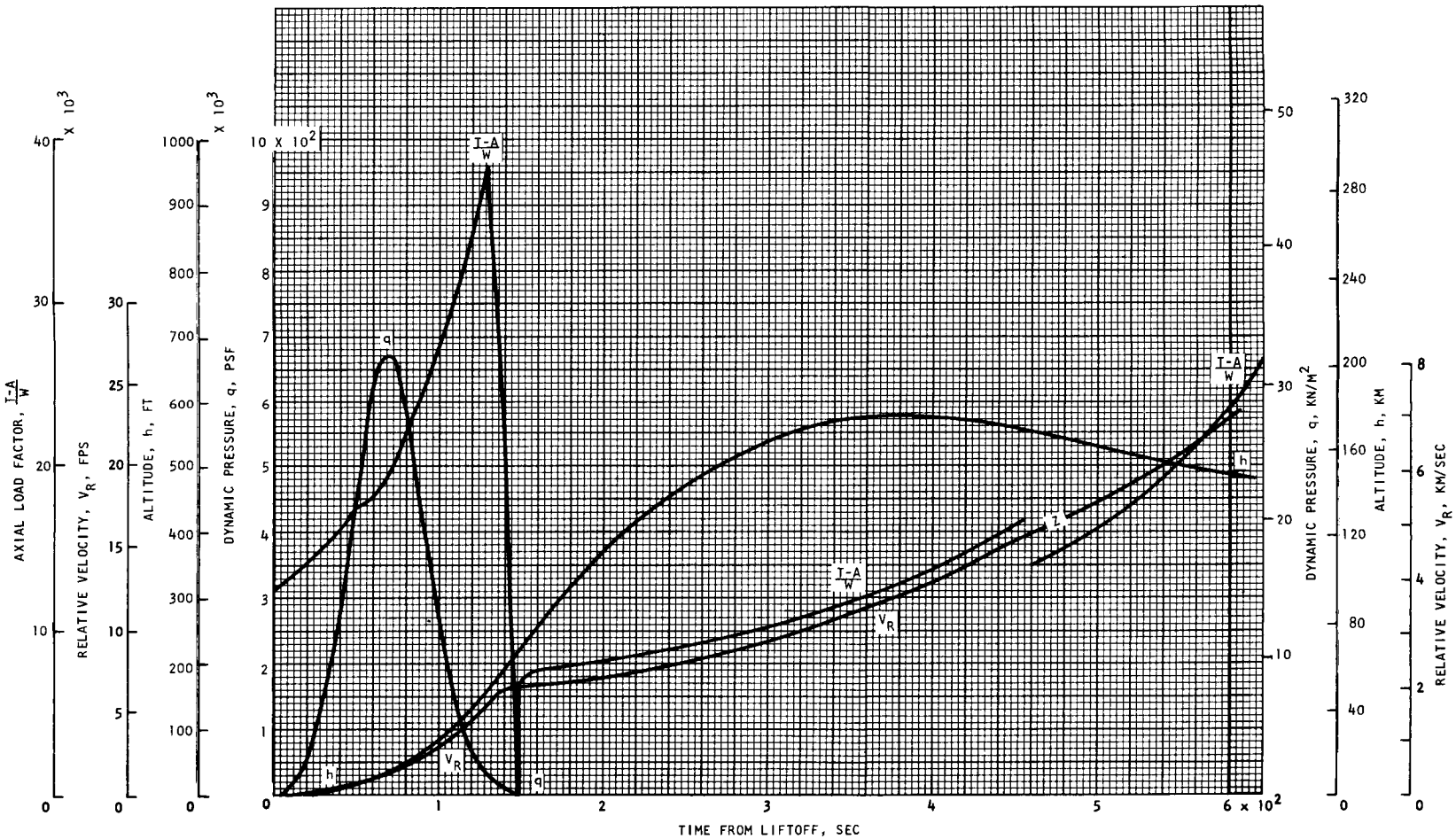

FIGURE 16. SATURN IB ASCENT TRAJECTORY

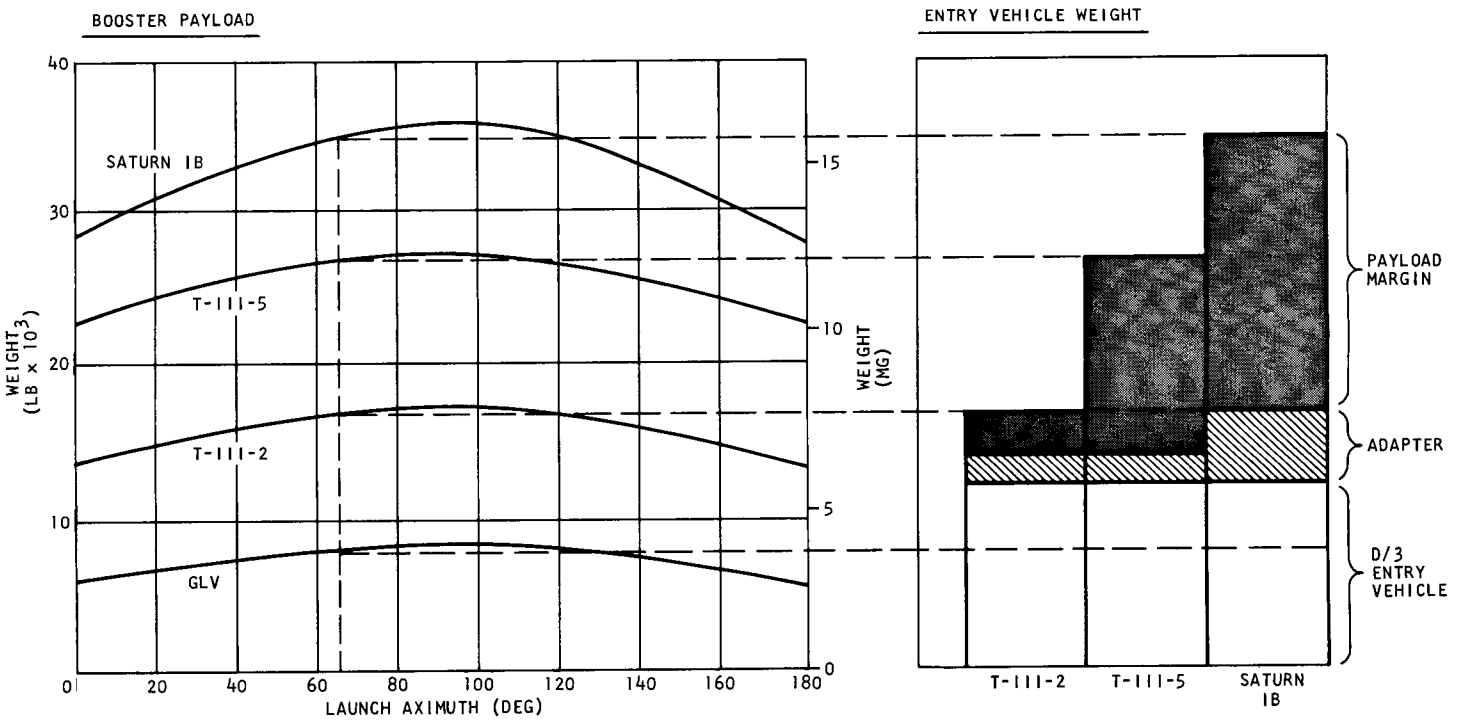

FIGURE 17. ENTRY VEHICLE WEIGHT AND BOOSTER PAYLOAD CAPABILITY

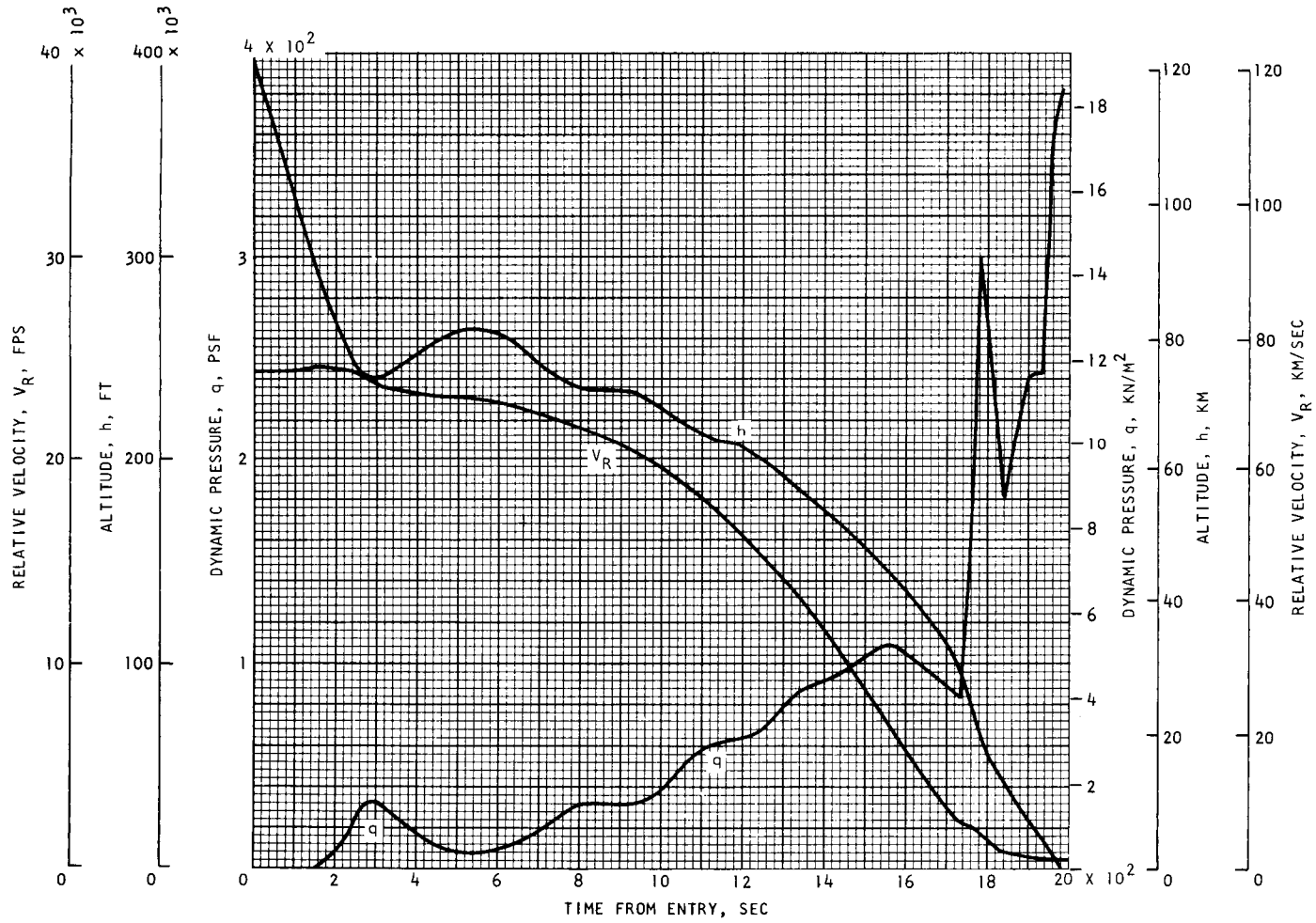

FIGURE 18 (a). ENTRY FLIGHT TRAJECTORY, ENTRY CONDITION C

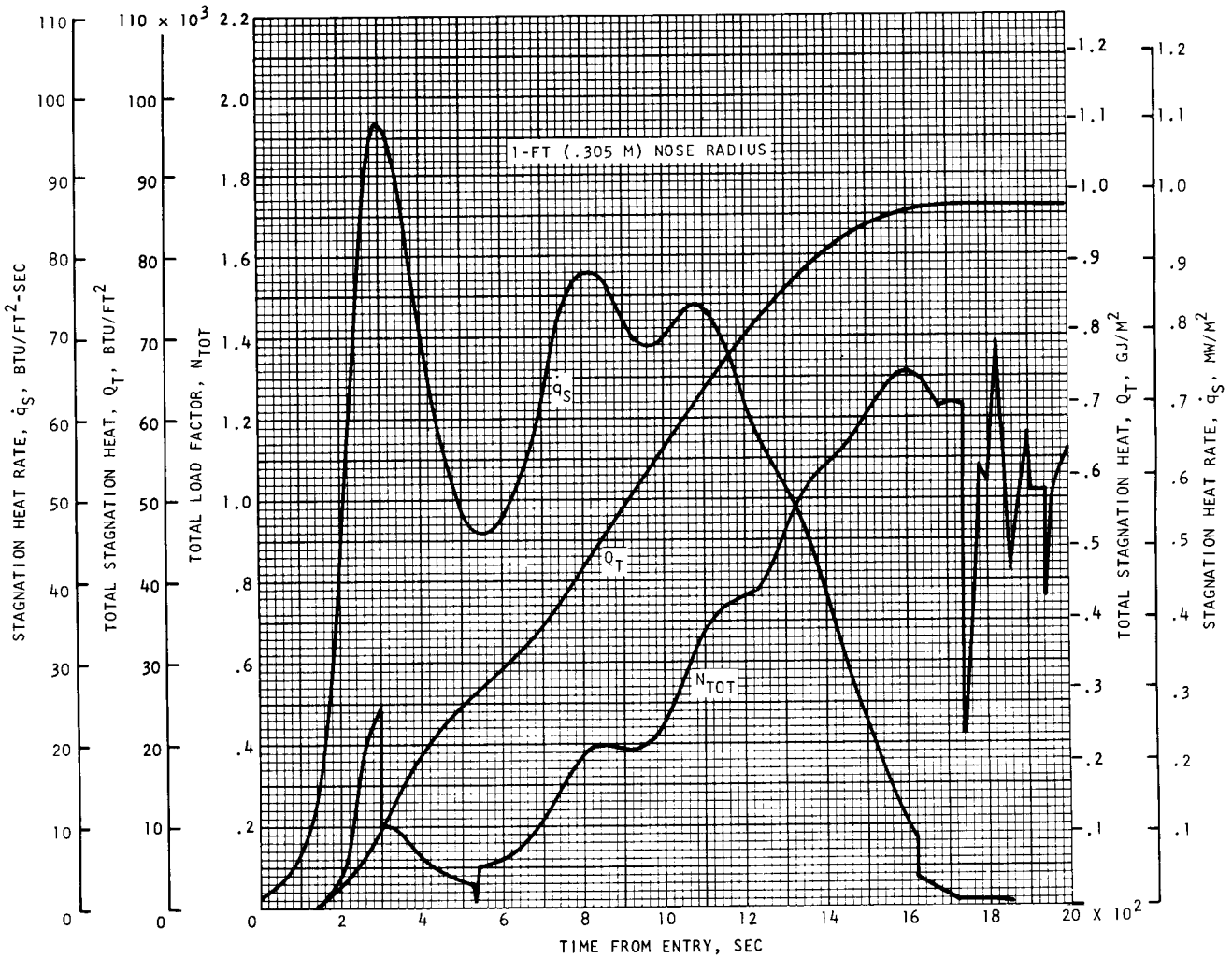

FIGURE 18 (b). ENTRY FLIGHT TRAJECTORY, ENTRY CONDITION C

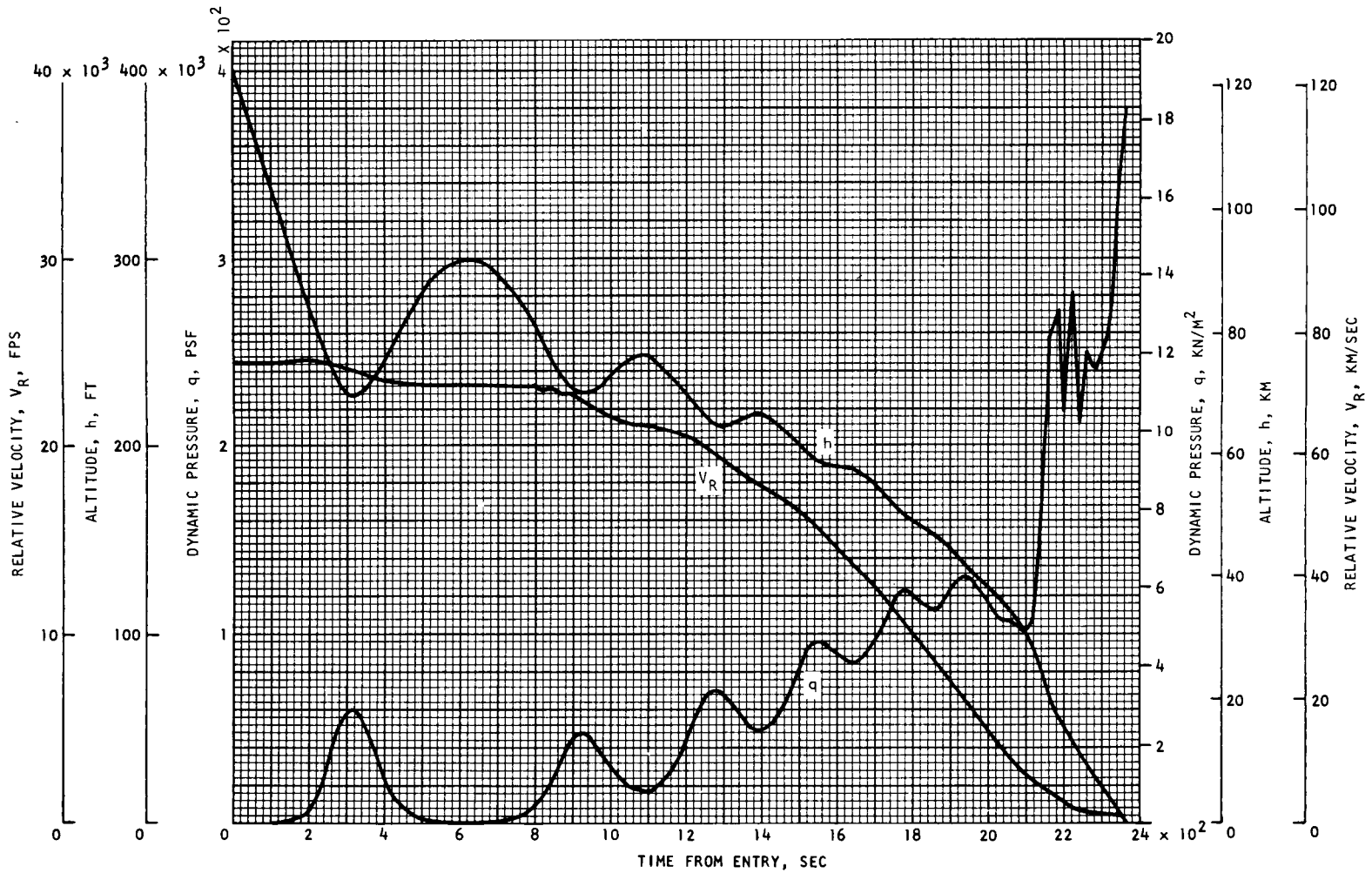

FIGURE 19 (a). ENTRY FLIGHT TRAJECTORY, ENTRY CONDITION D

ER 14271-5

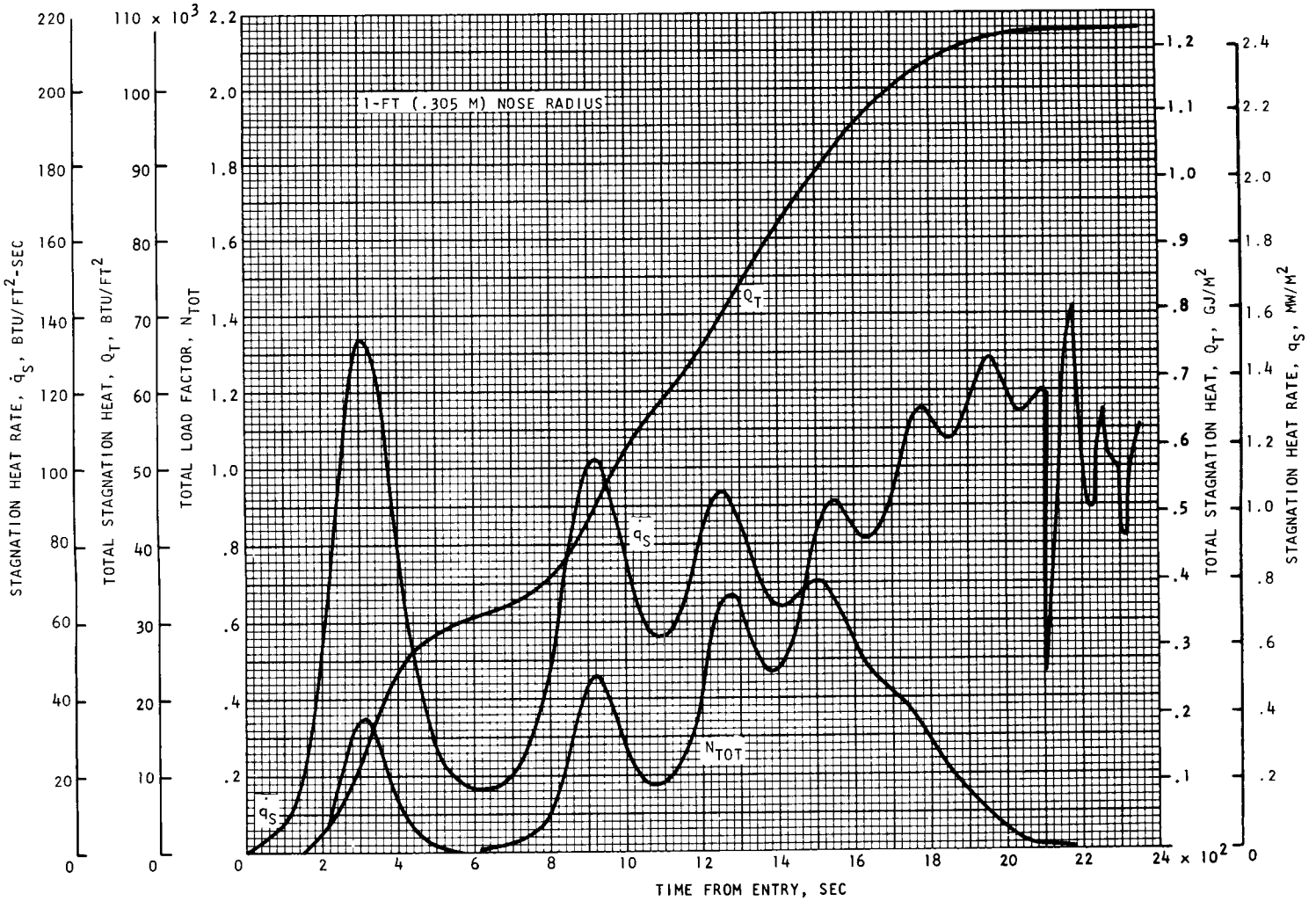

FIGURE 19 (b). ENTRY FLIGHT TRAJECTORY, ENTRY CONDITION D

ER 14471-5

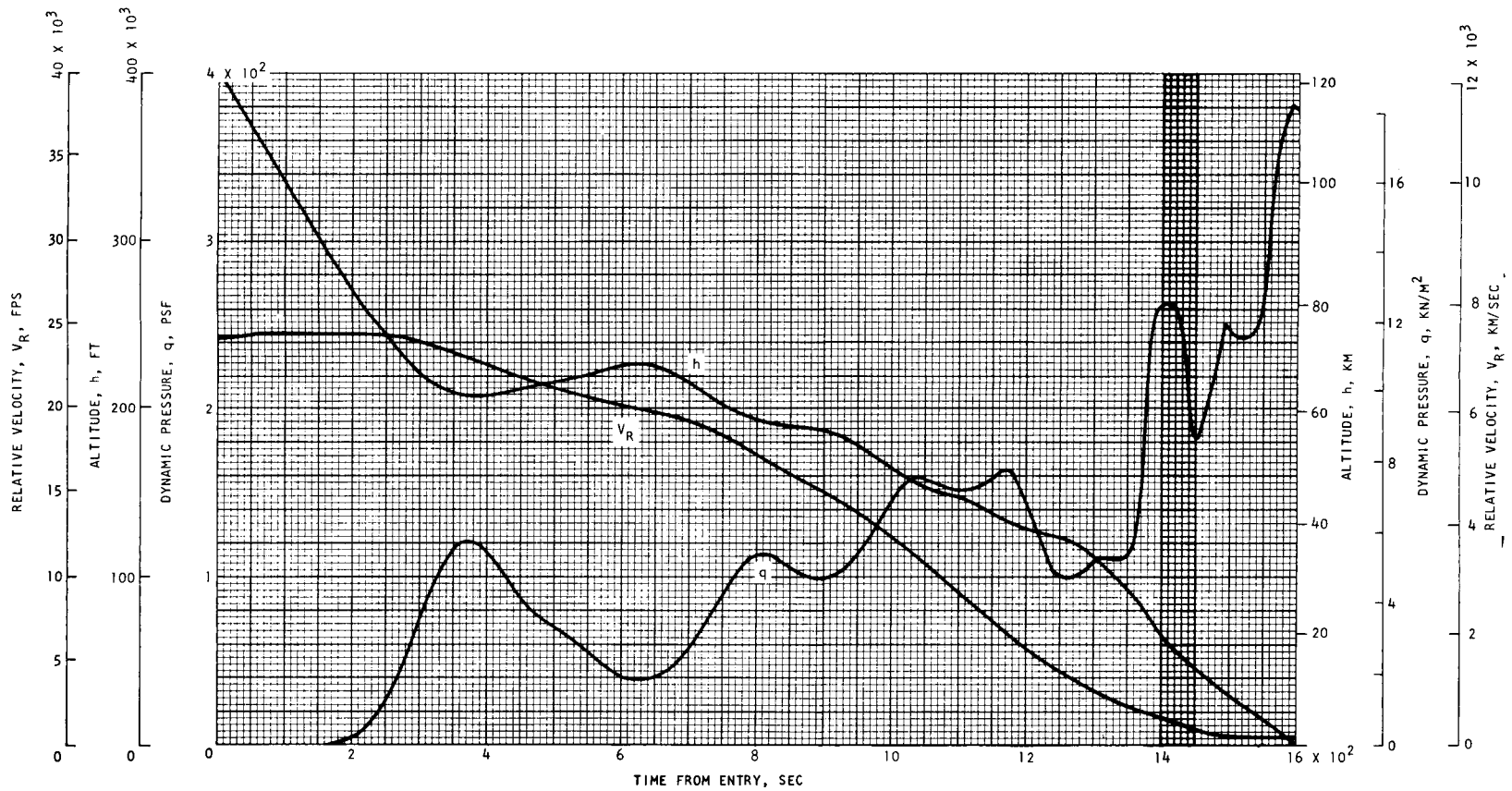

FIGURE 20(a). ENTRY FLIGHT TRAJECTORY, ENTRY CONDITION G

ER 14471-5

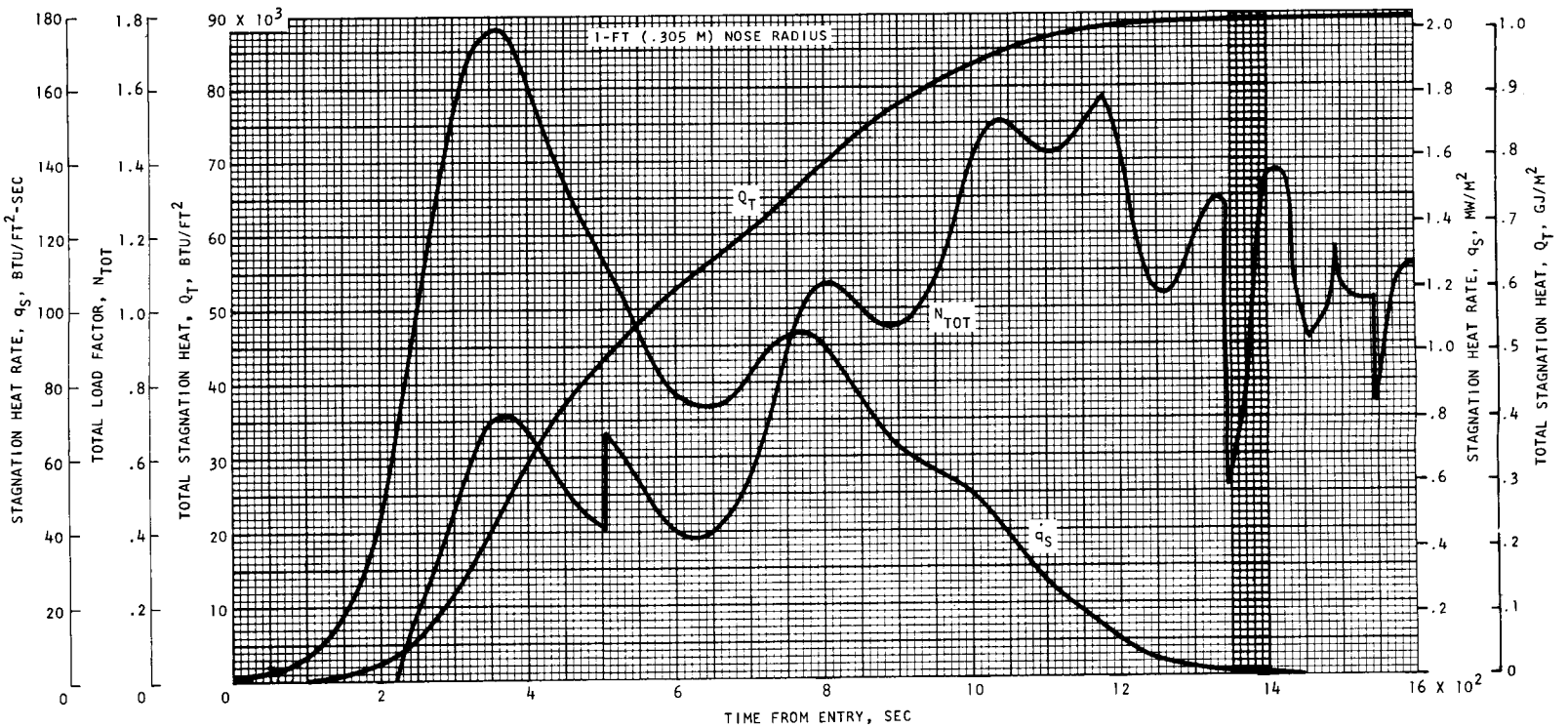

FIGURE 20(b). ENTRY FLIGHT TRAJECTORY, ENTRY CONDITION G

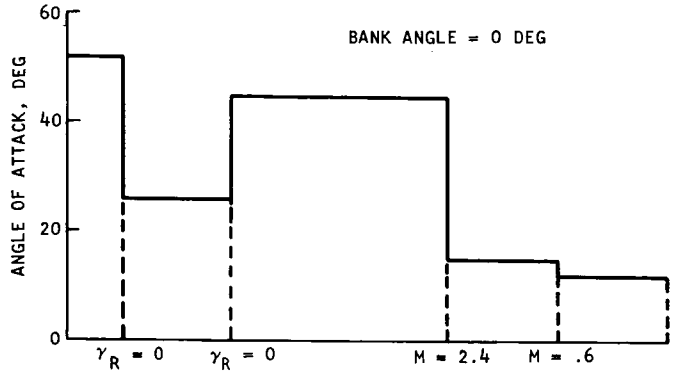

FIGURE 21. FLIGHT PROGRAM, ENTRY CONDITION C

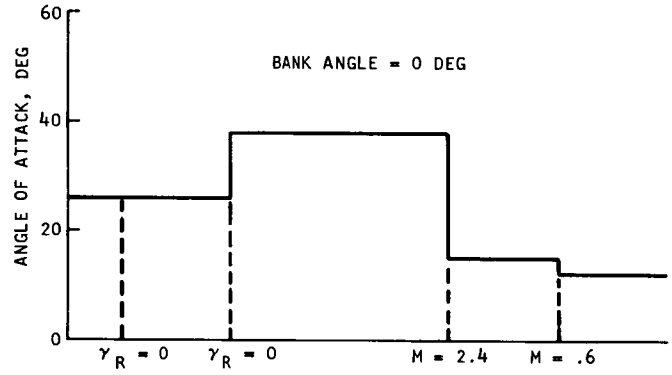

FIGURE 22. FLIGHT PROGRAM, ENTRY CONDITION D (AND B)

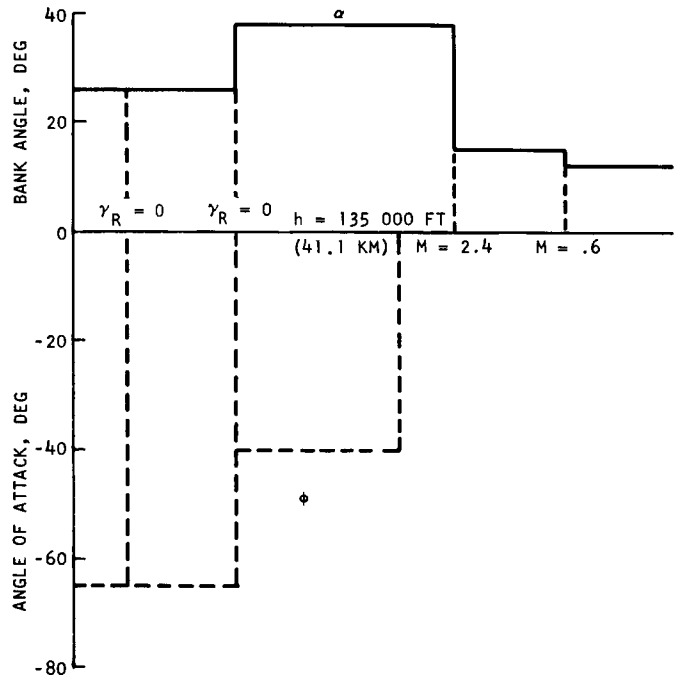

FIGURE 23. FLIGHT PROGRAM, ENTRY CONDITION G

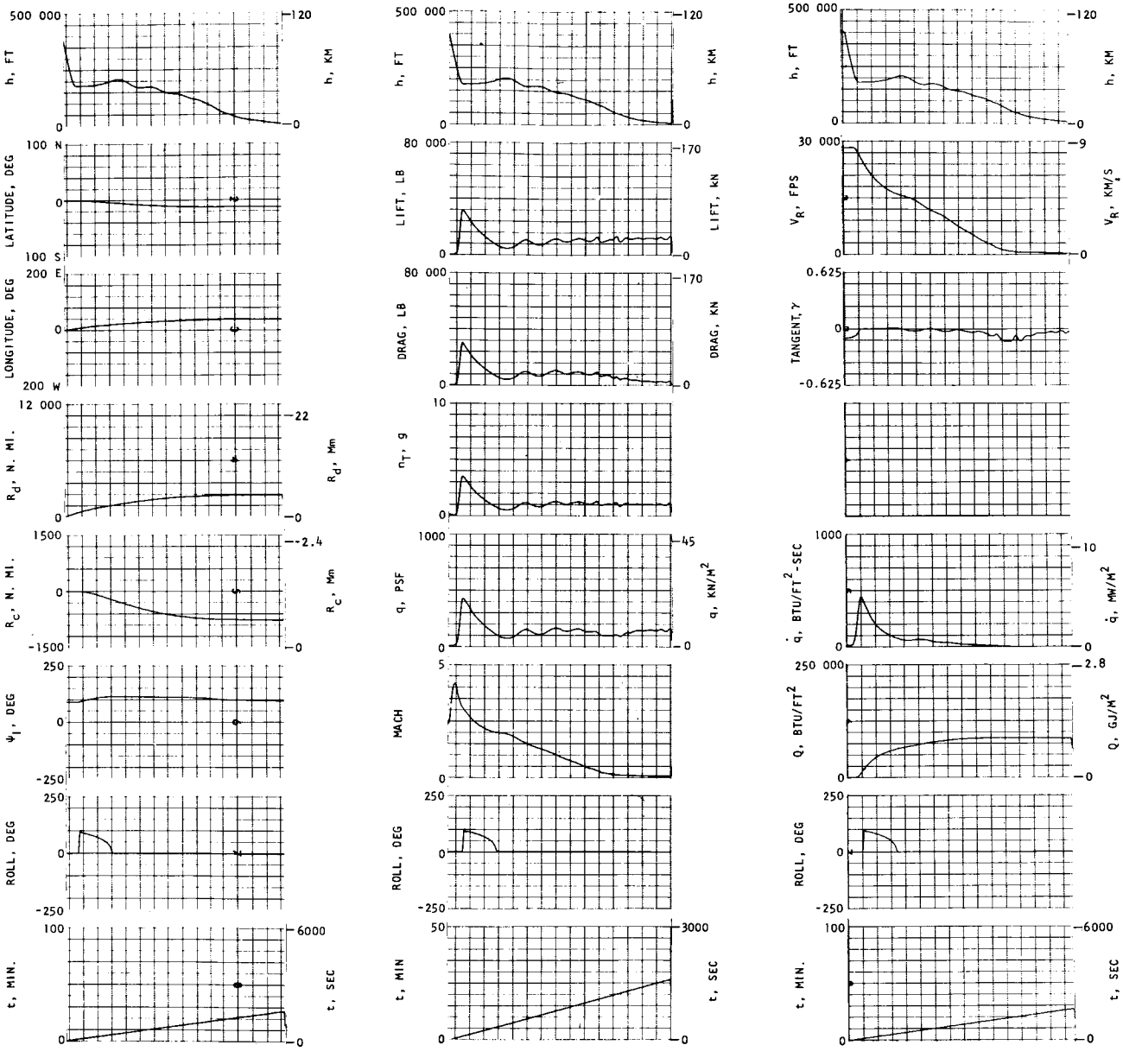

FIGURE 24. ENTRY FLIGHT TRAJECTORY, ENTRY FLIGHT CONDITION K ($\gamma_i = -6°$)

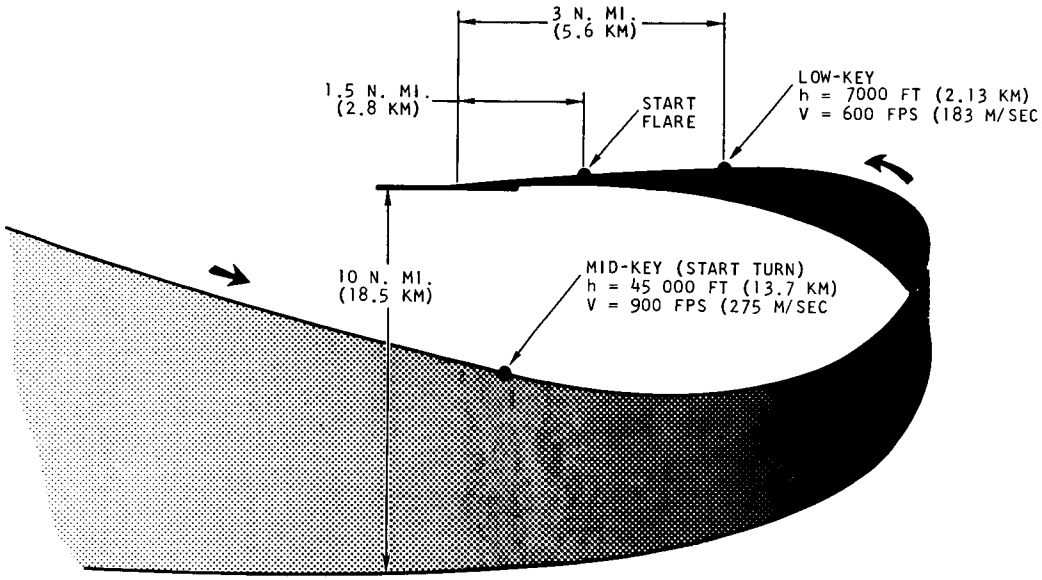

FIGURE 25. TYPICAL APPROACH PATTERN FROM ORBIT

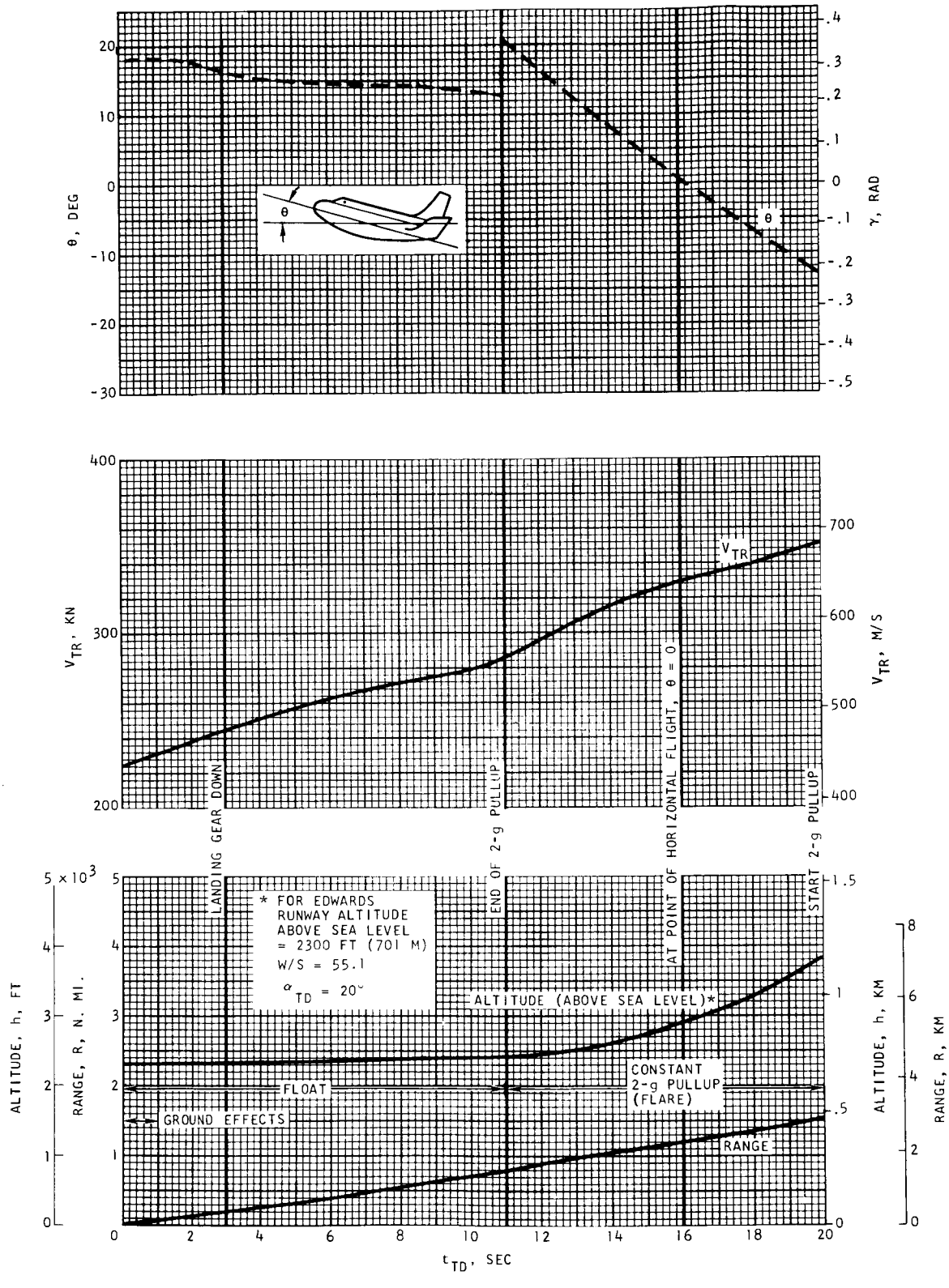

FIGURE 26. LANDING TRAJECTORY

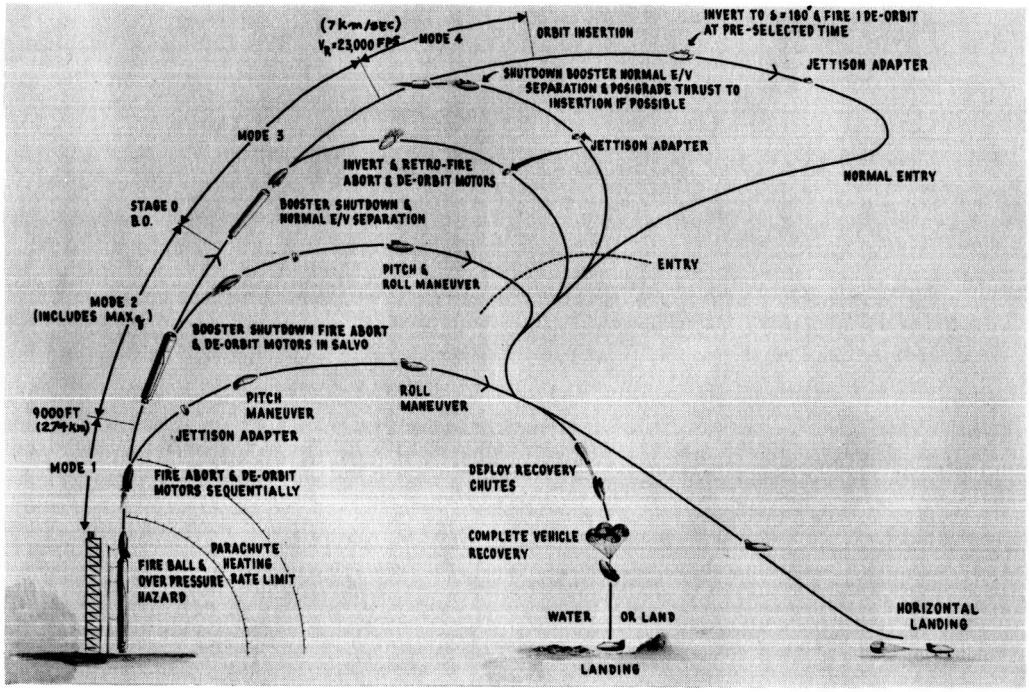

MODE	RANGE	ABORT PROCEDURE	RECOVERY PROCEDURE
1	PAD ABORT TO 9000 FT (2.74 KM)	FIRE ABORT AND THEN DEORBIT MOTORS SEQUENTIALLY. JETTISON ADAPTER AT MOTOR BURNOUT. PITCH TO ANGLE OF ATTACK FOR $C_{L_{MAX}}$ (ALSO L/D_{MAX} SUBSONICALLY). AT APOGEE ROLL 180° TO WINGS LEVEL ATTITUDE AND PROCEED TO PERTINENT RECOVERY PROCEDURE.	INITIATE COMPLETE VEHICLE RECOVERY ANYTIME AFTER APOGEE ALTITUDE AND BEFORE 1500 FT (457 M)
2	9000 FT (2.74 KM) TO STAGE 0 BURNOUT (INCLUDES MAX G)	SHUT DOWN BOOSTER ENGINES AND FIRE THE ABORT AND DEORBIT MOTORS SIMULTANEOUSLY (IN SALVO). JETTISON ADAPTER AT MOTOR BURNOUT. PITCH TO ANGLE OF ATTACK FOR $C_{L_{MAX}}$ AND CONTINUE ENTRY TO RECOVERY.	INITIATE COMPLETE VEHICLE RECOVERY.
3	STAGE 0 BURNOUT TO V_R = 23 000 FPS (7.02 KM/SEC)	SHUT DOWN BOOSTER ENGINES. SEPARATE ENTRY VEHICLE AS IN NORMAL ORBIT INSERTION. PITCH TO AN INVERTED ATTITUDE FOR RETRO FIRE AND FIRE ANY COMBINATION OF ABORT AND DEORBIT MOTORS AS NECESSARY TO ROUGHLY CONTROL LANDING POINT. JETTISON ADAPTER AT MOTOR BURNOUT AND PITCH TO ANGLE OF ATTACK FOR $C_{L_{MAX}}$. CONTINUE ENTRY TO RECOVERY.	SAME AS MODE 2.
4	V_R = 23 000 FPS (7.02 KM/SEC) TO ORBIT INSERTION	SHUT DOWN BOOSTER ENGINES, COAST AS NECESSARY. SEPARATE ENTRY VEHICLE AS IN NORMAL DIRECTION BY FIRING ANY COMBINATION OF THE ABORT AND DEORBIT MOTORS AS REQUIRED TO AVOID AN AFRICA LANDING, OR TO GO INTO ORBIT. IF ORBITAL VELOCITY IS NOT REACHED, PITCH TO ANGLE OF ATTACK, AS REQUIRED, TO ACHIEVE DOWNRANGE DISTANCE TO OVERFLY AFRICA. JETTISON ADAPTER AND CONTINUE ENTRY TO RECOVERY. IF ORBIT INSERTION IS ATTAINED, SELECT DESIRED DEORBIT POINT AND DEORBIT IN NORMAL MANNER.	SAME AS MODE 2.

FIGURE 27. MISSION ABORT TECHNIQUES

ER 14471-5

RECOMMENDATION		
ABORT V_R	L/D	THRUST
<23 050 FPS (7.03 KM/SEC)	MIN.	RETROGRADE
>23 050 FPS (7.03 KM/SEC)	MAX.	POSIGRADE

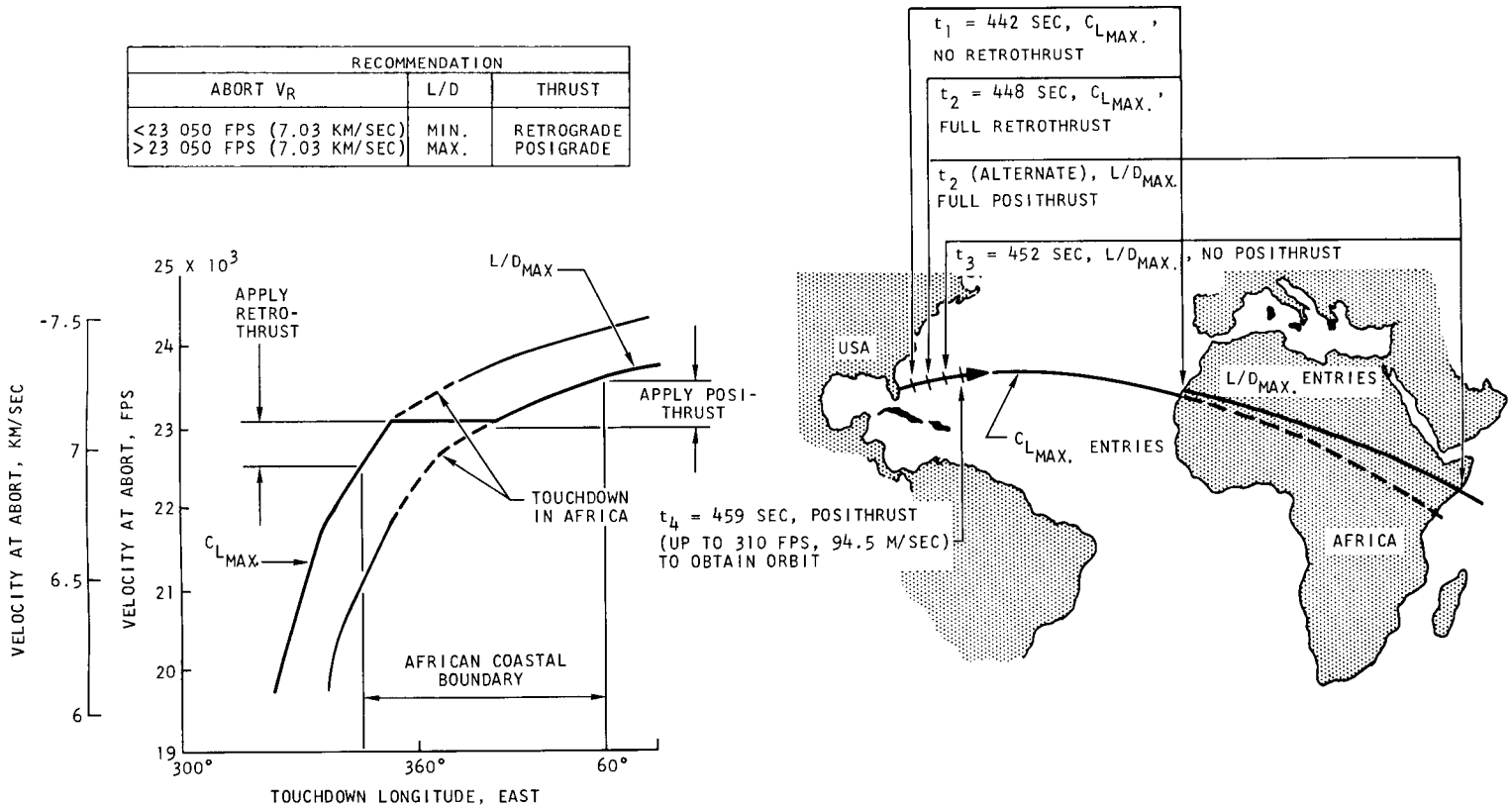

FIGURE 28. ASCENT ABORT CONSIDERATIONS

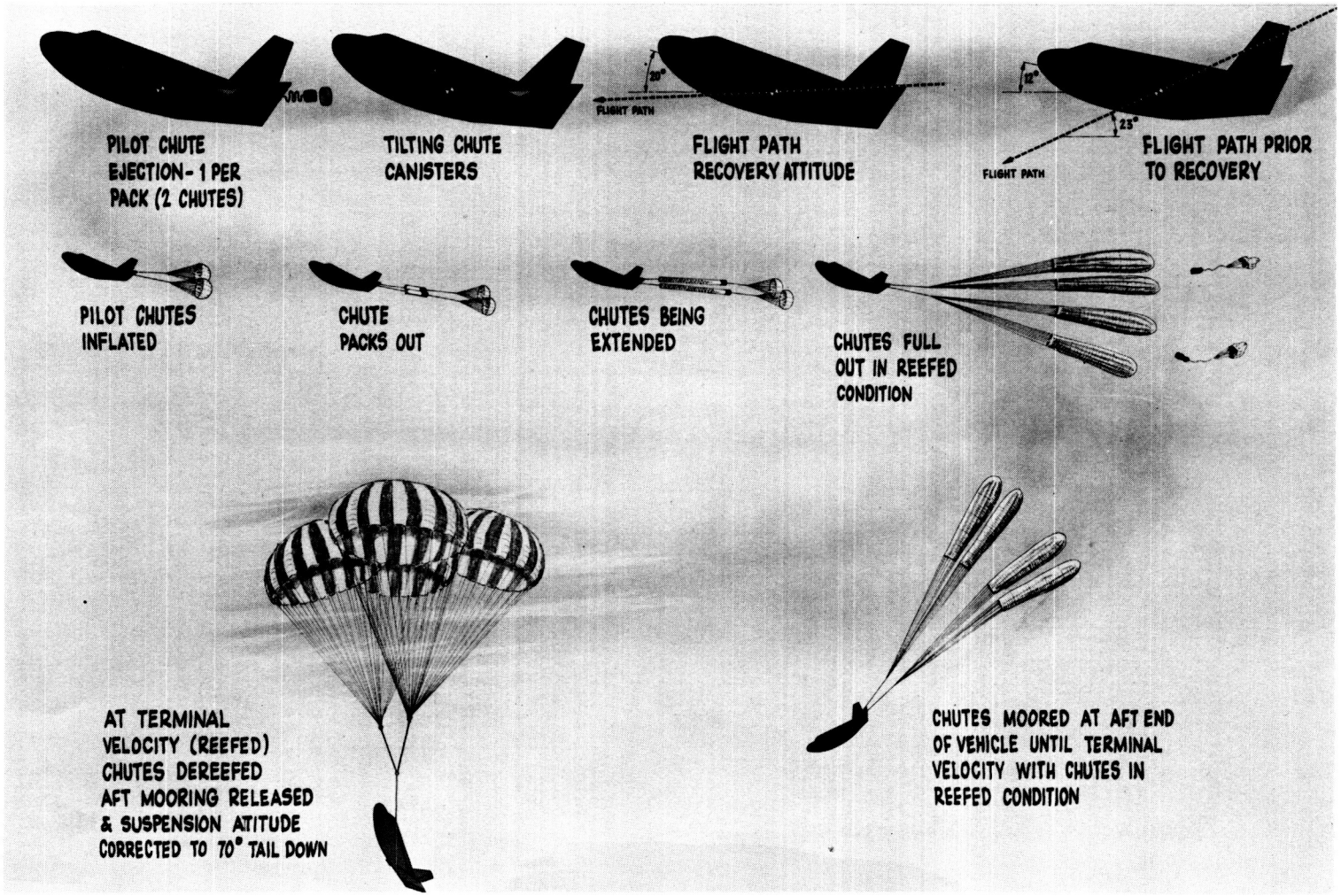

FIGURE 29. RECOVERY SEQUENCE

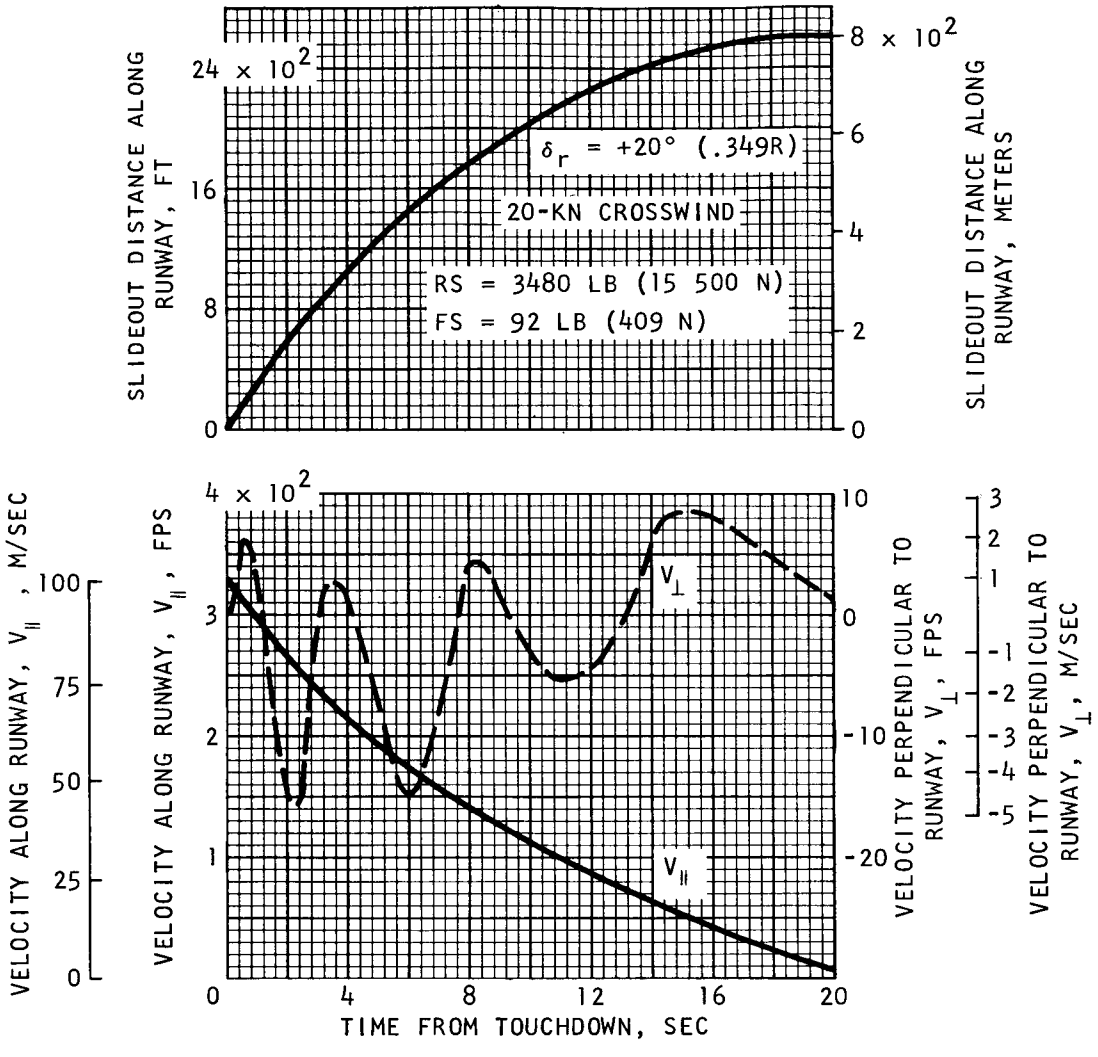

FIGURE 30. D/3 SLIDEOUT DISTANCE

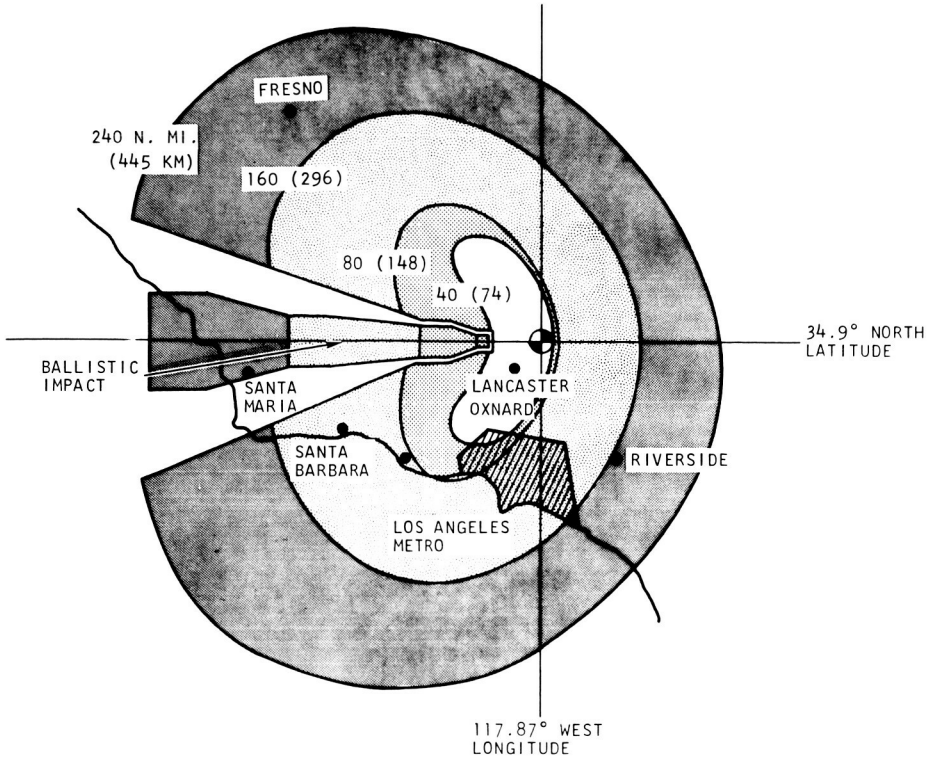

FIGURE 31. HAZARD ANALYSIS FOOTPRINT, WEST APPROACH TO EDWARDS AFB

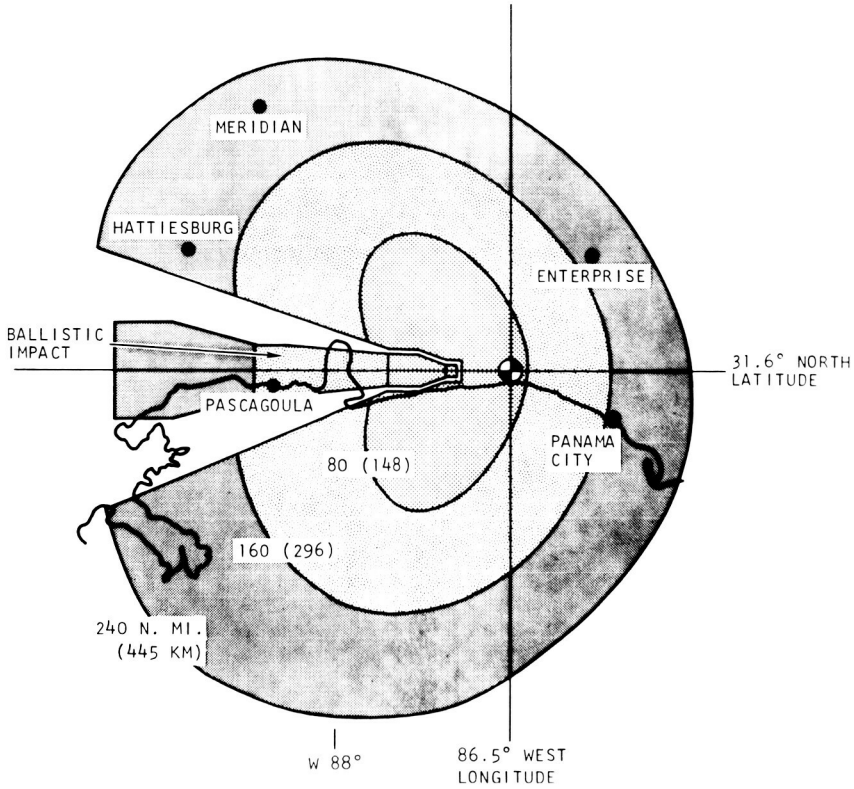

FIGURE 32. HAZARD ANALYSIS FOOTPRINT, WEST APPROACH TO EGLIN AFB

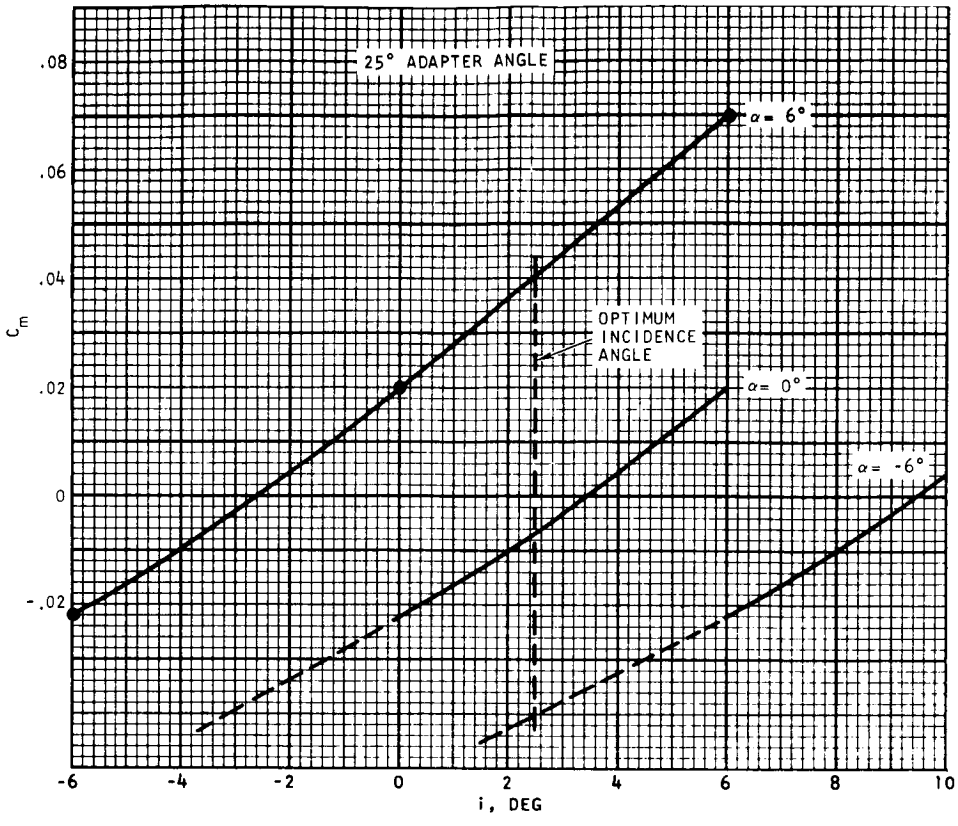

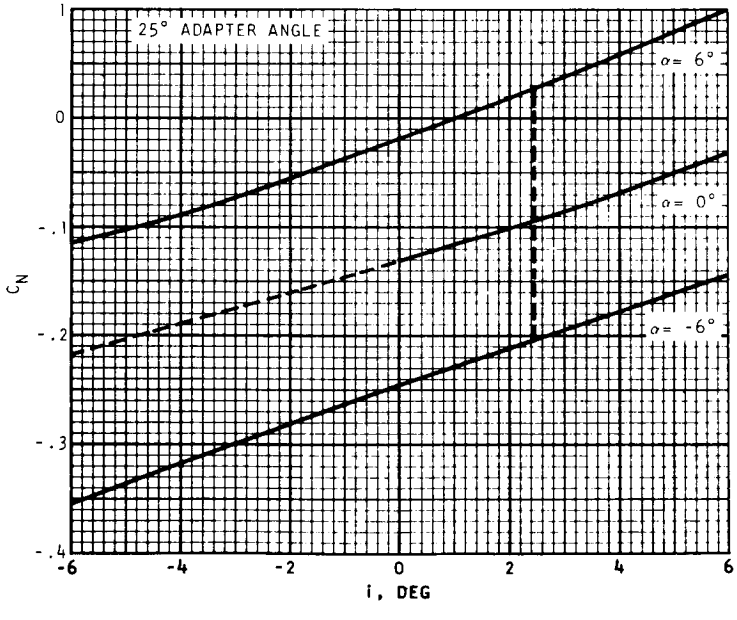

FIGURE 33. AERODYNAMIC LOADS COEFFICIENTS AT INTERFACE FOR TITAN III

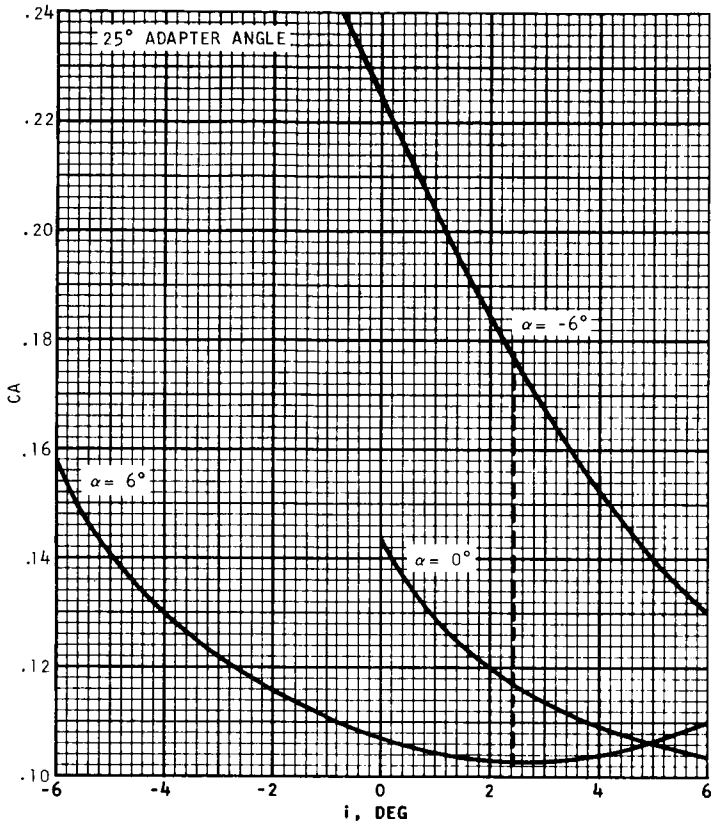

FIGURE 33. --CONCLUDED

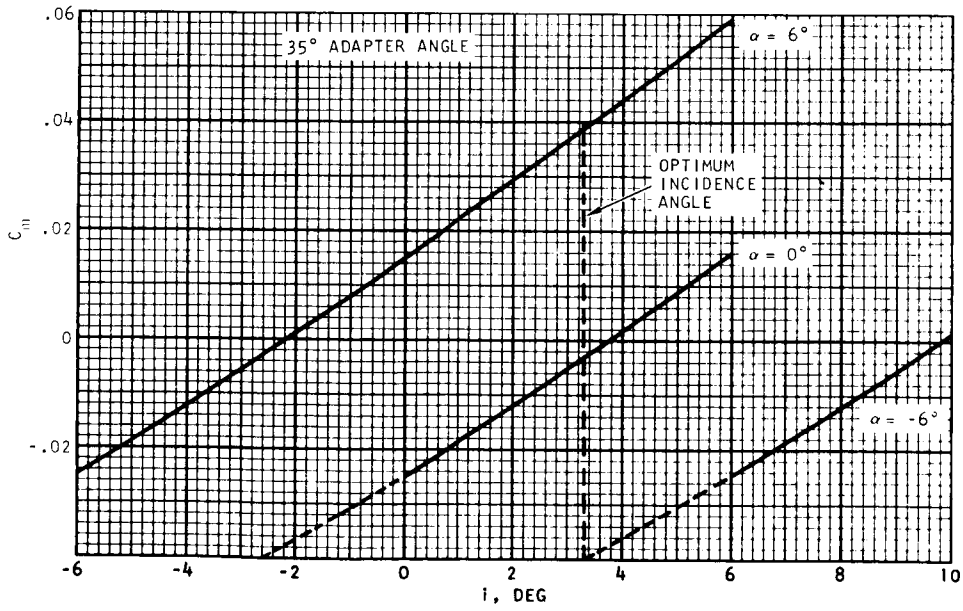

FIGURE 34. AERODYNAMIC LOADS COEFFICIENT AT INTERFACE FOR SATURN IB

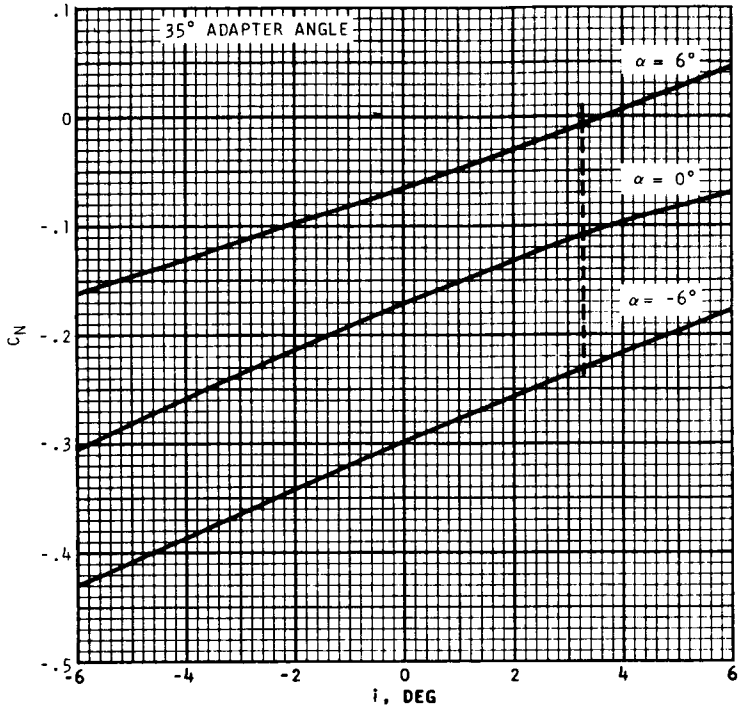

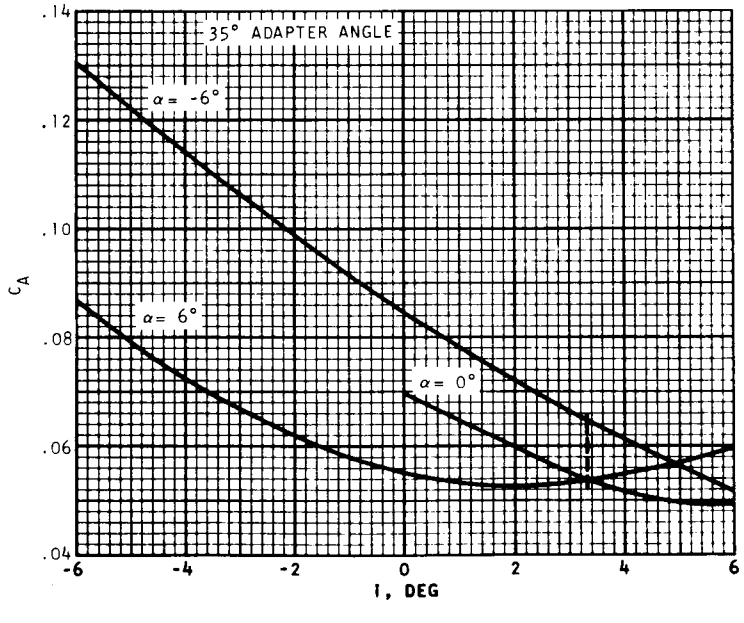

FIGURE 34. --CONCLUDED

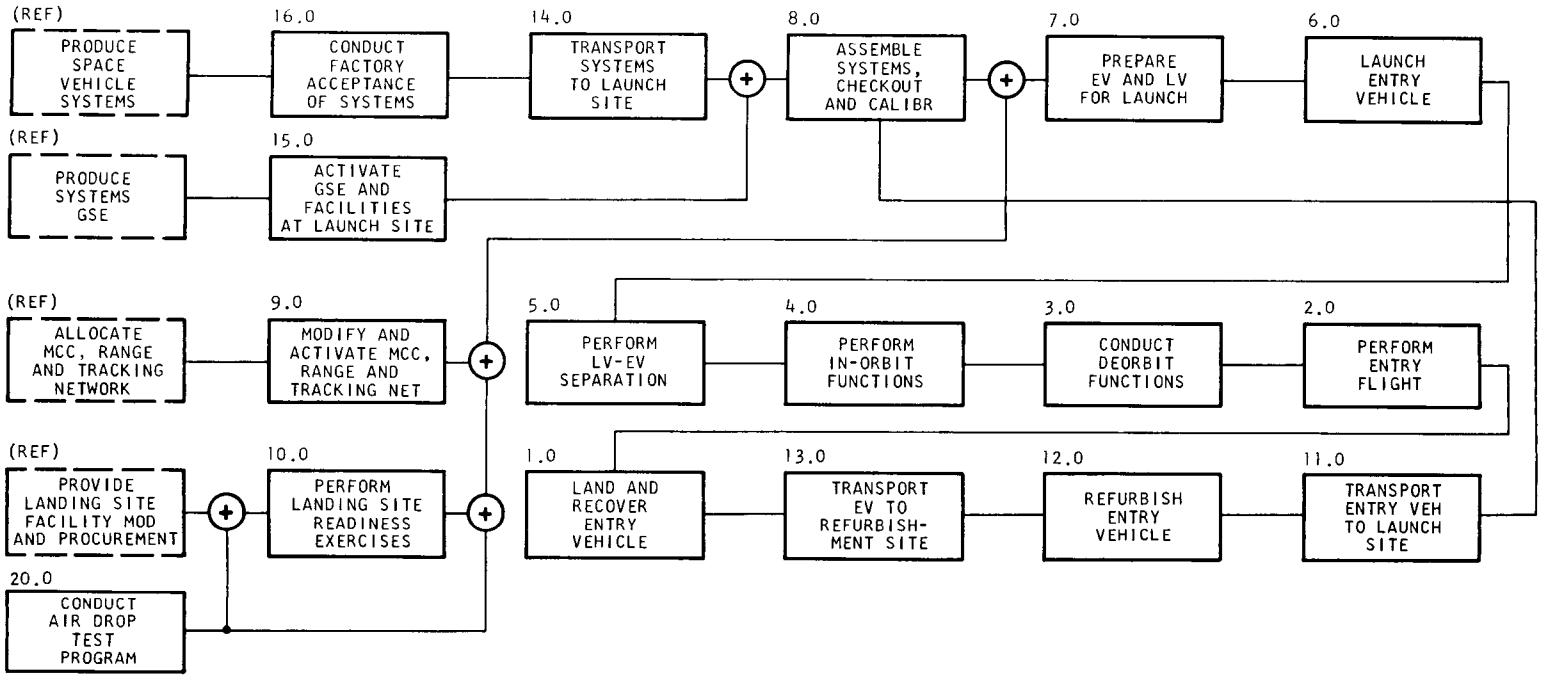

FIGURE 35. SEQUENTIAL OPERATIONAL PLAN, TOP LEVEL

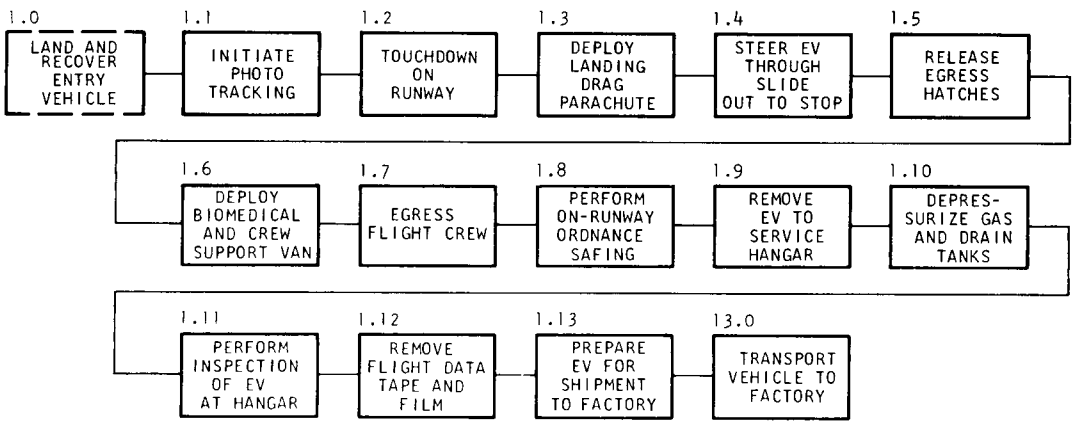

FIGURE 36. SEQUENTIAL OPERATIONAL PLAN, LAND AND RECOVER ENTRY VEHICLE

DECLASSIFIED

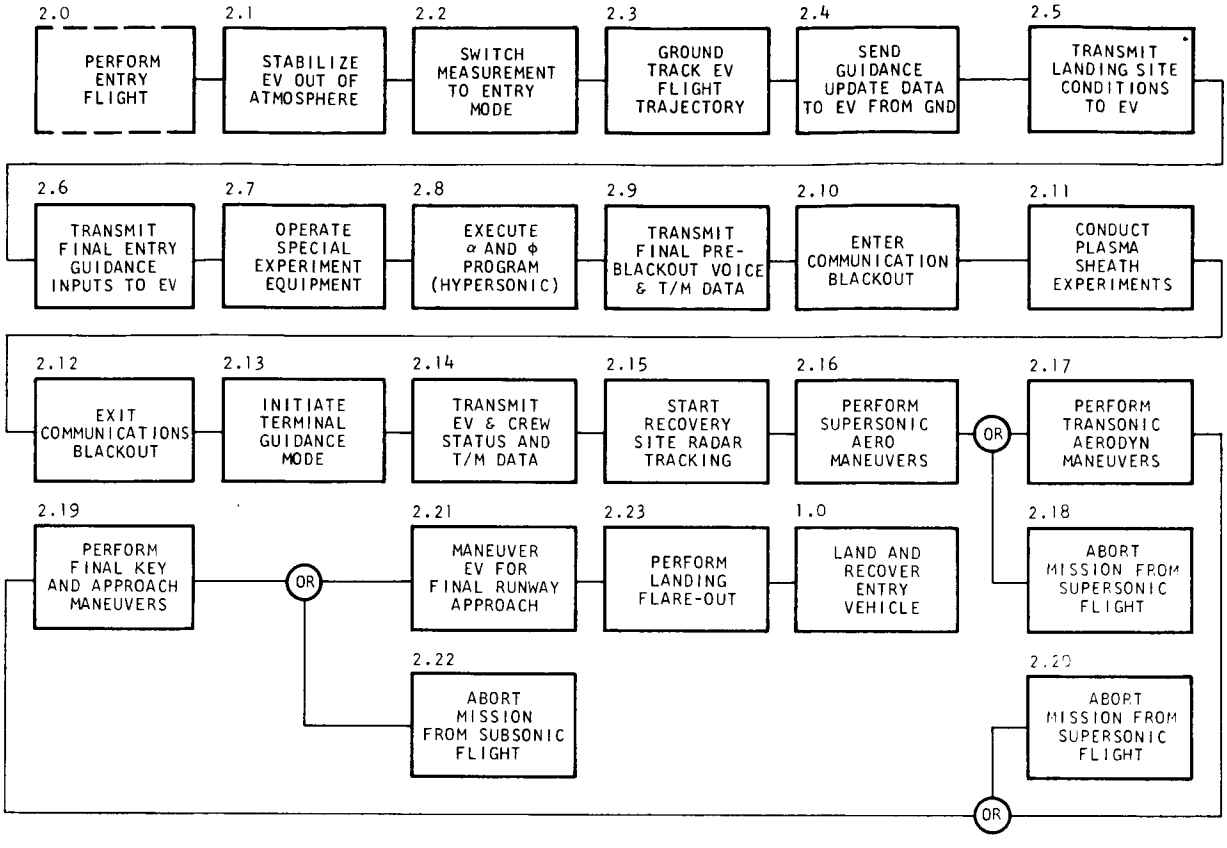

FIGURE 37. SEQUENTIAL OPERATIONAL PLAN, ENTRY FLIGHT

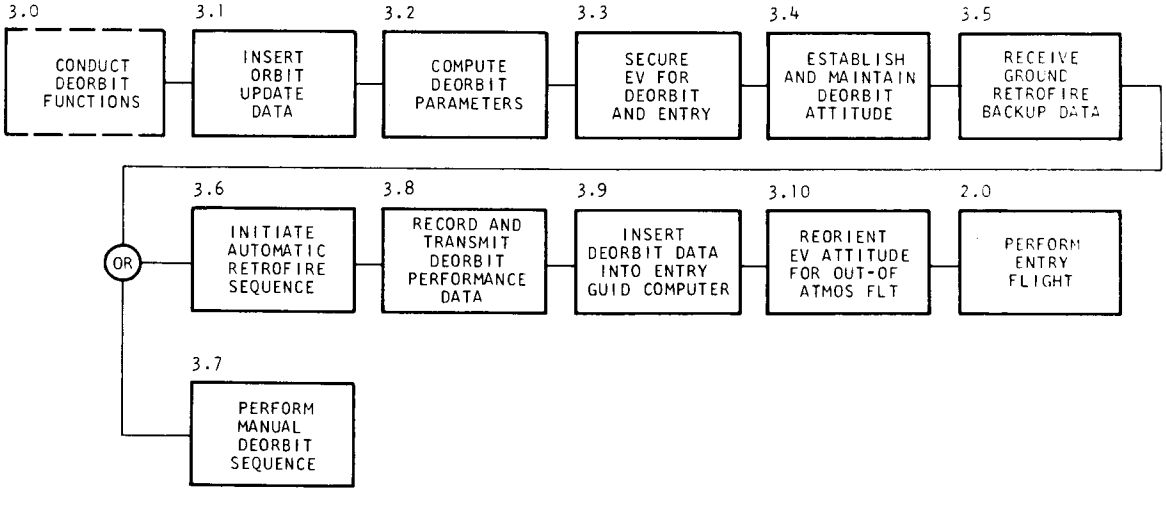

FIGURE 38. SEQUENTIAL OPERATIONAL PLAN, DEORBIT FUNCTION

DECLASSIFIED

DECLASSIFIED

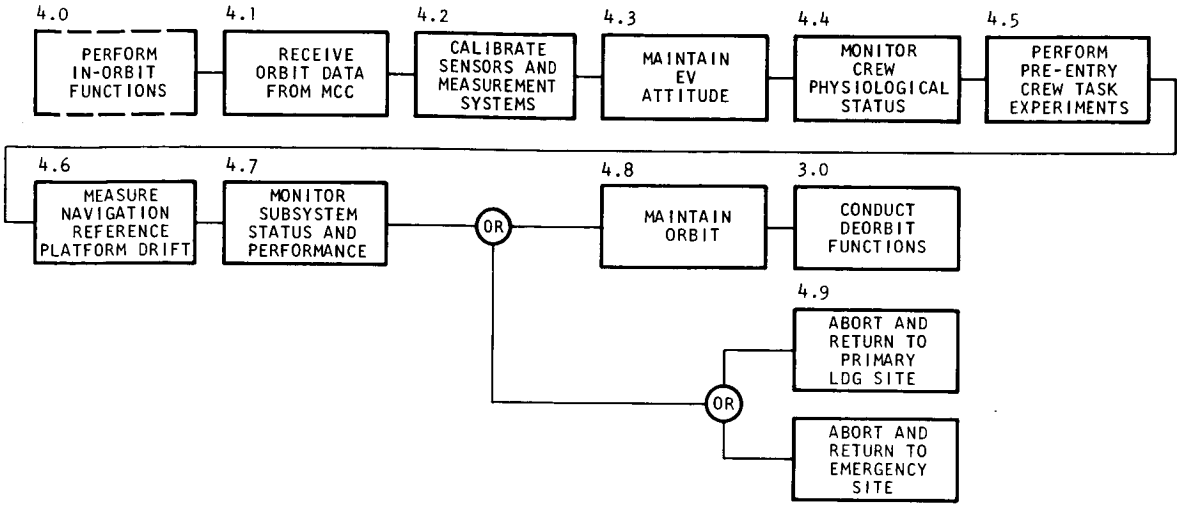

FIGURE 39. SEQUENTIAL OPERATIONAL PLAN, IN-ORBIT FUNCTIONS

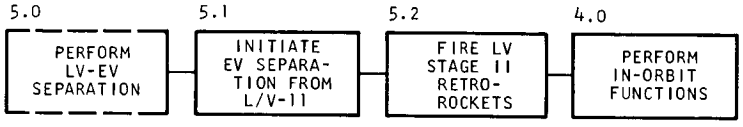

FIGURE 40. SEQUENTIAL OPERATIONAL PLAN, LAUNCH VEHICLE-ENTRY VEHICLE SEPARATION

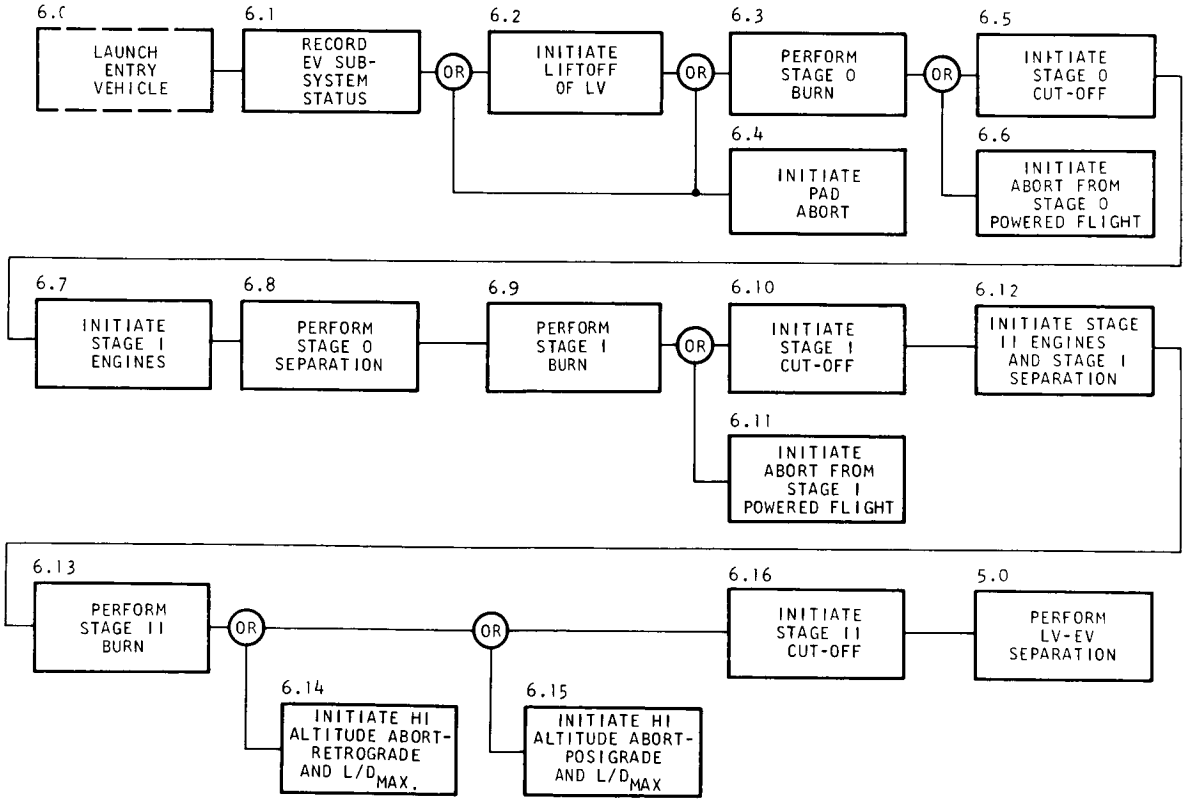

FIGURE 41. SEQUENTIAL OPERATIONAL PLAN, LAUNCH ENTRY VEHICLE

DECLASSIFIED

DECLASSIFIED

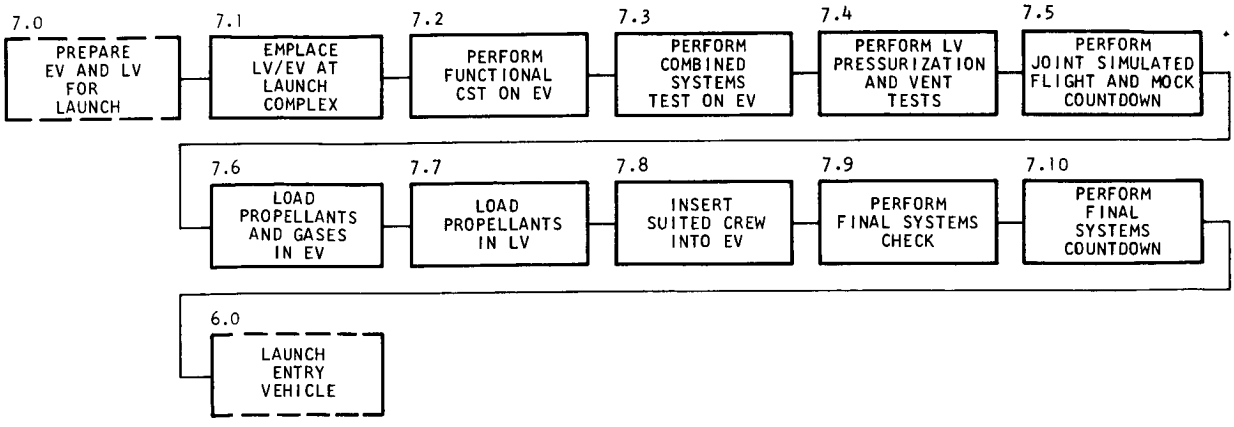

FIGURE 42. SEQUENTIAL OPERATIONAL PLAN, ENTRY VEHICLE AND LAUNCH VEHICLE LAUNCH PREPARATION

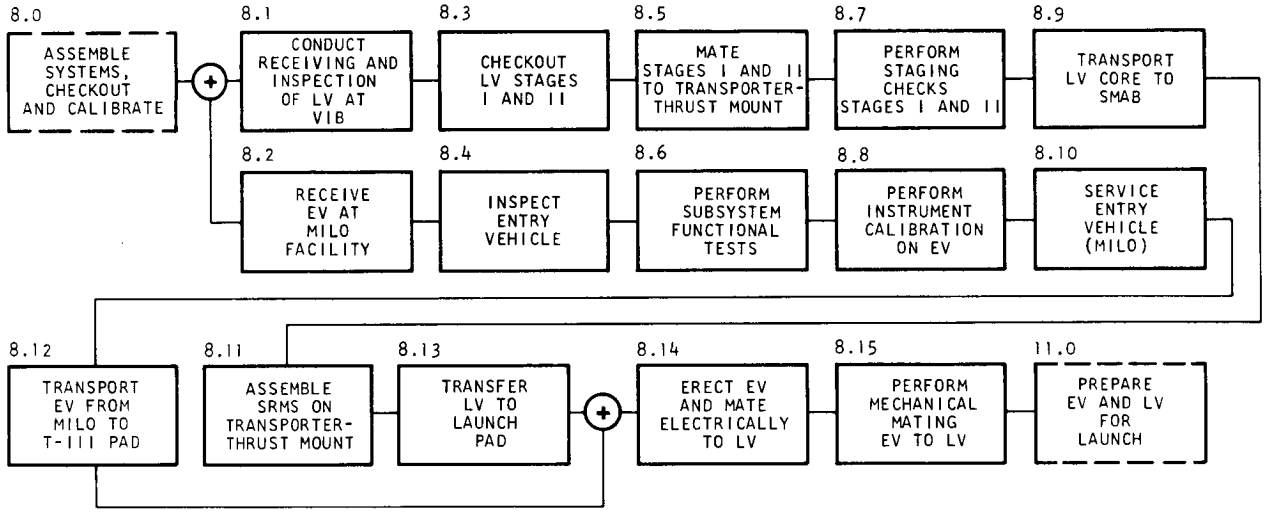

FIGURE 43. SEQUENTIAL OPERATIONAL PLAN, ASSEMBLY AND CHECKOUT SYSTEMS

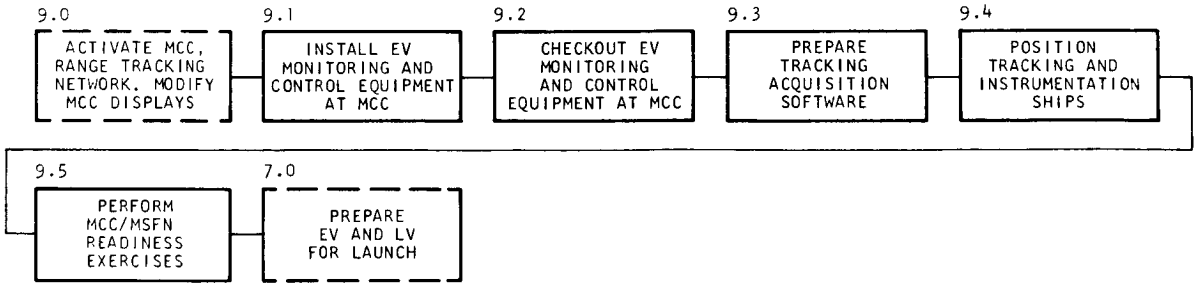

FIGURE 44. SEQUENTIAL OPERATIONAL PLAN, ACTIVATION OF GOSS

DECLASSIFIED

DECLASSIFIED

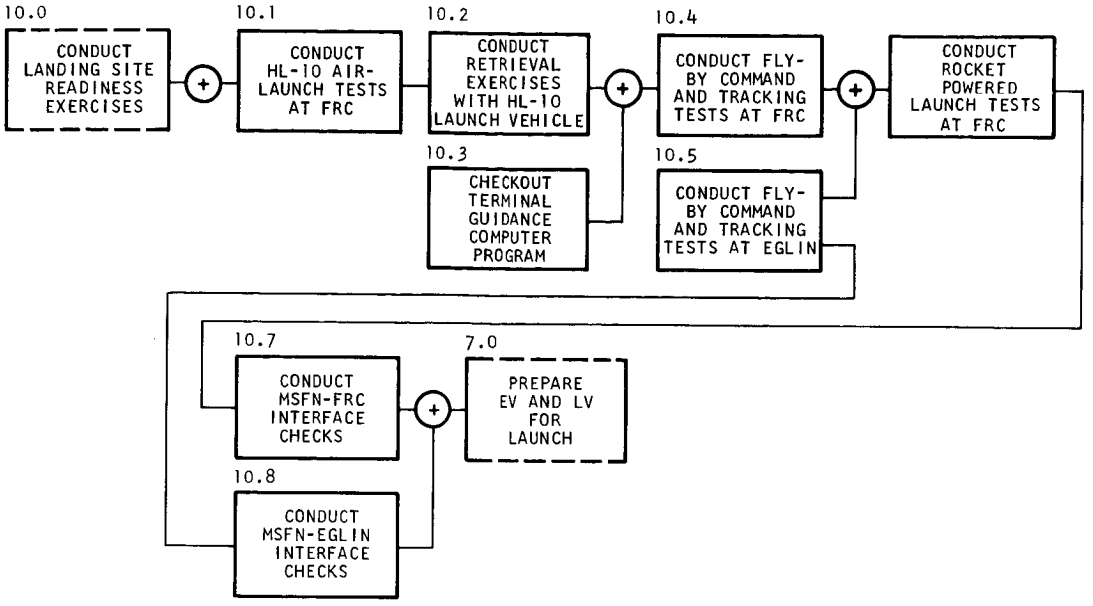

FIGURE 45. SEQUENTIAL OPERATIONAL PLAN, LANDING SITE READINESS EXERCISES

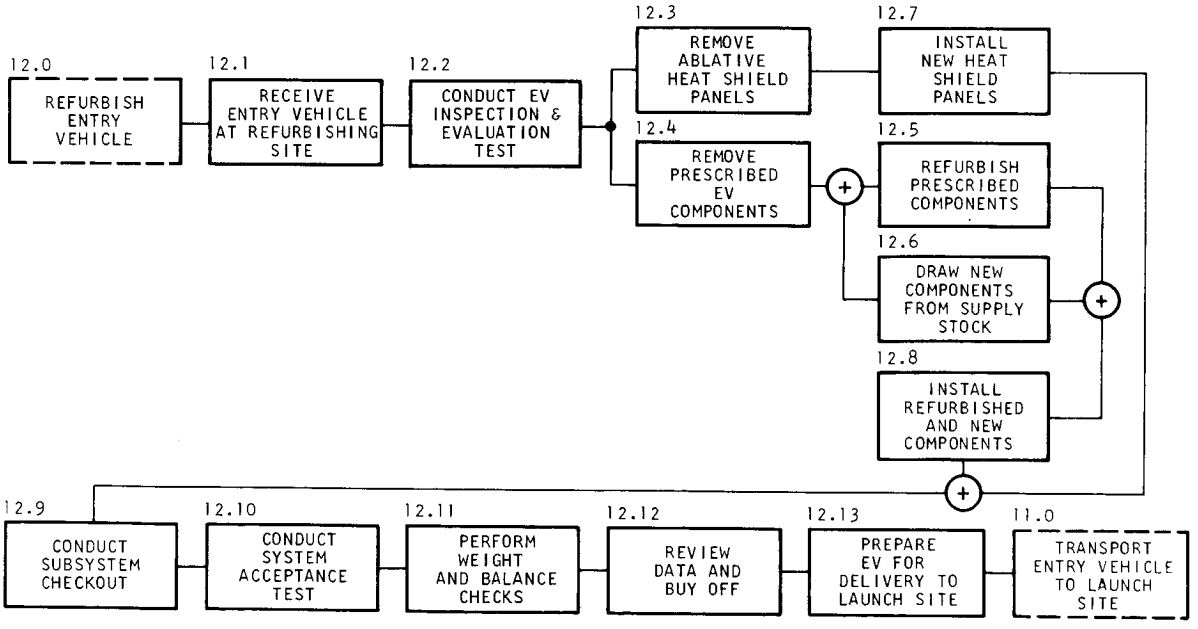

FIGURE 46. SEQUENTIAL OPERATIONAL PLAN, REFURBISHMENT

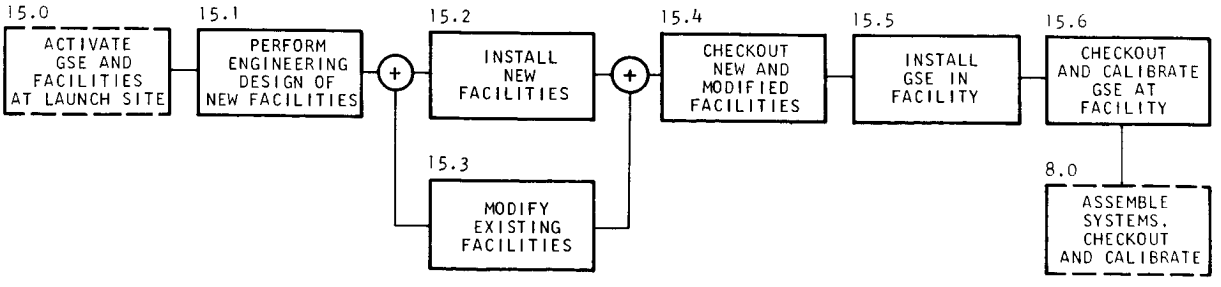

FIGURE 47. SEQUENTIAL OPERATIONAL PLAN, ACTIVATION OF GSE AND FACILITIES

DECLASSIFIED

DECLASSIFIED

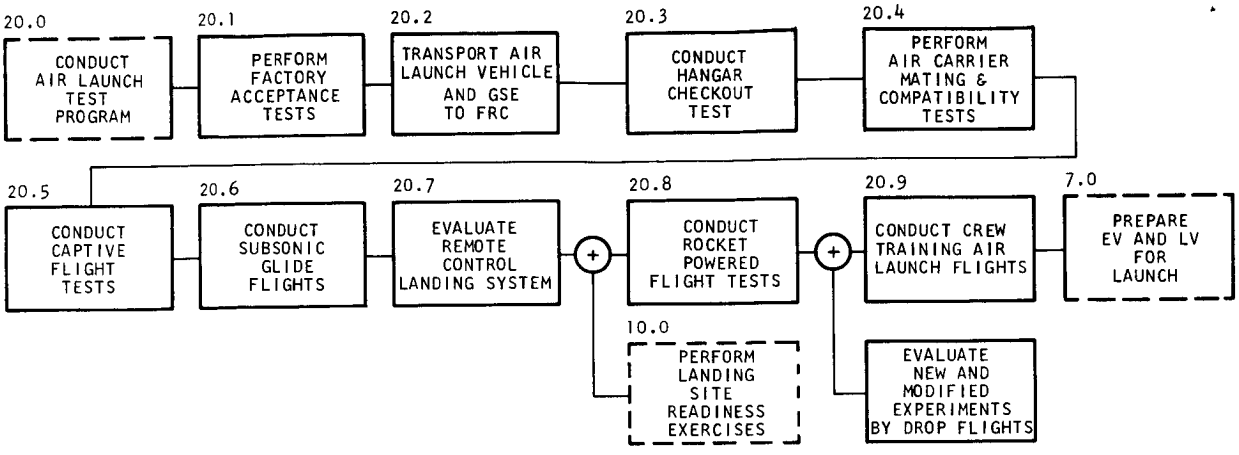

FIGURE 48. SEQUENTIAL OPERATIONAL PLAN, AIR LAUNCH TESTS

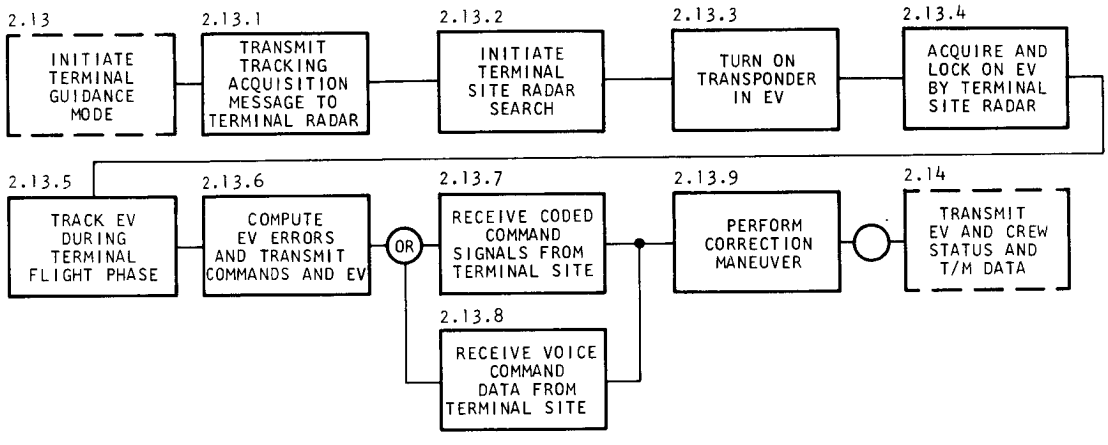

FIGURE 49. SEQUENTIAL OPERATIONAL PLAN, TERMINAL GUIDANCE, 2ND LEVEL

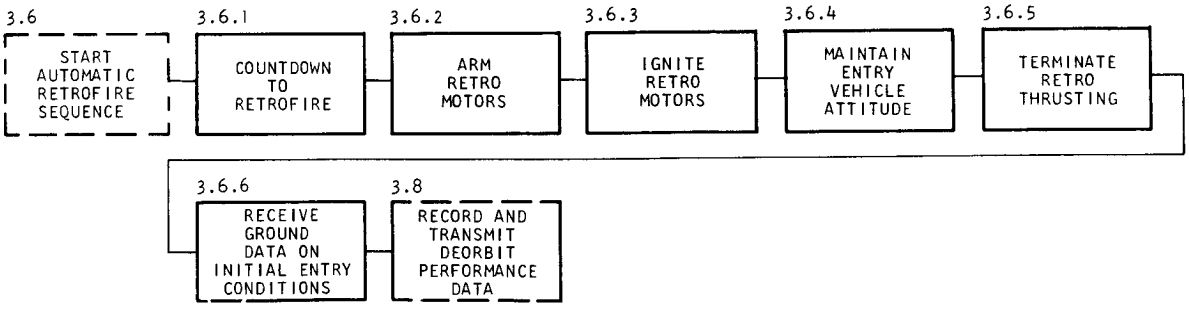

FIGURE 50. SEQUENTIAL OPERATIONAL PLAN, START OF RETROFIRE SEQUENCE

DECLASSIFIED

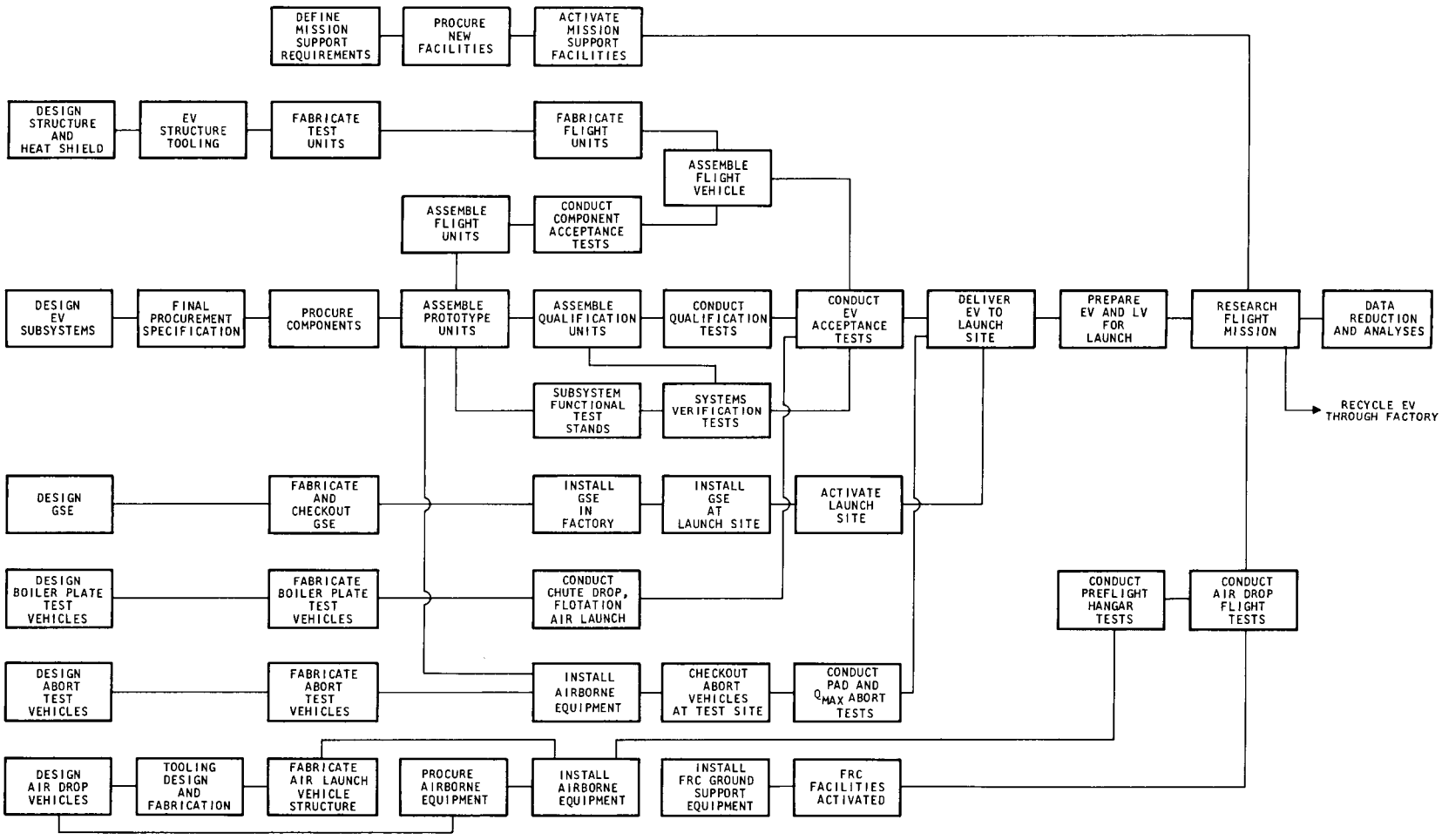

FIGURE 51. ENTRY VEHICLE DEVELOPMENT FLOW PLAN

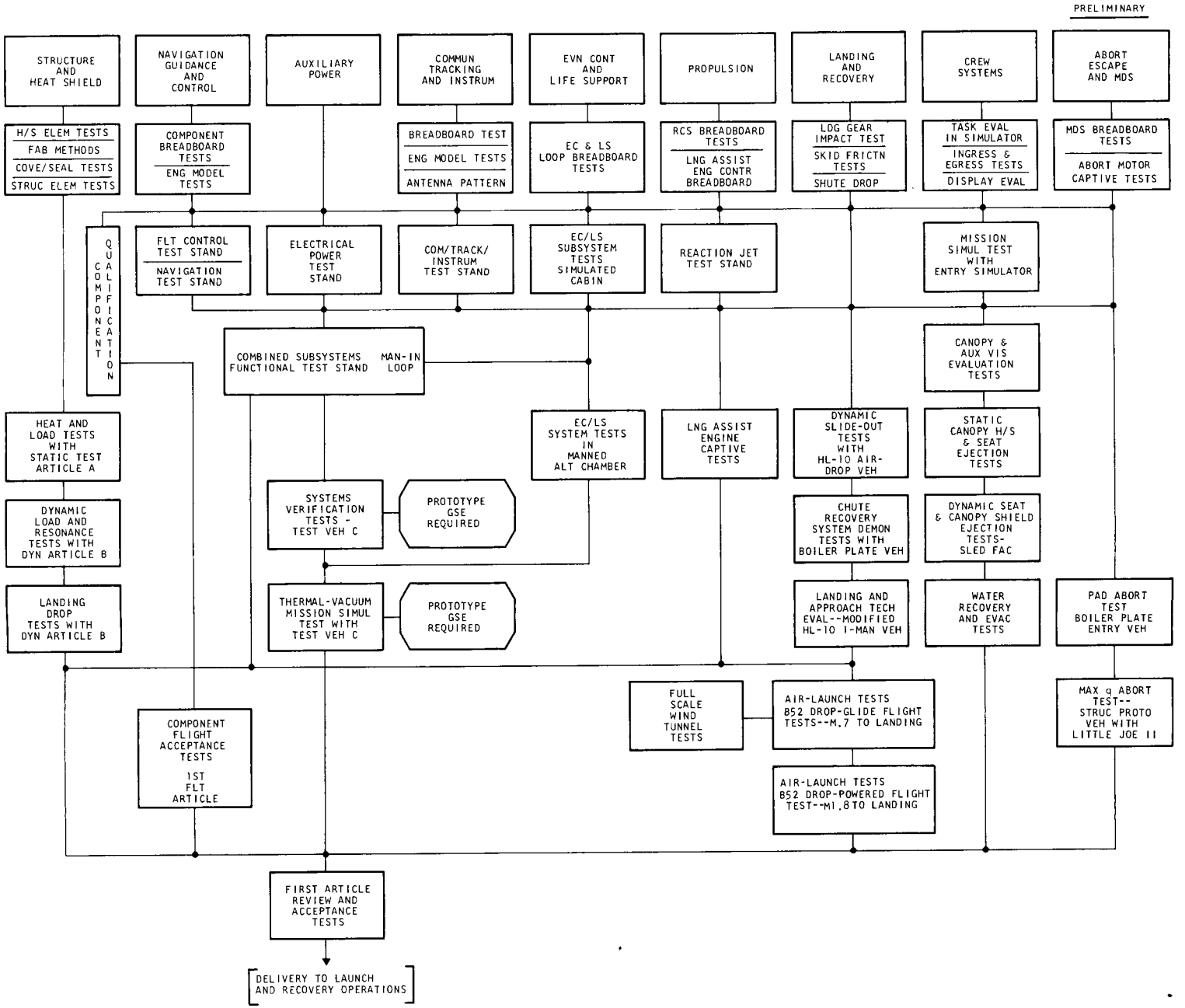

FIGURE 52. HL-10 BASELINE DEVELOPMENT TEST FLOW PLAN

	ITEM NO.	TEST DESCRIPTION	MACH NUMBER	TEST TIME REQUIRED	DESCRIPTION OF MODEL	PURPOSE OF TEST	WIND TUNNEL VELOCITY
HL-10 WIND TUNNEL TEST PROGRAM COMPLETED	1	FORCE TEST $\delta_e = 0°$	SUBSONIC		NO CANOPY		
	2	FORCE TEST δ_e 0°	SUBSONIC		NO CANOPY		
	3	FORCE TEST	SUBSONIC		NO CANOPY		
	4	PRESSURE DISTRIBUTION, FORCE AND HINGE MOMENT	1.5 to 2.16		FIBER GLASS--DEF CANOPIES		
	5	FORCE TEST	SUBSON-1.2		METAL--NO CANOPY		
	6	HINGE MOMENTS	0.4-1.2		FIBER GLASS--NO CANOPY		
	7	FORCE TEST	0.4-1.2		FIBER GLASS--NO CANOPY		
	8	PRESSURE DISTRIBUTION, FORCE AND HINGE MOMENT	1.4-2.16		NO CANOPY		
	9	PRESSURE DISTRIBUTION AND FORCE	10.4		NO CANOPY		
	10	FORCE TEST	6.8		NO CANOPY		
	11	FORCE TEST	19.7		NO CANOPY		
	12	FORCE TEST	0.6-6.8		DEF CANOPIES		
	13	FORCE TEST	0.2-1.4		NO CANOPY AND "D" CANOPY		
	14	FORCE TEST	1.5-2.86		"D" CANOPY		
	15	PRESSURE DISTRIBUTION, FORCE AND HINGE MOMENT	SUBSON-20		NO CANOPY		
	16	HEAT TRANSFER TEST	8		NO CANOPY		
	17	HEAT TRANSFER TEST	8		NO CANOPY		
	18	FULL SCALE FORCE AND HINGE MOMENT	SUBSONIC		FULL SCALE HL-10 DROP VEHICLE		
TO SUPPORT LIFTING ENTRY RESEARCH PROGRAM	1	FORCE TEST--FINAL D/3 CONFIGURATION	SUBSONIC	80	MODIFIED LRC SUBSONIC MODEL	GROUND EFFECTS; GEARDOWN, CANOPY SHIELD OFF, ABORT EFFECTS	LRC 7 x 10 FEET
	2	FORCE TEST--FINAL D/3 CONFIGURATION	10	40	MODIFIED LRC MACH 10 MODEL	ACCOUNT FOR FINAL GEOMETRY; CONTROL EFFECTIVITY	LRC CONT FLOW HYPERSONIC
	3	FORCE TEST--FINAL D/3 CONFIGURATION	1.2-2.4	40	MODIFIED LRC SUPERSONIC MODELS	ACCOUNT FOR FINAL GEOMETRY; CONTROL EFFECTIVITY	LRC UNITARY
	4	FORCE TEST--FINAL D/3 CONFIGURATION	20	120	NEW LIGHTWEIGHT PLASTIC MODELS	ACCOUNT FOR FINAL GEOMETRY; CONTROL EFFECTIVITY	LRC HOTSHOT
	5	FORCE TEST--FINAL D/3 CONFIGURATION	0.4-1.2	40	MODIFIED LRC TRANSONIC MODEL	ACCOUNT FOR FINAL GEOMETRY; CONTROL EFFECTIVITY	LRC 8 FEET TRANS
	6	HEAT RATE DISTRIBUTION TEST	8	40	MODIFIED LRC HEAT RATE MODEL	DETERMINE EFFECT OF CANOPY ON HEAT DISTRIBUTION	LRC M8 VARI DENS
	7	PRESSURE DISTRIBUTION TEST	20	160	METAL MODEL-80 PRESSURE LOCATIONS	DETERMINE LOCAL SURFACE PRESSURES WITH CANOPY	LRC HOTSHOT
	8	HEAT RATE DISTRIBUTION TEST	20	80	THIN SKIN INCONEL MODEL-150 T/C	DETERMINE EFFECT OF CANOPY ON HEAT RATE DISTRIBUTION	LRC HOTSHOT
	9	FORCES AND HEAT MOMENT WITH ADAPTER (ABORT)	SUBSONIC	40	NEW MODEL AND ADAPTER	FORCES ON ENTRY VEHICLE AND ADAPTER DURING AND AFTER SEPARATION	LRC 7 x 10 FEET
	10	FORCES AND HEAT MOMENT WITH ADAPTER (ABORT)	0.4-1.2	80	NEW MODEL AND ADAPTER	FORCES ON ENTRY VEHICLE AND ADAPTER DURING AND AFTER SEPARATION	LRC 8 FEET TRANS
	11	FORCES AND HEAT MOMENT WITH ADAPTER (ABORT)	1.2-2.9/10	80/20	NEW MODEL AND ADAPTER	FORCES ON ENTRY VEHICLE AND ADAPTER DURING AND AFTER SEPARATION	LRC UNITARY LRC CONT FLOW HYP
	12	LAUNCH VEHICLE AERO FORCES	0.6-1.5	60	EXISTING T-III; NEW D/3 MODEL	ENTRY VEHICLE-LAUNCH VEHICLE; WIND INDUCED OSC; ENTRY VEHICLE INCIDENCE L.	AEOC 16 FEET TRANS
	13	LAUNCH VEHICLE AERO FORCES	1.8-3.2	40	EXISTING T-III; NEW D/3 MODEL	ENTRY VEHICLE-LAUNCH VEHICLE; WIND INDUCED OSC; ENTRY VEHICLE INCIDENCE L.	AEDC 16 FEET TRANS
	14	LAUNCH VEHICLE TRANSONIC BUFFET	0.6-1.2	40	EXISTING T-III; NEW D/3 AND ADAPTER	TRANSONIC PRESSURE FLUCTUATIONS ON ADAPTER AND LAUNCH VEHICLE	AEDC 16 FEET TRANS
	15	B52 DROP VEHICLE SEPARATION	0.6-0.9	40	EXISTING B52 MODEL; NEW D/3	FORCE AND MOMENTS ON HL-10 DURING RELEASE FROM B52	LRC 7 x 10 FEET
	16	FULL SCALE FORCE AND MOMENT--D/3 VEHICLE	0.1-0.2	40	D/3 AIR-LAUNCH VEHICLE	LOW SPEED L/D EVALUATION; GEAR DOWN EFFECTS	AMES 40 x 80 FEET

FIGURE 53. HL-10 WIND TUNNEL TEST PLAN

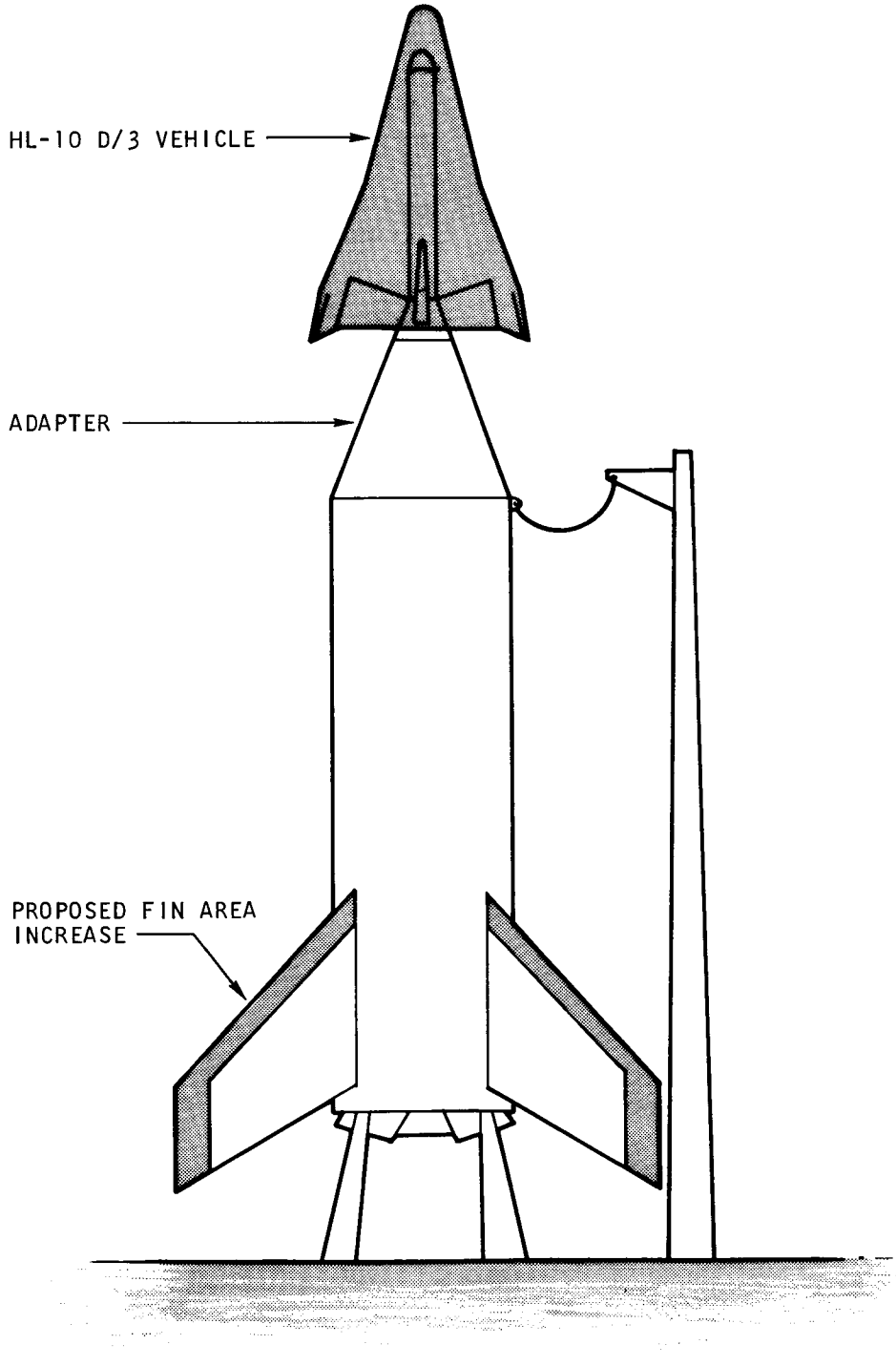

FIGURE 54. LITTLE JOE II/HL-10, D/3 ABORT TEST

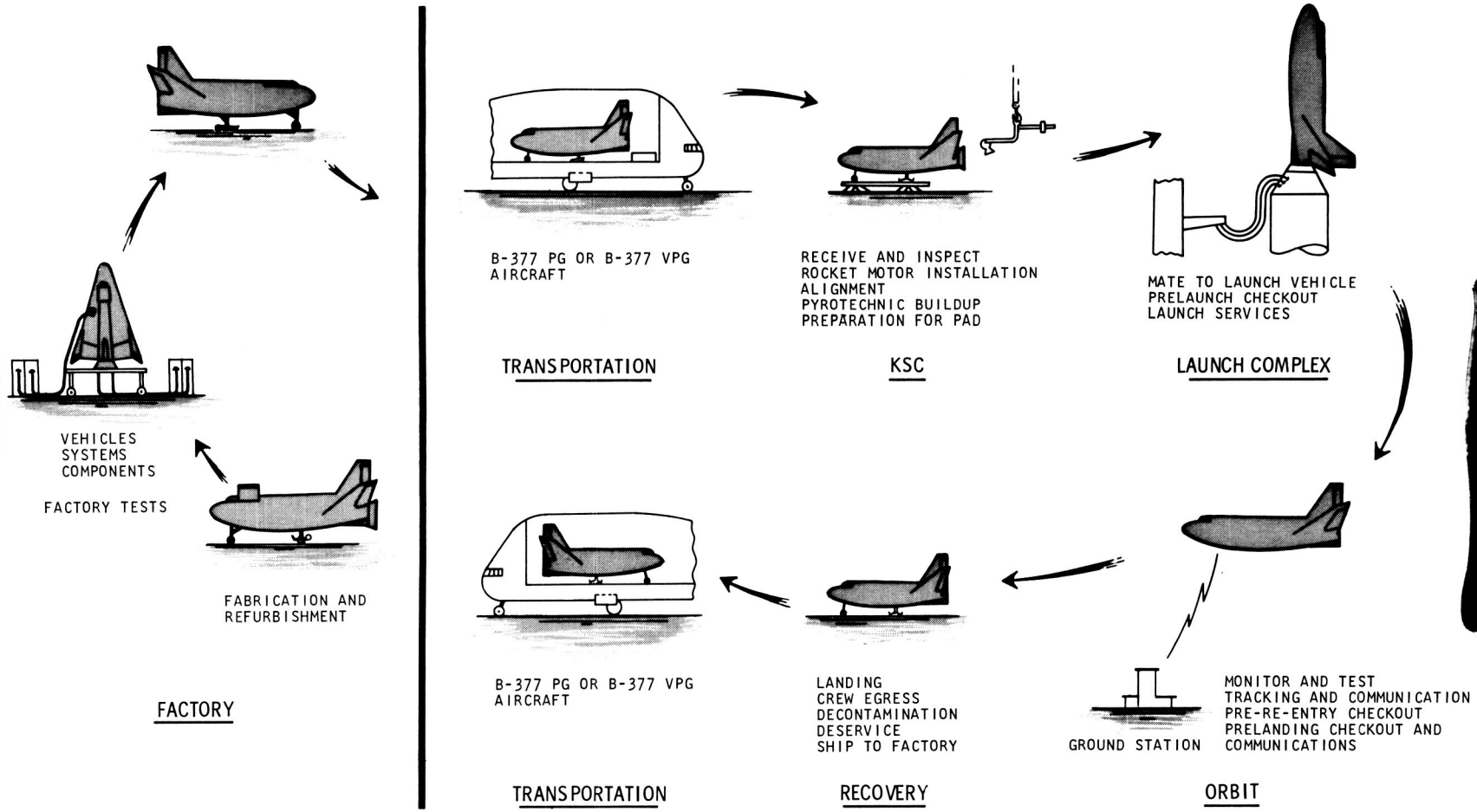

FIGURE 55. BASELINE OPERATIONAL SUPPORT

ER 14471-5

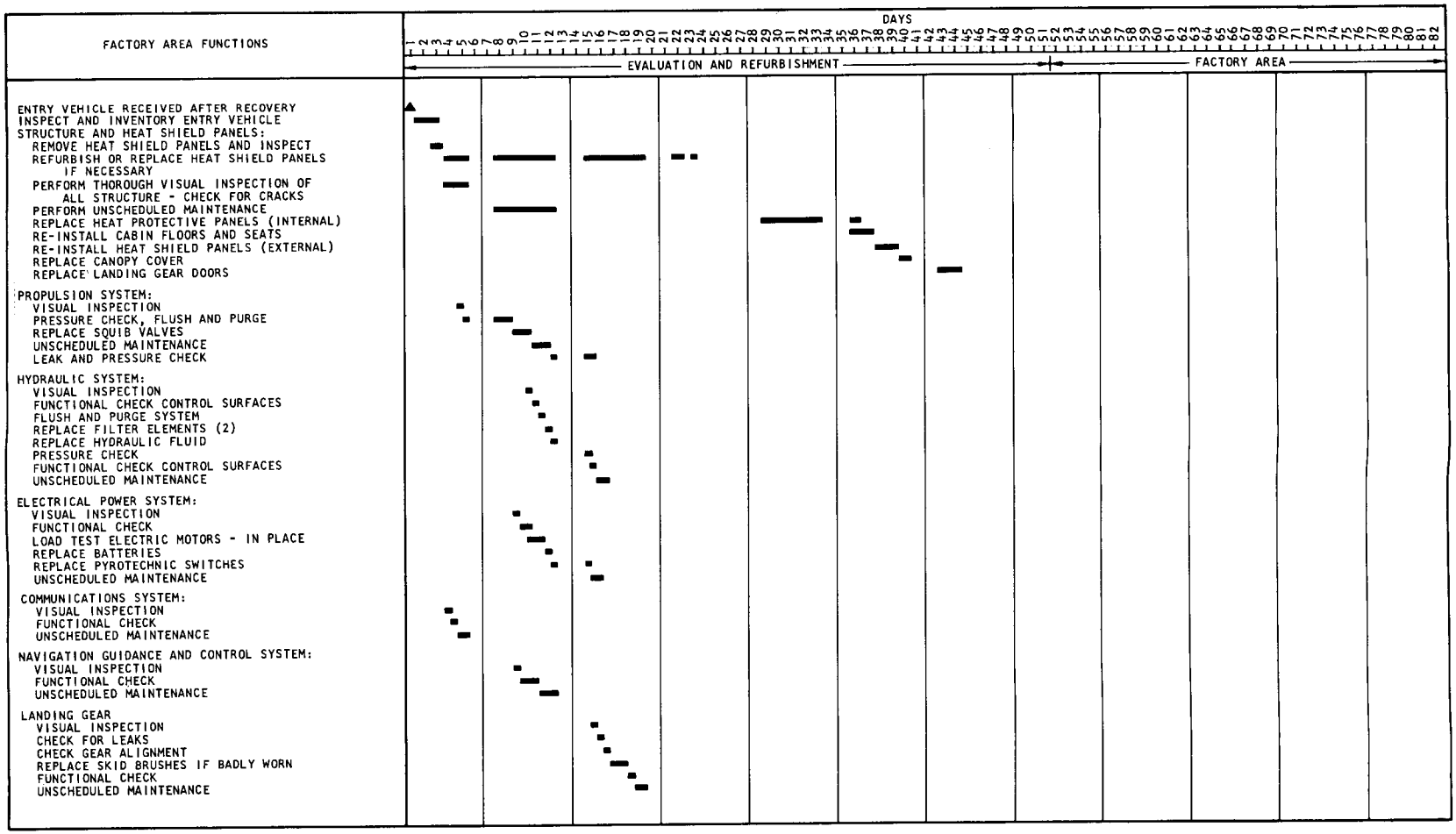

FIGURE 56. ENTRY VEHICLE REFURBISHMENT TURNAROUND CYCLE--FACTORY

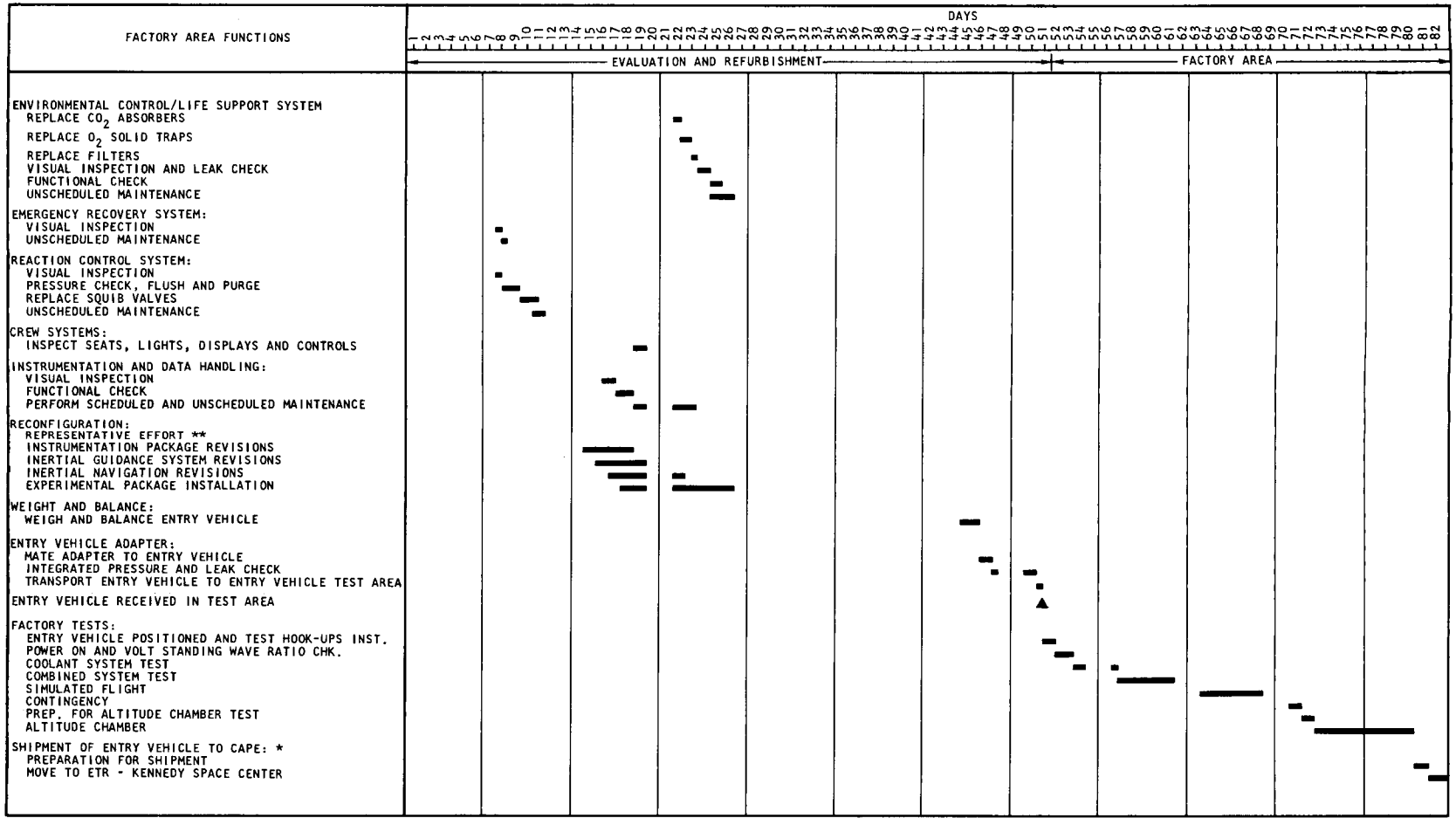

NOTES: 1. WORK DAY 2 SHIFTS

2. * NOT APPLICABLE TO UNMANNED VEHICLE NO. 2

3. ** DEPENDING ON RESEARCH TASKS TO BE PERFORMED

FIGURE 56. --CONCLUDED

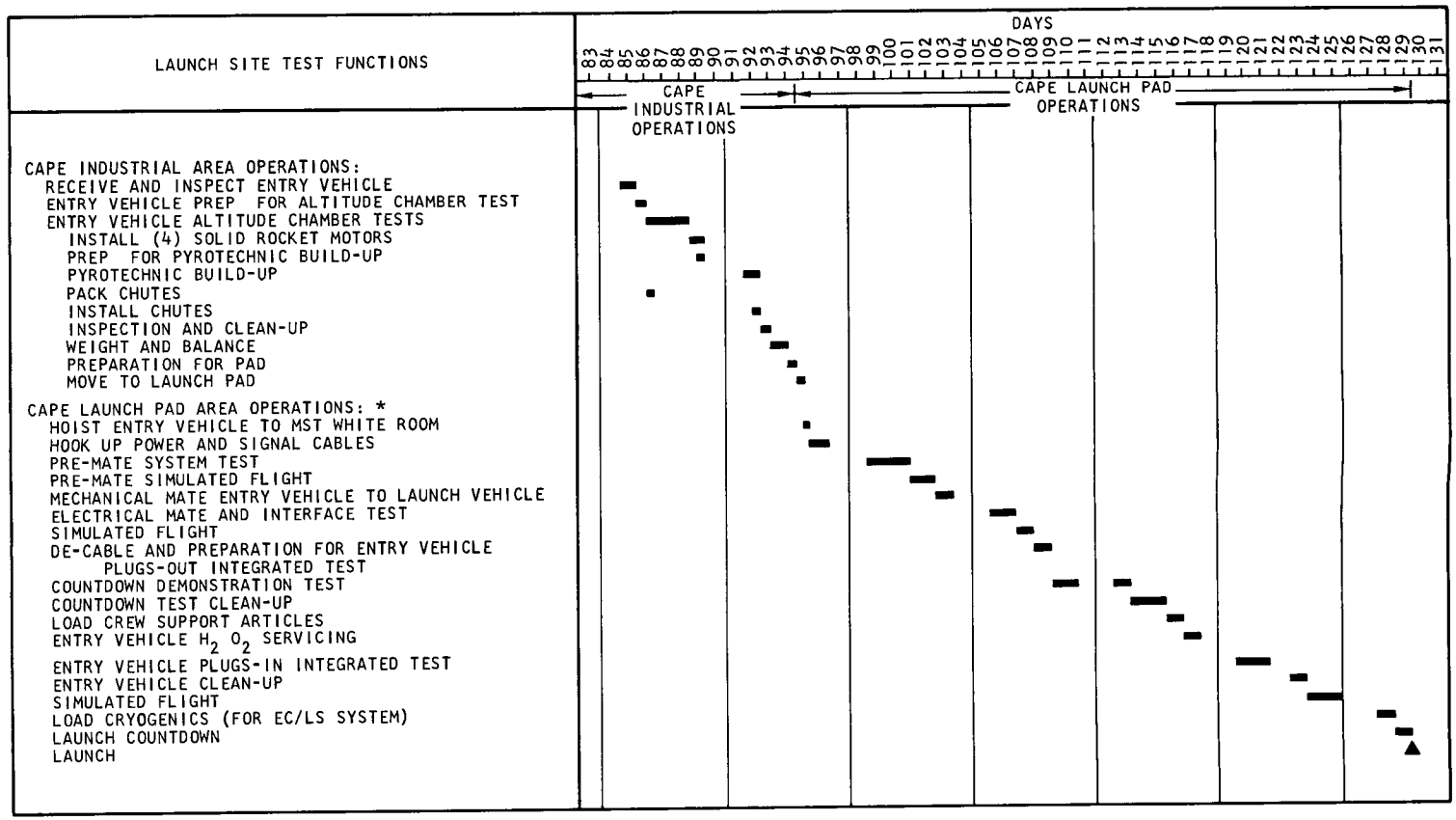

FIGURE 57. ENTRY VEHICLE REFURBISHMENT TURNAROUND CYCLE--LAUNCH SITE

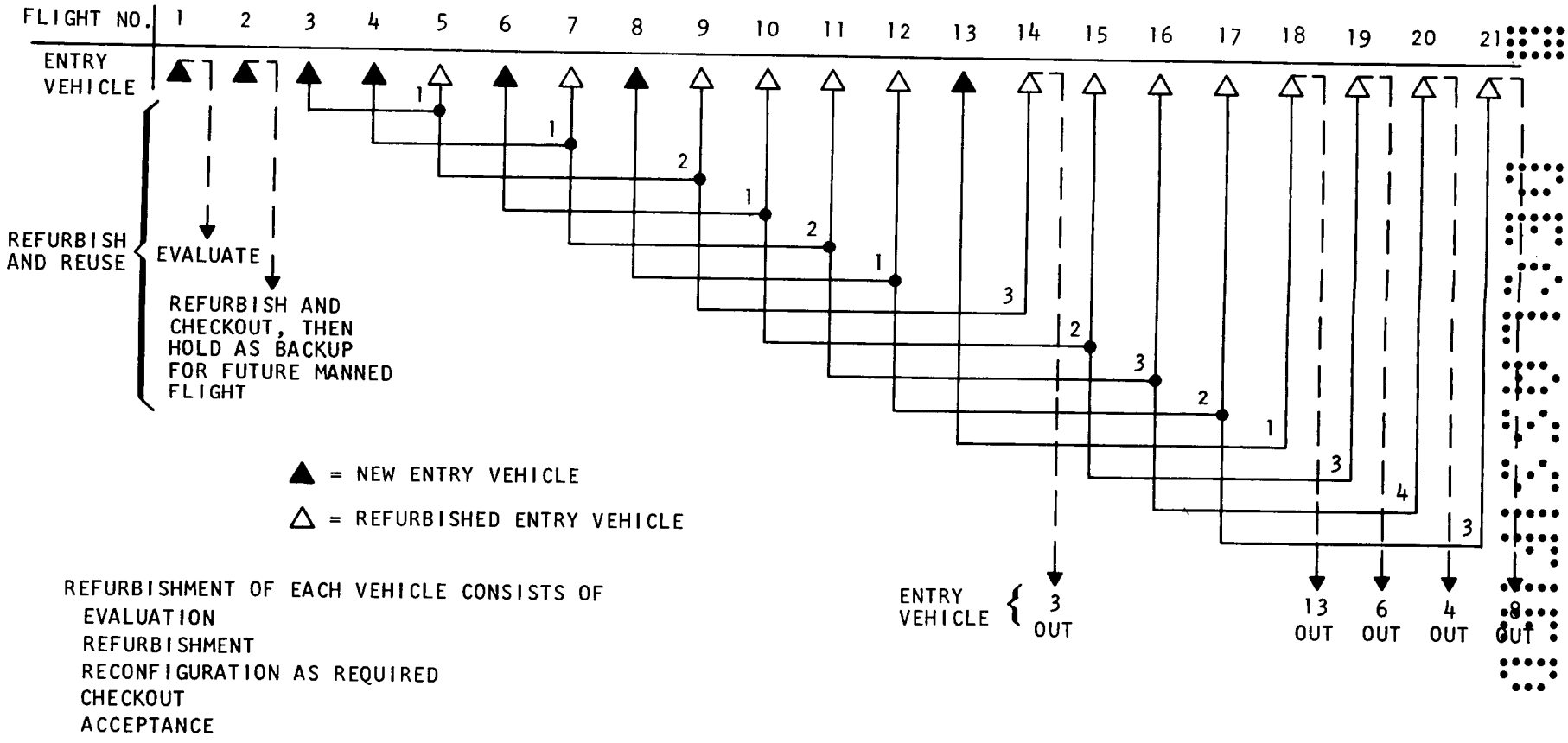

REFURBISHMENT OF EACH VEHICLE CONSISTS OF
- EVALUATION
- REFURBISHMENT
- RECONFIGURATION AS REQUIRED
- CHECKOUT
- ACCEPTANCE

FIGURE 58. ENTRY VEHICLE REFURBISHMENT--REUSAGE PLAN

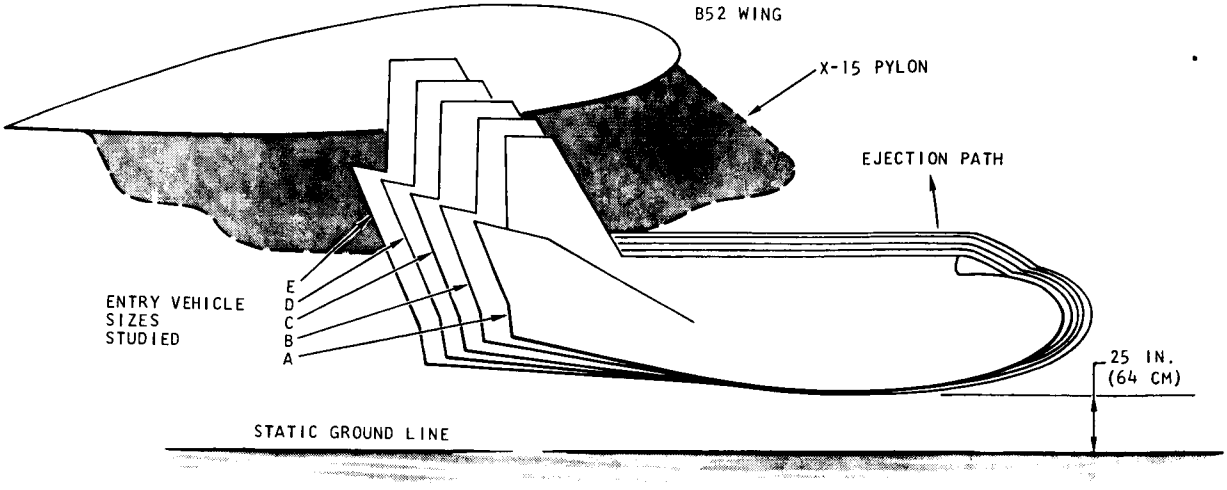

FIGURE 59. B-52 CARRIER WITH HL-10, X-15 PYLON

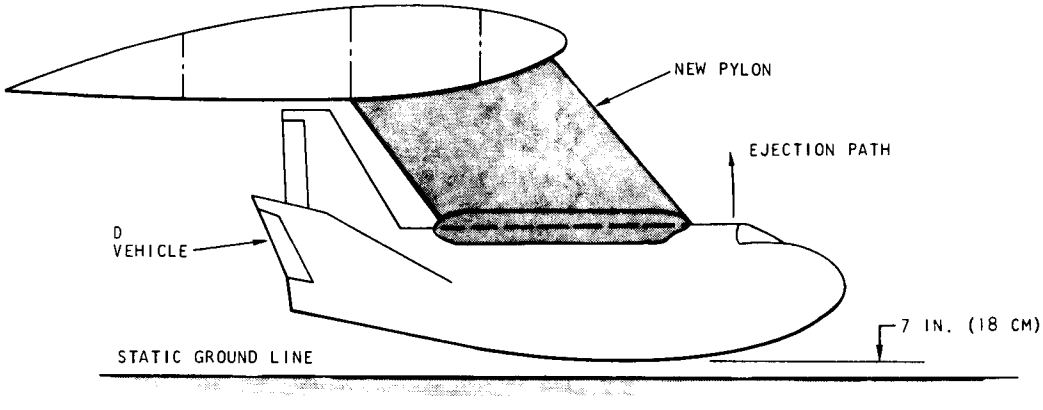

FIGURE 60. B-52 CARRIER WITH HL-10, NEW PYLON

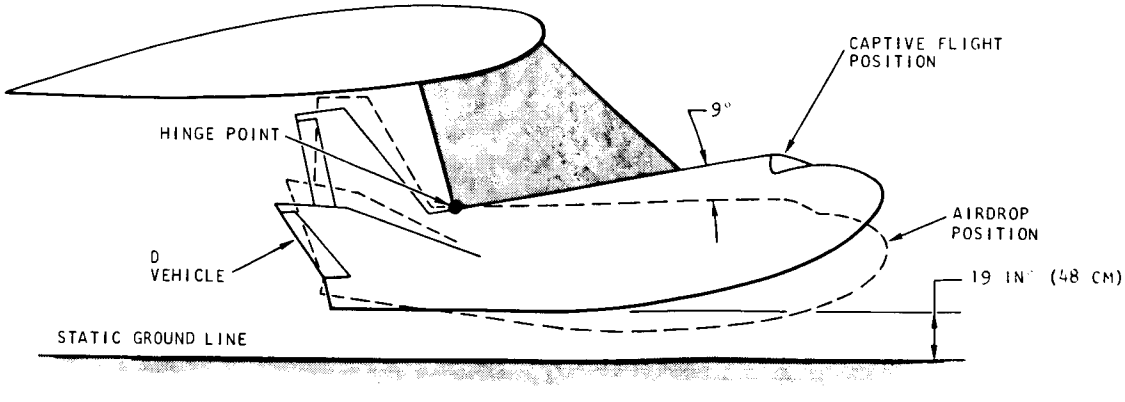

FIGURE 61. B-52 CARRIER WITH HL-10, RETRACTABLE PYLON

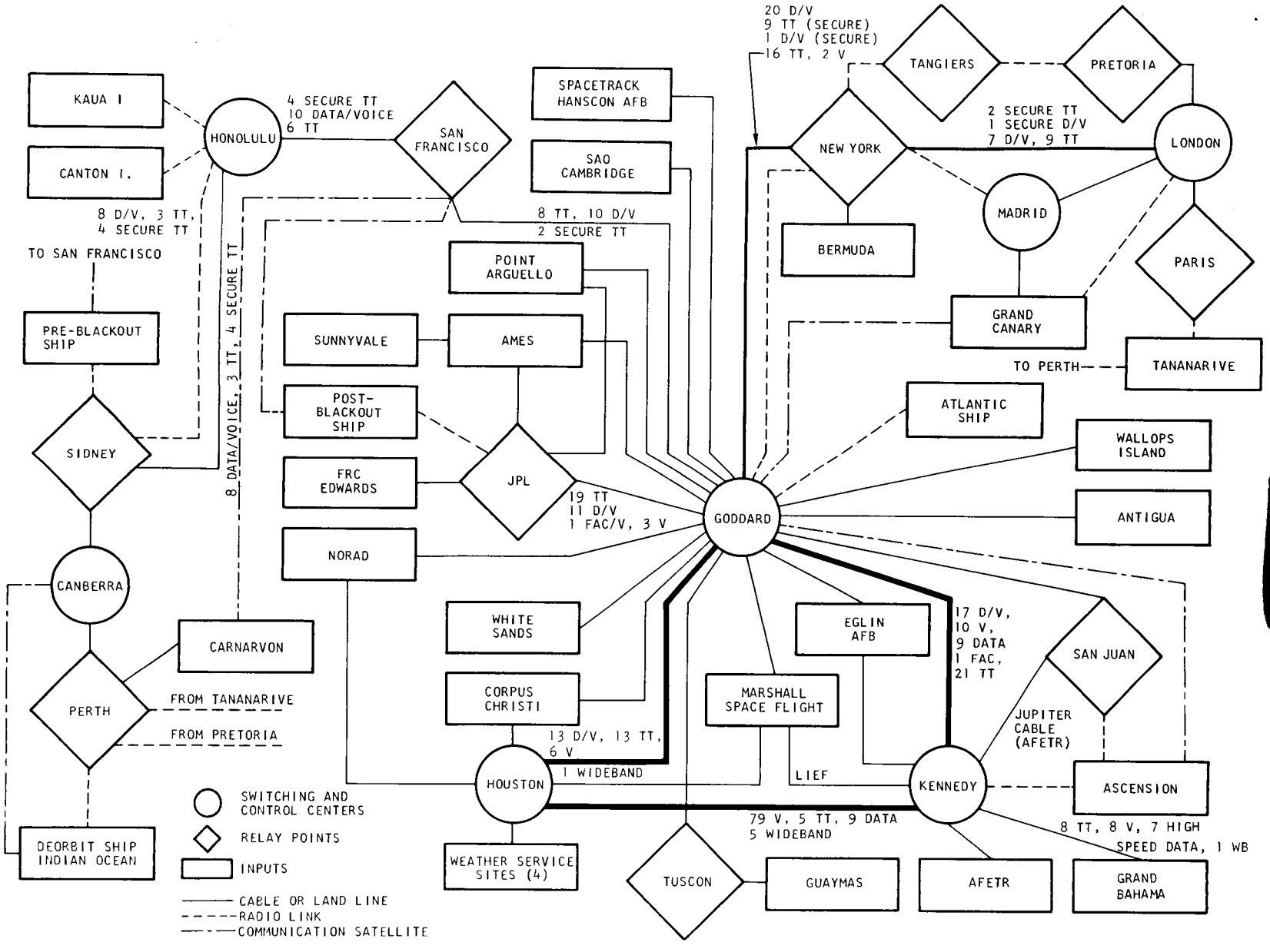

FIGURE 62. INTERSTATION COMMUNICATIONS NETWORK

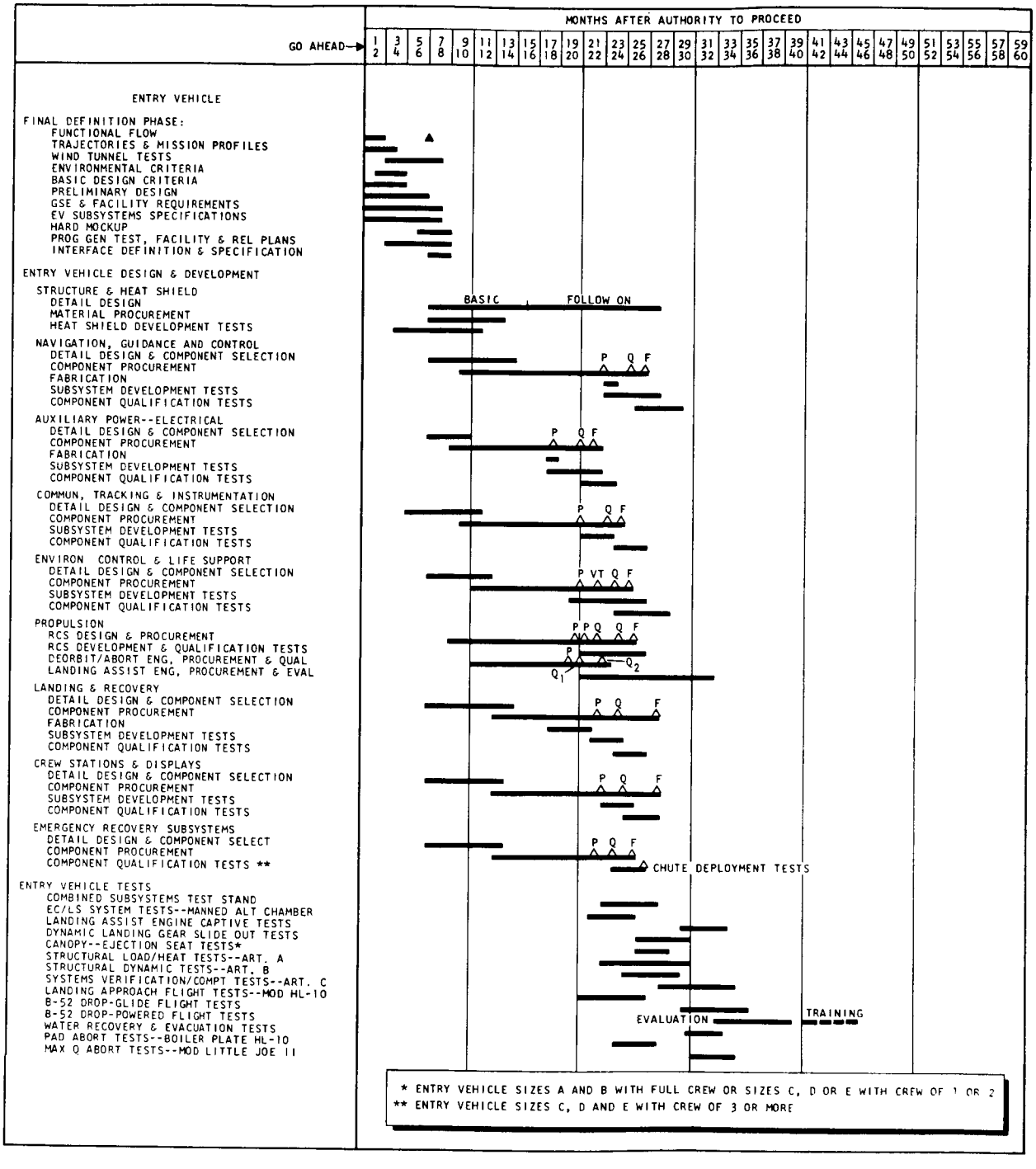

FIGURE 63. HL-10 PROGRAM PLAN, SYSTEMS AND ENTRY VEHICLE

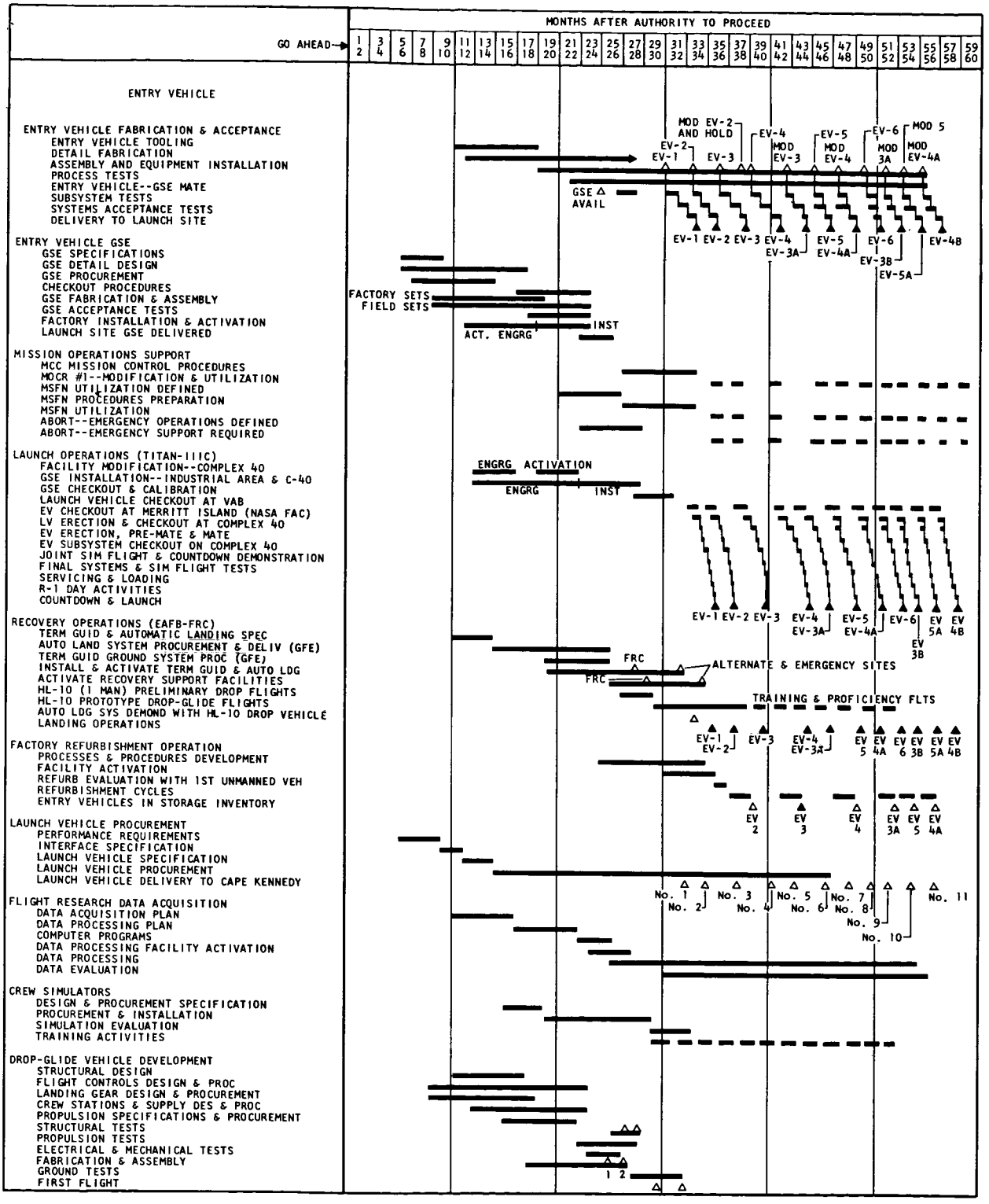

FIGURE 64. HL-10 PROGRAM PLAN, OPERATIONS AND GSE

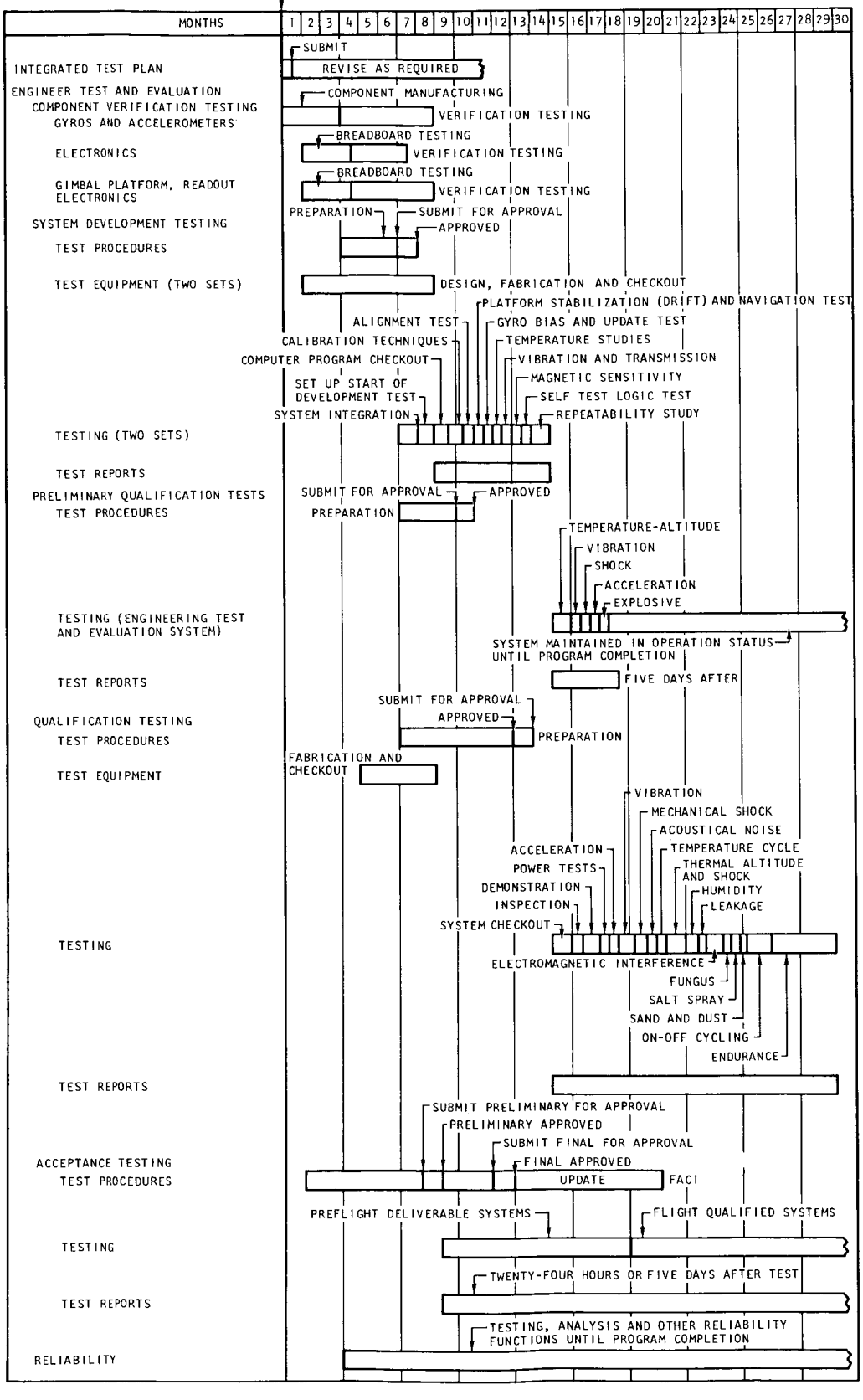

FIGURE 65. HL-10 PROGRAM PLAN, NAVIGATION AND GUIDANCE SUBSYSTEMS TESTS

DECLASSIFIED

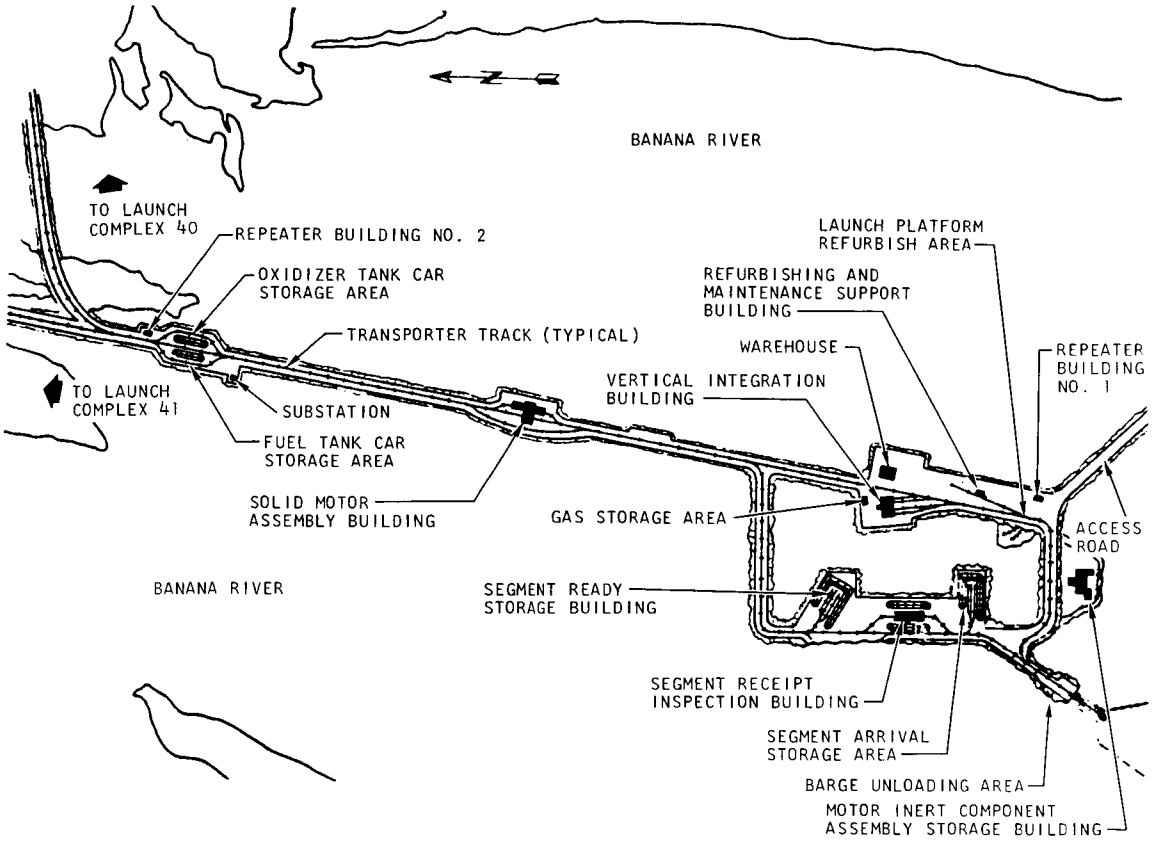

FIGURE 66. INTEGRATE--TRANSFER SECTOR OF TITAN III ITL AREA

DECLASSIFIED

ER 14471-5

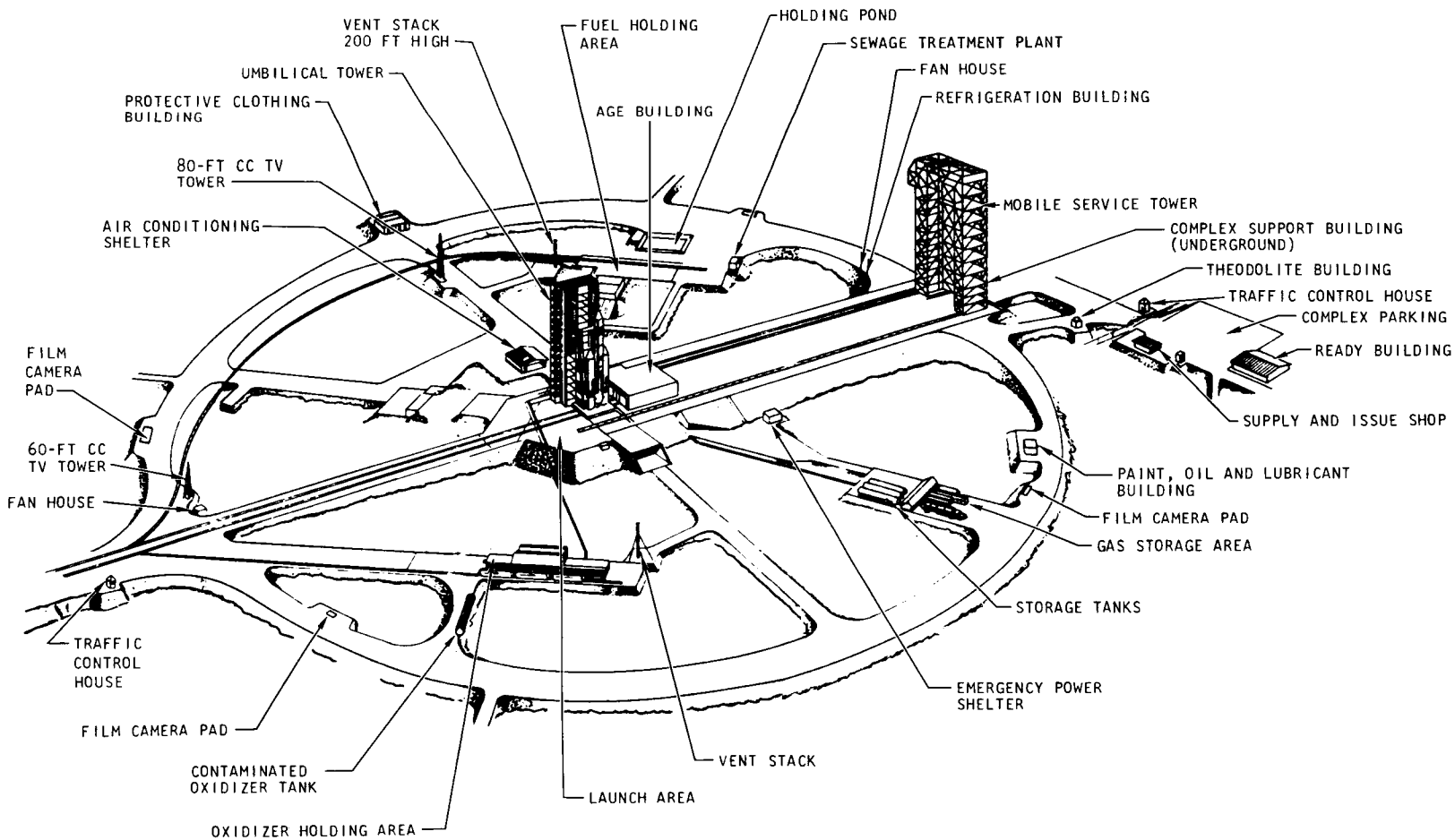

FIGURE 67. TITAN III LAUNCH SITE, COMPLEX 40

DECLASSIFIED

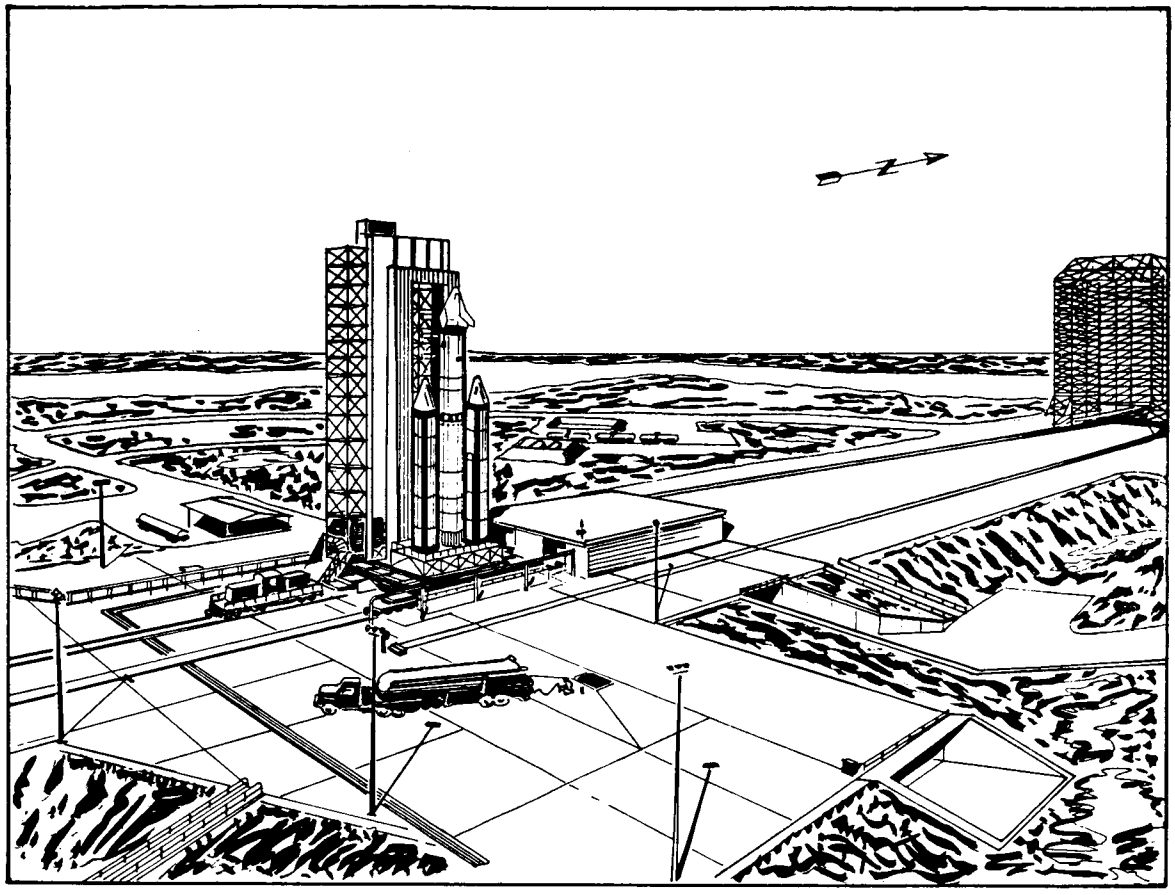

FIGURE 68. TITAN III AND ENTRY VEHICLE ON LAUNCH PAD; MST AT EXTREME RIGHT

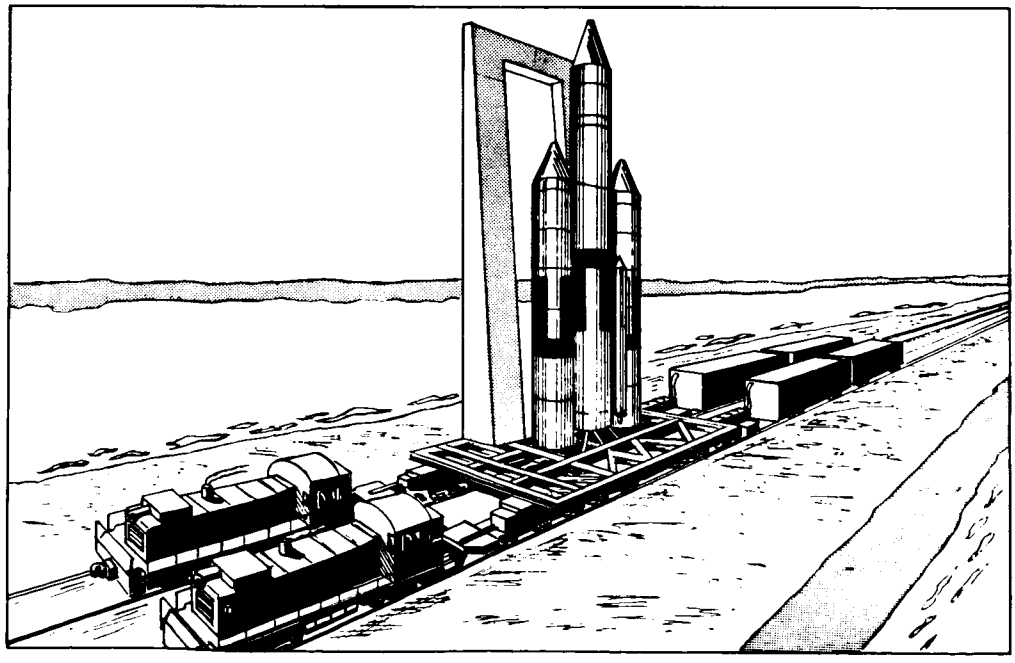

FIGURE 69. TRANSPORTER/THRUST MOUNT WITH TITAN IIIC ABOARD

DECLASSIFIED

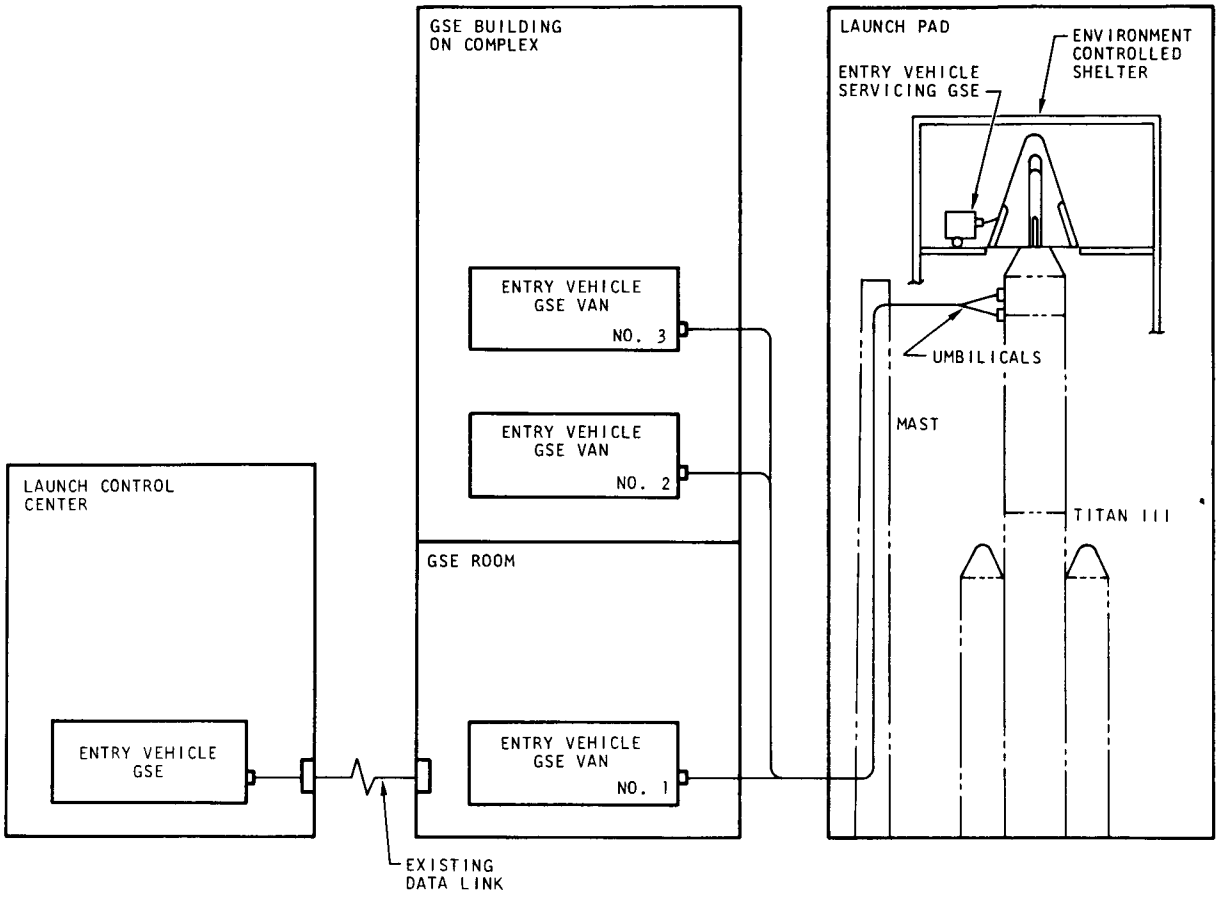

FIGURE 70. ENTRY VEHICLE GSE ARRANGEMENT TITAN III OPERATIONS

DECLASSIFIED

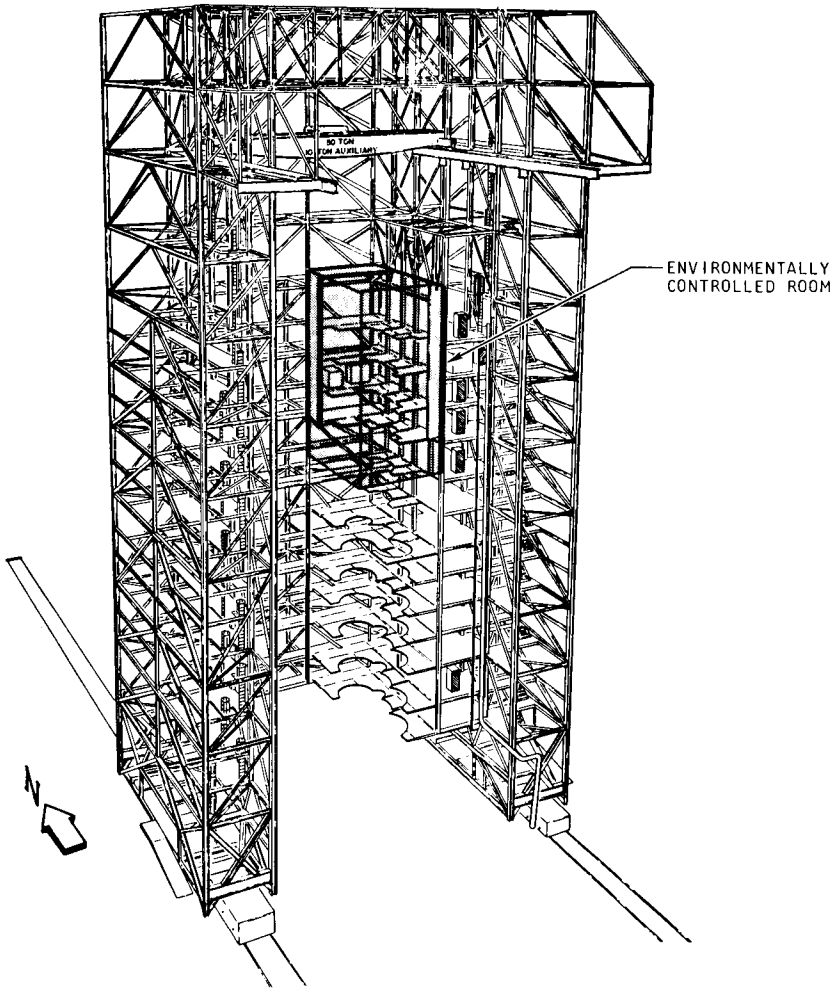

FIGURE 71. MOBILE SERVICE TOWER (MST) ON COMPLEX 40

DECLASSIFIED

ER 14470-5

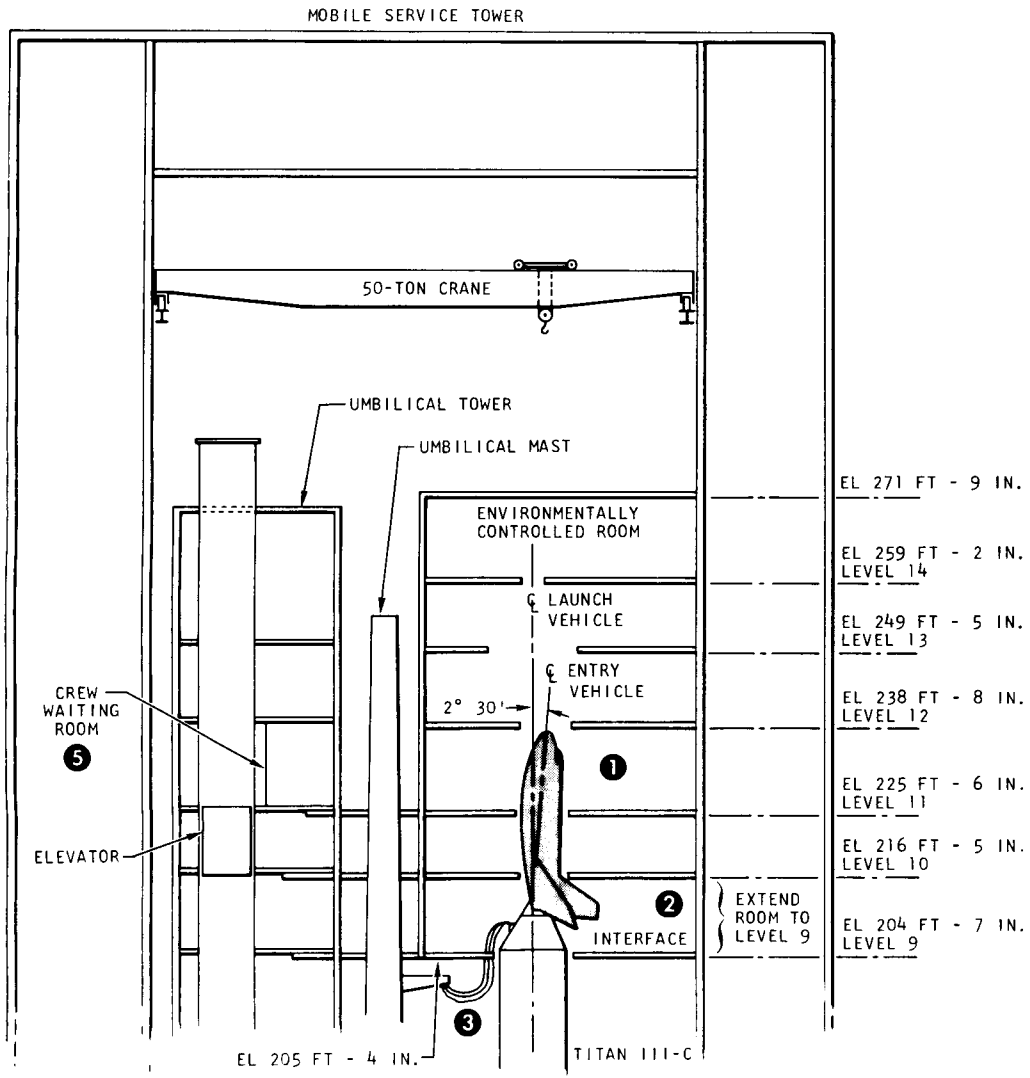

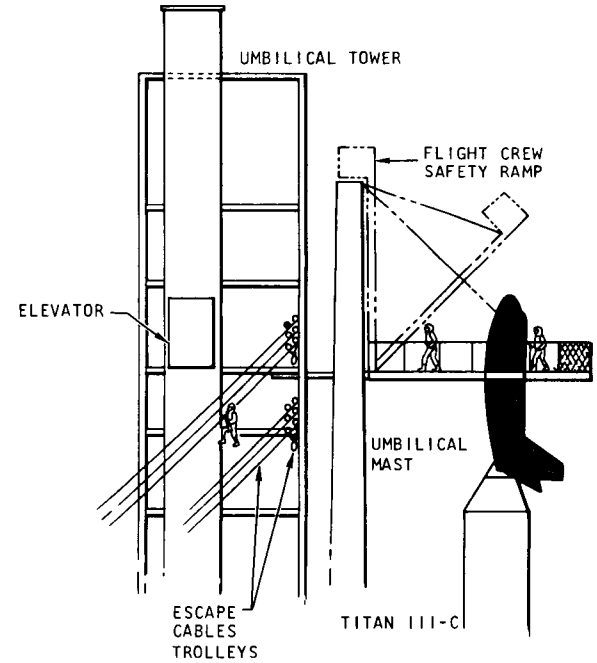

4 PRELAUNCH EVACUATION SYSTEM

1. MODIFY PLATFORMS AT LEVELS 10, 11 AND 12.
2. EXTEND ENVIRONMENTALLY CONTROLLED ROOM STRUCTURE AND CONDITIONING. SEAL GAPS AND REFURBISH.
3. ADD UMBILICAL MAST SERVICES.
4. ADD PAD EVACUATION SYSTEM.
5. ADD CREW WAITING CLEAN ROOM

FIGURE 72. LAUNCH PAD GENERAL ARRANGEMENT LAUNCH VEHICLE TITAN IIIC/COMPLEX 40

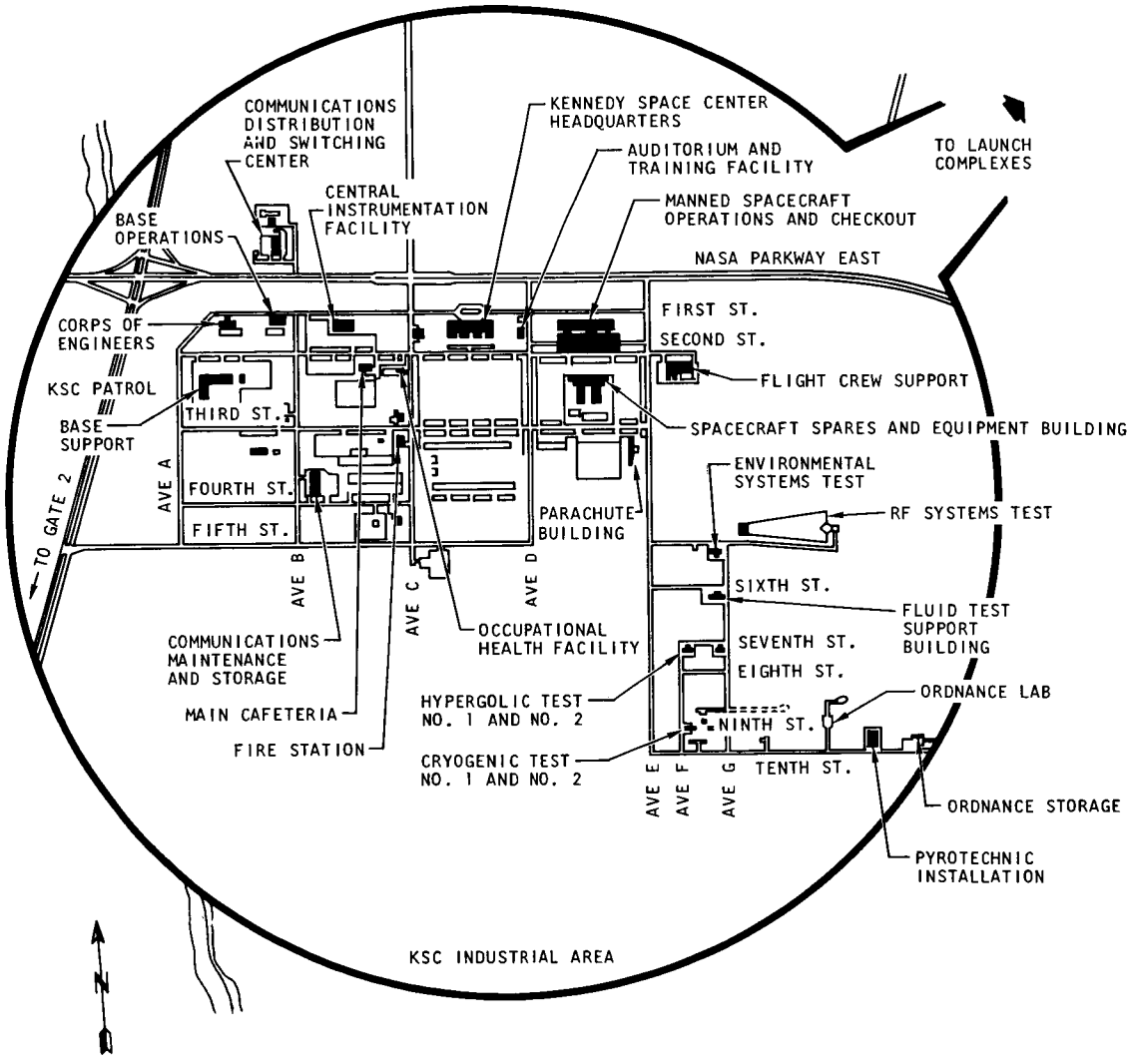

FIGURE 73. NASA FACILITIES AT KENNEDY SPACE CENTER

STATION	C-BAND TRACKING FPS-16 OR SIMILAR	UHF COMMAND	PCM TELEMETRY GRD STATION (S-BAND)	VHF VOICE COMMUNICATION	FLIGHT CONTROL DISPLAY CONSOLES	COMSAT TERMINALS
CAPE KENNEDY	●	●	●	●	●	
WALLOPS IS, VA	●	●	●	●	●	
BERMUDA	●	●	●	●		
GRAND BAHAMA IS	●	●	●	●		
ANTIGUA	●	●	●	●		
GRAND CANARY IS	●	●	●	●	●	●
ASCENSION IS	●			●		●
PRETORIA, AFRICA	●					
TANANARIVE, MADAGASCAR				●		
CARNARVON, AUSTRALIA	●	●	●	●	●	●
CANTON IS				●		
KAUAI IS, HAWAII	●	●	●	●	●	
POINT ARGUELLO, CALIF	●			●		
GUAYMAS, MEXICO			●	●	●	
WHITE SANDS, NEW MEXICO	●			●		
CORPUS CHRISTI, TEXAS		●	●	●	●	
EGLIN AFB, FLORIDA	●			●		
EDWARDS AFB, CALIF	●	●*	●	●		
DEORBIT SHIP (INDIAN OCEAN)	●	●	●			●
PRE-BLACKOUT SHIP (PACIFIC)	●	●	●			●
POST-BLACKOUT SHIP (PACIFIC)	●	●	●			●

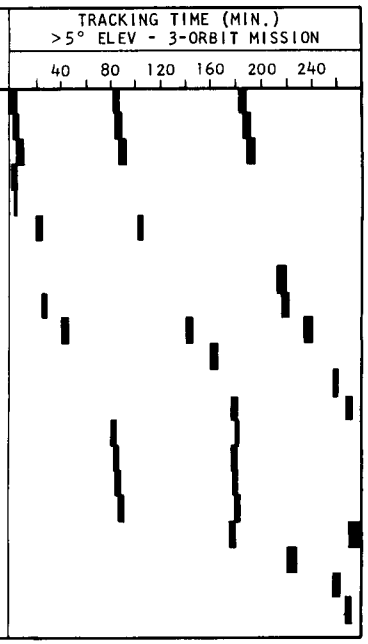

* NEW DIGITAL COMMAND BUFFER AND FRW-2 REQUIRED

FIGURE 74. TELECOMMUNICATIONS GROUND SUPPORT FACILITIES

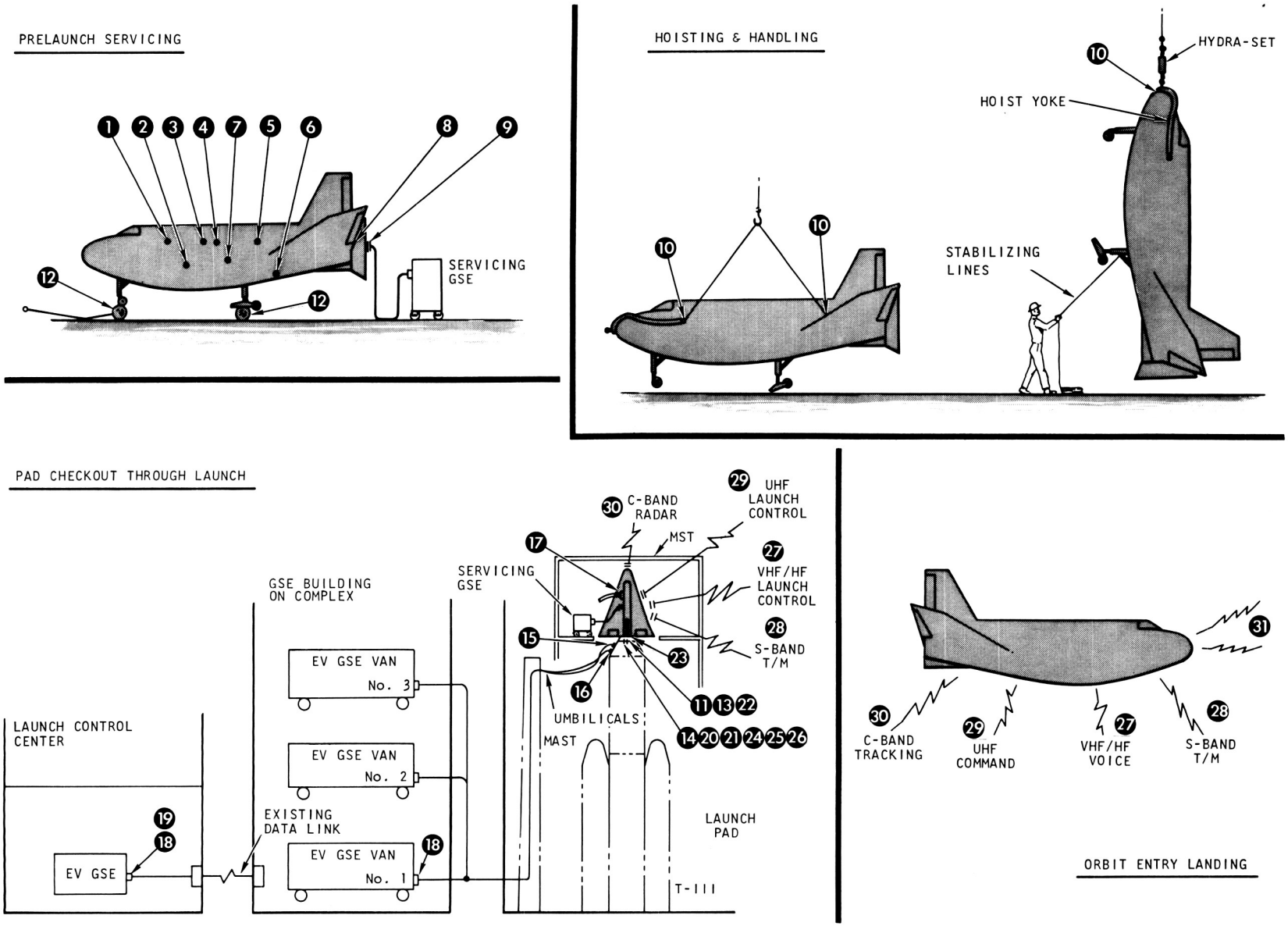

FIGURE 75. HL-10 INTERFACE REQUIREMENTS

INTERFACE DESCRIPTION

	INTERFACE	FUNCTION	OPERATION PHASE: INDUSTRIAL OPERATION	HANDLING	PAD CHECKOUT	COUNTDOWN & LAUNCH	ORBIT	ENTRY	LANDING	TYPE
1	OXYGEN SERVICING GSE TO EV HOOKUP	LOAD OXYGEN ON EV	X		X	X				MECH
2	OXYGEN DRAIN TANK GSE TO EV CONNECTION	DUMP OXYGEN FROM EV	X		X					MECH
3	NITROGEN SERVICING GSE TO EV CONNECTION	LOAD GASEOUS NITROGEN ON EV	X		X	X				MECH
4	NITROGEN DRAIN KIT GSE TO EV CONNECTION	DUMP GASEOUS NITROGEN FROM EV	X		X					MECH
5	PROPELLANT TRANSFER GSE TO EV HOOKUP	LOAD PROPELLANTS ON EV	X		X	X				MECH & ELEC
6	PROPELLANT DRAIN TANK GSE TO EV HOOKUP	DRAIN PROPELLANTS FROM EV	X		X					MECH
7	AUTOMATIC CHECKOUT GSE TO EV CONNECTION	SUPPLY STIMULUS SIGNALS TO EV FROM GSE	X		X	X				ELEC
8	MATE EV ADAPTER TO EV	TRANSMIT LAUNCH LOADS FROM EV TO EV ADAPTER	X							MECH
9	ELECTRICAL CHECKOUT GSE TO EV	LOAD AND CHECKOUT ROCKET MOTORS	X							ELEC
9	ELECTRICAL CHECKOUT GSE TO EV	PYROTECHNIC BUILDUP ON EV	X							ELEC
10	HOIST SLING CONNECTION TO EV	INSTALL EV IN WEIGHT & BALANCE UNIT	X	X						MECH
		HOIST EV FROM GROUND TO TRANSPORTER		X						MECH
10	HOIST SLING CONNECTION TO EV	HOIST EV FROM TRANSPORTER TO LV		X						MECH
11	MATE EV ADAPTER TO LV ADAPTER	TRANSMIT LAUNCH LOADS FROM EV TO LV ADAPTER		X	X					MECH
12	TRANSPORTER DOLLIES TO LANDING GEAR ATTC	TRANSPORT LOADS: EV VIA ROAD AND AIR CARRIER		X						MECH
13	AUTO ALIGNMENT FEATURE AT EV TO LV ADAPTER	ALIGN EV WITH LV			X					MECH
14	ELEC MATE AT EV TO LV ADAPTER	TRANSMIT LV SIGNALS TO EV			X	X				ELEC
15	ELEC POWER UMBILICAL CONNECTION TO EV	TRANSMIT 28 VDC GROUND POWER TO EV			X	X				MECH & ELEC
16	ELEC SIGNAL UMBILICAL CONNECTION TO EV	TRANSMIT SIGNALS FROM EV TO GSE			X	X				MECH & ELEC
17	A/C DUCTING CONNECTION TO EV	SUPPLY CONDITIONED AIR TO EV			X	X				MECH
18	LAUNCH CONTROL GSE TO EV HOOKUPS	EV SUBSYSTEM PRELAUNCH PERFORMANCE TO LIFTOFF			X	X				ELEC
19	GUIDANCE AND CONTROL GSE TO EV HOOKUP	GUIDANCE PROGRAM UPDATE BIASING				X				ELEC
20 *	LV MALFUNCTION DETECTION LINK TO EV SIGNAL SYSTEM	MALFUNCTION DETECT ABORT SIGNAL--LV TO EV				X				ELEC
21 *	LV MALFUNCTION DETECTION LINK TO EV SIGNAL MONITOR	MALFUNCTION DETECT SYSTEM MONITOR: LV FUNCTIONS IN EV				X				ELEC
22	EV ADAPTER TO LV ADAPTER MATING CUTTER	SEPARATE EV & EV ADAPTER FROM LV ADAPTER				X				MECH & ELEC
23	EV ADAPTER TO EV MATING PYRO BOLTS	SEPARATE EV ADAPTER FROM EV					X			MECH & ELEC
24	LV STAGING LINK TO EV SIGNAL & GUID CONTROL	LAUNCH VEHICLE STAGING SIGNALS TO EV				X				ELEC
25	EV GUIDANCE CONTROL COMMAND LINK TO LV	PITCH, YAW, ROLL STEERING COMMANDS TO LV				X				
25	EV GUIDANCE CONTROL COMMAND LINK TO LV	ENGINE SHUTDOWN COMMANDS TO LV				X				
26	LV CONTROL COMMAND LINK TO EV GUID. CONTROL	LV VELOCITY-TO-GO COMMANDS FOR EV MONITOR				X				
27	VHF/HF VOICE COMMUNICATION LINK	EV AND CREW STATUS				X	X	X	X	
		UPDATE DATA FOR NAVIGATION-EMERGENCY ONLY					X	X	X	
		LANDING COMMUNICATION						X	X	
		COMMUNICATION WITH ALTERNATE LANDING SITES						X	X	
27	VHF/HF VOICE COMMUNICATION LINK	LINK TO GROUND WITH COMMUNICATIONS SATELLITE					X			
28	EV TO GRD TELEMETRY LINK: S-BAND	EV SUBSYSTEM AND CREW STATUS				X	X	X	X	
		EV ATTITUDE DATA FOR TRAJECTORY RECONSTRUCTION						X		
		RESEARCH TASK DATA					X	X	X	
28	EV TO GRD TELEMETRY LINK: S-BAND	COMMAND VERIFICATION					X	X	X	
29	UHF COMMAND LINK WITH EV	TERMINAL GUIDANCE STEERING: ANGLE OF ATTACK							X	
		SPECIAL COMMANDS FOR GN-6							X	
		BANK ANGLE							X	
		TERMINAL GUIDANCE STEERING: DRAG BRAKE							X	
		NAVIGATION UPDATE DATA: TIME					X	X		
		POSITION					X	X		
		ATTITUDE					X	X		
		NAVIGATION UPDATE DATA: VELOCITY					X	X		
29	UHF COMMAND LINK WITH EV	DEORBIT INITIATION: TIME						X		
30	C-BAND TRACKING LINK WITH EV	TRACKING OF EV: RANGE RATE					X	X	X	
		AZIMUTH					X	X	X	
		TRACKING OF EV: ELEVATION					X	X	X	
30	C-BAND TRACKING LINK WITH EV	SKIN TRACING OF EV					X	X	X	
31	RESCUE BEACON LINK FROM EV TO SEARCH VEHICLES	AIRCRAFT TRACING OF EV							X	
		SEA AND LAND SEARCH							X	ELEC
10	HOIST SLING CONNECTION TO EV	HOIST EV FROM SEA TO HELICOPTER								
32	ALIGN EV WITH SHIPBOARD LOADING MAT	TRANSFER EV FROM HELICOPTER TO NAVY SHIP								
33	MATE COCKPIT EGRESS PAD AND ENTRY LADDER TO EV	CREW EGRESS FROM HOT ENTRY VEHICLE								

* 20 and 21 COMPRISE 20 SIGNALS BASED ON FRAMEWORK ESTABLISHED BY T-111M/GEMINI-B.

FIGURE 75. --CONCLUDED

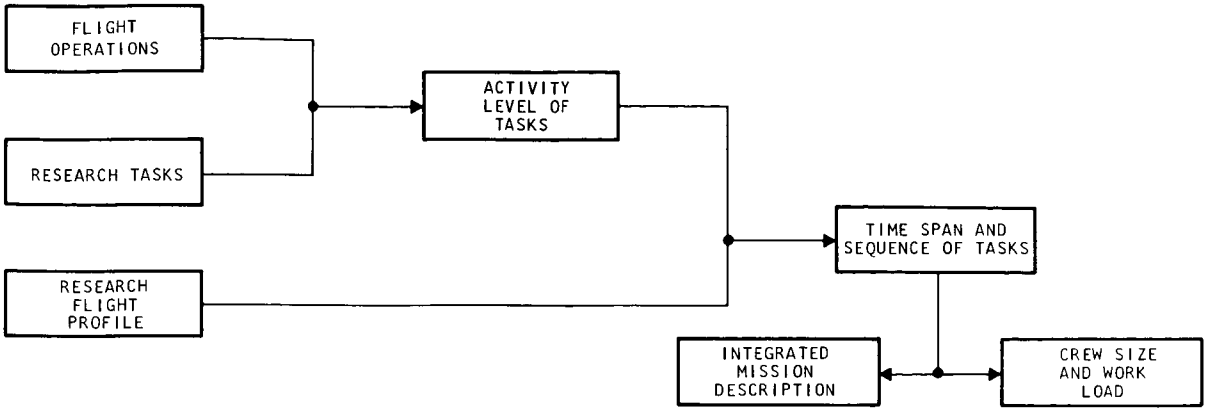

FIGURE 76. APPROACH TO CREW TASK LOADING

CREW ACTIVITY	PERCENT CREW CAPACITY
ENTRY VEHICLE STATUS TO MCC VIA ENTRY TRACKING SHIP	.2
RECEIVE MCC TRAJECTORY CONFIRMATION	.2
READ COMMANDED DISPLAYS (CONSTANT ATTITUDE)	.3
CONTROL ATTITUDE TO MATCH COMMANDS	.3
SWITCH BACKUP GUIDANCE SYSTEM TO DISPLAY	
COMPARE PRIMARY AND BACKUP GUIDANCE	.2
DECIDE TO CONTINUE WITH PRIMARY GUIDANCE	.3
MONITOR HYDRAULIC PUMP ON LIGHT	.1
MONITOR HYDRAULIC PRESSURE AND FCS	.1
SENSE ACCELERATION AND MONITOR RCS	.1
MANUAL HYDRAULIC SWITCH ON IF AUTOMATIC FAILS	
MONITOR COMMUNICATIONS VHF SIGNAL	.2
VERIFY COMMUNICATIONS DROPOUT	.3
VERIFY TAPE RECORDER ON AND RECORDING	.2

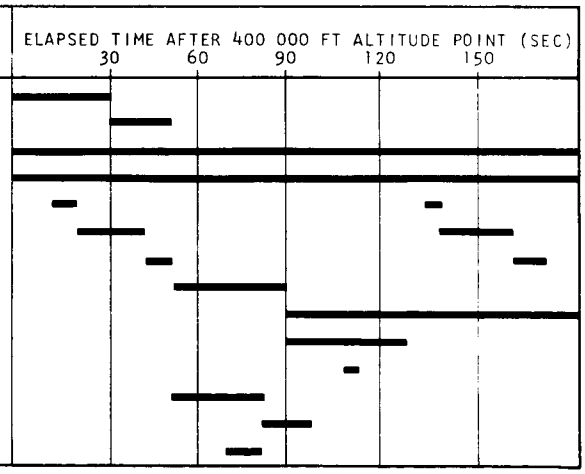

$$\text{AVERAGE CREW UTILIZATION} = \frac{.2 \times 30 + .2 \times 20 + .3 \times 150 + .3 \times 150 + .2 \times 40 + .3 \times 20 + .1 \times 40 + .1 \times 90 + .1 \times 40 + .2 \times 30 + .3 \times 20 + .2 \times 10}{180}$$

$$= .805$$

FIGURE 77. CREW TASK UTILIZATION

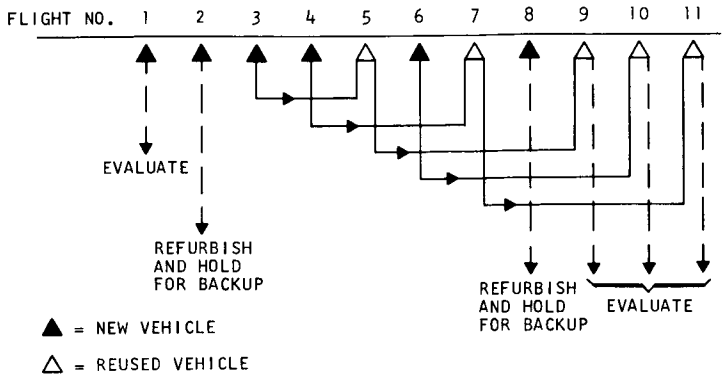

FIGURE 78. RECYCLE PLAN--11 FLIGHT PROGRAM

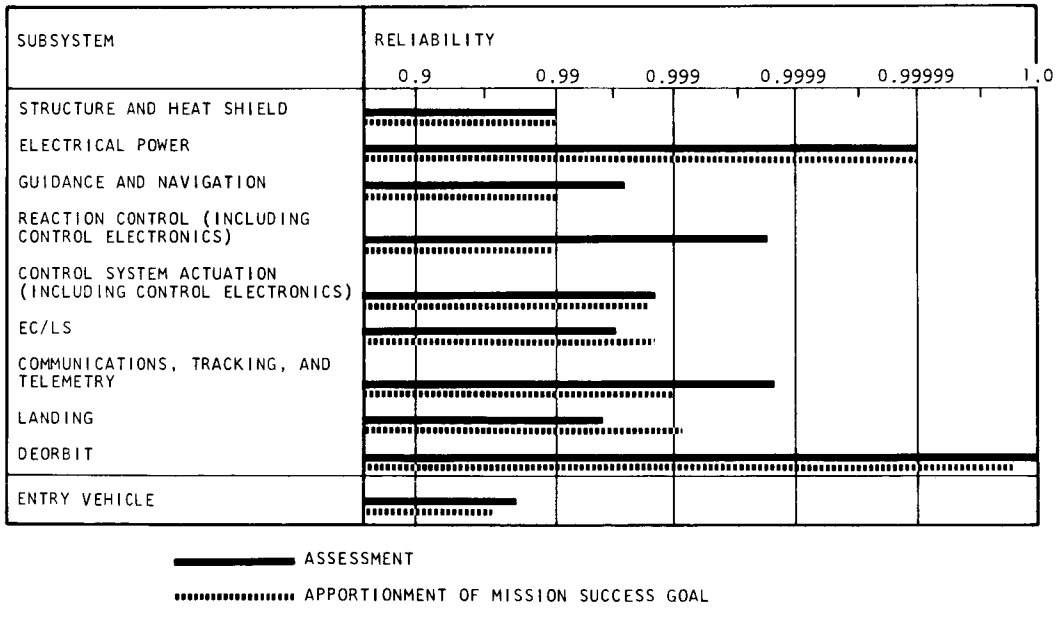

FIGURE 79. ENTRY VEHICLE MISSION SUCCESS ASSESSMENT

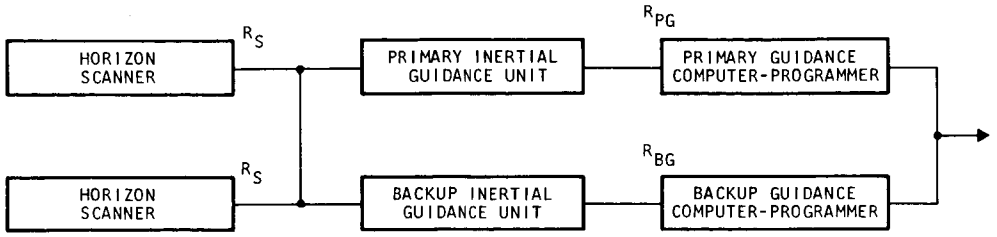

$$R_{NG} = \left[1 - (1 - R_S)^2\right]\left[1 - (1 - R_{PG})(1 - R_{BG})\right]$$

FIGURE 80. NAVIGATION AND GUIDANCE SYSTEM, RELIABILITY BLOCK DIAGRAM

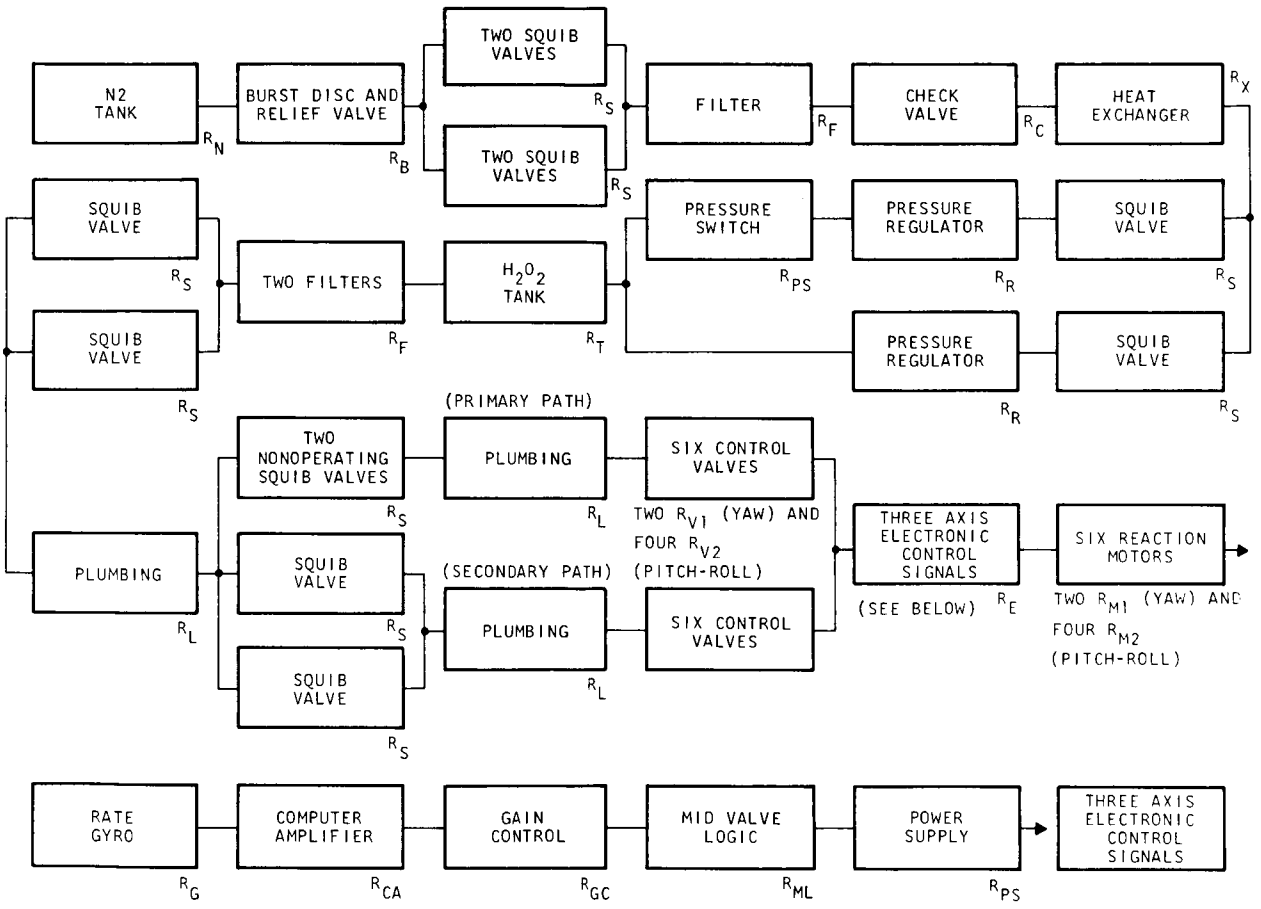

$$R_E = R_G\, R_{CA}\, R_{GC}\, R_{ML}\, R_{PS}$$

$$R_{PS} = R_N\, R_B \left[1 - \left(1 - R_S^2\right)^2\right] R_F\, R_C\, R_X \left[1 - \left(1 - R_S\, R_R\, R_{PS}\right)\left(1 - R_S\, R_{SV}\right)\right] R_T\, R_F^2 \left[1 - \left(1 - R_S\right)^2\right] R_L$$

$$R_{MS} = R_E^3\, R_{V1}^2\, R_{V2}^4 \left[1 + R_E\left(1 - R_E\, R_{V1}^2\right)\right] \left[1 + R_E\left(1 - R_E R_{V2}^2\right)\right]^2 R_{M1}^2\, R_{M2}^4$$

$$R_{RC} = R_{PS}\, R_{MS}$$

FIGURE 81. REACTION CONTROL SUBSYSTEM, RELIABILITY BLOCK DIAGRAM AND EQUATIONS

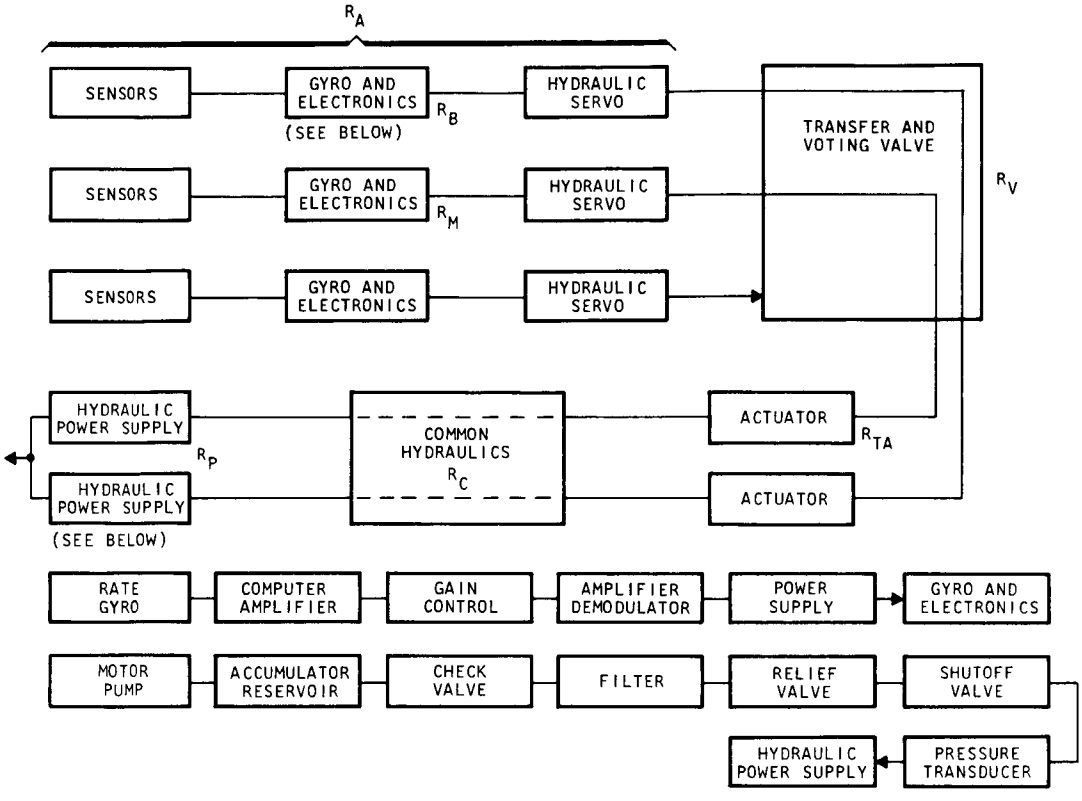

$R_1 = (R_A\ R_{TA})^3 R_P$; $R_2 = (R_B\ R_M\ R_{TA})^3 R_P$ $\qquad R_{CA} = \left(R_1\ R_2 + R_1\ (1 - R_2) + R_2\ (1 - R_1)\right) R_V\ {}^3R_C{}^3$

FIGURE 82. CONTROL ACTUATION SUBSYSTEM (INCLUDING FLIGHT CONTROL ELECTRONICS), RELIABILITY BLOCK DIAGRAM

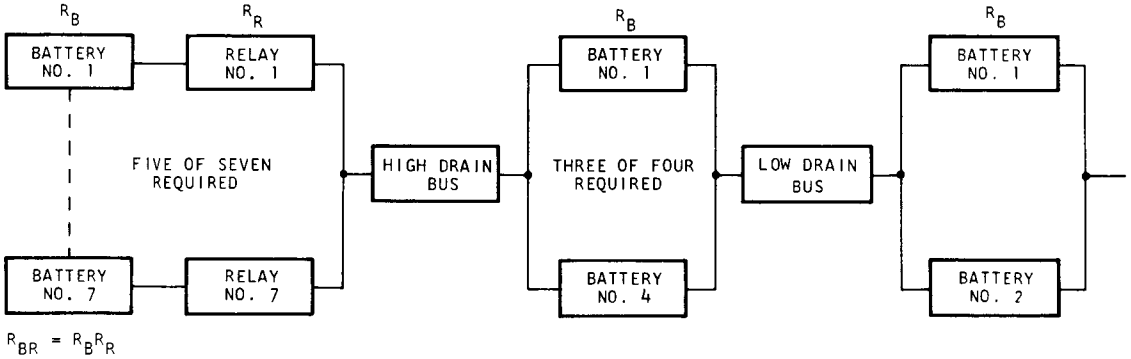

$R_{BR} = R_B R_R$

$R_E = R_{BR}^5 \left[R_{BR}^2 + 7R_{BR}\ (1 - R_{BR}) + 21(1 - R_{BR})^2\right] R_B^3 (4 - 3R_B) \left[1 - (1 - R_B)^2\right]$

FIGURE 83. ELECTRICAL SUBSYSTEM, RELIABILITY BLOCK DIAGRAM

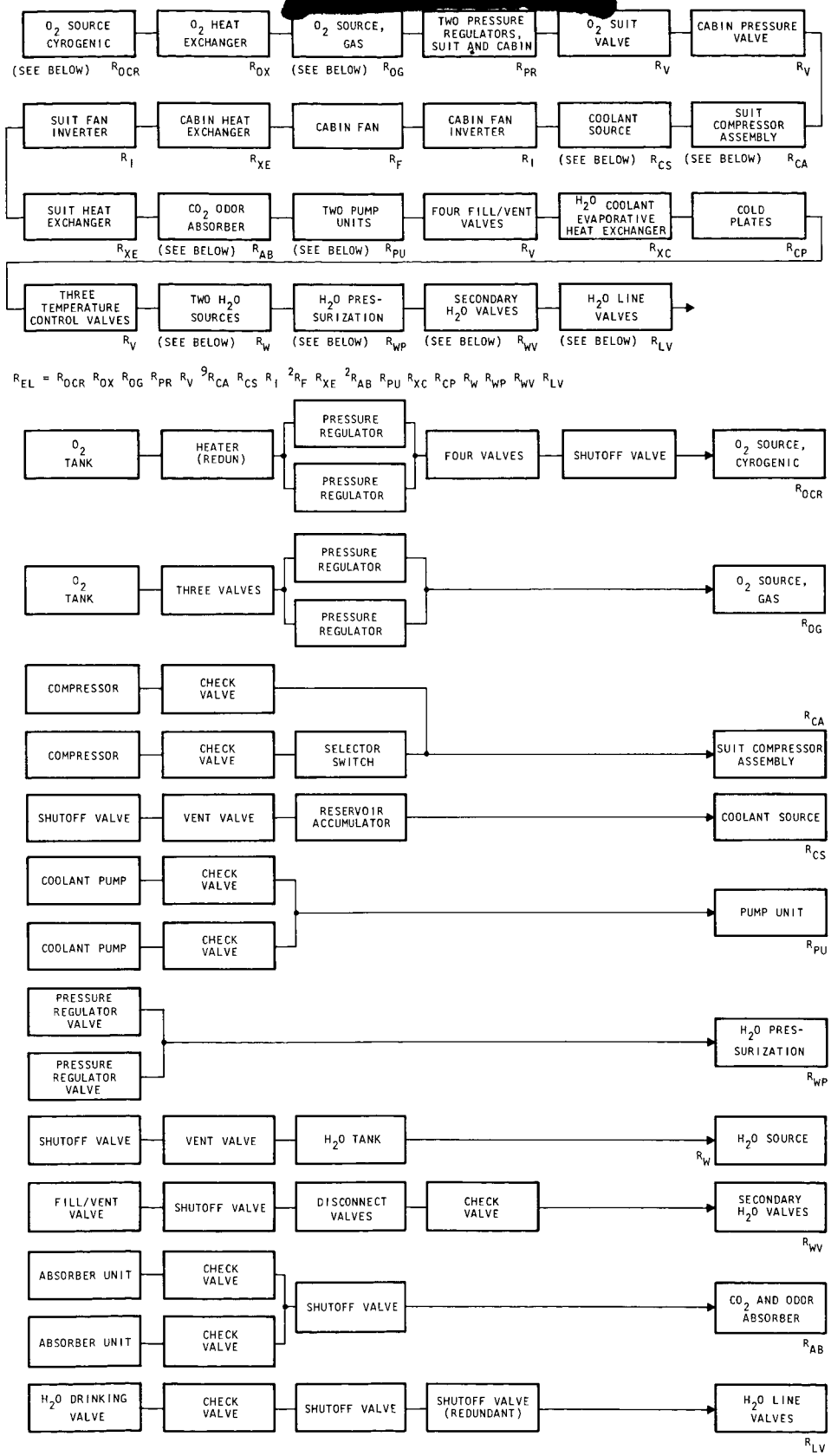

FIGURE 84. ENVIRONMENTAL CONTROL/LIFE SUPPORT SUBSYSTEM, RELIABILITY BLOCK DIAGRAM

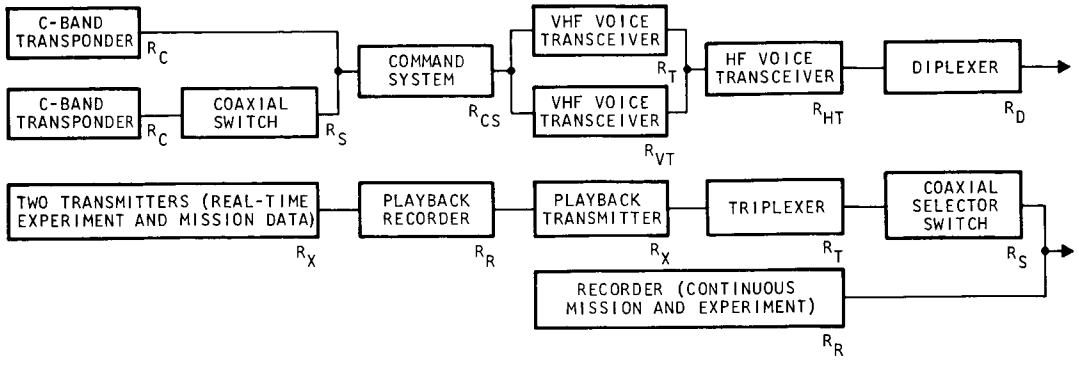

$$R_{CT} = \left[1 - (1 - R_C)\ (1 - R_C\ R_S)\right]\ \left[1 - (1 - R_{VT})^2\right]\ R_D\ \left[1 - (1 - R_X^3\ R_R\ R_T\ R_S)(1 - R_R)\right]$$

FIGURE 85. COMMUNICATIONS, TRACKING AND TELEMETRY, RELIABILITY BLOCK DIAGRAM

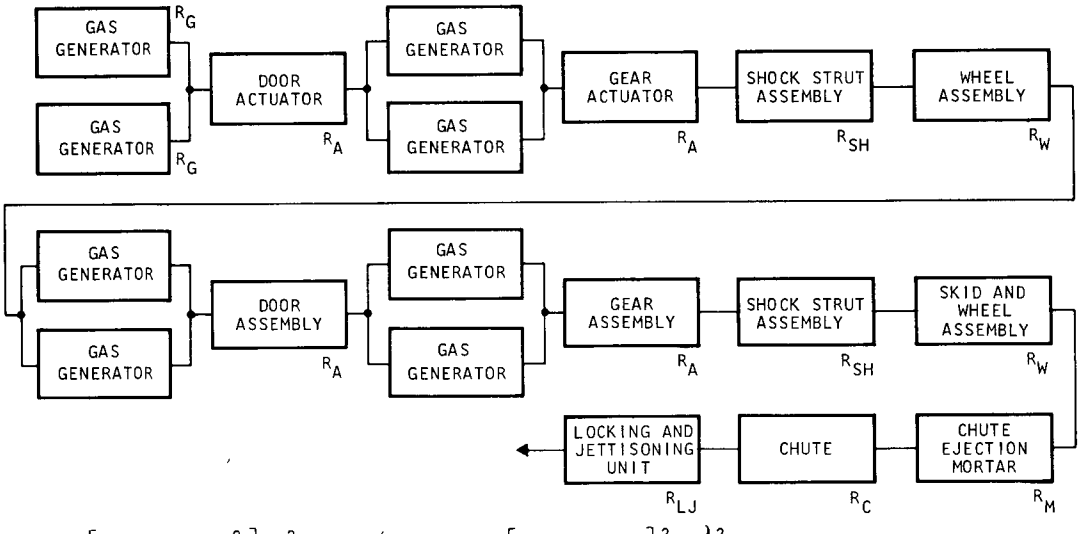

$$R_L = \left[1 - (1 - R_G)^2)\right] R_A^2\ R_{SH}\ R_W \left\{(R_W\ R_{SH}\ R_A\ \left[1 - (1 - R_G)\right]^2\ R_A\right\}^2\ R_M\ R_C\ R_{LJ}$$

FIGURE 86. LANDING SUBSYSTEM, RELIABILITY BLOCK DIAGRAM

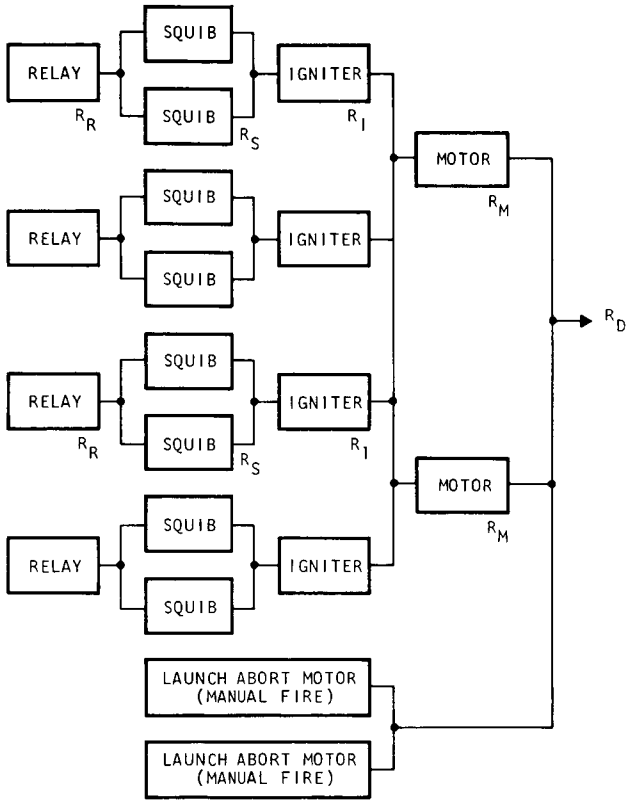

$$R_A = 1 - (1 - (1 - (1 - R_R (1 - (1 - R_S)^2) R_I)^2) R_M)^2$$

$$R_B = 1 - (1 - R_M)^2 \qquad R_D = 1 - (1 - R_A)(1 - R_B)$$

FIGURE 87. ABORT AND DEORBIT SUBSYSTEM, RELIABILITY BLOCK DIAGRAM

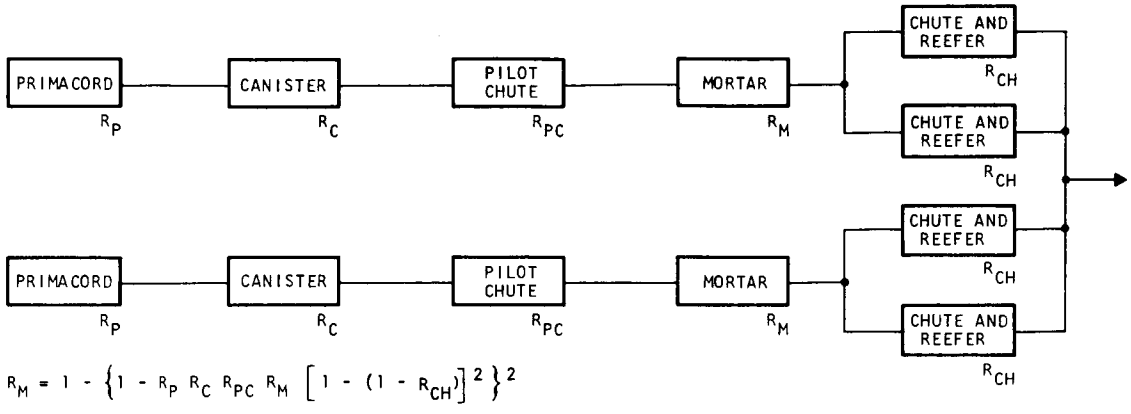

FIGURE 88. RECOVERY SUBSYSTEM, RELIABILITY BLOCK DIAGRAM

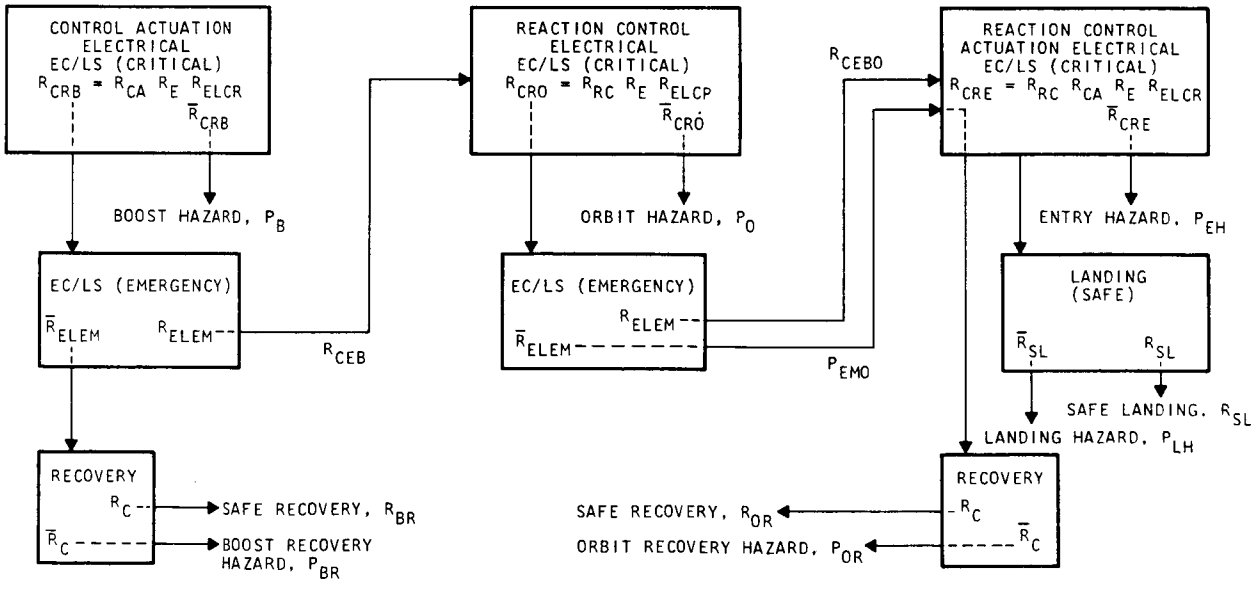

FIGURE 89. CREW SAFETY LOGIC