FACILITY FORM 602
X67 10240
(ACCESSION NUMBER)
(THRU)
123
(PAGES)
2C
(CODE)
CR-66191
(NASA CR OR TMX OR AD NUMBER)
08
(CATEGORY)

NASA CR-66191

COMPUTER PROGRAM FOR SYNTHESIS OF 15μ INFRARED HORIZON RADIANCE PROFILES

Horizon Definition Study

N70-76946
(ACCESSION NUMBER)
(THRU)
None
103
(PAGES)
(CODE)
CR-66191
(NASA CR OR TMX OR AD NUMBER)
(CATEGORY)
FACILITY FORM 602

Distribution of this report is provided in the interest of information exchange. Responsibility for the contents resides in the author or organization that prepared it.

[redacted]

October 1966

Prepared under Contract No. NAS 1-6010 by

HONEYWELL INC.

Systems & Research Division

Minneapolis, Minn.

for

NATIONAL AERONAUTICS AND SPACE ADMINISTRATION

[redacted]

NASA CR-66191

COMPUTER PROGRAM FOR SYNTHESIS OF 15μ INFRARED HORIZON RADIANCE PROFILES

By Robert W. Bencoe and Donald D. James

HORIZON DEFINITION STUDY

Distribution of this report is provided in the interest of information exchange. Responsibility for the contents resides in the author or organization that prepared it.

U. S. GOVERNMENT AGENCIES ONLY

October 1966

Prepared under Contract No. NAS 1-6010 by
Honeywell Inc.
Systems and Research Division
Minneapolis, Minnesota

for

NATIONAL AERONAUTICS AND SPACE ADMINISTRATION

U. S. Government Agencies Only

[redacted]

[redacted]

FOREWORD

This report documents the first phase of An Analytical and Conceptual Design Study for an Earth Coverage Infrared Horizon Definition Study performed under National Aeronautics and Space Administration Contract NAS 1-6010 for Langley Research Center.

This study provides for delineation of the experimental data required to define the infrared horizon on a global basis and for all time periods. Once defined, a number of flight techniques are evaluated to collect the experimental data required. The study includes assessment of the factors which affect the infrared horizon through statistical examination of a large body of meteorological information and the development of a state-of-the-art infrared horizon simulation.

The contractual effort was divided into numerous subtasks which are listed as follows:

Infrared Horizon Definition - A State-of-the-Art Report

Derivation of a Meteorological Body of Data Covering the Northern Hemisphere in the Longitude Region Between 60°W and 160°W from March 1964 through February 1965

The Synthesis of 15μ Infrared Horizon Radiance Profiles from Meteorological Data Inputs

The Analysis of 15μ Infrared Horizon Radiance Profile Variations Over a Range of Meteorological, Geographical, and Seasonal Conditions

Derivation and Statistical Comprison of Various Analytical Techniques Which Define the Location of Reference Horizons in the Earth's Horizon Radiance Profile

The 15μ Infrared Horizon Radiance Profile Temporal, Spatial, and Statistical Sampling Requirements for a Global Measurement Program

Evaluation of Several Mission Approaches for Use in Defining Experimentally the Earth's 15μ Infrared Horizon

Evaluation of the Apollo Applications Program Missions for an Earth Coverage Horizon Measurement Program in the 15μ Infrared Spectral Region

Computer Program for Synthesis of 15μ Infrared Horizon Radiance Profiles

Compilation of Computer Programs for a Horizon Definition Study

PRECEDING PAGE BLANK NOT FILMED.

Compilation of Atmospheric Profiles and Synthesized 15μ Infrared Horizon Radiance Profiles Covering the Northern Hemisphere in the Longitude Region Between 60°W and 160°W from March 1964 through February 1965 - Part I

Compilation of Atmospheric Profiles and Synthesized 15μ Infrared Horizon Radiance Profiles Covering the Northern Hemisphere in the Longitude Region Between 60°W and 160°W from March 1964 through February 1965 - Part II

Horizon Definition Study Summary - Part I

The study results for the first five subtasks listed previously are of considerable interest and warrant wide distribution to the scientific community.

Honeywell Inc., Systems and Research Division, performed this study program under the technical direction of Mr. L. G. Larson. The program was conducted during the period 28 March 1966 through 10 October 1966.

Acknowledgment is extended to GCA Corporation for their contributions on atmospheric physics and meteorology. Specifically, Dr. F. House and Mr. J. Mariano made significant contributions to the numerical analysis of profile synthesis.

Gratitude is extended to NASA/Langley Research Center for their technical guidance, under the program technical direction of Mr. L. Keafer and direct assistance from Messrs. J. Dodgen, R. Davis and H. Curfman, as well as the many people within their organization.

CONTENTS

	Page
SUMMARY	1
INTRODUCTION	2
METHOD	3
Physical Problem	3
Mathematical Model	3
Numerical Analysis	14
Doppler Broadening	21
Absence of Local Thermodynamic Equilibrium	21
Azimuth Option	25
Transmissivity Gate	25
Cloud Study Option	27
USAGE	27
Basic Program Structure	27
Computational Options	29
Common Output	34
Output Options	34
Running Times	34
CODING INFORMATION	37
Fixed Point Variables	37
Fixed Point Arrays	39
Real Single Variables	39
Real Array	41
INPUT DATA	43
OUTPUT DATA	52
Total Radiance	52
Spectral Subinterval Radiance	52
FLOW CHART	57
PROGRAM LISTING	67
APPENDIX A - PLOTTING ROUTINE	92

ILLUSTRATIONS

Figure		Page
1	Satellite Scan Lines	4
2	Radiance Profile	5
3	Scan Line Geometry	19
4	Azimuth	26
5	Abbreviated Flow Chart of Basic Program	30
6	Program CORPS Flow Chart	58

PRECEDING PAGE BLANK NOT FILMED.

TABLES

Table		Page
1	Ten Spectral Subinterval Plass Transmittance Coefficients	8
2	Twenty-Five Spectral Subinterval Plass Transmittance Coefficients	9
3	Generalized Absorption Coefficients for Ozone	11
4	Transmittance Table for Ozone	11
5	Generalized Absorption Coefficients for Water Vapor	12
6	Band Transmittance Table for Water Vapor	13
7	Corrected Water Vapor Continuum Absorption Coefficients	14
8	Corrections for Reduced Optical Depth of Carbon Dioxide	15
9	Generalized Absorption Coefficients for Carbon Dioxide	16
10	Transmittance Table for Carbon Dioxide	17
11	Plass Doppler Table, Ten Spectral Subintervals	22
12	Plass Doppler Table, Twenty-Five Spectral Subintervals	23
13	Available Combinations of Computational Options	28
14	Running Time per Synthesized Profile	35
15	Example of Input Data Cards	44
16	Example of Radiance Profile Tape Output for Each of Ten Spectral Subintervals	53
17	Example of Radiance Profile Output Tape for the Complete Spectral Interval	55

PRECEDING PAGE BLANK NOT FILMED.

COMPUTER PROGRAM FOR SYNTHESIS OF 15 μ INFRARED HORIZON RADIANCE PROFILES

By Robert W. Blencoe and Donald D. James

SUMMARY

The computer program for synthesizing infrared radiance profiles from temperature profiles and corresponding pressure profiles is defined. This program, designated CORPS (Comprehensive Radiance Profile Synthesizer), has numerous options which profiles the user with extreme flexibility in studying the effects of various atmospheric conditions on infrared radiance profiles. The mathematical model is developed using the Plass and Elsasser methods of computing atmospheric transmittance of particular gases. A number of other computational options are also available to assist the user in examining combinations of atmospheric model variables. The complete coding information, input data, and output data is presented for the program user.

INTRODUCTION

A number of theoretical and experimental definition programs have been conducted in the past to assist in the development of horizon sensors for space vehicle guidance and control. These programs have considered many of the factors which affect the infrared radiation emanating from the Earth's horizon but, in general, have been hampered by the lack of a significant number of radiance profiles used in conducting statistical analysis of profile variations. As a result, the need persisted for compiling a broad profile base of sufficient sample size to obtain a high statistical confidence. Synthesizing radiance profiles can be accomplished from temperature profiles, but such a large task demands the use of computer facilities.

It is also important to examine the variation of the horizon radiance profile with respect to various factors which determine the profile. Implicit factors such as time, latitude, longitude, and various geomorphological and meteorological conditions are related to radiance in a very complex way. Therefore, the study of variation due to these factors must be conducted statistically.

Certain atmospheric factors such as clouds, azimuth, refraction, Doppler broadening, and absence of local thermal equilibrium also affect the radiance profile. To measure their effect, experiments must be conducted in which each factor is varied separately and the results compared.

The computational models for synthesis of radiance profiles must also be studied. Available are the Plass transmittance model, the Elsasser transmittance model, the choice of spectral interval, the choice of tangent height resolution, and the choice of the approximations used to describe temperature and pressure input profiles. Again many controlled numerical experiments must be made to determine the best among these choices from the point of view of accuracy and computing speed.

Many computer programming experiments and techniques analyses have been conducted; the results of these studies form the basis for the computer program for synthesizing horizon radiance profiles discussed in this report. The total composite program has been identified as CORPS (COmprehensive Radiance Profile Synthesizer).

The program CORPS provides an effective computing tool to perform the horizon definition study. It represents a significant improvement in both accuracy and speed of radiance profile synthesis. More importantly, it makes available for the first time a tool for the efficient study of the complete horizon definition problem. The user can easily select input options, computational options, and output options which will provide the results needed in a form that can be rapidly compared and analyzed.

This report describes the program in sufficient detail to allow the scientist to direct its use and to allow the computer programmer to control, maintain, and modify its performance.

METHOD

PHYSICAL PROBLEM

The program calculates the radiance profile, $N(H_T)$, of the Earth's horizon in each of 25 equal spectral intervals from $\nu_1 = 600\ cm^{-1}$ to $\nu_2 = 725\ cm^{-1}$. Physically, a horizon radiance profile is generated as a radiometer "looks" over a small solid angle from a satellite, and scans from the center of the Earth toward the outer edge of the Earth's atmosphere. At each position of the scan line (see Figure 1), there is a minimum distance from the scan line to the surface of the Earth. This distance is called the virtual tangent height, H_T, of the scan line and is the independent variable of a radiance profile.

At negative virtual tangent heights, the scan line strikes the Earth's surface. At small positive virtual tangent heights, the scan line just misses the Earth's surface and, therefore, passes through more of the atmosphere. Due to this, the radiance at a small positive virtual tangent height is usually slightly larger than it is for negative virtual tangent heights. As the scan line rises and the virtual tangent height gets much larger positively, the radiance drops to nearly zero because the atmosphere is becoming less and less dense. Thus, if radiance versus virtual tangent height were plotted, the characteristic shape of a radiance profile as shown in Figure 2 would be obtained.

In the spectral interval $\nu_1 = 600\ cm^{-1}$ to $\nu_2 = 725\ cm^{-1}$, the only appreciable contributors to the radiation sensed by the radiometer are carbon dioxide (CO_2), ozone (O_3), and water vapor (H_2O). Of these, CO_2 is by far the most significant.

MATHEMATICAL MODEL

Summary

The basic input to the radiance profile calculations is a temperature profile and a pressure profile. From these data three quantities are computed at each virtual tangent height and at each point s along the corresponding scan line (see Figure 1). They are the optical depth $u(H_T, s)$ the effective temperature $\bar{T}(H_T, s)$ and the effective pressure $\bar{P}(H_T, s)$. From these three quantities the transmittance τ of each gas is computed for each of the 25 spectral subintervals. That is,

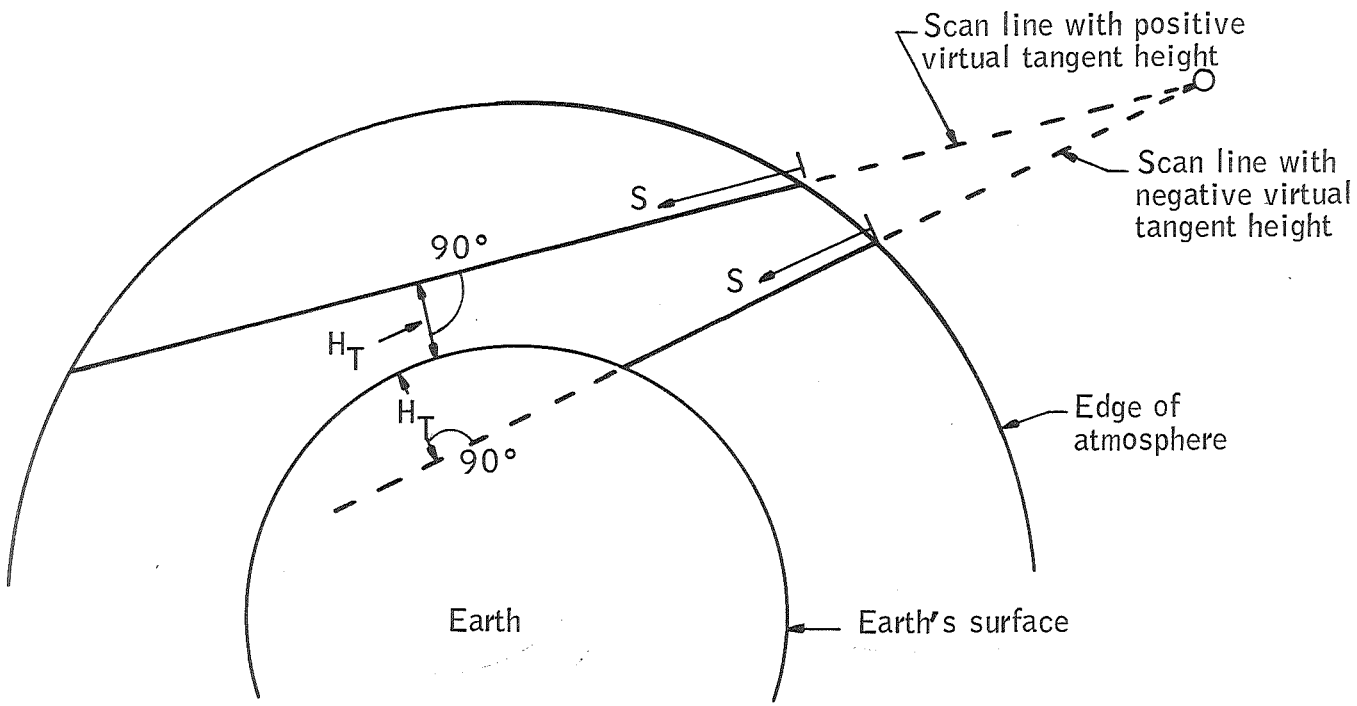

Figure 1. Satellite Scan Lines

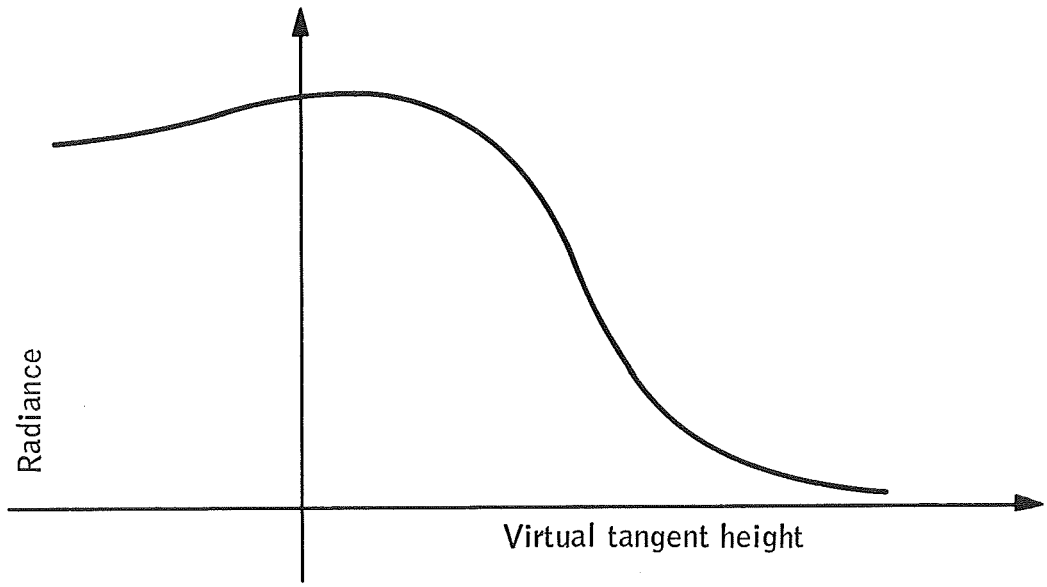

Figure 2. Radiance Profiles

$$\tau_{CO_2}(H_T, s, \nu) = f_{CO_2}\left[(u(H_T, s),\ \bar{T}(H_T, s), \bar{P}(H_T, s),\ \nu)\right] \tag{1}$$

$$\tau_{O_3}(H_T, s, \nu) = f_{O_3}\left[(u(H_T, s),\ \bar{T}(H_T, s),\ \bar{P}(H_T, s),\ \nu)\right] \tag{2}$$

$$\tau_{H_2O}(H_T, s, \nu) = f_{H_2O}\left[(u(H_T, s),\ \bar{T}(H_T, s),\ \bar{P}(H_T, s),\ \nu)\right] \tag{3}$$

The total transmittance for the atmosphere is obtained by

$$\tau(H_T, s, \nu) = \tau_{CO_2}(H_T, s, \nu) * \tau_{O_3}(H_T, s, \nu) * \tau_{H_2O}(H_T, s, \nu) \tag{4}$$

Then the radiance $N(H_T, \nu)$ for each wave number ν and each virtual tangent height H_T is computed by

$$N(H_T, \nu) = \int_1^{\tau_o} B(\nu, T)\, d\tau + B(\nu, T_o)\, \tau_o \tag{5}$$

where

$$B(\nu, T) = p\nu^3/(e^{\frac{q\nu}{T}} - 1), \tag{6}$$

$p = 1.19089 \times 10^{-5}$, erg cm/sec/steradian,

$q = 1.4389$, °K cm,

T_o = temperature at the Earth's surface, °K,

$$\tau_o = \begin{cases} \text{transmittance from the Earth's surface to the satellite if } H_T \le 0, \\ \text{zero if } H_T > 0 \end{cases}$$

Finally, the radiance profile for the entire spectral interval is found using

$$N(H_T) = \int_{\nu_1}^{\nu_2} N(H_T, \nu) F(\nu)\, d\nu \tag{7}$$

where $F(\nu)$ is a filter function to weight the wave number ν.

Calculation of u, $\bar{T}$, and $\bar{P}$

The optical depth is calculated using

$$u(H_T, s) = \int_0^s C_{CO_2}(s) \frac{P(s)}{P_o} \frac{T_o}{T(s)} ds \tag{8}$$

where $C_{CO_2}(s)$ is the mixing ratio of carbon dioxide in parts per million, P_o = 1000 mb, and T_o = 273.0°K. The effective temperature is calculated using

$$\bar{T}(H_T, s) = \frac{\int_0^{u(s)} T \, du}{\int_0^{u(s)} du} \tag{9}$$

The effective pressure is calculated using

$$\bar{P}(H_T, s) = \frac{\frac{1}{P_o} \int_0^{u(s)} P \, du}{\int_0^{u(s)} du} \tag{10}$$

Calculation of τ

There exist two methods to compute the transmittance of a radiating gas. The first, due to Plass, has only been developed for carbon dioxide. The second method, due to Elsasser, is somewhat less accurate but can be used to study all three gases.

Plass method. -- The inputs are the three quantities $u(H_T, s)$, $\bar{T}(H_T, s)$, and $\bar{P}(H_T, s)$ and eight coefficients which depend on wave number, $A_1(\nu)$, $A_2(\nu)$, $B_1(\nu)$, $B_2(\nu)$, $C_o(\nu)$, $C_1(\nu)$, $C_2(\nu)$, and $C_3(\nu)$. (See Tables 1 and 2). First

$$F = \log_e (u * \bar{P}) \tag{11}$$

is completed and then

TABLE 1. - TEN SPECTRAL SUBINTERVAL PLASS TRANSMITTANCE COEFFICIENTS

-.1998E+01	-.8065E+00	-.8933E+00	-.2468E+00	.4692E+00	C0
.1581E+01	.3094E+00	-.5223E+00	-.1361E+01	-.8322E+00	C0
.5297E+00	.4779E+00	.5207E+00	.5174E+00	.5324E+00	C1
.4545E+00	.5323E+00	.5263E+00	.5327E+00	.4667E+00	C1
.9393E-03	-.6512E-02	.1382E-02	.1691E-02	.7554E-02	C2
-.7751E-02	.1123E-01	.2520E-02	.3877E-02	-.8158E-02	C2
.3403E-03	-.2191E-03	.2298E-03	.2591E-03	.8044E-03	C3
-.1627E-03	.9712E-03	.2021E-03	.3666E-03	-.3603E-03	C3
.2655E-01	.2441E-01	.1855E-01	.9212E-02	-.3709E-03	A1
-.1849E-02	.2638E-03	.1534E-01	.2642E-01	.2220E-01	A1
-.3340E-04	-.3251E-04	-.2229E-04	-.9819E-05	.1619E-05	A2
.1799E-05	.7602E-06	-.1897E-04	-.3373E-04	-.2783E-04	A2
-.2416E-02	-.7380E-03	-.3373E-03	-.2205E-03	.6175E-03	B1
.3196E-02	.1623E-03	-.3583E-03	-.8593E-03	-.6750E-03	B1
.4480E-05	.4801E-06	.4607E-06	.3791E-06	-.1519E-05	B2
-.7419E-05	-.6407E-06	.5207E-06	.1318E-05	.6201E-06	B2

TABLE 2. - TWENTY-FIVE SPECTRAL SUBINTERVAL PLASS TRANSMITTANCE COEFFICIENTS

Spectral Sub Interval	Transmissivity Coefficients				
600 - 605	C0 =-.2059E 01	C1 = .5345E 00	C2 = .4735E-03	C3 = .1754E-03	
600 - 605	A1 = .2845E-01	A2 =-.3544E-04	B1 =-.1988E-03	B2 = .1970E-07	
605 - 610	C0 =-.2066E 01	C1 = .5429E 00	C2 = .9158E-03	C3 = .7054E-04	
605 - 610	A1 = .2508E-01	A2 =-.3183E-04	B1 =-.2967E-03	B2 = .3035E-06	
610 - 615	C0 =-.1913E 01	C1 = .5367E 00	C2 = .1018E-02	C3 = .4015E-03	
610 - 615	A1 = .2500E-01	A2 =-.3103E-04	B1 =-.1348E-02	B2 = .2423E-05	
615 - 620	C0 =-.6496E 00	C1 = .4670E 00	C2 =-.1117E-01	C3 =-.5972E-03	
615 - 620	A1 = .2427E-01	A2 =-.3255E-04	B1 =-.1429E-03	B2 =-.6601E-06	
620 - 625	C0 =-.9708E 00	C1 = .4881E 00	C2 =-.3081E-02	C3 = .8933E-04	
620 - 625	A1 = .2466E-01	A2 =-.3254E-04	B1 =-.1147E-02	B2 = .1682E-05	
625 - 630	C0 =-.1094E 01	C1 = .5227E 00	C2 = .9985E-03	C3 = .1969E-03	
625 - 630	A1 = .2064E-01	A2 =-.2516E-04	B1 =-.7863E-03	B2 = .1244E-05	
630 - 635	C0 =-.7126E 00	C1 = .5259E 00	C2 = .4944E-02	C3 = .6003E-03	
630 - 635	A1 = .1731E-01	A2 =-.2070E-04	B1 = .3972E-04	B2 =-.2974E-06	
635 - 640	C0 =-.4273E 00	C1 = .5258E 00	C2 = .4451E-02	C3 = .4902E-03	
635 - 640	A1 = .1074E-01	A2 =-.1133E-04	B1 =-.8162E-04	B2 = .1052E-06	
640 - 645	C0 =-.5124E-01	C1 = .5226E 00	C2 = .2344E-02	C3 = .3125E-03	
640 - 645	A1 = .8374E-02	A2 =-.9330E-05	B1 =-.1409E-03	B2 = .1398E-06	
645 - 650	C0 = .5226E 00	C1 = .5209E 00	C2 = .2917E-02	C3 = .4480E-03	
645 - 650	A1 = .3873E-02	A2 =-.2421E-05	B1 =-.2004E-03	B2 = .1608E-06	
650 - 655	C0 = .4233E 00	C1 = .5475E 00	C2 = .1223E-01	C3 = .1234E-02	
650 - 655	A1 =-.6438E-03	A2 = .2341E-05	B1 = .5680E-03	B2 =-.1662E-05	
655 - 660	C0 = .3158E 00	C1 = .5657E 00	C2 = .1514E-01	C3 = .1334E-02	
655 - 660	A1 =-.2864E-02	A2 = .4484E-05	B1 = .3343E-03	B2 =-.1000E-05	
660 - 665	C0 = .7340E 00	C1 = .5043E 00	C2 = .4062E-02	C3 = .7427E-03	
660 - 665	A1 =-.2866E-02	A2 = .4004E-05	B1 =-.2181E-02	B2 = .4345E-05	
665 - 670	C0 = .1581E 01	C1 = .4545E 00	C2 =-.7751E-02	C3 =-.1627E-03	
665 - 670	A1 =-.1849E-02	A2 = .1799E-05	B1 = .3196E-02	B2 =-.7419E-05	
670 - 675	C0 = .5982E 00	C1 = .4893E 00	C2 = .2140E-01	C3 = .2304E-02	
670 - 675	A1 =-.2964E-02	A2 = .5146E-05	B1 = .5660E-03	B2 =-.2058E-05	
675 - 680	C0 = .3750E 00	C1 = .5768E 00	C2 = .1620E-01	C3 = .1371E-02	
675 - 680	A1 =-.3190E-02	A2 = .5444E-05	B1 =-.5589E-03	B2 = .6459E-06	
680 - 685	C0 = .3085E 00	C1 = .5622E 00	C2 = .1288E-01	C3 = .1098E-02	
680 - 685	A1 = .1207E-02	A2 =-.1181E-05	B1 =-.1148E-02	B2 = .1942E-05	
685 - 690	C0 = .7475E-01	C1 = .5635E 00	C2 = .1304E-01	C3 = .1087E-02	
685 - 690	A1 = .4749E-02	A2 =-.4402E-05	B1 = .3228E-02	B2 =-.6662E-05	
690 - 695	C0 =-.1999E 00	C1 = .5443E 00	C2 = .7285E-02	C3 = .5822E-03	
690 - 695	A1 = .1094E-01	A2 =-.1318E-04	B1 =-.9946E-03	B2 = .1565E-05	
695 - 700	C0 =-.5606E 00	C1 = .5394E 00	C2 = .7133E-02	C3 = .6003E-03	
695 - 700	A1 = .1667E-01	A2 =-.2118E-04	B1 =-.7771E-03	B2 = .1322E-05	
700 - 705	C0 =-.8201E 00	C1 = .5369E 00	C2 = .5191E-02	C3 = .4480E-03	
700 - 705	A1 = .2395E-01	A2 =-.3179E-04	B1 =-.7774E-03	B2 = .1184E-05	
705 - 710	C0 =-.1199E 01	C1 = .5312E 00	C2 = .4247E-02	C3 = .4863E-03	
705 - 710	A1 = .2737E-01	A2 =-.3638E-04	B1 =-.1020E-02	B2 = .1640E-05	
710 - 715	C0 =-.1552E 01	C1 = .5436E 00	C2 = .2749E-02	C3 = .1488E-03	
710 - 715	A1 = .2574E-01	A2 =-.3124E-04	B1 =-.4845E-03	B2 = .5831E-06	
715 - 720	C0 =-.8974E 00	C1 = .4765E 00	C2 =-.6213E-02	C3 =-.1930E-03	
715 - 720	A1 = .2479E-01	A2 =-.3091E-04	B1 =-.8478E-03	B2 = .1159E-05	
720 - 725	C0 =-.7514E 00	C1 = .4525E 00	C2 =-.1445E-01	C3 =-.8852E-03	
720 - 725	A1 = .2027E-01	A2 =-.2585E-04	B1 =-.5027E-03	B2 =-.3843E-07	

$$\bar{Y} = \left\{\left[C_3(\nu) * F + C_2(\nu)\right] * F + C_1(\nu)\right\} * F + C_o(\nu) \tag{12}$$

$$Y = \bar{Y} + \left[A_1(\nu) + B_1(\nu) * F\right] * (\bar{T} - 250)$$

$$+ \left[A_2(\nu) + B_2(\nu) * F\right] * (\bar{T}^2 - 62\ 500) \tag{13}$$

and finally,

$$\tau_{CO_2}(H_T, s, \nu) = \exp(-\exp(Y)) \tag{14}$$

Elsasser method. -- The computation of τ for each gas will be discussed separately. For ozone, first a "reduced" optical depth u^* is computed using

$$u^*(H_T, s) = \begin{cases} \int_o^s C_{O_3}(s) \left(\frac{P(s)}{1013.2}\right)\left(\frac{273}{T(s)}\right)^{1/2} ds, & \text{if } P(s) \le 13.4, \\ \int_o^s C_{O_3}(s)\ (0.132)\left(\frac{273}{T(s)}\right)^{1/2} ds, & \text{if } P(s) > 13.4, \end{cases} \tag{15}$$

where C_{O_3} is the mixing ratio for ozone.

Next, a value of the logarithm of the generalized absorption coefficient $\bar{L}$ depending on the value of ν is obtained from Table 3.

Finally $\tau_{O_3}(H_T, s, \nu)$ is computed by forming the sum,

$$\log_{10} u^*(H_T, s) + \log_{10} \bar{L},$$

and using linear interpolation and Table 4.

Again, a "reduced" optical depth $u^*(H_T, s)$ for H_2O is calculated using

$$u^*(H_T, s) = 1.292 \times 10^{-3} \int_o^s C_{H_2O}(s) \left(\frac{P(s)}{1013.2}\right)^2 \left(\frac{273}{T(s)}\right)^{3/2} ds \tag{16}$$

where $C_{H_2O}(s)$ is the mixing ratio for water vapor. Next, a value for $\log_{10}\bar{L}_o$ is obtained from Table 5.

The value obtained for $\log_{10}\bar{L}_o$ is now corrected for temperature effects using the formula

TABLE 3. - GENERALIZED ABSORPTION COEFFICIENTS FOR OZONE

Wave number ν	$\mathrm{Log}_{10}\bar{L}$	Wave number ν	$\mathrm{Log}_{10}\bar{L}$
600-605	-5.33	665-670	-2.35
605-610	-4.83	670-675	-2.27
610-615	-4.35	675-680	-2.19
615-620	-3.97	680-685	-2.14
620-625	-3.67	685-690	-2.12
625-630	-3.42	690-695	-2.12
630-635	-3.22	695-700	-2.16
635-640	-3.06	700-705	-2.25
640-645	-2.91	705-710	-2.29
645-650	-2.77	710-715	-2.28
650-655	-2.65	715-720	-2.23
655-660	-2.54	720-725	-2.09
660-665	-2.44		

TABLE 4. - TRANSMITTANCE TABLE FOR OZONE

$\mathrm{Log}_{10}u^* + \mathrm{Log}_{10}\bar{L}$	τ_{o_3}	$\mathrm{Log}_{10}u^* + \mathrm{Log}_{10}\bar{L}$	τ_{o_3}	$\mathrm{Log}_{10}u^* + \mathrm{Log}_{10}\bar{L}$	τ_{o_3}
-4.3	1.000	-2.9	0.868	-1.5	0.418
-4.2	0.992	-2.8	0.849	-1.4	0.366
-4.1	0.984	-2.7	0.830	-1.3	0.312
-4.0	0.976	-2.6	0.809	-1.2	0.257
-3.9	0.968	-2.5	0.786	-1.1	0.202
-3.8	0.960	-2.4	0.761	-1.0	0.151
-3.7	0.952	-2.3	0.734	-0.9	0.108
-3.6	0.944	-2.2	0.705	-0.8	0.074
-3.5	0.936	-2.1	0.673	-0.7	0.048
-3.4	0.927	-2.0	0.638	-0.6	0.029
-3.3	0.917	-1.9	0.600	-0.5	0.015
-3.2	0.906	-1.8	0.559	-0.4	0.005
-3.1	0.894	-1.7	0.519	-0.3	0.000
-3.0	0.881	-1.6	0.468		

TABLE 5. - GENERALIZED ABSORPTION COEFFICIENTS FOR WATER VAPOR

Wave number ν	$\mathrm{Log}_{10}K_o$	Wave number ν	$\mathrm{Log}_{10}\bar{L}_o$
600-605	-0.58	665-670	-1.28
605-610	-0.63	670-675	-1.33
610-615	-0.68	675-680	-1.39
615-620	-0.73	680-685	-1.45
620-625	-0.78	685-690	-1.52
625-630	-0.83	690-695	-1.58
630-635	-0.88	695-700	-1.64
635-640	-0.94	700-705	-1.70
640-645	-1.00	705-710	-1.77
645-650	-1.06	710-715	-1.83
650-655	-1.11	715-720	-1.89
655-660	-1.17	720-725	-1.96
660-665	-1.22		

$$\log_{10}\bar{L} = \log_{10}\bar{L}_o - (9.8 \times 10^{-6}) \frac{293 - \bar{T}(s)}{\bar{T}(s)} \nu^2$$

$$+ \log_{10} 293 - \log_{10} \bar{T}(s) \qquad (17)$$

where $\bar{T}(s)$ is the effective temperature computed earlier using formula (9). After the sum

$$\log_{10} u^* (H_T, s) + \log_{10}\bar{L},$$

is formed, the "band" water vapor transmittance, τ_{H_2O} BAND is obtained, using linear interpolation, from Table 6.

Next, a corrected water vapor continuum absorption coefficient, depending on the value of the wave number, ν , must be obtained from Table 7.

Finally, the water vapor continuum transmittance is computed using

$$\tau_{H_2O} \text{ CONT.} = \exp(-Ku^*), \qquad (18)$$

and then the transmittance of water vapor using

$$\tau_{H_2O}(H_T, s, \nu) = (\tau_{H_2O}\text{CONT.})\,(\tau_{H_2O}\text{BAND}) \qquad (19)$$

TABLE 6. - BAND TRANSMITTANCE TABLE FOR WATER VAPOR

$\text{Log}_{10}u^* + \text{Log}_{10}\bar{L}$	τ_{H_2O}band	$\text{Log}_{10}u^* + \text{Log}_{10}\bar{L}$	τ_{H_2O} band	$\text{Log}_{10}u^* + \text{Log}_{10}\bar{L}$	τ_{H_2O} band
-3.7	1.0000	-2.0	0.8711	-0.3	0.3497
-3.6	0.9990	-1.9	0.8556	-0.2	0.3076
-3.5	0.9967	-1.8	0.8384	-0.1	0.2661
-3.4	0.9932	-1.7	0.8194	0.0	0.2258
-3.3	0.9887	-1.6	0.7984	0.1	0.1874
-3.2	0.9833	-1.5	0.7753	0.2	0.1518
-3.1	0.9772	-1.4	0.7500	0.3	0.1198
-3.0	0.9705	-1.3	0.7225	0.4	0.0920
-2.9	0.9633	-1.2	0.6928	0.5	0.0687
-2.8	0.9556	-1.1	0.6610	0.6	0.0500
-2.7	0.9475	-1.0	0.6272	0.7	0.0357
-2.6	0.9389	-0.9	0.5915	0.8	0.0250
-2.5	0.9298	-0.8	0.5541	0.9	0.0168
-2.4	0.9200	-0.7	0.5152	1.0	0.0103
-2.3	0.9094	-0.6	0.4750	1.1	0.0049
-2.2	0.8978	-0.5	0.4338	1.2	0.0000
-2.1	0.8851	-0.4	0.3919		

TABLE 7. - CORRECTED WATER VAPOR CONTINUUM ABSORPTION COEFFICIENTS

Wave number ν	$Log_{10}K$	Wave number ν	$Log_{10}K$
600-660	0.000	690-695	-0.812
660-665	-0.737	695-700	-0.825
665-670	-0.750	700-705	-0.837
670-675	-0.762	705-710	-0.850
675-680	-0.775	710-715	-0.862
680-685	-0.787	715-720	-0.875
685-690	-0.800	720-725	-0.887

Now consider the calculation of transmittance for carbon dioxide. As with the other gases, first a "reduced" optical depth $u^*(H_T, s)$ is computed using

$$u^*_{CO_2}(H_T, s) = \int_0^s C_{CO_2}(s) \left(\frac{P(s)}{1013.2}\right)^2 \left(\frac{273}{T(s)}\right)^{3/2} ds \tag{20}$$

where $C_{CO_2}(s)$ is the mixing ratio for carbon dioxide. Next the common logarithm of $u^*_{CO_2}(H_T, s)$ is computed and a new value for it is obtained using linear interpolation and Table 8.

Next, depending on the value of the wave number ν, the logarithm of the generalized absorption coefficient $\bar{L}$ is selected from Table 9.

Finally, the sum

$$\text{New value of } Log_{10}u^* + Log_{10}\bar{L},$$

is formed and the transmittance of carbon dioxide, $\tau_{CO_2}(H_T, s, \nu)$ is computed using linear interpolation and Table 10.

NUMERICAL ANALYSIS

To compute the various integrals described in the last section, the atmosphere of the Earth is broken into n concentric shells, not necessarily evenly spaced. Let $Z_1, Z_2, \ldots, Z_{n+1} = 0$, be the altitudes in km of the shell boundaries above

TABLE 8. - CORRECTIONS FOR REDUCED OPTICAL DEPTH OF CARBON DIOXIDE

Old value of $Log_{10}u^*$	New value of $Log_{10}U^*$
-10	-10.82
- 9	- 9.82
- 8	- 8.82
- 7	- 7.82
- 6	- 6.82
- 5	- 5.80
- 4	- 4.72
- 3	- 3.60
- 2	- 2.46
- 1	- 1.29
0	- 0.11
1	0.97
2	2.02
3	3.03
4	4.04
5	5.05

TABLE 9. - GENERALIZED ABSORPTION COEFFICIENTS FOR CARBON DIOXIDE

Wave number ν	$\mathrm{Log}_{10}\bar{L}$	Wave number ν	$\mathrm{Log}_{10}\bar{L}$
600-605	-1.92	665-670	0.43
605-610	-1.66	670-675	0.42
610-615	-1.40	675-680	0.37
615-620	-1.16	680-685	0.23
620-625	-0.93	685-690	0.07
625-630	-0.72	690-695	-0.08
630-635	-0.51	695-700	-0.26
635-640	-0.31	700-705	0.43
640-645	-0.12	705-710	-0.61
645-650	0.07	710-715	-0.79
650-655	0.22	715-720	-0.98
655-660	0.33	720-725	-1.18
660-665	0.38		

TABLE 10. - TRANSMITTANCE TABLE FOR CARBON DIOXIDE

$Log_{10}u^* + Log_{10}\bar{L}$	τ_{CO_2}	$Log_{10}u^* + Log_{10}\bar{L}$	τ_{CO_2}	$Log_{10}u^* + Log_{10}\bar{L}$	τ_{CO_2}
-5.2	1.000	-2.7	0.8972	-0.2	0.3428
-5.1	0.9997	-2.6	0.8879	-0.1	0.3075
-5.0	0.9991	-2.5	0.8790	0.0	0.2727
-4.9	0.9982	-2.4	0.8674	0.1	0.2389
-4.8	0.9970	-2.3	0.8561	0.2	0.2066
-4.7	0.9955	-2.2	0.8440	0.3	0.1763
-4.6	0.9937	-2.1	0.8310	0.4	0.1484
-4.5	0.9916	-2.0	0.8170	0.5	0.1230
-4.4	0.9892	-1.9	0.8019	0.6	0.1002
-4.3	0.9865	-1.8	0.7856	0.7	0.0801
-4.2	0.9835	-1.7	0.7680	0.8	0.0627
-4.1	0.9802	-1.6	0.7491	0.9	0.0480
-4.0	0.9766	-1.5	0.7288	1.0	0.0360
-3.9	0.9727	-1.4	0.7071	1.1	0.0266
-3.8	0.9685	-1.3	0.6839	1.2	0.0196
-3.7	0.9639	-1.2	0.6592	1.3	0.0147
-3.6	0.9590	-1.1	0.6330	1.4	0.0113
-3.5	0.9538	-1.0	0.6053	1.5	0.0089
-3.4	0.9482	-0.9	0.5762	1.6	0.0071
-3.3	0.9422	-0.8	0.5458	1.7	0.0056
-3.2	0.9358	-0.7	0.5142	1.8	0.0042
-3.1	0.9290	-0.6	0.4815	1.9	0.0028
-3.0	0.9218	-0.5	0.4478	2.0	0.0014
-2.9	0.9141	-0.4	0.4133	2.1	0.0000
-2.8	0.9059	-0.3	0.3782		

the surface of the earth. It is assumed that the temperature and pressure of the atmosphere are given as input data at these n+1 altitudes. Denote these values by $T_1, T_2, \ldots, T_{n+1}$ and $P_1, P_2, \ldots, P_{n+1}$. The average temperature and pressure over each shell is obtained and stored using

$$TAV_j = 1/2\,(P_j + P_{j+1})$$

$$j = 1, 2, \ldots, n.$$

$$PAV_j = 1/2\,(T_j + T_{j+1})$$

When refraction is included, the scan line will bend as it passes through the atmosphere, giving a real tangent height H_T. Therefore, when refraction is included, the arc length variable, s must be measured along this bent path (see Figure 3). It is assumed that the index of refraction, η is constant within any shell and is equal to the average index of refraction of that shell. Refraction with and without considering water vapor was studied to determine the perturbations in the resulting horizon radiance profiles. The total refraction effect on the horizon radiance profile was negligible, but it was decided to include dry air refraction as a computational option as it was the major factor of the refraction effect. Then η_j for dry air is computed using

$$\eta_j = 1 + \frac{77.526 \times 10^{-6} \times PAV_j}{TAV_j} \tag{21}$$

Denote by Δs_j the portion of the refracted scan line within the jth shell, that is, the portion of the scan line between the altitude Z_j and the altitude Z_{j+1}. Then Δs_j is computed using

$$\Delta s_j = \frac{1}{\eta_j}\left(\sqrt{(R_e + Z_j)^2\,\eta_j^2 - (R_e + H_T)^2} - \sqrt{(R_e + Z_{j+1})^2 - (R_e + H_T)^2}\right) \tag{22}$$

This equation for Δs_j holds for all shells except the one shell where the refracted scan line does not cross the shell but rather enters and leaves the shell across the same boundary. Call this shell the ith shell. For this shell Δs_i is computed using

$$\Delta s_i = \frac{2}{\eta_i}\sqrt{(R_e + Z_i)^2 - (R_e + H_T)^2} \tag{23}$$

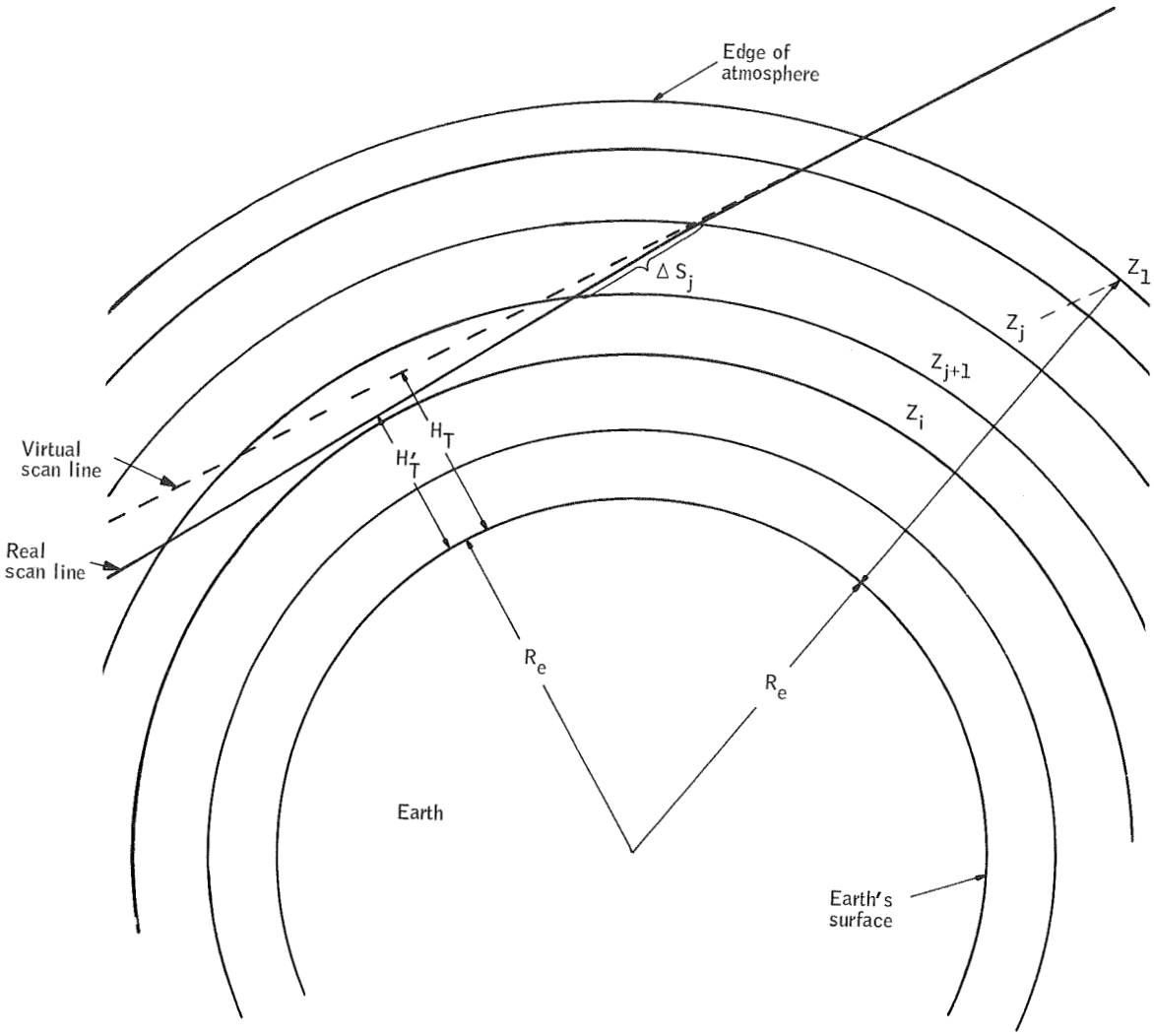

Figure 3. Scan Line Geometry

Next, the optical depth u, the effective temperature $\bar{T}$, and the effective pressure $\bar{P}$ for the jth shell are computed using the formulas

$$u_j = \frac{T_o}{P_o} \sum_{i=1}^{j} C_{CO_2}(Z_i) \frac{PAV_i}{TAV_i} \Delta s_i, \tag{24}$$

$$\bar{T}_j = \frac{\sum_{i=1}^{j} PAV_i * \Delta u_i}{\sum_{i=1}^{j} \Delta u_i}, \tag{25}$$

and

$$\bar{P}_j = \frac{\sum_{i=1}^{j} PAV_i * \Delta u_i}{P_o \sum_{i=1}^{j} \Delta u_i} \tag{26}$$

where

$$\Delta u_i = \frac{T_o}{P_o} \frac{PAV_i}{TAV_i} \Delta s_i. \tag{27}$$

Formulas (24), (25), and (26) are the numerical analogs of the formulas (8), (9), and (10).

Using the quantities u, T_j, and P_j, the transmittance τ_j is computed for the jth shell following the steps given in the last section. Finally, the radiance at the tangent height H_T from the spectral interval ν_ℓ is computed by

$$N(H_T, \nu_\ell) = \sum_{j=1}^{KK} B(\nu_\ell, TAV_j) \Delta\tau_j + B(\nu_\ell, T_o)\tau_o \tag{28}$$

where

K = number of shells traversed by the scan line corresponding to H_T

and

$$\Delta\tau_j = \tau_j - \tau_{j+1},$$

and then the total radiance is found using

$$N(H_T) = \sum_{\ell=1}^{K} N(H_T, \nu_\ell)\,\Delta\nu_\ell \tag{29}$$

where

K = number of spectral subintervals considered,

$\Delta\nu_\ell$ = number of cm^{-1} in the ℓth spectral subinterval.

DOPPLER BROADENING

Doppler broadening is a correction to the transmittance which is available only when the Plass CO_2 transmittance model is used. Denote $\tau_{CO_2}(H_T, s, \nu)$ the value of transmittance given by this model. The correction is computed using

$$\tau_{CORR}(H_T, s, \nu) = \tau_{CO_2}(H_T, s, \nu)\left[(1\text{-SUMY } (\log_{10}u, \bar{T}, \nu)\right]$$

where u and T are the optical depth and effective temperature. The values of SUMY are found by linear interpolation in Tables 11 or 12. The tables are given for effective temperatures of 200°K, 250°K, and 300°K. Linear extrapolation is used for effective temperatures below 200°K.

ABSENCE OF LOCAL THERMODYNAMIC EQUILIBRIUM

The correction for absence of local thermodynamic equilibrium is made to the Planck black body function $B(\nu, T)$ defined by equation (6). The correction is the multiplication of B at each shell by the factor $\theta/(\theta+\lambda)$ where $\theta = 0.412$ seconds and

$$\lambda_i = 10^{-6} \times \frac{P_o}{P_i}\left(\frac{T_i}{T_o}\right)^{1/2}, \quad i = 1, 2, \ldots, n.$$

TABLE 11. - PLASS DOPPLER TABLE, TEN SPECTRAL INTERVALS

					Spectral Sub. Int.	(200°K)
.14563333E-04	.46060000E-04	.14563333E-03	.46060000E-03	.65490000E-03	600 - 615	
.60116667E-03	.43123333E-03	.81343333E-03	.65540000E-03	.56200000E-05		
.67085000E-04	.21225000E-03	.14435000E-03	.21225000E-02	.27275000E-02	615 - 625	
.34095000E-02	.21835000E-02	.26085000E-02	.23345000E-03	.00000000E 00		
.62130000E-04	.19645000E-03	.62130000E-03	.15090000E-02	.18790000E-02	625 - 635	
.19750000E-02	.24665000E-02	.34965000E-02	.10939500E-02	.00000000E 00		
.50370000E-03	.89145000E-03	.12765000E-02	.22075000E-02	.32345000E-02	635 - 645	
.41960000E-02	.45930000E-02	.44105000E-02	.19900000E-02	.00000000E 00		
.87627500E-03	.13376000E-02	.27762500E-02	.55455000E-02	.75245000E-02	645 - 665	
.83722500E-02	.68212500E-02	.58445000E-02	.44162838E-02	.00000000E 00		
.51280000E-02	.66150000E-02	.94540000E-02	.13430000E-01	.12390000E-01	665 - 670	
.13810000E-01	.10970000E-01	.11358000E-01	.70000000E-02	.00000000E 00		
.68990000E-03	.85887500E-03	.11661750E-02	.28585000E-02	.30770000E-02	670 - 690	
.40272500E-02	.32752500E-02	.51712500E-02	.70175075E-02	.00000000E 00		
.40240000E-03	.59203333E-03	.75610000E-03	.10679667E-02	.16806667E-02	690 - 705	
.20343333E-02	.23703333E-02	.22200000E-02	.17333333E-02	.00000000E 00		
.38800000E-04	.12269500E-03	.38800000E-03	.10185500E-02	.11490000E-02	705 - 715	
.98865000E-03	.56825000E-03	.11430000E-02	.88025000E-03	.00000000E 00		
.83160000E-04	.26299500E-03	.83160000E-03	.19864500E-02	.24205000E-02	715 - 725	(250°K)
.28050000E-02	.19825000E-02	.22660000E-02	.52325000E-03	.00000000E 00		
.31213333E-04	.98703333E-04	.31213333E-03	.77363333E-03	.80320000E-03	600 - 615	
.89636667E-03	.11299333E-02	.28916667E-02	.14810667E-02	.45066667E-04		
.25597500E-03	.80995000E-03	.25597500E-02	.39640000E-02	.52930000E-02	615 - 625	
.65180000E-02	.61720000E-02	.74415000E-02	.18970000E-02	.74900000E-03		
.19805000E-03	.62635000E-03	.15925000E-02	.25945000E-02	.42270000E-02	625 - 635	
.49865000E-02	.60370000E-02	.61570000E-02	.41790000E-02	.41650000E-03		
.75640000E-03	.11780000E-02	.20000000E-02	.40395000E-02	.56630000E-02	635 - 645	
.58555000E-02	.70740000E-02	.66920000E-02	.65625000E-02	.00000000E 00		
.10239500E-02	.16367500E-02	.35742500E-02	.72870000E-02	.11162750E-01	645 - 665	
.13951500E-01	.12728000E-01	.75692500E-02	.65585000E-02	.00000000E 00		
.74270000E-02	.11650000E-01	.17200000E-01	.21360000E-01	.24250000E-01	665 - 670	
.24910000E-01	.17040000E-01	.63650000E-02	.70000000E-02	.00000000E 00		
.89060000E-03	.13655000E-02	.24997500E-02	.33325000E-02	.54895000E-02	670 - 690	
.69822500E-02	.71185000E-02	.87202500E-02	.82241750E-02	.00000000E 00		
.67876667E-03	.10174000E-02	.17380000E-02	.28610000E-02	.33520000E-02	690 - 705	
.41443333E-02	.59370000E-02	.67523333E-02	.30486667E-02	.00000000E 00		
.16625000E-03	.52585000E-03	.13010000E-02	.15710000E-02	.20110000E-02	705 - 715	
.25100000E-02	.33105000E-02	.49660000E-02	.42845000E-02	.00000000E 00		
.31855000E-03	.10072500E-02	.26405000E-02	.39005000E-02	.44475000E-02	715 - 725	(300°K
.53035000E-02	.61030000E-02	.77255000E-02	.15720000E-02	.26880000E-03		
.49213333E-04	.15560000E-03	.49213333E-03	.90933333E-03	.10759333E-02	600 - 615	
.16020000E-02	.30946667E-02	.39516667E-02	.37903333E-02	.37100000E-03		
.14713500E-03	.46536000E-03	.14713500E-02	.29420000E-02	.44945000E-02	615 - 625	
.42230000E-02	.34995000E-02	.53695000E-02	.66015000E-02	.00000000E 00		
.12233000E-03	.38695000E-03	.12233000E-02	.24465000E-02	.32485000E-02	625 - 635	
.40630000E-02	.49990000E-02	.51890000E-02	.31860000E-02	.82850000E-03		
.68210000E-03	.11245000E-02	.16655000E-02	.33050000E-02	.52625000E-02	635 - 645	
.58060000E-02	.64290000E-02	.66100000E-02	.57150000E-02	.00000000E 00		
.10468250E-02	.15562500E-02	.31670000E-02	.74130000E-02	.10929250E-01	645 - 665	
.12799250E-01	.12929500E-01	.79430000E-02	.47952500E-02	.00000000E 00		
.69180000E-02	.99970000E-02	.15240000E-01	.20820000E-01	.19420000E-01	665 - 670	
.25690000E-01	.20660000E-01	.19630000E-01	.11241000E-01	.00000000E 00		
.89252500E-03	.12017500E-02	.21815000E-02	.34797500E-02	.46637500E-02	670 - 690	
.63657500E-02	.58612500E-02	.49970000E-02	.51712500E-02	.00000000E 00	670 - 690	
.58560000E-03	.90896667E-03	.12540000E-02	.22646667E-02	.28726667E-02	690 - 705	
.32850000E-02	.43566667E-02	.60143333E-02	.30756667E-02	.32246667E-03		
.95090000E-04	.30070000E-03	.95090000E-03	.15280000E-02	.15930000E-02	705 - 715	
.17970000E-02	.20095000E-02	.29570000E-02	.29925000E-02	.21475000E-03		
.18994000E-03	.60060000E-03	.18994000E-02	.30890000E-02	.40575000E-02	715 - 725	
.41950000E-02	.43260000E-02	.43420000E-02	.49655000E-02	.13435000E-02		

TABLE 12. - PLASS DOPPLER TABLE, TWENTY-FIVE SPECTRAL SUBINTERVALS

					Spectral Sub. Int.	
.15530000E-04	.49120000E-04	.15530000E-03	.49120000E-03	.77020000E-03	600 - 605	(200°K)
.67180000E-03	.36060000E-03	.55880000E-03	.42870000E-03	.00000000E 00		
.15380000E-04	.48640000E-04	.15380000E-03	.48640000E-03	.58260000E-03	605 - 610	
.51950000E-03	.32000000E-03	.75450000E-03	.10740000E-02	.00000000E 00		
.12780000E-04	.40420000E-04	.12780000E-03	.40420000E-03	.61190000E-03	610 - 615	
.61220000E-03	.61310000E-03	.11270000E-02	.46350000E-03	.16860000E-04		
.11700000E-03	.37020000E-03	.11700000E-03	.37020000E-02	.40930000E-02	615 - 620	
.49870000E-02	.29830000E-02	.40580000E-02	.00000000E 00	.00000000E 00		
.17170000E-04	.54300000E-04	.17170000E-03	.54300000E-03	.13620000E-02	620 - 625	
.18320000E-02	.13840000E-02	.11590000E-02	.46690000E-03	.00000000E 00		
.38240000E-04	.12090000E-03	.38240000E-03	.12090000E-02	.17890000E-02	625 - 630	
.16910000E-02	.13790000E-02	.26650000E-02	.12410000E-02	.00000000E 00		
.86020000E-04	.27200000E-03	.86020000E-03	.18090000E-02	.19690000E-02	630 - 635	
.22590000E-02	.35540000E-02	.43280000E-02	.94690000E-03	.00000000E 00		
.34370000E-03	.10070000E-02	.14230000E-02	.24120000E-02	.27790000E-02	635 - 640	
.39650000E-02	.34590000E-02	.35030000E-02	.00000000E 00	.00000000E 00		
.66370000E-03	.27590000E-03	.11300000E-02	.20030000E-02	.36900000E-02	640 - 645	
.44270000E-02	.57270000E-02	.53180000E-02	.39800000E-02	.00000000E 00		
.98900000E-03	.17410000E-02	.40990000E-02	.63500000E-02	.85180000E-02	645 - 650	
.10350000E-01	.10710000E-01	.78260000E-02	.36650000E-02	.00000000E 00		
.90080000E-03	.10840000E-02	.16660000E-02	.35060000E-02	.36990000E-02	650 - 655	
.46430000E-02	.32750000E-02	.40890000E-02	.13520000E-06	.00000000E 00		
.72550000E-03	.97140000E-03	.17490000E-02	.37700000E-02	.36810000E-02	655 - 660	
.47260000E-02	.36970000E-02	.65550000E-02	.70000000E-02	.00000000E 00		
.90980000E-03	.15540000E-02	.35910000E-02	.85560000E-02	.14200000E-01	660 - 665	
.13770000E-01	.96030000E-02	.49080000E-02	.70000000E-02	.00000000E 00		
.51280000E-02	.66150000E-02	.94540000E-02	.13430000E-01	.12390000E-01	665 - 670	
.13810000E-01	.10970000E-01	.11358000E-01	.70000000E-02	.00000000E 00		
.71760000E-03	.94650000E-03	.16700000E-02	.37640000E-02	.36740000E-02	670 - 675	
.41220000E-02	.29930000E-02	.58440000E-02	.70000000E-02	.00000000E 00		
.70650000E-03	.91140000E-03	.15590000E-02	.3066[illegible]000E-02	.33290000E-02	675 - 680	
.37470000E-02	.28610000E-02	.48510000E-02	.70000000E-02	.00000000E 00		
.68420000E-03	.84070000E-03	.13350000E-02	.27420000E-02	.31100000E-02	680 - 685	
.41310000E-02	.34620000E-02	.47700000E-02	.70000000E-02	.00000000E 00		
.65130000E-03	.73690000E-03	.10070000E-03	.18620000E-02	.21950000E-02	685 - 690	
.41090000E-02	.37850000E-02	.52200000E-02	.70700300E-02	.00000000E 00		
.63210000E-03	.67630000E-03	.81580000E-03	.12570000E-02	.21710000E-02	690 - 695	
.28240000E-02	.30150000E-02	.14590000E-02	.11390000E-02	.00000000E 00		
.43070000E-03	.64310000E-03	.71080000E-03	.92490000E-03	.16020000E-02	695 - 700	
.19100000E-02	.20730000E-02	.18470000E-02	.16280000E-02	.00000000E 00		
.14440000E-03	.45670000E-03	.74170000E-03	.10220000E-02	.12690000E-02	700 - 705	
.13690000E-02	.20230000E-02	.33540000E-02	.24330000E-02	.00000000E 00		
.50950000E-04	.16110000E-03	.50950000E-03	.11950000E-02	.11340000E-02	705 - 710	
.94230000E-03	.50730000E-03	.12770000E-02	.20150000E-03	.00000000E 00		
.26650000E-04	.84290000E-04	.26650000E-03	.84290000E-03	.11640000E-02	710 - 715	
.10350000E-02	.62920000E-03	.10090000E-02	.15590000E-02	.00000000E 00		
.28520000E-04	.90190000E-04	.28520000E-03	.90190000E-03	.17440000E-02	715 - 720	
.24310000E-02	.20230000E-02	.12520000E-02	.69670000E-03	.00000000E 00		
.13780000E-03	.43580000E-03	.13780000E-02	.30710000E-02	.30970000E-02	720 - 725	(250°K)
.31790000E-02	.19420000E-02	.32800000E-02	.34980000E-03	.00000000E 00		
.36330000E-04	.11490000E-03	.36330000E-03	.90190000E-03	.88010000E-03	600 - 605	
.81110000E-03	.59300000E-03	.18590000E-02	.90990000E-03	.13520000E-03	605 - 610	
.31850000E-04	.10070000E-03	.31850000E-03	.69250000E-03	.71080000E-03		

TABLE 12. - PLASS DOPPLER TABLE, TWENTY-FIVE SPECTRAL SUBINTERVALS - Concluded

					Spectral Sub. Int.	
.76900000E-03	.99780000E-03	.27520000E-02	.26840000E-02	.00000000E 00	605 - 610	(250°K) (Cont'd)
.25460000E-04	.80510000E-04	.25460000E-03	.72650000E-03	.81870000E-03	610 - 615	
.11090000E-02	.17990000E-02	.40640000E-02	.84930000E-03	.00000000E 00		
.44930000E-03	.14200000E-02	.44930000E-02	.59470000E-02	.74690000E-02	615 - 620	
.92740000E-02	.83360000E-02	.73730000E-02	.23290000E-02	.00000000E 00		
.62650000E-04	.19810000E-03	.62650000E-03	.19810000E-02	.31170000E-02	620 - 625	
.37620000E-02	.40080000E-02	.75100000E-02	.14650000E-02	.14980000E-02		
.13140000E-03	.41550000E-03	.13140000E-02	.22280000E-02	.37980000E-02	625 - 630	
.41230000E-02	.56560000E-02	.45420000E-02	.46650000E-02	.00000000E 00		
.26470000E-03	.83720000E-03	.18710000E-02	.29610000E-02	.46560000E-02	630 - 635	
.58500000E-02	.64180000E-02	.77720000E-02	.36930000E-02	.83300000E-03		
.70130000E-03	.12690000E-02	.20410000E-02	.41240000E-02	.56470000E-02	635 - 640	
.55220000E-02	.61240000E-02	.43910000E-02	.22150000E-02	.00000000E 00		
.81150000E-03	.10870000E-02	.19590000E-02	.39550000E-02	.56790000E-02	640 - 645	
.61890000E-02	.80240000E-02	.89930000E-02	.10910000E-01	.00000000E 00		
.11770000E-02	.22450000E-02	.56220000E-02	.11770000E-01	.16830000E-01	645 - 650	
.20570000E-01	.17450000E-01	.10690000E-01	.97370000E-02	.00000000E 00		
.10840000E-02	.14580000E-02	.26390000E-02	.38310000E-02	.59830000E-02	650 - 655	
.75570000E-02	.63620000E-02	.43330000E-02	.47510000E-02	.00000000E 00		
.87430000E-03	.12860000E-02	.25870000E-02	.41180000E-02	.56580000E-02	655 - 660	
.70990000E-02	.53300000E-02	.30560000E-02	.47460000E-02	.00000000E 00		
.96050000E-03	.15580000E-02	.34490000E-02	.94290000E-02	.16180000E-01	660 - 665	
.20580000E-01	.21770000E-01	.12198000E-01	.70000000E-02	.00000000E 00		
.74270000E-02	.11650000E-01	.17200000E-01	.21360000E-01	.24250000E-01	665 - 670	
.24910000E-01	.17040000E-01	.63650000E-02	.70000000E-02	.00000000E 00		
.89880000E-03	.13630000E-02	.28320000E-02	.39740000E-02	.61580000E-02	670 - 675	
.69660000E-02	.72270000E-02	.71630000E-02	.70000000E-02	.00000000E 00		
.91950000E-03	.14280000E-02	.24510000E-02	.33140000E-02	.55650000E-02	675 - 680	
.68640000E-02	.65010000E-02	.87530000E-02	.77667000E-02	.00000000E 00		
.91360000E-03	.14100000E-02	.24040000E-02	.31670000E-02	.55800000E-02	680 - 685	
.73200000E-02	.66410000E-02	.79750000E-02	.83960000E-02	.00000000E 00		
.86650000E-03	.12610000E-02	.23120000E-02	.28750000E-02	.46550000E-02	685 - 690	
.67790000E-02	.81050000E-02	.10990000E-01	.97340000E-02	.00000000E 00		
.82850000E-03	.11410000E-02	.21290000E-02	.31230000E-02	.41280000E-02	690 - 695	
.49620000E-02	.48480000E-02	.51190000E-02	.32770000E-02	.00000000E 00		
.77520000E-03	.97240000E-03	.15960000E-02	.27830000E-02	.28860000E-02	695 - 700	
.36320000E-02	.62320000E-02	.46580000E-02	.39010000E-02	.00000000E 00		
.43260000E-03	.93880000E-03	.14890000E-02	.26770000E-02	.30420000E-02	700 - 705	
.38390000E-02	.67310000E-02	.10480000E-01	.19680000E-02	.00000000E 00		
.21810000E-03	.68980000E-03	.14580000E-02	.16550000E-02	.22760000E-02	705 - 710	
.24560000E-02	.28410000E-02	.40330000E-02	.22230000E-02	.00000000E 00		
.11440000E-03	.36190000E-03	.11440000E-02	.14870000E-02	.17460000E-02	710 - 715	
.25640000E-02	.37800000E-02	.58990000E-02	.63460000E-02	.00000000E 00		
.17410000E-03	.55050000E-03	.17410000E-02	.40000000E-02	.42690000E-02	715 - 720	
.51210000E-02	.54270000E-02	.96690000E-02	.15180000E-02	.53760000E-03		
.46300000E-03	.14640000E-02	.35400000E-02	.38010000E-02	.46260000E-02	720 - 725	(300°K)
.54860000E-02	.67790000E-02	.57820000E-02	.16260000E-02	.00000000E 00		
.59620000E-04	.18850000E-03	.59620000E-03	.10080000E-02	.10290000E-02	600 - 605	
.10940000E-02	.14040000E-02	.30660000E-02	.20810000E-02	.11130000E-02		
.48800000E-04	.15430000E-03	.48800000E-03	.80950000E-03	.93980000E-03	605 - 610	
.13510000E-02	.27540000E-02	.45380000E-02	.64950000E-02	.00000000E 00		
.39220000E-04	.12400000E-03	.39220000E-03	.91050000E-03	.12590000E-02	610 - 615	
.23610000E-02	.51260000E-02	.42510000E-02	.27950000E-02	.00000000E 00		
.25880000E-03	.81860000E-03	.25880000E-02	.47630000E-02	.61690000E-02	615 - 620	

AZIMUTH OPTION

The usual model for radiance calculation uses as input only one temperature profile and one pressure profile. The azimuth option allows the user to study the effect of having the scan line pass through two different sets of input profiles (see Figure 4). For a given angle ψ, calculate the altitude ZTST at which the atmosphere must be changed from temperature and pressure profiles number one to temperature and pressure profiles number two. As the scan line is followed doing the usual calculations with atmosphere number one as input, the altitude ZTST is encountered. The data of the two atmospheres for the shell containing ZTST are averaged to allow a smoother transition from the first atmosphere to the second. Using this averaged data, the calculations for that shell are completed. When the next and successive shells are considered, the data from the second atmosphere is used exclusively.

When the next tangent height is considered, atmosphere number one is again used to begin the calculation, and a new altitude ZTST is calculated.

At each tangent height, the altitude ZTST is computed using

$$ZTST = \frac{H_T + R_E}{\cos(0.0174533\,\psi)}$$

where ψ is in radians.

TRANSMISSIVITY GATE

Under this option, at each shell, the total transmittance is calculated across the complete spectral interval $\nu_1 = 600\ cm^{-1}$ to $\nu_2 = 725\ cm^{-1}$. If, in a given shell, this total transmittance is less than a given value τ_{gate} it is concluded that further calculation down the scan line can be neglected since all radiation beyond that point is nearly all absorbed. That is, if

$$\sum_{i=1}^{25} \tau(T_T, s, \nu_i) \leq \tau_{gate}$$

the iteration on shells is ended and the computation with the next tangent height is begun.

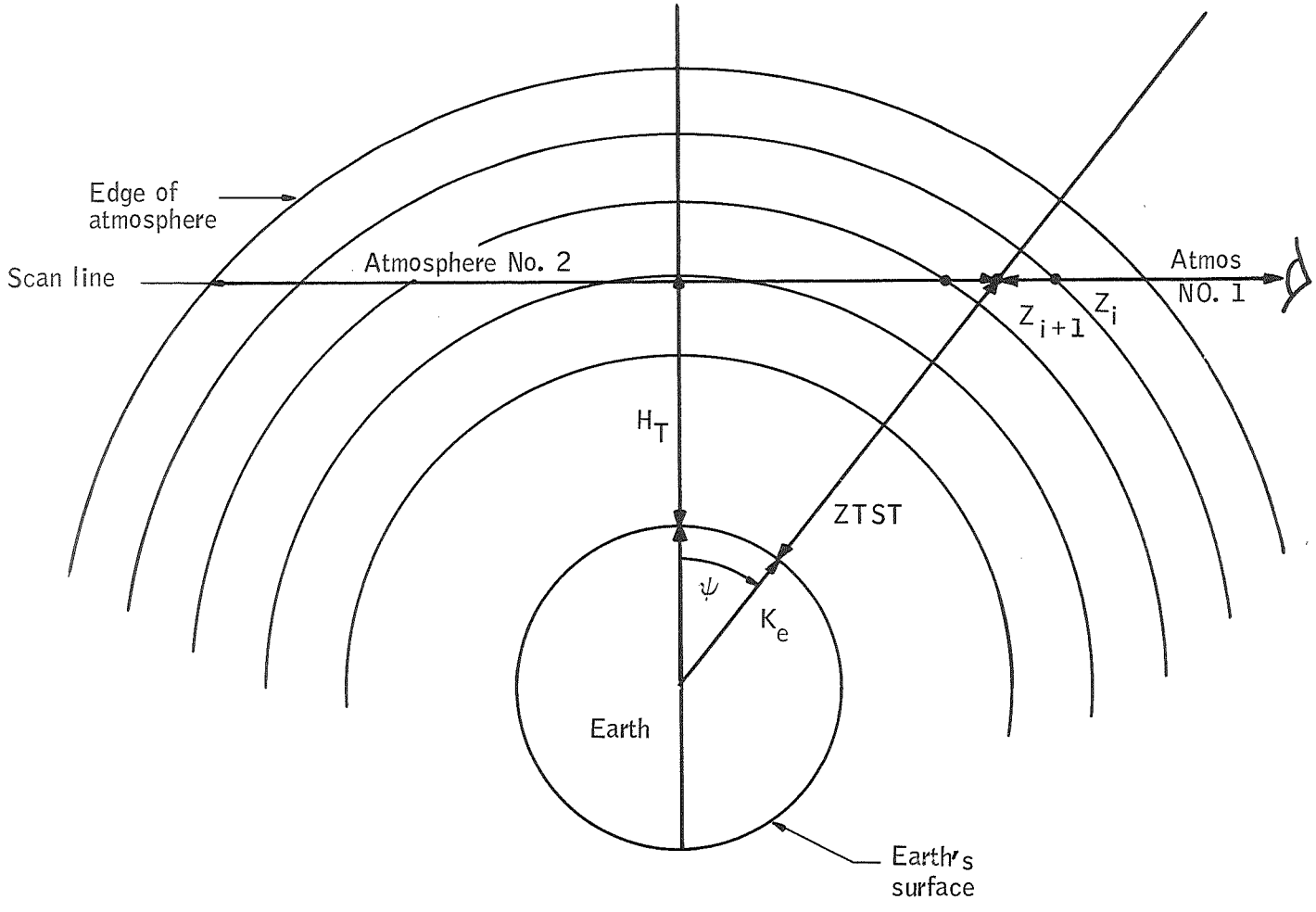

Figure 4. Azimuth

CLOUD STUDY OPTION

This option uses essentially the same procedure as in the transmissivity gate option. The calculations along a given scan line are continued until a cloud is encountered at some altitude. Then the shell iteration is ended and a new tangent height sought. This assumes that all radiance produced beyond the cloud has been absorbed by the cloud. The cloud altitudes are read in as input data.

USAGE

It is important in any scientific study to use a controlled experiment to furnish data upon which the analysis is to be performed. It was with this in mind that program CORPS was written. Program CORPS was designed to synthesize horizon radiance profiles of the Earth to study cause and effect relationships between atmospheric phenomena and variations in the horizon profile in the carbon dioxide band, 600 cm^{-1} to 725 cm^{-1}.

CORPS provides a simple system with which the user can study desired variables in the atmospheric model in many combinations. The available combinations of computational options are graphically presented in Table 13. To include an option in the computations, the user enters the integer one (1) into the appropriate column of the computation option control card (see input data section). Columns for unused options are left blank. Illegal option combinations will be detected and common output will indicate that an error in option selection has been made. Since Doppler broadening cannot be used with any of the three Elsasser transmittance models, if any of these combinations are selected, CORPS will proceed with the calculations ignoring the request for Doppler broadening.

BASIC PROGRAM STRUCTURE

Input

All input data for all computational options are always read in except for azimuth and cloud data. AZIMUTH AND CLOUD DATA ARE READ IN ONLY WHEN THESE OPTIONS ARE INCLUDED. All input data are then converted into proper units, all constants are set, and the iterations are initialized. Atmospheric temperature and pressure data are read in. This defines altitudes for a series of shells in each of which the temperature and pressure are constant. These artificial shells are then used to approximate the temperature-pressure variations in the actual atmosphere.

TABLE 13. - AVAILABLE COMBINATIONS OF COMPUTATIONAL OPTIONS

	Clouds	Trans. Gate	Refraction	Azimuth	Thermal Equilibrium	Doppler Broadening	CO_2 - Plass	CO_2 - Elsasser	H_2O - Elsasser	O_3 - Elsasser	Weighting Func.	Filters
Clouds												
Transmissivity Gate	X											
Refraction	X	X										
Azimuth	O	X	X									
Thermal Equil.	X	X	X	X								
Doppler Broadening	X	X	X	X	X							
CO_2 - Plass	X	X	X	X	X	X						
CO_2 - Elsasser	X	X	X	X	X	O	O					
H_2O - Elsasser	X	X	X	X	X	O	X	X				
O_3 - Elsasser	X	X	X	X	X	O	X	X	X			
Weighting Functions	O	X	X	O	X	X	X	X	X	X		
Filters	X	X	X	X	X	X	X	X	X	X	X	

Computation

Each virtual tangent height $(H_T)_j$ is taken in sequence from the table of input data and the iteration along the resulting scan line from the near edge of the atmosphere is initiated (see Figure 1). As the iteration proceeds along the scan line, the following are calculated for each shell the scan line traverses:

	Symbol
• The path length, Δs, within the shell	DS
• Average shell temperature	TAV
• Average shell pressure	PAV
• The effective shell temperature	TBAR
• The effective shell pressure	PBAR
• Running total of the optical depth	U
• Running total of the transmissivity, τ	TAUCOR(NQ)
• Running total of the spectral subinterval radiances, $N(H_T, \nu)$, for each of the NN spectral subintervals	RT2(NQ)

Output

When all virtual tangent heights have been processed, the program writes out the radiance profile it has just calculated and reads in another set of atmospheric temperature and pressure data to begin another radiance profile computation. When the final set of atmospheric temperature and pressure data has been processed, the program stops. For a graphical description of the computational procedure, see Figure 5.

COMPUTATIONAL OPTIONS

Computational options are graphically presented in Table 13. For CORPS to use the options correctly, the user must be certain that appropriate input data are ready and in proper order to be read in by the program. Standard data sequence and common data values are given in Section 5. The discussion here gives data that are required for the individual computations options.

NOTE: THE DATA FOR ALL THE OPTIONS EXCEPT AZIMUTH AND CLOUDS MUST BE READ IN EACH TIME THE PROGRAM IS RUN REGARDLESS OF WHICH OPTIONS ARE SELECTED.

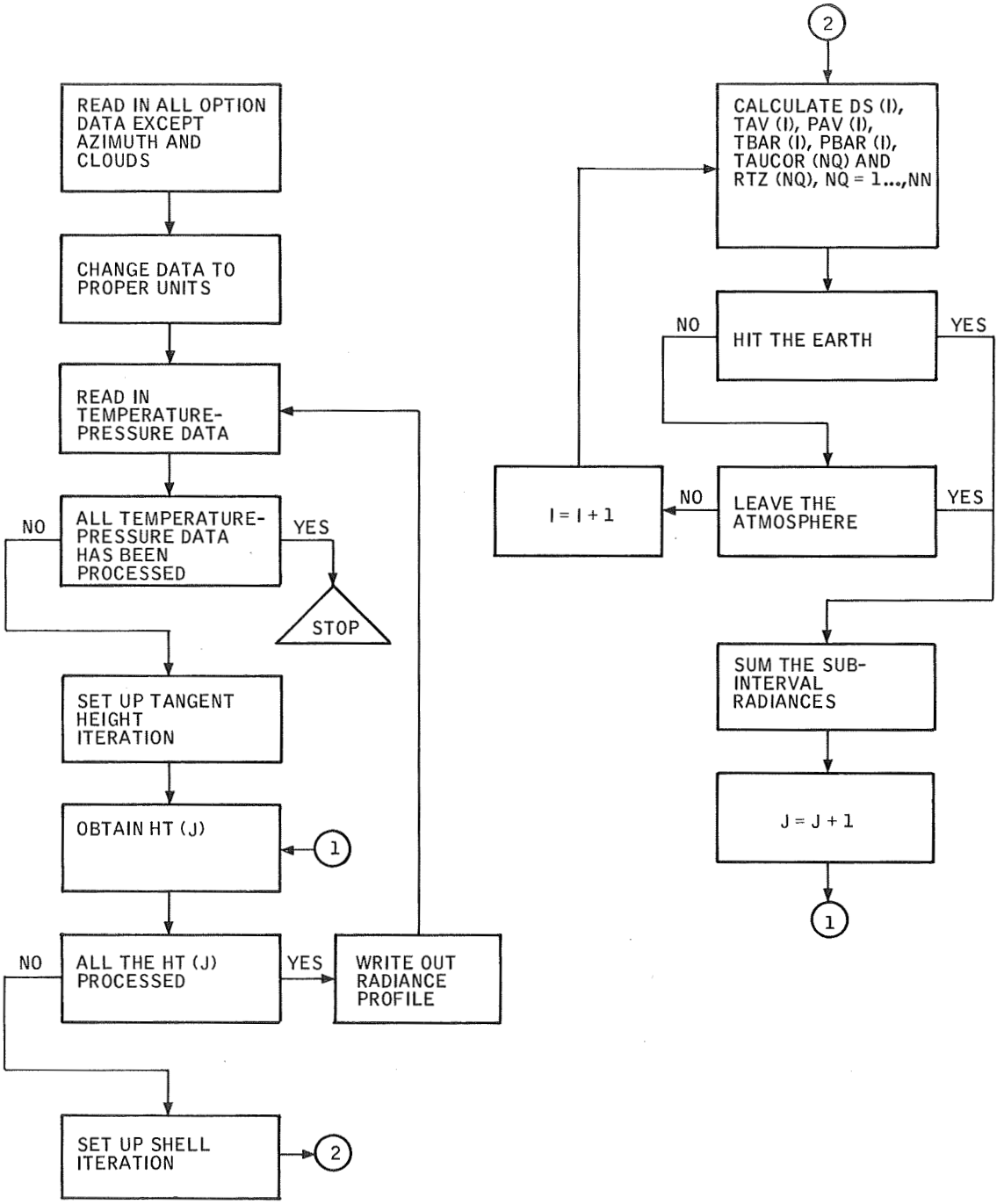

Figure 5. Abbreviated Flow Chart of Basin Program

Standard Program

The standard program contains only the basic methods used in calculating the radiance profile. Data needed for the basic calculation is given below:

Parameter	Description	Format
DES	Run description or title	18A4
NN	Number of spectral subintervals	I3
M	Number of tangent heights	I3
HT	Table of virtual tangent heights, km	24F3.0
DV	Spectral subinterval widths, cm^{-1}	10F2.0
C0, C1, C2, C3 A1, A2, B1, B2	8*NN values of Plass transmittance coefficients (see Tables 1 and 2)	(16x, 5(E10.4, 6x))
WAVEL	NN values of the center points of the spectral subintervals	5E15.8
MA1, . . . , MA11	Computational options	11I1
WW1	Table of CO_2 concentration as a function of altitude, 1 km resolution	5E10.4
FILTER	Radiance summation filter	5E15.8
T	Table of atmospheric temperature data as a function of altitude, km	F4.1
P	Table of atmospheric pressure data as a function of altitude, mb	E10.4
Z	Altitudes, km	F3.1
N	Number of atmospheric data points	I4
LABEL	Numeric label of atmosphere	

The remainder of the standard data are constants and are treated as constants in the program. They are listed in the table of coding variables. Examples are standard temperature, T_o = 273.0 (°K), and standard pressure, P_o = 1000 (mb).

Clouds

Parameter	Description	Format
NOHTS	Number of cloud altitudes	I2
NCLOUD	Table of cloud altitudes (km)	E10.4

The Transmissivity Gate

The transmissivity gate allows the iteration along the scan line to terminate when the sum of spectral transmittances is less than the set value of TAUGATE. It is assumed that all radiation beyond this point is so small that it can be neglected. The format for TAUGATE is E10.4.

The Refraction Option

The refraction option requires no extra data.

The Azimuth Option

The azimuth option requires the angles, ψ, at which the atmosphere is changed to the second set of temperature and pressure data. This second set of temperature and pressure data must also be read in.

Parameter	Description	Format
NPSI	Number of Azimuth angles to be read in	I2
PSI	Table of Azimuth angles, ψ	18F4.1
T	Second set of atmospheric temperature	F4.1
P	Pressure data at the same altitudes as the first set	

Local Thermal Equilibrium Option

The local thermal equilibrium option requires no extra data.

Doppler Broadening

Parameter	Description	Format
A	Ten arguments of u for the table	5E15.8
B	Three arguments of $\bar{T}$ for the table	5E15.8
TBL	3 x 10 x NN elements of the table	5E15.8

Plass Carbon Dioxide Transmittance Option

The Plass carbon dioxide transmittance option is commonly used as the standard transmissivity calculation for carbon dioxide. For a description of the data required, see subsection on standard program.

Elsasser Carbon Dioxide Transmittance Option

Parameter	Description	Format
BARLC	Generalized absorption coefficients, (see Table 9)	5E15.8
CORLU, CORLUA	Correction for the reduced optical depth (see Table 8)	5E15.8
TRANAC, TRANSC	Transmittance table (see Table 10)	5E15.8

Elsasser Water Vapor Transmittance Option

Parameter	Description	Format
BARLH	Generalized absorption coefficients (see Table 5)	5E15.8
CONTUM	Corrected continuum absorption coefficients (see Table 7)	5E15.8
TRANAH, TRANSH	Band transmittance table (see Table 6)	5E15.8

Elsasser Ozone Transmittance Option

Parameter	Description	Format
BARLO	Generalized absorption coefficients (see Table 3)	5E15.8
TRANAO, TRANSO	Transmittance table (see Table 4)	5E15.8

Weighting Function Option

The weighting function option requires no extra data.

COMMON OUTPUT

The common output contains run titles, normal program listing, various flags, and special option output such as weighting functions. For details see the section on output data. The common output flags are as follows:

Stop 77 - Logical End

Illegal Option Combinations - Azimuth, Clouds

Illegal Option Combinations - Azimuth, Weighting Functions

Illegal Option Combinations - Weighting Functions, Clouds

Illegal Option Combinations - Plass CO_2, Elsasser CO_2

OUTPUT OPTIONS

The program computes two types of radiance profiles, spectral subinterval radiance versus tangent height and total radiance versus tangent height. These two types of profiles can be obtained in any or all of three ways, magnetic tape output, common output, or plotted output. For a description of the subroutine PLOT, see Appendix A. To obtain a certain output option, integer one (1) is put in the appropriate column of the output option control card (see input data section). Care must be exercised in being certain that at least one type of output is specified. If none of the output options is specified, the program will not write anything out.

RUNNING TIMES

Program running time varies with the number of shells in the atmospheric data, the number of tangent heights, the number spectral subintervals, the number and type of computational options, and the number and type of output options. Running times observed during the use of CORPS are given in Table 14.

Computational Requirements

The CORPS program language is FORTRAN IV and the library subroutines required are as follows:

- ALOG - $\log_e x$
- ALOG10 - $\log_{10} x$
- EXP - e^x

TABLE 14. - RUNNING TIME PER SYNTHESIZED PROFILE ON HONEYWELL H-1800 COMPUTER

Running time (min. :sec)	Number of shells	Number of tangent hts	Number of Spectral int.	Special options
2:30	67	69	10	Doppler, Local Thermal Equilibrium, τ Gate, Refraction
4:35	67	69	20	" "
6:30	67	69	30	" "
:42	90	50	1	Basic program only (no options)
1:21	90	50	4	"
2:37	90	50	10	"
7:00	90	50	30	"

- COS - cosine (x)
- SQRT - $\sqrt{x}$
- ABS - $|x|$

The program uses 18 000 memory locations and needs at least one input unit and one output unit for its operation, which a maximum of two input units and four output units.

Variable unit assignments are as follows:

- L1 - Common input
- L2 - Common output
- L3 - Atmospheric temperature and pressure data (input)
- L4 - NN spectral subinterval radiances (output)
- L5 - Total radiance (output)
- L6 - Not used

CODING INFORMATION

FIXED POINT VARIABLES

L1	Variable unit symbol for common input
L2	Variable unit symbol for common output
L3	Variable unit symbol for tape input
L4	Variable unit symbol for spectral interval output
L5	Variable unit symbol for total radiance output
L6	Variable unit symbol not assigned
NN	Number of spectral subintervals
M	Number of virtual tangent heights
I	Index for input and for scan line iteration
NQ2	Input index for Doppler tables
NQQ	Input index for Doppler tables
NQ3	Input index for Doppler tables
MA1	Computation option - cloud study
MA2	Computation option - transmissivity gate
MA3	Computation option - refraction
MA4	Computation option - azimuth study
MA5	Computation Option - local thermal equilibrium
MA6	Computation option - Doppler broadening
MA7	Computation option - Plass CO_2
MA8	Computation option - Elsasser CO_2
MA9	Computation option - Elsasser H_2O
MA10	Computation option - Elsasser O_3
MA11	Computation option - weighting functions
NUMHTS	Number of cloud altitudes
III	Index for setting Doppler effect to zero
NPSI	Number of azimuth variation iterations
IQ	Cloud iteration index
IEND	Index on the number of atmospheres processed
IABC	Azimuth variation iteration index

N	Number of shell in atmosphere
LABEL	Atmosphere identification
ITT	Subscript denoting azimuth atmosphere
JJ	Index for the tangent height iteration
ICCC4	Shell index constant
ER	Progressional index for Doppler interpolation
IA	Optical depth argument for Doppler table
IB	Effective temperature index for Doppler table
M3	Index for scan line iteration leaving atmosphere
IENDD	Maximum number of shell for scan line iteration
IC	Indicator for scan line iteration at tangent height altitude
JC	Indicator for center shell at tangent height altitude
MM	Equal number of shell minus 1
IO	Following index for shell boundary in scan line iteration
IL	Leading index
NDL	Exit for Block 100, shell data calculation
ND2	Exit for Block 200, transmissivity and radiance calculation
NSHELL	Number of shells traversed in scan line iteration
L	Index in gas concentration table look-up
LL	Index in gas concentration table look-up
NQ	Utility index
MM2	Index in initializing transmittances to zero
INDEX	General Doppler table look-up index
IND	Equals INDEX plus 1
J	Index on optical depth look-up in Doppler table
K	Index on effective temperature look-up in Doppler table
IJ	Index on radiance summation
M3M	Equals m times NN
MB1	Spectral subinterval radiance common output
MB2	Spectral subinterval radiance plotted output
MB3	Total radiance common output
MB4	Total radiance plotted output

FIXED POINT ARRAYS

The program contains no fixed point arrays.

REAL SINGLE VARIABLES

TAUGAT	Transmissivity gate
TO	Temperature at standard conditions
THETA	Constant in Planck black body calculation
RE	Radius of the Earth (cm)
R1	Constant in Planck black body calcuation
T2	Constant in Planck black body calculation
PO	Pressure at standard conditions
Q	Indicator for boundary condition
H	Virtual tangent height being used in iteration (cm)
RH	$(RE + H)^2$
PAV	Average shell pressure
TAV	Average shell temperature
ETA	Refraction effect value
S2	Previous optical path length
ZPREV	Previous shell altitude
PSUM	Effective pressure summation
SU	Total optical depth
TSUM	Effect temperature summation
USUMO	O_3 U* sum calculation for Elsasser
USUMH	H_2O U* sum calculation for Elsasser
USUMC	CO_2 U* sum calculation for Elsasser
SN	Differential sign for scan line iteration
PSS	Azimuth angle being used
CPSS	Cosine of PSS
HPRE	H + RE
ZTST	Test altitude for azimuth calculation
ZBAR	Average shell altitude
PT	Standard condition for temperature-pressure ratios

SPHI	Test angle for scan line iteration at tangent height
S1	Present optical path length
DZ	Change in altitude for one increment along scan line
DS	Change in optical path length for one increment along scan line
AL	Index used in calculating gas concentration
WWW	Gas concentration value
DU	Change in total optical depth for one increment along scan line
TBAR	Effective temperature value
PBAR	Effective pressure value
COG	Varying constant in Elsasser transmittance calculations
ARGB	Arguments used in Plass and Elsasser calculations
ARGA	Arguments used in Plass and Elsasser calculations
AA	Coefficient in Elsasser transmittance calculations
FUN	$\log_e$ (SU*PBAR), argument in Plass Doppler calculations
EER	Sum of transmittance values
RA	Ratio used in Doppler table look-up
SLOPE 1	Extrapolation slope in Doppler calculation
CONST1	Extrapolation constant in Doppler calculation
V1	Extrapolation value in Doppler calculation
SLOPE 2	Extrapolation slope in Doppler calculation
CONST 2	Extrapolation constant in Doppler calculation
V2	Extrapolation value in Doppler calculation
RB	Ratio used in Doppler table look-up
YBAR	Intermediate value in Plass CO_2 calculation
Y	Intermediate value in Plass CO_2 calculation
TPOWER	Intermediate value in Plass CO_2 calculation
DT	Change in transmittance for one increment along scan line
BB	Planck black body value
VLAMDA	Local thermal equilibrium intermediate value
VLTE	Local thermal equilibrium effect value
DR	Change in radiance
HTP	Real tangent height
DIF	Ratio for altering shell structure at tangent height altitude
PPP	Temporary storage for original shell pressure

TTT	Temporary storage for original shell temperature
HTPPR	Previous value of tangent height
ZZZ	Temporary storage for original shell altitude

REAL ARRAY

BARLO	Elsasser generalized O_3 absorption coefficients
BARLC	Elsasser CO_2 absorption coefficients
BARLH	Elsasser generalized H_2O absorption coefficients
TRANSO	Elsasser O_3 transmittance argument table
TRANAO	Elsasser O_3 transmittance value
CONTUM	Elsasser H_2O continuum table
TRANSH	Elsasser H_2O transmittance argument table
TRANAH	Elsasser H_2O transmittance value
CORLU	Elsasser CO_2 corrected $\log_{10}u^*$ table arguments
CORLUA	Elsasser CO_2 corrected $\log_{10}u^*$ table values
TRANSC	Elsasser CO_2 transmittance argument table
TRANAC	Elsasser CO_2 transmittance value
FILTER	Spectral interval radiance filter values
WW3	O_3 gas concentration table
DESCRI	Table containing run description label
NCLOUD	Table of cloud study altitudes
T	Atmospheric temperature data
P	Atmospheric pressure data
Z	Atmospheric altitude data
HT	Virtual tangent heights
TAUPR	Previous values of transmittance values
WAVEL	Spectral interval average values or centers
RT	Spectral interval radiance intermediate values
TAUCOR	CO_2 transmittance values and final transmittance values
RT2	Spectral interval radiances
R2TOT	Total radiance values
ARRAYZ	Argument array for weighting functions
DV	Table of spectral interval widths

C0	Plass transmittance coefficient
C1	Plass transmittance coefficient
C2	Plass transmittance coefficient
C3	Plass transmittance coefficient
A1	Plass transmittance coefficient
A2	Plass transmittance coefficient
B1	Plass transmittance coefficient
B2	Plass transmittance coefficient
A	Plass Doppler table optical depth arguments
B	Plass Doppler table effective temperature arguments
TBL	Plass Doppler table
VAL	Plass Doppler effect values
PSI	Azimuth angles
WW1	CO_2 gas concentrations
WW2	H_2O gas concentrations
DTDZ	Weighting function values
TAUO3	O_3 transmittance values
$TAUH_2O$	H_2O transmittance values

INPUT DATA

The following card input data are required. For an example, see Table 15.

Data Sequence	Format	Parameter	Description
1	18A4	DES	Run description on title
2	10A1	AN	Plot data
3	10I3	MV	Plot data
4	6A6	PERIOD, PLUS DASH, MINUS BLANK, HPLOT	Plot data
5	I3	NN	Number of spectral subintervals
6	I3	M	Number of tangent heights
7	24F3.0	HT	Tangent heights 24 per card
8	10F2.0	DV	Spectral interval widths
9	(16X, 5 (E10.4, 6X))	C0, C1, C2 C3, A1, A2 B1, B2	200 values of coefficients for Plass data curve fit
10	5E15.8	WAVEL	25 values of wave number average value or center of spectral interval, cm^{-1}
11	5E15.8	A	10 augment values of u for Plass Doppler table
12	5E15.8	B	3 augment value of $\bar{T}$ for Plass Doppler table
13	5E15.8	TBL	Plass Doppler table
14	5E15.8	BARLO, BARLC, BARLH	Generalized Elsasser absorption coefficients O_3, CO_2, H_2O
15	5E15.8	TRANSO TRANAO	Elsasser ozone transmittance table
16	5E15.8	CONTUM	Elsasser H_2O continum absorption
17	5E15.8	TRANSH, TRANAH	Elsasser H_2O transmittance table
18	5E15.8	CORLU, CORLUA	Elsasser correction table for CO_2, $\log_{10} j^*$

TABLE 15. - EXAMPLE OF INPUT DATA CARDS

```
*DATA
PROGRAM CORPS-COMPREHENSIVE RADIANCE PROFILE SYNTHESIZER
025069
-30-25-20-15-10-08-06-04-0200000100200300400500600700800900100110120130 14
015016017018019020021022023024025026027028029030031032033034035036037038
039040041042043044045046047048049050052054056058060065070075080
050505050505050505050505050505050505050505050505050505
 600 - 605  C0 =-.2059E 01  C1 = .5345E 00  C2 = .4735E-03  C3 = .1754E-03
 600 - 605  A1 = .2845E-01  A2 =-.3544E-04  B1 =-.1988E-03  B2 = .1970E-07
 605 - 610  C0 =-.2066E 01  C1 = .5429E 00  C2 = .9158E-03  C3 = .7054E-04
 605 - 610  A1 = .2508E-01  A2 =-.3183E-04  B1 =-.2967E-03  B2 = .3035E-06
 610 - 615  C0 =-.1913E 01  C1 = .5367E 00  C2 = .1018E-02  C3 = .4015E-03
 610 - 615  A1 = .2500E-01  A2 =-.3103E-04  B1 =-.1348E-02  B2 = .2423E-05
 615 - 620  C0 =-.6496E 00  C1 = .4670E 00  C2 =-.1117E-01  C3 =-.5972E-03
 615 - 620  A1 = .2427E-01  A2 =-.3255E-04  B1 =-.1429E-03  B2 =-.6601E-06
 620 - 625  C0 =-.9708E 00  C1 = .4881E 00  C2 =-.3081E-02  C3 = .8933E-04
 620 - 625  A1 = .2466E-01  A2 =-.3254E-04  B1 =-.1147E-02  B2 = .1682E-05
 625 - 630  C0 =-.1094E 01  C1 = .5227E 00  C2 = .9985E-03  C3 = .1969E-03
 625 - 630  A1 = .2064E-01  A2 =-.2516E-04  B1 =-.7863E-03  B2 = .1244E-05
 630 - 635  C0 =-.7126E 00  C1 = .5259E 00  C2 = .4944E-02  C3 = .6003E-03
 630 - 635  A1 = .1731E-01  A2 =-.2070E-04  B1 = .3972E-04  B2 =-.2974E-06
 635 - 640  C0 =-.4273E 00  C1 = .5258E 00  C2 = .4451E-02  C3 = .4902E-03
 635 - 640  A1 = .1074E-01  A2 =-.1133E-04  B1 =-.8162E-04  B2 = .1052E-06
 640 - 645  C0 =-.5124E-01  C1 = .5226E 00  C2 = .2344E-02  C3 = .3125E-03
 640 - 645  A1 = .8374E-02  A2 =-.9330E-05  B1 =-.1409E-03  B2 = .1398E-06
 645 - 650  C0 = .5226E 00  C1 = .5209E 00  C2 = .2917E-02  C3 = .4480E-03
 645 - 650  A1 = .3873E-02  A2 =-.2421E-05  B1 =-.2004E-03  B2 = .1608E-06
 650 - 655  C0 = .4233E 00  C1 = .5475E 00  C2 = .1223E-01  C3 = .1234E-02
 650 - 655  A1 =-.6438E-03  A2 = .2341E-05  B1 = .5680E-03  B2 =-.1662E-05
 655 - 660  C0 = .3158E 00  C1 = .5657E 00  C2 = .1514E-01  C3 = .1334E-02
 655 - 660  A1 =-.2864E-02  A2 = .4484E-05  B1 = .3343E-03  B2 =-.1000E-05
 660 - 665  C0 = .7340E 00  C1 = .5043E 00  C2 = .4062E-02  C3 = .7427E-03
 660 - 665  A1 =-.2866E-02  A2 = .4004E-05  B1 =-.2181E-02  B2 = .4345E-05
 665 - 670  C0 = .1581E 01  C1 = .4545E 00  C2 =-.7751E-02  C3 =-.1627E-03
 665 - 670  A1 =-.1849E-02  A2 = .1799E-05  B1 = .3196E-02  B2 =-.7419E-05
 670 - 675  C0 = .5982E 00  C1 = .4893E 00  C2 = .2140E-01  C3 = .2304E-02
 670 - 675  A1 =-.2964E-02  A2 = .5146E-05  B1 = .5660E-03  B2 =-.2058E-05
 675 - 680  C0 = .3750E 00  C1 = .5768E 00  C2 = .1620E-01  C3 = .1371E-02
 675 - 680  A1 =-.3190E-02  A2 = .5444E-05  B1 =-.5589E-03  B2 = .6459E-06
 680 - 685  C0 = .3085E 00  C1 = .5622E 00  C2 = .1288E-01  C3 = .1098E-02
 680 - 685  A1 = .1207E-02  A2 =-.1181E-05  B1 =-.1148E-02  B2 = .1942E-05
 685 - 690  C0 = .7475E-01  C1 = .5635E 00  C2 = .1304E-01  C3 = .1087E-02
 685 - 690  A1 = .4749E-02  A2 =-.4402E-05  B1 = .3228E-02  B2 =-.6662E-05
 690 - 695  C0 =-.1999E 00  C1 = .5443E 00  C2 = .7285E-02  C3 = .5822E-03
 690 - 695  A1 = .1094E-01  A2 =-.1318E-04  B1 =-.9946E-03  B2 = .1565E-05
 695 - 700  C0 =-.5606E 00  C1 = .5394E 00  C2 = .7133E-02  C3 = .6003E-03
 695 - 700  A1 = .1667E-01  A2 =-.2118E-04  B1 =-.7771E-03  B2 = .1322E-05
 700 - 705  C0 =-.8201E 00  C1 = .5369E 00  C2 = .5191E-02  C3 = .4480E-03
 700 - 705  A1 = .2395E-01  A2 =-.3179E-04  B1 =-.7774E-03  B2 = .1184E-05
 705 - 710  C0 =-.1199E 01  C1 = .5312E 00  C2 = .4247E-02  C3 = .4863E-03
 705 - 710  A1 = .2737E-01  A2 =-.3638E-04  B1 =-.1020E-02  B2 = .1640E-05
 710 - 715  C0 =-.1552E 01  C1 = .5436E 00  C2 = .2749E-02  C3 = .1488E-03
 710 - 715  A1 = .2574E-01  A2 =-.3124E-04  B1 =-.4845E-03  B2 = .5831E-06
```

TABLE 15. - EXAMPLE OF INPUT DATA CARDS - Continued

```
715 - 720   C0 =-.8974E 00   C1 = .4765E 00   C2 =-.6213E-02   C3 =-.1930E-03
715 - 720   A1 = .2479E-01   A2 =-.3091E-04   B1 =-.8478E-03   B2 = .1159E-05
720 - 725   C0 =-.7514E 00   C1 = .4525E 00   C2 =-.1445E-01   C3 =-.8852E-03
720 - 725   A1 = .2027E-01   A2 =-.2585E-04   B1 =-.5027E-03   B2 =-.3843E-07
602.5   607.5   612.5   617.5   622.5   627.5   632.5   637.5   642.5   647.5
652.5   657.5   662.5   667.5   672.5   677.5   682.5   687.5   692.5   697.5
702.5   707.5   712.5   717.5   722.5
  -3.E 00  -2.5E 00   -2.E 00  -1.5E 00   -1.E 00
 -0.5E 00   0.0E 00    .5E 00   1.E 00   1.5E 00
  2.E 02   2.5E 02   3.E 02
 .15530000E-04  .49120000E-04  .15530000E-03  .49120000E-03  .77020000E-03
 .67180000E-03  .36060000E-03  .55880000E-03  .42870000E-03  .00000000E 00
 .15380000E-04  .48640000E-04  .15380000E-03  .48640000E-03  .58260000E-03
 .51950000E-03  .32000000E-03  .75450000E-03  .10740000E-02  .00000000E 00
 .12780000E-04  .40420000E-04  .12780000E-03  .40420000E-03  .61190000E-03
 .61220000E-03  .61310000F-03  .11270000E-02  .46350000E-03  .16860000E-04
 .11700000E-03  .37020000E-03  .11700000E-03  .37020000E-02  .40930000E-02
 .49870000E-02  .29830000E-02  .40580000E-02  .00000000E 00  .00000000E 00
 .17170000E-04  .54300000E-04  .17170000E-03  .54300000E-03  .13620000E-02
 .18320000E-02  .13840000E-02  .11590000E-02  .46690000E-03  .00000000E 00
 .38240000E-04  .12090000E-03  .38240000E-03  .12090000E-02  .17890000E-02
 .16910000E-02  .13790000E-02  .26650000E-02  .12410000E-02  .00000000E 00
 .86020000E-04  .27200000E-03  .86020000E-03  .18090000E-02  .19690000E-02
 .22590000E-02  .35540000E-02  .43280000E-02  .94690000E-03  .00000000E 00
 .34370000E-03  .10070000E-02  .14230000E-02  .24120000E-02  .27790000E-02
 .39650000E-02  .34590000E-02  .35030000E-02  .00000000E 00  .00000000E 00
 .66370000E-03  .77590000F-03  .11300000E-02  .20030000E-02  .36900000E-02
 .44270000E-02  .57270000E-02  .53180000E-02  .39800000E-02  .00000000E 00
 .96900000E-03  .17410000F-02  .40990000E-02  .63500000E-02  .85180000E-02
 .10350000E-01  .10710000E-01  .78260000E-02  .36650000E-02  .00000000E 00
 .90080000E-03  .10840000E-02  .16660000E-02  .35060000E-02  .36990000E-02
 .46430000E-02  .32750000E-02  .40890000E-02  .13520000E-06  .00000000E 00
 .72550000E-03  .97140000F-03  .17490000E-02  .37700000E-02  .36810000E-02
 .47260000E-02  .36970000E-02  .65550000E-02  .70000000E-02  .00000000E 00
 .90980000E-03  .15540000E-02  .35910000E-02  .85560000E-02  .14200000E-01
 .13770000E-01  .96030000E-02  .49080000E-02  .70000000E-02  .00000000E 00
 .51280000E-02  .66150000E-02  .94540000E-02  .13430000E-01  .12390000E-01
 .13810000E-01  .10970000E-01  .11358000E-01  .70000000E-02  .00000000E 00
 .71760000E-03  .94650000E-03  .16700000E-02  .37640000E-02  .36740000E-02
 .41220000E-02  .29930000E-02  .58440000E-02  .70000000E-02  .00000000E 00
 .70650000E-03  .91140000E-03  .15590000E-02  .30660000E-02  .33290000E-02
 .37470000E-02  .28610000E-02  .48510000E-02  .70000000E-02  .00000000E 00
 .68420000E-03  .84070000E-03  .13350000E-02  .27420000E-02  .31100000E-02
 .41310000E-02  .34620000F-02  .47700000E-02  .70000000E-02  .00000000E 00
 .65130000E-03  .73690000E-03  .10070000E-03  .18620000E-02  .21950000E-02
 .41090000E-02  .37850000E-02  .52200000E-02  .70700300E-02  .00000000E 00
 .63210000E-03  .67630000E-03  .81580000E-03  .12570000E-02  .21710000E-02
 .28240000E-02  .30150000F-02  .14590000E-02  .11390000E-02  .00000000E 00
 .43070000E-03  .64310000E-03  .71080000E-03  .92490000E-03  .16020000E-02
 .19100000E-02  .20730000E-02  .18470000E-02  .16280000E-02  .00000000E 00
 .14440000E-03  .45670000E-03  .74170000E-03  .10220000E-02  .12690000E-02
 .13690000E-02  .20230000E-02  .33540000E-02  .24330000E-02  .00000000E 00
 .50950000E-04  .16110000E-03  .50950000E-03  .11950000E-02  .11340000E-02
 .94230000E-03  .50730000E-03  .12770000E-02  .20150000E-03  .00000000E 00
```

TABLE 15. - EXAMPLE OF INPUT DATA CARDS - Continued

.26650000E-04	.84290000E-04	.26650000E-03	.84290000E-03	.11640000E-02
.10350000E-02	.62920000E-03	.10090000E-02	.15590000E-02	.00000000E 00
.28520000E-04	.90190000E-04	.28520000E-03	.90190000E-03	.17440000E-02
.24310000E-02	.20230000E-02	.12520000E-02	.69670000E-03	.00000000E 00
.13780000E-03	.43580000E-03	.13780000E-02	.30710000E-02	.30970000E-02
.31790000E-02	.19420000E-02	.32800000E-02	.34980000E-03	.00000000E 00
.36330000E-04	.11490000E-03	.36330000E-03	.90190000E-03	.88010000E-03
.81110000E-03	.59300000E-03	.18590000E-02	.90990000E-03	.13520000E-03
.31850000E-04	.10070000E-03	.31850000E-03	.69250000E-03	.71080000E-03
.76900000E-03	.99780000E-03	.27520000E-02	.26840000E-02	.00000000E 00
.25460000E-04	.80510000E-04	.25460000E-03	.72650000E-03	.81870000E-03
.11090000E-02	.17990000E-02	.40640000E-02	.84930000E-03	.00000000E 00
.44930000E-03	.14200000E-02	.44930000E-02	.59470000E-02	.74690000E-02
.92740000E-02	.83360000E-02	.73730000E-02	.23290000E-02	.00000000E 00
.62650000E-04	.19810000E-03	.62650000E-03	.19810000E-02	.31170000E-02
.37620000E-02	.40080000E-02	.75100000E-02	.14650000E-02	.14980000E-02
.13140000E-03	.41550000E-03	.13140000E-02	.22280000E-02	.37980000E-02
.41230000E-02	.56560000E-02	.45420000E-02	.46650000E-02	.00000000E 00
.26470000E-03	.83720000E-03	.18710000E-02	.29610000E-02	.46560000E-02
.58500000E-02	.64180000E-02	.77720000E-02	.36930000E-02	.83300000E-03
.70130000E-03	.12690000E-02	.20410000E-02	.41240000E-02	.56470000E-02
.55220000E-02	.61240000E-02	.43910000E-02	.22150000E-02	.00000000E 00
.81150000E-03	.10870000E-02	.19590000E-02	.39550000E-02	.56790000E-02
.61890000E-02	.80240000E-02	.89930000E-02	.10910000E-01	.00000000E 00
.11770000E-02	.22450000E-02	.56220000E-02	.11770000E-01	.16830000E-01
.20570000E-01	.17450000E-01	.10690000E-01	.97370000E-02	.00000000E 00
.10840000E-02	.14580000E-02	.26390000E-02	.38310000E-02	.59830000E-02
.75570000E-02	.63620000E-02	.43330000E-02	.47510000E-02	.00000000E 00
.87430000E-03	.12860000E-02	.25870000E-02	.41180000E-02	.56580000E-02
.70990000E-02	.53300000E-02	.30560000E-02	.47460000E-02	.00000000E 00
.96050000E-03	.15580000E-02	.34490000E-02	.94290000E-02	.16180000E-01
.20580000E-01	.21770000E-01	.12198000E-01	.70000000E-02	.00000000E 00
.74270000E-02	.11650000E-01	.17200000E-01	.21360000E-01	.24250000E-01
.24910000E-01	.17040000E-01	.63650000E-02	.70000000E-02	.00000000E 00
.89880000E-03	.13630000E-02	.28320000E-02	.39740000E-02	.61580000E-02
.69660000E-02	.72270000E-02	.71630000E-02	.70000000E-02	.00000000E 00
.91950000E-03	.14280000E-02	.24510000E-02	.33140000E-02	.55650000E-02
.68640000E-02	.65010000E-02	.87530000E-02	.77667000E-02	.00000000E 00
.91360000E-03	.14100000E-02	.24040000E-02	.31670000E-02	.55800000E-02
.73200000E-02	.66410000E-02	.79750000E-02	.83960000E-02	.00000000E 00
.86650000E-03	.12610000E-02	.23120000E-02	.28750000E-02	.46550000E-02
.67790000E-02	.81050000E-02	.10990000E-01	.97340000E-02	.00000000E 00
.82850000E-03	.11410000E-02	.21290000E-02	.31230000E-02	.41280000E-02
.49620000E-02	.48480000E-02	.51190000E-02	.32770000E-02	.00000000E 00
.77520000E-03	.97240000E-03	.15960000E-02	.27830000E-02	.28860000E-02
.36320000E-02	.62320000E-02	.46580000E-02	.39010000E-02	.00000000E 00
.43260000E-03	.93880000E-03	.14890000E-02	.26770000E-02	.30420000E-02
.38390000E-02	.67310000E-02	.10480000E-01	.19680000E-02	.00000000E 00
.21810000E-03	.68980000E-03	.14580000E-02	.16550000E-02	.22760000E-02
.24560000E-02	.28410000E-02	.40330000E-02	.22230000E-02	.00000000E 00
.11440000E-03	.36190000E-03	.11440000E-02	.14870000E-02	.17460000E-02
.25640000E-02	.37800000E-02	.58990000E-02	.63460000E-02	.00000000E 00
.17410000E-03	.55050000E-03	.17410000E-02	.40000000E-02	.42690000E-02
.51210000E-02	.54270000E-02	.96690000E-02	.15180000E-02	.53760000E-03

TABLE 15. - EXAMPLE OF INPUT DATA CARDS - Continued

```
 .46300000E-03  .14640000E-02  .35400000E-02  .38010000E-02  .46260000E-02
 .54860000E-02  .67790000E-02  .57820000E-02  .16260000E-02  .00000000E 00
 .59620000E-04  .18850000E-03  .59620000E-03  .10080000E-02  .10290000E-02
 .10940000E-02  .14040000E-02  .30660000E-02  .20810000E-02  .11130000E-02
 .48800000E-04  .15430000E-03  .48800000E-03  .80950000E-03  .93980000E-03
 .13510000E-02  .27540000E-02  .45380000E-02  .64950000E-02  .00000000E 00
 .39220000E-04  .12400000E-03  .39220000E-03  .91050000E-03  .12590000E-02
 .23610000E-02  .51260000E-02  .42510000E-02  .27950000E-02  .00000000E 00
 .25880000E-03  .81860000E-03  .25880000E-02  .47630000E-02  .61690000E-02
 .54690000E-02  .37890000E-02  .74330000E-02  .65520000E-02  .00000000E 00
 .35470000E-04  .11210000E-03  .35470000E-03  .11210000E-02  .28200000E-02
 .29770000E-02  .32100000E-02  .31860000E-02  .66510000E-02  .00000000E 00
 .77860000E-04  .24620000E-03  .77860000E-03  .23420000E-02  .25460000E-02
 .31920000E-02  .36320000E-02  .55550000E-02  .14380000E-02  .16570000E-02
 .16680000E-03  .52770000E-03  .16680000E-02  .25510000E-02  .39510000E-02
 .49340000E-02  .63660000E-02  .48230000E-02  .49340000E-02  .00000000E 00
 .53560000E-03  .12490000E-02  .17890000E-02  .33520000E-02  .46610000E-02
 .56390000E-02  .53110000E-02  .45150000E-02  .18580000E-02  .00000000E 00
 .82860000E-03  .10000000E-02  .15420000E-02  .32580000E-02  .58640000E-02
 .59730000E-02  .75470000E-02  .87050000E-02  .95720000E-02  .00000000E 00
 .11420000E-02  .19910000E-02  .46780000E-02  .97850000E-02  .15270000E-01
 .17740000E-01  .18830000E-01  .11510000E-01  .92970000E-02  .00000000E 00
 .11190000E-02  .13800000E-02  .22040000E-02  .48100000E-02  .52800000E-02
 .73590000E-02  .65980000E-02  .40070000E-02  .14760000E-02  .00000000E 00
 .89530000E-03  .12110000E-02  .22100000E-02  .53690000E-02  .53670000E-02
 .62080000E-02  .59900000E-02  .34910000E-02  .14080000E-02  .00000000E 00
 .10310000E-02  .16430000E-02  .35760000E-02  .96880000E-02  .17800000E-01
 .19890000E-01  .20300000E-01  .12764000E-01  .70000000E-02  .00000000E 00
 .69180000E-02  .99970000E-02  .15240000E-01  .20820000E-01  .19420000E-01
 .25690000E-01  .20660000E-01  .19630000E-01  .11241000E-01  .00000000E 00
 .90910000E-03  .12540000E-02  .23470000E-02  .38460000E-02  .62230000E-02
 .69180000E-02  .70730000E-02  .58350000E-02  .70000000E-02  .00000000E 00
 .91360000E-03  .12680000E-02  .23920000E-02  .32190000E-02  .45190000E-02
 .62600000E-02  .60450000E-02  .69560000E-02  .84000000E-02  .00000000E 00
 .89590000E-03  .12130000E-02  .22160000E-02  .36770000E-02  .43460000E-02
 .64390000E-02  .50790000E-02  .33000000E-02  .17100000E-02  .00000000E 00
 .85150000E-03  .10720000E-02  .17710000E-02  .31770000E-02  .35670000E-02
 .58460000E-02  .52480000E-02  .38970000E-02  .35750000E-02  .00000000E 00
 .81970000E-03  .97190000E-03  .14530000E-02  .27840000E-02  .33120000E-02
 .40850000E-02  .49640000E-02  .34660000E-02  .24700000E-02  .00000000E 00
 .64970000E-03  .87850000E-03  .11580000E-02  .20420000E-02  .28620000E-02
 .27890000E-02  .39600000E-02  .46230000E-02  .22520000E-02  .00000000E 00
 .28740000E-03  .87650000E-03  .11510000E-02  .19680000E-02  .24440000E-02
 .29810000E-02  .41460000E-02  .99540000E-02  .45050000E-02  .96740000E-03
 .12590000E-03  .39820000E-03  .12590000E-02  .15460000E-02  .16500000E-02
 .19760000E-02  .21410000E-02  .19120000E-02  .29510000E-02  .00000000E 00
 .64280000E-04  .20320000E-03  .64280000E-03  .15100000E-02  .15360000E-02
 .16180000E-02  .18780000E-02  .40020000E-02  .30340000E-02  .42950000E-03
 .83780000E-04  .26490000E-03  .83780000E-03  .24040000E-02  .38240000E-02
 .39990000E-02  .34650000E-02  .34640000E-02  .67990000E-02  .00000000E 00
 .29610000E-03  .93630000E-03  .29610000E-02  .37740000E-02  .42910000E-02
 .43910000E-02  .51870000E-02  .52200000E-02  .31320000E-02  .26870000E-02
-5.33E00       -4.83E00       -4.35E00       -3.97E00       -3.67E00
-3.42E00       -3.22E00       -3.06E00       -2.91E00       -2.77E00
```

TABLE 15. - EXAMPLE OF INPUT DATA CARDS - Continued

-2.65E00	-2.54E00	-2.44E00	-2.35E00	-2.27E00
-2.19E00	-2.14E00	-2.12E00	-2.12E00	-2.16E00
-2.25E00	-2.29E00	-2.28E00	-2.23E00	-2.09E00
-.58E00	-.63E00	-.68E00	-.73E00	-.78E00
-.83E00	-.88E00	-.94E00	-1.0E00	-1.06E00
-1.11E00	-1.17E00	-1.22E00	-1.28E00	-1.33E00
-1.39E00	-1.45E00	-1.52E00	-1.58E00	-1.64E00
-1.70E00	-1.77E00	-1.83E00	-1.89E00	-1.96E00
-1.92E00	-1.66E00	-1.40E00	-1.16E00	-.93E00
-.72E00	-.51E00	-.31E00	-.12E00	.07E00
.22E00	.33E00	.38E00	.43E00	.42E00
.37E00	.23E00	.07E00	-.08E00	-.26E00
-.43E00	-.61E00	-.79E00	-.98E00	-1.18E00
-4.3E00	100.E00	-4.2E00	99.2E00	-4.1E00
98.4E00	-4.0E00	97.6E00	-3.9E00	96.8E00
-3.8E00	96.0E00	-3.7E00	95.2E00	-3.6E00
94.4E00	-3.5E00	93.6E00	-3.4E00	92.7E00
-3.3E00	91.7E00	-3.2E00	90.6E00	-3.1E00
89.4E00	-3.0E00	88.1E00	-2.9E00	86.8E00
-2.8E00	84.9E00	-2.7E00	83.0E00	-2.6E00
80.9E00	-2.5E00	78.6E00	-2.4E00	76.1E00
-2.3E00	73.4E00	-2.2E00	70.5E00	-2.1E00
67.3E00	-2.0E00	63.8E00	-1.9E00	60.0E00
-1.8E00	55.9E00	-1.7E00	51.5E00	-1.6E00
46.8E00	-1.5E00	41.8E00	-1.4E00	36.6E00
-1.3E00	31.2E00	-1.2E00	25.7E00	-1.1E00
20.2E00	-1.0E00	15.1E00	-.9E00	10.8E00
-.8E00	7.4E00	-.7E00	4.8E00	-.6E00
2.9E00	-.5E00	1.5E00	-.4E00	.5E00
-.3E00	0.E00			
0.E00	0.E00	0.E00	0.E00	0.E00
0.E00	0.E00	0.E00	0.E00	0.E00
0.E00	0.E00	-.737E00	-.750E00	-.762E00
-.775E00	-.787E00	-.800E00	-.812E00	-.825E00
-.837E00	-.850E00	-.862E00	-.875E00	-.887E00
-3.7E00	100.E00	-3.6E00	99.9E00	-3.5E00
99.67E00	-3.4E00	99.32E00	-3.3E00	98.87E00
-3.2E00	98.33E00	-3.1E00	97.72E00	-3.0E00
97.05E00	-2.9E00	96.33E00	-2.8E00	95.56E00
-2.7E00	94.75E00	-2.6E00	93.89E00	-2.5E00
92.98E00	-2.4E00	92.E00	-2.3E00	90.94E00
-2.2E00	89.78E00	-2.1E00	88.51E00	-2.0E00
87.11E00	-1.9E00	85.56E00	-1.8E00	83.84E00
-1.7E00	81.94E00	-1.6E00	79.84E00	-1.5E00
77.53E00	-1.4E00	75.00E00	-1.3E00	72.25E00
-1.2E00	69.28E00	-1.1E00	66.10E00	-1.0E00
62.72E00	-.9E00	59.15E00	-.8E00	55.41E00
-.7E00	51.52E00	-.6E00	47.50E00	-.5E00
43.38E00	-.4E00	39.19E00	-.3E00	34.97E00
-.2E00	30.76E00	-.1E00	26.61E00	0.E00
22.58E00	.1E00	18.74E00	.2E00	15.18E00
.3E00	11.98E00	.4E00	9.2E00	.5E00
6.87E00	.6E00	5.E00	.7E00	3.57E00
.8E00	2.5E00	.9E00	1.68E00	1.E00

TABLE 15. - EXAMPLE OF INPUT DATA CARDS - Continued

```
1.03E00        1.1E00         .49E00         1.2E00         0.E00
-10.E00         -10.82E00      -9.E00         -9.82E00       -8.E00
-8.82E00       -7.E00         -7.82E00       -6.E00         -6.82E00
-5.E00         -5.80E00       -4.E00         -4.72E00       -3.E00
-3.60E00       -2.E00         -2.46E00       -1.E00         -1.29E00
0.E00          -.11E00         1.E00         .97E00          2.E00
2.02E00        3.E00           3.03E00       4.E00          4.04E00
5.E00          5.05E00
-5.2E00        100.E00        -5.1E00        99.97E00       -5.0E00
99.91E00       -4.9E00        99.82E00       -4.8E00        99.70E00
-4.7E00        99.55E00       -4.6E00        99.37E00       -4.5E00
99.16E00       -4.4E00        98.92E00       -4.3E00        98.65E00
-4.2E00        98.35E00       -4.1E00        98.02E00       -4.0E00
97.66E00       -3.9E00        97.27E00       -3.8E00        96.85E00
-3.7E00        96.39E00       -3.6E00        95.90E00       -3.5E00
95.38E00       -3.4E00        94.82E00       -3.3E00        94.22E00
-3.2E00        93.58E00       -3.1E00        92.9E00        -3.0E00
92.18E00       -2.9E00        91.41E00       -2.8E00        90.59E00
-2.7E00        89.72E00       -2.6E00        88.79E00       -2.5E00
87.8E00        -2.4E00        86.74E00       -2.3E00        85.61E00
-2.2E00        84.4E00        -2.1E00        83.1E00        -2.0E00
81.7E00        -1.9E00        80.19E00       -1.8E00        78.56E00
-1.7E00        76.80E00       -1.6E00        74.91E00       -1.5E00
72.88E00       -1.4E00        70.71E00       -1.3E00        68.39E00
-1.2E00        65.92E00       -1.1E00        63.30E00       -1.0E00
60.53E00       -.9E00         57.62E00       -.8E00         54.58E00
-.7E00         51.42E00       -.6E00         48.15E00       -.5E00
44.78E00       -.4E00         41.33E00       -.3E00         37.82E00
-.2E00         34.28E00       -.1E00         30.75E00       0.E00
27.27E00       .1E00          23.89E00       .2E00          20.66E00
.3E00          17.63E00       .4E00          14.84E00       .5E00
12.3E00        .6E00          10.02E00       .7E00          8.01E00
.8E00          6.27E00        .9E00          4.8E00         1.0E00
3.60E00        1.1E00         2.66E00        1.2E00         1.96E00
1.3E00         1.47E00        1.4E00         1.13E00        1.5E00
0.89E00        1.6E00         .71E00         1.7E00         .56E00
1.8E00         .42E00         1.9E00         .28E00         2.0E00
.14E00         2.1E00         0.E00
 11.111         1.E-3
1010
3.22   E-43.1445 E-43.1415 E-43.1405 E-43.1404 E-4
3.1403 E-43.1401 E-43.1395 E-43.1380 E-43.1350 E-4
3.1290 E-43.1200 E-43.1152 E-43.1130 E-43.1110 E-4
3.1100 E-43.1094 E-43.1087 E-43.1082 E-43.1080 E-4
3.1076 E-43.1070 E-43.1069 E-43.1066 E-43.1062 E-4
3.1060 E-43.1059 E-43.1058 E-43.1057 E-43.1056 E-4
3.1055 E-43.1054 E-43.1053 E-43.1052 E-43.1051 E-4
3.1050 E-43.1049 E-43.1048 E-43.1047 E-43.1046 E-4
3.1045 E-43.1044 E-43.1043 E-43.1042 E-43.1041 E-4
3.1040 E-43.1039 E-43.1038 E-43.1037 E-43.1036 E-4
3.1035 E-43.1034 E-43.1033 E-43.1032 E-43.1031 E-4
3.1030 E-43.1029 E-43.1028 E-43.1027 E-43.1026 E-4
3.1025 E-43.1024 E-43.1023 E-43.1022 E-43.1021 E-4
3.1020 E-43.1019 E-43.1018 E-43.1017 E-43.1016 E-4
```

TABLE 15. - EXAMPLE OF INPUT DATA CARDS - Concluded

```
3.1015 E-43.1014 E-43.1013 E-43.1012 E-43.1011 E-4
3.1010 E-43.1009 E-43.1008 E-43.1007 E-43.1006 E-4
3.10050E-43.10045E-43.10040E-43.10035E-43.10030E-4
3.10025E-43.10020E-43.10015E-43.10010E-43.10005E-4
3.10000E-4
3.22   E-43.1445 E-43.1415 E-43.1405 E-43.1404 E-4
3.1403 E-43.1401 E-43.1395 E-43.1380 E-43.1350 E-4
3.1290 E-43.1200 E-43.1152 E-43.1130 E-43.1110 E-4
3.1100 E-43.1094 E-43.1087 E-43.1082 E-43.1080 E-4
3.1076 E-43.1070 E-43.1069 E-43.1066 E-43.1062 E-4
3.1060 E-43.1059 E-43.1058 E-43.1057 E-43.1056 E-4
3.1055 E-43.1054 E-43.1053 E-43.1052 E-43.1051 E-4
3.1050 E-43.1049 E-43.1048 E-43.1047 E-43.1046 E-4
3.1045 E-43.1044 E-43.1043 E-43.1042 E-43.1041 E-4
3.1040 E-43.1039 E-43.1038 E-43.1037 E-43.1036 E-4
3.1035 E-43.1034 E-43.1033 E-43.1032 E-43.1031 E-4
3.1030 E-43.1029 E-43.1028 E-43.1027 E-43.1026 E-4
3.1025 E-43.1024 E-43.1023 E-43.1022 E-43.1021 E-4
3.1020 E-43.1019 E-43.1018 E-43.1017 E-43.1016 E-4
3.1015 E-43.1014 E-43.1013 E-43.1012 E-43.1011 E-4
3.1010 E-43.1009 E-43.1008 E-43.1007 E-43.1006 E-4
3.10050E-43.10045E-43.10040E-43.10035E-43.10030E-4
3.10025E-43.10020E-43.10015E-43.10010E-43.10005E-4
3.10000E-4
3.22   E-43.1445 E-43.1415 E-43.1405 E-43.1404 E-4
3.1403 E-43.1401 E-43.1395 E-43.1380 E-43.1350 E-4
3.1290 E-43.1200 E-43.1152 E-43.1130 E-43.1110 E-4
3.1100 E-43.1094 E-43.1087 E-43.1082 E-43.1080 E-4
3.1076 E-43.1070 E-43.1069 E-43.1066 E-43.1062 E-4
3.1060 E-43.1059 E-43.1058 E-43.1057 E-43.1056 E-4
3.1055 E-43.1054 E-43.1053 E-43.1052 E-43.1051 E-4
3.1050 E-43.1049 E-43.1048 E-43.1047 E-43.1046 E-4
3.1045 E-43.1044 E-43.1043 E-43.1042 E-43.1041 E-4
3.1040 E-43.1039 E-43.1038 E-43.1037 E-43.1036 E-4
3.1035 E-43.1034 E-43.1033 E-43.1032 E-43.1031 E-4
3.1030 E-43.1029 E-43.1028 E-43.1027 E-43.1026 E-4
3.1025 E-43.1024 E-43.1023 E-43.1022 E-43.1021 E-4
3.1020 E-43.1019 E-43.1018 E-43.1017 E-43.1016 E-4
3.1015 E-43.1014 E-43.1013 E-43.1012 E-43.1011 E-4
3.1010 E-43.1009 E-43.1008 E-43.1007 E-43.1006 E-4
3.10050E-43.10045E-43.10040E-43.10035E-43.10030E-4
3.10025E-43.10020E-43.10015E-43.10010E-43.10005E-4
3.10000E-4
1.E00          1.E00          1.E00          1.E00          1.E00
1.E00          1.E00          1.E00          1.E00          1.E00
1.E00          1.E00          1.E00          1.E00          1.E00
1.E00          1.E00          1.E00          1.E00          1.E00
1.E00          1.E00          1.E00          1.E00          1.E00
```

Data Sequence	Format	Parameter	Description
19	5E15.8	TRANSC	Elsasser CO_2 transmittance table
20	11I1	MA1, MA2, ..., MA11	Computation options
21	E15.8	TAUGAT	Transmissivity gate
22	4I1	MB1, MB2 MB3, MB4	Output options
23	5E15.8	FILTER	Radiance summation filter
24	I2, 18F4.1	NPSI, PSI	Number of azimuth angles and table of azimuth angles
25	I2, 5E10.4	NUM HTS, NCLOUD	Number of cloud altitudes and table of cloud altitudes
26	4(F4.1, E10.4, F3.1)	T, P, Z	Temperature, pressure, altitude of shells
27	I4	N	Number of shells
28	I8	LABEL	Profile code number
29	5E10.4	WW1, WW2, WW3	Concentration of CO_2, O_3, H_2)
30		T, P, Z	Set 2 of atmospheric temperature and pressure data for azimuthal variation study

OUTPUT DATA

TOTAL RADIANCE

For an example of the total radiance output tape see Table 16. Each output radiance profile consists of 12 records of information (69 tangent heights).

Data Sequence	Format	Parameter	Description
1	5E13.6	$N(H_T)$	Radiance at $(H_T)_i$ (i = I, 5)
	I8	LABEL	Profile code number
	I7	IEND	Sequence number
2	6E13.6	$N(H_T)$	Radiance at $(H_T)_i$ (i = 6, . . . , 11)
3	6E13.6	$N(H_T)$	Radiance at $(H_T)_i$ (i = 12, . . . , 17)
.	.	.	. . . .
.	.	.	. . . .
.	.	.	. . . .
12	6E13.6	$N(H_T)$	Radiance at $(H_T)_i$ (i = 66, . . . , 69)

SPECTRAL SUBINTERVAL RADIANCE

For an example of the spectral subinterval tape see Table 17. Each spectral interval radiance output consists of 116 records of information (69 tangent heights, 10 spectral intervals).

Record	Format	Parameter	Description
1	5E13.6	$N_j(H_T)$	Radiance at $(H_T)_i$(i = 1)
			V_j (j = 1, . . . , 5)
	I8	LABEL	Profile code number
	I7	IEND	Sequence number
2	6E13.6	$N_j(H_T)$	Radiance at $(H_T)_i$(i = 1)
			V_j (j = 6, . . . , 10)
			$(H_T)_i$ (i = 2)
			V_j (i = 1)
3	6E13.6	$N_j(H_T)$	Radiance at $(H_T)_i$ (i = 2)
			V_j (j = 2, . . . , 7)

TABLE 16. - EXAMPLE OF RADIANCE PROFILE TAPE OUTPUT FOR EACH OF TEN SPECTRAL SUBINTERVALS

.516096E 00	.517716E 00	.483140E 00	.501019E 00	.111195E 01	2010018	466
.337704E 00	.104124E 01	.640795E 00	.419994E 00	.436213E 00	.905256E 00	
.516384E 00	.482533E 00	.502635E 00	.111635E 01	.338829E 00	.104557E 01	
.642178E 00	.417196E 00	.434437E 00	.893202E 00	.514977E 00	.481952E 00	
.504446E 00	.112116E 01	.340047E 00	.105031E 01	.643795E 00	.414201E 00	
.432516E 00	.878874E 00	.513283E 00	.481370E 00	.506435E 00	.112612E 01	
.341325E 00	.105539E 01	.645661E 00	.410946E 00	.429676E 00	.863213E 00	
.511649E 00	.480892E 00	.508803E 00	.113199E 01	.342773E 00	.106120E 01	
.647949E 00	.407431E 00	.427308E 00	.856408E 00	.510962E 00	.480721E 00	
.509856E 00	.113454E 01	.343397E 00	.106372E 01	.648987E 00	.405924E 00	
.426372E 00	.848663E 00	.510188E 00	.480561E 00	.510983E 00	.113722E 01	
.344049E 00	.106637E 01	.650113E 00	.404353E 00	.425147E 00	.840732E 00	
.509407E 00	.480412E 00	.512178E 00	.113994E 01	.344691E 00	.106912E 01	
.651337E 00	.402697E 00	.424078E 00	.831697E 00	.508568E 00	.480303E 00	
.513475E 00	.114291E 01	.345404E 00	.107207E 01	.652682E 00	.400963E 00	
.422729E 00	.821769E 00	.507678E 00	.480216E 00	.514866E 00	.114601E 01	
.346129E 00	.107519E 01	.654158E 00	.399126E 00	.421284E 00	.816573E 00	
.507222E 00	.480188E 00	.515611E 00	.114765E 01	.346517E 00	.107682E 01	
.654956E 00	.398165E 00	.420641E 00	.810642E 00	.506701E 00	.480170E 00	
.516388E 00	.114935E 01	.346915E 00	.107851E 01	.655796E 00	.397171E 00	
.419685E 00	.804408E 00	.506164E 00	.480161E 00	.517200E 00	.115110E 01	
.347323E 00	.108026E 01	.656683E 00	.396140E 00	.418749E 00	.798162E 00	
.505644E 00	.480164E 00	.518051E 00	.115291E 01	.347742E 00	.108206E 01	
.657622E 00	.395067E 00	.418079E 00	.790822E 00	.505022E 00	.480180E 00	
.518943E 00	.115478E 01	.348173E 00	.108394E 01	.658616E 00	.393947E 00	
.416909E 00	.782978E 00	.504381E 00	.480209E 00	.519882E 00	.115671E 01	
.348616E 00	.108588E 01	.659674E 00	.392772E 00	.415906E 00	.773648E 00	
.503604E 00	.480252E 00	.520870E 00	.115872E 01	.349072E 00	.108789E 01	
.660800E 00	.391532E 00	.414304E 00	.762619E 00	.502699E 00	.480311E 00	
.521914E 00	.116081E 01	.349543E 00	.108999E 01	.662004E 00	.390210E 00	
.412423E 00	.748608E 00	.501556E 00	.480386E 00	.523020E 00	.116298E 01	
.350030E 00	.109218E 01	.663295E 00	.388779E 00	.409958E 00	.734088E 00	
.500355E 00	.480477E 00	.524196E 00	.116524E 01	.350533E 00	.109446E 01	
.664683E 00	.387225E 00	.407634E 00	.711407E 00	.498517E 00	.480574E 00	
.525451E 00	.116760E 01	.351053E 00	.109684E 01	.666184E 00	.385448E 00	
.404074E 00	.684511E 00	.496212E 00	.480648E 00	.526795E 00	.117007E 01	
.351592E 00	.109934E 01	.667815E 00	.383247E 00	.400234E 00	.650633E 00	
.493058E 00	.480618E 00	.528240E 00	.117265E 01	.352149E 00	.110196E 01	
.669585E 00	.380280E 00	.395625E 00	.608962E 00	.488534E 00	.480233E 00	
.529806E 00	.117536E 01	.352727E 00	.110473E 01	.671517E 00	.375541E 00	
.389912E 00	.573647E 00	.484291E 00	.479696E 00	.531518E 00	.117822E 01	
.353328E 00	.110765E 01	.673660E 00	.370349E 00	.385103E 00	.530656E 00	
.478208E 00	.478189E 00	.533380E 00	.118124E 01	.353953E 00	.111075E 01	
.675948E 00	.362422E 00	.378941E 00	.496562E 00	.473762E 00	.477563E 00	
.535638E 00	.118444E 01	.354605E 00	.111405E 01	.679236E 00	.356229E 00	
.374933E 00	.463441E 00	.468496E 00	.475632E 00	.538138E 00	.118785E 01	
.355286E 00	.111760E 01	.682659E 00	.348342E 00	.370683E 00	.435446E 00	
.462817E 00	.472092E 00	.540647E 00	.119150E 01	.355999E 00	.112143E 01	
.685334E 00	.339487E 00	.366345E 00	.401129E 00	.453475E 00	.464195E 00	
.542761E 00	.119546E 01	.356746E 00	.112562E 01	.685908E 00	.325813E 00	
.359384E 00	.369413E 00	.442820E 00	.453636E 00	.544027E 00	.119977E 01	
.357532E 00	.113027E 01	.683955E 00	.310959E 00	.351697E 00	.339626E 00	
.430432E 00	.440074E 00	.543466E 00	.120450E 01	.358359E 00	.113540E 01	
.678062E 00	.294858E 00	.342831E 00	.309842E 00	.415122E 00	.422411E 00	
.539642E 00	.120955E 01	.359234E 00	.114066E 01	.666212E 00	.276580E 00	
.331755E 00	.275741E 00	.393402E 00	.396888E 00	.529231E 00	.121410E 01	
.360164E 00	.114438E 01	.643300E 00	.253080E 00	.315701E 00	.251906E 00	
.375760E 00	.376018E 00	.517947E 00	.121744E 01	.361161E 00	.114572E 01	
.621511E 00	.235344E 00	.302548E 00	.226587E 00	.354580E 00	.351149E 00	
.501306E 00	.121737E 01	.362186E 00	.114205E 01	.592695E 00	.215593E 00	

TABLE 16. - EXAMPLE OF RADIANCE PROFILE TAPE OUTPUTS FOR EACH OF TEN SPECTRAL SUBINTERVALS - Concluded

.286739E 00	.201826E 00	.331397E 00	.324114E 00	.479780E 00	.121240E 01
.363350E 00	.113116E 01	.558470E 00	.195433E 00	.269375E 00	.182676E 00
.311518E 00	.301257E 00	.458818E 00	.120223E 01	.364586E 00	.111465E 01
.527350E 00	.179249E 00	.254397E 00	.161450E 00	.287287E 00	.273920E 00
.430523E 00	.117966E 01	.365912E 00	.108397E 01	.487884E 00	.160798E 00
.236066E 00	.147183E 00	.269583E 00	.254315E 00	.408201E 00	.115578E 01
.367285E 00	.105419E 01	.458172E 00	.148068E 00	.222589E 00	.132866E 00
.250571E 00	.233657E 00	.382813E 00	.112145E 01	.368548E 00	.101457E 01
.425679E 00	.135052E 00	.208016E 00	.119890E 00	.232237E 00	.214054E 00
.357016E 00	.107964E 01	.369637E 00	.969049E 00	.393889E 00	.123101E 00
.193947E 00	.109765E 00	.217295E 00	.198099E 00	.334718E 00	.103866E 01
.370847E 00	.926180E 00	.367580E 00	.113830E 00	.182726E 00	.100392E 00
.202673E 00	.182835E 00	.312266E 00	.991257E 00	.371285E 00	.878922E 00
.341697E 00	.105097E 00	.171584E 00	.912952E-01	.187651E 00	.167674E 00
.289186E 00	.936950E 00	.369979E 00	.826887E 00	.315297E 00	.963683E-01
.159772E 00	.823103E-01	.172081E 00	.152407E 00	.265353E 00	.876371E 00
.366517E 00	.770470E 00	.288212E 00	.875497E-01	.147249E 00	.739705E-01
.157079E 00	.137974E 00	.242225E 00	.813898E 00	.361020E 00	.713576E 00
.262244E 00	.792647E-01	.135052E 00	.658269E-01	.141886E 00	.123672E 00
.218871E 00	.747602E 00	.352572E 00	.654302E 00	.236194E 00	.710580E-01
.122524E 00	.586917E-01	.128176E 00	.110942E 00	.197628E 00	.684556E 00
.342268E 00	.598791E 00	.212789E 00	.638264E-01	.111167E 00	.527026E-01
.116394E 00	.100097E 00	.179139E 00	.627533E 00	.330918E 00	.549206E 00
.192715E 00	.577361E-01	.101406E 00	.476759E-01	.106304E 00	.908740E-01
.163127E 00	.576427E 00	.318911E 00	.505252E 00	.175569E 00	.526184E-01
.930557E-01	.433412E-01	.974763E-01	.828046E-01	.148936E 00	.529873E 00
.306521E 00	.465492E 00	.160640E 00	.482224E-01	.858220E-01	.399942E-01
.909195E-01	.765708E-01	.137372E 00	.490759E 00	.295748E 00	.432306E 00
.149117E 00	.448875E-01	.806399E-01	.369334E-01	.846454E-01	.708844E-01
.126028E 00	.451403E 00	.282459E 00	.399174E 00	.137546E 00	.416748E-01
.755400E-01	.327460E-01	.752129E-01	.629026E-01	.112192E 00	.404079E 00
.261985E 00	.359084E 00	.122146E 00	.371456E-01	.672109E-01	.284796E-01
.653903E-01	.548259E-01	.984683E-01	.357193E 00	.238840E 00	.319198E 00
.106480E 00	.324309E-01	.582893E-01	.248765E-01	.569252E-01	.479104E-01
.865369E-01	.315348E 00	.216835E 00	.283726E 00	.929762E-01	.284776E-01
.506463E-01	.220868E-01	.501941E-01	.423861E-01	.767764E-01	.279869E 00
.197386E 00	.253851E 00	.821053E-01	.254460E-01	.446480E-01	.196455E-01
.441558E-01	.374895E-01	.681213E-01	.247844E 00	.178618E 00	.226885E 00
.723938E-01	.227857E-01	.392298E-01	.171974E-01	.380721E-01	.326901E-01
.597096E-01	.216781E 00	.158918E 00	.200528E 00	.628355E-01	.201095E-01
.337052E-01	.130716E-01	.277030E-01	.247819E-01	.456354E-01	.164207E 00
.123169E 00	.155832E 00	.469670E-01	.156842E-01	.243791E-01	.989873E-02
.202710E-01	.186518E-01	.339988E-01	.121196E 00	.921527E-01	.118168E 00
.350489E-01	.120075E-01	.178665E-01	.771911E-02	.154085E-01	.143397E-01
.254054E-01	.892872E-01	.679722E-01	.897938E-01	.267746E-01	.936492E-02
.136840E-01	.605740E-02	.117961E-01	.108637E-01	.184462E-01	.637112E-01
.481301E-01	.663405E-01	.202105E-01	.708890E-02	.105584E-01	.469237E-02
.899944E-02	.815379E-02	.130792E-01	.440925E-01	.328455E-01	.474117E-01
.149593E-01	.515740E-02	.805006E-02	.171179E-02	.376308E-02	.383420E-02
.572864E-02	.187428E-01	.129890E-01	.189533E-01	.632768E-02	.192725E-02
.322941E-02	.353377E-03	.124967E-02	.148277E-02	.246508E-02	.779172E-02
.493952E-02	.606969E-02	.227550E-02	.440338E-03	.973427E-03	.155294E-03
.592699E-03	.579067E-03	.119133E-02	.346624E-02	.192350E-02	.207564E-02
.811142E-03	.935560E-04	.374412E-03	.179109E-03	.527451E-03	.274966E-03
.648652E-03	.253297E-02	.105870E-02	.111017E-02	.389852E-03	.123546E-03
.323587E-03					
.920051E 00	.517172E 00	.481891E 00	.499639E 00	.111148E 01	2010019 467
.336666E 00	.104007E 01	.638323E 00	.420127E 00	.436095E 00	.900064E 00
.515776E 00	.431216E 00	.501283E 00	.111592E 01	.337757E 00	.104445E 01
.639712E 00	.417194E 00	.434259E 00	.896836E 00	.514299E 00	.480563E 00

TABLE 17. - EXAMPLE OF RADIANCE PROFILE OUTPUT TAPE FOR THE COMPLETE SPECTRAL INTERVAL

.552086E 01	.552860E 01	.553727E 01	.554706E 01	.555824E 01	1010001	1
.556311E 01	.556837E 01	.557401E 01	.558002E 01	.558650E 01	.558991E 01	
.559351E 01	.559723E 01	.560113E 01	.560520E 01	.560944E 01	.561389E 01	
.561853E 01	.562338E 01	.562828E 01	.563387E 01	.564008E 01	.564652E 01	
.565027E 01	.564942E 01	.563870E 01	.562274E 01	.558856E 01	.554824E 01	
.548105E 01	.539227E 01	.529036E 01	.517481E 01	.503693E 01	.493149E 01	
.479318E 01	.462452E 01	.446597E 01	.424556E 01	.407175E 01	.386434E 01	
.365187E 01	.345618E 01	.329333E 01	.311967E 01	.296736E 01	.282779E 01	
.267434E 01	.251605E 01	.236154E 01	.219249E 01	.201393E 01	.185015E 01	
.168428E 01	.152375E 01	.139322E 01	.126731E 01	.118377E 01	.111850E 01	
.104024E 01	.802295E 00	.593981E 00	.456661E 00	.336384E 00	.234967E 00	
.844606E-01	.315983E-01	.136953E-01	.843468E-02			
.542951E 01	.543637E 01	.544401E 01	.545257E 01	.546225E 01	1010002	2
.546647E 01	.547090E 01	.547563E 01	.548063E 01	.548595E 01	.548871E 01	
.549155E 01	.549453E 01	.549758E 01	.550070E 01	.550388E 01	.550719E 01	
.551055E 01	.551392E 01	.551688E 01	.552000E 01	.552114E 01	.552038E 01	
.551464E 01	.550289E 01	.549134E 01	.547297E 01	.544278E 01	.540826E 01	
.535455E 01	.528655E 01	.520450E 01	.510684E 01	.498125E 01	.488308E 01	
.475410E 01	.459717E 01	.445176E 01	.425116E 01	.409849E 01	.392979E 01	
.376017E 01	.354755E 01	.334030E 01	.313765E 01	.300508E 01	.290053E 01	
.277200E 01	.260484E 01	.242699E 01	.223606E 01	.204191E 01	.186894E 01	
.169476E 01	.153218E 01	.140183E 01	.127502E 01	.118760E 01	.111816E 01	
.103581E 01	.798516E 00	.589077E 00	.448740E 00	.329935E 00	.231197E 00	
.843204E-01	.315874E-01	.136905E-01	.843293E-02			
.567931E 01	.568757E 01	.569673E 01	.570698E 01	.571858E 01	1010003	3
.572366E 01	.572905E 01	.573475E 01	.574087E 01	.574742E 01	.575087E 01	
.575445E 01	.575817E 01	.576208E 01	.576615E 01	.577037E 01	.577480E 01	
.577944E 01	.578372E 01	.578932E 01	.579503E 01	.579985E 01	.580445E 01	
.580489E 01	.580066E 01	.578574E 01	.576485E 01	.572483E 01	.566798E 01	
.561115E 01	.552378E 01	.542167E 01	.530795E 01	.516882E 01	.505806E 01	
.491332E 01	.473640E 01	.456962E 01	.433780E 01	.415434E 01	.393349E 01	
.370963E 01	.352588E 01	.337968E 01	.320905E 01	.301555E 01	.282346E 01	
.262590E 01	.245227E 01	.230212E 01	.214264E 01	.198748E 01	.184582E 01	
.169769E 01	.153984E 01	.140497E 01	.127523E 01	.118889E 01	.112241E 01	
.104340E 01	.810262E 00	.602028E 00	.460825E 00	.338752E 00	.236833E 00	
.852364E-01	.321217E-01	.145395E-01	.882584E-02			
.540290E 01	.541151E 01	.542114E 01	.543201E 01	.544440E 01	1010004	4
.544980E 01	.545565E 01	.546184E 01	.546847E 01	.547561E 01	.547937E 01	
.548332E 01	.548740E 01	.549168E 01	.549614E 01	.550078E 01	.550564E 01	
.551070E 01	.551595E 01	.552173E 01	.552784E 01	.553358E 01	.554077E 01	
.554550E 01	.554567E 01	.554068E 01	.552018E 01	.548659E 01	.544865E 01	
.538770E 01	.531155E 01	.522276E 01	.511793E 01	.498399E 01	.488024E 01	
.474551E 01	.458226E 01	.443181E 01	.422428E 01	.406644E 01	.388896E 01	
.371231E 01	.351684E 01	.333208E 01	.314136E 01	.298884E 01	.285495E 01	
.270278E 01	.253511E 01	.236901E 01	.219046E 01	.200702E 01	.184118E 01	
.167538E 01	.152038E 01	.139479E 01	.127160E 01	.118216E 01	.110965E 01	
.102518E 01	.793957E 00	.585300E 00	.441834E 00	.324256E 00	.227223E 00	
.837100E-01	.316697E-01	.143951E-01	.876316E-02			
.538142E 01	.539030E 01	.540024E 01	.541148E 01	.542422E 01	1010005	5
.542990E 01	.543590E 01	.544230E 01	.544910E 01	.545638E 01	.546020E 01	
.546415E 01	.546829E 01	.547257E 01	.547699E 01	.548156E 01	.548626E 01	
.549045E 01	.549534E 01	.550068E 01	.550591E 01	.551005E 01	.551397E 01	
.551393E 01	.550877E 01	.550231E 01	.548604E 01	.545818E 01	.542709E 01	
.537849E 01	.531909E 01	.524876E 01	.516728E 01	.506734E 01	.499009E 01	
.488465E 01	.475324E 01	.462670E 01	.444939E 01	.430877E 01	.414992E 01	
.398655E 01	.377580E 01	.356396E 01	.335581E 01	.322009E 01	.311063E 01	
.297319E 01	.278100E 01	.257414E 01	.235511E 01	.214137E 01	.195575E 01	
.176848E 01	.159724E 01	.145944E 01	.132335E 01	.122170E 01	.113989E 01	
.104648E 01	.807484E 00	.589387E 00	.436542E 00	.318604E 00	.223419E 00	
.851688E-01	.323191E-01	.146020E-01	.885304E-02			

Record	Format	Parameter	Description
.	.	.	.
.	.	.	.
.	.	.	.
115	6E13.6	$N_j(H_T)$	Radiance at $(H_T)_i$ (i = 10) V_j (j = 4, . . . , 9)
116	6E13.6	$N_j(H_T)$	Radiance at $(H_T)_i$(i = 10) V_j (j = 10)

FLOW CHART

Figure 6 contains a detailed graphical representation of the flow of logic for Program CORPS.

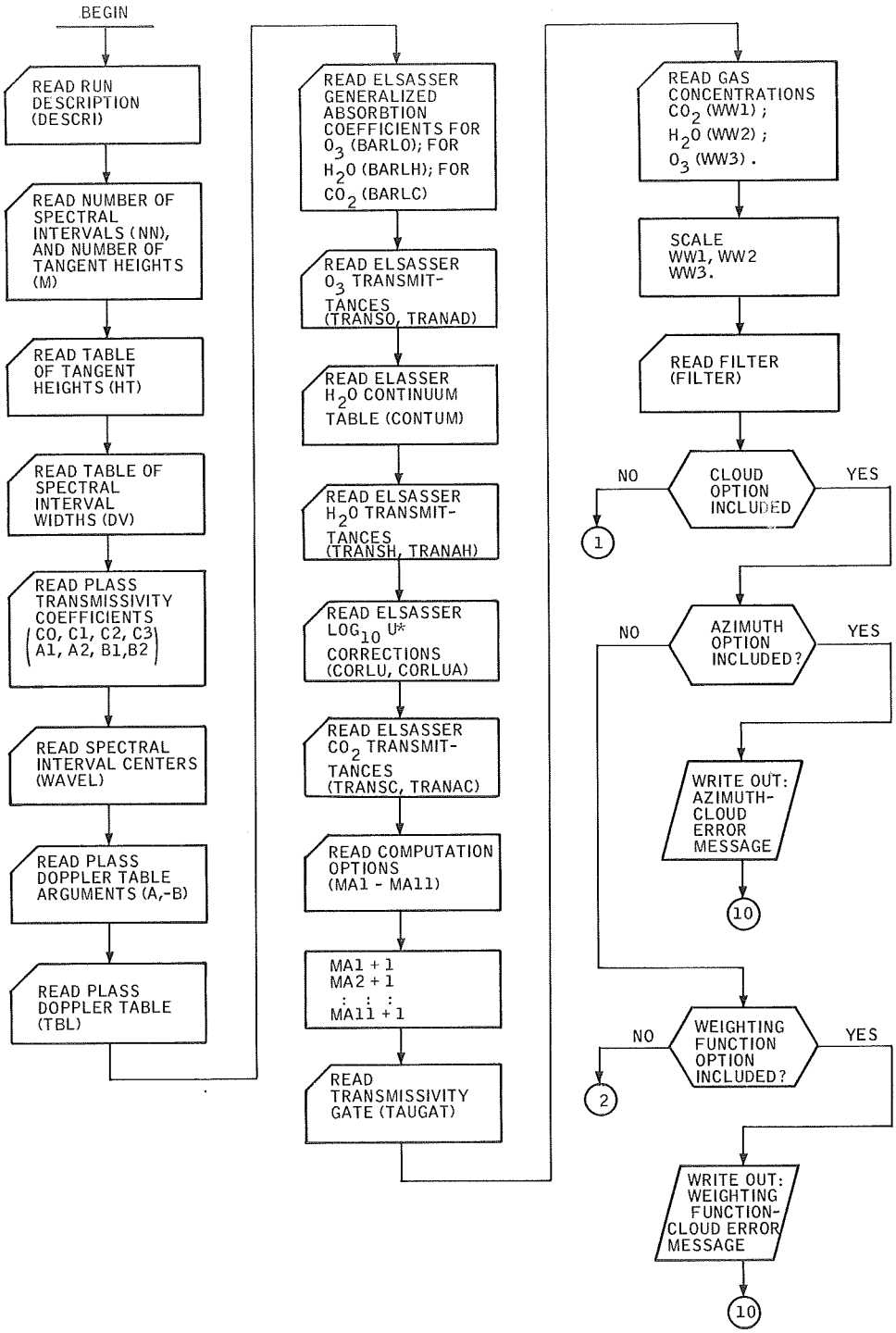

Figure 6. Program CORPS Flow Chart

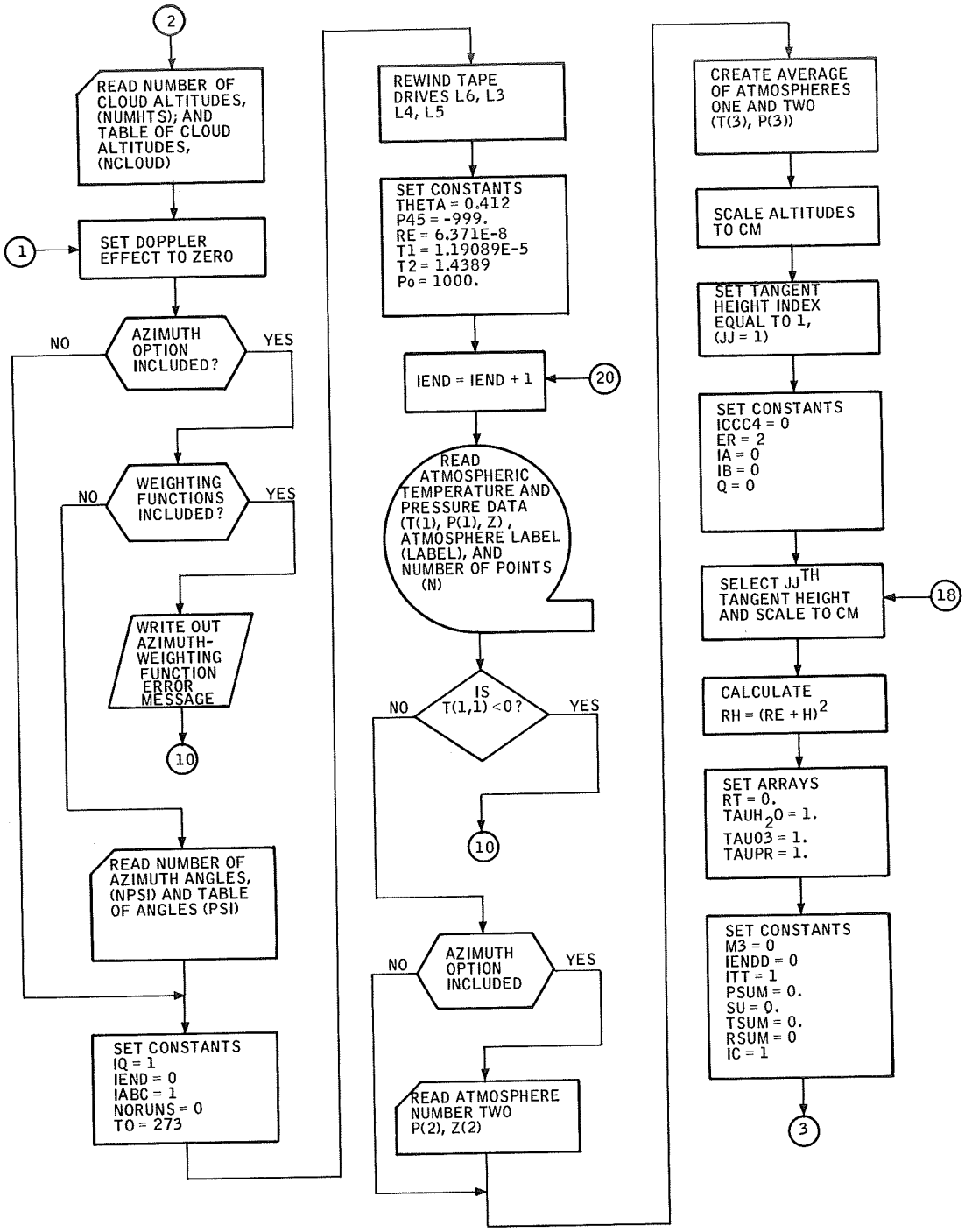

Figure 6. Program CORPS Flow Chart - Continued

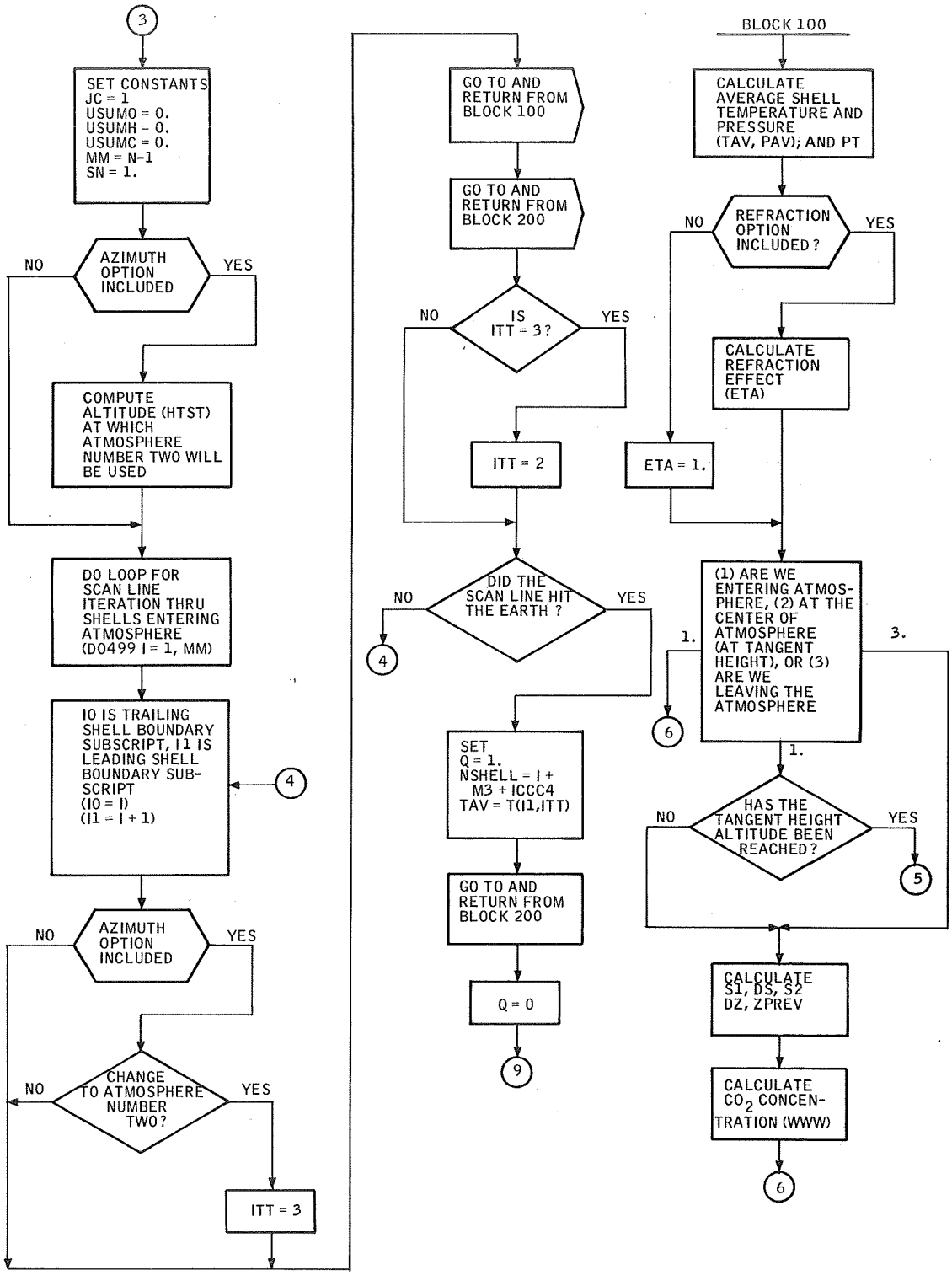

Figure 6. Program CORPS Flow Chart - Continued

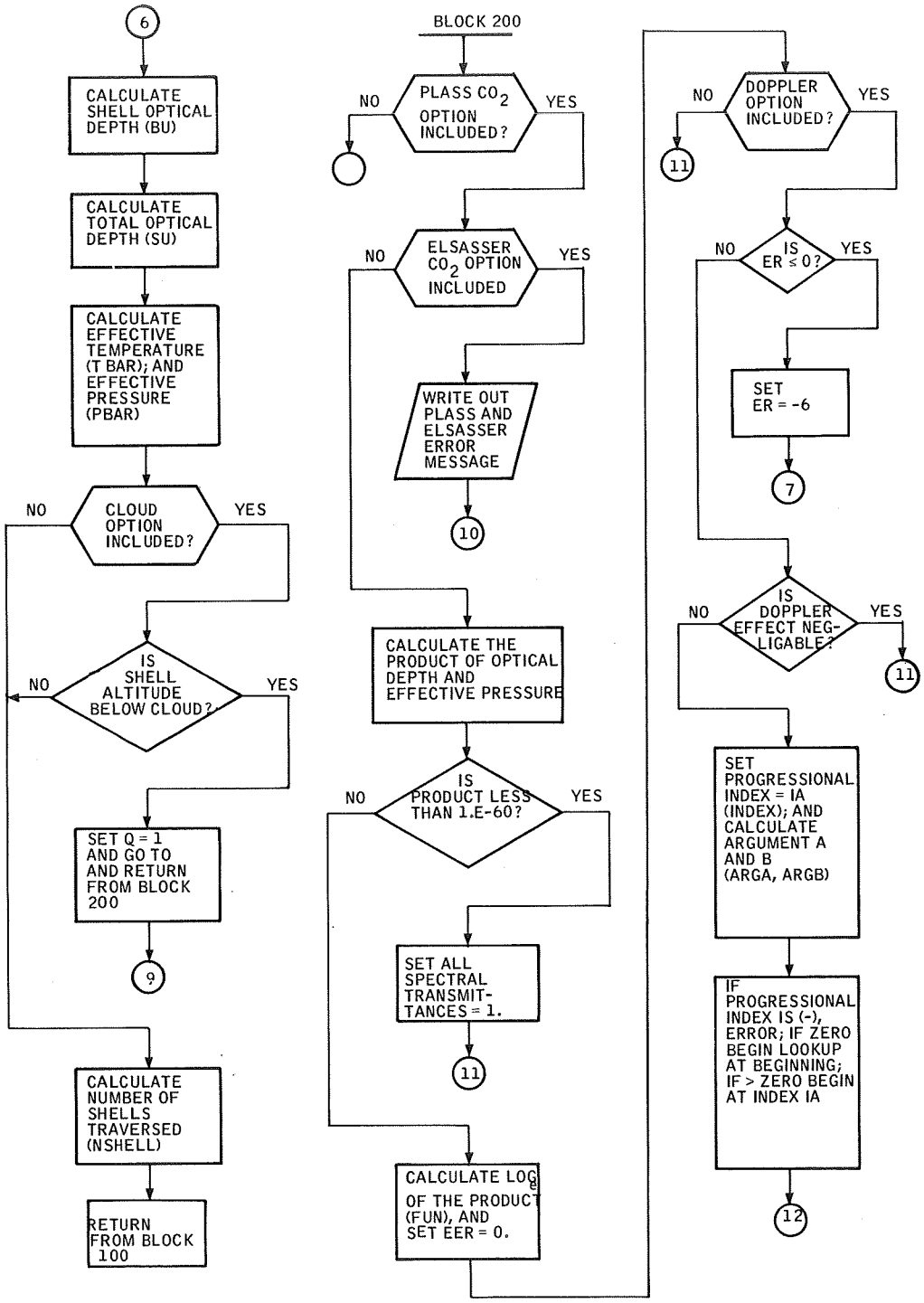

Figure 6. Program CORPS Flow Chart - Continued

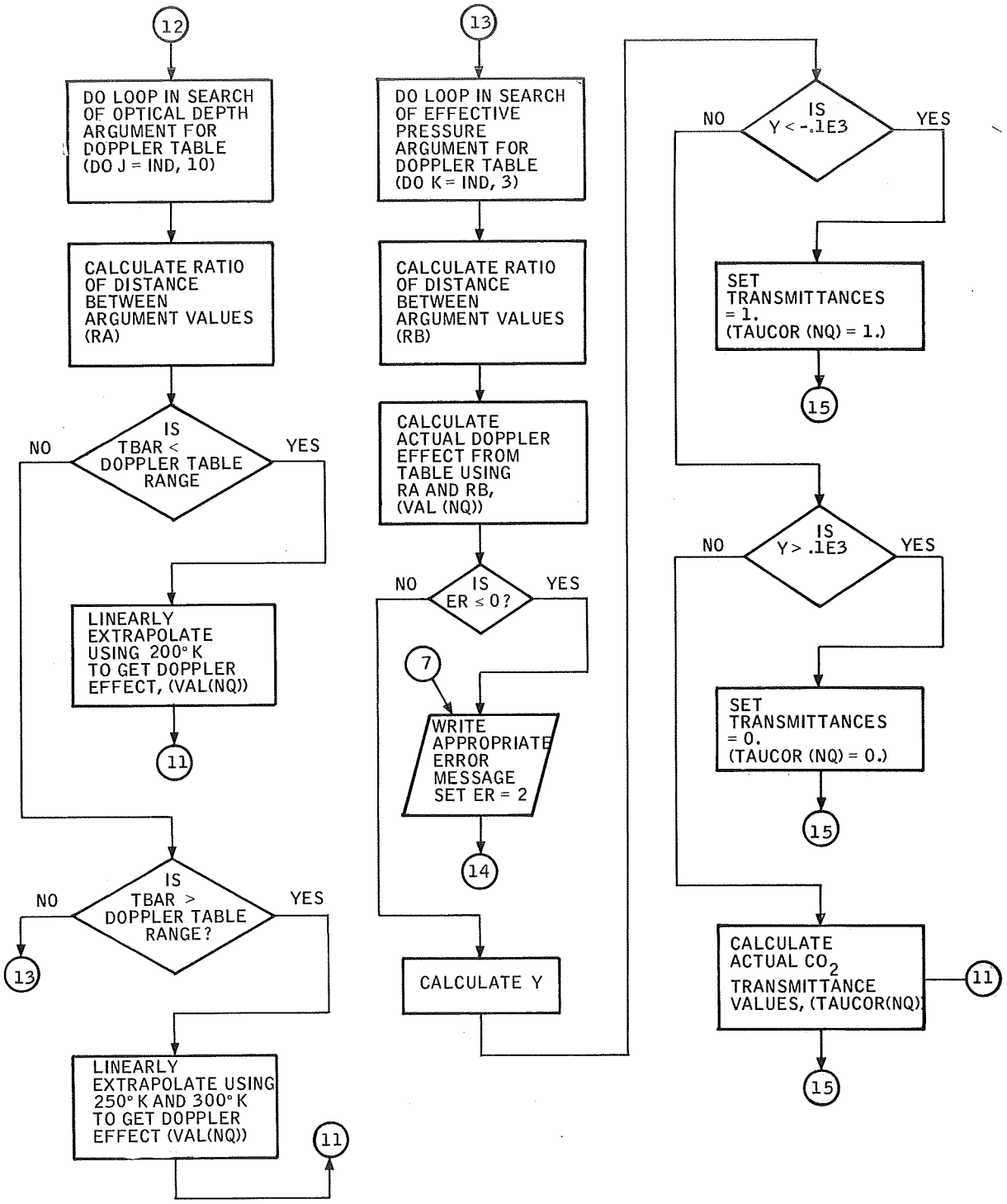

Figure 6. Program CORPS Flow Chart - Continued

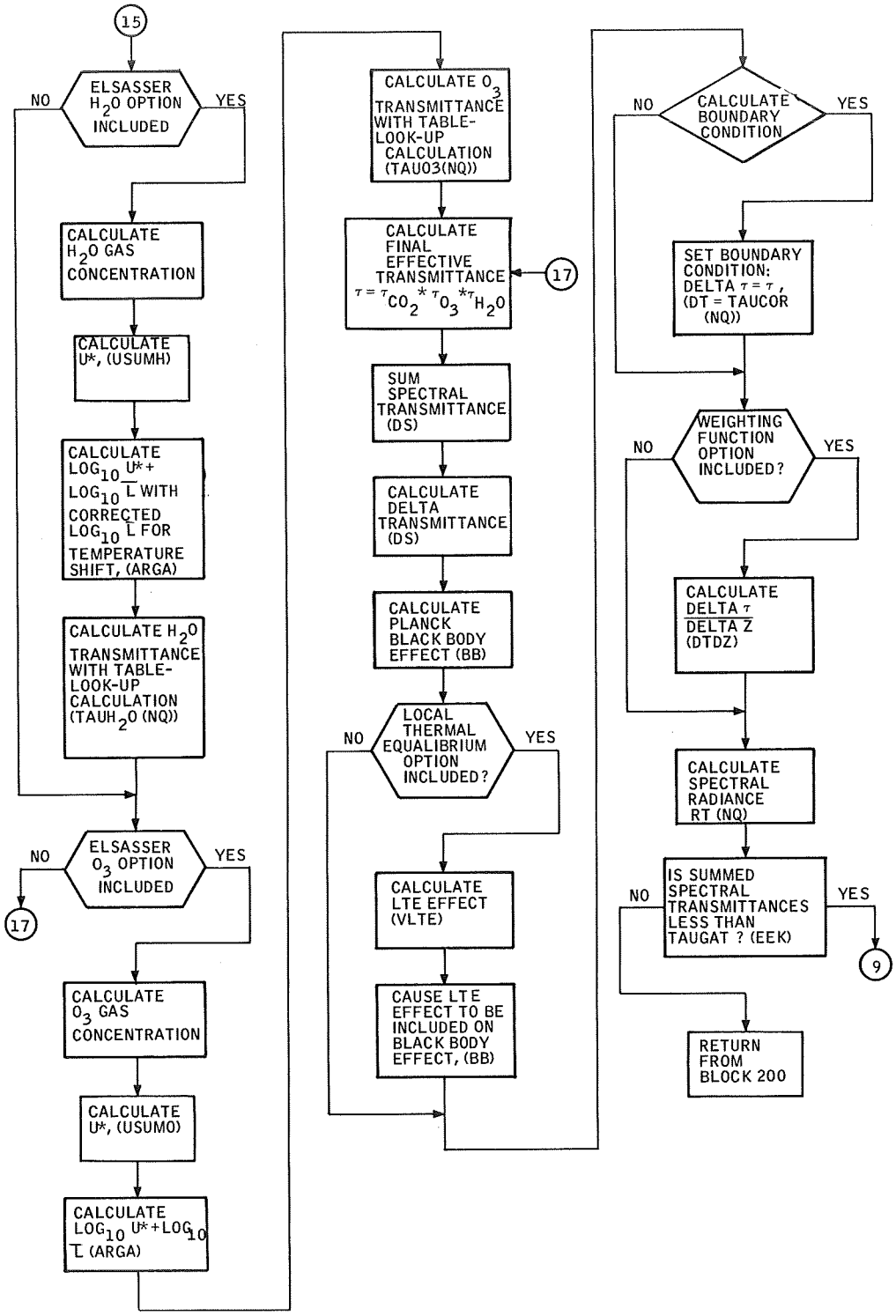

Figure 6. Program CORPS Flow Chart - Continued

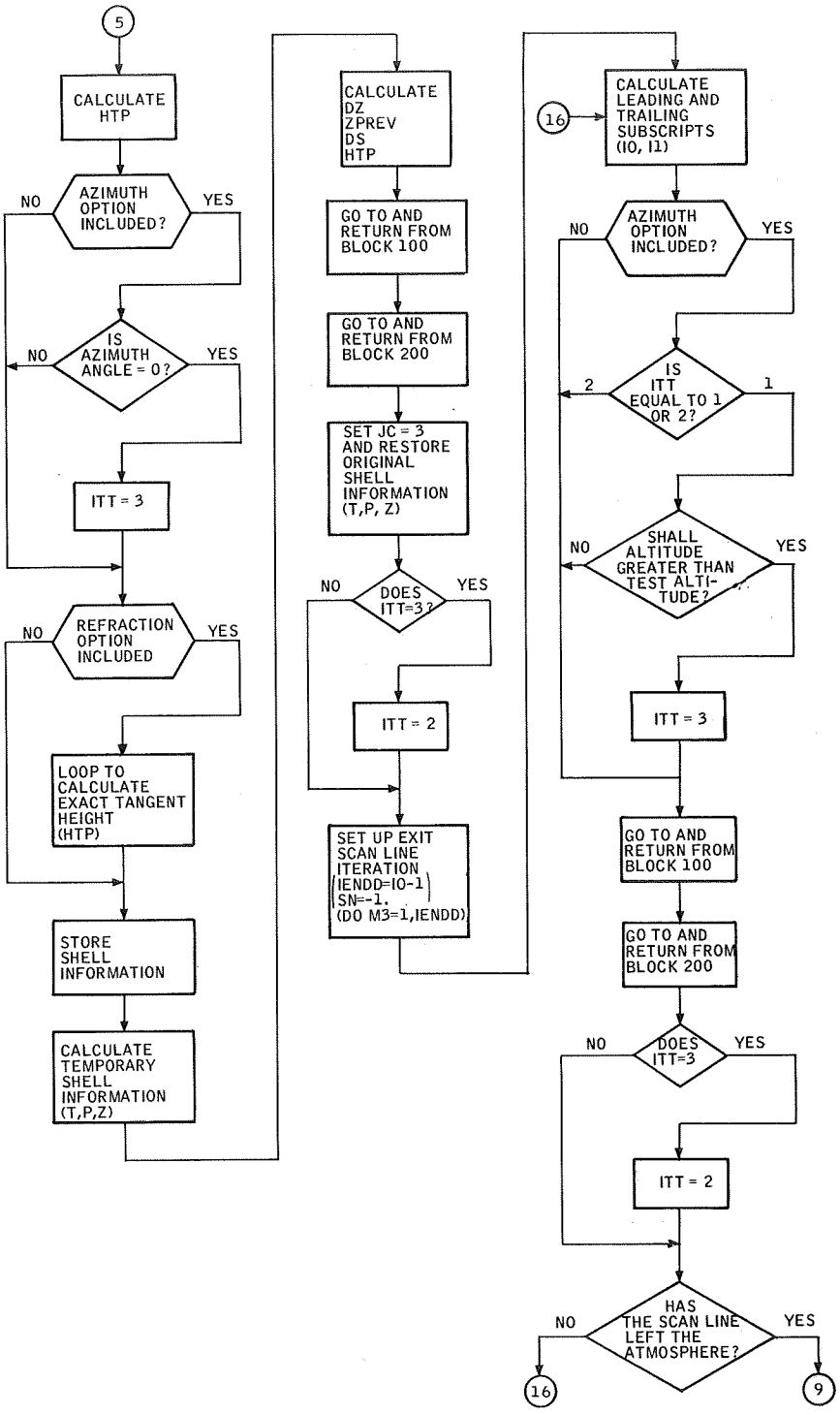

Figure 6. Program CORPS Flow Chart - Continued

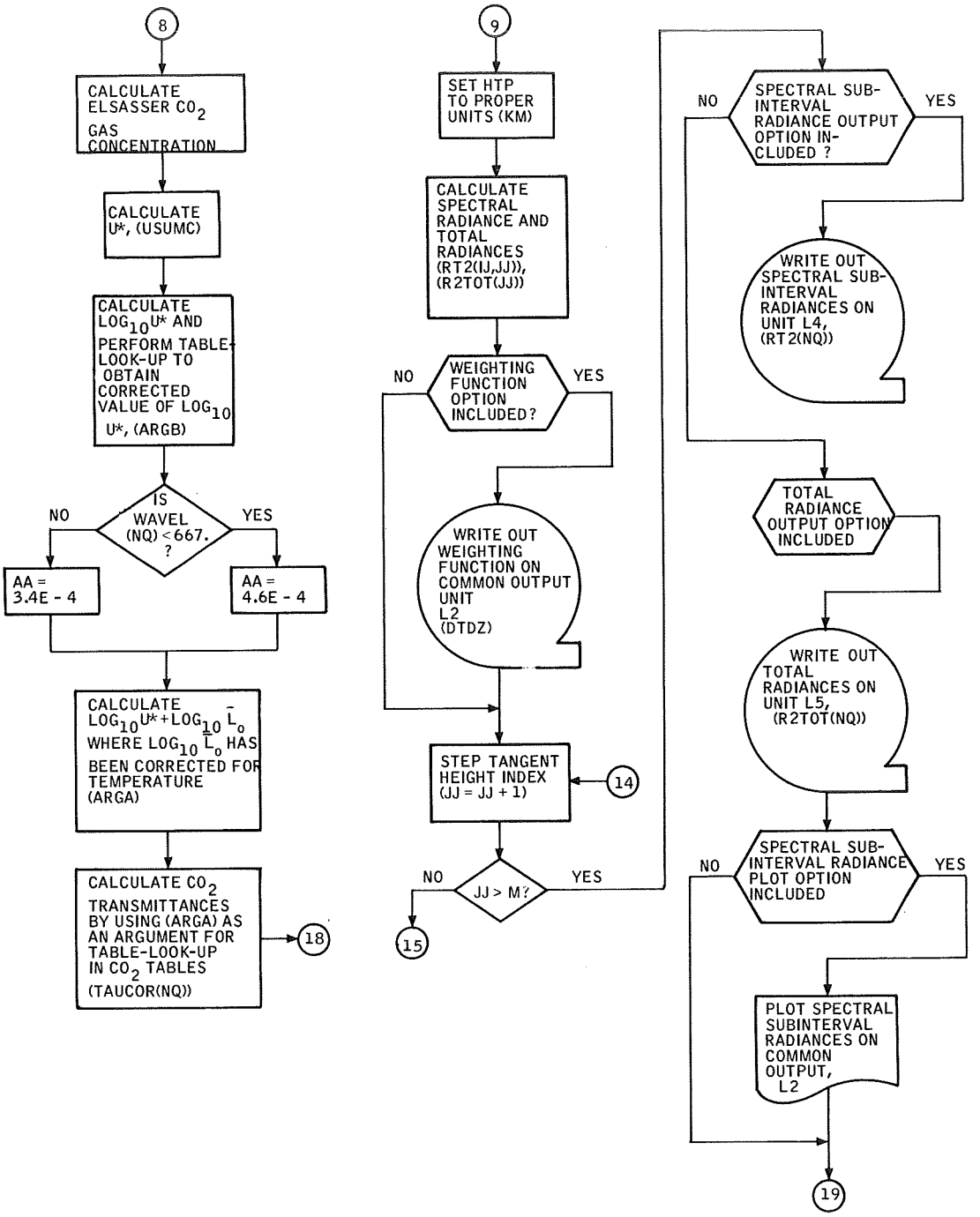

Figure 6. Program CORPS Flow Chart - Continued

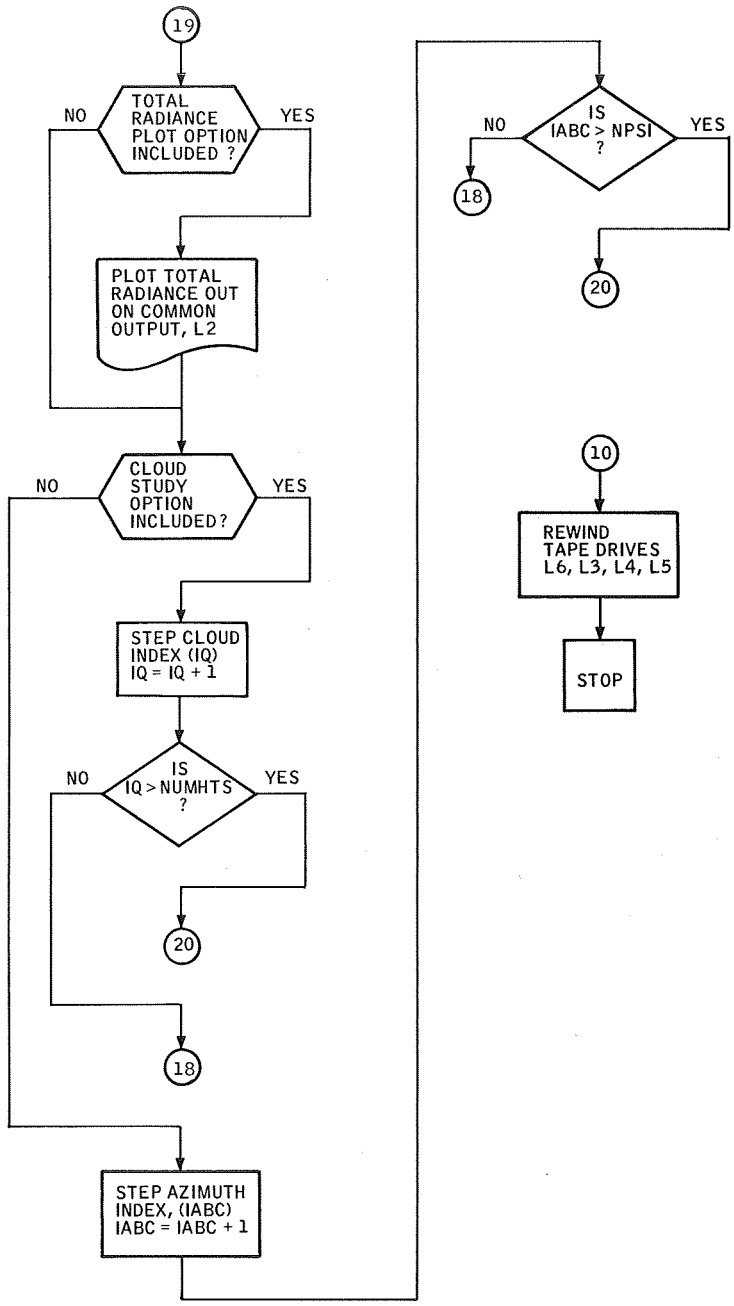

Figure 6. Program CORPS Flow Chart - Concluded

PROGRAM LISTING

```
$JOB            GCC 11792 R0000 I 1 015 20000 76
$SETUP          14 1158          SAVE                          RO
$SETUP          15 6             SAVE                          RIS
$SETUP          16 964           SAVE                          RIS
$EXECUTE        IBJOB
$IBJOB          DLOGIC,MAP
$IBFTC HONEY
      REAL NCLOUD
      INTEGER ER
      DIMENSION RTT2(100,25)
      DIMENSION AN(10),MV(10),NPLOT(400),HPLOT(25)
      DIMENSION BARLO(25),BARLC(25),BARLH(25),TRANSO(41),TRANAO(41),
     1CONTUM(25),TRANSH(50),TRANAH(50),CORLU(16),CORLUA(16),
     2TRANSC(74),TRANAC(74),FILTER(25),WW3(91),DESCRI(18),NCLOUD(30)
      DIMENSION T(210,3),P(210,3),Z(210),HT(69),TAUPR(30),WAVEL(25),
     1RT(70),TAUCOR(25),RT2(25,100),R2TOT(100),ARRAYZ(182)
      DIMENSION DV(25),C0(25),C1(25),C2(25),C3(25),A1(25),A2(25),B1(25),
      DIMENSION A(10),B( 3),TBL(25,10,3),VAL(25),PSI(26),
     1B2(25),WW4(91),WA4(91),
     1WW1(91),WW2(91),DTDZ(182,25),TAUO3(25),TAUH2O(25)
      COMMON AN,MV,PERIOD,PLUS,DASH,MINUS,BLANK,L2
C
C     VARIABLE TAPE ASSIGNMENTS
C
      L1=5
      L2=6
      L3=1
      L5=2
      L4=3
C
C     INPUT CARD DATA
C
      READ(L1,1112)DESCRI
 1112 FORMAT(18A4)
      WRITE(L2,1107)DESCRI
 1107 FORMAT(1H1,9X,18A4)
      READ(L1,165)AN,MV
  165 FORMAT(10A1,10I3)
      READ(L1,166)PERIOD,PLUS,DASH,MINUS,BLANK,HPLOT(8)
  166 FORMAT(6A6)
      READ(L1,1108)NN,M
 1108 FORMAT(2I3)
      READ(L1,96)(HT(I),I=1,M)
   96 FORMAT(24F3.0)
    9 FORMAT(36I2)
      READ(L1,2)(DV(I),I=1,NN)
    2 FORMAT(36F2.0)
      READ(L1,1169)(C0(I),C1(I),C2(I),C3(I),A1(I),A2(I),B1(I),B2(I),I=1,
     1NN)
 1169 FORMAT(16X,  E10.4,6X,E10.4,6X,E10.4,6X,E10.4,6X)
    8 FORMAT(5E15.8)
      READ(L1,731)(WAVEL(I),I=1,NN)
  731 FORMAT(10F8.0)
      READ(L1,1777)A,B
 1777 FORMAT(5E10.4)
      DO 1733 NQ2=1,3
      DO 1731 NQQ=1,NN
      READ(L1,1778)(TBL(NQQ,NQ3,NQ2),NQ3=1,10)
 1778 FORMAT(5E15.8)
```

```
 1731 CONTINUE
 1733 CONTINUE
      READ(L1,8)(BARLO(I),I=1,NN)
      READ(L1,8)(BARLH(I),I=1,NN)
      READ(L1,8)(BARLC(I),I=1,NN)
      READ(L1,8)(TRANSC(I),TRANAO(I),I=1,41)
      READ(L1,8)(CONTUM(I),I=1,NN),(TRANSH(I),TRANAH(I),I=1,50)
      READ(L1,8)(CORLU(I),CORLUA(I),I=1,16)
      READ(L1,8)(TRANSC(I),TRANAC(I),I=1,74)
      READ(L1,1113)MA1,MA2,MA3,MA4,MA5,MA6,MA7,MA8,MA9,MA10,MA11,
     1TAUGAT
 1113 FORMAT(11I1,E10.4)
      MA1=MA1+1
      MA2=MA2+1
      MA3=MA3+1
      MA4=MA4+1
      MA5=MA5+1
      MA6=MA6+1
      MA7=MA7+1
      MA8=MA8+1
      MA9=MA9+1
      MA10=MA10+1
      MA11=MA11+1
      READ(L1,1113)MB1,MB2,MB3,MB4
      MB1=MB1+1
      MB2=MB2+1
      MB3=MB3+1
      MB4=MB4+1
      READ(L1,8)(FILTER(I),I=1,NN)
C
C     CHECK FOR ILLEGAL RUN OPTIONS
C
 1114 GOTO(1163,1164),MA1
 1164 GOTO(7081,7082),MA4
 7082 WRITE(L2,7003)
 7003 FORMAT(28H ILLEGAL OPTION COMBINATION-)
      WRITE(L2,7004)
 7004 FORMAT(28X,15H-AZIMUTH-CLOUDS)
      GOTO 887
 7081 GOTO(7008,7009),MA11
 7009 WRITE(L2,7003)
      WRITE(L2,7010)
 7010 FORMAT(28X,27H-WEIGHTING FUNCTIONS-CLOUDS)
      GOTO 887
C
C     INPUT CLOUD DATA
C
 7008 READ(L1,9)NUMHTS
 3001 READ(L1,1777)(NCLOUD(I),I=1,NUMHTS)
      DO 3002 NG2=1,NUMHTS
 3002 NCLOUD(NG2)=NCLOUD(NG2)*1.E+05
 1163 DO 6015 III=1,NN
 6015 VAL(III)=0.
      GOTO(1110,1115),MA4
 1115 GOTO(1111,7006),MA11
 7006 WRITE(L2,7003)
      WRITE(L2,7007)
 7007 FORMAT(28X,28H-AZIMUTH-WEIGHTING FUNCTUONS)
      GOTO 887
C
```

```
C       INPUT AZIMUTH DATA
C
 1111 READ(L1,9)NPSI
      READ(L1,698)(PSI(I),I=1,NPSI)
  698 FORMAT(18F4.1)
 1110 IEND=0
      NORUNS=0
      TO=273.
      THETA=.412
      RF=6.371E+08
      CCC1=.01
      CCC2=.03
      T1=1.19089E-05
      T2=1.4389
      PO=1000.
  888 IEND=IEND+1
      IQ=1
      IABC=1
C
C       INPUT TAPE TEMPERATURES AND PRESSURES
C
      READ(L3,15)(T(I,1),P(I,1),Z(I),I=1,4),N,LABEL
      WRITE(L2,7015)LABEL,N
 7015 FORMAT(1H0,9HRUN IDENT,5X,13HNO. OF SHELLS/1H ,I8,9X,I4//)
   15 FORMAT(4(F4.1,E10.4,F3.1),I4,I8)
      IF(T(1,1))887,11,11
   11 READ(L3,16)(T(I,1),P(I,1),Z(I),I=5,N)
   16 FORMAT(4(F4.1,E10.4,F3.1))
      IF(IEND-1)178,179,178
C
C       CALCULATE GAS CONCENTRATIONS
C
  179 DO 173 K=1,3
      READ(L1,9)NGAS
      READ(L1,1777)(WW4(I),I=1,NGAS)
  180 READ(L1,9999)(WA4(I),I=1,NGAS)
 9999 FORMAT(36F2.0)
  191 III=2
      DO 17 I=1,N
      NQ=N+1-I
  176 IF(WA4(III)-Z(NQ))171,172,172
  171 IF(III-NGAS)174,175,175
  174 III=III+1
      GOTO 176
  175 WW1(NQ)=WW4(NGAS)
      GOTO(19,18,17),K
  172 JJ=III-1
      WW1(NQ)=WW4(JJ)+(WW4(III)-WW4(JJ))*(Z(NQ)-WA4(JJ))/(WA4(III)-WA4
     1(JJ))
      GOTO(19,18,17),K
   18 WW2(NQ)=WW1(NQ)
      GOTO 17
   19 WW3(NQ)=WW1(NQ)
   17 CONTINUE
  173 CONTINUE
C
  178 GOTO(1148,1149),MA4
 1149 READ(L3,16)(T(I,2),P(I,2),Z(I),I=1,N)
      DO 1380 I=1,N
      T(I,3)=(T(I,1)+T(I,2))/2.
```

```
      P(I,3)=(P(I,1)+P(I,2))/2.
 1380 CONTINUE
 1148 DO 20 I=1,N
   20 Z(I)=Z(I)*1.E+05
C     INITIAL CONDITIONS
  889 JJ=1
  500 CONTINUE
      NSHELL=0
      ER=2
      IA=0
      IB=0
      Q=0.
      H=HT(JJ)*1.E+05
      RH=(RE+H)*(RE+H)
      DO 21 I=1,NN
      RT(I)=0.
      TAUH2O(I)=1.
      TAUC3(I)=1.
   21 TAUPR(I)=1.
      M3=0
      IENDD=0
      ITT=1
      PAV=.5*(P(1,ITT)+P(2,ITT))
      TAV=.5*(T(1,ITT)+T(2,ITT))
      GOTO(1124,1125),MA3
 1124 ETA=1.
      GOTO 1126
 1125 ETA=1.+(PAV*77.526E-06)/TAV
 1126 S2=(RE+Z(1))*ETA
      S2=S2*S2-RH
      S2=S2**.5/ETA
      ZPREV=Z(1)
      PSUM=0.
      SU=0.
      TSUM=0.
      RSUM=0.
      IC=1
      JC=1
      USUMO=0.
      USUMH=0.
      USUMC=0.
      MM=N-1
      SN=1.
      GOTO(1120,1121),MA4
 1121 PSS=PSI(IABC)*.0174533
      CPSS=COS(PSS)
      HPRE=H+RE
      ZTST=HPRE/CPSS-RE
C
C     INITIAL SHELL ITERATION
C
 1120 DO 499 I=1,MM
      IO=I
      I1=I+1
      GOTO(381,1123),MA4
 1123 GOTO(1801,381),ITT
 1801 IF(PSI(IABC))381,381,379
  379 IF(Z(IO)-ZTST)380,380,381
  380 ITT=3
  381 ASSIGN 30  TO  ND1
```

```
      GOTO 100
   30 ASSIGN 310 TO  ND2
      GOTO 200
  310 IF(ITT-3)499,315,315
  315 ITT=2
  499 CONTINUE
      Q=1.
      NSHELL=NSHELL+1
      TAV=T(I1,ITT)
      ASSIGN 60 TO  ND2
      GOTO 200
   60 Q=0.
      GOTO 550
C
C     BLOCK 100
C
  100 ZBAR=.5*(Z(I0)+Z(I1))
      PAV=.5*(P(I0,ITT)+ P(I1,ITT))
      PT=.5*(P(I0,ITT)/T(I0,ITT)+P(I1,ITT)/T(I1,ITT))
      TAV=.5*(T(I0,ITT)+T(I1,ITT))
      GOTO(1127,1128),MA3
 1127 ETA=1.
      GOTO 1129
 1128 ETA=1.+(PAV*77.526E-06)/TAV
 1129 GOTO(113,112,117),JC
  113 SPHI=(RE+H)/((RE+Z(I1))*ETA)
      IF(1.-SPHI)118,118,117
  117 S1=(RE+Z(I1))*ETA
      DZ=(ZPREV-Z(I1))*SN
      ZPREV=Z(I1)
      S1=S1*S1-RH
      S1= S1**.5/ETA
      DS=(S2-S1)*SN
      S2=S1
  112 DU= WW1(I1)*DS*PT*.273
      SU=SU+DU
      TSUM=TSUM+TAV*DU
      TBAR=TSUM/SU
      PSUM=PSUM+PAV*DU
      PBAR=PSUM/(PO*SU)
      GOTO(992,1166),MA1
 1166 IF(Z(I1)-NCLOLD(IQ))994,994,992
  994 Q=1.
      ASSIGN 60 TO ND2
      GOTO 200
  992 NSHELL=NSHELL+1
      GOTO  ND1,(30,70,90)
C
C     BLOCK 200
C
  200 GOTO(1200,1133),MA7
C
C     ELSASSER C3 TRANSMISSIVITY CALCULATION
C
 1400 COG=PAV/1013.2
      IF(PAV-13.4)1405,1405,1410
 1410 COG=.132
 1405 USUMO=USUMC+COG*SQRT(273./TAV)* WW3(I1)*DS*.3E-3
      ARGR=ALOG10(USUMC)
      DO 1418 NG=1,NN
```

```
      ARGA=BARLC(NG)+ARGB
      DO 1420 NGG=2,40
      IF(TRANSO(NGG)-ARGA)1420,1417,1417
 1420 CONTINUE
 1417 NG2=NGG-1
      TAUC3(NG)=(TRANAO(NG2)+(TRANAO(NGG)-TRANAO(NG2))*(ARGA-TRANSO(NG2)
     1)/(TRANSO(NGG)-TRANSO(NG2)))/100.
      IF(TAUC3(NG)-1.)1430,1418,1440
 1430 IF(TAUC3(NG))1431,1418,1418
 1431 TAUC3(NG)=0.
      GOTO 1418
 1440 TAUC3(NG)=1.
 1418 CONTINUE
      GOTO 1401
C
C     ELSASSER H2O TRANSMISSIVITY CALCULATION
C
 1300 USUMH=USUMH+1.292E-3*((PAV/1013.2)**2*(273./TAV)**1.5* WW2(I1)
     1*DS)*1.E-1
      ARGB=ALOG10(USUMH)
      DO 1318 NG=1,NN
      ARGA=ARGB+(BARLH(NG)-9.8E-6*((293.-TBAR)/TBAR)*WAVEL(NG)**2+ALOG10
     1(293./TBAR))
      DO 1320 NGG=2,49
      IF(TRANSH(NGG)-ARGA)1320,1317,1317
 1320 CONTINUE
 1317 NG2=NGG-1
      TAUH2O(NG)=(TRANAH(NG2)+(TRANAH(NGG)-TRANAH(NG2))*(ARGA-TRANSH(NG2
     1))/(TRANSH(NGG)-TRANSH(NG2)))/100.*EXP(-10.**(CONTUM(NG))*USUMH)
      IF(TAUH2O(NG)-1.)1330,1318,1340
 1330 IF(TAUH2O(NG))1331,1318,1318
 1331 TAUH2O(NG)=0.
      GOTO 1318
 1340 TAUH2O(NG)=1.
 1318 CONTINUE
      GOTO 1301
C
C     ELSASSER CO2 TRANSMISSIVITY CALCULATION
C
 1200 USUMC=USUMC+(PAV/1013.2)**2*(273./TAV)**1.5* WW1(I1)*DS
      ARGB=ALOG10(USUMC)
      DO 1205 NG=2,15
      IF(CORLU(NG)-ARGB)1205,1206,1206
 1205 CONTINUE
 1206 NG2=NG -1
      ARGB=CORLUA(NG2)+(CORLUA(NG)-CORLUA(NG2))*(ARGB-CORLU(NG2))/(CORLU
     1(NG)-CORLU(NG2))
      DO 1218 NG=1,NN
      IF(WAVEL(NG)-667.)1211,1211,1212
 1211 AA=4.6E-4
      GOTO 1213
 1212 AA=3.4E-4
 1213 ARGA=ARGB+(BARLC(NG)-AA*(293.-TBAR)/TBAR*(WAVEL(NG)-667.)**2+
     1ALOG10(293./TBAR))
      DO 1220 NGG=2,73
      IF(TRANSC(NGG)-ARGA)1220,1217,1217
 1220 CONTINUE
 1217 NG2=NGG-1
      TAUCOR(NG)=(TRANAC(NG2)+(TRANAC(NGG)-TRANAC(NG2))*(ARGA-TRANSC(NG2
     1))/(TRANSC(NGG)-TRANSC(NG2)))/100.
```

```
      IF(TAUCOR(NG)-1.)1230,1218,1240
 1230 IF(TAUCOR(NG))1231,1218,1218
 1231 TAUCOR(NG)=0.
      GOTO 1218
 1240 TAUCOR(NG)=1.
 1218 CONTINUE
      GOTO 1299
 1133 GOTO(7011,7012),MA8
 7012 WRITE(L2,7003)
      WRITE(L2,7013)
 7013 FORMAT(28X,23H+ELSASSER CO2-PLASS CO2)
      GOTO 887
 7011 IF(PBAR*SL-1.E-37)202,201,201
  202 DO 203 MM2=1,NN
  203 TAUCOR(MM2)=1.
      GOTO 1299
  201 FUN=ALOG(SL*PBAR)
      FER=0.
      GOTO(2215,2651),MA6
C
C     DOPPLER CALCULATION
C
 2651 IF(ER)2030,2030,2735
 2030 ER=-6
      GOTO 1005
 2735 GOTO(2215,2002),ER
 2002 INDEX=IA
      ARGA=ALOG10(SL)
      ARGB=TBAR
 2035 IF(IA)2036,2037,2038
 2036 ER=-3
      GOTO 1005
 2038 IF(A(IA)-ARGA)2045,2045,2037
 2037 IF(A(1)-ARGA)2042,2042,2215
 2042 INDEX=1
 2045 IND=INDEX+1
      DO 2050 J=IND,10
      IF(ARGA-A(J))2060,2060,2050
 2050 CONTINUE
      ER=1
      GOTO 2215
 2060 IA=J-1
      RA=(ARGA-A(IA))/(A(J)-A(IA))
      INDEX=IB
      IF(IB)2036,2067,2068
 2068 IF(B(IB)-ARGB)2075,2075,2067
 2067 IF(B(1)-ARGB)2072,2072,2070
 2070 DO 2555 NG=1,NN
      SLOPE1=(TBL(NG,J,2)-TBL(NG,J,1))/50.
      CONST1=TBL(NG,J,1)-200.*SLOPE1
      V1=ARGB*SLOPE1+CONST1
      SLOPE2=(TBL(NG,IA,2)-TBL(NG,IA,1))/50.
      CONST2=TBL(NG,IA,1)-200.*SLOPE2
      V2=ARGB*SLOPE2+CONST2
 2555 VAL(NG)=(V2-V1)*RA+V1
      GOTO 2215
 2072 INDEX=1
 2075 IND=INDEX+1
      DO 2080 K=IND,3
      IF(ARGB-B(K))2085,2085,2080
```

```
 2080 CONTINUE
      DO 2560 NQ=1,NN
      SLOPE1=(TBL(NQ,J,3)-TBL(NQ,J,2))/50.
      CONST1=TBL(NQ,J,3)-300.*SLOPE1
      V1=ARGB*SLOPE1+CONST1
      SLOPE2=(TBL(NQ,IA,3)-TBL(NQ,IA,2))/50.
      CONST2=TBL(NQ,IA,3)-300.*SLOPE2
      V2=ARGB*SLOPE2+CONST2
 2560 VAL(NQ)=(V2-V1)*RA+V1
      GOTO 2215
 2085 IB=K-1
      RB=(ARGB-B(IB))/(B(K)-B(IB))
      DO 8003 NQ=1,NN
      V1=RA*(TBL(NQ,J,IB)-TBL(NQ,IA,IB))+TBL(NQ,IA,IB)
      V2=RA*(TBL(NQ,J,K)-TBL(NQ,IA,K))+TBL(NQ,IA,K)
 8003 VAL(NQ)= V1+(V2-V1)*RB
C
C     ERROR INDICATORS
C
C     -3 ONE OF THE INDICES IS NEGATIVE
C     -6 PREVIOUS ERROR HAS NOT BEEN ACKNOWLEDGED
C
 2099 IF(ER)1005,1005,2215
 1005 WRITE(L2,2022)IA,IB,RA,RB,J,K,V1,V2,VAL,ARGA,ARGB,ER
 2022 FORMAT(1H0,2(2X,I2),2(2X,F8.4),2(2X,I2),2(2X,F8.4),2X,F8.4,3(2X,F8
     1.4))
      IF(ER+3)1260,1261,1260
 1261 WRITE(L2,1232)ER
 1232 FORMAT(I4,32H PLASS DOPPLER INDEX IS NEGATIVE)
      GOTO 1233
 1260 IF(ER+6)1233,1241,1233
 1241 WRITE(L2,1242)ER
 1242 FORMAT(I4,41H PREVIOUS ERROR HAS NOT BEEN ACKNOWLEDGED)
 1233 ER=2
      GOTO 1181
C
C     PLASS CO2 TRANSMISSIVITY CALCULATION
C
 2215 DO 7005 NQ=1,NN
      YBAR=(((C3(NQ)*FUN)+C2(NQ))*FUN+C1(NQ) )*FUN+C0(NQ)
      Y=YBAR+(A1(NQ)+B1(NQ)*FUN)*(TBAR-250.)+(A2(NQ)+B2(NQ)*FUN)*(TBAR*T
     1BAR-62500.)
      IF(Y+85.)7021,7021,7022
 7021 TAUCOR(NQ)=1.
      GOTO 7005
 7022 TPOWER=(-EXP(Y))
      IF(TPOWER+85.)7001,7001,7002
 7002 TAUCOR(NQ)=EXP(TPOWER)*(1.-VAL(NQ))
      GOTO 7005
 7001 TAUCOR(NQ)=0.
 7005 VAL(NQ)=0.
 1299 GOTO(1301,1300),MA9
 1301 GOTO(1401,1400),MA10
C
C     SPECTRAL SUBINTERVAL RADIANCE CALCULATION
C
 1401 DO 777 NQ=1,NN
      TAUCOR(NQ)=TAUCOR(NQ)*TAUH2O(NQ)*TAUO3(NQ)
  215 EER=EER+TAUCOR(NQ)
      DT=TAUPR(NQ)-TAUCOR(NQ)
```

```
      TAUPR(NQ)=TAUCOR(NQ)
      BB=T1*WAVEL(NQ)**3/(EXP(T2*WAVEL(NQ)/TAV)-1.)
      GOTO(1130,1131),MA5
 1131 VLAMDA=.1E-05*PO/P(I1,ITT)*SQRT(T(I1,ITT)/TO)
      VLTE=THETA/(THETA+VLAMDA)
      BB=BB*VLTE
 1130 IF(G)771,1770,771
  771 DT=TAUCOR(NQ)
 1770 GOTO(770,1157),MA11
 1157 ARRAYZ(NSHELL)=ZBAR
      GOTO(1158,1159,1158),JC
 1158 DTDZ(NSHELL,NQ)=DT/DZ*1.E5
      GOTO 770
 1159 DTDZ(NSHELL,NQ)=DT/(2.*DZ)*1.E5
      NSHELL=NSHELL+1
      DTDZ(NSHELL ,NQ)=DT/(2.*DZ)*1.E5
      ARRAYZ(NSHELL)=ZBAR
  770 DR=DT*BB
  777 RT(NQ)=RT(NQ)+DR
      IF(EER-TAUGAT)550,550,781
  781 GOTO ND2,(310,60,800,330)
C
C     TANGENT HEIGHT CALCULATION
C
  118 HTP=(RE+H)/ETA
      GOTO(74,1803),MA4
 1803 IF(PSI(IABC))74,76,74
   76 ITT=3
   74 GOTO(640,630),MA3
  630 DIF=(HTP-RE-Z(IO))/(Z(I1)-Z(IO))
      PPP=P(IO,ITT)+DIF*(P(I1,ITT)-P(IO,ITT))
      TTT=T(IO,ITT)+DIF*(T(I1,ITT)-T(IO,ITT))
      PAV=.5*(PPP+P(IO,ITT))
      TAV=.5*(TTT+T(IO,ITT))
      HTPPR=HTP
      ETA=1.+(PAV*77.526E-06)/TAV
      HTP=(RE+H)/ETA
      IF(ABS(HTP-HTPPR)-1.E-8)640,640,630
C
C     CENTER SHELL AT THE TANGENT HEIGHT
C
  640 JC=2
      PPP=P(I1,ITT)
      TTT=T(I1,ITT)
      ZZZ=Z(I1)
      DIF=(HTP-RE-Z(IO))/(Z(I1)-Z(IO))
      P(I1,ITT)=P(IO,ITT)+DIF*(P(I1,ITT)-P(IO,ITT))
      T(I1,ITT)=T(IO,ITT)+DIF*(T(I1,ITT)-T(IO,ITT))
      Z(I1)=Z(IO)+DIF*(Z(I1)-Z(IO))
      DZ=(ZPREV-Z(I1))*SN
      ZPREV=Z(IO)
      DS=2.*((RE+Z(IO))**2-HTP*HTP)**.5
      HTP=HTP-RE
   77 ASSIGN 700TO  ND1
      GOTO 100
   70 ASSIGN 800TO  ND2
      GOTO 200
  800 JC=3
      P(I1,ITT)=PPP
      T(I1,ITT)=TTT
```

```
      Z(I1)=ZZZ
      IF(ITT-3)802,803,803
  803 ITT=2
  802 IENDD=I0-1
      SN=-1.0
C
C     FINAL SHELL ITERATION
C
      DO 80 M3=1,IENDD
      I1=IENDD+1-M3
      I0=I1+1
      GOTO (87,1142),MA4
 1142 GOTO(85,87),ITT
   85 IF(Z(I1)-ZTST)87,86,86
   86 ITT=3
   87 ASSIGN 90 TO  ND1
      GOTO 100
   90 ASSIGN 330 TO  ND2
      GOTO 200
  330 IF(ITT-3)80,335,335
  335 ITT=2
   80 CONTINUE
C
C     OUTPUT DATA
C
  550 H=H/(1.E05)
      HTP=HTP/(1.E05)
      R2TOT(JJ)=0.
      DO 510 IJ=1,NN
      RT2(IJ,JJ)=RT(IJ)*DV(IJ)/1000.*FILTER(IJ)
  510 R2TOT(JJ)=R2TOT(JJ)+RT2(IJ,JJ)
      GOTO(1181,1182),MA11
C
C     WEIGHTING FUNCTION OUTPUT
C
 1182 WRITE(L2,2185)
 2185 FORMAT(1H1,19HWEIGHTING FUNCTIONS)
      DO 2182 I=1,NSHELL
      WRITE(L2,2186)ARRAYZ(I)
 2186 FORMAT(1H ,9HALTITUDE:,E15.8)
 2182 WRITE(L2,8) (DTDZ(I,M3),M3=1,NN)
 1181 JJ=JJ+1
 4001 IF(JJ-M)500,500,995
  995 GOTO(710,711),MB1
C
C     SPECTRAL SUBINTERVAL RADIANCE OUTPUT
C
  711 WRITE(L4,996)(RT2(NG,1),NG=1,5),LABEL,IEND
  996 FORMAT(5E13.6,I8,I7)
      M3M=M*NN
      WRITE(L4,997)(RT2(NG,1),NG=6,M3M)
  997 FORMAT(6E13.6)
  710 GOTO(712,713),MB2
  713 DO 1508 JJ=1,M
      DO 1509 NG=1,NN
 1509 RTT2(JJ,NG)=RT2(NG,JJ)
 1508 CONTINUE
      DO 167 NG=1,NN
      NPLOT(1)=1
      NPLOT(2)=1
```

```
      NPLCT(3)=M
      NPLCT(4)=(NQ-1)*M+1
      NPLCT(5)=1
      NPLCT(6)=1
      NPLCT(7)=1
      WRITE(L2,168)NQ,IEND
  168 FORMAT(1H1,21HSPECTRAL SUBINTERVAL ,I3,29H RADIANCE PROFILE OF DAT
     1A SET,I3)
      CALL PLOTS(RTT2,HT,NPLOT,HPLOT)
  167 CONTINUE
  712 GOTO(714,715),MB3
C
C     TOTAL RADIANCE OUTPUT
C
  715 WRITE(L5,996)(R2TOT(NQ),NQ=1,5),LABEL,IEND
      WRITE(L5,997)(R2TOT(NQ),NQ=6,M)
  714 GOTO(716,717),MB4
  717 NPLCT(1)=1
      NPLCT(2)=1
      NPLCT(3)=M
      NPLCT(4)=1
      NPLCT(5)=1
      NPLCT(6)=1
      NPLCT(7)=1
      WRITE(L2,169)IEND
  169 FORMAT(1H1,34HTOTAL RADIANCE PROFILE OF DATA SET,I3)
      CALL PLOTS(R2TOT,HT,NPLOT,HPLOT)
  716 GOTO(1183,1184),MA1
 1184 IQ=IQ+1
      IF(IQ-NUMPTS)889,889,888
 1183 GOTO(888,1186),MA4
 1186 IABC=IABC+1
      IF(IABC-NPSI)889,889,888
  887 STOP 77
      END
$IBFTC BCB
      SUBROUTINE PLOTS(Y,X,N,H)
      DIMENSION T(1),X(1),H(1),PLOT(120),VMAX(2),VMIN(2),Y(1)
      DIMENSION N(4,1),NU(2),MU(2),NAVE(100)
      DIMENSION AN(10),MV(10)
      COMMON AN,MV,PERIOD,PLUS,DASH,MINUS,BLANK,ITBCD
      EQUIVALENCE  (N1,NAVE(1)),(N2,NAVE(2)),(N3,NAVE(3)),(N4,NAVE(4)),
     1(N5,NAVE(5))
      EQUIVALENCE  (VMAX(1),XMAX),(VMAX(2),YMAX),(VMIN(1),XMIN),
     1    (VMIN(2),YMIN)
      REAL MINUS
      ZERO=AN(1)
C SAVE N
      I=1
      DO 1 K=1,25
      DO 1 J=1,4
      NAVE(I)=N(J,K)
 1    I=I+1
C COMPUTE NUMBER OF POINTS(NX) TO BE PLOTTED
      NX=0
      DO 2 I=1,N1
 2    NX=NX+NAVE(3*I)
C INITIALIZE SORTING POINTERS
      IL1=1
      IL2=1
```

```
      JO =1
      XMIN = X(N5)
      XMAX = X(N5)
      IN =1
      N(1,1)=0
      N(2,1)=N4
      N(3,1)=N5
      N(4,1)=8
C SORT LOOP
      I3=0
      DO 10 I=1,N1
      I3=I3+3
      KN=NAVE(I3+1)
      KX=KN-1+NAVE(I3)
      JX=NAVE(I3+2)-1
      IF(I.GT.1)  GO TO 3
      KN=KN+1
      JX=JX+1
 3    DO 10 K=KN,KX
      IN =IN +1
      JX =JX+1
      N(4,IN)=3*I+5
      N(3,IN)=JX
      N(2,IN)=K
      N(1,IN)=0
C SAVE MAXIMUM AND MINIMUM INDEPENDENT VARIABLE VALUES
      IF(XMIN.LT.X(JX))  GO TO 4
      XMIN = X(JX)
      GO TO 5
 4    IF(XMAX.GT.X(JX))  GO TO 5
      XMAX = X(JX)
 5    J=IL1
      JY=N(2,J)
      IF(Y(K).LE.Y(JY))  GO TO 8
C Y(K) IS LARGEST VALUE FOUND, PLACE AT TOP OF LIST
      IL1  =IN
      N(1,IN)=J
      GO TO 10
 6    IF(Y(K).LT.Y(JY))  GO TO 8
C PLACE Y(K) IN MIDDLE OF LIST
 7    N(1,IN)=J
      N(1,JO)=IN
      GO TO 10
 8    IF(N(1,J ).LE.0)   GO TO 9
C PROCEED DOWN LIST
      JO=J
      J=N(1,JO)
      JY=N(2,J)
      GO TO 6
C PLACE Y(K)AT BOTTOM OF LIST
 9    N(1,J )=IN
      IL2  =IN
 10   CONTINUE
      IL11=N(2,IL1)
      YMAX=Y(IL11)
      IL22=N(2,IL2)
      YMIN=Y(IL22)
C PLOT LOOP
      NPP=3*N1+1
      J=1
```

```
      IF (N2.EQ.1) GO TO 60
      N2=1
      LIM=4*J+3*N1+4
      YMAX=H(LIM)
      YMIN=H(LIM+1)
      XMAX=H(LIM+2)
      XMIN=H(LIM+3)
   60 CONTINUE
      NPP=NPP+2
C DETERMINE NUMBER OF PAGES FOR JTH GRAPH   NPY X NPX
      NPX=MAX0(NAVE(NPP)+1)
      NPY=MAX0(NAVE(NPP+1),1)
      NL=120*NPX
C DETERMINE UNITS FOR J-TH GRAPH
      DO 13 I=1,2
      ONL = 1./FLOAT(NL) + .000001
      U = ABS(VMAX(I)-VMIN(I))*ONL
      U=1.06*U
      IF (.1E10*U.LT.(ABS(VMAX(I))+ABS(VMIN(I))))U=.04*ABS(VMAX(I))
      NU(I)=ALOG10(U)
      NU(I)=NU(I)-1
      IF(U.LT.1.)     NU(I)=NU(I)-1
      UM = U*10.**(-NU(I))
      MU(I)= UM + .99
      DO 11 K=1,9
      IF(MU(I).GT.MV(K))  GO TO 11
      MU(I)=MV(K)
      GO TO 12
 11   CONTINUE
      MU(I)=10
      NU(I)=NU(I)+1
 12   IF(U.GE.1.)  GO TO 13
 13   NL=60*NPY-5
C DETERMINE MINIMUM INDEPENDENT VALUE(XMIV) ON GRAPH, FIRST PRINT LINE,
C (LPI), AND VERTICAL AXIS LINE(LVA)
      U5 =MU(1)
      Ux = 10.**(NU(1))
      Ux = U5*Ux
      U5 = 5.*Ux
      LVA=9
      LPI=9
      IF(XMAX.LE.0.)  GO TO 15
      XMIV = -7.5*Ux
      IF(XMIN.LT.XMIV)  GO TO 14
      IF(XMIN.GT.(.1*XMAX))  XMIV = XMIV + U5*FLOAT(IFIX(XMIN/U5))
      GO TO 151
 14   L= -XMIN/U5
      LVA=LVA+5*L
      IF(L.NE.(2*(L/2)))   LPI=3
      XMIV = XMIV - FLOAT(L)*U5
      GO TO 151
 15   LVA=120*NPX-2
      XMIV = -Ux*(FLOAT(LVA)-.5)
      IF(-XMAX.GT.(-.1*XMIN))  XMIV = XMIV + U5*FLOAT(IFIX(XMAX/U5))
C DETERMINE MAXIMUM DEPENDENT VALUE(XMOV) ON GRAPH, FIRST PRINT LINE
C (LPD), AND HORIZONTAL AXIS LINE(LHA)
 151  U5 =MU(2)
      LPD=3
      LPDV=3
      Uy = 10.**(NU(2) )
```

```
      LY = U5*UY
      U5 = 5.*UY
      IF(YMAX.LT.0.) GO TO 18
      IF(YMIN.LT.(-2.5*UY))  GO TO 16
      LHA=60*NPY-7
      XMOV = UY*(FLOAT(LHA)-.5)
      IF(YMIN.GT.(.2*YMAX))  XMOV = XMOV + U5*FLOAT(IFIX(YMIN/U5))
      GO TO 19
 16   L= YMAX/(10.*LY) + 1.
      IF(ABS(YMIN/LY).GE.FLOAT(60*NPY-10*L-7))  GO TO 17
      LHA=3+10*L
      XMOV = UY*(FLOAT(10*L+2)+.5)
      GO TO 19
 17   LHA=10*L-2
      LPDV=8
      XMOV = UY*(FLOAT(10*L-3)+.5)
      GO TO 19
 18   LHA=3
      XMOV = -2.5*LY
      IF(-YMAX.GT.(-.1*YMIN))  XMOV = XMOV + U5*FLOAT(IFIX(YMAX/U5))
C PRINT HEADINGS ON FIRST PAGE
 19   KX=3*N1+7
      LINE=1+(N1+3)/4
      MX=0
      DELTAX = 120.*UX
      XMINN = XMIV - DELTAX
      XMAXX = XMIV
      DO 50 I=1,NPX
      LPDVL=LPDV
      IPDL=LPD
C START GRAPHING LOOP
      XMINN = XMINN + DELTAX
      XMAXX = XMAXX + DELTAX
      LX=MX+1
      MX=MX+120
      LINX=NPY*60-5
      IF(I.EQ.1)     GO TO 21
      LINE=0
 21   IF(LINE.GE.4)  GO TO 23
      LINE=LINE+1
      WRITE (ITBCD,22) BLANK
 22   FORMAT(A1)
      GO TO 21
 23   LINE=1
C SEARCH TO FIND MAXIMUM VALUE TO BE PRINTED
      XMOVH = XMOV
      JP=IL1
      JY=N(2,JP)
 24   IF(Y(JY).LE.XMOVH)  GO TO 261
      JP=N(1,JP)
      IF(JP.LE.0)     GO TO 261
      JY=N(2,JP)
      GO TO 24
 25   XMOVH = XMOVH - LY
      IF(LINE.GT.LINX)  GO TO 35
      LINE=LINE+1
C ARE THERE VALUES TO BE PLOTTED
      IF(JP.LE.0)     GO TO 252
 251  IF(Y(JY).GE.XMOVH)   GO TO 28
 252  WRITE (ITBCD,26) PLOT
```

```
26    FORMAT(6(20A1))
261   IF(LINE.EQ.LHA)     GO TO 271
      DO 262 II=1,120
262   PLOT(II) = BLANK
      IF(LINE.EQ.(LHA+1))     GO TO 2731
      IF(LVA.LT.LX)  GO TO 25
      IF(LVA.GT.MX)  GO TO 25
      PLOT(LVA) = DASH
      IF(LINE.NE.LPDL)  GO TO 25
      LPDL=LPDL+5
      PLOT(LVA) = PLUS
      IF(LINE.NE.LPDVL)   GO TO 25
      LPDVL=LPDVL+10
      JPER=LVA  +NU(2)
      IF(NU(2).GE.0)    JPER=LVA-1
      ABV = ABS(XMOVH-.5*UY)
      JPRM=LVA-7
      JPRX=LVA-1
      SIGN = BLANK
      IF(XMOVH.GT.0.)  GO TO 270
      JPRM=JPRM+1
      SIGN = MINUS
270   TEN=10.**(JPER-JPRM-1)
      ABV = 1.00000001*ABV
      AN(1) = BLANK
      DO 2700 JPR=JPRM,JPRX
      IF( (JPER.EQ.JPR).AND.(AN(1).EQ.BLANK) )     PLOT(JPR-1) = SIGN
      IF(JPR.EQ.JPER)  GO TO 2700
      IF(JPR.GT.JPER)     AN(1)=ZERO
      KK= ABV/TEN
      PLOT(JPR) = AN(KK+1)
      ABV = ABV - TEN*FLOAT(KK)
      TEN = .1*TEN
      IF( (KK.GT.0).AND.(AN(1).EQ.BLANK) )   PLOT(JPR-1) = SIGN
      IF(KK.GT.0)  AN(1) = ZERO
2700  CONTINUE
      PLOT(JPER) = PERIOD
      IF(LINE.EQ.(LHA+1))     GO TO 2740
      GO TO 25
2731  JPER=LVA
2732  IF(JPER.LE.20)     GO TO 2733
      JPER=JPER-20
      GO TO 2732
2733  IF(JPER.NE.LVA)     GO TO 2734
      IF(LVA.LT.LX)     GO TO 2734
      IF(LVA.GE.MX)     GO TO 2734
      PLOT(JPER) = DASH
      GO TO 2740
2734  ABV =JPER
      SIGN = BLANK
      ABV = UX*(ABV-.5) + XMINN
      JPRM =JPER-6
      IF(JPRM.LE.0)     GO TO 2740
      JPRX=JPER
      IF(NU(1).LT.0)      JPRX=JPER-NU(1)-1
      IF(JPRX.GT.120)     GO TO 2740
      IF(ABV.GE.0.)     GO TO 270
      ABV = -ABV
      SIGN = MINUS
      GO TO 270
```

```
 2740 JPER=JPER+20
      IF(JPER.GT.120)     GO TO 25
      GO TO 2733
 271  DO 272   II=1,120
 272  PLOT(II) = MINUS
      LPIN=LPI
 2720 IF(LPIN.LE.5)     GO TO 2721
      LPIN=LPIN-5
      GO TO 2720
 2721 DO 273   II=LPIN,120,5
 273  PLOT(II) = PLUS
      LPDL=LPDL+5
      LPDVL=LPDVL+10
      GO TO 25
 28   JX=N(3,JP)
      IF(X(JX).GT.XMAXX)   GO TO 29
      IF(X(JX).LT.XMINN)   GO TO 29
      FINDEX= (120.*X(JX) + 60.*UX - 120.*XMINN)/DELTAX
      INDEX=FINDEX
      IF (AMOD(FINDEX,1.0).GE..5) INDEX=INDEX+1
      IF(INDEX.LE.0)     INDEX=1
      IF(INDEX.GT.120)      INDEX=120
      JH=N(4,JP)
      PLOT(INDEX) = H(JH)
 29   JP=N(1,JP)
      IF(JP.LE.0)     GO TO 252
      JY=N(2,JP)
      GO TO 251
 35   IF( (N2.LE.1).AND.(I.EQ.NPX) )    GO TO 51
 50   CONTINUE
   51 AN(1)=ZERO
      RETURN
      END
$IBFTC PRTXT   LIST,DECK
      SUBROUTINE PRINT (N1,N2)
C                LIST RAC BCD PRINT TAPE
C                FROM N1 TO N2 PRINT LINES.
C
      DATA      BLANK/6H        /
    2 FORMAT(22A6)
    3 FORMAT(18H1CARD INPUT ERROR    ,3HN1=,I5,5X,3HN2=,I5)
      DIMENSION PLN(22)
      IF((N2.LT.N1).OR.(N1.LE.0).OR.(N2.LE.0)) GO TO 30
      IF(N1.EQ.1) GO TO 20
      N = N1-1
      DO 10 I=1,N
      DO 9 K=1,22
    9 PLN(K)=BLANK
   10 CALL AREAD(PLN)
      N2 = N2 - N
   20 DO 25 I = 1,N2
      DO 21 K=1,22
   21 PLN(K) = BLANK
      CALL AREAD(PLN)
   25 WRITE(6,2)  PLN
      RETURN
   30 WRITE(6,3)  N1,N2
      STOP
      END
$IBMAP TAPE     20
 AIN   FILE     AINPLT,B(2),BLK=22,MOUNT,INPUT
 AREAD SAVE
       CLA      3,4
       STA      PLN
       CLA      TWRD
       TNZ      READ
       TSX      .CPEN,4
       PZE      AIN
       STL      TWRD
```

```
 READ   TSX      .READ,4
        PZE      AIN,,ERR
        PZE      ECF,,ERR
 PLN    TCRT     C,,**
        RETURN   AREAD
 TWRD   PZE
 EOF    CALL     .EXIT.
 ERR    CALL     DUMP(=0,=77777,=3)
        END
$IBFTC PRT1      LIST,DECK
      SUBROUTINE PRINT1(N1,N2)
C                LIST RAC BCD PRINT TAPE
C                FROM N1 TO N2 PRINT LINES.
C
      DATA       BLANK/6H      /
    2 FORMAT(22A6)
    3 FORMAT(18H1CARD INPUT ERROR    ,3HN1=,I5,5X,3HN2=,I5)
      DIMENSION PLN(22)
      IF((N2.LT.N1).OR.(N1.LE.0).OR.(N2.LE.0)) GO TO 30
      IF(N1.EQ.1) GO TO 20
      N = N1-1
      DO 10 I=1,N
      DO 9 K=1,22
    9 PLN(K)=BLANK
   10 CALL BREAD(PLN)
      N2 = N2 - N
   20 DO 25 I = 1,N2
      DO 21 K=1,22
   21 PLN(K) = BLANK
      CALL BREAD(PLN)
   25 WRITE(6,2)  PLN
      RETURN
   30 WRITE(6,3)  N1,N2
      STOP
      END
$IBMAP TAPB      20
 BIN   FILE      BINPUT,B(3),BLK=22,MOUNT,INPUT
 BREAD SAVE
       CLA       3,4
       STA       PLN
       CLA       TWRD
       TNZ       READ
       TSX       .OPEN,4
       PZE       BIN
       STL       TWRD
 READ  TSX       .READ,4
       PZE       BIN,,ERR
       PZE       ECF,,ERR
 PLN   TCRT      0,,**
       RETURN    BREAD
 TWRD  PZE
 EOF   CALL      .EXIT.
 ERR   CALL      DUMP(=0,=77777,=3)
       END
$IBMAP UN1       4
       ENTRY     .UNC1.
.UNC1. PZE       UNITC1
UNITC1 FILE      ,B(1),MOUNT,HOLD,INPUT,BCD,BLK=20
       END
$IBMAP UN2       4
       ENTRY     .UNC2.
.UNC2. PZE       UNITC2
UNITC2 FILE      ,B(2),MOUNT,HOLD,OUTPUT,BCD,BLK=20
       END
$IBMAP UN3       4
       ENTRY     .UNC3.
.UNC3. PZE       UNITC3
UNITC3 FILE      ,B(3),MOUNT,HOLD,OUTPUT,BCD,BLK=20
       END
```

```
PROGRAM CORPS-COMPREHENSIVE RADIANCE PROFILE SYNTHESIZER
0123456789010012015020025030040050075
.     +     '     -     *
025069
-30-25-20-15-10-08-06-04-02000001002003004005006007008009010011012013014
015016017018019020021022023024025026027028029030031032033034035036037038
039040041042043044045046047048049050052054056058060065070075080
050505050505050505050505050505050505050505050505
 600 - 605   C0 =-.2059E 01   C1 = .5345E 00   C2 = .4735E-03   C3 = .1754E-03
 600 - 605   A1 = .2845E-01   A2 =-.3544E-04   B1 =-.1088E-03   B2 = .1970E-07
 605 - 610   C0 =-.2066E 01   C1 = .5429E 00   C2 = .9158E-03   C3 = .7054E-04
 605 - 610   A1 = .2508E-01   A2 =-.3183E-04   B1 =-.2967E-03   B2 = .3035E-06
 610 - 615   C0 =-.1913E 01   C1 = .5367E 00   C2 = .1018E-02   C3 = .4015E-03
 610 - 615   A1 = .2500E-01   A2 =-.3103E-04   B1 =-.1348E-02   B2 = .2423E-05
 615 - 620   C0 =-.6496E 00   C1 = .4670E 00   C2 =-.1117E-01   C3 =-.5072E-03
 615 - 620   A1 = .2427E-01   A2 =-.3255E-04   B1 =-.1429E-03   B2 =-.6601E-06
 620 - 625   C0 =-.9708E 00   C1 = .4881E 00   C2 =-.3081E-02   C3 = .8933E-04
 620 - 625   A1 = .2466E-01   A2 =-.3254E-04   B1 =-.1147E-02   B2 = .1682E-05
 625 - 630   C0 =-.1094E 01   C1 = .5227E 00   C2 = .9985E-03   C3 = .1969E-03
 625 - 630   A1 = .2064E-01   A2 =-.2516E-04   B1 =-.7863E-03   B2 = .1244E-05
 630 - 635   C0 =-.7126E 00   C1 = .5259E 00   C2 = .4944E-02   C3 = .6003E-03
 630 - 635   A1 = .1731E-01   A2 =-.2070E-04   B1 = .3972E-04   B2 =-.2974E-06
 635 - 640   C0 =-.4273E 00   C1 = .5258E 00   C2 = .4451E-02   C3 = .4902E-03
 635 - 640   A1 = .1074E-01   A2 =-.1133E-04   B1 =-.8162E-04   B2 = .1052E-06
 640 - 645   C0 =-.5124E-01   C1 = .5226E 00   C2 = .2344E-02   C3 = .3125E-03
 640 - 645   A1 = .8374E-02   A2 =-.9330E-05   B1 =-.1409E-03   B2 = .1398E-06
 645 - 650   C0 = .5226E 00   C1 = .5209E 00   C2 = .2917E-02   C3 = .4480E-03
 645 - 650   A1 = .3873E-02   A2 =-.2421E-05   B1 =-.2004E-03   B2 = .1608E-06
 650 - 655   C0 = .4233E 00   C1 = .5475E 00   C2 = .1223E-01   C3 = .1234E-02
 650 - 655   A1 =-.6438E-03   A2 = .2341E-05   B1 = .5680E-03   B2 =-.1662E-05
 655 - 660   C0 = .3158E 00   C1 = .5657E 00   C2 = .1514E-01   C3 = .1334E-02
 655 - 660   A1 =-.2864E-02   A2 = .4484E-05   B1 = .3343E-03   B2 =-.1000E-05
 660 - 665   C0 = .7340E 00   C1 = .5043E 00   C2 = .4062E-02   C3 = .7427E-03
 660 - 665   A1 =-.2866E-02   A2 = .4004E-05   B1 =-.2181E-02   B2 = .4345E-05
 665 - 670   C0 = .1581E 01   C1 = .4545E 00   C2 =-.7751E-02   C3 =-.1627E-03
 665 - 670   A1 =-.1849E-02   A2 = .1790E-05   B1 = .3196E-02   B2 =-.7419E-05
 670 - 675   C0 = .5082E 00   C1 = .4893E 00   C2 = .2140E-01   C3 = .2304E-02
 670 - 675   A1 =-.2964E-02   A2 = .5146E-05   B1 = .5660E-03   B2 =-.2058E-05
 675 - 680   C0 = .3750E 00   C1 = .5768E 00   C2 = .1620E-01   C3 = .1371E-02
 675 - 680   A1 =-.3190E-02   A2 = .5444E-05   B1 =-.5586E-03   B2 = .6459E-06
 680 - 685   C0 = .3085E 00   C1 = .5622E 00   C2 = .1288E-01   C3 = .1098E-02
 680 - 685   A1 = .1207E-02   A2 =-.1181E-05   B1 =-.1148E-02   B2 = .1942E-05
 685 - 690   C0 = .7475E-01   C1 = .5635E 00   C2 = .1304E-01   C3 = .1087E-02
 685 - 690   A1 = .4749E-02   A2 =-.4402E-05   B1 = .3228E-02   B2 =-.6662E-05
 690 - 695   C0 =-.1900E 00   C1 = .5443E 00   C2 = .7285E-02   C3 = .5822E-03
 690 - 695   A1 = .1094E-01   A2 =-.1318E-04   B1 =-.9946E-03   B2 = .1565E-05
 695 - 700   C0 =-.5606E 00   C1 = .5394E 00   C2 = .7133E-02   C3 = .6003E-03
 695 - 700   A1 = .1667E-01   A2 =-.2118E-04   B1 =-.7771E-03   B2 = .1322E-05
 700 - 705   C0 =-.8201E 00   C1 = .5369E 00   C2 = .5101E-02   C3 = .4480E-03
 700 - 705   A1 = .2305E-01   A2 =-.3179E-04   B1 =-.7774E-03   B2 = .1184E-05
 705 - 710   C0 =-.1100E 01   C1 = .5312E 00   C2 = .4247E-02   C3 = .4863E-03
 705 - 710   A1 = .2737E-01   A2 =-.3638E-04   B1 =-.1020E-02   B2 = .1640E-05
 710 - 715   C0 =-.1552E 01   C1 = .5436E 00   C2 = .2749E-02   C3 = .1488E-03
```

```
 710 - 715   A1 = .2574E-01   A2 =-.3124E-04   B1 =-.4845E-03   B2 = .5831E-06
 715 - 720   C0 =-.8974E 00   C1 = .4765E 00   C2 =-.6213E-02   C3 =-.1930E-03
 715 - 720   A1 = .2479E-01   A2 =-.3091E-04   B1 =-.8478E-03   B2 = .1159E-05
 720 - 725   C0 =-.7514E 00   C1 = .4525E 00   C2 =-.1445E-01   C3 =-.8852E-03
 720 - 725   A1 = .2027E-01   A2 =-.2585E-04   B1 =-.5027E-03   B2 =-.3843E-07
602.5   607.5   612.5   617.5   622.5   627.5   632.5   637.5   642.5   647.5
652.5   657.5   662.5   667.5   672.5   677.5   682.5   687.5   692.5   697.5
702.5   707.5   712.5   717.5   722.5
   -3.5E 00   -2.5E 00   -2.5E 00   -1.5E 00   -1.5E 00
  -0.5E 00    0.0E 00    .5E 00    1.5E 00    1.5E 00
    2.5E 02    2.5E 02    3.5E 02
  .15530000E-04  .40120000E-04  .15530000E-03  .40120000E-03  .77020000E-03
  .67180000E-03  .36060000E-03  .55880000E-03  .42870000E-03  .00000000E 00
  .15380000E-04  .48640000E-04  .15380000E-03  .48640000E-03  .58260000E-03
  .51950000E-03  .32000000E-03  .75450000E-03  .10740000E-02  .00000000E 00
  .12780000E-04  .40420000E-04  .12780000E-03  .40420000E-03  .61190000E-03
  .61220000E-03  .61310000E-03  .11270000E-02  .46350000E-03  .16860000E-04
  .11700000E-03  .37020000E-03  .11700000E-03  .37020000E-02  .40930000E-02
  .49870000E-02  .29830000E-02  .40580000E-02  .00000000E 00  .00000000E 00
  .17170000E-04  .54300000E-04  .17170000E-03  .54300000E-03  .13620000E-02
  .18320000E-02  .13940000E-02  .11590000E-02  .46690000E-03  .00000000E 00
  .38240000E-04  .12090000E-03  .38240000E-03  .12090000E-02  .17890000E-02
  .16910000E-02  .13790000E-02  .26650000E-02  .12410000E-02  .00000000E 00
  .86020000E-04  .27200000E-03  .86020000E-03  .18090000E-02  .19690000E-02
  .22590000E-02  .35540000E-02  .43280000E-02  .94690000E-03  .00000000E 00
  .34370000E-03  .10870000E-02  .14230000E-02  .24120000E-02  .27790000E-02
  .39650000E-02  .34590000E-02  .35030000E-02  .00000000E 00  .00000000E 00
  .66370000E-03  .77590000E-03  .11300000E-02  .20030000E-02  .36900000E-02
  .44270000E-02  .57270000E-02  .53180000E-02  .39800000E-02  .00000000E 00
  .96900000E-03  .17410000E-02  .40990000E-02  .63500000E-02  .85180000E-02
  .10350000E-01  .10710000E-01  .78260000E-02  .36650000E-02  .00000000E 00
  .90280000E-03  .10940000E-02  .16660000E-02  .35060000E-02  .36990000E-02
  .46430000E-02  .73750000E-02  .40890000E-02  .13520000E-06  .00000000E 00
  .72550000E-03  .97140000E-03  .17490000E-02  .37700000E-02  .36810000E-02
  .47260000E-02  .36970000E-02  .65550000E-02  .70000000E-02  .00000000E 00
  .90980000E-03  .15540000E-02  .35910000E-02  .85560000E-02  .14200000E-01
  .13770000E-01  .96630000E-02  .49080000E-02  .70000000E-02  .00000000E 00
  .51280000E-02  .66150000E-02  .94540000E-02  .13430000E-01  .12390000E-01
  .13810000E-01  .10970000E-01  .11350000E-01  .70000000E-02  .00000000E 00
  .71760000E-03  .94550000E-03  .16700000E-02  .37640000E-02  .36740000E-02
  .41220000E-02  .29070000E-02  .59440000E-02  .70000000E-02  .00000000E 00
  .70650000E-03  .91140000E-03  .15590000E-02  .30660000E-02  .33290000E-02
  .37470000E-02  .28610000E-02  .48510000E-02  .70000000E-02  .00000000E 00
  .68420000E-03  .84070000E-03  .13350000E-02  .27420000E-02  .31100000E-02
  .41710000E-02  .34620000E-02  .47700000E-02  .70000000E-02  .00000000E 00
  .65130000E-03  .73600000E-03  .10070000E-03  .18620000E-02  .21050000E-02
  .41090000E-02  .37850000E-02  .52200000E-02  .70700300E-02  .00000000E 00
  .63210000E-03  .67030000E-03  .81580000E-03  .12570000E-02  .21710000E-02
  .28240000E-02  .30150000E-02  .14590000E-02  .11790000E-02  .00000000E 00
  .43070000E-03  .64310000E-03  .71080000E-03  .92490000E-03  .15020000E-02
  .19100000E-02  .20730000E-02  .18470000E-02  .16280000E-02  .00000000E 00
  .14440000E-03  .45670000E-03  .74170000E-03  .10220000E-02  .12690000E-02
  .13690000E-02  .20230000E-02  .33540000E-02  .24370000E-02  .00000000E 00
  .50950000E-04  .16110000E-03  .50950000E-03  .11950000E-02  .11340000E-02
```

.94230000E-03	.50730000E-03	.12770000E-02	.20150000E-03	.00000000E 00
.26650000E-04	.84290000E-04	.26650000E-03	.84290000E-03	.11640000E-02
.10350000E-02	.62920000E-03	.10090000E-02	.15590000E-02	.00000000E 00
.28520000E-04	.90190000E-04	.28520000E-03	.90190000E-03	.17440000E-02
.24310000E-02	.20230000E-02	.12520000E-02	.69670000E-03	.00000000E 00
.13780000E-03	.43580000E-03	.13780000E-02	.30710000E-02	.30970000E-02
.31790000E-02	.19420000E-02	.32800000E-02	.34980000E-03	.00000000E 00
.36330000E-04	.11490000E-03	.36330000E-03	.90190000E-03	.88010000E-03
.81110000E-03	.59300000E-03	.18590000E-02	.90990000E-03	.13520000E-03
.31850000E-04	.10070000E-03	.31850000E-03	.69250000E-03	.71080000E-03
.76900000E-03	.99780000E-03	.27520000E-02	.26840000E-02	.00000000E 00
.25460000E-04	.80510000E-04	.25460000E-03	.72650000E-03	.81870000E-03
.11090000E-02	.17990000E-02	.40640000E-02	.84930000E-03	.00000000E 00
.44930000E-03	.14200000E-02	.44930000E-02	.59470000E-02	.74690000E-02
.92740000E-02	.83360000E-02	.73730000E-02	.23290000E-02	.00000000E 00
.62650000E-04	.19810000E-03	.62650000E-03	.19810000E-02	.31170000E-02
.37620000E-02	.40680000E-02	.75100000E-02	.14650000E-02	.14680000E-02
.13140000E-03	.41550000E-03	.13140000E-02	.22280000E-02	.37980000E-02
.41230000E-02	.56560000E-02	.45420000E-02	.46650000E-02	.00000000E 00
.26470000E-03	.83720000E-03	.18710000E-02	.29610000E-02	.46560000E-02
.58500000E-02	.64180000E-02	.77720000E-02	.36930000E-02	.83300000E-03
.70130000E-03	.12690000E-02	.20410000E-02	.41240000E-02	.56470000E-02
.55220000E-02	.61240000E-02	.43910000E-02	.22150000E-02	.00000000E 00
.81150000E-03	.10870000E-02	.10590000E-02	.39550000E-02	.56790000E-02
.61890000E-02	.80240000E-02	.89930000E-02	.10910000E-01	.00000000E 00
.11770000E-02	.22450000E-02	.56220000E-02	.11770000E-01	.16830000E-01
.20570000E-01	.17450000E-01	.10690000E-01	.97370000E-02	.00000000E 00
.10840000E-02	.14580000E-02	.26790000E-02	.38310000E-02	.59830000E-02
.75570000E-02	.63620000E-02	.43330000E-02	.47510000E-02	.00000000E 00
.87430000E-03	.12860000E-02	.25870000E-02	.41180000E-02	.56580000E-02
.70990000E-02	.53300000E-02	.30560000E-02	.47460000E-02	.00000000E 00
.96050000E-03	.15580000E-02	.34490000E-02	.94290000E-02	.16180000E-01
.20580000E-01	.21770000E-01	.12198000E-01	.70000000E-02	.00000000E 00
.74270000E-02	.11650000E-01	.17200000E-01	.21360000E-01	.24250000E-01
.24910000E-01	.17040000E-01	.63650000E-02	.70000000E-02	.00000000E 00
.89880000E-03	.13630000E-02	.28320000E-02	.39740000E-02	.61580000E-02
.69660000E-02	.72270000E-02	.71630000E-02	.70000000E-02	.00000000E 00
.91950000E-03	.14280000E-02	.24510000E-02	.33140000E-02	.55650000E-02
.68640000E-02	.65010000E-02	.87530000E-02	.77667000E-02	.00000000E 00
.91360000E-03	.14100000E-02	.24040000E-02	.31670000E-02	.55800000E-02
.73200000E-02	.66410000E-02	.79750000E-02	.83960000E-02	.00000000E 00
.86650000E-03	.13610000E-02	.23120000E-02	.28750000E-02	.46550000E-02
.67790000E-02	.81650000E-02	.10990000E-01	.97340000E-02	.00000000E 00
.82850000E-03	.11410000E-02	.21290000E-02	.31230000E-02	.41280000E-02
.49620000E-02	.48480000E-02	.51190000E-02	.32770000E-02	.00000000E 00
.77520000E-03	.97240000E-03	.15960000E-02	.27830000E-02	.28860000E-02
.36320000E-02	.62320000E-02	.46580000E-02	.39010000E-02	.00000000E 00
.43260000E-03	.93980000E-03	.14890000E-02	.26770000E-02	.30420000E-02
.38390000E-02	.67310000E-02	.10480000E-01	.19680000E-02	.00000000E 00
.21810000E-03	.68980000E-03	.14580000E-02	.16550000E-02	.22760000E-02
.24560000E-02	.28410000E-02	.40330000E-02	.22230000E-02	.00000000E 00
.11440000E-03	.36190000E-03	.11440000E-02	.14870000E-02	.17460000E-02
.25640000E-02	.37800000E-02	.58990000E-02	.63460000E-02	.00000000E 00
.17410000E-03	.55050000E-03	.17410000E-02	.40000000E-02	.42690000E-02

.51210000E-02	.54270000E-02	.96690000E-02	.15180000E-02	.53760000E-03
.46300000E-03	.14640000E-02	.35400000E-02	.38010000E-02	.46260000E-02
.54860000E-02	.67790000E-02	.57820000E-02	.16260000E-02	.00000000E 00
.59620000E-04	.18550000E-03	.59620000E-03	.10080000E-02	.10290000E-02
.10940000E-02	.14040000E-02	.30660000E-02	.20810000E-02	.11130000E-02
.48800000E-04	.15430000E-03	.48800000E-03	.80950000E-03	.93980000E-03
.13510000E-02	.27540000E-02	.45380000E-02	.64950000E-02	.00000000E 00
.39220000E-04	.12400000E-03	.39220000E-03	.91050000E-03	.12590000E-02
.23610000E-02	.51260000E-02	.42510000E-02	.27950000E-02	.00000000E 00
.25880000E-03	.81860000E-03	.25880000E-02	.47630000E-02	.61690000E-02
.54690000E-02	.37890000E-02	.74330000E-02	.65520000E-02	.00000000E 00
.35470000E-04	.11210000E-03	.35470000E-03	.11210000E-02	.28200000E-02
.29770000E-02	.32100000E-02	.31860000E-02	.66510000E-02	.00000000E 00
.77860000E-04	.24620000E-03	.77860000E-03	.23420000E-02	.25460000E-02
.31920000E-02	.36720000E-02	.55550000E-02	.14380000E-02	.16570000E-02
.16680000E-03	.52770000E-03	.16680000E-02	.25510000E-02	.39510000E-02
.49340000E-02	.63660000E-02	.48230000E-02	.49340000E-02	.00000000E 00
.53560000E-03	.12490000E-02	.17890000E-02	.33520000E-02	.46610000E-02
.56390000E-02	.53110000E-02	.45150000E-02	.18580000E-02	.00000000E 00
.82860000E-03	.10000000E-02	.15420000E-02	.32580000E-02	.58640000E-02
.59730000E-02	.75470000E-02	.87050000E-02	.95720000E-02	.00000000E 00
.11420000E-02	.19910000E-02	.46780000E-02	.97850000E-02	.15270000E-01
.17740000E-01	.18830000E-01	.11510000E-01	.92970000E-02	.00000000E 00
.11190000E-02	.13800000E-02	.22040000E-02	.48100000E-02	.52800000E-02
.73590000E-02	.65980000E-02	.40070000E-02	.14760000E-02	.00000000E 00
.89530000E-03	.12110000E-02	.22100000E-02	.53690000E-02	.53670000E-02
.62080000E-02	.59900000E-02	.34910000E-02	.14080000E-02	.00000000E 00
.10310000E-02	.16430000E-02	.35760000E-02	.96880000E-02	.17800000E-01
.19890000E-01	.20300000E-01	.12764000E-01	.70000000E-02	.00000000E 00
.69180000E-02	.99970000E-02	.15240000E-01	.20820000E-01	.19420000E-01
.25690000E-01	.20660000E-01	.19630000E-01	.11241000E-01	.00000000E 00
.90910000E-03	.12540000E-02	.23470000E-02	.38460000E-02	.62230000E-02
.69180000E-02	.70730000E-02	.58350000E-02	.70000000E-02	.00000000E 00
.91360000E-03	.12680000E-02	.23920000E-02	.32190000E-02	.45190000E-02
.62600000E-02	.60450000E-02	.69560000E-02	.84000000E-02	.00000000E 00
.89590000E-03	.12130000E-02	.22160000E-02	.36770000E-02	.43460000E-02
.64390000E-02	.50790000E-02	.33000000E-02	.17100000E-02	.00000000E 00
.85150000E-03	.10720000E-02	.17710000E-02	.31770000E-02	.35670000E-02
.58460000E-02	.52480000E-02	.38970000E-02	.35750000E-02	.00000000E 00
.81970000E-03	.97190000E-03	.14530000E-02	.27840000E-02	.33120000E-02
.40850000E-02	.49640000E-02	.34660000E-02	.24700000E-02	.00000000E 00
.64970000E-03	.87850000E-03	.11580000E-02	.20420000E-02	.28620000E-02
.27890000E-02	.39600000E-02	.46230000E-02	.22520000E-02	.00000000E 00
.28740000E-03	.87650000E-03	.11510000E-02	.19680000E-02	.24440000E-02
.29810000E-02	.41460000E-02	.99540000E-02	.45050000E-02	.96740000E-03
.12590000E-03	.39820000E-03	.12590000E-02	.15460000E-02	.16500000E-02
.19760000E-02	.21410000E-02	.19120000E-02	.29510000E-02	.00000000E 00
.64280000E-04	.20720000E-03	.64280000E-03	.15100000E-02	.15360000E-02
.16180000E-02	.18780000E-02	.40020000E-02	.30340000E-02	.42950000E-03
.83780000E-04	.26490000E-03	.83780000E-03	.24040000E-02	.38240000E-02
.39990000E-02	.34650000E-02	.34640000E-02	.67990000E-02	.00000000E 00
.29610000E-03	.93630000E-03	.29610000E-02	.37740000E-02	.42910000E-02
.43910000E-02	.51870000E-02	.52200000E-02	.31320000E-02	.26870000E-02
-5.33E00	-4.83E00	-4.35E00	-3.97E00	-3.67E00

-3.42E00	-3.22E00	-3.06E00	-2.91E00	-2.77E00
-2.65E00	-2.54E00	-2.44E00	-2.35E00	-2.27E00
-2.19E00	-2.14E00	-2.12E00	-2.12E00	-2.16E00
-2.25E00	-2.29E00	-2.28E00	-2.23E00	-2.09E00
-.58E00	-.63E00	-.68E00	-.73E00	-.78E00
-.83E00	-.88E00	-.94E00	-1.0E00	-1.06E00
-1.11E00	-1.17E00	-1.22E00	-1.28E00	-1.33E00
-1.39E00	-1.45E00	-1.52E00	-1.58E00	-1.64E00
-1.70E00	-1.77E00	-1.83E00	-1.89E00	-1.96E00
-1.92E00	-1.66E00	-1.40E00	-1.16E00	-.97E00
-.72E00	-.51E00	-.31E00	-.12E00	.07E00
.22E00	.33E00	.38E00	.43E00	.42E00
.37E00	.23E00	.07E00	-.08E00	-.26E00
-.43E00	-.61E00	-.79E00	-.98E00	-1.18E00
-4.3E00	100.E00	-4.2E00	99.2E00	-4.1E00
98.4E00	-4.0E00	97.6E00	-3.9E00	96.8E00
-3.8E00	96.0E00	-3.7E00	95.2E00	-3.6E00
94.4E00	-3.5E00	93.6E00	-3.4E00	92.7E00
-3.3E00	91.7E00	-3.2E00	90.6E00	-3.1E00
89.4E00	-3.0E00	88.1E00	-2.9E00	86.8E00
-2.8E00	84.9E00	-2.7E00	83.0E00	-2.6E00
80.9E00	-2.5E00	78.6E00	-2.4E00	76.1E00
-2.3E00	73.4E00	-2.2E00	70.5E00	-2.1E00
67.3E00	-2.0E00	63.8E00	-1.9E00	60.0E00
-1.8E00	55.9E00	-1.7E00	51.5E00	-1.6E00
46.8E00	-1.5E00	41.8E00	-1.4E00	36.6E00
-1.3E00	31.2E00	-1.2E00	25.7E00	-1.1E00
20.2E00	-1.0E00	15.1E00	-.9E00	10.8E00
-.8E00	7.4E00	-.7E00	4.8E00	-.6E00
2.9E00	-.5E00	1.5E00	-.4E00	.5E00
-.3E00	0.E00			
0.E00	0.E00	0.E00	0.E00	0.E00
0.E00	0.E00	0.E00	0.E00	0.E00
0.E00	0.E00	-.737E00	-.750E00	-.762E00
-.775E00	-.787E00	-.800E00	-.812E00	-.825E00
-.837E00	-.850E00	-.862E00	-.875E00	-.887E00
-3.7E00	100.E00	-3.6E00	99.9E00	-3.5E00
99.67E00	-3.4E00	99.32E00	-3.3E00	98.87E00
-3.2E00	98.33E00	-3.1E00	97.72E00	-3.0E00
97.05E00	-2.9E00	96.33E00	-2.8E00	95.56E00
-2.7E00	94.75E00	-2.6E00	93.89E00	-2.5E00
92.98E00	-2.4E00	92.E00	-2.3E00	90.94E00
-2.2E00	89.78E00	-2.1E00	88.51E00	-2.0E00
87.11E00	-1.9E00	85.56E00	-1.8E00	83.94E00
-1.7E00	81.04E00	-1.6E00	79.84E00	-1.5E00
77.57E00	-1.4E00	75.00E00	-1.3E00	72.25E00
-1.2E00	69.28E00	-1.1E00	66.10E00	-1.0E00
62.72E00	-.9E00	59.15E00	-.8E00	55.41E00
-.7E00	51.50E00	-.6E00	47.50E00	-.5E00
43.38E00	-.4E00	39.19E00	-.3E00	34.97E00
-.2E00	30.76E00	-.1E00	26.61E00	0.E00
22.58E00	.1E00	18.74E00	.2E00	15.18E00
.3E00	11.98E00	.4E00	9.2E00	.5E00
6.87E00	.6E00	5.E00	.7E00	3.57E00

```
.8E00          2.5E00         .9E00          1.68E00        1.E00
1.03E00        1.1E00         .49E00         1.2E00         0.E00
-10.E00         -10.82E00      -9.E00         -9.82E00       -8.E00
-8.82E00       -7.E00         -7.82E00       -6.E00         -6.82E00
-5.E00         -5.80E00       -4.E00         -4.72E00       -3.E00
-3.60E00       -2.E00         -2.46E00       -1.E00         -1.29E00
0.E00          -.11E00         1.E00          .97E00         2.E00
2.02E00        3.E00           3.03E00        4.E00          4.04E00
5.E00          5.05E00
-5.2E00        100.E00        -5.1E00        99.97E00       -5.0E00
99.91E00       -4.9E00        99.82E00       -4.8E00        99.70E00
-4.7E00        99.55E00       -4.6E00        99.37E00       -4.5E00
99.16E00       -4.4E00        98.92E00       -4.3E00        98.65E00
-4.2E00        98.35E00       -4.1E00        98.02E00       -4.0E00
97.66E00       -3.9E00        97.27E00       -3.8E00        96.85E00
-3.7E00        96.39E00       -3.6E00        95.90E00       -3.5E00
95.38E00       -3.4E00        94.82E00       -3.3E00        94.22E00
-3.2E00        93.58E00       -3.1E00        92.9E00        -3.0E00
92.18E00       -2.9E00        91.41E00       -2.8E00        90.59E00
-2.7E00        89.72E00       -2.6E00        88.79E00       -2.5E00
87.8E00        -2.4E00        86.74E00       -2.3E00        85.61E00
-2.2E00        84.4E00        -2.1E00        83.1E00        -2.0E00
81.7E00        -1.9E00        80.19E00       -1.8E00        78.56E00
-1.7E00        76.80E00       -1.6E00        74.91E00       -1.5E00
72.88E00       -1.4E00        70.71E00       -1.3E00        68.39E00
-1.2E00        65.92E00       -1.1E00        63.30E00       -1.0E00
60.53E00       -.9E00         57.62E00       -.8E00         54.58E00
-.7E00         51.42E00       -.6E00         48.15E00       -.5E00
44.78E00       -.4E00         41.33E00       -.3E00         37.82E00
-.2E00         34.28E00       -.1E00         30.75E00       0.E00
27.27E00       .1E00          23.89E00       .2E00          20.66E00
.3E00          17.63E00       .4E00          14.84E00       .5E00
12.3E00        .6E00          10.02E00       .7E00          8.01E00
.8E00          6.27E00        .9E00          4.8E00         1.0E00
3.60E00        1.1E00         2.66E00        1.2E00         1.96E00
1.3E00         1.47E00        1.4E00         1.13E00        1.5E00
0.89E00        1.6E00         .71E00         1.7E00         .56E00
1.8E00         .42E00         1.9E00         .28E00         2.0E00
.14E00         2.1E00         0.E00
01101101100     1.E-3
1111
1.E00          1.E00          1.E00          1.E00          1.E00
1.E00          1.E00          1.E00          1.E00          1.E00
1.E00          1.E00          1.E00          1.E00          1.E00
1.E00          1.E00          1.E00          1.E00          1.E00
1.E00          1.E00          1.E00          1.E00          1.E00
91
3.22    E-43.1445 E-43.1415 E-43.1405 E-43.1404 E-4
3.1403 E-43.1401 E-43.1395 E-43.1380 E-43.1350 E-4
3.1290 E-43.1200 E-43.1152 E-43.1130 E-43.1110 E-4
3.1100 E-43.1094 E-43.1087 E-43.1082 E-43.1080 E-4
3.1076 E-43.1070 E-43.1069 E-43.1066 E-43.1062 E-4
3.1060 E-43.1059 E-43.1058 E-43.1057 E-43.1056 E-4
3.1055 E-43.1054 E-43.1053 E-43.1052 E-43.1051 E-4
```

```
3.1050 E-43.1049 E-43.1048 E-43.1047 E-43.1046 E-4
3.1045 E-43.1044 E-43.1043 E-43.1042 E-43.1041 E-4
3.1040 E-43.1039 E-43.1038 E-43.1037 E-43.1036 E-4
3.1035 E-43.1034 E-43.1033 E-43.1032 E-43.1031 E-4
3.1030 E-43.1029 E-43.1028 E-43.1027 E-43.1026 E-4
3.1025 E-43.1024 E-43.1023 E-43.1022 E-43.1021 E-4
3.1020 E-43.1019 E-43.1018 E-43.1017 E-43.1016 E-4
3.1015 E-43.1014 E-43.1013 E-43.1012 E-43.1011 E-4
3.1010 E-43.1009 E-43.1008 E-43.1007 E-43.1006 E-4
3.10050E-43.10045E-43.10040E-43.10035E-43.10030E-4
3.10025E-43.10020E-43.10015E-43.10010E-43.10005E-4
3.10000E-4
000102030405060708091011121314151617181920212223242526272829303132333435
363738394041424344454647484950515253545556575859606162636465666768697071
727374757677787980818283848586878889 90
91
3.22   E-43.1445 E-43.1415 E-43.1405 E-43.1404 E-4
3.1403 E-43.1401 E-43.1395 E-43.1380 E-43.1350 E-4
3.1290 E-43.1200 E-43.1152 E-43.1130 E-43.1110 E-4
3.1100 E-43.1094 E-43.1087 E-43.1082 E-43.1080 E-4
3.1076 E-43.1070 E-43.1069 E-43.1066 E-43.1062 E-4
3.1060 E-43.1059 E-43.1058 E-43.1057 E-43.1056 E-4
3.1055 E-43.1054 E-43.1053 E-43.1052 E-43.1051 E-4
3.1050 E-43.1049 E-43.1048 E-43.1047 E-43.1046 E-4
3.1045 E-43.1044 E-43.1043 E-43.1042 E-43.1041 E-4
3.1040 E-43.1039 E-43.1038 E-43.1037 E-43.1036 E-4
3.1035 E-43.1034 E-43.1033 E-43.1032 E-43.1031 E-4
3.1030 E-43.1029 E-43.1028 E-43.1027 E-43.1026 E-4
3.1025 E-43.1024 E-43.1023 E-43.1022 E-43.1021 E-4
3.1020 E-43.1019 E-43.1018 E-43.1017 E-43.1016 E-4
3.1015 E-43.1014 E-43.1013 E-43.1012 E-43.1011 E-4
3.1010 E-43.1009 E-43.1008 E-43.1007 E-43.1006 E-4
3.10050E-43.10045E-43.10040E-43.10035E-43.10030E-4
3.10025E-43.10020E-43.10015E-43.10010E-43.10005E-4
3.10000E-4
000102030405060708091011121314151617181920212223242526272829303132333435
363738394041424344454647484950515253545556575859606162636465666768697071
727374757677787980818283848586878889 90
91
3.22   E-43.1445 E-43.1415 E-43.1405 E-43.1404 E-4
3.1403 E-43.1401 E-43.1395 E-43.1380 E-43.1350 E-4
3.1290 E-43.1200 E-43.1152 E-43.1130 E-43.1110 E-4
3.1100 E-43.1094 E-43.1087 E-43.1082 E-43.1080 E-4
3.1076 E-43.1070 E-43.1069 E-43.1066 E-43.1062 E-4
3.1060 E-43.1059 E-43.1058 E-43.1057 E-43.1056 E-4
3.1055 E-43.1054 E-43.1053 E-43.1052 E-43.1051 E-4
3.1050 E-43.1049 E-43.1048 E-43.1047 E-43.1046 E-4
3.1045 E-43.1044 E-43.1043 E-43.1042 E-43.1041 E-4
3.1040 E-43.1039 E-43.1038 E-43.1037 E-43.1036 E-4
3.1035 E-43.1034 E-43.1033 E-43.1032 E-43.1031 E-4
3.1030 E-43.1029 E-43.1028 E-43.1027 E-43.1026 E-4
3.1025 E-43.1024 E-43.1023 E-43.1022 E-43.1021 E-4
3.1020 E-43.1019 E-43.1018 E-43.1017 E-43.1016 E-4
3.1015 E-43.1014 E-43.1013 E-43.1012 E-43.1011 E-4
3.1010 E-43.1009 E-43.1008 E-43.1007 E-43.1006 E-4
3.10050E-43.10045E-43.10040E-43.10035E-43.10030E-4
3.10025E-43.10020E-43.10015E-43.10010E-43.10005E-4
3.10000E-4
000102030405060708091011121314151617181920212223242526272829303132333435
363738394041424344454647484950515253545556575859606162636465666768697071
727374757677787980818283848586878889 90
```

APPENDIX A
PLOTTING ROUTINE

PRECEDING PAGE BLANK NOT FILMED.

APPENDIX A
PLOTTING ROUTINE

The subroutine PLOTS will provide printer plots of an arbitrary number of independent versus dependent variable sets per graph. Each graph may consist of any number of printer pages which when joined together form the complete graph. Unless specified by card input, limits are taken to be the maximum and minimum values of the variable sets.

The placement of the axes on the graph and the choice of units are selected by the subroutine. Units have the form

$$m10^n$$

where m and n are integers and m is restricted to the set

10, 12, 15, 20, 25, 30, 40, 50, 75

This set is arbitrary and may be redefined by card input. (See fixed input data for program variable MV.)

All independent and dependent values to be plotted on one graph are stored separately as vectors, say X and Y. Then to obtain plots, one call

CALL PLOTS (Y, X, N, H)

will suffice provided the arrays N and H are set up properly.

The array N is used as a work array by the subroutine and original input values are not restored before returning to the calling program. If the total number of points to plot is K, the dimension of N must be greater than or equal to 4 · K and

N(1) = No. of dependent variable sets to be plotted
N(2) = Method of selecting limits
. 1 Limits chosen from variable sets
.
. 2 Limits specified by card input
N(3K) = Length of Kth variable set
N(3K+1) = First location of the Kth dependent vector in Y
N(3K+2) = First location of the Kth independent vector in X
.
.
. K = 1, . . . , N(1)
N(3N(1) + 3) = No. of pages independent variable
N(3N(1) + 4) = No. of pages dependent variable
The restriction $3N(1) + 4 \leq 100$ must be observed.

PRECEDING PAGE BLANK NOT FILMED.

The array H contains alphabetic information and, if limits are specified by card input, the range of values to be plotted.

H(I) = Identification of graph (not used by all programs)

.

. I = 1, . . . , 7

.

H(3K + 5) = Symbol to be used for plot of Kth variable set. The symbol code must be in the left six bits of the word. (To redefine the code, see fixed data for program, variable SYMBL.)

H(3K + 6) = Identification of Kth variable set printed

H(3K + 7) with symbol. (Not used by all programs.)

.

.

.

H(3N(1) + 8) = Upper limit on dependent values

H(3N(1) + 9) = Lower limit on dependent values

H(3N(1) + 10) = Upper limit on independent values

H(3N(1) + 11) = Lower limit on independent values

Running time is approximately five seconds for a one-page graph.

REFERENCES

1. Anonymous: Space Planners Guide. United States Printing Office, 0-774-405, 1965.

2. Stiefel, E.: Note on Jordan Elimination, Linear Programming, and Tchebyscheff Approximation. Numeische Mathematik, Vol. 2, 1960, pp 1-17.

3. Sokolnidoff, I. S.; and Sokolnikoff, E. S., Higher Mathematics for Engineers and Physicists. McGraw-Hill, 2nd edition, 1941, pp. 542-544.

BIBLIOGRAPHY

Elsasser, W. M. and Culbertson, M. F.: Atmospheric Radiation Tables. Meteorological Monographs, Vol. 4, No. 23, August 1960, pp. 1-43.

GCA Technical Proposal: Infrared and Atmospheric Study Program, 4173-5-01, 1966.

Hanel, R. A., Bandeen, and Conrath, B. J.: The Infrared Horizon of the Planet Earth. J. Atmos. Sci., Vol. 20, 1963, pp. 73-86.

Wark, D. Q., Alishouse, J, and Yamamoto, G.: Calculations of the Earth's Spectral Radiance for Large Zenith Angles. U. S. Department of Commerce Weather Bureau, Meteorological Satellite Laboratory Report No. 21, October 1963.

Wark, D. Q., Alishouse, J., and Yamamoto, G.: Variation of the Infrared Spectral Radiance near the Limb of the Earth. Applied Optics, Vol. 3, No. 2, 1963, pp. 221-227.

PRECEDING PAGE BLANK NOT FILMED