N71-12573
NASA CR-111563

NATIONAL AERONAUTICS AND SPACE ADMINISTRATION

CASE FILE COPY

Technical Report 32-1461

Attitude Control and Structural Response Interaction

Jacob Abel

DEC 1970
RECEIVED
NASA STI FACILITY
INPUT BRANCH

JET PROPULSION LABORATORY
CALIFORNIA INSTITUTE OF TECHNOLOGY
PASADENA, CALIFORNIA

November 15, 1970

NATIONAL AERONAUTICS AND SPACE ADMINISTRATION

Technical Report 32-1461

Attitude Control and Structural Response Interaction

Jacob Abel

JET PROPULSION LABORATORY
CALIFORNIA INSTITUTE OF TECHNOLOGY
PASADENA, CALIFORNIA

November 15, 1970

Prepared Under Contract No. NAS 7-100
National Aeronautics and Space Administration

Preface

The work described in this report was performed by the Engineering Mechanics Division of the Jet Propulsion Laboratory.

Contents

I. Modes of Control-Structures Interaction 1

II. Some Examples 3

A. Example 1: Actuator Deformation Sensitivity 3

B. Example 2: Sensor Deformation Sensitivity 3

C. Example 3: Inertia Deformation Sensitivity 4

III. Sample Spacecraft System 4

A. Equations of Motion 4

B. Control Law 6

C. Analysis 7

D. A Sample Computation 7

E. Approximate Solutions 8

F. Frequency Separation 8

G. Practical Stability 9

IV. Conclusions 10

Figures

1. General attitude control system block diagram 2
2. Elastodynamic response 2
3. Complete elastic model 3
4. Thrusters on flexible appendages 3
5. Sensors on flexible appendages 3
6. Effect of deformation on inertia 4
7. Sample problem spacecraft model 4
8. Sample problem block diagram 4
9. Reference axes 5
10. General differential element coordinates 7
11. Deformed and misoriented solar array 10

Abstract

This report presents an assessment of the problem of the interaction between the structural or elastic response of a spacecraft and the attitude control system dynamics. A general discussion of the possible modes of interaction provides a means of classifying a given spacecraft with respect to the interaction problem. A model spacecraft system is studied and some parameters characterizing the interactions are identified. The question of system stability in the mathematical sense is discussed and the idea of a definition of a practical stability criterion is presented. This concept is applied to the model spacecraft system. Some comments on the adequacy of present methods of evaluating the significance of interactions between attitude control systems and structures are given with particular regard to the concept of frequency separation.

Attitude Control and Structural Response Interaction

I. Modes of Control-Structures Interaction

The attitude control of a rigid spacecraft is described first in order to provide a frame of reference for this report. The representation is modified subsequently to include elastic behavior.

Figure 1 is a block diagram of a general attitude control system, such as the cold gas type. Some of the assumptions in a description of this type which are relevant to this discussion or which are a consequence of the rigid body assumption are that:

(1) Vehicle motion is related to applied torques and forces via equations of Euler and Newton.

(2) Applied torques are functions of error signal only.

(3) Sensor motion is related to vehicle motion by laws of rigid body mechanics.

(4) Mass and inertia parameters in the equations of Euler and Newton are nearly constant, being modified due to gas expulsion.

The structural analysis of a comparable echelon of complexity would be based on the motion data derived from the analysis of the attitude control of Fig. 1. This process can be represented schematically as shown in Fig. 2.

In general, the design of the control system and the assessment of its stability is predicated on the rigid-body assumption. The evaluation of structural response is then based on force and motion histories calculated on the basis of this assumption also. For the class of spacecraft flown to date these procedures, with few exceptions, have been analytically justified and proven to be adequate by flight experience. It is only in the contemplation of the development of spacecraft with very large and very flexible appendages that the question of the adequacy of this approach is raised. The method of analysis which has been described may be likened to asking the question, "A dog walks down a cobblestone street; how does his tail wag?" The comparable question discussed here is, "What happens when a giraffe takes the same walk?"

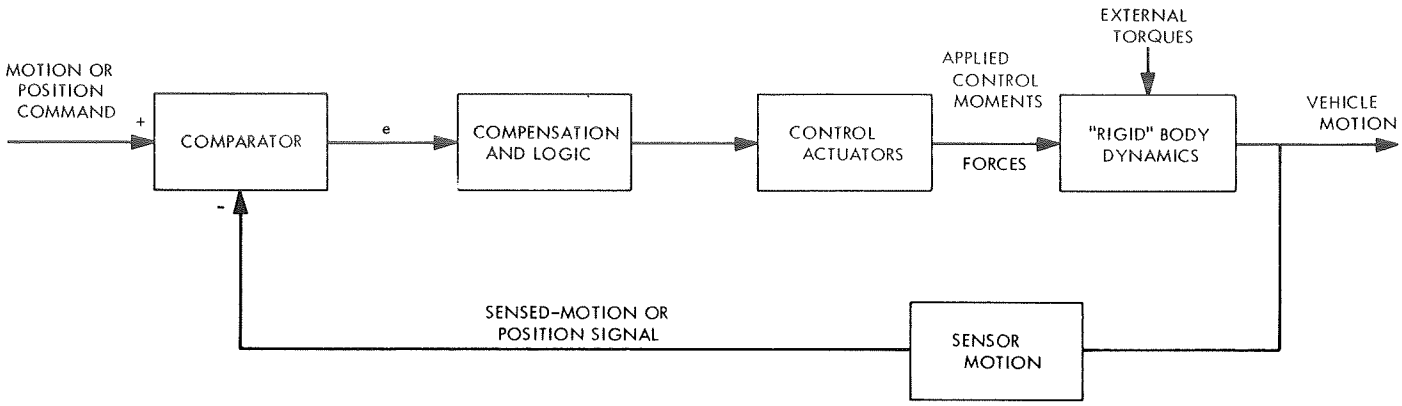

Fig. 1. General attitude control system block diagram

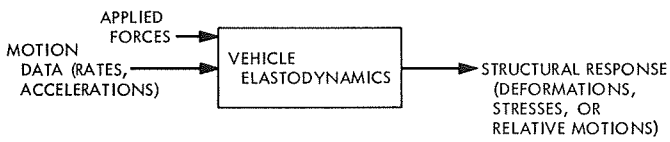

Fig. 2. Elastodynamic response

The effect of increased appendage size and flexibility on the block diagram for the spacecraft is profound. If we introduce the complete elastic description of the spacecraft we get something that looks like Fig. 3.

The situation actually could be worse if in addition we hypothesized some sensitivity of the control system element parameters to vehicle motion. This problem is usually eliminated by good design and is not really in the class of interaction we are discussing here.

The representation of Fig. 3 differs drastically in several respects from what a composite of Figs. 1 and 2 would look like. The outstanding feature is the embedment of the vehicle elastodynamics block in the midst of the attitude control system loop and the three distinct modes of connection between the vehicle elastodynamics and the various control system elements. These features in fact provide an immediate identification of three classes of interaction which may require study in a given spacecraft system; they are:

(1) Elastic response of control-actuator support.

(2) Elastic response of control-sensor support.

(3) Dependence of vehicle inertial properties on elastic deformation of appendages.

In (3) an assumption already has been made that the elastic motions of the appendages are the only ones which can affect the overall vehicle inertial parameters. This assumption actually introduces a possible delineation of what constitutes an appendage and what does not, from the interaction point of view.

The three types of interaction listed above can affect the system behavior in the following ways:

(1) Deformation of actuator support structure will modify the applied moments resulting from the actuator forces. This modification will result from both changes in the length of the vector from the vehicle center of mass to the actuator, and from changes in the directions of the applied forces.

(2) Deformation of the attitude-sensor support structure will introduce errors in the perceived orientation of the spacecraft.

(3) Large deformation of inertially important appendages will introduce changes in the inertia parameters which go into the relations between applied moments and rigid-body motion.

One additional class of interaction could be considered and that is the elastic response of the payload. If the spacecraft is designed on the basis of a presumed fixed orientation of the payload relative to some other element, then payload motion could affect the overall mission performance but not, however, the performance of the attitude control system.

From these considerations we come to a method of classifying attitude-controlled spacecraft with regard to control-structures interactions. For each spacecraft, we must establish which of the following three factors are present:

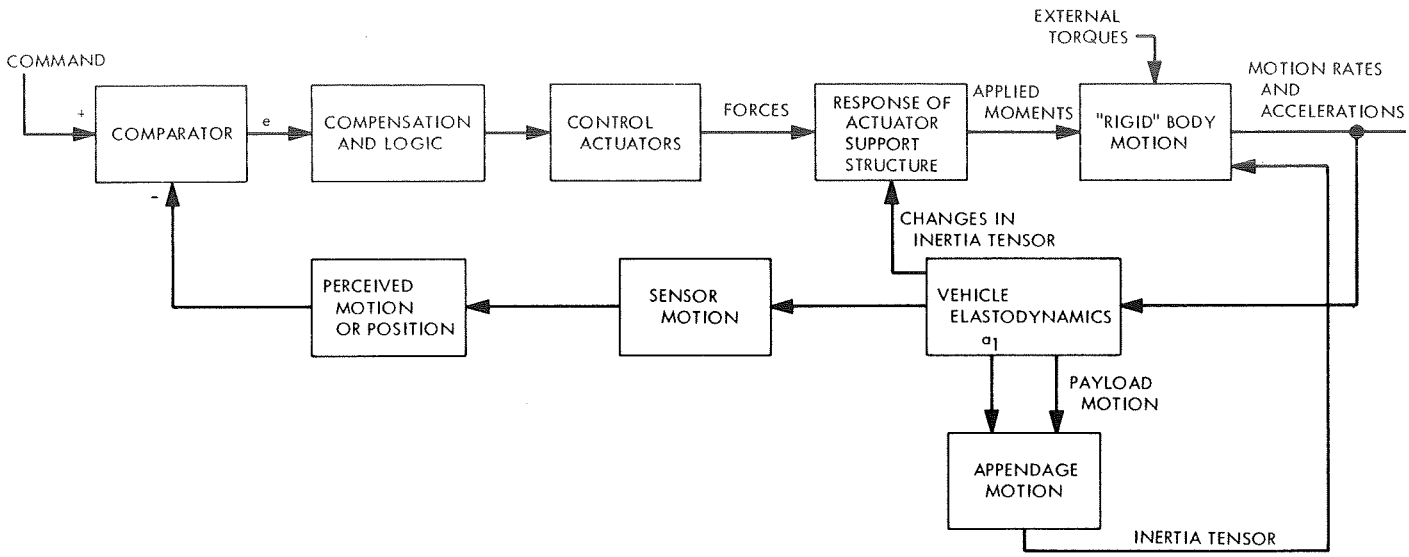

Fig. 3. Complete elastic model

(1) Actuator deformation sensitivity.

(2) Sensor deformation sensitivity.

(3) Inertia deformation sensitivity.

Ideally it would be desirable to establish parameters which characterize these sensitivities and the critical values of these parameters which if exceeded would necessitate the inclusion of the corresponding interaction made in the spacecraft dynamic analysis. Once this judgement is made, techniques for analyzing the system with the interaction present are required.

II. Some Examples

Some simplified spacecraft, which display the modes of interaction listed above, are described in the following:

A. Example 1: Actuator Deformation Sensitivity

In the *Mariner* spacecraft series, attitude control thrusters were mounted at the tips of the solar panels to develop maximum torque. Visualize the application of this technique to a spacecraft with 60-ft long flexible solar arrays.

Although Fig. 4 is presented in exaggerated form, the important point should not be lost: actuator deformation sensitivity may be an important factor. Proceeding a little further on an intuitive basis one may ask under what circumstances this effect would become appreciable. What comes to mind is some interplay between the actuator support stiffness and the system's resistance to rotation, i.e., the moment of inertia about the control axis.

B. Example 2: Sensor Deformation Sensitivity

Consider a spacecraft with a solar orientation requirement in which the solar orientation sensors are mounted flexibly, as shown in Fig. 5.

The question presented here is what is the orientation perceived by the control system, and furthermore what relation does it have to some other orientation parameter that could be postulated to describe the state of Fig. 5b.

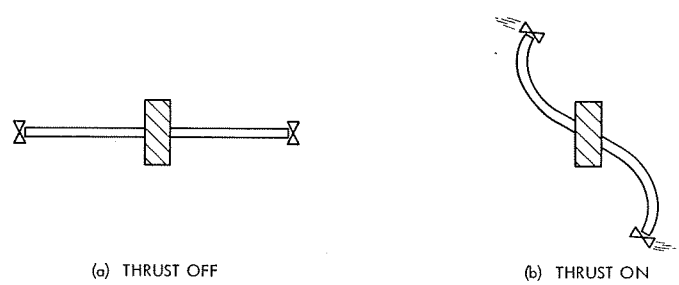

Fig. 4. Thrusters on flexible appendages

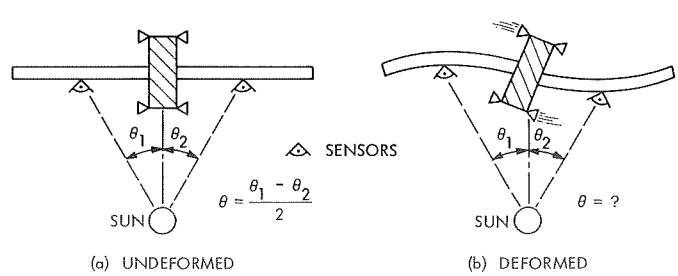

Fig. 5. Sensors on flexible appendages

C. Example 3: Inertia Deformation Sensitivity

Recognizing that the spacecraft inertia appears explicitly in the control system equation some way is needed to quantify the change in inertia of the deformed vehicle; see Fig. 6. This problem lends itself to analysis, and is treated in somewhat more detail later for the sample spacecraft system. What is important to recognize is that this effect immediately and irrevocably couples the elastic variables into the control system equations. This effect is traditionally assumed to be small since, as will be shown, its magnitude is a second order function of the elastic displacements and strains. When any of these quantities is expected to be large, consideration of this interaction is then necessary.

III. Sample Spacecraft System

To focus the efforts a sample spacecraft, which would display some of the interactions discussed above, is chosen for analysis. A flywheel attitude control for a single axis is hypothesized, and the whole problem is restricted to motions in a plane. The spacecraft consists of a rigid central body which houses a flywheel control system. Attitude sensors and the flywheel bearings are rigidly mounted. A large flexible beam is attached to the spacecraft, to simulate a solar array as shown in Fig. 7.

The block diagram for this system is shown in Fig. 8. Since we are considering a variable moment of inertia,

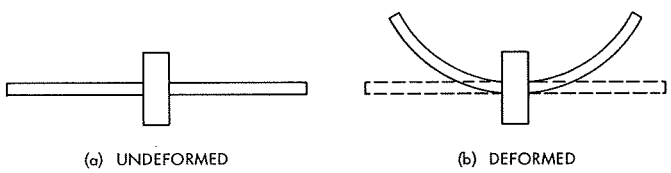

Fig. 6. Effect of deformation on inertia

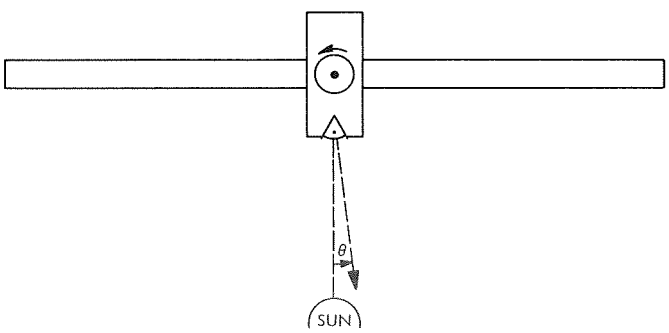

Fig. 7. Sample problem spacecraft model

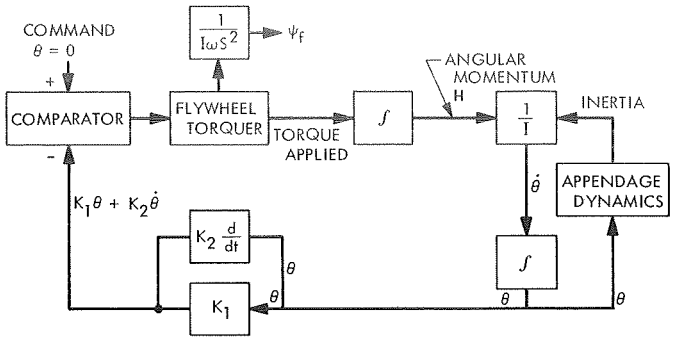

Fig. 8. Sample problem block diagram

the transfer function between applied torque and angular position does not appear in the usual manner but instead reflects the inertia deformation sensitivity.

A. Equations of Motion

As usual, before deriving equations of motion, it is necessary to define the coordinate system(s) which will be used. This subject could occupy a volume by itself. Two choices of system are generally used in problems of this type. In the first a reference frame is fixed with its origin at some point in the spacecraft and the rotations of this frame are considered to be the "rigid" body rotations; deformations are measured relative to this frame. In general, initially, the origin of this system is at the center of mass of the spacecraft and the axis system is principal. Naturally, these conditions do not obtain after elastic motion commences. In the second system, the origin of the coordinate axes is defined as being located at the center of mass of the deformed spacecraft and the orientation is defined as being principal, again in the deformed spacecraft. These assumptions introduce some simplification in the resulting equations but necessitate some additional care in handling kinematic relations. For this discussion we will use this latter system. The coordinate system along with definitions of relevant quantities appear in Fig. 9. One important point to note here is that the transverse displacement, labeled in Fig. 9 as w, is not the entire displacement which would be measured in the usual sense. Since the x axis moves in this system to remain centroidal and principal, the w of Fig. 9 differs from the total displacement by a rigid body translation and rotation.

The modeling of the elastic behavior of the beam may be approached in several ways. We choose here to include the rigid base in our representation by adding a concentrated mass and concentrated rotary inertia to a beam which obeys the Rayleigh theory.

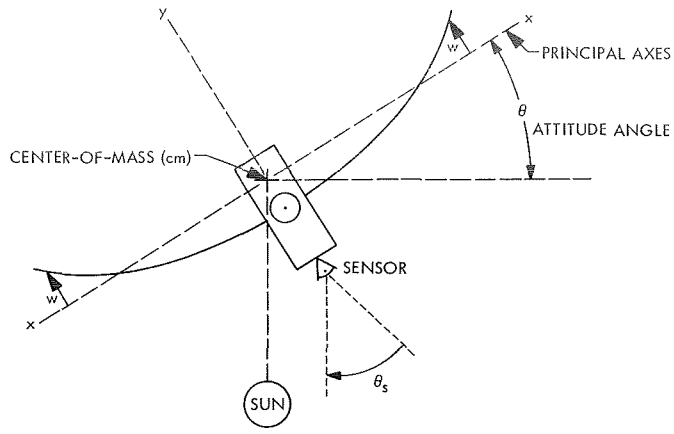

Fig. 9. Reference axes

This approach allows us to retain the continuum point of view and eliminates the necessity of breaking the system into two separate beams built into a rigid body. Should we wish to determine normal modes of such a beam, it is possible to use the free-free beam Green's function and solve the integral equation for the modes by iteration, including the effects of the lumped mass and rotary inertia at the center of the beam. The representation of the beam properties takes the form

$$\text{lineal mass density } \rho = \rho_0 + M_{rb}\delta(x - 0)$$

$$\text{rotary inertia } I_\rho = I_{\rho_0} + I_{rb}\delta(x - 0)$$

where M_{rb} is the mass of the rigid base including the attitude control flywheel and I_{rb} is the moment of inertia about the z-axis of the rigid base only. The terms with zero subscript refer to the uniform beam properties.

If Hamilton's principle is applied to the system of Fig. 8, the equations of motion of the beam and of the flywheel are obtained in terms of the torque applied to the flywheel. By hypothesizing a control law relating the applied torque to the attitude angle and angular rate we obtain all the necessary relations governing the system. Before proceeding with this, two points must be discussed. The first relates to the assumption regarding the sensing of the angle θ in the present system. The prescription of principal axes implies that there is no fixed relation between the x-axis of Fig. 7 and any given line in even the rigid part of the spacecraft. Thus it is impossible to conceive of a sensor which could sense the angle θ. What this amounts to is that this choice of axes inherently forces sensor deformation sensitivity into the system. If the sensor of Fig. 9 is considered, the angle θ_s that the sensor detects is given by

$$\theta_s = \theta + \left.\frac{\partial w}{\partial x}\right|_{x=0} \tag{1}$$

Recognizing that the control torque will be a function of θ_s it is seen that the elastic behavior is immediately coupled into the control equations.

With regard to inertia changes we will derive the equation for the moment of inertia of the system in the deformed state. The coordinates of a differential element of mass are as shown in Fig. 10.

The x coordinate of a particle in the deformed state can be related to its original position and the elastic strains by

$$x = x_0 - \frac{1}{2}\int_0^{x_0}\left(\frac{\partial w}{\partial x_0^1}\right)^2 dx_0^1 \tag{2}$$

where x_0 is the original 0 position of a point in the undeformed state. This equation gives the classical foreshortening due to bending.

If the moment of inertia is to be calculated about the z axis through the origin (center-of-mass) one obtains

$$I_{zz} = \int_{x(-l/2)}^{x(l/2)} \rho\,(x^2 + w^2)\,dx \tag{3}$$

Retaining only the quadratic or lower terms in $\partial w/\partial x_0$, the moment of inertia becomes

$$I_{zz} \doteq \int_{-l/2}^{l/2} \rho\left[x_0^2 - x_0\int_0^{x_0}\left(\frac{\partial w}{\partial x_0^1}\right)^2 dx_0^1 - w^2(x_0)\right]dx_0 \tag{4}$$

This result shows the general quadratic dependence of the moment of inertia on the deformation. If I_{zz_0} is defined as the moment of inertia of the undeformed system

$$I_{zz} = I_{zz_0} - \int_{-l/2}^{l/2} \rho\left[x_0\int_0^{x_0}\left(\frac{\partial w}{\partial x_0^1}\right)^2 dx_0^1 - w^2(x_0)\right]dx_0 \tag{5}$$

In this formula one sees the beginnings of a definition of a parameter which could quantify inertia deformation sensitivity. The system moment of inertia is naturally represented as the sum of its value in the undeformed state plus a correction term derived from the deformation. However, since the deformation $w(x_0)$ may take virtually any form, the correction term becomes a functional rather than something describable by a single parameter.

With these preliminaries the resulting equation becomes

$$-EI^4 \frac{\partial w}{\partial x^4} + \rho\dot{\theta}^2 w + I_\rho \frac{\partial^4 w}{\partial x_0^2 \partial t^2} + P(x_0, t) = \rho\left(\frac{\partial^2 w}{\partial t^2} + \ddot{\theta}x\right) + \rho\theta^2 \frac{\partial}{\partial x_0}\left(\frac{1 - x_0^2}{2}\frac{\partial w}{\partial x_0}\right) \tag{6}$$

where $P(x_0, t)$ are the applied leads resulting from the reactions of the control system drive motor supports.

The equation governing system rotation after applying integration by parts to the inertia term appears for the *spacecraft* as

$$\frac{d}{dt}\dot{\theta}\left[\int_{-l/2}^{l/2} \rho(x_0)(x_0^2 + w^2)\,dx_0 - \frac{1}{2}\int_{-l/2}^{l/2} \rho(x_0)\left(\frac{l^2}{4} - x_0^2\right)\left(\frac{\partial w}{\partial x_0}\right)^2 dx_0\right]$$
$$+ \frac{d}{dt}\int_{-l/2}^{l/2} I_\rho(x_0)\left(\frac{\partial^2 w}{\partial x \partial t} + \dot{\theta}\right)dx_0 = T_{applied} \tag{7}$$

and for the *flywheel* as

$$\frac{d}{dt}(I\dot{\psi}_{flywheel}) = -T_{applied} \tag{8}$$

Note that the sum of these two equations is a perfect time derivative which is equal to zero and expresses the conservation of angular momentum for the system

$$\frac{dH}{dt} = 0 \tag{9}$$

B. Control Law

We hypothesize a control law which incorporates rate feedback, remembering that the control system sees θ_s (Eq. 1).

$$T_{applied} = -k_1\theta_s - k_2\dot{\theta}_s \tag{10}$$

By combining Eqs. (1) and (10), one obtains the equation governing the attitude of the spacecraft showing the effects of Inertia Deformation Sensitivity and Sensor Deformation Sensitivity

$$\frac{d}{dt}\dot{\theta}\left[\int_{-l/2}^{l/2} \rho(x_0)(x_0^2 + w^2)\,dx_0 - \frac{1}{2}\int_{-l/2}^{l/2} \rho(x_0)(1 - x_0^2)\left(\frac{\partial w}{\partial x_0}\right)^2 dx_0\right]$$
$$+ \frac{d}{dt}\int_{-l/2}^{l/2} I_\rho(x_0)\left(\frac{\partial^2 w}{\partial x \partial t} + \dot{\theta}\right)dx_0 + K_2\left(\dot{\theta} + \frac{\partial^2 w}{\partial x_0 \partial t}\bigg|_{x_0=0}\right)$$
$$+ K_1\left(\theta + \frac{\partial w}{\partial x_0}\bigg|_{x_0=0}\right) = 0 \tag{11}$$

By setting $w(x_1 t) = 0$ in Eq. (11) the traditional rigid body control equation, which would come from a rigid body analysis, is found

$$(I_b + I_{rb})\ddot{\theta} + K_2\dot{\theta} + K_1\theta = 0 \tag{12}$$

where I_b is the moment of inertia for the beam.

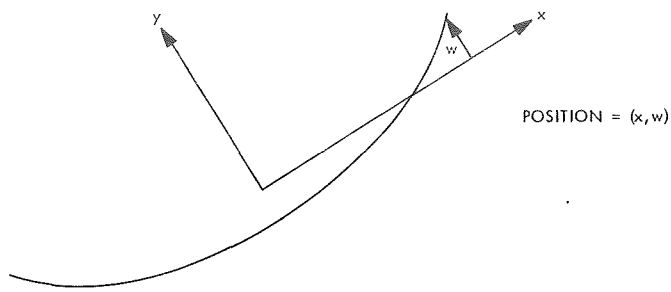

Fig. 10. General differential element coordinates

C. Analysis

Equations (11) and (6) represent the mathematical model of the system depicted in Fig. 9. The analytical difficulties are immediately manifest. For a number of reasons it is convenient to think of the elastic displacement in terms of modal analysis. One reason is the great familiarity that structural analysts have with the concept. Another is the accessibility of methods such as those of Galerkin or of Rayleigh–Ritz. The question of the existence of separable solutions of Eq. (6) can be examined readily. The conclusion is that normal modes will exist only when $\dot{\theta}$ is a constant. However, the normal modes of a related system in a Galerkin integration may be used. The modes that might be chosen would be those of a free-free Rayleigh beam with the same properties as our model of the spacecraft. If these modes are used, the resulting equations for the modal amplitudes will be less complicated, perhaps, than for another choice. The expansion of the displacement w is made in the form

$$w = \sum_{n=1}^{N} w_n(x)\, q_n(t) \tag{13}$$

and the application of the Galerkin method to Eq. (6) yields

$$\ddot{q}_n + (\omega_n^2 + \dot{\theta}^2)\, q_n + \dot{\theta}^2 \alpha_{nm} q_m = p_n(t) + \beta_n \ddot{\theta} \qquad n = 1 \cdots N \tag{14}$$

The α_{nm} are coefficients derived from the term involving $\partial w/\partial x$ in Eq. (6). The $p_n(t)$ is a generalized force derived from the loading $P(x, t)$. The problem in the time domain exhibits coupling between modes and the introduction of $\dot{\theta}^2$ into the stiffness. In addition, the angular acceleration θ appears as a forcing term. What distinguishes Eq. (14) from the case of a stiff and compact spacecraft are the terms $\dot{\theta}^2 q_n$ and $\alpha_{nm} q_m$. The first is a change in stiffness due to centrifugal acceleration while the second arises from the consideration of foreshortening of the deformed beam. If the system stiffness were so great that $\omega_n^2 >> \dot{\theta}^2$, as is the case in current spacecraft, and the deformations were kept small, then Eq. (14) could be reduced to the familiar form

$$\ddot{q}_n + \omega_n^2 q_n = p_n(t) + \beta_n \ddot{\theta}_n \tag{15}$$

If the modal expansion is used directly in attitude Eq. (11), a rather complicated result is obtained. This results primarily from the squaring of the modal expansion. Some simplification can be achieved by use of orthogonality relations; however, in general the squares of the modal amplitudes will appear. The general result is

$$\frac{d}{dt}\{\dot{\theta}\,[I_{rb} + I_b(1 - \eta_{ij} q_i q_j)]\} + \frac{d}{dt}(\mu_i \dot{q}_i + \bar{I}_p \dot{\theta}) + K_2(\dot{\theta} + \gamma_i \dot{q}_i) + K_1(\theta + \gamma_i q_i) = 0 \tag{16}$$

where we are invoking the summation convention for repeated indices. The various parameters η_{ij}, μ_i, γ_i, are measures of the interaction phenomena on a modal basis. Thus there are in these parameters quantitative measures of how strongly a particular mode of deformation influences a particular class of interaction. If interested in Inertia deformation sensitivity, the η_{ij} may be evaluated for the first N modes and determination made for what values of modal amplitude the correction to the rigid body inertia is above a certain value.

D. A Sample Computation

The parameter η_{11} may be calculated for example if the first mode shape of the model beam is known. If it is assumed that the beam is deformed into its first mode shape, the resulting inertia correction may be calculated. A fair approximation for illustrative purposes will be to take the deformation as

$$w = \alpha\left(x^2 - \frac{l^2}{12}\right) \tag{17}$$

This function looks a great deal like the first mode of a free-free beam except near $x = 0$ where it is suggested that the slope will be reduced due to the large rotary inertia. The end displacement is expressed as a fraction of the beam length

$$w(l) = \eta l \tag{18}$$

With this deformation the mode shape becomes

$$w = 6\eta l^2 \left[\left(\frac{x}{l}\right)^2 - \frac{1}{12}\right] \tag{19}$$

Inserting this relation into the equation for moment of inertia

$$I_{zz} = I_{zz_0}(1 - 4.8\,\eta^2) \tag{20}$$

Thus in this mode for end deflections equal to 1/10 of the beam length, the change in moment of inertia is 4.8%. The significance of a change of this size cannot be evaluated in terms of its magnitude alone; instead, the time dependence of the variation is crucial.

E. Approximate Solutions

The use of the modal expansion has reduced the problem to one in the time domain. The effects of the various interactions are represented by terms which in general are multiplied by small parameters. The resulting system may be viewed as a perturbed form of the equations derived for the rigid body case as shown below.

$$(I_{rb} + I_b + \bar{I}_\rho)\,\ddot{\theta} + K_2\dot{\theta} + K_1\theta = I_b \frac{d}{dt}(\dot{\theta}\eta_{ij}q_iq_j) - \frac{d}{dt}(\mu_i\dot{q}_i) - K_2\gamma_i\dot{q}_i - K_1\gamma_i q_i \tag{16'}$$

$$\ddot{q}_n + (\omega_n^2)\,q_n = p_n(t) + \beta_n\ddot{\theta} - \dot{\theta}^2 q_n - \dot{\theta}^2\alpha_{nm}q_m \tag{14'}$$

With the equations cast in this form it is possible to focus on one particular interaction to study some of the qualitative features of the system. Also, as is frequently done, attention may be focused on just the behavior of the first mode. Naturally, the system is well posed in this form for numerical integration using a digital computer. If attention is focused on the first deformation mode which is symmetric, the generalized forces due to angular acceleration β_n and the reaction from the control torquer p_n are zero. A zeroth order approximation then yields

$$\ddot{q}_1 + \omega_1^2 q = -\dot{\theta}^2 q_1 \tag{21}$$

Treating the sensor deformation terms as being smaller than the inertia terms yields as an approximate attitude equation

$$(I_{rb} + I_b + \bar{I}_e)\,\ddot{\theta} + K_2\dot{\theta} + K_1\theta = I_b \frac{d}{dt}(\dot{\theta}\eta_{11}q_1^2) \tag{22}$$

or equivalently

$$[I_{rb} + \bar{I}_\rho + I_b(1 - \eta_{11}q_1^2)]\,\ddot{\theta} + K_2\dot{\theta} + K_1\dot{\theta} = 2\eta_{11}I_b\dot{\theta}q_1\dot{q}_1 \tag{23}$$

Equations (21) and (23), which incorporate vast simplifications, still do not admit a closed form solution. Qualitatively, though, it is possible to raise the question of the stability of both the generalized coordinate q_1 and the attitude angle θ. On the assumption that $\dot{\theta}$ will be an oscillatory variable, we have the case for q_1 that is an oscillator with a variable stiffness. Moreover, the variation will be oscillatory. Thus from just a first order look it appears that the elastic response will be excited parametrically by the attitude oscillations. Looking at the left hand side of Eq. (23), precisely the same feature is observed. Here the attitude angle is essentially a damped oscillator with variable inertia. This type of problem arises in the study of drive shaft vibrations and is also well known to exhibit parametric instability. The appearance of the control and elastic variables in the parameters or coefficients of each other's governing equations is perhaps the most significant mathematical feature of the interaction problem. Its relevance to the concept of frequency separation is discussed below.

F. Frequency Separation

As was mentioned earlier, one of the principal arguments for ignoring control-elastic interactions is that of frequency separation. The argument is offered often on an intuitive basis that if the elastic frequencies are kept well above those of the control system the elastic response to attitude motion will be small and the resulting changes in inertia, actuator and sensor orientation will be ignorable. This conclusion can be reached from the equations presented here. One advantage of pursuing the concept with the aid of the fully coupled equations, of course, is that the values of the relevant parameters which make the argument valid may be determined. An important conclusion that is reached in this study is that in the case of large flexible appendages, which introduce finite changes in system inertia, the concept of frequency separation is invalid. This conclusion may be reached by making the underlying assumption of the argument and showing that the system stability is still jeopardized by the interaction.

Frequency separation in this problem means simply that the control system natural frequency ω_c obeys

$$\frac{\omega_c^2}{\omega_1^2} << 1 \tag{24}$$

As a consequence one may assume $\dot{\theta}^2 << \omega_1^2$. Incorporating this result into Eqs. (21) and (23) yields

$$\ddot{q}_1 + \omega_1^2 q_1 \approx 0 \tag{25}$$

$$[I_{rb} + \bar{I}_p + I_b(1 - \eta_{11}q_1^2)]\,\ddot{\theta} + K_2\dot{\theta} + K_1\theta = 2\eta_{11}I_b\theta q_1 q_1 \tag{26}$$

the result then is that q_1 is harmonic; that is

$$q_1 = q_1(0)\cos\omega_1 t \tag{27}$$

Introducing this result into Eq. (26) is

$$[I_{rb} + \bar{I}_p + I_b(1 - \eta_{11}q_0^2\cos^2\omega_1 t)]\,\ddot{\theta} + K_2\dot{\theta} + K_1\theta = \eta_{11}I_b q_0^2 \sin 2\omega_1 t \tag{28}$$

In this form the attitude angle θ is governed by a periodic differential equation with a periodic forcing function. The instabilities of such a system are known to be parametric in nature and depend on the arithmetic relationship between the system natural frequency and that of the excitation. Moreover, the conditions for instability are determinable from just the homogeneous form of the equation. Equation (28) may be cast in more traditional form by redefining constants. Dividing the homogeneous form of Eq. (28) by $I_{rb} + \bar{I}_p + I_b$

$$(1 - \delta q_0^2\cos^2\omega_1 t)\,\ddot{\theta} + 2\zeta\omega_c\dot{\theta} + \omega_c^2\theta = 0 \tag{29}$$

where

$$\delta = \frac{\eta_{11}I_b}{I_{rb} + \bar{I}_p + I_b}$$

With the additional assumption that δq_0^2 is small and using the binomial theorem

$$\ddot{\theta} + 2\zeta\omega_c(1 + \delta q_0^2\cos^2\omega_1 t)\,\dot{\theta} + \omega_c^2(1 + \delta q_0^2\cos^2\omega_1 t)\,\theta = 0 \tag{30}$$

The stability of this equation may be determined by converting it to an undamped Hill equation via the transformation

$$\theta = \psi\exp\left[-\zeta\omega_c\int_0^t (1 + \delta q_0^2\cos^2\omega_1 t')\,dt'\right] \tag{31}$$

The transformed variable ψ satisfies:

$$\ddot{\psi} + [\omega_c^2(1 + \delta q_0^2\cos^2\omega_1 t) - \zeta\omega_c\delta q_0^2\sin 2\omega_1 t - \zeta^2\omega_c^2(1 + 2\delta q_0^2\cos^2\omega_1 t + \delta^2 q_0^4\cos^4\omega_1 t)]\,\psi = 0 \tag{32}$$

Equation (32) lends itself to analysis via the application of Floquet theory. Stability boundaries may be derived in terms of the parameters ω_c, ω_1, q_0 and ζ, for example, as in the case of the simpler Mathieu equation. The principal feature of the resulting stability diagram is its division into regions of stability and instability, depending on the values of ω_1, q_0, and ζ for a fixed ω_c. It becomes clear in this case that no a priori statement with respect to increasing ω_1 (i.e., stiffening the elastic system) can be made as far as ensuring the stability of the attitude control system.

This statement can be better appreciated if we rewrite Eq. (32) in terms of a new time variable $\tau = \omega_1 t$:

$$\frac{d^2\psi}{d\tau^2} + \left[\frac{\omega_c^2}{\omega_1^2}(1 + \delta q_0^2\cos^2\tau) - \frac{\zeta\omega_c}{\omega_1^2}\delta q_0^2\sin 2\tau - \frac{\zeta^2\omega_c^2}{\omega_1^2}(1 + 2\delta q_0^2\cos^2\tau + \delta^2 q_0^4\cos^4\tau)\right]\psi = 0 \tag{33}$$

Recalling the frequency separation criterion, which is assumed to have been invoked, ψ is essentially a parametrically excited oscillator with a low mean value of the stiffness, or equivalent natural frequency. Referring to the stability criteria for the related Mathieu equation (i.e., Eq. (33) with $\zeta = 0$) it is known that in the region of $(\omega_c/\omega_1)^2 < 1$, the equation is unstable for most values of q_0.

This analysis underscores the significance of the appearance of the elastic variables in the parameters of the control system equations. The notion of frequency separation, which is derived from considerations of oscillators which are subjected to periodic forcing functions, is simply inapplicable in a situation of the type studied here. It is conceivable for a system of this class that system performance can be degraded by increasing the elastic frequencies, and that performance could actually be better when $\omega_1/\omega_c = 1.1$ compared with, say, when $\omega_1/\omega_c = 2.0$.

G. Practical Stability

Up to now the concept of stability with which we have been dealing has essentially been that of asymptotic stability in the mathematical sense. This is a natural concept to use when dealing with a system of equations of the type under study here. However, the significance of asymptotic stability from an operational or practical point of view may be quite small. The fact that attitude and elastic perturbations are shown to approach zero as $t \to \infty$ does not preclude large dynamic overshoots in the transient phase which can have considerable negative influence on system performance, and furthermore, does not really indicate how well the spacecraft itself is performing during stabilization. What is really suggested by these

shortcomings is the specification of practical stability criteria which embody or reflect relevant performance or design criteria of the spacecraft itself. The pursuit of system stability may then be conducted with these system-oriented criteria as quantities to be maximized or minimized, depending on their formulation.

As an example, consider the solar array of our sample spacecraft undergoing just first mode deformation. Select as a measure of the system's instantaneous performance the total power output of the array which is proportional to the area of the array projected on the plane perpendicular to the spacecraft-sun axis. This area will be a function of the deformation of the array as well as the spacecraft attitude. Figure 11 shows the pertinent relationships.

Letting S/S_0 be the ratio of actual projected area to the nominal value

$$\frac{S}{S_0} = \frac{1}{l}\int_{-l/2}^{l/2}\left(\cos\theta\cos\frac{\partial w}{\partial x} - \sin\theta\sin\frac{\partial w}{\partial x}\right)dx$$

$$= \frac{1}{l}\int_{-l/2}^{l/2}\left\{\cos\theta\left[1 - \frac{1}{2}\left(\frac{\partial w}{\partial x}\right)^2\right] - \sin\theta\frac{\partial w}{\partial x}\right\}dx \tag{34}$$

After inserting the first mode for $w(x)$

$$\frac{S}{S_0} = \cos\theta\left[1 - \frac{1}{2l}\int_{-l/2}^{l/2}\left(\frac{\partial w}{\partial x}\right)^2 dx\right] = \cos\theta\,[1 - \nu q_1^2] \tag{35}$$

Now there is a time-dependent quantity which is a function of θ and q_1 which measures the total effectiveness of the array-control system combination. There is this, a means of quantifying system performance and stability in a way which has very definite relevance to overall system objectives. It is conceivable that the choice of

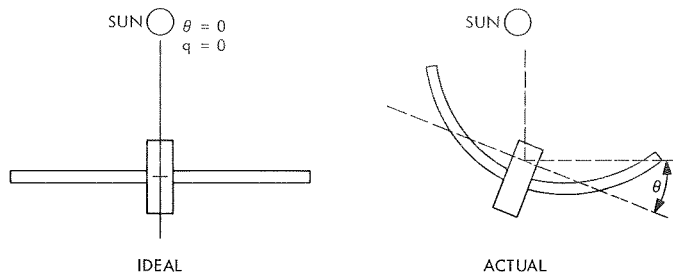

Fig. 11. Deformed and misoriented solar array

parameters which optimizes some of the more traditional criteria for control system performance will not result in optimum performance when evaluated by a criterion such as S/S_0. While this example has been discussed in some detail, there are of course other more complex criteria which may be advanced reflecting, perhaps in addition, maximum stress limits, energy consumption, etc.

IV. Conclusions

Three principal modes of the interactions between control systems and structures have been identified. The analysis of a sample spacecraft which displays two of these modes has led to an approach whereby the strength of the interactions may be evaluated for an arbitrary system. The technique is based on the traditional modal expansion for elastic systems and permits the analyst to employ familiar concepts. The analysis of the sample spacecraft has shown that frequency-separation arguments for determining the importance of control-structures interaction are not valid. The consideration of overall system performance has led to the formulation of a broader concept of stability which reflects system behavior as a function of the relevant dynamic variables. The concept of practical stability may lead to a more rational means of resolving conflicting requirements which arise from independent analyses of either the control system or the spacecraft structure.

NASA — JPL — Coml., L.A., Calif.

N71-12573

TECHNICAL REPORT STANDARD TITLE PAGE

1. Report No. 32-1461	2. Government Accession No.	3. Recipient's Catalog No.
4. Title and Subtitle ATTITUDE CONTROL AND STRUCTURAL RESPONSE INTERACTION		5. Report Date November 15, 1970 6. Performing Organization Code
7. Author(s) Jacob Abel		8. Performing Organization Report No.
9. Performing Organization Name and Address JET PROPULSION LABORATORY California Institute of Technology 4800 Oak Grove Drive Pasadena, California 91103		10. Work Unit No. 11. Contract or Grant No. NAS 7-100 13. Type of Report and Period Covered Technical Report
12. Sponsoring Agency Name and Address NATIONAL AERONAUTICS AND SPACE ADMINISTRATION Washington, D.C. 20546		14. Sponsoring Agency Code

15. Supplementary Notes

16. Abstract

This report presents an assessment of the problem of the interaction between the structural or elastic response of a spacecraft and the attitude control system dynamics. A general discussion of the possible modes of interaction provides a means of classifying a given spacecraft with respect to the interaction problem. A model spacecraft system is studied and some parameters characterizing the interactions are identified. The question of system stability in the mathematical sense is discussed and the idea of a definition of a practical stability criterion is presented. This concept is applied to the model spacecraft system. Some comments on the adequacy of present methods of evaluating the significance of interactions between attitude control systems and structures are given with particular regard to the concept of frequency separation.

17. Key Words (Selected by Author(s)) Control and Guidance Mechanics Solid-State Physics Structural Engineering	18. Distribution Statement Unclassified -- Unlimited

19. Security Classif. (of this report) Unclassified	20. Security Classif. (of this page) Unclassified	21. No. of Pages 10	22. Price

HOW TO FILL OUT THE TECHNICAL REPORT STANDARD TITLE PAGE

Make items 1, 4, 5, 9, 12, and 13 agree with the corresponding information on the report cover. Use all capital letters for title (item 4). Leave items 2, 6, and 14 blank. Complete the remaining items as follows:

3. Recipient's Catalog No. Reserved for use by report recipients.

7. Author(s). Include corresponding information from the report cover. In addition, list the affiliation of an author if it differs from that of the performing organization.

8. Performing Organization Report No. Insert if performing organization wishes to assign this number.

10. Work Unit No. Use the agency-wide code (for example, 923-50-10-06-72), which uniquely identifies the work unit under which the work was authorized. Non-NASA performing organizations will leave this blank.

11. Insert the number of the contract or grant under which the report was prepared.

15. Supplementary Notes. Enter information not included elsewhere but useful, such as: Prepared in cooperation with... Translation of (or by)... Presented at conference of... To be published in...

16. Abstract. Include a brief (not to exceed 200 words) factual summary of the most significant information contained in the report. If possible, the abstract of a classified report should be unclassified. If the report contains a significant bibliography or literature survey, mention it here.

17. Key Words. Insert terms or short phrases selected by the author that identify the principal subjects covered in the report, and that are sufficiently specific and precise to be used for cataloging.

18. Distribution Statement. Enter one of the authorized statements used to denote releasability to the public or a limitation on dissemination for reasons other than security of defense information. Authorized statements are "Unclassified—Unlimited," "U. S. Government and Contractors only," "U. S. Government Agencies only," and "NASA and NASA Contractors only."

19. Security Classification (of report). NOTE: Reports carrying a security classification will require additional markings giving security and downgrading information as specified by the Security Requirements Checklist and the DoD Industrial Security Manual (DoD 5220.22-M).

20. Security Classification (of this page). NOTE: Because this page may be used in preparing announcements, bibliographies, and data banks, it should be unclassified if possible. If a classification is required, indicate separately the classification of the title and the abstract by following these items with either "(U)" for unclassified, or "(C)" or "(S)" as applicable for classified items.

21. No. of Pages. Insert the number of pages.

22. Price. Insert the price set by the Clearinghouse for Federal Scientific and Technical Information or the Government Printing Office, if known.