NASA CR- 72783
AiResearch 70-6691

CONCEPTUAL DESIGN STUDY
of

NUCLEAR BRAYTON CYCLE HEAT EXCHANGER AND DUCT ASSEMBLY (HXDA)

by

M. G. Coombs, C. J. Morse, and C. E. Richard

N71-14037
(ACCESSION NUMBER) (THRU)
346 G3
(PAGES) (CODE)
CR-72783 22
(NASA CR OR TMX OR AD NUMBER) (CATEGORY)
FACILITY FORM 602

RECEIVED
NASA STI FACILITY
INPUT BRANCH
JAN 1970

AIRESEARCH MANUFACTURING COMPANY

prepared for

NATIONAL AERONAUTICS AND SPACE ADMINISTRATION
NASA Lewis Research Center

Contract No. NAS3-13453
P. T. Kerwin, Project Manager

22

NOTICE

This report was prepared as an account of Government-sponsored work. Neither the United States, nor the National Aeronautics and Space Administration (NASA), nor any person acting on behalf of NASA:

A.) Makes any warranty or representation, expressed or implied, with respect to the accuracy, completeness, or usefulness of the information contained in this report, or that the use of any information, apparatus, method, or process disclosed in this report may not infringe privately-owned rights; or

B.) Assumes any liabilities with respect to the use of, or for damages resulting from the use of, any information, apparatus, method or process disclosed in this report.

As used above, "person acting on behalf of NASA" includes any employee or contractor of NASA, or employee of such contractor, to the extent that such employee or contractor of NASA or employee of such contractor prepares, disseminates, or provides access to any information pursuant to his employment or contract with NASA, or his employment with such contractor.

Requests for copies of this report should be referred to

National Aeronautics and Space Administration
Scientific and Technical Information Facility
P. O. Box 33
College Park, Md. 20740

NASA CR- 72783
AiResearch 70-6691

TOPICAL REPORT
(PHASE I)

CONCEPTUAL DESIGN STUDY
OF

NUCLEAR BRAYTON CYCLE HEAT EXCHANGER AND DUCT ASSEMBLY (HXDA)

by

M. G. Coombs, C. J. Morse, and C. E. Richard

AIRESEARCH MANUFACTURING COMPANY
Los Angeles, California

prepared for

NATIONAL AERONAUTICS AND SPACE ADMINISTRATION

December 4, 1970

CONTRACT NO. NAS3-13453

NASA Lewis Research Center
Cleveland, Ohio 44135
P. T. Kerwin, Project Manager
Space Power Systems Division

FOREWORD

The studies described herein, which were performed by the AiResearch Manufacturing Company, a division of The Garrett Corporation, were performed under NASA Contract NAS3-13453. The work was done under the direction of the NASA Program Manager, Mr. P. T. Kerwin, Space Power Systems Division, NASA-Lewis Research Center. The AiResearch Program Manager was Mr. M. G. Coombs.

PRECEDING PAGE BLANK NOT FILMED

CONTENTS

Section		Page
1	INTRODUCTION	1
2	SUMMARY	3
	Task 1 - Preliminary Investigations	3
	Task 2 - Design of 24 Brayton Cycle HXDA'S	5
	Task 3 - Design of Four Brayton Cycle HXDA'S	8
3	PRELIMINARY INVESTIGATIONS	15
	Introduction	17
	Heat Exchanger Design Analysis	25
	Recuperator	25
	Waste Heat Exchanger	40
	Heat Source Heat Exchanger	55
	Heat Exchanger Structural Analysis	64
	Design Criteria and Material Properties	64
	Fin and Tube Pressure Capability	65
	Tubular Heat Exchanger Design	69
	Weight Results Summary	78
	Preliminary Configuration Study	84
	System Optimization Study	92
	Summary and Recommendations	97
4	DESIGN OF 24 BRAYTON CYCLE HXDA'S	99
	Introduction	101
	Component Design Approach	101
	System Evaluation Approach	107
	Heat Exchanger Design Analysis	112
	Recuperator	112
	Heat Source Heat Exchanger	128
	Waste Heat Exchanger	142
	Structural Design	153

PRECEDING PAGE BLANK NOT FILMED

CONTENTS (Continued)

Section		Page
	Manifold and Ducting Analysis	157
	Assumptions	157
	Equations	160
	Systems Analysis	166
	Preliminary System Studies	166
	System Optimization Computer Program	170
	Optimization of the 24 Design Point Cases	172
5	DESIGN OF FOUR BRAYTON CYCLE HXDA'S	195
	Introduction	197
	Cycle Conditions	198
	Component Studies	203
	Recuperators	203
	Waste Heat Exchanger	232
	Heat Source Heat Exchanger	238
	Heat Exchanger Structural Design	243
	Ducting Analysis	246
	System Optimization	247
	Summary	256
Appendix		
A-1	FLUID PROPERTY DATA	269
A-2	STRUCTURAL PROPERTY DATA	285
A-3	COMPUTER OUTPUT SUMMARY	291
A-4	WEIGHT OPTIMIZATION COMPUTER PROGRAM	317

ILLUSTRATIONS

Figure		Page
2-1	HXDA System Design Parameter Matrix	4
2-2	Task 2 HXDA Study Matrix	7
2-3	Sketch of HXDA Design (Task 2, Case 8-II, SNAP-8, 160 kw_e Design)	10
2-4	Sketch of HXDA Design (Task 3, Case IV, SNAP-8, 80 kw_e Design)	14
3-1	HXDA System Design Parameter Matrix	18
3-2	System State Points for Case IV	21
3-3	System State Points for Case IX	22
3-4	System State Points for Case IV-A	23
3-5	System State Points for Case IX-A	24
3-6	Counterflow Section Weight vs Pressure Drop for Case IV Counterflow Plate-Fin Recuperator	27
3-7	Counterflow Section Weight vs Pressure Drop for Case IX Counterflow Plate-Fin Recuperator	28
3-8	Counterflow Section Weight vs Pressure Drop for Case IX-A Counterflow Plate-Fin Recuperator	29
3-9	Variation of Weight, Volume, and Maximum Dimensions With Transverse Tube Spacing for Case IV Tubular (Multipass Tube-Side) Recuperator Core	30
3-10	Variation of Weight, Volume, and Maximum (No-Flow) Dimension with Pressure Drop Split for Case IV Tubular (Multipass Tube-Side) Recuperator Core	31
3-11	Variation of Weight, Volume, and Maximum Dimensions with Transverse Tube Spacing for Case IX Tubular (Multipass Tube-Side) Recuperator Core	32
3-12	Variation of Weight, Volume, and Maximum Dimensions with Pressure Drop Split for Case IX Tubular (Multipass Tube-Side) Recuperator Core	33

ILLUSTRATIONS (Continued)

Figure		Page
3-13	Variation of Weight, Volume, and Maximum Dimensions with Transverse Tube Spacing for Case IV-A Tubular Recuperator Core (Multipass Tube Side)	34
3-14	Variation of Weight, Volume, and Maximum Dimensions with Pressure Drop Split for Case IV-A Tubular Recuperator Core (Multipass Tube Side)	35
3-15	Variation of Weight, Volume, and Maximum Dimensions with Transverse Tube Spacing for Case IX-A Tubular Recuperator Core (Multipass Tube-Side)	36
3-16	Variation of Weight, Volume and Maximum Dimensions with Pressure Drop Split for Case IX-A Tubular Recuperator Core (Multipass Tube-Side)	37
3-17	Case IV-A Combination Plate-Fin/Tubular Recuperator Weights	38
3-18	Case IV-A Combination Plate-Fin/Tubular Recuperator Weight vs Total Pressure Drop and Pressure Drop Split	39
3-19	Comparison of Recuperator Types for Cases IV and IV-A	41
3-20	Comparison of Recuperator Types for Cases IX and IX-A	42
3-21	Variation of Weight with Gas-Side Pressure Drops for Case IV Plate-Fin Waste Heat Exchanger (Steel Fins)	44
3-22	Variation of Core Weight with Gas-Side Pressure Drop for Case IV Plate-Fin Waste Heat Exchanger (Nickel Fins)	45
3-23	Variation of Weight with Gas-Side Pressure Drop for Case IV Plate-Fin Waste Heat Exchanger (Copper Fins)	46
3-24	Variation of Weight with Gas-Side Pressure Drop for Case IX Plate-Fin Heat Exchanger	47
3-25	Variation of Weight with Gas-Side Pressure Drop for Case IV-A Plate-Fin Waste Heat Exchanger (Steel Fins)	48
3-26	Variation of Weight with Gas-Side Pressure Drop for Case IV-A Plate-Fin Waste Heat Exchanger (Nickel Fins)	49
3-27	Variation of Weight with Gas-Side Pressure Drop for Case IX-A Plate-Fin Waste Heat Exchanger	50

ILLUSTRATIONS (Continued)

Figure		Page
3-28	Variation of Weight with Gas-Side Pressure Drop for Finned Tubular Waste Heat Exchanger	51
3-29	Comparison of Waste Heat Exchanger Types for Cases IV and IV-A	52
3-30	Comparison of Waste Heat Exchanger Types for Cases IX and IX-A	53
3-31	Variation of Weight, Number of Tubes, and Core Dimensions with Tube Diameter for Case IV Heat Source Heat Exchanger	57
3-32	Variation of Weight, Number of Tubes and Core Dimensions with Liquid Pressure Drops for Case IV Heat Source Heat Exchanger	59
3-33	Variation of Weight, Number of Tubes, and Tube Length with Gas-Side Pressure Drop for Case IV Heat Source Heat Exchangers	60
3-34	Variation of Weight, Number of Tubes, and Tube Length with Gas-Side Pressure Drop for Case IX Heat Source Heat Exchangers	61
3-35	Variation of Weight, Number of Tubes, and Tube Length with Gas-Side Pressure Drop for Case IV-A Heat Source Heat Exchangers	62
3-36	Variation of Weight, Number of Tubes, and Tube Length with Gas-Side Pressure Drop for Case IX-A Heat Source Heat Exchangers	63
3-37	Maximum Estimated Fin Area Density Requirements for Hastelloy X at Two Recuperator Operating Temperatures	67
3-38	Rectangular Tubular Exchanger Structural Model	70
3-39	Rectangular Tubular Recuperator Geometry	80
3-40	Circular Tubular Recuperator Geometry	82
3-41	HXDA, Preliminary Configuration 1	85
3-42	HXDA, Preliminary Configuration 2	86

ILLUSTRATIONS (Continued)

Figure		Page
3-43	HXDA, Preliminary Configuration 3	87
3-44	HXDA, Preliminary Configuration 4	88
3-45	HXDA, Preliminary Configuration 5	89
3-46	HXDA, Preliminary Configuration 6	90
3-47	HXDA, Preliminary Configuration 7	91
3-48	Waste Heat Exchanger/Recuperator Optimization for Case IX	93
3-49	Case IX Heat Exchanger Designs	94
4-1	HXDA Study Matrix (Revised)	102
4-2(a)	Operating Conditions for Case 8-VIII	108
4-2(b)	Operating Conditions for Case 8-II	108
4-3(a)	Operating Conditions for Case 8-XI	109
4-3(b)	Operating Conditions for Case 8-V	109
4-4(a)	Operating Conditions for Case 8-II	110
4-4(b)	Operating Conditions for Case II	110
4-5(a)	Operating Conditions for Case V	111
4-5(b)	Operating Conditions for Case II-A	111
4-6	HXDA Plate-Fin Recuperator, Case 8-VIII	113
4-7	HXDA Plate-Fin Recuperator, Case 8-II	114
4-8	HXDA Plate-Fin Recuperator, Case 8-XI	115
4-9	HXDA Plate-Fin Recuperator, Case 8-V	116
4-10	HXDA Plate-Fin Recuperator, Case 8-II-A	117
4-11	HXDA Plate-Fin Recuperators, Case II	118
4-12	HXDA Plate-Fin Recuperator, Case V	119

ILLUSTRATIONS (Continued)

Figure		Page
4-13	HXDA Plate-Fin Recuperator, Case II-A	120
4-14	Recuperator Dimensions vs Pressure Drop	122
4-15	Recuperator Geometry Definition	123
4-16	Variation of Total Recuperator Weight With Pressure Drop	126
4-17	Recuperator Overall Dimensions vs Pressure Drop (Includes End Sections)	127
4-18	Heat Source Heat Exchanger Configuration	129
4-19	HSHX, Case II	130
4-20	HSHX, Case V	131
4-21	HSHX, Case II-A	132
4-22	Two-Pass HSHX Designs, Case 8-II	134
4-23	Three-Pass HSHX Designs, Case 8-II	135
4-24	Four-Pass HSHX Designs, Case 8-II	136
4-25	HSHX, Case 8-VIII	137
4-26	HSHX, Case 8-II	138
4-27	HSHX, Case 8-XI	139
4-28	HSHX, Case 8-V	140
4-29	HSHX, Case 8-IIA	141
4-30	Waste Heat Exchanger	143
4-31	Waste Heat Exchanger, Case 8-VIII	144
4-32	Waste Heat Exchanger, Case 8-II	145
4-33	Waste Heat Exchanger, Case 8-XI	146
4-34	Waste Heat Exchanger, Case 8-V	147
4-35	Waste Heat Exchanger, Case 8-II-A	148

ILLUSTRATIONS (Continued)

Figure		Page
4-36	Waste Heat Exchanger, Case II	149
4-37	Comparison of Plate-Fin vs Tubular Waste Heat Exchanger, Case II	150
4-38	Waste Heat Heat Exchanger, Case V	151
4-39	Waste Heat Heat Exchanger, Case II-A	152
4-40(a)	SNAP-8 System Ducting and Manifold Schematic	158
4-40(b)	Advanced System Ducting and Manifold Schematic	158
4-41	Waste Heat Exchanger/Recuperator Optimization for Case 8-VIII	167
4-42	System Pressure Drops and Weights for Case 8-VIII	168
4-43	Total Heat Exchanger Weight vs Total System Pressure Drop (Advanced Systems)	173
4-44	Total Heat Exchanger Weight vs Total System Pressure Drop (SNAP-8 Systems)	174
4-45	Total Heat Exchanger Weight vs Total System Pressure Drop (High Effectiveness SNAP-8 Systems)	175
5-1	Operating Conditions for Case I, Task 3	199
5-2	Operating Conditions for Case II, Task 3	200
5-3	Operating Conditions for Case III, Task 3	201
5-4	Operating Conditions for Case IV, Task 3	202
5-5	Counterflow Recuperator End Section Geometries	204
5-6	Task 3 Case I Recuperator Total Weight, 200/105 psi Structural Design (Rectangular End Section Design)	205
5-7	Task 3 Case I Recuperator Total Weight, 300/200 psi Structural Design (Rectangular End Section Design)	206
5-8	Task 3 Case II Recuperator Weight (Rectangular End Section Design)	207

ILLUSTRATIONS (Continued)

Figure		Page
5-9	Task 3 Case III Recuperator Weight (Rectangular End Section Design)	208
5-10	Task 3 Case IV Recuperator Weight (Rectangular End Section Design)	209
5-11	Task 3 Recuperator Core Lengths (Rectangular End Section Design)	210
5-12	Task 3 Recuperator Stack Heights (Rectangular End Section Design)	211
5-13	Triangular End Section Geometry and Nomenclature	213
5-14	Triangular End Pressure Losses for Task 3 Case I Recuperator, Core ΔP = 0.427 Percent	214
5-15	Triangular End Pressure Losses for Task 3 Case I Recuperator, Core ΔP = 1.089 Percent	215
5-16	Triangular End Pressure Losses for Task 3 Case I Recuperator, Core ΔP = 2.22 Percent	216
5-17	Triangular End Pressure Losses for Task 3 Case II Recuperator, Core ΔP = 0.470 Percent	217
5-18	Triangular End Pressure Losses for Task 3 Case II Recuperator, Core ΔP = 1.197 Percent	218
5-19	Triangular End Pressure Losses for Task 3 Case II Recuperator, Core ΔP = 2.44 Percent	219
5-20	Triangular End Pressure Losses for Task 3 Case III Recuperator, Core ΔP = 0.147 Percent	220
5-21	Triangular End Pressure Losses for Task 3 Case III Recuperator, Core ΔP = 0.297 Percent	221
5-22	Triangular End Pressure Losses for Task 3 Case III Recuperator, Core ΔP = 0.595 Percent	222
5-23	Triangular End Pressure Losses for Task 3 Case III Recuperator, Core ΔP = 1.493 Percent	223
5-24	Triangular End Pressure Losses for Task 3 Case IV Recuperator, Core ΔP = 0.421 Percent	224

ILLUSTRATIONS (Continued)

Figure		Page
5-25	Triangular End Pressure Losses for Task 3 Case IV Recuperator, Core ΔP = 1.055 Percent	225
5-26	Triangular End Pressure Losses for Task 3 Case IV Recuperator, Core ΔP = 2.10 Percent	226
5-27	Task 3 Case I Recuperator	228
5-28	Task 3 Case II Recuperator	229
5-29	Task 3 Case III Recuperator	230
5-30	Task 3 Case IV Recuperator	231
5-31	Task 3 Case I Waste Heat Exchanger	233
5-32	Task 3 Case II Waste Heat Exchanger	234
5-33	Task 3 Case III Waste Heat Exchanger	235
5-34	Task 3 Case III NaK Waste Heat Exchanger	236
5-35	Task 3 Case V Waste Heat Exchanger	237
5-36	Task 3 Case I Heat Source Heat Exchanger	239
5-37	Task 3 Case II Heat Source Heat Exchanger	240
5-38	Task 3 Case III Heat Source Heat Exchanger	241
5-39	Task 3 Case IV Heat Source Heat Exchanger	242
5-40	Task 3 Case I HXDA Weight	252
5-41	Task 3 Case II HXDA Weight	253
5-42	Task 3 Case III HXDA Weight	254
5-43	Task 3 Case IV HXDA Weight	255
A1-1	Density vs Temperature for Humble 3152	270
A1-2	Specific Heat vs Temperature for Humble 3152	271
A1-3	Thermal Conductivity vs Temperature for Humble 3152	272

ILLUSTRATIONS (Continued)

Figure		Page
AI-4	Viscosity vs Temperature for Humble 3152	273
AI-5	Thermal Conductivity vs Temperature for Xe-He Mixtures	274
AI-6	Viscosity vs Temperature for Xe-He 39.94	275
AI-7	Viscosity vs Temperature for Xe-He 83.8	276
AI-8	Density vs Temperature for MIPB(Monoisopropyl-Biphenyl)	277
AI-9	Specific Heat vs Temperature for MIPB (Moniosopropyl-Biphenyl)	278
AI-10	Viscosity of MIPB	279
AI-11	Specific Gravity vs Temperature of Dow Corning 200 Fluids	280
AI-12	Thermal Conductivity of Dow Corning 200 Fluids	281
AI-13	Viscosity of Dow Corning 200 Fluids	282
AI-14	Specific Heat of Dow Corning 200 Fluids	283
A2-1	347 Stainless Steel Allowable Stress vs Operating Temperature for 50,000-hr Operation	286
A2-2	Hastelloy X Allowable Stress vs Operating Temperature for 50,000-hr Operation	287
A2-3	Tantalum Alloy T-111 Allowable Stress vs Operating Temperature for 50,000-hr Operation	288
A2-4	Haynes 25 Allowable Stress vs Operating Temperature for 50,000-hr Operation	289
A2-5	Columbium-1Zr Allowable Stress vs Operating Temperature for 50,000-hr Operation	290
A3-1	Case I - Heat Exchanger and Ducting Summary (Split Recuperator)	292
A3-2	Case II - Heat Exchanger and Ducting Summary (Split Recuperator)	293

ILLUSTRATIONS (Continued)

Figure		Page
A3-3	Case III - Heat Exchanger and Ducting Summary (Split Recuperator)	294
A3-4	Case IA - Heat Exchanger and Ducting Summary	295
A3-5	Case IIA - Heat Exchanger and Ducting Summary	296
A3-6	Case IIIA - Heat Exchanger and Ducting Summary	297
A3-7	Case IV - Heat Exchanger and Ducting Summary	298
A3-8	Case V - Heat Exchanger and Ducting Summary	299
A3-9	Case VI - Heat Exchanger and Ducting Summary	300
A3-10	Case 8-I-S Heat Exchanger and Ducting Summary	301
A3-11	Case 8-II-S Heat Exchanger and Ducting Summary	302
A3-12	Case 8-III-S Heat Exchanger and Ducting Summary	303
A3-13	Case 8-IA - Heat Exchanger and Ducting Summary	304
A3-14	Case 8-IIA - Heat Exchanger and Ducting Summary	305
A3-15	Case 8-IIIA - Heat Exchanger and Ducting Summary	306
A3-16	Case 8-IV - Heat Exchanger and Ducting Summary	307
A3-17	Case 8-V - Heat Exchanger and Ducting Summary	308
A3-18	Case 8-VI - Heat Exchanger and Ducting Summary	309
A3-19	Case 8-VII - Heat Exchanger and Ducting Summary	310
A3-20	Case 8-VIII - Heat Exchanger and Ducting Summary	311
A3-21	Case 8-IX - Heat Exchanger and Ducting Summary	312
A3-22	Case 8-X - Heat Exchanger and Ducting Summary	313
A3-23	Case 8-XI - Heat Exchanger and Ducting Summary	314
A3-24	Case 8-XII - Heat Exchanger and Ducting Summary	315

TABLES

Table		Page
2-1	Task I Recommended Heat Exchanger Design Approach for High Temperature Systems	6
2-2	Task 2 HXDA Design Summary	9
2-3	TASK 3 HXDA Design	13
3-1	System Optimization Parameters	19
3-2	Comparison of Tubular Recuperator Configurations ($\Delta P/P$ = 2 Percent)	40
3-3	Comparison of Finned Tubes vs Plain Tubes (Design Conditions of Case IV) (2-Pass Counter Crossflow HX)	56
3-4	Waste Heat Exchanger Fin Area Densities for 347 Steel, Nickel, and Copper	68
3-5	Preliminary Heat Source Heat Exchanger Tube Diameter to Thickness Ratios for Tantalum Alloy T-111	68
3-6	Rectangular Tubular Heat Exchanger Design	71
3-7	Design Conditions	79
3-8	Tubular Recuperator Weight Summary	81
3-9	Waste Heat Exchanger Weight Summary	83
3-10	Heat Source Heat Exchanger Weight Summary	83
4-1	System Optimization Parameters for Task 2	103
4-2	Heat Source and Heat Sink Heat Exchanger Design Requirements	105
4-3	Heat Exchanger Design Conditions and Materials	154
4-4	Waste Heat Exchanger Weight Summary, Rectangular Tubular	155
4-5	Heat Source Heat Exchanger Weight Summary, Rectangular Tubular	156

TABLES (Continued)

Table		Page
4-6	HXDA Manifolding and Ducting Nomenclature	165
4-7	Case 8-VIII Heat Exchanger Summary	169
4-8	Case 8-VIII Heat Exchanger Design Summary	171
4-9	Task 2 HXDA Design Summary	176
5-1	Design Conditions. Materials	244
5-2	Heat Source Heat Exchanger Weight Summary	245
5-3	Task 3, Case I, Optimized System (Rectangular End Recuperator)	248
5-4	Task 3, Case II, Optimized System (Rectangular End Recuperator)	249
5-5	Task 3, Case III, Optimized System (Rectangular End Recuperator)	250
5-6	Task 3, Case IV, Optimized System (Rectangular End Recuperator)	251
5-7	Task 3 Case I HXDA	257
5-8	Task 3 Case II HXDA	258
5-9	Task 3 Case III HXDA	259
5-10	Task 3 Case IV HXDA	260

DRAWINGS

Drawing		Page
L198430	Layout, Heat Exchanger Ducting Assembly, Case IX, Task I	95
L198523	Layout, HXDA, Case Nos. I, II and III	179
L198522	Layout, HXDA, Case Nos. IV, V and VI	181
L198524	Layout, HXDA, Case Nos. IA, IIA and IIIA	183
L198525	Layout, HXDA, Case Nos. 8-I, 8-II, 8-III	185
L198527	Layout, HXDA, Case Nos. 8-IV, 8-V, 8-VI	187
L198528	Layout, HXDA, Case Nos. VII, VIII, IX	189
L198529	Layout, HXDA, Case Nos. 8-X, 8-XI, 8-XII	191
L198526	Layout, HXDA, Case Nos. 8-IA, 8-IIA, 8-IIIA	193
L198555	Layout, HXDA, Task 3, Case I, SNAP-8, 160 kw_e	261
L198556	Layout, HXDA, Task 3, Case II, SNAP-8, 160 kw_e	263
L198559	Layout, HXDA Task 3, Case III, Advanced System 160 kw_e	265
L198558	Layout, HXDA, Task 3, Case IV, SNAP-8, 80 kw_e	267

ABSTRACT

Parametric data of heat exchanger size and weight for nuclear reactor Brayton cycle space power systems in the 160 kw_e range are presented. Optimized (i.e., minimum weight) designs of HXDA's (heat exchanger and duct assemblies) are developed over a wide range of Brayton cycle operating conditions with particular emphasis on those associated with the SNAP-8 reactor capabilities.

PRECEDING PAGE BLANK NOT FILMED

SECTION I

INTRODUCTION

As part of their advanced space power systems studies, NASA is investigating the performance characteristics of advanced closed loop Brayton cycle electric power generating systems employing liquid-metal-cooled reactors. The heat exchangers associated with this type of power conversion system are the waste heat exchanger, the heat source heat exchanger, and the recuperator. These three heat exchangers and their associated interconnecting ducting define the heat exchanger and duct assembly (HXDA). The HXDA constitutes a large fraction of the Brayton cycle power conversion system weight and volume. The weight and volume of the HXDA is highly dependent on the selected cycle operating and design parameters. The definition of the set of design parameters which yields the minimum overall system weight requires extensive studies on the component and systems level.

To aid in the development of advanced Brayton cycle space power systems, NASA formulated a study to define the associated HXDA heat exchangers and suitable overall packaging configurations. This study was organized in three phases:

Phase I - Parametric Optimization Studies

Phase II - Pressure Containment Tests

Phase III - Preliminary Designs

The Phase I effort was concerned with the selection of basic types of heat transfer surfaces for each of the three system heat exchangers and the development of optimum (i.e., minimum weight) HXDA designs and configurations over a wide range of cycle operating conditions and design variables. The Phase II effort involved the structural testing of plate-fin heat transfer surfaces at the elevated temperatures and pressures associated with advanced Brayton cycle systems. The Phase III effort is directed to the preparation of two HXDA preliminary designs. The system parameters for these two designs are to be defined by NASA after the review of Phase I and II results and their in-house system studies. A topical report will be issued on each phase of the program as completed. This report presents the results of the Phase I effort performed during the period from November 1969 to August 1970.

The Phase I effort was divided into three work tasks:

Task 1 - Preliminary Investigations

Task 2 - Design of 24 Brayton Cycle HXDA's

Task 3 - Design of 4 Brayton Cycle HXDA's

A matrix of Brayton cycle operating conditions and design variables was established for the Task 1 and 2 efforts. This matrix included combinations of two Xe-He gas mixture molecular weights, two recuperator effectivenesses, three system pressure loss ratios, and a high and low operating pressure level. This resulted in 24 distinct system design points. The high-pressure systems were associated with a 36,000-rpm turbine-alternator-compressor (TAC) design, and the low-pressure systems with a 24,000-rpm TAC design. NASA provided the operating state points for each of the 24 design conditions. Initially the design points were exclusively concerned with systems which employed a high liquid temperature lithium-cooled reactor coupled to the Brayton cycle power conversion equipment through a heat source heat exchanger. The Task 1 studies are summarized in Section 3 of this report.

At the completion of Task 1, the program was reoriented to consider the design of HXDA's appropriate for application to the zirconium hydride reactor (SNAP-8) temperatures and its associated NaK coolant. Thus the Task 2 studies included a large number of systems considered to be appropriate to the SNAP-8 reactor. However, some effort was continued in Task 2 on the development of HXDA designs for a small number of systems employing the higher temperature level (i.e., 1740°F) associated with an advanced reactor design. The results of the Task 2 HXDA optimization analysis for the 24 Brayton cycle operating conditions are given in Section 4 of this report.

Based on the work performed in Tasks 1 and 2, NASA defined four Brayton cycle operating conditions for the Task 3 HXDA design and optimization studies. These four design cases consisted of two SNAP-8 design variations and two advanced systems. The two SNAP-8 systems differed in power level (one being designed for 160 kw_e and the other for 80 kw_e)and in design temperature capability. The 160 kw_e SNAP-8 HXDA was designed to have a capability for operation at 1600°F while the 80 kw_e design is directed at the lower SNAP-8 temperature (1150°F). The two advanced systems were both designed for 160 kw_e, but one was designed for a turbine inlet temperature of 1600°F, and the other for a turbine inlet temperature of 2100°F. Thus, the HXDA designs developed for these systems represent an increasing level of reactor temperature capability, starting with the current SNAP-8. The results of these studies are presented in Section 5 of this report.

SECTION 2

SUMMARY

This topical report summarizes the Phase I work performed by AiResearch on NASA Contract NAS3-13453 entitled "Conceptual Design Study of Nuclear Brayton-Cycle Heat Exchanger and Duct Assembly (HXDA)." The major elements of the closed loop Brayton cycle power conversion package are the TAC (Turbo-Alternator-Compressor), recuperator, waste heat exchanger, and heat source heat exchanger and the interconnecting ducting. This study was concerned with the three system heat exchangers and the interconnecting ducting which together constitute the HXDA.

The study centered around defining optimum heat exchanger designs, system operating parameters, and overall equipment configurations for a closed loop Brayton cycle space power conversion system, operating in the power range of 80 to 160 kw_e and coupled to a liquid metal cooled reactor. NASA defined a set of HXDA design requirements that cover a wide range of Brayton cycle operating and system design variables. These design points were used to develop optimized HXDA designs which will be evaluated by NASA on a systems level. The design matrix as originally conceived, and applicable to Task I of this study, is shown in Figure 2-1.

The Phase I studies were organized around three work tasks as follows:

Task I - Preliminary Investigations

Task 2 - Design of 24 Brayton Cycle HXDA's

Task 3 - Design of 4 Brayton Cycle HXDA's

The following paragraphs summarize the work performed in each task.

TASK I - PRELIMINARY INVESTIGATIONS

The objective of the Task I studies was to identify the most appropriate design approaches for the three system heat exchangers over the range of design variables defined in Figure 2-1. The design approach included the determination of heat exchanger materials, types of heat transfer surfaces, and heat exchanger flow configurations which yield minimum weight heat exchanger designs.

For this study four design cases were selected from the matrix shown in Figure 2-1. These cases were IV, IX, IVA, and IXA. These cases represented the systems which were the largest and smallest for each of the two working fluids. For example, the smallest system would have the highest pressure level, lowest recuperator effectiveness, and highest pressure drop allocation. Heat exchanger designs were developed for several types of heat exchangers for each of the four design cases. For the system recuperators, both plate-fin and tubular types were evaluated as well as combined tubular plate-fin configurations. Both plate-fin and tubular waste heat exchanger designs were

FIXED PARAMETERS

HEAT SOURCE HEAT EXCHANGER

- HOT FLUID-LITHIUM
  - T_{IN} = 2130°R
  - T_{OUT} = 2030°R
  - P_{MAX} = 30 PSI
  - ΔP_{MAX} = 5 PSI
- GAS OUTLET TEMP - 2060°R
- LOCATED REMOTELY

HEAT SINK HEAT EXCHANGER

- E = 0.95
  - $\frac{W_{CP}GAS}{W_{CP}LIQUID} = 0.90$
- COOLANT-HUMBLE OIL 3152
  - P_{MAX} = 75 PSI
  - ΔP_{MAX} = 10 PSI
- GAS OUTLET TEMP - 700°R

SYSTEM

- POWER - 160 kw_e

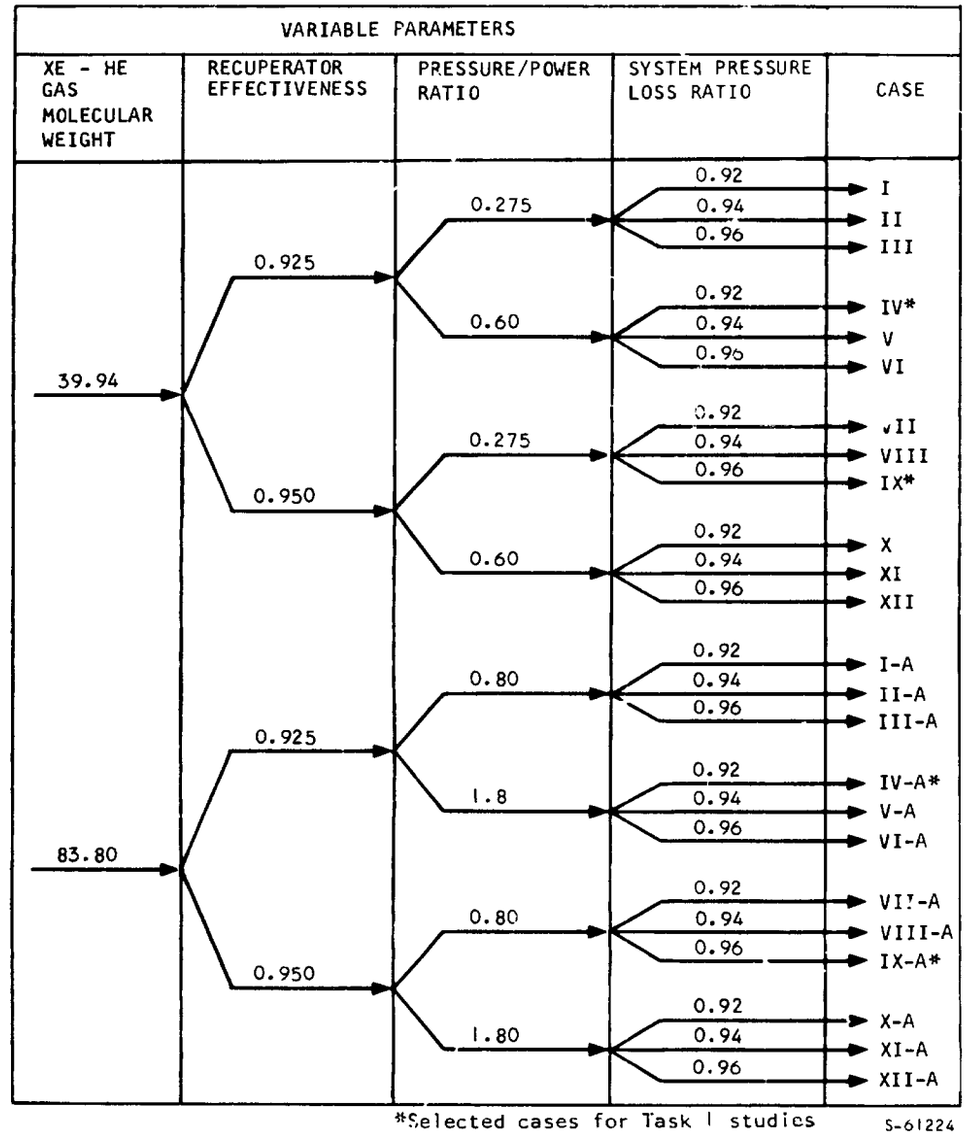

Figure 2-1. HXDA System Design Parameter Matrix

evaluated for each of the four design points. For the HSHX designs only the tubular type was considered due to the lithium containment problem. However, various finned and plain tubular geometries were considered. Materials were identified for each heat exchanger design. Based on minimum heat exchanger weight, an overall design approach was identified for each of the system heat exchangers.

A graphical method was developed to determine the allocation of pressure drop among the three heat exchangers yielding minimum total heat exchanger weight. Various arrangements of the heat exchanger and the TAC were investigated to identify a reasonable packaging configuration for the HXDA.

Based on these studies, AiResearch made recommendations for a set of ground rules for the Task 2 studies. These recommendations are summarized in Table 2-1.

TASK 2 - DESIGN OF 24 BRAYTON CYCLE HXDA'S

At the initiation of the Task 2 studies, the program was reoriented to consider designs of HXDA's appropriate for application to the SNAP-8 reactor temperature levels. Consequently the 24 design conditions were redefined and are shown in Figure 2-2. The new study matrix retains nine of the original 24 cases (Figure 2-1) and substitutes 15 SNAP-8 cases for the remainder. In addition, for the SNAP-8 systems, the heat source heat exchanger is close-coupled to the recuperator/waste heat exchanger package, and the heat rejection fluid is defined as Dow Corning 200-(2 CS). For all systems a tubular type waste-heat exchanger was specified by NASA for the Task 2 studies. While the tubular type heat exchanger was heavier than the plate-fin type, NASA felt that the tubular type offered more protection against leaks.

The Task 1 results were reviewed in light of the above changes. The lower operating temperatures associated with the SNAP-8 reactor NaK coolant permitted the use of nonrefractory materials in the heat source heat exchanger. For the heat source heat exchanger for the SNAP-8 cases a tube-fin approach was selected using Haynes 25 tubes with stainless steel clad copper fins. For the tubular waste heat exchangers, a 347-SS tube with copper fins was found to be appropriate for both the advanced and SNAP-8 systems. For the waste heat exchangers, a flap turbulator insert was used to enhance liquid-side heat transfer.

Examination of the design matrix of Figure 2-2 reveals that each of the eight design cases associated with a system pressure loss ratio of 0.94 (i.e., a pressure loss of 6 percent in the HXDA) differs from two adjacent cases only in this parameter. Thus these cases (i.e., 0.92 and 0.96) will differ only slightly from the 0.94 case in terms of gas flow rate due to the small difference in cycle efficiency with the higher or lower system pressure drop. Heat exchanger weight and size data developed for the eight 0.94 pressure loss ratio cases (i.e., cases II, V, II-A, 8-II, 8-V, 8-VIII, 8-XI, 8-IIA) were therefore scaled to provide similar data on the 0.92 and 0.96 pressure loss ratio cases. Consequently, these eight cases were identified as the prime design cases.

Studies were conducted on each of the three system heat exchangers for eight operating conditions of the prime design cases. These studies resulted in the definition of minimum weight heat exchanger designs (i.e., weight, size,

TABLE 2-1

TASK-1 RECOMMENDED HEAT EXCHANGER DESIGN APPROACH
FOR
HIGH TEMPERATURE SYSTEMS

Item	Recuperator	Waste Heat Exchanger	Heat Source Heat Exchanger
Heat Transfer Surfaces	1 - Plate-fin for low pressure systems 2 - Plate-fin and tubular precooler for high pressure systems Pure counterflow Rectangular end sections	Plate-fin for all systems 8-pass cross-counterflow Alternate fluid-1/gas/fluid-2 passages	Finned tubular for all systems 2-pass cross-counterflow (lithium inside tubes)
Materials	1 - Hastelloy X for high pressure systems 2 - 347SS for low pressure systems Brazed construction	Stainless steel plates Cu or Ni fins Brazed construction	T-111 tubes Cb-1%Zr fins All welded construction
Material thickness	Plates = 0.008 in. Side plates = 0.060 in. Fin as req'd for structure (minimum area density=0.04)	Plates = 0.008 in. Side plates = 0.060 in. Fin as req'd for structure and heat transfer	Tube OD = 0.50 in. Tube wall = 0.02 in. Fin (minimum) = 0.003 in.

HXDA CONFIGURATION: Similar to current BHXU configuration

FIXED PARAMETERS

HEAT SOURCE HEAT EXCHANGER

1. SNAP-8 SYSTEMS
   - HOT FLUID-NaK
     - T_{IN} = 1625°R
     - T_{OUT} = 1455°R
     - P_{MAX} = 80 PSIA
     - ΔP_{MAX} = 5 PSI
   - GAS OUTLET TEMP - 1610°R
   - CLOSE COUPLED TO RECUPERATOR
2. ADVANCED SYSTEMS
   - HOT FLUID-LITHIUM
     - T_{IN} = 2130°R
     - T_{OUT} = 2030°R
     - P_{MAX} = 30 PSI
     - ΔP_{MAX} = 5 PSI
   - GAS OUTLET TEMP - 2060°R
   - LOCATED REMOTELY

HEAT SINK HEAT EXCHANGER

1. SNAP-8 SYSTEMS
   - E = 0.95
     - $\frac{W_{CP}^{GAS}}{W_{CP}^{LIQUID}} = 0.90$
   - COOLANT-DOW CORNING 200-(2CS)
     - P_{MAX} = 75 PSI
     - ΔP_{MAX} = 10 PSI
   - GAS OUTLET TEMP - 580°R
2. ADVANCED SYSTEMS
   - E = 0.95
     - $\frac{W_{CP}^{GAS}}{W_{CP}^{LIQUID}} = 0.90$
   - COOLANT-HUMBLE OIL 3152
     - P_{MAX} = 75 PSI
     - ΔP_{MAX} = 10 PSI
   - GAS OUTLET TEMP - 700°R

SYSTEM

- POWER LEVEL - 160 kw_e

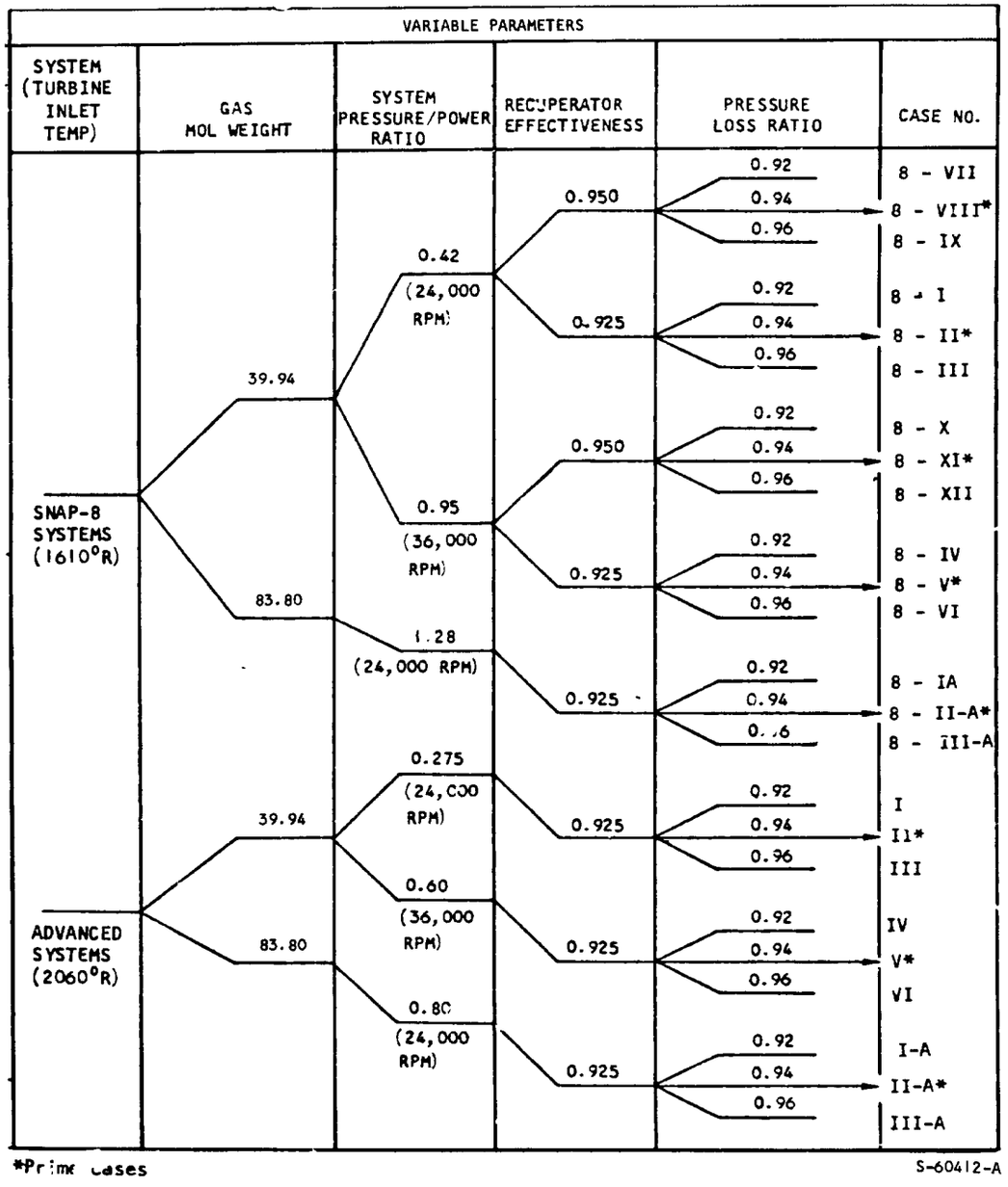

Figure 2-2. Task 2 HXDA Study Matrix

heat transfer matrixes, etc.) for the recuperator, heat source heat exchanger, and waste heat exchanger over a range of gas-side pressure drops. Fomulations were also developed defining the weight, size, and pressure drop associated with the interconnecting gas ducts and manifolds.

A computer program was developed (replacing the graphical method used in Task 1) to optimize the allocation of pressure drop among the three system heat exchangers. Operating on weight and pressure drop data of the individual heat exchangers, the computer program identifies that combination of heat exchangers which yields minimum total heat exchanger weight for a fixed total system pressure drop. For the Task 2 studies, 25 percent of the total pressure drop available was allocated to the interconnecting gas ducts and manifolds.

Using the component data developed as a function of pressure drop for each of the eight prime design cases, and adjusting these data to account for variations in gas flow rate, the weight optimization computer program was used to obtain optimum solutions for the recuperator, heat source heat exchanger, and waste-heat heat exchanger for each of the 24 design cases. The results of these analyses are summarized in Table 2-2.

Layout drawings were prepared for each of the eight prime design cases with dimensional information on the sixteen nonprime cases indicated on the appropriate drawings. A typical layout drawing developed in this task is shown in Figure 2-3 along with an illustration of the complete HXDA package.

TASK 3 - DESIGN OF FOUR BRAYTON CYCLE HXDA'S

Four Brayton cycle design points were selected for this task by NASA, on the basis of their inhouse systems studies and the Task 2 HXDA study results. The four systems were as follows:

I - SNAP-8 Design Temperatures, 160 kw_e

HXDA Mechanical Design

Recuperator, waste heat exchanger, and ducting capable of operating at 1600°F system temperature levels

200/105 psi (maximum, high/low pressure levels)

1300°F maximum temperature (HSHX)

Waste Heat Exchanger

Plate-fin construction

Coolant: DC-200 - (2 CS)

TABLE 2-2

TASK 2 HXDA DESIGN SUMMARY

a. ADVANCED SYSTEMS

Case No.	System Pressure (psi)	RPM	Recuperator Effectiveness	$\left(\frac{\Delta P}{P}\right)_T$ (%)	Total HXDA Weight, lb	$\left(\frac{\Delta P}{P}\right)_{Ducts}$	Duct Weight, lb	HXDA HX Wt Total (lb)	Recuperator (Plate-Fin) $\left(\frac{\Delta P}{P}\right)$ (%)	Wt (lb)	Flow Length (in.)	Stack Height (in.)	No Flow (in.)	2-Waste Heat Exchangers (Tubular) $\left(\frac{\Delta P}{P}\right)$ (%)	Wt (lb)	Flow Length (in.)	Tube Length (in.)	No Flow (in.)	No. of Tubes	HSHX (Tubular) $\left(\frac{\Delta P}{P}\right)$ (%)	Wt (lb)	Flow Length (in.)	Tube Length (in.)	No Flow (in.)	No. of Tubes	Recuperator Configuration
I	104.5	24,000	0.925	8.0	4374	2.00	1097	3278	4.40	1059	22.8	63.5	14.4	1.45	1977	22.7	36.1	41.2	37,964	0.15	242	2.0	25.0	33.0	84	Split Recup
*II	104.5	24,000	0.925	6.0	4348	1.50	1121	3227	3.20	1158	22.5	64.0	16.0	1.15	1849	21.1	36.8	40.7	35,057	0.15	220	2.0	25.0	30.0	76	Split Recup.
III	104.5	24,000	0.925	4.0	4729	1.00	1280	3449	2.20	1385	22.6	67.5	18.4	0.65	1862	18.1	39.7	45.2	33,336	0.15	202	2.0	25.0	27.5	70	Split Recup.
IV	228.0	36,000	0.925	8.0	3772	2.00	841	2931	4.80	754	24.4	30.4	13.8	0.90	1909	30.1	32.6	29.7	35,575	0.30	269	5.2	21.6	17.2	78	Normal
*V	228.0	36,000	0.925	6.0	3718	1.50	911	2807	3.70	798	24.4	30.2	15.1	0.65	1757	27.2	33.9	29.9	32,871	0.15	252	4.5	23.0	17.5	72	Normal
VI	228.0	36,000	0.925	4.0	3777	1.00	948	2829	2.35	968	24.3	31.9	17.4	0.50	1631	25.0	35.0	29.3	30,594	0.15	231	4.5	23.0	16.0	66	Normal
I-A	304.0	24,000	0.925	8.0	4984	2.00	1074	3911	4.80	1028	27.3	31.8	14.4	1.05	2535	36.5	37.3	25.4	38,228	0.15	348	4.0	21.5	19.9	82	Normal
*II-A	304.0	24,000	0.925	6.0	4835	1.50	1093	3742	3.50	1106	27.5	31.4	15.7	0.85	2320	34.6	38.3	24.9	35,208	0.15	316	4.0	21.5	18.0	74	Normal
III-A	304.0	24,000	0.925	4.0	4974	1.00	1194	3780	2.35	1299	27.9	32.7	17.8	0.50	2191	30.2	41.4	26.6	33,598	0.15	290	4.0	21.5	16.5	68	Normal

*Prime Case

b. SNAP-8 SYSTEMS

Case No.	System Pressure (psi)	RPM	Recuperator Effectiveness	$\left(\frac{\Delta P}{P}\right)_T$ (%)	Total HXDA Weight, lb	$\left(\frac{\Delta P}{P}\right)_{Ducts}$	Duct Weight, lb	HXDA HX Wt Total (lb)	Recuperator (Plate-Fin) $\left(\frac{\Delta P}{P}\right)$ (%)	Wt (lb)	Flow Length (in.)	Stack Height (in.)	No Flow (in.)	2-Waste Heat Exchangers (Tubular) $\left(\frac{\Delta P}{P}\right)$ (%)	Wt (lb)	Flow Length (in.)	Tube Length (in.)	No Flow (in.)	No. of Tubes	HSHX (Tubular) $\left(\frac{\Delta P}{P}\right)$ (%)	Wt (lb)	Flow Length (in.)	Tube Length (in.)	No Flow (in.)	No. of Tubes	Recuperator Configuration
8-I	135.0	24,000	0.925	8.0	3795	2.00	400	3392	4.55	900	26.2	56.0	12.6	1.30	2209	25.2	28.7	49.0	50,513	0.15	284	3.7	32.0	32.6	250	Split Recup.
*8-II	135.0	24,000	0.925	6.0	3589	1.50	385	3203	3.20	948	25.6	55.7	13.9	1.15	2001	24.4	29.1	45.8	45,612	0.15	255	3.7	32.0	29.2	224	Split Recup.
8-III	135.0	24,000	0.925	4.0	3601	1.00	392	3209	2.00	1104	24.8	58.4	16.1	0.85	1874	22.3	29.7	45.7	42,149	0.15	232	3.7	32.0	26.5	204	Split Recup
8-IV	304.0	36,000	0.925	8.0	3311	2.00	289	3022	4.80	535	29.7	27.0	12.1	0.50	2252	30.5	27.0	40.5	49,138	0.70	234	8.4	14.9	18.3	310	Normal Conf.
*8-V	304.0	36,000	0.925	6.0	3131	1.50	347	2784	3.90	526	29.5	25.5	12.7	0.45	2023	29.8	27.3	37.5	44,303	0.15	235	5.6	18.5	25.0	289	Normal Conf.
8-VI	304.0	36,000	0.925	4.0	2981	1.00	329	2653	2.45	597	28.7	26.4	14.9	0.40	1842	28.8	27.7	35.[illegible]	40,460	0.15	213	5.6	18.5	22.7	263	Normal Conf.
8-VII	135.0	24,000	0.950	8.0	4664	2.00	462	4203	4.60	1613	37.9	44.2	19.8	1.25	2251	27.6	27.2	48.7	51,167	0.15	339	4.0	38.5	29.3	253	Normal Conf.
*8-VIII	135.0	24,000	0.950	6.0	4508	1.50	451	4058	3.45	1669	37.1	43.2	21.6	0.90	2085	25.1	28.5	48.9	46,759	0.15	304	4.0	38.5	26.3	226	Normal Conf.
8-IX	135.0	24,000	0.950	4.0	4665	1.00	458	4207	2.20	1943	36.4	45.1	24.8	0.65	1988	22.0	30.1	49.5	43,366	0.15	276	4.0	38.5	23.9	206	Normal Conf.
8-X	304.0	36,000	0.950	8.0	3627	2.00	294	3333	4.80	844	40.1	29.3	13.1	0.40	2258	28.0	27.5	42.7	49,762	0.80	231	8.5	14.7	17.5	301	Normal Conf.
*8-XI	304.0	36,000	0.950	6.0	3379	1.50	284	3095	3.50	848	39.3	28.4	14.2	0.40	2025	28.0	27.5	38.3	44,629	0.60	222	7.9	16.0	17.0	272	Normal Conf.
8-XII	304.0	36,000	0.950	4.0	3330	1.00	325	3004	2.50	909	38.2	28.3	15.6	0.35	1845	27.0	28.0	36.3	40,773	0.15	251	6.2	21.2	19.5	255	Normal Conf.
8-IA	410.0	24,000	0.925	8.0	4244	2.00	313	3930	3.50	746	33.0	29.9	13.3	0.45	2913	34.1	30.5	37.3	53,509	2.05	271	13.6	10.5	10.2	407	Normal Conf.
*8-II-A	410.0	24,000	0.925	6.0	3963	1.50	349	3614	3.50	667	33.0	26.7	13.3	0.45	2603	34.1	30.5	33.4	47,818	0.55	344	9.3	16.1	25.9	391	Normal Conf.
8-III-A	410.0	24,000	0.925	4.0	3828	1.00	382	3446	2.40	727	32.3	26.8	14.8	0.40	2366	33.3	30.9	31.3	43,545	0.20	352	7.9	18.5	23.2	377	Normal Conf.

*Prime Case

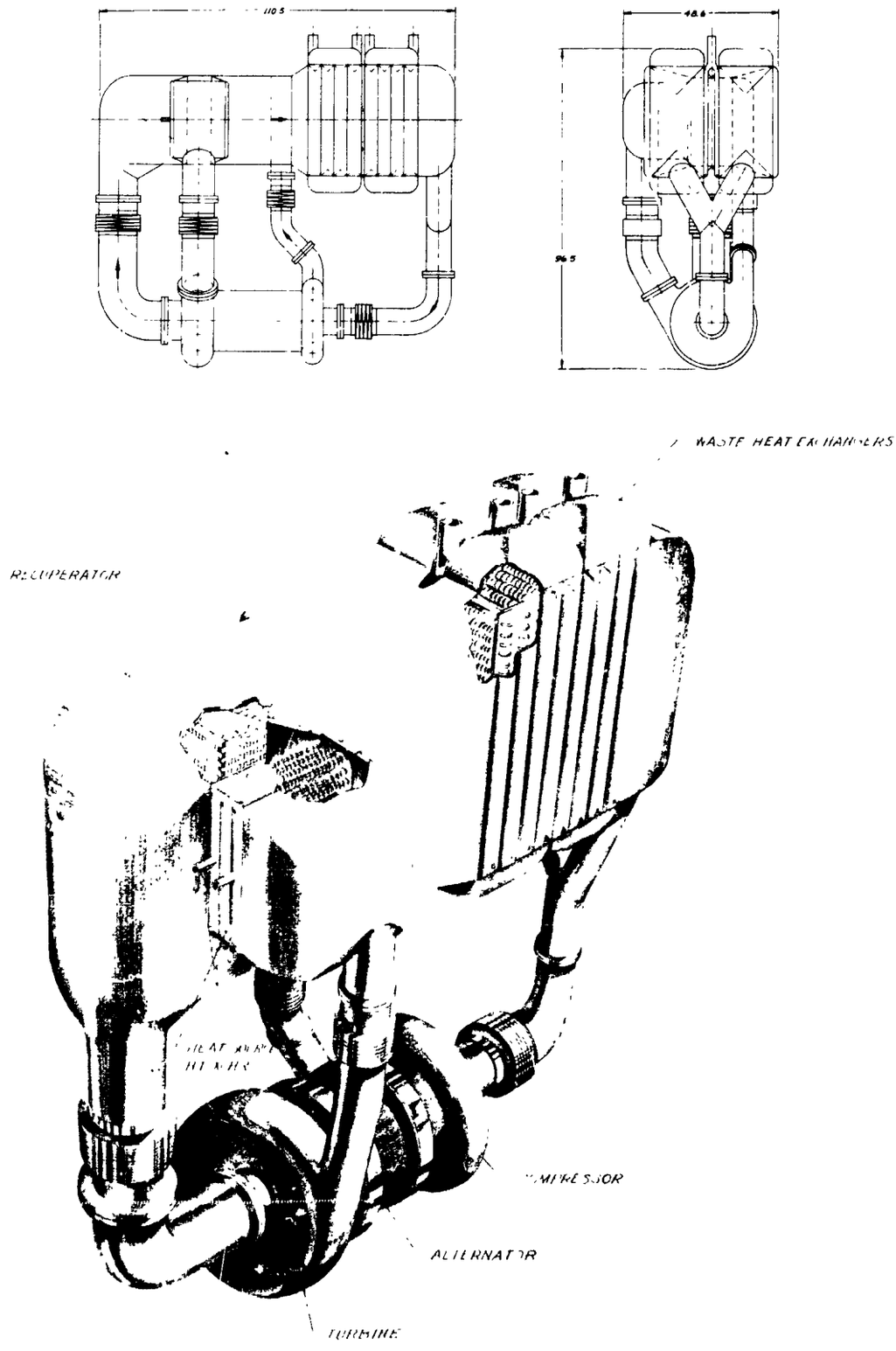

F-12134

Figure 2-3. Sketch of HXDA Design (Task 2, Case 8-II, SNAP-8, 160 kw_e design)

II - 1600°F Turbine Inlet Temperature, 160 kw_e

HXDA Mechanical Design

200/105 psi (maximum, high/low pressure levels)

1700°F maximum temperature (HSHX)

Waste Heat Exchanger

Plate-fin construction

Coolant: MIPB

III - 2100°F Turbine Inlet Temperature, 160 kw_e

HXDA Mechanical Design

200/105 psi (maximum, high/low pressure levels)

2150°F maximum temperature (HSHX)

Waste Heat Exchanger

1. Plate-fin/MIPB Coolant
2. Tube-fin/NaK coolant

IV - SNAP-8 Design Temperatures, 80 kw_e

HXDA Mechanical Design

100/50 psi (maximum, high/low pressure levels)

1300°F maximum temperature (HSHX)

Waste Heat Exchanger

Plate-fin

Coolant: DC-200 - (1 CS)

The following conditions were held constant for all four systems:

(a) Working fluid Xe-He - Mol weight = 39.94

(b) Recuperator effectiveness = 0.925

(c) System pressure loss ratio = 3 percent

(d) Waste heat exchanger effectiveness = 0.950

Materials were selected for each of the three HXDA heat exchangers, consistent with the defined operating temperatures and pressures. Parametric data on weight and size of recuperators, waste-heat heat exchangers, and heat source heat exchangers were developed for each of the four design cases. These component studies identified optimum (i.e., minimum weight) design solutions for each of the system heat exchangers as a function of gas-side pressure drop. In the course of these component studies, it was determined that for a given pressure drop a considerable weight savings could be effected by using triangular end sections on the recuperators as opposed to the rectangular end sections employed in the Task 2 studies. Consequently, design procedures were developed to size and configure minimum weight recuperators employing triangular end sections.

The weight optimization computer program, developed in Task 2, was expanded to treat the HXDA ducts and manifolds as a fourth system component for which an optimum allocation of pressure drop for minimum weight can be determined. In this form the computer program determines the optimum pressure drop allocation, for and among the three system heat exchangers, as well as the optimum size, weight, and pressure drop allocation for the ducts and manifolds which yield a minimum total HXDA weight.

The parametric heat exchanger weight and size data developed on each heat exchanger was used in conjunction with the computer optimization program to identify the optimum set of heat exchangers and pressure drop allocations for each of the four design cases. The results of these analyses are summarized in Table 2-3.

Layout drawings were prepared for each of the four design cases of Task 3. The layout drawing for Case IV (SNAP-8, 80 kw_e) is shown in Figure 2-4 along with a sketch illustrating the overall HXDA configuration.

TABLE 2-3

TASK 3 HXDA DESIGN SUMMARY

Task 3 Case No.	Compressor Outlet Pressure (psi)	Mech Design Pressure HP/LP (psi)	Turbine Inlet Temp (°F)	Power Level (kwe)	Total HXDA		Ducts & Manifolds		Recuperator (Plate-Fin)				
					$\frac{\Delta P}{P}$ (percent)	Weight (lb)	ΔP/P (percent)	Weight (lb)	ΔP/P (percent)	Weight (lb)	Flow Length (in.)	Stack Height (in.)	Width (in.)
I	133	200/105*	1150	160	3.00	3375	0.50	619	1.85	1390	39.3	41.4	20.5
II	120	200/105	1600	160	3.00	3289	0.50	656	1.85	1280	30.0	43.9	22.3
III	96	200/105	2100	160	3.00	4201	0.50	920	1.55	1070	20.1	71.5	35.8
IV	66.5	100/50	1150	80	3.00	2099	0.50	401	1.85	870	33.8	46.2	23.1

*At 1600°F turbine inlet conditions for recuperator and waste heat exchanger, 1300°F maximum temperature for heat source heat exchanger.

Task 3 Case No.	Waste Heat Exchanger (Plate-Fin)					Heat Source Heat Exchanger (Tubular)					
	ΔP/P (percent)	Weight (lb)	Gas Flow Length (in.)	Liquid Flow Length (in.)	Stack Height (in.)	ΔP/P (Percent)	Weight (lb)	Flow Length (in.)	Tube Length (in.)	No Flow (in.)	No. Tubes
I	0.50	1166	16.3	30.8	36.2	0.15	200	5.1	18.2	42.6	328
II	0.40	908	13.3	37.5	27.7	0.25	445	5.8	44.8	19.0	156
III	0.40	658	9.8	40.7	24.6	0.55	1553	13.6	16.0	48.8	904
IV	0.40	652	9.2	37.0	28.4	0.25	176	4.4	44.6	13.8	74

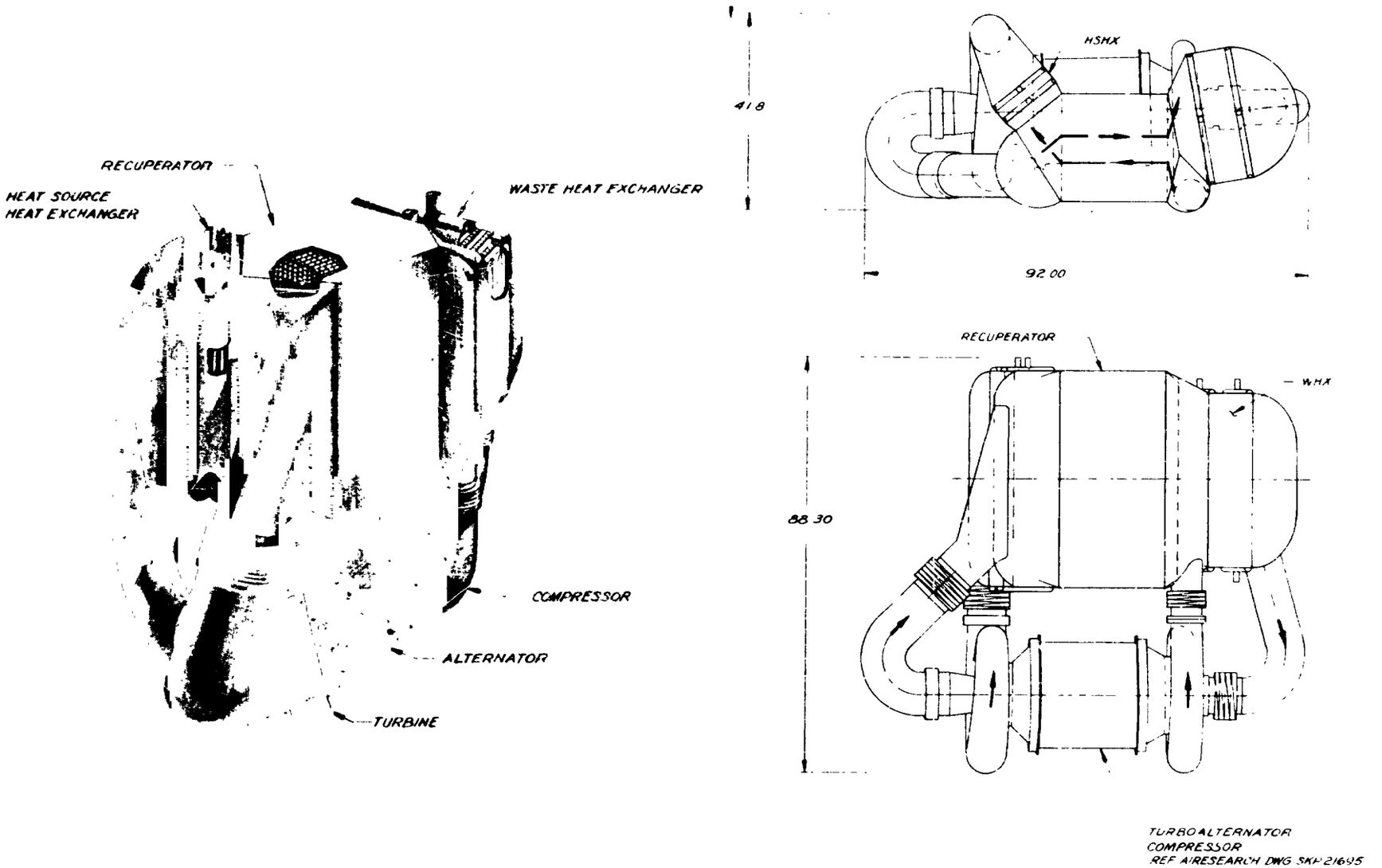

Figure 2-4. Sketch of HXDA Design (Task 3 Case IV, SNAP-8, 80 kw_e design)

F-12:36

SECTION 3

PRELIMINARY INVESTIGATIONS

	Page
INTRODUCTION	17
HEAT EXCHANGER DESIGN ANALYSIS	25
Recuperator	25
1. Plate-Fin Cores	25
2. Tubular, Multipass Tube-Side Cores	26
3. Tubular, Multipass Shell-Side Cores	26
4. Combination Plate-Fin/Tubular Cores	26
5. Comparison of Recuperator Types	40
Waste Heat Exchanger	40
1. Plate-Fin Cores	43
2. Disc-Finned Tubular Cores	43
3. Strip-Finned Tubular Cores	43
4. Comparison of Waste Heat Exchanger Types	43
Heat Source Heat Exchanger	55
HEAT EXCHANGER STRUCTURAL ANALYSIS	64
Design Criteria and Material Properties	64
Fin and Tube Pressure Capability	65
Tubular Heat Exchanger Design	69
1. Tube Weight	73
2. Baffle Weight	75
3. Header Weight	75
4. No-flow Pans	76
5. Support Beam	77
Weight Results Summary	78
1. Recuperator	78
2. Waste Heat Exchanger	78
3. Heat Source Heat Exchanger	78
PRELIMINARY CONFIGURATION STUDY	84
SYSTEM OPTIMIZATION STUDY	92
SUMMARY AND RECOMMENDATIONS	97

SECTION 3

PRELIMINARY INVESTIGATIONS

INTRODUCTION

This section of the report presents a summary of the work that was performed in the Task I effort. Figure 3-1 shows the original Brayton cycle system parameter matrix that was selected by NASA for the Phase I effort and Table 3-1 presents the matrix of operating design conditions. The objectives of Task I were to identify the most promising heat transfer surfaces for the three system heat exchangers from the large number of possible surfaces.

The approach taken to this task was to select from the 24 design points 4 design points which would represent the largest and smallest systems for each of the two working fluids.

By using the reduced number of design points, several types of heat transfer surfaces could be investigated and the most appropriate ones identified for each of the various system heat exchangers and design conditions.

The highest recuperator effectiveness, coupled with the lowest pressure-to-power ratio and the lowest system pressure loss, will result in the largest set of heat exchangers. This set of criteria applied to the gas molecular weight of 39.94 defines Case IX on the design point matrix of Figure 3-1. The other three design points were established in a similar manner. The design point cases selected for the Task I effort consequently were:

Case IV	(Molecular weight = 39.94)
Case IX	(Molecular weight = 39.94)
Case IV-A	(Molecular weight = 83.80)
Case IX-A	(Molecular weight = 83.80)

The state points for each of these design cases are given in Figure 3-2 through Figure 3-5.

PRECEDING PAGE BLANK NOT FILMED

FIXED PARAMETERS

HEAT SOURCE HEAT EXCHANGER

- HOT FLUID-LITHIUM
  - T_{IN} = 2130°R
  - T_{OUT} = 2030°R
  - P_{MAX} = 30 PSI
  - ΔP_{MAX} = 5 PSI
- GAS OUTLET TEMP - 2060°R
- LOCATED REMOTELY

HEAT SINK HEAT EXCHANGER

- E = 0.95
- $\frac{W_{CP}GAS}{W_{CP}LIQUID} = 0.90$
- COOLANT-HUMBLE OIL 3152
  - P_{MAX} = 75 PSI
  - ΔP_{MAX} = 10 PSI
- GAS OUTLET TEMP - 700°R

SYSTEM

- POWER - 160 kw_e

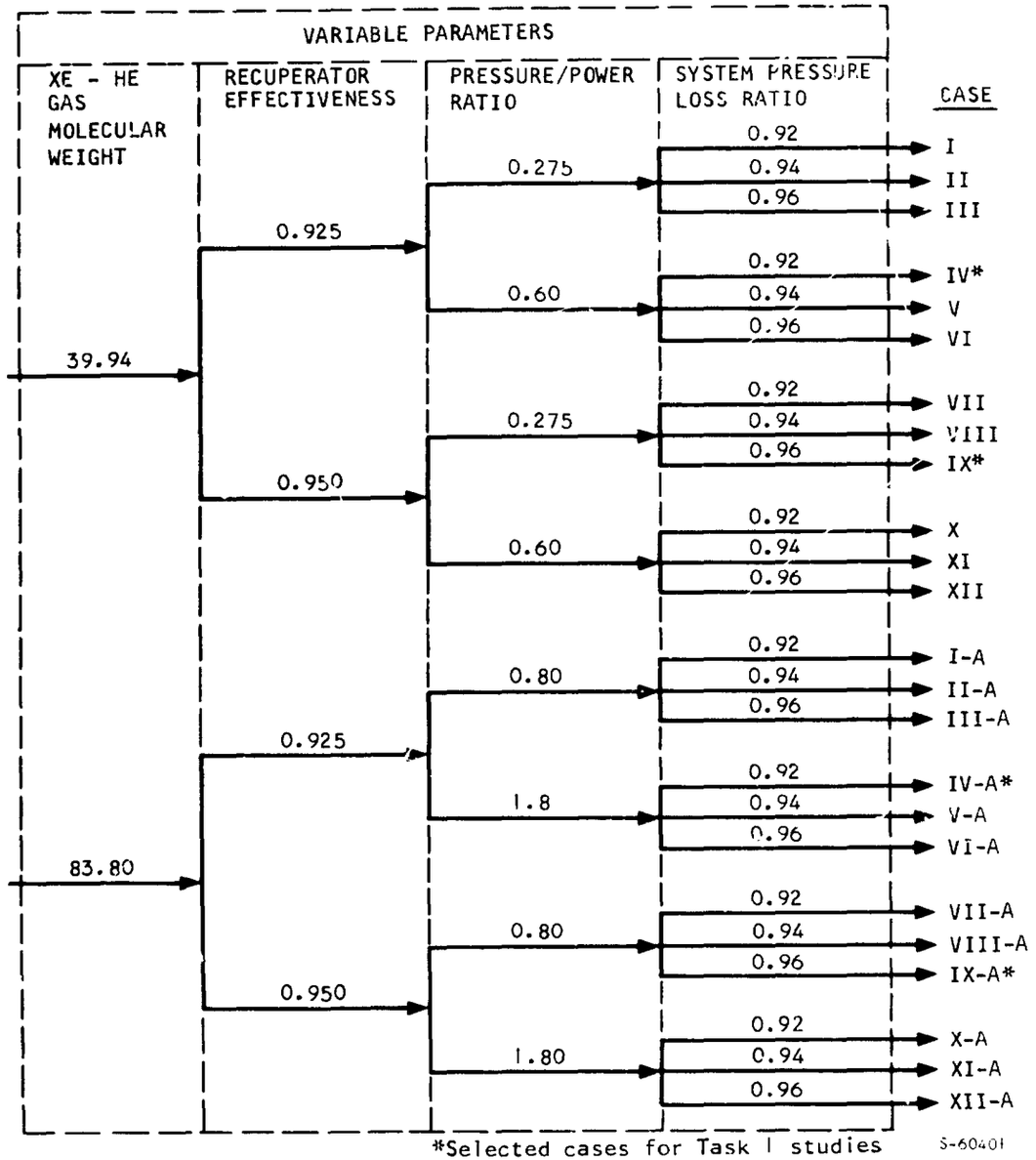

Figure 3-1. HXDA System Design Parameter Matrix

TABLE 3-1

SYSTEM OPTIMIZATION PARAMETERS

Working Fluid: He-Xe Mixture	Molecular Weight, 39.94					
Recuperator effectiveness, E	0.925					
Pressure-to-power ratio, p_4/P_{SH}	0.275			0.60		
Problem designation (case number)	I	II	III	IV	V	VI
System loss pressure ratio, L	0.92	0.94	0.96	0.92	0.94	0.96
Recuperator low-pressure (hot) side inlet temperature (T_2), °R	1689	1676	1663	1689	1676	1663
Recuperator low-pressure (hot) side inlet pressure (p_2), psia	57.3*	56.7*	56.1*	125.1*	123.8*	122.5*
Recuperator high-pressure (cold) side inlet temperature (T_5), °R	947	947	947	947	947	947
Recuperator high-pressure (cold) side inlet pressure (p_5), psia	104.5	104.5	104.5	228.0	228.0	228.0
Working fluid mass flow rate (w), lb/sec	12.29	11.14	10.21	12.29	11.14	10.21
Lithium mass flow rate, lb/sec	6.56	6.11	5.75	6.56	6.11	5.75
Recuperator effectiveness, E	0.950					
Pressure-to-power ratio, p_4/P_{SH}	0.275			0.60		
Problem designation (case number)	VII	VIII	IX	X	XI	XII
System loss pressure ratio, L	0.92	0.94	0.96	0.92	0.94	0.96
Recuperator low-pressure (hot) side inlet temperature (T_2), °R	1689	1676	1663	1689	1676	1663
Recuperator low-pressure (hot) side inlet pressure (p_2), psia	57.3*	56.7*	56.1*	125.1*	123.8*	122.5*
Recuperator high-pressure (cold) side inlet temperature (T_5), °R	947	947	947	947	947	947
Recuperator high-pressure (cold) side inlet pressure (p_5), psia	104.5	104.5	104.5	228.0	228.0	228.0
Working fluid mass flow rate (w), lb/sec	12.29	11.14	10.21	12.29	11.14	10.21
Lithium (heat source) mass flow rate, lb/sec	6.28	5.86	5.52	6.28	5.86	5.52

*Nominal value based on equal pressure losses for high and low pressure streams and a compressor pressure ratio of 1.9. Final value to be based on optimized pressure loss distribution.

TABLE 3-1 Continued

Working fluid: He-Xe Mixture	Molecular Weight, 83.80					
Recuperator effectiveness, E	0.925					
Pressure-to-power ratio, p_4/P_{SH}	0.80			1.8		
Problem designation (case number)	I-A	II-A	III-A	IV-A	V-A	VI-A
System loss pressure ratio, L	0.92	0.94	0.96	0.92	0.94	0.96
Recuperator low-pressure (hot) side inlet temperature (T_2), °R	1689	1676	1663	1689	1676	1663
Recuperator low-pressure (hot) side inlet pressure (p_2), psia	166.8*	165.0*	163.3*	375.3*	371.3*	367.4*
Recuperator high-pressure (cold) side inlet temperature (T_5), °R	947	947	947	947	947	947
Recuperator high-pressure (cold) side inlet pressure (p_5), psia	304.0	304.0	304.0	684.0	684.0	684.0
Working fluid mass flow rate (w), lb/sec	25.79	23.37	21.42	25.79	23.37	21.42
Lithium (heat source) mass flow rate, lb/sec	6.56	6.11	5.75	6.56	6.11	5.75
Recuperator effectiveness, E	0.950					
Pressure-to-power ratio, p_4/P_{SH}	0.80			1.8		
Problem designation (case number)	VII-A	VIII-A	IX-A	X-A	XI-A	XII-A
System loss pressure ratio, L	0.92	0.94	0.96	0.92	0.94	0.96
Recuperator low-pressure (hot) side inlet temperature (T_2), °R	1689	1676	1663	1689	1676	1663
Recuperator low pressure (hot) side inlet pressure (p_2), psia	166.8*	165.0*	163.3*	375.3*	371.3*	367.4*
Recuperator high-pressure (cold) side inlet temperature (T_5), °R	947	947	947	947	947	947
Recuperator high-pressure (cold) side inlet pressure (p_5), psia	304.0	304.0	304.0	684.0	684.0	684.0
Working fluid mass flow rate (w), lb/sec	25.79	23.37	21.42	25.79	23.37	21.42
Lithium (heat source) mass flow rate, lb/sec	6.28	5.86	5.52	6.28	5.86	5.52

*Nominal value based on equal pressure losses for high and low pressure streams and a compressor pressure ratio of 1.9. Final value to be based on optimized pressure loss distribution.

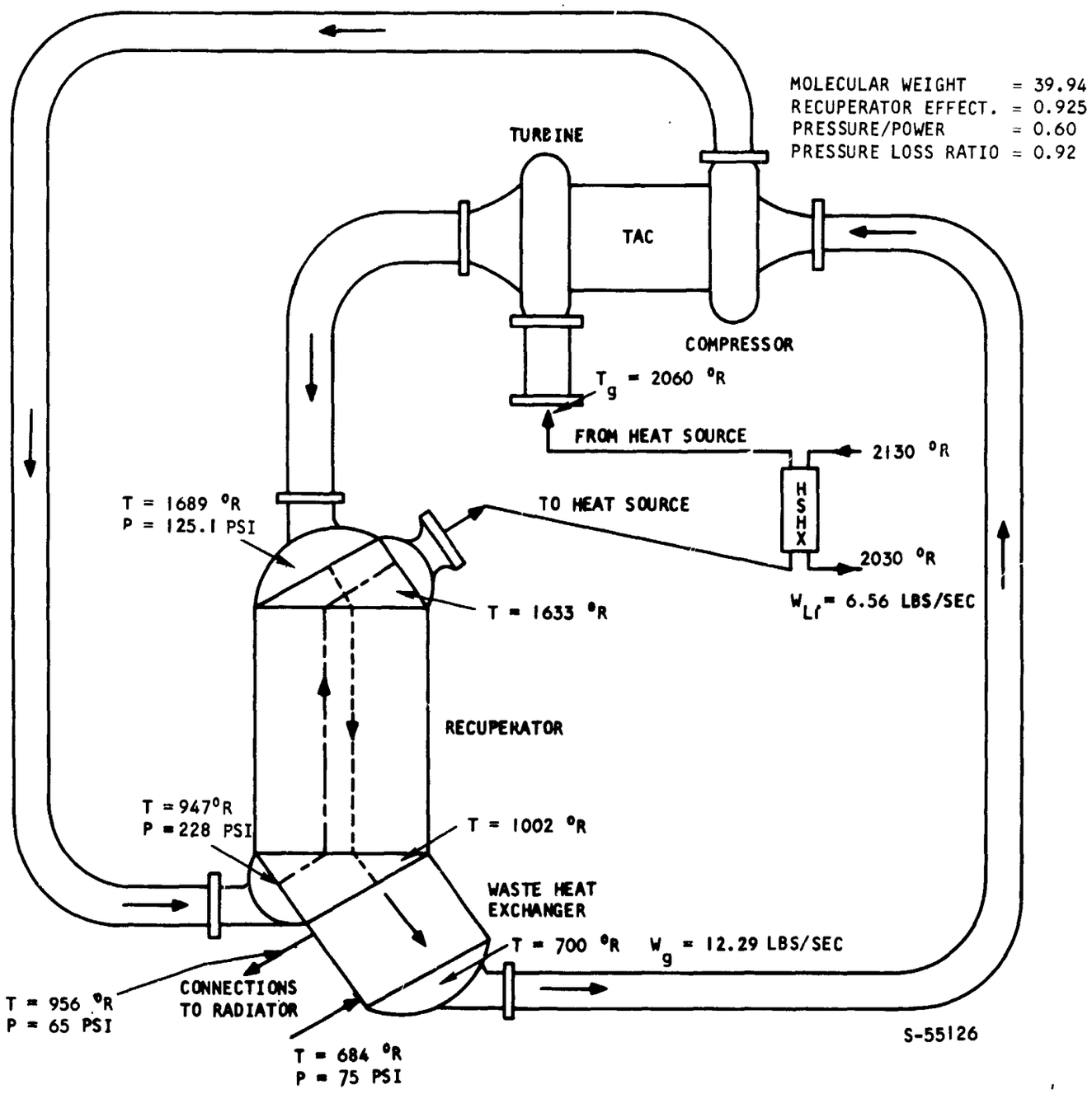

Figure 3-2. System State Points for Case IV

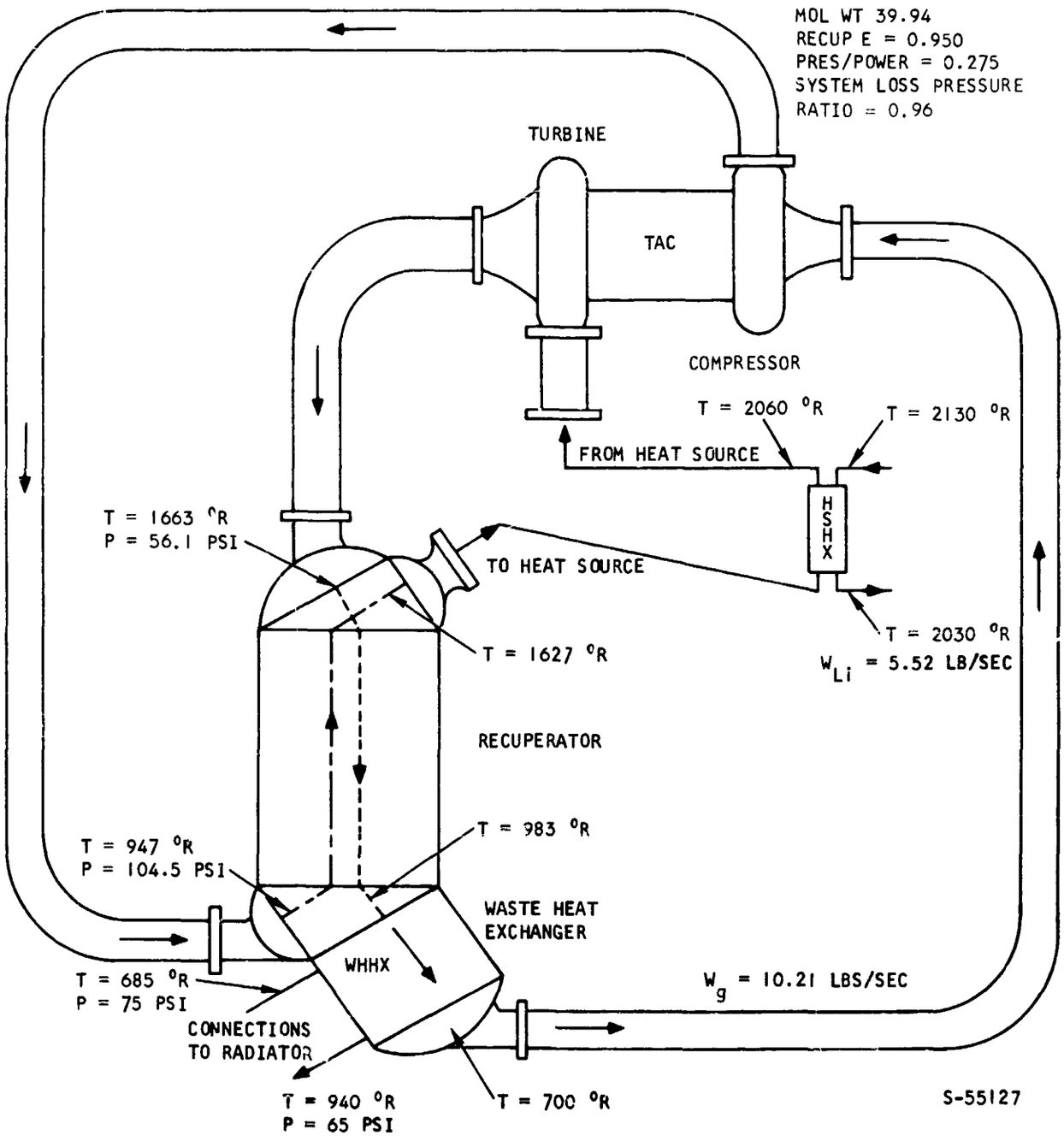

Figure 3-3. System State Points for Case IX

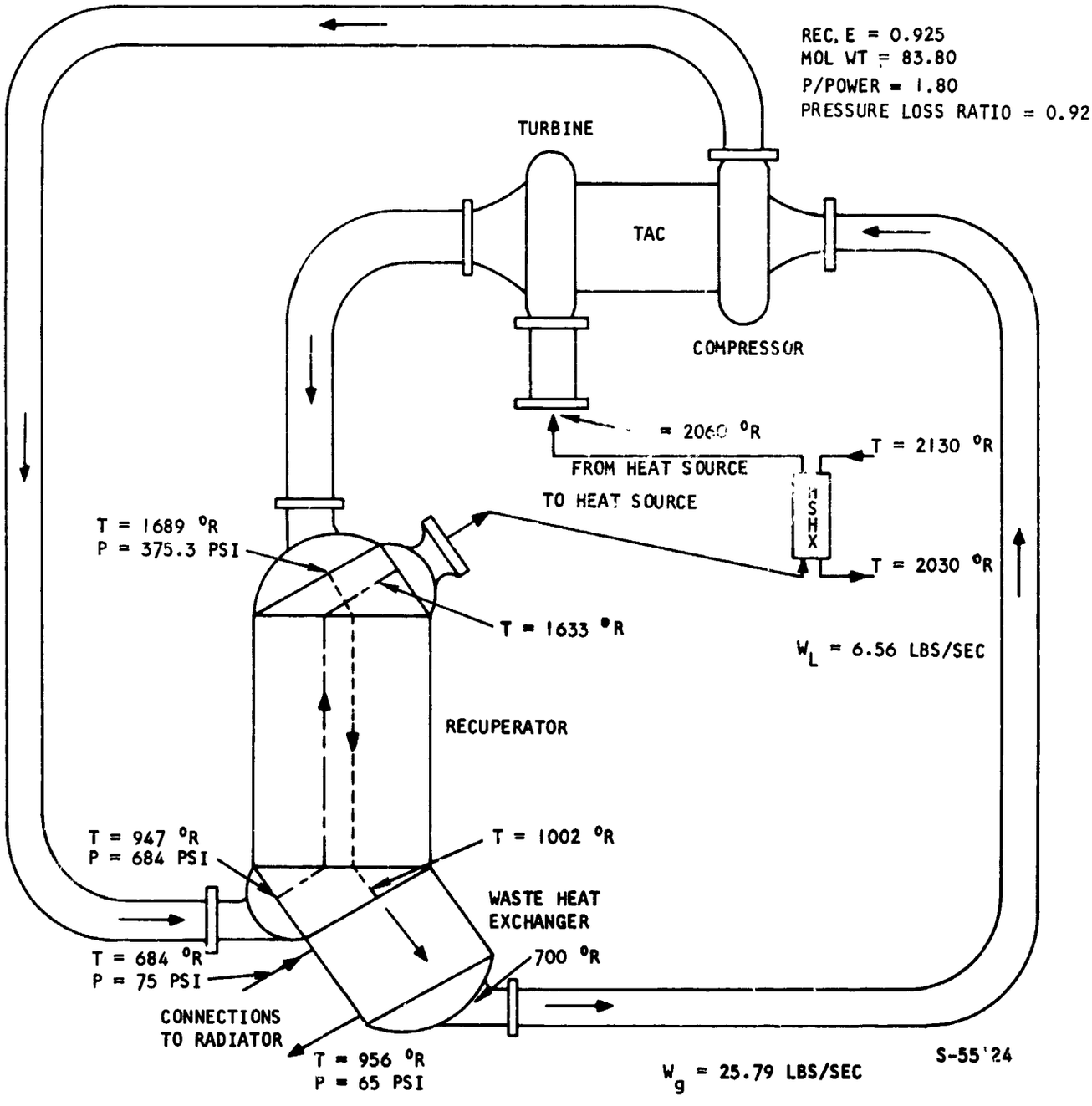

Figure 3-4. System State Points for Case IV-A

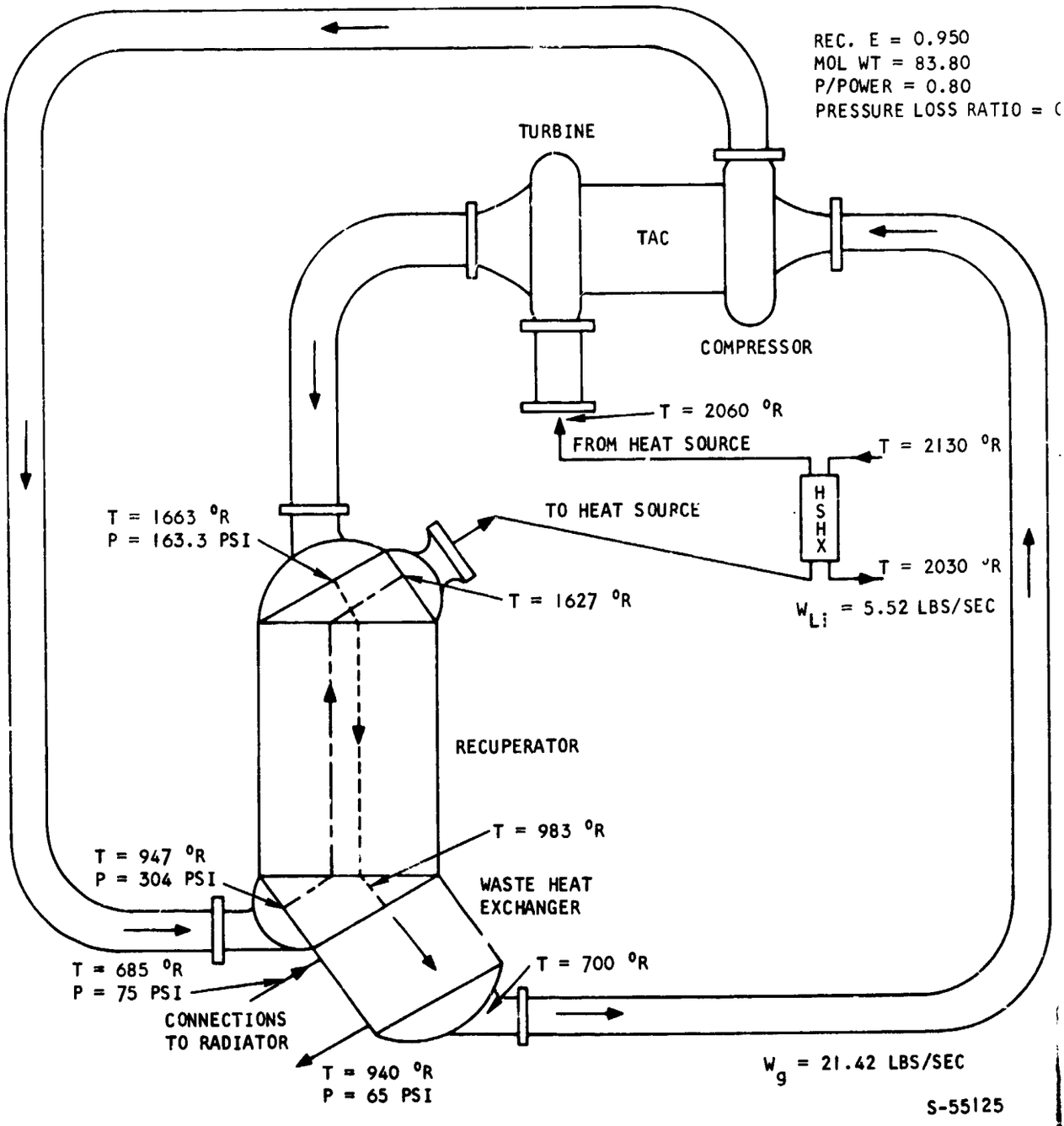

Figure 3-5. System State Points for Case IX-A

HEAT EXCHANGER DESIGN ANALYSIS

Recuperator

The heat exchanger configurations analyzed for this component are the following:

1. Plate-fin counterflow
2. Tubular cross-counterflow
   a. Multipass tube-side
   b. Multipass shell-side
3. Combination plate-fin/tubular

To obtain a comparison of tubular and plate-fin matrixes over the required range of design conditions, heat exchanger core weights were calculated for Cases IV, IX, IV-A, and IX-A. These cases represent, respectively, the smallest and largest recuperators for XeHe 39.94 and the smallest and largest recuperators for XeHe 83.8. Since the optimum pressure drop allotment among system components is not known at this time, all cases were calculated for a range of gas pressure drops.

The very high pressure of Case IV-A exceeds the strength capability of a pure plate-fin matrix, based on current estimates of the creep strength of brazed Hastelloy X. Thus, for this design condition, the candidate configurations are tubular and combination plate-fin/tubular. The latter configuration involves a tubular precooler, which reduces the temperature of the hot gas by 200°F, followed by a plate-fin counterflow heat exchanger. The plate-fin matrix in this configuration has adequate pressure containment capability at the reduced temperature of the hot inlet gas.

Following calculation of the heat exchanger core weights, a structural analysis was performed on the tubular designs to determine the weights of headers, no-flow pans, and any required tube supports. These weights added to the core tube weight for each design case give an adjusted core weight that can be used for comparison with the plate-fin matrix. Similarly, the adjusted core weight used for the plate-fin matrix includes both the calculated counterflow section weight and an estimate of the weight of the end sections required to provide fluid access to the core. Additionally, heat exchanger pressure drops for the plate-fin designs are adjusted to account for estimated pressure losses in the end sections. With these corrections to the tubular and plate-fin core weights, a set of comparable weights is obtained that can be used in making a selection of heat exchanger type for each design condition.

1. Plate-Fin Cores

Plate-fin core weights were calculated using several representative fin sets for Cases IV, IX, and IX-A. Fin thicknesses were based on the structural requirements.* For the purposes of this analysis, the use of Hastelloy X with

*See Figure 3-37 which appears later in this section.

a fin strength ratio of 0.25 was assumed. This is roughly equivalent to the use of 347 stainless steel with an assumed fin strength ratio of 0.5. The results of these calculations are shown in Figures 3-6, 3-7, and 3-8, where core weight is plotted as a function of total fractional pressure drop for the three design cases. Of the fin combinations used, fin set 4 is seen to be either minimum-weight or close to minimum-weight over the entire range of design conditions.

2. Tubular, Multipass Tube-Side Cores

In this configuration the low-pressure gas makes a straight pass on the shell side of the heat exchanger and the high-pressure gas is multipassed on the tube side. To obtain the optimum core geometry for each design case, a number of core parameters were varied in the calculations. The parameters varied included tube diameter, tube spacing, and tube dimple geometry. Additionally, tube-side and shell-side gas pressure drops were varied to obtain an optimum pressure drop split for each value of total fractional pressure drop considered. The variations of core weight and core geometry with tube spacing and pressure drop split are shown for each of the four cases in Figures 3-9 through 3-16. Based on these curves, the selected value of transverse tube spacing for all four cases is 1.5 x tube O.D.; and the selected pressure drop split for all four cases is 60/40 (inside/outside).

3. Tubular, Multipass Shell-Side Cores

In this configuration, the tubes are arranged in a cylindrical bundle and a series of core baffles are used to cause multipassing of the shell-side fluid. Configurations in which the low-pressure gas is inside the tubes and configurations in which the low-pressure gas is outside the tubes were both studied. The cores were optimized by varying tube diameter, tube spacing, dimple geometry, and pressure drop split between tube and shell sides of the heat exchangers. Based on a comparison of the calculated core weights and geometries obtained for these configurations with those obtained for the multipass tube-side configuration, the following conclusions can be stated: (1) comparable core tube weights can be obtained with multipass shell-side configurations but only with very long tubes, and (2) putting the high-pressure gas inside the tubes results in a less favorable geometry than is obtained with the low-pressure gas inside because of the increased tube lengths involved. A comparison of multipass tube-side and multipass shell-side (low pressure inside) recuperators at a total pressure drop of two percent is shown in Table 3-2. The greater volumes and tube lengths of the multipass shell-side configurations result in increased wrap-up weights as well as unfavorable geometries for packaging.

4. Combination Plate-Fin/Tubular Cores

This configuration consists of two heat exchangers in series, a tubular precooler of the multipass tube-side geometry and a plate-fin matrix in a pure counterflow configuration. Figure 3-17 shows adjusted core weight for each of the two components as a function of total fractional pressure drop for that component. In Figure 3-18 the weights are combined to obtain total adjusted core weight as a function of total fractional pressure drop and pressure drop split. The dotted line in Figure 3-18 represents the optimum pressure drop split and defines the locus of minimum weight designs.

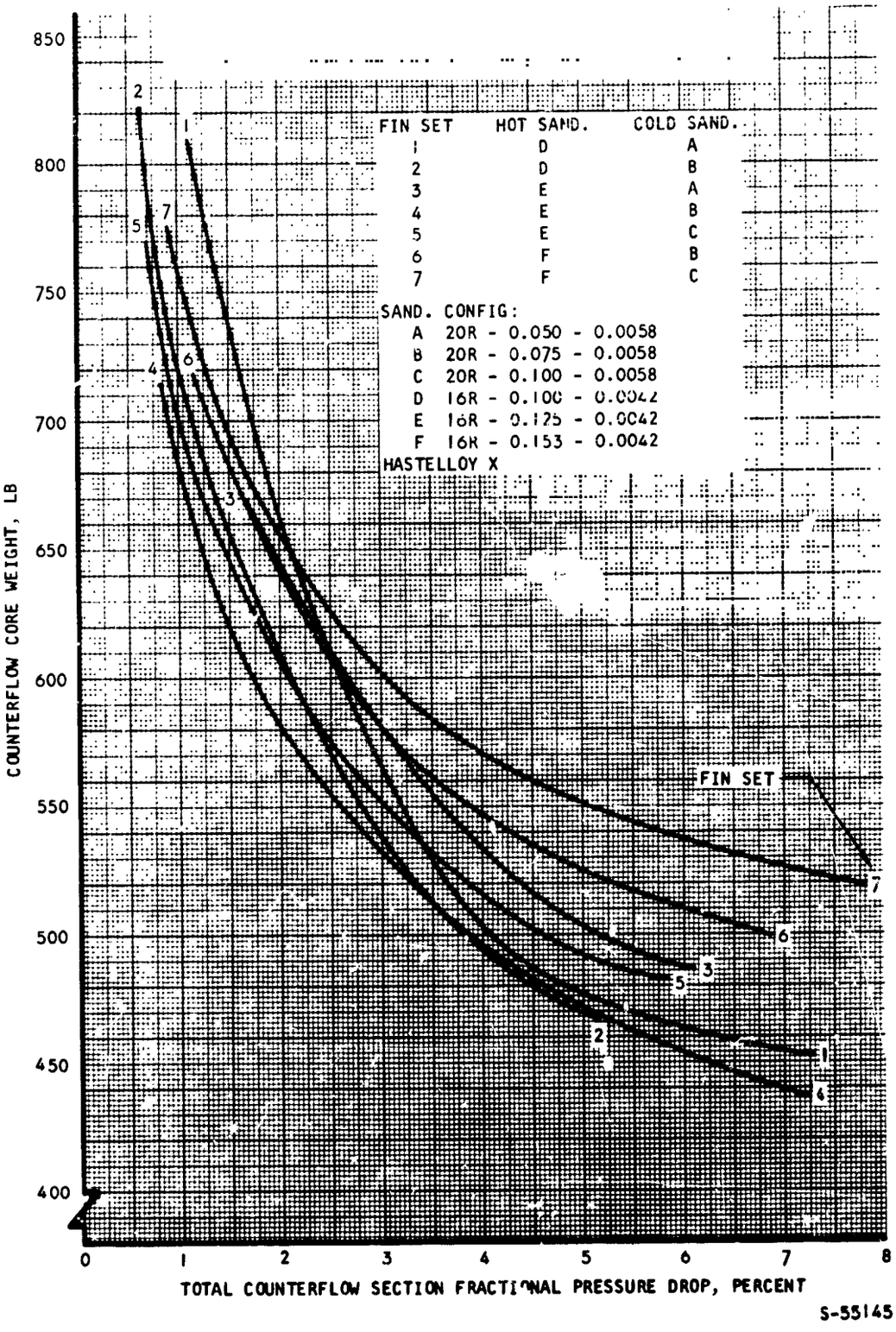

Figure 3-6. Counterflow Section Weight vs Pressure Drop for Case IV Counterflow Plate-Fin Recuperator

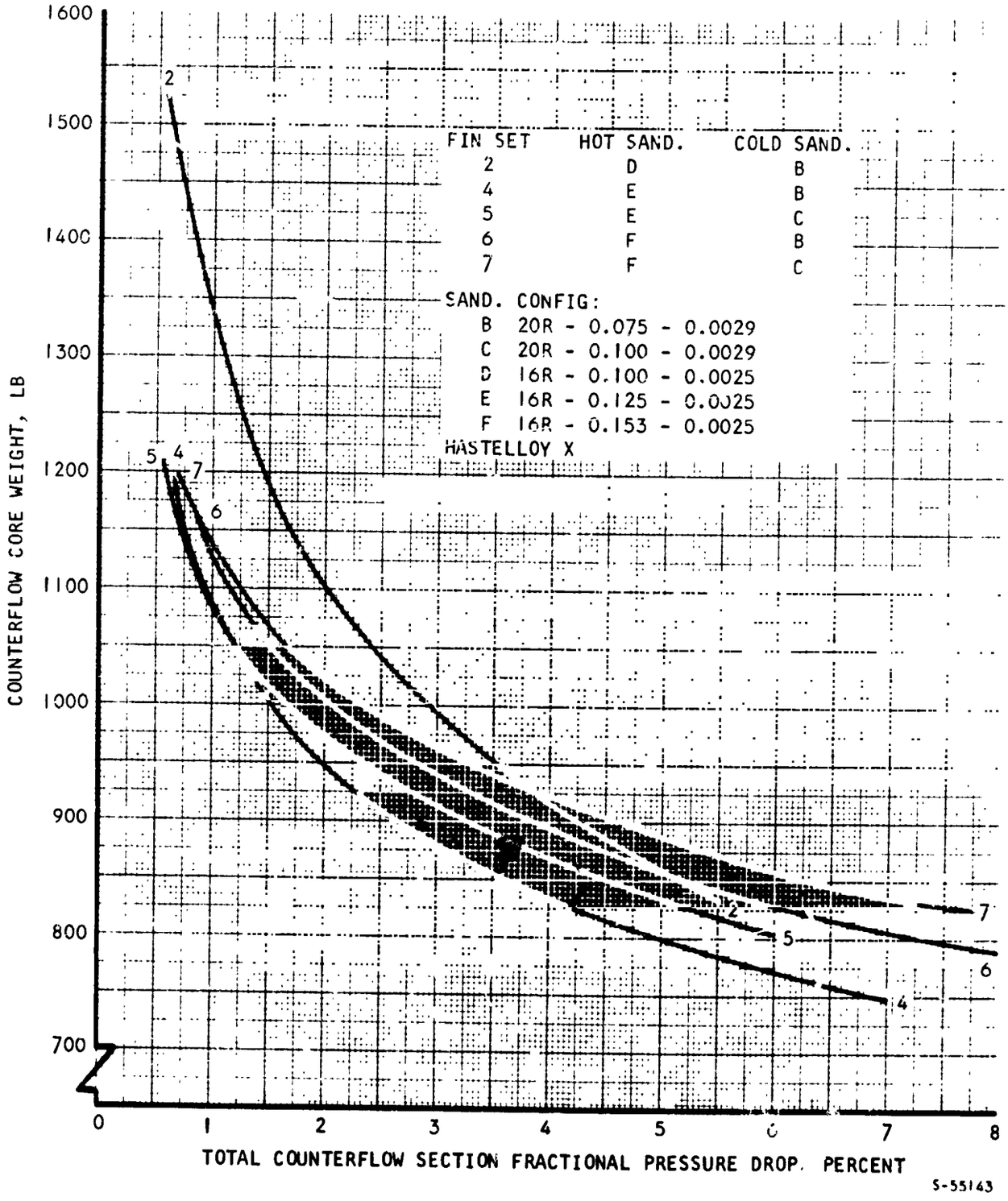

Figure 3-7. Counterflow Section Weight vs Pressure Drop for Case IX Counterflow Plate-Fin Recuperator

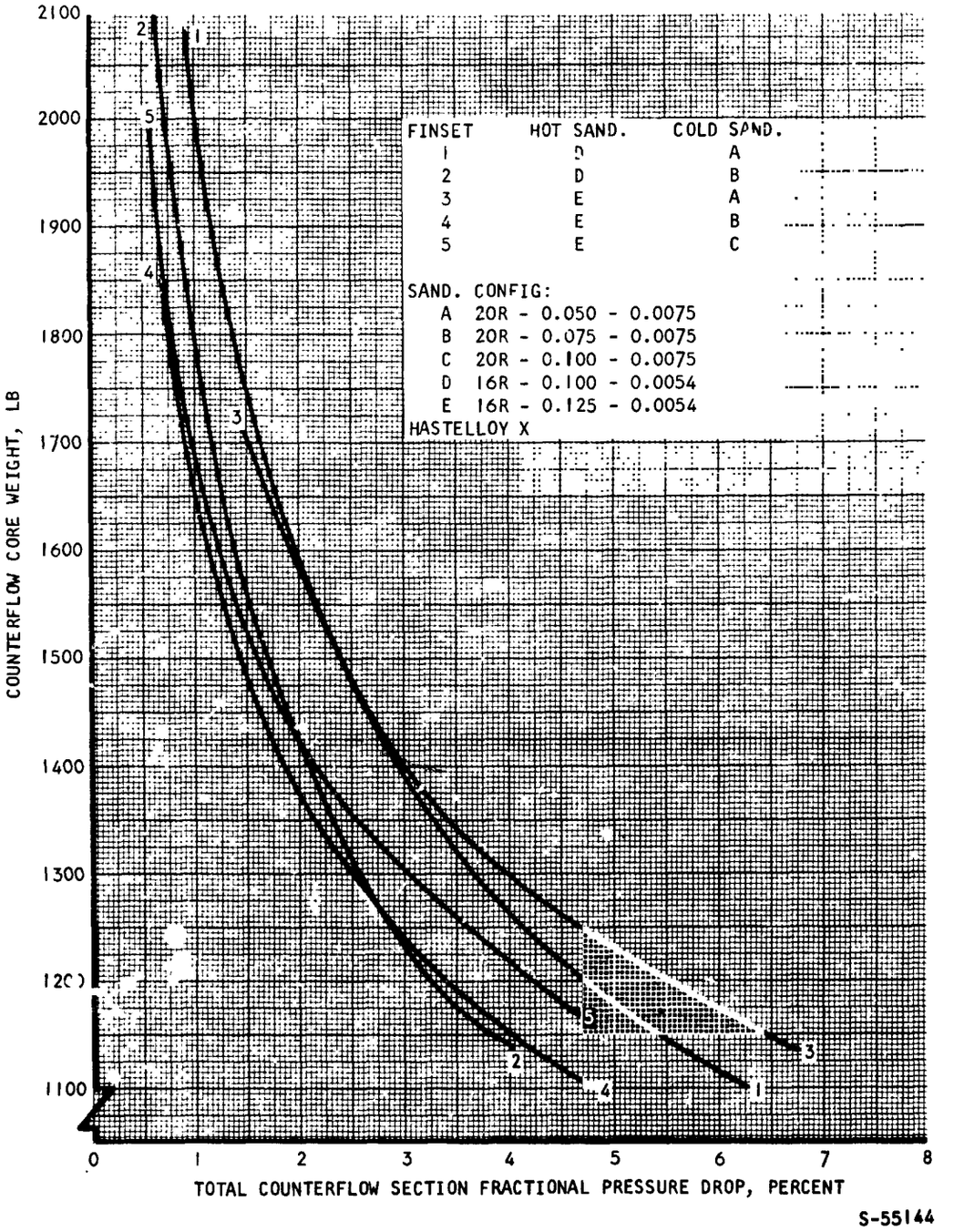

Figure 3-8. Counterflow Section Weight vs Pressure Drop for Case IX-A Counterflow Plate-Fin Recuperator

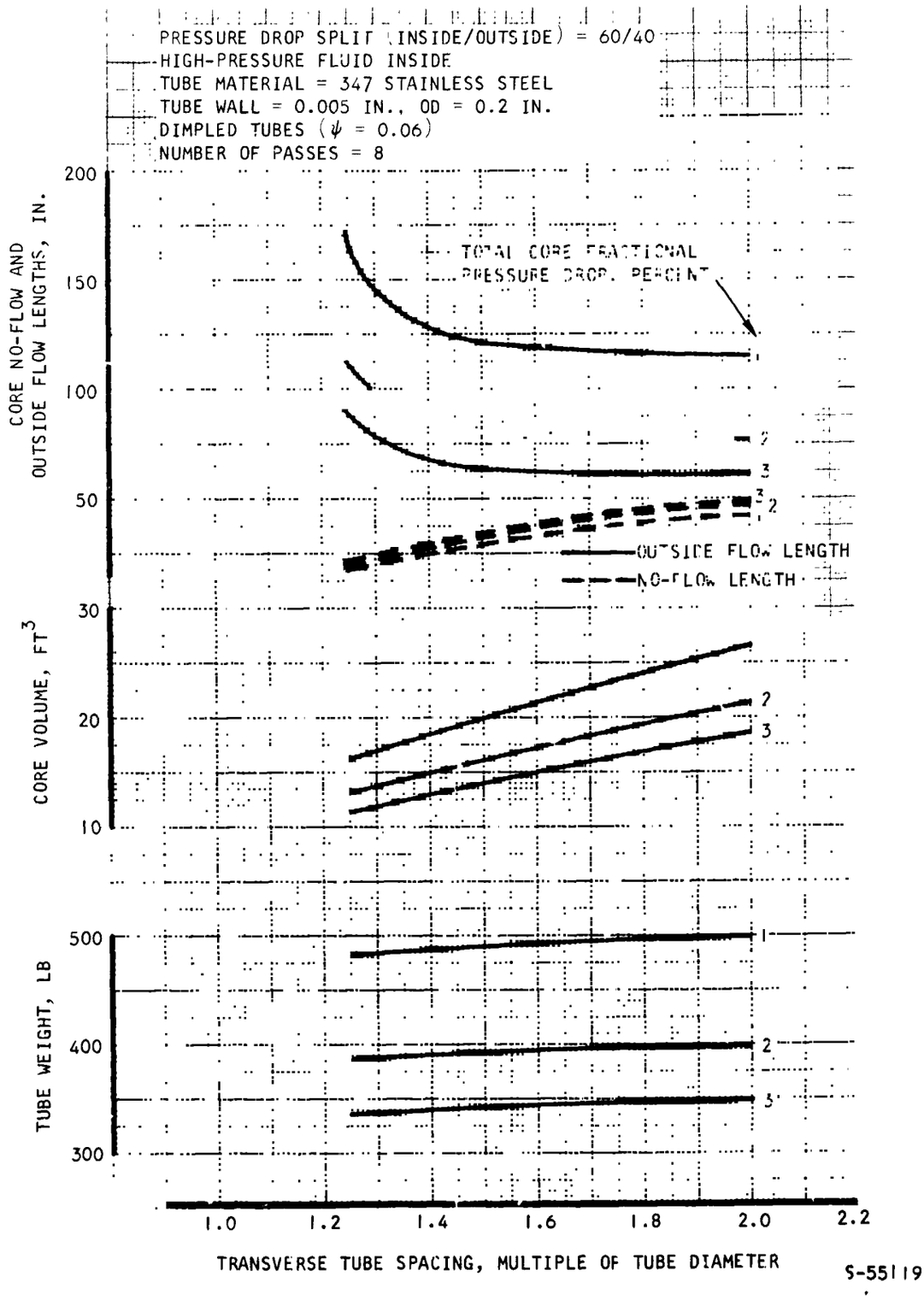

Figure 3-9. Variation of Weight, Volume, and Maximum Dimensions with Transverse Tube Spacing for Case IV Tubular (Multipass Tube-Side) Recuperator Core

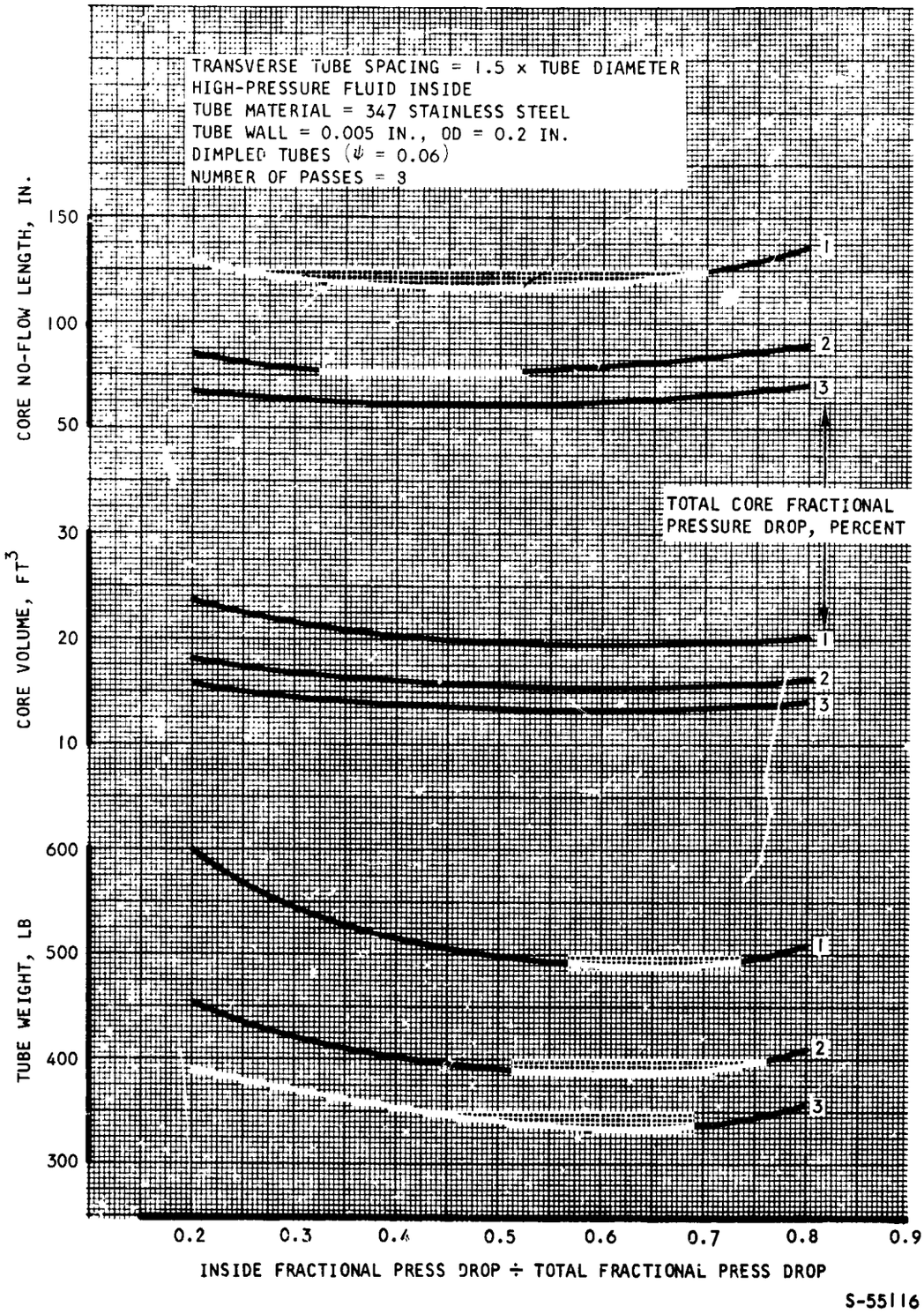

Figure 3-10. Variation of Weight, Volume, and Maximum (No-Flow) Dimension with Pressure Drop Split for Case IV Tubular (Multipass Tube-Side) Recuperator Core

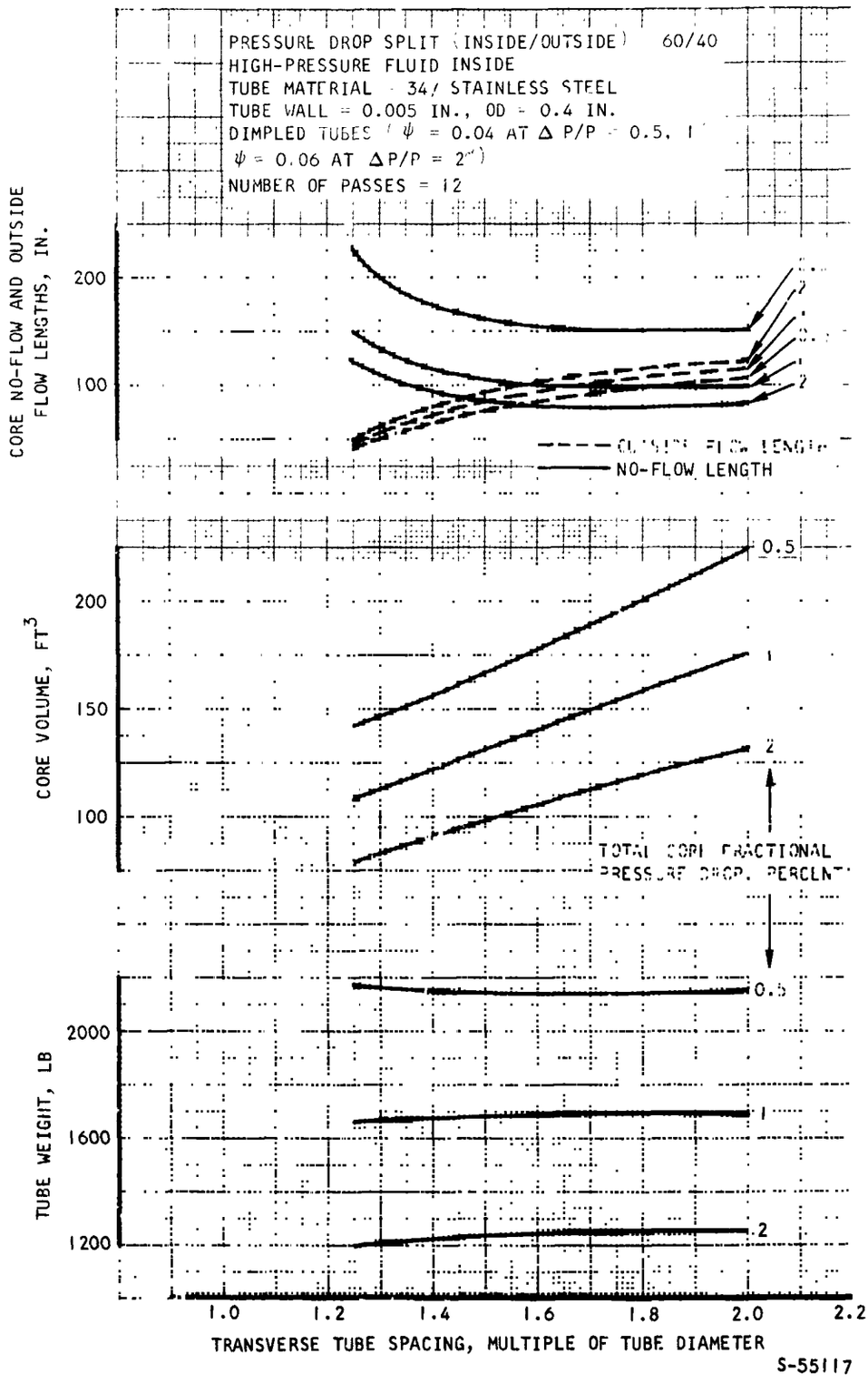

Figure 3-11. Variation of Weight, Volume, and Maximum Dimensions with Transverse Tube Spacing for Case IX Tubular (Multipass Tube-Side) Recuperator Core

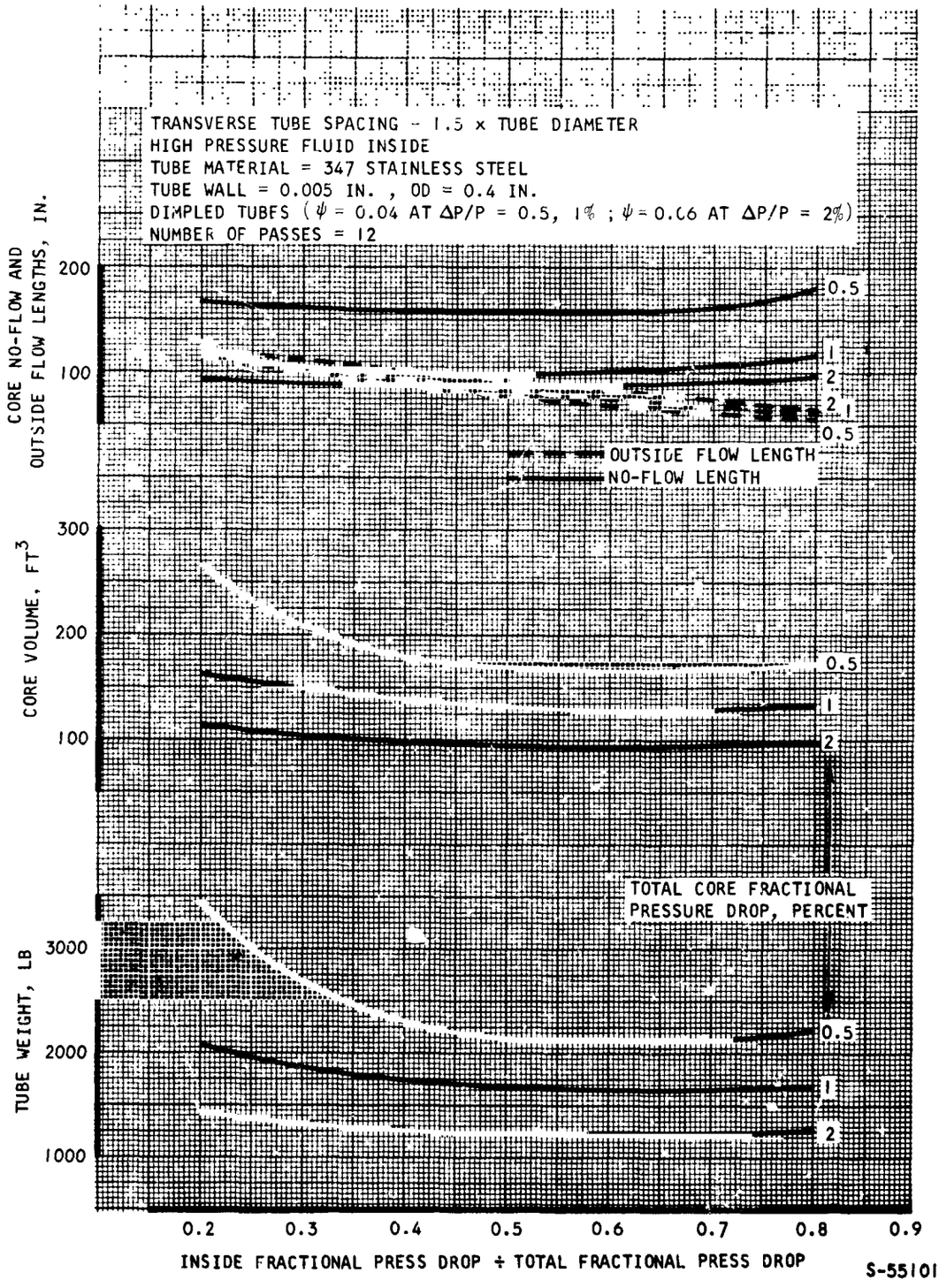

Figure 3-12. Variation of Weight, Volume, and Maximum Dimensions with Pressure Drop Split for Case IX Tubular (Multipass Tube-Side) Recuperator Core

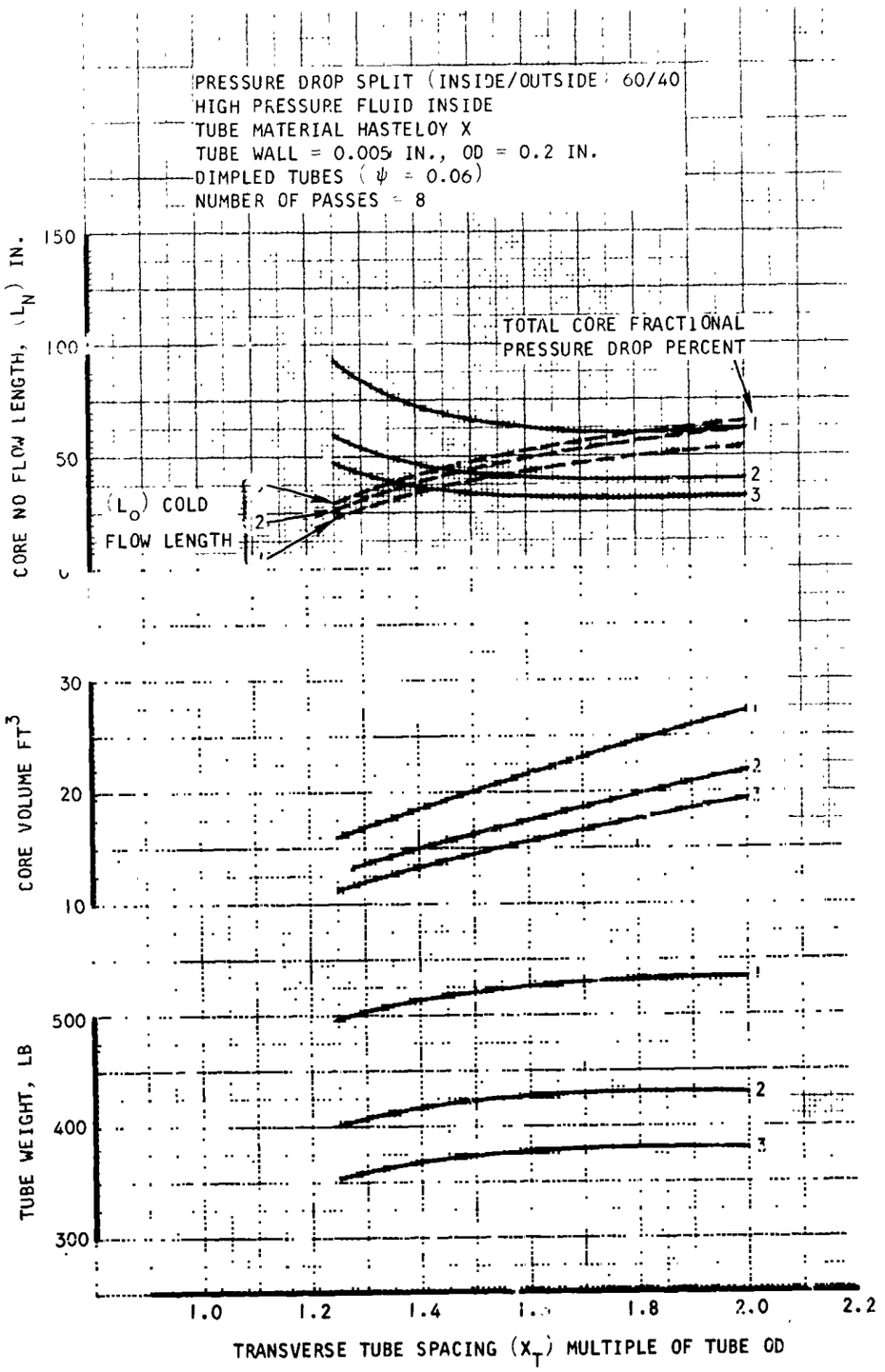

Figure 3-13. Variation of Weight, Volume, and Maximum Dimensions with Transverse Tube Spacing for Case IV-A Tubular Recuperator Core (Multipass Tube-Side)

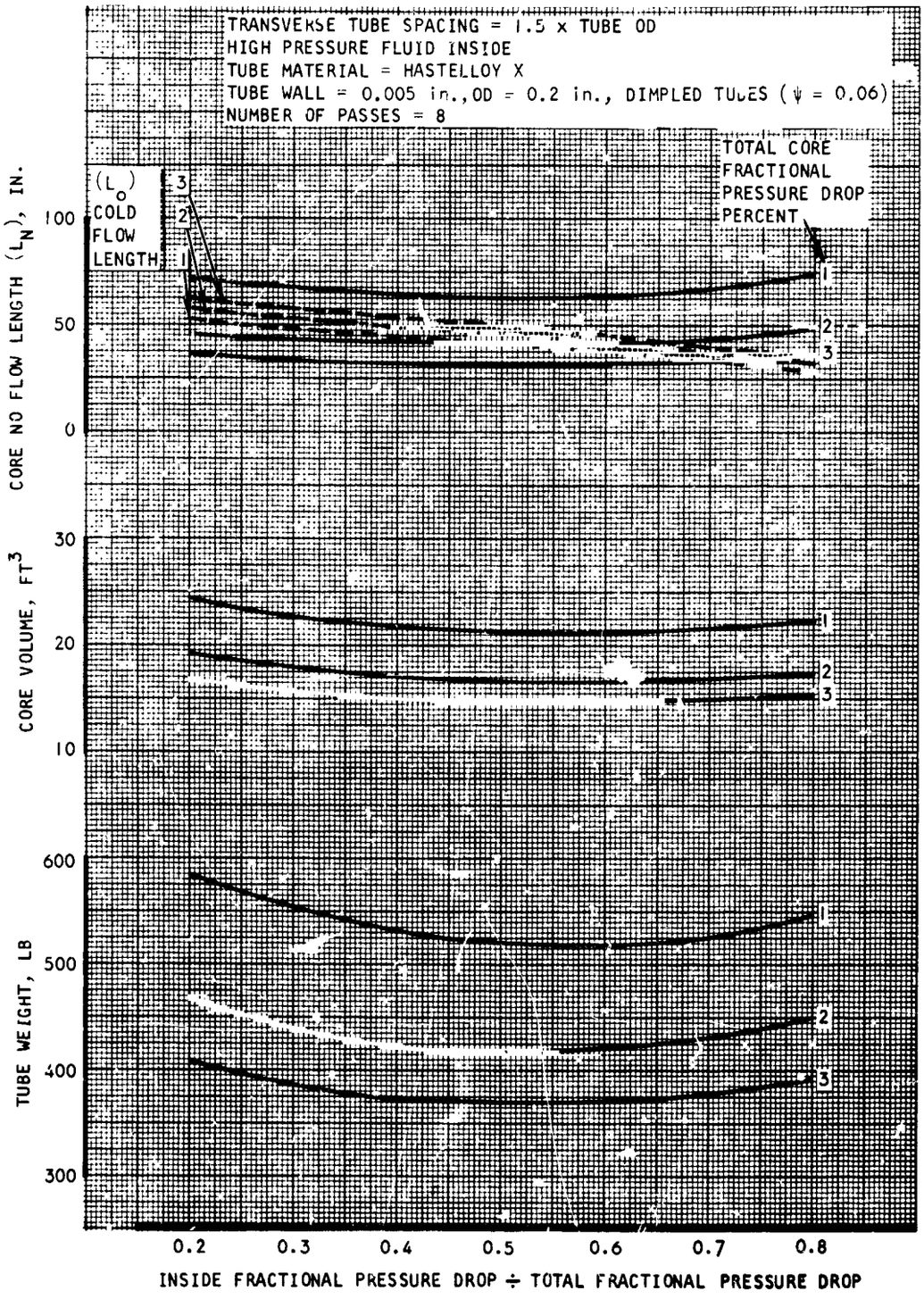

Figure 3-1'. Variation of Weight, Volume, and Maximum Dimensions with Pressure Drop Split for Case IV-A Tubular Recuperator Core (Multipass Tube Side)

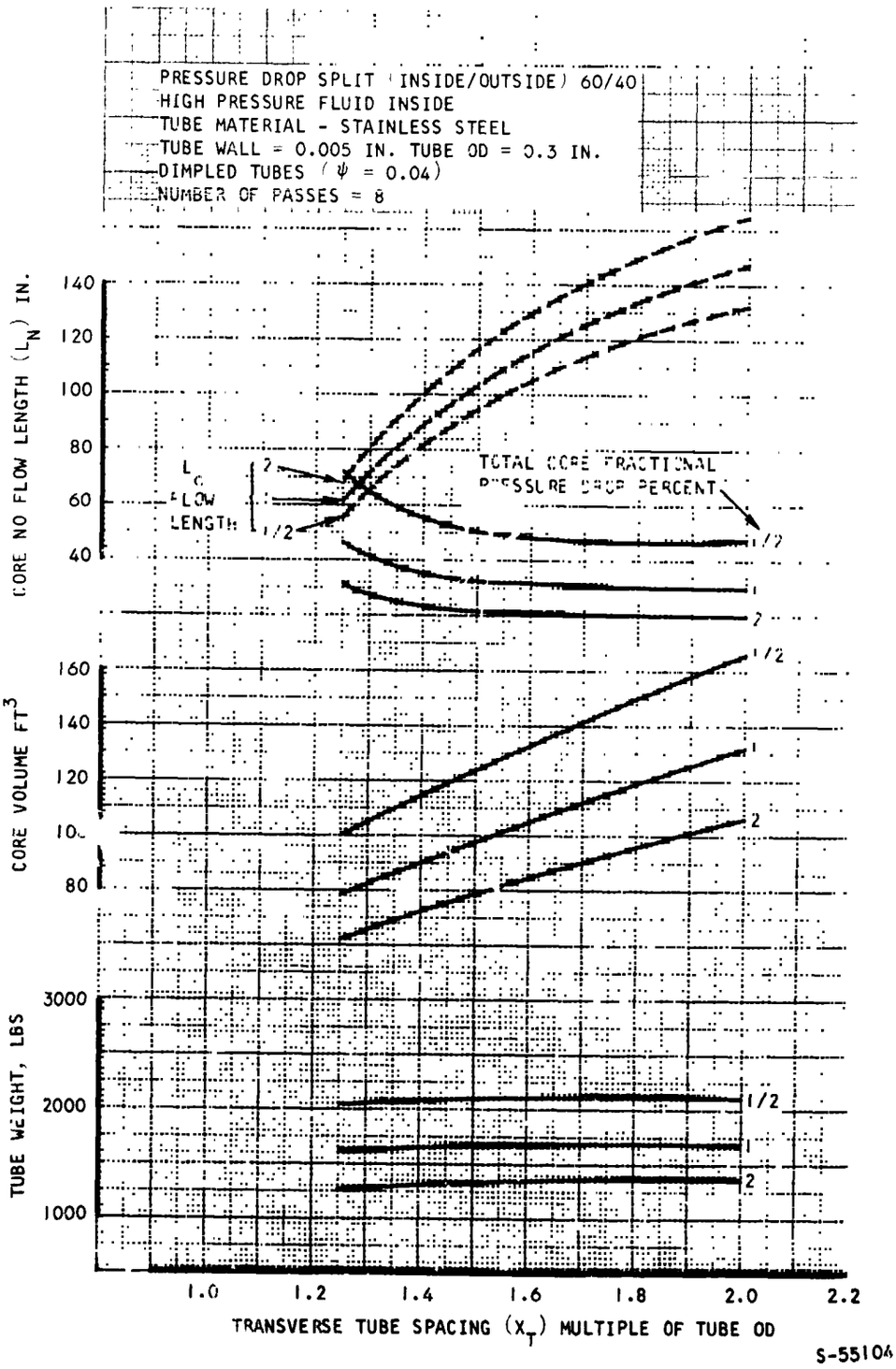

Figure 3-15. Variation of Weight, Volume, and Maximum Dimensions with Transverse Tube Spacing for Case IX-A Tubular Recuperator Core (Multipass Tube-Side)

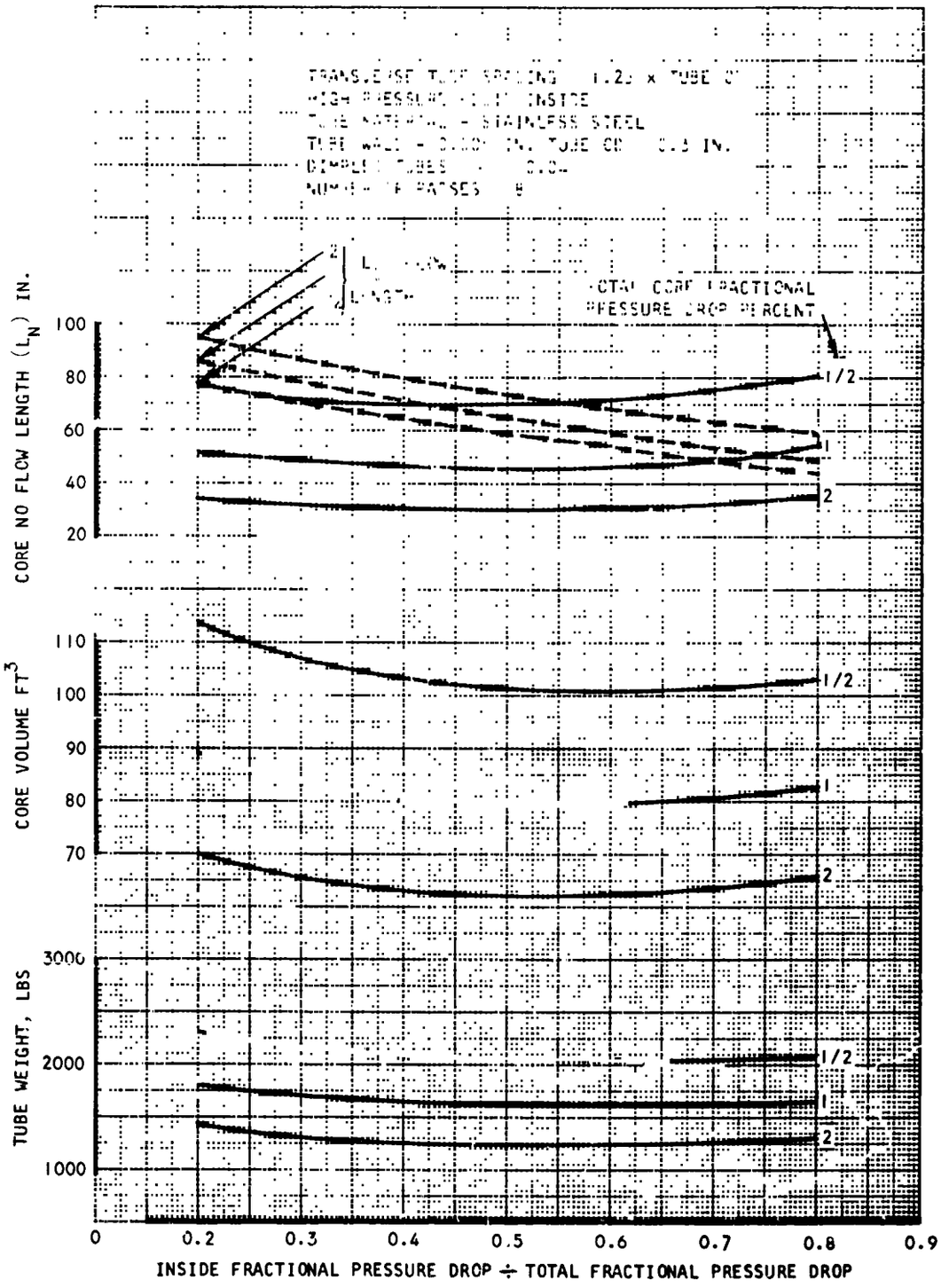

Figure 3-16. Variation of Weight, Volume, and Maximum Dimensions with Pressure Drop Split for Case IX-A Tubular Recuperator Core (Multipass Tube-Side)

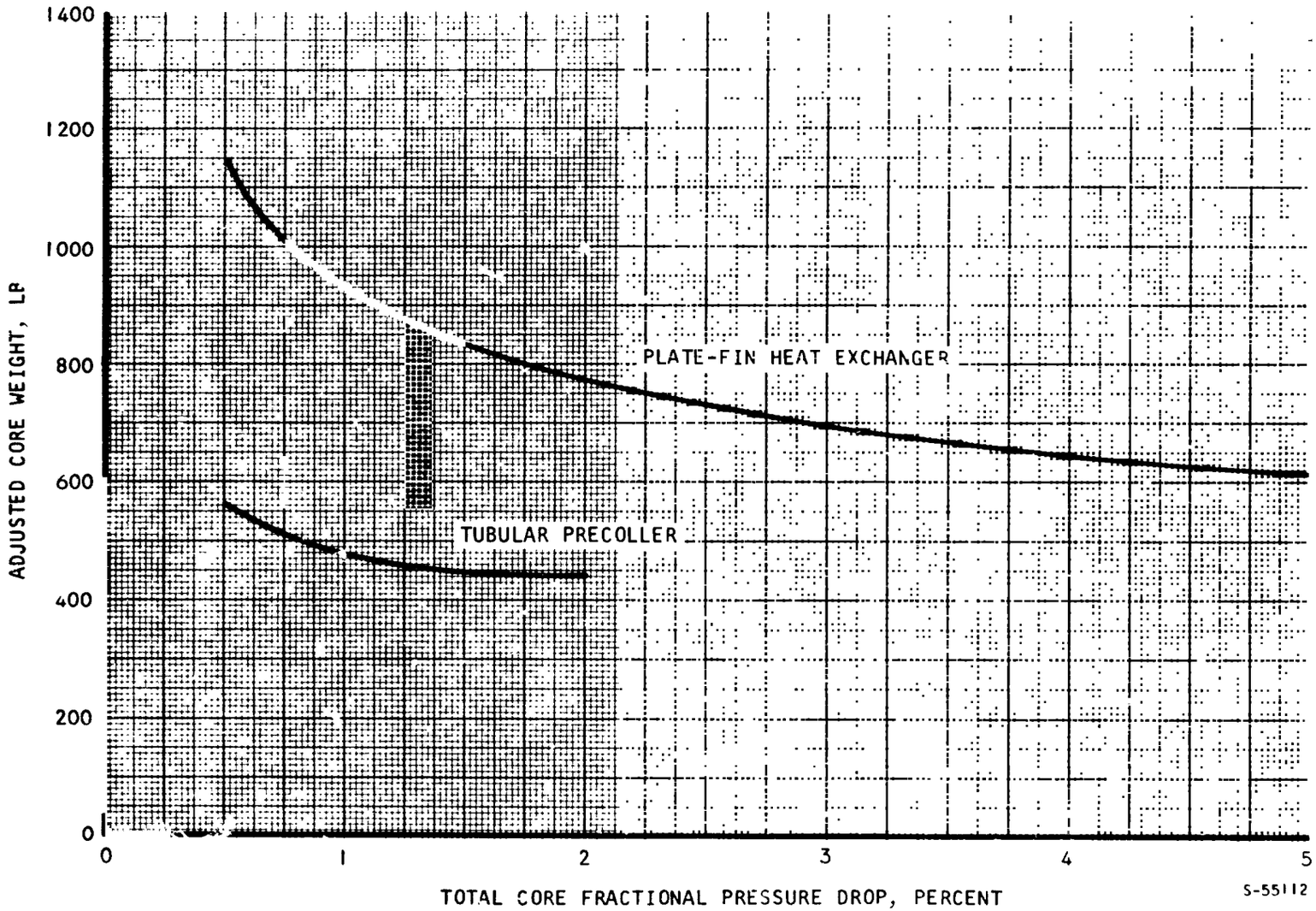

Figure 3-17. Case IV-A Combination Plate-Fin/Tubular Recuperator Weights

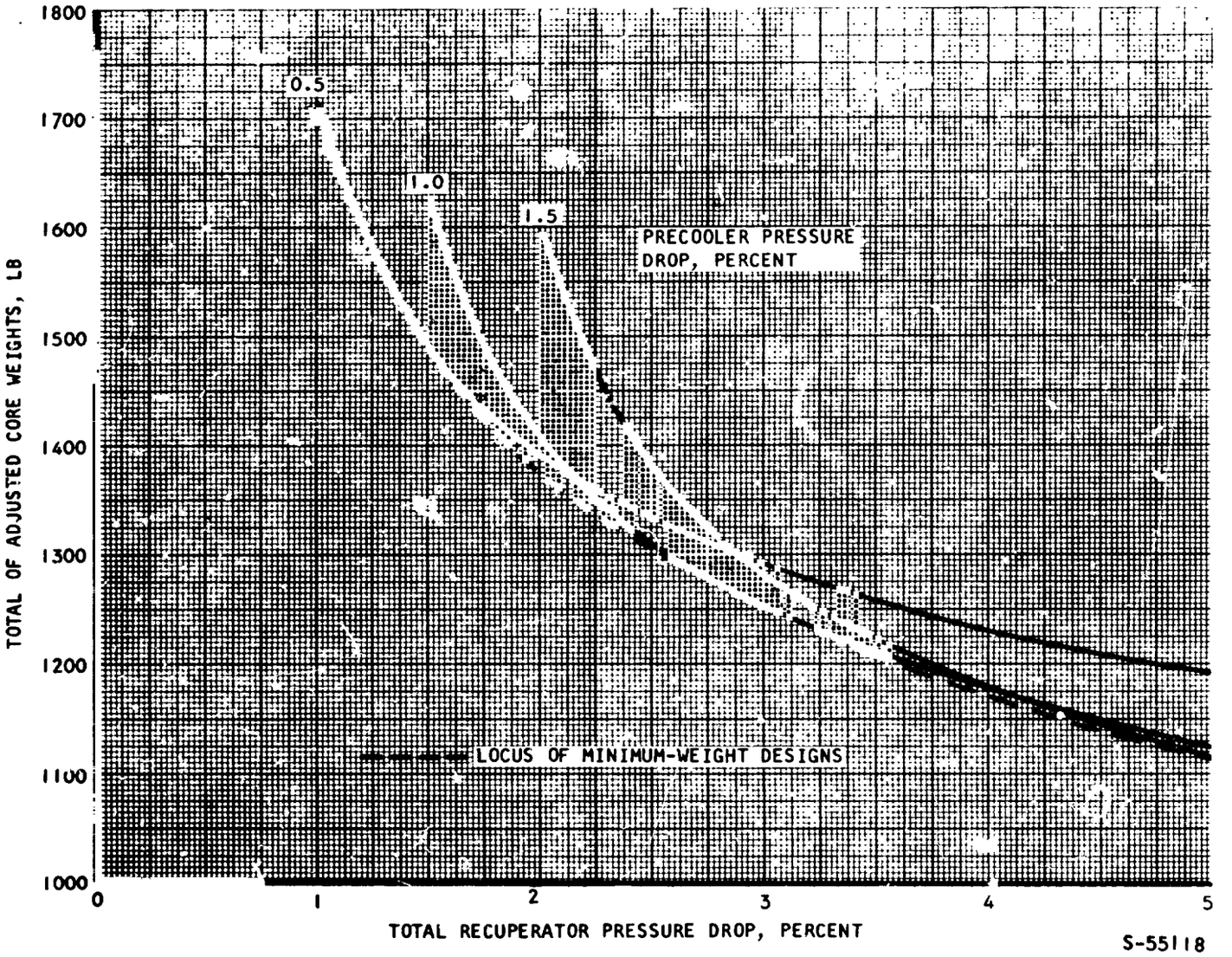

Figure 3-18. Case IV-A Combination Plate-Fin/Tubular Recuperator Weight vs Total Pressure Drop and Pressure Drop Split

TABLE 3-2

COMPARISON OF TUBULAR RECUPERATOR CONFIGURATIONS
($\Delta P/P$ = 2 PERCENT)

Case	Configuration	Core Vol.(Ft^3)	Tube Wt. (Lb)	Tube Length (In.)	Adjusted Core Wt (Lb)*
IV	Multipass Tube	15.5	390	11	710
	Multipass Shell	45.5	600	77	2860
IX	Multipass Tube	95	1250	22	2600
	Multipass Shell	230	2200	375	8020
IV-A	Multipass Tube	17	420	15	1930
	Multipass Shell	20	390	104	2590
IX-A	Multipass Tube	62	1250	53	5600
	Multipass Shell	74	1400	145	6690

5. Comparison of Recuperator Types

Figures 3-19 and 3-20 show a comparison of recuperator weights for the selected design cases. Based on these results, it was recommended that the plate-fin counterflow configuration be used in the parametric studies of Task II, except where the use of plate-fin matrixes is ruled out for structural reasons. At pressure levels above the capability of the pure plate-fin recuperator, the combination plate-fin/tubular configuration was recommended.

Waste Heat Exchanger

The following heat exchanger types were considered for this component:

1. Plate-fin cross-counterflow
2. Finned tubular cross-counterflow
   a) Disc fins
   b) Strip fins

As for the recuperator, heat exchanger designs were calculated for Cases IV, IX, IV-A, and IX-A for a range of gas-side pressure drops. Here also a structural analysis was made of the finned tubular designs to determine the weights of the required headers, no-flow pans, and any additional tube support structure. The addition of these weights to the basic core tube weight places the finned tubular design on a comparable basis with the plate-fin unit, since the calculated plate-fin cores include header bars and side plates and are structurally sound without additional internal core structure.

*Tubes, baffles, headers, and no-flow pans or cylindrical shell

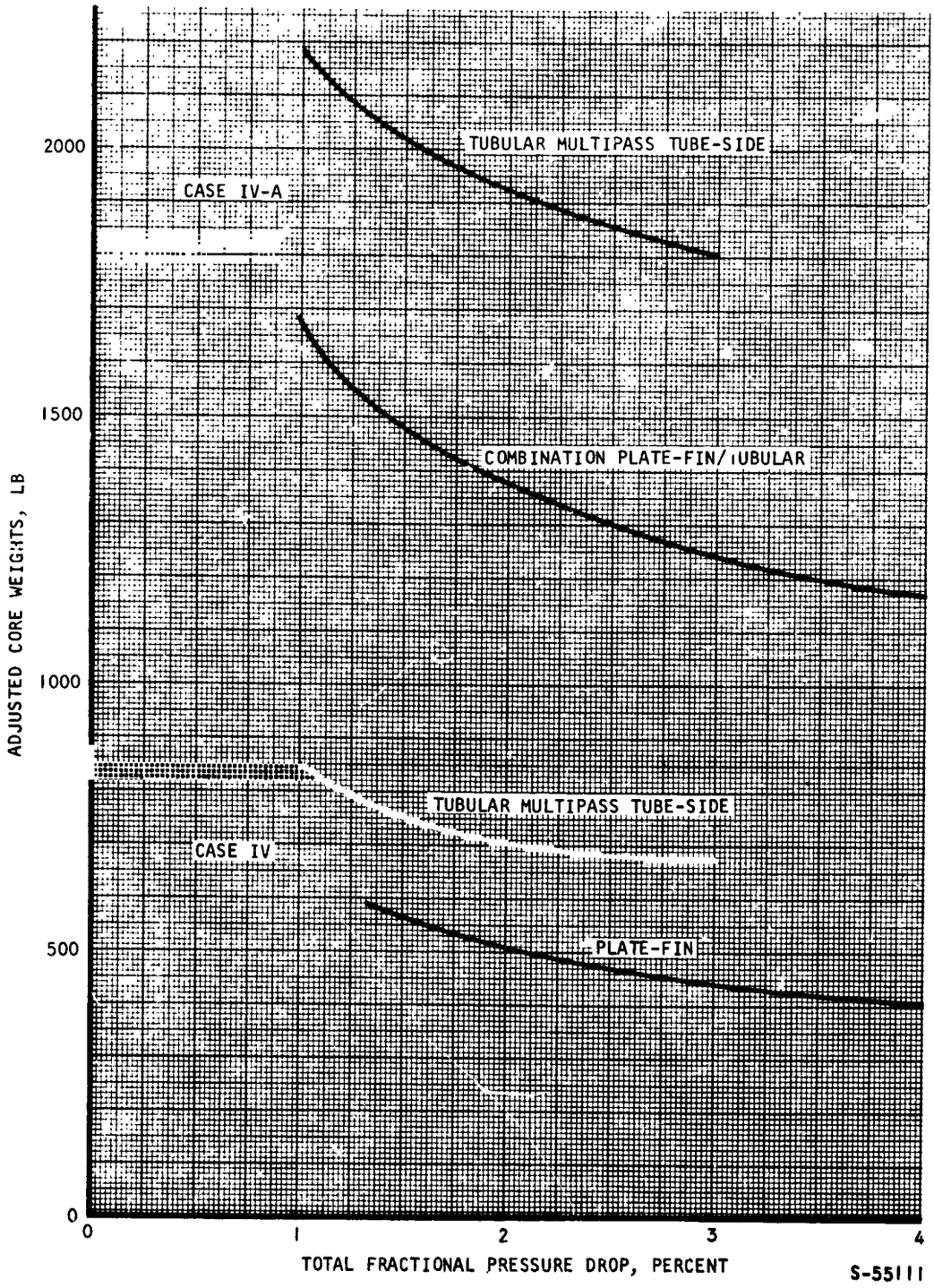

Figure 3-19. Comparison of Recuperator Types for Cases IV and IV-A

2

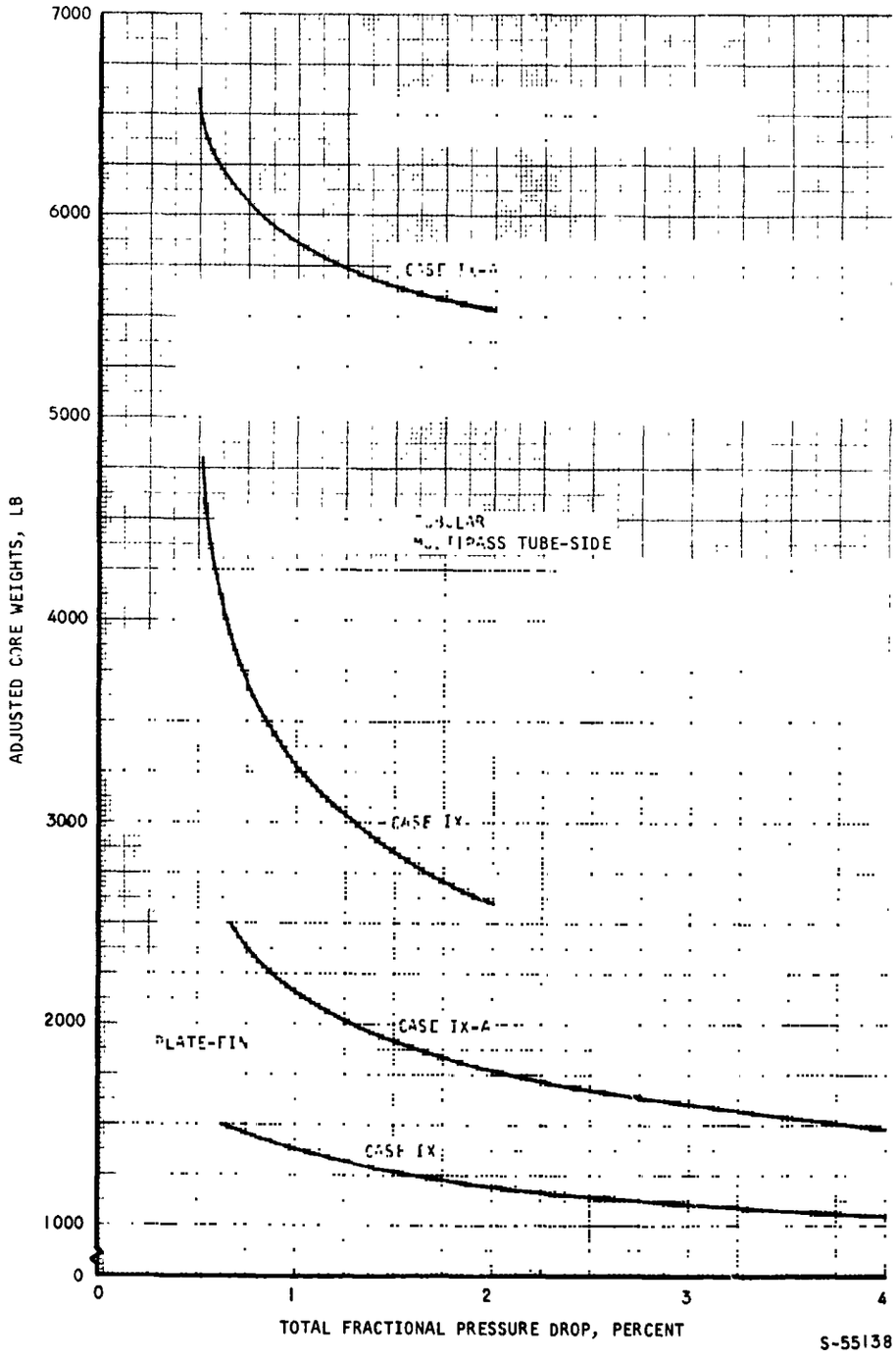

Figure 3-20. Comparison of Recuperator Types for Cases IX and IX-A

1. Plate-Fin Cores

In the plate-fin configuration studied, the gas makes a single pass through the heat exchanger and the liquid is multipassed eight times in a cross-counterflow arrangement. Liquid passages in the exchanger alternate between active and redundant loops, and interpass turns are accomplished with mitered turning fins to maintain separation of the two independent loops. This configuration is similar to the Engine B plate-fin heat sink heat exchanger.

Wet core weights for the plate-fin waste heat exchanger are shown in Figures 3-21 through 3-27 for each of the four design cases studied. In each case a number of representative fin sets were studied to obtain a minimum-weight design. For the lower pressure cases (IV and IX), steel, nickel, and copper were considered as fin material. At the higher pressures of Cases IV-A and IX-A, consideration was restricted to steel and nickel for the fins. In all cases, a relatively compact fin set (e.g., 20R-.075 liquid sandwich and 24R-.075 gas sandwich) is indicated as optimum by the weight curves. Also, copper or nickel was indicated as the optimum fin material in all cases.

2. Disc-Finned Tubular Cores

In the finned tubular core, the liquid is multipassed within the tubes while the gas makes a single pass on the shell side of the exchanger. The fins are continuous strips spiral-wound on the tubes to form a disc fin geometry with 30 fins per inch. Three-mil thick copper is used as the fin material. Of the several tube/fin geometries tried, matrix SFT 18 (fin OD ÷ tube OD = 1.27) yielded the lightest cores. The use of plain strips brazed inside the tubes resulted in lighter cores than were obtained with either plain tubes or tubes with turbulators. The variation of adjusted wet core weight with gas-side pressure drop, based on this optimized core geometry, is shown in Figure 3-28. The weights and pressure drops plotted are for two cores in series, as required to meet the requirement of two independent liquid loops.

3. Strip-Finned Tubular Cores

The use of a strip-finned tubular matrix, similar to the Engine A heat sink heat exchanger, was found to be impractical for the present application for two reasons: (1) the high ratio of outside-to-inside heat transfer area in the strip-finned matrix is far from optimum for the HXDA design conditions, and (2) the large number of tubes and tube rows per pass makes manifolding of independent liquid loops in a single core impractical.

4. Comparison of Waste Heat Exchanger Types

Figures 3-29 and 3-30 show the comparative weights of the plate-fin and disc-finned tubular heat exchangers for each of the four selected design conditions. The finned tubular weights range from 65 percent to 195 percent heavier than the plate-fin weights at corresponding design conditions. The unfavorable weight of the finned tubular heat exchanger is due largely to the weight of the gas containment structure and is most pronounced at the higher pressure level design conditions. Based on these results, the use of the plate-fin matrix for the waste heat exchanger is recommended.

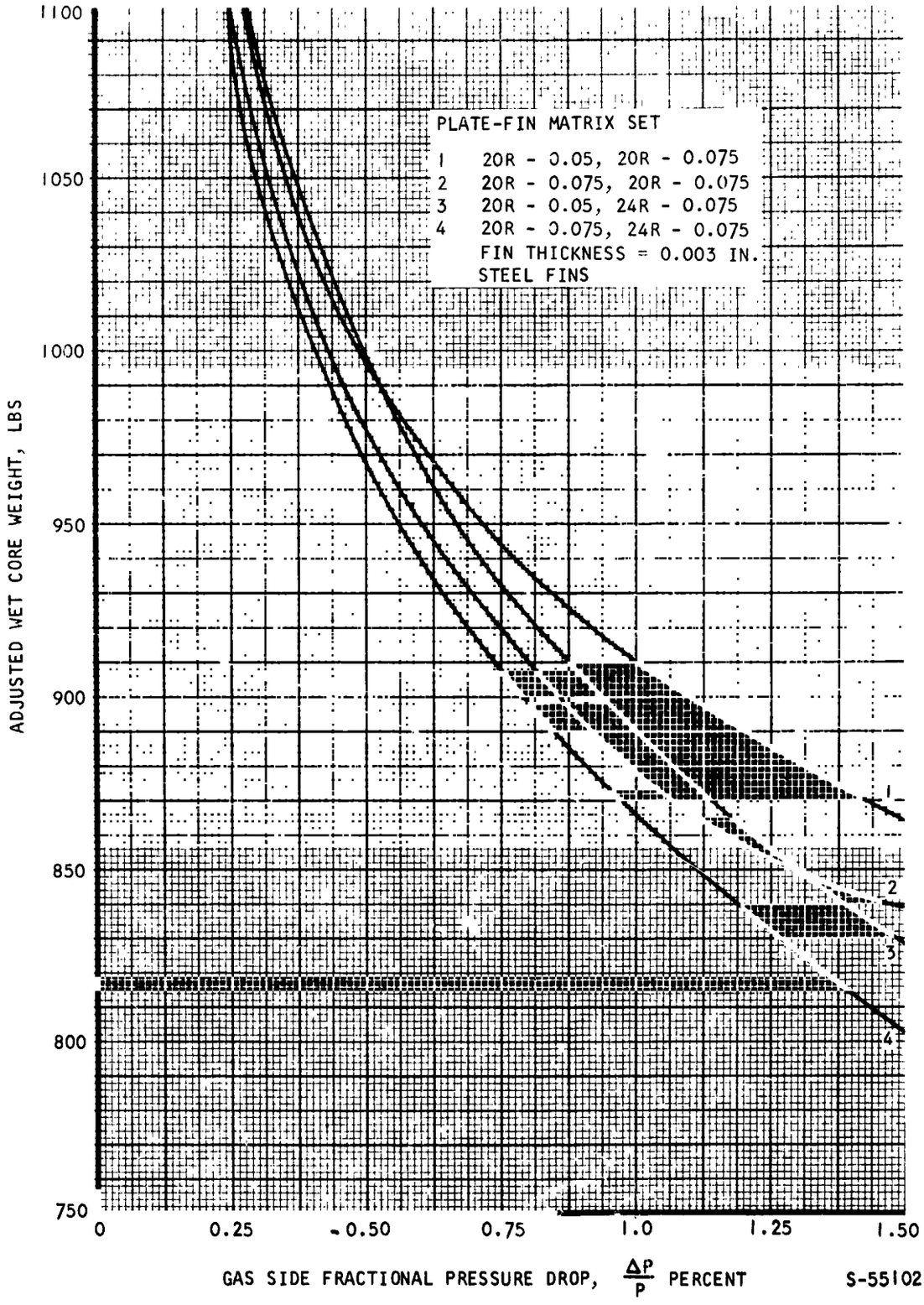

Figure 3-21. **Variation of Weight with Gas-Side Pressure Drop for Case IV Plate-Fin Waste Heat Exchanger (Steel Fins)**

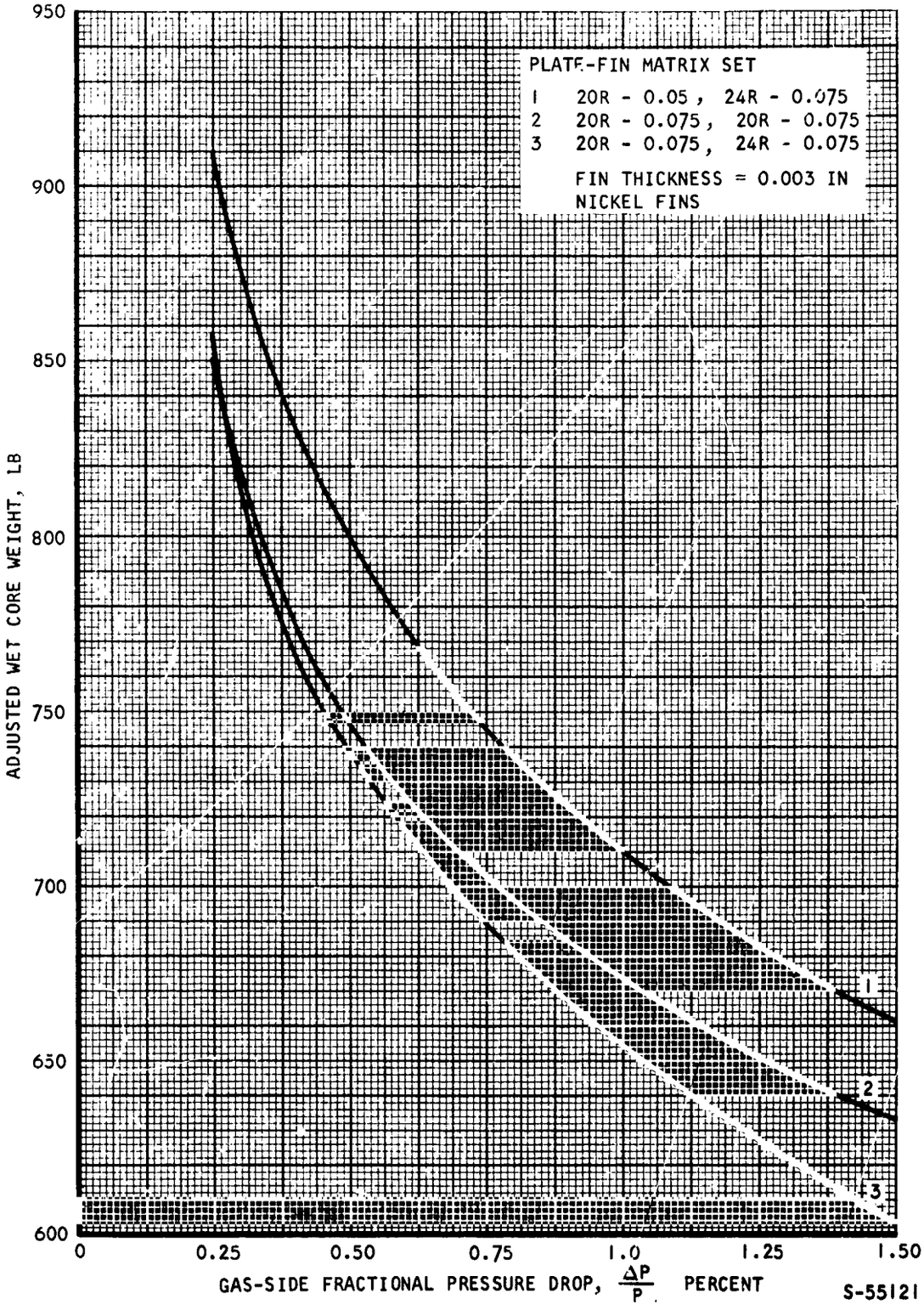

Figure 3-22. Variation of Core Weight with Gas-Side Pressure Drop for Case IV Plate-Fin Waste Heat Exchanger (Nickel Fins)

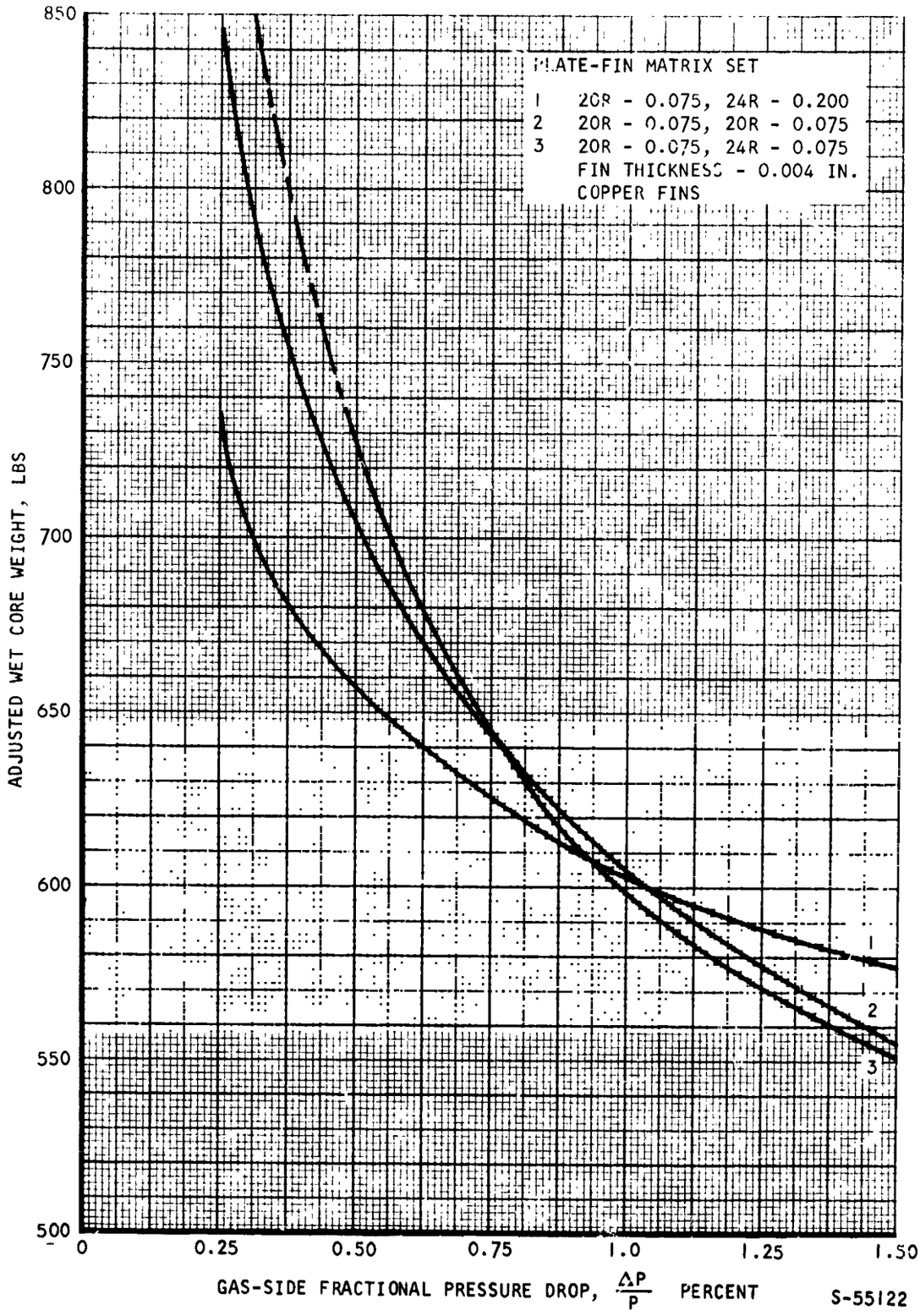

Figure 3-23. Variation of Weight with Gas-Side Pressure Drop for Case IV Plate-Fin Waste Heat Exchanger (Copper Fins)

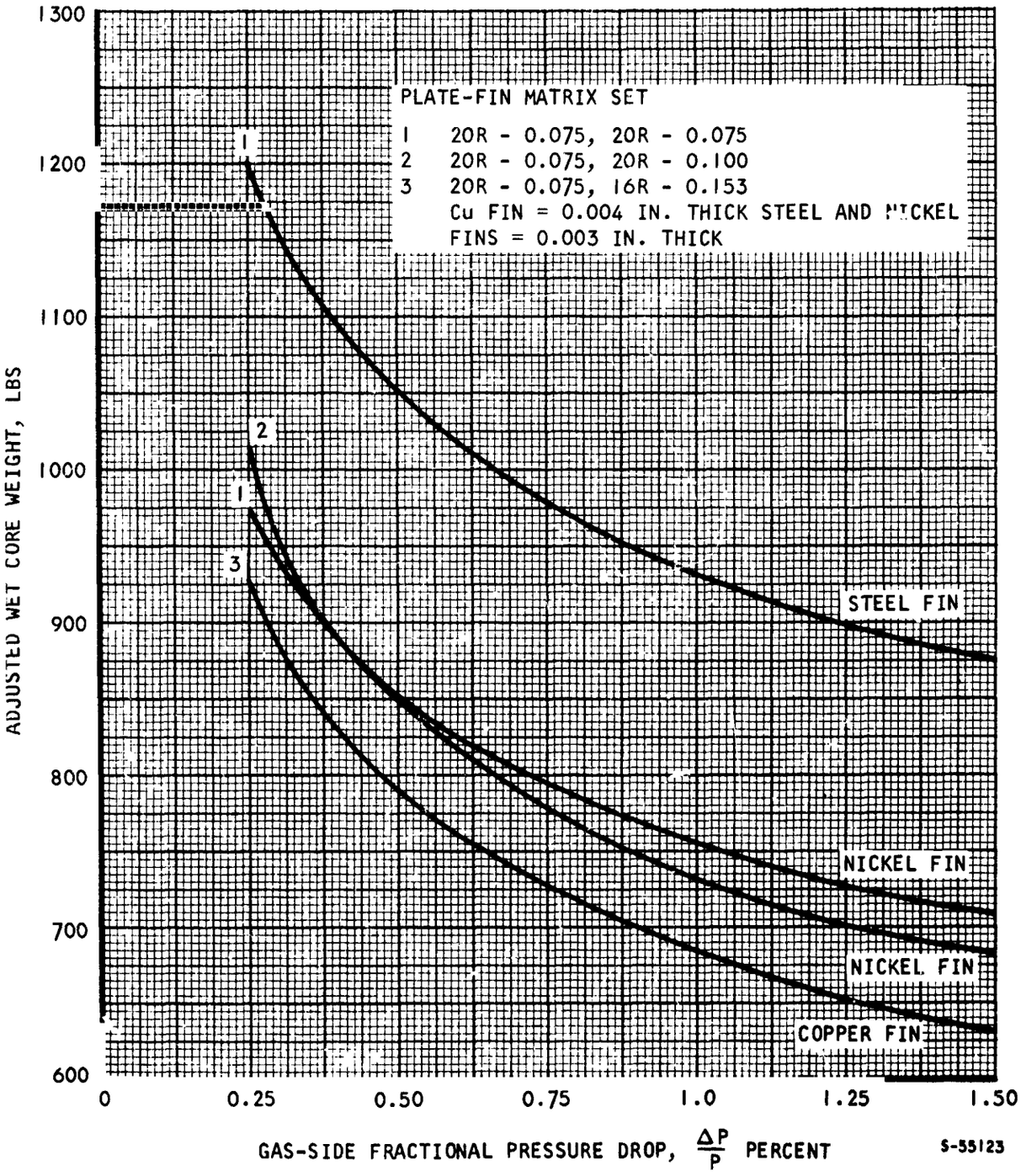

Figure 3-24. Variation of Weight with Gas-Side Pressure Drop for Case IX Plate-Fin Heat Exchanger

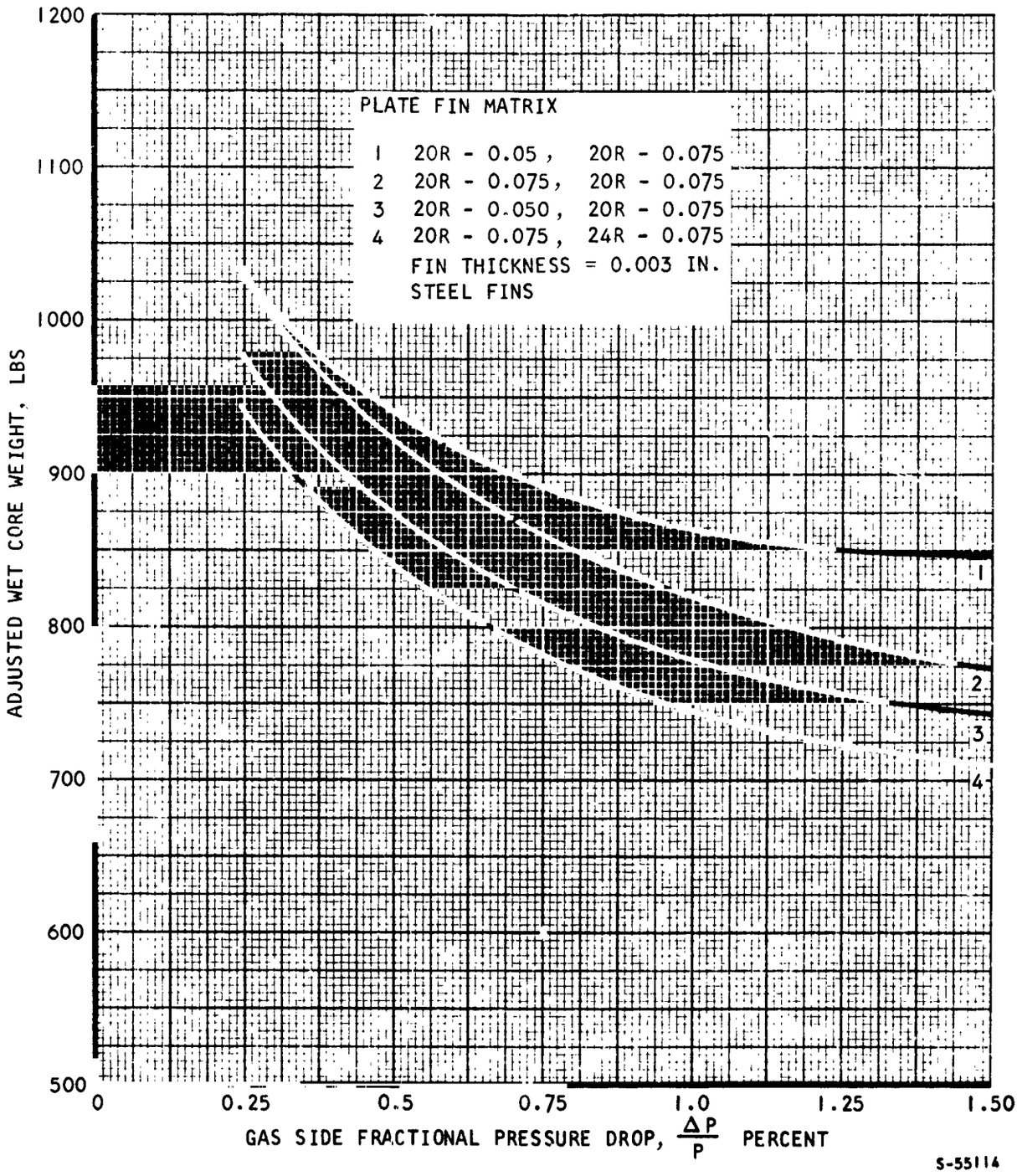

Figure 3-25. Variation of Weight with Gas-Side Pressure Drop for Case IV-A Plate-Fin Waste Heat Exchanger (Steel Fins)

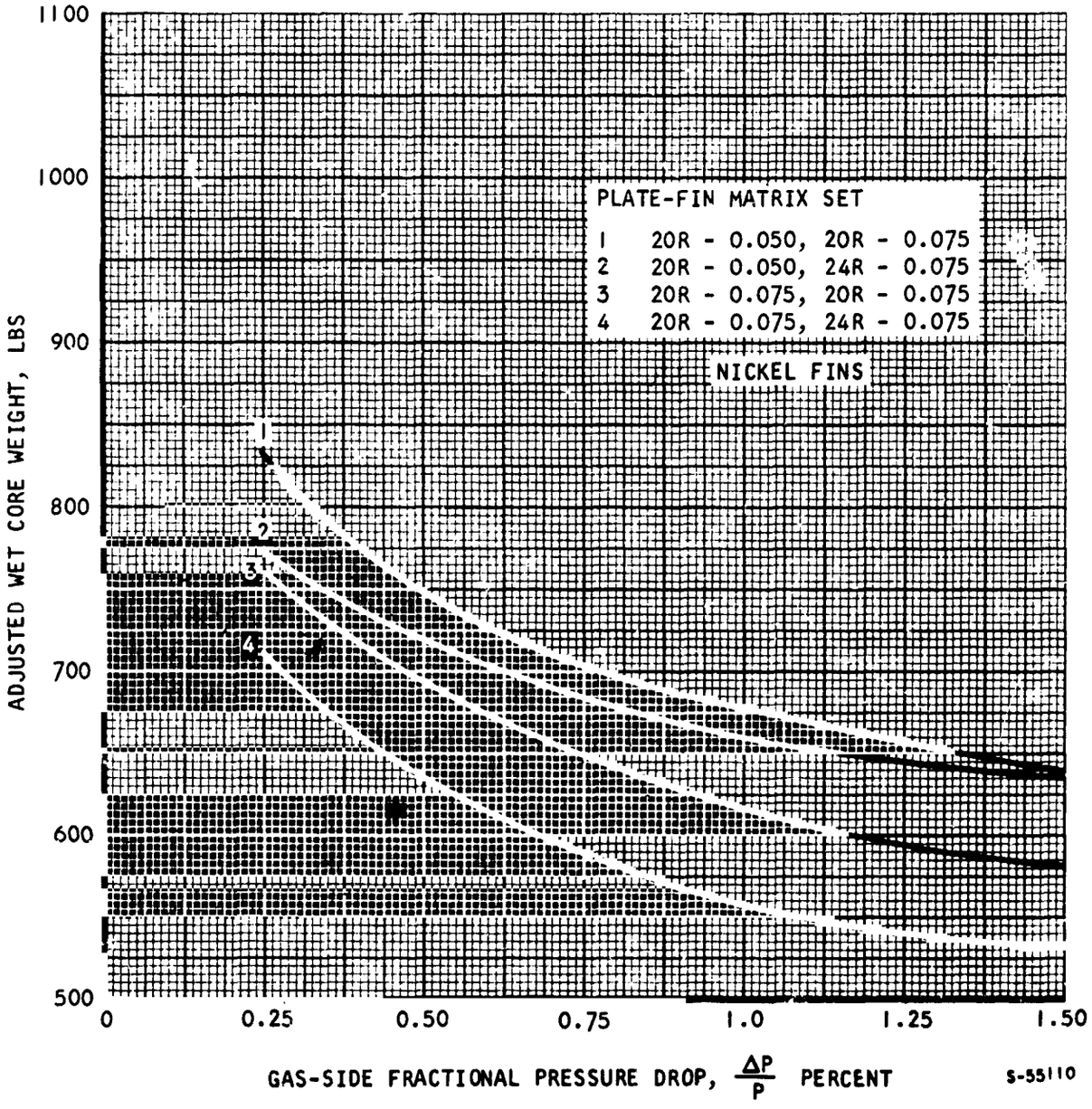

Figure 3-26. Variation of Weight with Gas-Side Pressure Drop for Case IV-A Plate-Fin Waste Heat Exchanger (Nickel Fins)

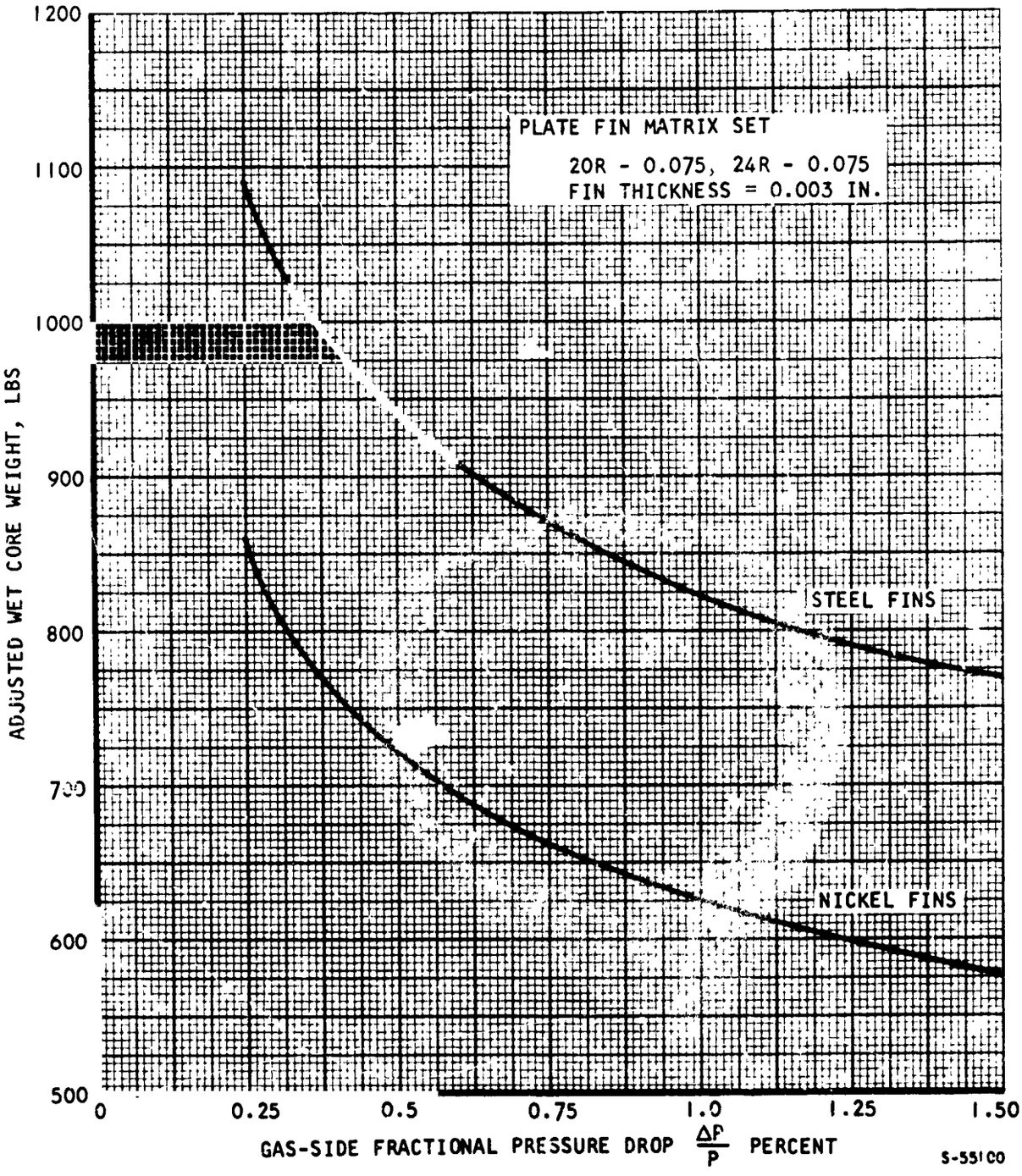

Figure 3-27. Variation of Weight with Gas-Side Pressure Drop for Case IX-A Plate-Fin Waste Heat Exchanger

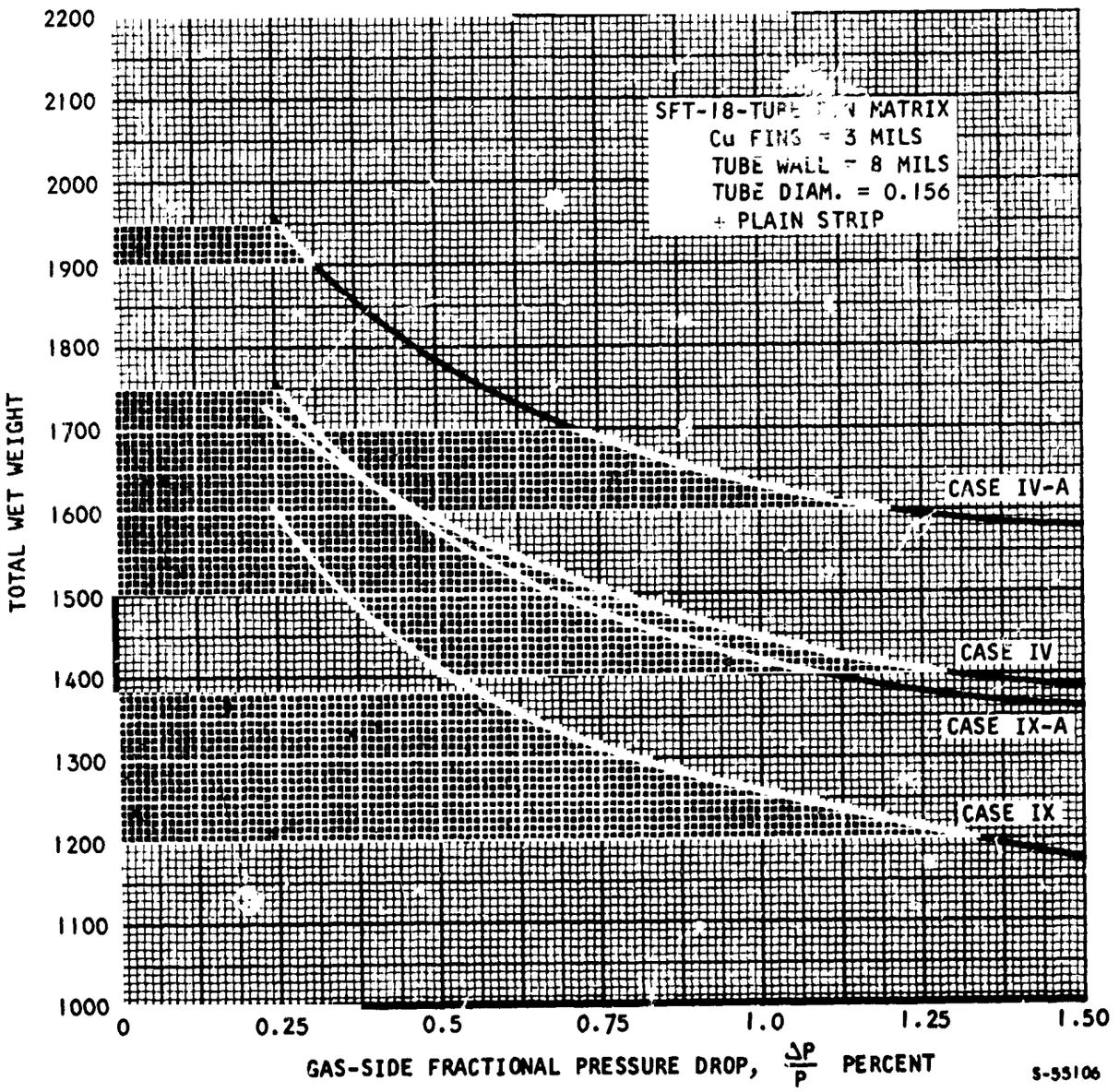

Figure 3-28. Variation of Weight with Gas-Side Pressure Drop for Finned Tubular Waste Heat Exchanger

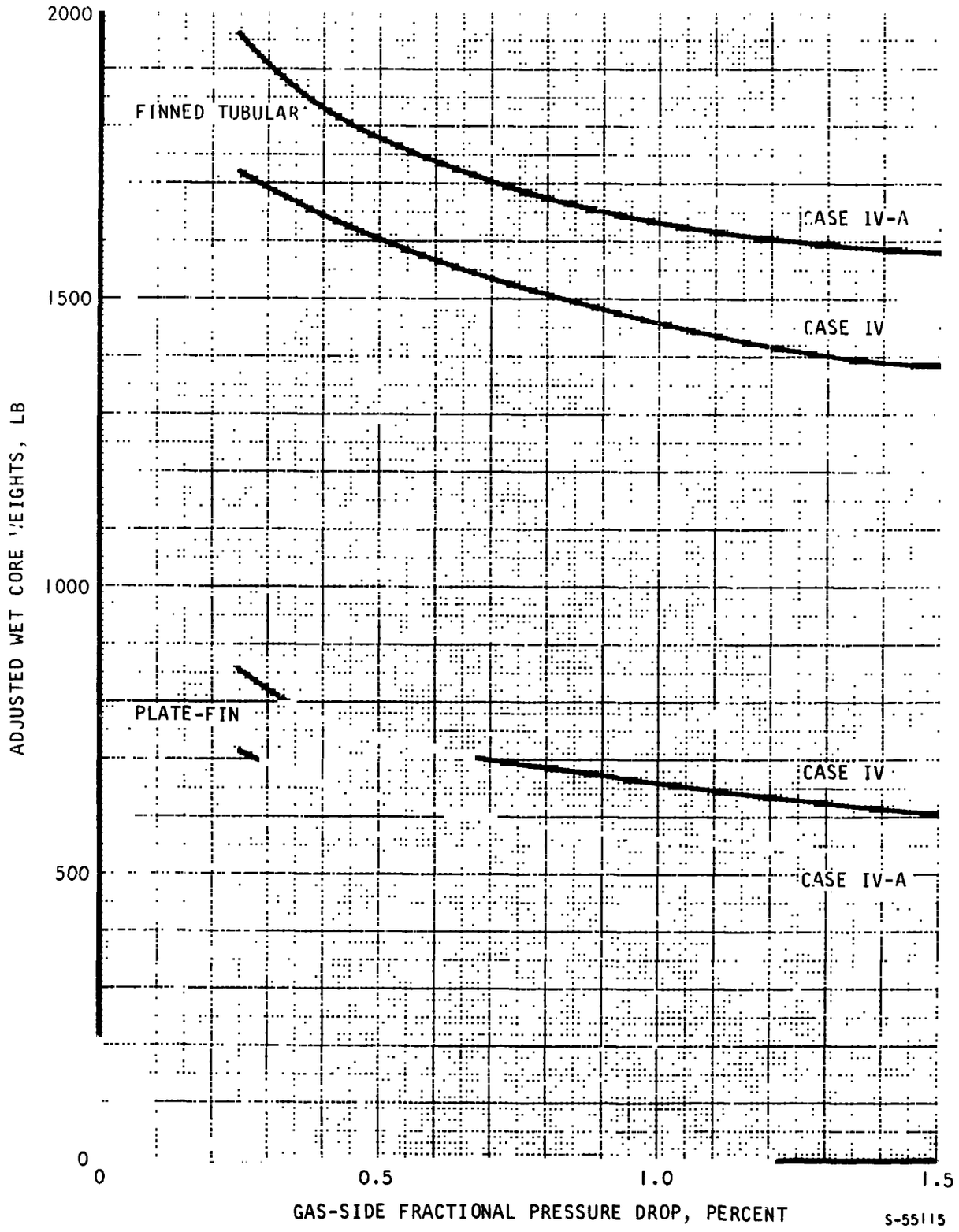

Figure 3-29. Comparison of Waste Heat Exchanger Types for Cases IV and IV-A

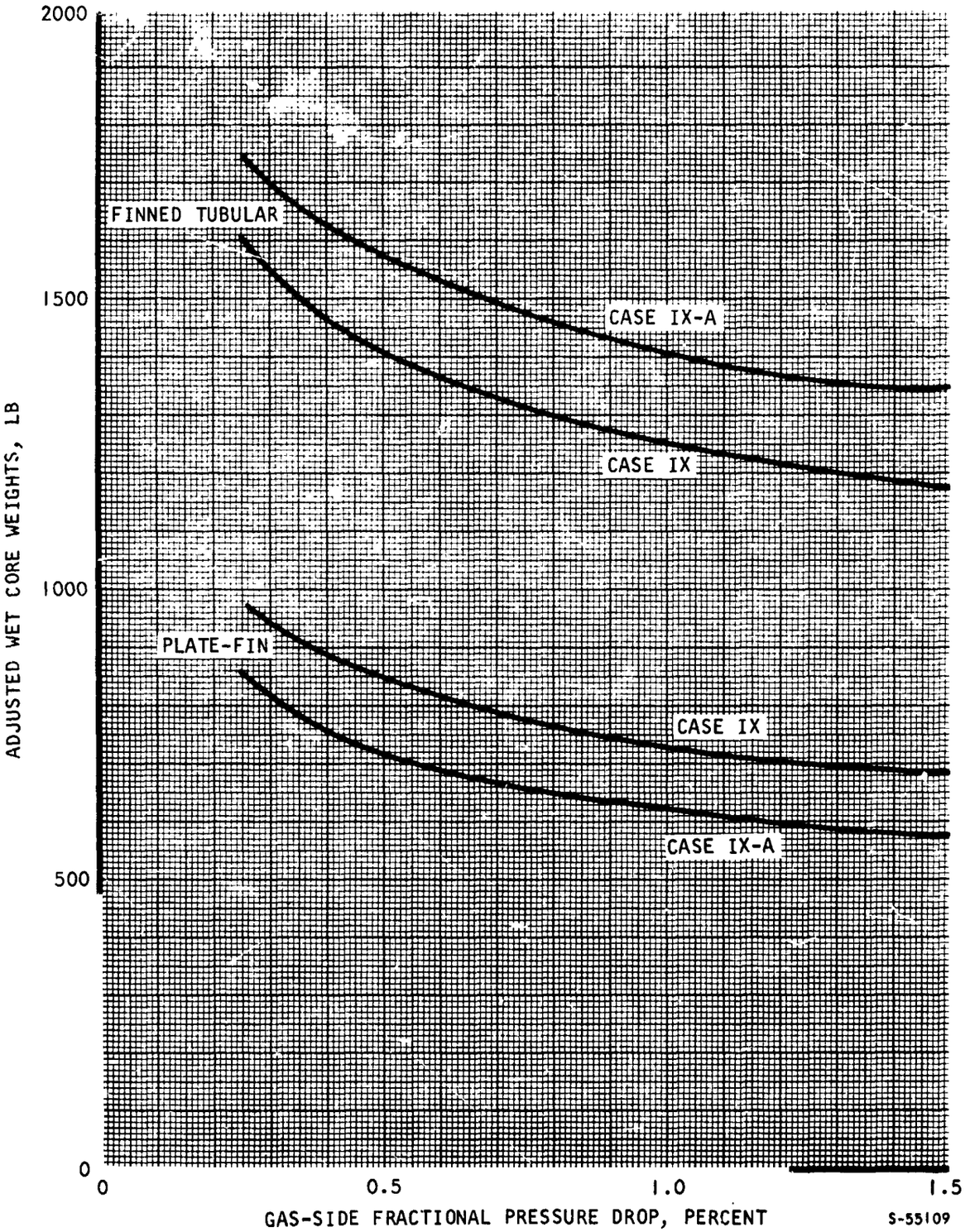

Figure 3-30. Comparison of Waste Heat Exchanger Types for Cases IX and IX-A

A comparison of these results with the parametric study results for the Engine A and Engine B Brayton cycle systems indicates the influence of increasing system pressure level on optimum waste heat exchanger design. In the Engine A system, at a gas pressure level of 6.25 psia, the optimum waste heat exchanger was strip-finned tubular and weighed less than half what a plate-fin heat exchanger would have weighed for that system. At the Engine B pressure level of 24 psia, the weights of plate-fin and finned tubular designs for the waste heat exchanger, including required wrap-up and structure, were essentially equal. At the higher pressure levels of the present system, as noted above, the plate-fin heat exchanger weights range from 35 percent to 60 percent of the finned tubular weights.

The following major factors make the plate-fin matrix increasingly attractive in comparison with the finned tubular configurations as gas pressure level is increased:

1. There is a reduction in axial conduction of heat in the plate-fin core as pressure level is increased due to the decreasing ratio of core A/L (metal area ÷ length) to fluid capacity rate. As a result of this, the use of higher conductivity fins (nickel or copper) becomes possible at the higher pressure levels, with attendant weight reduction. Axial conduction is not a factor in the finned tubular core because an uninterrupted conduction path does not exist in the axial (gas-flow) direction.

2. An increase in pressure level causes a rapid increase in the weight of the gas containment structure (i.e., manifolds, no-flow pans, headers) required for the finned tubular heat exchanger. At the temperature and pressure levels under consideration here, the plate-fin heat exchanger is relatively unaffected by the structural requirements of gas pressure containment; i.e., minimum metal thicknesses required for heat transfer or reliable fabrication are in most cases sufficient also for pressure containment.

3. The increase in gas-side heat transfer coefficient with increasing pressure level reduces the optimum ratio of gas-side to liquid-side heat transfer area from 25 for the low-pressure Engine A system to roughly one or two for the various design conditions of the present system. The advantage of the finned tubular matrix in providing high area ratios in compact and efficient configurations is thus eliminated at the high pressure levels of the HXDA waste heat exchanger. Specifically, the use of a strip-finned core, providing dual use of fin area for both liquid loops, is impractical at the HXDA design conditions. Thus the finned tubular configuration, requiring two separate cores to accommodate independent liquid loops, is at a basic disadvantage to the plate-fin three-fluid heat exchanger.

Heat Source Heat Exchanger

The materials selected for the heat source heat exchanger were T-111 for the tubes, manifolds, headers, etc. and Columbium (1% Zr) for the fins. A minimum tube wall thickness of 0.020 in. was selected to ensure fabricability of the heat exchangers and for containment of the lithium. A minimum tube O.D. of 0.25 in. was selected to avoid any problem of tube plugging by the liquid lithium. The heat exchanger configurations analyzed for this component were plain tubular and finned tubular.

The following staggered tube matrixes were considered for the plain tube configurations.

Core Matrix Designation	Tube Spacing ÷ Tube O.D.	Tube Row Spacing ÷ Tube O.D.
SB-125100	1.25	1.0
SB-150100	1.50	1.0
SB-200100	2.00	1.0

For the finned tube configuration, the following staggered tube matrixes were surveyed.

Core Matrix Designation	Tube Spacing Tube O.D.	Tube Row Spacing Tube O.D.	Fin Diameter Tube O.D.	Fins Per Inch
SFT 16	2.60	2.26	2.50	30
SFT 17*	2.29	1.63	1.88	30
SFT 18	1.98	0.99	1.27	30

An initial survey was conducted contrasting heat exchanger designs employing plain tubes vs finned tubes and the results are shown in Table 3-3. The gas side and liquid side pressure drops were selected to achieve a reasonable aspect ratio on the frontal area of the heat exchangers. Examination of the data on Table 3-3 shows that the performance of the finned tube matrixes are, as would be expected, considerably better than the plain tubes both in weight and in total number of tubes required. While only the designs for Case IV are shown, similar results can be shown for all the design cases. Thus the finned tube approach is greatly superior in this application.

In general, the heat exchanger weight decreases with decreasing tube diameter at the expense of an increase in the number of tubes. Since the HSHX is by far the lightest of the three heat exchangers in the system and each tube will have to be welded into the headers because of the materials of construction, there is a great incentive to reduce the number of tubes as well as to achieve a lightweight design solution.

Figure 3-31 shows the variation in several heat exchanger parameters as the tube diameter is varied. Below a tube diameter of 0.50 in. there is a rapid rise in the number of tubes required although weight continues to decrease.

TABLE 3-3

COMPARISON OF FINNED TUBES VS PLAIN TUBES
(DESIGN CONDITIONS OF CASE IV)
(2-PASS COUNTER CROSSFLOW HX)

Type	Matrix	Tube Dia. (In.)	$(\Delta P/P)_{gas}$	ΔP_{liq} (psi)	Tube Length (In.)	N_{Tubes}	No Flow Length (In.)	Flow Length (In.)	Core Weight
Plain	SB125100	0.25	.50%	.20	18.98	845	26.53	2.5	139.5
Plain	SB150100	0.25	.50%	.20	20.00	873	18.28	4.5	151.9
Plain	SB200100	0.25	.50%	.20	20.57	871	16.78	6.50	155.81
Finned	SFT-16	0.25	1%	2.0	12.84	227	18.90	3.53	56.0
Finned	SFT-17	0.25	1%	2.0	11.99	224	18.53	2.91	42.1

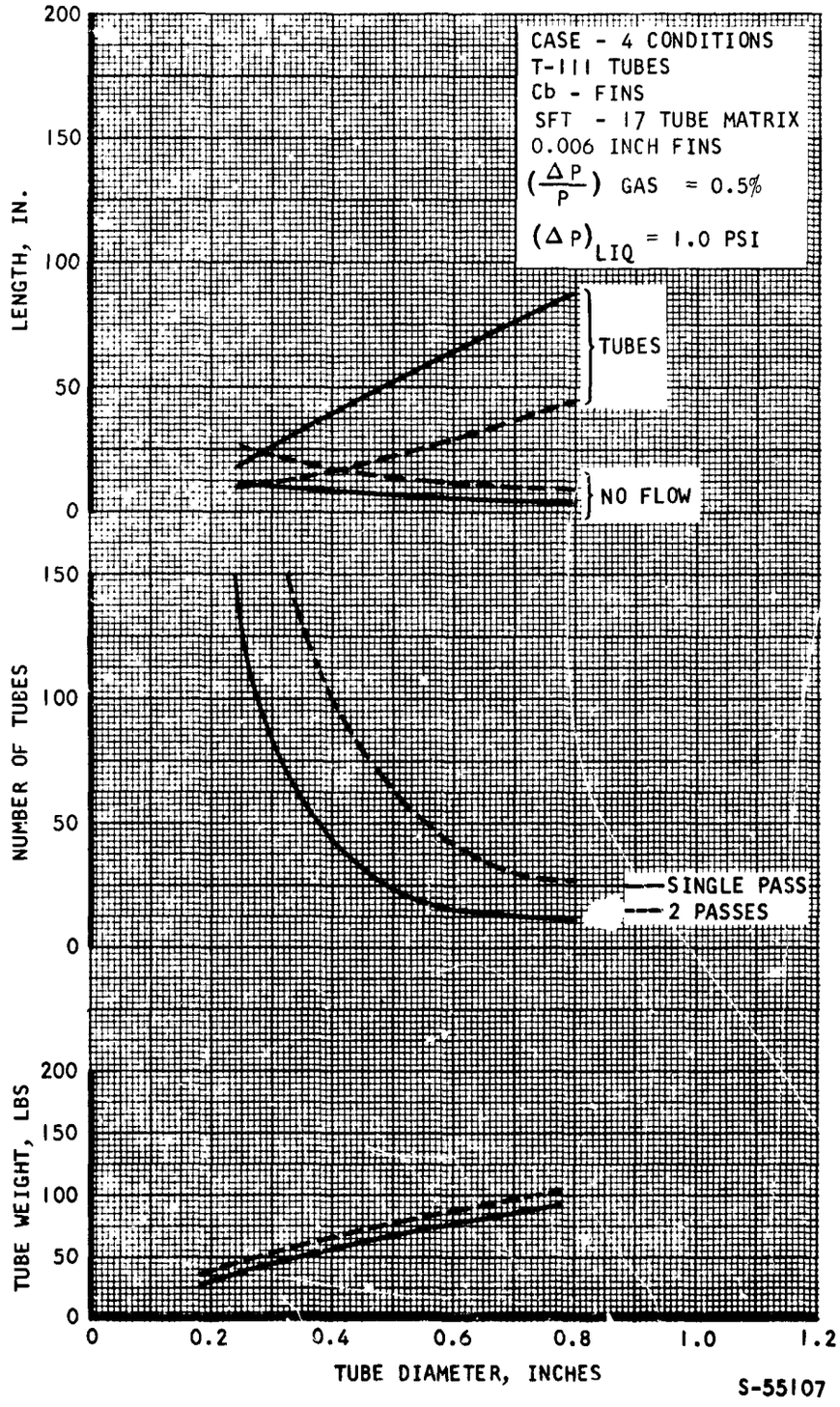

Figure 3-31. Variation of Weight, Number of Tubes, and Core Dimensions with Tube Diameter for Case IV Heat Source Heat Exchanger

The effect of multipassing is also illustrated in this figure. While the single pass solution for a given tube diameter results in fewer tubes, an unfavorable aspect ratio of the gas flow frontal area results. Thus the two-pass solution is recommended. A tube diameter of about 0.5 in. represents a reasonable compromise between low weight, a small number of tubes and a good frontal area aspect ratio.

The next area investigated was the effect on heat exchanger design of the liquid lithium side pressure drop. The change in heat exchanger design with change in liquid side pressure drop is illustrated in Figure 3-32. As the liquid side pressure drop is increased there is a resultant decrease in the number of tubes required, a small change in weight and an increasingly poor frontal area aspect ratio. Thus a ΔP on the liquid side of 1.0 psi or less is indicated.

The effect of gas side pressure drop for the four design conditions of Task I is shown in Figures 3-33 through 3-36. For Case IV, Figure 3-36, the gas side pressure drop was varied from .25 to 1.0 percent $\Delta P/P$. For a $\Delta P/P$ greater than .005 there is little decrease in heat exchanger weight, and over the range surveyed the number of tubes is practically constant, as is the frontal area aspect ratio. For Case IX, Figure 3-34, the same type behavior as in the previous case is apparent, with little change in weight with pressure drop. However, in this case there is a slight worsening of the aspect ratio as higher gas side pressure drops are encountered. For Case IV-A, Figure 3-35, the weight of the heat exchanger is about twice that of the other cases considered due to the high system pressure level. Most of the weight is in wrap-up of the heat exchanger tubes and not in the heat exchanger core. There is little change in heat exchanger weight over the range of gas side pressure drops considered. For Case IX-A, Figure 3-36, the change in weight is somewhat more pronounced over the complete range of gas side pressure drops than the previous cases and does not flatten out appreciably. It was necessary to drop the liquid side pressure drop from 1.0 psi used in Cases IV and IX to 0.50 psi for Cases IV-A and IX-A to achieve more favorable frontal aspect ratios.

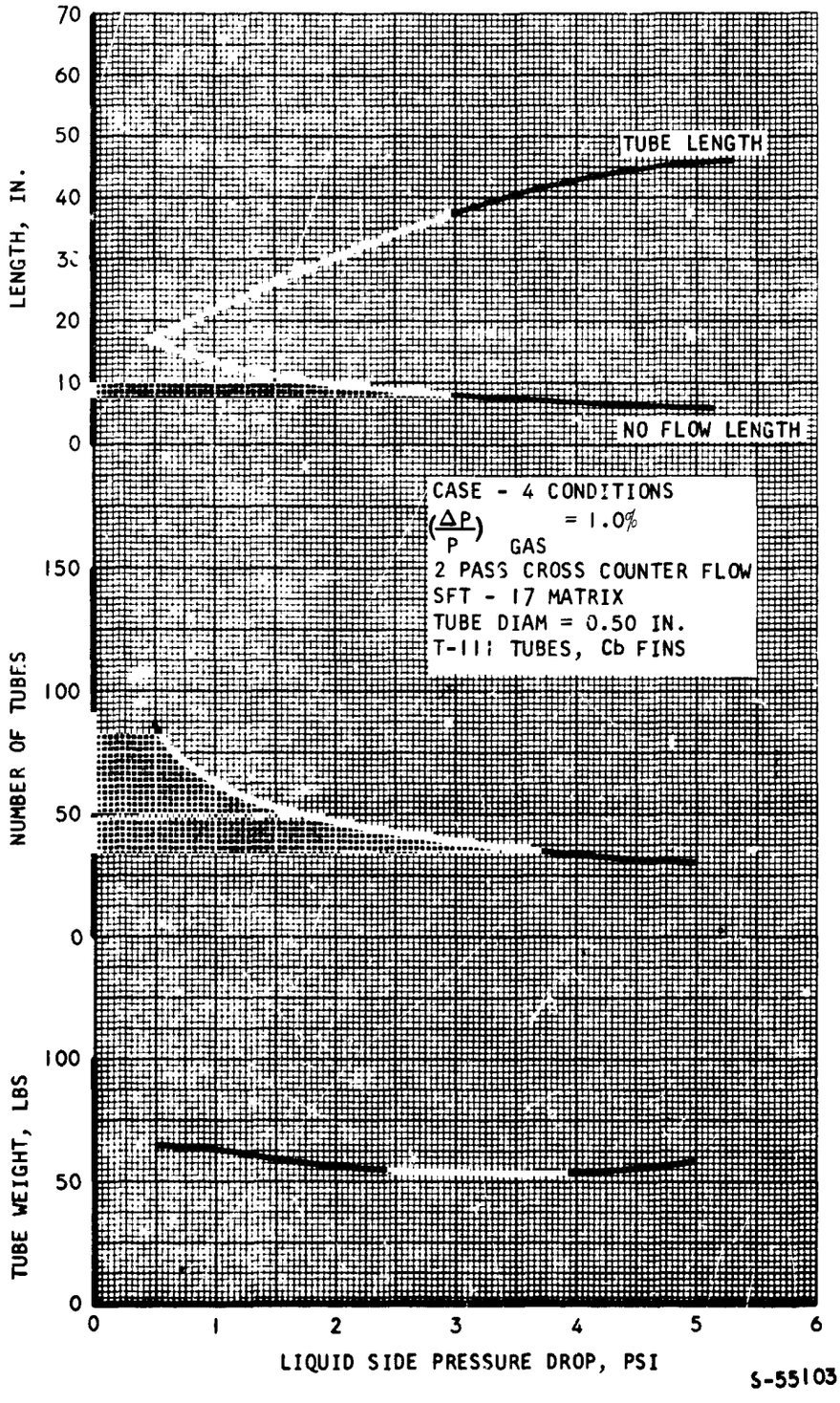

Figure 3-32. Variation of Weight, Number of Tubes, and Core Dimensions with Liquid Pressure Drops for Case IV Heat Source Heat Exchanger

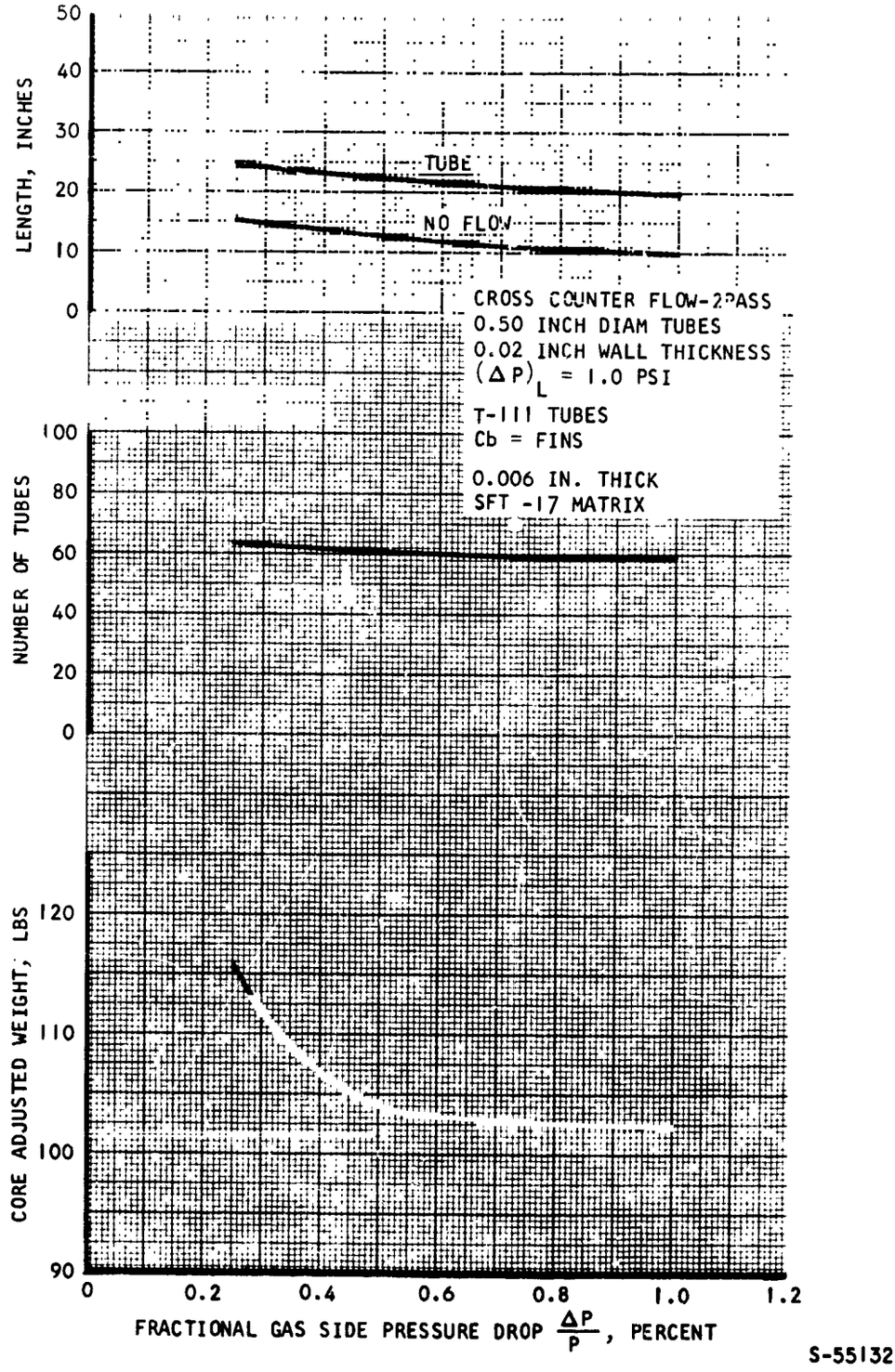

Figure 3-33. Variation of Weight, Number of Tubes, and Tube Length with Gas-Side Pressure Drop for Case IV Heat Source Heat Exchangers

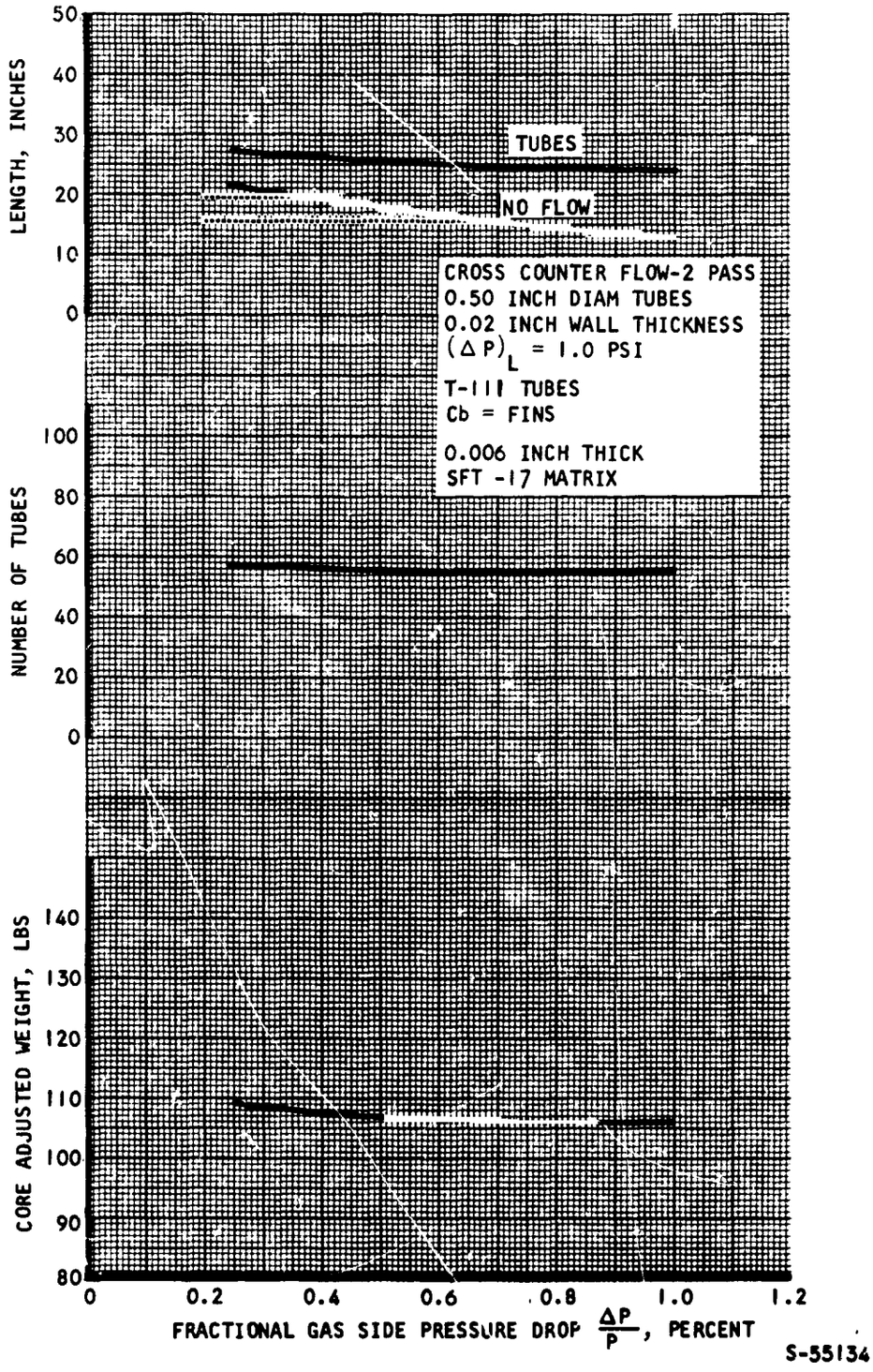

Figure 3-34. Variation of Weight, Number of Tubes, and Tube Length with Gas-Side Pressure Drop for Case IX Heat Source Heat Exchangers

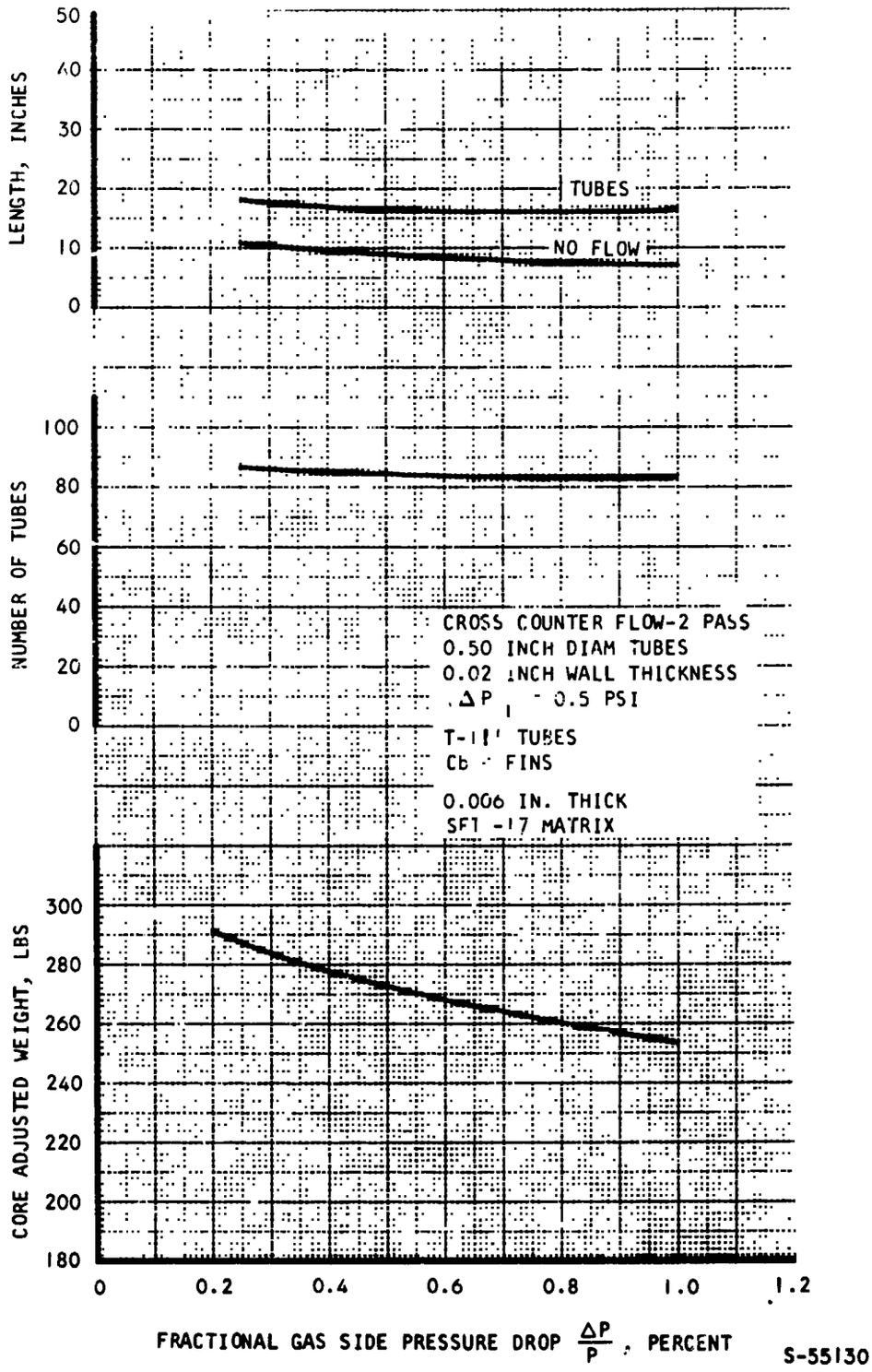

Figure 3-35. Variation of Weight, Number of Tubes, and Tube Length with Gas-Side Pressure Drop for Case IV-A Heat Source Heat Exchangers

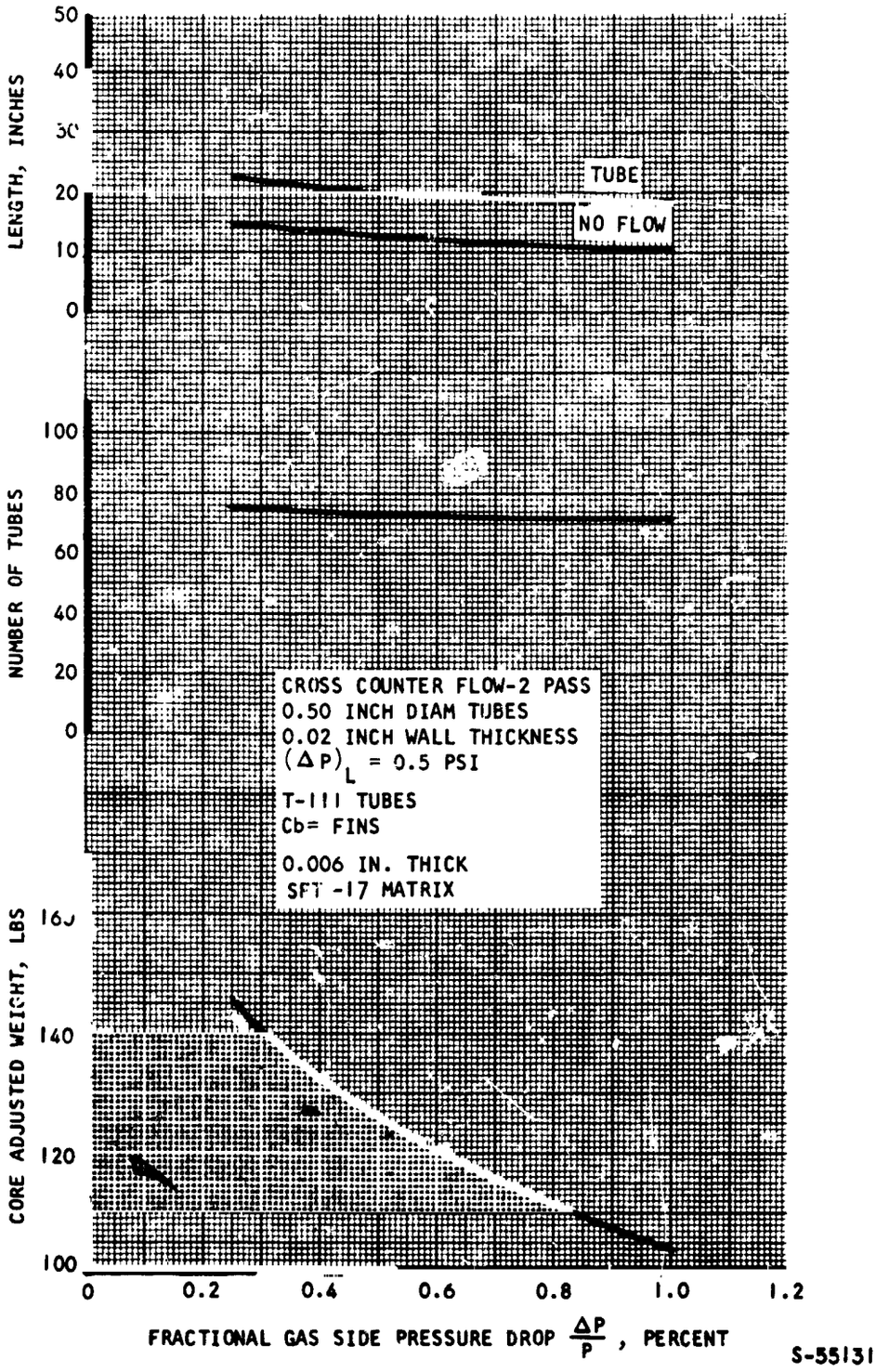

Figure 3-36. Variation of Weight, Number of Tubes, and Tube Length with Gas-Side Pressure Drop for Case IX-A Heat Source Heat Exchangers

HEAT EXCHANGER STRUCTURAL ANALYSIS

Structural analyses were performed on the various system heat exchangers to determine acceptable geometries. Since one of the primary study objectives is to determine component weights, structural analysis was directed to achieving realistic, lightweight designs. Plate-fin heat exchanger weights are calculated with the heat transfer analysis utilizing fin and plate sizes established by strength requirements or minimum gage requirements. Tubular heat exchanger design and weight analysis was performed to give a realistic comparison with the plate-fin design type. This work was performed during the preliminary design and was utilized for all tubular heat exchanger weight estimates.

Structural analyses in the preliminary investigations consisted of support for the heat transfer studies, development of tubular heat exchanger weight relations and calculation of tubular recuperator, heat source, and waste heat exchanger weights. The preliminary fin and tube thicknesses for the plate-fin and tubular designs, respectively, were calculated to initiate the heat transfer analysis. Preliminary sizing was based on pressure containment requirements. Tubular heat exchanger weight relations were then developed for components such as tubes, headers, pans, and shells based on pressure containment and inertia load requirements. These tubular weights were then incorporated in the summary curves to provide weight comparisons between competitive designs and estimates of the contribution to system weight of the three heat exchanger components.

Design Criteria and Material Properties

The operating requirements of the system include a 50,000 hr service life and inertia loads during vehicle operation. The inertia loads were based on the use of an isolation system which limited load to 24 g in any direction. The natural frequencies of the components will be greater than 50 Hz to avoid the isolation system frequencies.

A variety of load conditions, stress conditions, and types of failure mode possibilities will be experienced by the components during their service life. The comprehensive set of design criteria normally used to accommodate pressure loads, inertia loads, and thermal stresses was simplified for this preliminary study. Allowable stresses were therefore based on pressure containment design criteria.

The standard design practice employed by AiResearch is to design the pressure carrying structure for proof pressures of 1.5 times the working pressures and for burst pressures of 2.5 times the working pressures. The structure must not yield at proof pressure or rupture at burst pressure. This implies that the proof pressure is the governing design condition if the ratio of yield stress to ultimate stress is less than 0.6 and that the burst pressure will govern if the ratio is greater than 0.6. The allowable stress at working pressure is, therefore, the lesser of the following:

$$\sigma_{all} = (\sigma_{ult})/2.5 \qquad \text{(1a)}$$

$$\sigma_{all} = (\sigma_{y})/1.5 \qquad \text{(1b)}$$

At elevated temperature for extended operating times, the above condition must be satisfied and, in addition, the component must be satisfactory for creep effects. A set of criteria for creep must be comparable to those for the short time loading. Accordingly, limitations based upon stress-to-rupture and stress-to-one percent creep must be established. The rated design life of the unit is five years and it will be designed for sustained pressure operation at maximum operating temperature throughout the entire design life. Allowable stresses at working pressure must be the lesser of the following.

$$\sigma_{all} = [(\text{1-percent creep stress})_{50,000\ hr}]/1.2 \tag{2a}$$

$$\sigma_{all} = [(\text{creep-rupture stress})_{50,000\ hr}]/1.5 \tag{2b}$$

Material properties at elevated temperatures are very sensitive to temperature. For the candidate materials, an increase in temperature of 100°F typically leads to a decrease of approximately 33 percent in creep and stress rupture strengths. Therefore, an allowance must be made to account for the possibility of overtemperature. The design temperature used to establish allowable stresses is taken to be the maximum operating temperature plus 100°F. The 100°F overtemperature criteria result in an effective safety factor greater than those shown in Equation 2.

Material strengths properties for the three heat exchangers are provided in Appendix A-2, based on the above criteria. For the preliminary investigation, 347 steel was the basic construction material for the waste heat exchanger although nickel and copper were used in the plate-fin designs. Hastelloy X was the basic recuperator material although 347 steel was an acceptable alternative providing equal weight in low pressure plate-fin designs. Tantalum alloy T-111 was the structural material for the heat source heat exchangers.

Fin and Tube Pressure Capability

Plate-fin heat exchanger fin density requirements were determined for the recuperator and waste heat exchanger prior to the heat transfer calculations. The fin densities used in the analyses are then reflected in the weight of the plate-fin heat exchangers. Fin area density requirements were based on fin tensile stress as given by

$$\sigma_{fin} = \frac{p}{f}\left(\frac{b_{fin} - t_{fin}}{t_{fin}}\right)$$

where p is the applied internal pressure, b_{fin} is the fin spacing, t_{fin} is fin thickness, and f is the strength ratio relating fin tested performance to theoretical tensile strength based on this equation. This equation can be rewritten to express the required fin area density as a function of pressure, allowable stress, and strength ratio giving

$$\frac{t_{fin}}{b_{fin}} = \frac{p}{f\sigma_{all} + p} \tag{3}$$

Recuperator fin areas vs pressure are shown for Hastelloy X at operating temperatures of 1000° and 1200°F in Figure 3-37. The 1200°F operating temperature applies to all designs where a plate-fin recuperator is utilized. However, as shown by the results in Figure 3-37, plate-fin designs for pressures above 400 psi require fin densities greater than 20 percent. Since fin densities of about 18 percent or greater would require improved fabrication techniques they were not considered. A reduction in maximum plate-fin operating temperature to about 1000°F would permit fins to be used in the entire operating range as indicated by Figure 3-37. Designs were therefore considered which would incorporate a tubular unit at the hot end of the recuperator to reduce the plate-fin temperature. This would allow a combined tubular and plate-fin design which would include the size and weight advantage of the plate-fin type.

The results in Figure 3-37 are highly dependent on the fin strength ratio used in the calculations. The range of strength ratios expected for standard fin materials is about 0.25 to 0.50 depending, for example, on the braze alloy used for fabrication. The curves in Figure 3-37 are based on a Hastelloy X fin strength ratio of 0.25. This is conservative for this material; however, this strength coincides with the strength of 347 steel fins with a 0.5 ratio, and either material could be used for the plate-fin recuperators.

Fin requirements for the waste heat exchanger were computed for 347 steel, nickel, and copper fins using a maximum operating temperature of 600°F. The fin area densities are presented in Table 3-4 for the various operating pressures using Equation (3). Nickel and 347 steel are satisfactory over the entire pressure range with nickel fins requiring about twice the density. However, fin area requirements at the low pressures will not govern the design because fin densities less than 2 or 3 percent involve minimum size limitations. Therefore, the nickel fin weight will be about the same as steel fins except for the 375 psi pressure where the nickel fin weight is about 70 percent higher. Copper fin density requirements exceed nickel by a factor of about 6, and due to maximum density limitations no design is possible at 375 psi. Copper fin weight will exceed steel or nickel fin weight throughout the design range since minimum copper requirements exceed minimum acceptable sizes.

Heat source heat exchanger design was limited to tubular types using Tantalum alloy T-111. Initial tube sizing was expressed as an allowable ratio of diameter to thickness based on tube circumferential membrane stress. A 1.5 factor was added to the stress to account for thermal stresses, and for internal pressure cases we have

$$\sigma = 1.5\ pD/2t$$

or

$$(D/t)_{req} = 1.3\ \sigma_{all}\ /p$$

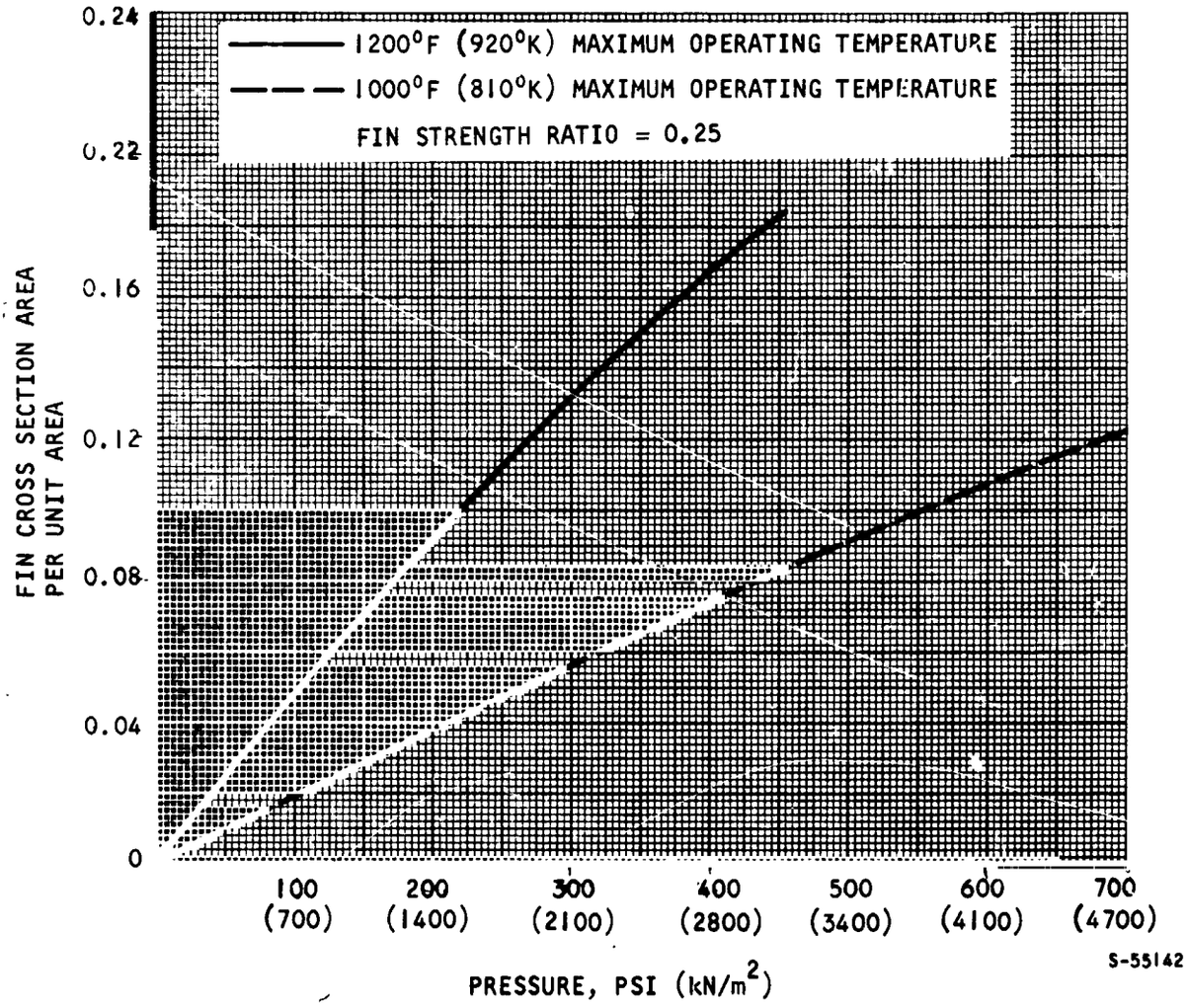

Figure 3-37. Maximum Estimated Fin Area Density Requirements for Hastelloy X at Two Recuperator Operating Temperatures

TABLE 3-4

WASTE HEAT EXCHANGER FIN AREA
DENSITIES FOR 347 STEEL, NICKEL, AND COPPER

Maximum Pressure, psi	Condition, Location	Required Fin Density		
		347 Steel	Nickel	Copper
56	IX, gas	.006	.009	.051
75	Liquid	.007	.012	.067
125	IV, gas	.011	.020	.117
163	IX-A, gas	.014	.026	.136
375	IV-A, gas	.035	.059	.265

TABLE 3-5

PRELIMINARY HEAT SOURCE HEAT
EXCHANGER TUBE DIAMETER TO THICKNESS
RATIOS FOR TANTALUM ALLOY T-111

Maximum Pressure, psi	Condition	Maximum Allowable Diameter-to-Thickness Ratio
105	IX	88
228	IV	41
304	IX-A	30
684	IV-A	15

For external pressure loads we have a biaxial stress characterized by compression circumferential stress and tensile longitudinal stress. Assuming equal stresses, the equivalent stress is 1.73 times the one dimensional stress so

$$(D/t)_{req} = 0.77\ \sigma_{all}/p \qquad (4)$$

Since the high pressure gases are outside the tubes in all cases, Equation (4) was used to set the diameter to thickness ratios shown in Table 3-5. The maximum operating temperature is 1670°F and the allowable stress for T-111 is 12,000 psi. A check of tube buckling indicated that there was adequate strength in all cases for the ratios shown in Table 3-5.

Tubular Heat Exchanger Design

Tubular heat exchanger structural design was performed to provide core weight estimates which would be comparable to plate-fin core weights. The plate-fin core weight is provided with the heat transfer analysis, whereas for tubular units the heat transfer calculations provide tube weight (including disk fins, turbulators, etc.). A comparable tubular core weight is achieved by adding the contributions of baffles, headers, pans on the no-flow sides, and support beams.

The tubular elements were designed to withstand internal pressure and inertia loads. Pressure loads were based on inlet fluid pressures which apply to the particular component. For inertia loads it is assumed that the unit is isolation mounted so that the maximum load is 24 g in any direction. In addition, the natural frequency of the heat exchanger components must be greater than 50 Hz to ensure that internal resonances exceed the isolation system resonances.

Structural models were selected for several types of tubular arrangements including rectangular and circular designs. Fluid pressures were assumed to be contained by cylindrical structures. Discontinuity stresses at joints and changes in geometry were not calculated; however, stress factors were used to account for them. (This factor also provides for thermal stresses which were not otherwise considered.) Inertia loads were supported by beam structures using standard design techniques.

The following development of design equations is based on a rectangular tubular recuperator model with multipassing on the tube side. A schematic of the recuperator is shown in Figure 3-38. The added components included baffles (not shown) to support the tubes when necessary, a header array consisting of a flat plate and semicircular caps, no-flow circular pans, a flat plate flow guide, and support beams to provide the required end conditions for the header array. The basic approach in the analysis was to compute required thickness for each component for the applicable design conditions of pressure, 24 g insertia load, and 50 Hz minimum natural frequency. The weight of each component was then obtained for the surface area that encloses the heat exchanger. A summary of thickness and weight equations for the various elements is given in Table 3-6. A complete listing of the nomenclature used in Figure 3-38 and Table 3-6a is provided in Table 3-6b. The thickness at the inlet and outlet

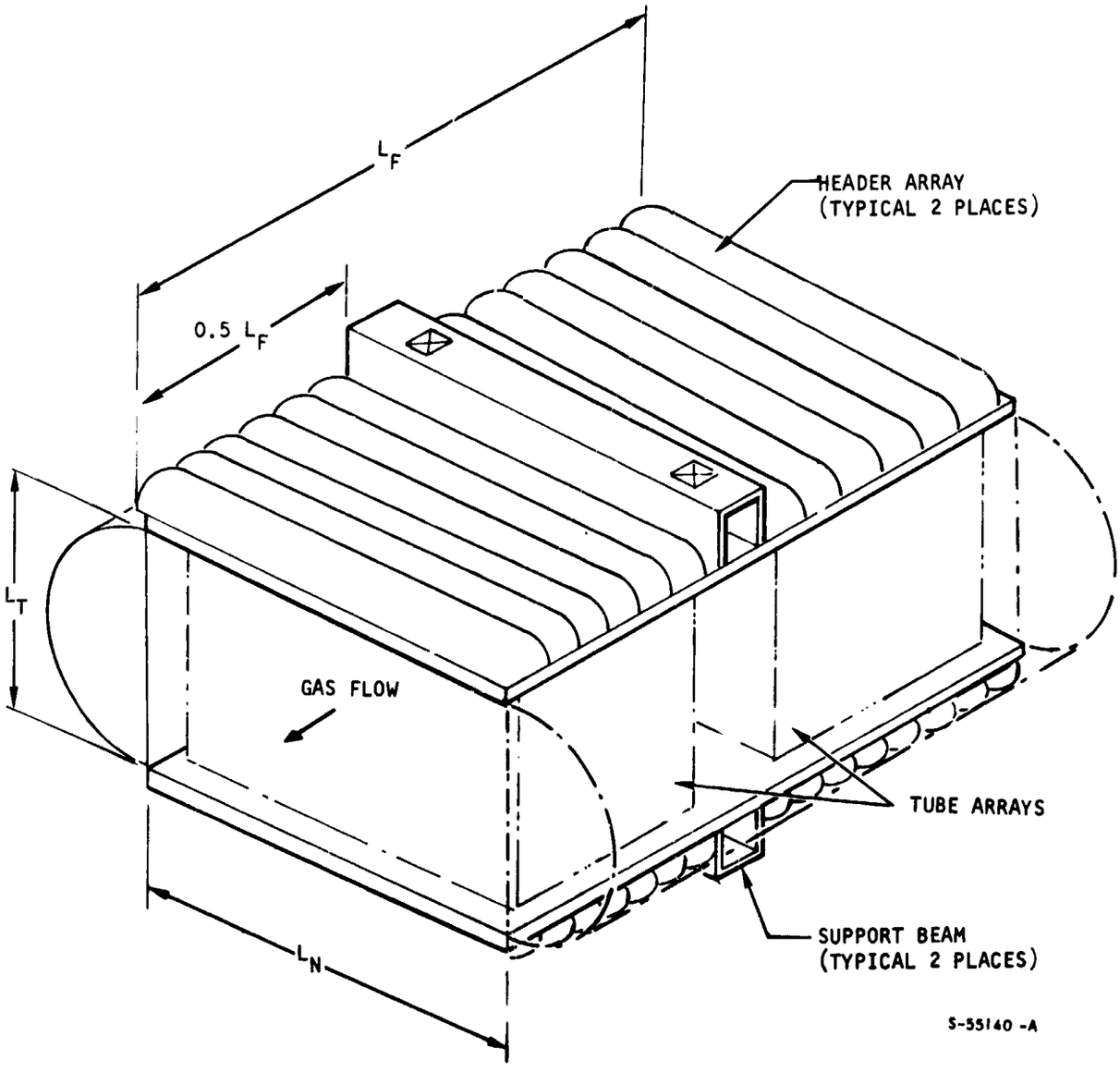

Figure 3-38. Rectangular Tubular Exchanger Structural Model

TABLE 3-6

RECTANGULAR TUBULAR HEAT EXCHANGER DESIGN

a. SUMMARY OF WEIGHT ANALYSIS EQUATIONS

Item	Weight	*Thickness Equations	Condition	Minimum Thickness, In.
Tubes	$W_{HT}(\bar{t}_T/t_{HT})$	t_{HT}	Initial heat transfer input	0.005
		$(P/4\sigma_{all})D_{HT}$	Pressure	
Baffles	$\rho N_B L_N L_F \bar{t}_B$	$1.5p_o L_T/(N_B + 1)\sigma_{all}$	Pressure	0.025
		$24\ W_T/(N_B + 1)L_N\sigma_{all}$	24 g inertia	
Headers	$\rho L_N L_F(3.14\bar{t}_{CAP} + 2\bar{t}_{PLATE})$	$1.5\ p_i L_F/N_p\sigma_{all}$	Pressure, cap	0.025
		$3(W_{TB}/\sigma_{all})^{1/2}(L_F/L_n)^{1/2}$	24 g inertia, plate	$t_{PLATE} \geq t_{CAP}$
		$14.4L_F(W_{TB}/gL_N E)^{1/3}$	50 Hz, plate	
No Flow Pans	$\rho L_T L_F(3.14\bar{t}_{PAN} + 2\bar{t}_{GUIDE})$	$0.75p_o L_T/\sigma_{all}(N_B + 1)$	Pressure, pan	0.025
		$18\rho L_T^2/\sigma_{all}(N_B + 1)^2$	24 g inertia, guide	$t_{GUIDE} \leq t_{PAN}$
		$110L_T^2\ (\rho/Eg)^{1/2}/(N_B + 1)^2$	50 Hz, guide	
Supporting Beams	$32\rho L_N L_F \bar{t}/N_p$	$0.063L_N W_{TBHP} N_p^2/\sigma_{all} L_F^2$	24 g inertia	0.05
		$3.06L_N^3 N_p^3 W_{TBHP}/gEL_F^3$	50 Hz	

*Maximum Condition Governs

TABLE 3-6 (Continued)

b. NOMENCLATURE

D	Tube outside diameter, in.
E	Material elastic modulus, psi
g	386 in./sec^2 = acceleration of gravity
L	Length, in.
N	Number
p_i	Pressure inside the tubes, psi
p_o	Pressure outside the tubes, psi
P	$1.5\left[0.25\pi p_o D_{HT}^2 + p_o(L_N L_F/N_T - 0.25\pi D_{HT}^2)\right]/0.25\pi D_{HT}^2$
t	Thickness, in.
$\bar{t}$	$(t_{INLET} + t_{OUTLET})/2$ = average required tube thickness, in.
W	Weight, lb
ρ	Material density, lb/cu in.
σ_{all}	Material allowable stress, psi

Subscript

B	Baffle
F	Flow
H	Header
HT	Heat transfer input
N	No-flow
P	Liquid passes
T	Tube
TB	Tube and baffle
TBHP	Tube, baffle, header and no-flow pan

(for the gas outside the tubes) was computed by the equations shown and the average thickness, t, was used to estimate component weight. This average thickness considers material strength at the high temperatures at one end but assumes that the greater material capability at the cold end of the unit could be taken advantage of by varying thicknesses. Estimated minimum fabricable sizes for each of the components are included in the table based on state-of-the-art fabrication techniques and reliability requirements.

I. Tube Weight

Initial acceptable tube dimensions were provided for the heat transfer analysis based on internal pressure containment. After core sizing the tubes were then checked to see that they would be adequate for pressure, inertia load, and resonance conditions. If the tubes required additional pressure containment strength, the tube thickness was increased. It was assumed that thickness changes would have a minimum effect on the heat transfer analysis and a second core sizing was not required. A 4-percent weight increase was used for dimpled tubes; however, stress effects were not considered. Baffles were utilized to provide inertia load capability when the unsupported tube was inadequate.

The initial tube sizing was on the axial stress since the gas outside the tubes contributes a significant load. In addition, a 1.5 factor was applied to account for various effects such as header discontinuity loads and thermal loads. The tube axial stress is

$$\sigma = 1.5\left[p_i(\pi R^2) + p_o(\ell_1\ell_2 - \pi R^2)\right]/(\pi D t)$$

where R is tube radius, ℓ_1 and ℓ_2 are tube and row spacing, p_i is internal tube pressure and p_o is external pressure. The stress given by the above equation exceeds the tube loop stress for either pressure applied separately. The equation can be written in standard membrane form

$$\sigma = \frac{PD}{4t}$$

if we let

$$P = 1.5\left[p_i(\pi R^2) + p_o(\ell_1\ell_2 - \pi R^2)\right]/(\pi R^2)$$

The required tube thickness is then

$$t = PD/4\sigma_{all} \qquad (5)$$

The average tube thickness, given by

$$\bar{t} = 0.5\ (t_{INLET} + t_{OUTLET})$$

is then used to obtain the average tube thickness. The expression for tube weight is

$$W_T = W_{HEAT\ TRANSFER}\ (\bar{t}_T/t_{HT})$$

The tube geometry determined by the heat transfer analysis may not be adequate for tube inertia bending loads or minimum resonance requirements. The tube bending stress under a uniform 24 g force assuming simple support end conditions is

$$\sigma = 12\ \rho\ L_T^2/D(N_B + 1)^2 \qquad (6)$$

where L_T is the total length as determined by heat transfer calculations and N_B is the required number of baffles. Similarly, unsupported span affects tube resonant frequency. The equation for beam frequency is

$$f = \frac{a_n}{2\pi}\sqrt{\frac{EI}{\mu L^4}}$$

where $a_n = 9.87$ for a simply supported beam and μ is the mass per length. From the expression for tube moment of inertia

$$I = \pi D^3 t/8$$

and

$$\mu = \rho \pi D t/g$$

we have

$$f = \frac{0.08\ D(N_B + 1)^2}{L_T^2}\sqrt{\frac{Eg}{\rho}} \qquad (7)$$

Equations (6) and (7) therefore determine the minimum number of baffles required to support the tubes for inertia loads.

2. Baffle Weight ($N_B \geq 1$)

Baffle thickness is determined from the governing size required for no-flow pan pressure load (see below) and tube inertia load at 24 g. The baffle thickness required to support the no-flow pan membrane force, assuming a 1.5 factor for additional stresses is

$$t = 1.5\ p_o\ L_T/(N_B + 1)\sigma_{all} \tag{8}$$

Since the baffles support the tubes they must sustain a 24-g tube load. The required baffle thickness for tensile loading is

$$t = 24\ W_T/L_N\ \sigma_{all}(N_B + 1) \tag{9}$$

The maximum baffle thickness determined from Equations (8) and (9) determines baffle weight. The weight is expressed by

$$W_B = \rho N_B L_N L_F \bar{t}_B$$

3. Header Weight

The weight of the headers, consisting of a flat plate and semicircular caps is determined for inertia loads and internal pressure. The no-flow, outside flow length, and number of passes on the tube side are used from the heat transfer analysis. Tube and baffle weight from the above calculations is used for the inertia loads and resonance estimates. It is assumed that header thickness always exceeds cap thickness due to discontinuity stresses at the joints of the two parts. The minimum thickness for either section is assumed to be 0.025 in.

Cap wall thickness must be sufficient to withstand internal pressure. Considering the hoop stress of a cylinder and adding a 1.5 concentration factor for local bending, the required thickness is

$$t = \frac{1.5 p_i D}{2\sigma_{all}} = \frac{1.5 p_i}{\sigma_{all}}\left(\frac{L_F}{N_p}\right) \tag{10}$$

where the outside flow length, L_F, divided by one-half the number of passes, N_p, gives cap diameter.

The maximum inertia stresses occur when the loads act parallel to the tubes. The headers share the tube load equally with a cantilever span equal to 0.5 L_F. The average pressure per unit area at a 24 g amplification due to the tubes and baffles is

$$p = 24W_{TB}/2L_N L_F,\ \text{psi}$$

The expression for maximum bending stress is

$$\sigma = \frac{pL_N^2}{8Z} = \frac{9W_{TB}L_F}{L_N t^2}$$

or required thickness is

$$t = 3(W_{TB}L_F/L_N\sigma_{all})^{1/2} \qquad (11)$$

The header plate must be sized so that no resonances less than 50 Hz will occur. For a cantilever beam

$$f = 0.56\sqrt{\frac{EI}{\mu L^4}}$$

The average mass per unit area due to the tubes and baffles and the plate bending section moment of inertia are

$$I = t^3/12\ \mu = W_{TB}/2gL_FL_N$$

Combining, the required thickness of the header plate for a span of 0.5 L_F is

$$t = 14.4\ L_F(W_{TB}/L_N gE)^{1/3} \qquad (12)$$

4. <u>No-Flow Pans</u>

Pans are required on the no-flow sides to contain the gas outside the tubes. The pans are designed for the gas pressure load. In addition, a flow guide, considered to be part of the pan assembly, will be used to prevent bypass of the tubes. The guide will be considered as an unpressurized flat plate which must sustain inertia loads and avoid resonance vibrations.

The pan is assumed to be semicircular with diameter equal to the smaller of the unsupported tube length or flow length. A 1.5 factor is added to the hoop stress to account for joint pressure bending stresses, thermal stresses, and inertia stresses. The circumferential stress with the 1.5 factor, assuming the unsupported tube length governs, is

$$\sigma = 1.5p_oL_T/2t(N_B + 1)$$

The required thickness is

$$t = 0.75\ p_oL_T/\sigma_{all}(N_B + 1) \qquad (13)$$

The flow guide is considered to be a flat sheet so the bending stress for a 24 g load on a simply supported span equal to unsupported tube length gives a required thickness of

$$t = 18\ \rho\ L_T^2/\sigma_{all}\ (N_B + 1)^2 \qquad (14)$$

The minimum natural frequency limitation is obtained from the same equation used above for the tubes

$$f = 1.57 \sqrt{\frac{gE\ t^3\ (N_B + 1)^4}{12\ \rho t\ L_T^4}}$$

So the required thickness for a minimum of 50 Hz is

$$t = 110\left(\frac{L_T}{N_B + 1}\right)^2 \left(\frac{\rho}{Eg}\right)^{1/2} \qquad (15)$$

To account for longer spans where intermediate supports would be beneficial (while increasing complexity), the flow guide thickness was limited to the pan thickness obtained from Equation 13 or pan minimum acceptable thickness.

5. Support Beam

As shown in Figure 3-38, a support beam connects the mount points on either side of the unit. This beam is required to establish the boundary conditions used for the tubes and headers in the above analysis. The weight of the two rectangular box beams, added to the tubular core weight, reflects this need for header and tube support.

Each box beam is assumed to support one half of the weight of the tubes, headers, and no-flow pans for inertia loads and minimum resonance requirements. The box was assumed to have equal thickness sides with lengths equal to 1.5 times the diameter of the header caps. The required thickness for a 24 g inertia load on the core was based on fixed ended beam conditions since the brackets do not have to be placed at the extreme ends. Using a span equal to the flow length outside the tubes, the required thickness is

$$t = 0.063 L_N W_{TBHP} N_p^2 / \sigma_{all} L_F^2 \qquad (16)$$

where W_{THP} is the combined weight of tubes, headers, and pans.

The 50 Hz minimum resonance requirement also applies to the beam. The required wall thickness for this condition is

$$t = 3.06 L_N^3 N_p^3 W_{TBHP} / gEL_F^3 \qquad (17)$$

Weight Results Summary

Design procedures for obtaining tubular heat exchanger weights similar to the above were developed for several core models depending on flow geometry and heat transfer tube array. The following is a summary of weight results for various tubular heat source, recuperator, and waste heat exchangers including descriptions of the models to indicate the variety of containment concepts employed for these tubular units. Design conditions for the heat exchangers are shown in Table 3-7.

1. Recuperator

Rectangular tubular geometries shown in Figure 3-39 were investigated and the weight results are presented in Table 3-8a. The two tube bank array shown in Figure 3-39 was utilized to obtain a compact unit. The weight and thickness equations in Table 2-6 were modified to accommodate the difference between the Figure 3-38 and 3-3° geometries.

Recuperators enclosed with a circular shell with length equal to tube length were considered as shown in Figure 3-40. Multipass of either the low or high pressure gas occurs outside the tubes, i.e., on the shell side. An expansion joint would be required in this design to permit tube movement relative to the shell but was not incorporated in the analysis. Core diameter for structural analysis was roughly the mean between the no-flow length and the equivalent diameter for a circular with area equal to $(L_N L_F)$. Design equations for thickness and weight of the tubes and baffles (for flow distribution and/or support), flat circular header plates, and cylindrical shell were developed. The resulting weights for a limited number of cases for high-pressure gas outside the tubes is presented in Table 3-8b. Table 3-8c shows the results for the same four cases with the high-pressure gas inside the tubes. The latter case generally results in the lighter design partly because of the dependence of the heavy shell on gas pressure.

2. Waste Heat Exchanger

Tubular waste heat exchangers of rectangular type having multipass flow on the tube side were analyzed using the model in Figure 3-38. The support beams are placed between the two cores in this unit which is redundant on the liquid side (see Figure 3-38). The weight results for four waste heat exchanger cases are summarized in Table 3-9a.

3. Heat Source Heat Exchanger

Heat source heat exchangers of the rectangular tubular type were analyzed utilizing a single bank of tubes rather than the folded arrangement in Figure 3-40. Equations similar to those in Table 3-6 were used to obtain weights. The results for several cases are shown in Table 3-10. These results were used to estimate weights of other designs of the type by using the appropriate ratio of tube weight (from heat transfer analysis) to total core weight.

TABLE 3-7

DESIGN CONDITIONS

a. RECUPERATOR

Case	Temperature, °F		Gas Pressure, psi	
	Inlet	Outlet	Outside Tubes	Inside Tubes
IV	1229	487	125	228
IX	1203	487	56	105
IV-A	1229	487	375	684
IX-A	1203	487	163	304

b. WASTE HEAT EXCHANGER

Case	Temperature, °F		Pressure, psi	
	Inlet	Outlet	Gas	Liquid
IV	487	140	125	75
IX	487	140	56	75
IV-A	487	140	375	75
IX-A	487	140	163	75

C. HEAT SOURCE HEAT EXCHANGER

Case	Temperature, °F				Pressure, psi	
	Inlet		Outlet			
	Tubes, Headers	Pans, Beams	Tubes, Headers	Pans, Beams	Gas	Liquid
IV	1570	1200	1670	1600	228	30
IX	1570	1200	1670	1600	105	30
IV-A	1570	1200	1670	1600	684	30
IX-A	1570	1200	1670	1600	304	30

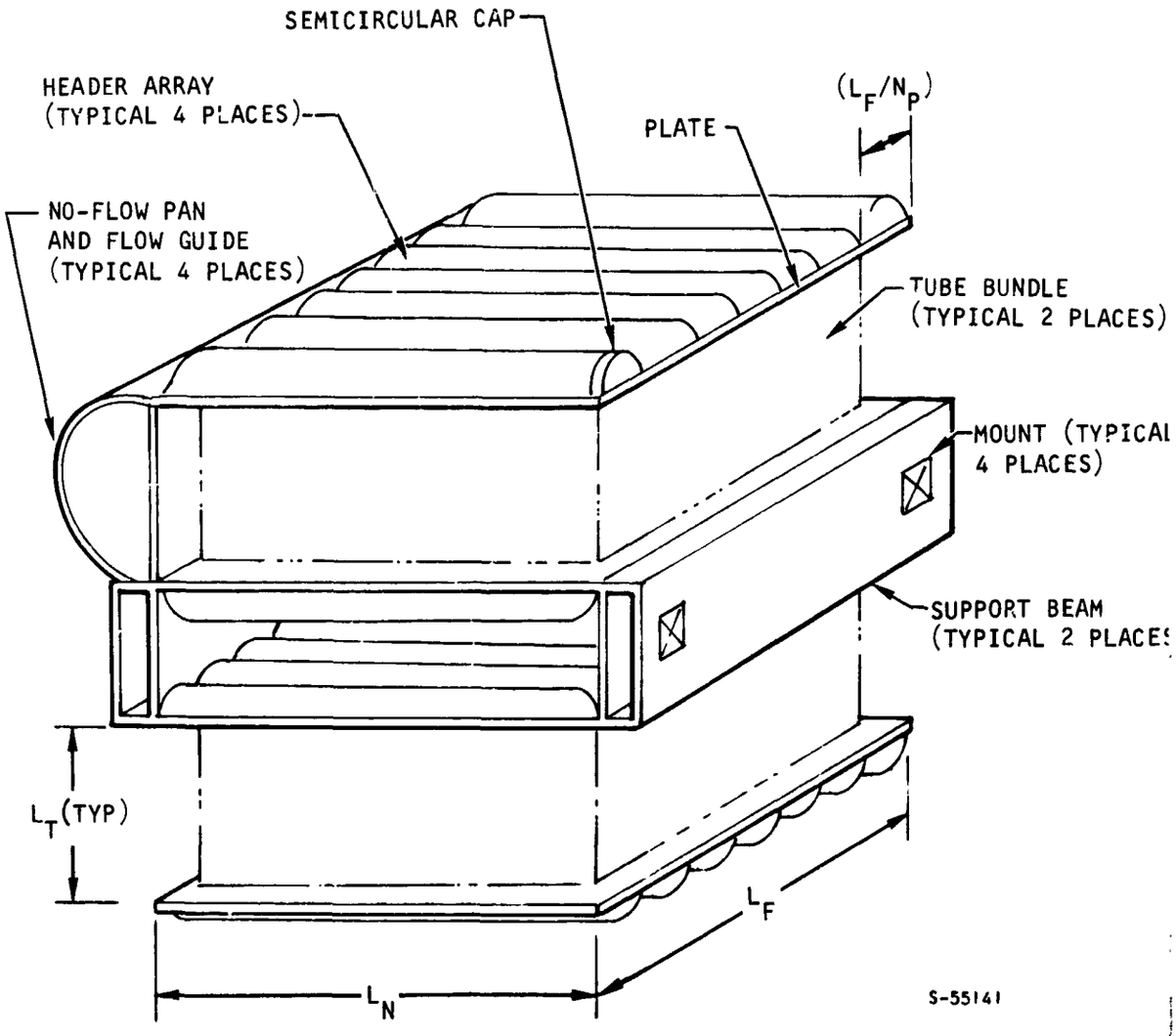

Figure 3-39. Rectangular Tubular Recuperator Geometry

TABLE 3-8

TUBULAR RECUPERATOR WEIGHT SUMMARY

a. RECTANGULAR TUBULAR MULTIPASS ON TUBE-SIDE (FIGURE 3-39)

Case	ΔP/P, Percent	L_N^*, in.	L_F, in.	L_T, in.	Item Weights, lb				Core Weight, lb
					Tubes and Baffles	Headers	No-Flow Pans	Support Beams	
IV	1	60	27	10.4	510	250	70	30	860
	2	40	30	10.9	410	180	90	30	710
	3	31	32	11.8	390	150	110	30	680
IX	0.5	80	75	24.2	2420	1740	250	530	4940
	1	52	82	26.3	1890	710	320	370	3290
	2	44	87	21.9	1380	660	250	310	2600
IV-A	1	34	38	13.0	1040	870	190	90	2190
	2	22	43	15.0	850	720	260	100	1930
	3	17	46	16.2	750	640	320	100	1810
IX-A	0.5	25	95	45	3000	1760	1270	600	6630
	1	17	104	48	2420	1450	1320	580	5770
	2	11	116	53	1920	1200	1840	640	5600

$^*L_N = \frac{1}{2}(L_N)_{HEAT\ TRANSFER}$, Two Banks of Tubes

b. CIRCULAR TUBULAR, HIGH PRESSURE GAS OUTSIDE THE TUBES (FIGURE 3-40)

Case	ΔP/P, Percent	L_N, in.	L_F, in.	L_T, in.	N_P	N_B	Item Weights, lb			Core Weight, lb
							Tubes and Baffles	Headers	Shell	
IV	2	48	15	77	8	8	710	760	1390	2860
IX	2	46	23	375	8	24	3460	1380	3180	8020
IV-A	2	25	10	104	8	16	620	240	1730	2590
IX-A	2	50	16	145	8	16	2030	1180	3480	6690

c. CIRCULAR TUBULAR, HIGH PRESSURE GAS INSIDE THE TUBES (FIGURE 3-40)

Case	ΔP/P, Percent	L_N, in.	L_F, in.	L_T, in.	N_P	N_B	Item Weights, lb			Core Weight, lb
							Tubes and Baffles	Headers	Shell	
IV	2	26	11	260	8	16	620	430	900	1950
IX	2	62	13	350	8	24	2590	3130	2040	7760
IV-A	2	19	7	220	10	20	350	190	1110	1650
IX-A	2	54	8	240	8	24	1860	1950	2830	6640

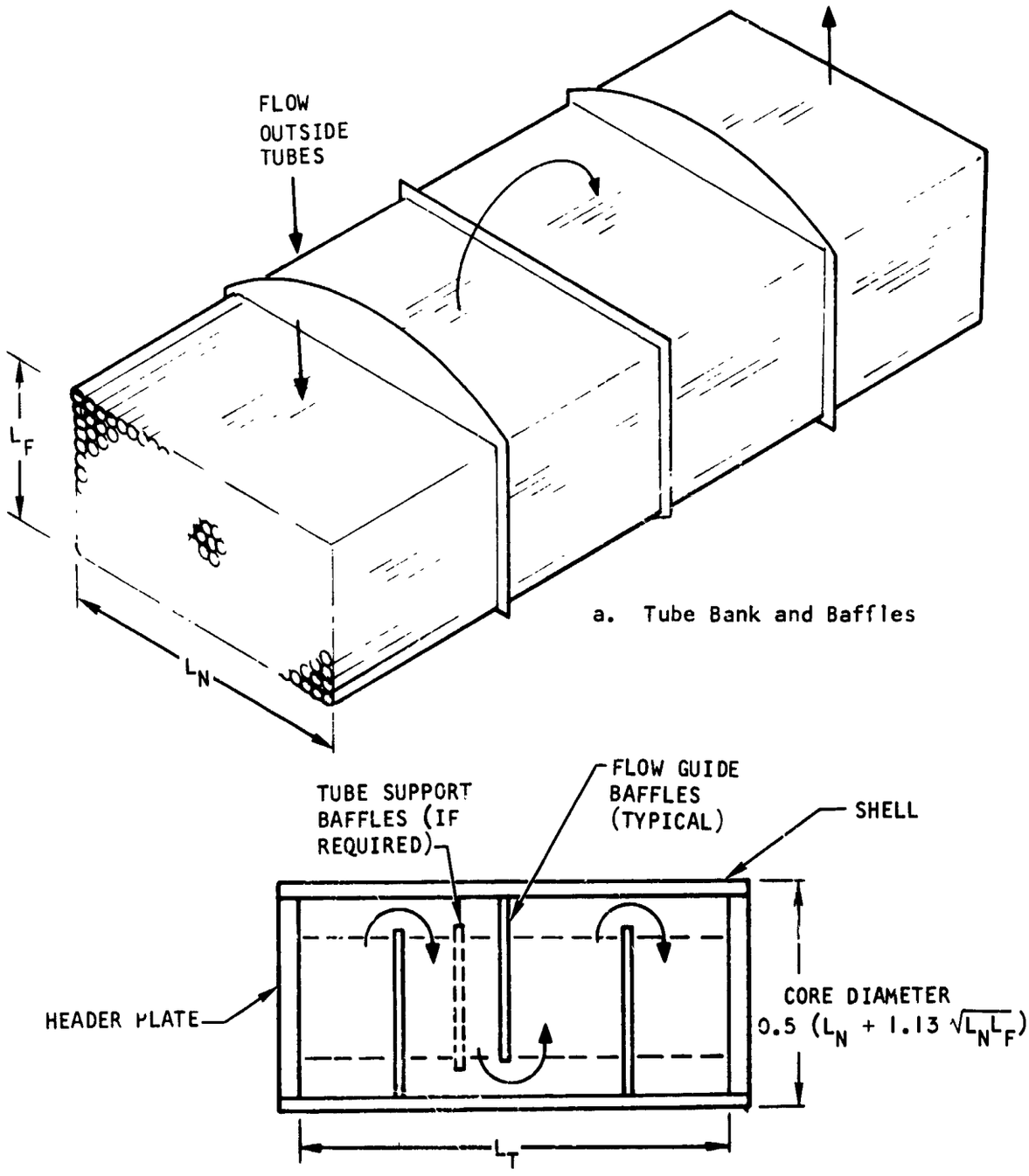

Figure 3-40. Circular Tubular Recuperator Geometry

TABLE 3-9

WASTE HEAT EXCHANGER WEIGHT SUMMARY
(2 CORES FOR REDUNDANCY, FIGURE 3-38)

a. Core Dimensions and Weight

Case	$\Delta P/P$, Percent	L_N, in.	L_F,(1) in.	L_T, in.	N_P	Item Weights, lb				Core Weight, lb
						Tubes, Liquid and Baffles	Headers	No-Flow Pans	Support Beams	
IV	0.75	28	34	24	40	800	370	70	40	1280
IX	0.75	30	16	52	30	870	130	40	50	1250
IV-A	0.75	15	44	34	40	900	410	360	20	1690
IX-A	0.75	23	28	38	40	370	260	90	30	1250

(1) $L_F = 2\ (L_F)_{HT}$ and $N_P = 2\ (N_P)_{HT}$ since there are two cores

TABLE 3-10

HEAT SOURCE HEAT EXCHANGER WEIGHT SUMMARY
(GEOMETRY SIMILAR TO FIGURE 3-40)

Tube Type	Case	N_P	$\Delta P/P$, Percent	L_N, in.	L_F, in.	L_T, in.	Item Weight, lb				Core Weight, lb
							Tubes, Liquid and Baffles	Headers Weight, lb	No-Flow Pans	Support Beams	
SFT-17*	IV	1	0.25	18.3	2.5	16.5	55	6	9	3	73
		1	0.50	14.0	3.3	16.7	56	6	12	4	78
		2	1.00	12.0	3.7	14.2	41	7	23	5	76
		2	0.5	12.5	2.9	17.5	46	3	12	1	62
	IX	1	0.5	19.1	2.1	19.3	53	8	6	2	69
	IV-A	1	0.5	11.7	10.8	5.8	50	47	45	12	154
		2	0.5	10.7	10.8	4.9	39	30	38	2	109
	IX-A	1	0.5	15.7	3.7	13.2	50	11	24	5	90
SB125100	IV	2	0.5	15.9	2.8	22.4	116	8	22	1	147

PRELIMINARY CONFIGURATION STUDY

A brief study was conducted to examine various configurations for the HXDA/TAC. In the absence of an installation requirement the arrangement of the HXDA components is somewhat arbitrary. Figures 3-41 through 3-47 indicate some of the possible configurations of the HXDA components. These configurations employ heat exchanger designs based on the Case IV conditions. The most compact of these configurations appears to be configuration 2, which is similar to the current Brayton cycle units. As shown in these sketches, the heat source heat exchangers are located approximately 20 ft from the rest of the Brayton cycle equipment.

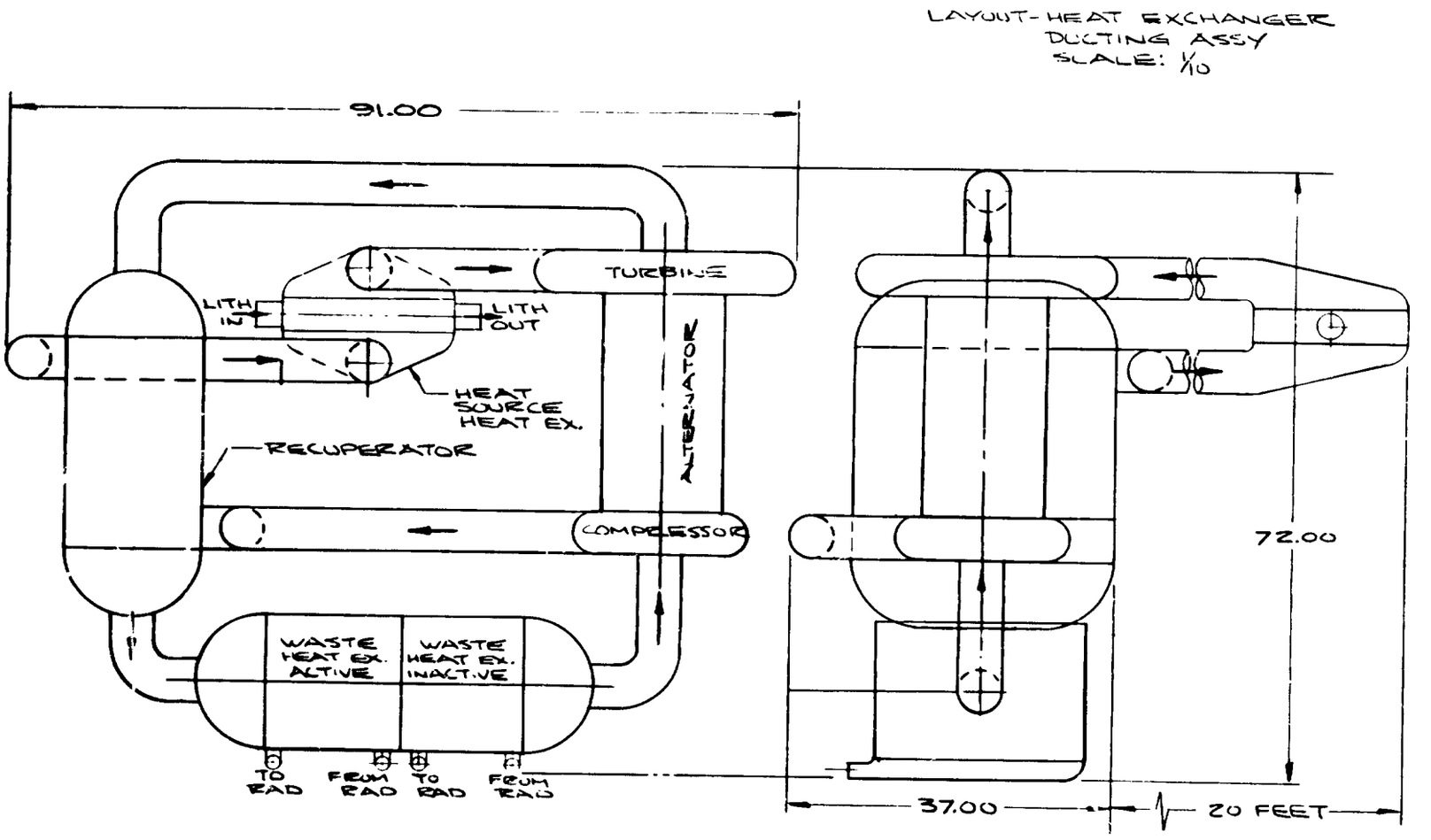

Figure 3-41. HXDA, Preliminary Configuration I

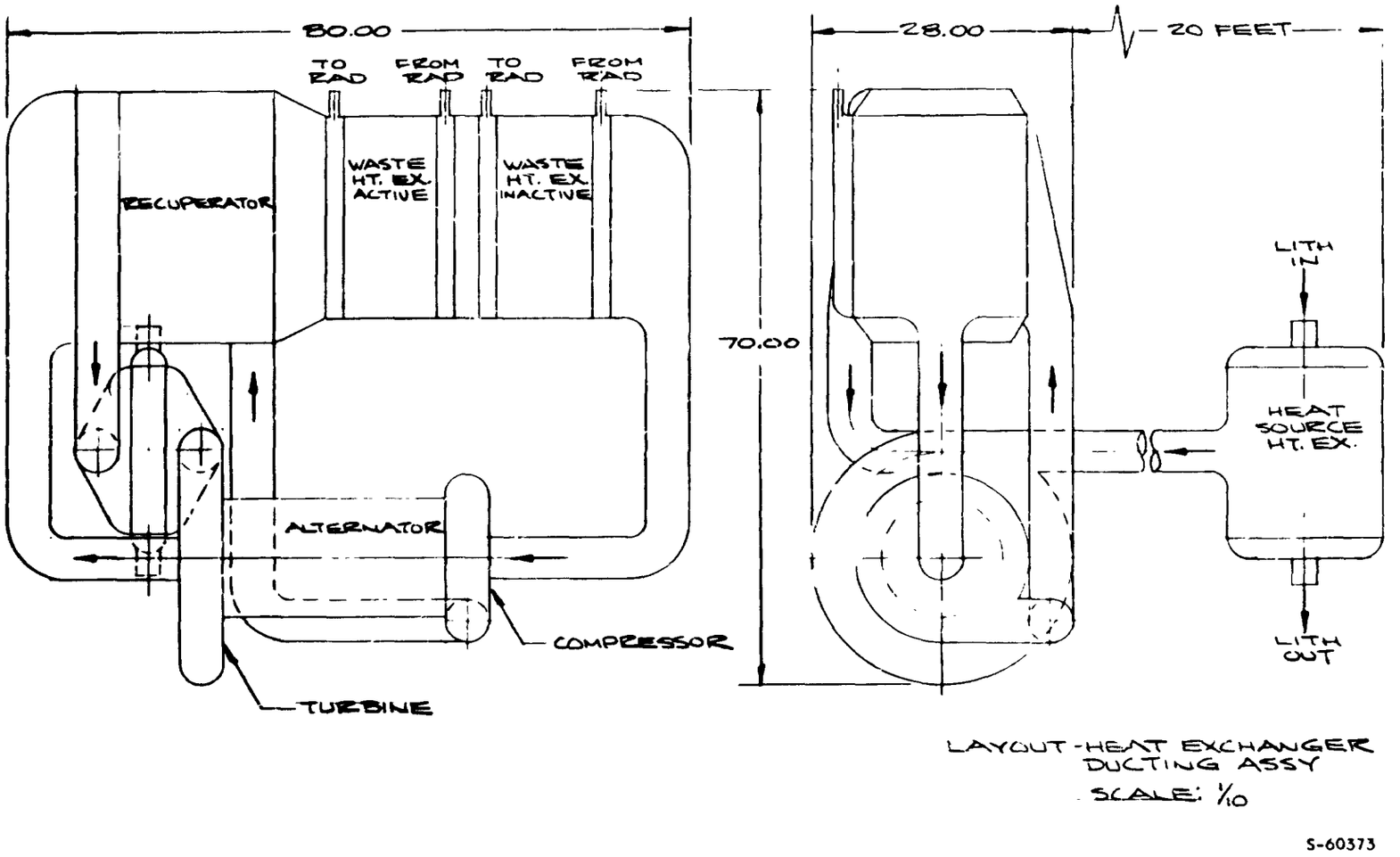

Figure 3-42. HXDA, Preliminary Configuration 2

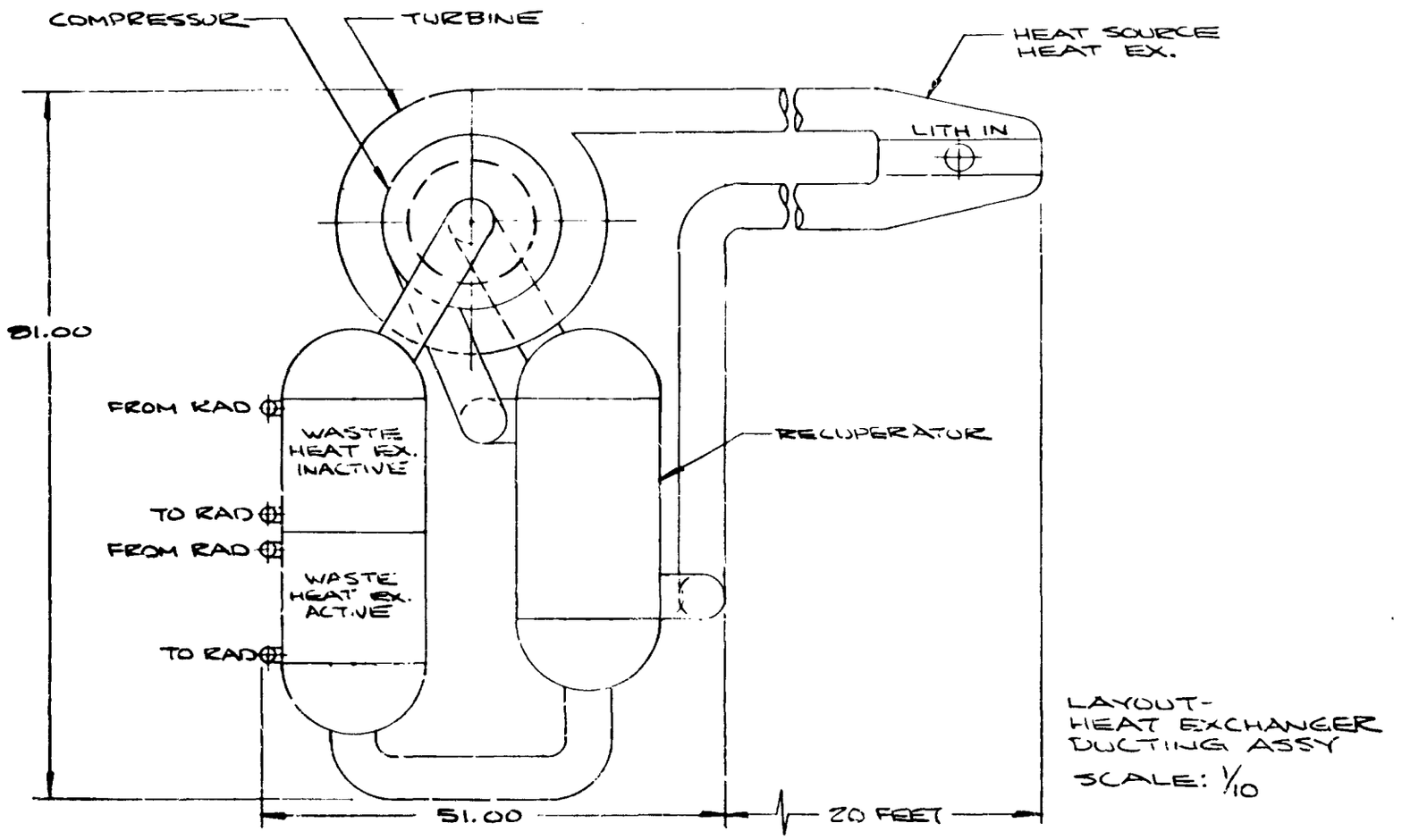

Figure 3-43. HXDA, Preliminary Configuration 3

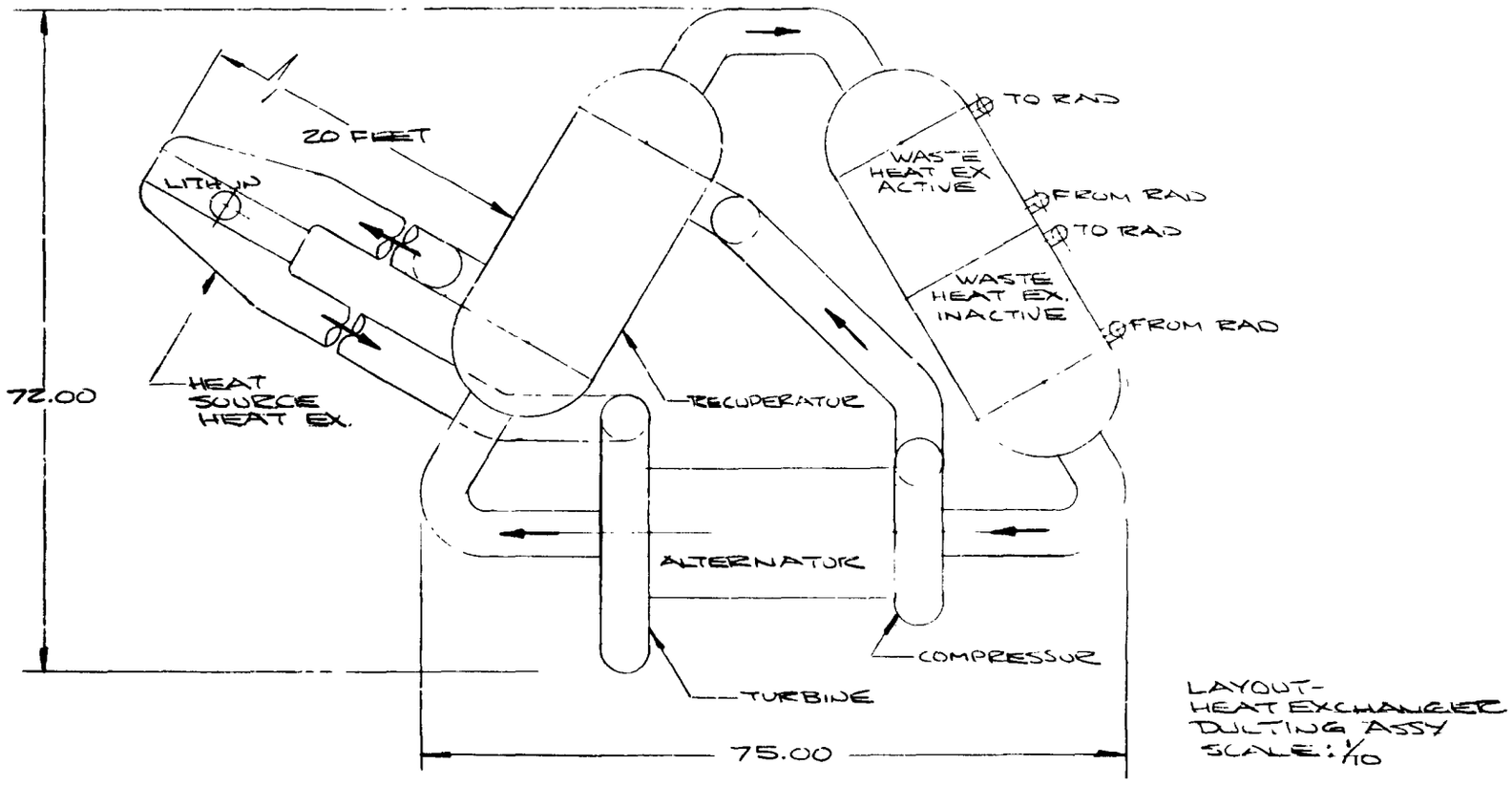

S-60375

Figure 3-44. HXDA, Preliminary Configuration 4

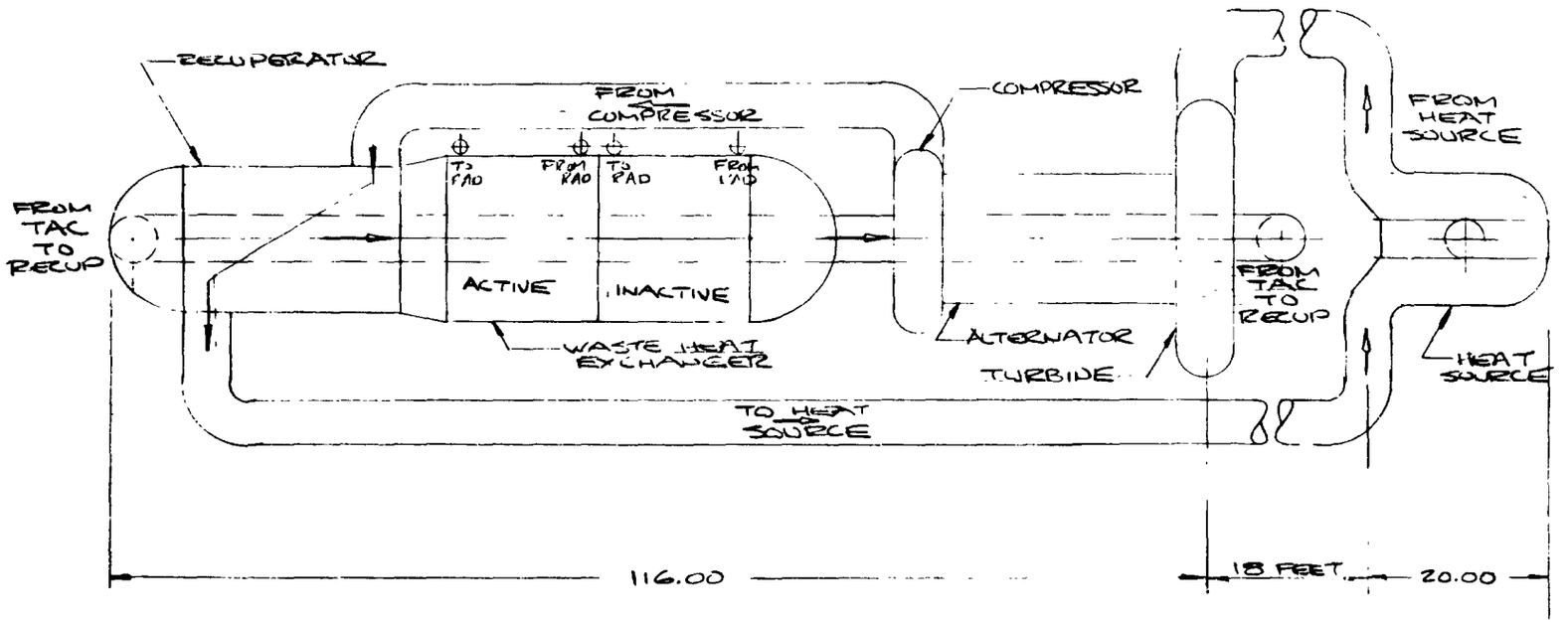

LAYOUT-
HEAT EXCHANGER
DUCTING ASSY
SCALE: 1/10

S-60376

Figure 3-45. HXDA, Preliminary Configuration 5

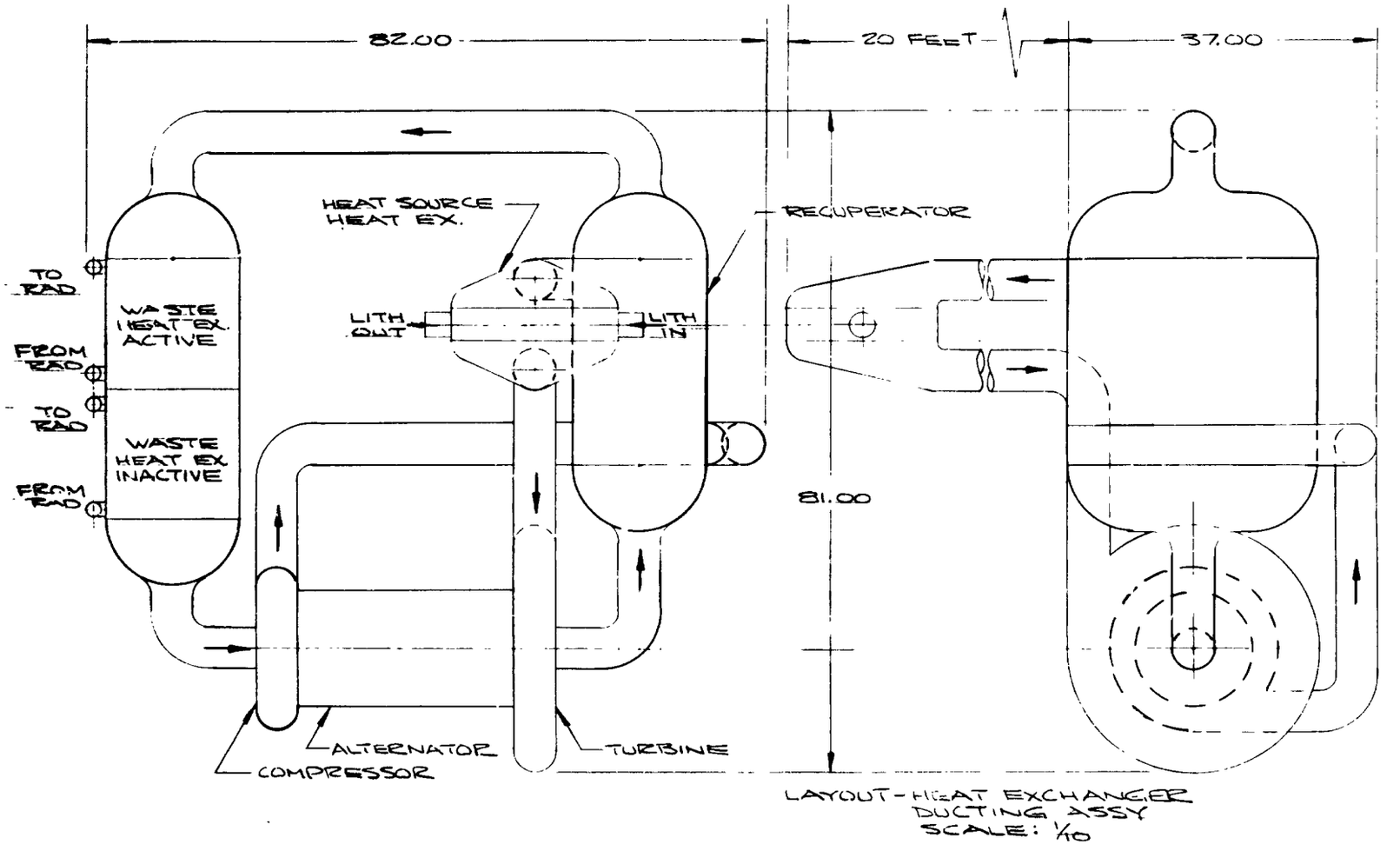

Figure 3-46 HXDA, Preliminary Configuration 6

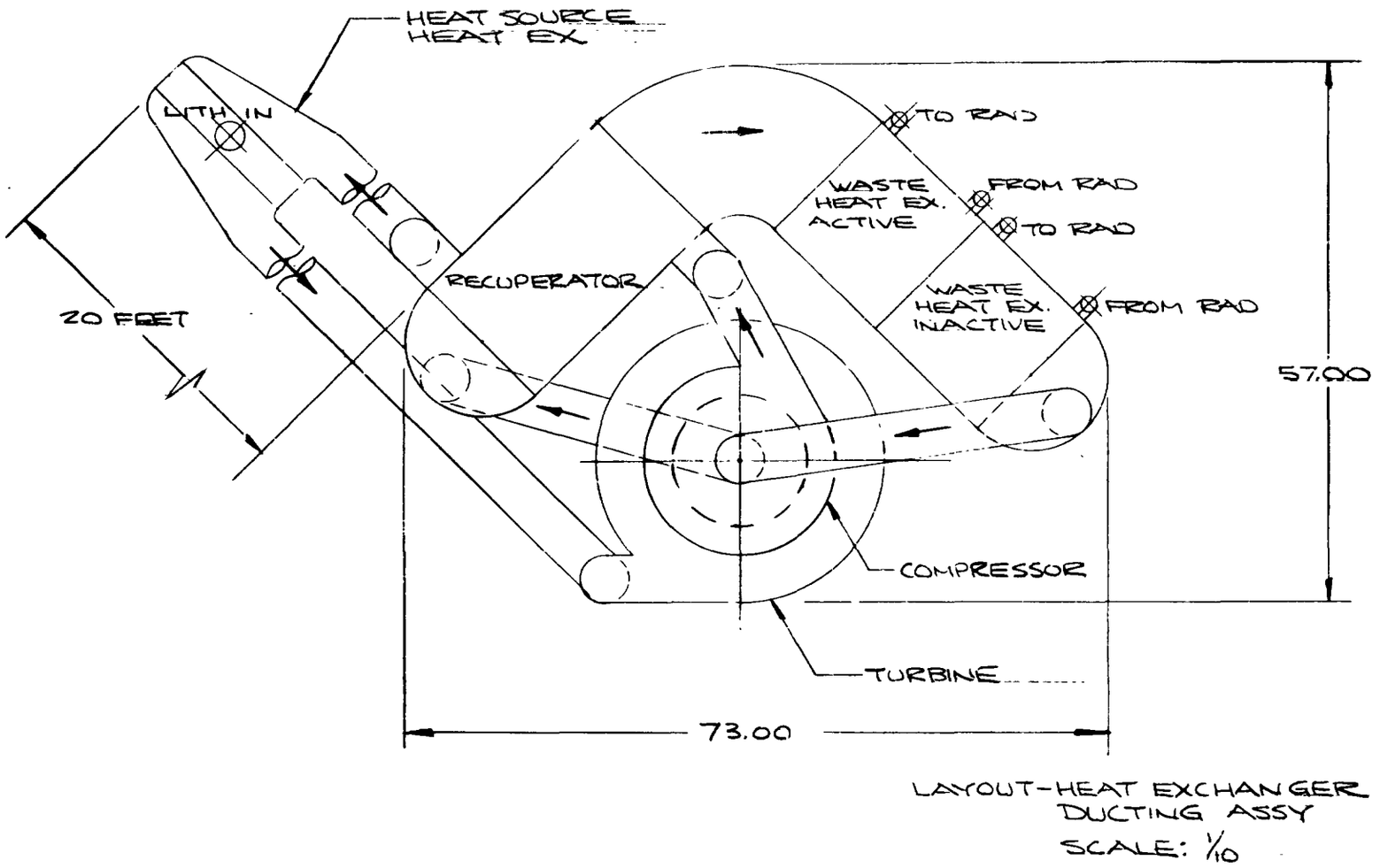

Figure 3-47. HXDA, Preliminary Configuration 7

SYSTEM OPTIMIZATION STUDY

Figure 3-48 is a curve showing the optimization of the pressure drop split between recuperator and waste heat exchanger for Case IX. The plate-fin matrix was selected for both the recuperator and waste heat exchangers. The solid lines in Figure 3-48 represent the variation of total weight with total fractional pressure drop for fixed values of the waste heat exchanger fractional pressure drop. The dashed lines are the loci of minimum-weight combinations and thus represent optimum variations of the pressure drop split.

Based on Figure 3-48, a selection of components was made for the Case IX system. Of the total 4-percent fractional pressure drop available to the HXDA and HSHX, an allowance of 1.25 percent was made for the ducting, and the heat source heat exchanger was allotted 0.25 percent (an actual minimum-weight split would result in somewhat less than 0.25 percent in the HSHX). With 2.5 percent remaining for the recuperator and waste heat exchanger, Figure 3-48 indicates an optimum split of approximately 1 percent for the waste heat exchanger and 1.5 percent for the recuperator. With these pressure drops, the three heat exchanger designs are shown in Figure 3-49. A layout drawing of this system is shown in Drawing L198430.

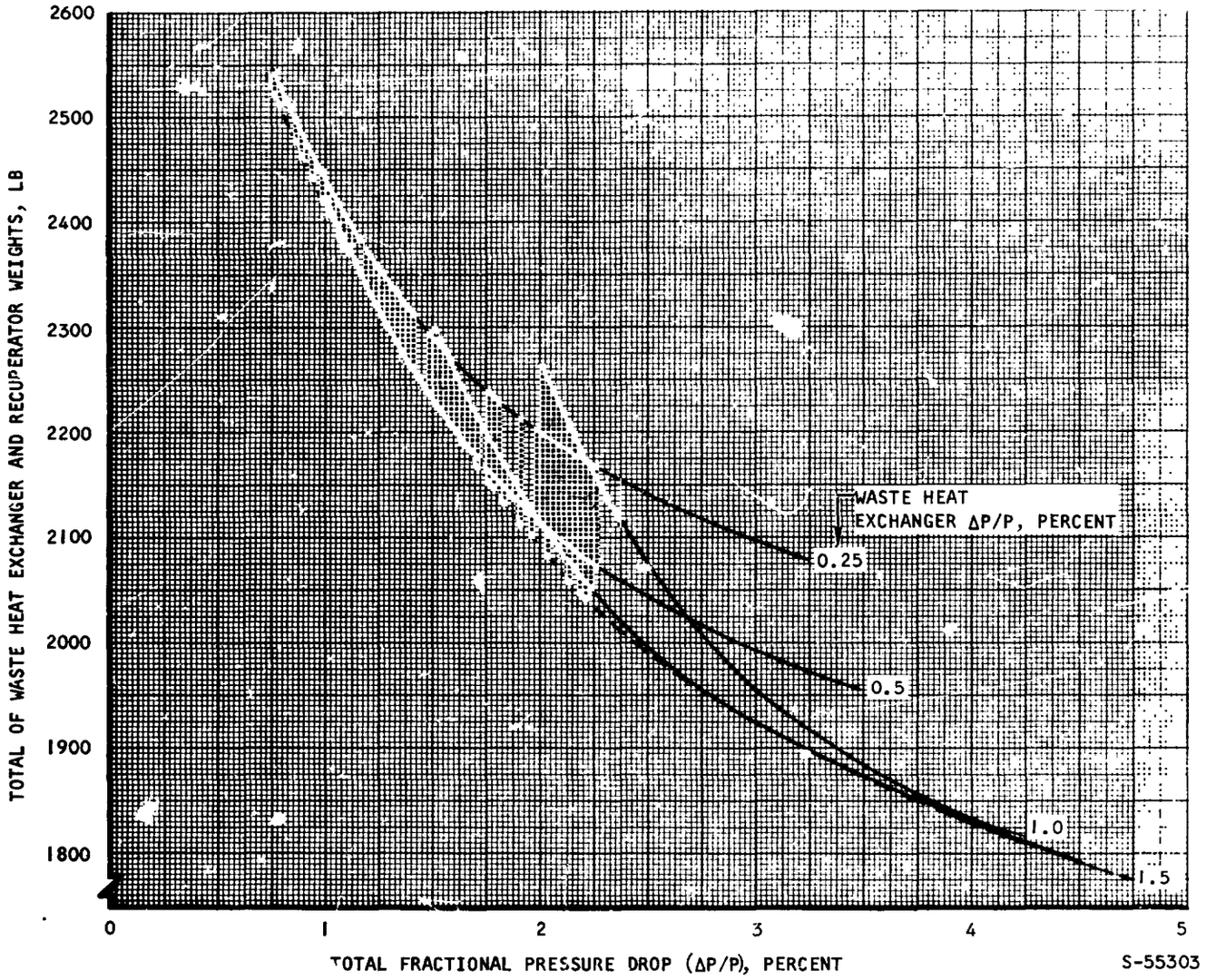

Figure 3-48. Waste Heat Exchanger/Recuperator Optimization for Case IX

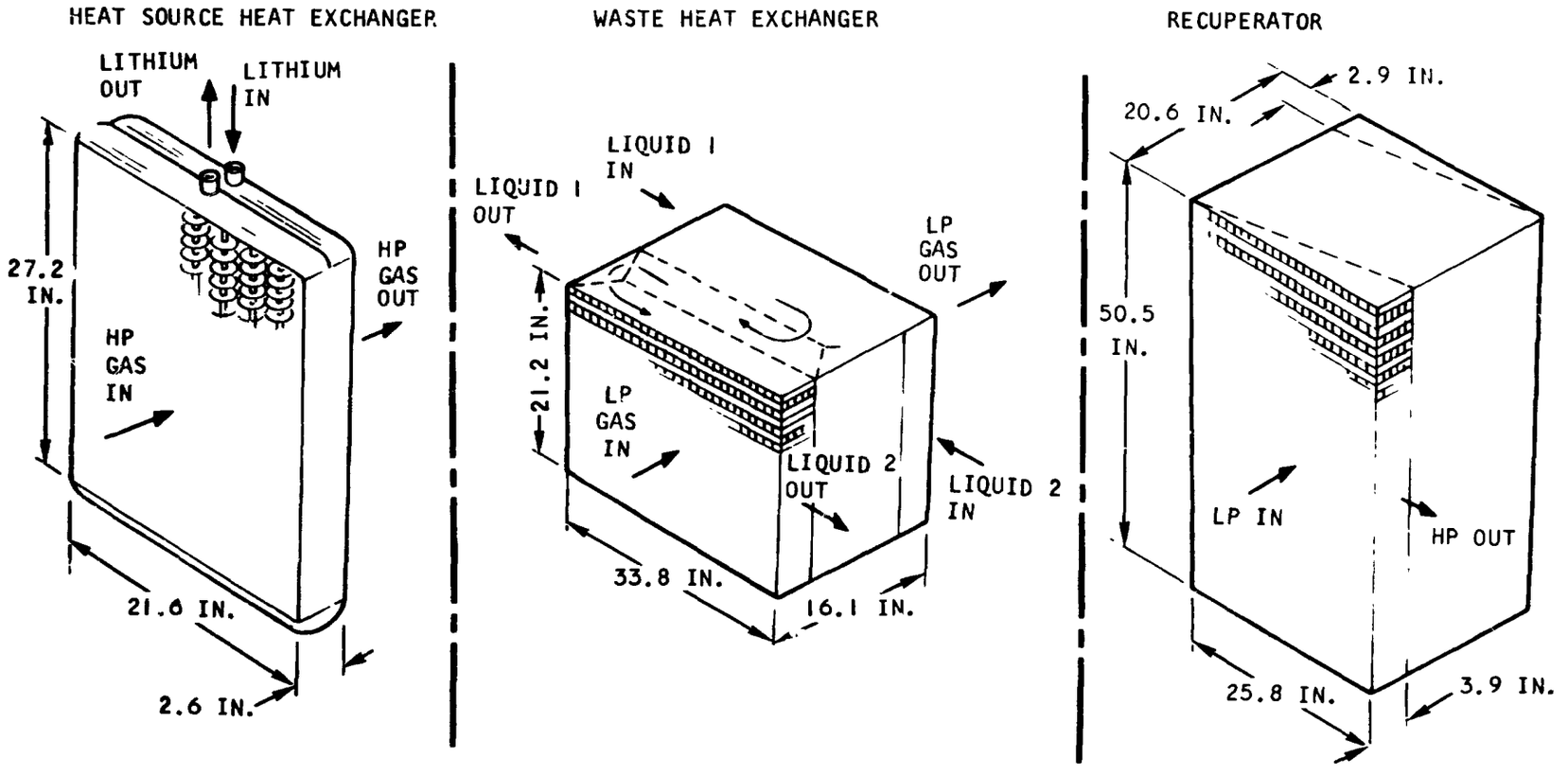

TYPE - FINNED TUBULAR

56 TUBES
2 PASSES
WEIGHT = 109 LB
$(\Delta P/P)_{gas}$ = 0.25 PERCENT

TYPE - PLATE-FIN

224 SANDWICHES
(112 EACH SIDE)
WEIGHT = 737 LB
$(\Delta P/P)_{gas}$ = 1.0 PERCENT

TYPE - PLATE-FIN

446 SANDWICHES
(223 EACH SIDE)
WEIGHT = 1280 LB
$(\Delta P/P)_{gas}$ = 1.5 PERCENT

S-60413

Figure 3-49. Case IX Heat Exchanger Designs

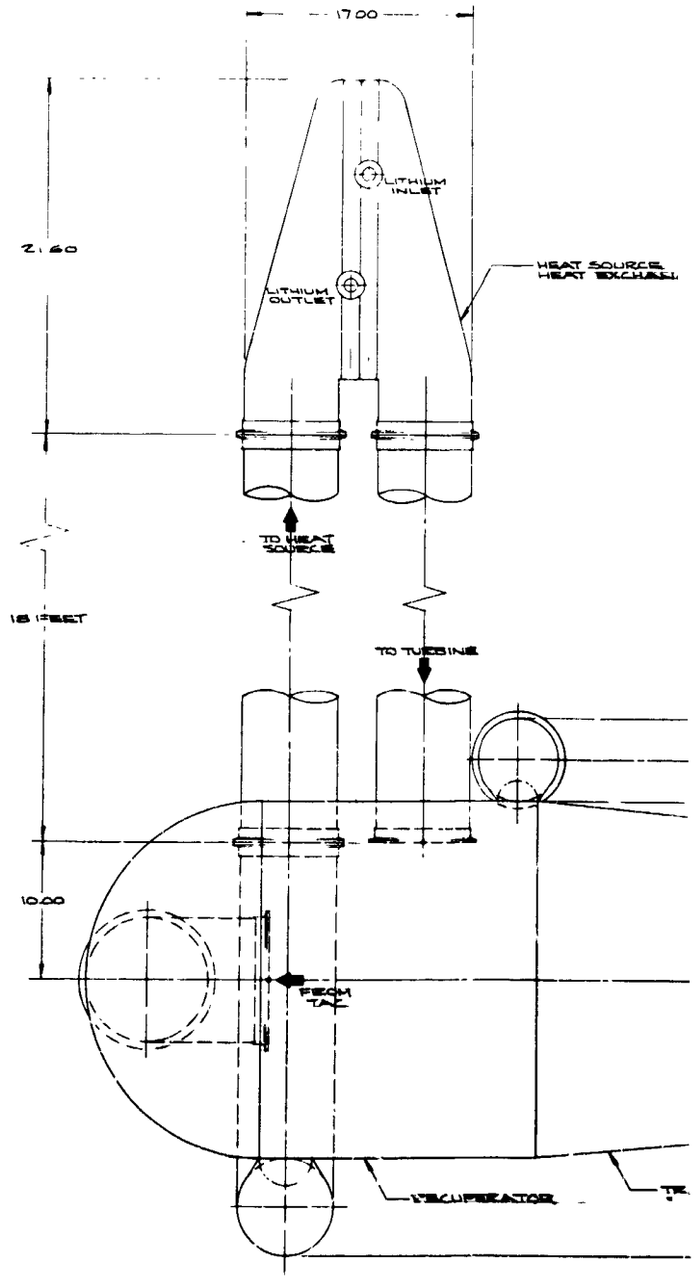

FOLDOUT FRAME 1

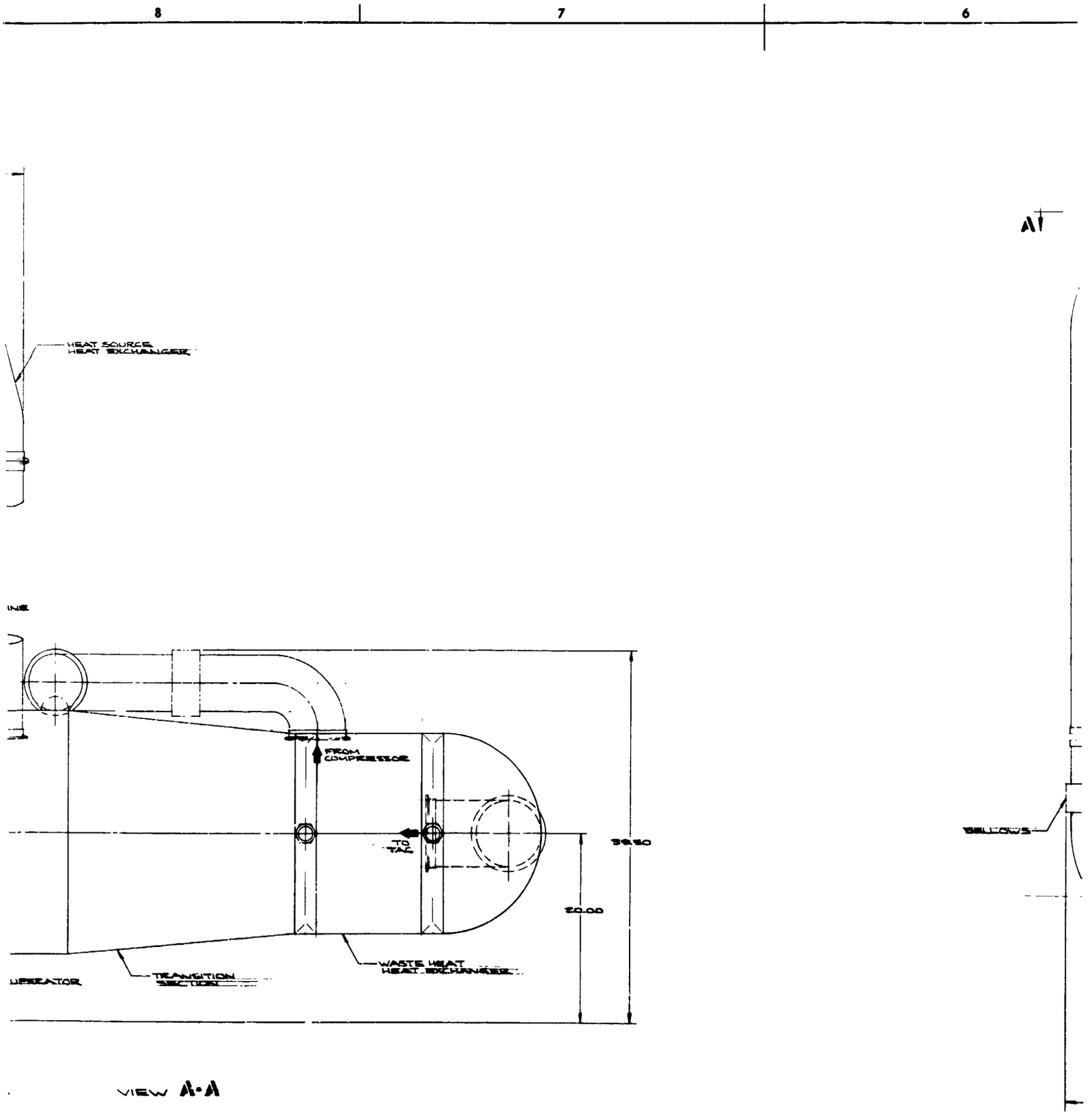

FOLDOUT FRAME 2

L 198430

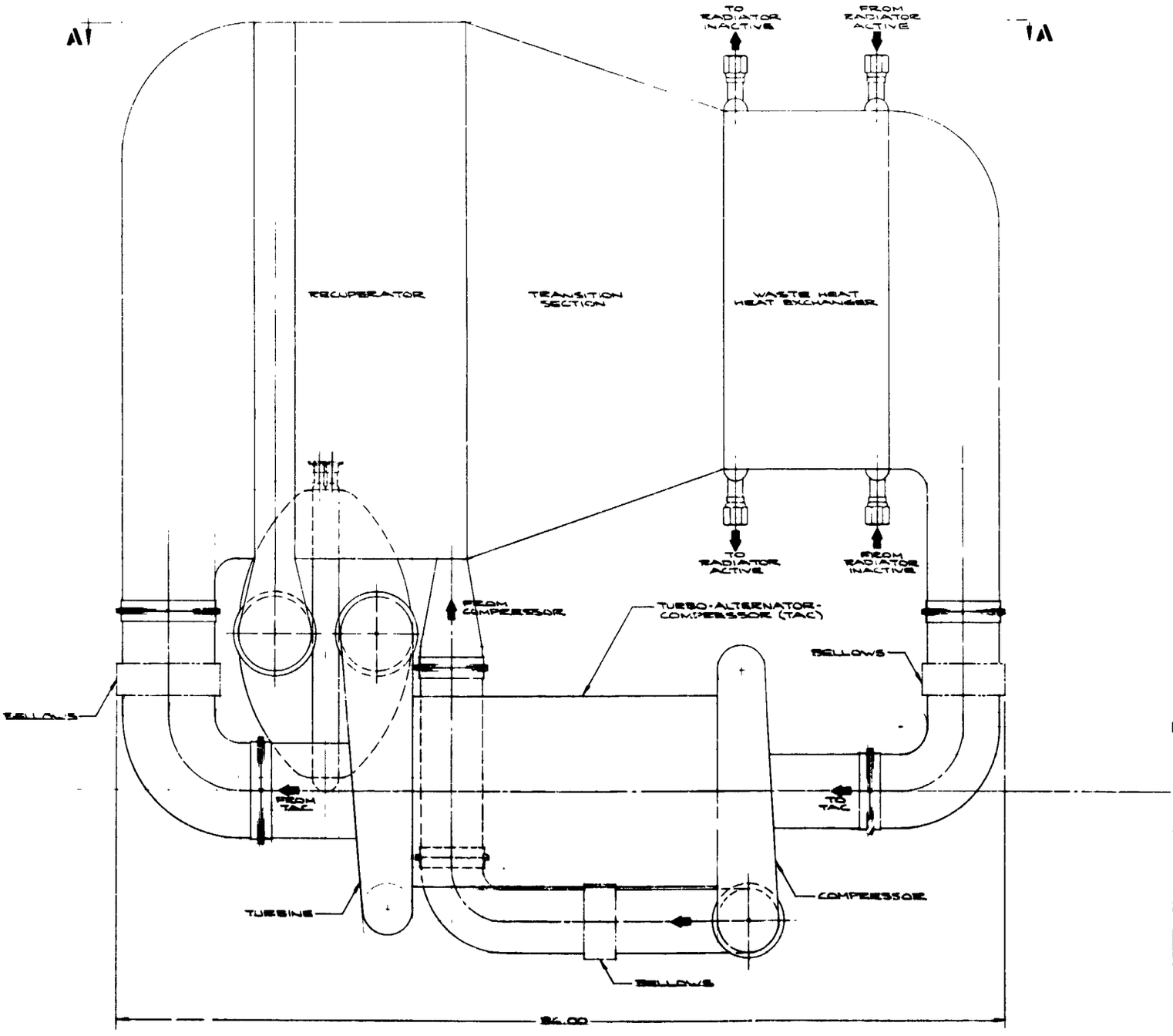

FOLDOUT FRAME 3

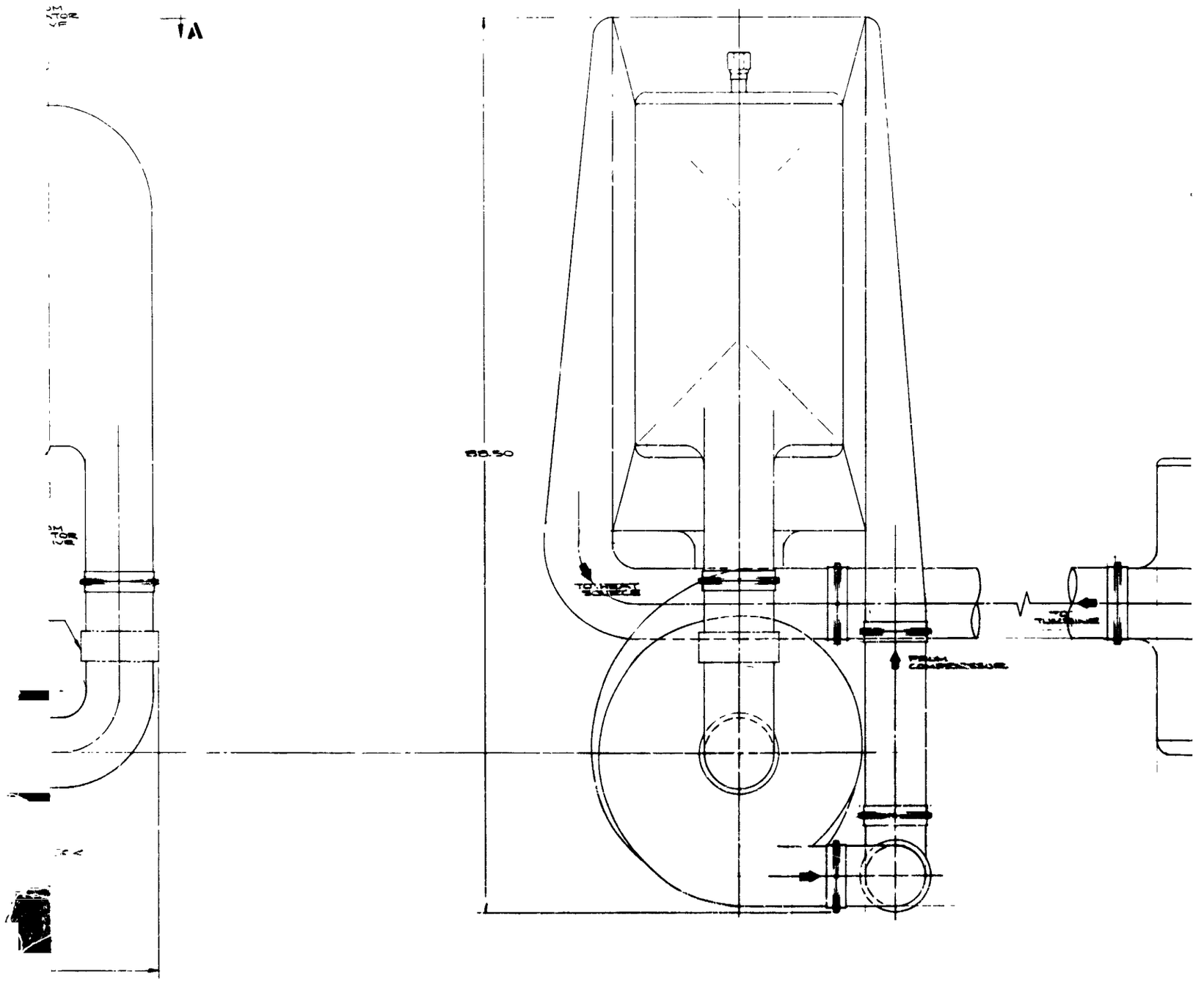

FOLDOUT FRAME 4

OUT FRAME 3

ALL FLANGES AND JOINTS BETWEEN MAJOR COMPONENTS ARE TP-WELD-ABLE FOR DIS-ASSEMBLY AND/OR REPLACEMENT.

L 198430

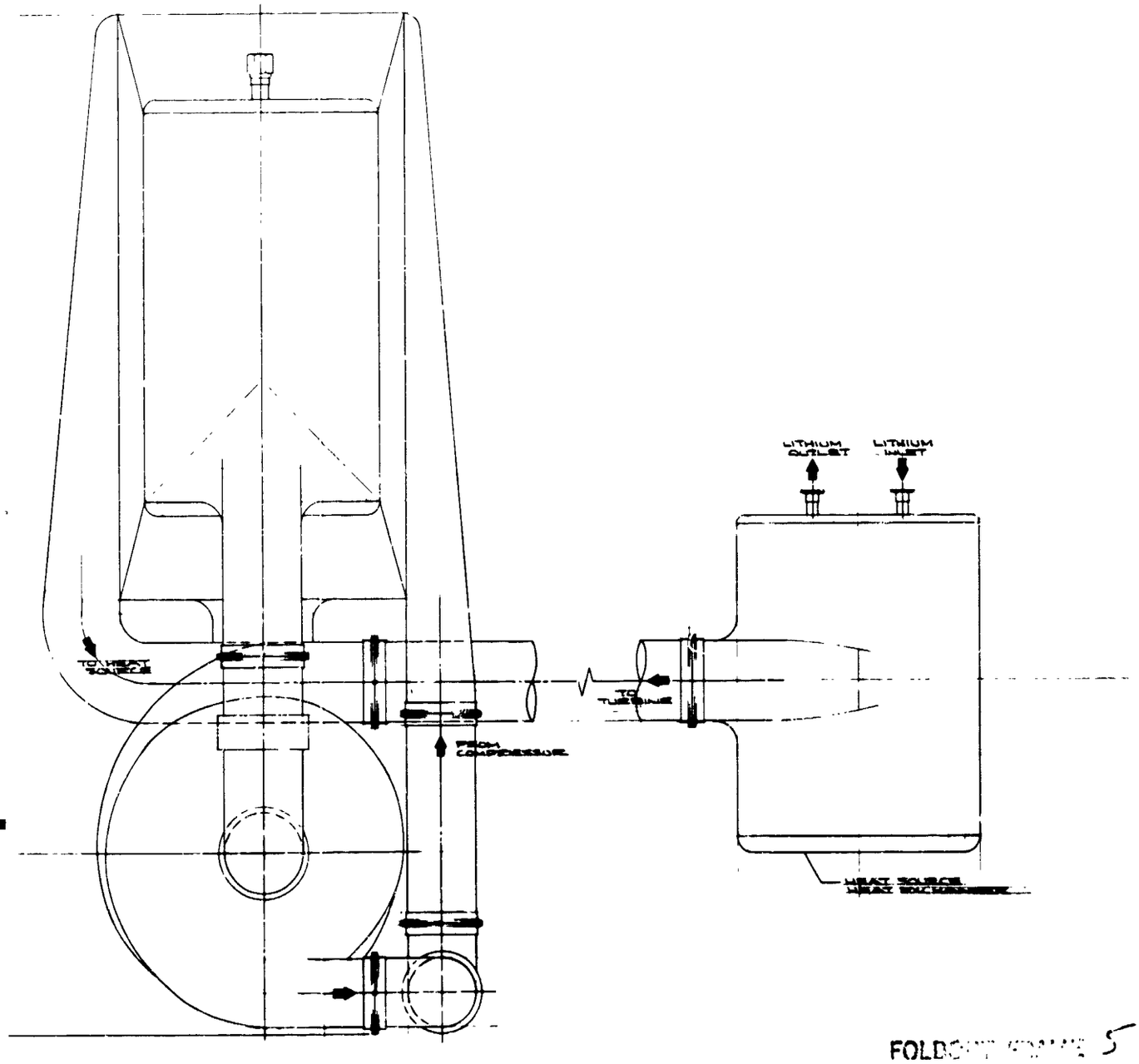

FOLDOUT FRAME 5

FOLDOUT FRAME 4

ALL FLANGES AND JOINTS BETWEEN MAJOR COMPONENTS ARE BRAZED-ABLE FOR DIS-ASSEMBLY AND/OR REPLACEMENT.

LAYOUT, HEAT EXCHANGER DUCTING ASSEMBLY CASE IA, TASK I

J 70210 L 198430

L 198430

95

SUMMARY AND RECOMMENDATIONS

From the results of the Task-1 studies presented in this section, AiResearch made the following recommendations of ground rules for the Task-2 studies, to the NASA-Lewis program office:

1. Heat Source Heat Exchanger
   - (a) T-111 tubes
   - (b) Cb fins
   - (c) 0.50-in. OD tubes
2. Recuperator
   - (a) Plate-fin
   - (b) Plate-fin and tubular precooler for high pressure cases that pure plate-fin cannot accommodate
3. Waste Heat Exchanger
   - (a) Plate-fin, Cu or Ni fins
   - (b) 15 percent UA margin required for variable C_p
4. Configuration
   - (a) Approach of Configuration 2 (Figure 3-42)

PRECEDING PAGE BLANK NOT FILMED

SECTION 4

DESIGN OF 24 BRAYTON CYCLE HXDA'S

	Page
INTRODUCTION	101
Component Design Approach	101
System Evaluation Approach	107
HEAT EXCHANGER DESIGN ANALYSIS	112
Recuperator	112
1. Counterflow Core Analysis	112
2. End Section Analysis	121
3. Summary	125
Heat Source Heat Exchanger	128
1. Advanced Systems	128
2. SNAP-8 Systems	128
Waste Heat Exchanger	142
Structural Design	153
1. Material Selection	153
2. Disk Fin Design	153
MANIFOLD AND DUCTING ANALYSIS	157
Assumptions	157
Equations	160
1. Duct Diameters	160
2. Pressure Drop	160
3. Weights	163
SYSTEMS ANALYSIS	166
Preliminary System Studies	166
System Optimization Computer Program	170
OPTIMIZATION OF THE 24 DESIGN POINT CASES	172

PRECEDING PAGE BLANK NOT FILMED

SECTION 4

DESIGN OF 24 BRAYTON CYCLE HXDA'S

INTRODUCTION

The objective of the Task 2 effort was the definition of optimum heat exchanger designs and configurations for the 24 Brayton Cycle design points of Figure 3-1. Of the recommended ground rules for Task 2 that evolved in the previous studies, all were accepted except for the waste heat exchanger. A tubular heat exchanger design approach was desired by NASA for the waste heat exchanger.

At this point in the program it was decided by NASA to reorient the study to also consider HXDA's which would be suitable for application to the SNAP-8 reactor power and temperature levels. As a result of this decision NASA redefined the 24 design points to be considered in Task 2 as shown in Figure 4-1. This matrix included 9 of the original cases and 15 cases involving the SNAP-8 reactor operating conditions. The major operating design conditions defined for each of the 24 design points are shown in Table 4-1. The design requirements that were imposed on the heat source heat exchanger and waste heat exchanger are shown in Table 4-2.

Component Design Approach

The studies conducted in Task 1 (Section 3 of this report) were reviewed in light of the revised system requirements, and the following heat exchanger design approaches were adopted for the various system heat exchangers.

- Recuperator (for both advanced systems and SNAP-8 systems)

  (a) Counterflow; plate-fin; rectangular offset fins; rectangular end sections

  (b) Recommended material:

  Hastelloy X - Advanced systems

  Hastelloy X - SNAP-8 high pressure systems

  347 SS - SNAP-8 low pressure systems

  (c) Fin thickness: determined by structural requirements

  (d) Plate thickness: 0.008-in. thick (adequate for all pressures)

  (e) Side plate thickness: 0.060 in. (adequate for all pressures)

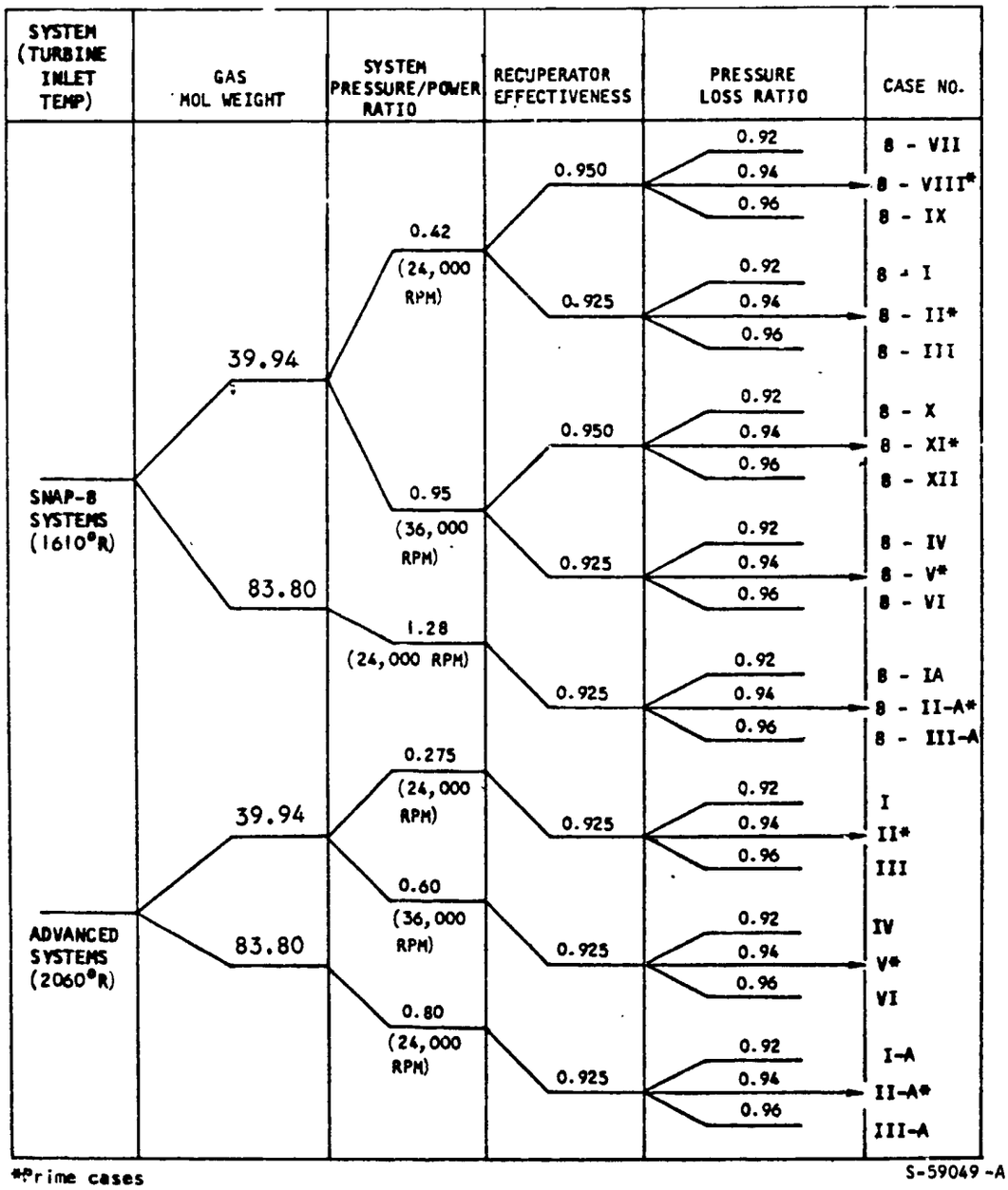

Figure 4-1. HXDA Study Matrix (Revised)

TABLE 4-1

SYSTEM OPTIMIZATION PARAMETERS FOR TASK 2

Working fluid: He - Xe mixture	Molecular Weight: 39.94					
Recuperator effectiveness, E	0.925					
Pressure-to-power ratio, (p_4/P_{SH})/RPM	0.275/24,000			0.60/36,000		
Problem designation (case number)	I	II	III	IV	V	VI
System loss pressure ratio, L	0.92	0.94	0.96	0.92	0.94	0.96
Recup. low-pressure (hot) side inlet temp (T_2), °R	1689	1676	1663	1689	1676	1663
Recup. low-pressure (hot) side inlet pressure (p_2), psia	57.3*	56.7*	56.1*	125.1*	123.8*	122.5*
Recup. high-pressure (cold) side inlet temp (T_5), °R	947	947	947	947	947	947
Recup. high-pressure (cold) side inlet pressure (p_5), psia	104.5	104.5	104.5	228.0	228.0	228.0
Working fluid mass flow rate (w), lb/sec	12.29	11.14	10.21	12.29	11.14	10.21
Lithium mass flow rate, lb/sec	6.56	6.11	5.75	6.56	6.11	5.75

Working fluid: He - Xe mixture	Molecular Weight: 83.80					
Recuperator effectiveness, E	0.925					
Pressure-to-power ratio, (p_4/P_{SH})/RPM	0.80/24,000			1.28/24,000		
Problem designation (case number)	I-A	II-A	III-A	8-IA	8-IIA	8-IIIA
System loss pressure ratio, L	0.92	0.94	0.96	0.92	0.94	0.96
Recup. low-pressure (hot) side inlet temp (T_2), °R	1689	1676	1663	1320	1310	1300
Recup. low-pressure (hot) side inlet pressure (p_2), psia	166.8*	165.0*	163.3*	225	223	220
Recup. high-pressure (cold) side inlet temp (T_5), °R	947	947	947	784	784	784
Recup. high-pressure (cold) side inlet pressure (p_5), psia	304.0	304.0	304.0	410	410	410
Working fluid mass flow rate (w), lb/sec	25.79	23.37	21.42	31.67	28.35	25.72
Lithium (heat source) mass flow rate, lb/sec	6.56	6.11	5.75	(1)	(1)	(1)

*Nominal value based on equal pressure losses for high and low pressure streams and a compressor pressure ratio of 1.9. Final value to be based on optimized pressure loss distribution.

(1) NAK

TABLE 4-I (Continued)

Working fluid: He - Xe mixture	Molecular Weight: 39.94					
Recuperator effectiveness, E	0.925					
Pressure-to-power ratio, (p_4/P_{SH})/RPM	0.42/24,000			0.95/36,000		
Problem designation (case number)	8-I	8-II	8-III	8-IV	8-V	8-VI
System loss pressure ratio, L	0.92	0.94	0.96	0.92	0.94	0.96
Recup. low-pressure (hot) side inlet temp (T_2), °R	1320	1310	1300	1320	1310	1300
Recup. low-pressure (hot) side inlet pressure (p_2), psia	74.0	73.3	72.5	167.0	165.0	163.0
Recup. high-pressure (cold) side inlet temp (T_5), °R	784	784	784	784	784	784
Recup. high-pressure (cold) side inlet pressure (p_5), psia	135.0	135.0	135.0	304	304	304
Working fluid mass flow rate (w), lb/sec	15.09	13.51	12.26	15.09	13.51	12.26
NAK (heat source) mass flow rate, lb/sec	—	—	—	—	—	—

Working fluid: He - Xe mixture	Molecular Weight: 39.94					
Recuperator effectiveness, E	0.950					
Pressure-to-power ratio, (p_4/P_{SH})/RPM	0.42/24,000			0.95/36,000		
Problem designation (case number)	8-VII	8-VIII	8-IX	8-X	8-XI	8-XII
System loss pressure ratio, L	0.92	0.94	0.96	0.92	0.94	0.96
Recup. low-pressure (hot) side inlet temp (T_2), °R	1320	1310	1300	1320	1310	1300
Recup. low-pressure (hot) side inlet pressure (p_2), psia	74.0	73.3	72.5	167.0	165.0	163.0
Recup. high-pressure (cold) side inlet temp (T_5), °R	784	784	784	784	784	784
Recup. high-pressure (cold) side inlet pressure (p_5), psia	135	135	135	304	304	304
Working fluid mass flow rate (w), lb/sec	15.09	13.51	12.26	15.09	13.51	12.26
NAK (heat source) mass flow rate, lb/sec	—	—	—	—	—	—

TABLE 4-2

HEAT SOURCE AND HEAT SINK HEAT EXCHANGER DESIGN REQUIREMENTS

HEAT SOURCE HEAT EXCHANGER	SNAP-8 Systems	Advanced Systems
1. Hot Fluid	NAK	Lithium
2. Inlet Temperature	1625°R	2130°R
3. Exit Temperature	1455°R	2030°R
4. Max. Pressure Drop (Hot Fluid)	5 psi	5 psi
5. Gas Outlet Temperature	1610°R	2060°R
6. Hot Fluid Pressure	80 psi	30 psi
WASTE HEAT EXCHANGER		
1. Effectiveness	0.95	0.95
2. Coolant	Dow Corning 200 (2CS)	Humble Fluid 3152
3. Coolant Pressure Drop	10 psi	10 psi
4. Coolant Pressure	75 psi	75 psi
5. Gas Outlet Temperature	580°R	700°R
6. Capacity-Rate Ratio	0.90	0.90

- Waste heat heat exchanger (for both advanced systems and SNAP-8 systems)

  (a) Tube type (0.156-in. tube OD; 0.008-in. wall thickness)

  (b) Finned tubes (347 stainless steel tubes; 0.003-in. thick copper fins; 30 fins/in.)

  (c) Tube matrix

  Outside: SFT-18*(0.366-in. tube spacing; 0.183-in. row spacing; 0.234-in. fin diameter)

  Inside: flap turbulator (0.005 in. thick)

  (d) Pressure drop: 10.0 psi (liquid)

  (e) Eight-pass cross-counterflow on liquid side

  (f) Folded on gas side when required

  (g) Two independent redundant cores

- Heat source heat exchanger (advanced systems)

  (a) Tube type (0.50 in. tube OD; tantalum T-111 tubes; 0.02-in. wall thickness)

  (b) Finned tubes; 30 fins/in.; columbium fins

  (c) Tube matrix

  Outside: SFT-17* (1.145-in. tube spacing; 0.813-in. row spacing; 0.942-in. fin dia)

  Inside: plain tubes

  (d) Pressure drop: ~ 0.5 psi (liquid)

  (e) Two-pass on lithium side

  (f) Located remotely from heat exchanger package

- Heat source heat exchanger (SNAP-8 systems)

  (a) Tube type (0.50 in. tube OD; Haynes 25 tubes; 0.02-in. wall thickness)

  (b) Finned tubes; 30 fins/in.; nickel fins

(c) Tube matrix

Outside: SFT-17*(1.145-in. tube spacing; 0.813-in. row spacing; 0.942-in. fin dia)

Inside: plain tubes

(d) Pressure drop: 0.5 to 1.0 psi

(e) Four-pass on NAK side

(f) Close coupled to heat exchanger package

System Evaluation Approach

Examination of Figure 4-1 reveals that of the 24 design points, 8 design points differ only in respect to pressure loss ratio from two adjacent cases. These cases, associated with a pressure loss ratio of 0.94, were designated as prime cases and consist of the following case numbers:

(1) 8-VIII
(2) 8-II
(3) 8-XI
(4) 8-V
(5) 8-II-A
(6) II
(7) V
(8) II-A

These eight design cases were considered to be representative of all 24 cases of Task 2. The other 16 cases involved different system pressure losses but only minor variations in the cycle conditions of temperature and flow. Thus, the variations of size and weight with pressure drop established for the eight prime cases were used in determining the optimum system design points of the additional 16 design cases. Corrected conditions were used for final sizing of all design point cases.

The cycle conditions for the eight prime case are given in Figures 4-2 through 4-5.

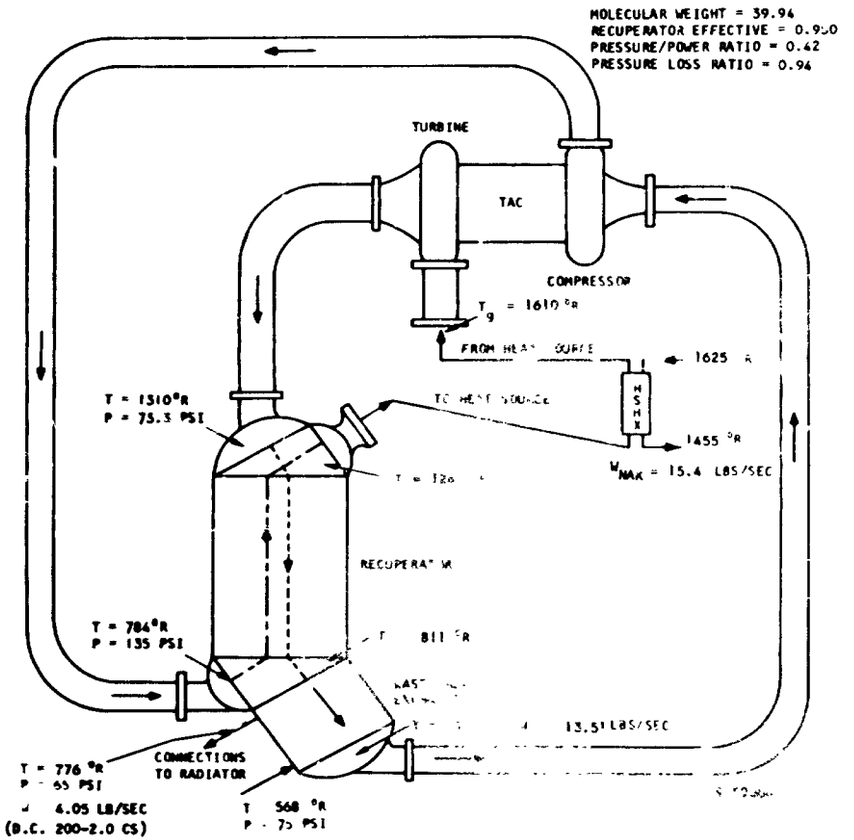

Figure 4-2(a). Operating Conditions for Case 8-VIII

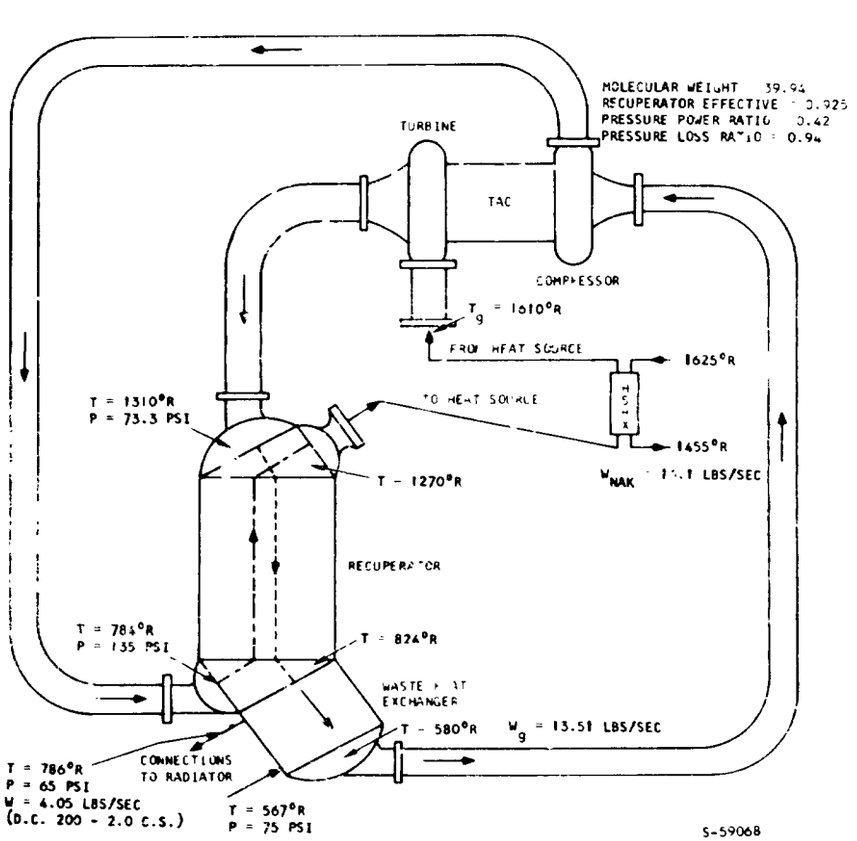

Figure 4-2(b). Operating Conditions for Case 8-II

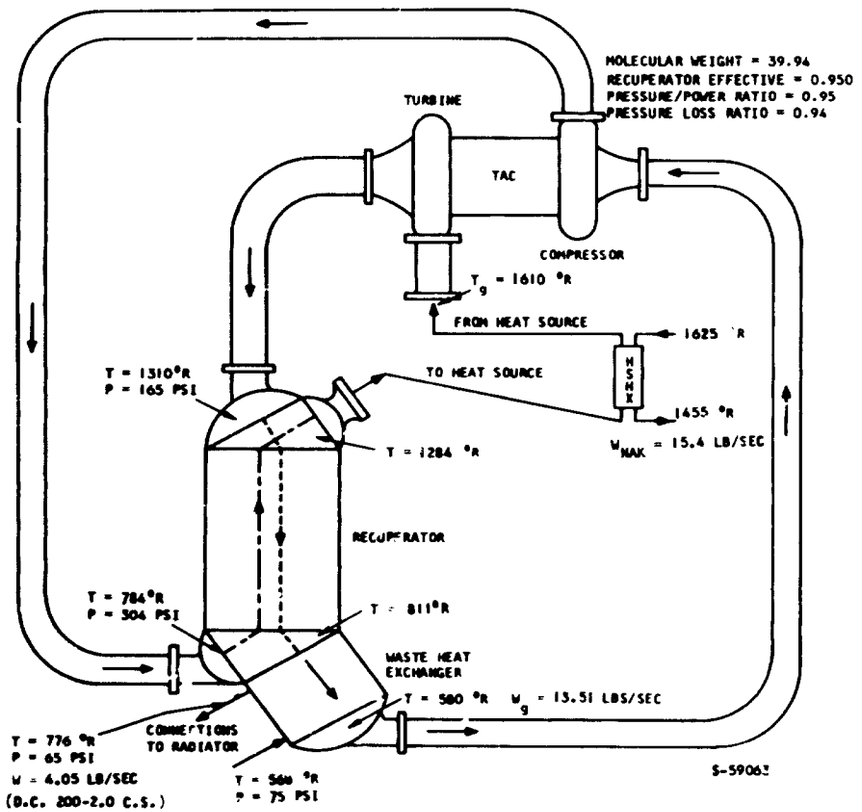

Figure 4-3(a). Operating Conditions for Case 8-XI

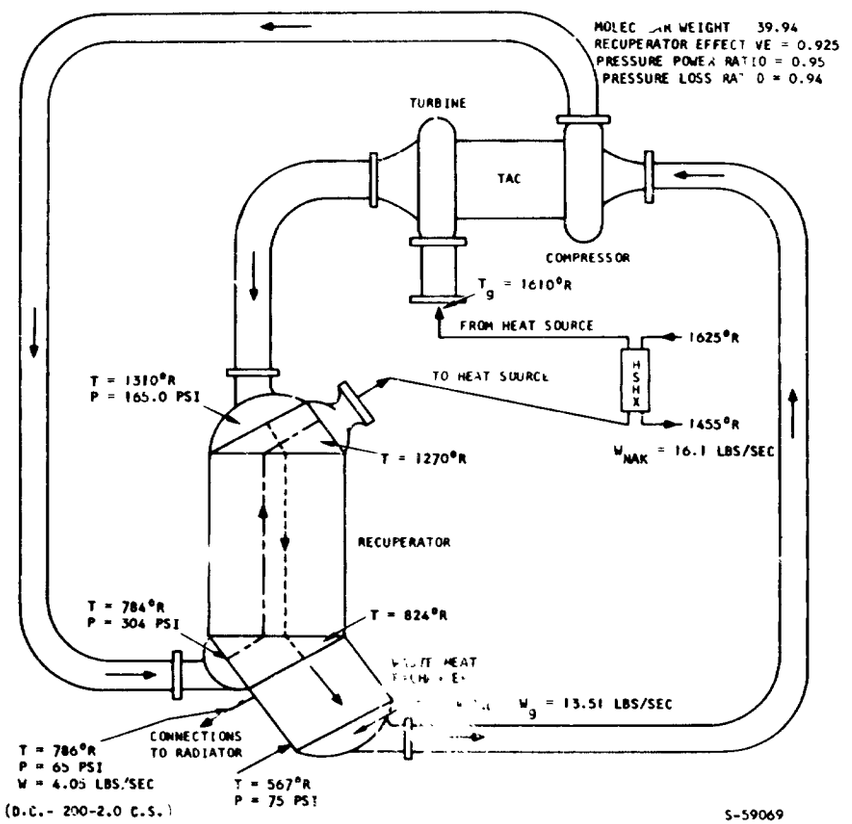

Figure 4-3(b). Operating Conditions for Case 8-V

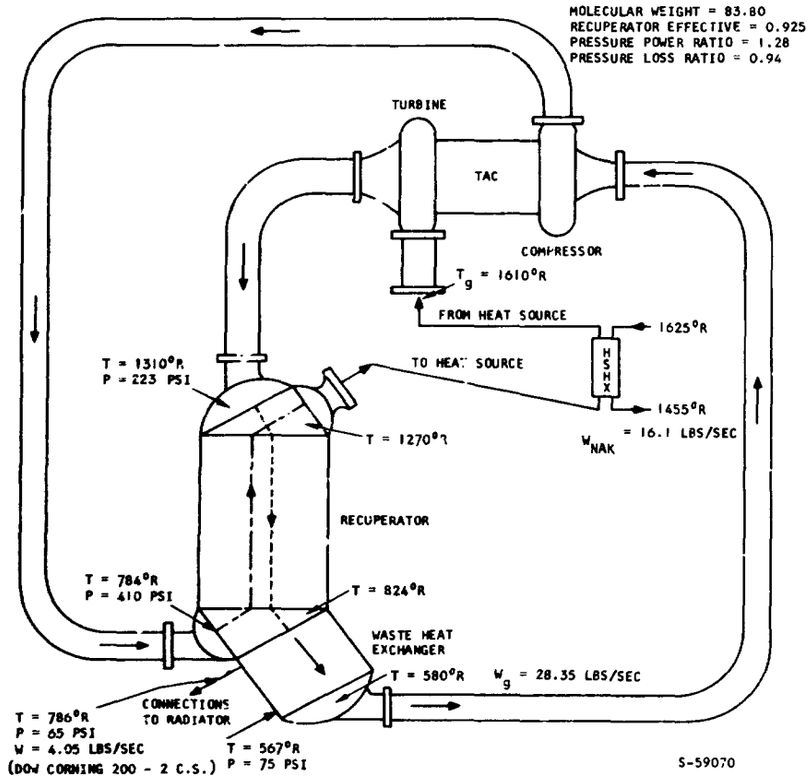

Figure 4-4(a). Operating Conditions for Case 8-II-A

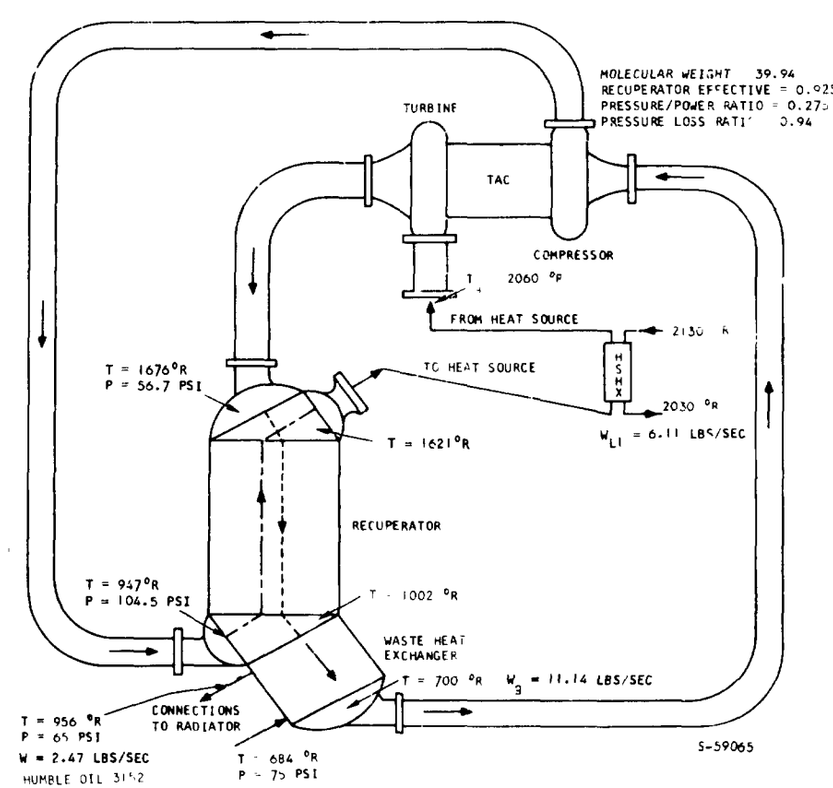

Figure 4-4(b). Operating Conditions for Case II

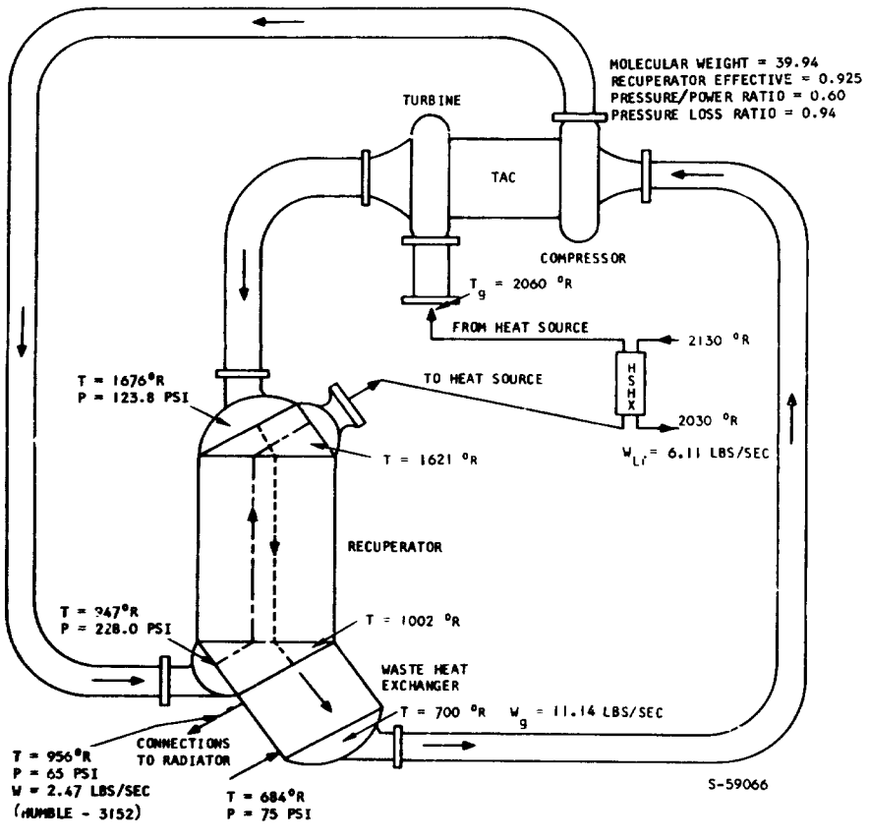

Figure 4-5(a). Operating Conditions for Case V

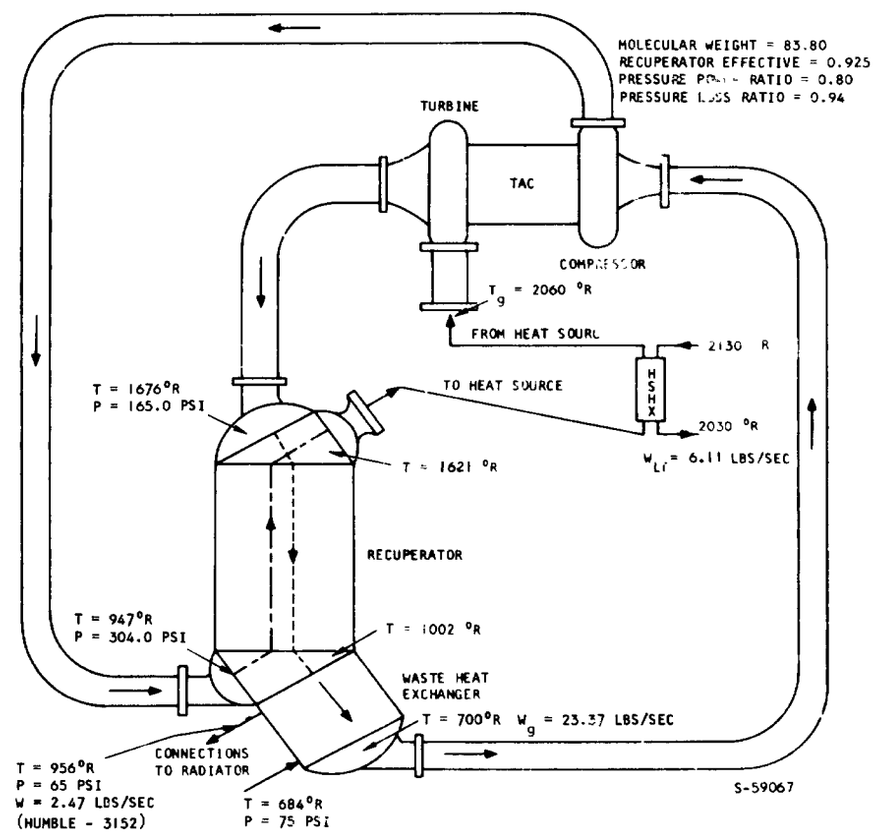

Figure 4-5(b). Operating Conditions for Case II-A

HEAT EXCHANGER DESIGN ANALYSIS

This subsection presents the parametric data developed on the three system heat exchangers for the eight prime cases selected for detailed analysis.

Recuperator

The recuperator geometry selected for analysis consists of a pure counterflow section and rectangular inlet and exit end sections as shown in sketch (a) below. The pure counterflow section of the recuperator is a rectangular parallelepiped. From a heat transfer and pressure drop standpoint, the counterflow section of the recuperator can be analyzed with an equivalent rectangular geometry as shown in sketch (b). This counterflow length is referred to as the core of the recuperator since it is assumed, conservatively, that no heat transfer takes place in the two end sections.

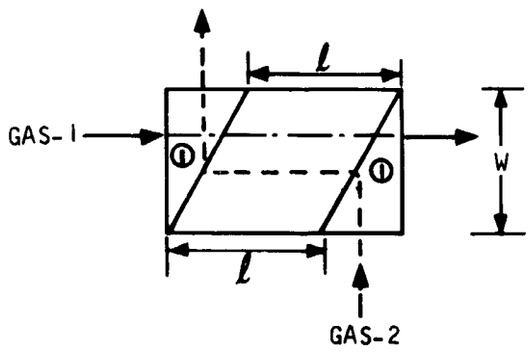

(a)

ACTUAL RECUPERATOR GEOMETRY

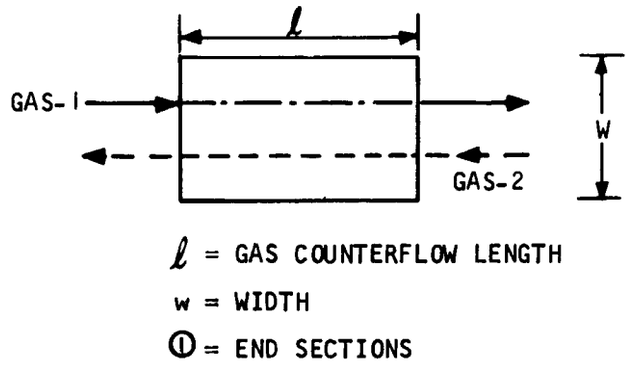

(b)

EQUIVALENT COUNTERFLOW SECTION

1. Counterflow Core Analysis

Recuperator counterflow core weights as a function of total fractional gas pressure drop were prepared for the eight prime system design conditions. These data are presented in Figures 4-6 through 4-13. Parametric weight data were developed for a variety of fin sets for each design condition as indicated on these figures. The fin sets used are listed on each figure and can be interpreted as follows: (fins/inch) (fin geometry) - (fin height or plate spacing) - (offset length). The letter R stands for a rectangular fin geometry. Fin thicknesses vary from case to case and are based on structural requirements as described in Section 3. Hastelloy X is the material of construction for all advanced system cases and for the high pressure SNAP-8 cases (8-V, 8-XI, and 8-IIA). For the low-pressure SNAP-8 cases (8-II and 8-VIII), the construction material is 347 stainless steel. Stainless steel is preferred for its lower density, higher conductivity, and lower cost in cases where structurally required gage thicknesses are less than the minimum gage required

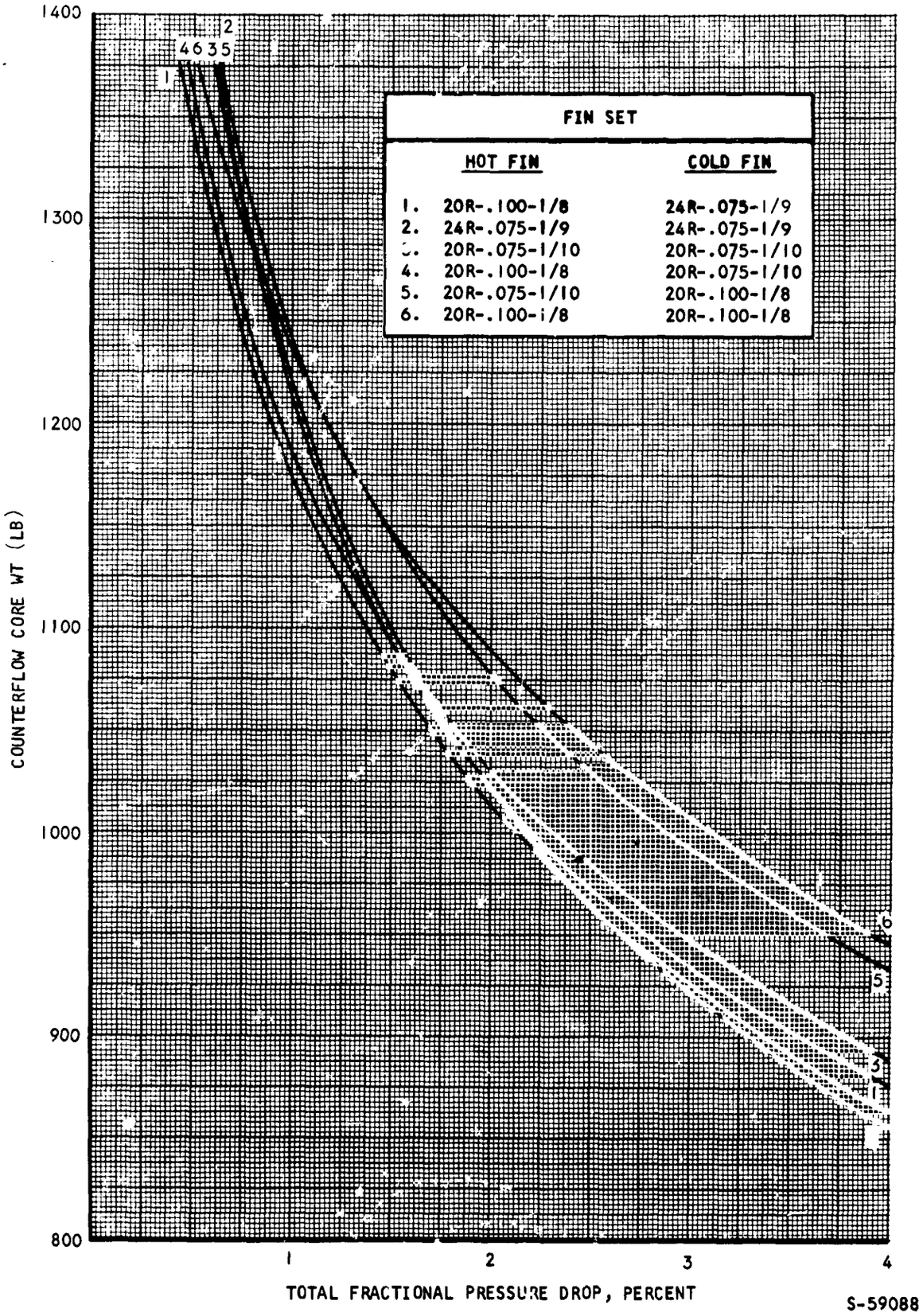

Figure 4-6. HXDA Plate-Fin Recuperator, Case 8-VIII

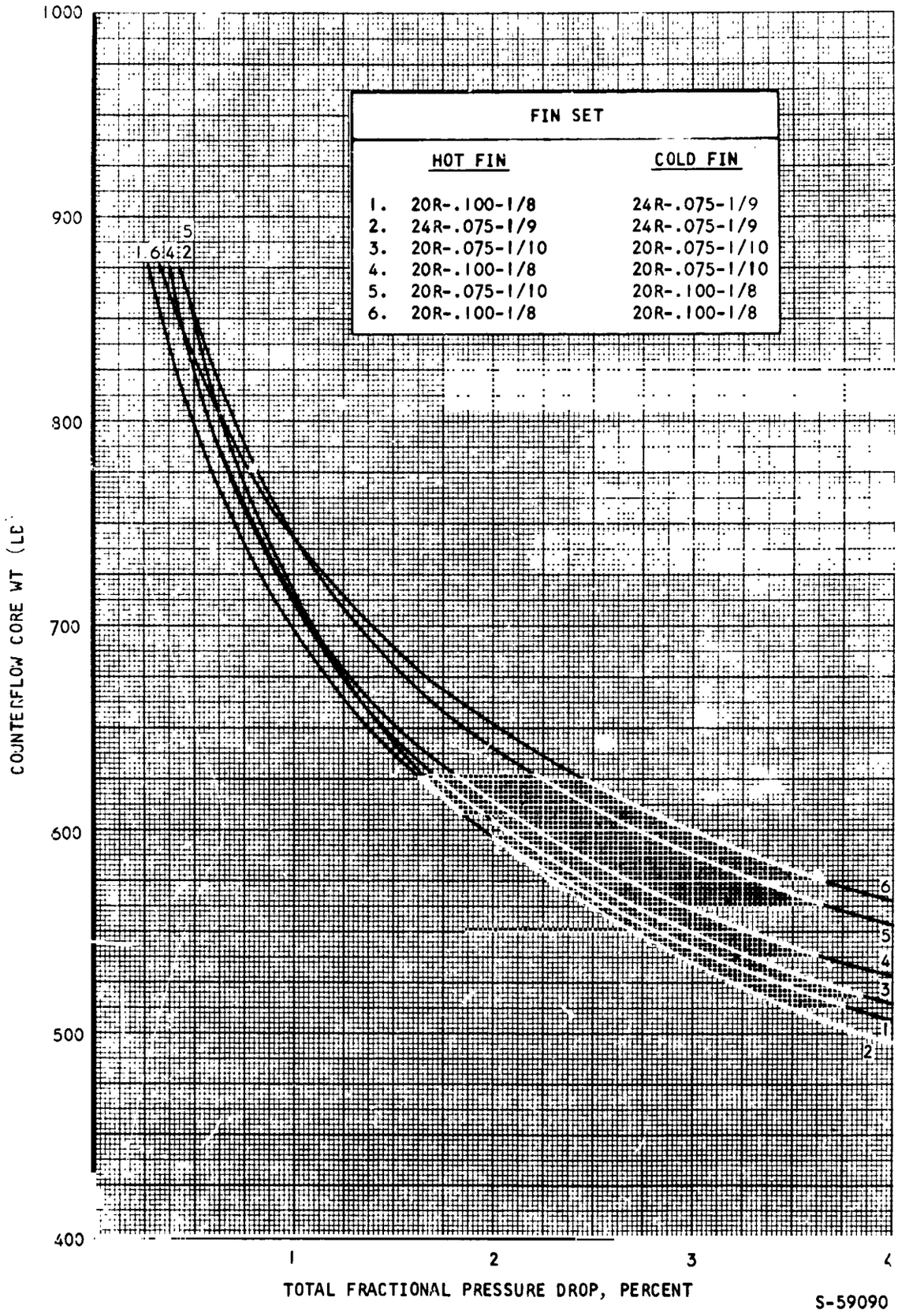

Figure 4-7. HXDA Plate-Fin Recuperator, Case 8-II

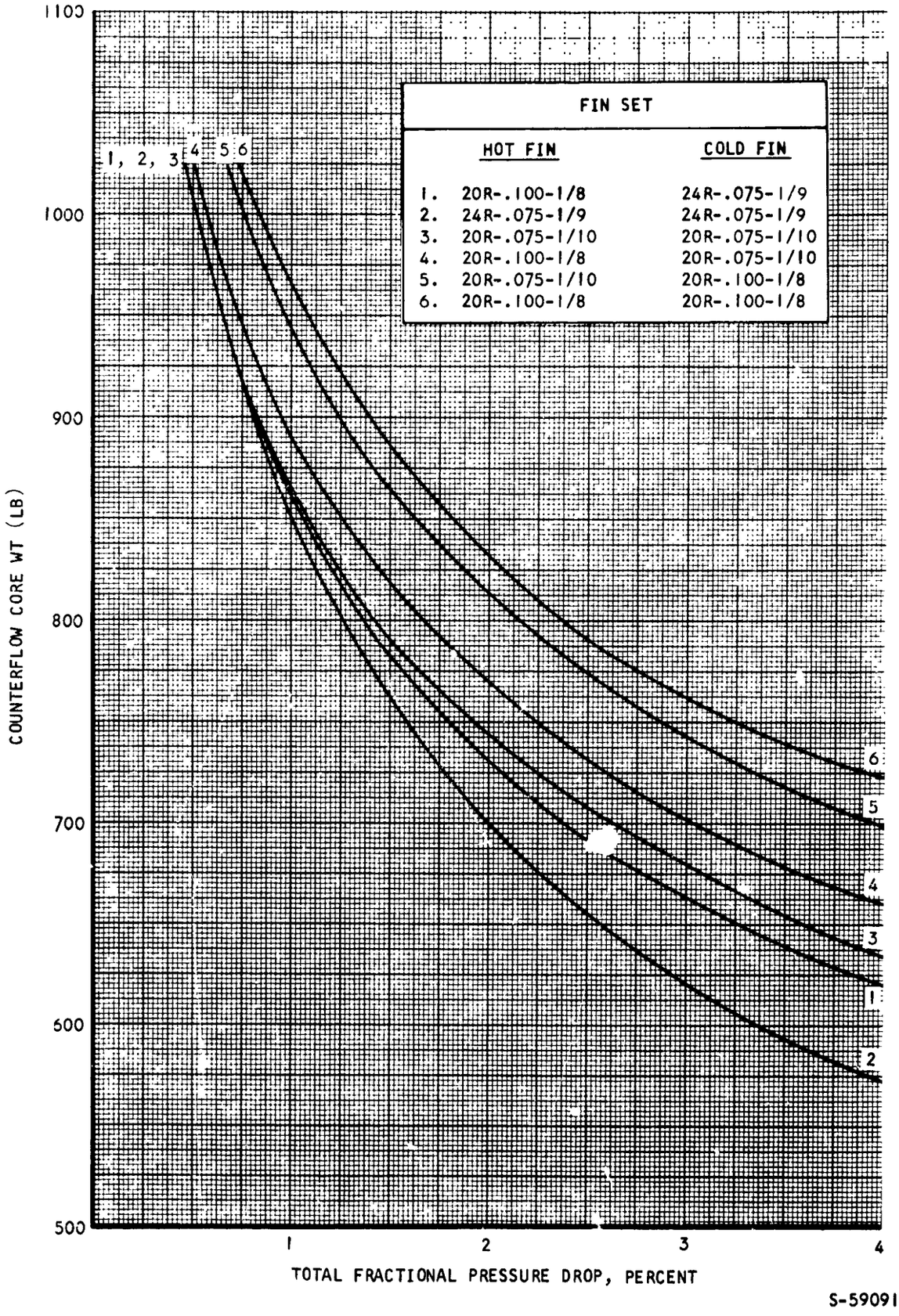

Figure 4-8. HXDA Plate-Fin Recuperator, Case 8-XI

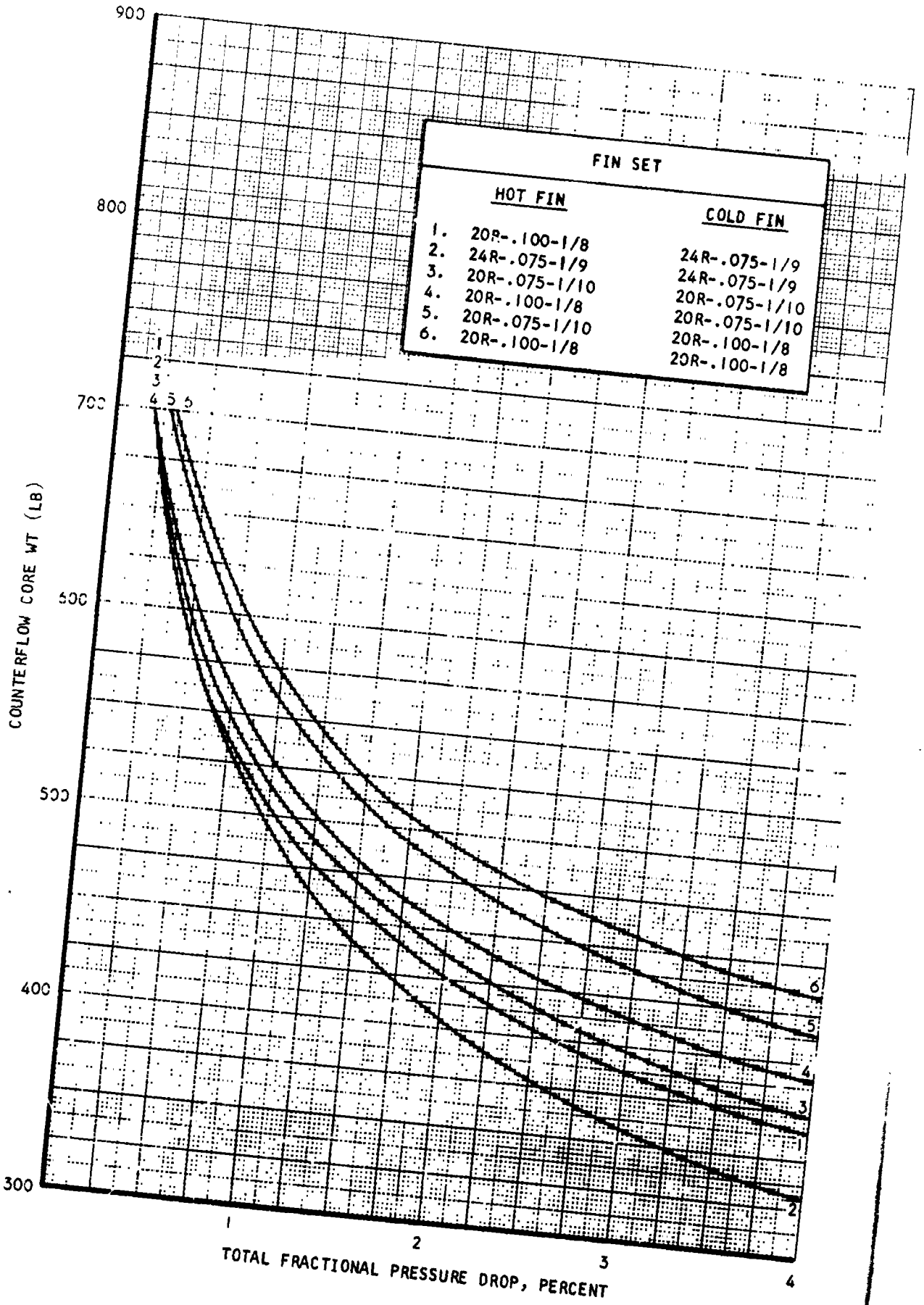

Figure 4-9. HXDA Plate-Fin Recuperator, Case 8-V

S-59085

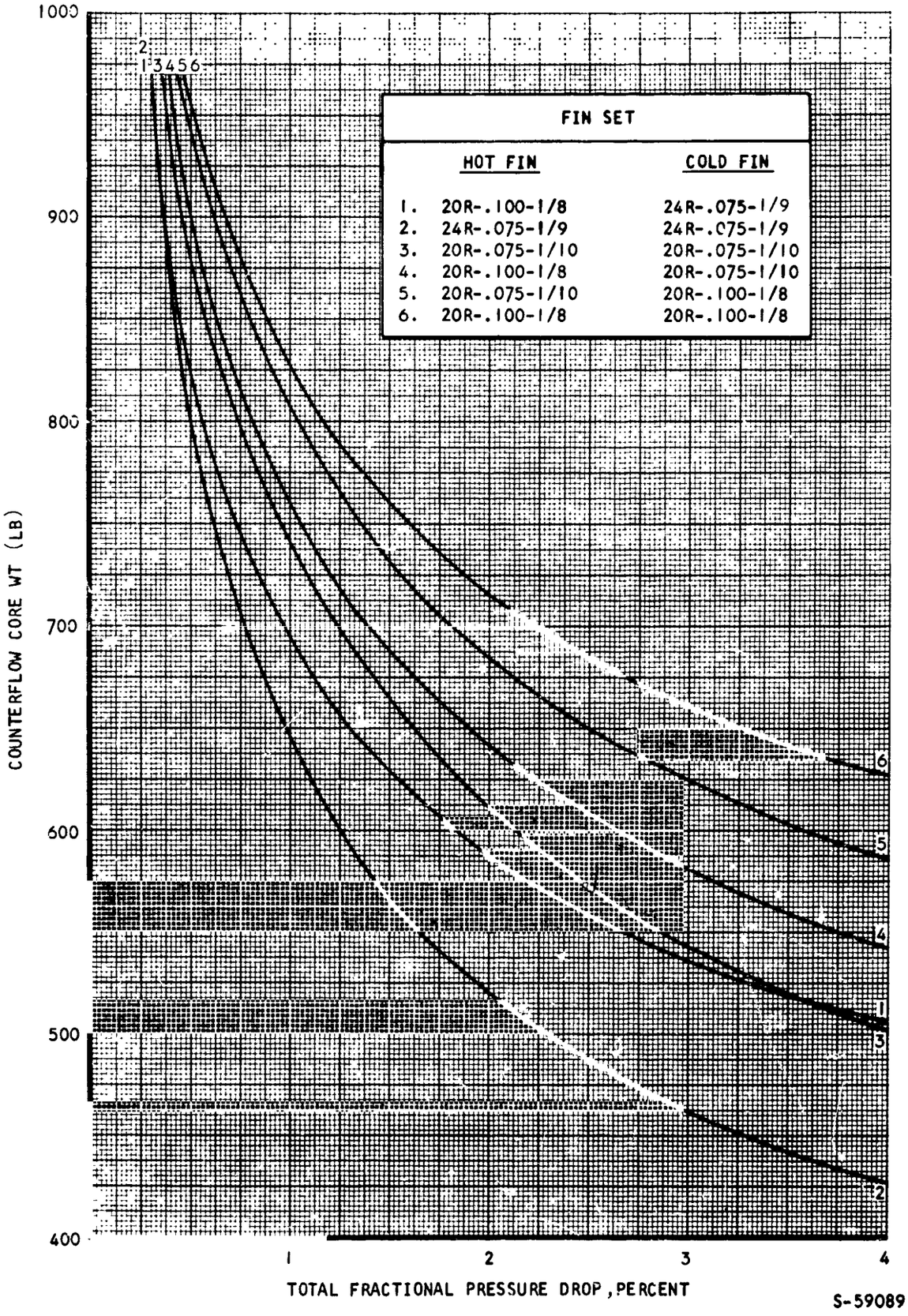

Figure 4-10. HXDA Plate-Fin Recuperator, Case 8-II-A

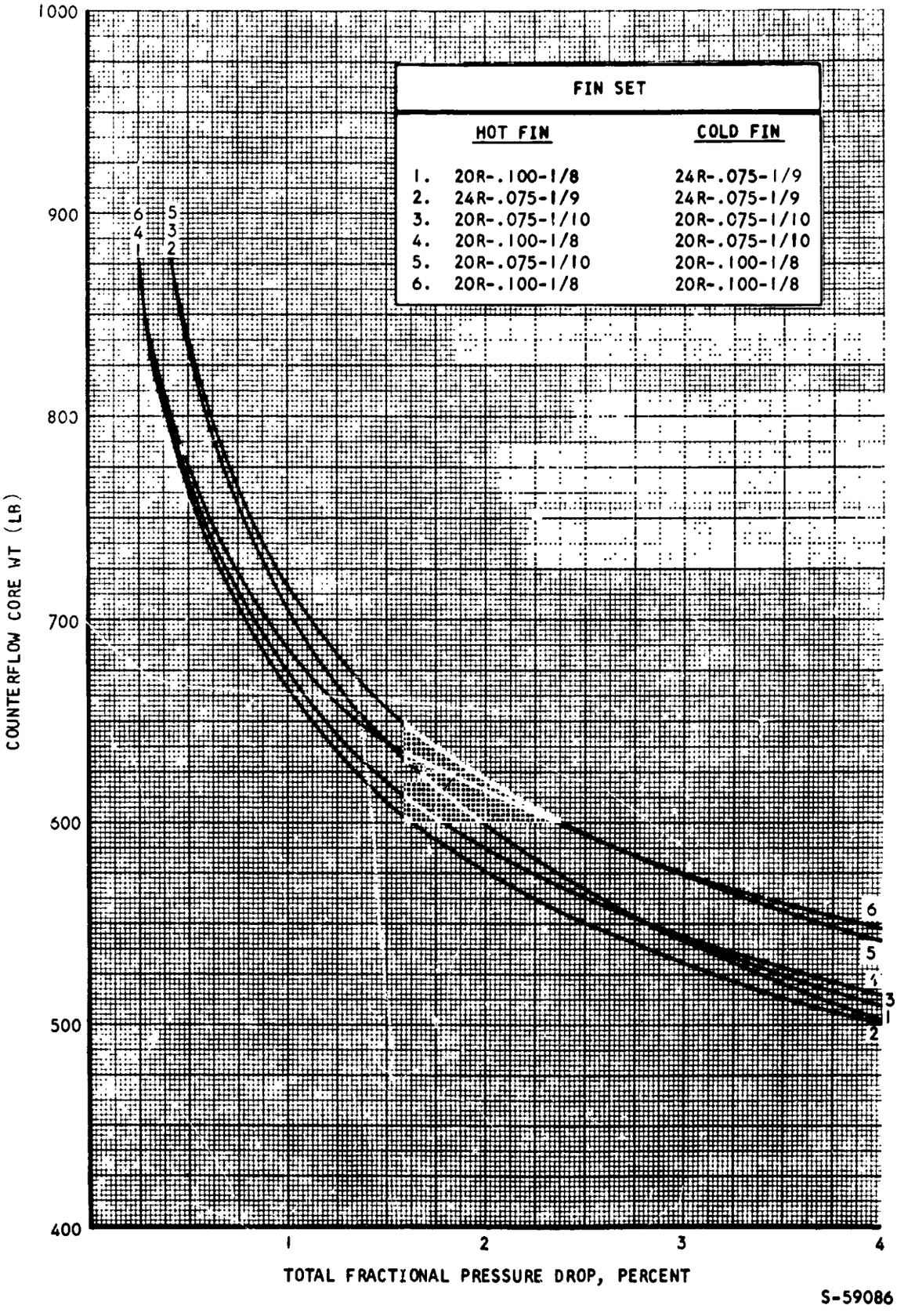

Figure 4-11. HXDA Plate-Fin Recuperators, Case II

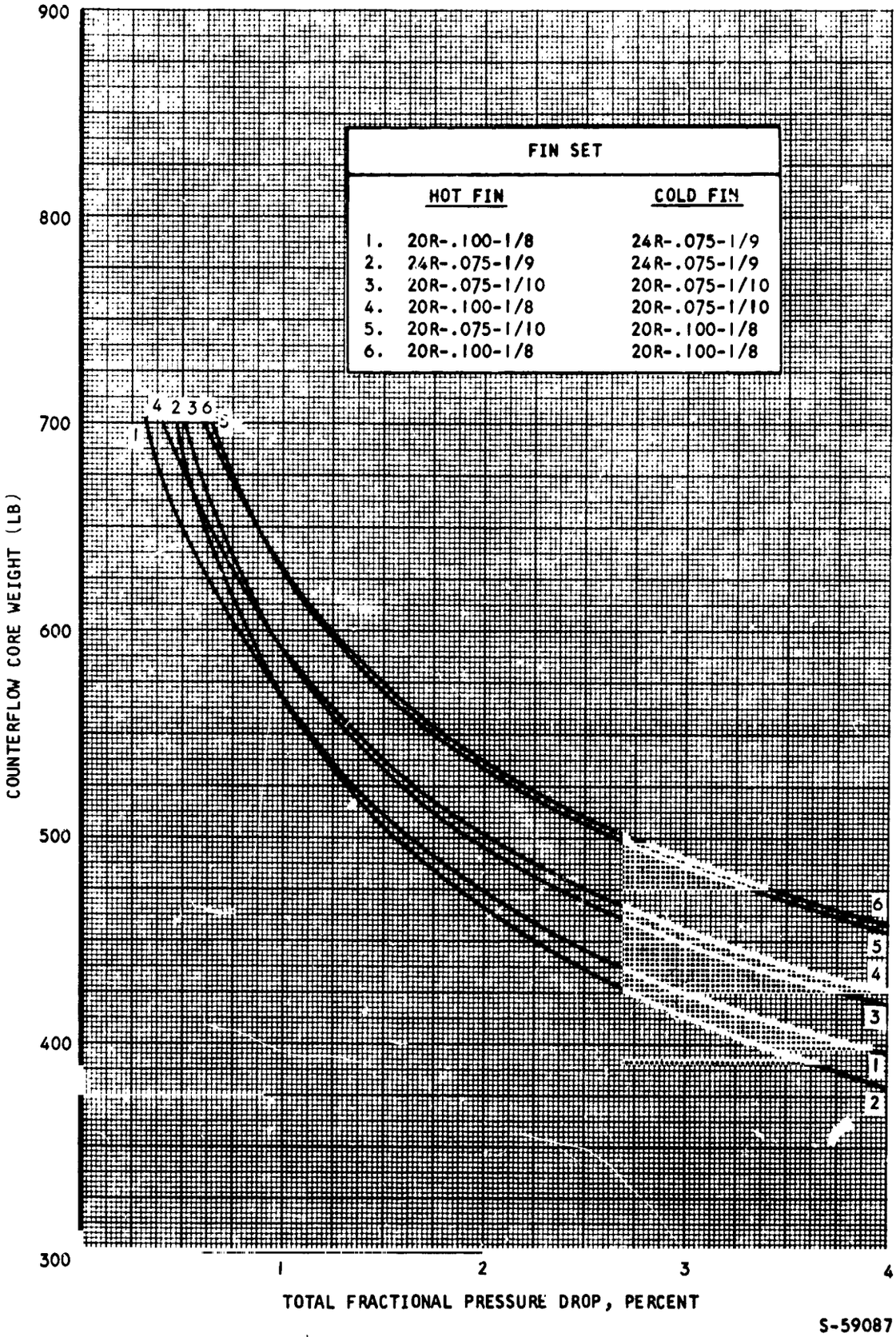

Figure 4-12. HXDA Plate-Fin Re uperator, Case V

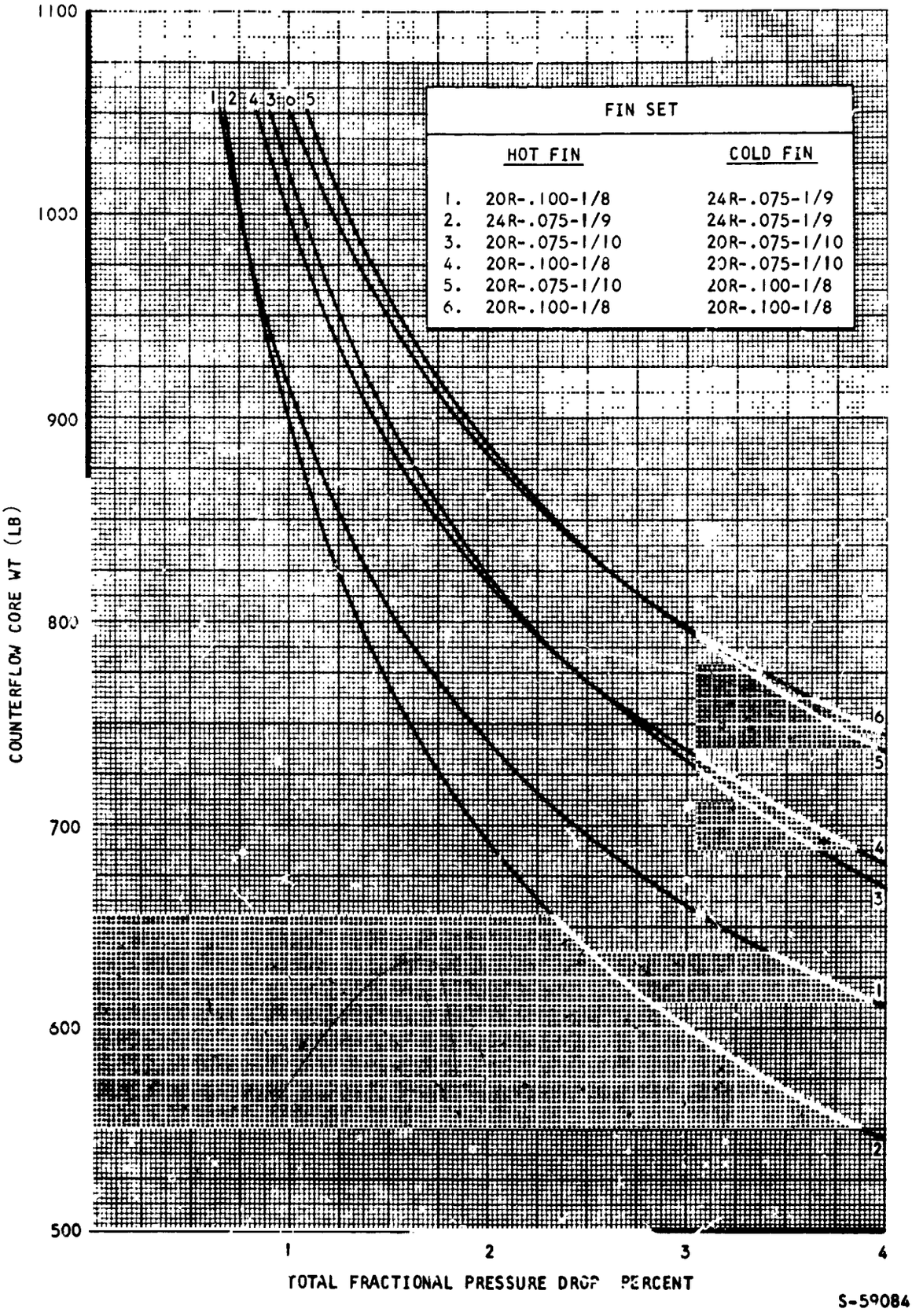

Figure 4-13. HXDA Plate-Fin Recuperator, Case II-A

for fabrication. For this study, minimum gage fin thickness was based on a minimum fin area density (i.e., fin thickness ÷ fin spacing) of 0.04. Where structurally-required thicknesses exceed those required for fabrication, Hastelloy X is usually superior to stainless on a weight basis because of its greater strength.

The optimum heat exchanger core is made up of that fin-set which yields a minimum weight for a given core total fractional pressure drop. The envelope of minimum-weight solutions is in general made up of several different fin sets depending on the assigned pressure drop. The optimum solutions for the eight design points are associated with the lowest weight values appearing in Figures 4-6 through 4-13.

Core dimensions for the optimum (i.e., minimum weight) recuperator cores are shown in Figure 4-14. A stack height of twice the flow width was used. This will have a minimum effect on comparative weights and was selected primarily to obtain a reasonable packaging configuration.

2. <u>End Section Analysis</u>

An analysis was made of recuperator end section designs to determine end section weight and pressure drop for inclusion in the curves of recuperator weight vs pressure drop. The following derivation, based on rectangular end sections, results in an approximation that is suitable for parametric representation of the end sections in the system optimization studies. During final design of a specific recuperator, further analysis would be required to determine both the exact end section pressure loss and the optimum end section dimensions for achieving uniform flow distribution in the recuperator core.

End section and core pressures losses for the recuperator high pressure side are given by

$$\Delta P_e \cong 6 f_e \frac{\ell}{D_e} \times \frac{W^2}{2 \rho g A_e^2}$$

$$\Delta P_c = 4 f_c \frac{\ell}{D_c} \times \frac{W^2}{2 \rho g A_c^2}$$

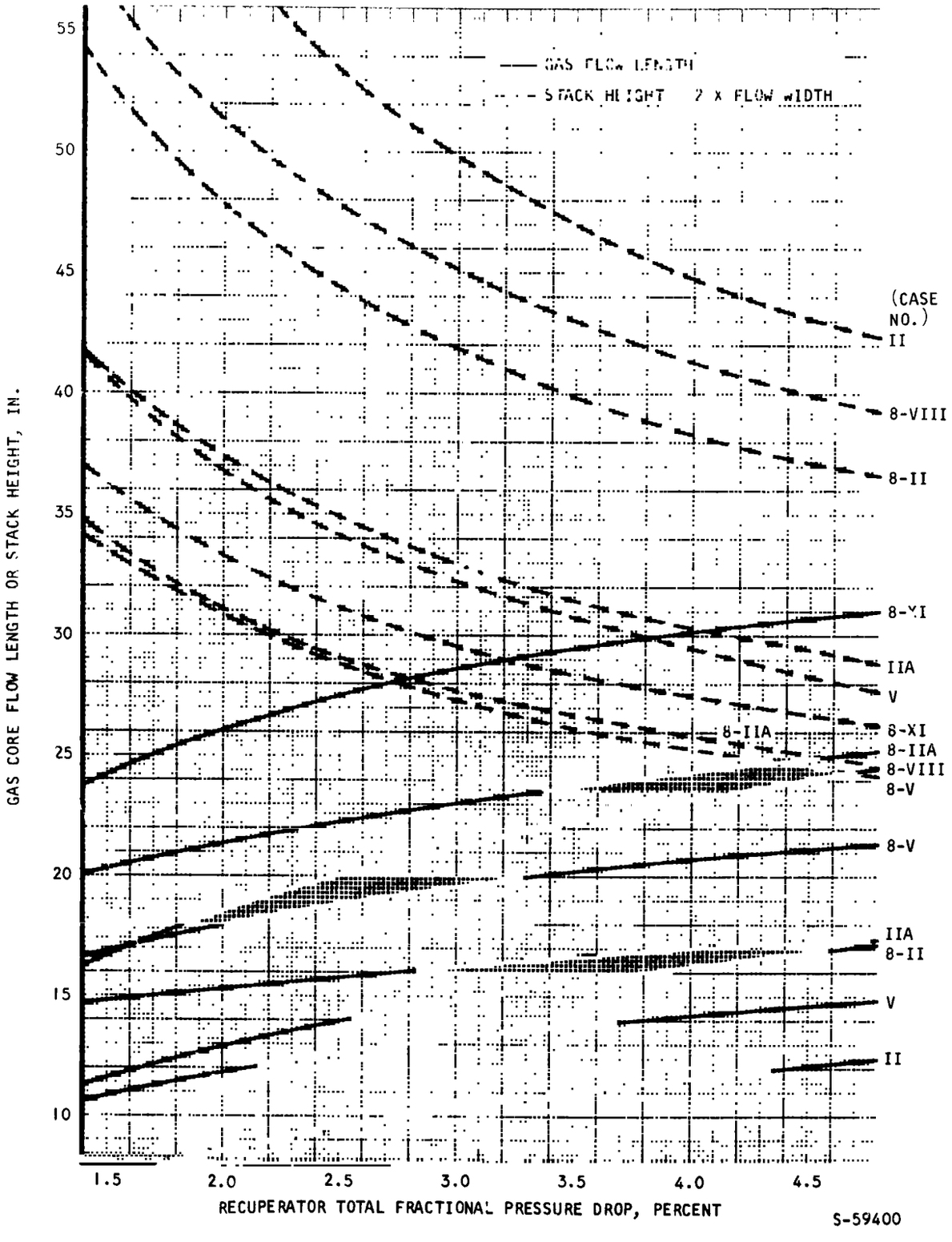

Figure 4-14. Recuperator Dimensions vs Pressure Drop

where ΔP = total pressure drop, including friction and kinetic effects

f = friction factor

ω = recuperator core flow width

ℓ = recuperator core flow length

D = flow passage equivalent diameter

W = gas flow rate

ρ = gas density

g = gravitational constant

A = gas flow area

and subscripts e and c refer to end section and core, respectively.

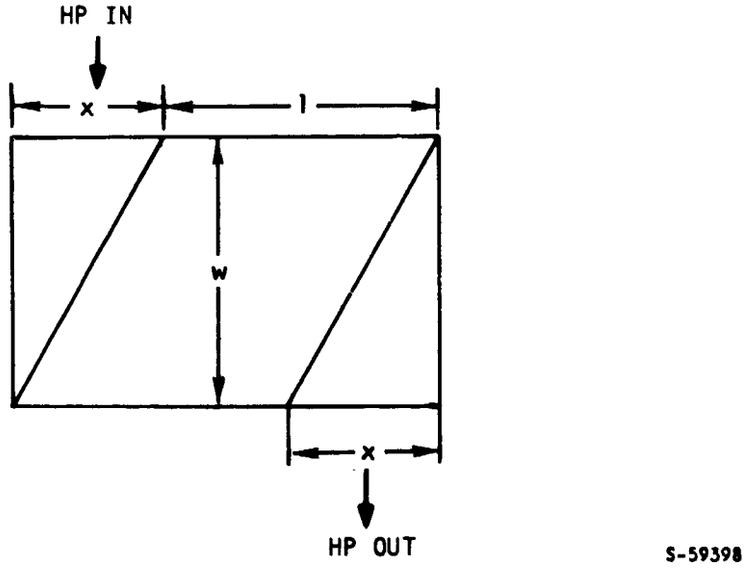

Figure 4-15. Recuperator Geometry Definition

Figure 4-15 is a sketch of a recuperator high-pressure side sandwich, showing the dimensions ω, ℓ, and x, and the end section height. Using the approximations

$$D_c = D_e$$

$$\frac{A_c}{A_e} = \frac{\omega}{x}$$

$$\frac{f_e}{f_c} \cong 1/5$$

The ratio of end section to core pressure loss becomes

$$\frac{\Delta P_e}{\Delta P_c} = 0.3 \frac{\omega^3}{\ell x^2} \text{ (high-pressure side)}$$

On the low-pressure side of the recuperator

$$\frac{\Delta P_e}{\Delta P_c} = \frac{x}{\ell} \text{ (low-pressure side)}$$

Assuming

L.P. Pressure = 0.54 x H.P. Pressure

and L.P. $\Delta P_c \cong$ H.P. ΔP_c

the fractional pressure losses become (where ΔP_{Tc} = recuperator total core fractional pressure loss, including high and low pressure sides)

$$\frac{\Delta P_e}{\Delta P_{Tc}} = \frac{\Delta P_e}{\Delta P_c} \times \frac{\Delta P_c}{\Delta P_{Tc}} = 0.3 \frac{\omega^3}{\ell x^2} \frac{0.54}{1 + 0.54} = 0.105 \frac{\omega^3}{\ell x^2} \text{ (high-pressure s}$$

and

$$\frac{\Delta P_e}{\Delta P_{Tc}} = \frac{\Delta P_e}{\Delta P_c} \times \frac{\Delta P_c}{\Delta P_{Tc}} = \frac{x}{\ell} \times \frac{1}{1 + 0.54} = 0.65 \frac{x}{\ell} \text{ (low-pressure side)}$$

Letting ΔP_{Te} = total end section fractional pressure loss,

$$\frac{\Delta P_{Te}}{\Delta P_{Tc}} = 0.65 \frac{x}{\ell} + 0.105 \frac{(\omega/\ell)^3}{(x/\ell)^2}$$

To obtain the end section dimensions for minimum end section pressure loss, let

$$\frac{d\,(\Delta P_{Te}/\Delta P_{Tc})}{d\,(\frac{x}{\ell})} = 0$$

Then $$0 = 0.65 - 0.21\,\frac{(\omega/\ell)^3}{(x/\ell)^3}$$

and $x = 0.69\,\omega$ for minimum pressure drop.

Solving for the end section pressure loss at $x = 0.69\,\omega$,

$$\frac{\Delta P_{Te}}{\Delta P_{Tc}} = 0.67\,\frac{\omega}{\ell}$$

For convenience in computation, the following equations are used:

$$\text{Total } \Delta P = (1 + 0.68\,\frac{\omega}{\ell}) \times \text{core } \Delta P$$

$$\text{Total weight} = (1 + 0.68\,\frac{\omega}{\ell}) \times \text{core weight}$$

where it has been assumed that weight per unit length of the recuperator end section equals weight per unit length of the core.

3. Summary

Total recuperator weights and dimensions were calculated from the data developed on the counterflow cores and the end section analysis presented in the previous subsection. The total weight and overall recuperator dimensions are shown in Figures 4-16 and 4-17 respectively. For cases II and 8-II, system studies indicated that a considerable weight savings could be obtained by going to a face aspect ratio of 4:1 on the recuperator. With a face aspect ratio of 4:1 it appeared to be reasonable to split the recuperator to maintain a more compact packaging arrangement. Splitting the recuperator means using two independent recuperators, each handling one-half of the system gas flow. Splitting the 4:1 face aspect ratio cores results in an overall face aspect ratio of 1:1 when the two cores are placed side by side. This results in a more favorable packaging arrangement. The weight and dimensional data for the split recuperator design approach are designated by the letter S following the design case numbers in Figures 4-16 and 4-17.

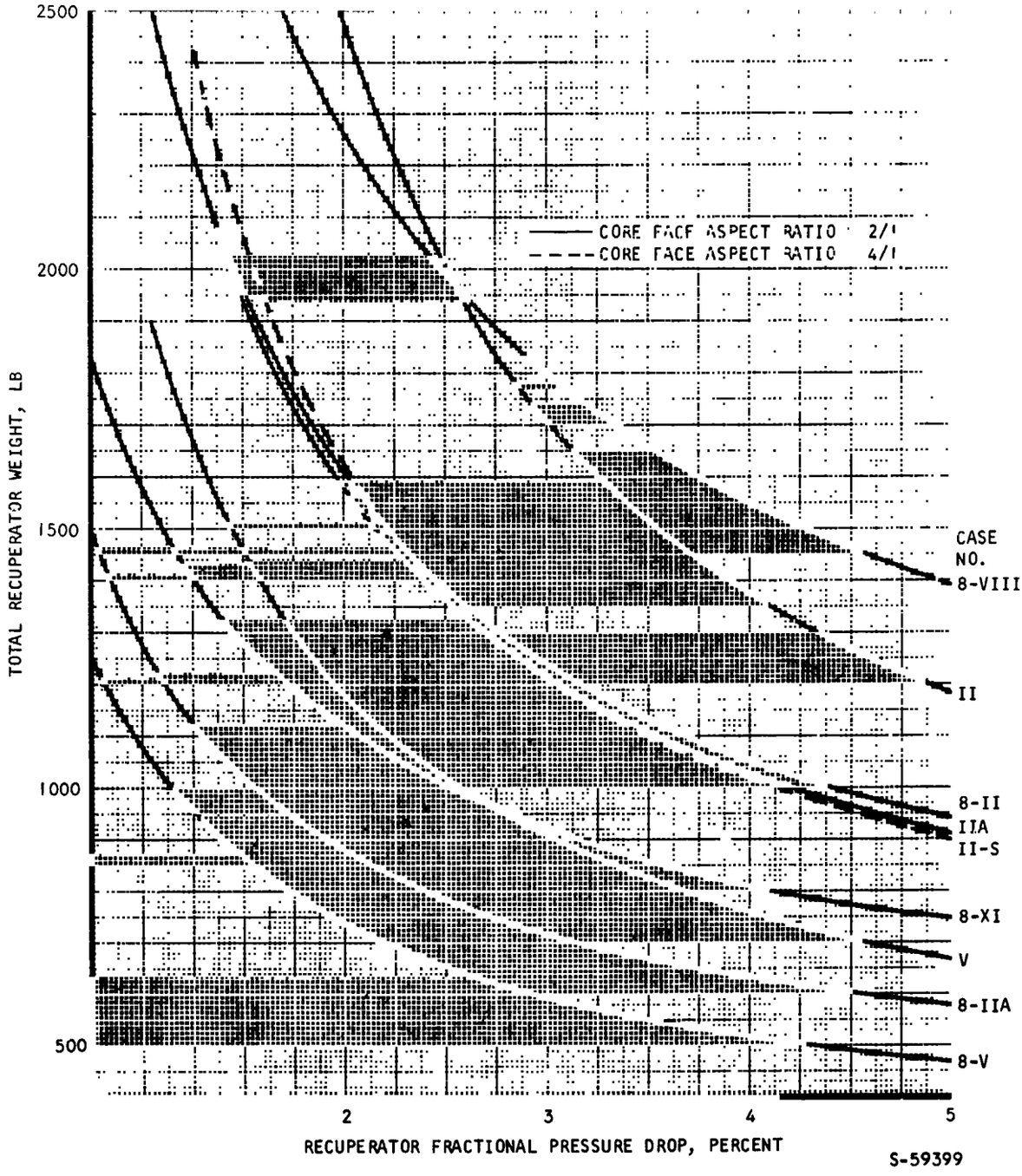

Figure 4-16. Variation of Total Recuperator Weight With Pressure Drop

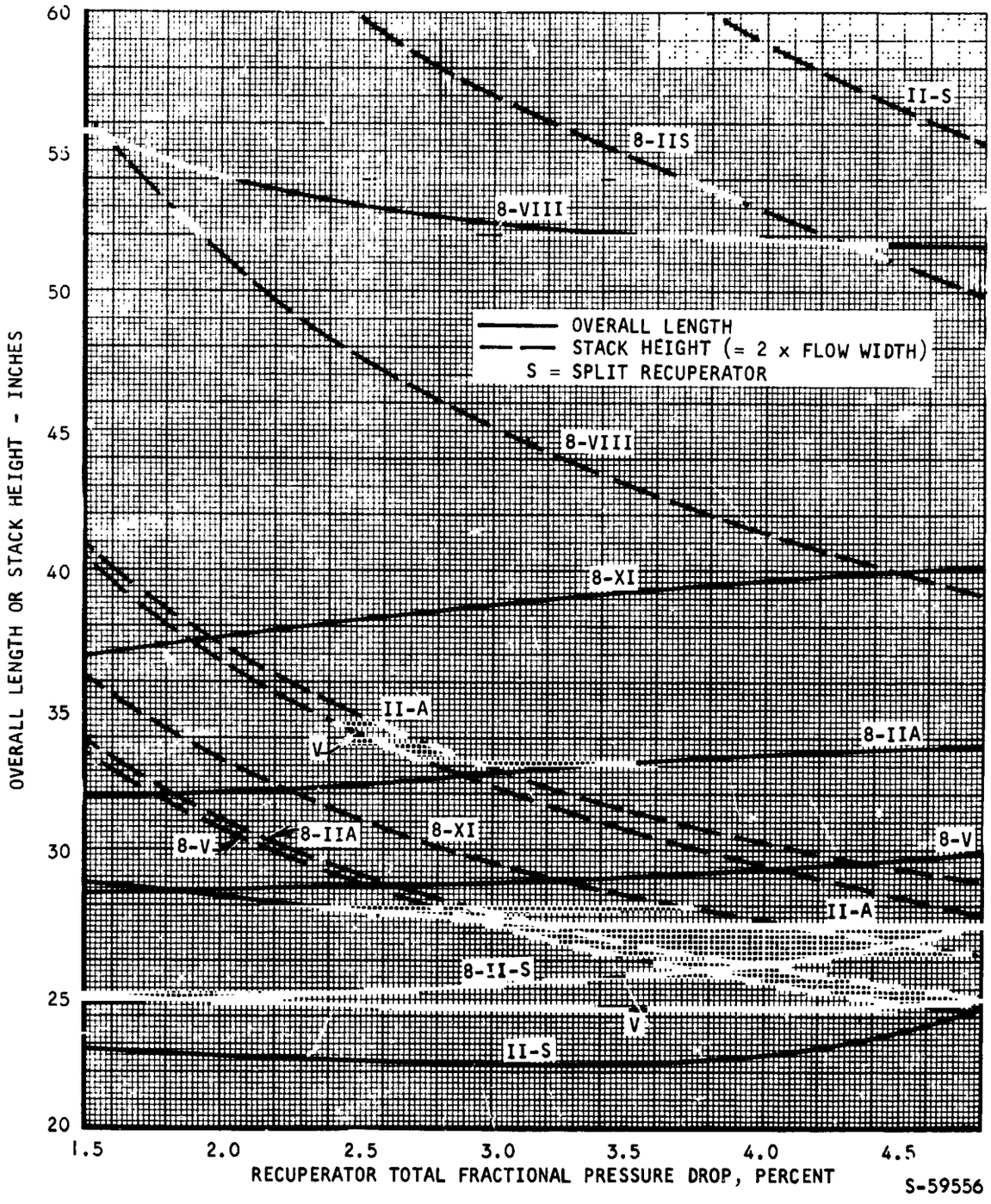

Figure 4-17. Recuperator Overall Dimensions vs Pressure Drop (Includes End Sections)

Heat Source Heat Exchanger

1. Advanced Systems

The preliminary work performed in Task I (Section 3) was applicable to the heat source heat exchanger (HSHX) for the advanced systems of Task 2 (i.e., Cases II, V, and II-A) since the temperature levels were not changed. The basic approach selected for the heat source heat exchanger from Task I was a rectangular array of finned tubes with the lithium flowing inside the tubes as illustrated in Figure 4-18. The lithium makes two passes across the gas stream in a counter-crossflow direction to the gas stream. The tube OD was selected at 0.50 in. with a wall thickness of 0.020 in. for liquid metal containment. The tube material was tantalum alloy T-111 and the fin material was Cb-1%Zr. A fin thickness of 0.006 in. was also selected.

With the above assumptions parametric weight and dimensional data were prepared for each of the three advanced HSHX prime design cases. This information is given in Figures 4-19 through 4-21 for Cases II, V and II-A respectively. These figures present heat exchanger weight, dimensions, and number of tubes as a function of heat exchanger total fractional gas pressure drop. The weights are given in terms of a core adjusted weight which includes the tubes, tube sheets, liquid manifolds, gas pans, and supporting structure. The gas manifolds were assumed to be part of the ducting system and are treated separately in a subsequent section of this report.

2. SNAP-8 Systems

The design requirements imposed on the heat source heat exchanger (HSHX) for the SNAP-8 systems were quite different than those imposed on the Task I HSHX's. The lower temperatures involved permitted the reconsideration of the HSHX materials as well as the type of extended surfaces most appropriate for this application. However, the general approach of a rectangular array of finned tubes, as illustrated in Figure 4-18, was preserved. Initially designs employing Haynes 25 tubes and nickel fins were investigated. However, at the lower operating temperatures involved with the SNAP-8 system a stainless steel clad copper fin material was finally adopted since it resulted in significantly lower heat source heat exchanger weights. By adopting a stainless steel clad copper fin, the fin thermal conductivity can be effectively increased. From the structural standpoint, a 0.003-in. copper fin with a total 347 stainless steel cladding thickness of 0.002 in. was found to be satisfactory. By assuming a conservative value of thermal conductivity for the copper, to allow for the effect of the braze joint between the fin and the tube parent material, an equivalent thermal conductivity of 37.0 Btu/ft hr ^{0}F was computed for a 0.005-in. composite copper/stainless steel fin. Using this fin construction the following staggered tube matrixes were surveyed for several of the SNAP-8 system design points.

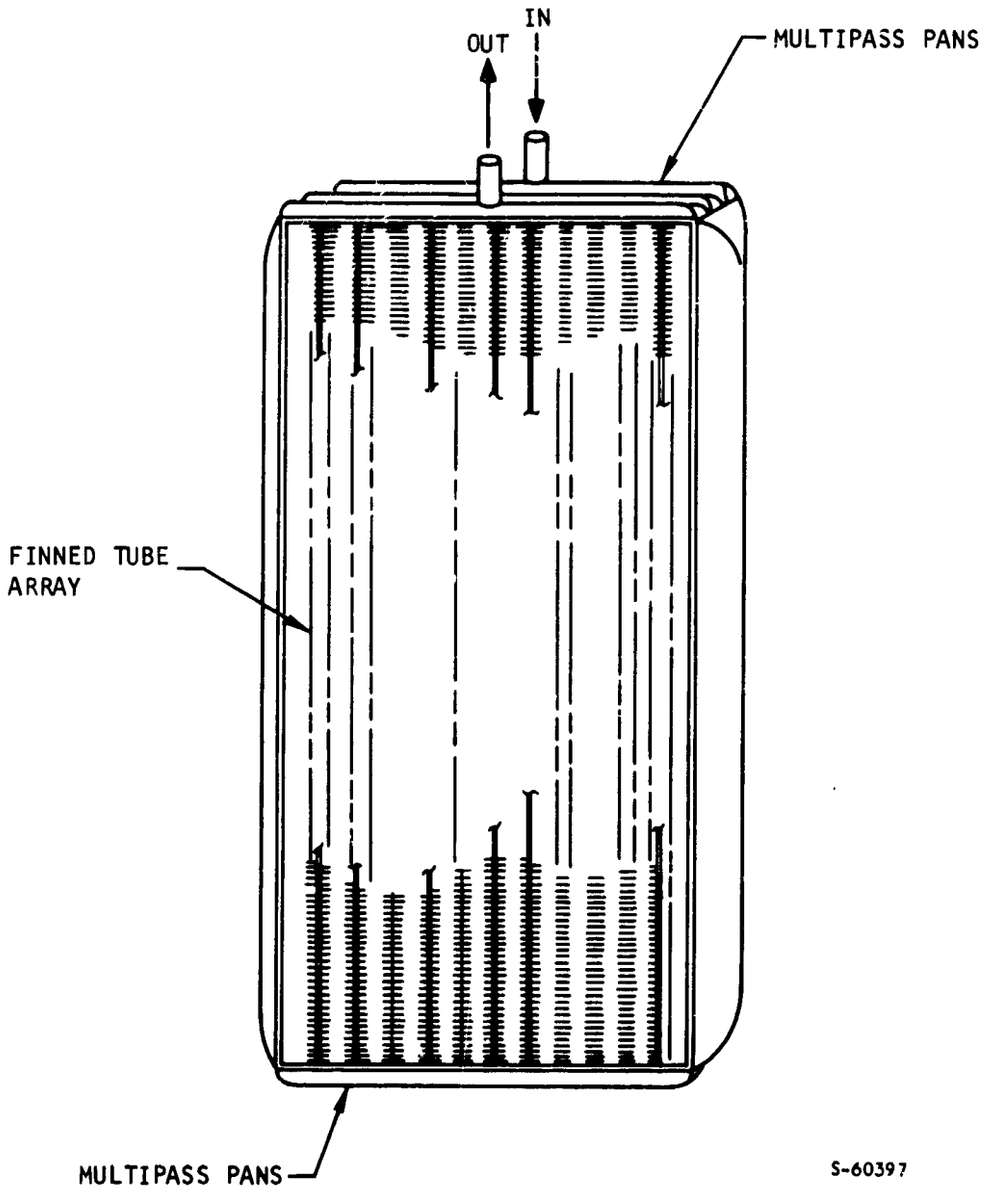

HEAT SOURCE HEAT EXCHANGER (TYPICAL)

Figure 4-18. Heat Source Heat Exchanger Configuration

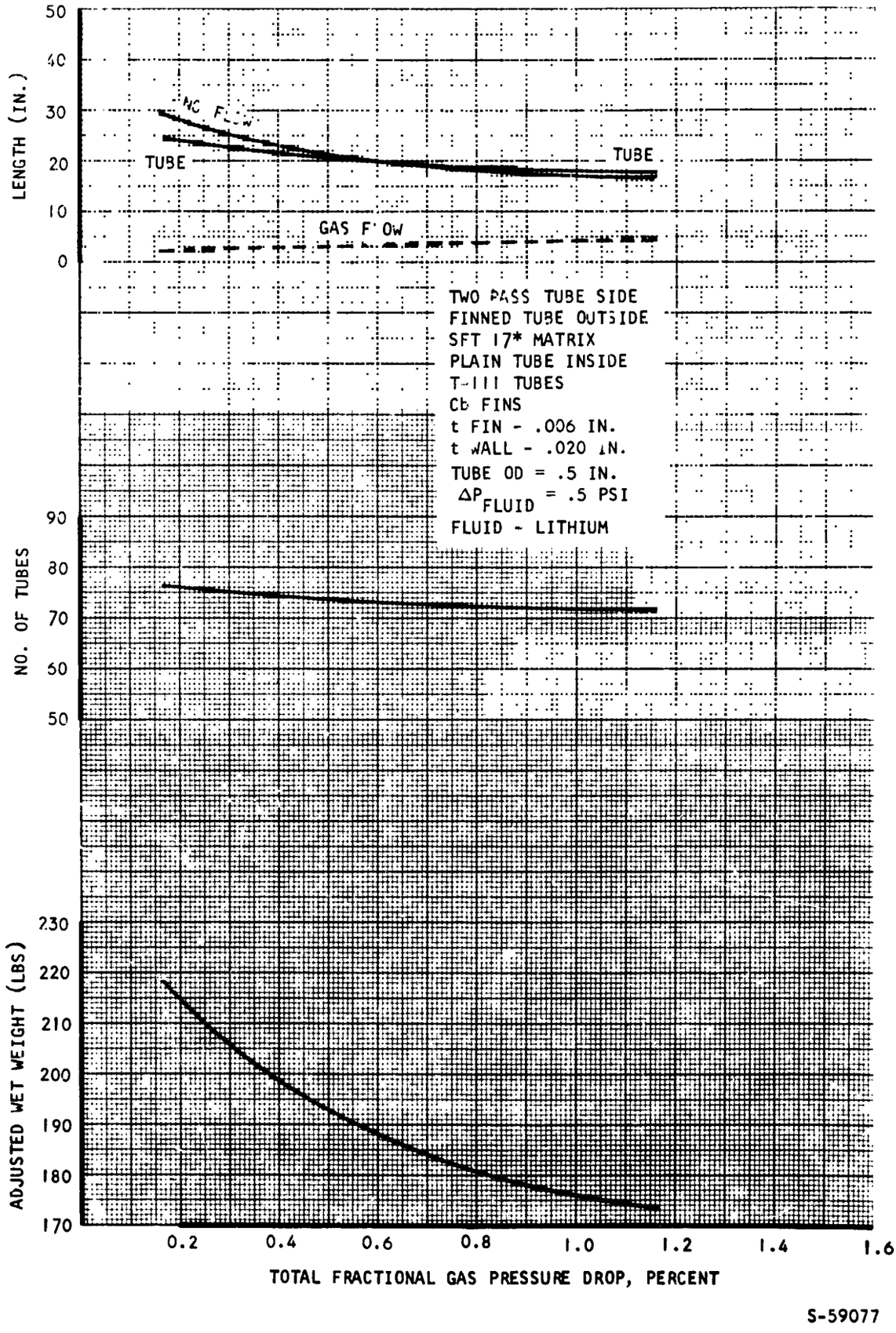

S-59077

Figure 4-19. HSHX, Case II

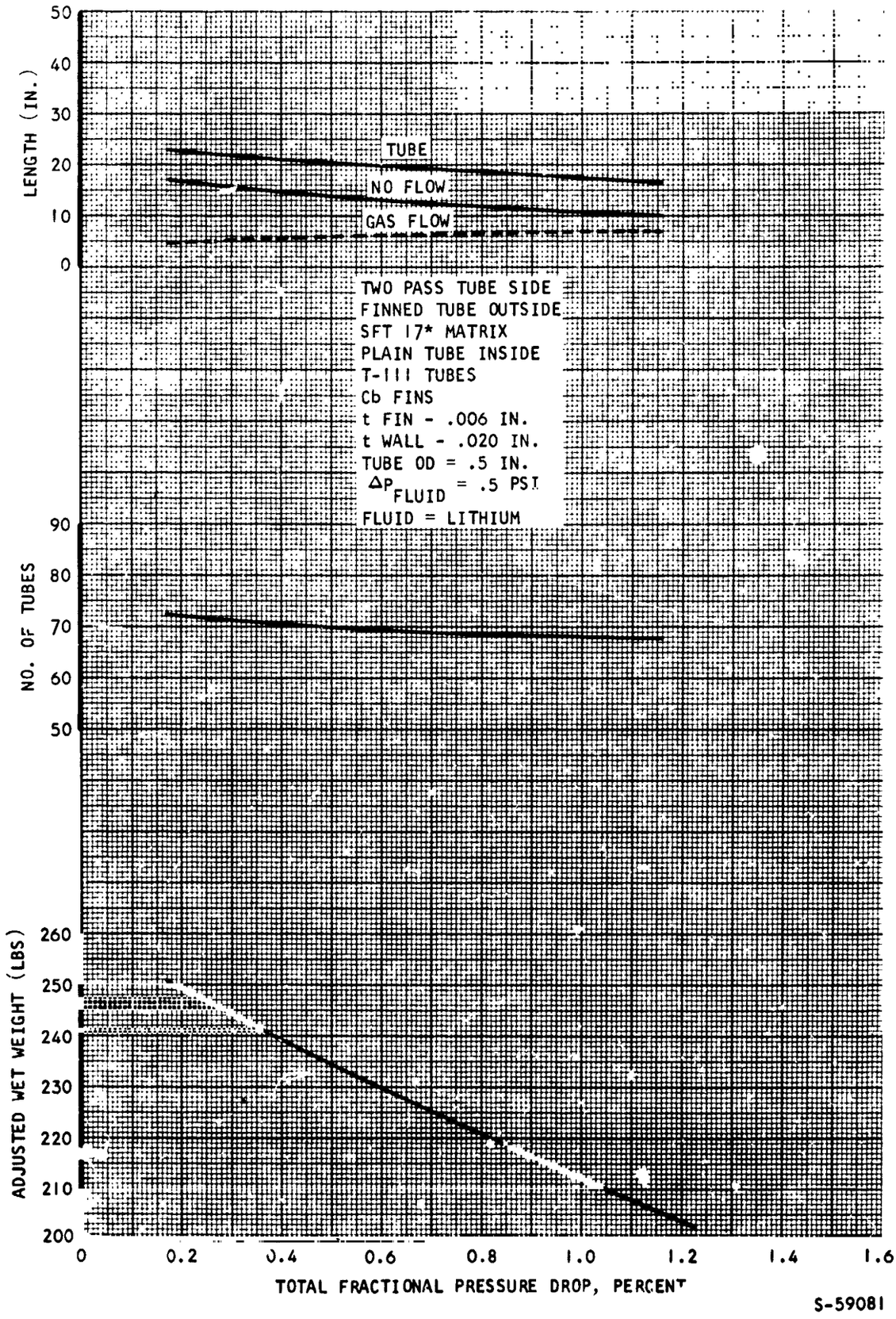

Figure 4-20. HSHX, Case V

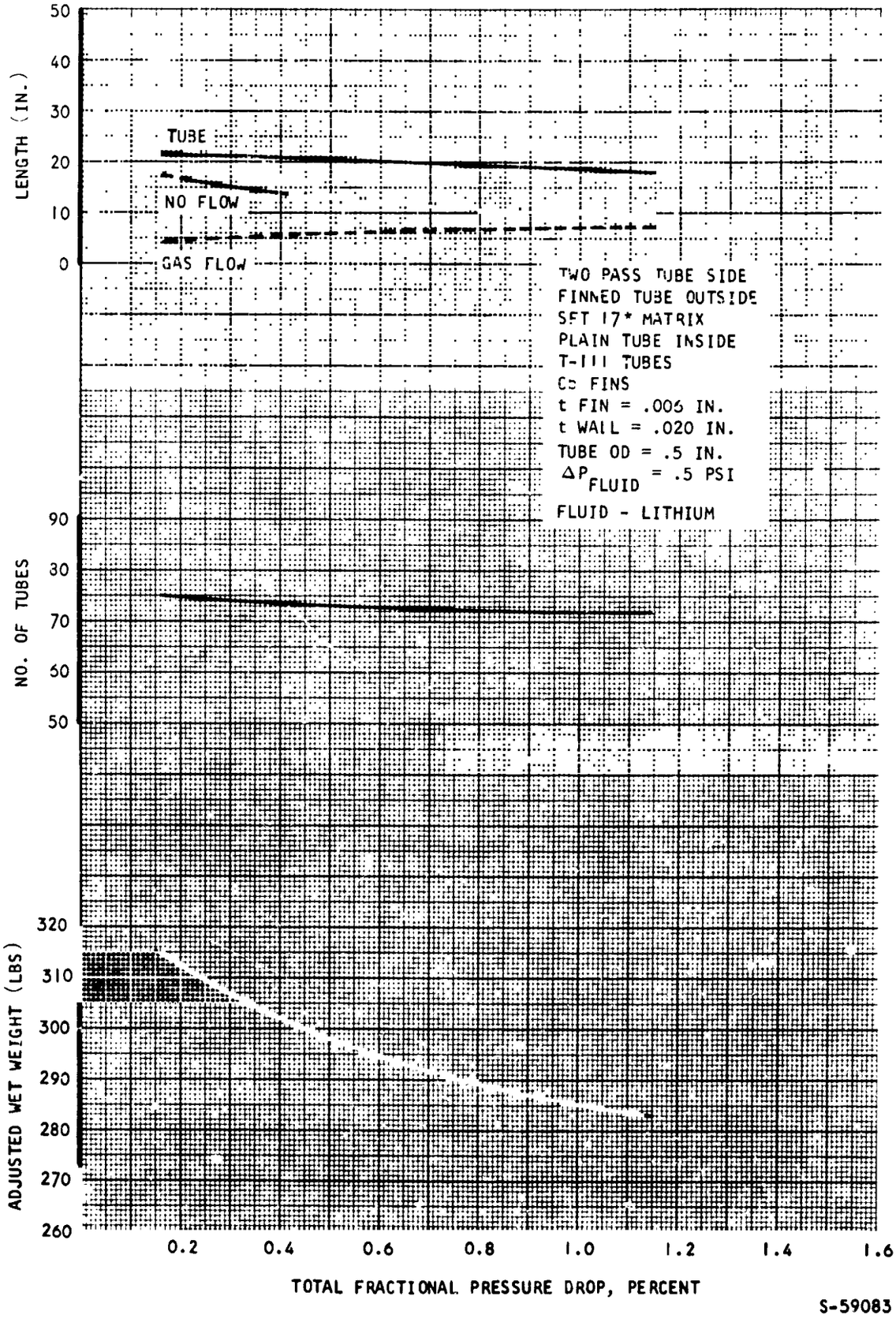

Figure 4-21. HSHX, Case II-A

Core Matrix Designation	Tube Spacing ÷ Tube OD	Tube Row Spacing ÷ Tube OD	Fin Diameter ÷ Tube OD	Fins/in.
SFT 17*	2.29	1.63	1.88	30
SFT 18*	2.34	1.17	1.50	30
SFT 18	1.98	0.99	1 27	30

In all cases the SFT-18 matrix yielded lower weight results consistent with reasonable tube numbers and frontal area aspect ratios. Consequently, this tube matrix was adopted for the SNAP-8 HSHX's. A minimum tube OD of 0.25 in. was selected to avoid any problem of tube plugging by the liquid NaK. Tube diameters of 0.25 in. and 0.50 in. were evaluated for two-, three-, and four-pass cross-counterflow arrangements for a representative SNAP-8 design point. The results of this analysis are shown in Figures 4-22, 4-23 and 4-24 for HSHX's designed for Case 8-II, with a selected gas side pressure loss of 0.40 percent. From these figures it can be seen that low tube weight designs with good frontal area aspect ratios can be realized with a four-pass cross-counterflow arrangement. Because of the very high liquid metal heat transfer coefficients, the gas side of the unit is heavily controlling, and thus the effect of tube diameter and liquid side pressure loss on tube weight is small. Since the HSHX is by far the lightest of the three heat exchangers in the system, and since the proposed construction involves welding each tube into the headers, there is a great incentive to reduce the number of tubes, as well as to achieve a lightweight design solution. From Figure 4-24 it can be seen that for a tube OD of 0.25 in., the number of tubes is excessively high, and in subsequent analyses a tube diameter of 0.50 in. was considered only.

The effect of allocated gas side pressure drop on the HSHX weight and dimensions for the five SNAP-8 design conditions is shown in Figures 4-25 through 4-29. These designs all utilize 0.50-in. diameter tubes, with the SFT 18 gas side surface geometry, and all are four-pass cross-counterflow arrangements. The liquid side pressure losses for each of the cases were chosen to give cores with favorable aspect ratios. Since a high percentage of the heat exchanger weight is in the wrap-up of the tubes and supporting structure, etc., a breakdown of the weights from the parametric study is shown in Table 4-5.

To achieve a minimum volume system package there is a strong incentive to design the three heat exchangers such that they can be integrated into one unit. In the HSHX parametric data it was determined that the liquid side pressure loss had a small effect on the core weight. However, the core frontal area aspect ratio is a strong function of liquid side pressure loss, and was selected to facilitate the matching of the face area of the HSHX with the high pressure outlet face of the recuperator.

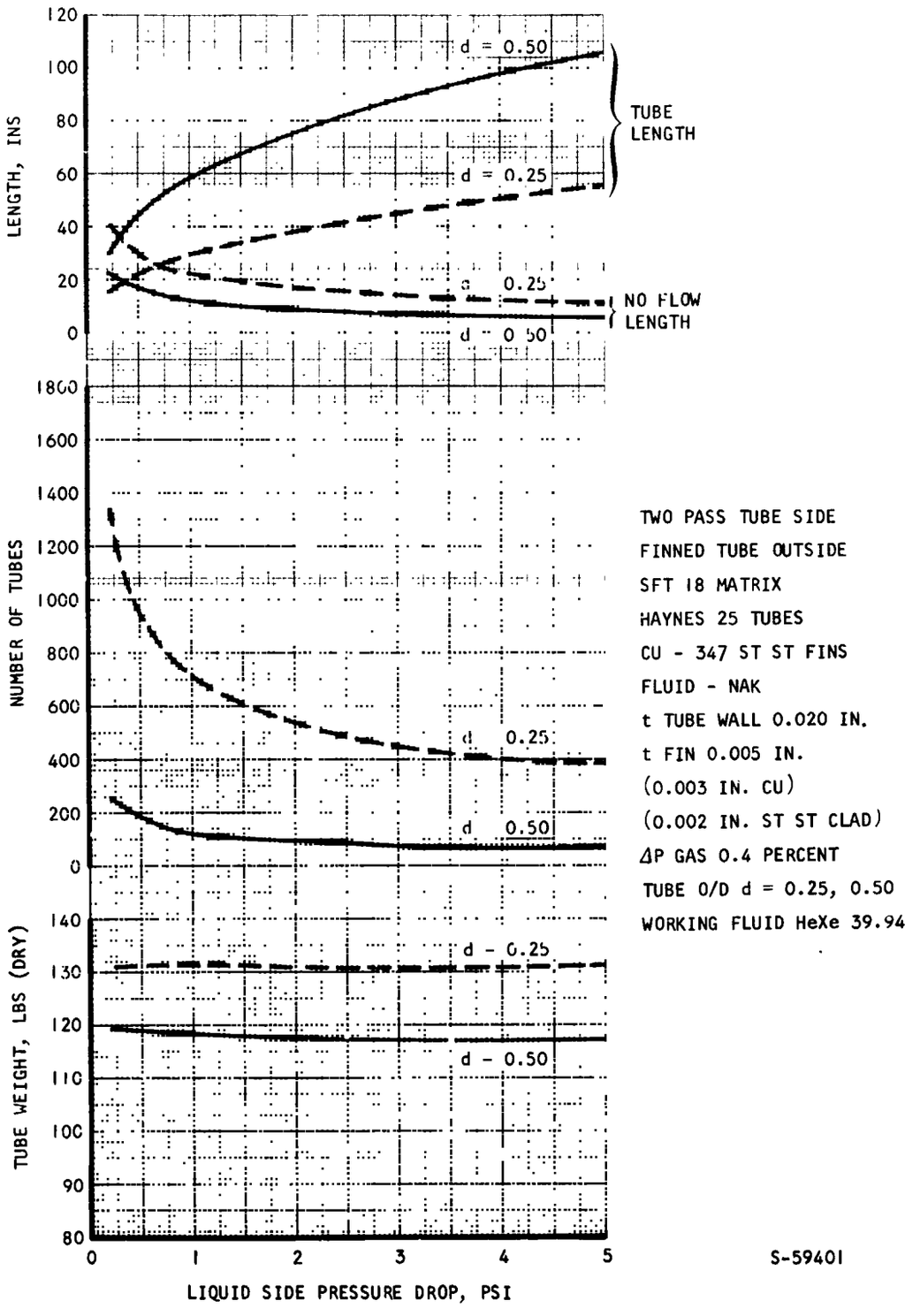

Figure 4-22. Two-Pass HSHX Designs, Case 8-II

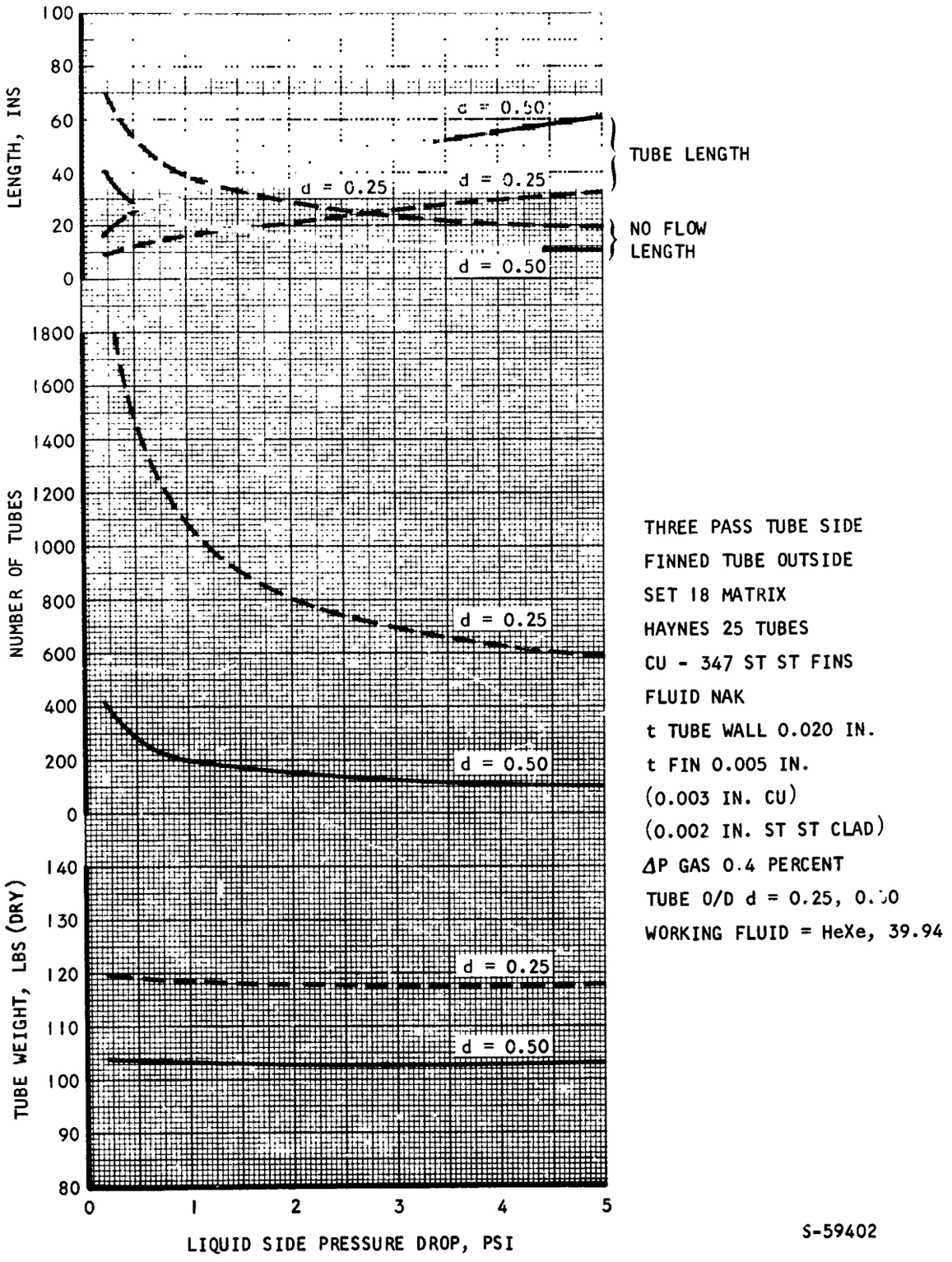

Figure 4-23. Three-Pass HSHX Designs, Case 8-II

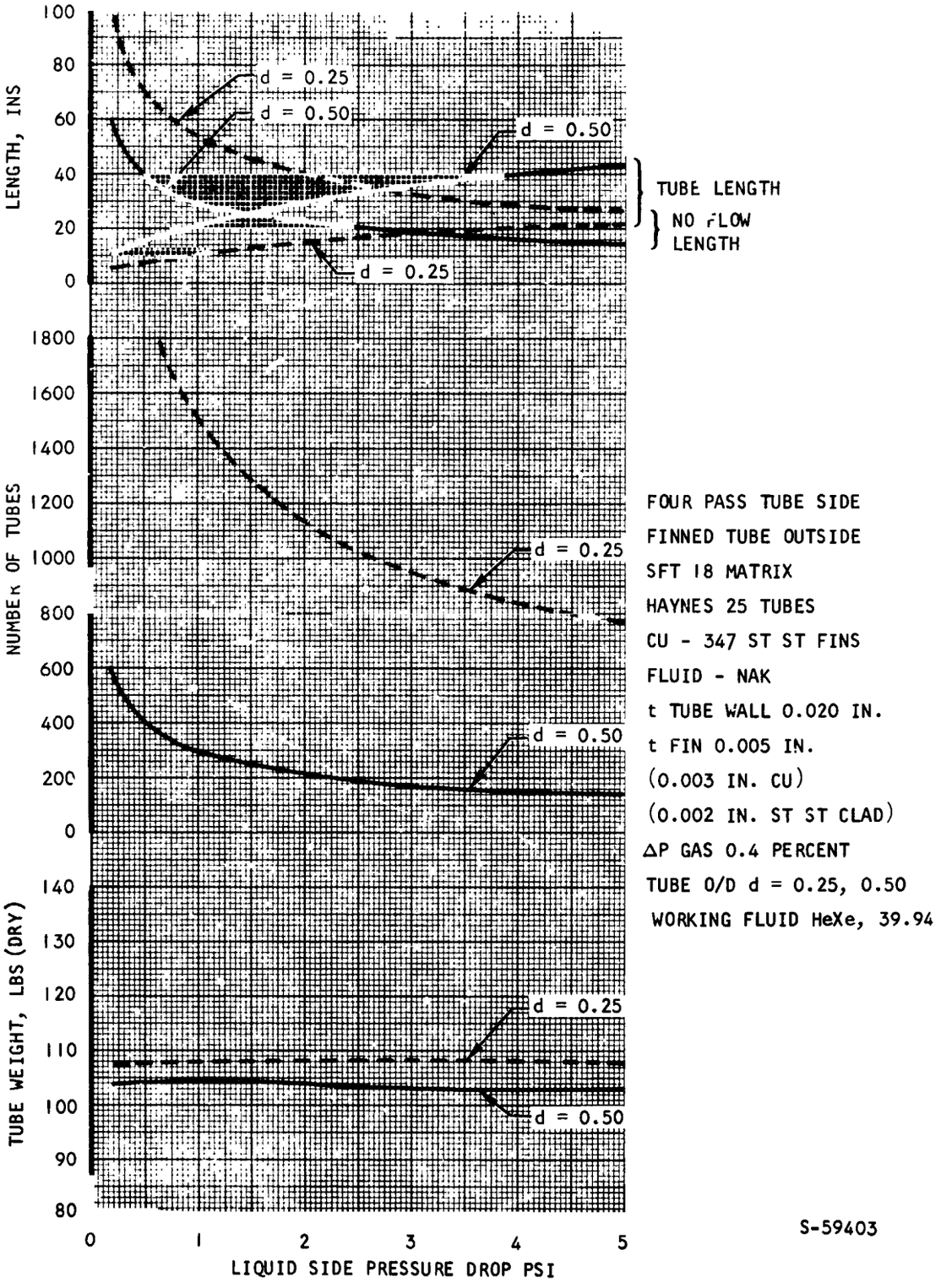

Figure 4-24. Four-Pass HSHX Designs for Case 8-II

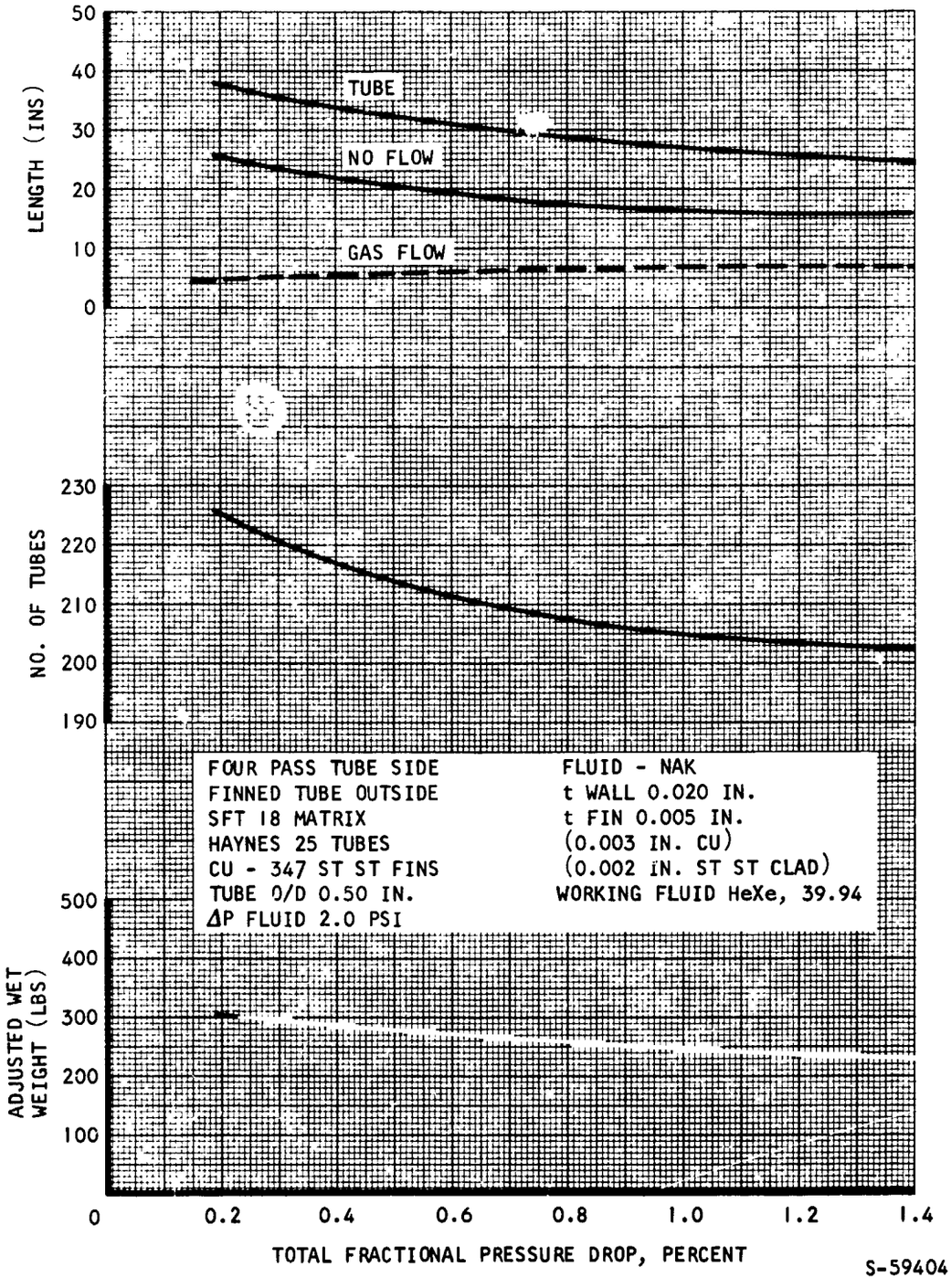

Figure 4-25. HSHX, Case 8-VIII

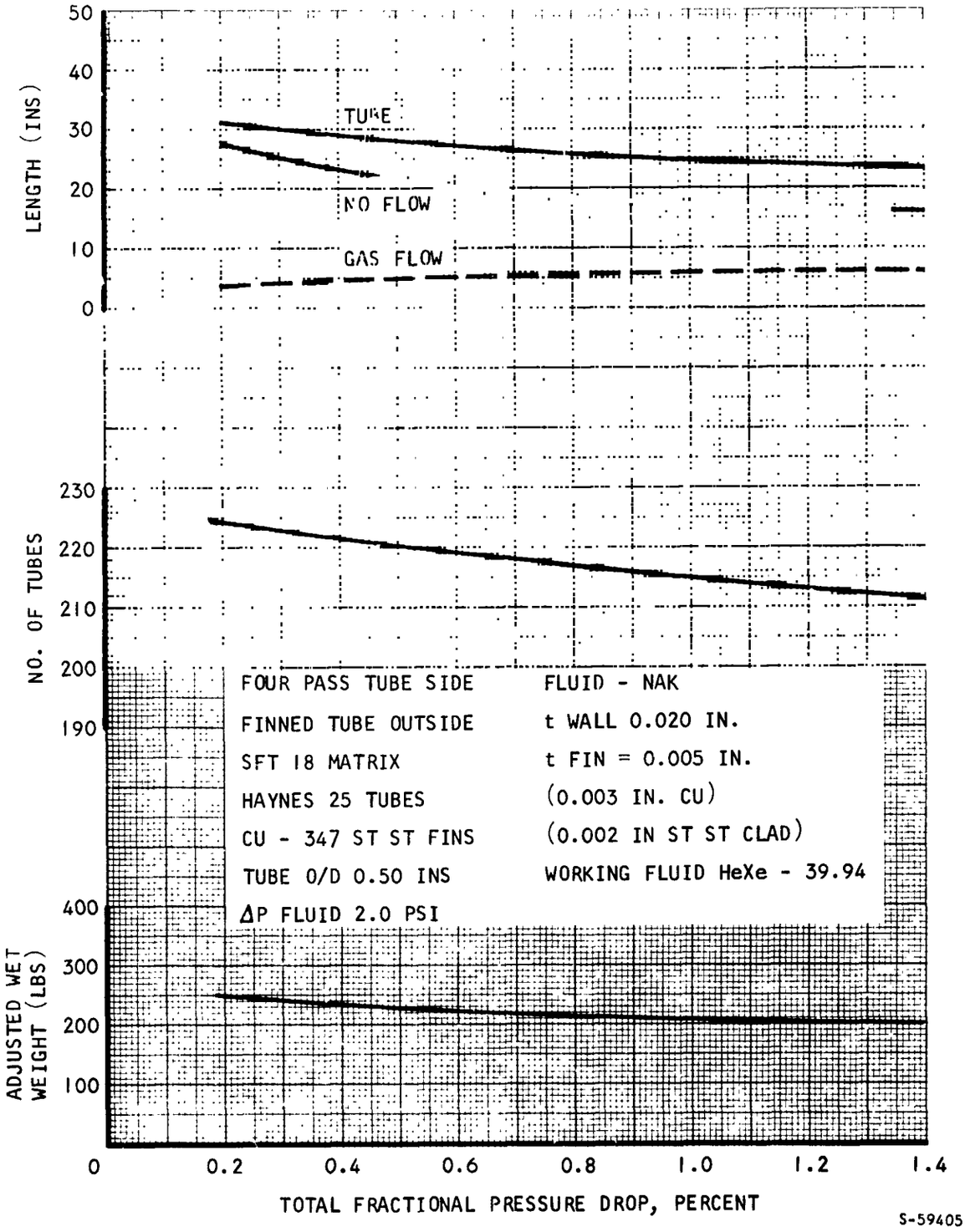

Figure 4-26. HSHX, Case 8-II

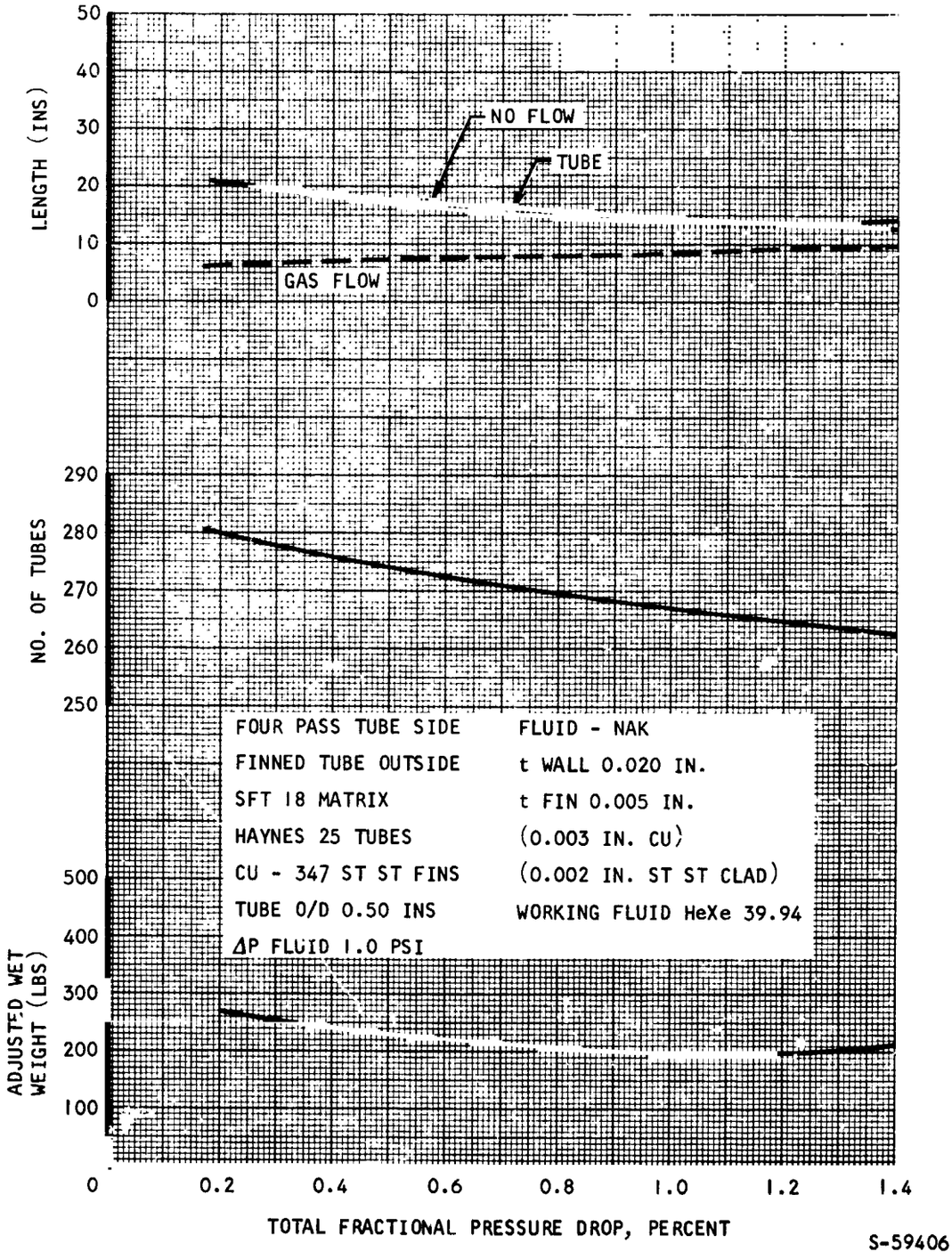

Figure 4-27. HSHX, Case 8-XI

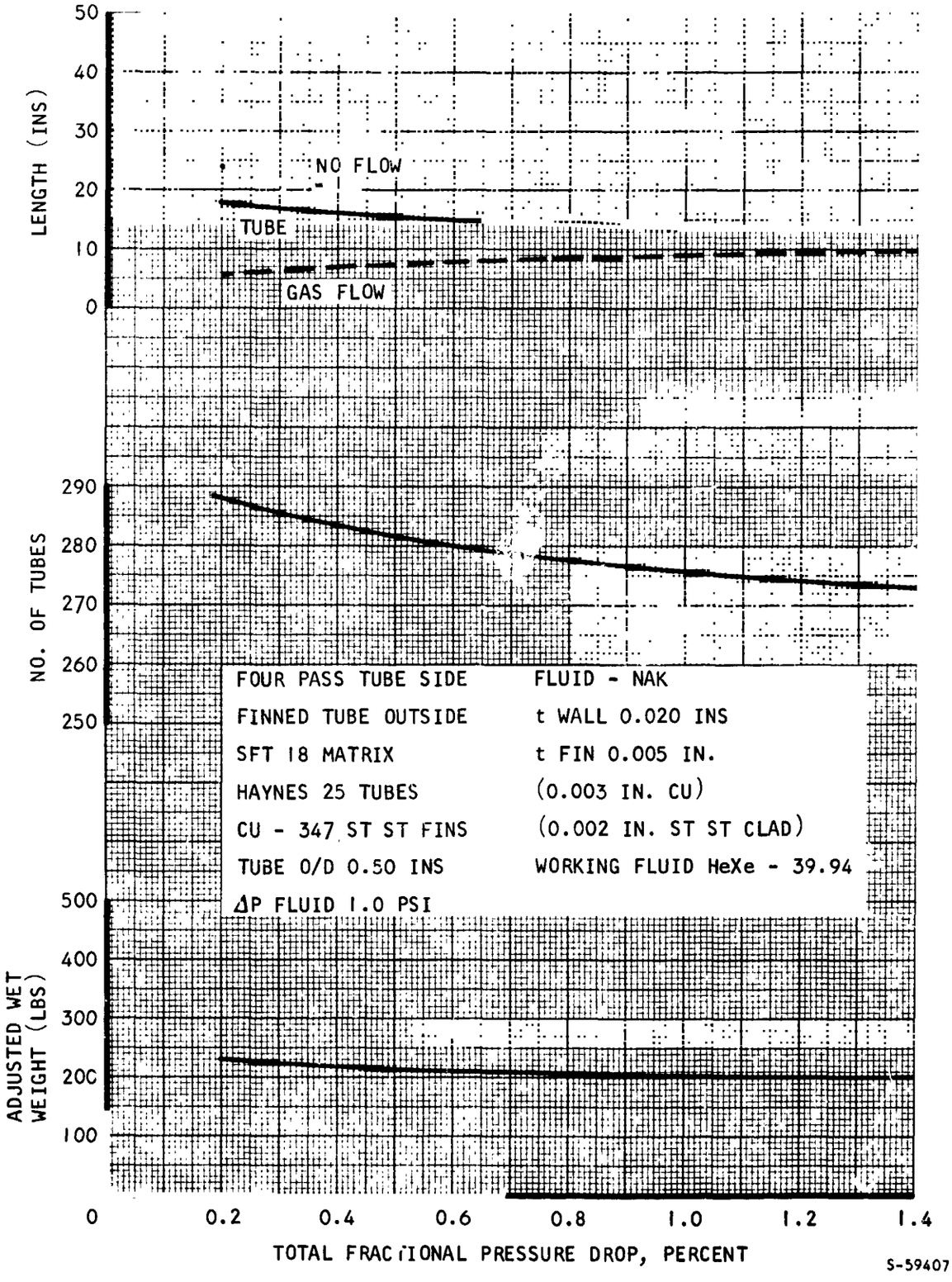

Figure 4-28. HSHX, Case 8-V

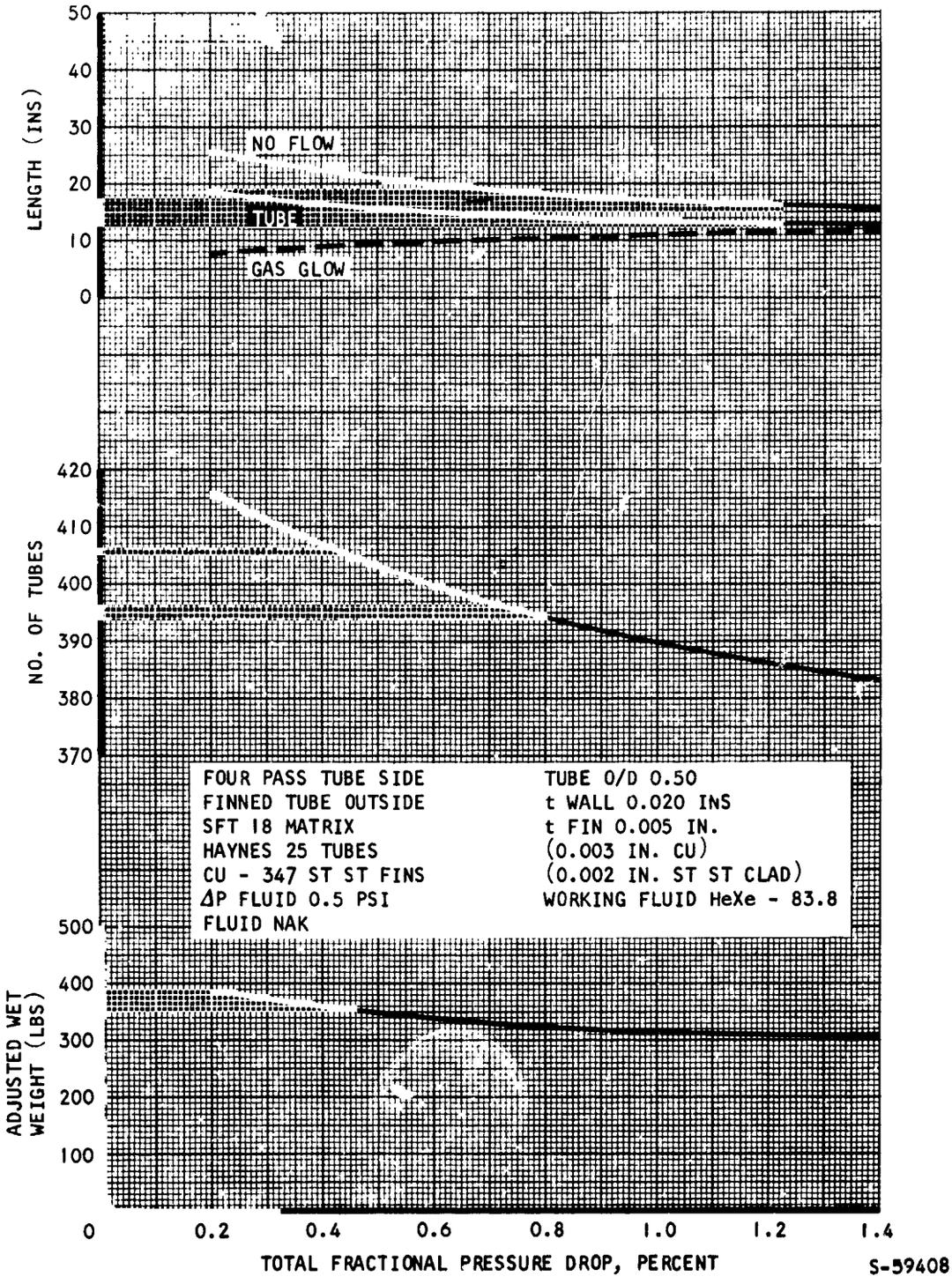

Figure 4-29. HSHX, Case 8-IIA

Waste Heat Exchanger

The primary heat exchanger configuration considered for the waste heat exchanger during the Task 2 studies in the cross-counterflow, finned-tubular unit. In this configuration the liquid coolant makes a number of crossflow passes on the tube side while the gas makes a single pass on the shell side of the exchanger. The optimum number of liquid passes for the heat exchanger design represents a compromise between heat exchanger required UA, which decreases with an increase in number of passes, and liquid pressure drop, which increases with increased number of passes. For the HXDA problem statement, the use of eight passes was found to represent the best compromise between these two factors.

To increase liquid-side heat transfer, flap turbulators are brazed to the tubes in all of the waste heat exchangers calculated. The turbulators act to increase tube-side conductance by promoting liquid turbulence, thereby increasing the film coefficient, and by providing increased area for heat transfer. The use of turbulators was found to be superior on a weight basis to several other tube-side configurations studied, which included plain tubes, tubes with plain strip inserts, and ring-dimpled tubes. AiResearch has extensive test data, utilized for this study, on the heat transfer and pressure loss characteristics of both turbulated and ring-dimpled tubes.

The shell-side heat transfer surface in the finned tubular configuration consists of copper disk fins brazed to the tube outer surfaces. The heat transfer matrix was optimized by calculating heat exchanger sizes for a number of different fin diameters for each case. A fin thickness of 0.003 in. and 30 fins/in. were used in all cases.

The finned tubular heat exchanger configuration is shown in Figure 4-30. The heat exchanger actually consists of two separate cores, one for each independent cooling loop, placed in series with respect to the gas stream. In addition, in order to obtain a favorable gas face aspect ratio for packaging, each of the two cores is split into two separate modules such that the liquid flow is split between upper and lower tube bundles. Flow splitting on the liquid side was necessary in most cases to maintain the liquid pressure drop within the allowable limit of 10 psi.

The waste heat exchanger parametric data is presented in Figures 4-31 through 4-39. The weights shown include the weights associated with the heat exchanger structural design (i.e., headers, manifolds, pans, tube supports), which represent a large portion of the total weight of the finned tubular unit. Because the weights of the finned tubular configurations were found to be quite high, a plate-fin waste heat exchanger was also calculated for Case II only. In this configuration, the two independent cooling loops are integrated into a single core. A comparison of the plate-fin and finned tubular heat exchanger weights and volumes for the Case II conditions is shown in Figure 4-37. It can be seen that the plate-fin unit is less than 50 percent the size and weight of the finned-tubular design.

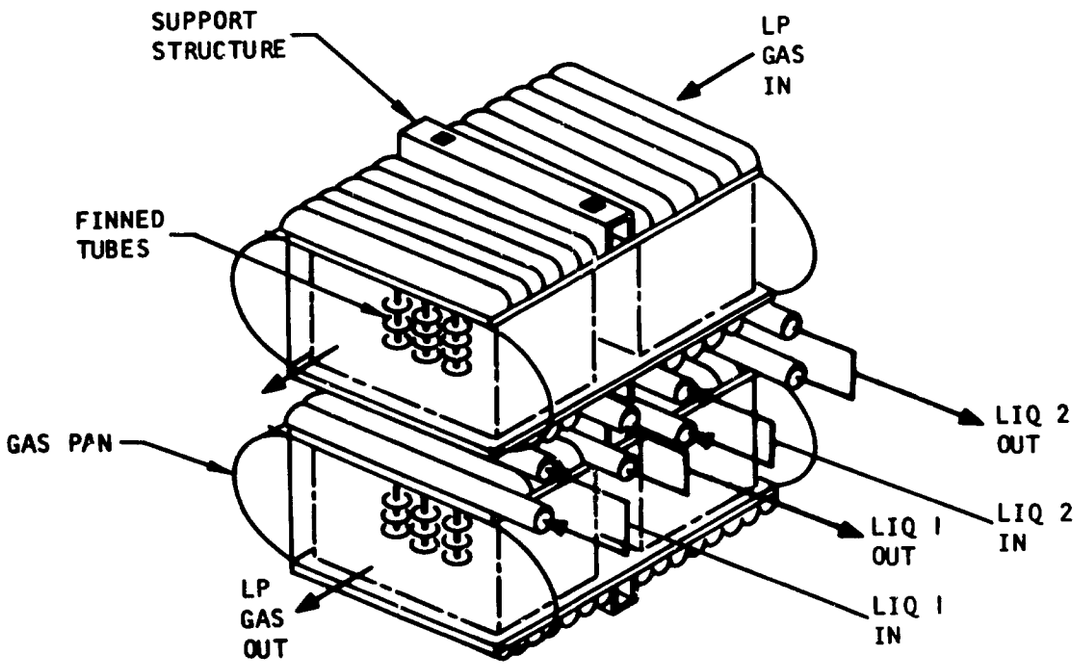

Figure 4-30. Waste Heat Exchanger

S-55641-A

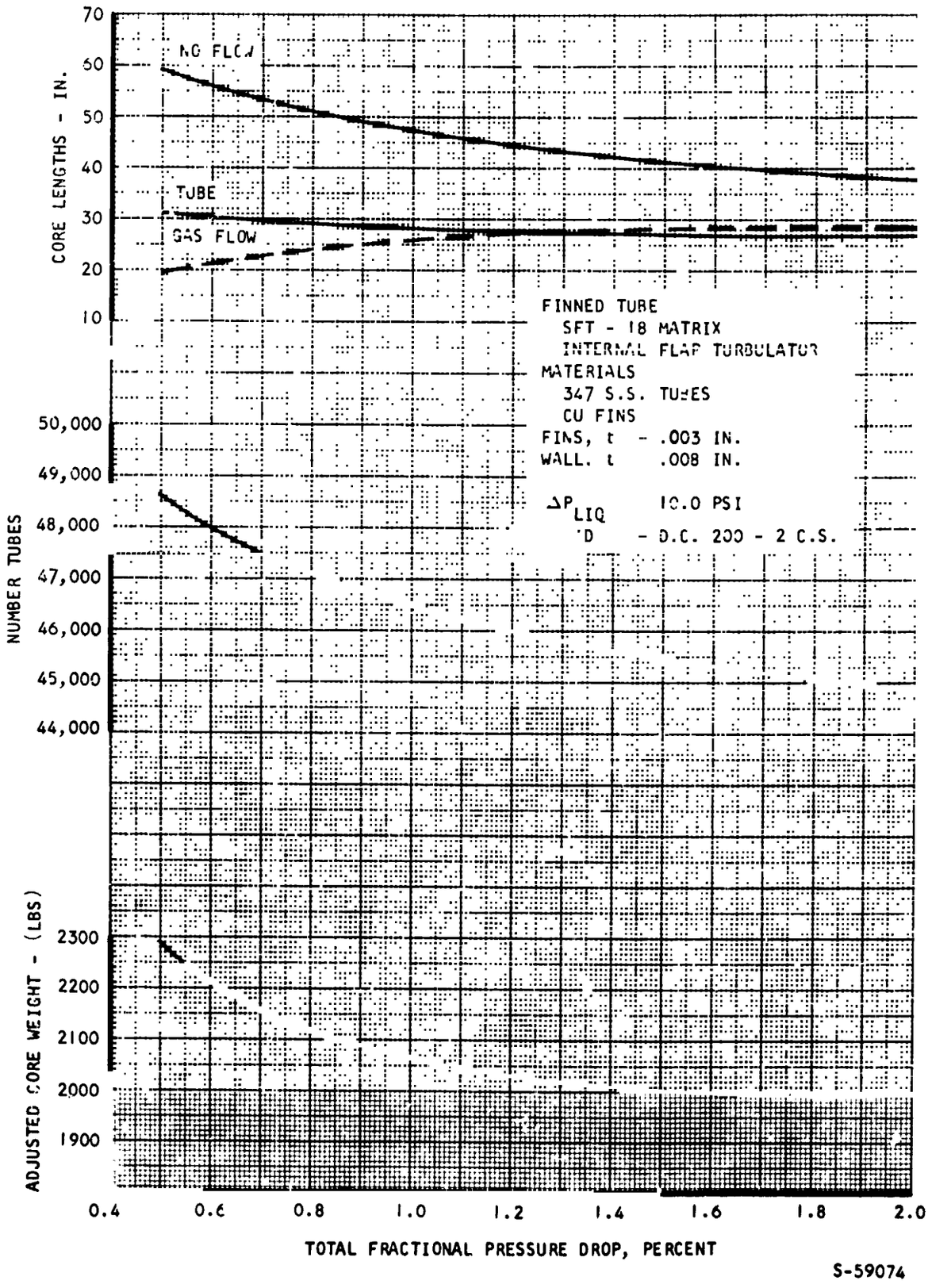

Figure 4-31. Waste Heat Exchanger, Case 8-VIII

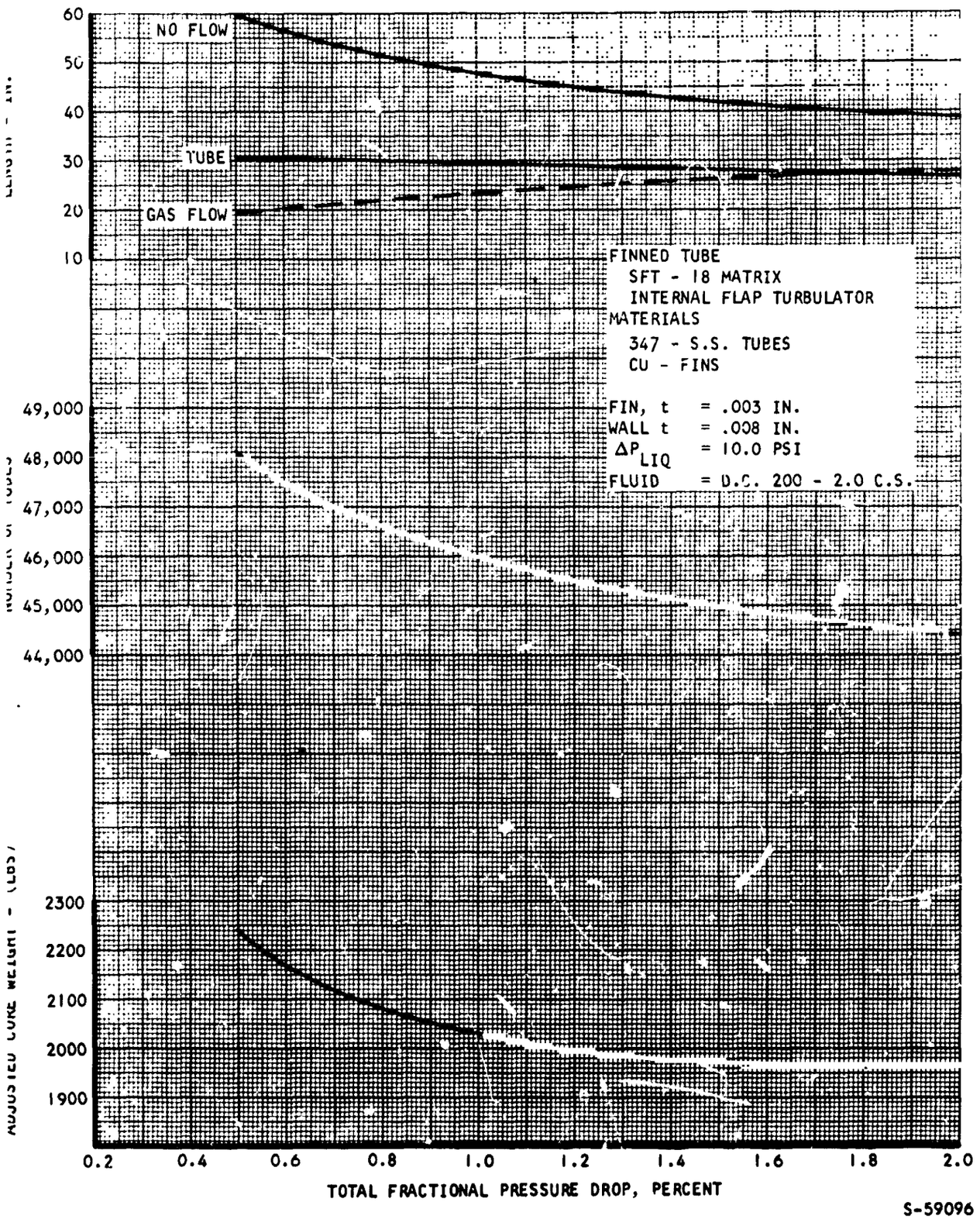

Figure 4-32. Waste Heat Exchanger, Case 8-II

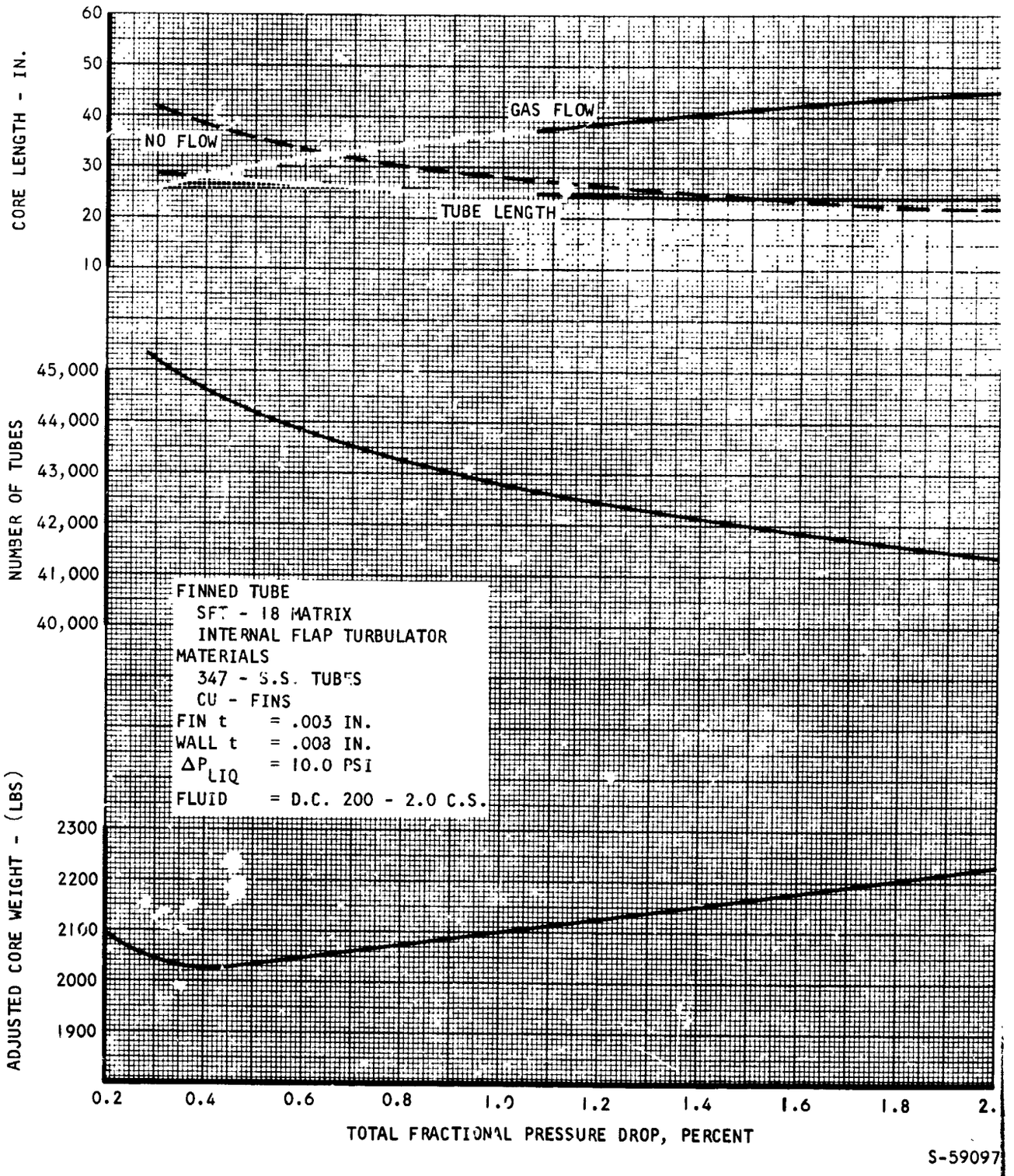

Figure 4-33. Waste Heat Exchanger, Case 8-XI

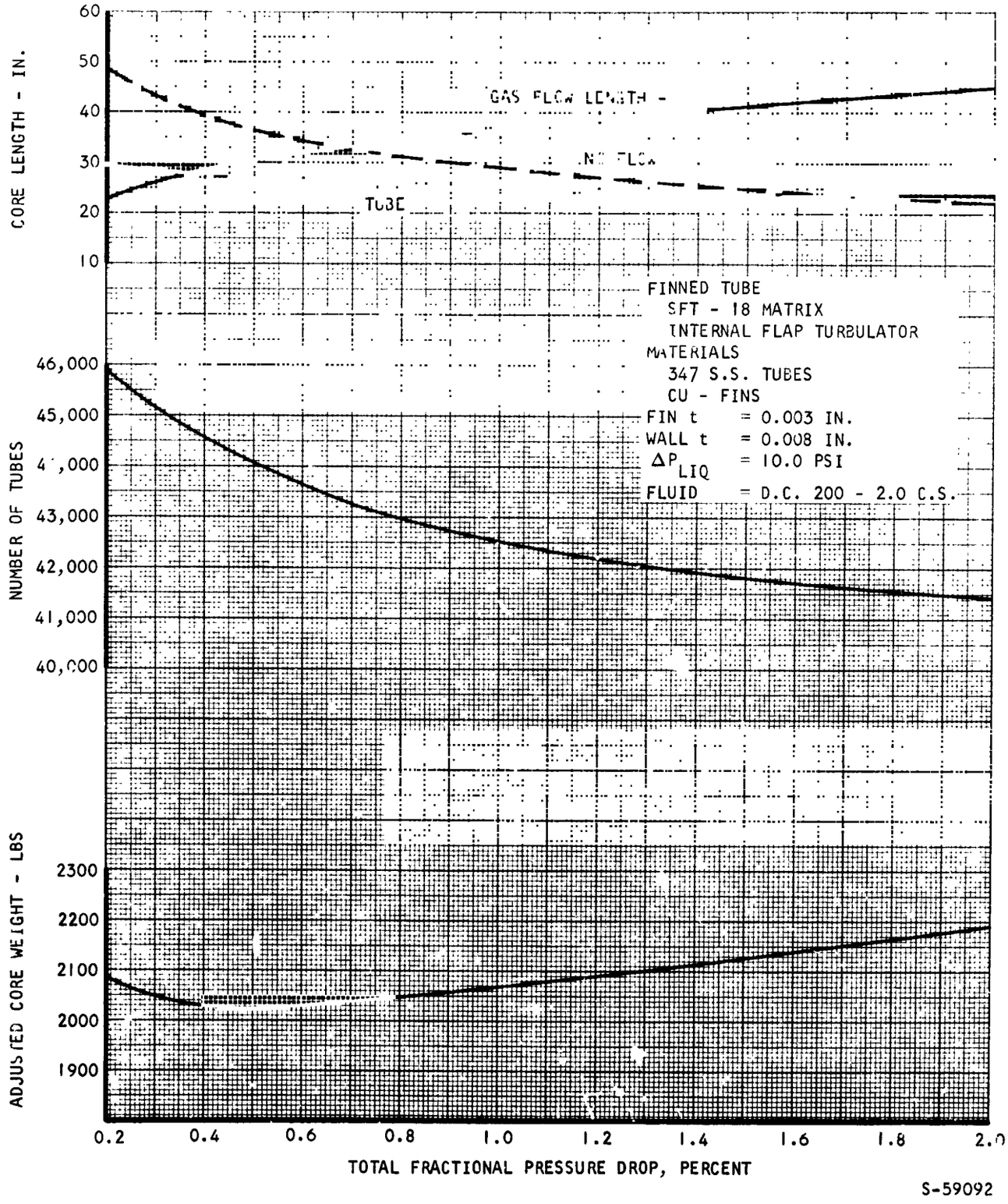

S-59092

Figure 4-34. Waste Heat Exchanger, Case 8-V

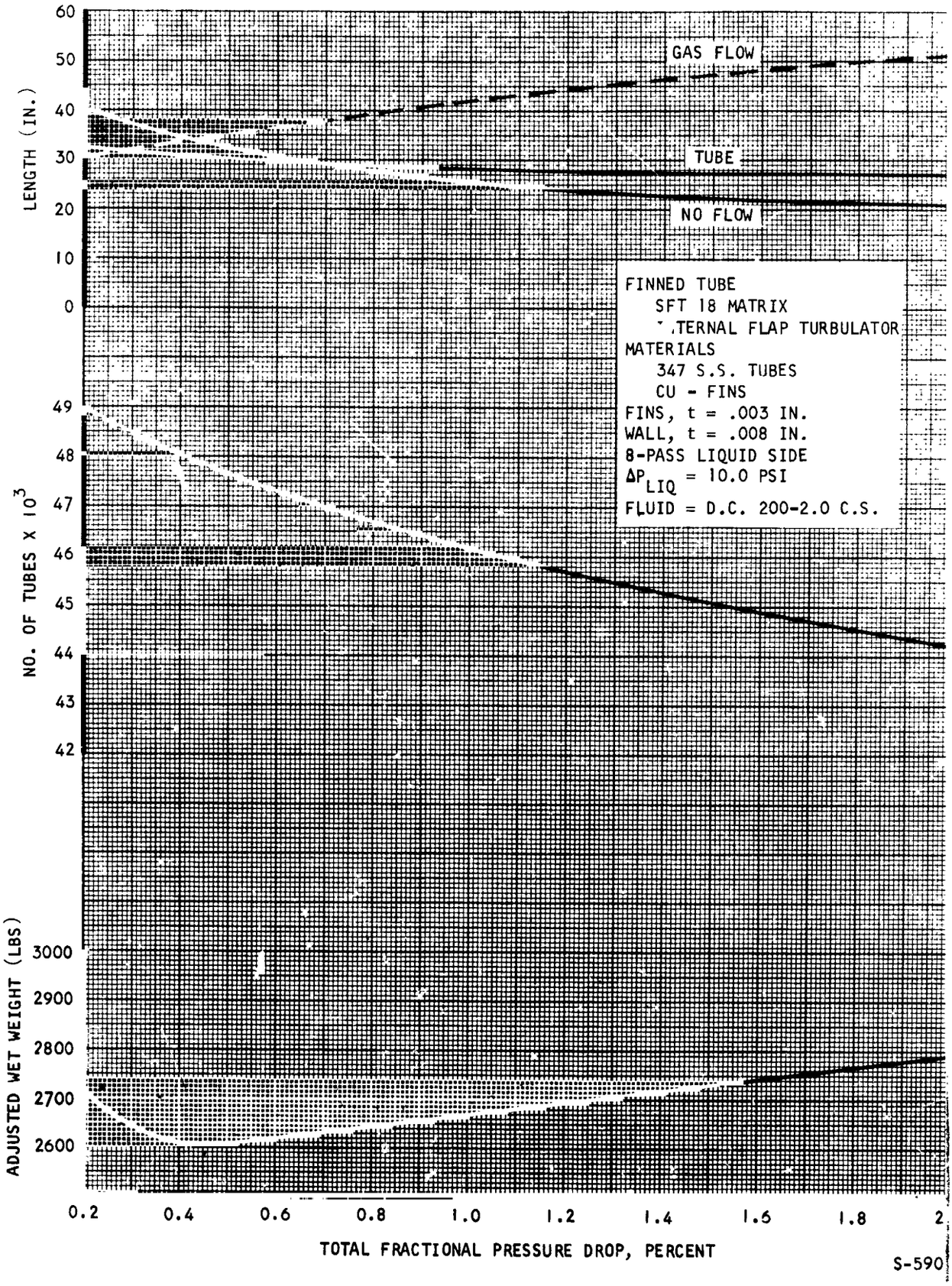

Figure 4-35. Waste Heat Exchanger, Case 8-II-A

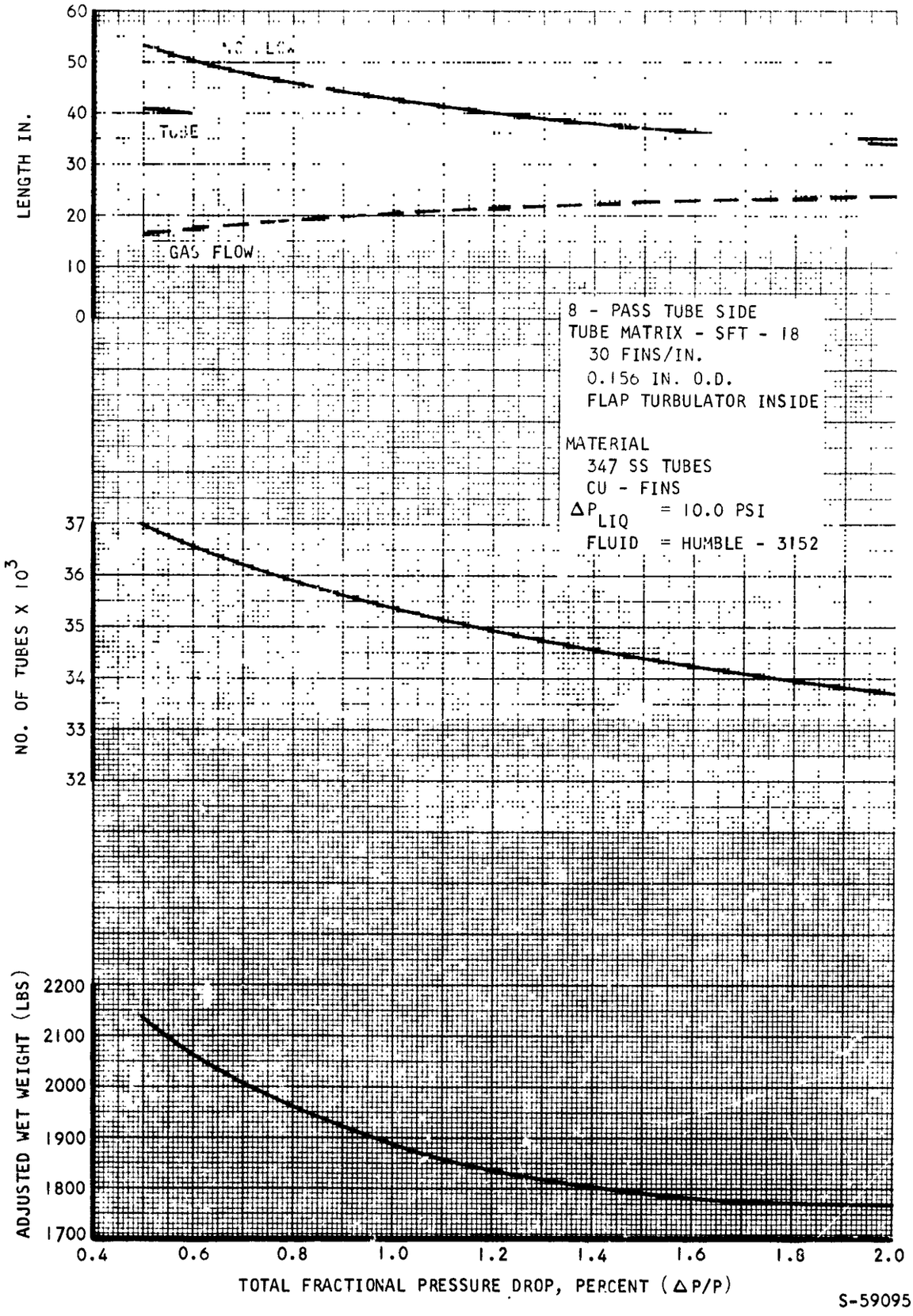

Figure 4-36. Waste Heat Exchanger, Case II

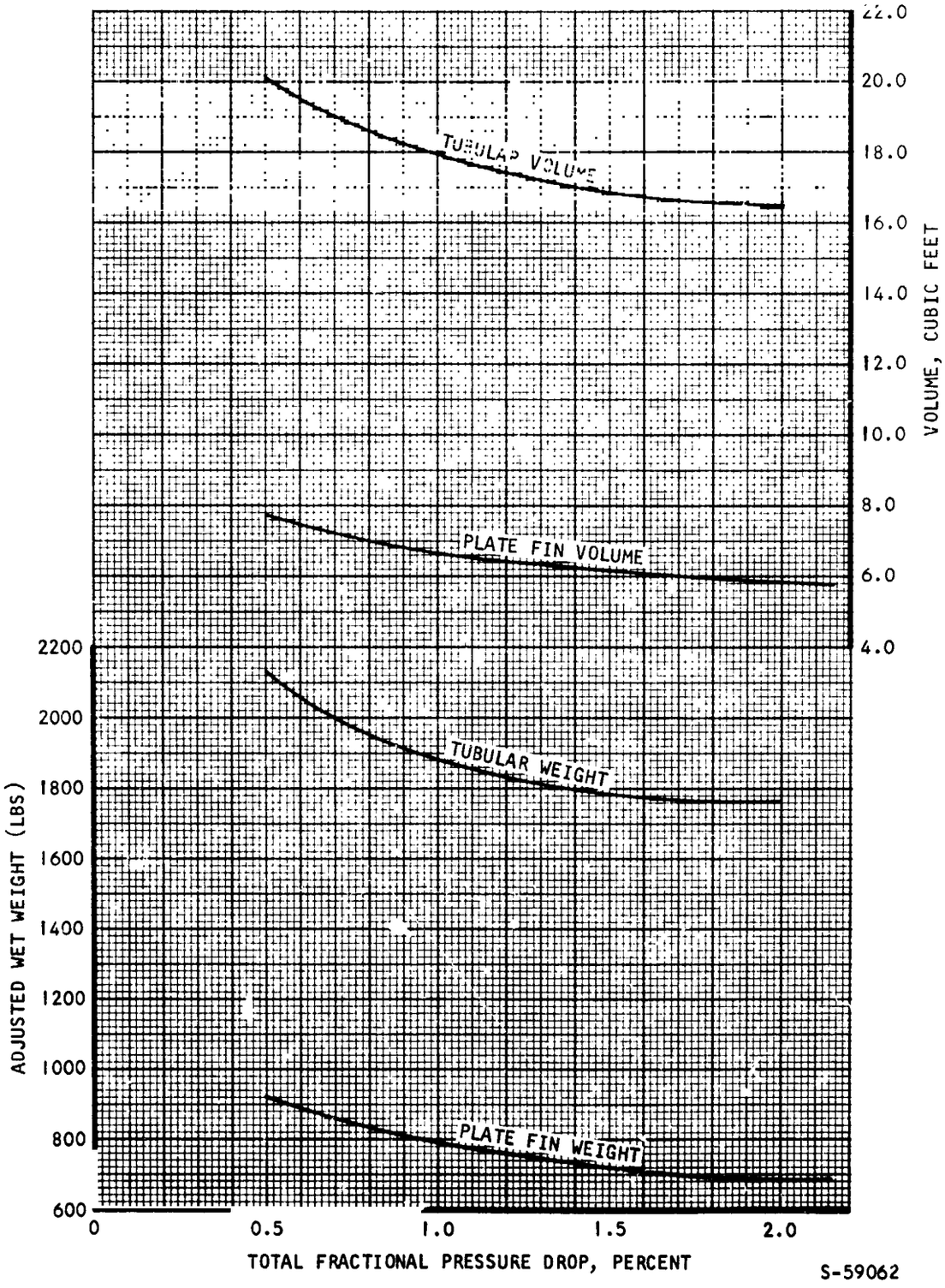

Figure 4-37. Comparison of Plate-Fin vs Tubular Waste Heat Exchanger, Case II

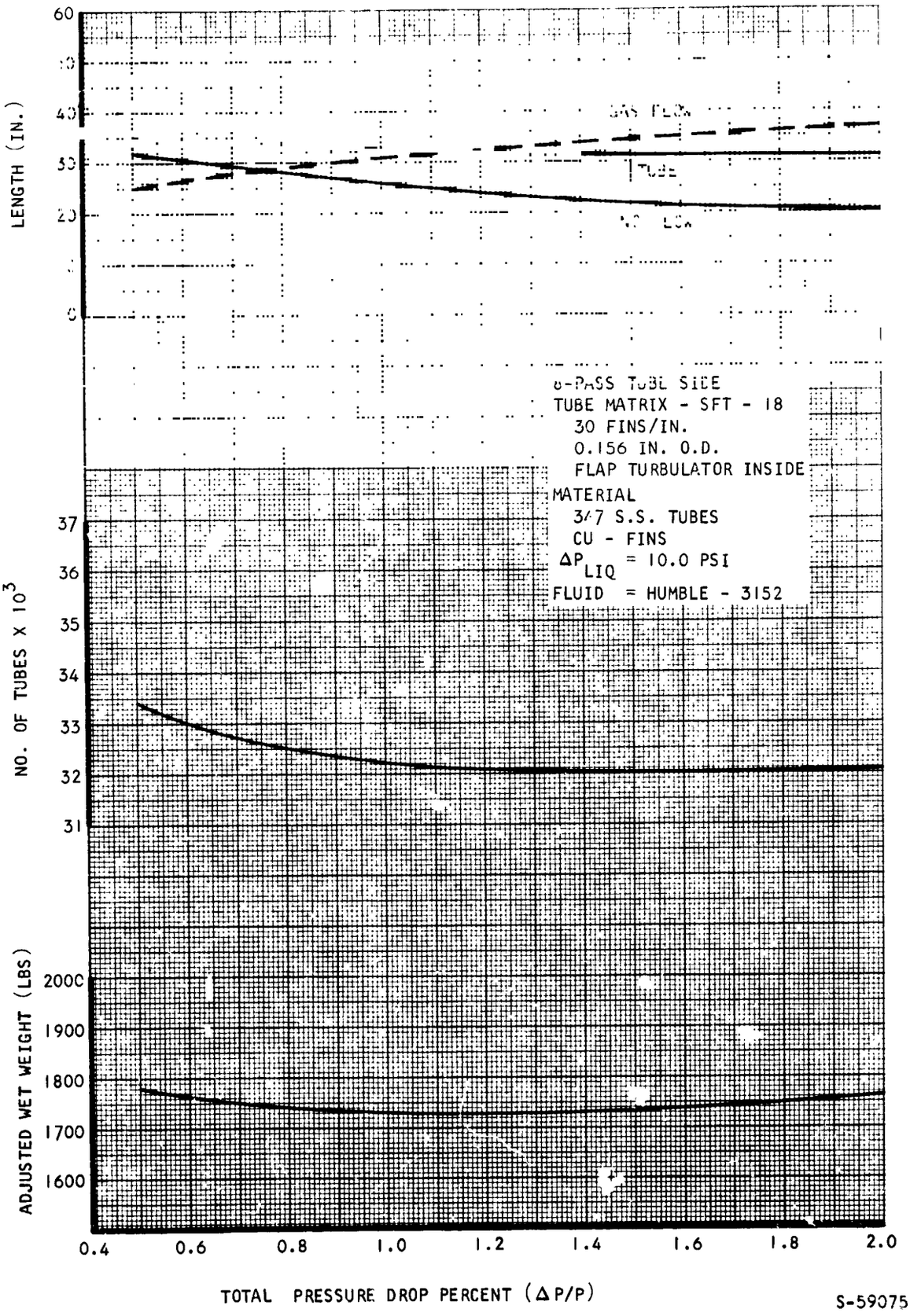

Figure 4-38. Waste Heat Heat Exchanger, Case V

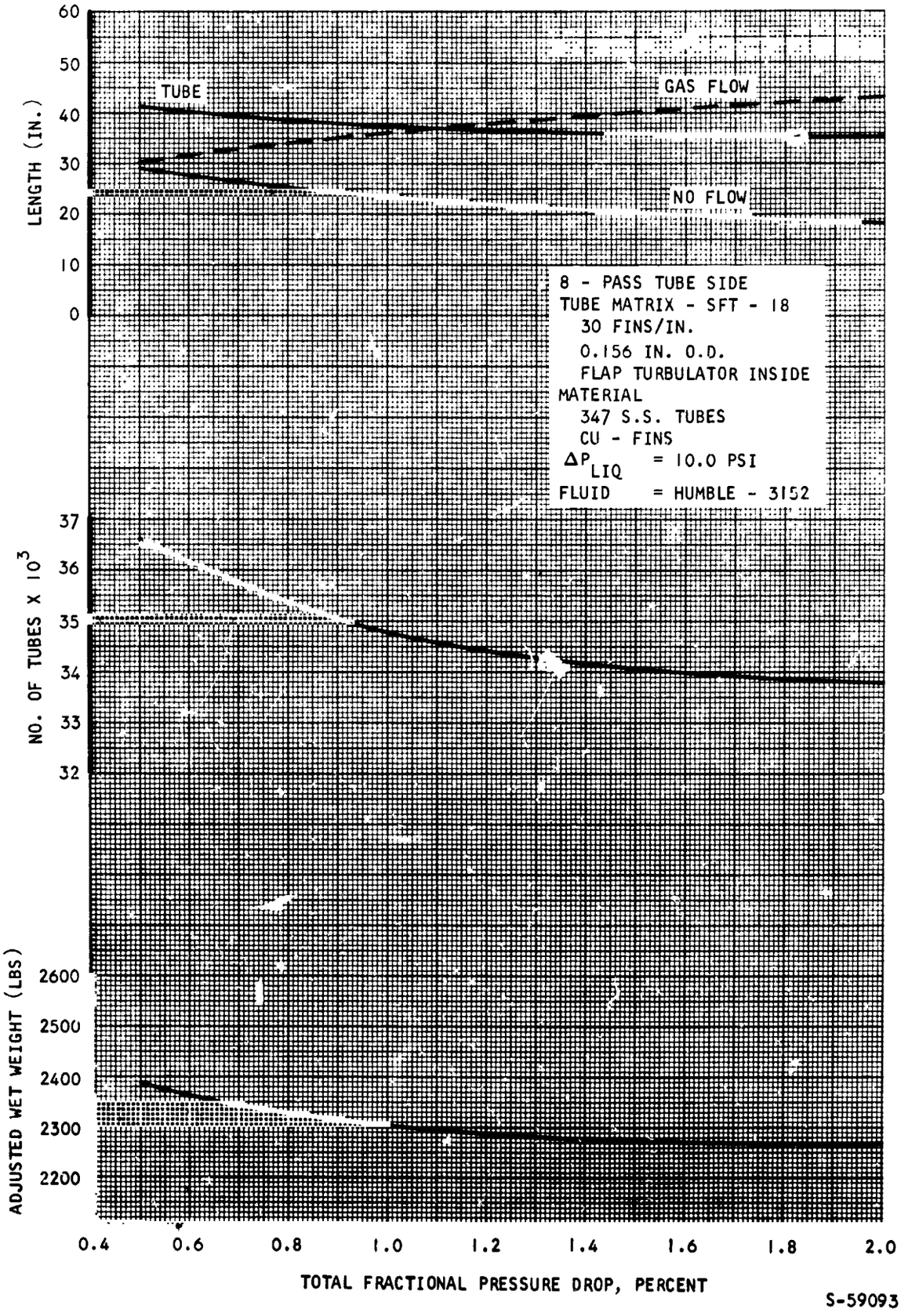

Figure 4-39. Waste Heat Heat Exchanger, Case II-A

Structural Design

The structural effort for the parametric analysis of 24 designs included material selection, tube-fin design, and weight calculations for the heat source heat exchanger and waste heat exchanger. Calculations were performed for the eight base cases for the design conditions in Table 4-3. The basic approach and design information developed in the preliminary work formed the basis for the parametric analysis. Additional work performed specifically for this phase is discussed in this section. The primary structural output was the weights of tubular waste and heat source heat exchangers which are summarized in Tables 4-4 and 4-5, respectively.

1. Material Selection

The materials for the three heat exchangers are included in Table 4-3. Basic structural materials and secondary materials, such as disk fins required for heat transfer (in parenthesis), are listed. Material strength properties are provided in Appendix A-2.

Material selection followed the choices of structural materials in the preliminary analysis of Task I except for using 347 steel in SNAP-8 recuperators and Haynes 25 and copper/stainless steel fins in the SNAP-8 heat source exchanger. In the SNAP-8 recuperator designs, 347 steel could be used since adequate strength is available for minimum gage designs at the 850°F maximum operating temperature. Materials for the SNAP-8 heat source heat exchanger designs were dictated by compatibility with the liquid metal environment and good strength capability. The NaK metal is corrosive to alloys with high nickel content and Haynes 25 is a cobalt base alloy with a low nickel content. It also has good strength, somewhat greater than Hastelloy X, at the 1165°F temperature of the SNAP-8 designs. Core weight from a structural standpoint is primarily a function of allowable stress at the highest operating temperature, so that Haynes 25 provides the lightest design.

Disk fin material selection was governed by heat transfer requirements for reducing heat exchanger size and weight; however, at the more severe operating conditions, structural evaluation (see below) was required. Satisfactory extended surface designs consisted of copper for the waste heat exchanger, columbium for the advanced heat source heat exchanger, and copper supported by 347 steel for the SNAP-8 heat source heat exchanger.

2. Disk Fin Design

Disk fin designs were established based on inertia loads of 24 g and a 50 Hz minimum natural frequency for the fin. The fin was assumed to be a cantilever beam operating at the tube temperature. For the copper-347 steel fins, it was assumed that the copper added weight but no strength or stiffness. The 347 steel strength was adequate to support a 0.005-in. fin thickness, 0.003 in. of copper and 0.002 in. of steel, at the 1165°F SNAP-8 heat source heat exchanger conditions. Copper and columbium fins had adequate strength at minimum gage thicknesses for the waste and advanced heat source heat exchanger conditions.

TABLE 4-3

HEAT EXCHANGER DESIGN CONDITIONS AND REQUIREMENTS

a. RECUPERATOR

System	Case	Material	Temperature, °F		Pressures, psi	
			Inlet	Outlet	Gas	Liquid
Advanced	II	Hastelloy X	487	1200	57	105
	V				124	228
	II-A				165	304
SNAP-8	8-II	347 steel	324	850	73	135
	8-V	or Hastelloy X			165	304
	8-VIII				73	135
	8-XI				165	304
	8-IIA				223	410

b. WASTE HEAT EXCHANGER

System	Case	Material	Temperature, °F		Pressures, psi	
			Inlet	Outlet	Gas	Liquid
Advanced	II	347 steel	240	487	57	75
	V	(Copper fins)			124	
	II-A				165	
SNAP-8	8-II	347 steel	120	324	73	75
	8-V	(Copper fins)			165	
	8-VIII				73	
	8-IX				165	
	8-IIA				223	

c. HEAT SOURCE HEAT EXCHANGER

System	Case	Material	Temperature, °F		Pressures, psi	
			Inlet	Outlet	Gas	Liquid
Advanced	II	Tantalum T-111	1570	1670	105	30
	V	(Cb-1Zr fins)			228	
	II-A				304	
SNAP-8	8-II	Haynes 25	850	1165	135	80
	8-V	(Copper-347			304	
	8-VII	steel fins)			135	
	8-XI				304	
	8-IIA				410	

TABLE 4-4

WASTE HEAT EXCHANGER WEIGHT SUMMARY RECTANGULAR TUBULAR (SEE FIGURE 3-38)

System	Case	ΔP/P	Item Weight, lb					Core
			Tubes, Liquid	Raffles	Headers	No Flow Pans	Support Beams	
Advanced	II	0.5	1530	30	390	30	160	2130
		1.0	1330	30	410	30	80	1880
		1.5	1270	20	440	60	50	1840
		2.0	1190	20	450	60	50	1770
	V	0.5	1170	40	470	60	50	1780
		1.0	1060	30	540	60	40	1730
		1.5	1010	30	620	60	40	1760
		2.0	970	30	650	60	40	1760
	IIA	0.5	1520	90	670	60	50	2390
		1.0	1330	80	750	60	50	2270
		1.5	1260	70	850	70	50	2300
		2.0	1210	50	900	50	50	2260
SNAP-8	8-II	0.5	1520	30	490	30	180	2240
		1.0	1350	20	540	30	90	2030
		1.5	1280	20	590	30	60	1980
		2.0	1240	20	630	30	60	1980
	8-V	0.1	1510	60	510	40	180	2300
		0.2	1340	60	550	40	90	2070
		0.3	1290	50	600	0	60	2050
		0.5	1190	50	680	40	60	2020
		1.0	1100	50	820	40	60	2070
		1.5	1040	40	930	50	60	2130
	8-VIII	0.5	1550	30	510	30	170	2290
		1.0	1370	20	550	30	90	2060
		1.5	1330	20	610	30	60	2060
		2.0	1250	20	640	30	60	2000
	8-XI	0.1	1540	60	510	40	180	2320
		0.2	1360	60	550	40	90	2090
		0.3	1290	50	600	40	60	2040
		0.5	1210	50	690	40	60	2040
		1.0	1120	50	850	40	60	2110
		1.5	1070	40	960	50	60	2170
		2.0	1030	40	1050	50	60	2230
	8-IIA	0.1	1920	110	710	80	170	2990
		0.2	1690	100	760	80	90	2710
		0.3	1580	90	830	80	70	2640
		0.5	1450	80	930	80	70	2650
		1.0	1320	80	1120	80	60	2670
		1.5	1250	70	1270	90	60	2740
		2.0	1200	70	1360	90	60	2790

TABLE 4-5

HEAT SOURCE HEAT EXCHANGER WEIGHT SUMMARY
RECTANGULAR TUBULAR (SEE FIGURE 3-40)

System	Case	ΔP Outside the Tubes, psi	Weight, lb					
			Tubes, Liquid	Baffles	Headers	No Flow Pans	Support Beams	Core
Advanced	II	0.1725	90	10	30	50	40	220
		0.5175	80	10	30	40	40	190
		0.8625	70	10	30	40	40	190
		1.208	70	10	30	40	30	170
	V	0.377	80	20	40	80	30	250
		1.133	70	20	50	90	40	270
		1.883	60	20	40	70	30	230
		2.616	50	10	40	60	30	200
	II-A	0.5	80	30	40	90	40	270
		1.5	70	30	50	110	40	300
		2.5	70	20	50	100	30	270
		3.5	60	20	50	110	30	280
SNAP-8	8-II	0.223	140	20	30	30	20	240
		0.67	120	10	30	60	10	250
		1.117	110	10	30	50	10	210
		1.567	100	10	30	50	10	200
	8-V	0.5	100	20	40	40	20	230
		1.5	90	20	50	40	20	220
		2.5	80	20	50	40	20	200
		3.5	80	20	60	40	20	200
	8-VIII	0.223	170	20	30	60	20	300
		0.67	120	10	30	80	10	260
		1.117	120	10	40	80	10	260
		1.567	100	10	40	60	20	220
	8-XI	0.5	120	30	50	70	20	270
		1.5	90	20	50	50	20	220
		2.5	80	20	50	40	20	200
		3.5	80	20	60	50	20	210
	8-IIA	0.678	160	50	80	80	30	390
		2.034	120	40	90	60	30	340
		3.383	110	30	90	60	30	310
		4.75	100	30	100	60	30	310

MANIFOLD AND DUCTING ANALYSIS

An analysis was conducted to determine manifold and duct weights and pressure losses as a function of manifold and ducting configuration and duct sizes. The result of this analysis was a set of general equations, presented in the following paragraphs, relating manifold and duct pressure drops and weights to the diameter of the compressor outlet duct and the dimensions of the heat exchangers in the system. These equations will be added to the pressure drop computer program in such a way as to provide the user with two options: (1) manifold and ducting sizes and weights can be determined for a given pressure drop allocation to manifold and ducts, or (2) the pressure drop allocation to ducts and manifolds can be optimized (based on minimum system weight) in conjunction with the optimization of the pressure drop split among heat exchangers, and the resultant sizes and weights determined.

Figure 4-40 shows the numbering system used to identify the individual ducts and manifolds in the following analysis. The numbers 1 through 4 refer to ducts in the basic SNAP-8 system configuration, and the numbers 5 through 8 refer to corresponding manifolds. The use of a remote heat source heat exchanger in the advanced system configuration requires the addition of ducts 9 and 10 and manifolds 11 and 12 to the analysis.

Assumptions

The following major assumptions were required for the analysis:

1. All ducts are sized for constant fluid velocity head throughout the ducting system.

2. The recuperator high-pressure inlet manifold is sized for twice the flow area of the compressor outlet duct.

3. The recuperator high-pressure outlet manifold for advanced system cases is sized for twice the flow area of the duct connecting recuperator to heat source heat exchanger.

4. The recuperator low-pressure inlet manifold, waste heat exchanger outlet manifold, heat source heat exchanger inlet manifold (advanced system cases), and heat source heat exchanger outlet manifold are full radius manifolds with sizes dependent on heat exchanger dimensions.

5. Aspect ratios of the waste heat exchanger and heat source heat exchanger are adjusted to achieve an exact match with the recuperator stack height dimension.

6. Pressure loss per 90-degree bend is 0.2 velocity head (approximately correct for bend radius divided by duct diameter of 1.0).

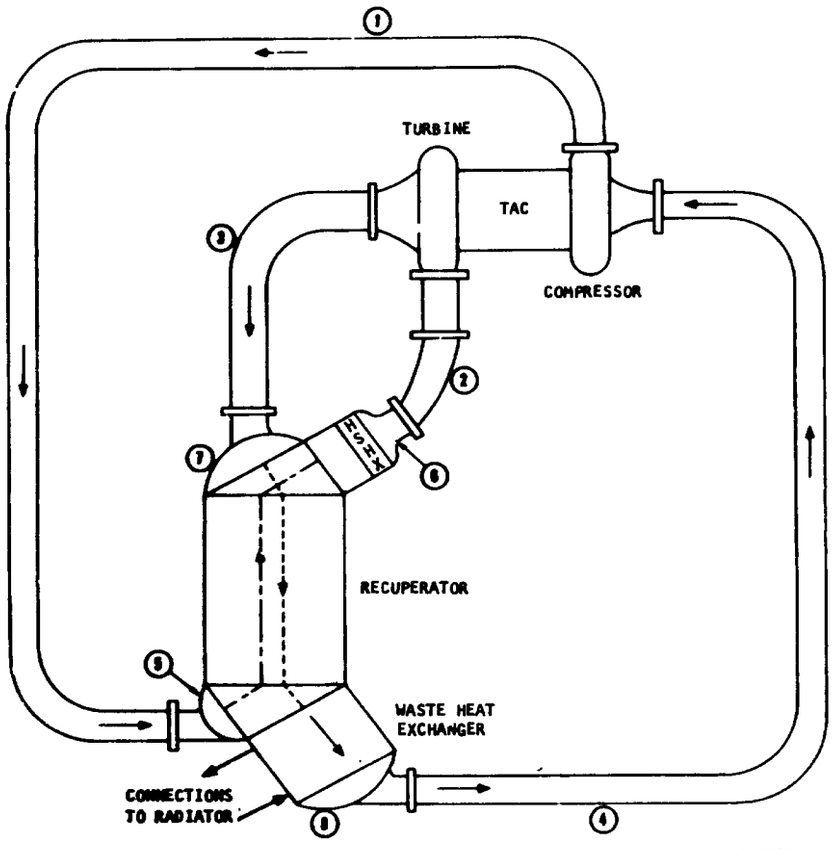

Figure 4-40(a). SNAP-8 System Ducting and Manifold Schematic

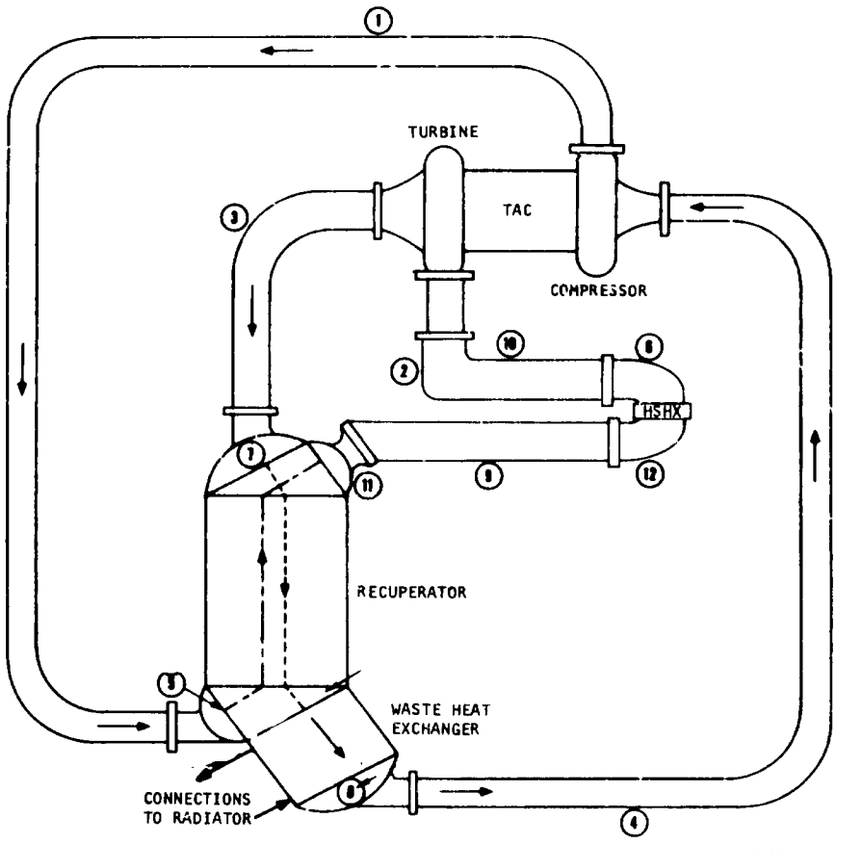

Figure 4-40(b). Advanced System Ducting and Manifold Schematic

7. Pressure loss per contraction from manifold to duct is 0.05 velocity head (approximately correct for well-rounded entrance).

8. Inlet manifold head loss coefficients are given by $K = R - 0.1$, where R is the ratio of manifold to heat exchanger gas velocities.

9. Outlet manifold head loss coefficients are given by $K = 1.0 - 0.167R$ for $R < 1$ and by $K = R - 0.1$ for $R > 1$, where R is the ratio of manifold to heat exchanger velocities.

10. All ducts and manifolds are Hastelloy X with the exception of the advanced system heat source heat exchanger outlet manifold and duct, which are T-111.

11. Manifold and duct wall thicknesses are based on Figures A2-2 and A2-3, with a minimum allowable thickness of 0.032 in.

12. All ducts and manifolds are covered by 2 in. of insulation weighing 20 lb/cu ft.

13. Duct weights are based on the following lengths:

Duct 1	62 in.
Duct 2	35 in.
Duct 3	48 in.
Duct 4	48 in.
Duct 9	18 ft (advanced system only)
Duct 10	18 ft (advanced system only)

14. Manifold and ducting pressure losses computed are listed below:

Manifold/ Duct	Loss
1	Two 90-deg bends and expansion into manifold
2	Contraction from manifold and two bends (< 90 deg, 0.05 velocity head per bend)
3	One 90-deg bend and expansion into manifold
4	Contraction from manifold and one 90-deg bend
5 through 8	Manifold/heat exchanger turning losses

Manifold/ Duct	Loss
9	Contraction from manifold, 18-ft friction loss, three 90-deg bends, and expansion into manifold
10	18-ft friction loss and three 90-deg bends
11, 12	Manifold/heat exchanger turning losses

Equations

1. Duct Diameters

The duct diameters, based on constant velocity head, are as follows:

(a) SNAP-8 and Advanced Systems

$$D_1 = D$$

$$D_2 = 1.205D$$

$$D_3 = 1.333D$$

$$D_4 = 1.08D$$

(b) Advanced System Only

$$D_9 = 1.144D$$

$$D_{10} = 1.214D$$

2. Pressure Drop

The velocity head is given (see nomenclature, Table 4-6) by

$$Q = \frac{38.9W^2T_1}{P_1MD^4}$$

(a) Loss Coefficients--The manifold loss coefficients are given by the following equations (see Figure 4-40 for numbering system).

(1) SNAP-8 and Advanced Systems

$$K_5 = \frac{h(\ell^* - \ell)}{\pi D^2} - 0.1, \quad K_5 \geq 0$$

$$R_6 = \frac{2.55h^2}{x\ell_{T1}}$$

$$K_6 = 1.0 - 0.167R_6, \; R_6 \leq 1.0$$

$$K_6 = R_6 - 0.1, \; R_6 > 1.0$$

$$K_7 = \frac{1.27h}{W_R} - 0.1, \; K_7 \geq 0$$

$$R_8 = \frac{2.55h^2}{y\ell_{T3}}$$

$$K_8 = 1.0 - 0.167R_8, \; R_8 \leq 1.0$$

$$K_8 = R_8 - 0.1, \; R_8 > 1.0$$

(2) Advanced System Only

$$R_{11} = \frac{0.243(\ell^* - \ell)h}{D^2}$$

$$K_{11} = 1.0 - 0.167R_{11}, \; R_{11} \leq 1.0$$

$$K_{11} = R_{11} - 0.1, \; R_{11} > 1.0$$

$$K_{12} = \frac{2.55h^2}{x\ell_{T1}} - 0.1, \; K_{12} \geq 0$$

(b) Pressure Drop Equations--The pressure drop equations are as follows:

(1) SNAP-8 and Advanced Systems

$$\Delta P_1 = 0.65 \; Q$$

$$\Delta P_2 = 0.15 \; Q$$

$$\Delta P_3 = \left[0.2 + \left(1 - 3.56\frac{D^2}{W_R{}^2}\right)^2\right] Q$$

$$\Delta P_4 = 0.25\ Q$$

$$\Delta P_5 = \left[\frac{\pi D^2}{2h\ (\ell^* - \ell)}\right]^2 K_5\ Q$$

$$\Delta P_6 = \frac{1.3\ D^4}{x^2\ \ell_{T1}^{\ 2}} K_6\ Q$$

$$\Delta P_7 = \frac{7.85\ D^4}{W_R^{\ 2}\ h^2} K_7\ Q$$

$$\Delta P_8 = \frac{0.836\ D^4}{y^2\ \ell_{T3}^{\ 2}} K_8\ Q$$

(2) Advanced Systems Only

$$\Delta P_9 = \left[0.65 + \left(1 - 2.62\ \frac{D^2\ h^2}{x^2\ \ell_{T1}^{\ 2}}\right)^2 + \frac{5.2}{(P_1\ Q)^{0.1}\ D^{1.2}}\right] Q$$

$$\Delta P_{10} = \left[0.60 + \frac{5.09}{(P_1\ Q)^{0.1}\ D^{1.2}}\right] Q$$

$$\Delta P_{11} = \frac{4.25\ D^4}{(\ell^* - \ell)^2\ h^2} K_{11}\ Q$$

$$\Delta P_{12} = \frac{1.03\ D^4}{x^2\ \ell_{T1}^{\ 2}} K_{12}\ Q$$

(c) Total Pressure Drop--The total system pressure drop is given by:

$$\Delta P_{TOTAL}\ (\text{percent}) = 120\left(\frac{\Sigma\Delta P_i}{P_i} + \frac{1.84\Sigma\Delta P_j}{P_j}\right) \quad \text{(20 percent margin)}$$

$i = 1,2,5,6$

$j = 3,4,7,8$; SNAP-8 system

$j = 3,4,7\text{-}12$; advanced system

3. Weights

a. SNAP-8 and Advanced Systems

$$W_1 = 57.3\ Dt_1,\ t_1 = \frac{P_1\ D}{k_1} + 0.079,\ t_1 \geq 0.111$$

$$W_2 = 39.0\ Dt_2,\ t_2 = \frac{P_1\ D}{k_2} + 0.079,\ t_2 \geq 0.111 \text{ (SNAP-8)}$$

$$t_2 \geq 0.145 \text{ (Advanced System)}$$

$$W_3 = 59.1\ Dt_3,\ t_3 = \frac{P_1\ D}{k_3} + 0.079,\ t_3 \geq 0.111$$

$$W_4 = 47.9\ Dt_4,\ t_4 = \frac{P_1\ D}{k_4} + 0.079,\ t_4 \geq 0.111$$

$$W_5 = 0.924\ Dht_5 + 0.462\ D^2\ t_5,\ t_5 = \frac{P_1\ D}{k_5} + 0.079,\ t_5 \geq 0.111$$

$$W_6 = 0.462\ x\ \ell_{T1}\ t_6 + 0.116\ \frac{x^2\ \ell_{T1}^{\ 2}\ t_6}{h^2},\ t_6 = \frac{P_1\ x\ \ell_{T1}}{k_6\ h} + 0.079,$$

$$t_6 \geq 0.111 \text{ (SNAP-8 System)}$$

$$t_6 \geq 0.145 \text{ (Advanced System)}$$

$$W_7 = 0.462\ W_R ht_7 + 0.116\ W_R^{\ 2}\ t_7,\ t_7 = \frac{P_1\ W_R}{k_7} + 0.079,\ t_7 \geq 0.111$$

$$W_8 = 0.462\ y\ell_{T3}t_8 + 0.116\ \frac{y^2\ \ell_{T3}^2\ t_8}{h^2},\ t_8 = \frac{P_1\ y\ \ell_{T3}}{k_8\ h} + 0.079,\ t_8 \geq 0.111$$

where the k's in the above equations are a function of the allowable stress, pressure, duct diameter and materials, and have the following values:

	k_1	k_2	k_3	k_4	k_5	k_6	k_7	k_8
SNAP-8	65,600	15,600	78,000	116,000	32,800	18,800	104,000	126,000
Adv Sys	60,400	12,200	18,800	114,000	30,200	14,600	25,100	123,000

b. Advanced Systems Only

$$W_9 = 229.0\ Dt_9,\ t_9 = \frac{P_1\ D}{15{,}400} + 0.079,\ t_9 \geq 0.111$$

$$W_{10} = 243.0\ Dt_{10},\ t_{10} = \frac{P_1\ D}{12{,}100} + 0.079,\ t_{10} \geq 0.145$$

$$W_{11} = 1.06\ Dht_{11} + 0.605\ D^2\ t_{11},\ t_{11} = \frac{P_1\ D}{7{,}700} + 0.079,\ t_{11} \geq 0.111$$

$$W_{12} = 0.462\ x\ell_{T1}t_{12} + 0.116\ \frac{x^2\ \ell_{T1}^{\ 2}}{h^2}\ t_{12},\ t_{12} = \frac{P_1\ x\ \ell_{T1}}{17{,}600\ h} + 0.079,$$

$$t_{12} \geq 0.111$$

c. Total Weight

The total weight of the ducts and manifolds including two inches of MINK-2000 is given by:

$$W_{TOTAL} = \sum_{i=1}^{n} W_i \qquad \begin{array}{l} n = 8,\ \text{SNAP-8 System} \\ n = 12,\ \text{Advanced System} \end{array}$$

TABLE 4-6

HXDA MANIFOLDING AND DUCTING NOMENCLATURE

W = gas flow rate, lb/sec

t = equivalent thickness of duct, in. of Hastelloy X

T_1 = compressor outlet temperature, ^oR

P_1 = compressor outlet pressure, psia

M = gas molecular weight

D = compressor outlet duct diameter, in.

h = recuperator stack height, in.

ℓ^* = recuperator total length, in.

ℓ = recuperator core length, in.

x = HSHX no-flow length, in.

y = WHX no-flow length, in.

ℓ_{T1} = HSHX tube length, in.

ℓ_{T3} = WHX tube length, in.

W_R = recuperator width, in.

Q = duct velocity head, psi

SYSTEMS ANALYSIS

The three HXDA heat exchangers and their associated manifolds and ducts constitute the major fraction of the Brayton cycle power conversion system weight and cycle pressure losses. The optimum allocation of pressure drop among the three heat exchangers is the central objective of the systems analysis. The optimum is defined as that combination of heat exchanger designs which yield a minimum HXDA weight. Further optimization is necessary since the HXDA in itself can be considered a component in the overall power system. As a result, the design point of the HXDA must be determined on a higher level of systems analysis that would consider the TAC, radiator, heat source, etc. The purpose of the study is to generate optimum HXDA designs over a wide range of operating conditions to provide the data for the higher level of systems studies.

Preliminary Systems Studies

The preliminary systems analysis involved a graphical solution. This approach is illustrated in Figures 4-41 and 4-42 for the design conditions of Case 8-VIII. Figure 4-41 was constructed using the heat exchanger weight vs pressure drop data from Figures 4-16 and 4-31 for the recuperator and waste heat exchanger, respectively. This figure shows the total weight of the recuperator plus the waste heat exchanger as a function of the sum of the pressure drops through both of these heat exchangers for various values of the pressure drop through the waste heat exchanger. Thus, the lowest curve in Figure 4-41 represents the optimum (i.e., minimum weight) combination of pressure drop allocation between the recuperator and waste heat exchanger. Figure 4-42 is constructed in an analogous manner using (1) the total weight and total pressure drop of the optimum combination of recuperator-waste heat exchanger from Figure 4-41, and (2) the weight and pressure drop of the HSHX from Figure 4-25. In Figure 4-42, the total weight of the three heat exchangers is plotted vs the total pressure drop through the three heat exchangers as a function of pressure drop allocated to the waste heat exchanger-recuperator combination.

The dashed line in Figure 4-42 thus is the locus of design points, yielding minimum HXDA heat exchanger weights for a given total pressure drop allocation to the heat exchangers. Figure 4-42 can be used to identify the particular heat exchanger designs (i.e., weights and dimensions) and optimum pressure drop allocations among the heat exchangers for fixed values of total heat exchanger pressure drop allotment. This is illustrated in Table 4-7 for the Case 8-VIII design conditions. In this case, a total HXDA pressure loss of 6.0 percent is allocated. A pressure drop of 1.5 percent was allocated to the interconnecting gas ducts and manifold, leaving 4.5 percent for the three system heat exchangers.

At a pressure drop of 4.5 percent, the total system weight (from Figure 4-42) is 4090 lb, and a $\Delta P/P$ of 0.2 percent is allocated to the HSHX, and, consequently, 4.3 percent is allocated to the recuperator waste heat exchanger combination. Figure 4-41 shows that at 4.3-percent $\Delta P/P$ the optimum allocation of pressure drop between the recuperator and waste heat exchanger is 1.0 for the waste heat exchanger and 3.3 percent for the recuperator. Using these percentages, the heat exchanger designs are identified by referring to the appropriate heat exchanger parametric design data. The results of this type of analysis for Case 8-VIII are presented in Table 4-7,

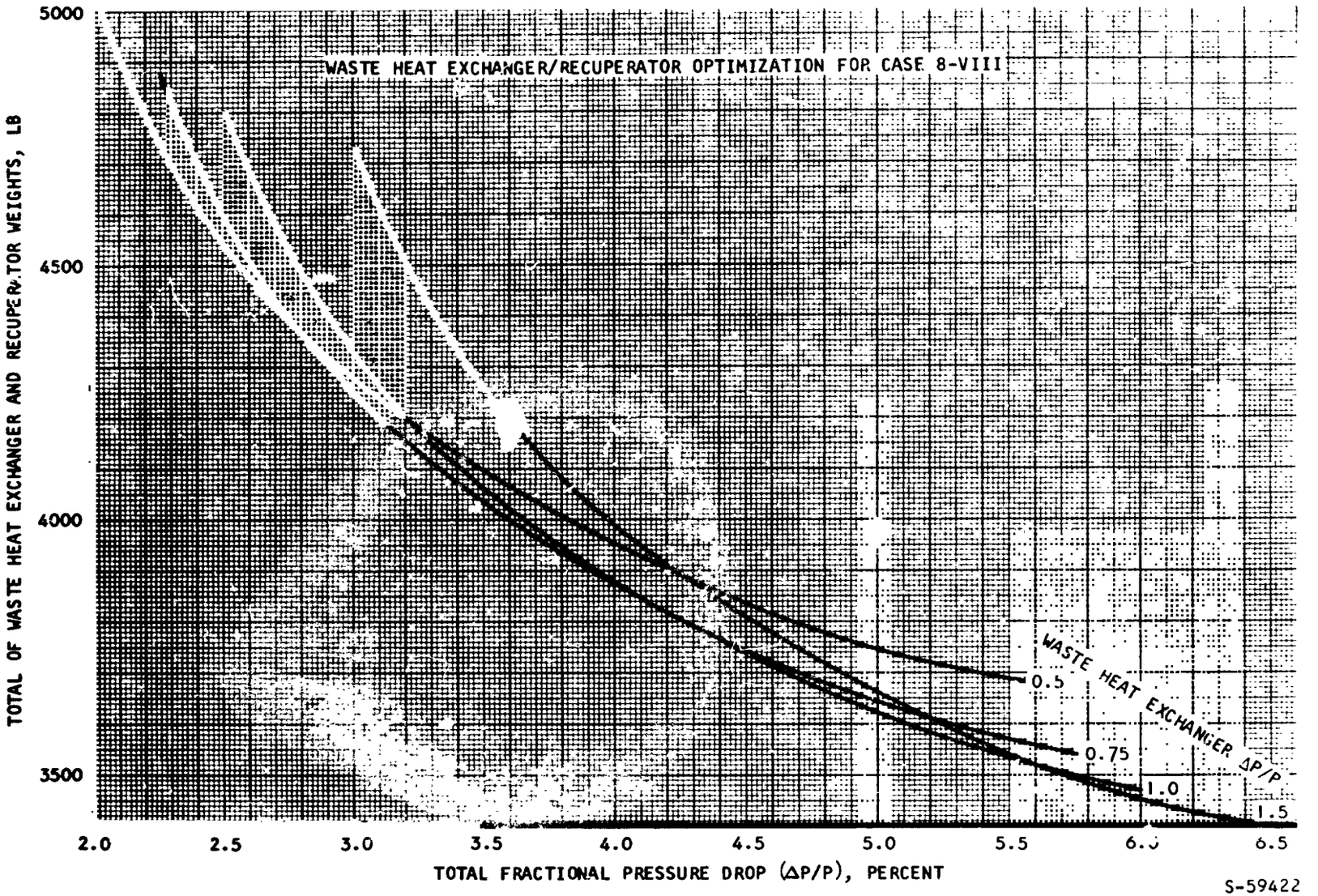

Figure 4-41. Waste Heat Exchanger/Recuperator Optimization for Case 8-VIII

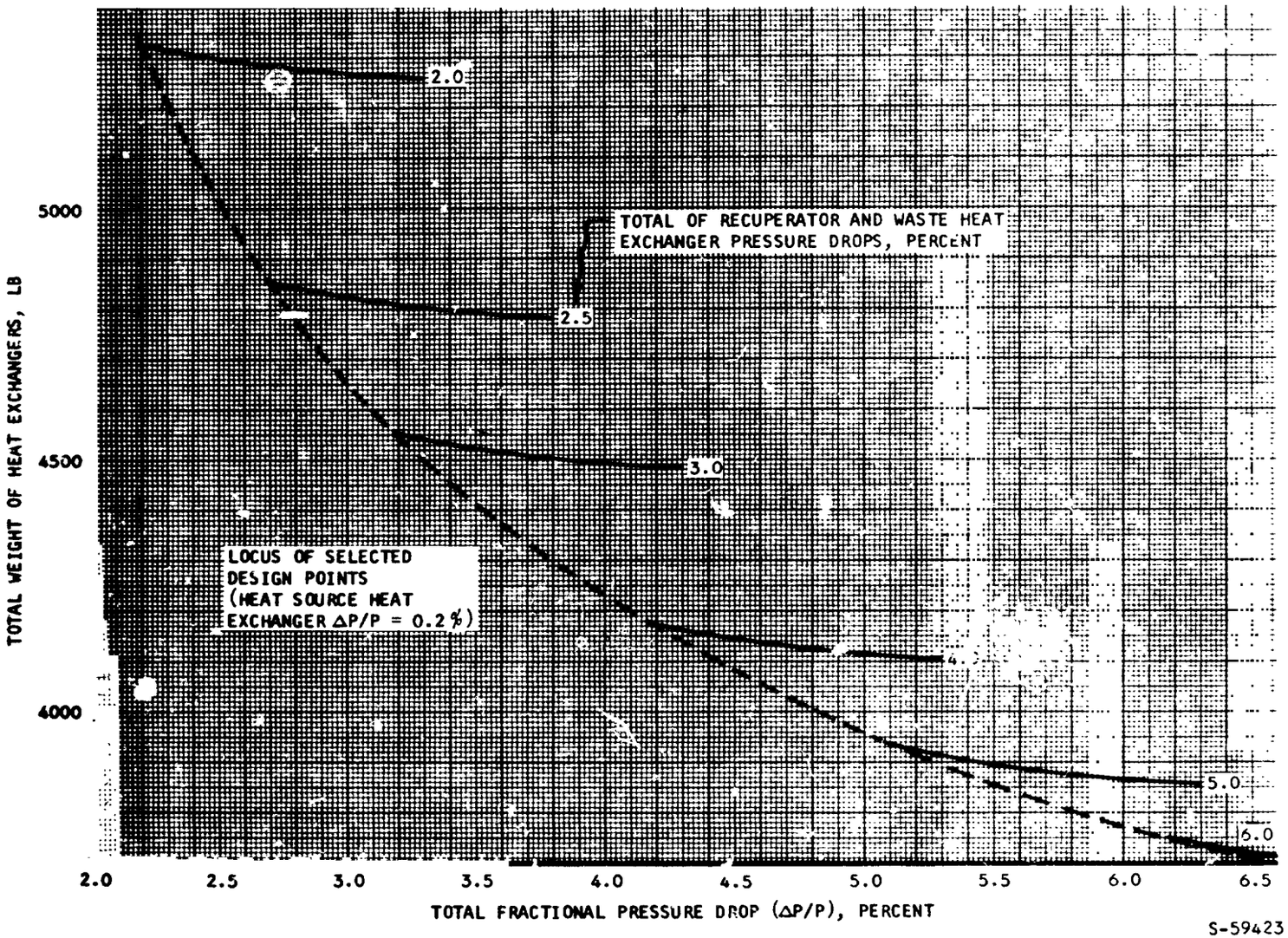

Figure 4-42. System Pressure Drops and Weights for Case 8-VIII

TABLE 4-7

CASE 8-VIII HEAT EXCHANGER SUMMARY

$\Delta P/P$ System = 6.0 percent

$\Delta P/P$ Heat Exchangers = 4.5 percent (1.5 percent for ducts)

1. Heat Source Heat Exchanger

$\Delta P/P$	0.20 percent
Weight	300 lb
No. of tubes	225
Gas flow length	4.5 in.
Tube length	37 in.
No flow length	25 in.
No. of passes	4

2. Waste Heat Exchanger

$\Delta P/P$	1.0 percent
Weight	2070 lb
No. of tubes	46,500
Gas flow length	26 in.
Tube length	28 in.
No flow length	47 in.
No. of passes	8

3. Recuperator

$\Delta P/P$	3.3 percent
Weight	1720 lb
Gas flow length	21.8 in.
Stack height	43.9 in.
Width	21.9 in.

4. Total System Weight = 4090 lb

System Optimization Computer Program

A computer program was written to perform, in a numerical manner, essentially the same analysis that was described above as a graphical process. The parametric data developed for each heat exchanger was reduced to tabular form and supplied as data for the program. The computer was programmed to systematically search for the combination of the three heat exchangers that yielded minimum total weight. The computer then printed out the data on the selected heat exchangers. A complete listing of the HXDA weight optimization program is presented in Appendix A-4.

A typical output sheet from the computer program is shown in Table 4-8. This run was for Case 8-VIII, and the results show good agreement with the previously presented graphical optimization solution.

The duct and manifold weights and pressure drop correlations developed (presented in a prior part of this section) were programmed and incorporated into the weight optimization program. This portion of the program computes the duct dimensions and weight data for a prescribed allocation of duct manifold pressure drop, to obtain a total HXDA system weight.

TABLE 4-8

CASE 8-VIII HEAT EXCHANGER DESIGN SUMMARY

WEIGHT OPTIMIZED HEAT EXCHANGER DESIGNS

FOR TOTAL HXDA SYSTEM PRESSURE DROP

OF 6.00 PERCENT

DUCT PRESSURE DROP = 1.50 PERCENT

CASE 8-VII THRU IX MAY 13, 1970

	RECUPERATOR	WHX	HSHX	TOTAL
WEIGHT(LBS)	1668.8	2084.7	304.0	4057.5
PRESSURE DROP(PCT)	3.45	0.90	0.15	4.50
FLOW LENGTH(INCHES)	37.1	25.1	4.0	
STACK HEIGHT(INCHES)	43.2			
TUBE LENGTH(INCHES)		28.5	38.5	
NO-FLOW LENGTH(INCHES)	21.6	48.9	26.3	
NO. OF TUBES		46759	226	

OPTIMIZATION OF THE 24 DESIGN POINT CASES

The parametric data developed for each of the three heat exchangers--recuperator, waste heat exchanger, and heat source heat exchanger-- for each of the eight prime design cases was used to obtain weight and sizes for the heat exchangers required for all 24 design points. The parametric heat exchanger data for the eight prime design cases--i.e., the 6 percent $(\Delta P/P)_{TOTAL}$--is presented in the previous paragraphs of this section.

Weight and dimensional data for each of the prime system heat exchangers, as a function of pressure drop, was coded and used in the HXDA weight optimization computer program. The computer program identifies the optimum set of heat exchangers (i.e., minimum weight) and the associated allocation of gas pressure drop. For the Task 2 studies, a $\Delta P/P$ of 25 percent of the $(\Delta P/P)_{TOTAL}$ was allocated to the system ducting and gas manifolds. The correlations used to obtain the heat exchanger sizes and weights for the 16 nonprime cases--i.e., the $(\Delta P/P)_{TOTAL}$ of 4 and 8 percent--were as follows:

(a) Gas flow rates from Tables 4-1 and 4-2

(b) Recuperator stack height and weight varied directly with gas flow rate

(c) Waste heat exchanger and heat source heat exchanger no-flow dimension and weight varied directly with gas flow rate

The computer output summary sheets for the 24 design point cases are presented in Appendix A-3. Also shown in these output sheets are the weights and sizes of the associated ducts.

Table 4-9 presents a summary of the heat exchanger designs for the 24 design conditions. The use of a split recuperator for Cases I, II, and III and Cases 8-I, 8-II, and 8-III was based on lower overall system weights over the normal or nonsplit recuperators for these design conditions.

The effect on total heat exchanger weight of system $\Delta P/P$, system pressure level, and working fluid are shown in Figures 4-43 through 4-45. The data for the advanced systems is shown in Figure 4-43 for the high and low pressure, low molecular weight (Argon = 39.94) systems and the low pressure, high molecular weight (Krypton = 83.80) systems. The minimum weight solution, i.e., that value of total $\Delta P/P$ which yields minimum heat exchanger weight, is seen to lie between 4 and 8 percent and is a function of system pressure level. Figure 4-44 presents the same data for the comparable SNAP-8 systems, except that only the 135-psi Argon molecular weight system optimizes in the range of 4- to 8-percent $\Delta P/P$. The other cases appear to optimize at a lower $\Delta P/P$. The data for the SNAP-8 high recuperator effectiveness (E_r = 0.950) is shown in Figure 4-45 and shows a significant effect on system weight with working fluid pressure level.

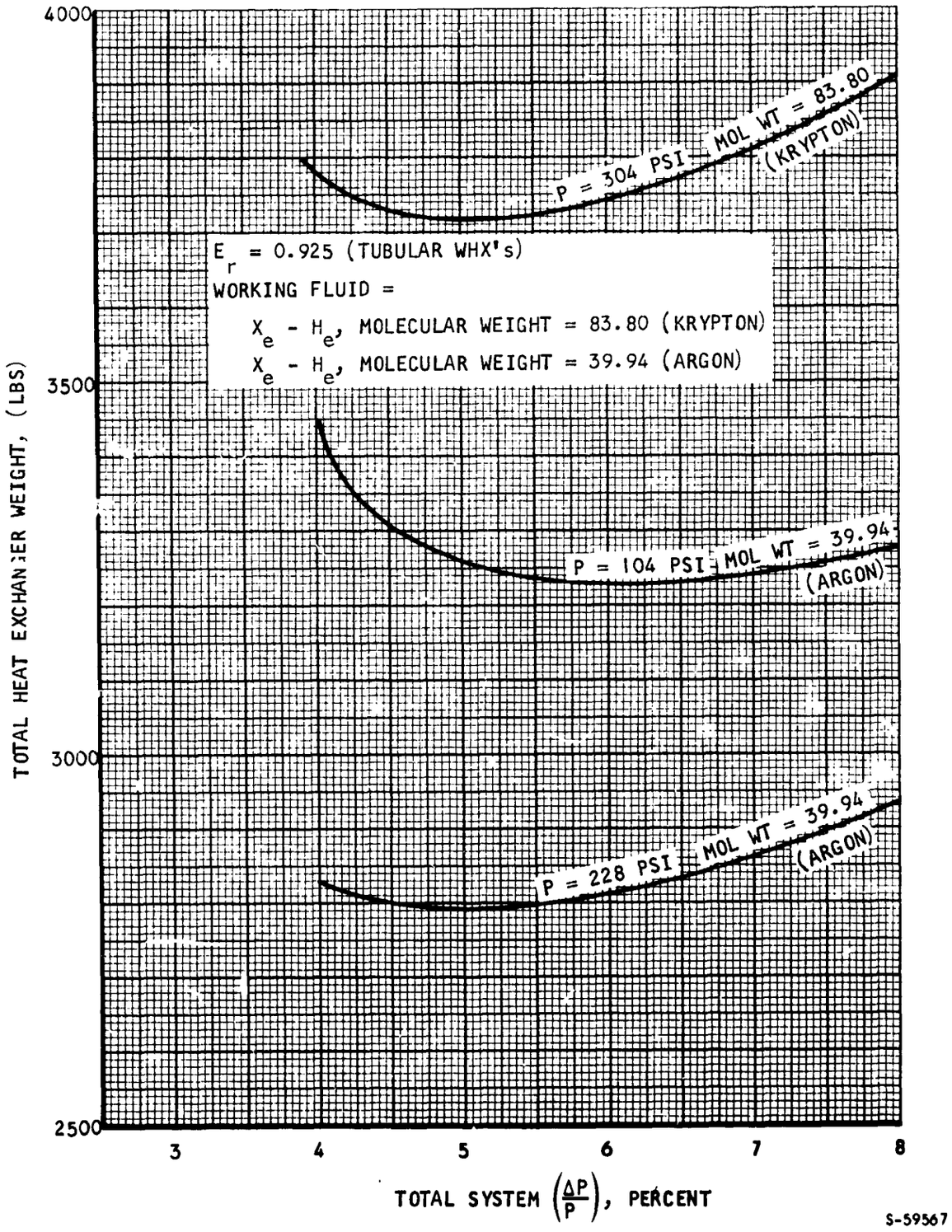

Figure 4-43. Total Heat Exchanger Weight vs Total System Pressure Drop (Advanced Systems)

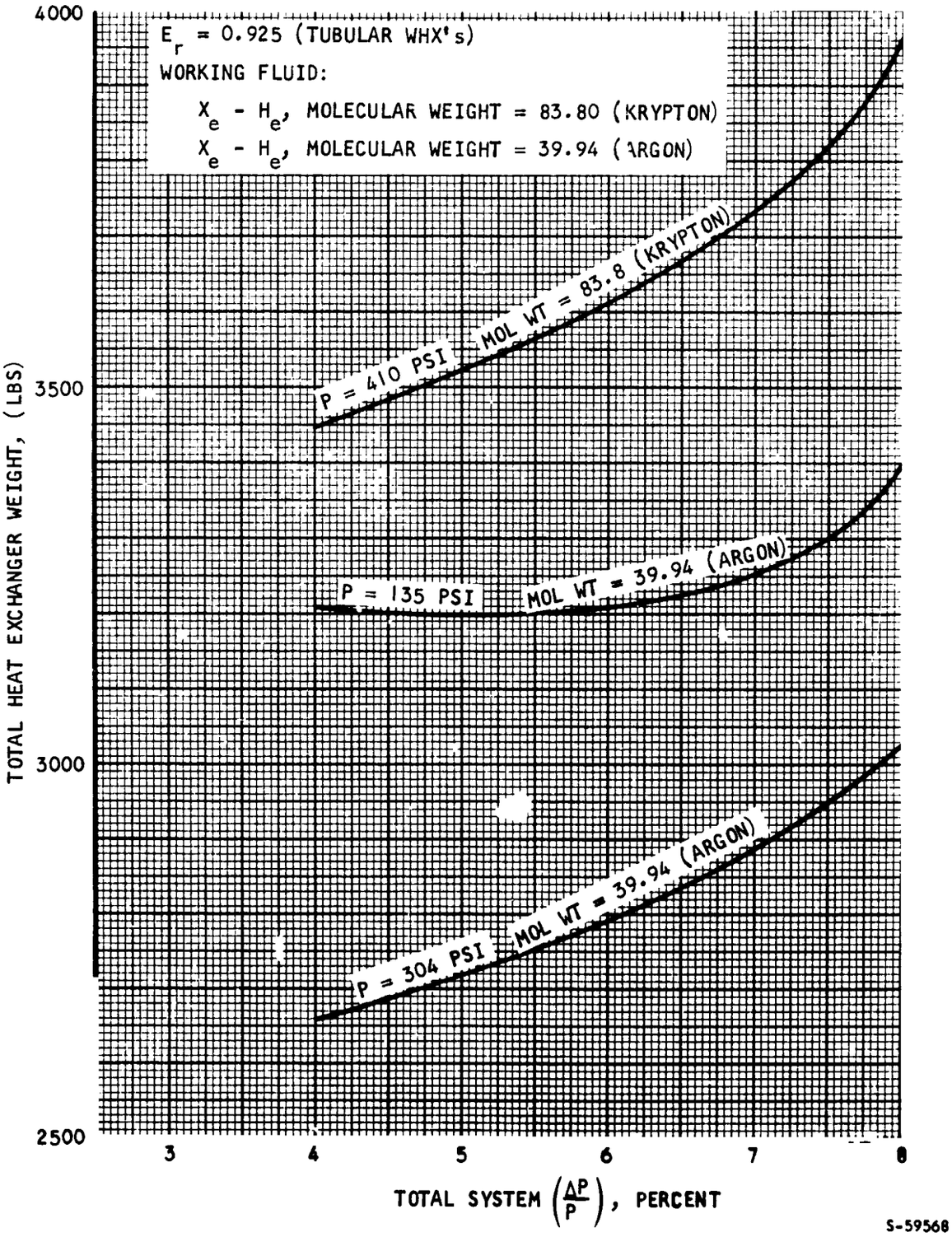

Figure 4-44. Total Heat Exchanger Weight vs Total System Pressure Drop (SNAP-8 Systems)

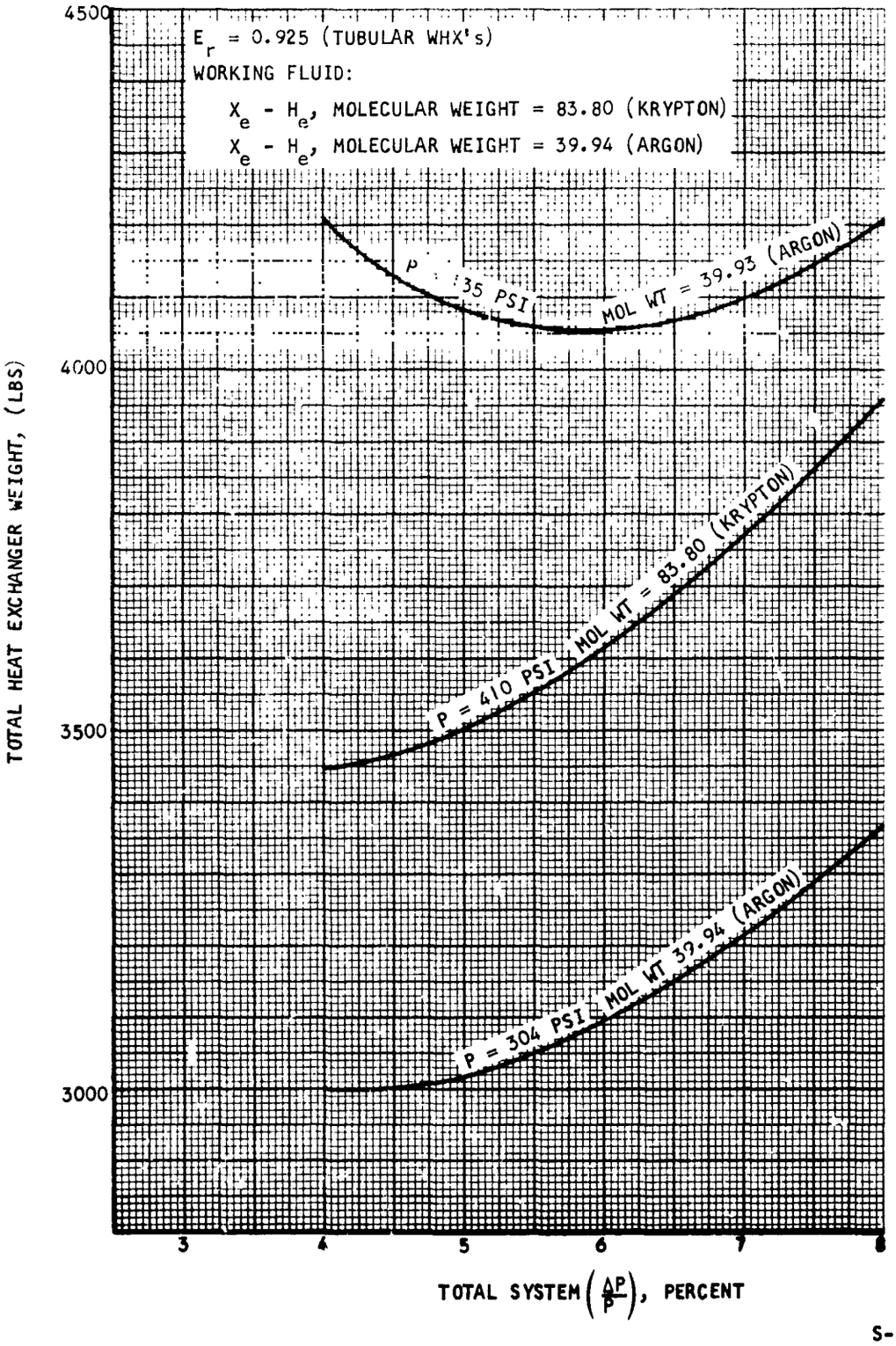

S-59569

Figure 4-45. Total Heat Exchanger Weight vs Total System Pressure Drop (High Effectiveness SNAP-8 Systems)

TABLE 4-9

TASK 2 HXDA DESIGN SUMMARY

a. ADVANCED SYSTEMS

Case No.	System Pressure (psi)	RPM	Recuperator Effectiveness	$\left(\frac{\Delta P}{P}\right)_T$ (%)	Total HXDA Weight, lb	$\left(\frac{\Delta P}{P}\right)_{Ducts}$	Duct Weight, lb	HXDA HX Wt Total (lb)	Recuperator (Plate-Fin) $\left(\frac{\Delta P}{P}\right)$ (%)	Wt (lb)	Flow Length (in.)	Stack Height (in.)	No Flow (in.)	2-Waste Heat Exchangers (Tubular) $\left(\frac{\Delta P}{P}\right)$ (%)	Wt (lb)	Flow Length (in.)	Tube Length (in.)	No Flow (in.)	No. of Tubes	HSHX (Tubular) $\left(\frac{\Delta P}{P}\right)$ (%)	Wt (lb)	Flow Length (in.)	Tube Length (in.)	No Flow (in.)	No. of Tubes	Recuperator Configuration
I	104.5	24,000	0.925	8.0	4374	2.00	1097	3278	4.40	1059	22.8	6[illegible].5	14.4	1.45	1977	22.7	36.1	41.2	37,964	0.15	242	2.0	25.0	33.0	84	Split Recup.
*II	104.5	24,000	0.925	6.0	4348	1.50	1121	3227	3.20	1158	22.5	64.0	16.0	1.15	1849	21.1	36.8	40.7	35,057	0.15	220	2.0	25.0	30.0	76	Split Recup.
III	104.5	24,000	0.925	4.0	4729	1.00	1280	3449	2.20	1385	22.6	67.5	18.4	0.65	1862	18.1	39.7	45.2	33,336	0.15	202	2.0	25.0	27.5	70	Split Recup.
IV	228.0	36,000	0.925	8.0	3772	2.00	841	2931	4.80	754	24.4	30.4	13.8	0.90	1909	30.1	32.6	29.7	35,575	0.30	269	5.2	21.6	17.2	78	Normal
*V	228.0	36,000	0.925	6.0	3718	1.50	911	2807	3.70	798	24.4	30.2	15.1	0.65	1757	27.2	33.9	29.9	32,871	0.15	252	4.5	23.0	17.5	72	Normal
VI	228.0	36,000	0.925	4.0	3777	1.00	948	2829	2.35	968	24.3	31.9	17.4	0.50	1631	25.0	35.0	29.3	30,594	0.15	231	4.5	23.0	16.0	66	Normal
I-A	304.0	24,000	0.925	8.0	4984	2.00	1074	3911	4.80	1028	27.3	31.8	14.4	1.05	2535	36.5	37.3	25.4	38,228	0.15	348	4.0	21.5	19.9	82	Normal
*II-A	304.0	24,000	0.925	6.0	4835	1.50	1093	3742	3.50	1106	27.5	31.4	15.7	0.85	2320	34.6	38.3	24.9	35,208	0.15	316	4.0	21.5	18.0	74	Normal
III-A	304.0	24,000	0.925	4.0	4974	1.00	1194	3780	2.35	1299	27.9	32.7	17.8	0.50	2191	30.2	41.4	26.6	33,598	0.15	290	4.0	21.5	16.5	68	Normal

*Prime Case

b. SNAP-8 SYSTEMS

Case No.	System Pressure (psi)	RPM	Recuperator Effectiveness	$\left(\frac{\Delta P}{P}\right)_T$ (%)	Total HXDA Weight, lb	$\left(\frac{\Delta P}{P}\right)_{Ducts}$	Duct Weight, lb	HXDA HX Wt Total (lb)	Recuperator (Plate-Fin) $\left(\frac{\Delta P}{P}\right)$ (%)	Wt (lb)	Flow Length (in.)	Stack Height (in.)	No Flow (in.)	2-Waste Heat Exchangers (Tubular) $\left(\frac{\Delta P}{P}\right)$ (%)	Wt (lb)	Flow Length (in.)	Tube Length (in.)	No Flow (in.)	No. of Tubes	HSHX (Tubular) $\left(\frac{\Delta P}{P}\right)$ (%)	Wt (lb)	Flow Length (in.)	Tube Length (in.)	No Flow (in.)	No. of Tubes	Recuperator Configuration
8-I	135.0	24,000	0.925	8.0	3793	2.00	400	3392	4.55	900	26.2	56.0	12.6	1.30	2209	25.2	28.7	49.0	50,513	0.15	284	3.7	32.0	32.6	250	Split Recup.
*8-II	135.0	24,000	0.925	6.0	3589	1.50	385	3203	3.20	948	25.6	55.7	13.9	1.15	2001	24.4	29.1	45.8	45,612	0.15	255	3.7	32.0	29.2	224	Split Recup.
8-III	135.0	24,000	0.925	4.0	3601	1.00	392	3209	2.00	1104	24.8	58.4	16.1	0.85	1874	22.3	29.7	45.7	42,149	0.15	232	3.7	32.0	26.5	204	Split Recup.
8-IV	304.0	36,000	0.925	8.0	3311	2.00	289	3022	4.80	535	29.7	27.0	12.1	0.50	2252	30.5	27.0	40.5	49,138	0.70	234	8.4	14.9	18.3	310	Normal Conf.
*8-V	304.0	36,000	0.925	6.0	3131	1.50	347	2784	3.90	526	29.5	25.5	12.7	0.45	2023	29.8	27.3	37.5	44,303	0.15	235	5.6	18.5	25.0	289	Normal Conf.
8-VI	304.0	36,000	0.925	4.0	2981	1.00	329	2653	2.45	597	28.7	26.4	14.9	0.40	1842	28.8	27.7	35.5	40,460	0.15	213	5.6	18.5	22.7	263	Normal Conf.
8-VII	135.0	24,000	0.950	8.0	4664	2.00	462	4203	4.60	1613	37.9	44.2	19.8	1.25	2251	27.6	27.2	48.7	51,167	0.15	339	4.0	38.5	29.3	253	Normal Conf.
*8-VIII	135.0	24,000	0.950	6.0	4508	1.50	451	4058	3.45	1669	37.1	43.2	21.6	0.90	2085	25.1	28.5	48.9	46,759	0.15	304	4.0	38.5	26.3	226	Normal Conf.
8-IX	135.0	24,000	0.950	4.0	4665	1.00	458	4207	2.20	1943	36.4	45.1	24.8	0.65	1988	22.0	30.1	49.5	43,366	0.15	276	4.0	38.5	23.9	206	Normal Conf.
8-X	304.0	36,000	0.950	8.0	3627	2.00	294	3333	4.80	844	40.1	29.3	13.1	0.40	2258	28.0	27.5	42.7	49,762	0.80	231	8.5	14.7	17.5	301	Normal Conf.
*8-XI	304.0	36,000	0.950	6.0	3379	1.50	284	3095	3.50	848	39.3	28.4	14.2	0.40	2025	28.0	27.5	38.3	44,629	0.60	222	7.9	16.0	17.0	272	Normal Conf.
8-XII	304.0	36,000	0.950	4.0	3330	1.00	325	3004	2.50	909	38.2	28.3	15.6	0.35	1845	27.0	28.0	36.3	40,773	0.15	251	6.2	21.2	19.5	255	Normal Conf.
8-IA	410.0	24,000	0.925	8.0	4244	2.00	313	3930	3.50	746	33.0	29.9	13.3	0.45	2913	34.1	30.5	37.3	53,509	2.05	271	13.6	10.5	10.2	407	Normal Conf.
*8-II-A	410.0	24,000	0.925	6.0	3963	1.50	349	3614	3.50	667	33.0	26.7	13.3	0.45	2603	30.9	30.5	33.4	47,818	0.55	344	9.3	16.1	25.9	391	Normal Conf.
8-III-A	410.0	24,000	0.925	4.0	3828	1.00	382	3446	2.40	727	32.3	26.8	14.8	0.40	2366	33.3	30.9	31.3	43,545	0.20	352	7.9	18.5	23.2	377	Normal Conf

*Prime Case

Layout drawings for the eight prime cases are presented on the following pages. The dimensional information for all 24 cases is given on the appropriate drawings.

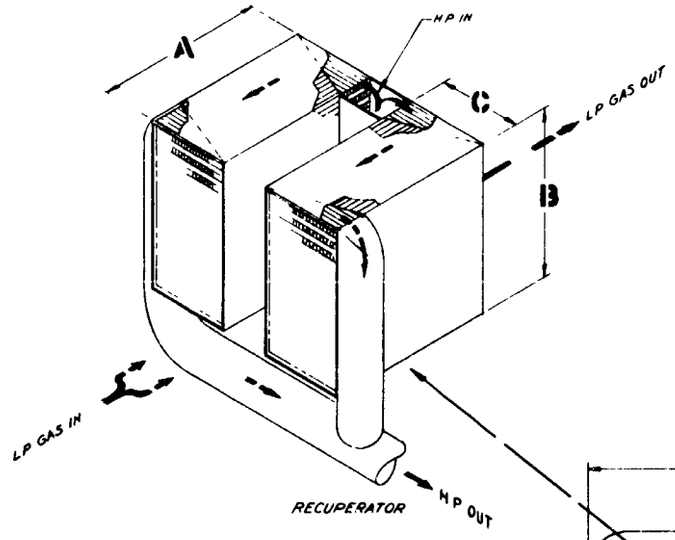

RECUPERATOR

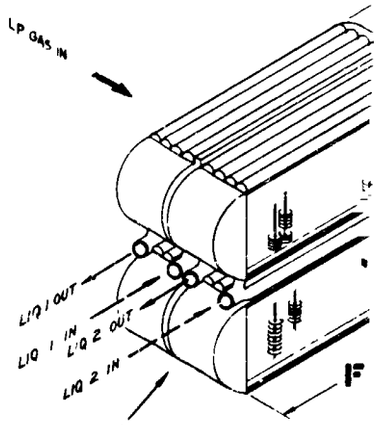

WASTE HEAT EXCHA

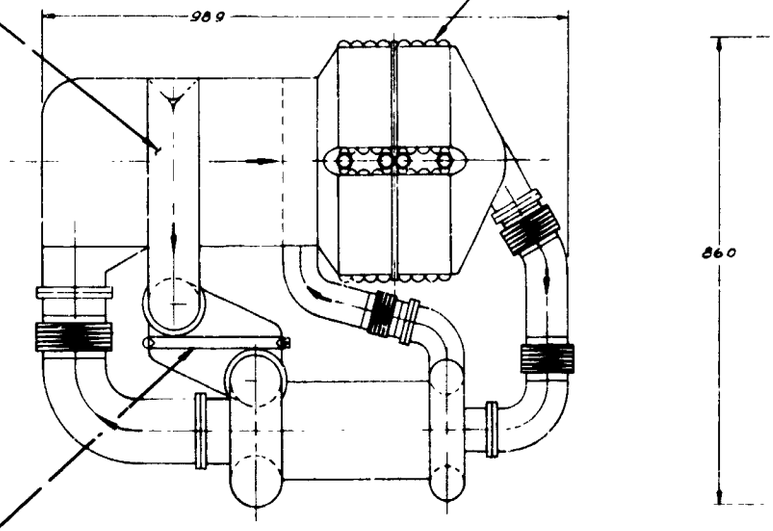

ADVANCED SYSTEMS									
CASE NO	RECUPERATOR PLATE/FIN			WASTE HEAT EXCHANGER TUBULAR			HEAT SOURCE HEAT EXCHANGER		
	A FLOW LENGTH	B STACK HEIGHT	C NO FLOW	D FLOW LENGTH	E TUBE LENGTH	F NO FLOW	G FLOW LENGTH	H TUBE LENGTH	J NO FLOW
I	22.8	31.7	14.4	22.7	18.0	41.2	2.0	25.0	33.0
△ II	22.5	32.0	16.0	21.1	18.4	40.7	2.0	25.0	30.0
III	22.6	33.7	18.4	18.1	19.85	45.2	2.0	25.0	27.5

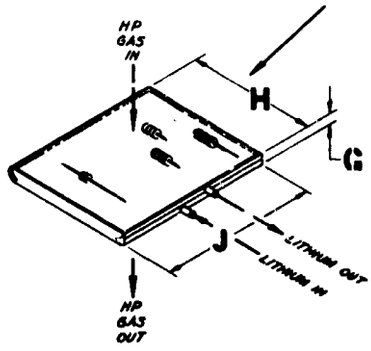

HEAT SOURCE HEAT EXCHANGER

FOLDOUT FRAME 1

2 THIS IS A PRELIMINARY L
DIMENSIONS ARE SUBJECT
DETAILED STRUCTURAL
△ CASE II SHOWN, CASES I

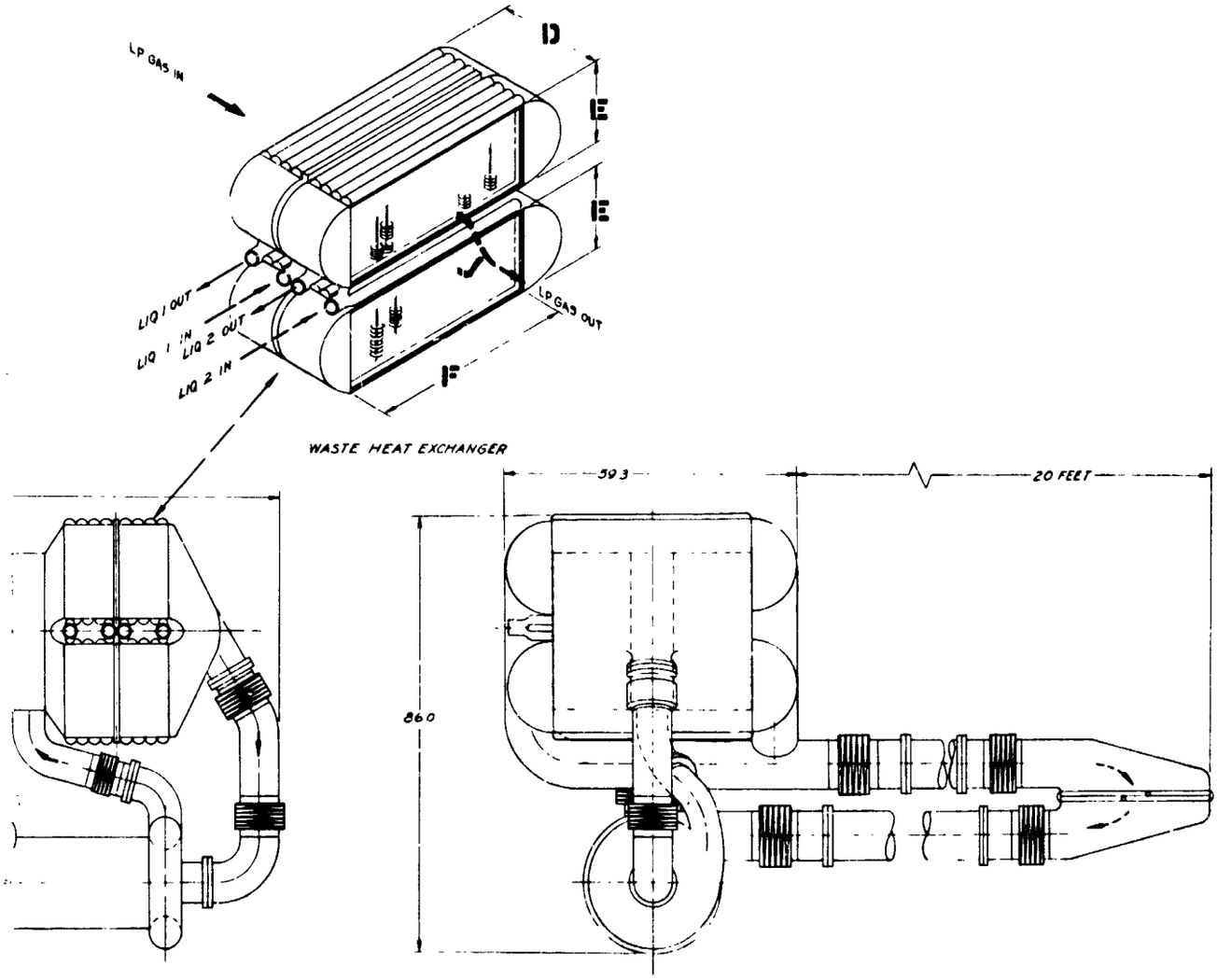

FOLDOUT FRAME 2

2 THIS IS A PRELIMINARY LAYOUT DRAWING, OVERALL PACKAGE DIMENSIONS ARE SUBJECT TO CHANGE AS A RESULT OF DETAILED STRUCTURAL ANALYSIS.

⚠ CASE II SHOWN, CASES I & III TABULATED

LAYOUT HXDA CASE NOS I, II & III	
70110	L198523
24,000 RPM SPLIT RECUPERATOR	

PRECEDING PAGE BLANK NOT FILMED

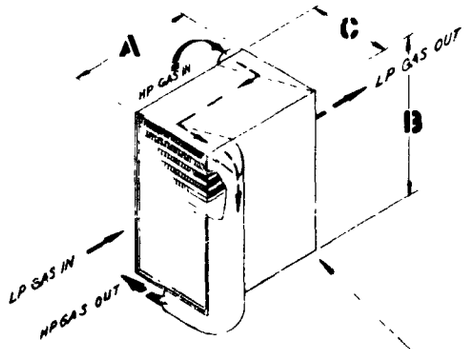

RECUPERATOR

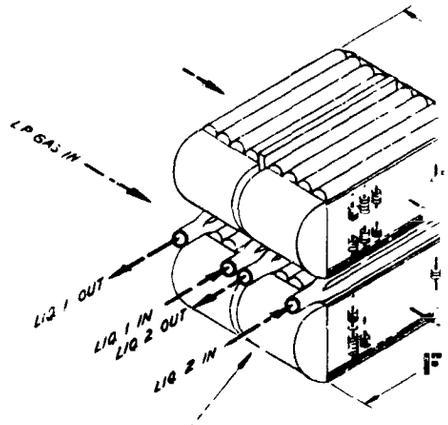

WASTE HEAT EXCHA

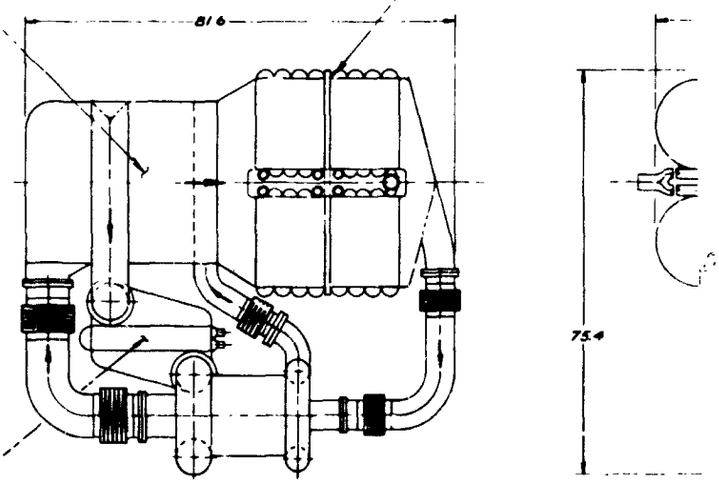

ADVANCED SYSTEMS									
CASE NUMBER	RECUPERATOR PLATE/FIN			WASTE HEAT EXCHANGER TUBULAR			HEAT SOURCE HEAT EXCHANGER		
	A FLOW LENGTH	B STACK HEIGHT	C NO FLOW	D FLOW LENGTH	E TUBE LENGTH	F NO FLOW	G FLOW LENGTH	H TUBE LENGTH	J NO FLOW
IX	24.4	30.4	13.6	30.1	16.3	29.7	5.2	21.6	17.2
⚠ X	24.4	30.2	15.1	27.2	16.95	29.9	4.5	23.0	17.5
XI	24.3	31.9	17.4	25.0	17.5	29.3	4.5	23.0	16.0

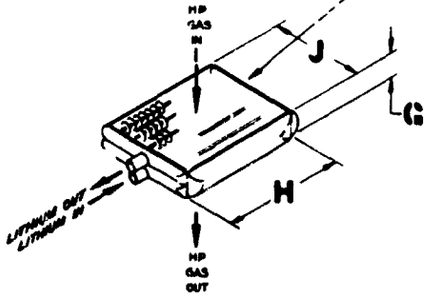

HEAT SOURCE HEAT EXCHANGER

FOLDOUT FRAME 1

2 THIS IS A PRELIMINARY L
DIMENSIONS ARE SUBJECT
STRUCTURAL ANALYSIS.
⚠ CASE X SHOWN, CASES IX

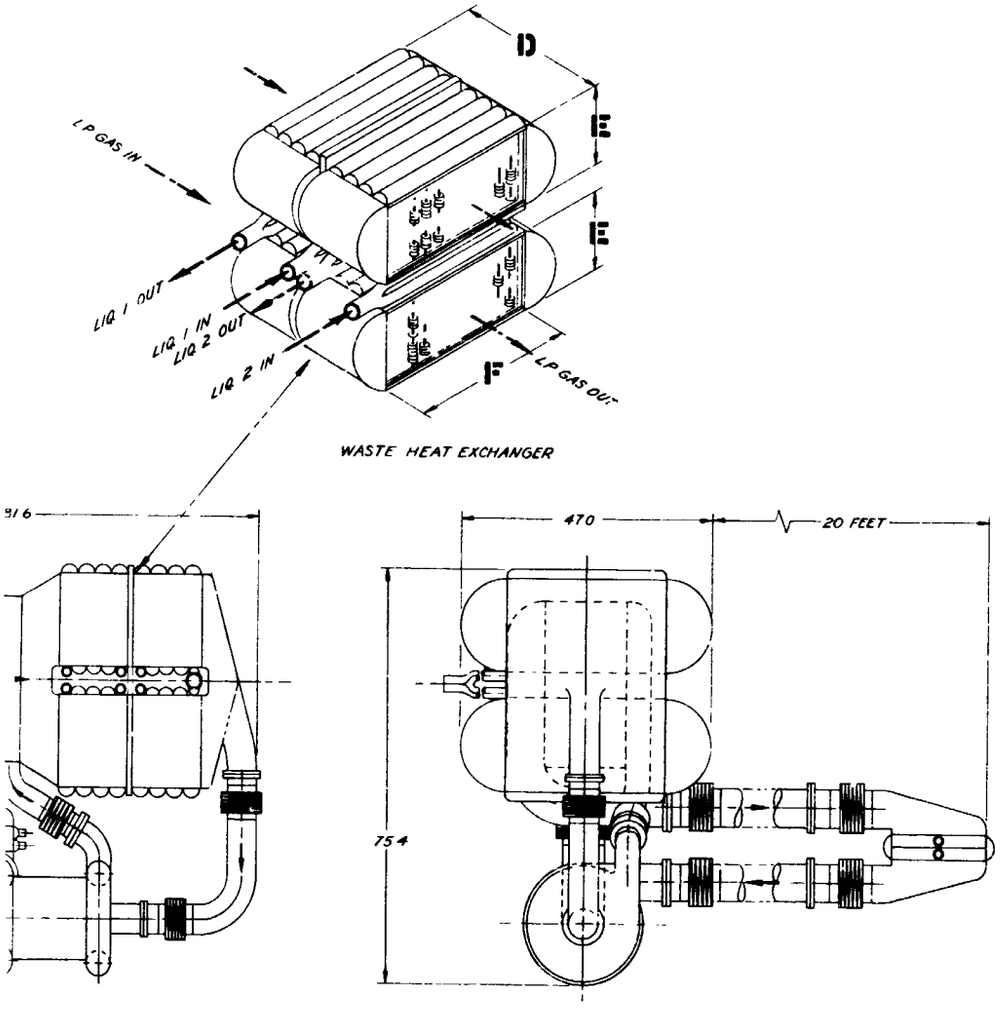

FOLDOUT FRAME 2

2. THIS IS A PRELIMINARY LAYOUT DRAWING, OVER-ALL PACKAGE DIMENSIONS ARE SUBJECT TO CHANGE AS A RESULT OF DETAILED STRUCTURAL ANALYSIS

△1 CASE V SHOWN, CASES IV & VI TABULATED

AIRESEARCH MANUFACTURING COMPANY

LAYOUT

LAYOUT HXDA, CASE NOS. IV, V & VI

70210 L 198522

SCALE 1/10 SHEET 1 OF 1

FEATURES 36,000 RPM NOMINAL CASES

PRECEDING PAGE BLANK NOT FILMED

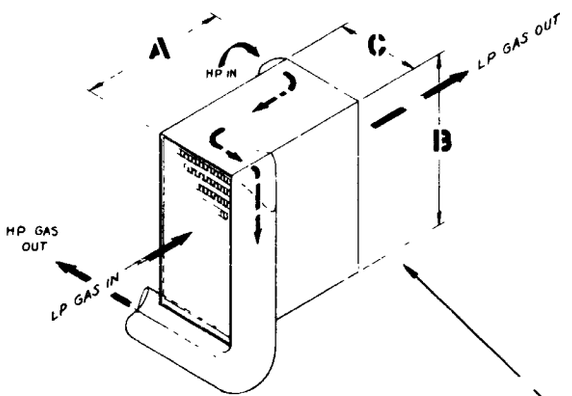

RECUPERATOR

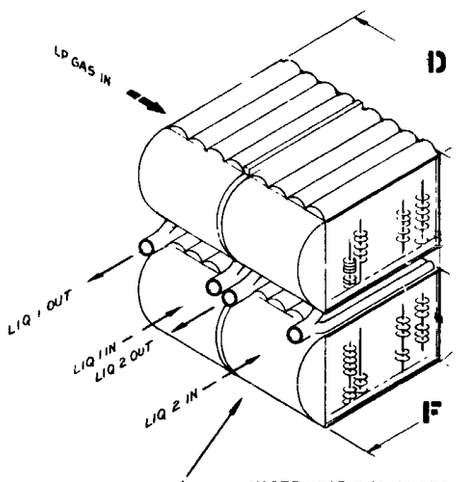

WASTE HEAT EXCHANGER

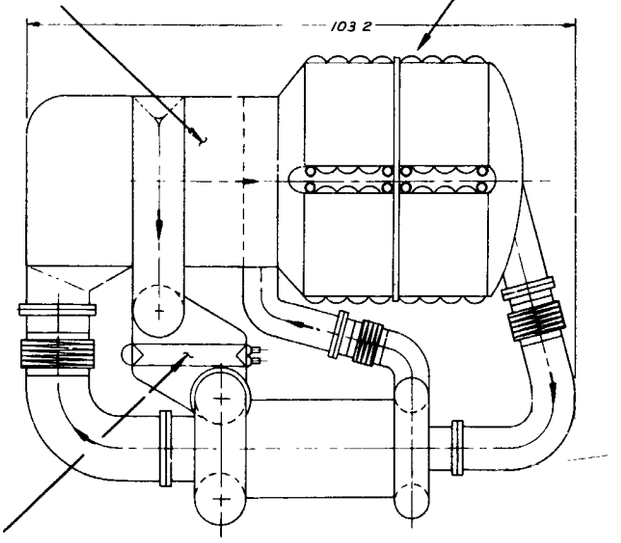

ADVANCED SYSTEMS									
CASE NO.	RECUPERATOR PLATE/FIN			WASTE HEAT EXCHANGER TUBULAR			HEAT SOURCE HEAT EXCHANGER		
	A FLOW LENGTH	B STACK HEIGHT	C NO FLOW	D FLOW LENGTH	E TUBE LENGTH	F NO FLOW	G FLOW LENGTH	H TUBE LENGTH	J NO FLOW
I-A	27.3	31 8	14 4	36.5	18.65	25 4	4 0	21.5	19.9
II-A	27 5	31 4	15 7	34.6	19.15	24.9	4.0	21.5	18 0
III-A	27.9	32.7	17.8	30.2	20 70	26.6	4.0	21.5	16.5

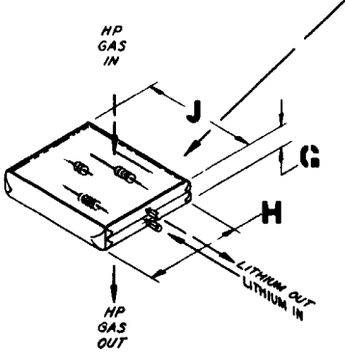

HEAT SOURCE HEAT EXCHANGER

FOLDOUT FRAME 7

2 THIS IS A PRELIMINARY LAYO
DIMENSIONS ARE SUBJECT TO
STRUCTURAL ANALYSIS
△ CASE II-A SHOWN, CASES I

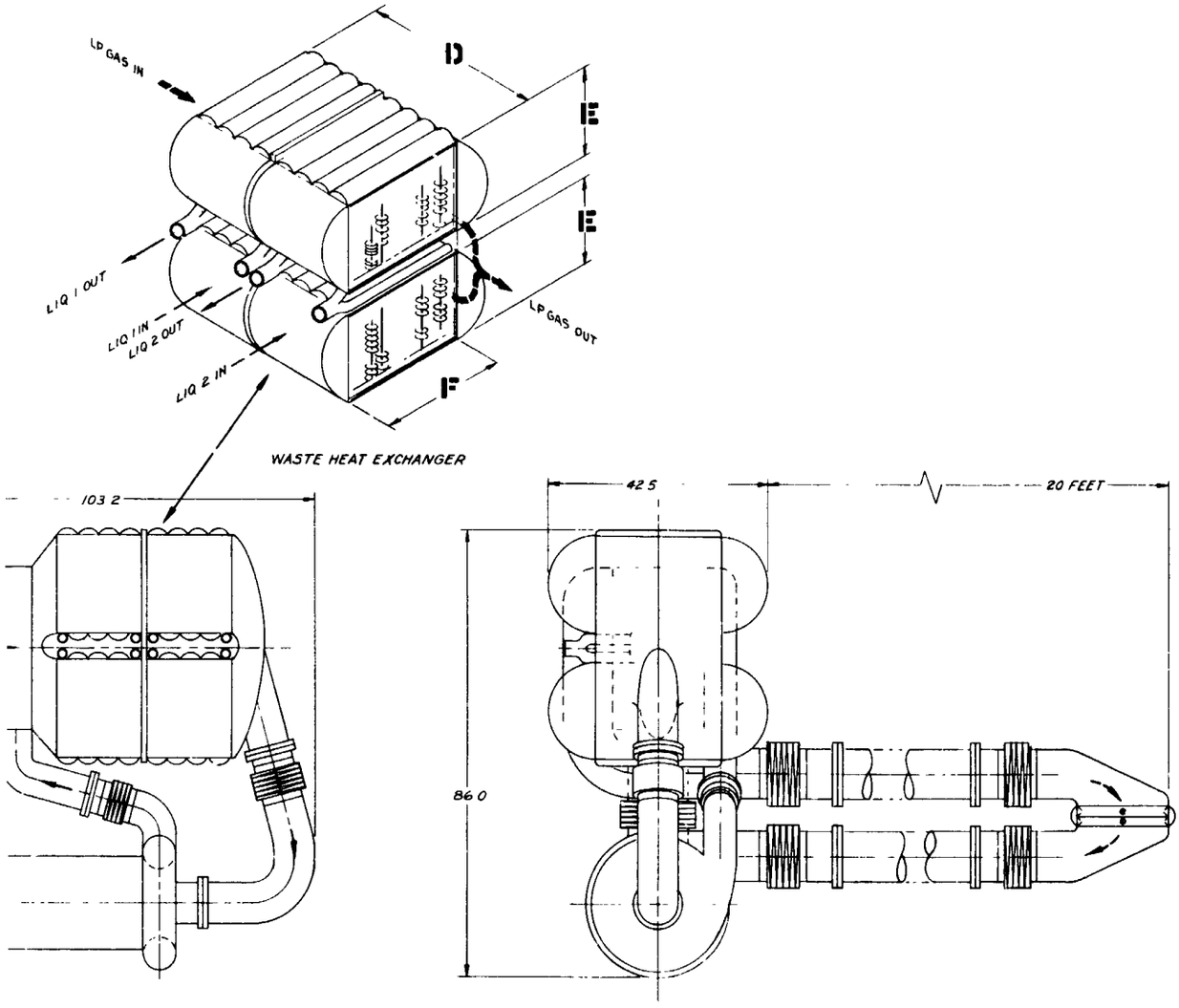

FOLDOUT FRAME 2

2 THIS IS A PRELIMINARY LAYOUT DRAWING OVER-ALL PACKAGE DIMENSIONS ARE SUBJECT TO CHANGE AS A RESULT OF DETAILED STRUCTURAL ANALYSIS

△ CASE II-A SHOWN, CASES I-A & III-A TABULATED.

24,000 RPM NOMINAL CASES

AIRESEARCH MANUFACTURING COMPANY OF ARIZONA
LAYOUT

LAYOUT HXDA
CASE NOS. I-A, II-A & III-A

70210 L 198524

SCALE WT SHEET 1 OF 1

PRECEDING PAGE BLANK NOT FILMED

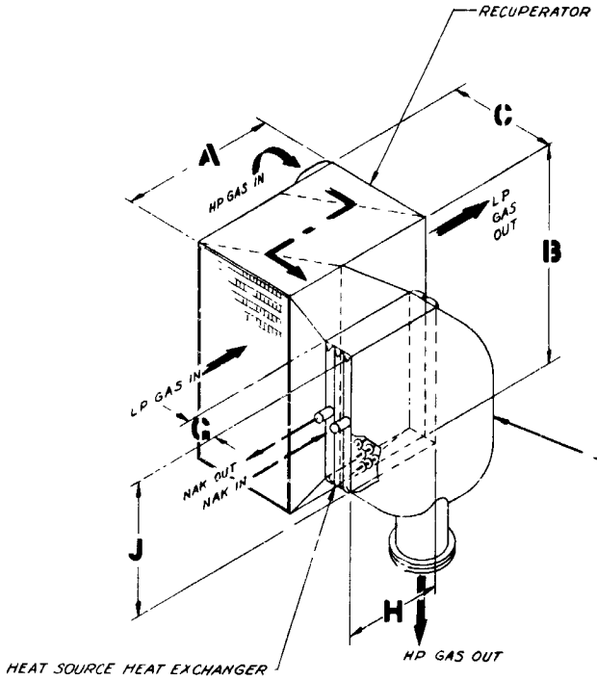

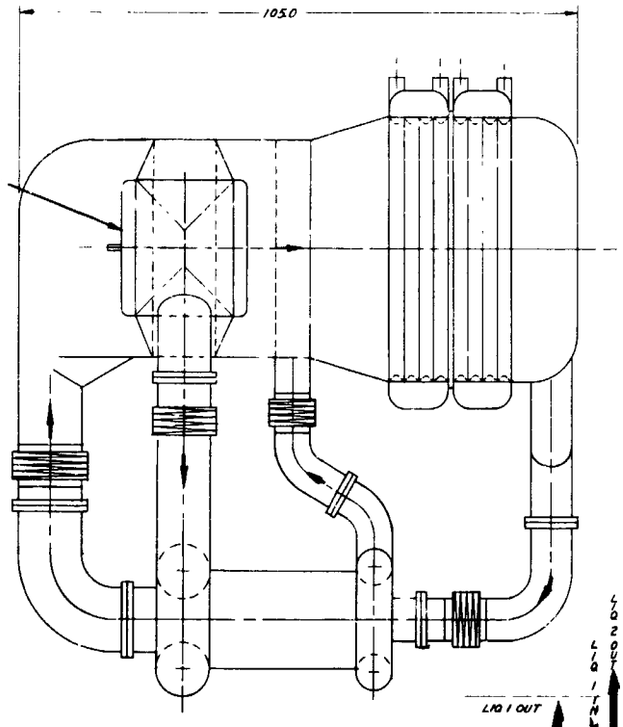

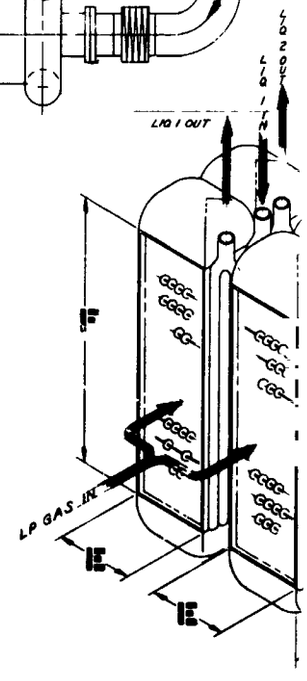

WASTE HEAT

SNAP 8 SYSTEMS									
CASE NO	RECUPERATOR PLATE/FIN			WASTE HEAT EXCHANGER TUBULAR			HEAT SOURCE HEAT EXCHANGER		
	A FLOW LENGTH	B STACK HEIGHT	C NO FLOW	D FLOW LENGTH	E TUBE LENGTH	F NO FLOW	G FLOW LENGTH	H TUBE LENGTH	J NO FLOW
8-I	29.7	41.5	18.5	25.2	28.7	49.0	3.7	32.0	32.6
8-II	29.3	40.2	20.1	23.1	29.6	48.7	3.7	32.0	29.2
8-III	29.4	42.4	23.4	21.0	30.2	48.8	3.7	32.0	26.5

FOLDOUT FRAME 1

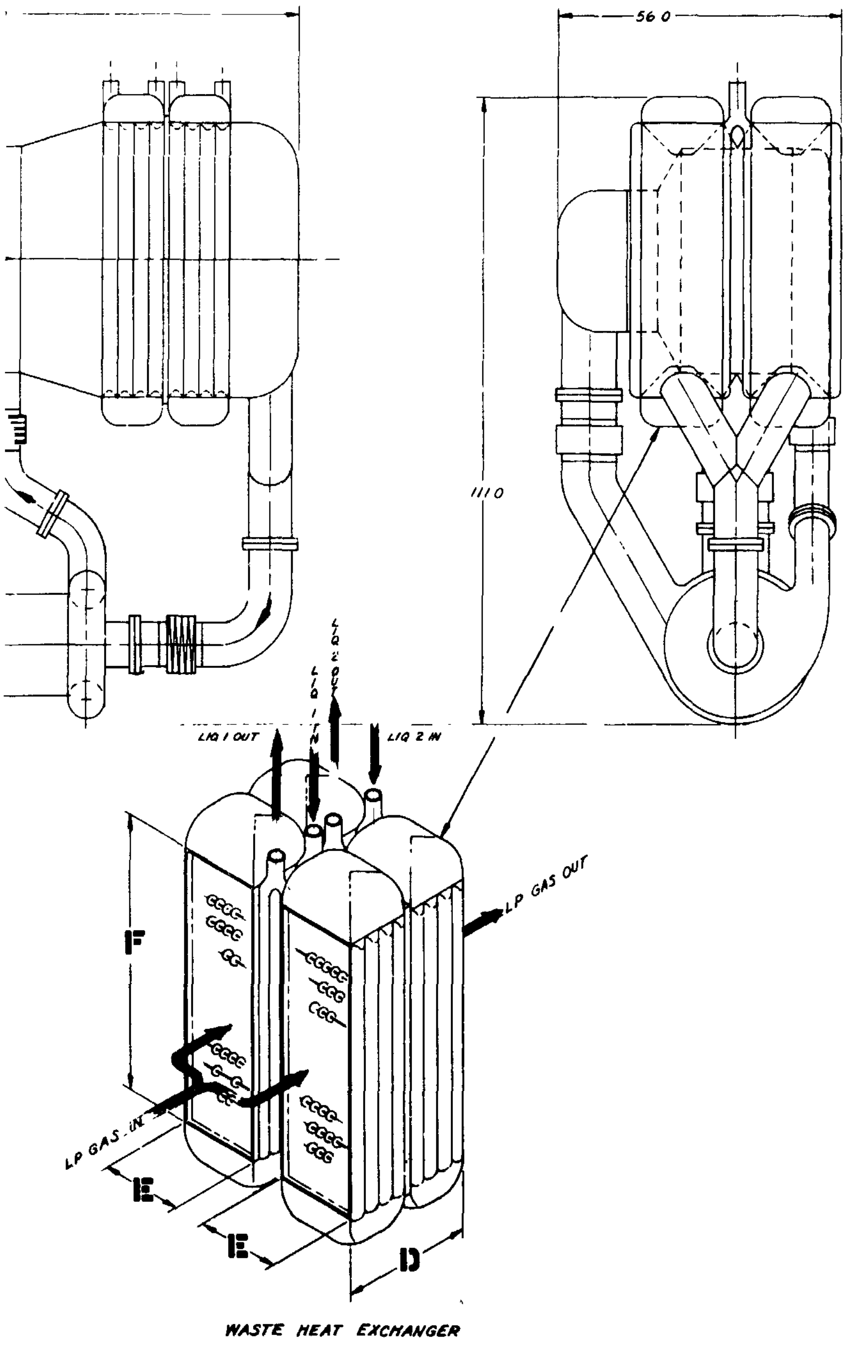

WASTE HEAT EXCHANGER

FOLDOUT FRAME 2

NOTES: UNLESS OTHERWISE SPECIFIED

1. CASE 8-II SHOWN, CASES 8-I & 8-III SHOWN
2. THIS IS A PRELIMINARY LAYOUT DRAWING, OVER-ALL PACKAGE DIMENSIONS ARE SUBJECT TO CHANGE AS A RESULT OF DETAILED STRUCTURAL ANALYSIS.

56,000 RPM. CASES

LAYOUT

LAYOUT, HXDA, CASE NO. 8-I, 8-II, 8-III

70210 L198525

PRECEDING PAGE BLANK NOT FILMED

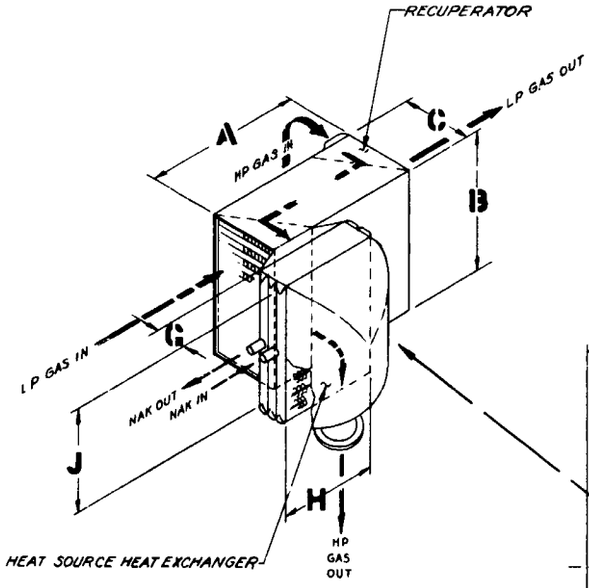

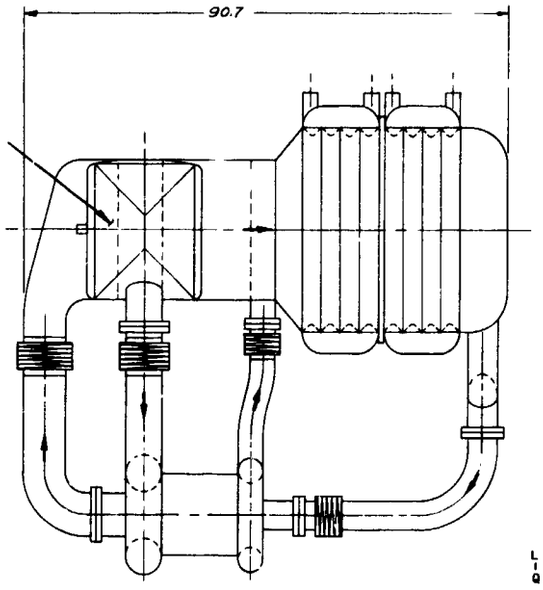

SNAP 8 SYSTEMS									
CASE NO.	RECUPERATOR PLATE/FIN			WASTE HEAT EXCHANGER TUBULAR			HEAT SOURCE HEAT EXCHANGER		
	A FLOW LENGTH	B STACK HEIGHT	C NO FLOW	D FLOW LENGTH	E TUBE LENGTH	F NO FLOW	G FLOW LENGTH	H TUBE LENGTH	J NO FLOW
8-IV	29.7	27.0	12.1	30.5	13.5	40.5	8.4	14.9	16.3
8-V	29.5	25.5	12.7	29.8	13.6	37.5	5.6	18.5	25.0
8-VI	28.7	26.4	14.5	28.8	13.8	35.5	5.6	18.5	22.7

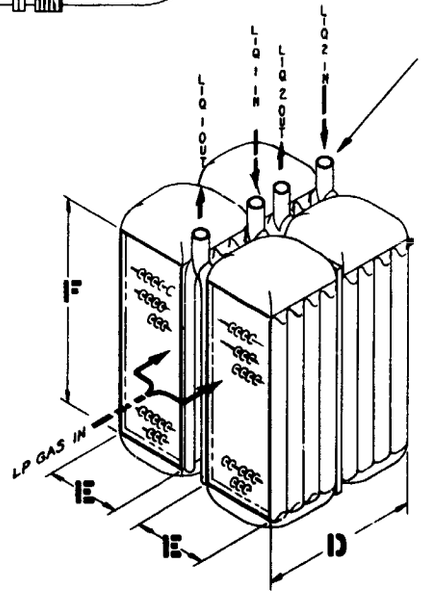

WASTE HEAT EXCHANGER

FOLDOUT FRAME 1

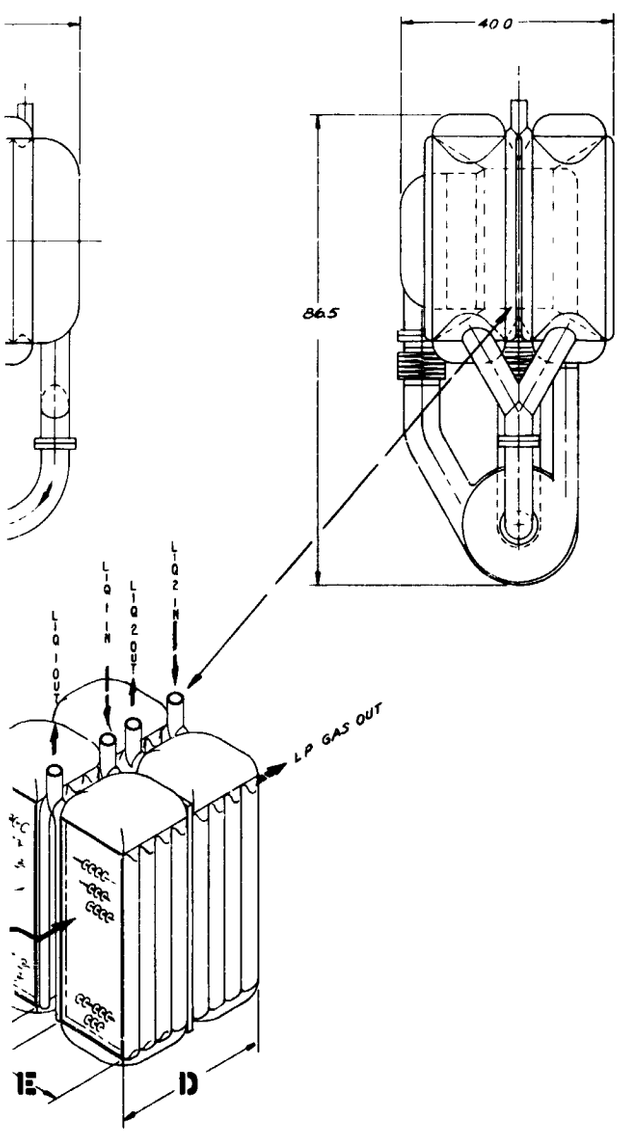

ASTE HEAT EXCHANGER

FOLDOUT FRAME 2

2 THIS IS A PRELIMINARY LAYOUT DRAWING, OVER-ALL PACKAGE DIMENSIONS ARE SUBJECT TO CHANGE AS A RESULT OF DETAILED STRUCTURAL ANALYSIS.

1 CASE 8-II SHOWN CASES 8-IV & 8-VI TABULATED UNLESS OTHERWISE SPECIFIED

AIRESEARCH MANUFACTURING COMPANY	
LAYOUT	
LAYOUT HXDA CASE NOS 8-IV, 8-V, 8-VI	
70210	L 198527
36,000 RPM NORMAL CASES	

PRECEDING PAGE BLANK NOT FILMED

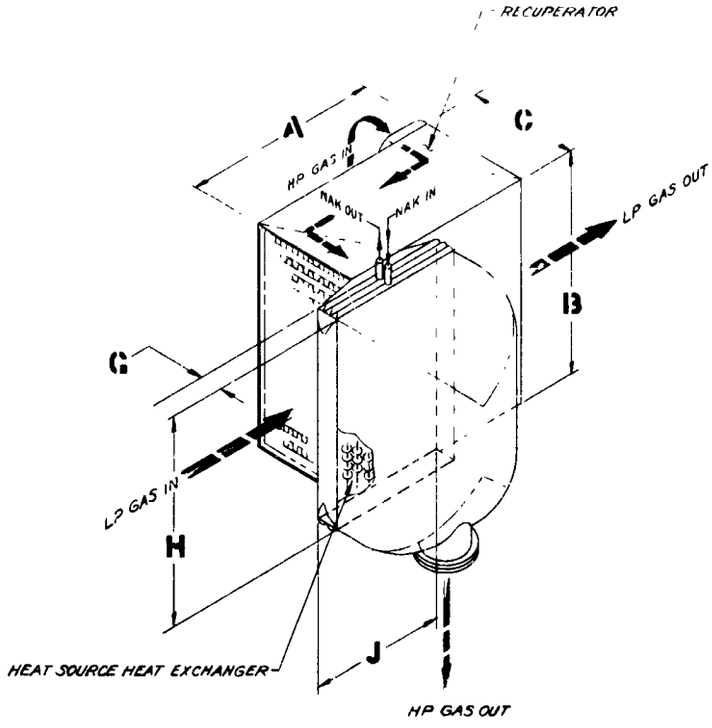

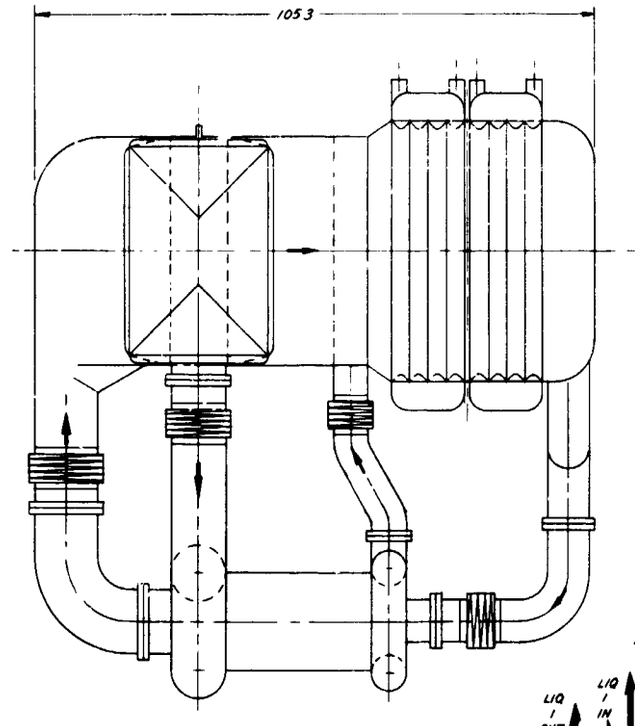

SNAP 8 SYSTEMS									
CASE NO.	RECUPERATOR PLATE/FIN			WASTE HEAT EXCHANGER TUBULAR			HEAT SOURCE HEAT EXCHANGER		
	A FLOW LENGTH	B STACK HEIGHT	C NO FLOW	D FLOW LENGTH	E TUBE LENGTH	F NO FLOW	G FLOW LENGTH	H TUBE LENGTH	J NO FLOW
8-VII	37.9	44.2	19.8	27.6	13.6	48.7	4.0	38.5	29.3
8-VIII	37.1	43.2	21.6	25.1	14.2	48.9	4.0	30.5	26.3
8-IX	36.4	45.1	24.8	22.0	15.0	49.5	4.0	38.5	23.9

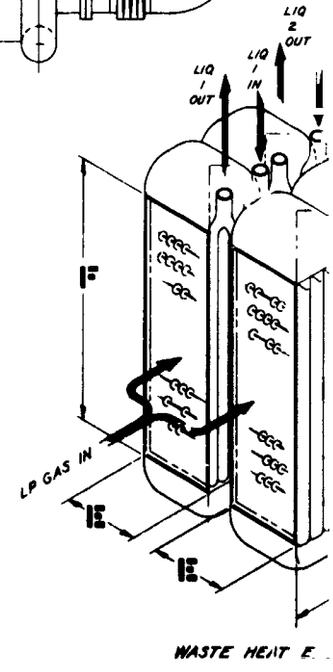

FOLDOUT FRAME 7

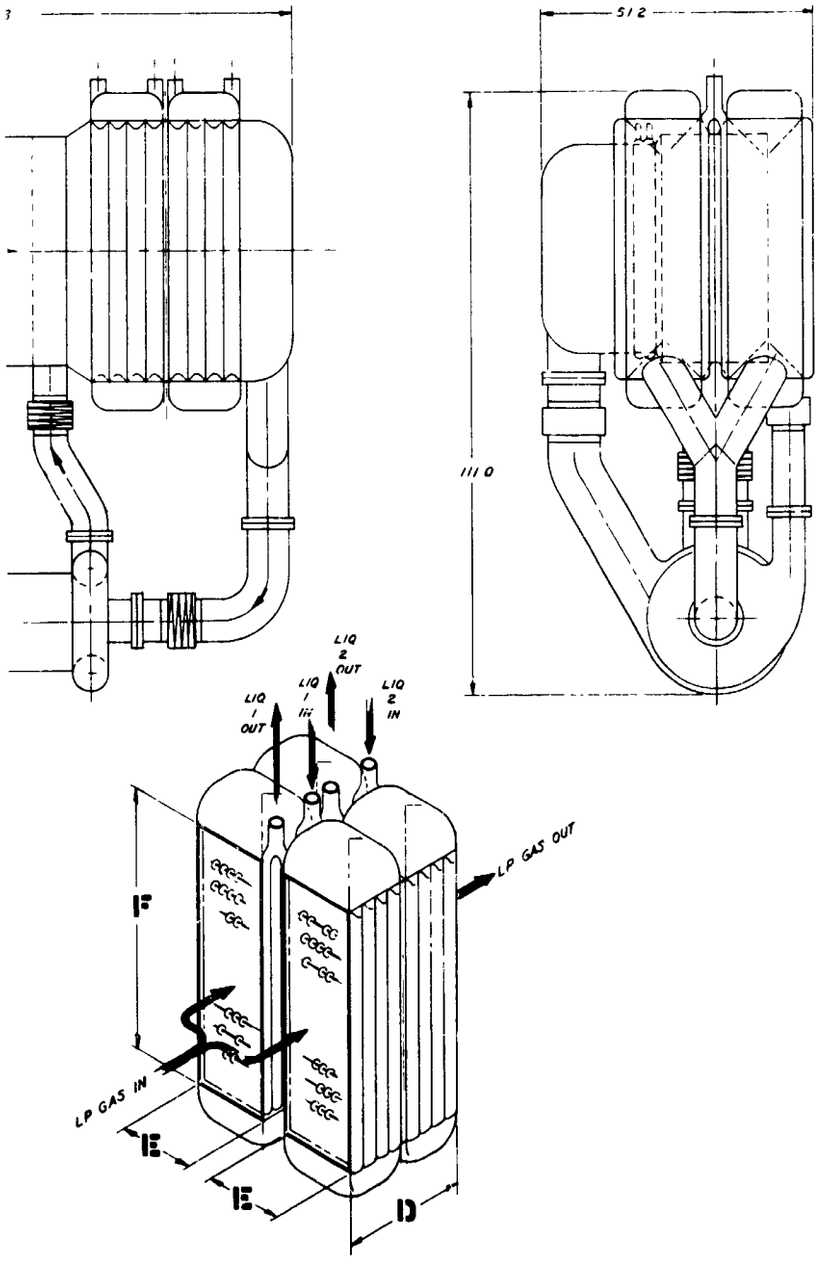

WASTE HEAT EXCHANGER

..OUT FRAME 2

2. THIS IS A PRELIMINARY LAYOUT DRAWING, OVER-ALL PACKAGE DIMENSIONS ARE SUBJECT TO CHANGE AS A RESULT OF DETAILED STRUCTURAL ANALYSIS.

NOTES: ⚠ CASE VIII SHOWN, CASES III & IX TABULATED. UNLESS OTHERWISE SPECIFIED.

24,000 RPM CASES

LAYOUT, HXDA
CASE NOS VII, VIII & IX

70210 L 198528

PRECEDING PAGE BLANK NOT FILMED

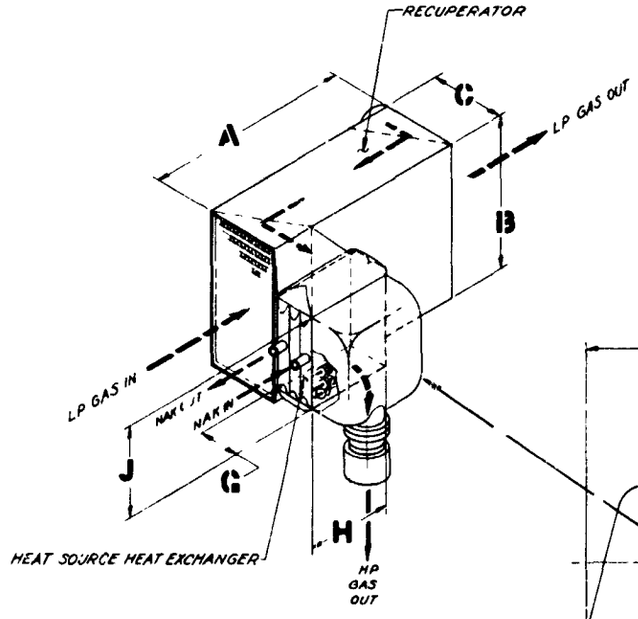

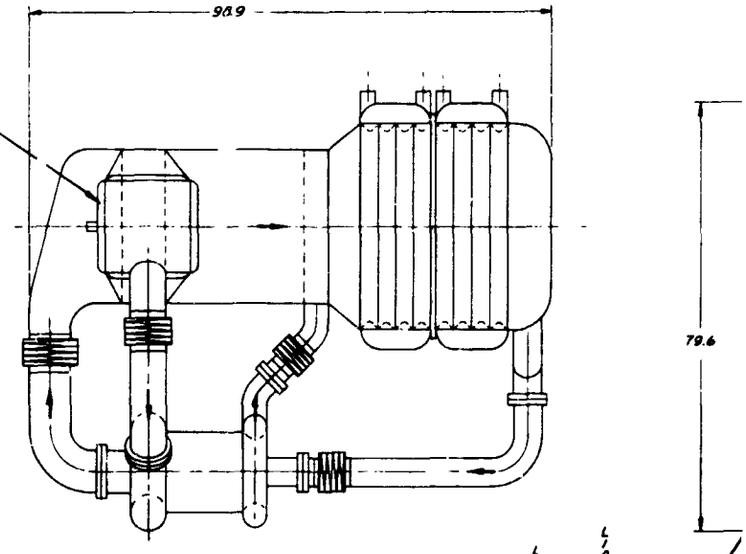

SNAP 8 SYSTEMS									
CASE NO.	RECUPERATOR PLATE/FIN			WASTE HEAT EXCHANGER TUBULAR			HEAT SOURCE HEAT EXCHANGER		
	A FLOW LENGTH	B STACK HEIGHT	C NO FLOW	D FLOW LENGTH	E TUBE LENGTH	F NO FLOW	G FLOW LENGTH	H TUBE LENGTH	J NO FLOW
8 I	40.1	29.3	13.1	28.0	13.7	42.7	8.5	14.7	17.5
8 II	39.3	28.4	14.2	28.0	13.7	38.3	7.9	16.0	17.0
8-III	38.2	28.3	15.6	27.0	14.00	36.3	6.2	21.2	19.5

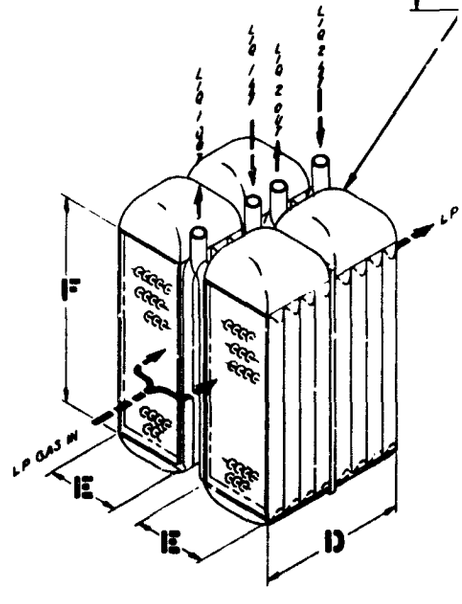

WASTE HEAT EXCHANGER

FRAME 1

NOTES:

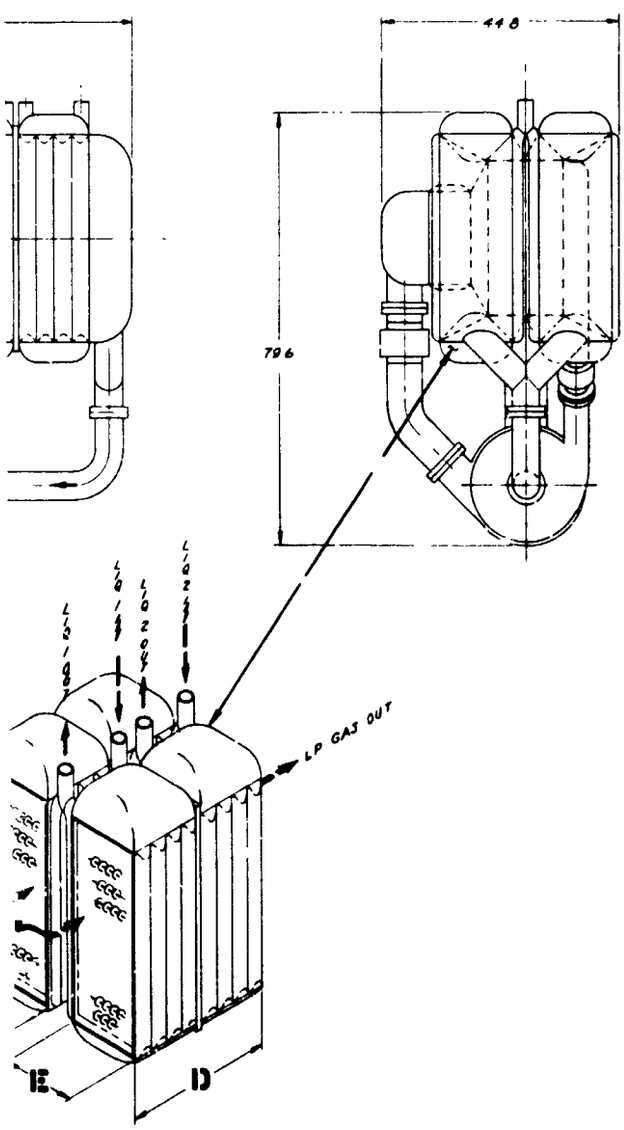

VASTE HEAT EXCHANGER

2 THIS IS A PRELIMINARY LAYOUT DRAWING, OVER-ALL PACKAGE DIMENSIONS ARE SUBJECT TO CHANGE AS A RESULT OF DETAILED STRUCTURAL ANALYSIS

1 CASE 8XI SHOWN CASES 8X & 8XII SHOWN.

NOTES: UNLESS OTHERWISE SPECIFIED

...UT FRAME 2

LAYOUT HXDA
CASE NOS. 8X, 8XI, 8XII

70210 L 198529

36,000 RPM NORMAL CASES

PRECEDING PAGE BLANK NOT FILMED

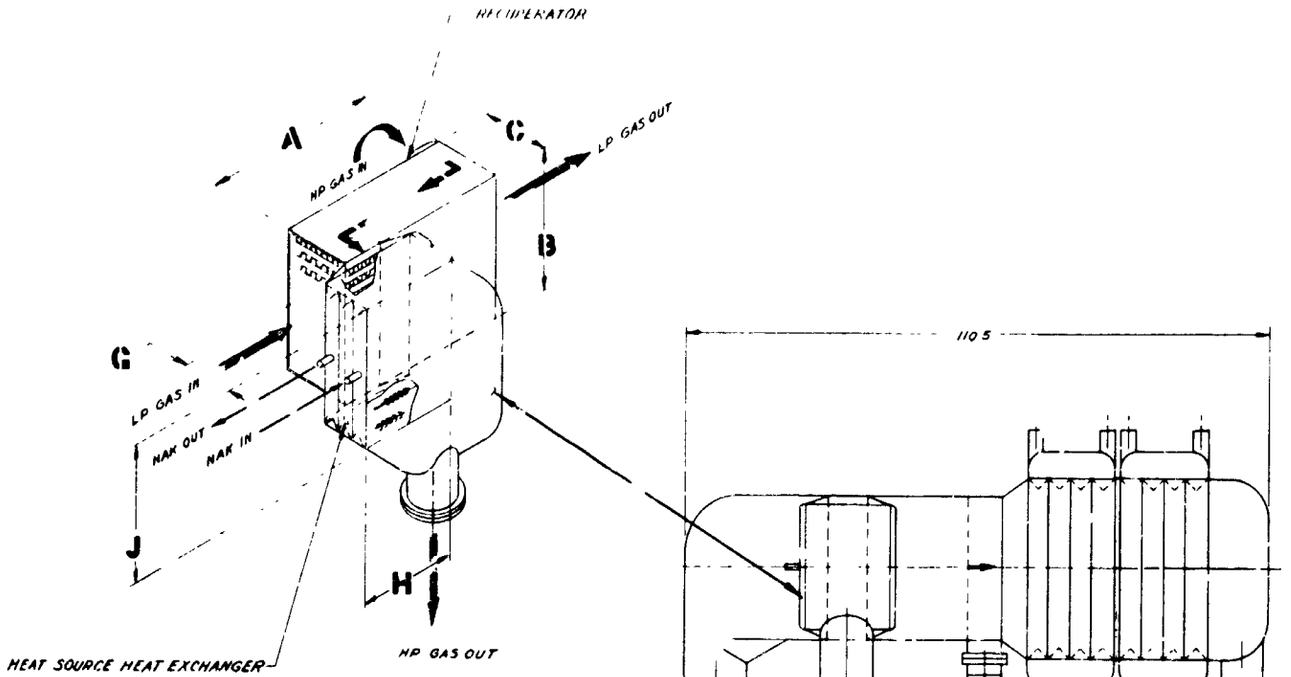

SNAP 8 SYSTEMS									
CASE NO.	RECUPERATOR PLATE/FIN			WASTE HEAT EXCHANGER TUBULAR			HEAT SOURCE HEAT EXCHANGER		
	A FLOW LENGTH	B STACK HEIGHT	C NO FLOW	D FLOW LENGTH	E TUBE LENGTH	F NO FLOW	G FLOW LENGTH	H TUBE LENGTH	J NO FLOW
8-IIA	33.0	28.9	13.3	34.1	30.5	37.3	13.6	10.5	10.2
8-IIA	33.0	26.7	13.3	34.1	30.5	33.4	9.8	15.4	23.0
8-IIIA	32.3	26.8	14.8	33.3	30.9	31.3	7.9	18.5	23.2

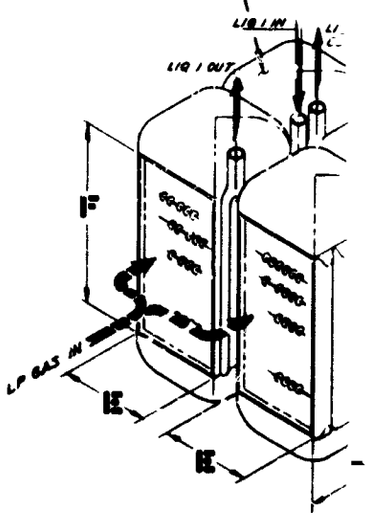

WASTE HEAT EXC

POCKET FRAME 7

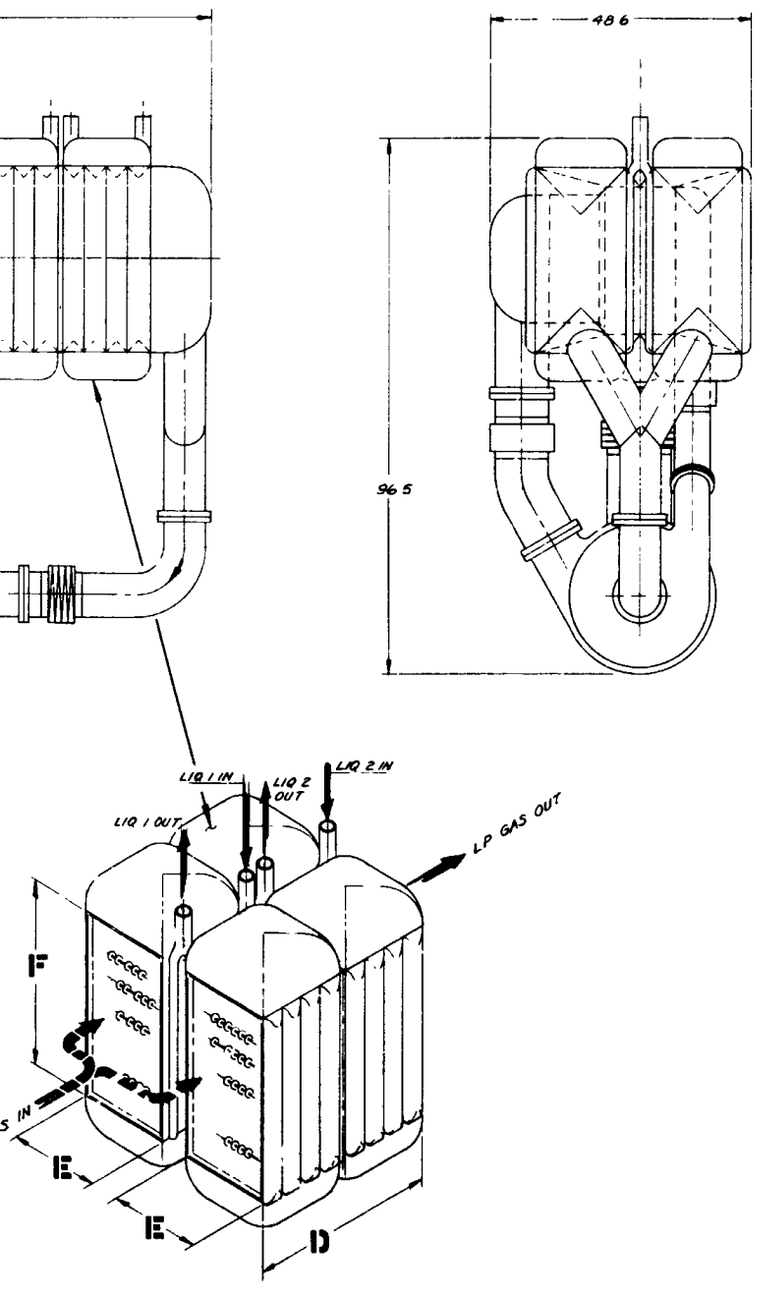

WASTE HEAT EXCHANGER

2 THIS IS A PRELIMINARY LAYOUT DRAWING. OVER-ALL PACKAGE DIMENSIONS ARE SUBJECT TO CHANGE, AS A RESULT OF DETAILED STRUCTURAL ANALYSIS

NOTES: 1 CASE 8II-A SHOWN CASES 8-I-A & 8-III-A TABULATED UNLESS OTHERWISE SPECIFIED

FRAME 2

AIRESEARCH MANUFACTURING COMPANY

LAYOUT

LAYOUT, HXDA, CASE NOS. 8-I-A, 8-II-A, 8-III-A

70210 L/98526

24,000 RPM CASES

PRECEDING PAGE BLANK NOT FILMED

SECTION 5

DESIGN OF FOUR BRAYTON CYCLE HXDA's

	Page
INTRODUCTION	197
CYCLE CONDITICNS	198
COMPONENT STUDIES	203
Recuperators	203
1. Rectangular End Section Recuperator	203
2. Triangular End Section Recuperator	212
3. Summary	227
Waste Heat Exchanger	232
Heat Source Heat Exchanger	238
Heat Exchanger Structural Design	243
DUCTING ANALYSIS	246
SYSTEM OPTIMIZATION	247
SUMMARY	256

PRECEDING PAGE BLANK NOT FILMED

SECTION 5

DESIGN OF FOUR BRAYTON CYCLE HXDA'S

INTRODUCTION

This section presents the results of the Task 3 studies. Task 3 is concerned with the design and optimization of four Brayton cycle heat exchanger and duct assemblies to the design conditions selected by NASA. Upon reviewing the Task 2 studies reported in Section 4 of this report, and their in-house systems level studies, NASA selected the following systems for the Task 3 efforts.

Case

I SNAP-8 design temperatures, 160 kw_e
- HXDA mechanical design
  - 200/105 psi (maximum high/low pressure level)
  - 1600°F turbine inlet temperature cycle conditions except HSHX
  - 1300°F maximum temperature (HSHX)
- Waste heat exchanger
  - Plate-fin construction
  - Coolant: DC-200-(2CS)

II 1600°F turbine inlet temperature, 160 kw_e
- HXDA mechanical design
  - 200/105 ps. (max. high/low pressure level)
  - 1700°F maximum temperature (HSHX)
- Waste heat exchanger
  - Plate-fin construction
  - Coolant: MIPB

III 2100°F turbine inlet temperature, 160 kw_e
- HXDA mechanical design
  - 200/105 psi (max. high/low pressure level)
  - 2150°F maximum temperature (HSHX)
- Waste heat exchanger
  1. Plate fin/MIPB coolant
  2. Tube fin/NaK coolant

IV SNAP-8 design temperatures, 80 kw_e
- HXDA mechanical design
  - 100/50 psi (max. high/low pressure level)
  - 1300°F maximum temperature (HSHX)
- Waste heat exchanger
  - Plate-fin
  - Coolant: DC-200-(1CS)

PRECEDING PAGE BLANK NOT FILMED

CYCLE CONDITIONS

The design point conditions for each of the four Task 3 systems are shown in Figures 5-1 through 5-4. The Case I design point is shown in Figure 5-1. Case I represents a SNAP-8 reactor system operating at 600 kw_t and approximately 1200°F NaK outlet temperature. However, to provide some growth potential and flexibility in the PCS, the Brayton cycle equipment structural design for this case is based on conditions more severe than SNAP-8. The HXDA was designed for system pressures of 200 psi on the high-pressure side and 105 psi on the low-pressure side and temperatures corresponding to a 1600°F turbine inlet temperature.

The design conditions for Case II are shown in Figure 5-2. This represents a system operating at 1600°F turbine inlet temperature based on a TAC designed at the SNAP-8 temperature conditions and a system pressure ratio of 1.9. The system heat exchangers for this case are again designed structurally for a 200/105 psi high and low side pressure level to build in some system growth potential and flexibility.

The Case III design conditions, shown in Figure 5-3, are representative of an advanced system operating at 2100°F turbine inlet temperature. Although Cases I, II, and IV utilize NaK in the secondary heat source coolant loop, the high temperature level of Case III favors the use of lithium in this loop. System heat exchangers are again structurally designed for the 200/105 psi pressure level.

The Case IV system, shown in Figure 5-4, represents a reduced power version of Case I. Temperature levels in Case IV are identical with those in Case I, whereas pressure levels and flow rates are exactly half of the Case I pressures and flows. Structurally, the Case IV equipment is designed for gas pressure levels of 100 psi and 50 psi on the high- and low-pressure sides, respectively. Whereas the Case I structural design is based on system temperatures corresponding to a 1600°F turbine inlet, the Case IV structural design is based on actual system operating temperatures.

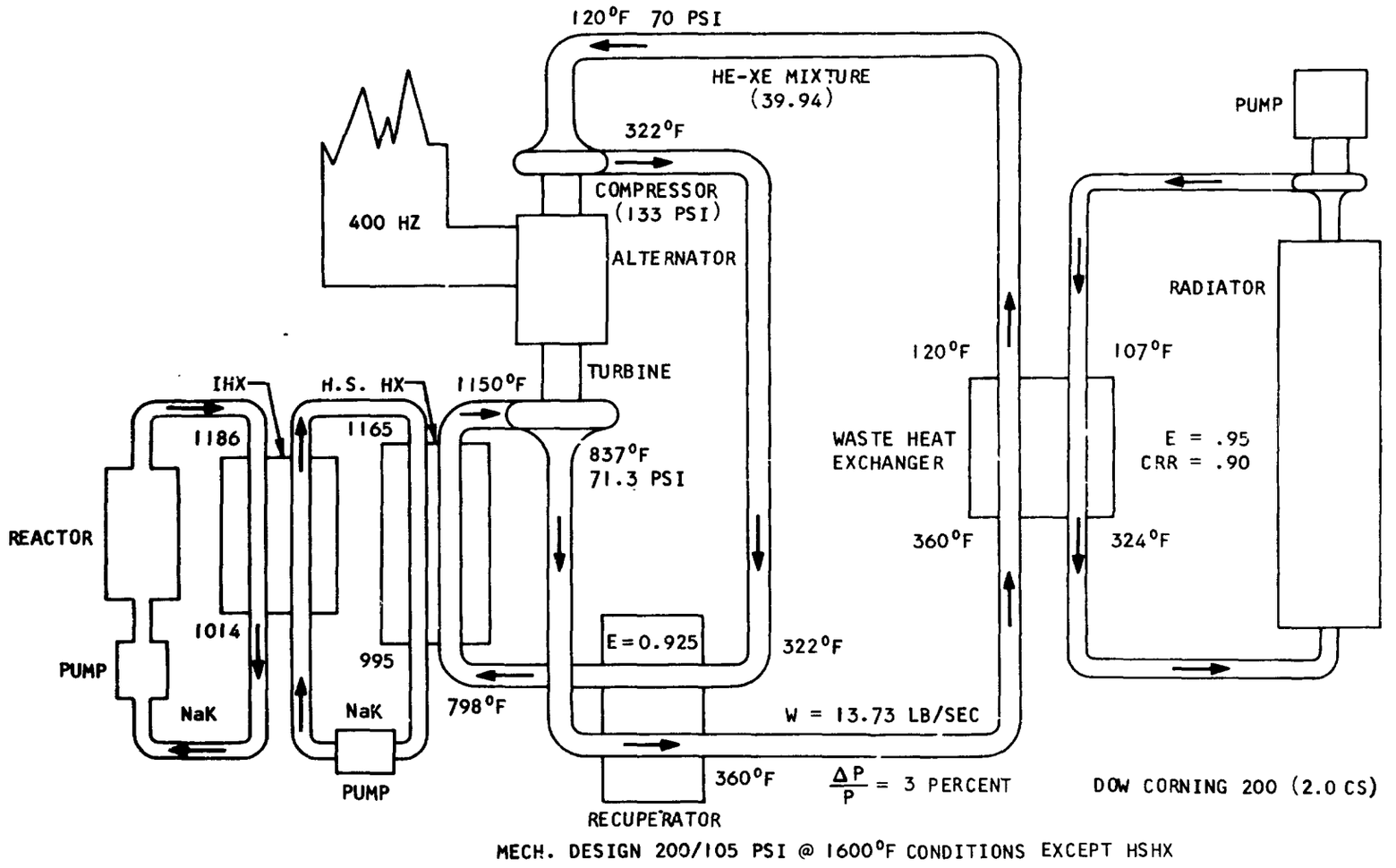

Figure 5-1. Operating Conditions for Case I, Task 3

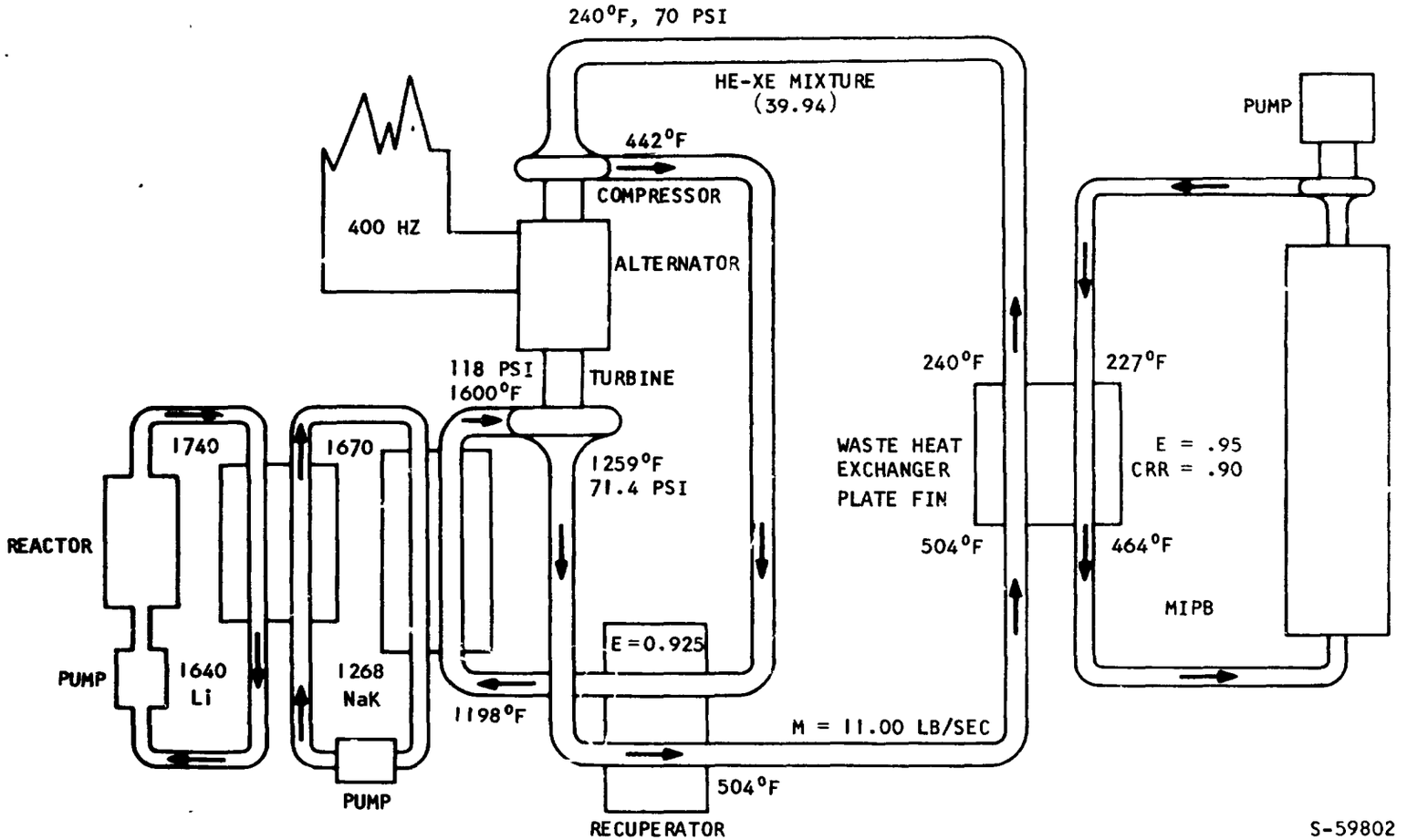

MECH. DESIGN = 200 PSI/105 PSI

$\frac{\Delta P}{P}$ = 3 PERCENT

Figure 5-2. Operating Conditions for Case II, Task 3

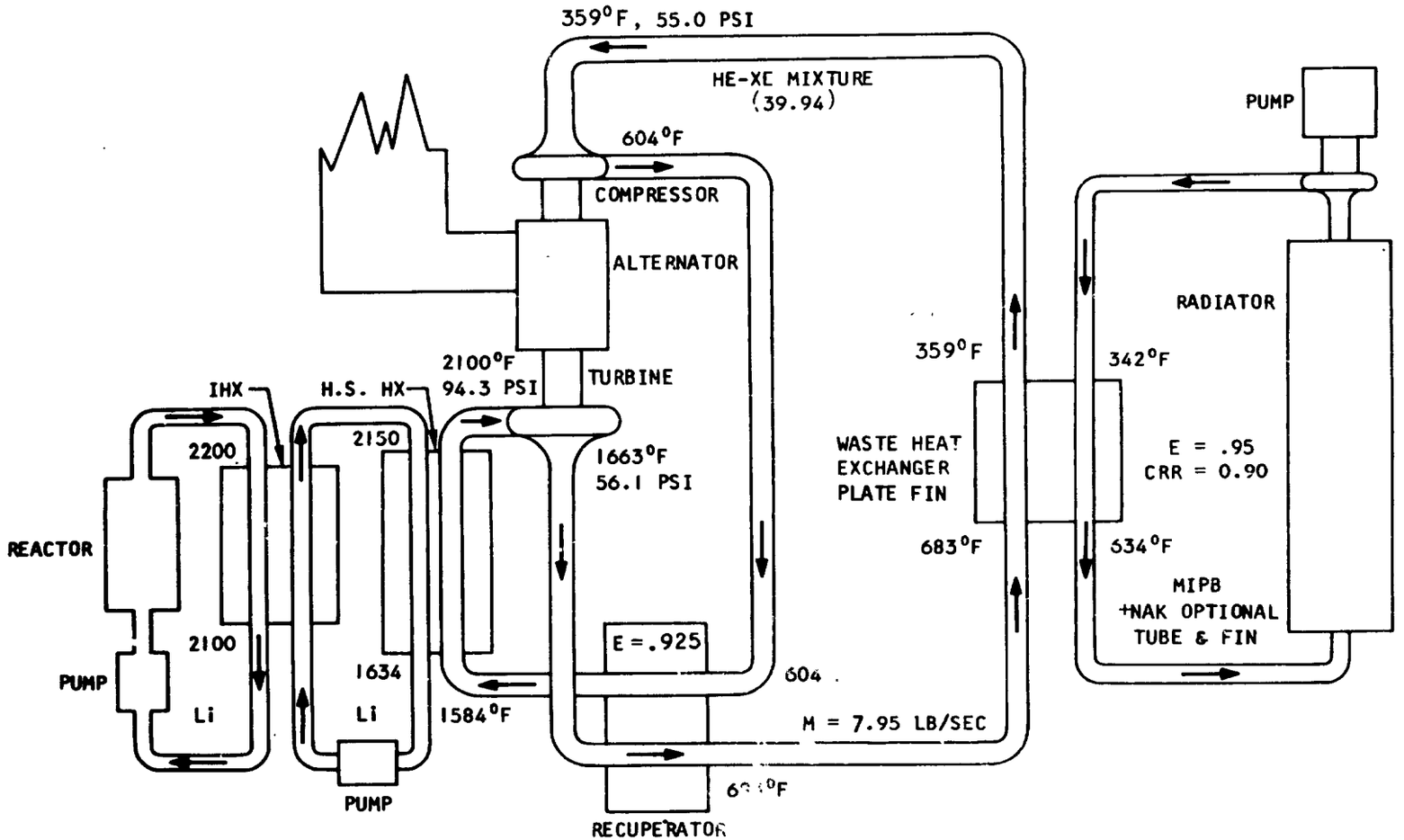

MECH. DESIGN = 200/105 PSI

$\frac{\Delta P}{P}$ = 3 PERCENT

S-59801

Figure 5-3. Operating Conditions for Case III, Task 3

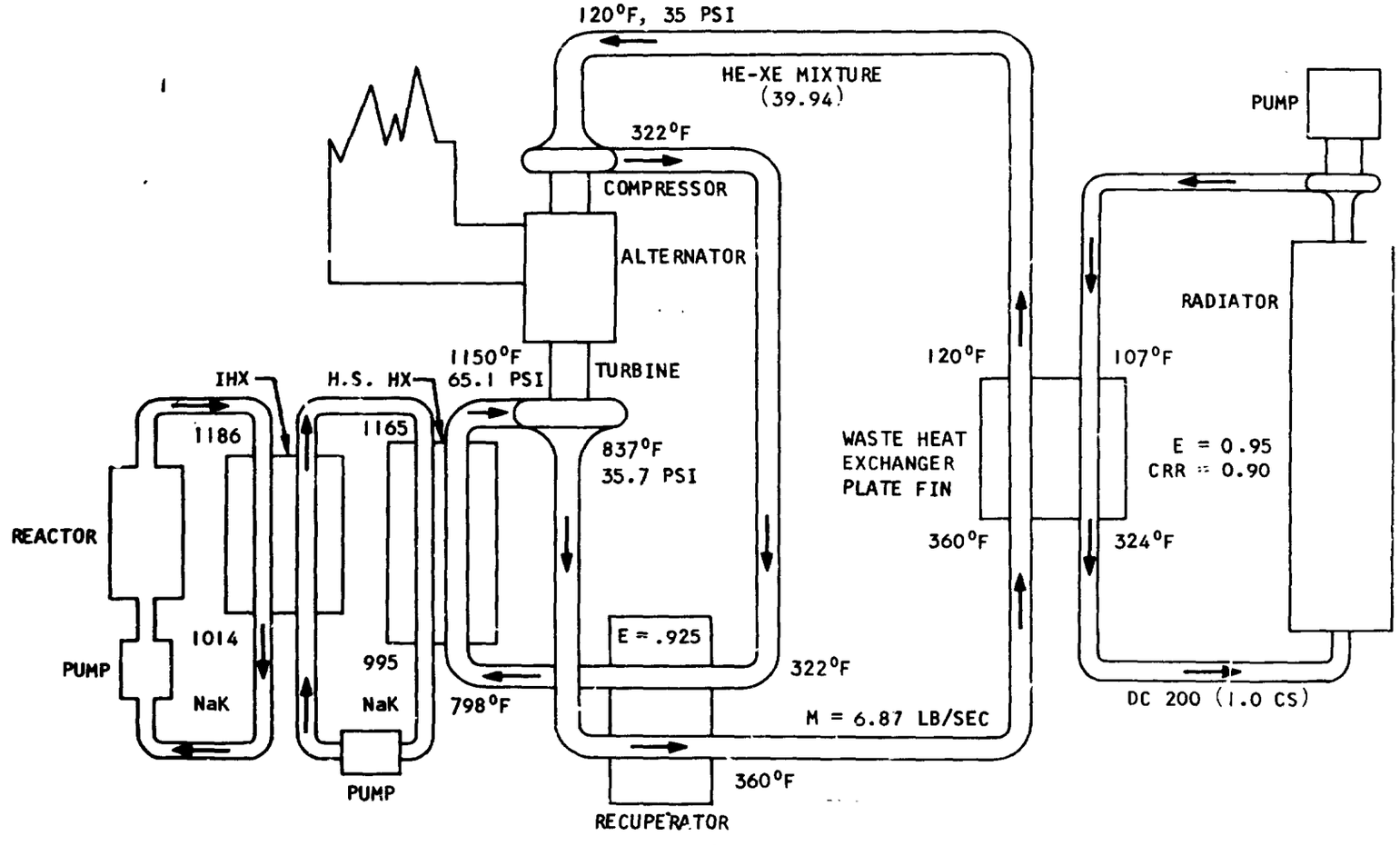

MECH. DESIGN - 100/50 PSI

$\frac{\Delta P}{P}$ = 3 PERCENT

S-60361

Figure 5-4. Operating Conditions for Case IV, Task 3

COMPONENT STUDIES

Recuperators

Two different approaches to the recuperator end section design were investigated for the Task 3 studies. The two approaches are illustrated in Figure 5-5 and involve different geometries for ducting the gases in and out of the recuperator counterflow section. In the Task 2 studies only the rectangular end section approach was considered.

I. Rectangular End Section Recuperators

Recuperator weight as a function of pressure drop for Case I, based on the use of the rectangular end section design, is shown in Figure 5-6. The data in Figure 5-6 include the counterflow portion and the two rectangular end sections of the recuperator. The material selected for the recuperator is Hastelloy X. End section weights and dimensions were obtained as outlined in the Task 2 studies.

A brief study was conducted for recuperators thermally designed for the Case I operating conditions but structurally designed to withstand 300/200 psi pressure levels on the high and low sides respectively and at temperatures associated with a 1600°F turbine inlet temperature. Figure 5-7 presents the recuperator weight data for this set of design assumptions. Comparison of the data of Figures 5-6 and 5-7 shows that the higher design pressure level results in about a 30-percent increase in recuperator total weight for the same pressure drop allocation.

Figures 5-8 through 5-10 present similar weight vs pressure drop data for rectangular recuperators designed for Cases II, III and IV. The materials selected for the recuperator for each of the cases is shown below:

Case	Structural Material	Fins
I	Hastelloy X	Hastelloy X
II	Hastelloy X	Hastelloy X
III	Cb-1%Zr	Cb-1%Zr
IV	347 stainless steel	347 stainless steel

The recuperator dimensions for the rectangular end section designs are shown in Figures 5-11 and 5-12. The data on these figures show the stack height and counterflow core lengths as a function of total recuperator pressure drop for all four design cases of Task 3. The third dimension of the recuperator, the recuperator width, is not shown in these figures. The width is equal to half the stack height.

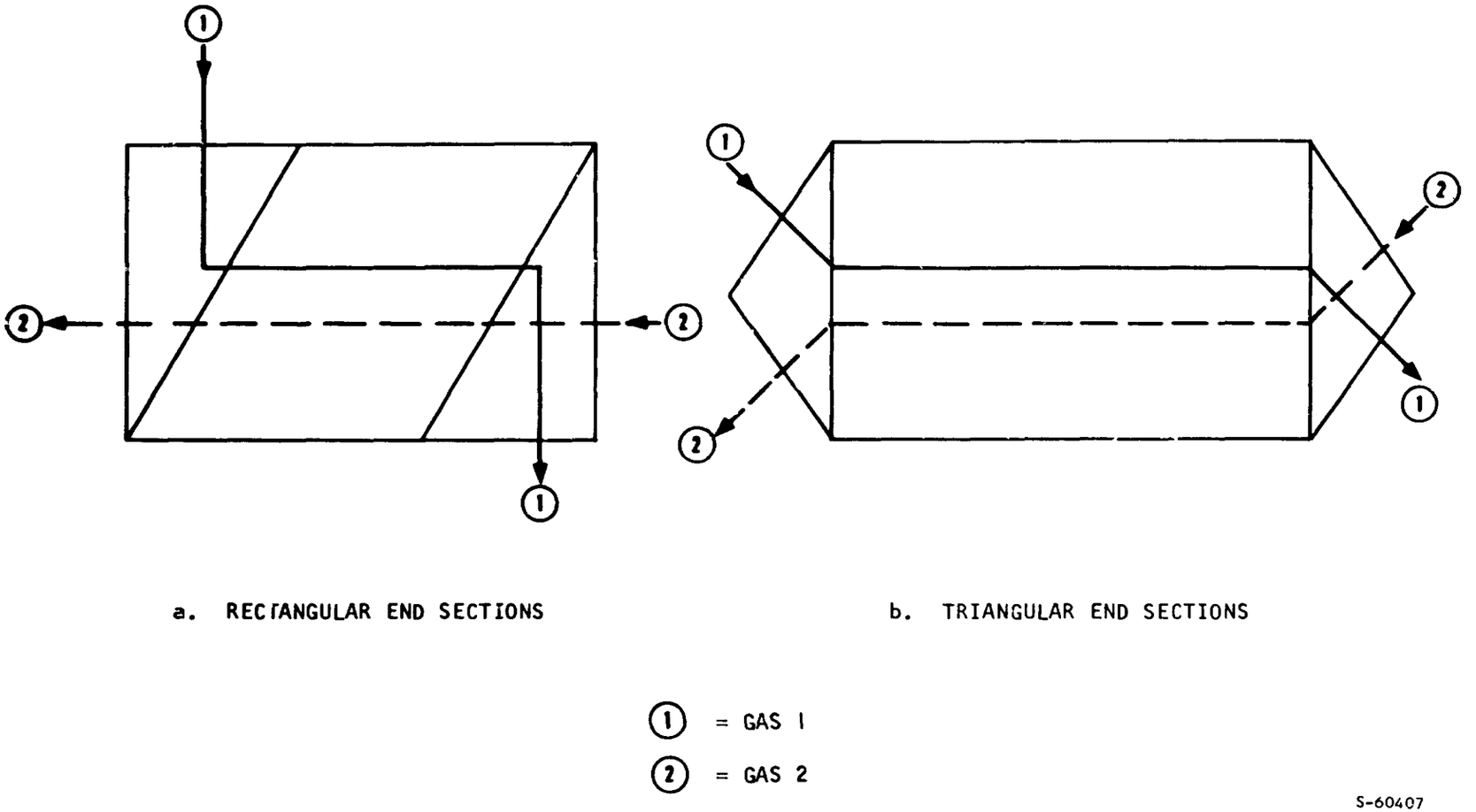

Figure 5-5. Counterflow Recuperator End Section Geometries

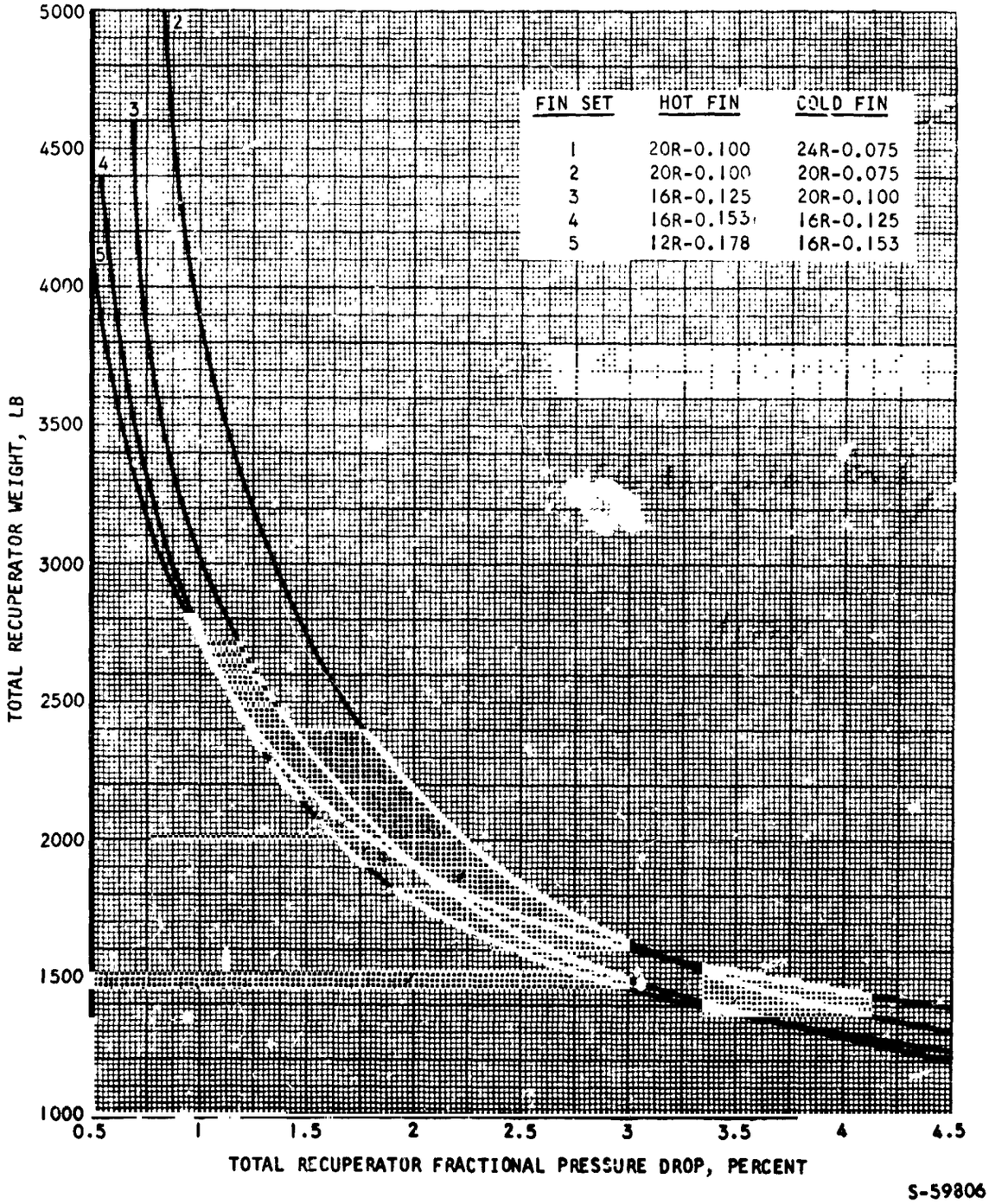

Figure 5-6. Task 3 Case I Recuperator Total Weight 200/105 psi Structural Design (Rectangular End Section Design)

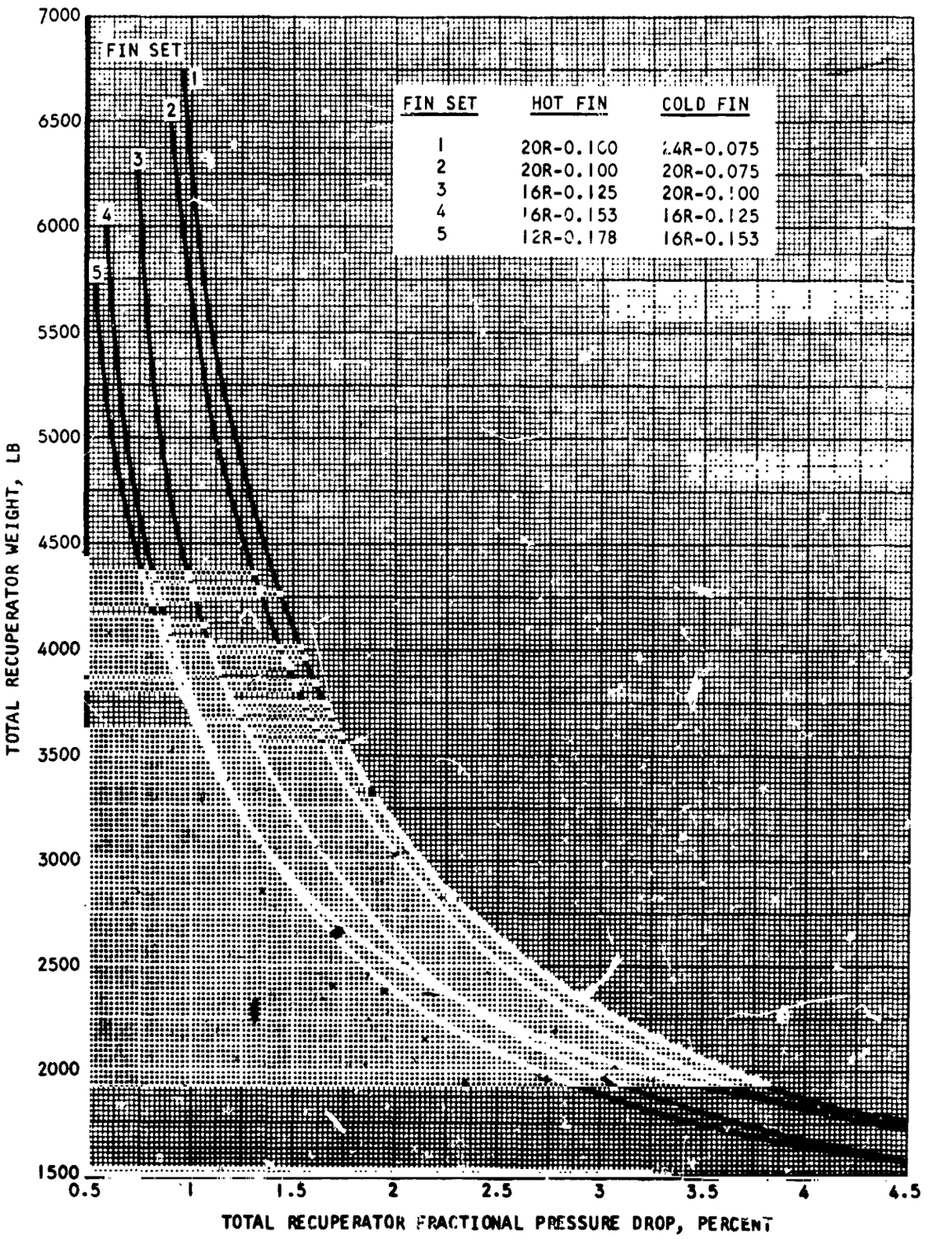

S-59808

Figure 5-7. Task 3 Case I Recuperator Total Weight 300/200 psi Structural Design (Rectangular End Section Design)

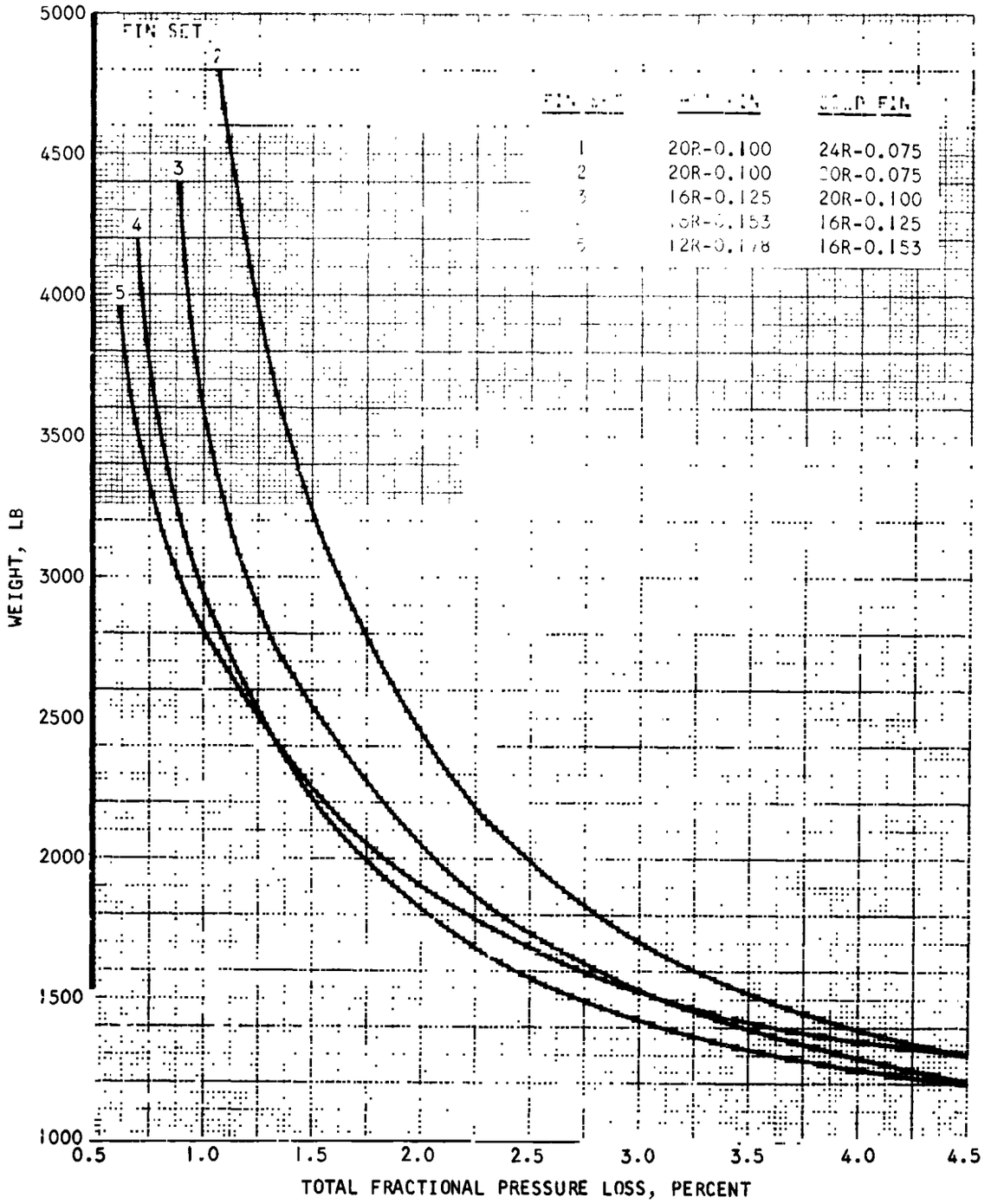

Figure 5-8. Task 3 Case II Recuperator Weight (Rectangular End Section Design)

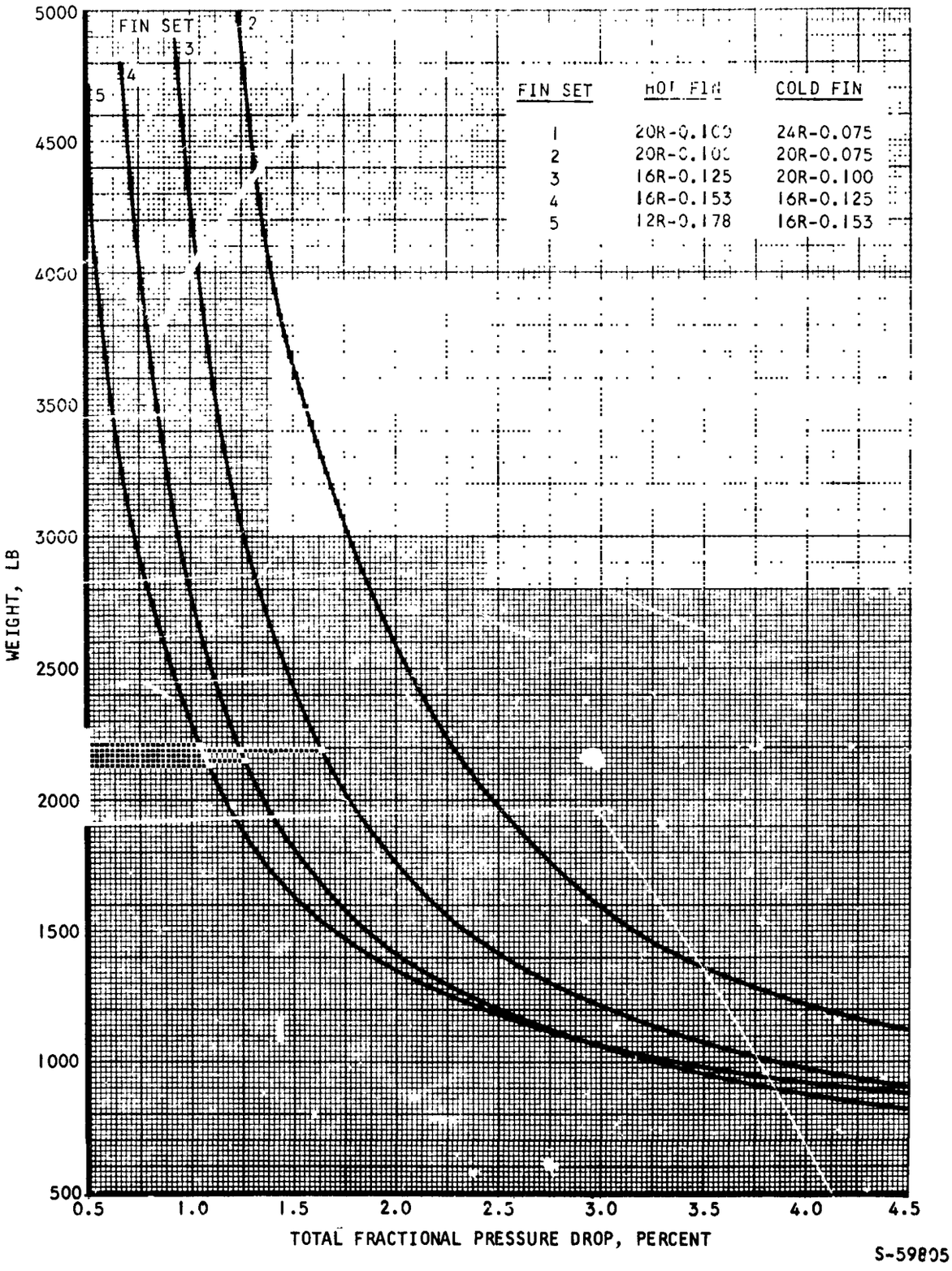

Figure 5-9. Task 3 Case III Recuperator Weight (Rectangular End Section Design)

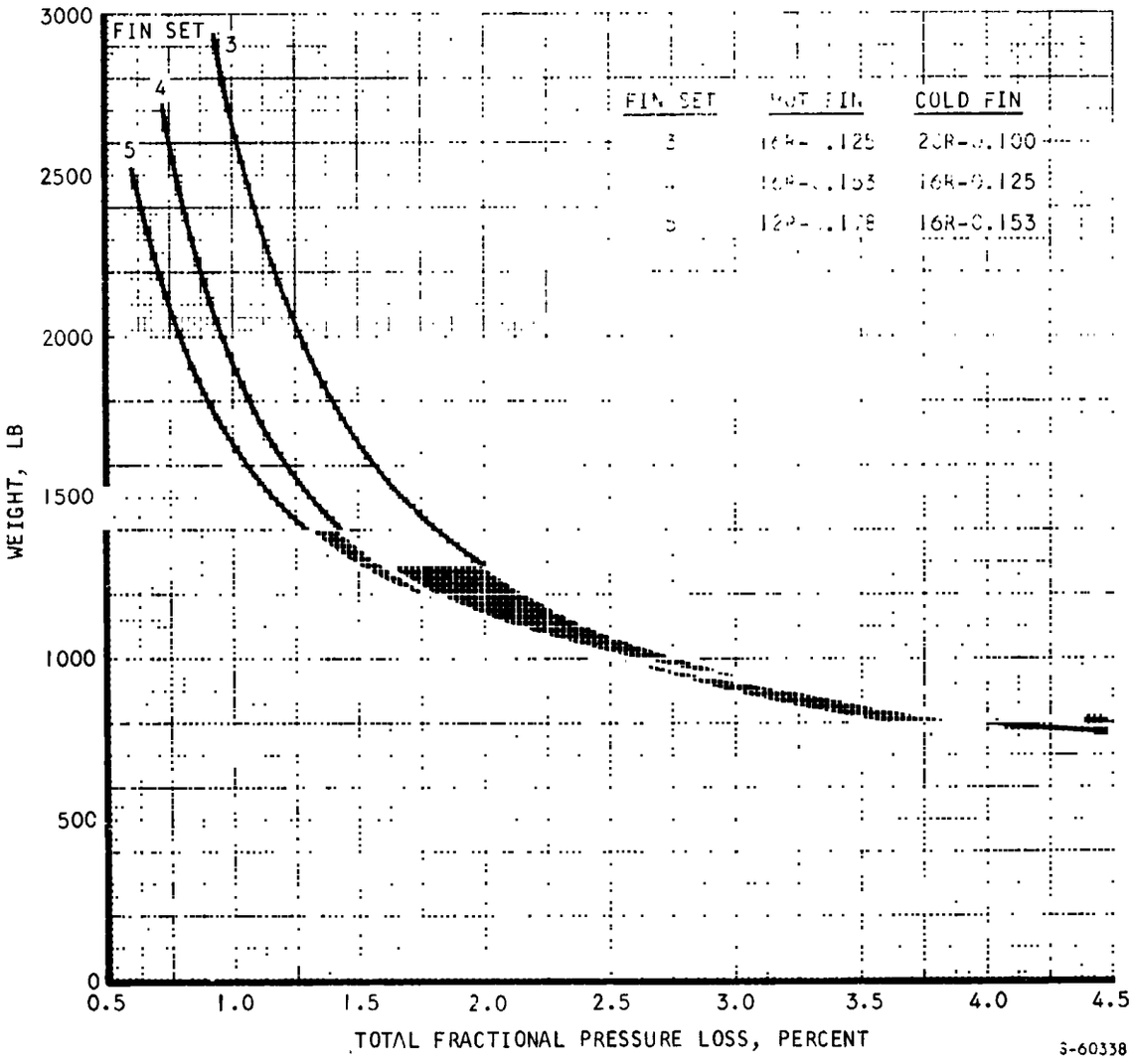

Figure 5-10. Task 3 Case IV Recuperator Weight (Rectangular End Section Design)

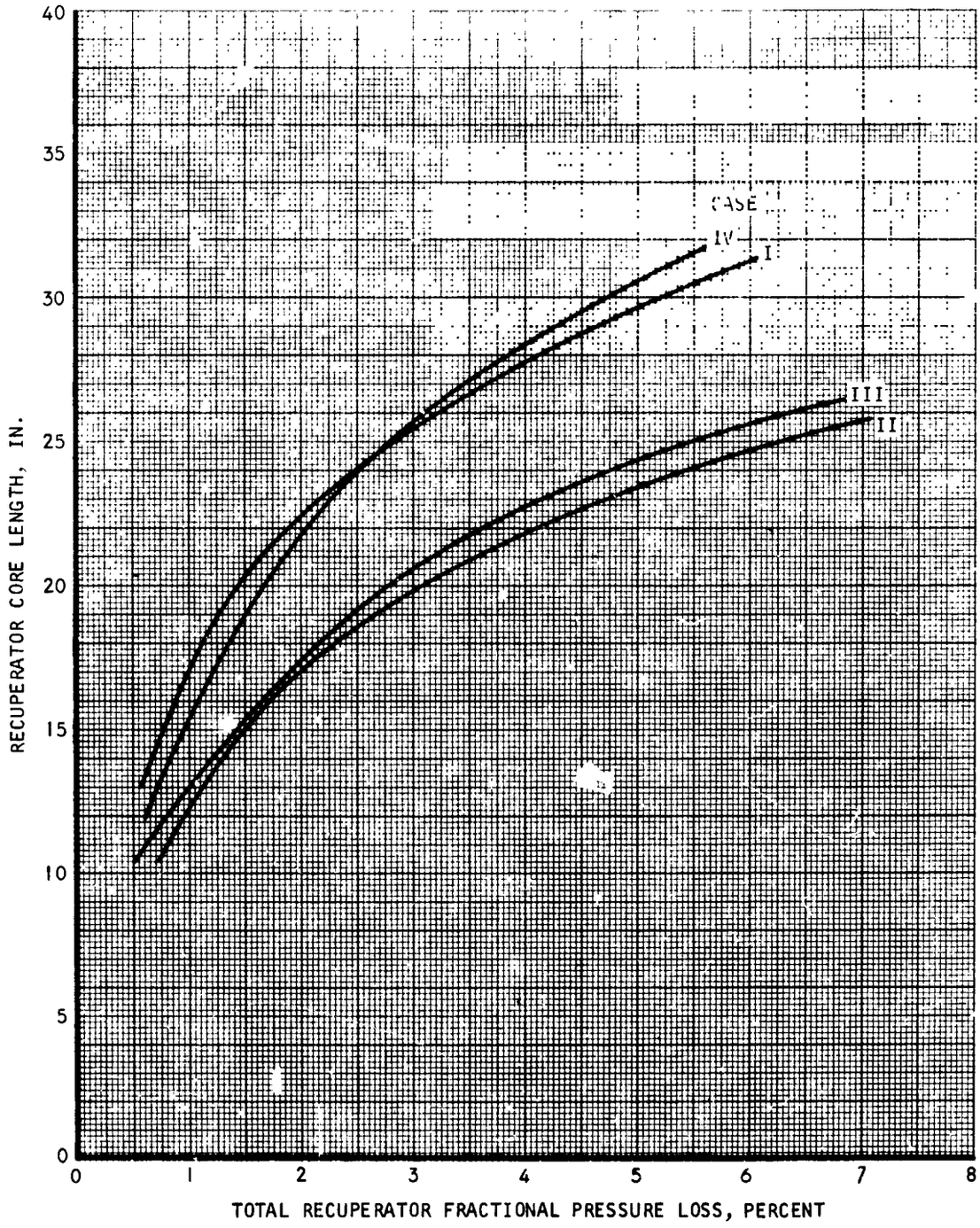

Figure 5-11. Task 3 Recuperator Core Lengths
(Rectangular End Section Design)

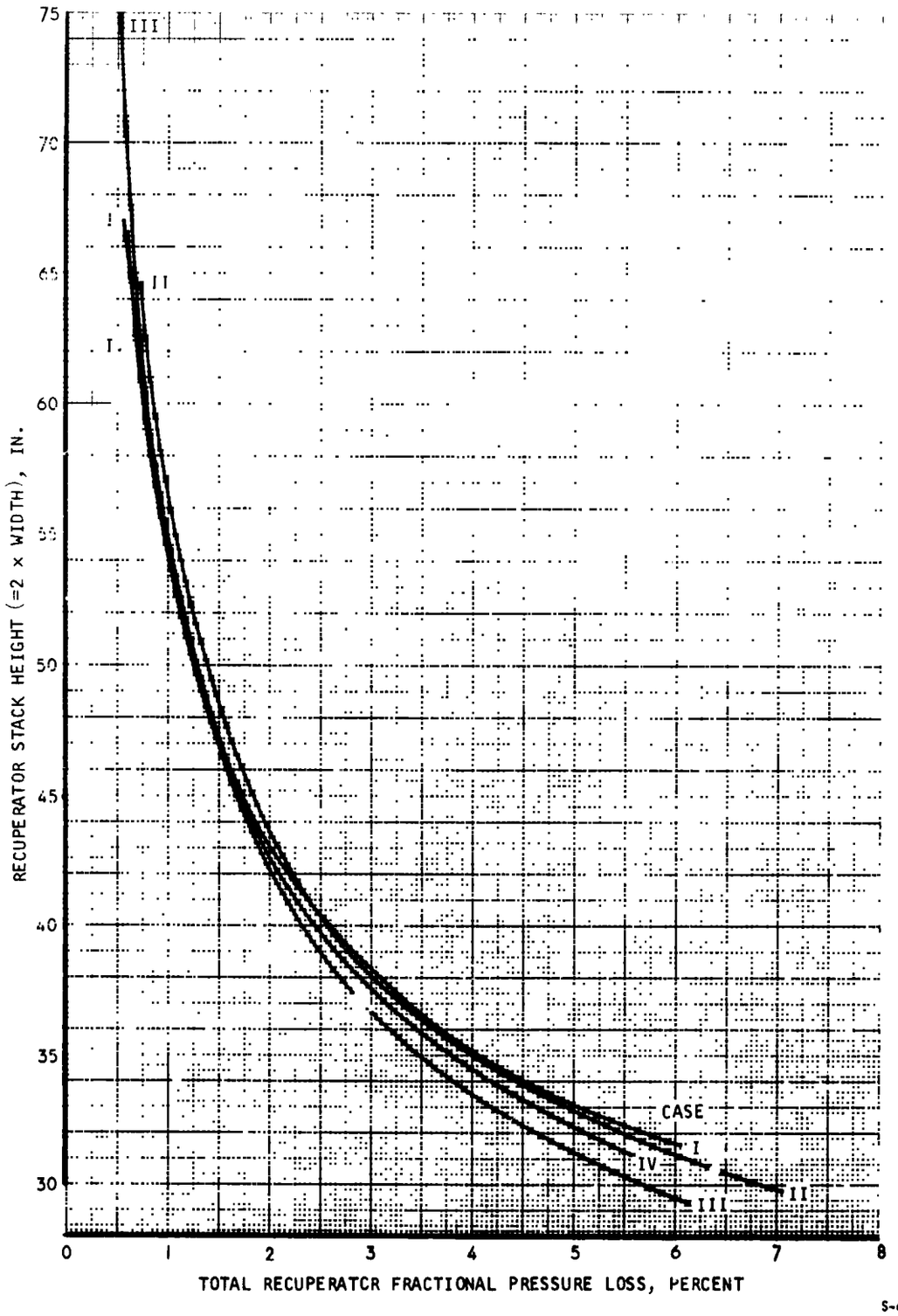

Figure 5-12. Task 3 Recuperator Stack Heights
(Rectangular End Section Design)

2. Triangular End Section Recuperator

As a means of reducing recuperator weight and pressure drop (at the expense of simplicity in fabrication and packaging), the use of triangular end sections for gas manifolding was investigated. Whereas it is possible to apply two simple equations to approximate the weight and pressure drop contributions from rectangular ends, it was not possible to develop a similar set of expressions that would predict with sufficient accuracy the weight and pressure drop contributions from the triangular ends. Therefore a series of triangular end sections was designed for each recuperator at different values of the counterflow core pressure drop. Each set of end sections was sized to obtain uniform gas flow distribution in the recuperator core. The triangular end section geometry and nomenclature are given in Figure 5-13.

The method of end section sizing to obtain uniform flow distribution is illustrated in Figure 5-14. Based on a counterflow core sized for 0.427 percent pressure drop, the friction pressure losses for inlet and outlet streams at both end sections are plotted individually as a function of end section height. The pressure losses are based on the use of plain rectangular fin sandwiches incorporating 10 fins per inch in the end sections. Uniform flow distribution is obtained where the inlet and outlet end friction losses are equal. The design point at which this occurs is shown by the circled points in Figure 5-14. This design point is unique in Figure 5-14. Additional designs involving uniform flow can be obtained by varying the value of the parameter RATIO at each end of the recuperator. RATIO is the ratio of the projected width of the low-pressure side end section passage to the core width, as illustrated in Figure 5-13. The RATIO values of 0.65 (hot end) and 0.55 (cold end) used in Figure 5-14 were selected because these values were found to be optimum for the Engine B (Brayton heat exchanger unit) Brayton cycle recuperator.

Figures 5-15 and 5-16 show the end section design curves for two additional core pressure drops. Also listed on these two figures, as well as on Figure 5-14, are the total end section pressure drops, including expansion, contraction, and turning losses, that occur at the selected design points.

Similar curves as the ones described above were developed for all the Task 3 design cases. These data are presented in Figures 5-17 through 5-26 for the Case II, III and IV design cases.

For the Case III case in which the recuperator core pressure drop is 0.297 percent (Figure 5-21), two values of the parameter RATIO were tried at the hot end. The value of 0.60 was chosen because it results in a recuperator that is shorter by about 5.5 in. than is obtained with a RATIO of 0.65. The value of 0.60 was then used for the other Case III cases as well, in conjunction with a cold end RATIO of 0.55.

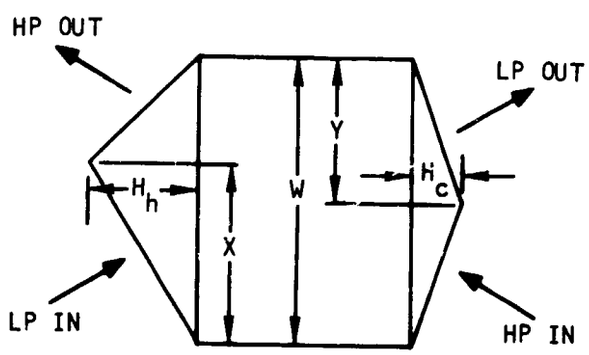

RATIO = $\frac{X}{W}$ (HOT END), $\frac{Y}{W}$ (COLD END)

END SECTION HEIGHT = H_h (HOT END), H_c (COLD END)

Figure 5-13. Tri-gular End Section Geometry and Nomenclature

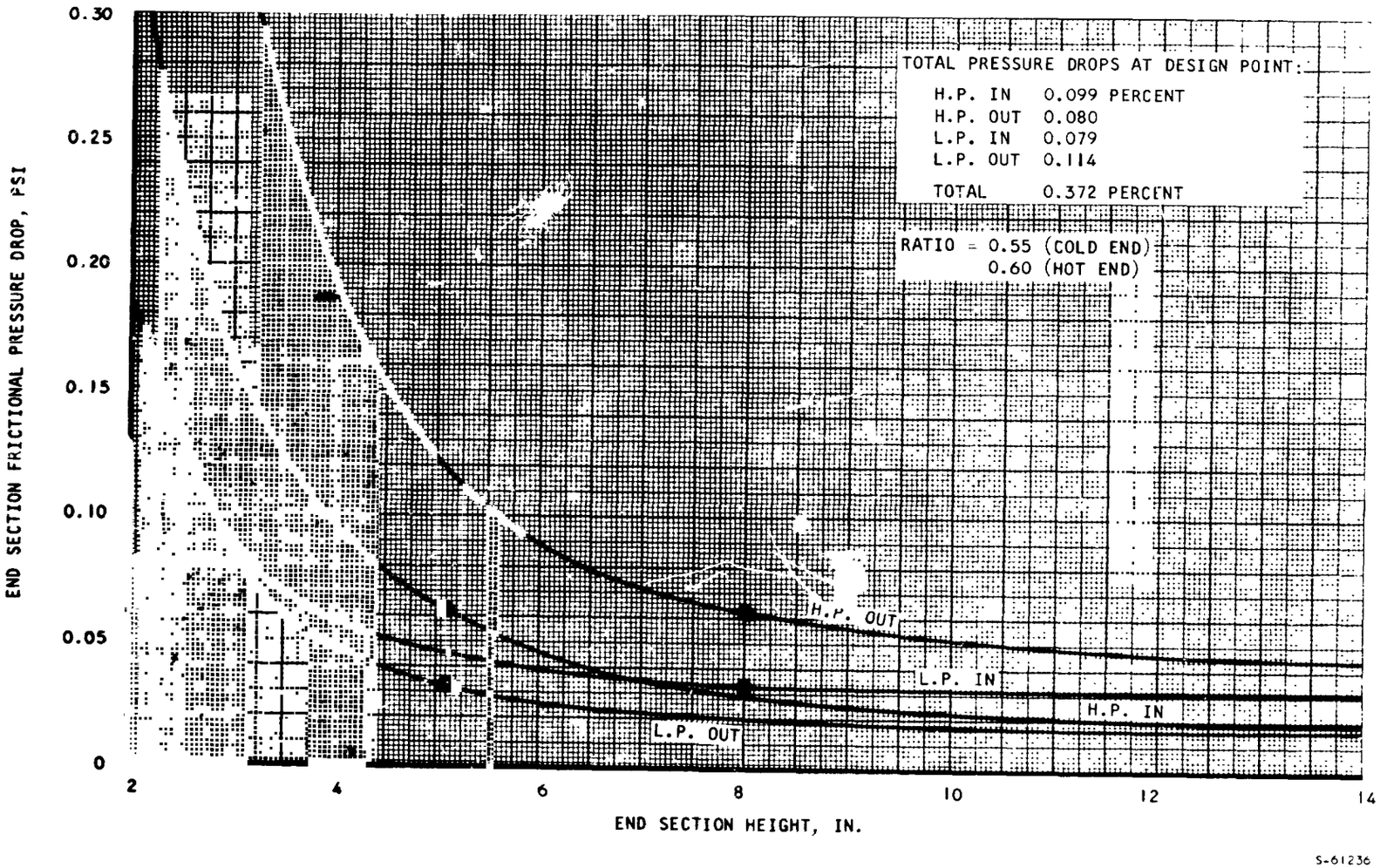

Figure 5-14. Triangular End Pressure Losses for Task 3 Case I Recuperator, Core ΔP = 0.427 Percent

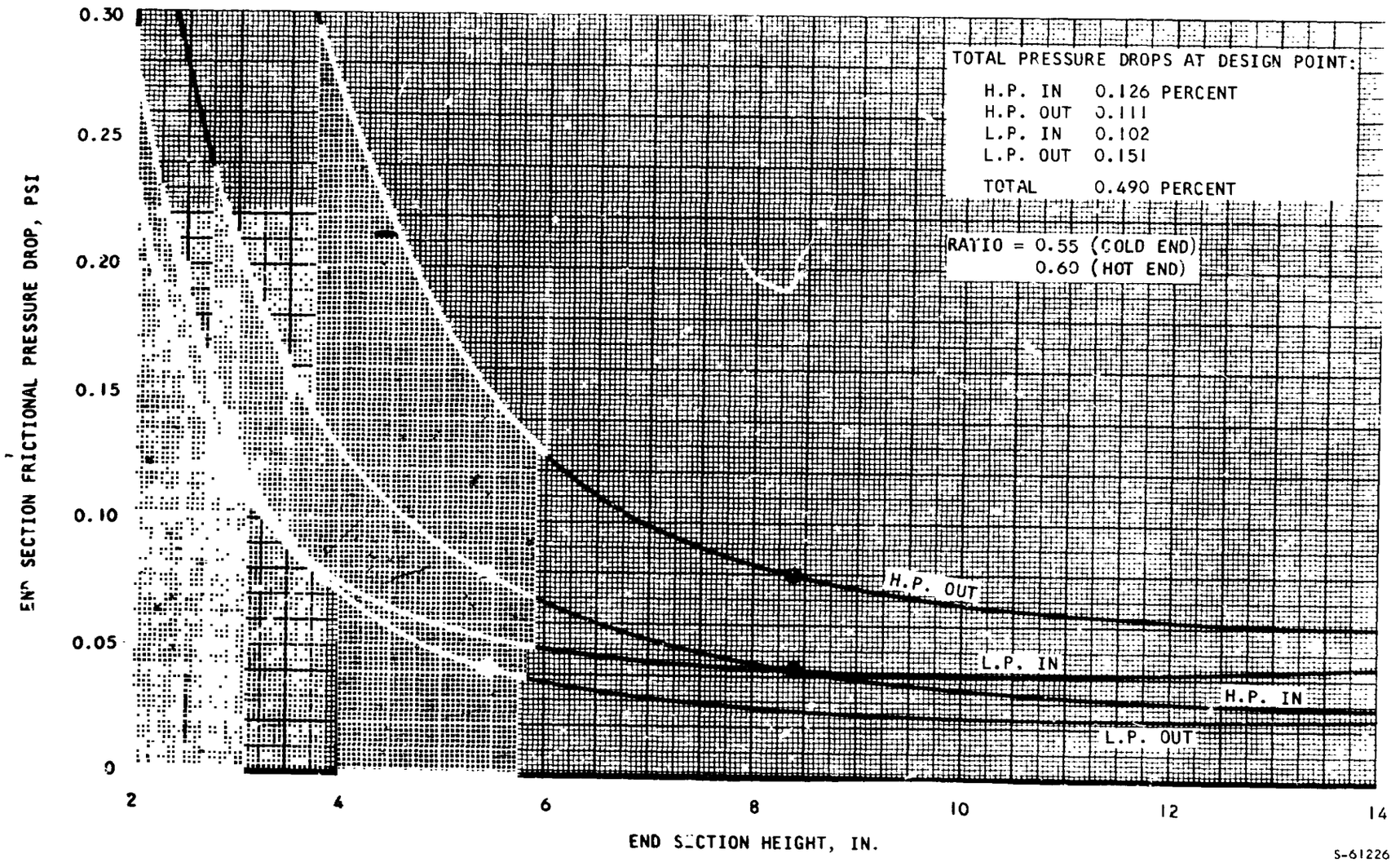

Figure 5-15. Triangular End Pressure Losses for Task 3 Case I Recuperator, Core ΔP = 1.089 Percent

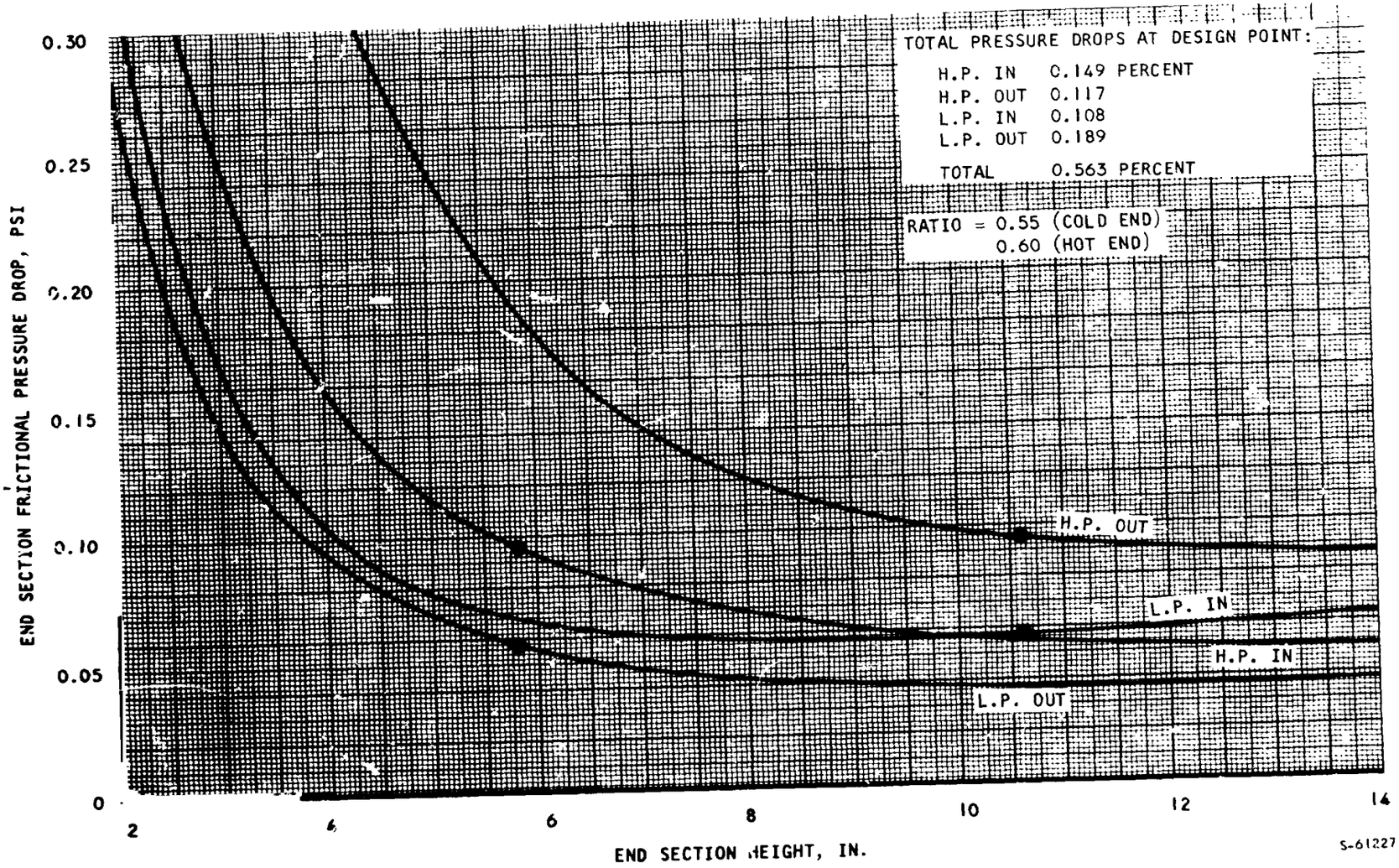

Figure 5-16. Triangular End Pressure Losses for Task 3 Case I Recuperator, Core ΔP = 2.22 Percent

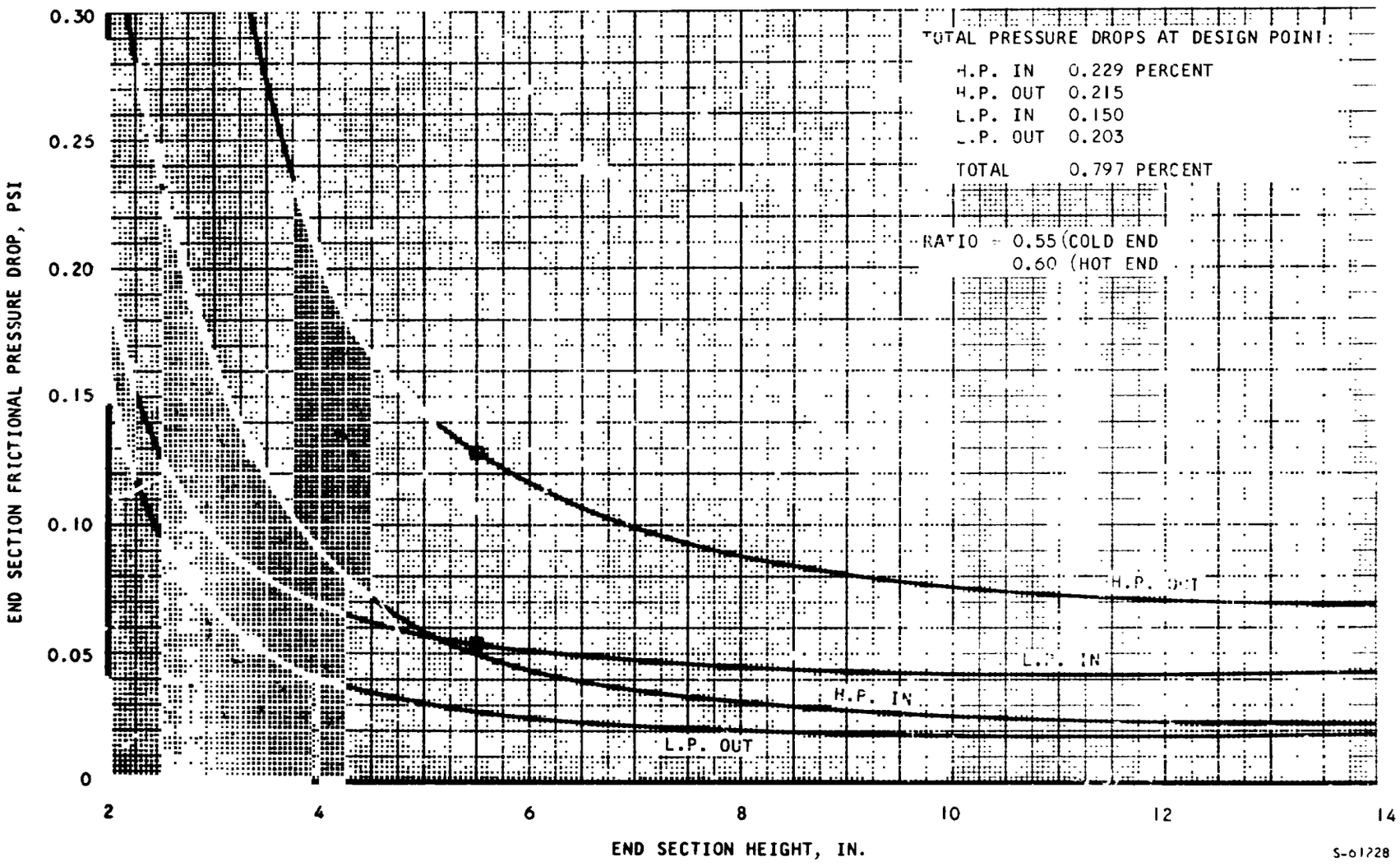

Figure 5-17. Triangular End Pressure Losses for Task 3 Case II Recuperator, Core ΔP = 0.470 Percent

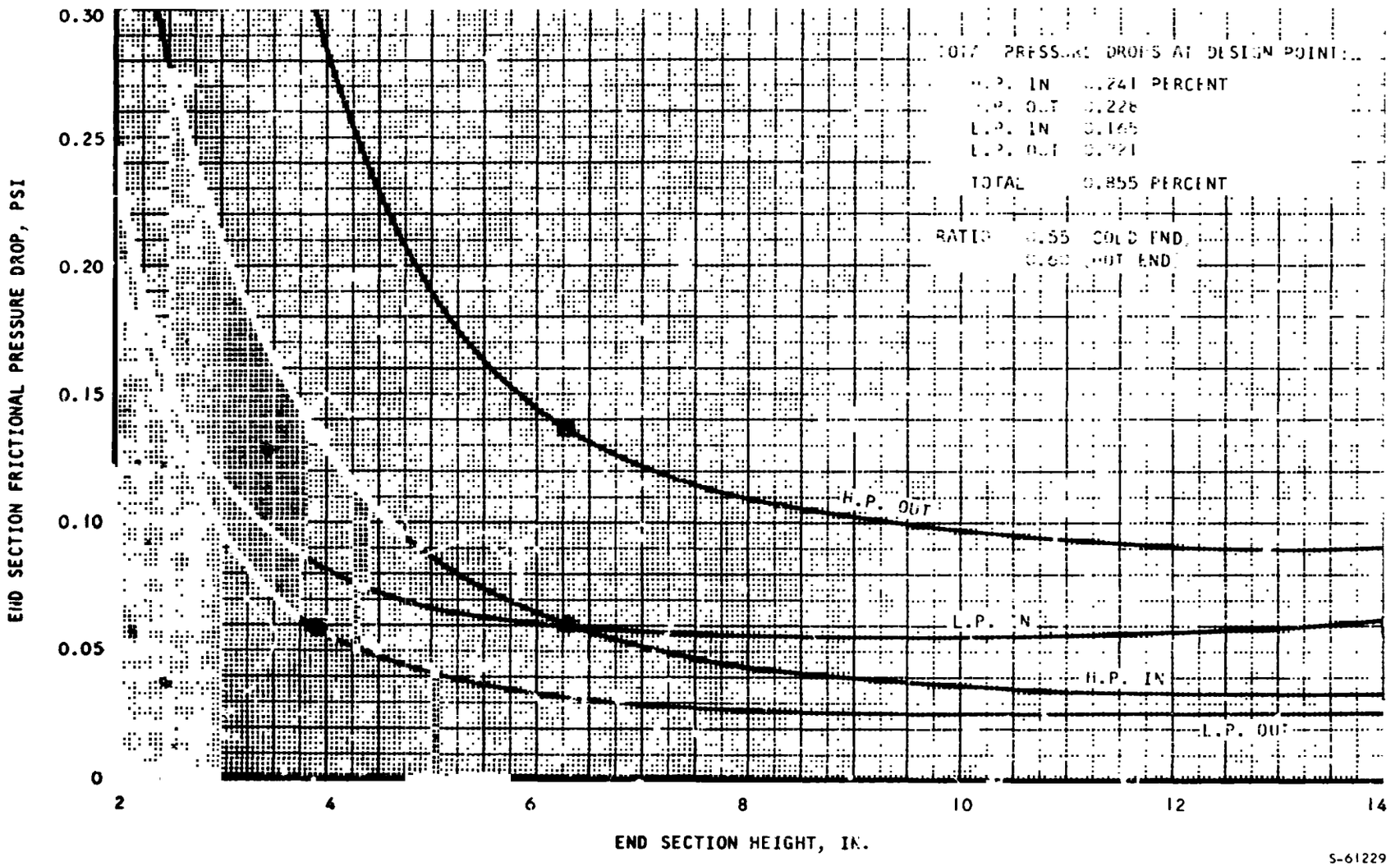

Figure 5-18. Triangular End Pressure Losses for Task 3 Case II Recuperator, Core ΔP = 1.197 Percent

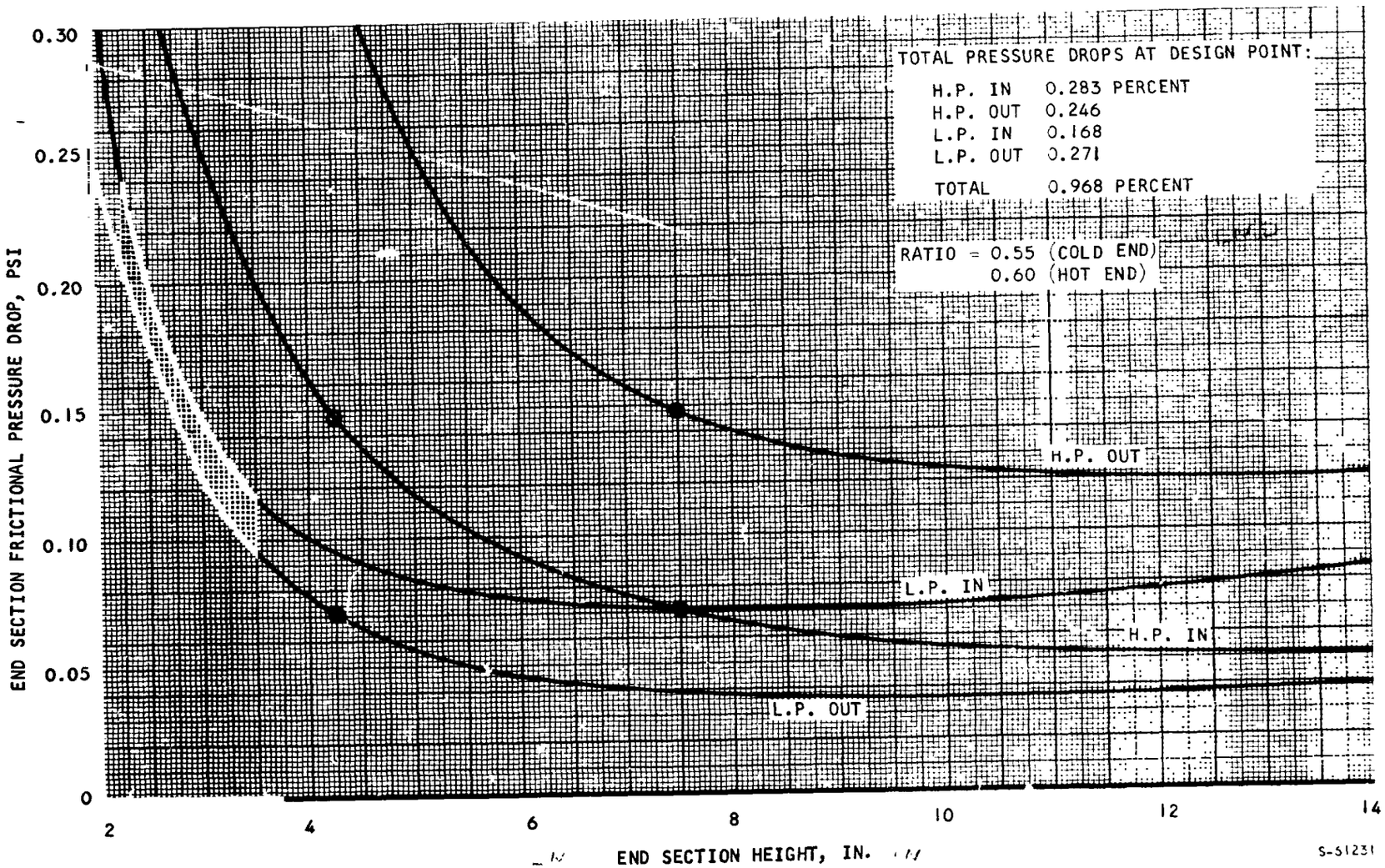

Figure 5-19. Triangular End Pressure Losses for Task 3 Case II Recuperator, Core ΔP = 2.44 Percent

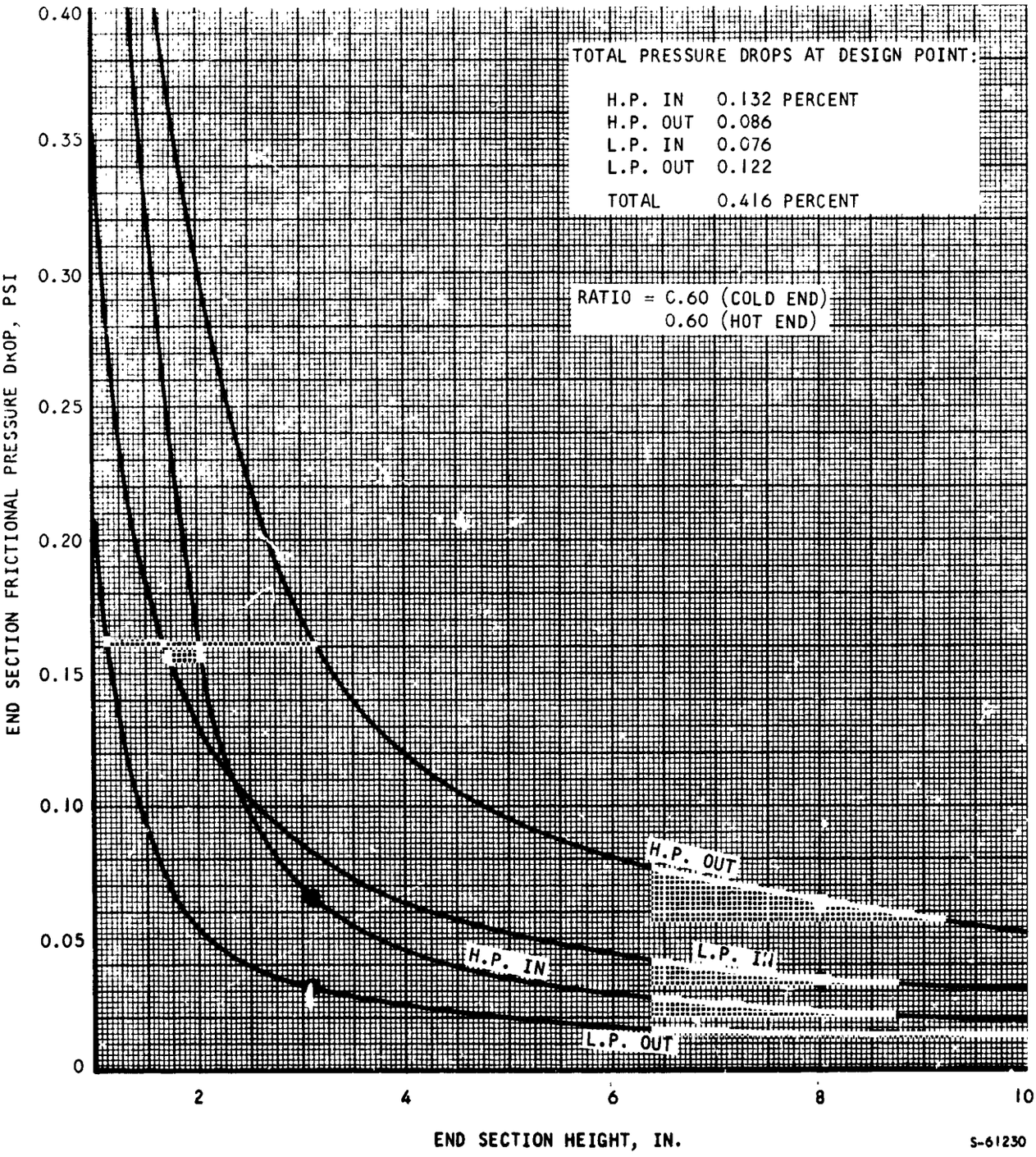

Figure 5-20. Triangular End Pressure Losses for Task 3 Case III Recuperator, Core ΔP = 0.147 Percent

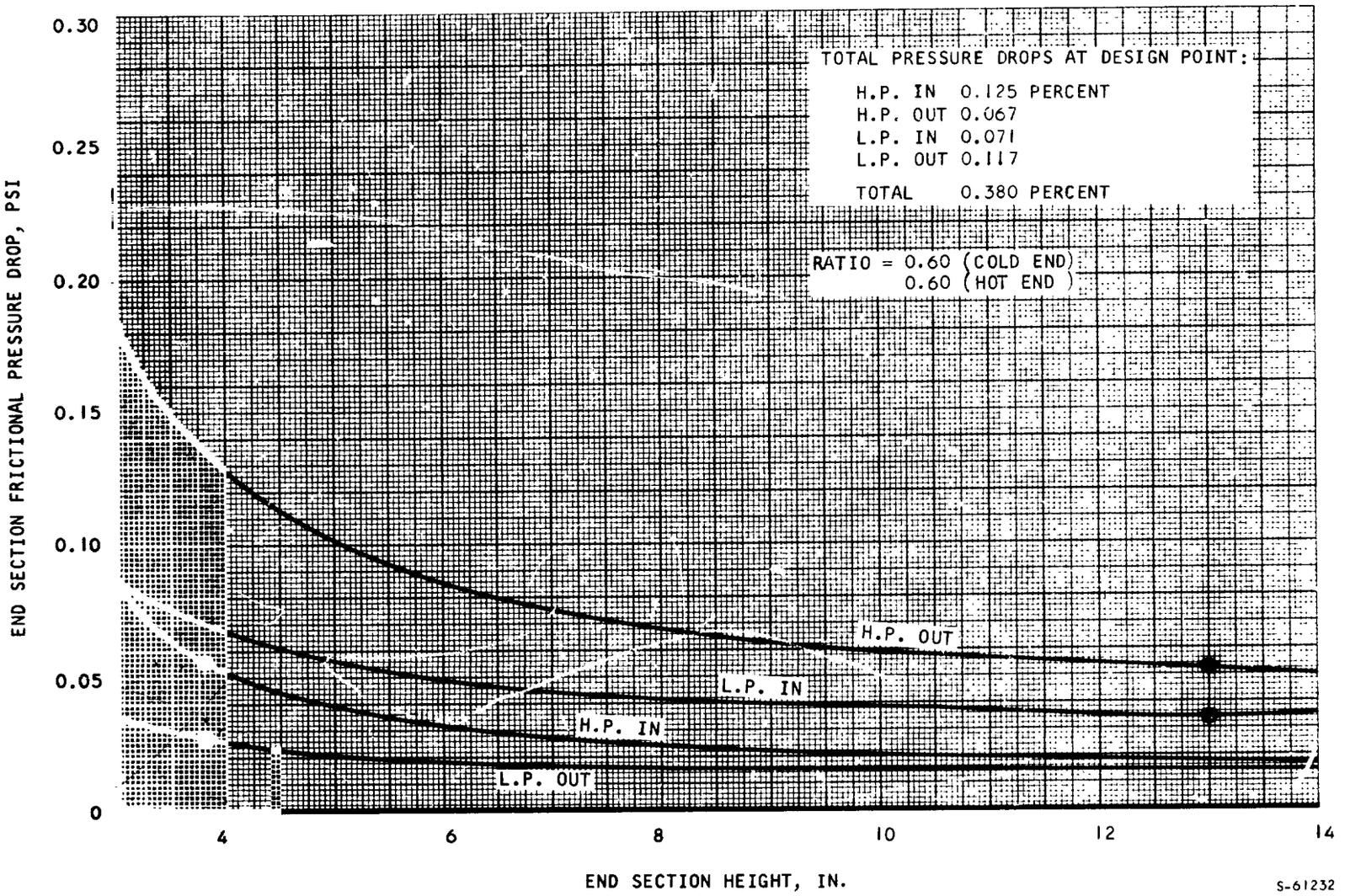

Figure 5-21. Triangular End Pressure Losses for Task 3 Case III Recuperator, Core ΔP = 0.297 Percent

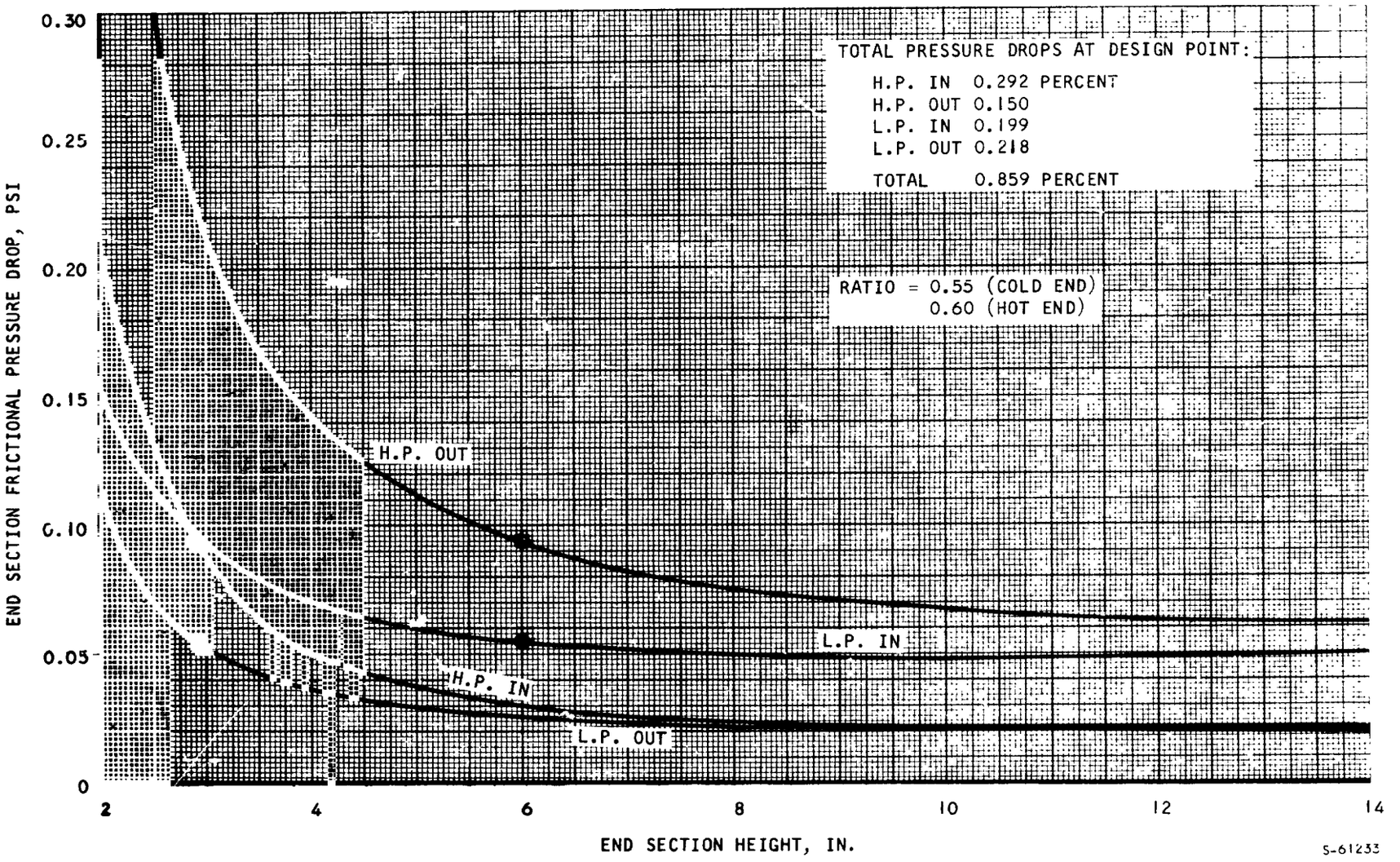

Figure 5-22. Triangular End Pressure Losses for Task 3 Case III Recuperator, Core ΔP = 0.595 Percent

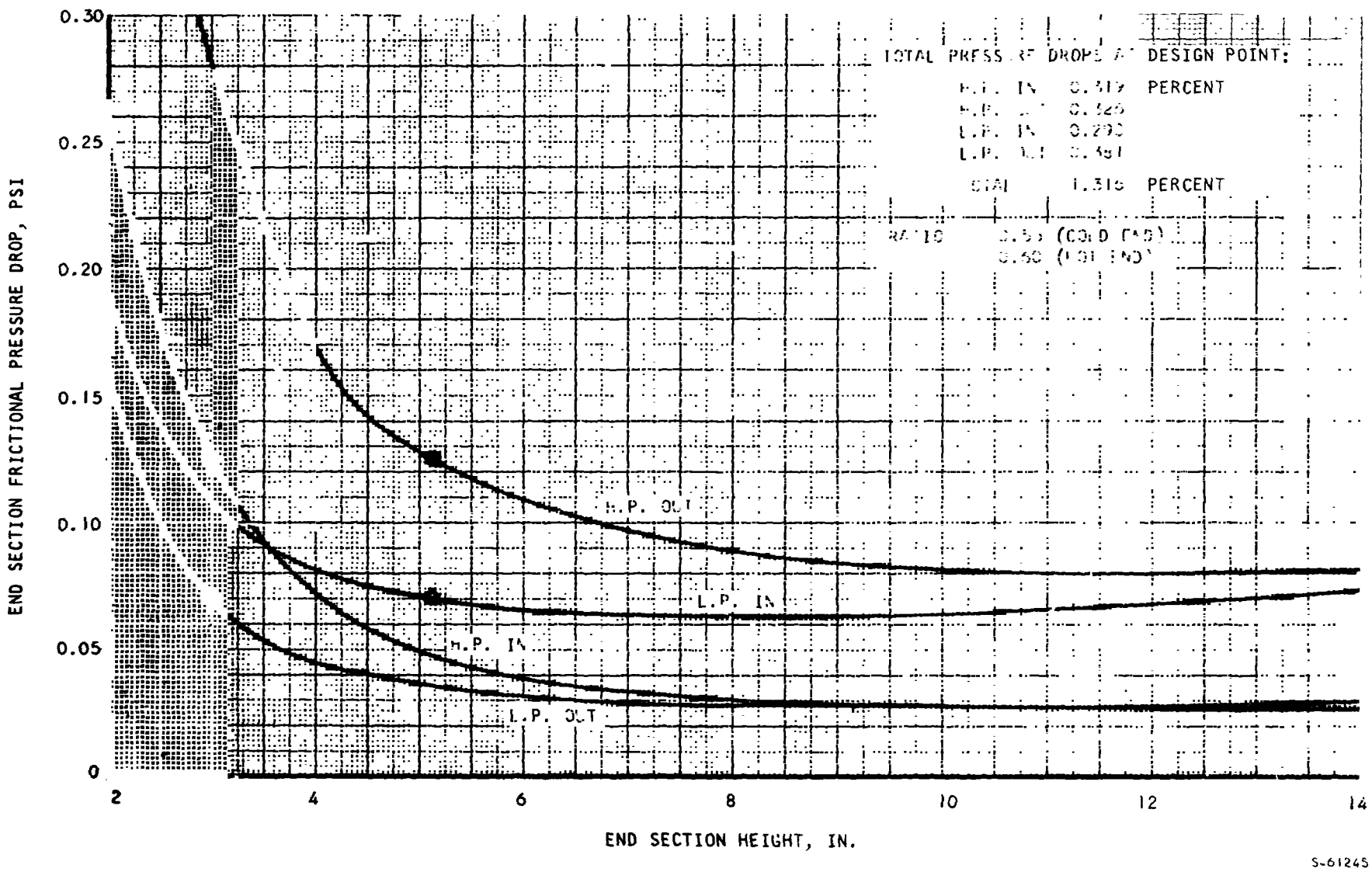

Figure 5-23. Triangular End Pressure Losses for Task 3 Case III Recuperator, Core ΔP = 1.493 Percent

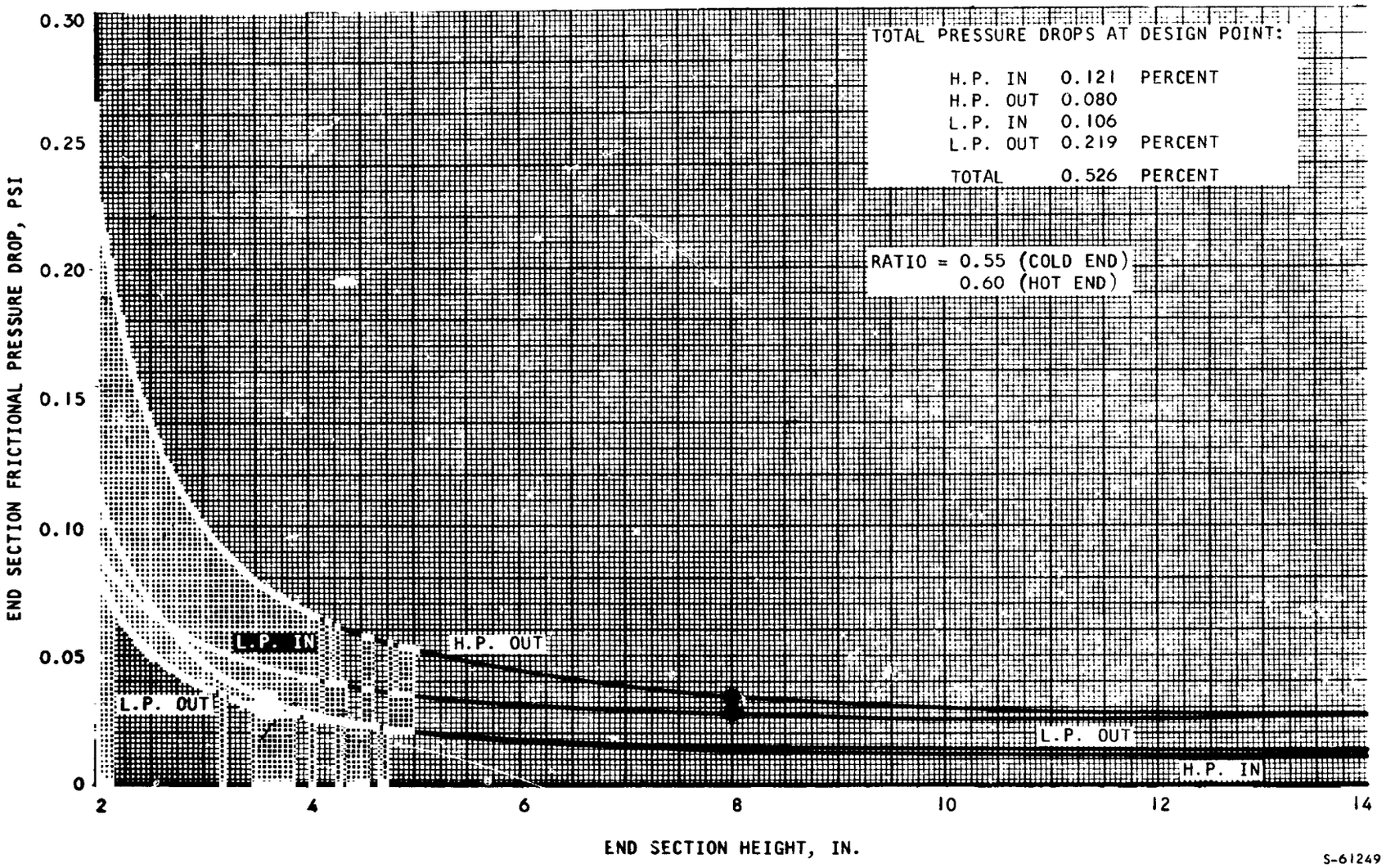

Figure 5-24. Triangular End Pressure Losses for Task 3 Case IV Recuperator, Core ΔP = 0.421 Percent

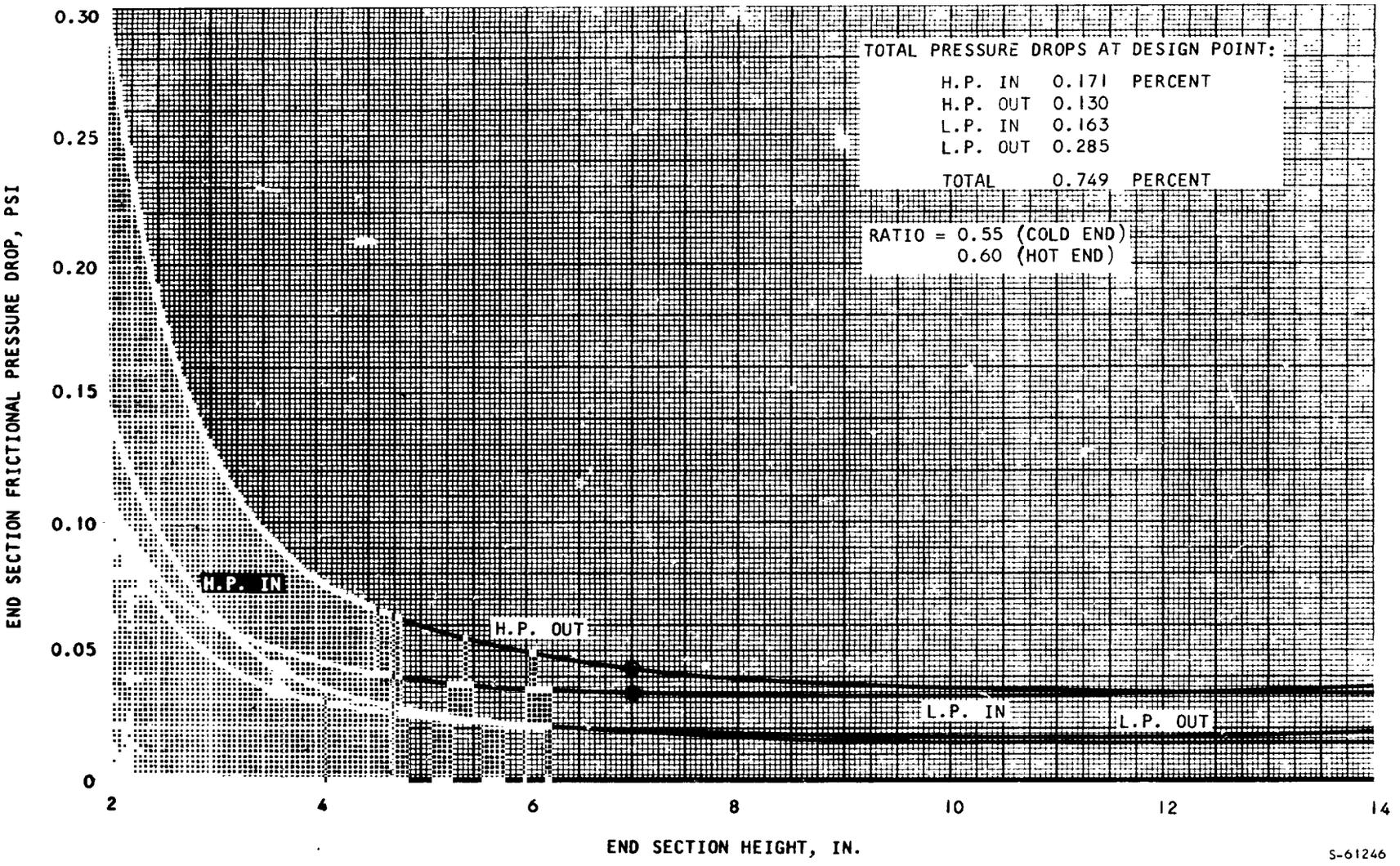

Figure 5-25. Triangular End Pressure Losses for Task 3 Case IV Recuperator, Core ΔP = 1.055 Percent

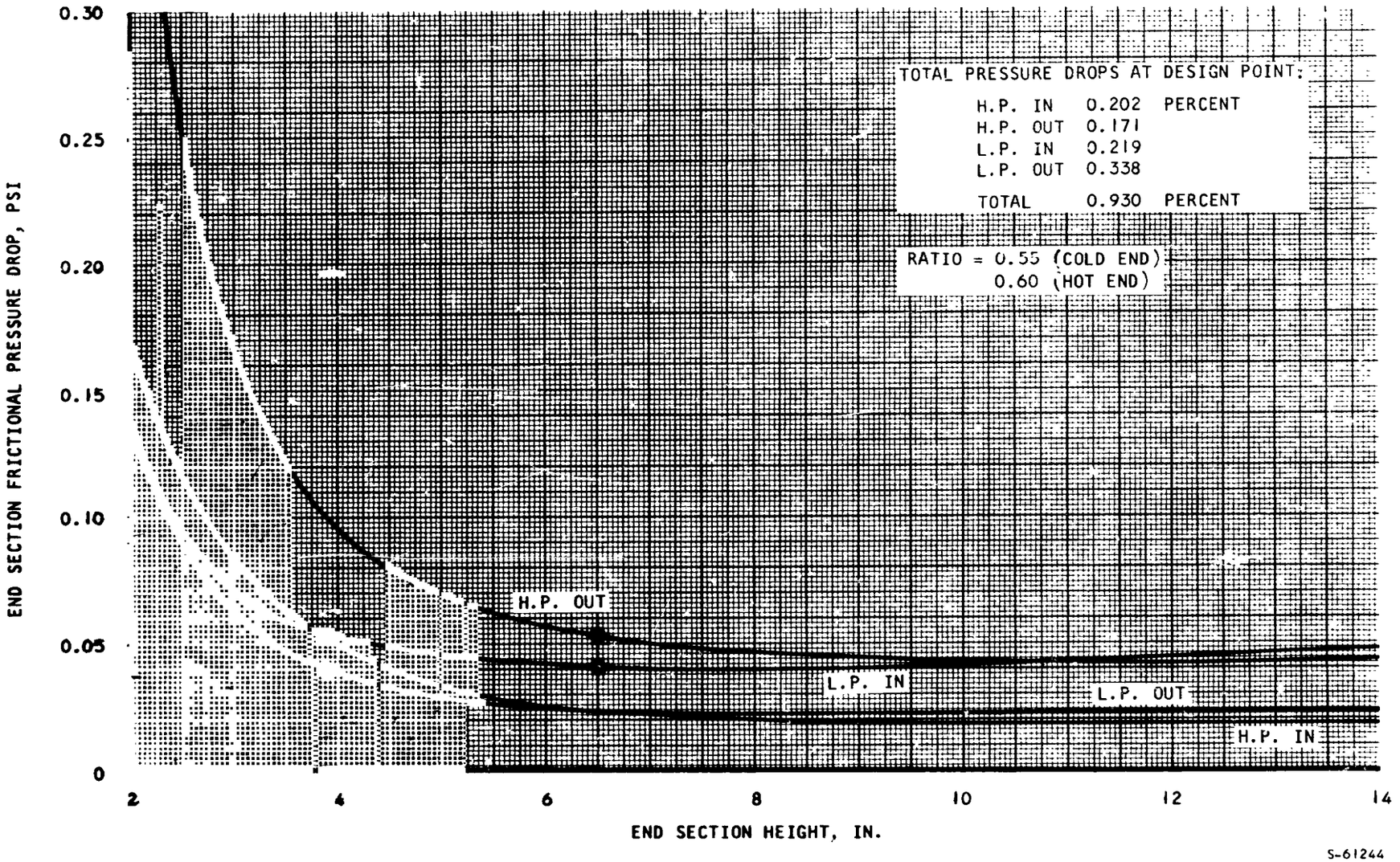

Figure 5-26. Triangular End Pressure Losses for Task 3 Case IV Recuperator, Core ΔP = 2.10 Percent

3. Summary

Figure 5-27 shows total recuperator weight, including core and triangular ends, as a function of total pressure drop for Case I. Shown for comparison is the comparable weight curve for the rectangular end design. Also shown on this figure are recuperator width and total recuperator length for the triangular end design. As before, recuperator stack height is maintained at twice recuperator width. Similar data for Cases II, III, and IV are shown in Figures 5-28 through 5-30.

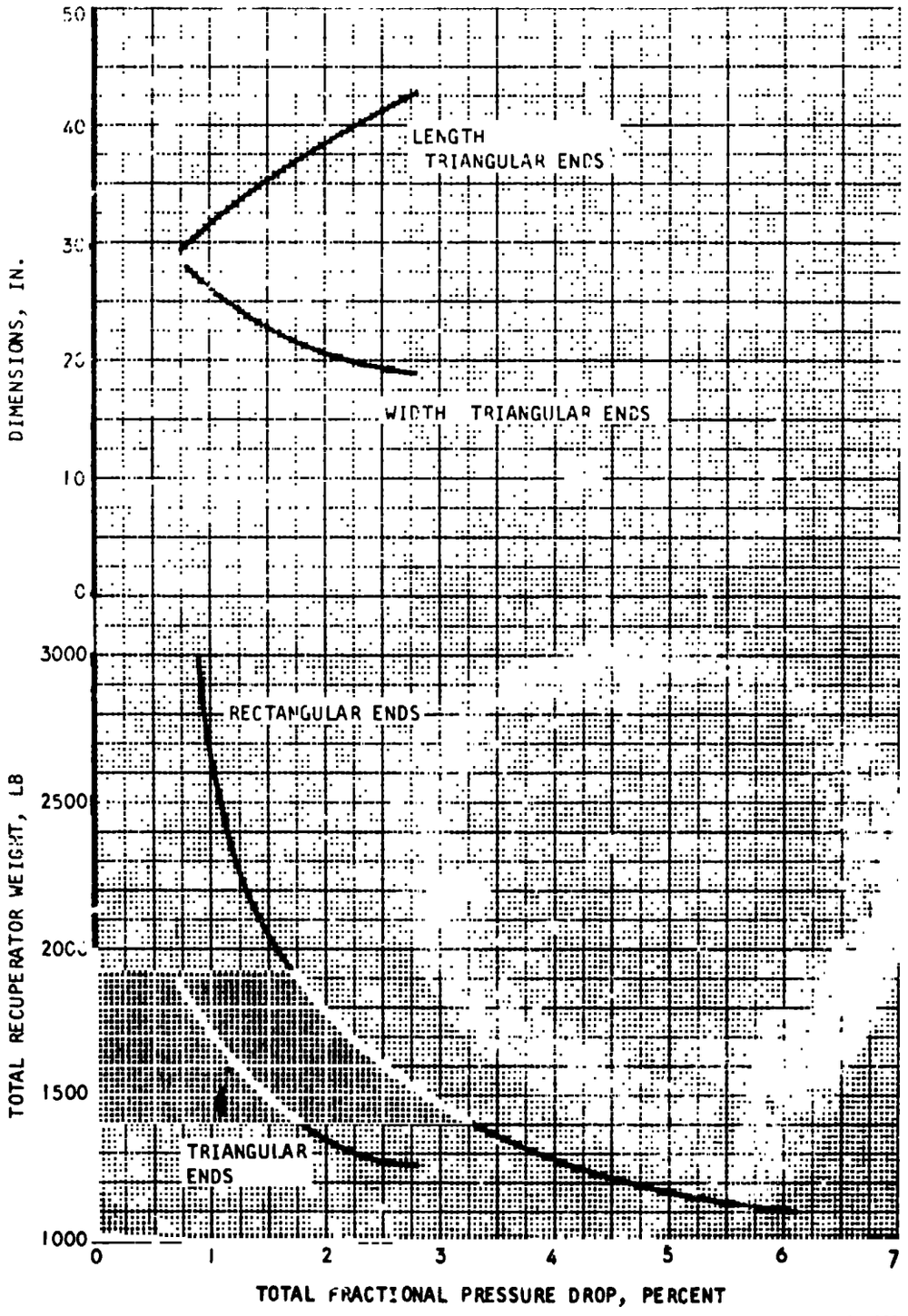

Figure 5-27. Task 3 Case I Recuperator

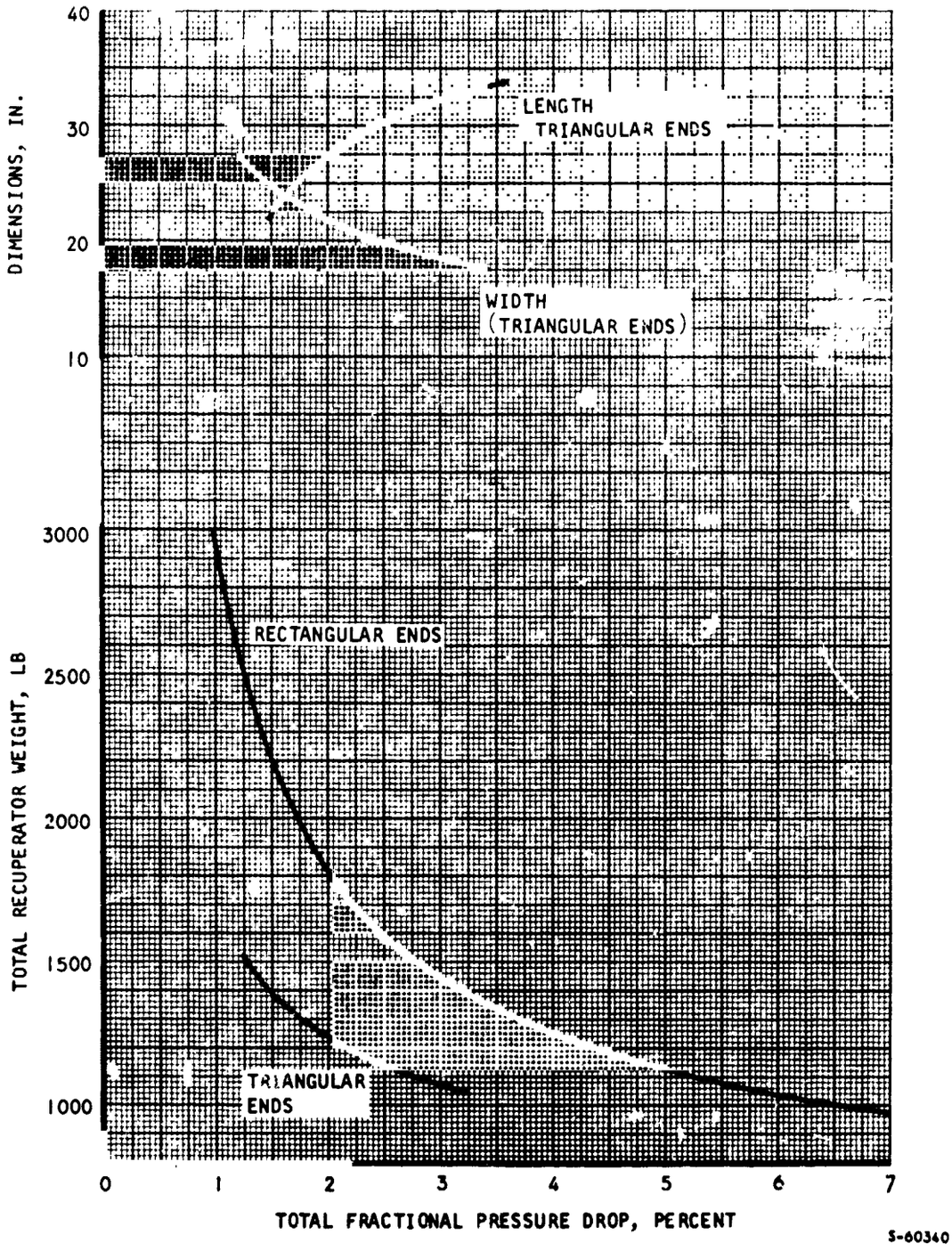

Figure 5-28. Task 3 Case II Recuperator

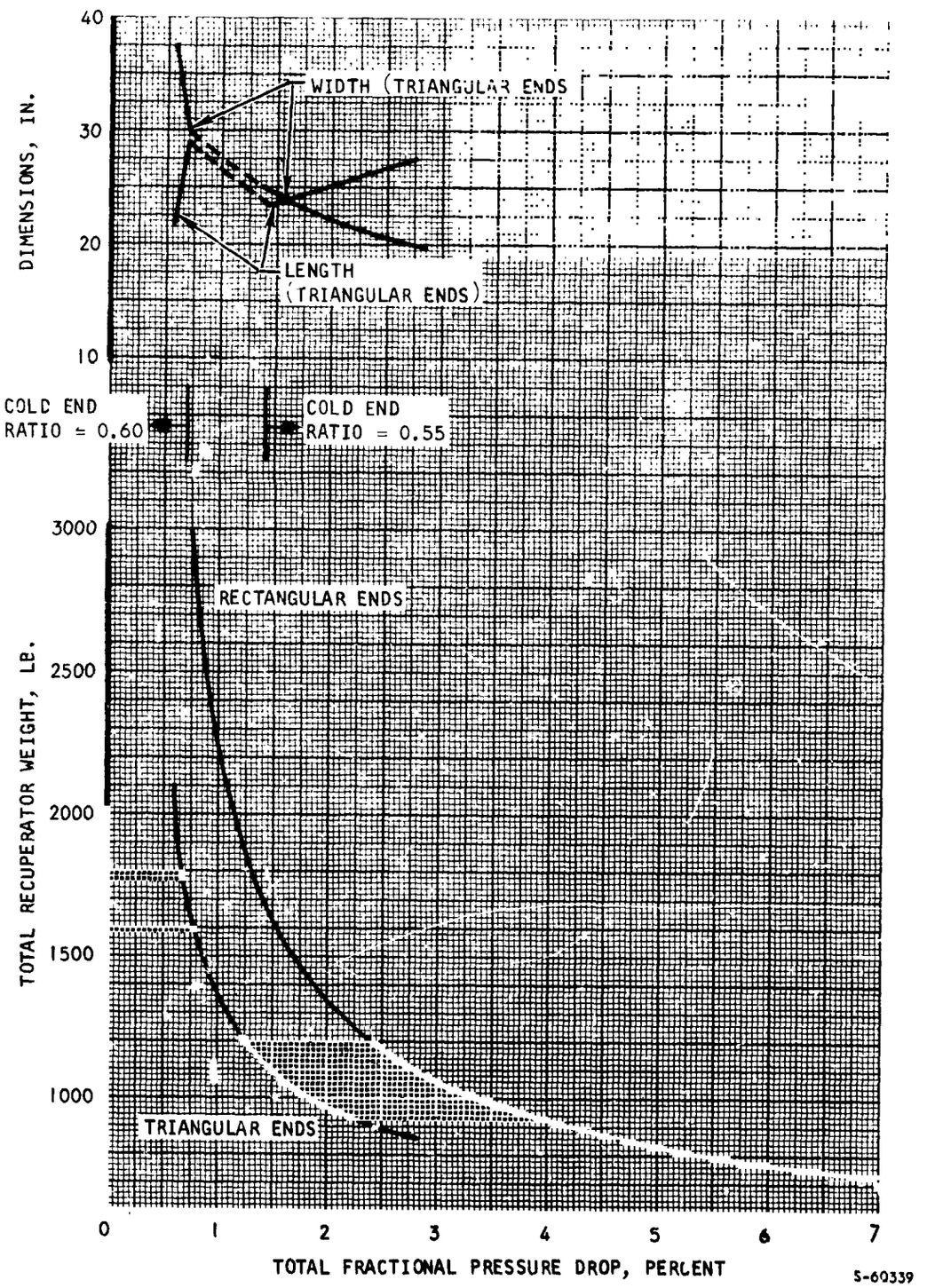

Figure 5-29. Task 3 Case III Recuperator

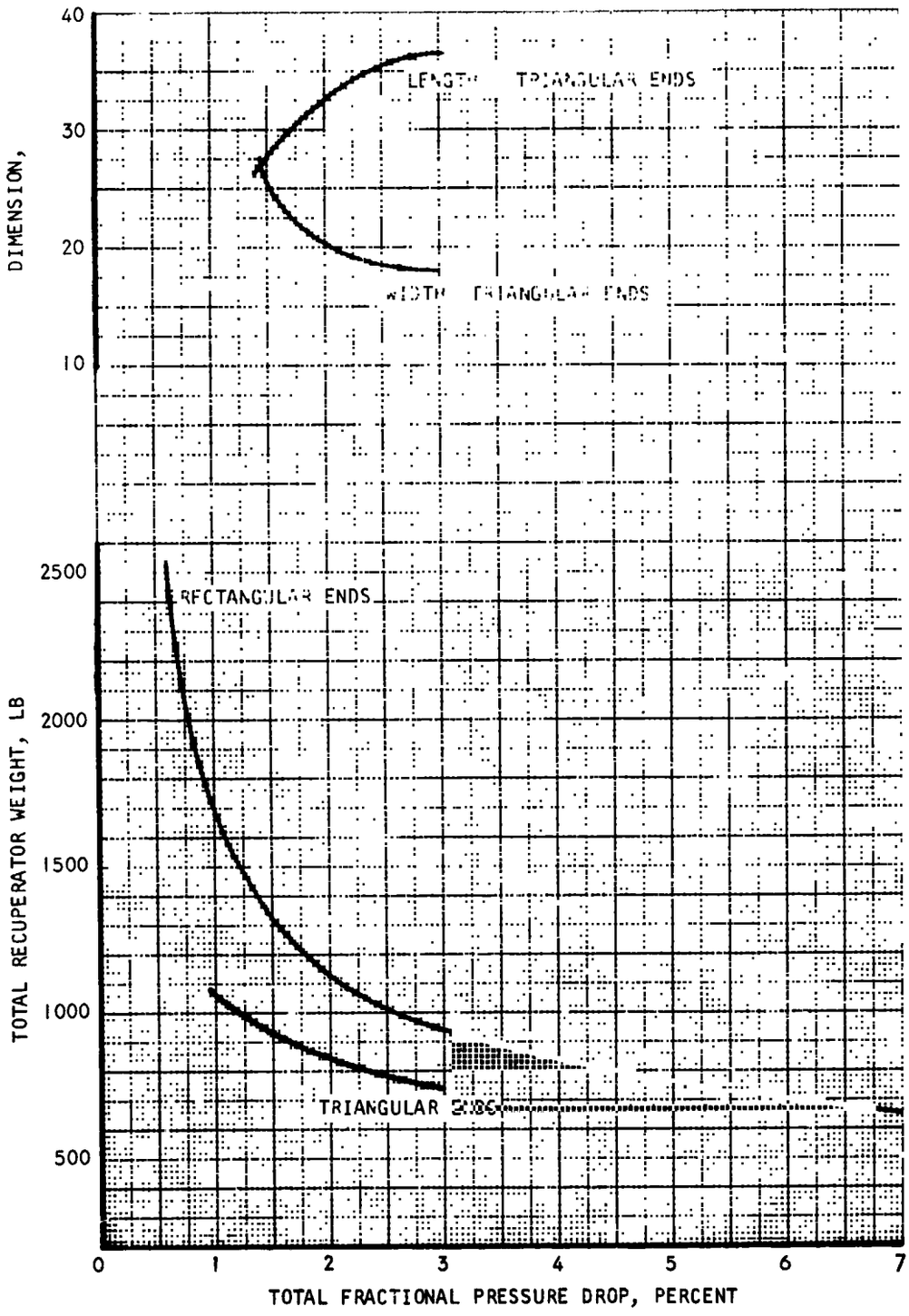

S-60343

Figure 5-30. Task 3 Case IV Recuperator

Waste Heat Exchanger

The data for the waste heat exchanger are shown in Figures 5-31 through 5-35. The waste heat exchanger is of plate-fin construction, with alternate liquid passages associated with the redundant heat rejection loop. The liquid makes eight passes cross-counterflow to the gas stream. The heat rejection fluid is Dow Corning 200 (2.0CS) for Case I, monoisopropylbiphenyl (MIPB) for Cases II and III, and Dow Corning 200 (1.0CS) for Case IV. The heat exchanger plates are 347 stainless steel and the fins are nickel.

A finned tubular waste heat exchanger, using NaK78 as the heat rejection fluid, was designed for Case III. Results are shown in Figure 5-34. Two separate cores in series are required to provide two independent cooling loops. Due to the additional core plus the large wrap-up weight associated with the tubular configuration, the weight of this heat exchanger is considerably greater than the weight of the plate-fin unit utilizing MIPB coolant.

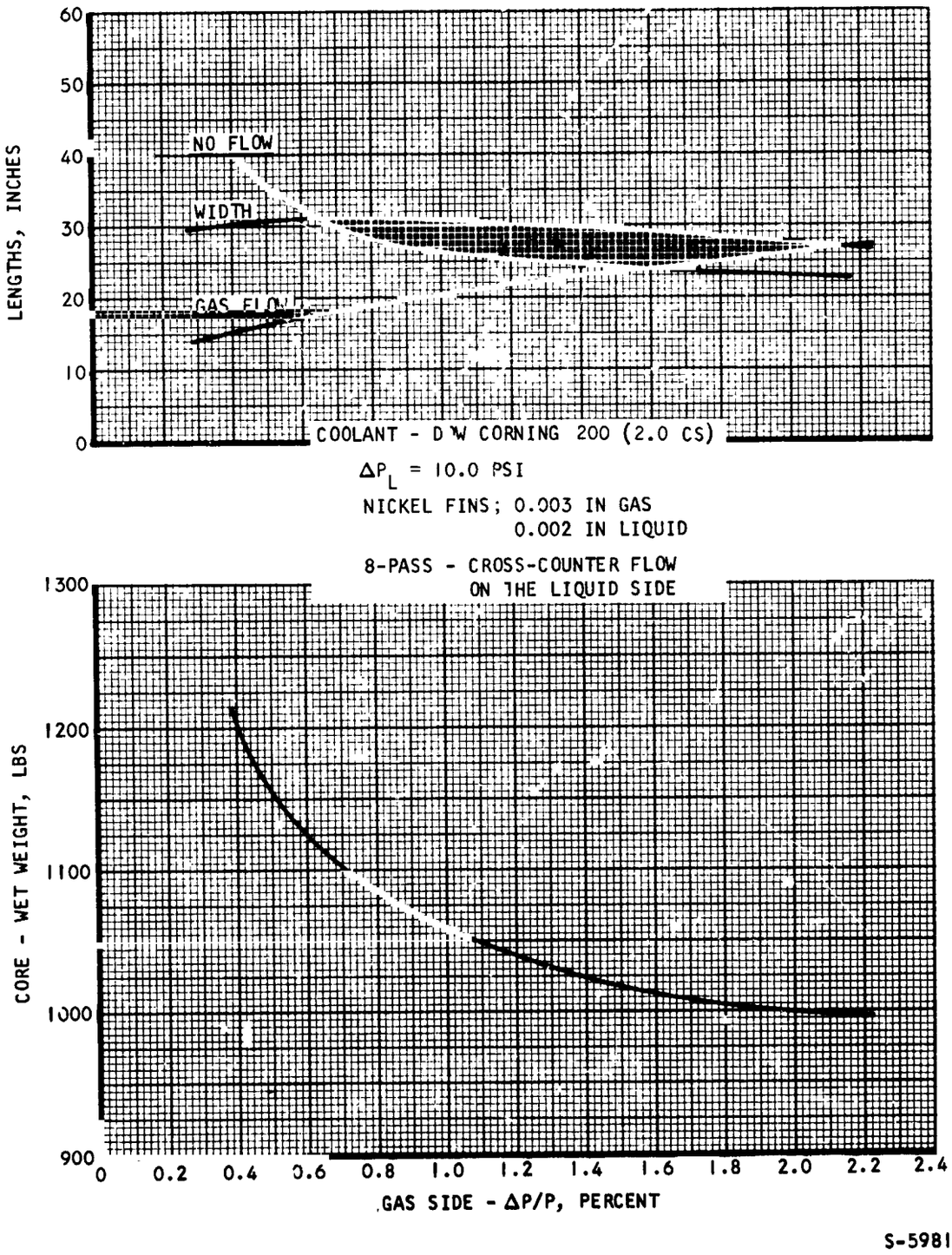

Figure 5-31. Task 3 Case I Waste Heat Exchanger

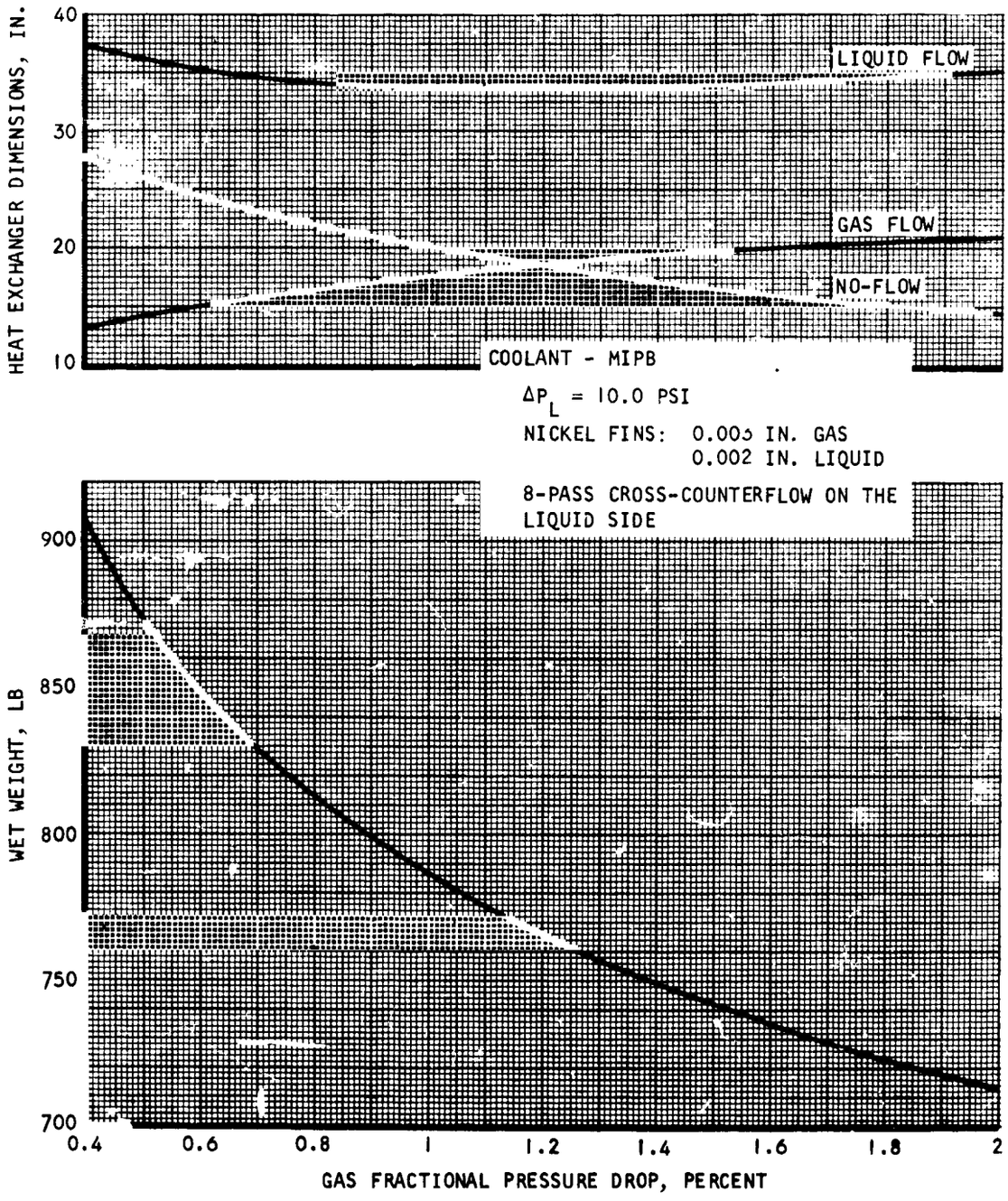

Figure 5-32. Task 3 Case II Waste Heat Exchanger

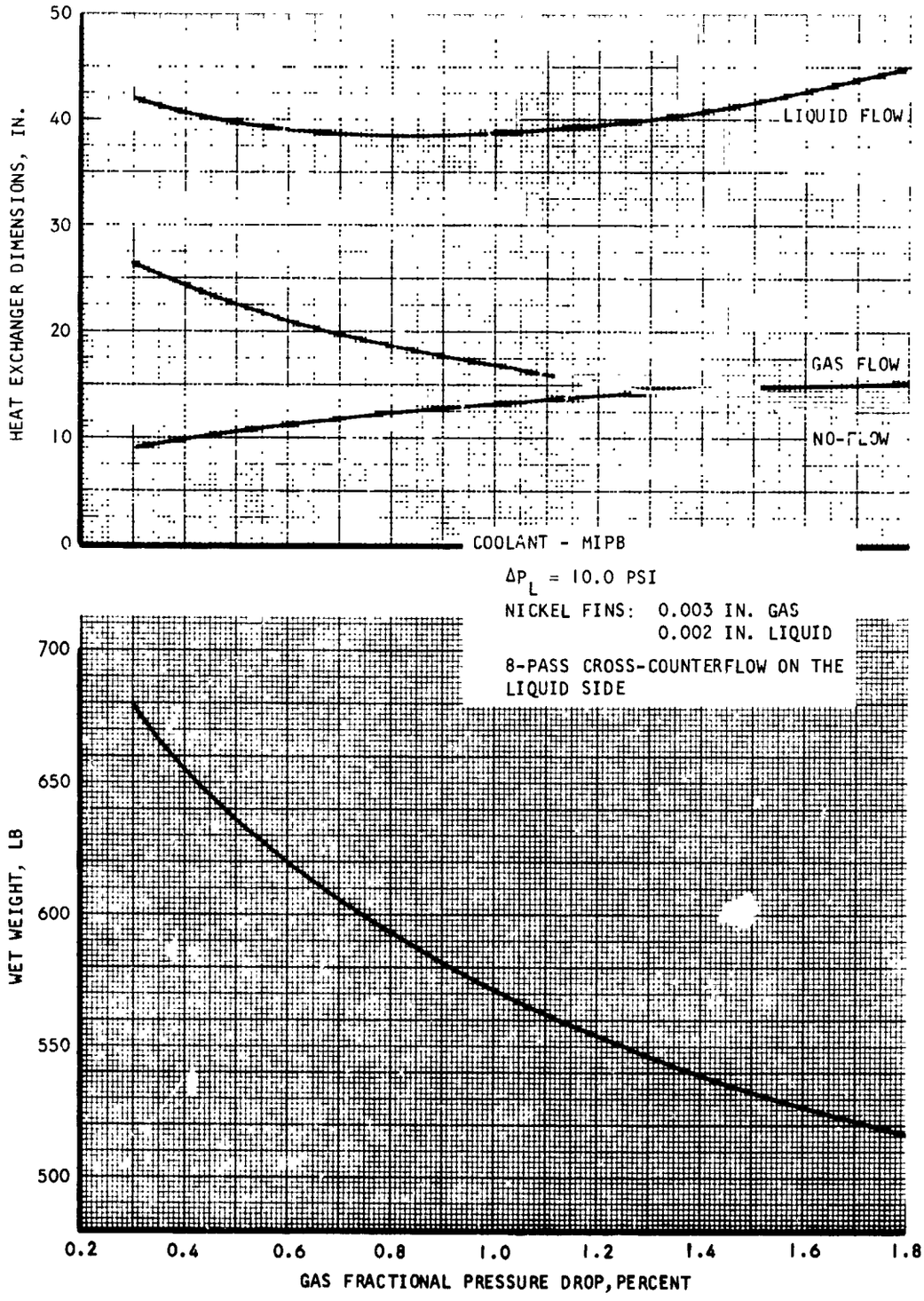

Figure 5-33. Task 3 Case III Waste Heat Exchanger

HAYNES 25 TUBES

COPPER FINS

COOLANT = NaK - 78

TUBE-FIN MATRIX = SFT 18*

TUBE DIA. = 0.50 IN.

TUBE WALL = 0.030 IN.

NO. PASSES = 8

NaK ΔP = 1.0 PSI

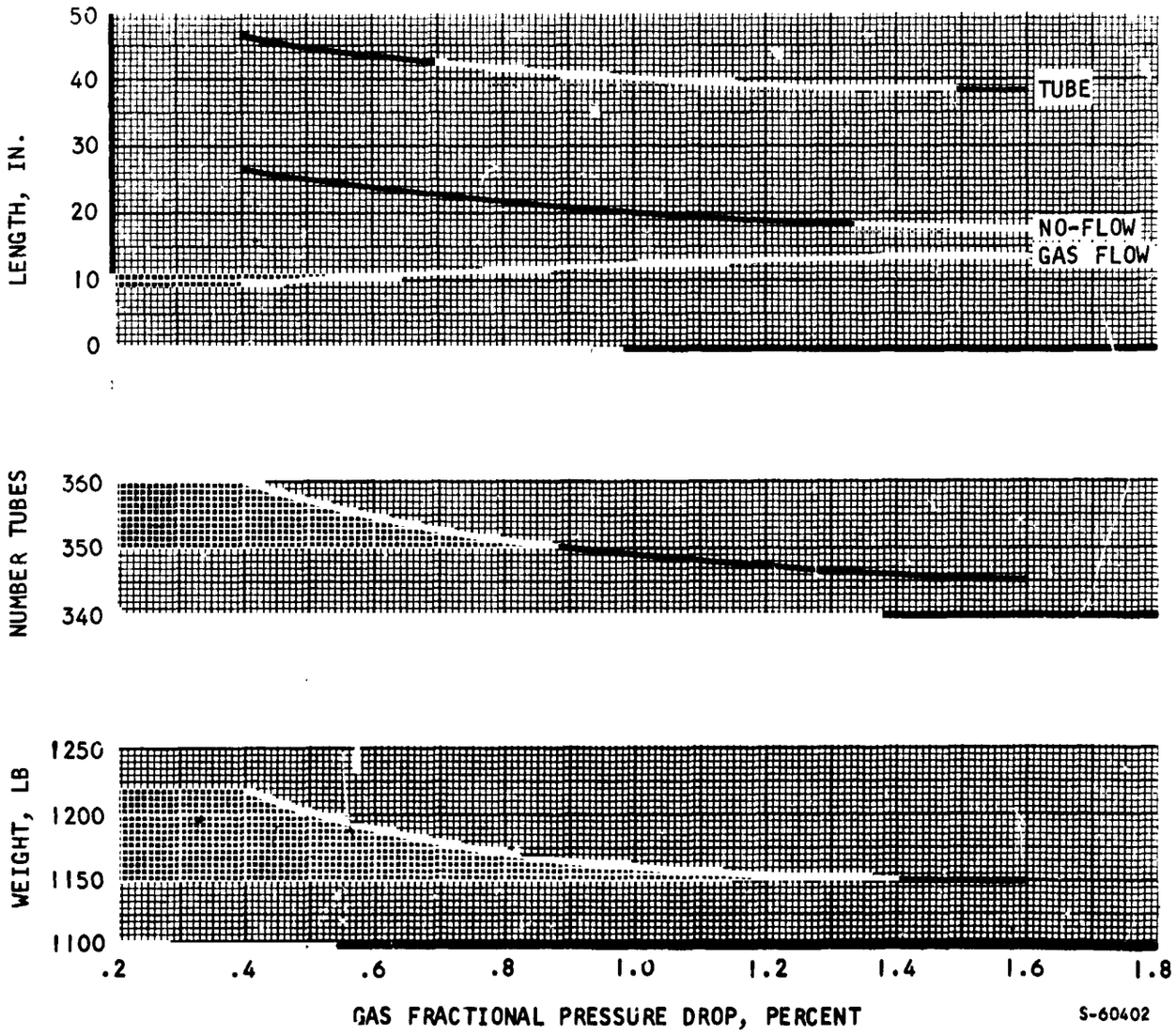

Figure 5-34. Task 3 Case III NaK Waste Heat Exchanger

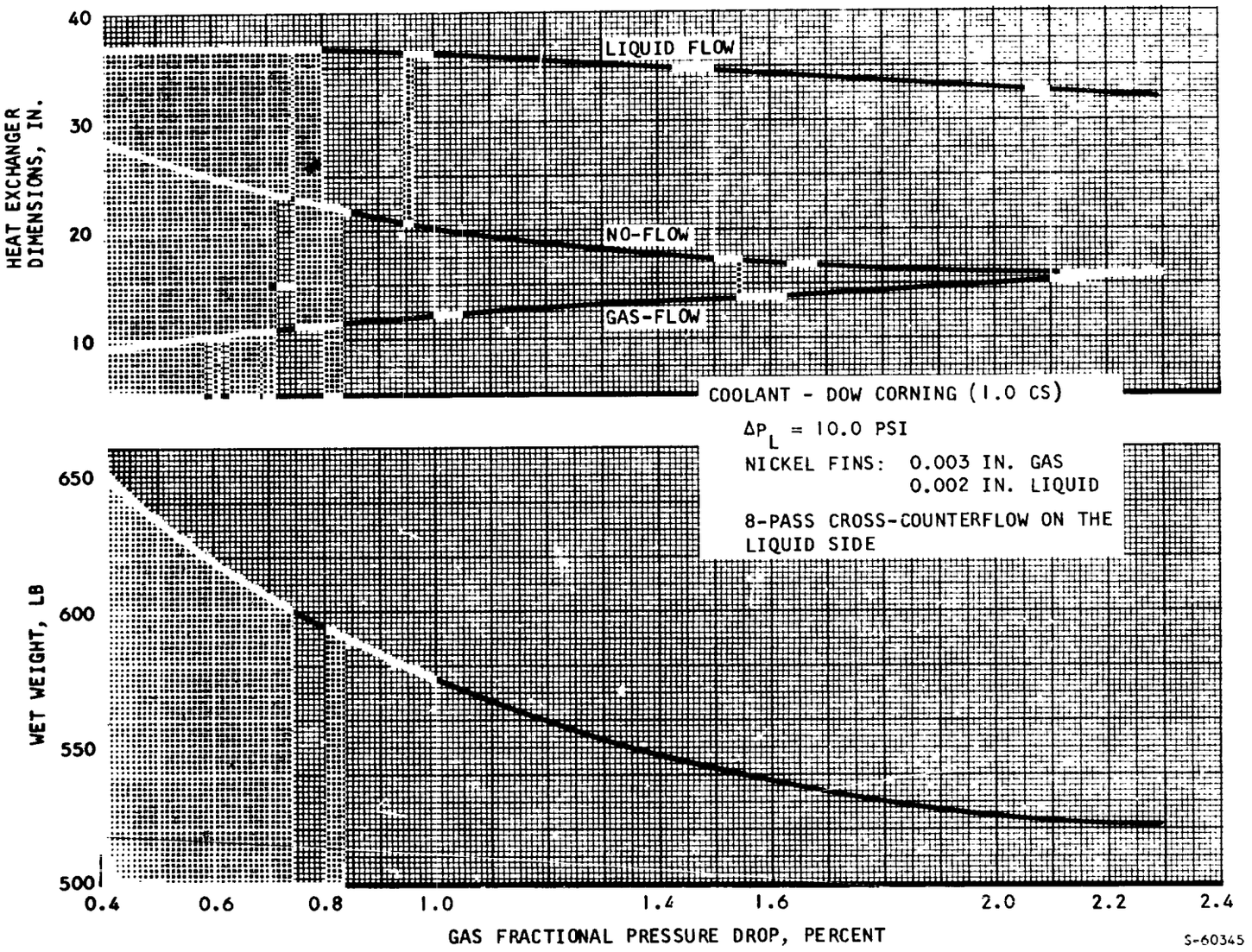

Figure 5-35. Task 3 Case IV Waste Heat Exchanger

Heat Source Heat Exchanger

Parametric weight and dimensional data as a function of pressure drop were developed for the HSHX's for the four design cases of Task 3. These data are given in Figures 5-36 through 5-39 for design cases I through IV respectively.

The heat source heat exchanger data for Case I are given in Figure 5-36. This heat exchanger is of the tube-fin construction using Haynes 25 tubes with a copper and stainless steel sandwich fin. The structural design temperature for this heat exchanger was taken as 1300°F. The NaK makes four passes in a cross-counterflow configuration, and the gas makes a single pass across the tube bank. A weight breakdown, based on the structural analysis of required wrap-up, is shown in Table 5-2.

The heat source heat exchanger data for Case II are presented in Figure 5-37. The material selected for this heat exchanger is Cb-1%Zr tubes as well as fins due to the high operating temperature. A weight breakdown on this heat exchanger is also given in Table 5-2.

For the Case III design the use of liquid lithium and the temperatures involved require a refractory heat source heat exchanger design. T-111 was selected for the tube materials and Cb-1%Zr was the selected fin material. The data developed for this heat exchanger are given in Figure 5-38 and a weight breakdown is given in Table 5-2.

The materials selected for the Case IV heat source heat exchanger were the same as for Case I, i.e., the Haynes 25 alloy tubes with a stainless steel clad fin. The weight and dimensional variation with pressure drop is given in Figure 5-39 and the weight breakdown in Table 5-2.

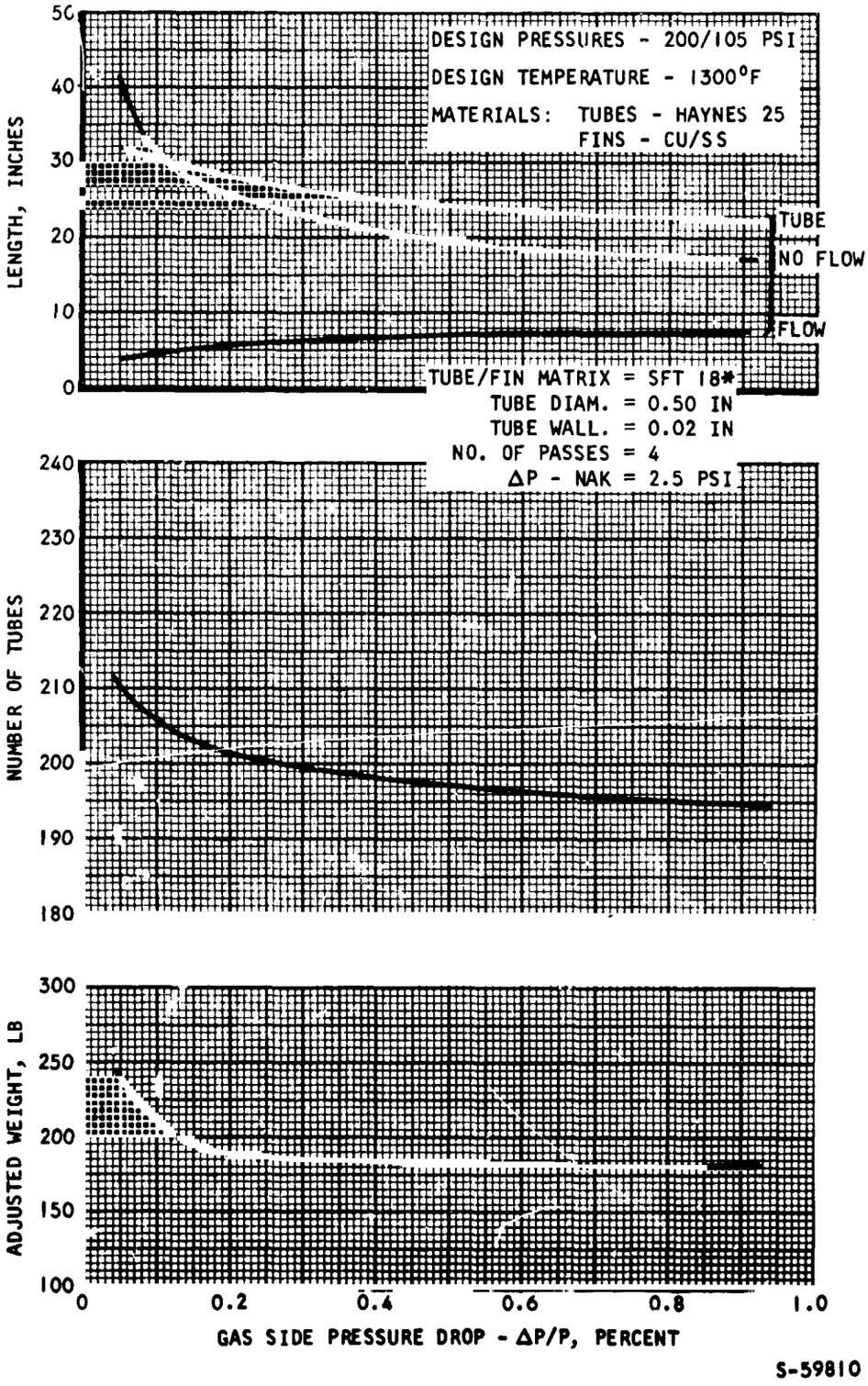

Figure 5-36. Task 3 Case I Heat Source Heat Exchanger

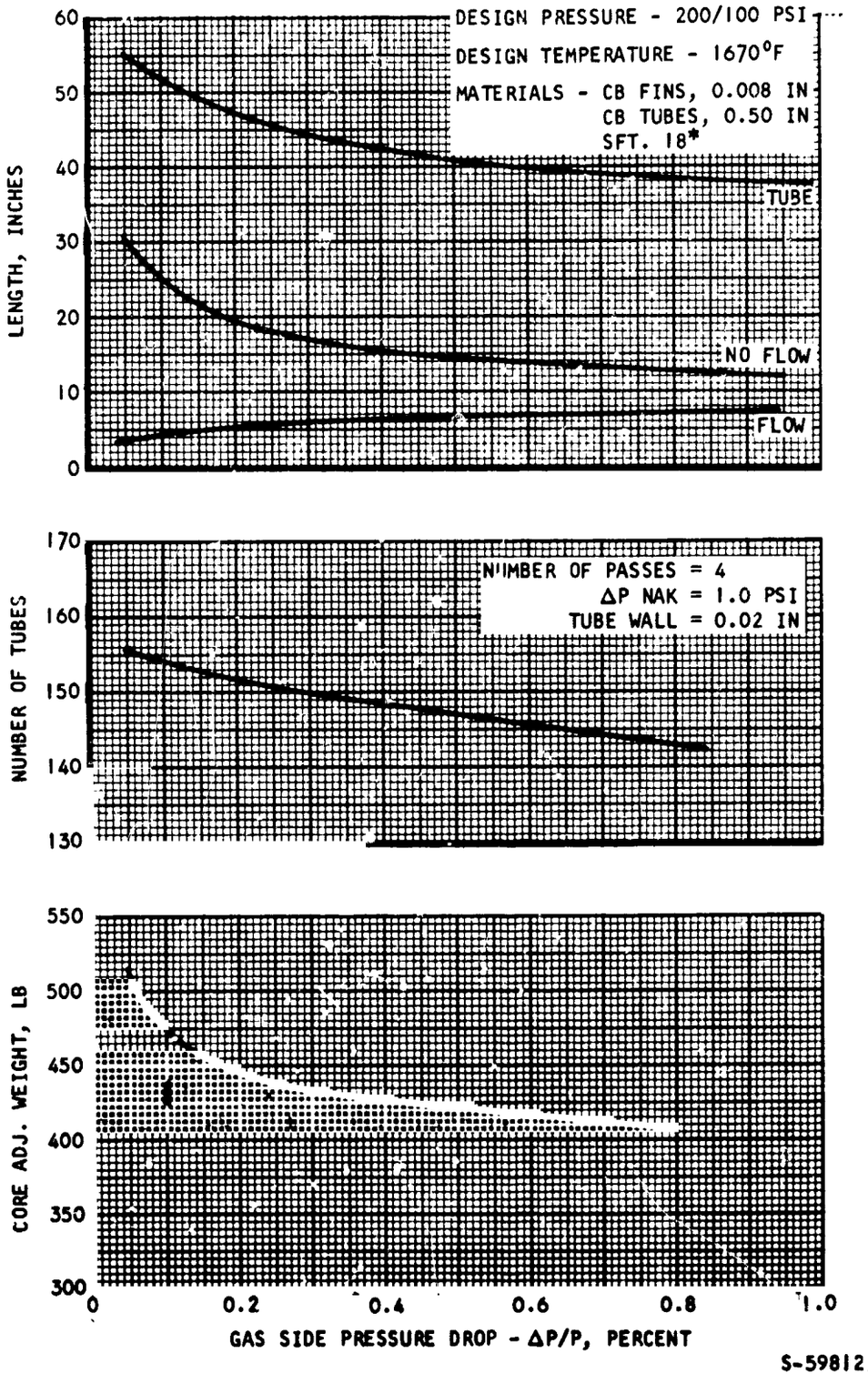

Figure 5-37. Task 3 Case II Heat Source Heat Exchanger

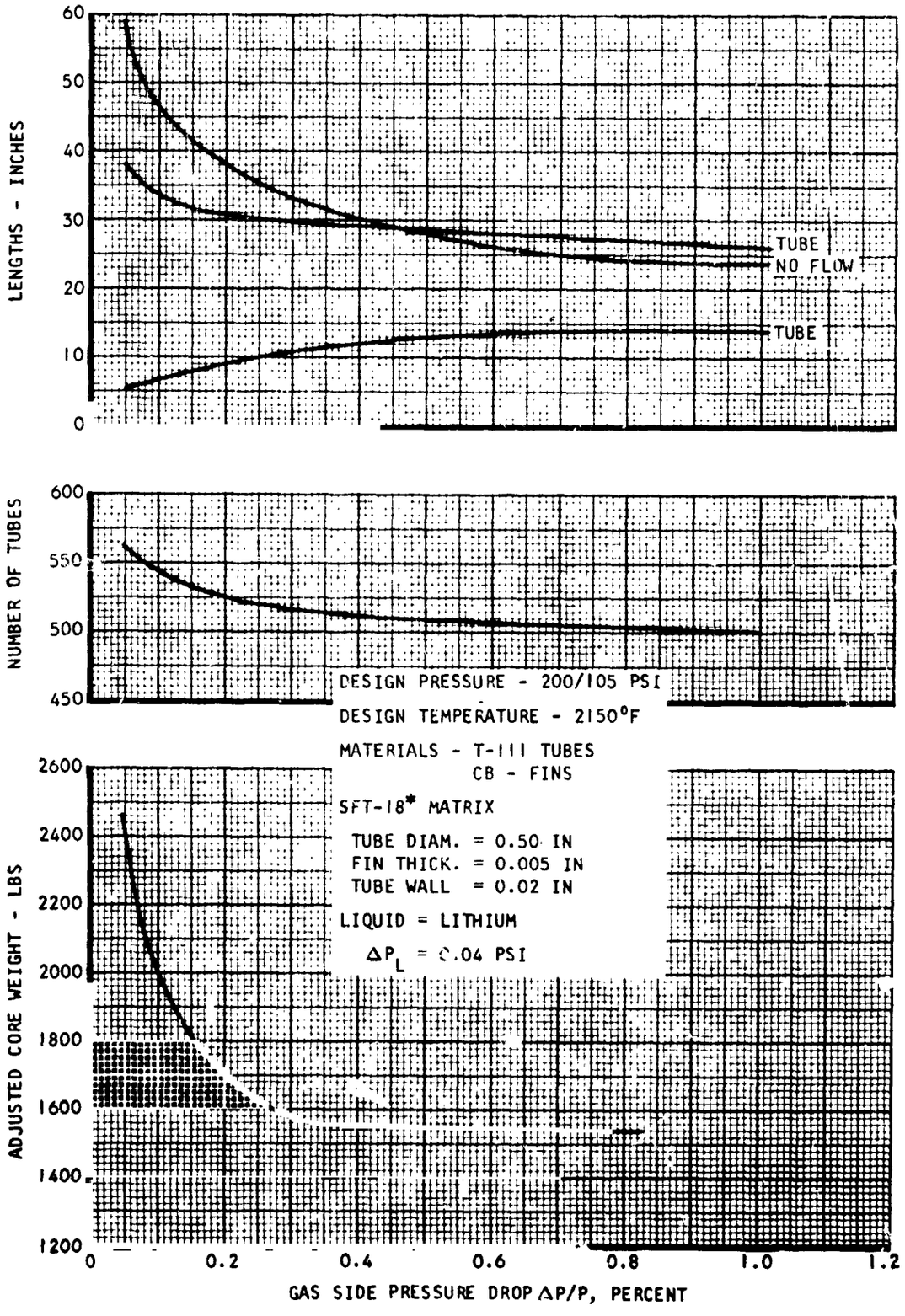

S-59804

Figure 5-38. Task 3 Case III Heat Source Heat Exchanger

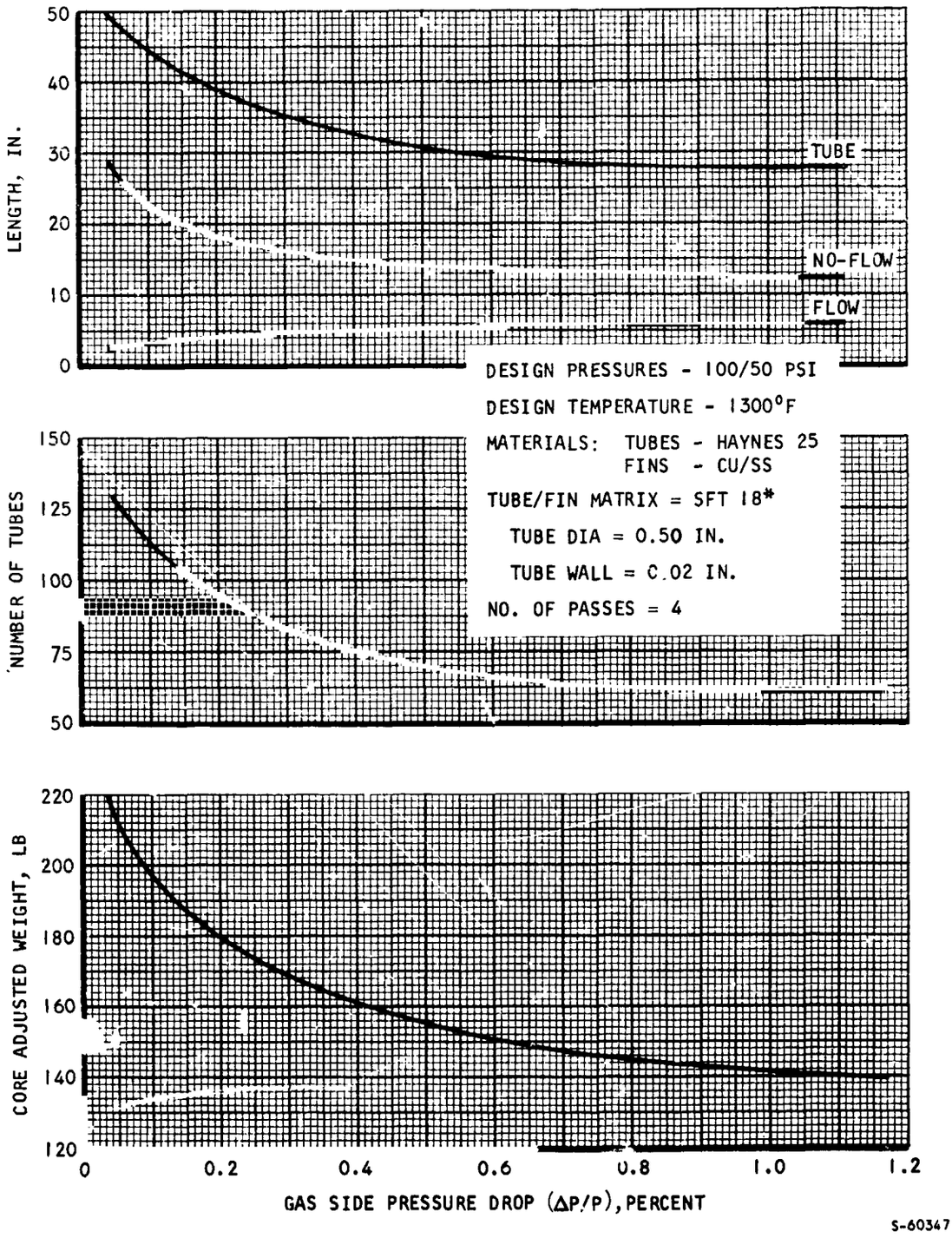

Figure 5-39. Task 3 Case IV Heat Source Heat Exchanger

Heat Exchanger Structural Design

The structural effort for Task 3 involved the selection of materials for each of the heat exchangers in the system, sizing of the fins to meet pressure containment and (in the case of the heat source heat exchanger) environmental inputs, and calculation of wrap-up weights (headers, pans, etc.) for the heat source heat exchangers. The design conditions and selected materials, which provide the lightest designs, are shown in Table 5-1. Sizing of the fins for the plate-fin recuperator and waste heat exchanger follows the analysis described in previous sections. For the finned tubular heat source heat exchanger, a stainless-clad copper disk fin is used for Cases I and IV to obtain both high conductivity and structural strength. The fin thickness, based on strength requirements (see Section 4 discussion), is 0.005 in. total, consisting of 0.003 in. copper and 0.002 in. 347 steel. The material used for disk fins for Cases II and III is Cb-1%Zr. It was determined that a fin thickness of 0.003 in. of Cb-1%Zr is required for structural integrity for the Case III heat source exchanger. At the lower temperature of the Case II heat source exchanger, a fin thickness of 0.003 in. is more than sufficient for structural integrity.

Wrap-up weights obtained from the structural design of the heat source heat exchanger are presented in Table 5-2.

TABLE 5-1

DESIGN CONDITIONS, MATERIALS

a. RECUPERATOR

Case	Material	Maximum Operating Temperature, °F	Pressures, psi	
			Low	High
1	Hastelloy X	1200	105	200
2	Hastelloy X	1260	105	200
3	Columbium -1Zr	1660	105	200
4	347 steel	840	50	100

b. WASTE HEAT EXCHANGER

Case	Material	Maximum Operating Temperature, °F	Pressures, psi	
			Gas	Liquid
1	347 steel and nickel	360	105	75
2	347 steel and nickel	500	105	75
3	347 steel and nickel	680	105	75
4	347 steel and nickel	360	50	75

c. HEAT SOURCE HEAT EXCHANGER

Case	Material	Temperature, °F		Pressures, psi	
		Inlet	Outlet	Gas	Liquid
1	Haynes 25	1130	1300	200	80
2	Columbium -1Zr	1570	1670	200	80
3	Tantalum T-111	1660	2150	200	80
4	Haynes 25	1130	1300	100	80

TABLE 5-2

HEAT SOURCE HEAT EXCHANGER WEIGHT SUMMARY

Case	Fin Thickness, in.	ΔP/P	Dimension, in.			Item Weights, lb.					
			LN	LF	LT	Tubes and Liquid	Baffles	Headers	No-Flow Pans	Support Beams	Core
1	0.005	0.05	41.1	3.7	33.0	152	30	20	11	26	238
		0.1	31.2	4.8	34.1	159	22	25	20	20	246
		0.2	26.5	5.4	28.6	127	-	23	21	19	190
		0.4	21.3	6.6	27.0	118	-	27	29	19	192
		0.8	17.7	7.8	23.6	101	-	28	35	18	183
2	0.003	0.05	22.4	5.4	74.5	278	50	62	104	31	527
		0.1	18.3	6.6	67.1	248	41	72	139	30	530
		0.2	14.8	7.8	61.2	219	31	77	175	29	532
		0.4	11.9	9.5	57.0	200	25	90	243	28	585
		0.8	9.6	11.3	52.6	175	19	98	281		601
	0.008	0.05	30.6	3.7	55.0	314	63	44	35	58	515
		0.1	23.0	4.8	56.5	315	47	56	63	32	513
		0.2	19.5	5.4	47.9	260	38	56	67	26	448
		0.4	16.0	6.6	43.4	238	41	66	83	26	452
		0.8	13.1	7.8	39.3	206	-	66	113	25	410
3	0.003	0.05	52.3	7.8	43.4	772	458	370	196	495	2292
		0.1	41.7	9.5	39.9	696	357	415	271	249	1987
		0.2	35.3	10.7	33.3	551	288	408	270	153	1670
		0.4	27.7	13.6	32.3	533	152	472	447	101	1705
		0.8	22.4	16.0	29.2	459	117	500	511	87	1673
	0.005	0.05	59.9	6.6	37.9	773	511	317	124	734	2459
		0.1	46.4	8.4	36.4	728	388	370	190	338	2014
		0.2	38.8	9.5	31.0	591	209	352	210	176	1538
		0.4	30.6	11.9	29.5	554	162	414	313	113	1557
		0.8	24.8	14.2	27.0	491	127	454	388	85	1545
	0.008	0.05	70.4	5.4	33.5	808	580	267	74	1236	2966
		0.1	55.8	6.6	30.8	718	299	275	100	514	1906
		0.2	43.5	8.4	29.6	680	230	326	155	247	1636
		0.4	35.3	10.1	26.9	609	183	364	205	145	1507
		0.8	28.9	11.9	24.2	590	177	414	249	103	1532
4	0.005	0.05	27.7	3.1	49.5	128	11	30	23	14	207
		0.1	22.4	3.7	45.1	113	9	32	29	11	194
		0.2	18.9	4.3	38.9	96	7	34	34	11	182
		0.4	16.0	4.8	33.6	80	6	34	39	10	169
		0.8	13.7	5.4	28.1	64	-	33	41	10	147

DUCTING ANALYSIS

The analysis of manifold and ducting weights and pressure drops for the Task 3 systems is similar to the analysis performed in Task 2 with only minor modifications. The values of k_i used in the weight equation are as follows:

Task 3 Case	k_1	k_2	k_3	k_4	k_5	k_6	k_7	k_8
I	40,100	8,110	12,900	78,400	20,100	9,700	17,200	84,600
II	36,600	7,200	8,900	69,600	18,300	8,600	12,000	75,000
III	27,000	1,760	8,660	50,400	13,500	2,110	11,600	54,500
IV	43,600	10,400	54,600	81,100	21,800	12,500	72,900	88,100

Since all of the heat source heat exchangers in the Task 3 cases are designed for close coupling with the recuperator, the ducts 9 and 10 and manifolds 11 and 12 do not exist for these cases. Manifold and duct materials are all Hastelloy X with the following exceptions: (1) the heat source heat exchanger outlet manifold and outlet duct are T-111 for Cases I, II, and III; and (2) the recuperator low-pressure side inlet duct and inlet manifold are T-111 for Case III. The selection of these materials results in the following changes from Task 2 (SNAP-8 cases) in the minimum allowable values of t_i in the weight equations:

$t_2 \geq 0.145$, Case I, II and III

$t_6 \geq 0.145$, Case I, II and III

$t_3 \geq 0.145$, Case III

$t_7 \geq 0.145$, Case III

The above values of k_i and t_i were incorporated in the system optimization program for use in the Task 3 studies.

SYSTEM OPTIMIZATION

Using the system optimization computer program and the heat exchanger parametric data generated in the previous paragraph, the optimum HXDA pressure drop allotment and heat exchanger and ducting sizes were determined for each of the four Task 3 cases. The optimization was carried out over a range of HXDA total pressure drops for each case. Results for a 3-percent total pressure loss are shown in Tables 5-3 through 5-6. The pressure losses shown for each component in these figures are optimum values within the following restrictions: (1) the minimum value of ducting pressure drop considered by the program was 0.50 percent, (2) the minimum value of waste heat exchanger pressure drop was 0.40 percent, and (3) the minimum value of heat source heat exchanger pressure drop was 0.15 percent. The duct pressure drop includes losses in all ducts and manifolds in the systems. Individual duct and manifold weights and pressure losses (in psi) are listed at the bottom of Figures 5-3 through 5-6 under Duct System Data. The last line gives the individual duct inner diameters. Numbering of the individual ducts, weights, and pressure drops follows the nomenclature of Figure 4-40. Since in all cases the heat source heat exchanger is coupled directly to the recuperator high-pressure outlet, ducts 9 and 10 as well as manifolds 11 and 12 do not exist for these cases.

The variation of total HXDA weight with total pressure loss is shown for each case in Figures 5-40 through 5-43. The rectangular-end-recuperator curves are constructed from the minimum weight points determined by the computer program, in which the recuperator configuration used involves rectangular end sections for gas manifolding. The triangular-end-recuperator curves were obtained by substituting the weight of a recuperator with triangular end sections for the weight of the rectangular recuperator design at each point on the weight curve. Although ducting and manifold configurations will be different for a system utilizing a triangular end recuperator, the assumption implicit in these curves is that overall weight and pressure loss for the ducting system will remain approximately the same, independent of recuperator end configuration.

TABLE 5-3

TASK 3, CASE I, OPTIMIZED SYSTEM (RECTANGULAR END RECUPERATOR)

WEIGHT OPTIMIZED HEAT EXCHANGER DESIGNS

FOR TOTAL HXDA SYSTEM PRESSURE DROP

OF 3.00 PERCENT

DUCT PRESSURE DROP = 0.50 PERCENT

TASK 3 / CASE I

	RECUPERATOR	WHX	HSHX	TOTAL
WEIGHT(LBS)	1871.9	1166.0	199.5	3237.4
PRESSURE DROP(PCT)	1.85	0.50	0.15	2.50
FLOW LENGTH(INCHES)	37.1	16.3	5.1	
STACK HEIGHT(INCHES)	44.2			
TUBE LENGTH(INCHES)		30.8	29.4	
NO-FLOW LENGTH(INCHES)	22.2	36.2	26.4	
NO. OF TUBES		0	203	

DUCT SYSTEM DATA

WEIGHT(LBS)	DIA(INCH)	DELTA P(PCT)	HXDA WEIGHT
619.22	8.27	0.50	3856.61

DP1	DP2	DP3	DP4	DP5	DP6	DP7	DP8	DP9	DP10	DP11	DP12
0.15	0.03	0.10	0.06	0.02	0.01	0.02	0.00	0.0	0.0	0.0	0.0

W1	W2	W3	W4	W5	W6	W7	W8	W9	W10	W11	W12
52.61	69.23	80.30	43.98	49.35	126.26	127.60	69.90	0.0	0.0	0.0	0.0

D1	D2	D3	D4	D9	D10
8.27	9.97	11.03	8.93	0.0	0.0

TABLE 5-4

TASK 3, CASE II, OPTIMIZED SYSTEM
(RECTANGULAR END RECUPERATOR)

WEIGHT OPTIMIZED HEAT EXCHANGER DESIGNS

FOR TOTAL HXDA SYSTEM PRESSURE DROP

OF 3.00 PERCENT

DUCT PRESSURE DROP = 0.50 PERCENT

TASK 3 / CASE II

	RECUPERATOR	WHX	HSHX	TOTAL
WEIGHT(LBS)	1960.4	908.0	444.5	3312.9
PRESSURE DROP(PCT)	1.85	0.40	0.25	2.50
FLOW LENGTH(INCHES)	32.0	13.3	5.8	
STACK HEIGHT(INCHES)	44.8			
TUBE LENGTH(INCHES)		37.5	46.4	
NO-FLOW LENGTH(INCHES)	22.5	27.7	18.2	
NO. OF TUBES		0	151	

DUCT SYSTEM DATA

WEIGHT(LBS)	DIA(INCH)	DELTA P(PCT)	HXDA WEIGHT
656.39	8.20	0.50	3969.32

DP1	DP2	DP3	DP4	DP5	DP6	DP7	DP8	DP9	DP10	DP11	DP12
0.13	0.03	0.10	0.05	0.01	0.01	0.02	0.01	0.0	0.0	0.0	0.0

W1	W2	W3	W4	W5	W6	W7	W8	W9	W10	W11	W12
52.13	68.19	90.90	43.58	48.87	145.17	157.16	50.40	0.0	0.0	0.0	0.0

D1	D2	D3	D4	D9	D10
8.20	9.88	10.93	8.85	0.0	0.0

TABLE 5-5

TASK 3, CASE III, OPTIMIZED SYSTEM (RECTANGULAR END RECUPERATOR)

WEIGHT OPTIMIZED HEAT EXCHANGER DESIGNS

FOR TOTAL HXDA SYSTEM PRESSURE DROP

OF 3.00 PERCENT

DUCT PRESSURE DROP = 0.50 PERCENT

TASK 3 CASE III

	RECUPERATOR	WHX	HSHX	TOTAL
WEIGHT(LBS)	1651.7	658.0	1552.5	3862.2
PRESSURE DROP(PCT)	1.55	0.40	0.55	2.50
FLOW LENGTH(INCHES)	31.5	9.8	13.6	
STACK HEIGHT(INCHES)	46.1			
TUBE LENGTH(INCHES)		40.7	28.4	
NO-FLOW LENGTH(INCHES)	23.1	24.6	27.4	
NO. OF TUBES		0	509	

DUCT SYSTEM DATA

WEIGHT(LBS)	DIA(INCH)	DELTA P(PCT)	HXDA WEIGHT
920.24	8.06	0.50	4782.41

DP1	DP2	DP3	DP4	DP5	DP6	DP7	DP8	DP9	DP10	DP11	DP12
0.10	0.02	0.08	0.04	0.01	0.01	0.01	0.00	0.0	0.0	0.0	0.0

W1	W2	W3	W4	W5	W6	W7	W8	W9	W10	W11	W12
51.29	163.62	80.39	42.88	50.98	333.35	149.66	48.08	0.0	0.0	0.0	0.0

D1	D2	D3	D4	D9	D10
8.06	9.72	10.75	8.71	0.0	0.0

TABLE 5-6

TASK 3, CASE IV, OPTIMIZED SYSTEM
(RECTANGULAR END RECUPERATOR)

WEIGHT OPTIMIZED HEAT EXCHANGER DESIGNS

FOR TOTAL HXDA SYSTEM PRESSURE DROP

OF 3.00 PERCENT

DUCT PRESSURE DROP = 0.50 PERCENT

TASK 3 CASE IV

	RECUPERATOR	WHX	HSHX	TOTAL
WEIGHT(LBS)	1182.9	652.0	176.4	2011.3
PRESSURE DROP(PCT)	1.85	0.40	0.25	2.50
FLOW LENGTH(INCHES)	36.1	9.2	4.4	
STACK HEIGHT(INCHES)	43.9			
TUBE LENGTH(INCHES)		37.0	36.8	
NO-FLOW LENGTH(INCHES)	22.0	28.4	16.7	
NO. OF TUBES		0	89	

DUCT SYSTEM DATA

WEIGHT(LBS)	DIA(INCH)	DELTA P(PCT)	HXDA WEIGHT
400.55	8.34	0.50	2411.86

DP1	DP2	DP3	DP4	DP5	DP6	DP7	DP8	DP9	DP10	DP11	DP12
0.07	0.02	0.05	0.03	0.01	0.01	0.01	0.00	0.0	0.0	0.0	0.0

W1	W2	W3	W4	W5	W6	W7	W8	W9	W10	W11	W12
53.06	43.05	54.72	44.35	41.15	47.26	55.69	61.25	0.0	0.0	0.0	0.0

D1	D2	D3	D4	D9	D10
8.34	10.05	11.12	9.01	0.0	0.0

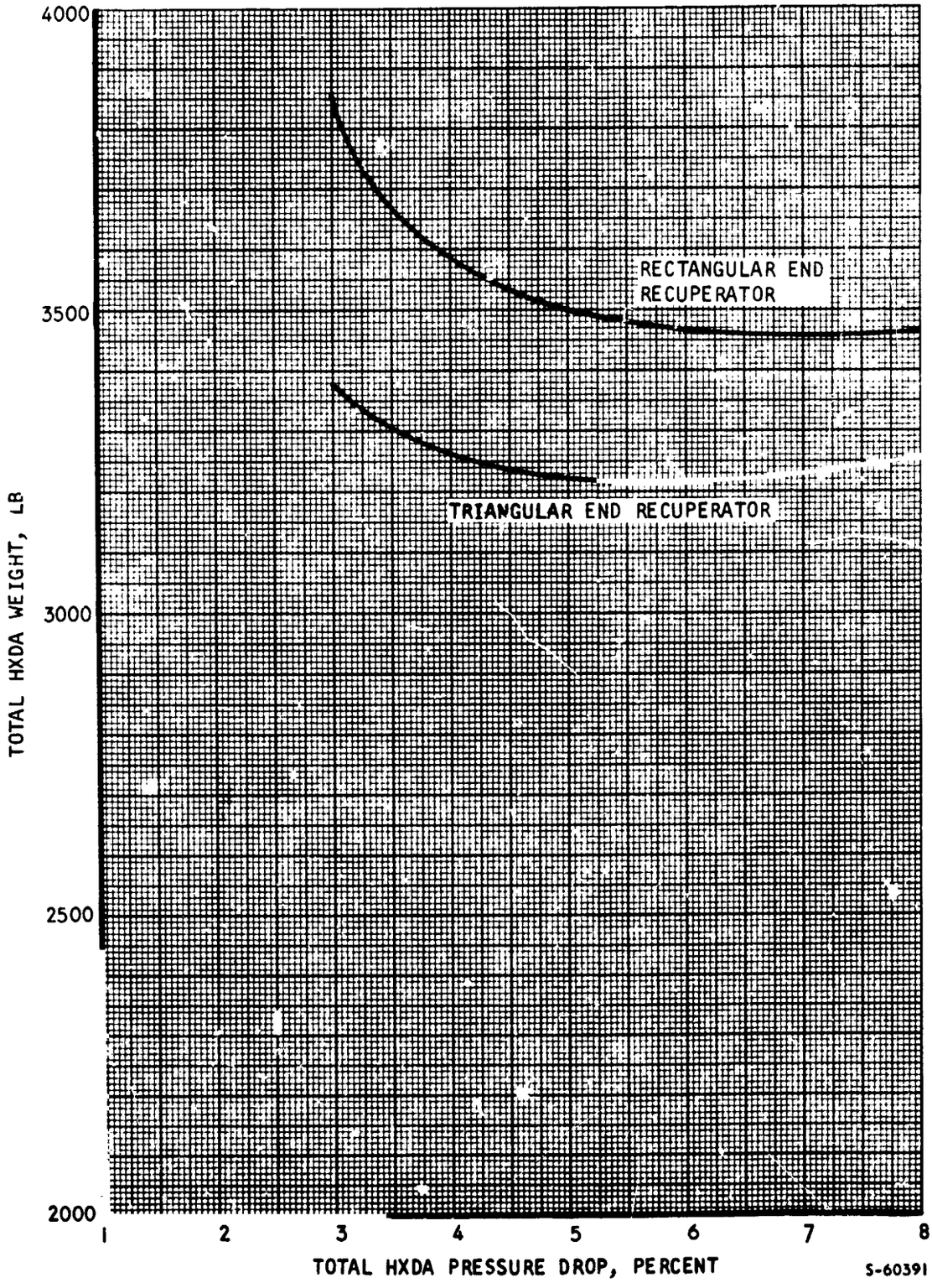

Figure 5-40. Task 3 Case I HXDA Weight

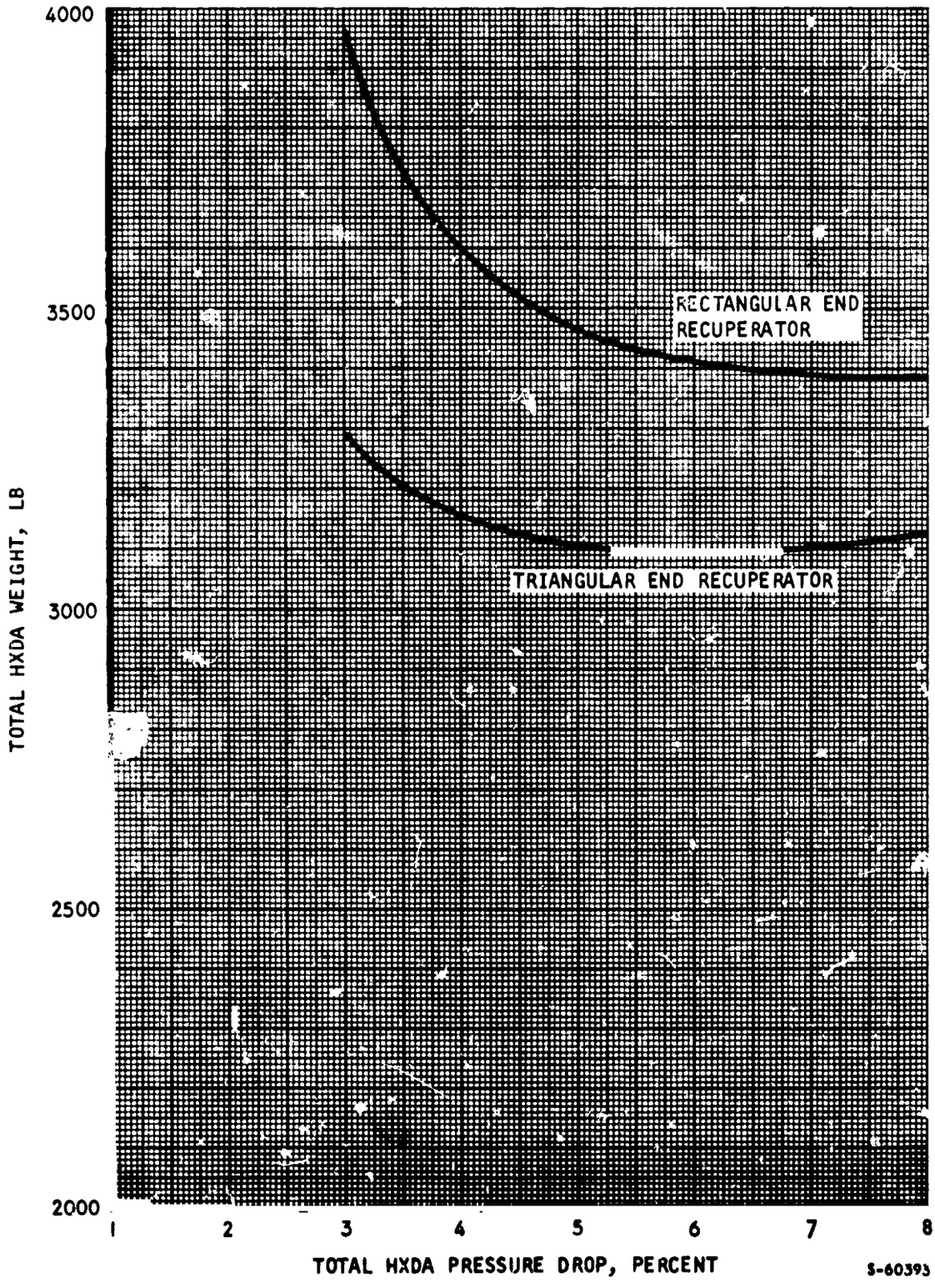

Figure 5-41. Task 3 Case II HXDA Weight

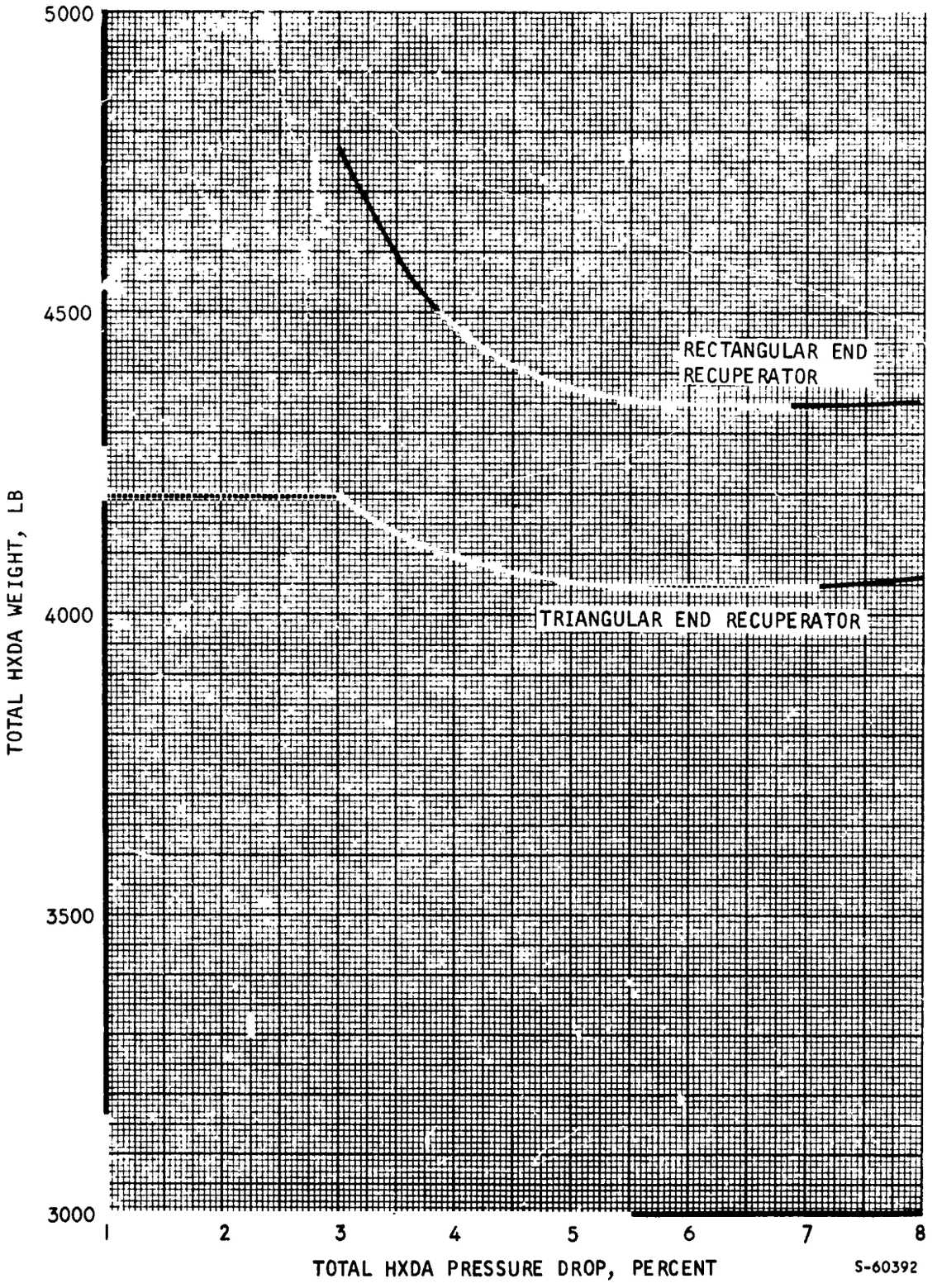

Figure 5-42. Task 3 Case III HXDA Weight

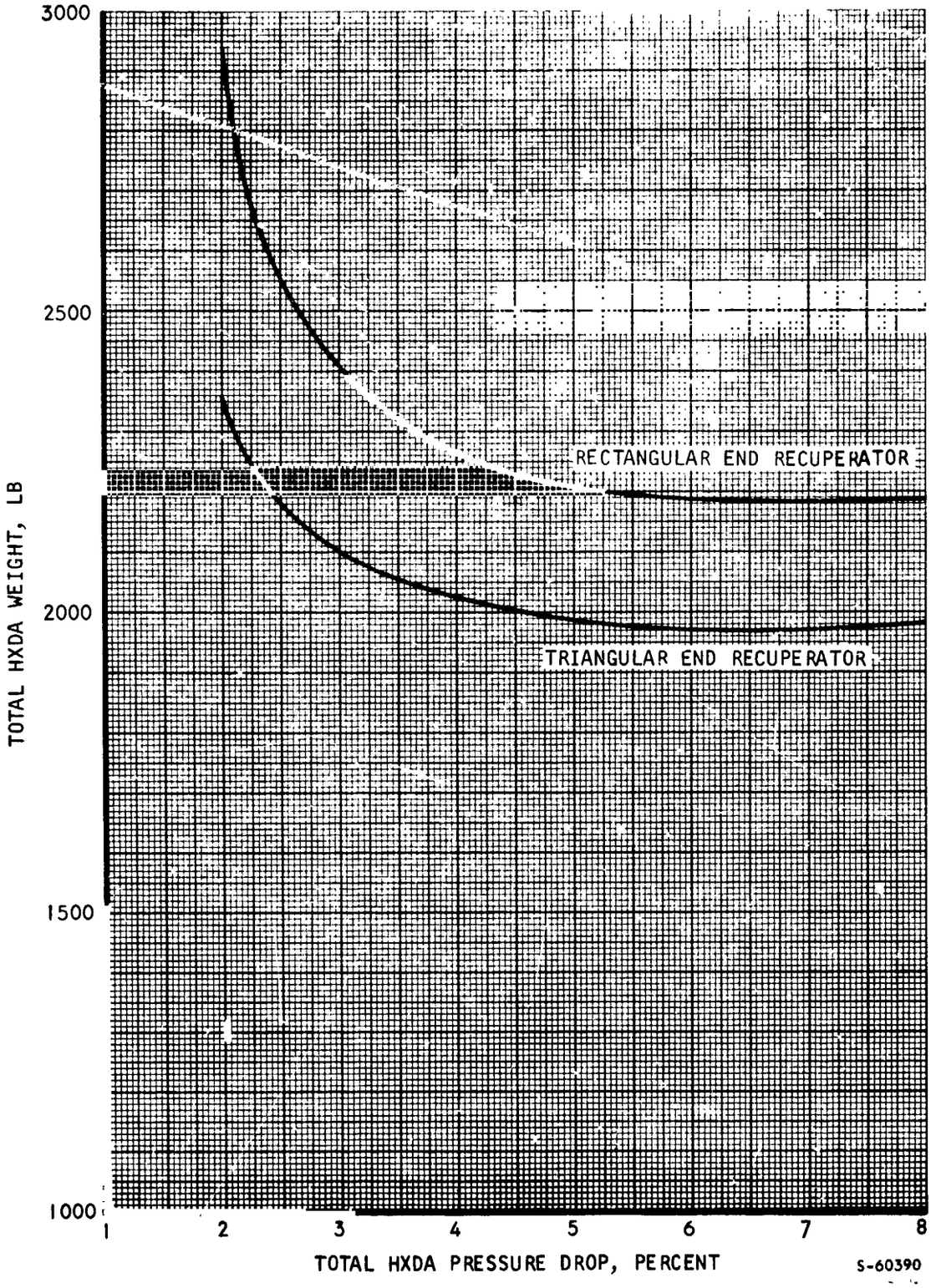

Figure 5-43. Task 3 Case IV HXDA Weight

SUMMARY

The heat exchanger and ducting designs for each of the four cases of Task 3 are summarized in Tables 5-7 through 5-10. These designs are selected for an overall HXDA pressure drop of 3 percent.

The recuperator is in all cases a pure counterflow, plate-fin unit with triangular end sections providing fluid access to the counterflow core. The material of construction is Hastelloy X for Cases I and II, Cb-1%Zr for Case III, and 347 stainless steel for Case IV.

The heat source heat exchanger is cross-counterflow finned tubular in all cases and has been adjusted in aspect ratio so that one of its dimensions (either tube length or no-flow) always matches the recuperator stack height dimension. It was possible to do this with negligible weight penalty while maintaining the liquid side pressure drop at 5 psi or less. For Cases I and IV, the materials of construction are Haynes 25 for the tubes and stainless clad copper for the fins. The Case II heat source heat exchanger is constructed entirely of Cb-1%Zr, whereas the Case III heat source heat exchanger utilizes T-111 tubes and Cb-1%Zr fins.

The waste heat exchanger is in all cases a cross-counterflow, plate-fin unit with two independent liquid cooling circuits in the core. In this configuration, interpass turning of the liquid is accomplished with mitered turning fins internal to the core. The heat exchanger materials are 347 stainless steel for the plates and nickel for the fins.

Duct diameters shown in Tables 5-7 through 5-10 are based on maintaining a constant velocity head in the system ducting. Duct and manifold weights include provision for 2 in. of min-K insulation weighing 20 lb/cu ft.

The following four drawings at the end of this section show the four HXDA systems of Task 3, utilizing the components delineated in Tables 5-7 through 5-10.

TABLE 5-7

TASK 3 CASE I HXDA

Recuperator	
ΔP	1.85 percent
Core length	22.8 in.
End section height	8.9 in. (hot end) 5.4 in. (cold end)
Width	21.4 in.
Stack height	42.6 in.
Total weight	1390 lb
Heat Source Heat Exchanger	
ΔP (gas)	0.15 percent
ΔP (liquid)	2.5 psi
Gas flow length	5.1 in.
No-flow length	42.6 in.
Tube length	18.2 in.
Number of tubes	328
Number of passes	4
Total weight	200 lb
Waste Heat Exchanger	
ΔP (gas)	0.50 percent
ΔP (liquid)	10.0 psi
Gas flow length	16.3 in.
No-flow length	36.2 in.
Liquid flow length	30.8 in.
Number of passes	8
Total weight	1166 lb
Ducting	
ΔP	0.50 percent
Compressor outlet duct dia	8.27 in.
HSHX outlet duct dia	9.97 in.
Turbine outlet duct dia	11.03 in.
WHX outlet duct dia	8.93 in.
Weight of ducts and manifolds	619 lb

TABLE 5-8

TASK 3 CASE II HXDA

Recuperator	
ΔP	1.85 percent
Core length	16.6 in.
End section height	6.1 in. (hot end) 3.8 in. (cold end)
Width	22.5 in.
Stack height	44.8 in.
Total weight	1280 lb
Heat Source Heat Exchanger	
ΔP (gas)	0.25 percent
ΔP (liquid)	1.0 psi
Gas flow length	5.8 in.
No-flow length	19.0 in.
Tube length	44.8 in.
Number of tubes	156
Number of passes	4
Total weight	445 lb
Waste Heat Exchanger	
ΔP (gas)	0.40 percent
ΔP (liquid)	10.0 psi
Gas flow length	13.3 in.
No-flow length	27.7 in.
Liquid flow length	37.5 in.
Number of passes	8
Total weight	908 lb
Ducting	
ΔP	0.50 percent
Compressor outlet duct dia	8.20 in.
HSHX outlet duct dia	9.88 in.
Turbine outlet duct dia	10.93 in.
WHX outlet duct dia	8.85 in.
Weight of ducts and manifolds	656 lb

TABLE 5-9

TASK 3 CASE III HXDA

Recuperator	
ΔP	1.55 percent
Core length	14.7 in.
End section height	6.0 in. (hot end) 2.9 in. (cold end)
Width	24.4 in.
Stack height	48.8 in.
Total weight	1070 lb
Heat Source Heat Exchanger	
ΔP (gas)	0.55 percent
ΔP (liquid)	0.04 psi
Gas flow length	13.6 in.
No-flow length	48.8 in.
Tube length	16.0 in.
Number of tubes	904
Number of passes	4
Total weight	1553 lb
Waste Heat Exchanger	
ΔP (gas)	0.40 percent
ΔP (liquid)	10.0 psi
Gas flow length	9.8 in.
No-flow length	24.6 in.
Liquid flow length	40.7 in.
Number of passes	8
Total weight	658 lb
Ducting	
ΔP	0.50 percent
Compressor outlet duct dia	8.06 in.
HSHX outlet duct dia	9.72 in.
Turbine outlet duct dia	10.75 in.
WHX outlet duct dia	8.71 in.
Weight of ducts and manifolds	920 lb

TABLE 5-10

TASK 3 CASE IV HXDA

Recuperator	
ΔP	1.85 percent
Core length	21.0 in.
End section height	7.0 in. (hot end) 3.7 in. (cold end)
Width	22.3 in.
Stack height	44.6 in.
Total weight	870 lb
Heat Source Heat Exchanger	
ΔP (gas)	0.25 percent
ΔP (liquid)	2.5 psi
Gas flow length	4.[illegible] in.
No-flow length	13.8 in.
Tube length	44.6 in.
Number of tubes	74
Number of passes	4
Total weight	176 lb
Waste Heat Exchanger	
ΔP (gas)	0.40 percent
ΔP (liquid)	10.0 psi
Gas flow length	9.2 in.
No-flow length	28.4 in.
Liquid flow length	37.0 in.
Number of passes	8
Total weight	652 lb
Ducting	
ΔP	0.50 percent
Compressor outlet duct dia	8.34 in.
HSHX outlet duct dia	10.05 in.
Turbine outlet duct dia	11.12 in.
WHX outlet duct dia	9.01 in.
Weight of ducts and manifolds	401 lb

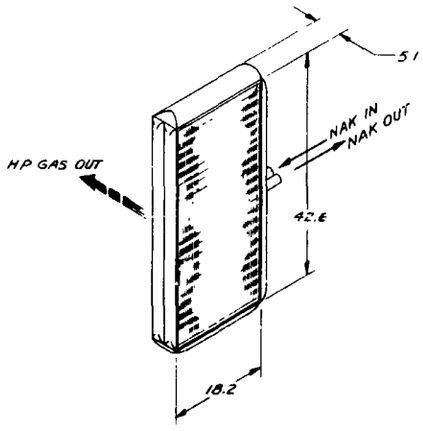

HEAT SOURCE HEAT EXCHANGER

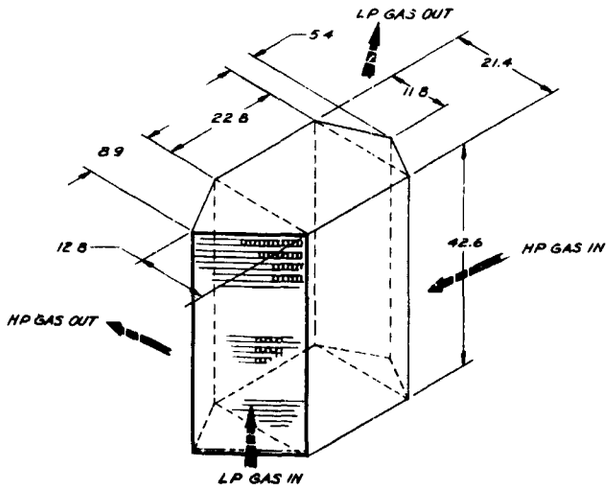

RECUPERATOR

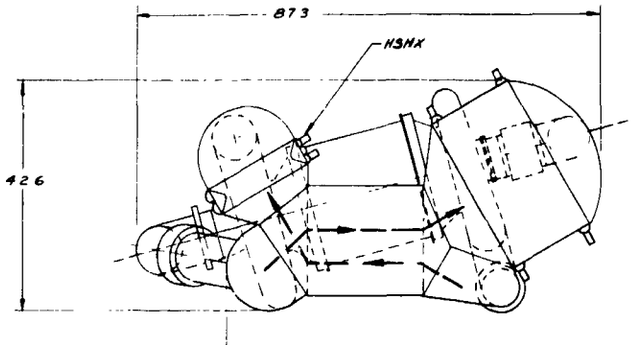

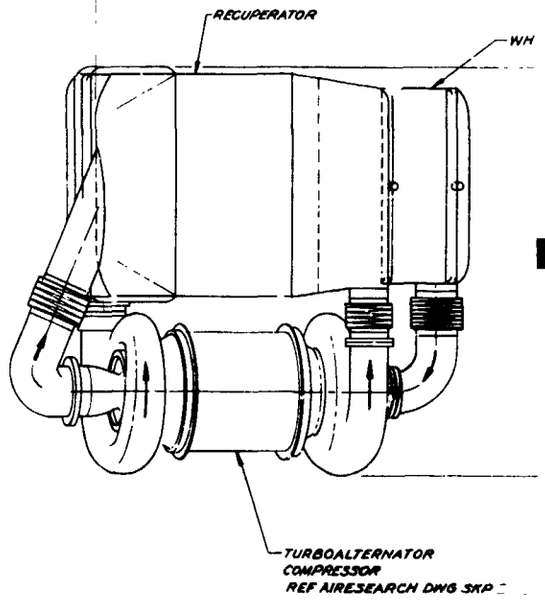

1. THIS IS A PRELIMINARY L
PACKAGE DIMENSIONS ARE
AS A RESULT OF DETAILED
NOTES: UNLESS OTHERWISE SPECIFIED

FOLDOUT FRAME 7

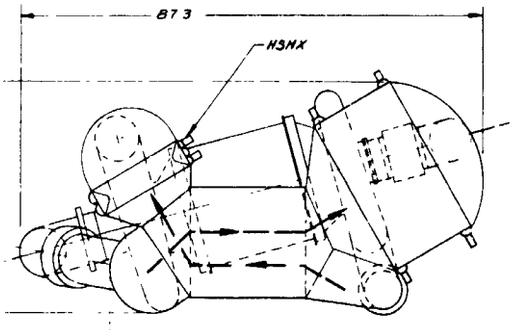

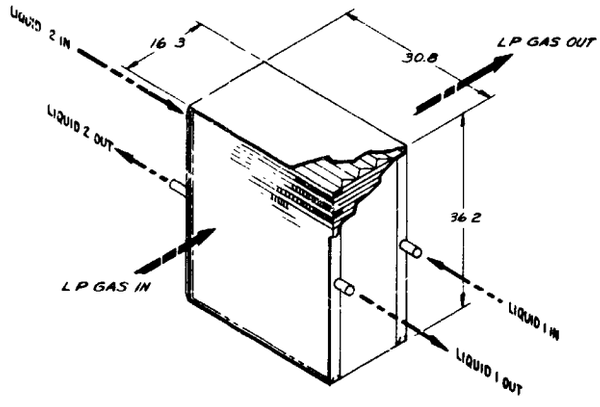

WASTE HEAT EXCHANGER

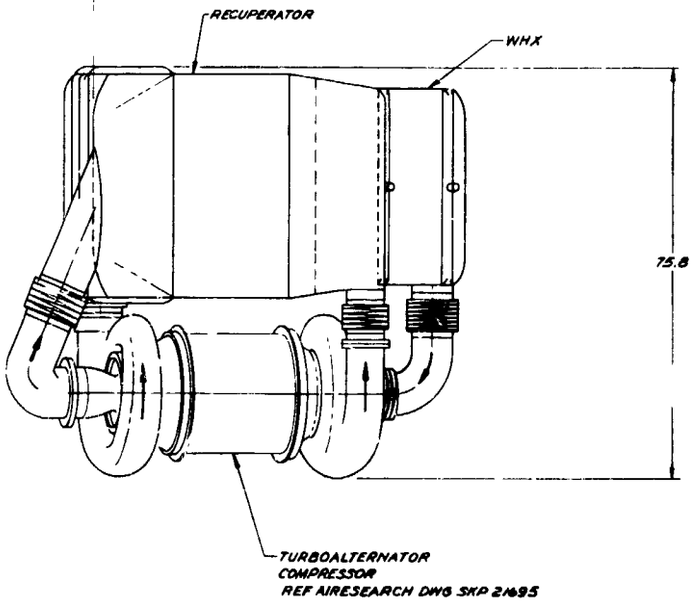

~~PRELIMINARY~~

NOTES: UNLESS OTHERWISE SPECIFIED

1. THIS IS A PRELIMINARY LAYOUT DRAWING. OVER-ALL PACKAGE DIMENSIONS ARE SUBJECT TO CHANGE AS A RESULT OF DETAILED STRUCTURAL ANALYSIS.

24,000 RPM TAC

LAYOUT, NXDA, TASK 2, CASE I
SNAP-8 160 KWE

70210 L/98555

L/98555

FOLDOUT FRAME 2

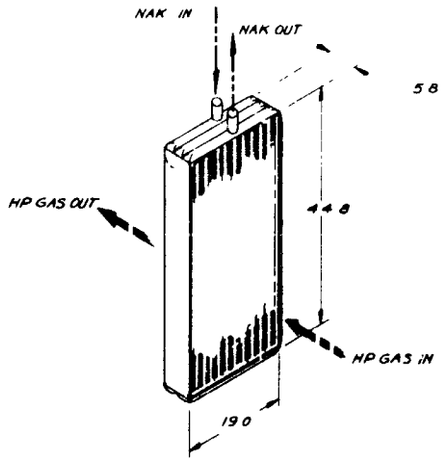

HEAT SOURCE HEAT EXCHANGER

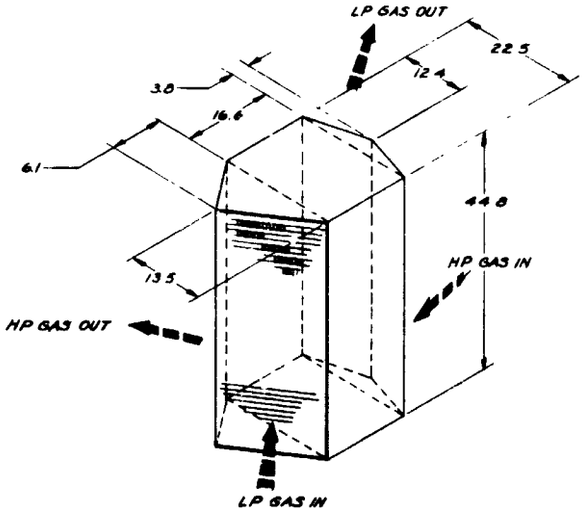

RECUPERATOR

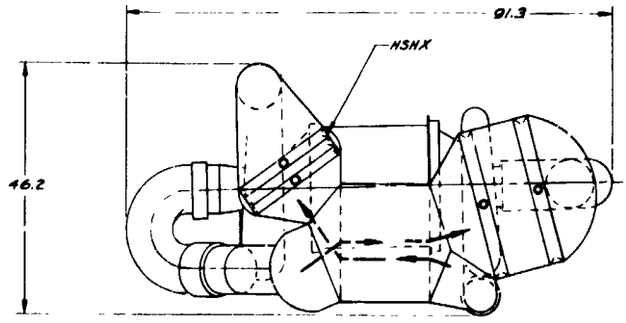

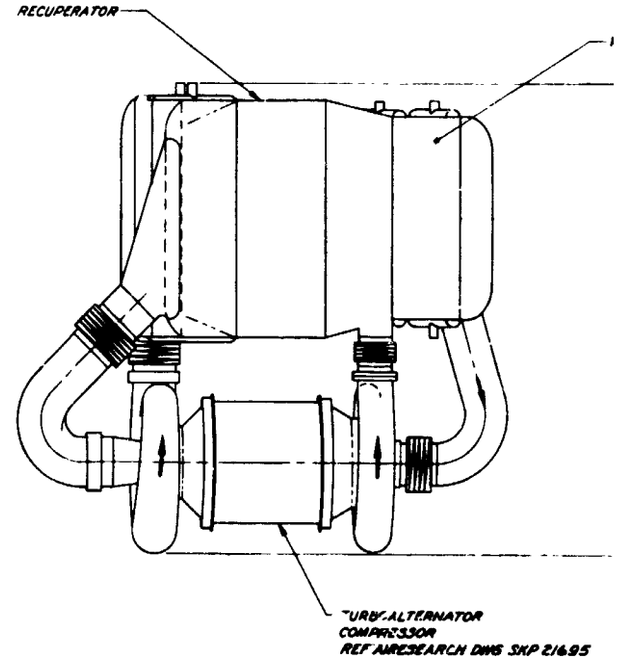

NOTES: UNLESS OTHERWISE SPECIFIED

1. THIS IS A PRELIMINARY LAYOUT
PACKAGE DIMENSIONS ARE
AS A RESULT OF DETAILED

FOLDOUT FRAME 1

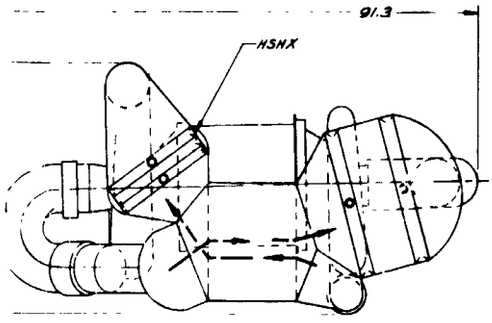

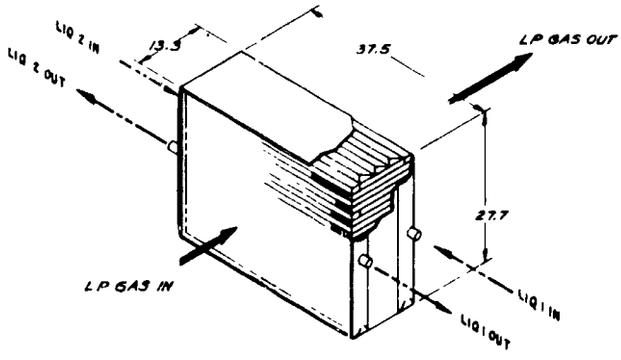

WASTE HEAT EXCHANGER

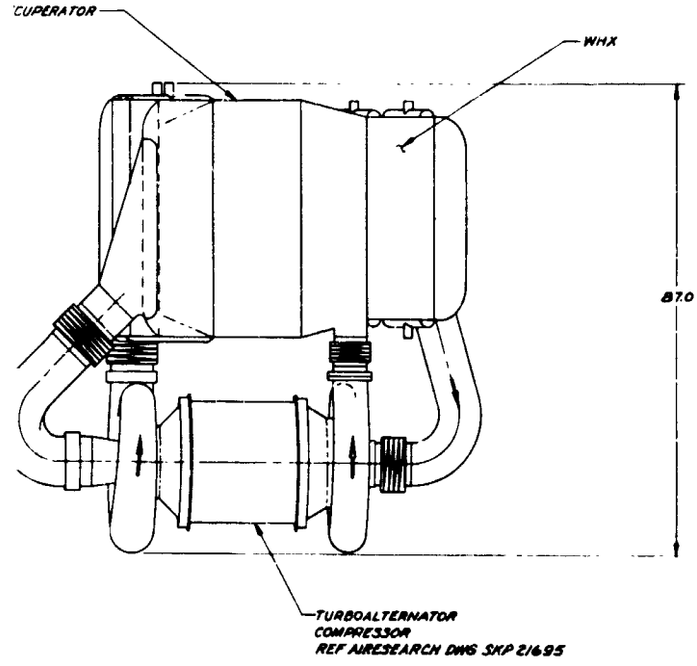

PRECEDING PAGE BLANK NOT FILMED

L198556

NOTES: 1. THIS IS A PRELIMINARY LAYOUT DRAWING. OVER-ALL PACKAGE DIMENSIONS ARE SUBJECT TO CHANGE AS A RESULT OF DETAILED STRUCTURAL ANALYSIS UNLESS OTHERWISE SPECIFIED

24,000 RPM TAC

LAYOUT, HXDA, TASK 3 CASE II SHAP-B (160 KWE)

70210 L198556

FOLDOUT FRAME 2

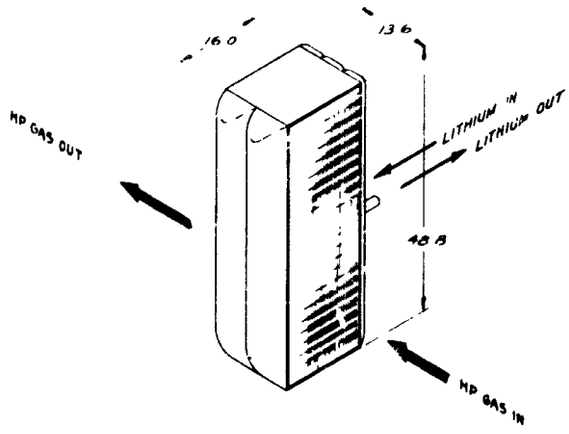

HEAT SOURCE HEAT EXCHANGER

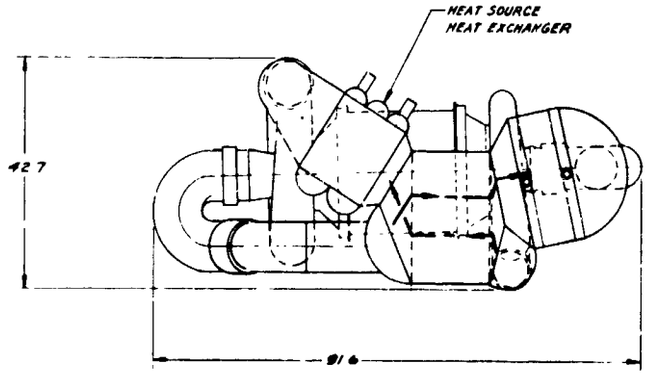

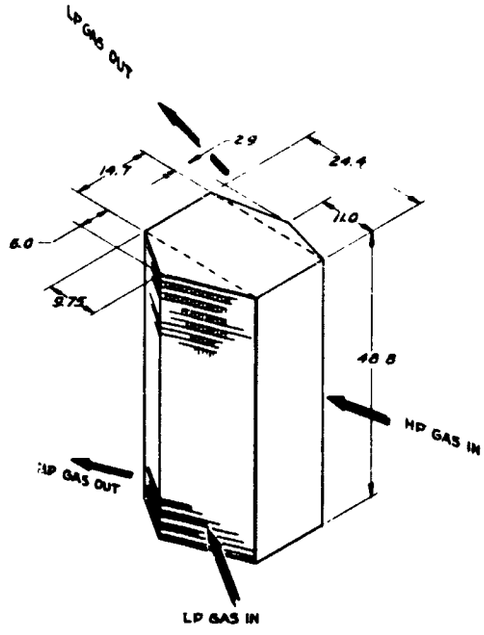

RECUPERATOR

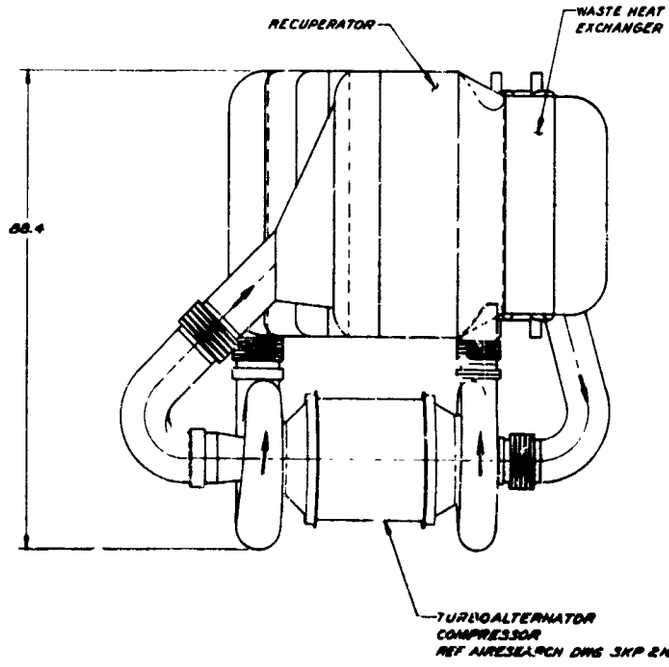

NOTES: UNLESS OTHERWISE SPECIFIED
1. THIS IS A PRELIMINARY LAYOUT DWG.
DIMENSIONS ARE SUBJECT TO CHANGE.
DETAILED STRUCTURAL ANALYSIS.

FOLDOUT FRAME 7

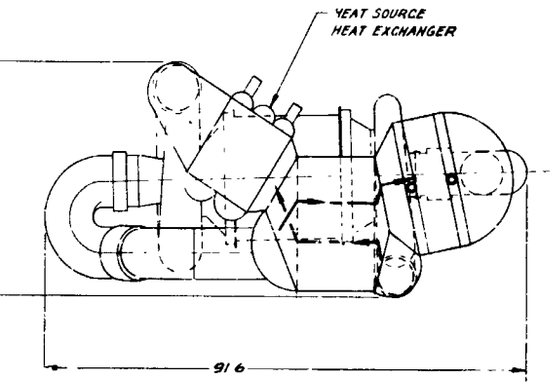

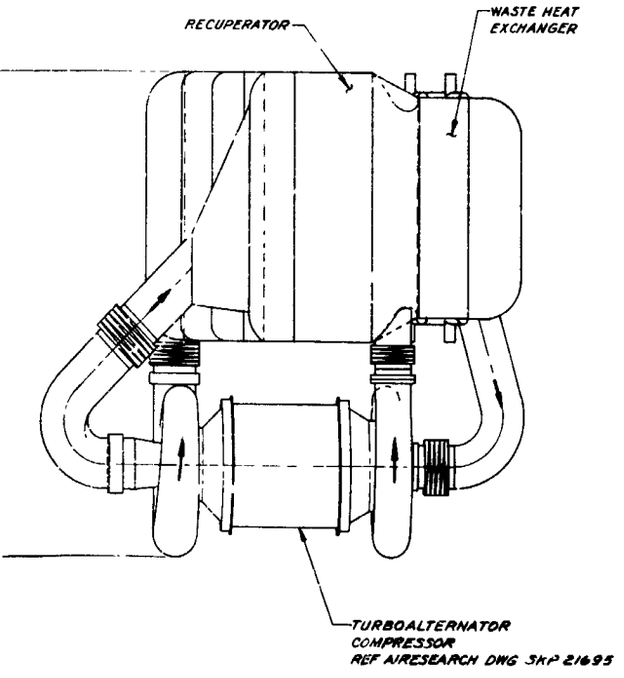

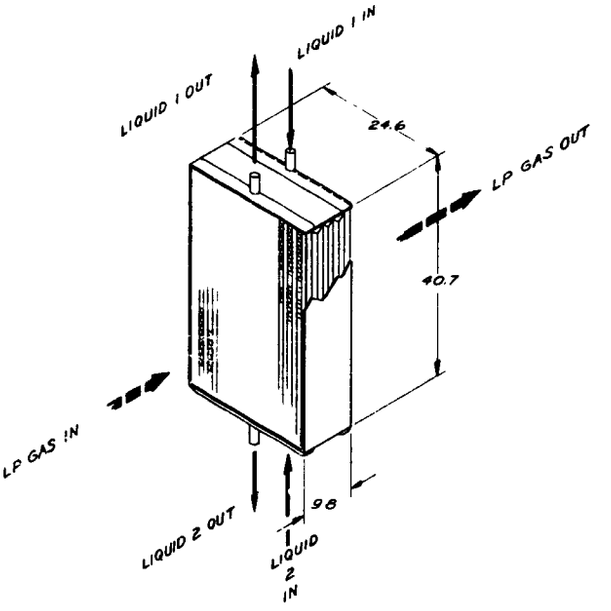

WASTE HEAT EXCHANGER

PRECEDING PAGE BLANK NOT FILMED

1. THIS IS A PRELIMINARY LAYOUT DWG. OVER-ALL PACKAGE DIMENSIONS ARE SUBJECT TO CHANGE AS A RESULT OF DETAILED STRUCTURAL ANALYSIS.
NOTES: UNLESS OTHERWISE SPECIFIED

AIRESEARCH MANUFACTURING COMPANY
LAYOUT

LAYOUT HXDA, TASK 3, CASE III
ADVANCED SYSTEM (160 KWE)

70210 L198559

L198559

FOLDOUT FRAME 2

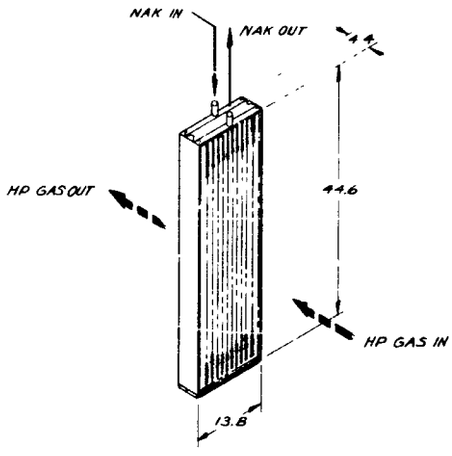

HEAT SOURCE HEAT EXCHANGER

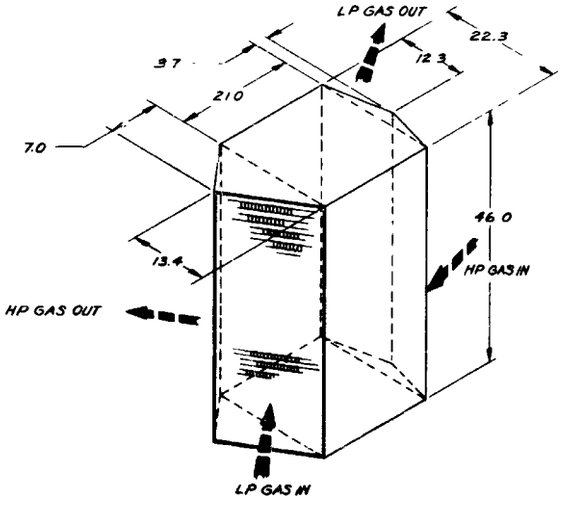

RECUPERATOR

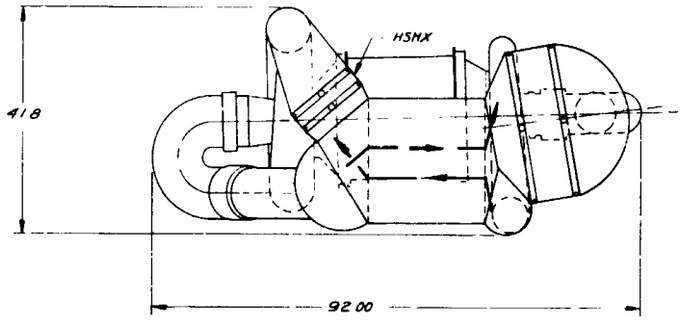

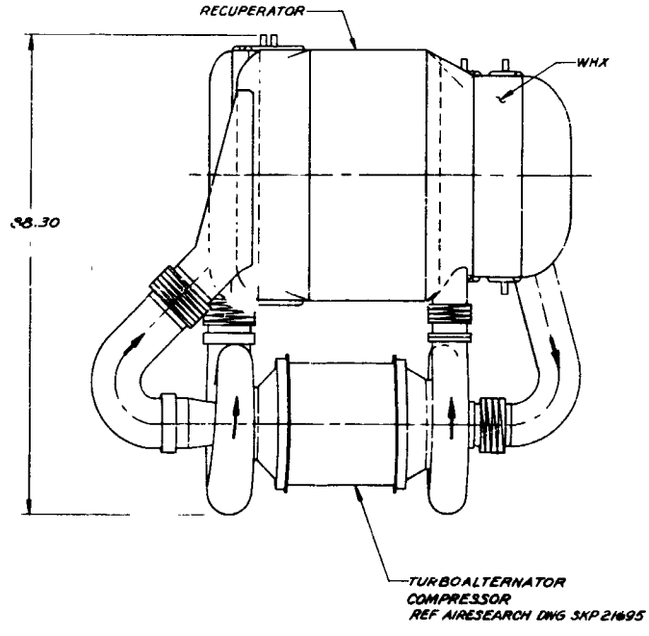

1 THIS IS A PRELIMINARY LAYOUT
PACKAGE DIMENSIONS ARE SU
AS A RESULT OF DETAILED STR
NOTES: UNLESS OTHERWISE SPECIFIED

FOLDOUT FRAME 1

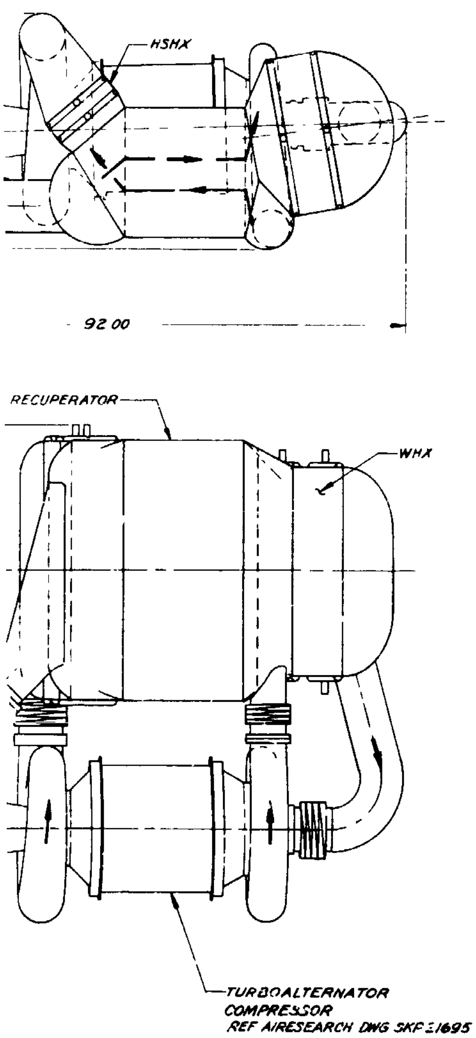

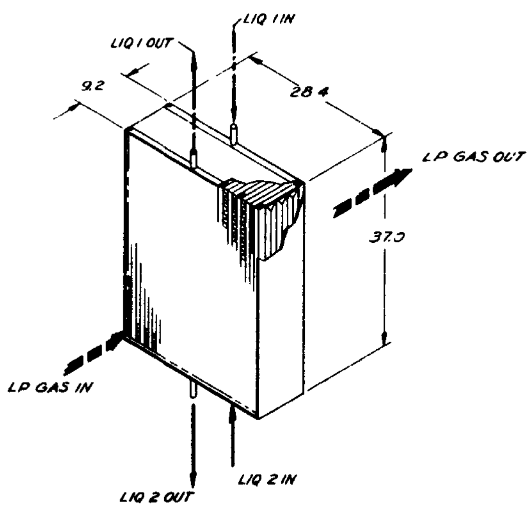

WASTE HEAT EXCHANGER

PRECEDING ... FILMED

NOTES: UNLESS OTHERWISE SPECIFIED

1. THIS IS A PRELIMINARY LAYOUT DRAWING. OVER-ALL PACKAGE DIMENSIONS ARE SUBJECT TO CHANGE AS A RESULT OF DETAILED STRUCTURAL ANALYSIS.

AIRESEARCH MANUFACTURING COMPANY

LAYOUT

LAYOUT, HXDA, TASK 3, CASE IV SNAP-8

24,000 RPM TAC

70210 L/98558

APPENDIX A-I

FLUID PROPERTY DATA

The following figures present the fluid property data used in the study. The data for NaK and Ni are not given since they are well documented in the open literature.

PRECEDING PAGE BLANK NOT FILMED

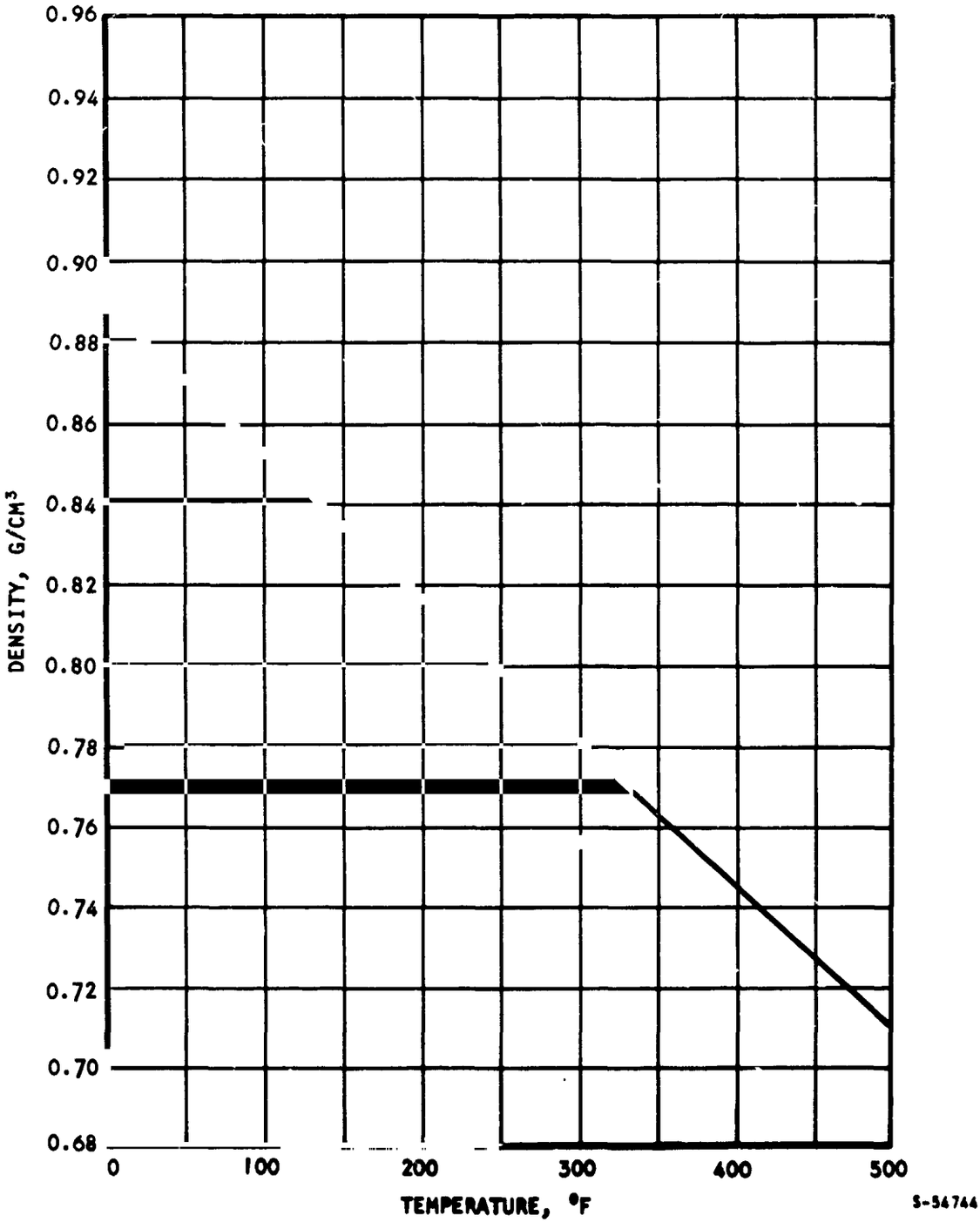

Figure A1-1. Density vs Temperature for Humble 3152

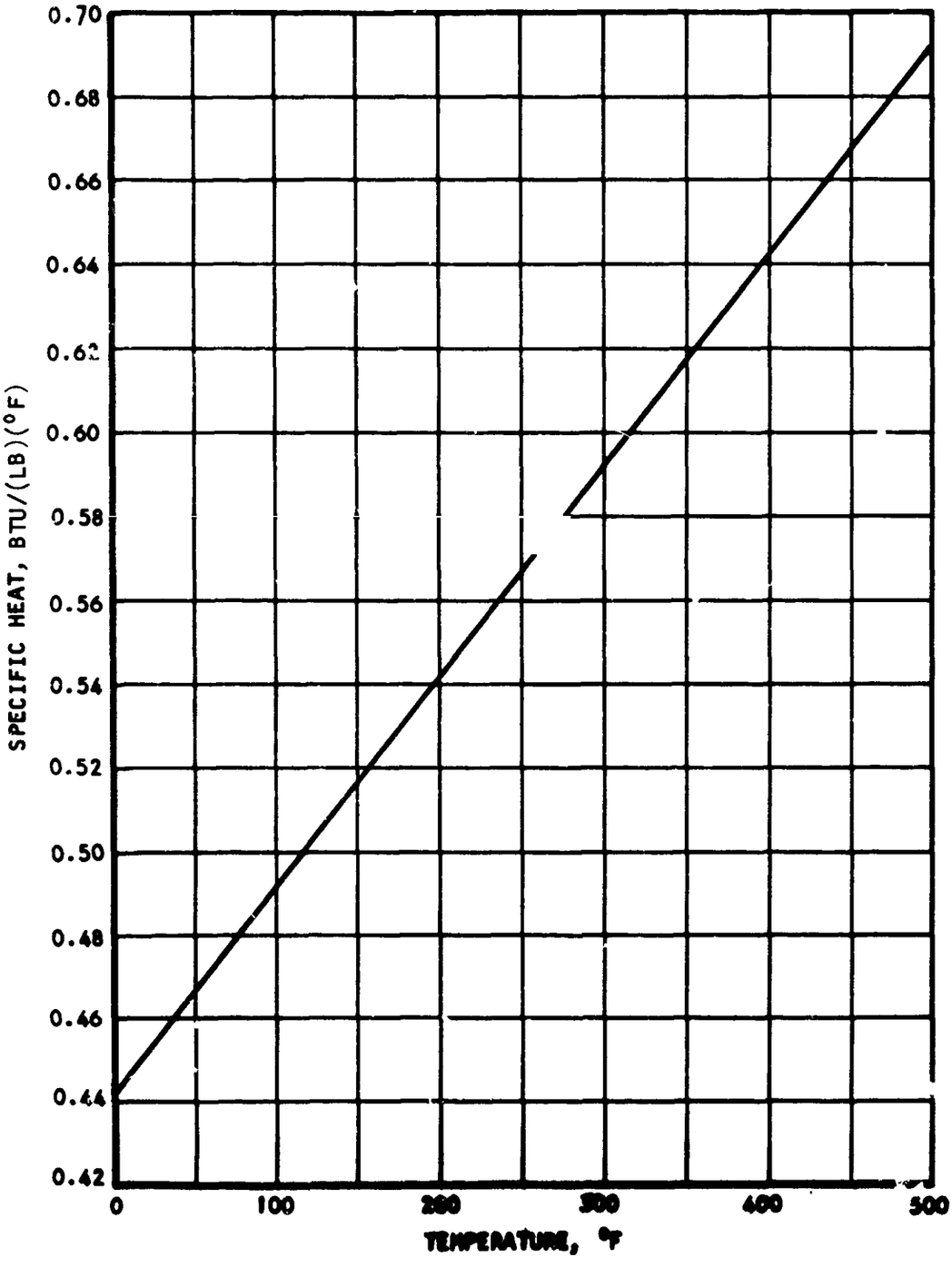

S-54745

Figure AI-2. Specific Heat vs Temperature for Humble 3152

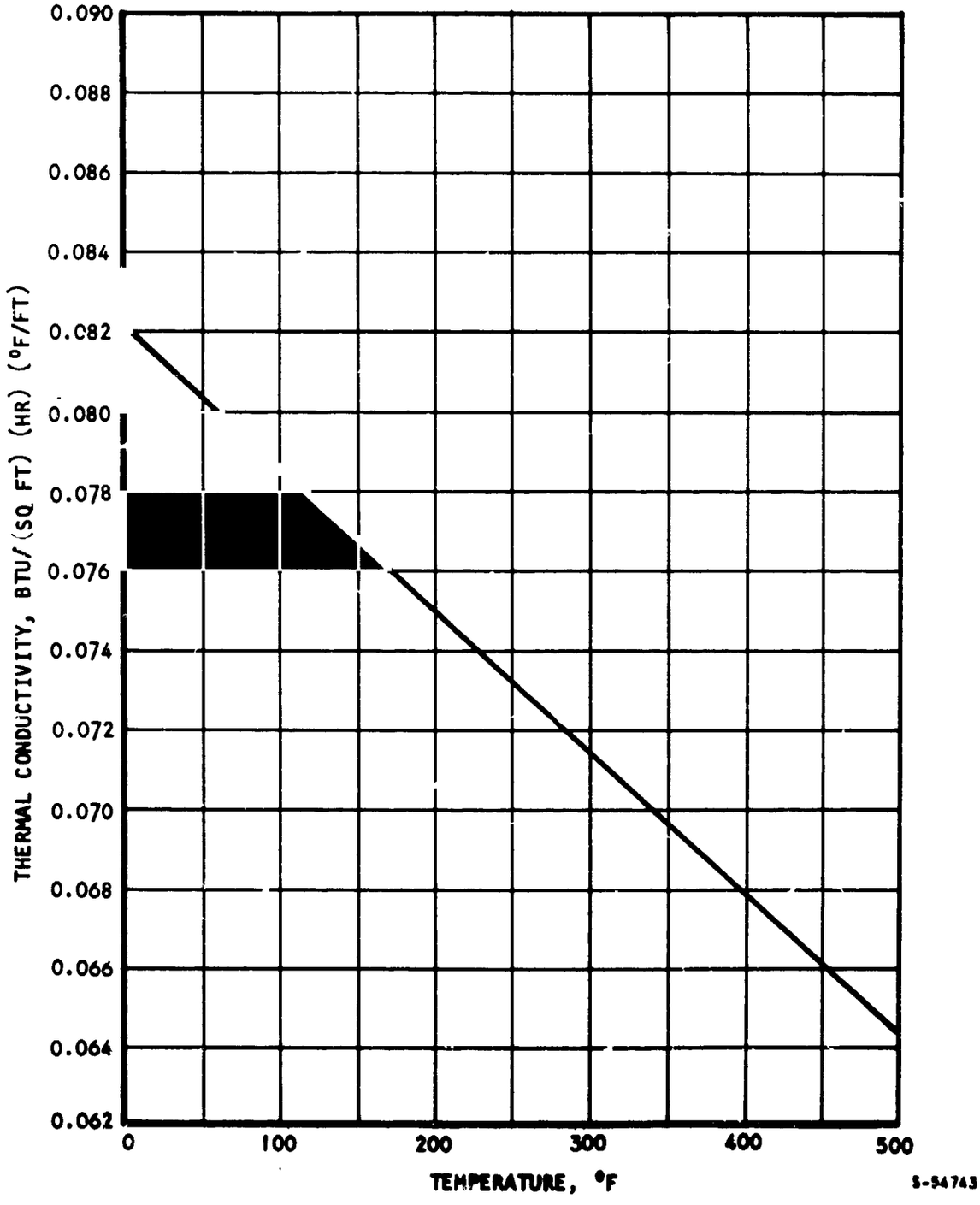

Figure AI-3. Thermal Conductivity vs Temperature for Humble 3152

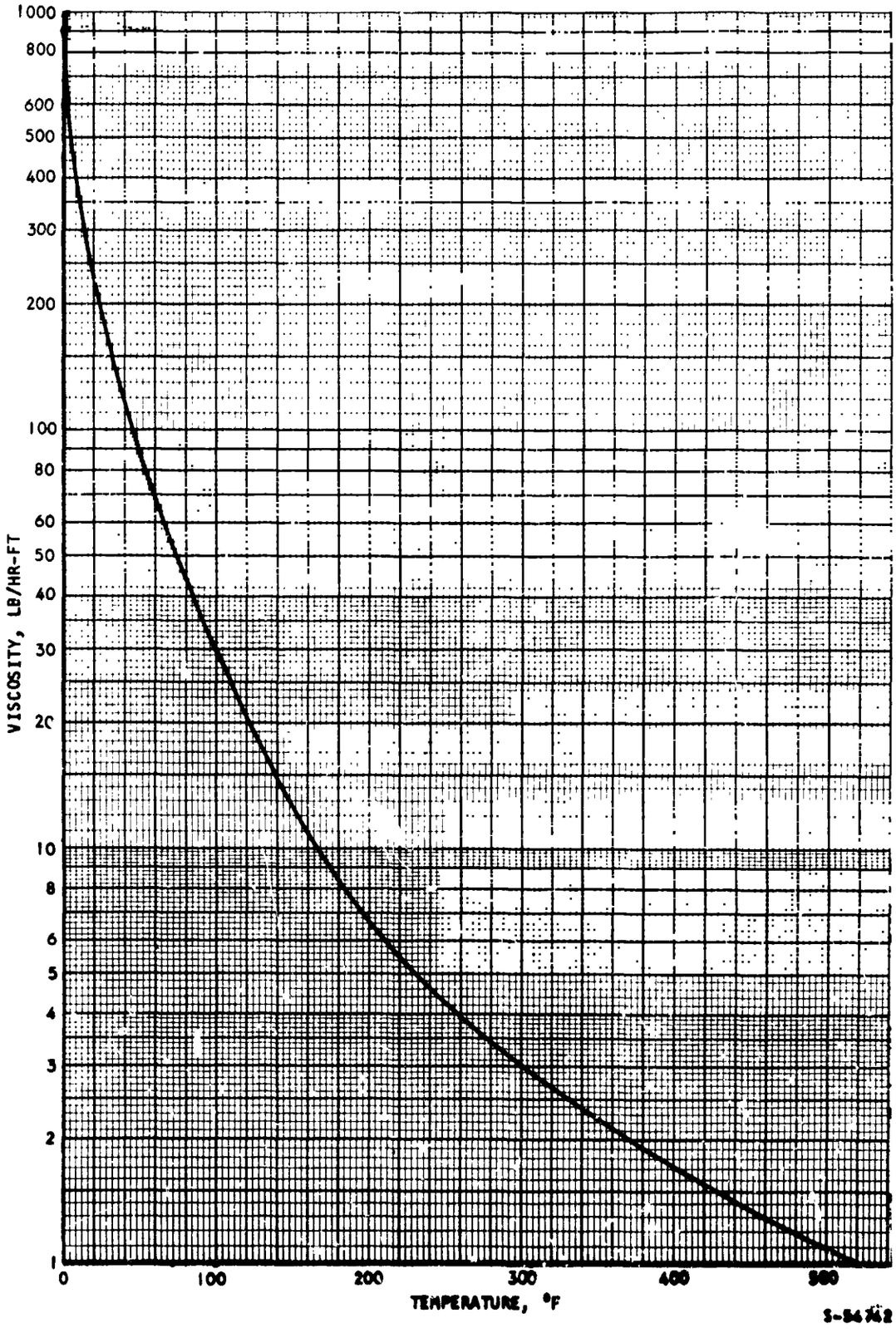

Figure A1-4. Viscosity vs Temperature for Humble 3152

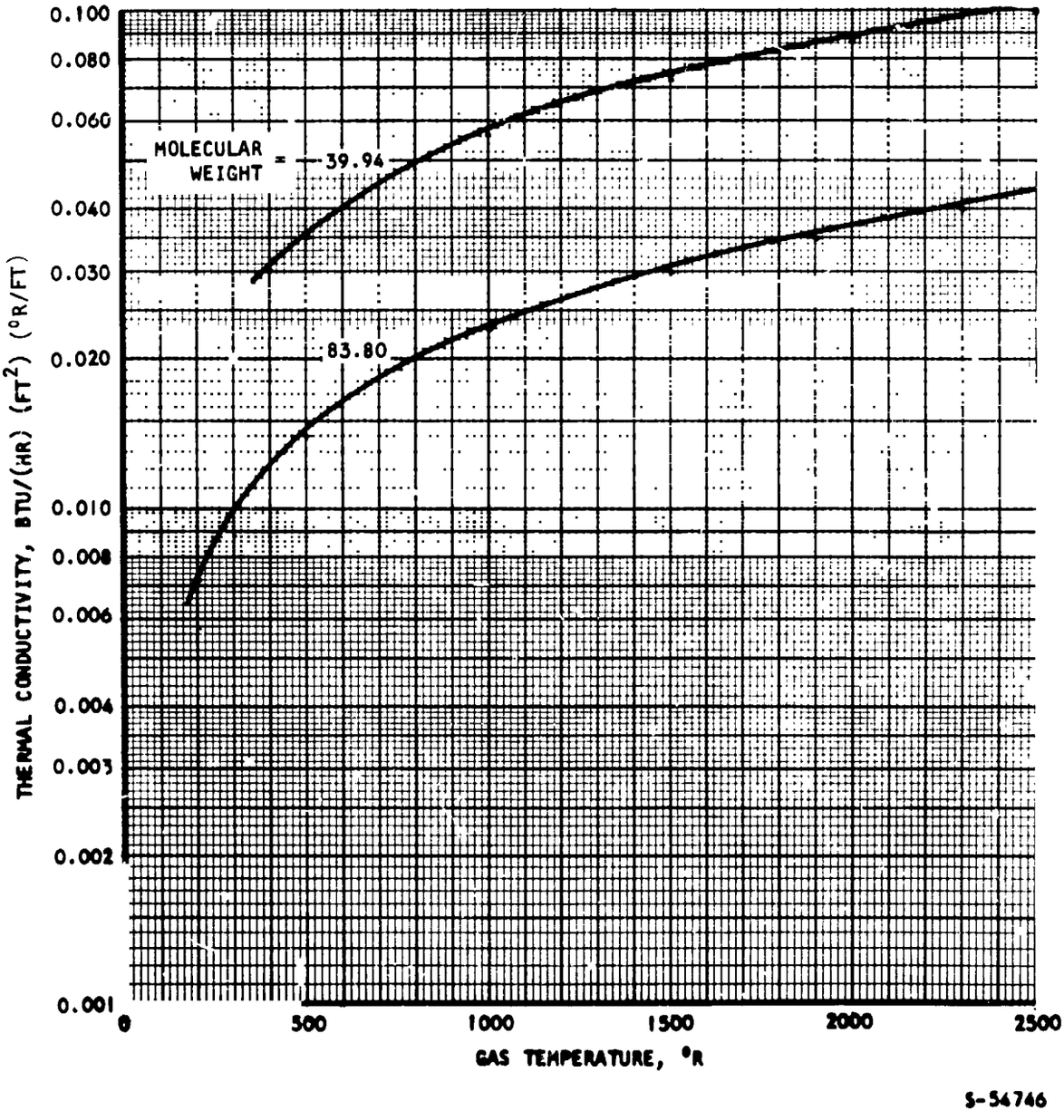

Figure AI-5. Thermal Conductivity vs Temperature for Xe-He Mixtures

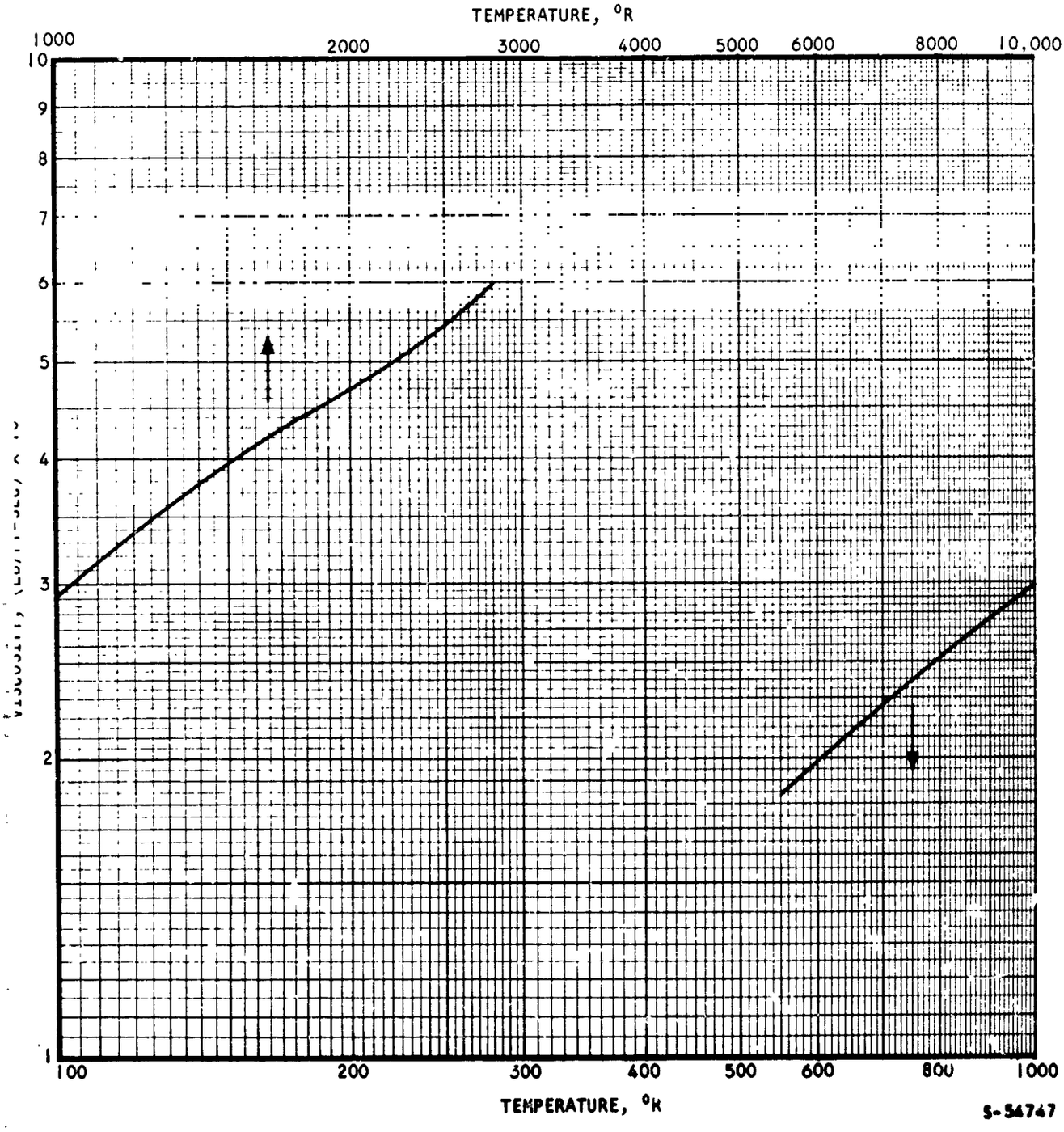

Figure AI-6. Viscosity vs Temperature for Xe-He 39.94

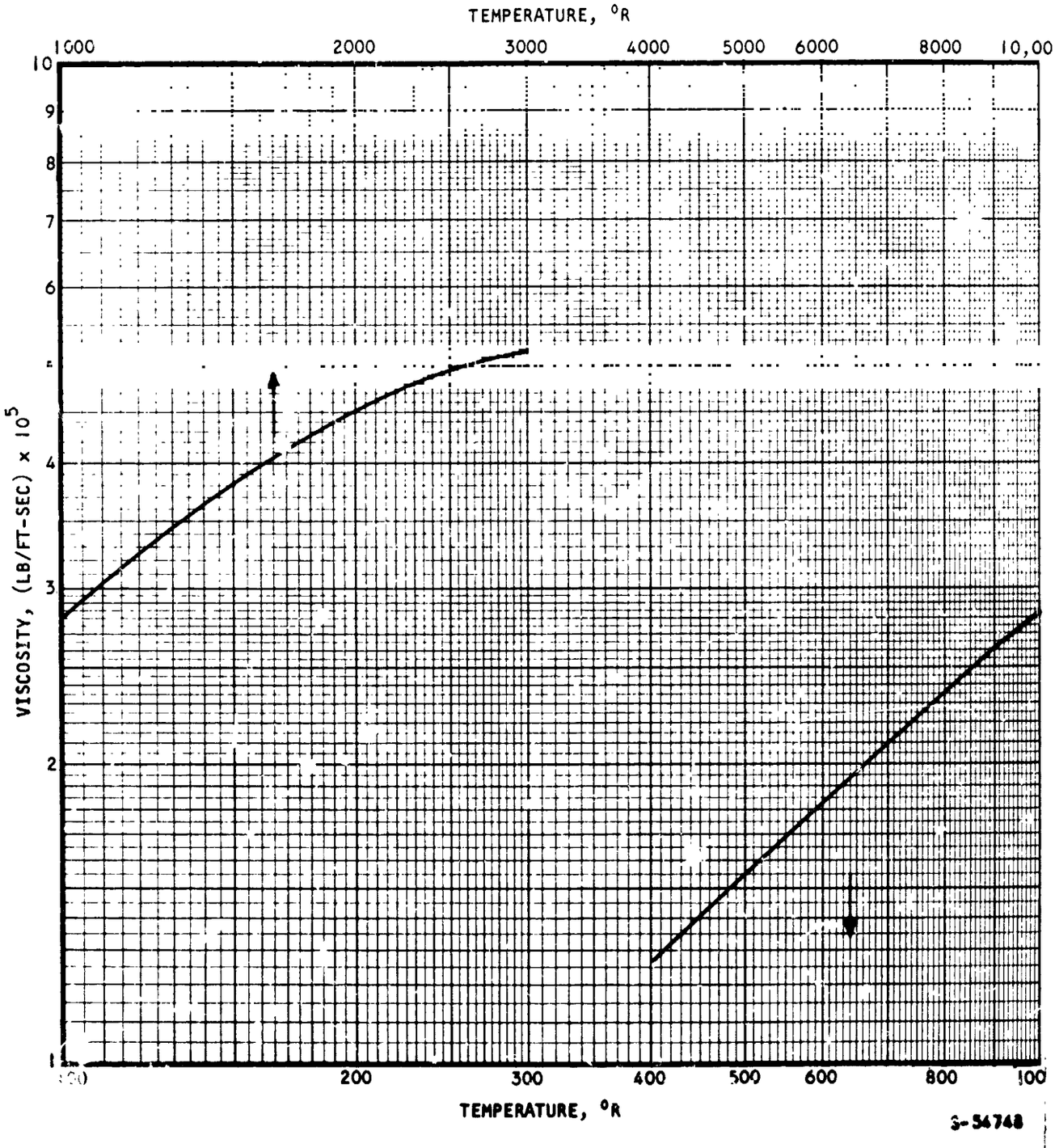

Figure AI-7. Viscosity vs Temperature for Xe-He 83.8

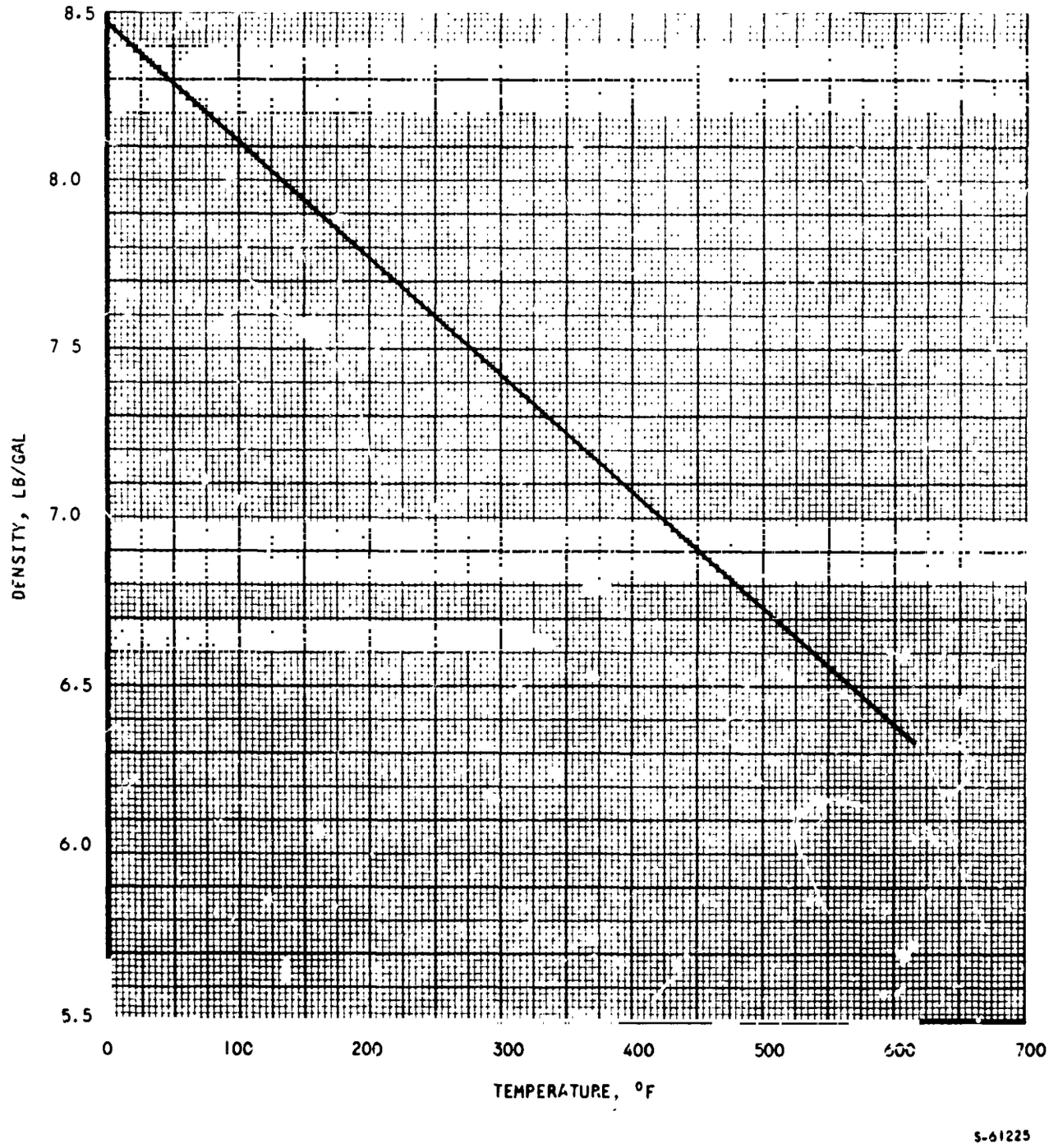

Figure AI-8. Density vs Temperature for MIPB
(Monoisopropyl-Biphenyl)

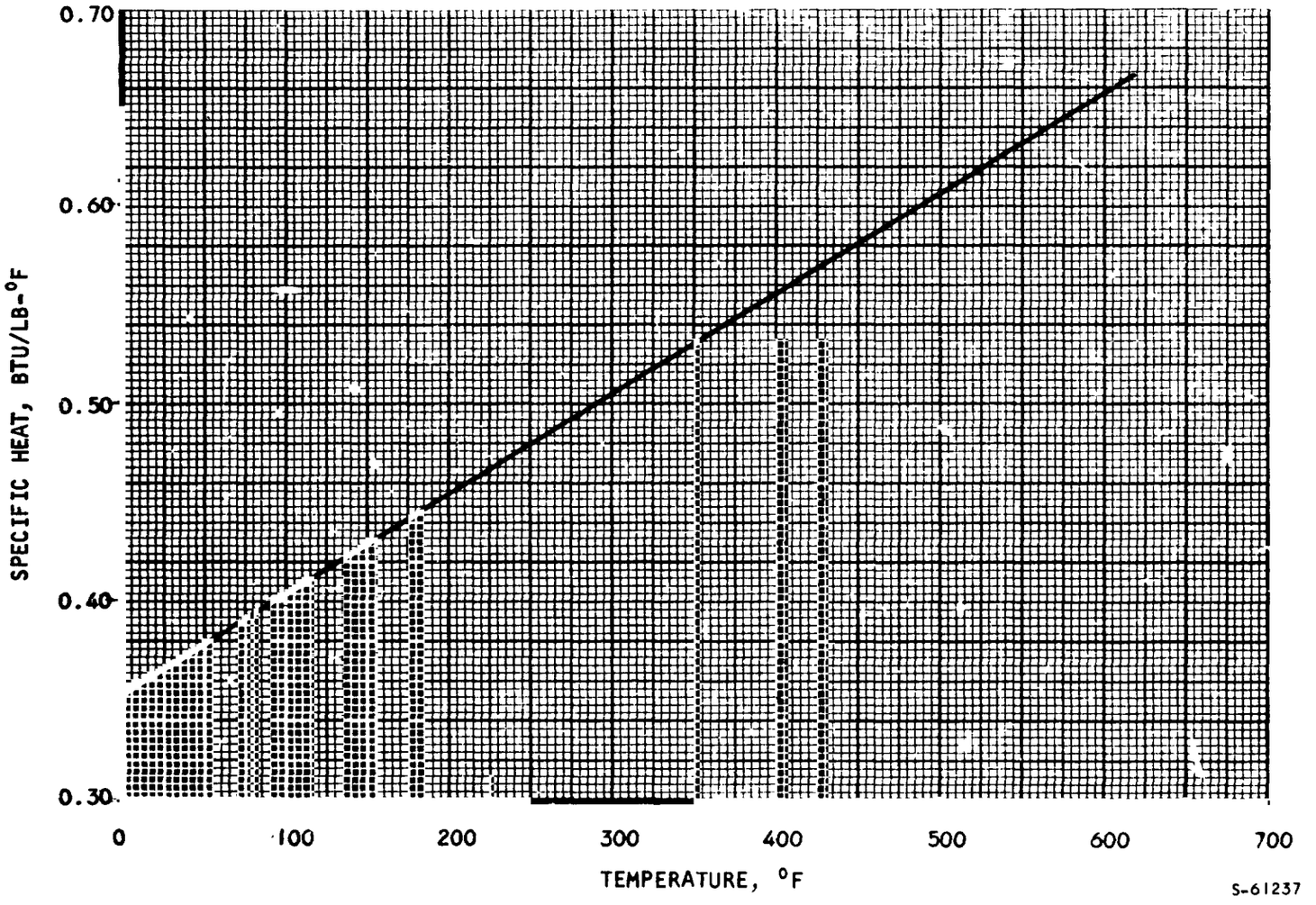

Figure AI-9. Specific Heat vs Temperature for MIPB (Monoisopropyl-Biphenyl)

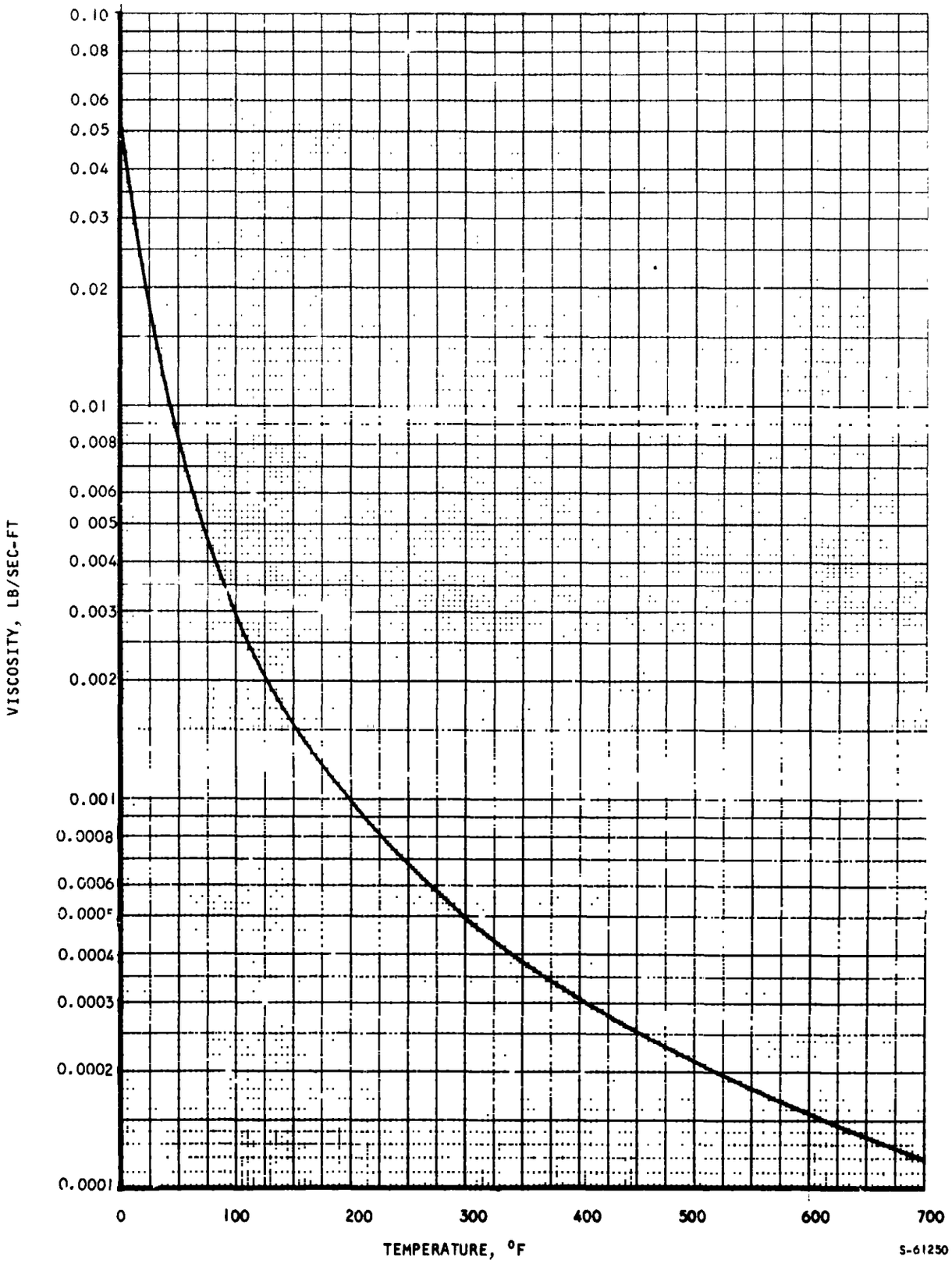

Figure AI-10. Viscosity of MIPB

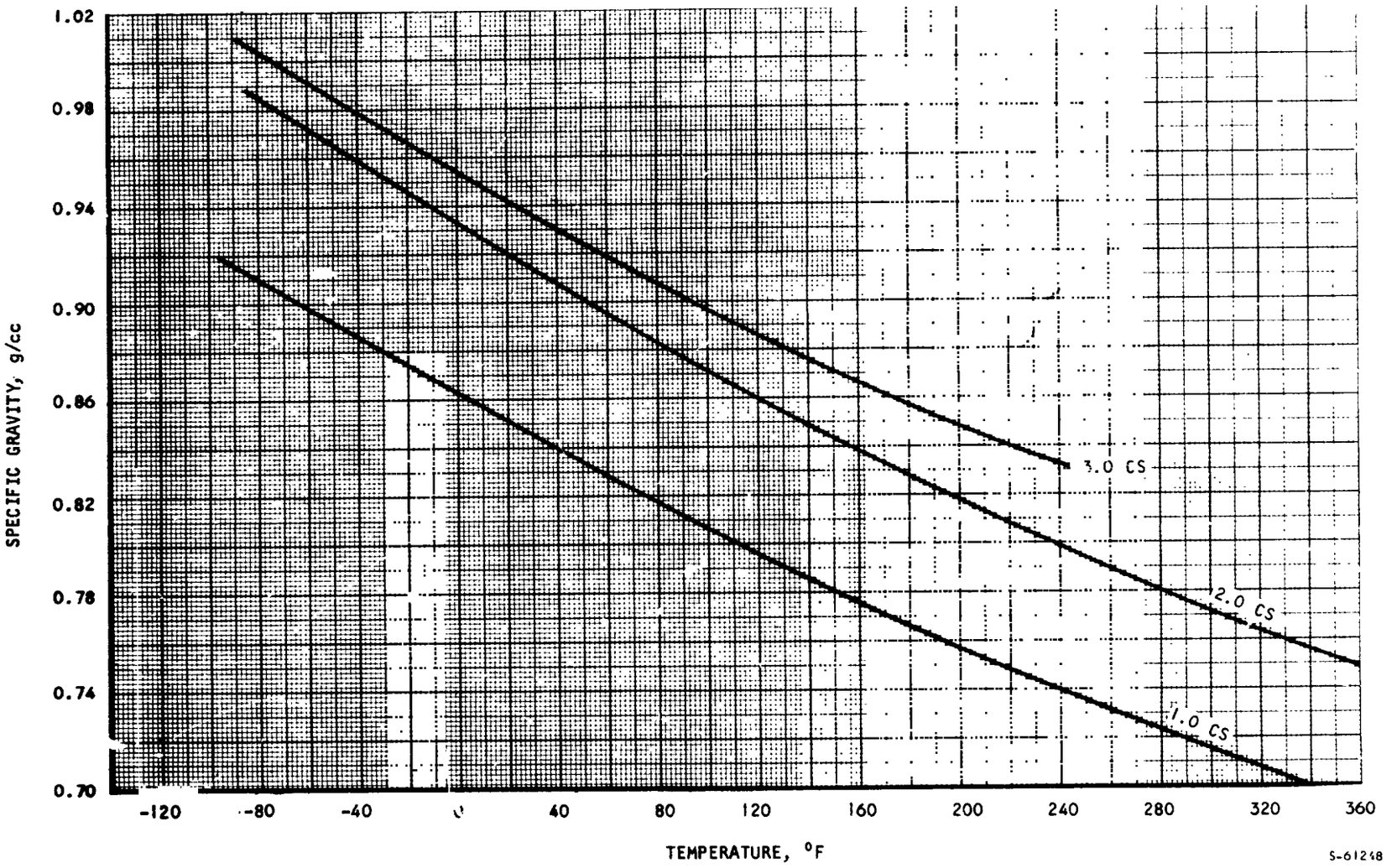

Figure A1-11. Specific Gravity of Dow Corning 200 Fluids

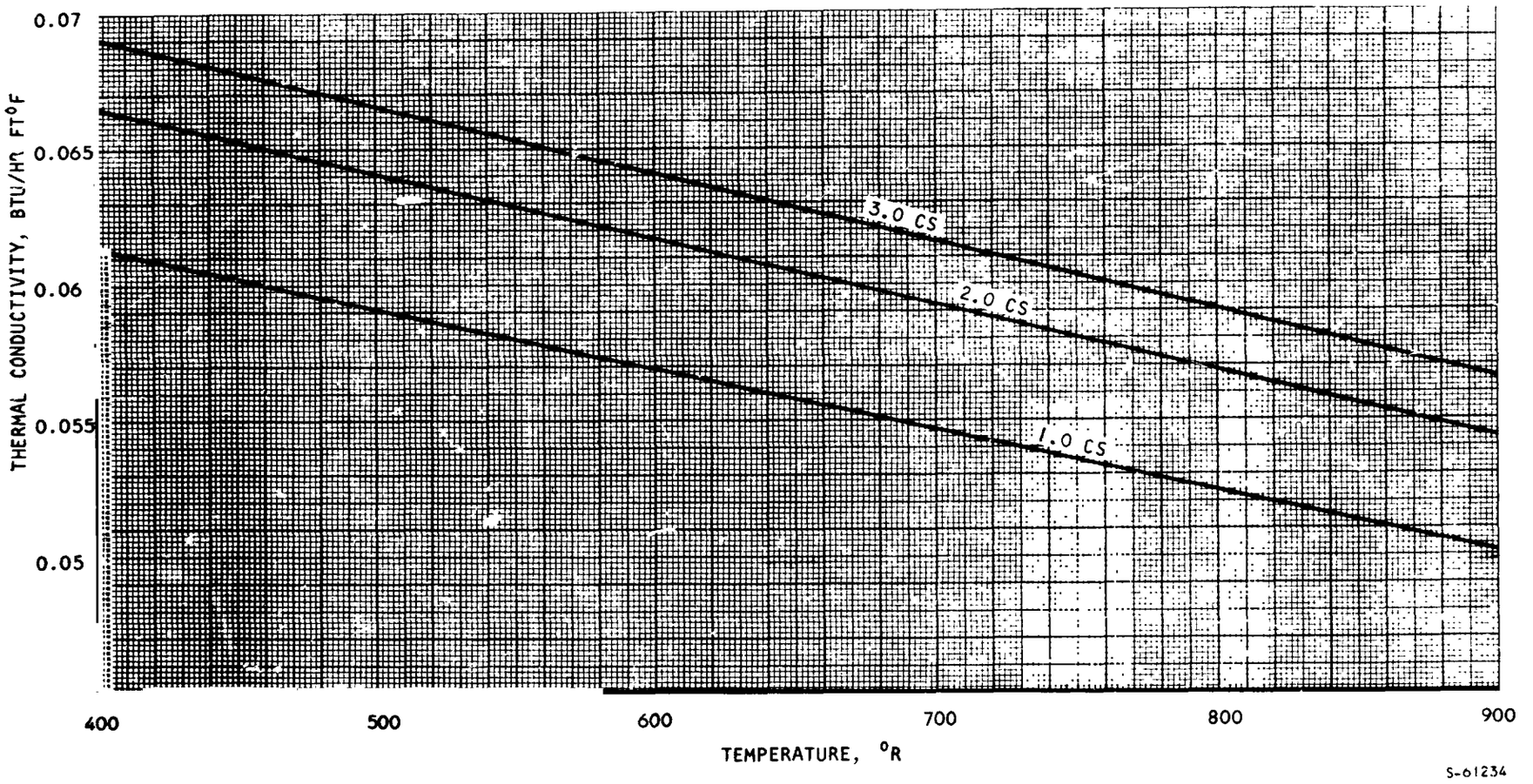

Figure AI-12. Thermal Conductivity of Dow Corning 200 Fluids

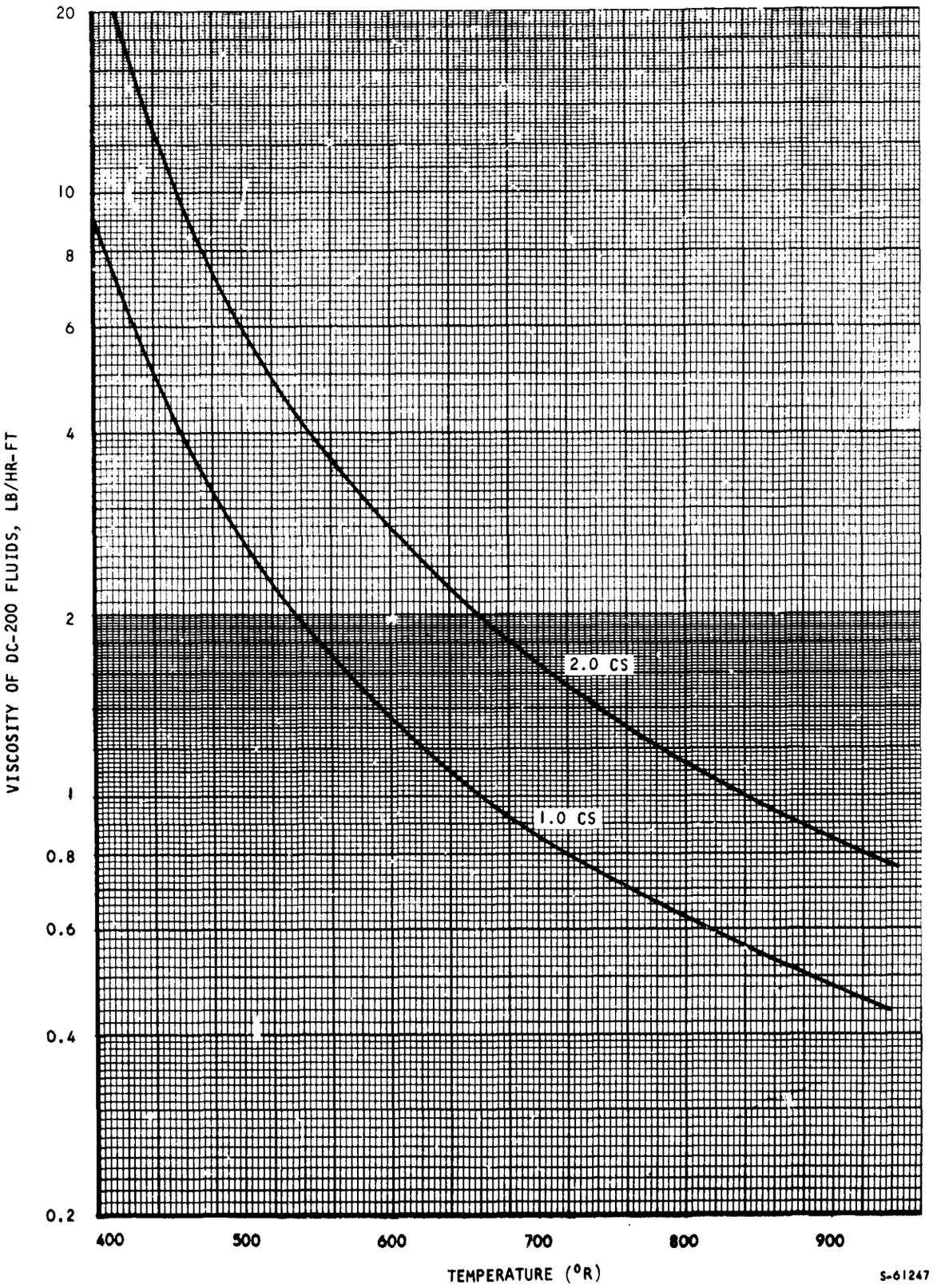

Figure AI-13. Viscosity of Dow Corning 200 Fluids

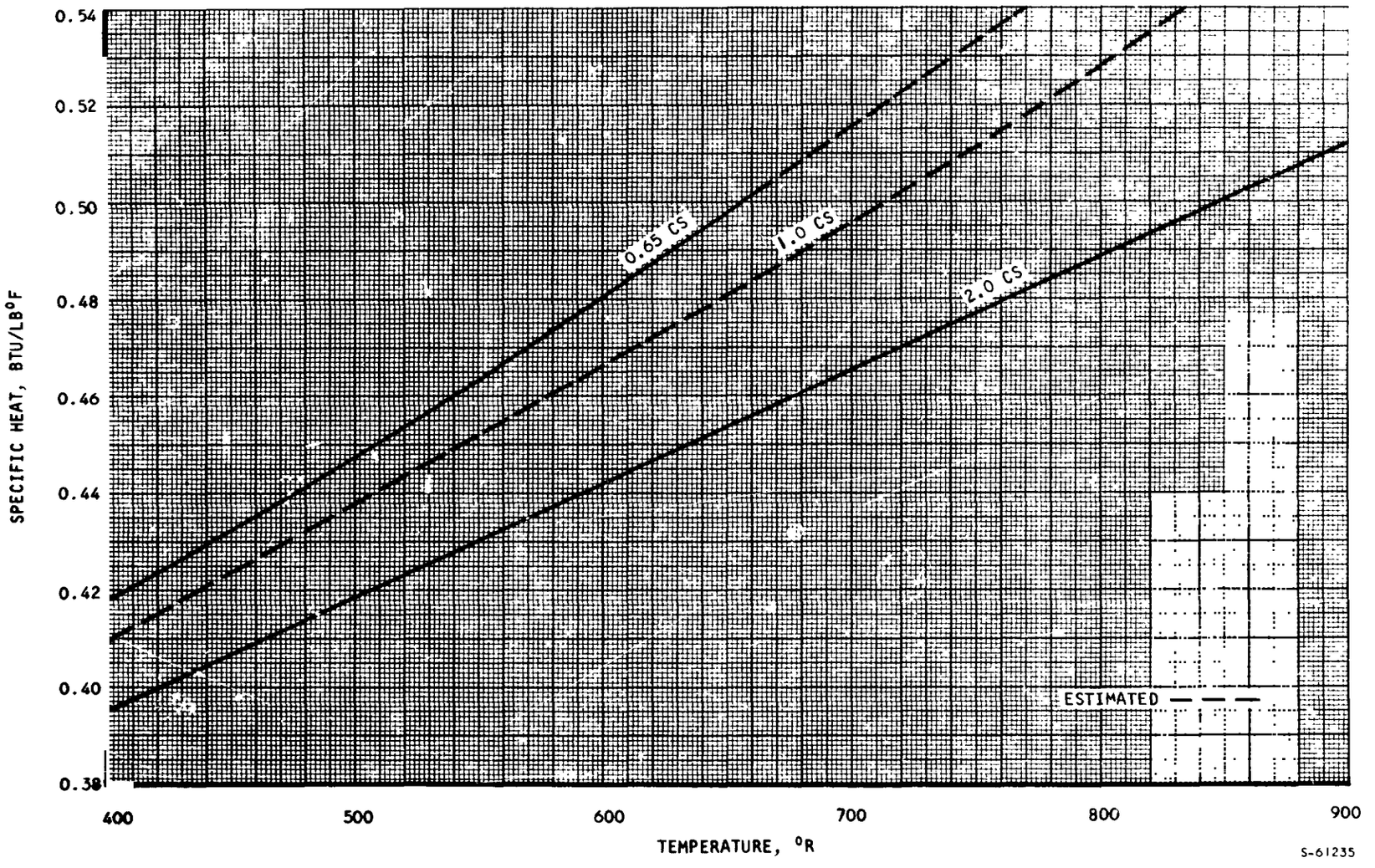

Figure AI-14. Specific Heat of Dow Corning 200 Fluids

APPENDIX A-2

STRUCTURAL PROPERTY DATA

The following figures present the structural property data used in the study.

PRECEDING PAGE BLANK NOT FILMED

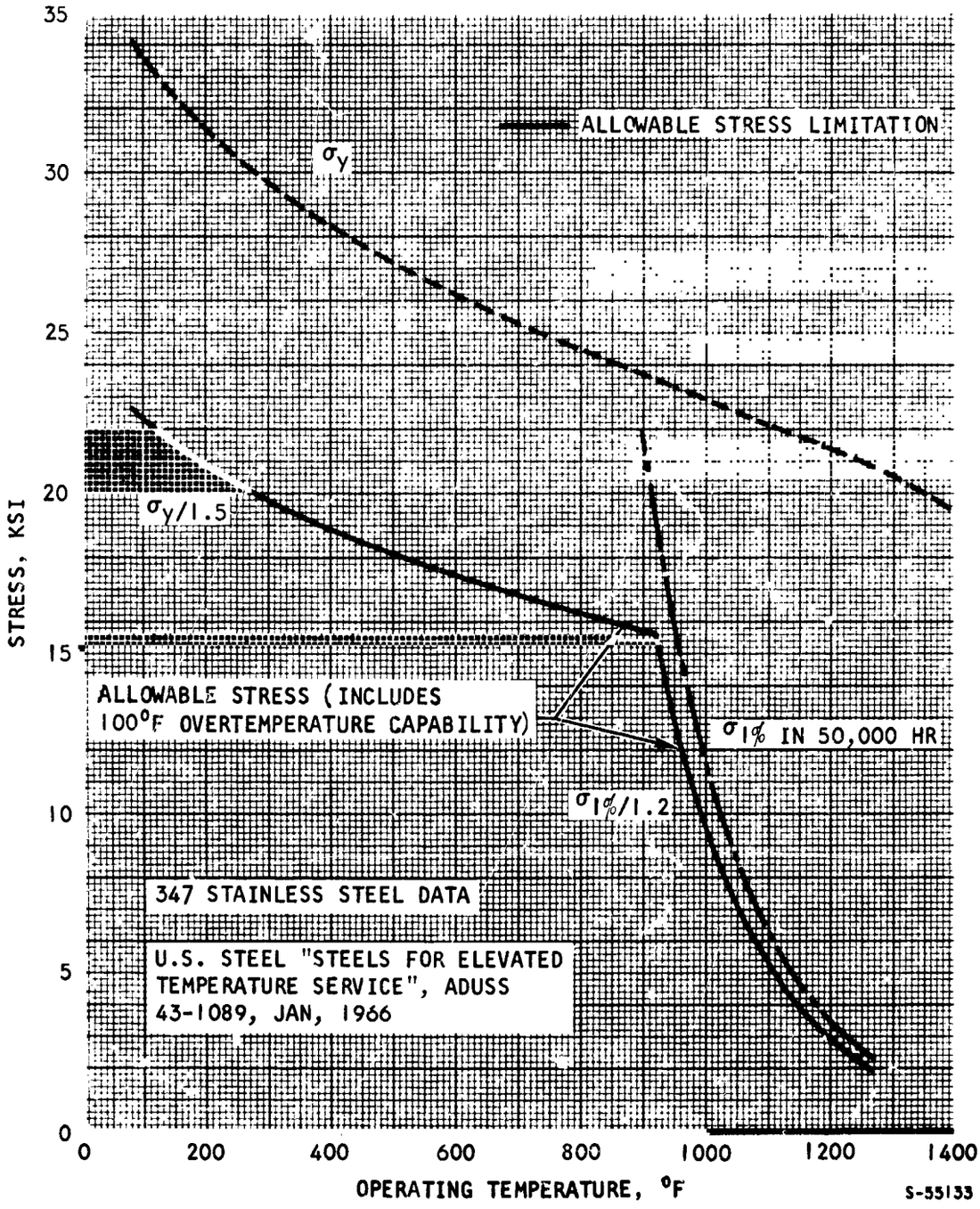

Figure A2-1. 347 Stainless Steel Allowable Stress vs Operating Temperature for 50,000 Hr Operation

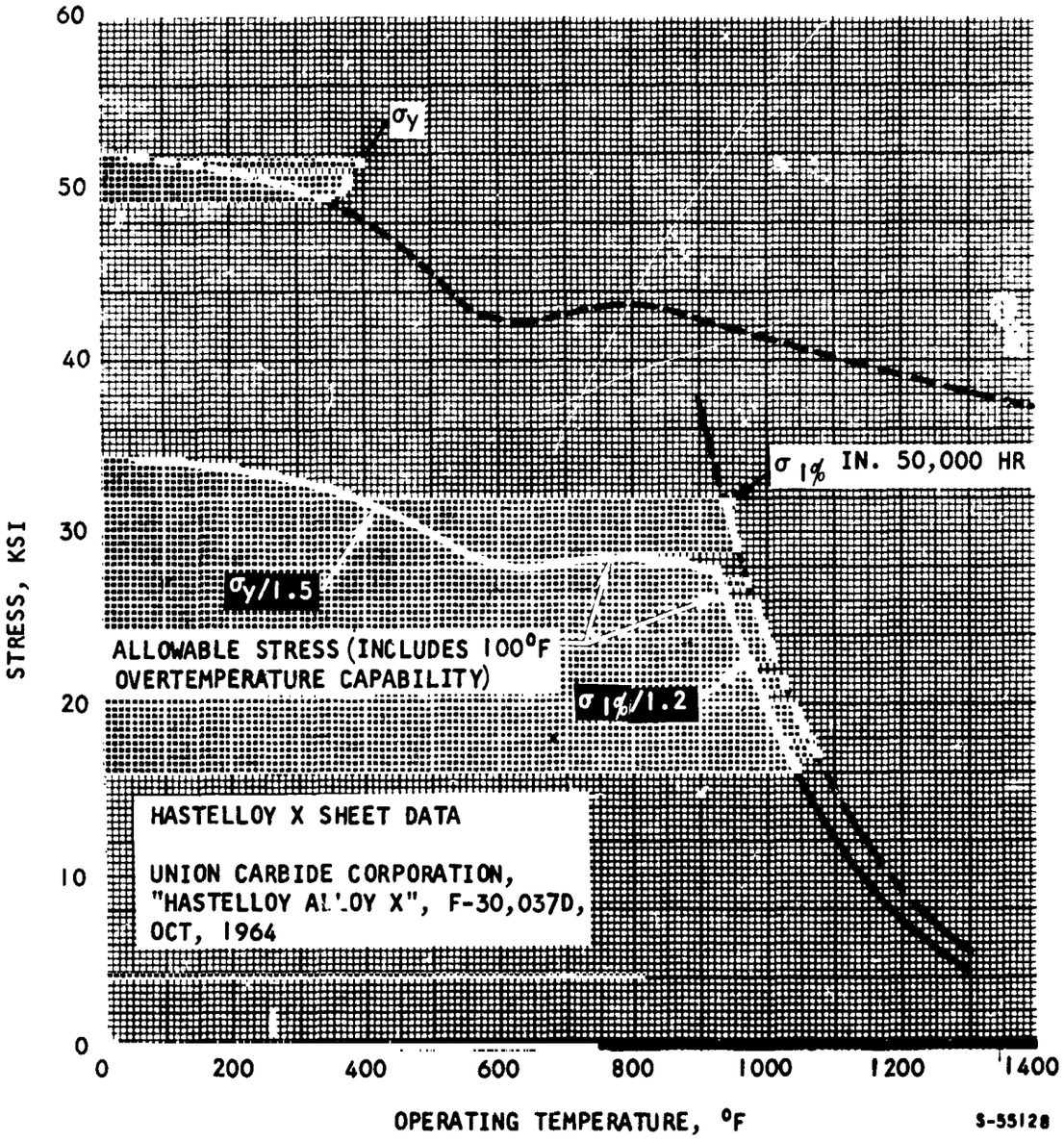

Figure A2-2. Hastelloy X Allowable Stress vs Operating Temperature for 50,000 Hour Operation

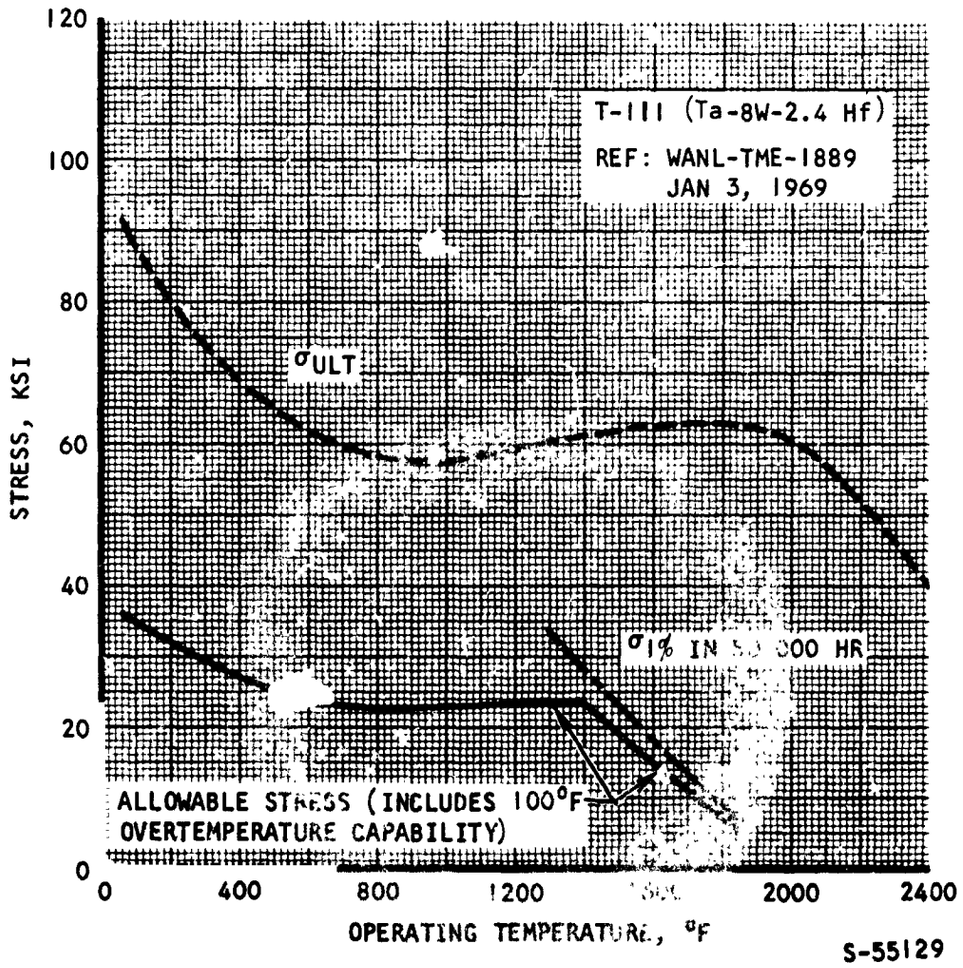

Figure A2-3. Tantalum Alloy T-111 Allowable Stress vs Operating Temperature for 50,000 Hr Operation

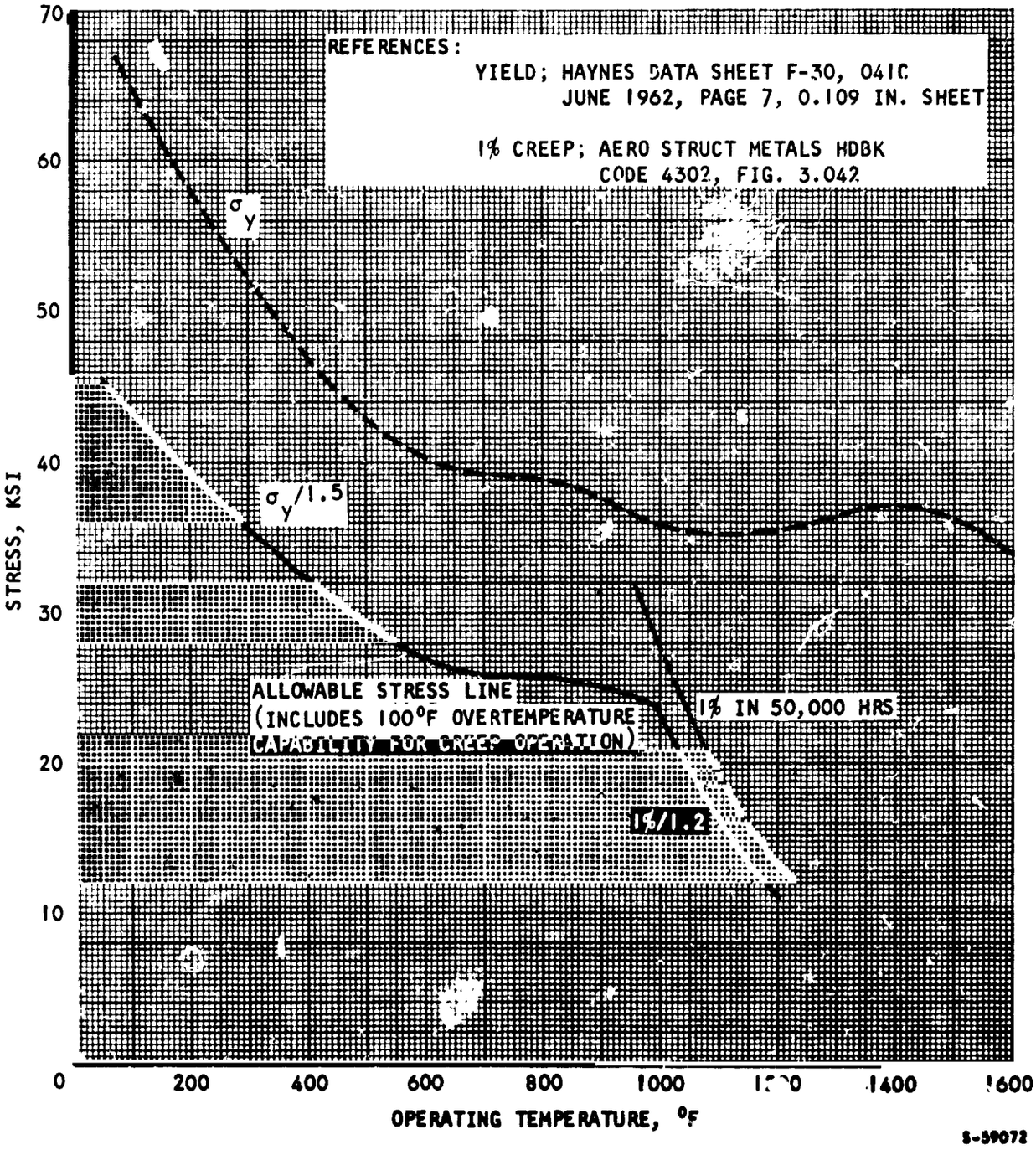

Figure A2-4. Haynes 25 Allowable Stress vs Operating Temperature for 50,000 hr Operation

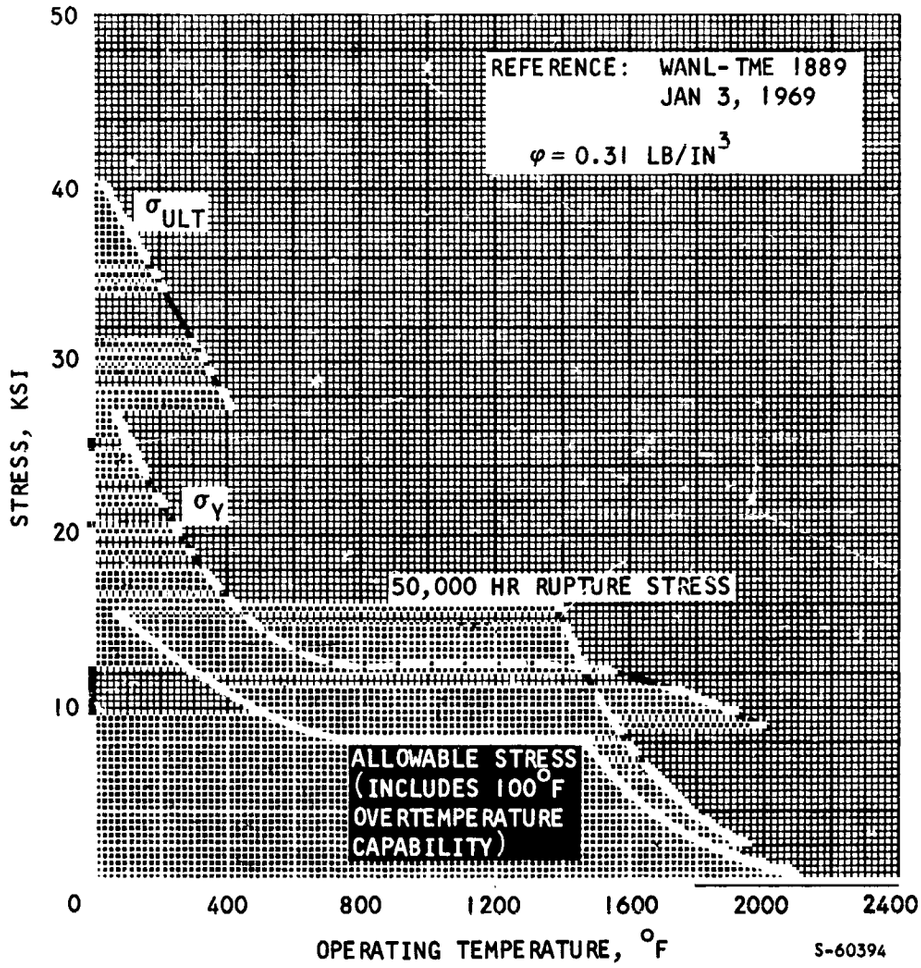

Figure A2-5. Columbium-1Zr Allowable Stress vs Operating Temperature for 50,000 hr Operation

APPENDIX A-3

COMPUTER OUTPUT SUMMARY

The following pages present the computer output summary sheets for the 24 design points for Task 2.

WEIGHT OPTIMIZED HEAT EXCHANGER DESIGNS

FOR TOTAL HXDA SYSTEM PRESSURE DROP

OF 8.00 PERCENT

DUCT PRESSURE DROP = 2.00 PERCENT

CASE I-S THRU III-S (SPLIT RECUPERATOR)

	RECUPERATOR	WHX	HSHX	TOTAL
WEIGHT(LBS)	1058.8	1976.5	242.2	3277.5
PRESSURE DROP(PCT)	4.40	1.45	0.15	6.00
FLOW LENGTH(INCHES)	22.8	22.7	2.0	
STACK HEIGHT(INCHES)	63.5			
TUBE LENGTH(INCHES)		36.1	25.0	
NO-FLOW LENGTH(INCHES)	14.4	41.2	33.0	
NO. OF TUBES		37964	84	

DUCT SYSTEM DATA

WEIGHT(LBS)	DIA(INCH)	DELTA P(PCT)	HXDA WEIGHT
1096.62	7.50	2.00	4374.16

DP1	DP2	DP3	DP4	DP5	DP6	DP7	DP8	DP9	DP10	DP11	DP12
0.27	0.06	0.08	0.11	0.03	0.03	0.07	0.00	0.41	0.38	0.04	0.02

W1	W2	W3	W4	W5	W6	W7	W8	W9	W10	W11	W12
47.69	42.40	53.48	39.87	51.72	69.02	61.94	83.24	223.02	264.20	97.38	62.66

D1	D2	D3	D4	D9	D10
7.50	9.04	10.00	8.10	8.58	9.10

Figure A3-1. Case I - Heat Exchanger and Ducting Summary (Split Recuperator)

WEIGHT OPTIMIZED HEAT EXCHANGER DESIGNS

FOR TOTAL HXDA SYSTEM PRESSURE DROP

OF 6.00 PERCENT

DUCT PRESSURE DROP = 1.50 PERCENT

CASE I-S THRU III-S (SPLIT RECUPERATOR)

	RECUPERATOR	WHX	HSHX	TOTAL
WEIGHT(LBS)	1157.7	1848.8	220.0	3226.5
PRESSURE DROP(PCT)	3.20	1.15	0.15	4.50
FLOW LENGTH(INCHES)	22.5	21.1	2.0	
STACK HEIGHT(INCHES)	64.0			
TUBE LENGTH(INCHES)		36.8	25.0	
NO-FLOW LENGTH(INCHES)	16.0	40.7	30.0	
NO. OF TUBES		35057	76	

DUCT SYSTEM DATA

WEIGHT(LBS)	DIA(INCH)	DELTA P(PCT)	HXDA WEIGHT
1121.05	7.72	1.50	4347.50

DP1	DP2	DP3	DP4	DP5	DP6	DP7	DP8	DP9	DP10	DP11	DP12
0.20	0.05	0.07	0.08	0.02	0.04	0.04	0.00	0.30	0.28	0.03	0.03

W1	W2	W3	W4	W5	W6	W7	W8	W9	W10	W11	W12
49.07	43.66	55.58	41.02	53.72	59.02	73.29	83.94	232.08	273.04	102.81	53.84

D1	D2	D3	D4	D9	D10
7.72	9.30	10.28	8.33	8.83	9.37

Figure A3-2. Case II - Heat Exchanger and Ducting Summary (Split Recuperator)

WEIGHT OPTIMIZED HEAT EXCHANGER DESIGNS

FOR TOTAL HXDA SYSTEM PRESSURE DROP

OF 4.00 PERCENT

DUCT PRESSURE DROP = 1.00 PERCENT

CASE I-S THRU III-S (SPLIT RECUPERATOR)

	RECUPERATOR	WHX	HSHX	TOTAL
WEIGHT(LBS)	1385.3	1862.0	201.5	3448.9
PRESSURE DROP(PCT)	2.20	0.65	0.15	3.00
FLOW LENGTH(INCHES)	22.6	18.1	2.0	
STACK HEIGHT(INCHES)	67.5			
TUBE LENGTH(INCHES)		39.7	25.0	
NO-FLOW LENGTH(INCHES)	18.4	45.2	27.5	
NO. OF TUBES		33336	70	

DUCT SYSTEM DATA

WEIGHT(LBS)	DIA(INCH)	DELTA P(PCT)	HXDA WEIGHT
1280.17	8.53	1.00	4729.05

DP1	DP2	DP3	DP4	DP5	DP6	DP7	DP8	DP9	DP10	DP11	DP12
0.11	0.03	0.04	0.04	0.01	0.04	0.02	0.00	0.29	0.15	0.01	0.03

W1	W2	W3	W4	W5	W6	W7	W8	W9	W10	W11	W12
54.25	50.59	63.73	45.35	62.76	50.03	95.07	101.19	267.39	316.46	127.39	45.94

D1	D2	D3	D4	D9	D10
8.53	10.28	11.37	9.21	9.76	10.36

Figure A3-3. Case III - Heat Exchanger and Ducting Summary (Split Recuperator)

WEIGHT OPTIMIZED HEAT EXCHANGER DESIGNS

FOR TOTAL HXDA SYSTEM PRESSURE DROP

OF 8.00 PERCENT

DUCT PRESSURE DROP = 2.00 PERCENT

CASE I-A THRU III-A

	RECUPERATOR	WHX	HSHX	TOTAL
WEIGHT(LBS)	1028.0	2534.6	348.0	3910.6
PRESSURE DROP(PCT)	4.80	1.05	0.15	6.00
FLOW LENGTH(INCHES)	27.3	36.5	4.0	
STACK HEIGHT(INCHES)	31.8			
TUBE LENGTH(INCHES)		37.3	21.5	
NO-FLOW LENGTH(INCHES)	14.4	25.4	19.9	
NO. OF TUBES		38228	82	

DUCT SYSTEM DATA

WEIGHT(LBS)	DIA(INCH)	DELTA P(PCT)	HXDA WEIGHT
1073.85	5.54	2.00	4984.49

DP1	DP2	DP3	DP4	DP5	DP6	DP7	DP8	DP9	DP10	DP11	DP12
0.66	0.15	0.43	0.25	0.08	0.04	0.10	0.00	1.35	0.98	0.10	0.03

W1	W2	W3	W4	W5	W6	W7	W8	W9	W10	W11	W12
35.26	46.96	55.27	29.48	23.85	78.27	59.65	82.69	239.27	294.12	61.16	67.87

D1	D2	D3	D4	D9	D10
5.54	6.68	7.39	5.99	6.34	6.73

Figure A3-4. Case IA - Heat Exchanger and Ducting Summary

WEIGHT OPTIMIZED HEAT EXCHANGER DESIGNS

FOR TOTAL HXDA SYSTEM PRESSURE DROP

OF 6.00 PERCENT

DUCT PRESSURE DROP = 1.50 PERCENT

CASE 1-A THRU 111-A

	RECUPERATOR	HHX	HSHX	TOTAL
WEIGHT(LBS)	1106.4	2319.8	315.5	3741.7
PRESSURE DROP(PCT)	3.50	0.85	0.15	4.50
FLOW LENGTH(INCHES)	27.5	34.6	4.0	
STACK HEIGHT(INCHES)	31.4			
TUBE LENGTH(INCHES)		38.3	21.5	
NO-FLOW LENGTH(INCHES)	15.1	24.9	18.0	
NO. OF TUBES		35208	74	

DUCT SYSTEM DATA

WEIGHT(LBS)	DIA(INCH)	DELTA P(PCT)	HXD WEIGHT
1093.32	5.69	1.50	48[illegible]5.05

DP1	DP2	DP3	DP4	DP5	DP6	DP7	DP8	DP9	DP10	DP11	DP12
0.49	0.11	0.37	0.19	0.05	0.04	0.06	0.00	0.92	0.73	0.07	0.03

W1	W2	W3	W4	W5	W6	W7	W8	W9	W10	W11	W12
36.17	48.95	57.46	30.24	24.55	65.83	69.27	84.46	249.07	306.61	63.47	57.25

D1	D2	D3	D4	D9	D10
5.69	6.85	7.58	6.14	6.51	6.90

Figure A3-5. Case IIA - Heat Exchanger and Ducting Summary

WEIGHT OPTIMIZED HEAT EXCHANGER DESIGNS

FOR TOTAL HXDA SYSTEM PRESSURE DROP

OF 4.00 PERCENT

DUCT PRESSURE DROP = 1.00 PERCENT

CASE I-A THRU III-A

	RECUPERATOR	WHX	HSHX	TOTAL
WEIGHT(LBS)	1299.0	2191.3	289.6	3779.9
PRESSURE DROP(PCT)	2.35	0.50	0.15	3.00
FLOW LENGTH(INCHES)	27.9	30.2	4.0	
STACK HEIGHT(INCHES)	32.7			
TUBE LENGTH(INCHES)		41.4	21.5	
NO-FLOW LENGTH(INCHES)	17.8	26.6	16.5	
NO. OF TUBES		33598	68	

DUCT SYSTEM DATA

WEIGHT(LBS)	DIA(INCH)	DELTA P(PCT)	HXDA WEIGHT
1193.53	6.02	1.00	4973.39

DP1	DP2	DP3	DP4	DP5	DP6	DP7	DP8	DP9	DP10	DP11	DP12
0.33	0.08	0.28	0.13	0.03	0.05	0.03	0.00	0.53	0.48	0.05	0.04

W1	W2	W3	W4	W5	W6	W7	W8	W9	W10	W11	W12
38.31	99.81	62.78	32.02	27.73	54.30	90.00	104.09	272.93	337.07	73.04	47.44

D1	D2	D3	D4	D9	D10
6.02	7.26	8.03	6.50	6.89	7.31

Figure A3-6. Case IIIA - Heat Exchanger and Ducting Summary

WEIGHT OPTIMIZED HEAT EXCHANGER DESIGNS

FOR TOTAL HXDA SYSTEM PRESSURE DROP

OF 8.00 PERCENT

DUCT PRESSURE DROP = 2.00 PERCENT

CASE IV THRU VI

	RECUPERATOR	WHX	HSHX	TOTAL
WEIGHT(LBS)	754.2	1908.7	268.5	2931.4
PRESSURE DROP(PCT)	4.80	0.90	0.30	6.00
FLOW LENGTH(INCHES)	24.4	30.1	5.2	
STACK HEIGHT(INCHES)	30.4			
TUBE LENGTH(INCHES)		32.6	21.6	
NO-FLOW LENGTH(INCHES)	13.8	29.7	17.2	
NO. OF TUBES		35575	78	

DUCT SYSTEM DATA

WEIGHT(LBS)	DIA(INCH)	DELTA P(PCT)	HXDA WEIGHT
840.57	5.26	2.00	3771.98

DP1	DP2	DP3	DP4	DP5	DP6	DP7	DP8	DP9	DP10	DP11	DP12
0.52	0.12	0.34	0.20	0.06	0.04	0.07	0.00	1.06	0.80	0.08	0.03

W1	W2	W3	W4	W5	W6	W7	W8	W9	W10	W11	W12
33.47	36.40	44.42	27.98	19.06	51.23	44.11	78.23	189.08	227.81	43.74	45.05

D1	D2	D3	D4	D9	D10
5.26	6.34	7.01	5.68	6.02	6.39

Figure A3-7. Case IV - Heat Exchanger and Ducting Summary

WEIGHT OPTIMIZED HEAT EXCHANGER DESIGNS

FOR TOTAL HXDA SYSTEM PRESSURE DROP

OF 6.00 PERCENT

DUCT PRESSURE DROP = 1.50 PERCENT

CASE IV THRU VI

	RECUPERATOR	WHX	HSHX	TOTAL
WEIGHT(LBS)	798.4	1756.6	252.0	2807.0
PRESSURE DROP(PCT)	3.70	0.65	0.15	4.50
FLOW LENGTH(INCHES)	24.4	27.2	4.5	
STACK HEIGHT(INCHES)	30.2			
TUBE LENGTH(INCHES)		33.9	23.0	
NO-FLOW LENGTH(INCHES)	15.1	29.9	17.5	
NO. OF TUBES		32871	72	

DUCT SYSTEM DATA

WEIGHT(LBS)	DIA(INCH)	DELTA P(PCT)	HXDA WEIGHT
910.92	5.50	1.50	3717.96

DP1	DP2	DP3	DP4	DP5	DP6	DP7	DP8	DP9	DP10	DP11	DP12
0.36	0.08	0.26	0.14	0.04	0.02	0.05	0.00	0.75	0.55	0.05	0.02

W1	W2	W3	W4	W5	W6	W7	W8	W9	W10	W11	W12
34.97	38.97	47.34	29.23	20.17	59.32	51.23	84.80	201.96	243.96	46.97	51.99

D1	D2	D3	D4	D9	D10
5.50	6.63	7.33	5.94	6.29	6.67

Figure A3-8. Case V - Heat Exchanger and Ducting Summary

WEIGHT OPTIMIZED HEAT EXCHANGER DESIGNS

FOR TOTAL HXDA SYSTEM PRESSURE DROP

OF 4.00 PERCENT

DUCT PRESSURE DROP = 1.00 PERCENT

CASE IV THRU VI

	RECUPERATOR	WHX	HSHX	TOTAL
WEIGHT(LBS)	967.9	1630.5	230.8	2829.2
PRESSURE DROP(PCT)	2.35	0.50	0.15	3.00
FLOW LENGTH(INCHES)	24.3	25.0	4.5	
STACK HEIGHT(INCHES)	31.9			
TUBE LENGTH(INCHES)		35.0	23.0	
NO-FLOW LENGTH(INCHES)	17.4	29.3	16.0	
NO. OF TUBES		30594	66	

DUCT SYSTEM DATA

WEIGHT(LBS)	DIA(INCH)	DELTA P(PCT)	HXDA WEIGHT
947.63	5.71	1.00	3776.82

DP1	DP2	DP3	DP4	DP5	DP6	DP7	DP8	DP9	DP10	DP11	DP12
0.26	0.06	0.23	0.10	0.03	0.03	0.02	0.00	0.47	0.40	0.03	0.02

W1	W2	W3	W4	W5	W6	W7	W8	W9	W10	W11	W12
36.30	41.33	50.00	30.35	22.35	48.29	68.94	82.43	213.70	258.72	52.68	42.55

D1	D2	D3	D4	D9	D10
5.71	6.88	7.61	6.16	6.53	6.93

Figure A3-9. Case VI - Heat Exchanger and Ducting Summary

WEIGHT OPTIMIZED HEAT EXCHANGER DESIGNS

FOR TOTAL HXDA SYSTEM PRESSURE DROP

OF 8.00 PERCENT

DUCT PRESSURE DROP = 2.00 PERCENT

CASE 8-I-S THRU 8-III-S (SPLIT RECUPERATOR)

	RECUPERATOR	WHX	HSHX	TOTAL
WEIGHT(LBS)	899.[illegible]	2209.0	284.3	3392.9
PRESSURE DROP(PCT)	4.55	1.30	0.15	6.00
FLOW LENGTH(INCHES)	25.2	25.2	3.7	
STACK HEIGHT(INCHES)	55.0			
TUBE LENGTH(INCHES)		28.7	32.0	
NO-FLOW LENGTH(INCHES)	12.6	49.0	32.6	
NO. OF TUBES		50513	250	

DUCT SYSTEM DATA

WEIGHT(LBS)	DIA(INCH)	DELTA P(PCT)	HXDA WEIGHT
400.05	5.83	2.00	3792.98

DP1	DP2	DP3	DP4	DP5	DP6	DP7	DP8	DP9	DP10	DP11	DP12
0.72	0.17	0.28	0.28	0.06	0.01	0.11	0.00	0.0	0.0	0.0	0.0

W1	W2	W3	W4	W5	W6	W7	W8	W9	W10	W11	W12
37.08	29.44	38.25	31.00	35.24	110.84	38.09	80.12	0.0	0.0	0.0	0.0

D1	D2	D3	D4	D9	D10
5.83	7.03	7.77	6.30	0.0	0.0

Figure A3-10. Case 8-I-S Heat Exchanger and Ducting Summary

WEIGHT OPTIMIZED HEAT EXCHANGER DESIGNS

FOR TOTAL HXDA SYSTEM PRESSURE DROP

OF 6.00 PERCENT

DUCT PRESSURE DROP = 1.50 PERCENT

CASE 8-I-S THRU 8-III-S (SPLIT RECUPERATOR)

	RECUPERATOR	WHX	HSHX	TOTAL
WEIGHT(LBS)	947.6	2000.8	255.0	3203.4
PRESSURE DROP(PCT)	3.20	1.15	0.15	4.50
FLOW LENGTH(INCHES)	25.6	24.4	3.7	
STACK HEIGHT(INCHES)	55.7			
TUBE LENGTH(INCHES)		29.1	32.0	
NO-FLOW LENGTH(INCHES)	13.9	45.8	29.2	
NO. OF TUBES		45615	224	

DUCT SYSTEM DATA

WEIGHT(LBS)	DIA(INCH)	DELTA P(PCT)	HXDA WEIGHT
385.45	5.96	1.50	3588.84

DP1	DP2	DP3	DP4	DP5	DP6	DP7	DP8	DP9	DP10	DP11	DP12
0.53	0.12	0.26	0.20	0.04	0.01	0.07	0.00	0.0	0.0	0.0	0.0

W1	W2	W3	W4	W5	W6	W7	W8	W9	W10	W11	W12
37.90	30.34	39.09	31.68	35.83	92.67	42.20	75.75	0.0	0.0	0.0	0.0

D1	D2	D3	D4	D9	D10
5.96	7.18	7.94	6.43	0.0	0.0

Figure A3-II. Case 8-II-S Heat Exchanger and Ducting Summary

WEIGHT OPTIMIZED HEAT EXCHANGER DESIGNS

FOR TOTAL HXDA SYSTEM PRESSURE DROP

OF 4.00 PERCENT

DUCT PRESSURE DROP = 1.00 PERCENT

CASE 8-I-S THRU 8-III-S (SPLIT RECUPERATOR)

	RECUPERATOR	WHX	HSHX	TOTAL
WEIGHT(LBS)	1103.8	1873.7	231.5	3209.1
PRESSURE DROP(PCT)	2.00	0.85	0.15	3.00
FLOW LENGTH(INCHES)	24.8	22.3	3.7	
STACK HEIGHT(INCHES)	58.4			
TUBE LENGTH(INCHES)		29.7	32.0	
NO-FLOW LENGTH(INCHES)	16.1	45.7	26.5	
NO. OF TUBES		42149	204	

DUCT SYSTEM DATA

WEIGHT(LBS)	DIA(INCH)	DELTA P(PCT)	HXDA WEIGHT
392.28	6.31	1.00	3601.33

DP1	DP2	DP3	DP4	DP5	DP6	DP7	DP8	DP9	DP10	DP11	DP12
0.35	0.08	0.22	0.13	0.03	0.02	0.03	0.00	0.0	0.0	0.0	0.0

W1	W2	W3	W4	W5	W6	W7	W8	W9	W10	W11	W12
40.14	32.88	41.40	33.55	39.83	76.36	51.43	76.69	0.0	0.0	0.0	0.0

D1	D2	D3	D4	D9	D10
6.31	7.60	8.41	6.82	0.0	0.0

Figure A3-12. Case 8-III-S Heat Exchanger and Ducting Summary

WEIGHT OPTIMIZED HEAT EXCHANGER DESIGNS

FOR TOTAL HXDA SYSTEM PRESSURE DROP

OF 8.00 PERCENT

DUCT PRESSURE DROP = 2.00 PERCENT

CASE 8-I-A THRU III-A

	RECUPERATOR	WHX	HSHX	TOTAL
WEIGHT(LBS)	746.4	2912.8	270.9	3930.1
PRESSURE DROP(PCT)	3.50	0.45	2.05	6.00
FLOW LENGTH(INCHES)	33.0	34.1	13.6	
STACK HEIGHT(INCHES)	29.9			
TUBE LENGTH(INCHES)		30.5	10.5	
NO-FLOW LENGTH(INCHES)	13.3	37.3	10.2	
NO. OF TUBES		53509	407	

DUCT SYSTEM DATA

WEIGHT(LBS)	DIA(INCH)	DELTA P(PCT)	HXDA WEIGHT
313.49	4.57	2.00	4243.58

DP1	DP2	DP3	DP4	DP5	DP6	DP7	DP8	DP9	DP10	DP11	DP12
1.34	0.31	1.11	0.51	0.12	2.14	0.12	0.00	0.0	0.0	0.0	0.0

W1	W2	W3	W4	W5	W6	W7	W8	W9	W10	W11	W12
29.04	35.43	29.95	24.27	18.45	8.01	26.94	141.42	0.0	0.0	0.0	0.0

D1	D2	D3	D4	D9	D10
4.57	5.50	6.09	4.93	0.0	0.0

Figure A3-13. Case 8-IA - Heat Exchanger and Ducting Summary

WEIGHT OPTIMIZED HEAT EXCHANGER DESIGNS

FOR TOTAL HXDA SYSTEM PRESSURE DROP

OF 6.00 PERCENT

DUCT PRESSURE DROP = 1.50 PERCENT

CASE 8-I-A THRU III-A

	RECUPERATOR	WHX	HSHX	TOTAL
WEIGHT(LBS)	667.0	2603.0	343.8	3613.8
PRESSURE DROP(PCT)	3.50	0.45	0.55	4.50
FLOW LENGTH(INCHES)	33.0	34.1	9.8	
STACK HEIGHT(INCHES)	26.7			
TUBE LENGTH(INCHES)		30.5	15.4	
NO-FLOW LENGTH(INCHES)	13.3	33.4	23.0	
NO. OF TUBES		47818	401	

DUCT SYSTEM DATA

WEIGHT(LBS)	DIA(INCH)	DELTA P(PCT)	HXDA WEIGHT
349.19	4.31	1.50	3962.99

DP1	DP2	DP3	DP4	DP5	DP6	DP7	DP8	DP9	DP10	DP11	DP12
1.34	0.31	1.22	0.51	0.12	0.04	0.11	0.00	0.0	0.0	0.0	0.0

W1	W2	W3	W4	W5	W6	W7	W8	W9	W10	W11	W12
27.44	32.37	28.30	22.94	15.28	68.45	24.36	130.03	0.0	0.0	0.0	0.0

D1	D2	D3	D4	D9	D10
4.31	5.20	5.75	4.66	0.0	0.0

Figure A3-14. Case 8-IIA - Heat Exchanger and Ducting Summary

WEIGHT OPTIMIZED HEAT EXCHANGER DESIGNS

FOR TOTAL HXDA SYSTEM PRESSURE DROP

OF 4.00 PERCENT

DUCT PRESSURE DROP = 1.00 PERCENT

CASE 8-I-A THRU III-A

	RECUPERATOR	WHX	HSHX	TOTAL
WEIGHT(LBS)	727.2	2366.4	352.1	3445.7
PRESSURE DROP(PCT)	2.40	0.40	0.20	3.00
FLOW LENGTH(INCHES)	32.3	33.3	7.9	
STACK HEIGHT(INCHES)	26.8			
TUBE LENGTH(INCHES)		30.9	18.5	
NO-FLOW LENGTH(INCHES)	14.8	31.3	23.2	
NO. OF TUBES		43545	377	

DUCT SYSTEM DATA

WEIGHT(LBS)	DIA(INCH)	DELTA P(PCT)	HXDA WEIGHT
382.39	4.64	1.00	3828.07

DP1	DP2	DP3	DP4	DP5	DP6	DP7	DP8	DP9	DP10	DP11	DP12
0.82	0.19	0.78	0.32	0.08	0.02	0.07	0.00	0.0	0.0	0.0	0.0

W1	W2	W3	W4	W5	W6	W7	W8	W9	W10	W11	W12
29.53	36.40	30.46	24.68	17.10	98.18	28.50	117.53	0.0	0.0	0.0	0.0

D1	D2	D3	D4	D9	D10
4.64	5.59	6.19	5.01	0.0	0.0

Figure A3-15. Case 8-IIIA - Heat Exchanger and Ducting Summary

WEIGHT OPTIMIZED HEAT EXCHANGER DESIGNS

FOR TOTAL HXDA SYSTEM PRESSURE DROP

OF 8.00 PERCENT

DUCT PRESSURE DROP = 2.00 PERCENT

CASE 8-IV THRU VI

	RECUPERATOR	WHX	HSHX	TOTAL
WEIGHT(LBS)	535.2	2252.3	234.1	3021.6
PRESSURE DROP(PCT)	4.80	0.50	0.70	6.00
FLOW LENGTH(INCHES)	29.7	30.5	8.4	
STACK HEIGHT(INCHES)	27.0			
TUBE LENGTH(INCHES)		27.0	14.9	
NO-FLOW LENGTH(INCHES)	12.1	40.5	18.3	
NO. OF TUBES		49138	310	

DUCT SYSTEM DATA

WEIGHT(LBS)	DIA(INCH)	DELTA P(PCT)	HXDA WEIGHT
289.41	4.12	2.00	3311.05

DP1	DP2	DP3	DP4	DP5	DP6	DP7	DP8	DP9	DP10	DP11	DP12
1.29	0.30	1.08	0.49	0.11	0.07	0.11	0.00	0.0	0.0	0.0	0.0

W1	W2	W3	W4	W5	W6	W7	W8	W9	W10	W11	W12
26.20	25.59	27.02	21.90	12.95	33.70	19.19	122.84	0.0	0.0	0.0	0.0

D1	D2	D3	D4	D9	D10
4.12	4.96	5.49	4.45	0.0	0.0

Figure A3-16. Case 8-IV - Heat Exchanger and Ducting Summary

WEIGHT OPTIMIZED HEAT EXCHANGER DESIGNS

FOR TOTAL HXDA SYSTEM PRESSURE DROP

OF 6.00 PERCENT

DUCT PRESSURE DROP = 1.50 PERCENT

CASE 8-IV THRU VI

	RECUPERATOR	WHX	HSHX	TOTAL
WEIGHT(LBS)	526.2	2023.1	235.0	2784.4
PRESSURE DROP(PCT)	3.90	0.45	0.15	4.50
FLOW LENGTH(INCHES)	29.5	29.8	5.6	
STACK HEIGHT(INCHES)	25.5			
TUBE LENGTH(INCHES)		27.3	18.5	
NO-FLOW LENGTH(INCHES)	12.7	37.5	25.0	
NO. OF TUBES		44303	289	

DUCT SYSTEM DATA

WEIGHT(LBS)	DIA(INCH)	DELTA P(PCT)	HXDA WEIGHT
346.67	4.22	1.50	3131.04

DP1	DP2	DP3	DP4	DP5	DP6	DP7	DP8	DP9	DP10	DP11	DP12
0.94	0.22	0.82	0.36	0.09	0.01	0.08	0.00	0.0	0.0	0.0	0.0

W1	W2	W3	W4	W5	W6	W7	W8	W9	W10	W11	W12
26.86	26.56	27.70	22.45	12.71	93.88	19.60	116.89	0.0	0.0	0.0	0.0

D1	D2	D3	D4	D9	D10
4.22	5.09	5.63	4.56	0.0	0.0

Figure A3-17. Case 8-V - Heat Exchanger and Ducting Summary

WEIGHT OPTIMIZED HEAT EXCHANGER DESIGNS

FOR TOTAL HXDA SYSTEM PRESSURE DROP

OF 4.00 PERCENT

DUCT PRESSURE DROP = 1.00 PERCENT

CASE 8-IV THRU VI

	RECUPERATOR	WHX	HSHX	TOTAL
WEIGHT(LBS)	596.9	1842.3	213.4	2652.6
PRESSURE DROP(PCT)	2.45	0.40	0.15	3.00
FLOW LENGTH(INCHES)	28.7	28.8	5.6	
STACK HEIGHT(INCHES)	26.4			
TUBE LENGTH(INCHES)		27.7	18.5	
NO-FLOW LENGTH(INCHES)	14.5	35.5	22.7	
NO. OF TUBES		40460	263	

DUCT SYSTEM DATA

WEIGHT(LBS)	DIA(INCH)	DELTA P(PCT)	HXDA WEIGHT
328.60	4.47	1.00	2981.17

DP1	DP2	DP3	DP4	DP5	DP6	DP7	DP8	DP9	DP10	DP11	DP12
0.61	0.14	0.60	0.24	0.05	0.01	0.04	0.00	0.0	0.0	0.0	0.0

W1	W2	W3	W4	W5	W6	W7	W8	W9	W10	W11	W12
28.46	29.00	29.35	23.79	14.24	75.24	24.42	104.11	0.0	0.0	0.0	0.0

D1	D2	D3	D4	D9	D10
4.47	5.39	5.96	4.83	0.0	0.0

Figure A3-18. Case 8-VI - Heat Exchanger and Ducting Summary

WEIGHT OPTIMIZED HEAT EXCHANGER DESIGNS

FOR TOTAL HXDA SYSTEM PRESSURE DROP

OF 8.00 PERCENT

DUCT PRESSURE DROP = 2.00 PERCENT

CASE 8-VII THRU IX

	RECUPERATOR	WHX	HSHX	TOTAL
WEIGHT(LBS)	1612.7	2251.2	339.0	4202.8
PRESSURE DROP(PCT)	4.60	1.25	0.15	6.00
FLOW LENGTH(INCHES)	37.9	27.6	4.0	
STACK HEIGHT(INCHES)	44.2			
TUBE LENGTH(INCHES)		27.2	38.5	
NO-FLOW LENGTH(INCHES)	19.8	48.7	29.3	
NO. OF TUBES		51167	253	

DUCT SYSTEM DATA

WEIGHT(LBS)	DIA(INCH)	DELTA P(PCT)	HXDA WEIGHT
461.57	6.20	2.00	4664.37

DP1	DP2	DP3	DP4	DP5	DP6	DP7	DP8	DP9	DP10	DP11	DP12
0.56	0.13	0.54	0.22	0.04	0.01	0.04	0.00	0.0	0.0	0.0	0.0

W1	W2	W3	W4	W5	W6	W7	W8	W9	W10	W11	W12
39.43	32.07	40.67	32.96	30.08	156.74	49.98	79.63	0.0	0.0	0.0	0.0

D1	D2	D3	D4	D9	D10
6.20	7.47	8.26	6.70	0.0	0.0

Figure A3-19. Case 8-VII - Heat Exchanger and Ducting Summary

WEIGHT OPTIMIZED HEAT EXCHANGER DESIGNS

FOR TOTAL HXDA SYSTEM PRESSURE DROP

OF 6.00 PERCENT

DUCT PRESSURE DROP = 1.50 PERCENT

CASE 8-VII THRU IX

	RECUPERATOR	WHX	HSHX	TOTAL
WEIGHT(LBS)	1668.8	2084.7	304.0	4057.5
PRESSURE DROP(PCT)	3.45	0.90	0.15	4.50
FLOW LENGTH(INCHES)	37.1	25.1	4.0	
STACK HEIGHT(INCHES)	43.2			
TUBE LENGTH(INCHES)		28.5	38.5	
NON-FLOW LENGTH(INCHES)	21.6	48.9	26.3	
NO. OF TUBES		46759	226	

DUCT SYSTEM DATA

WEIGHT(LBS)	DIA(INCH)	DELTA P(PCT)	HXDA WEIGHT
450.74	6.33	1.50	4508.25

DP1	DP2	DP3	DP4	DP5	DP6	DP7	DP8	DP9	DP10	DP11	DP12
0.42	0.10	0.44	0.16	0.03	0.01	0.02	0.00	0.0	0.0	0.0	0.0

W1	W2	W3	W4	W5	W6	W7	W8	W9	W10	W11	W12
40.26	33.02	41.52	33.65	30.11	131.38	53.92	86.86	0.0	0.0	0.0	0.0

D1	D2	D3	D4	D9	D10
6.33	7.63	8.44	6.84	0.0	0.0

Figure A3-20. Case 8-VIII - Heat Exchanger and Ducting Summary

WEIGHT OPTIMIZED HEAT EXCHANGER DESIGNS

FOR TOTAL HXDA SYSTEM PRESSURE DROP

OF 4.00 PERCENT

DUCT PRESSURE DROP = 1.00 PERCENT

CASE 8-VII THRU IX

	RECUPERATOR	WHX	HSHX	TOTAL
WEIGHT(LBS)	1942.9	1987.9	276.0	4206.8
PRESSURE DROP(PCT)	2.20	0.65	0.15	3.00
FLOW LENGTH(INCHES)	36.4	22.0	4.0	
STACK HEIGHT(INCHES)	45.1			
TUBE LENGTH(INCHES)		30.1	38.5	
NO-FLOW LENGTH(INCHES)	24.8	49.5	23.9	
NO. OF TUBES		43366	206	

DUCT SYSTEM DATA

WEIGHT(LBS)	DIA(INCH)	DELTA P(PCT)	HXDA WEIGHT
458.49	6.76	1.00	4665.29

DP1	DP2	DP3	DP4	DP5	DP6	DP7	DP8	DP9	DP10	DP11	DP12
0.26	0.06	0.30	0.10	0.02	0.01	0.01	0.00	0.0	0.0	0.0	0.0

W1	W2	W3	W4	W5	W6	W7	W8	W9	W10	W11	W12
43.02	36.27	44.37	35.96	33.64	106.58	65.55	93.11	0.0	0.0	0.0	0.0

D1	D2	D3	D4	D9	D10
6.76	8.15	9.02	7.30	0.0	0.0

Figure A3-21. Case 8-IX - Heat Exchanger and Ducting Summary

WEIGHT OPTIMIZED HEAT EXCHANGER DESIGNS

FOR TOTAL HXDA SYSTEM PRESSURE DROP

OF 8.00 PERCENT

DUCT PRESSURE DROP = 2.00 PERCENT

CASE 8-X THRU XII

	RECUPERATOR	WHX	HSHX	TOTAL
WEIGHT(LBS)	844.1	2257.9	231.2	3333.1
PRESSURE DROP(PCT)	4.80	0.40	0.80	5.00
FLOW LENGTH(INCHES)	40.1	28.0	8.5	
STACK HEIGHT(INCHES)	29.3			
TUBE LENGTH(INCHES)		27.5	14.7	
NO-FLOW LENGTH(INCHES)	13.1	42.7	17.5	
NO. OF TUBES		49762	301	

DUCT SYSTEM DATA

WEIGHT(LBS)	DIA(INCH)	DELTA P(PCT)	HXDA WEIGHT
293.93	5.12	2.00	3627.03

DP1	DP2	DP3	DP4	DP5	DP6	DP7	DP8	DP9	DP10	DP11	DP12
1.29	0.30	1.24	0.50	0.10	0.10	0.08	0.00	0.0	0.0	0.0	0.0

W1	W2	W3	W4	W5	W6	W7	W8	W9	W10	W11	W12
26.19	25.58	27.01	21.89	13.99	28.02	23.28	127.96	0.0	0.0	0.0	0.0

D1	D2	D3	D4	D9	D10
4.12	4.96	5.49	4.45	0.0	0.0

Figure A3-22. Case 8-X - Heat Exchanger and Ducting Summary

WEIGHT OPTIMIZED HEAT EXCHANGER DESIGNS

FOR TOTAL HXDA SYSTEM PRESSURE DROP

OF 6.00 PERCENT

DUCT PRESSURE DROP = 1.50 PERCENT

CASE 8-X THRU XII

	RECUPERATOR	WHX	HSHX	TOTAL
WEIGHT(LBS)	848.0	2025.0	222.0	3094.9
PRESSURE DROP(PCT)	3.50	0.40	0.60	4.50
FLOW LENGTH(INCHES)	39.3	28.0	7.9	
STACK HEIGHT(INCHES)	28.4			
TUBE LENGTH(INCHES)		27.5	16.0	
NO-FLOW LENGTH(INCHES)	14.2	38.3	17.0	
NO. OF TUBES		44629	272	

DUCT SYSTEM DATA

WEIGHT(LBS)	DIA(INCH)	DELTA P(PCT)	HXDA WEIGHT
283.57	4.22	1.50	3378.52

DP1	DP2	DP3	DP4	DP5	DP6	DP7	DP8	DP9	DP10	DP11	DP12
0.94	0.22	0.97	0.36	0.07	0.06	0.05	0.00	0.0	0.0	0.0	0.0

W1	W2	W3	W4	W5	W6	W7	W8	W9	W10	W11	W12
26.82	26.51	27.66	22.42	14.02	31.92	25.18	109.04	0.0	0.0	0.0	0.0

D1	D2	D3	D4	D9	D10
4.22	5.08	5.62	4.55	0.0	0.0

Figure A3-23. Case 8-XI - Heat Exchanger and Ducting Summary

WEIGHT OPTIMIZED HEAT EXCHANGER DESIGNS

FOR TOTAL HXDA SYSTEM PRESSURE DROP

OF 4.00 PERCENT

DUCT PRESSURE DROP = 1.00 PERCENT

CASE 8-X THRU XII

	RECUPERATOR	WHX	HSHX	TOTAL
WEIGHT(LBS)	909.3	1944.5	250.6	3004.4
PRESSURE DROP(PCT)	2.50	0.35	0.15	3.00
FLOW LENGTH(INCHES)	39.2	27.0	6.2	
STACK HEIGHT(INCHES)	28.3			
TUBE LENGTH(INCHES)		28.0	21.2	
NO-FLOW LENGTH(INCHES)	15.6	36.3	19.5	
NO. OF TUBES		40773	255	

DUCT SYSTEM DATA

WEIGHT(LBS)	DIA(INCH)	DELTA P(PCT)	HXDA WEIGHT
375.49	4.49	1.00	3329.85

DP1	DP2	DP3	DP4	DP5	DP6	DP7	DP8	DP9	DP10	DP11	DP12
0.61	0.14	0.65	0.23	0.05	0.01	0.03	0.00	0.0	0.0	0.0	0.0

W1	W2	W3	W4	W5	W6	W7	W8	W9	W10	W11	W12
28.53	29.11	29.43	23.85	15.29	68.04	29.00	102.24	0.0	0.0	0.0	0.0

D1	D2	D3	D4	D9	D10
4.49	5.41	5.98	4.84	0.0	0.0

Figure A3-24. Case 8-XII - Heat Exchanger and Ducting Summary

APPENDIX A-4

WEIGHT OPTIMIZATION COMPUTER PROGRAM

The following pages present a listing of the computer program developed to optimize Brayton cycle HXDA's given data on heat exchanger weights and sizes as a function of pressure gas side drop.

PRECEDING PAGE BLANK NOT FILMED

```
                C MAIN PROGRAM // HXDA PRESSURE DROP OPTIMIZATION
                C WRITTEN BY HERBERT N. ROSENBERG / GARRETT-AIRESEARCH / LOS ANGELES
                C
                C
0001                 DIMENSION TITLE(20),X1A(20),Y1A(20),X2A(20),Y2A(20),X3A(20),
                    1 Y3A(20)
0002                 DIMENSION XTA(20),FCA(20)
0003                 COMMON/COPT/ WGAS,TEMP1,P1,WMOL,X4,WDS,D,IADV,IERR
0004                 COMMON/ARRAYS/
                    1          A1A(20),B1A(20),C1A(20),A2A(20),B2A(20),C2A(20),
                    2   A3A(20),B3A(20),C3A(20) , D2A(20),D3A(20)
0005                 COMMON/ERROR/ ERR
0006                 COMMON/DUCTIN/B1,A1,A10,C3,C2,B3,B2,C1,A2,A3,D2,D3
0007                 COMMON/DUCTEX/ DP1,DP2,DP3,DP4,DP5,DP6,DP7,DP8,DP9,DP10,DP11,DP12,
                    1   W1,W2,W3,W4,W5,W6,W7,W8,W9,W10,W11,W12,D1,G2,G3,D4,D9,D10
0008                 D=8.0
0009            1000 READ(5,5000,END=9999) TITLE
0010            5000 FORMAT(20A4)
0011                 READ(5,5001) X10,DX1,N1,X20,DX2,N2
0012            5001 FORMAT(2(2F10.0,I10))
0013                 READ(5,5001) X30,DX3,N3,XTO,DXT,NT
0014                 X1MAX=6.0
0015                 X2MAX=2.0
0016                 X3MAX=1.5
0017                 N1=(X1MAX-X10)/0.1
0018                 N2=(X2MAX-X20)/0.1
0019                 N3=(X3MAX-X30)/0.1
0020                 DX1=0.1
0021                 DX2=0.1
0022                 DX3=0.1
0023                 READ(5,5002) I1,I2,I3   , I4 , IDUCT,IADV
0024                 READ(5,5003) WGAS,TEMP1,P1,WMOL
0025            5002 FORMAT(7I10)
0026                 READ(5,5003) (X1A(I),I=1,I1)
0027            5003 FORMAT(7F10.0)
0028                 READ(5,5003) (Y1A(I),I=1,I1)
0029                 READ(5,5003) (A1A(I),I=1,I1)
0030                 READ(5,5003) (B1A(I),I=1,I1)
0031                 READ(5,5003) (C1A(I),I=1,I1)
0032                 READ(5,5003) (X2A(I),I=1,I2)
0033                 READ(5,5003) (Y2A(I),I=1,I2)
0034                 READ(5,5003) (A2A(I),I=1,I2)
0035                 READ(5,5003) (B2A(I),I=1,I2)
0036                 READ(5,5003) (C2A(I),I=1,I2)
0037                 READ(5,5003) (D2A(I),I=1,I2)
0038                 READ(5,5003) (X3A(I),I=1,I3)
0039                 READ(5,5003) (Y3A(I),I=1,I3)
0040                 READ(5,5003) (A3A(I),I=1,I3)
0041                 READ(5,5003) (B3A(I),I=1,I3)
0042                 READ(5,5003) (C3A(I),I=1,I3)
0043                 READ(5,5003) (D3A(I),I=1,I3)
0044                 READ(5,5003) (XTA(I),I=1,I4)
0045                 READ(5,5003) (FCA(I),I=1,I4)
0046                 WRITE(6,6000) TITLE
0047            6000 FORMAT(1H1///,30X,'HXDA PRESSURE DROP OPTIMIZATION PROGRAM',/,30X,
```

```
     1 20A4///)
      WRITE(6,6001)
 6001 FORMAT(1H0,12X,'X10',12X,'DX1',13X,'N1',12X,'X20',12X,'DX2',13X,
     1 'N2')
      WRITE(6,6002) X10,DX1,N1,X20,DX2,N2
 6002 FORMAT(1H ,2(2F15.4,I15))
      WRITE(6,6003)
 6003 FORMAT(1H0,12X,'X30',12X,'DX3',13X,'N3',12X,'XT0',12X,'DXT',13X,
     1 'NT')
      WRITE(6,6002) X30,DX3,N3,XT0,DXT,NT
      WRITE(6,6004)
 6004 FORMAT(1H0,13X,'I1',13X,'I2',13X,'I3', 13X,'I4', 10X,'IDUCT',
     1   11X,'IADV')
      WRITE(6,6005) I1,I2,I3, I4  ,IDUCT,IADV
 6005 FORMAT(1H ,7I15)
      WRITE(6,6014)
 6014 FORMAT(1H0,11X,'WGAS',10X,'TEMP1',13X,'P1',11X,'WMOL')
      WRITE(6,6015) WGAS,TEMP1,P1,WMOL
 6015 FORMAT(1H ,7F15.4)
      WRITE(6,6006)
 6006 FORMAT(////20X,'INPUT DATA ARRAYS'/)
      WRITE(6,6007)
 6007 FORMAT(//,1H0,10X,'X1A DATA ARRAY'/)
      WRITE(6,6008) (X1A(I),I=1,I1)
 6008 FORMAT(/,7F15.4)
      WRITE(6,6009)
 6009 FORMAT(//,1H0,10X,'Y1A DATA ARRAY')
      WRITE(6,6008) (Y1A(I),I=1,I1)
      WRITE(6,6101)
 6101 FORMAT(//,1H0,10X,'A1A DATA ARRAY')
      WRITE(6,6008) (A1A(I),I=1,I1)
      WRITE(6,6102)
 6102 FORMAT(//,1H0,10X,'B1A DATA ARRAY')
      WRITE(6,6008) (B1A(I),I=1,I1)
      WRITE(6,6103)
 6103 FORMAT(//,1H0,10X,'C1A DATA ARRAY')
      WRITE(6,6008) (C1A(I),I=1,I1)
      WRITE(6,6010)
 6010 FORMAT(//,1H0,10X,'X2A DATA ARRAY')
      WRITE(6,6008) (X2A(I),I=1,I2)
      WRITE(6,6011)
 6011 FORMAT(//,1H0,10X,'Y2A DATA ARRAY')
      WRITE(6,6008) (Y2A(I),I=1,I2)
      WRITE(6,6201)
 6201 FORMAT(//,1H0,10X,'A2A DATA ARRAY')
      WRITE(6,6008) (A2A(I),I=1,I2)
      WRITE(6,6202)
 6202 FORMAT(//,1H0,10X,'B2A DATA ARRAY')
      WRITE(6,6008) (B2A(I),I=1,I2)
      WRITE(6,6203)
 6203 FORMAT(//,1H0,10X,'C2A DATA ARRAY')
      WRITE(6,6008) (C2A(I),I=1,I2)
      WRITE(6,6204)
 6204 FORMAT(//,1H0,10X,'D2A DATA ARRAY')
      WRITE(6,6008) (D2A(I),I=1,I2)
```

```
0099          WRITE(6,6012)
0100     6012 FORMAT(//,1H0,10X,'X3A DATA ARRAY')
0101          WRITE(6,6008) (X3A(I),I=1,I3)
0102          WRITE(6,6013)
0103     6013 FORMAT(//,1H0,10X,'Y3A DATA ARRAY')
0104          WRITE(6,6008) (Y3A(I),I=1,I3)
0105          WRITE(6,6301)
0106     6301 FORMAT(//,1H0,10X,'A3A DATA ARRAY')
0107          WRITE(6,6008) (A3A(I),I=1,I3)
0108          WRITE(6,6302)
0109     6302 FORMAT(//,1H0,10X,'B3A DATA ARRAY')
0110          WRITE(6,6008) (B3A(I),I=1,I3)
0111          WRITE(6,6303)
0112     6303 FORMAT(//,1H0,10X,'C3A DATA ARRAY')
0113          WRITE(6,6008) (C3A(I),I=1,I3)
0114          WRITE(6,6304)
0115     6304 FORMAT(//,1H0,10X,'D3A DATA ARRAY')
0116          WRITE(6,6008) (D3A(I),I=1,I3)
0117          WRITE(6,6305)
0118     6305 FORMAT(//,1H0,10X,'XTA DATA ARRAY')
0119          WRITE(6,6008) (XTA(I),I=1,I4)
0120          WRITE(6,6306)
0121     6306 FORMAT(//,1H0,10X,'FCA DATA ARRAY')
0122          WRITE(6,6008) (FCA(I),I=1,I4)
0123          DO 200 I=1,NT
0124          XT=XTO +(I-1)*DXT
0125          CALL LAGIN2(-1,XTA,I4,3,XT,FC,FCA)
0126          CALL OPTSUM(X1A,Y1A,I1,X2A,Y2A,I2,X3A,Y3A,I3,Y,X1,X10,DX1,N1,X2,
             1 X20,DX2,N2,X3,X30,DX3,N3,Y1,Y2,Y3,XT,FC)
0127          WRITE(6,6800) XT ,X4 ,TITLE
0128     6800 FORMAT(1H1,/////1H0,30X,'WEIGHT OPTIMIZED HEAT EXCHANGER DESIGNS',
             1                /1H0,30X,'  FOR TOTAL HXDA SYSTEM PRESSURE DROP',
             2                /1H0,30X,'     OF ',F5.2,' PERCENT',
             3                /1H0,30X,'  DUCT PRESSURE DROP = ',F5.2,' PERCENT',
             4                /1H0,30X,20A4)
0129          WRITE(6,6801)
0130     6801 FORMAT(1H0,35X,'RECUPERATOR',10X,'WHX',11X,'HSHX',11X,'TOTAL')
0131          YSUM= Y1 + Y2 + Y3
0132          WRITE(6,6802)  Y1,Y2,Y3,YSUM
0133     6802 FORMAT(1H0,5X,'WEIGHT(LBS)',21X,F6.1,7X,3X,F6.1,9X,F6.1,10X,F6.1)
0134          XTSUM= X1 + X2 + X3
0135          WRITE(6,6803)  X1,X2,X3,XTSUM
0136     6803 FORMAT(1H0,5X,'PRESSURE DROP(PCT)', 15X,
             1                                   F6.2,10X,F6.2,9X,F6.2,10X,
             2 F6.2)
0137          WRITE(6,6804) A1,A2,A3
0138     6804 FORMAT(1H0,5X,'FLOW LENGTH(INCHES)',13X,F6.1,10X,F6.1,9X,F6.1)
0139          WRITE(6,6805) B1
0140     6805 FORMAT(1H0,5X,'STACK HEIGHT(INCHES)',12X,F6.1)
0141          WRITE(6,6806) B2,B3
0142     6806 FORMAT(1H0,5X,'TUBE LENGTH(INCHES)',29X,F6.1,9X,F6.1)
0143          WRITE(6,6807) C1,C2,C3
0144          M2=D2
0145          M3=D3
0146     6807 FORMAT(1H0,5X,'NO-FLOW LENGTH(INCHES)',10X,F6.1,10X,F6.1,9X,F6.1)
```

```
0147          WRITE(6,6808) M2,M3
0148     6808 FORMAT(1H0,5X,'NO. OF TUBES',34X,I6,9X,I6)
           C DUCT SYSTEM OUTPUT DATA
0149          WRITE(6,6809)
0150     6809 FORMAT(//1H0,30X,'DUCT SYSTEM DATA')
0151          IF(IERR .EQ. 1) WRITE(6,6812) ERR
0152     6812 FORMAT(//1H0,'***CONVERGENCE ERROR IN DUCT CALCULATION***, ERR=',
             1F6.3,//)
0153          WRITE(6,6810)
0154     6810 FORMAT(1H0,9X,'WEIGHT(LBS)',11X,'DIA(INCH)',8X,'DELTA P(PCT)',
             1 9X,'MXDA WEIGHT')
0155          WRITE(6,6811) WDS,D, X4,Y
0156     6811 FORMAT(1H ,F18.2,3F20.2)
0157          IF(IADV .EQ. 1) GO TO 1100
0158          DP9=0.0
0159          DP10=0.0
0160          DP11=0.0
0161          DP12=0.0
0162          W9=0.0
0163          W10=0.0
0164          W11=0.0
0165          W12=0.0
0166          D9=0.0
0167          D10=0.0
0168     1100 CONTINUE
0169          WRITE(6,6400)
0170     6400 FORMAT(1H0,7X,'DP1',7X,'DP2',7X,'DP3',7X,'DP4',7X,'DP5',7X,
             1   'DP6',7X,'DP7',7X,'DP8',7X,'DP9',6X,'DP10',6X,'DP11',5X,
             2    'DP12')
0171          WRITE(6,6401) DP1,DP2,DP3,DP4,DP5,DP6,DP7,DP8,DP9,DP10,DP11,DP12
0172     6401 FORMAT(1H , 11F10.2,F9.2)
0173          WRITE(6,6402)
0174     6402 FORMAT(1H0,8X,'W1',8X,'W2',8X,'W3',8X,
             1                                  'W4',8X,'W5',8X,'W6',8X,'W7',
             2  8X,'W8',8X,'W9',7X,'W10',7X,'W11',6X,'W12')
0175          WRITE(6,6401) W1,W2,W3,W4,W5,W6,W7,W8,W9,W10,W11,W12
0176          WRITE(6,6403)
0177     6403 FORMAT(1H0,8X,'D1',8X,'D2',8X,'D3',8X,'D4',8X,'D9',7X,'D10')
0178          WRITE(6,6401) D1,G2,G3,D4,D9,D10
0179      200 CONTINUE
0180          GO TO 1000
0181     9999 STOP
0182          END
```

```
0001          SUBROUTINE DUCT(W,TEMP1,P1,M, XDL   ,WTOT,D,IADV,IERR)
0002          IMPLICIT REAL (K,L,M)
        C THIS SUBROUTINE COMPUTES DUCT AND MANIFOLD PRESSURE DROP AND WEIGHT
0003          DIMENSION K(8),KS8(8),KADV(8),KT3I(8),KT3II(8),KT3III(8),KT3IV(8)
0004          DATA KS8/ 65600., 15600., 78000., 116000., 32800., 18800.,
             1  104000., 126000. /
0005          DATA KADV/60400., 12200., 18800., 114000., 30200., 14600.,
             1   25100., 123000. /
0006          DATA KT3I/ 40100., 8110., 12900., 78400., 20100., 9700.,
             1   17200., 84600./
0007          DATA KT3II/ 36600., 7200., 8900., 69600., 18300., 8600.,
             1   12000., 75000. /
0008          DATA KT3III/ 27000., 1760., 8660., 50400., 13500., 2110.,
             1   11600., 54500./
0009          DATA KT3IV/ 43600., 10400., 54600., 81100., 21800., 12500.,
             1   72900., 88100./
0010          COMMON/ERROR/ EKR
0011          COMMON/DUCTIN/ H,   LS,   L,   X,   Y,   LT1,   LT3,WR,A2,A3,A4,A5
0012          COMMON/DUCTEX/ DP1,DP2,DP3,DP4,DP5,DP6,DP7,DP8,DP9,DP10,DP11,DP12,
             1   W1,W2,W3,W4,W5,W6,W7,W8,W9,W10,W11,W12,D1,D2,D3,D4,D9,D10
0013          ICON=0
        C BEGIN DEFINE K(I)
0014          IF(IADV .NE. 0) GO TO 23
0015          DO 20  I=1,8
0016       20 K(I)=KS8(I)
0017          GO TO 21
0018       23 IF(IADV .NE. 1) GO TO 24
0019          DO 22  I=1,8
0020       22 K(I)=KADV(I)
0021          GO TO 21
0022       24 IF(IADV .NE. 2) GO TO 26
0023          DO 25  I=1,8
0024       25 K(I)=KT3I(I)
0025          GO TO 21
0026       26 IF(IADV .NE. 3) GO TO 28
0027          DO 27 I=1,8
0028       27 K(I)=KT3II(I)
0029          GO TO 21
0030       28 IF(IADV .NE. 4) GO TO 32
0031          DO 29 I=1,8
0032       29 K(I)=KT3III(I)
0033          GO TO 21
0034       32 IF(IADV .NE. 5) GO TO 34
0035          DO 33 I=1,8
0036       33 K(I)=KT3IV(I)
0037          GO TO 21
0038       34 GO TO 21
0039       21 CONTINUE
        C END DEFINE K(I)
0040          IF(IERR .EQ. 1) D=8.0
0041          IERR=0
0042     1000 CONTINUE
0043          IF(D .LT. 1.0) D=1.0
0044          IF(D .GT. 50.0) D=50.0
0045          Q=38.9*W**2*TEMP1/(P1*M*D**4)
```

```
0046          K5= H*(LS-L)/(3.1416*D**2)  - 0.1
0047          IF(K5 .LT. 0.0) K5=0.0
0048          R6= 2.55*H**2/(X*LT1)
0049          IF(R6 .LE. 1.0) K6= 1.0 - 0.167*R6
0050          IF(R6 .GT. 1.0) K6= R6 - 0.1
0051          K7= 1.27*H/WR - 0.1
0052          IF(K7 .LT. 0.0) K7=0.0
0053          R8= 2.55*H**2/(Y*LT3)
0054          IF(R8 .LE. 1.0) K8= 1.0 - 0.167*R8
0055          IF(R8 .GT. 1.0) K8= R8 - 0.1
0056          DP1= 0.65*Q
0057          DP2= 0.15*Q
0058          DP3= (0.2 + (1.0 - 3.56*D**2/WR**2)**2)*Q
0059          DP4= 0.25*Q
0060          DP5= (3.1416*D**2/(2.0*H*(LS-L)))**2*K5*Q
0061          DP6= 1.3*D**4*K6*Q/(X**2*LT1**2)
0062          DP7= 7.85*D**4*K7*Q/(WR**2*H**2)
0063          DP8= 0.836*D**4*K8*Q/(Y**2*LT3**2)
0064          XH= (DP1 + DP2 + DP5 + DP6)*100.0/P1
0065          XL= (DP3 + DP4 + DP7 + DP8)*100.0*1.84/P1
0066          XSUM= (XH + XL)*1.2
0067          IF(IADV .EQ. 0) GO TO 10
0068          IF(IADV .GE. 2) GO TO 10
        C ADDITIONAL PRESSURE DROPS FOR ADVANCED SYSTEMS
0069          R11= 0.243*(LS-L)*H/D**2
0070          IF(R11 .LE. 1.0) K11= 1.0 - 0.167*R11
0071          IF(R11 .GT. 1.0) K11= R11 - 0.1
0072          K12= 2.55*H**2/(X*LT1) - 0.1
0073          IF(K12 .LT. 0.0) K12=0.0
0074          ARG1= (1.0 - 2.62*D**2*H**2/(X**2*LT1**2))**2
0075          ARG2=       (P1*Q)**0.1*D**1.2
0076          DP9=(0.65 + ARG1 + 5.2/ARG2)*Q
0077          DP10= (0.6 + 5.09/ARG2)*Q
0078          DP11=(4.25*D**4/((LS-L)**2*H**2))*K11*Q
0079          DP12= 1.03*D**4*K12*Q/(X**2*LT1**2)
0080          XSUM= XSUM + (DP9 + DP10 + DP11 + DP12)*100.0*1.2/P1
0081       10 CONTINUE
        C
        C WEIGHT CALCULATION
        C
0082          T1= P1*D/K(1) + 0.079
0083          IF(T1 .LT. 0.111) T1=0.111
0084          W1=57.3*D*T1
0085          T2= P1*D/K(2) + 0.079
0086          IF(T2 .LT. 0.111) T2=0.111
0087          IF(T2 .LT. 0.145 .AND. IADV .EQ. 1) T2=0.145
0088          IF(T2 .LT. 0.145 .AND. IADV .EQ. 2) T2=0.145
0089          IF(T2 .LT. 0.145 .AND. IADV .EQ. 3) T2=0.145
0090          IF(T2 .LT. 0.145 .AND. IADV .EQ. 4) T2=0.145
0091          W2= 39.0*D*T2
0092          T3= P1*D/K(3) + 0.079
0093          IF(T3 .LT. 0.111) T3=0.111
0094          IF(T3 .LT. 0.145 .AND. IADV .EQ. 4) T3=0.145
0095          W3= 59.1*D*T3
0096          T4= P1*D/K(4) + 0.079
```

```
0097          IF(T4 .LT. 0.111) T4=0.111
0098          W4= 47.9*D*T4
0099          T5= P1*D/K(5) + 0.079
0100          IF(T5 .LT. 0.111) T5=0.111
0101          W5= 0.924*D*H*T5 + 0.462*D**2*T5
0102          T6= P1*X*LT1/(K(6)*H) + 0.079
0103          IF(T6 .LT. 0.111) T6=0.111
0104          IF(T6 .LT. 0.145 .AND. IADV .EQ. 1) T6=0.145
0105          IF(T6 .LT. 0.145 .AND. IADV .EQ. 2) T6=0.145
0106          IF(T6 .LT. 0.145 .AND. IADV .EQ. 3) T6=0.145
0107          IF(T6 .LT. 0.145 .AND. IADV .EQ. 4) T6=0.145
0108          W6= 0.462*X*LT1*T6 + 0.116*X**2*LT1**2*T6/H**2
0109          T7= P1*WR/K(7) + 0.079
0110          IF(T7 .LT. 0.111) T7=0.111
0111          IF(T7 .LT. 0.145 .AND. IADV .EQ. 4) T7=0.145
0112          W7= 0.462*WR*H*T7 + 0.116*WR**2*T7
0113          T8= P1*Y*LT3/(K(8)*H) + 0.079
0114          IF(T8 .LT. 0.111) T8=0.111
0115          W8= 0.462*Y*LT3*T8 + 0.116*Y**2*LT3**2*T8/H**2
0116          WTOT= W1+W2+W3+W4+W5+W6+W7+W8
0117          IF(IADV .EQ. 0) GO TO 30
0118          IF(IADV .GE. 2) GO TO 30
        C ADDITIONAL WEIGHTS FOR ADVANCED SYSTEMS
0119          T9= P1*D/15400. + 0.079
0120          IF(T9 .LT. 0.111) T9=0.111
0121          W9= 229.0*D*T9
0122          T10= P1*D/12100. + 0.079
0123          IF(T10 .LT. 0.145) T10=0.145
0124          W10= 243.0*D*T10
0125          T11= P1*D/7700. + 0.079
0126          IF(T11 .LT. 0.111) T11=0.111
0127          W11= 1.06*D*H*T11 + 0.605*D**2*T11
0128          T12= P1*X*LT1/(17600.*H) + 0.079
0129          IF(T12 .LT. 0.111) T12=0.111
0130          W12= 0.462*X*LT1*T12 + 0.116*X**2*LT1**2*T12/H**2
0131          WTOT= WTOT + W9 + W10 + W11 + W12
0132       30 CONTINUE
0133          D1=D
0134          D2=1.205*D
0135          D3=1.333*D
0136          D4=1.08*D
0137          D9=1.144*D
0138          D10=1.214*D
        C CONVERGENCE TRIAL
0139          DOLD=D
0140          EX=0.25
0141          DNEW= D*(XSUM/XDL)**EX
0142          ERR= ABS((DNEW-DOLD)/8.0)
0143          IF(ERR .LT. 0.01) RETURN
0144          IF(ICON .LT. 20) GO TO 100
0145          IERR=1
0146          RETURN
0147      100 ICON=ICON + 1
0148          D=DNEW
0149          GO TO 1000
              END
```

```
0001          SUBROUTINE OPTSUM(X1A,Y1A,I1,X2A,Y2A,I2,X3A,Y3A,I3,Y,X1,X10,DX1,
             1 N1,X2,X20,DX2,N2,X3,X30,DX3,N3,Y1,Y2,Y3,XT,FC)
0002          DIMENSION X1A(I1),Y1A(I1),X2A(I2),Y2A(I2),X3A(I3),Y3A(I3)
0003          COMMON/ARRAYS/
             1          A1A(20),B1A(20),C1A(20),A2A(20),B2A(20),C2A(20),
             2   A3A(20),B3A(20),C3A(20) , D2A(20),D3A(20)
0004          COMMON/COPT/ WGAS,TEMP1,P1,WMOL,X4,WDS,D,IADV,IERR
0005          COMMON/DUCTIN/B1,A1,A10,C3,C2,B3,B2,C1,A2,A3,D2,D3
0006          CALL OPTIN(Y,X1,X10,DX1,N1,X2,X20,DX2,N2,X3,X30,DX3,N3)
0007       10 CONTINUE
0008          X4=XT-X2-X1-X3
0009          IF(X4 .LE. 0.5) GO TO 20
0010          CALL LAGIN2(-1,X1A,I1,2,X1,Y1,Y1A)
0011          CALL LAGIN2(-2,X2A,I2,2,X2,Y2,Y2A)
0012          CALL LAGIN2(-3,X3A,I3,2,X3,Y3,Y3A)
0013          Y1=Y1*FC
0014          Y2=Y2*FC
0015          Y3=Y3*FC
0016          CALL LAGIN2(-1,X1A,I1,3,X1,A1,A1A)
0017          CALL LAGIN2(-1,X1A,I1,3,X1,B1,B1A)
0018          CALL LAGIN2(-1,X1A,I1,3,X1,C1,C1A)
0019          CALL LAGIN2(-1,X2A,I2,3,X2,A2,A2A)
0020          CALL LAGIN2(-1,X2A,I2,3,X2,B2,B2A)
0021          CALL LAGIN2(-1,X2A,I2,3,X2,C2,C2A)
0022          CALL LAGIN2(-1,X2A,I2,3,X2,D2,D2A)
0023          CALL LAGIN2(-1,X3A,I3,3,X3,A3,A3A)
0024          CALL LAGIN2(-1,X3A,I3,3,X3,B3,B3A)
0025          CALL LAGIN2(-1,X3A,I3,3,X3,C3,C3A)
0026          CALL LAGIN2(-1,X3A,I3,3,X3,D3,D3A)
0027          B1=B1*FC
0028          C2=C2*FC
0029          C3=C3*FC
0030          D2=D2*FC
0031          D3=D3*FC
0032          A10=A1
0033          A1=0.69*C1 + A1
0034          WG= FC*WGAS
0035          CALL DUCT(WG  ,TEMP1,P1,WMOL, X4 ,WDS,D,IADV,IERR)
0036          Y=  Y1 + Y2 + Y3    + WDS
0037       20 CONTINUE
0038          CALL OPTOUT( Y,X1,X2,X3,IMIN,          &10)
0039          RETURN
0040          END
```

```
      SUBROUTINE OPTIN(Y,X1,X10,DX1,N1,X2,X20,DX2,N2,X3,X30,DX3,N3)
      IMIN=-1
      IEND=0
      YMIN=1.E20
      Y=1.E21
      I=0
      J=0
      K=0
      X1=X10
      X2=X20
      X3=X30
      RETURN
      ENTRY OPTOUT(Y,X1,X2,X3,IMIN, *)
      IF(IEND .EQ. 1) RETURN
      IF(Y .GE. YMIN) GO TO 100
      IMIN=I
      JMIN=J
      KMIN=K
      YMIN=Y
  100 CONTINUE
      I=I+1
      X1=X10 + I*DX1
      IF(I .LE. N1) RETURN 1
      J=J+1
      X2=X20 + J*DX2
      I=0
      X1=X10
      IF(J .LE. N2) RETURN 1
      K=K+1
      X3= X30 + K*DX3
      J=0
      X2=X20
      IF(K .LE. N3) RETURN 1
      IF(IMIN .LT. 0) RETURN
      X1=X10 + IMIN*DX1
      X2=X20 + JMIN*DX2
      X3=X30 + KMIN*DX3
      IEND=1
      RETURN 1
      END
```