N71-19645

PART 2 – MODULATORS

Section

Page

Radio Frequency Modulators 120

Optical Modulators 128

Electro-Optic Modulation 134

Elasto-Optic Modulation 152

Internal Modulation 168

Modulator Performance 176

MODULATORS

Radio Frequency Modulators

	Page
Modulation Methods	120
Radio Frequency Modulations Implementation	124
Digital and Compound Modulation Implementation	126

MODULATION METHODS

Amplitude, frequency and phase modulation are discussed.

A signal to be modulated may be described by equation 1.

$$A(t) = E_{mo} \sin(\omega t + \phi) \tag{1}$$

where: E_{mo} is the peak amplitude of the signal
ω is the angular frequency
ϕ is the phase

It is possible to modulate this signal by changing the constants: E_{mo}, ω, or ϕ. This produces amplitude, frequency, and phase modulation respectively.

Amplitude Modulation

Amplitude modulation may be analyzed by letting

$$E_{mo} = E_m + mE_m \sin qt \tag{2}$$

$$\phi = 0$$

$$\omega = \omega_o$$

$$o \leq m \leq 1$$

then

$$A(t) = E_m \left[1 + m \sin qt\right] \sin \omega_o t \tag{3}$$

by trigonometric expansion this equation may be written

$$A(t) = E_m \sin \omega t - \frac{mE_m}{2} \cos(\omega_o + q)t + \frac{mE_m}{2} \cos(\omega_o - q)t \tag{4}$$

Equation (4) shows the carrier term and the two sidebands.

The bandwidth required for an AM system is twice the modulating frequency. However, it is possible by suitable filtering to suppress the carrier and one sideband and transmit a single sideband only. This is usually noted as single sideband amplitude modulation (SSB-AM). As may be seen from equation 4 the modulation frequency and amplitude may

be recovered from SSB-AM if the carrier frequency is known at the receiver. SSB-AM transmission is approximately 5 db more efficient than normal AM.

Frequency Modulation

Frequency modulation may be analyzed by letting

$$\omega = \omega_o + 2\pi k f_o \cos qt \tag{5}$$

$$\emptyset = 0$$

$$E_{mo} = E_{mo}$$

Equation 1 becomes then

$$A(t) = E_{mo} \sin \left[(\omega_o + 2\ kf_o \cos qt)t \right] \text{ or by expansion} \tag{6}$$

$$\begin{aligned} A(t) = E_{mo} \Big\{ & J_o(m_f) \sin \omega_o f + J_1(m_f) \left[\sin (\omega_o + q)t - \sin (\omega_o - q)\, t \right] \\ & + J_2(m_f) \left[\sin (\omega_o + 2q)t - \sin (\omega_o - 2q)\, t \right] \\ & + J_3(m_f) \left[\sin (\omega_o + 3q)t - \sin (\omega_o - 3q) \right] \\ & + \ldots \Big\} \end{aligned} \tag{7}$$

where

$$m_f = \frac{\Delta f}{f_o} = \frac{2\pi\, \Delta f}{\omega_o}$$

and $J_m(m)$ is the Bessel function.

The bandwidth of a frequency modulated signal is infinite. However, higher order Bessel functions have small values and may be neglected. A practical bandwidth requirement for a frequency modulated wave is

$$BW_{IF} = 2f_m\, (m_f + 1) \tag{8}$$

where $f_m = \frac{q}{2\pi}$

MODULATION METHODS

A frequency modulated wave realizes an improvement in signal to noise ratio (SNR) when detected. The relationship of the modulated SNR to the detected SNR is

$$\frac{(SNR)_{detected}}{(SNR)_{modulated}} = \frac{3}{2}\frac{\Delta f^2 BW_{IF}\delta}{f_m^3} \tag{9}$$

where δ is a loss due to imperfect filtering.

Phase Modulation

Phase modulation may be analyzed by letting

$$\begin{aligned} \phi &= m_p \sin qt \\ E_{mo} &= E_{mo} \\ \omega &= \omega_o \end{aligned} \tag{10}$$

Then equation 1 may be written as

$$A(t) = E_{mo} \sin(\omega_o t + m_p \sin qt) \tag{11}$$

Equation 11 may be expanded to yield:

$$\begin{aligned} A(t) = E_{mo} \Big\{ & J_o(m_p) \sin \omega_o t + J_1(m_p) \left[\sin(\omega_o + q)t - \sin(\omega_o - q)t\right] \\ & + J_2(m_p) \left[\sin(\omega_o + 2q)t + \sin(\omega_o - 2q)t\right] \\ & + J_3(m_p) \left[\sin(\omega_o + 3q)t - \sin(\omega_o - 3q)t\right] \\ & + \ldots \Big\} \end{aligned} \tag{12}$$

The bandwidth of a phase modulated signal may be obtained from equation 8 by substituting m_p for m_f. Similarly, the detection improvement obtained at demodulation may be obtained from equation 9 by a slight rearranging of terms to yield

$$\frac{(SNR)_{detected}}{(SNR)_{modulated}} = \frac{3}{2} \frac{m_p^{\,2} \, BW_{IF} \, \delta}{f_m} \tag{13}$$

RADIO FREQUENCY MODULATION IMPLEMENTATION

Typical circuits are given for amplitude, phase and frequency modulation.

Implementations for amplitude, phase, and frequency modulation can take on a great variety of forms. Three single circuits are discussed below which can accomplish these modulation forms.

Amplitude Modulation

Amplitude modulation has, as a basic equation:

$$A(t) = E_m \left[1 + m \sin qt\right] \sin \omega_o t \qquad (1)$$

Thus there is a basic operation of multiplying the modulation waveform and the carrier waveform. This can be done using the circuit of Figure A. Figure B may be used to generate amplitude modulation with suppressed carrier. If this signal is passed through a suitable bandpass filter single sideband amplitude modulation results.

Frequency Modulation

The equation describing frequency modulation is:

$$A(t) + E_{mo} \sin \left[(\omega_o + 2\ k\ f \sin qt)t\right]$$

here a frequency is added to the carrier frequency. This is most commonly done by using an electronically controllable reactive element in the frequency determining circuit of an oscillator. Figure C illustrates such an implementation.

Phase Modulation

The equation describing phase modulation is:

$$A(t) = E_{mo} \sin (\omega_o t + m_p \sin q\, t)$$

Here a phase addition is indicated. Such a modulation is often accomplished using a phase shifter which can be controlled electronically. Figure D illustrates such an implementation.

It should be noted that frequency and phase modulators are often followed by frequency multipliers. When this occurs the phase and frequency modulation indices are also multiplied by the multiplying factor.

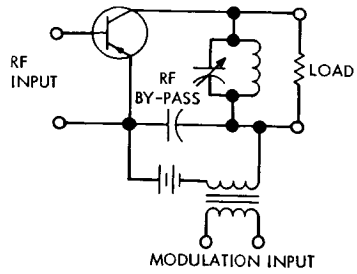

Figure A. Amplitude Modulator

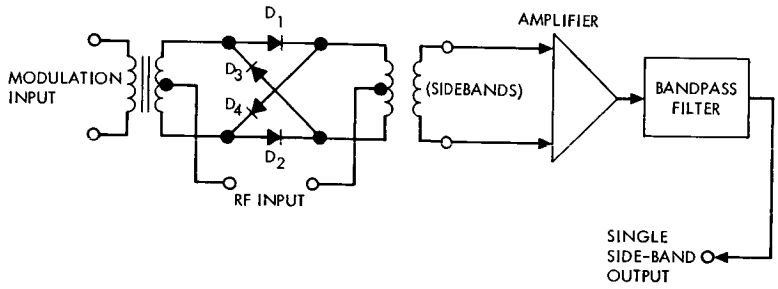

Figure B. Single Sideband Modulator

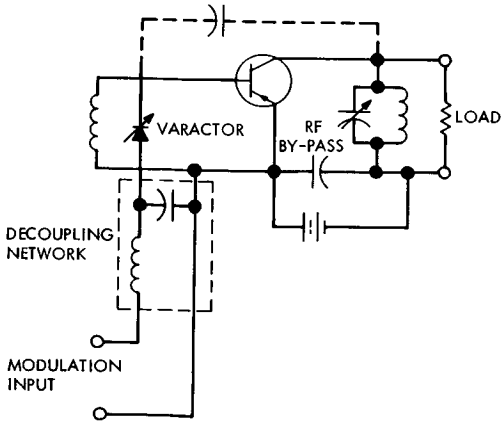

Figure C. Frequency Modulator

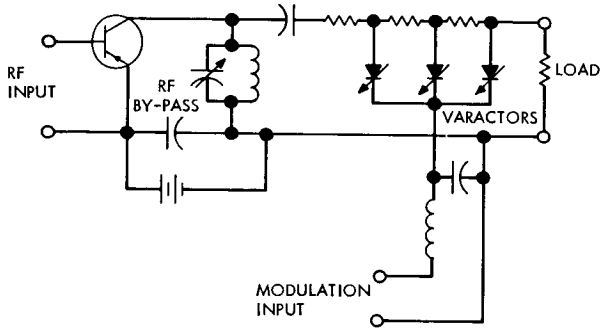

Figure D. Phase Modulator

DIGITAL AND COMPOUND MODULATION IMPLEMENTATION

Compound modulation combines several modulation steps in series, e.g. PCM/FM/PM.

The previous topic discussed amplitude frequency and phase modulation as methods where one time function is impressed on a second.

Digital Modulation

Before describing compound modulation one additional modulation method should be mentioned, namely pulse code modulation or PCM. PCM is a means of representing a given time waveform to an arbitrarily small error using a digital code word. The conversion of a time waveform to a PCM waveform consists of two basic steps, sampling and coding. In the sampling step the analog waveform is sampled at a rate higher than twice its highest frequency. The amplitudes of the samples are then represented as a code word. Clearly the bandwidth of a PCM signal is higher than the bandwidth of the input time waveform. An approximate* bandwidth is given by:

$$BW_{PCM} = (K_1)\ (f_m)\ (n)\ K_2$$

where K_1 is a constant greater than 2

f_m is the highest frequency in the time waveform

n is an exponent of 2** (e.g. 2^3)

K_2 is a constant to account for synchronizing pulses, normally $1.00 < K_2 < 1.10$

Compound Modulation

In compound modulation several modulation processes are cascaded in series. An example is PCM/FM/PM. Here the original waveform is represented by a PCM binary code. This code in turn frequency modulates a sine wave. The frequency modulated sine wave then phase modulates a second sine wave. This type of modulation is often used in radio space applications where scientific data is converted to PCM using an analog-to-digital (A/D) converter. The PCM pulse stream then modulates a relatively low frequency subcarrier oscillator (SCO). The SCO then phase modulates the carrier. By using several subcarrier oscillators several channels may be imposed on a carrier. Similarly several channels may be incorporated in the PCM bit stream by using a commutator before the A/D converter.

---

*Varies with various filtering criteria
**For binary modulation

Many forms of compound modulation can be implemented, a few of the more common types are listed below.

PCM/FM	PCM/PM
PCM/FM/PM	FM/FM
PCM/AM	AM/FM

INTRODUCTION

The interaction of optical and electric or acoustic fields in certain optical materials is the basis for achieving a variety of types of laser beam modulation for useful applications in space communication systems.

Laser modulation is accomplished by passing the beam through an optically transmissive medium in which one or more of the optical transmission parameters is varied by the application of a modulating field. The interaction of the laser beam and the modulating field within the medium makes it possible to achieve a wide variety of types of optical modulation, including intensity, frequency, phase, and polarization.

The advent of lasers has motivated extensive research and development in optical modulation. Laboratory and commercial devices presently are available for obtaining all forms of modulation of visible and infrared lasers. Most of these devices are based on the use of the electro-optic effect or elasto-optic effect in crystals and liquids. Up until two years ago, the best immediately available techniques for modulating infrared lasers (beyond about 1.5 microns) involved the use of elasto-optic, or acoustic effects. However, advances in the technology of growing single-domain ferro-electric crystals, some of which exhibit a strong first-order electro-optic effect, promise a brighter future for modulation up to 5 microns by electro-optic means; and the recent advent of high resistivity gallium arsenide opens the way to practical modulation systems at 10.6 microns.

A detailed assessment of the performance and burdens of existing visible and infrared optical modulators may be somewhat misleading to the designer of future laser systems for space applications because the relevant technology is in a constant state of flux and probably will continue to be so for at least several years. The discovery and perfection of nonlinear optical materials and the invention and perfection of modulation interaction structures and devices will lead to continuing improvement in performance and reduction of burdens.

At present, electro-optic modulators for lasers which operate in the wavelength range between about 0.4 and 10.6 microns can provide information bandwidths larger than the maximum believed to be required by space optical communication and tracking systems (i.e., 100 MHz of bandwidth). The burdens of weight and modulator driving power at the longer wavelengths, however, appear excessive. The problems associated with handling very high laser beam powers also have not yet been studied in depth, and may present some additional difficulties. However, advances both in the synthesis of better electro-optic materials, and in the design of modulator structures will provide optical modulators suitable for space communications systems within the next few years.

In the meantime, it would seem advisable to pursue further research in acoustic and other means for modulating infrared lasers above 1.5 microns. Present acoustic materials and techniques have serious limitations in achieving the larger information bandwidths that may be required (i.e., in extending present bandwidths of 1 to 5 MHz, up to 100 MHz).

Other physical processes which may be useful for optical modulation, such as controllable photon absorption in solid-state materials, and

magneto-optics, either are not very promising, or are in too early a state of research to evaluate accurately their potential usefulness.

These introductory remarks on optical modulation have been addressed exclusively to the final modulation process of impressing the information on the optical carrier. It should be pointed out that there may be very good reasons for impressing the signal information on a radio-frequency subcarrier, prior to performing the final optical modulation. All of the conventional modulation techniques may be utilized in the preliminary step. This will eliminate the necessity for impressing video or very low-frequency modulation components on the laser beam. The elimination of low-frequency components on the optical signal may provide important advantages both in the ease of design and driving of optical modulators, and in achieving satisfactory transmission through the earth's atmosphere. The latter factor is mentioned even though it is not yet certain that it will be either feasible or desirable to include the earth's atmosphere in the optical part of a space-earth link.

Finally, it should be pointed out that research and development remain to be done before the technology will exist to provide optical modulators with fully acceptable performance and burdens for space communication and tracking systems. The programs now in progress, if continued, may accomplish the desired results. This is in an area, however, which needs additional direction and support in order to assure that the results will be forthcoming on a suitable schedule.

SUMMARY OF OPTICAL MODULATORS

Advances in the technology of electro-optic modulator materials and design techniques permit a reasonably accurate assessment of expected performance.

It is difficult at this time to make accurate assessment of the performance characteristics of optical modulators which will have continuing value to the designer of laser systems for space communications and tracking. However, great progress has been made in the past few years in the development of optical modulation techniques and materials. This work has demonstrated that all forms of modulation can be impressed on optical carriers in the band between 0.4 and 10.6 μ. At wavelengths longer than 1.5 μ, optical modulation technology is in a somewhat more primitive state; but the advent of high grade semi-insulating GaAs as a useful electro-optic modulator material in the infrared region of 2 to 12 μ has constituted a notable breakthrough for CO_2 laser applications. Moreover, the technology of synthesizing superior grade $LiNbO_3$ and $LiTaO_3$ has made possible useful and efficient modulators in very broadband applications over the wavelength range of 0.4 to 5 μ. Research and development of acoustic modulation techniques is progressing at a moderate pace, and acoustic modulators in some instances offer a significant power advantage; but on the other hand they provide modulation bandwidths far short of those believed to be needed in optical space communication systems.

In considering communication and tracking systems using infrared lasers, it must be realized that there is an inherent inverse dependence of modulation efficiency on wavelength at a given driver power level. Thus, for example, a specific modulator element requires 10 times as much voltage at 5 μ as it does at 0.5 μ to achieve the same depth of modulation. In order to keep the power within reasonable limits, it is necessary to (1) extend the interaction length and/or (2) settle for less modulation scheme which can provide a high effective modulation index for intensity modulation and reasonable frequency deviations in optical FM systems with very modest levels of driver power, when the attendant bandwidth limitations are acceptable.

The table presents, in more or less chronological order, a series of electro-optic modulators and their operating characteristics. This listing is by no means complete, but an attempt has been made to itemize those modulators which represent significant advances in their particular regime of applications. Except where otherwise noted, the performance characteristics are applicable for an optical wavelength of 6328Å. The commercial device produced by Isomet Corporation reflects the advanced technology now reached in the field of electro-optic modulator design and production.

Characteristics of Some Electro-Optic Modulators - December 1968

Parameter	TM_{00} Mode Cavity Modulator	Traveling Wave Intensity Modulator	Polarization Modulator (NASA Contract)	Multi-Element Intensity Modulator	Resonant SSBSC Modulator	Traveling Wave SSBSC Modulator	Single Element PCM Modulator	10.6 μ Intensity Modulator	Commercial Modulator
Development Status	Built at BTL	Built at Sylvania	Built at Hughes Aircraft Company	Built at Hughes Aircraft Company	Built at Hughes Aircraft Company	Built at Hughes Aircraft Company	Built at BTL	Built at RCA	Product of Isomet Corp.
Material	KDP	KDP	KDP	KDP	KDP	KDP	$LiTaO_3$	GaAs	y-cut ADP
Crystal Dimensions	1 cm long x 2.5mm dia.	100 cm long x 2 mm wide	50 x 0.4 x 0.4 cm	16 each 1/4" x 1/4" x 1/2"	2 each 1 1/2" long x 1/2" dia.	80 x 0.4 x 0.4 cm	1 x 0.025 x 0.025 cm	6.7 x 0.3 x 0.3 cm	20 x 0.4 x 0.4 cm
Optical Attenuation	0.1 dB	6 dB	1.5 dB	0.3 dB	1.0 dB	2.0 dB	1.5 dB	0.4 dB	0.4 dB
Useful Optical Range	0.4 - 1.5 μ	0.4 - 1.5 μ	0.4 - 1.5 μ	0.4 - 1.5 μ	0.4 - 1.5 μ	0.4 - 1.5 μ	0.4 to 5 μ	2 to 12 μ	0.25 to 0.75 μ
Modulation Frequency	3 Gc	Baseband	Baseband	Baseband	850 Mc	200 Mc	Baseband	Baseband	Baseband
3 dB Bandwidth	4 MHz	3 GHz	30 MHz*	10 MHz*	5 MHz	100 MHz	220 MHz*	100 MHz*	>100 MHz
Modulating Power	1.5 W	12 W	20 W	12 W	3 W	10 W	250 mW	70 W	50 W
Modulation Index	0.13	~1.0	0.5	0.5	0.01	0.3	0.4	0.1	0.5
Extinction Ratio	Unknown	Unknown	8:1	250:1	NA	NA	80:1	~80:1	70:1
Weight	Unknown	Unknown	20 lbs	2 lbs	15 lbs	25 lbs	Unknown	Unknown	Unknown
Size	Unknown	~100 in^3	144 in^3	30 in^3	850 in^3	216 in^3	Unknown	12 in^3	80 in^3

*3dB Bandwidth limited by modulator driver and not by the electro-optic structure.

OPTICAL MODULATORS

Electro-Optic Modulation

	Page
Theory of Electro-Optic Modulation	134
Bias Point and Driver Level Considerations	136
Design of Optical Intensity Modulators	138
Design of Electro-Optic Frequency Translators	142
Bandwidth Limiting Factors in Lumped-Element Modulators	146
Traveling Wave Electro-Optic Modulators	148

THEORY OF ELECTRO-OPTIC MODULATION

Optical modulation in various forms may be achieved using materials which exhibit the electro-optic effect.

The phenomenon of electrically-induced birefringence exhibited by most optical materials provides the mechanism for electro-optic modulation of optical beams. Application of a properly-directed electric field within the material gives rise to a perturbation of its refractive properties, characterized by two unique orthogonal directions, called the "fast" and "slow" axes. Optical beams plane-polarized along these two axes and directed normal to their plane, will travel at different velocities, determined by their respective indices of refraction. After traversing a length L of the material, a single optical beam initially plane-polarized at 45 degrees to these principal axes will emerge in general elliptically polarized, since its principal components will have suffered a relative optical phase shift, Γ, of

$$\Gamma = \frac{2\pi L}{\lambda} \Delta N \text{ radians},$$

where λ is the free-space optical wavelength and ΔN is the difference between the fast and slow refractive indices. If the emerging beam is passed through a linear polarizer (analyzer) whose preferred direction is perpendicular to that of the incident beam polarization, some of the elliptically-polarized beam will be transmitted. Its intensity I, relative to the incident intensity I_o, is given by

$$I = I_o \sin^2 \left(\frac{\Gamma}{2}\right),$$

assuming no losses in the material. Variations in Γ resulting from electro-optic changes in the birefringence ΔN thus give rise to intensity modulation of the incident beam. If the analyzer is omitted, a receiver equipped with suitable polarization isolators and matched detectors can process the beam in either a phase-difference modulation or polarization modulation mode. Finally, if the modulator is designed to provide a real or simulated rotation of the principle axes of induced birefringence, optical frequency translation may be achieved.

Depending upon the nature of the material, the electro-optic effect may take different functional forms. In liquids and some solids, the changes in refractive indices exhibit a quadratic dependence upon the field; this is designated the Kerr effect.[1] Crystalline solids which are piezoelectric display a linear relationship known as the Pockels effect.[2] Explicit relations for some common classes of electro-optic materials are shown in the Table.

---

[1] Jenkins, F. A. and White, H. E., Fundamentals of Optics, Third Edition, McGraw-Hill, New York, pp. 604-605, 1957.

[2] West, C. B. and Carpenter, R. O'B., in American Institute of Physics Handbook, Section 6, McGraw-Hill, New York, pp. 94-97, 1957.

Properties of Some Typical Electro-Optic Materials

Crystal Class or Material	Retardation Equation	Examples	Indices of Refraction	Electro-Optic Coefficients
$\bar{4}2$ m	$\Gamma = \frac{2\pi L}{\lambda} N_o^3 r_{63} E$	KDP	$N_o = 1.51$	$r_{63} = 1.03 \times 10^{-11}$ m/volt
		KD*P	$N_o = 1.51$	$r_{63} = 2.6 \times 10^{-11}$ m/volt
$\bar{4}3$ m	$\Gamma = \frac{2\pi L}{\lambda} N_o^3 r_{41} E$	Cu Cl	$N_o = 1.93$	$r_{41} = 6.14 \times 10^{-12}$ m/volt
		GaAs	$N_o = 3.31$ (at 10 microns)	$r_{41} = 1.6 \times 10^{-12}$ m/volt
3 m	$\Gamma = \frac{2\pi L}{\lambda} N_o^3 r_{22} E$ (field parallel to b-axis)	$LiNbO_3$	$N_o = 2.241$	$r_{22} = 6.7 \times 10^{-12}$ m/volt
			$N_e = 2.158$ (at 1 micron)	$\left(\frac{N_e}{N_o}\right)^3 r_{33} - r_{13} = 1.73 \times 10^{-11}$ m/volt
	$\Gamma = \frac{\pi L}{\lambda} N_o^3 \left[\left(\frac{N_e^3}{N_o} r_{33} - r_{13}\right)\right] E$ (field parallel to c-axis)	$LiTaO_3$	$N_o = 2.139$	$r_{22} \cong 1 \times 10^{-12}$ m/volt
			$N_e = 2.143$ (at 1 micron)	$\left(\frac{N_e}{N_o}\right)^3 r_{33} - r_{13} = 2.16 \times 10^{-11}$ m/volt
m3m	$\Gamma = \frac{\pi L}{\lambda} N_o^3 (g_{11} - g_{12}) \epsilon^2 E^2$	KTN	$N_o = 2.29$	$(g_{11} - g_{12}) \epsilon^2 - 1.36 \times 10^{-15}$ (m/volt)^2
Kerr Fluids	$\Gamma = 2\pi BLE^2$	Nitrobenzene	$N_o = 1.55$	$B = 2.5 \times 10^{-12}$ m/volt^2

E is the electric field

n_{ij} are the Pockels constants (linear electro-optic coefficients)

N_o is the ordinary refractive index

N_e is the extraordinary refractive index

The electro-optic coefficients for the crystals are the "unclamped", zero stress values obtained with dc or low frequency fields.

g_{11} and g_{12} are the quadratic electro-optic coefficients in the cubic axes system.

ϵ is the permitivity

B is the Kerr constant

BIAS POINT AND DRIVER LEVEL CONSIDERATIONS

The transfer characteristics of electro-optic modulators depend upon the quiescent or bias point and the modulation drive level.

It is important to be familiar with the characteristics of the modulated output beam of electro-optic modulators as a function of both the quiescent operating point and the level or depth of modulation. Consider in particular a beam intensity modulator whose output I as a function of the input I_o and optical phase shift Γ is given by

$$I = I_o \sin^2 \frac{\Gamma}{2}$$

In some applications such as optical printing, displays, or perhaps digital modulation, it is customary to modulate the beam from a condition of zero intensity ($\Gamma = 0$) to various levels of intensity. Practical systems will customarily operate with peak values of Γ less than about one radian, in which case it is valid to make the approximation $\sin(\Gamma/2) \cong \Gamma/2$, yielding

$$I = I_o \frac{\Gamma^2}{4}$$

This shows that for modulators using linear electro-optic crystals, the output intensity is proportional to the square of the applied electric field; in other words, the output optical power is proportional to the input driver power.

It is clear that with zero bias, an rf sine wave driver signal producing $\Gamma = \Gamma_o \sin \omega_m t$ would yield an intensity modulated optical output beam containing only the second harmonic of ω_m, since

$$\frac{I}{I_o} \cong \frac{1}{4} \Gamma_o^2 \sin^2 \omega_m t = \frac{1}{8} \Gamma_o^2 (1 - \cos 2\omega_m t).$$

In intensity modulation with sine wave rf drive, minimum harmonic distortion is achieved by biasing the incident beam with a quarter-wave plate to give circular polarization. In this case

$$\Gamma = \frac{\pi}{2} + \Gamma_o \sin \omega_m t,$$

and

$$\frac{I}{I_o} = \frac{1}{2}\left[1 + \sin\left(\Gamma_o \sin \omega_m t\right)\right] = \frac{1}{2}\left[1 + 2J_1\left(\Gamma_o\right) \sin \omega_m t + 2J_3\left(\Gamma_o\right) \sin 3\omega_m t + \ldots\right],$$

where J_n is the nth order Bessel function. When $\Gamma \leq \pi/6 \cong 0.5$, this can be written in the approximate form

$$\frac{I}{I_o} = \frac{1}{2}\left[1 + \Gamma_o \sin \omega_m t\right].$$

In this case $\Gamma_o \equiv m$, the usual designation of modulation index for intensity-modulated waves. More generally, however, there is a modulation index $m_i = 2J_i(\Gamma_o)$ for the fundamental and higher harmonics. For convenience some values of m_i for a selected range of Γ_o are listed below.

Γ_o	m_1	m_3
0.25	0.248	0.001
0.50	0.485	0.005
$\pi/4$	0.726	0.019
1.00	0.880	0.039
1.25	1.021	0.074
$\pi/2$	1.134	0.138

These figures show that if an attempt is made to make $\Gamma_o = \pi/2$, the modulated wave contains almost 14 percent third-harmonic power. More significantly, since the driver power is proportional to Γ_o^2, it takes four times as much power to achieve this modulation index as it does to achieve $\Gamma_o = \pi/4$ and nine times as much as that for $\Gamma_o = \pi/6$. Note also that this last depth of modulation introduces only about 1/2 percent third-harmonic distortion.

DESIGN OF OPTICAL INTENSITY MODULATORS

Special design schemes may be utilized to construct practical electro-optic modulators requiring only modest levels of driver voltage.

The optical modulators used as examples for the present discussion employ KDP as the active electro-optic element. The customary and only practical mode of optical modulation using KDP and its isomorphs is that which applies the modulating signal field along the crystalline c-axis (optic axis). If it is desired to avoid the natural birefringence of this class of material and at the same time realize maximum electro-optic phase retardation, the light beam must also travel parallel to the c-axis. Under the influence of a signal field, the principal axes of induced birefringence lie in the a-b plane at ±45 degrees relative to the crystalline axes. The maximum field strength E_m in terms of the voltage V_m is $E_m = V_m/L$, where L is the length of crystal along the field (and optical beam). From the Table, given in the topic entitled "Theory of Electro-Optic Modulation,":

$$\Gamma_o = \frac{2\pi N_o^3 r_{63} V_m}{\lambda} \tag{1}$$

The output phase difference, Γ, of the principal optical components is therefore independent of the length of the crystal. To reach the maximum Γ (= $\pm \pi/2$) in KDP, for light of wavelength λ = 6328 Å, requires a signal voltage amplitude V_m = 5.5 kV, which is obviously high for practical operation.

Two types of modulators are discussed below which are designed to circumvent the above limitation. Both systems provide a long interaction length with modulating fields sufficiently strong to yield ample modulation depth at low levels of driving voltage.

The first modulator is a multielement device consisting of a linear chain of small KDP crystals separated by thin, flat-ring electrodes. This is shown schematically in Figure A. Figure B is a photograph of one such unit containing 16 elements. Alternate electrodes carry common signal voltage polarity; therefore, adjacent crystal elements have opposing fields. Since the fast and slow axes of induced birefringence exchange roles upon reversal of the field, alternate crystal elements are rotated 90 degrees about their common c-axis, so that the instantaneous fast and slow axes all have a common direction throughout the chain. The effect of this arrangement is to produce a cumulative phase shift between principal components of the light beam which is the sum of the separate elemental phase shifts. By the same token, the driving voltage required to produce a given total phase shift is 1/n times the voltage needed to produce the same phase shift in a single element, where n is the number of elements.

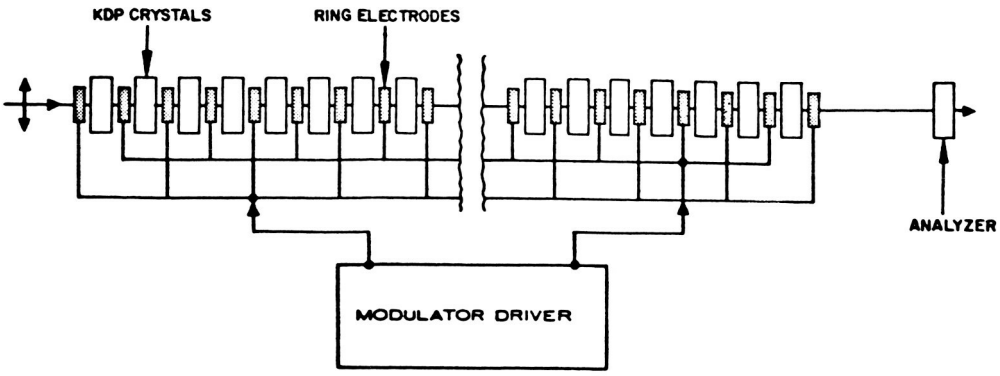

Figure A. Multielement Optical Modulator

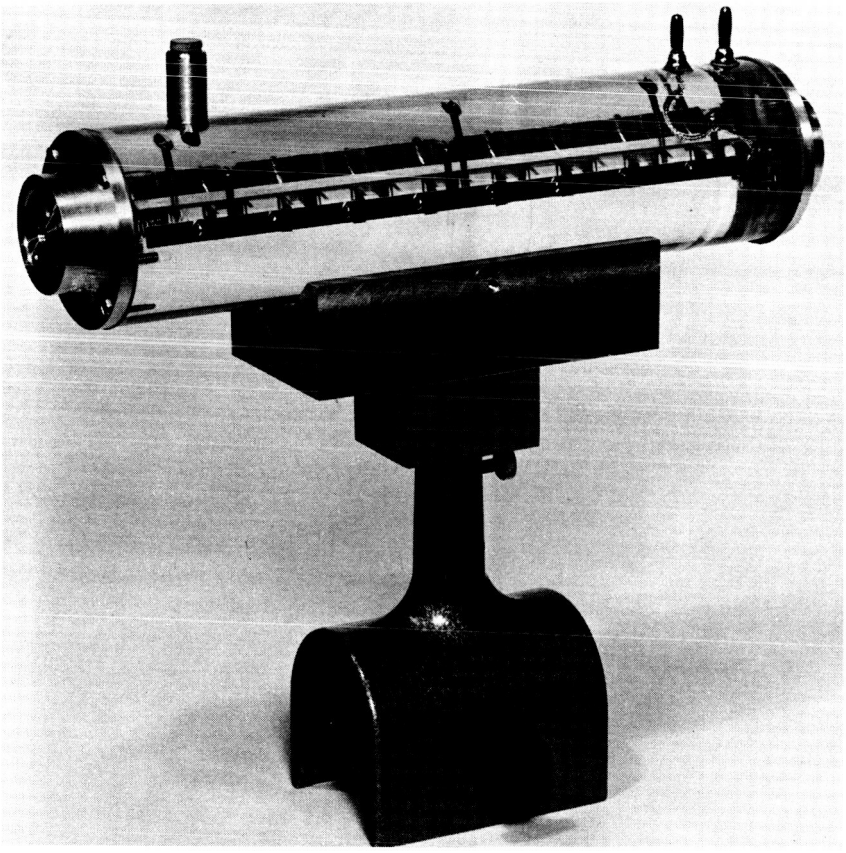

Figure B. Sixteen-Element KDP Crystal Modulator

DESIGN OF OPTICAL INTENSITY MODULATORS

The second, or alternative, modulator design has quite a different configuration.[1] It consists of two long, narrow, parallel-strip condensers filled with KDP. These are made as nearly identical as possible and are oriented in tandem along the optical beam axis. The electric fields are applied as before along the crystalline optic axis; however, this direction is now transverse to the beam, and natural birefringence must be taken into account. The purpose of having two similar units is to effect a cancellation of this natural birefringence by rotating the second unit 90 degrees relative to the first. Maximum optical phase shift is achieved if the fast axis (x-axis) of induced birefringence in the first unit is directed transverse to the beam and parallel to the plane of the electrodes, and if the slow axis (y-axis) in the second unit is similarly oriented. The incident light beam is plane polarized at 45 degrees to the optic axis (z-axis). Figure C illustrates schematically this modulator system. A simplification in the design of this configuration can be made which allows the use of a single pair of electrodes.[2] The two crystal elements are aligned with their z-axes parallel and are separated by a $\lambda/2$ plate, which is the optical equivalent of the original 90 degree rotation.

The optical phase shift Γ_o produced by this type of modulator is

$$\Gamma_o = \frac{2\pi}{\lambda}\left[LN_o^3 r_{63} E_m + \Delta L(N_e - N_o)\right]$$

in which L is the average value of the separate crystal lengths and ΔL is their length difference. An optical compensator,[2] as shown in Figure C, can be incorporated into the modulator and adjusted to cancel out the residual birefringence resulting from ΔL. The signal-dependent expression for Γ is:

$$\Gamma_o = \frac{2\pi L N_o^3 r_{63} V_m}{\lambda t} \qquad (2)$$

where again V_m is the signal voltage amplitude and t is the electrode, or plate, separation. Equation (2) is the same as Equation (1) for a single element longitudinal field modulator except for the factor L/t. Such an enhancement of the field strength is a cogent reason for considering this form of modulator.

Since the birefringence of most uniaxial crystals is temperature dependent, the second term in the above expression for Γ_o will cause the operating bias point to vary as the ambient temperature changes. With the KDP value of temperature coefficient,[2] the result is

$$\frac{\Delta\Gamma}{\Delta T} = 1.09\ \Delta L\ \text{rad}/^{\circ}\text{C}\ (\Delta L \text{ in cm.})$$

No technological difficulty is anticipated in achieving a ΔL considerably less than 0.10 mm.

$$\frac{\Delta\Gamma}{\Delta T} < 0.01\ \text{rad}/^{\circ}\text{C}$$

[1] A ruby laser Q-switch employing the same principle of operation has been described by J. L. Wentz, Proc. IEEE 52, p. 716, 1964.

[2] Peters, C. J., NEREM Record, p. 70, 1964.

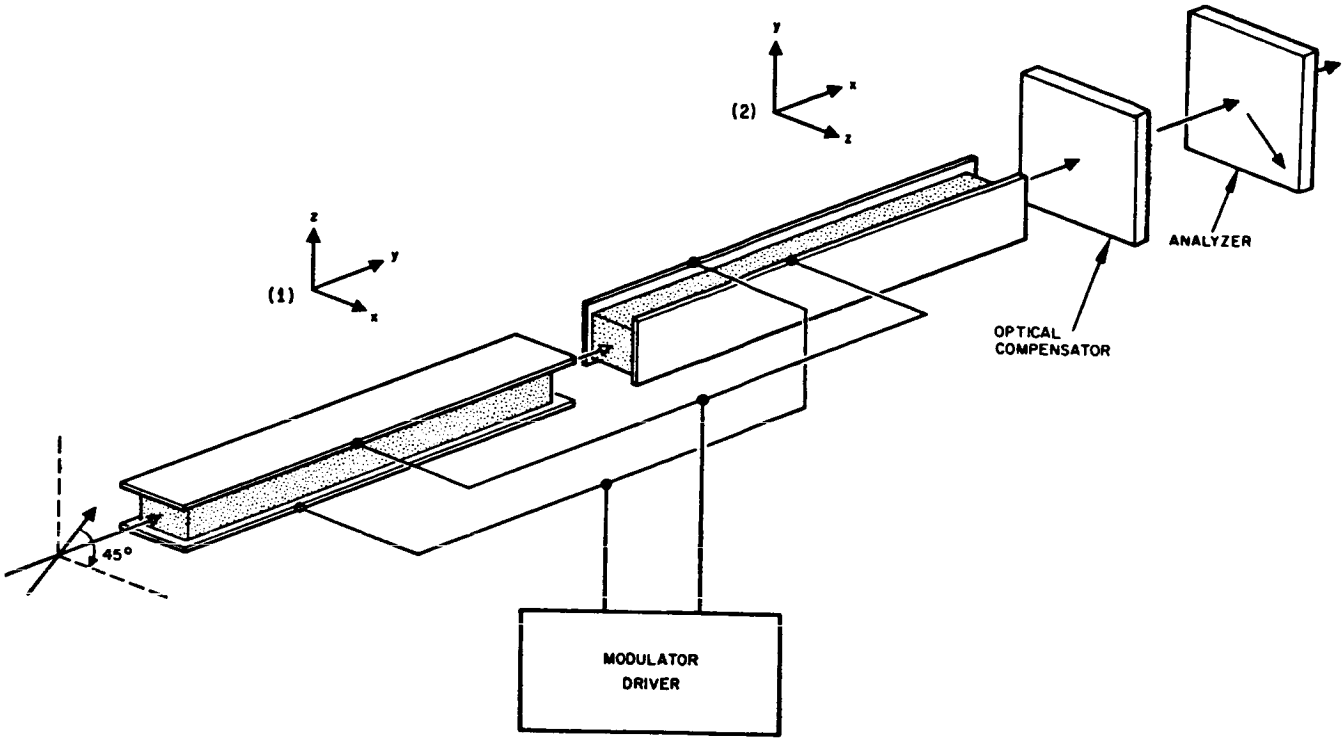

Figure C. Two-Element Parallel-Strip Optical Modulator

DESIGN OF ELECTRO-OPTIC FREQUENCY TRANSLATORS

Electro-optic frequency translation is effected by generating a real or simulated rotation of the principal axes of induced birefringence.

A laser heterodyne communication link normally employs two identical lasers, one being translated in frequency. Either could be used as the local oscillator, with the other serving as transmitter carrier. Optical frequency translation can be affected by several techniques. One method for Single Sidelobe Surpressed Carrier (SSBSC) operation is the electro-optic rotating birefringent plate.[1] In some forms, this instrument is capable of completely transforming a circularly polarized light beam into a beam of the opposite polarity and shifted in frequency by twice the frequency of rotation of the wave plate. More generally, however, only a portion of the original beam is thus shifted, and suppression of the carrier is affected by circular polarizer. Cubic crystals of a symmetry class $\bar{4}3$ m and m3m, when driven by a rotating electric field in their (111) crystal plane, exhibit a true rotating birefringence in that plane, and thus produce frequency translation of a beam of light traveling along the (111) direction. The most popular and readily available electro-optic crystals, of class $\bar{4}2$m such as KDP, do not have the above property; and thus an alternate technique is used with them.[2, 3, 4] Two crystals are oriented in tandem along the optic beam and driven in phase quadrature. These elements are oriented with their principal axes of induced birefringence at an angle of 45 degrees with respect to each other. For incident circularly-polarized light this arrangement simulates a rotating birefringent plate, producing a component of circular polarization of the opposite sense and shifted by the signal frequency.

The one-element SSBSC modulator constitutes a true rotating birefringent element which serves the function of optical frequency translation by adding a constant rate of change of phase to a wave of given input frequency. It is thus the optical analog of the conventional microwave phase shifter which utilizes a mechanically rotated birefringent half-wave plate. To realize such an optical device requires in practice the use of electro-optic crystals of special symmetry classes: $\bar{4}3$m, such as CuCl or GaAs, 3m, such as $LiNbO_3$, or m3m, such as $KTa_{0.65}Nb_{0.35}O_3$(KTN) or other similar perovskites operating in their paraelectric phase. The first two classes possess a first order electro-optic (Pockels) effect, the third, a quadratic (Kerr) effect. For classes $\bar{4}3$m and m3m the crystals are driven by an electric field rotating in the crystalline (111) plane, while the optical beam, circularly-polarized, travels through in the (111) direction. For class 3m, the field is in the (001) plane; the beam direction is (001).

---

[1] Buhrer, C. F., Bloom, L. R., and Baird, D. H., Applied Optics, 2, p. 839, 1963.

[2] Buhrer, C. F., Fowler, V. J., and Bloom, L. R., Proc. IRE, 50, p. 1827, 1962

[3] Buhrer, C. F., Proc. IEEE, 52, p. 969, 1964.

[4] Targ, R., Proc. IEEE, 52, p. 303, 1964.

Under the influence of a signal frequency f_m rotating, say, clockwise, the induced axes of birefringence of the 3m3 type rotate with the field at frequency f_m, while those of the $\bar{4}3m$ and 3m type rotate counterclockwise at a frequency $(1/2)f_m$. Since, as noted previously, the optical beam undergoes a frequency translation equal to twice the rotation rate of the wave plate, this shift can equal either f_m or $2f_m$ depending upon the class of crystal employed. In either case, if the amplitude of the applied signal voltage is sufficient to produce a full half-wave of induced birefringence, the optical frequency translation is complete. Figures A and B illustrate two possible embodiments of single-element frequency translators.

The desirability of employing the two-element modulator for optical frequency translation is dictated mainly by the crystal characteristics of the more readily available and high quality materials of class $\bar{4}2m$, such as potassium dihydrogen phosphate (KDP) and its isomorphs. Because this type is naturally birefringent, the simplest arrangement is to orient the light beam along the optic axis, in order to avoid this unwanted birefringence in the absence of modulating signal. For optimum electro-optic effect it is also necessary to apply the signal field along the c-axis; thus the beam and signal field are parallel. With this configuration the induced axes of birefringence lie in the (001) plane at a fixed orientation of 45 degrees relative to the a and b axes, exchanging roles of "fast" and "slow" axis upon reversal of the signal field.

The action of a simulated rotating birefringent plate is provided by orienting two identical crystal elements in tandem along the beam axis and so oriented relative to each other that the corresponding a and b axes (or equivalently the induced principal axes) lie at 45 degrees with respect to each other. The modulating signal is applied to the two elements in phase quadrature. This configuration behaves like a single wave plate rotating at half the frequency of the applied signal, so that the optical frequency is translated by an amount equal to that of the signal. Figure C illustrates this particular system under low frequency operation. At microwave frequencies, the simple capacitative electrodes and associated circuit is normally replaced by suitable reentrant or cylindrical cavities. In some cases the crystals are driven <u>in phase</u> but separated by a distance equal to a quarter of a signal wavelength so that the optical photons automatically experience the quadrature driving fields by virtue of their transit time.

Complete disappearance of the carrier occurs not at half-wave voltage when the optical relative phase retardation Γ_o is $\pi/2$, as in the case of the single-element device, but rather when $J_o(\Gamma_o/\sqrt{2}) = 0$ or when $\Gamma_o = 3.40$. Here J_o is the Bessel Function of zero order. Also, in addition to the first order single sideband, an upper and lower second-order sideband are generated; also a single third-order sideband, etc. The optical amplitude of thse sidebands are proportional to their respective Bessel Functions of the argument $\Gamma_o/\sqrt{2}$.

DESIGN OF ELECTRO-OPTIC FREQUENCY TRANSLATORS

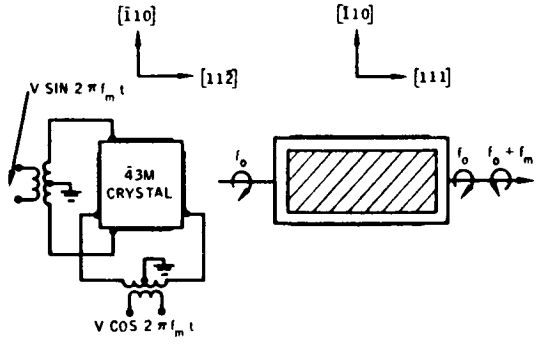

Figure A. Low Frequency One-Element Optical Frequency Translator

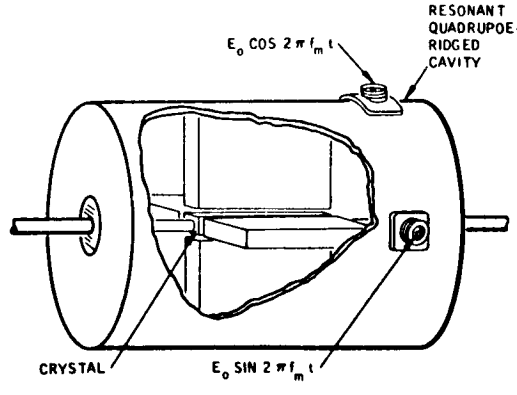

Figure B. Possible Microwave Optical Frequency Translator

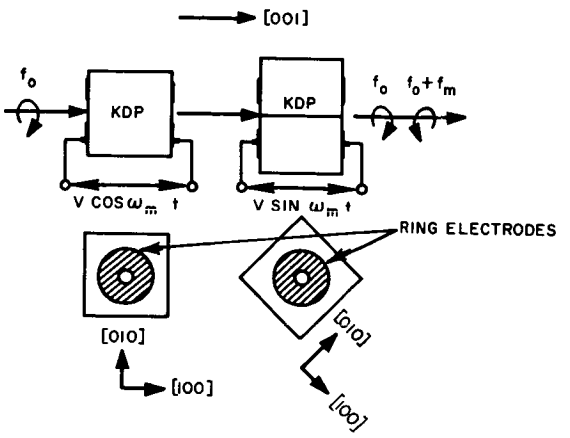

Figure C. Two-Element KDP Optical Frequency Translator For SSBSC Modulator

BANDWIDTH LIMITING FACTORS IN LUMPED-ELEMENT MODULATORS

Optical photon transit time and excessive load capacitance are the two basic factors which limit the operating bandwidth of lumped-element electro-optic modulators.

In order to realize a substantial optical phase shift, and thus a large modulation depth, one is tempted to relieve a voltage or power burden by resorting to long interaction lengths. In lumped-element modulators, however, there are two principal bandwidth-limiting factors which restrict the length of active material. These are optical transit time and load capacitance.

Optical transit time effects become appreciable when the signal frequency is sufficiently high to have a period comparable with the time required for an optical wavefront to traverse the electro-optic medium. For maximum phase shift at a given signal level, an optical wavefront should see a constant signal field strength during its transit of the crystal medium. Obviously, however, this cannot obtain if the signal frequency is so high that the field polarity actually changes sign during this transit time. It can be shown that the effective optical phase shift Γ_{eff} has a frequency dependence given by

$$\Gamma_{eff} = \Gamma_m \frac{\sin u}{u} ,$$

where

$$u \equiv \frac{\omega_m L}{2v_o} = \frac{\pi N_o L}{\lambda_m} , \qquad (1)$$

and where

$\Gamma_m \equiv$ maximum (low frequency) phase shift

$\omega_m/2\pi \equiv$ signal frequency

$v_o \equiv$ optical wave velocity

$N_o \equiv$ optical refractive index

$\lambda_m \equiv$ free space signal wavelength.

As a specific example, when the optical transit time L/v_o is a quarter of a signal period - or equivalently, when the optical path length N_oL is one quarter of a free space signal wavelength - then $u = \pi/4$,

$$\sin u/u = 0.707/0.785 = 0.90 ,$$

and the phase shift has been reduced by 10 percent. Consider, for example, a two-element transverse field modulator. For an active length of 50 cm, the frequency at which u becomes equal to $\pi/4$ is 100 MHz for KDP-type materials ($N_o \cong 1.5$) and 64 MHz for $LiNbO_3$ ($N_o \cong 2.3$).

Except for those crystals which have a relatively low dielectric permittivity, a more stringent bandwidth-limiting factor than optical transit time is the load capacitance presented by the lumped-element modulator to the signal driver. For example, a 50-cm KDP modulator having square cross-section has a capacitance of 90 pF, neglecting strays. To operate this up to 100 MHz would require a driver with maximum output impedance of only about 35 ohms, even with critical inductive video peaking. It would also, incidentally, require nearly 45 watts to modulate a 5000 Å beam 50 percent, assuming a 5 mm electrode separation. Indeed, more generally it can be shown that if optical transit time is chosen as the limiting criterion for either bandwidth or modulator length, then the driver output impedance depends <u>only</u> on optical velocity and crystal dielectric. Arbitrarily choosing $u = \pi/4$ as the maximum acceptable value, then from Equation (1), $\omega_2 L$ is:

$$\omega_2 L = \frac{\pi v_o}{2}, \tag{2}$$

where $\omega_2/2\pi = f_2$ is the upper frequency limit. A signal source capable of driving a purely capacitative load over a video bandwidth f_2 must have an output impedance less than approximately

$$R = \frac{2}{\omega_2 C} = \frac{2}{\omega_2 \epsilon L} \tag{3}$$

with optimized video peaking. Again a modulator of square cross-section is assumed having a capacitance $C = \epsilon L$, where ϵ is the permittivity of the electro-optic material. Combining Equations (2) and (3), the following is obtained:

$$R = \frac{4}{\pi \epsilon v_o},$$

which was to be proved. This result gives R = 35 ohms for KDP, 15 ohms for KD*P, and 40 ohms for $LiNbO_3$.

TRAVELING WAVE ELECTRO-OPTIC MODULATORS

The electrical characteristics of terminated traveling wave modulator structures afford a substantial increase in operating frequencies and bandwidths.

Limitations on bandwidth imposed by load capacitance and transit time effects are circumvented by resorting to a TEM parallel strip traveling wave structure, terminated by its characteristic impedance. Figure A shows the general form taken by a modulator of this type, using a KDP class of material. The dual-element configuration noted earlier can be adapted to a single electrode pair simply by incorporating a half-wave plate between the two modulator units. It causes the vertical and horizontal components of the beam to exchange roles, thereby simulating a 90-degree rotation of the second modulator section. With the positive optic axes (z-axes) of the two sections oppositely directed as shown, the axes of induced birefringence indicated by x are fast and slow axes, respectively.

By proper design, this type of modulator can be made to have a signal wave velocity which matches that of the beam. Thus any given optical wavefront sees a field strength which is constant throughout the entire modulator length, and transit time is no longer a controlling factor. The signal wave velocity can be adjusted by a suitable choice of the dielectric filling factor, that is, the ratio of crystal width to strip width.[1]

An upper limit of useful bandwidth is ultimately reached when the frequency is so high that the mode of transmission is no longer TEM. This occurs when the signal wavelength is comparable with the width of the dielectric. Under this condition the electric field amplitude is no longer constant across the wave structure; rather the mode becomes compressed within the dielectric, and the wave velocity is determined solely by the crystal dielectric permittivity.[1] This means the wave is slowed down and the velocity matching is lost. Typically the upper frequency limit at which such a degeneration of the TEM mode occurs is 2 to 3 GHz[2] with KDP type materials.

A second example of a parallel strip traveling wave electro-optic modulator is illustrated in Figure B for the case of a cubic $\bar{4}3m$ class of crystal, such as GaAs. This particular configuration is stressed for two reasons: (1) GaAs is a recent development for practical modulators of the 10.6μ CO_2 laser output and is available in good crystal sizes of acceptable optical quality and modest IR attenuation, and (2) the optical and r-f dielectric permittivities are so nearly equal that one is able to achieve a good velocity-matched condition with a fully-loaded wave structure, thus minimizing the power burden.

The indicated orientation of the crystalline axes represents the optimum configuration for the intensity-modulation mode of operation. The incident vertically-polarized laser beam is transformed by a quarter-wave plate into circular polarization in order to set the proper optical bias for best linear operation. By the action of a vertical modulation field along the [110] direction, the original circular polarization is rendered elliptical. That part of the beam which emerges from the vertically-oriented analyzer exhibits the desired intensity modulation according to the impressed signal.

---

[1] Kaminow, I. P., and Liu, J., Proc. IEEE, 51, p. 132, 1963.

[2] Peters, C. J., Proc. IEEE, 51, p. 147, 1963.

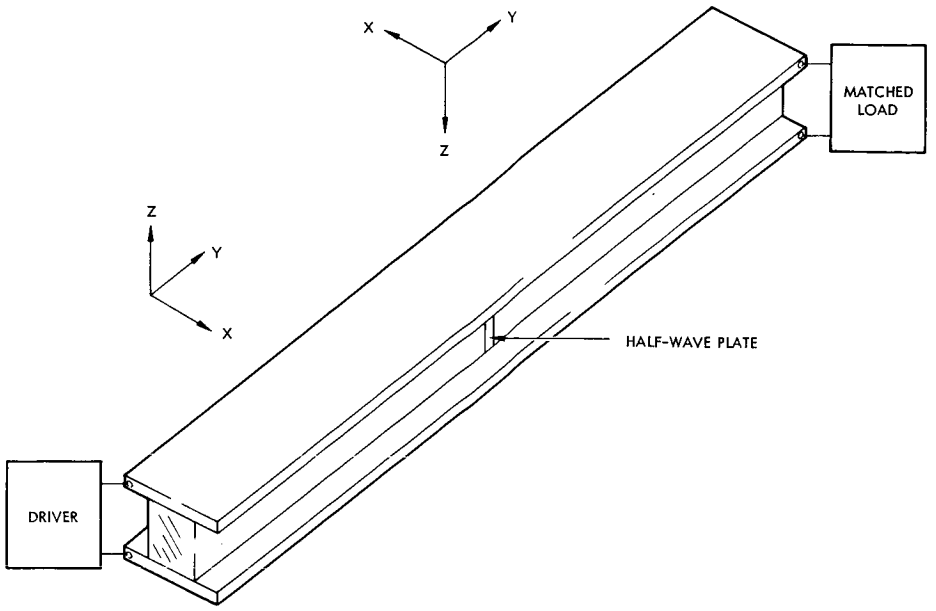

Figure A. Parallel Strip Traveling-Wave Electro-Optic Modulator Structure using KDP-Type Material

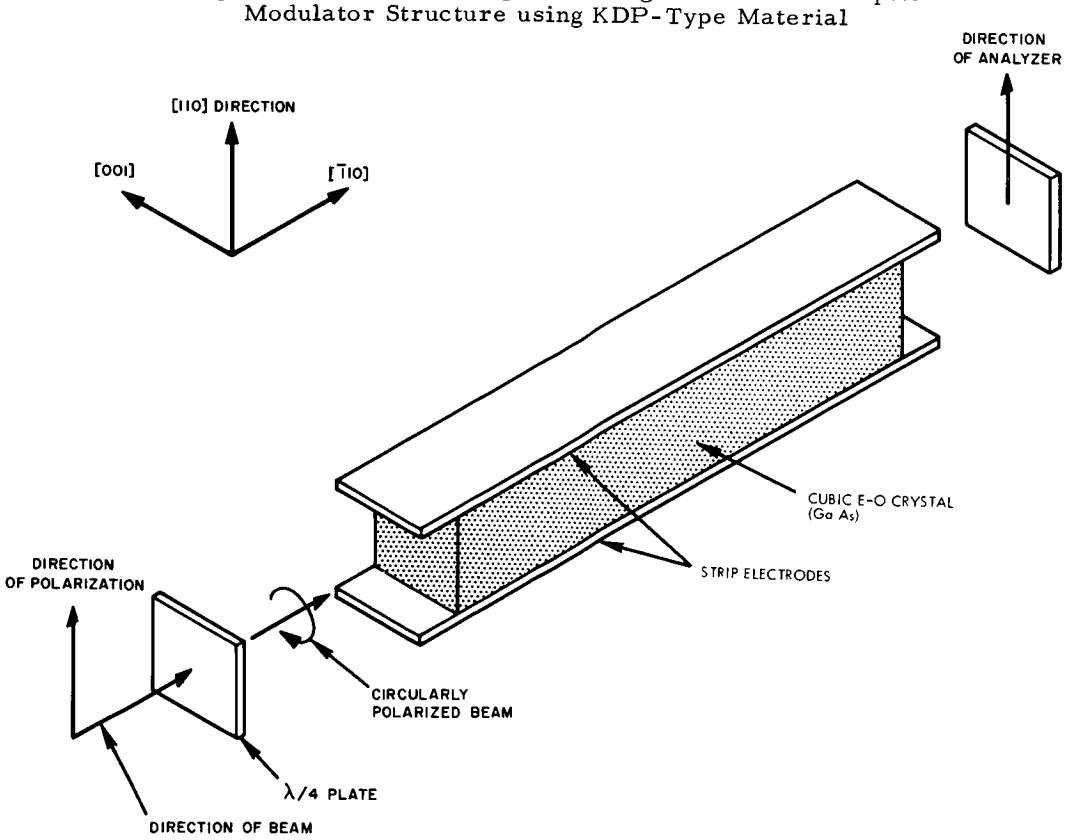

Figure B. Parallel Strip Traveling-Wave Modulator Configuration Using a Cubic $\bar{4}3m$ Crystal

OPTICAL MODULATORS

Elasto-Optic Modulation

	Page
Theory of the Elasto-Optic Effect	152
Theory of Ultrasonic Diffraction of Light	156
Acoustic Modulation Techniques	158
Properties of Ultrasonic Modulators	160
Summary and Tabulation of Elasto-Optic Modulators	164

THEORY OF THE ELASTO-OPTIC EFFECT

Variations of refractive index in optical materials may be strain-induced by propagation of acoustic waves.

The phenomenon of diffraction of light by the passage of a sound wave through the optical medium is largely governed by the change in refractive index induced in the medium by the passage of the sound wave and also by the radiation geometry of the sound and light wave sources. This section lists the equations that relate the change in refractive index to the stress-strain amplitude generated by the ultrasonic wave.

The elasto-optical coefficients for an anisotropic medium $p_{ijk\ell}$ are defined* by[1,2]

$$\Delta B_{ij} = p_{ijk\ell}\,\eta_{k\ell}$$

where η is the strain and B_{ij} is the dielectric impermeability tensor, which is related to the dielectric constant κ_{ij} by

$$\sum_j \kappa_{ij} B_{jk} = \delta_{ik}$$

where δ_{ik} is the Kronecker delta. For the case of cubic crystals κ is isotropic and thus

$$\Delta\kappa_{ij} = -\kappa^2\,\Delta B_{ij} = -\kappa^2 p_{ijk\ell}\,\eta_{k\ell}\ \cdots$$

Furthermore, if one restricts the problem to the propagation of longitudinal sound waves (no shear components) along principal crystallographic directions only, the strain component can be represented by a single subscript and the change in dielectric constant can be simply represented by the following equation

$$\Delta\left(\frac{1}{\kappa}\right)_i = \sum_j p_{ij} s_j$$

---

[1] Nye, J. F., Physical Properties of Crystals, Oxford, New York; 1960.

[2] Krishnan, R. S. and Viswananthan, S., Progress in Crystal Physics, Madras; Central Arts Press, 1958.

*Double summation over indices k and ℓ is implied.

where s_j, the strain tensor, is a special case of $\eta_{k\ell}$, and p is the fourth rank elasto-optic tensor.

If one passes a longitudinal sound wave along the [1, 0, 0] crystallographic axis of a simple cubic crystal such as silicon or germanium and this is labeled the j = 1 direction, the strain subscript will be (s_1). For the case of light wave polarization parallel to the direction of sound propagation the elasto-optic tensor p_{11} will apply; for orthogonal polarization the tensor p_{21} will apply. Thus for parallel and orthogonal polarization relative to the direction of propagation of a pure longitudinal [1, 0, 0] ultrasonic wave the following expressions are obtained for the change in refractive index.

$$\Delta\left(\frac{1}{\kappa}\right)_1 = p_{11}s_1 \qquad \text{(Parallel)}$$

$$\Delta\left(\frac{1}{\kappa}\right)_2 = p_{21}s_1 \qquad \text{(Perpendicular)} \tag{1}$$

Due to the symmetry of a cubic crystal the directions [0, 1, 0] and [0, 0, 1] have the same elasto-optic behavior. However for the case of sound propagation along the [1, 1, 1] crystallographic direction the elasto-optic constant is a linear combination of p_{11}, p_{21} and p_{44}, the later term being generated by shear stresses. For the case of a rotation of coordinates where the Z direction is the [1, 1, 1] crystallographic direction represented by j = 3', the Y direction lies in the [1, 1, 0] plane and is represented by j = 1', one finds for sound along j = 3' and light polarization along j = 1' and along j = 3', that

$$p_{1'3'} = \frac{1}{3}p_{11} + \frac{2}{3}p_{12} - \frac{1}{3}p_{44} \qquad \text{perpendicular polarization}$$

$$p_{3'3'} = \frac{1}{3}p_{11} + \frac{2}{3}p_{12} + \frac{2}{3}p_{44} \qquad \text{parallel polarization} \tag{2}$$

In more complicated crystals, such as uniaxial or biaxial, the unabridged notation applies and can be used in an analogous manner. The preceding relations indicate that the elasto-optic behavior of a single cubic crystal is completely described by three constants p_{11}, p_{12}, and p_{44}. These constants can only be measured by inducing strain in the crystal and determining the resultant change in index of refraction. Measurements have been made on the elasto-optic constants of selected crystals in the visible region of the spectrum and at infrared wavelengths. Work has been in progress at Hughes Research Laboratories and elsewhere to evaluate the elasto-optic behavior of various materials at 3.39 and 10.6 microns.

THEORY OF THE ELASTO-OPTIC EFFECT

Using the relationship between index of refraction and dielectric constant ($\kappa = N^2$) one finds the change in refractive index from Equations (1) and (2) to be

$$\Delta N_1 = -\frac{N^3}{2} p_{11} s_1$$ [1, 0, 0] sound, parallel light

$$\Delta N_2 = -\frac{N^3}{2} p_{21} s_1$$ [1, 0, 0] sound, perpendicular light

$$\Delta N_1^1 = -\frac{N^3}{2}\left(\frac{1}{3} p_{11} + \frac{2}{3} p_{12} - \frac{1}{3} p_{44}\right) s_3{}^1$$ [1, 1, 1] sound, perpendicular light

$$\Delta N_3^1 = -\frac{N^3}{2}\left(\frac{1}{3} p_{11} + \frac{2}{3} p_{12} + \frac{2}{3} p_{44}\right) s_3{}^1$$ [1, 1, 1] sound, parallel light

In the case of non-cubic crystals the tensor relationships become more complicated and terms such as p_{13}, p_{31}, p_{14}, etc., appear.

THEORY OF ULTRASONIC DIFFRACTION OF LIGHT

Acoustic waves in an optical medium form a diffraction grating for light beams, producing Bragg angle reflection.

It has been shown both theoretically and experimentally[1, 2, 3] that if the angle of incidence of a light wave relative to the wavefront of a plane sound wave obeys the following equation then the intensity in the -1 diffraction order is stronger than that of the +1 order and that under optimum conditions the intensity of the +1 order may be reduced to zero.

$$\lambda_L = 2\lambda_s \sin \frac{\theta}{2}$$

where λ_L and λ_s are the optical and acoustic wavelengths, respectively, and θ is the angle between the incident and the diffracted beams. This phenomenon may be most easily understood if one considers the layered nature of the sound wave acting as a Bragg reflection grating (see the figure). At an appropriate angular condition the multiply-scattered beams are phased to produce a maximum in one direction and a minimum in all other directions. If the ultrasonic transducer is sufficiently long, there are more scattering centers, or in other terms the grating is large enough to yield a large scattering cross section, and the intensity of the -1 order beam is strengthened at the expense of the other beams. Under the Bragg condition the intensity of the -1 order beam relative to the zero beam is given by

$$\frac{I_{-1}}{I_o} = \sin^2\left(\frac{v}{2}\right)$$

where

$$v = \frac{2\pi d \Delta N}{\lambda}$$

d is the transducer length along the optical path, ΔN is the change in index of refraction of the medium produced by the passage of the sound wave, and λ is the wavelength of light in vacuo. The change in index is related to the power in the ultrasonic wave by the equations

$$\Delta N = -\frac{1}{2} N_o^{\,3} p_{ij} s_j$$

---

[1] Quate, C. F., et al., Proc. IEEE, 53, pp. 1604, 1623, 1965.
[2] Hance, H. V., and Parks, J. K., J. Acoust. Soc. Am., 38, p. 14, 1965.
[3] Cohen, M. G., and Gordon, E. I., Bell Syst. Tech. J., 44, p. 693, 1965.

$$s_j = \sqrt{\frac{2S_a}{\rho v_s^3}}$$

$$S_a = \frac{TS_{rf} \times 10^7}{A}$$

Where S_a is the acoustic power density, ρ is the density of the medium, v_s is the velocity of sound of the medium, T is the electromechanical transduction efficiency of the transducer, A is the transducer area, and S_{rf} is the incident r-f power. It has been shown experimentally that for sufficiently large values of v, the Raman-Nath parameter, approximately 95 percent of the energy incident on the modulator can be translated into the -1 diffraction order at Bragg angle. However, the choice of experimental conditions must be optimum and would seldom be encountered in practice. It is important to note that the modulation effect falls off with increasing wavelength so that for a modulator capable of producing 60 percent modulation at 0.6328 μ, approximately 1/300 of this or 0.2 percent modulation would be obtained at 10.6 μ.

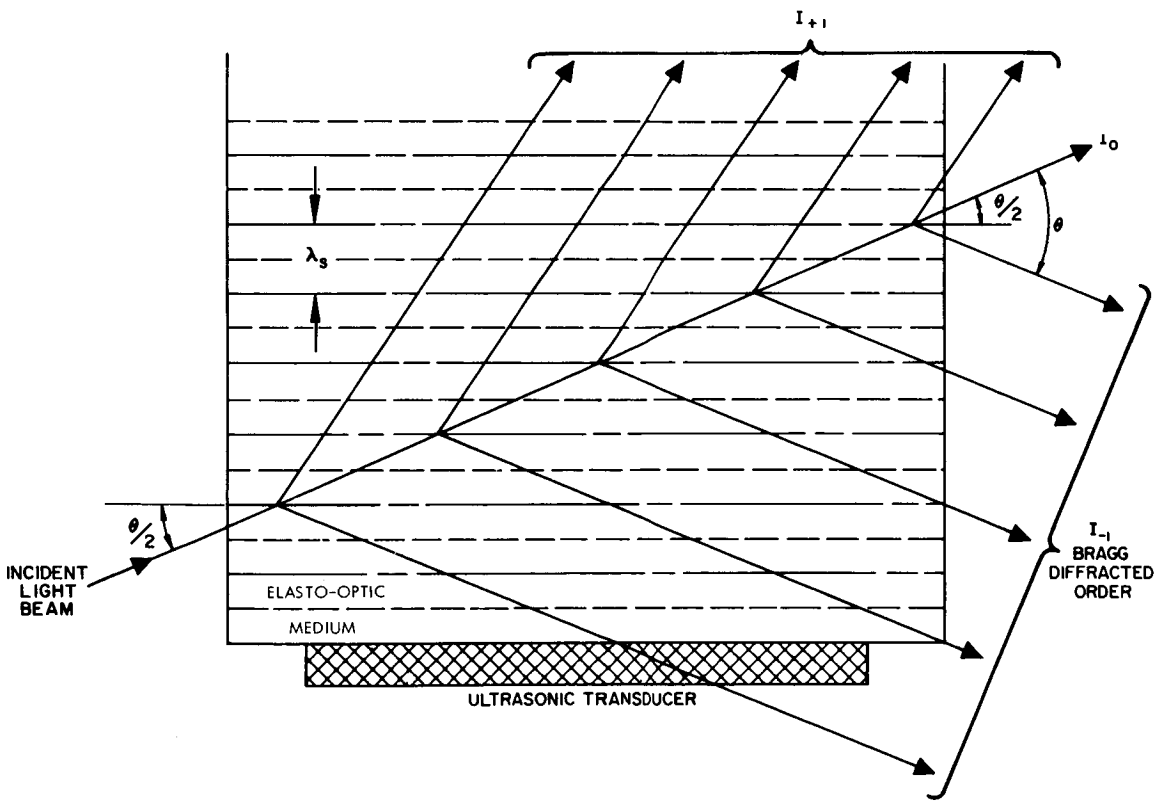

Ultrasonic Diffraction Geometry

ACOUSTIC MODULATION TECHNIQUES

Acoustic modulation techniques include frequency translation, intensity modulation, and polarization modulation.

Frequency Translation

It has been shown previously that a traveling ultrasonic wave can diffract a light beam into an arbitrary number of diffraction orders depending on the transducer length and the radiation geometry. The diffracted beams will be frequency shifted by an amount

$$\Delta f = f_o \pm nf_s$$

where f_o is the frequency of the light wave, f_s is the frequency of the sound wave, and n is the diffraction order. By adjusting the modulator for the Bragg condition (see previous topic), the intensity in all orders except -1 may be substantially reduced to the point where the device produces a single frequency shifted sideband I_{-1}. This mode of operation is entitled frequency translation and is useful in generating local oscillator beams for heterodyne detection systems. A detailed tabulation of the modulation efficiencies expected from a number of materials is presented in a later topic.

Intensity Modulation

If the traveling ultrasonic wave is reflected at a boundary of the modulation medium so that it returns to the transducer undeviated, a reflected or backward ultrasonic wave is generated, which, if unattenuated, is capable of producing a diffracted beam system spatially coincident with that produced by the forward wave and of equal intensity. Moreover, if the forward wave produces a positive frequency translation in a given order, the backward wave produces a negative one and vice versa. Thus, the sideband spectra become double sidebands and act as suppressed carrier modulated beams. The central or zero order beam becomes intensity modulated at twice the ultrasonic wave frequency since one now has an ultrasonic standing wave which diffracts energy away from the main beam twice per cycle. Because of the large values of mechanical Q usually encountered in ultrasonic resonators, the amplitudes of the forward and backward ultrasonic waves may reach values not obtainable in a traveling wave situation, and may, therefore, obtain large values of modulation index at low r-f drive levels. However, this system is of limited usefulness where large amplitude modulation bandwidths are desired because of the high mechanical Q of the system. On can, of course, use mechanical damping techniques to broaden the bandwidth of the modulator at the expense of modulation index and efficiency.

By proper choice of modulator dimensions and other parameters it is possible to produce a single diffraction maximum consisting of two frequency-translated optical waves. This system may prove valuable as a mechanism for locking of laser modes at infrared wavelengths, if the diffracted beam is fed back into the laser system.

If the optical faces of the modulator are made optically flat, highly parallel, and highly reflective, one can orient the crystal to obtain maximum transmission of light through the crystal at a selected set of optical wavelengths. This is the well-known Fabry-Perot effect. Similarly, if one passes sound waves through the crystal, one finds that the multi-reflected light wave interacts may times with the sound wave and, in consequency, the interaction cross section or modulation is stronger. This effect seems to be of limited usefulness in the visible region of the spectrum because of the change in modulator dimension when ultrasonic energy is dissipated in the crystal. At longer wavelengths this technique may be practicable because the effect of expansion is reduced, since the light wavelength is longer. With the use of good temperature regulation of the crystal, a Fabry-Perot acoustic modulator may be useful at 10.6 microns, where the dimensional tolerances will be about 20 times less than in the center of the visible spectrum.

Polarization Modulation

By focusing the optical beam to a diameter small compared to the ultrasonic wavelength it is possible to modulate the polarization of the optical beam, i.e., change the polarization from linear to elliptical, because of the birefringence induced in the modulation medium by the ultrasonic strain wave. The birefringence is simply calculated by taking the difference between the elasto-optic constants p_{11} and p_{21} or p_{33} and p_{31} and multiplying by the appropriate variables to yield a value ΔN, the induced change in refractive index. Further discussion of the elasto-optic birefringence modulation will not be detailed here since the application of birefringence modulation is well described in the section of electro-optic modulators.

PROPERTIES OF ULTRASONIC MODULATORS

The properties of elasto-optic media require specialized mechanical and electronic techniques for designing efficient optical modulators.

Choice of Acoustic Media

From the foregoing treatment, it may be seen that when a traveling sound wave interacts with a traveling light wave in an elasto-optic medium (solid or liquid) a frequency translated diffracted beam can be obtained which may be used for system applications requiring frequency translation. At ultrasonic frequenices below 50 MHz optically transparent liquids such as water, alcohol, tetrachloroethylene, carbon tetrachloride, etc., may be used as the modulation medium, provided they are transmissive to the optical wave. At frequencies above 50 MHz the high ultrasonic attenuation in all liquids prevents satisfactory modulation indices and forces consideration of solids as a modulation medium, since they have intrinsically lower losses than liquids. In the next topic, a tabulation is presented which compares the relative performance of useful ultrasonic modulation media at one visible and two infrared wavelengths. A general result is that materials with large values of refactive index and low values of sound velocity are the most effective modulation media.

Anechoic Terminations

The development of single sideband frequency translators in elasto-optic media introduces a new problem, namely the absorption or termination of the ultrasonic wave. This operation is most conveniently done by shaping the modulator crystal so that the coherence of the ultrasonic wave is destroyed and it can no longer coherently diffract the light wave. Such terminations are termed anechoic chambers and are designed according to the same principles as optical black bodies. However, the expense of cutting and shaping the single crystal is easily avoided by placing the crystal in contact with a pool of mercury which is contained in an anechoically shaped container. In practice it is found that mercury is a good acoustical impedance match for a large number of solids since the product of its density and sound velocity (acoustic impedance) is within 30 percent of that of many crystals. Thus the power reflection coefficient at a quartz-mercury or a quartz-silicon interface is of the order of 3 percent or less. Therefore, most of the ultrasonic energy passes into the mercury and is then rendered incoherent at the rough boundaries of the mercury container.

Transducer Bonding

Another problem common to solids but not encountered in liquids is the production of a satisfactory bond between the transducer and the modulator crystal. The bond should be lossless and of uniform thickness and it should be small compared to an ultrasonic wavelength. If all of these conditions are met then the transducer bandwidth and electrical impedance can be calculated or predicted in a straightforward manner. If they are not met, the bond can act as a mechanical transformer n quarter wavelengths long and thus preclude prediction of the frequency response and efficiency of the system.

In practice, it has been difficult to produce ideal ultrasonic transducer bonds without a great deal of care for transducers operating in the 5- to 100-MHz range. For frequencies above 100 MHz, a new transducer technique using evaporated thin films has some advantages not previously available; e.g., direct application of the transducer to the modulator without use of intermediate layers, fundamental frequency operation over a broad band, and fairly high transduction efficiencies.

Electrical Impedance Matching

Because of the high fundamental operation frequency, the transducers are very thin and thus present a high capacitance to the r-f generator or amplifier. It is usually difficult to inductively compensate this capacitance over a broad band of frequencies without using resistive damping and suffering an attendant increase in transduction loss. Theoretical calculations indicate that the use of a resonating inductance with a Q of 200 as an impedance matching transformer will yield an ultrasonic transduction loss of 10 dB, for a quartz transducer radiating into quartz, germanium, or silicon. In practice, transduction losses of the order of 12 dB are usually measured indicating the presence of other losses such as dielective loss, skin effect losses in wires, and dissipation in the ultrasonic bonds. If transducers with higher electromechanical coupling than quartz were used, e.g., ZnO, CdS, etc., a factor 2 to 4 improvement in transduction efficiency could be obtained. Thus, materials such as CdS or ZnO are preferable for ultrasonic transduction since they enable the designer to obtain a larger electrical bandpass and at the same time a reduction in the transduction loss that is obtained with quartz. These materials are used for making thin film evaporated transducers since in single crystal form they are quite brittle and do not lend themselves to the production of large area transducers.

Transit Time Effects

In the Fabry-Perot modulator, as in the normal ultrasonic modulator, the transit time of the ultrasonic wave across the optical beam is a modulation bandwidth determining factor. For example, if the velocity of sound is 5×10^5 cm/sec and the laser beam diameter is 10^{-1} cm, then the transit time is approximately 0.2×10^{-6} sec or the bandwidth is confined to frequencies below 5 MHz. It is possible to use a long focal length lens to reduce the beam diameter to the diffraction limit, since the beam diameter at focus, a, is given by

$$a = \lambda \frac{f}{D}$$

where λ is the wavelength of light, ($\approx 10^{-5}$ - 10^{-3} cm), f is the focal length of the lens and D is the diameter of the laser beam incident on the lens. Thus with the aid of a 10 cm focal length lens, a light beam of diameter 10^{-1} cm at 6328 Å can be focused to a spot of dimension 6.3×10^{-2} cm corresponding to a transit time $\approx 10^{-7}$ sec or a bandwidth of 10 MHz. Use of a shorter focal length lens can reduce the beam diameter even further if necessary to reduce the transit time of the ultrasonic wave across the light beam.

PROPERTIES OF ULTRASONIC MODULATORS

In effect, at the higher modulation frequencies,[1] the long transit time produces spatial modulation of the light wavefront and thus reduces the intensity of the modulation in a given diffraction order. Operating at frequencies low compared to the transit time will produce a percentage modulation in a given order approaching 100 percent; however, operation at the frequency equal to the reciprocal of the transit time will reduce the modulation in a given order to about 30 percent of the maximum.

These considerations are usually important when one is concerned with highly efficient modulator systems. However, ultrasonic modulator systems in their present state of development are not highly efficient since the physical nature of the transduction system limits one to at least 6 dB transduction loss with the most advanced experimental transducers.

[1] Hance, H. V., and Parks, J.K., op. cit.

SUMMARY AND TABULATION OF ELASTO-OPTIC MODULATORS

An appropriate figure of merit for elasto-optic modulator materials is the factor $(N^6 p^2/\rho v_s^3)$.

On the basis of the equations shown in preceding topics, the intensity in a modulated optical sideband produced by a traveling ultrasonic wave is given by

$$\frac{I_{-1}}{I_o} = \sin^2 \left[\frac{\pi d N_o^3}{2\lambda} \bullet p_{ij} \sqrt{\frac{2TS_{rf} \times 10^7}{\rho v_s^3 A}} \right]$$

where $A = d \times h$, the transducer area, for small values of the argument or for optimum Bragg conditions, i. e., when the transducer is of sufficient length that a single Bragg maximum is produced. This can be approximated by

$$\frac{I_{-1}}{I_o} = \frac{\pi^2}{2\lambda^2} \left(\frac{N_o^6 p_{ij}^2}{\rho v_s^3} \right) \left[\left(\frac{d}{h}\right) \left(S_{rf}\, T \times 10^7\right) \right]$$

Practical values of transduction efficiency T are of the order of 10 to 15 dB, corresponding to a power ratio of 0.1 to 0.03. Experimentally, it is found that the p_{ij} values range from 0.01 to 0.30 in most transparent solids, so that it is advantageous to select materials with as large a value of N_o^6 and as small a value of ρv_s^3 as possible.

Assuming a d over h ratio of 5:1, an rf power level of 20 watts, and a transduction efficiency of 0.03, the term in brackets takes a value of 3×10^7. The quantity $\pi^2/2\lambda^2$ takes a value of 1.23×10^9 at a wavelength of 0.633μ, 4.3×10^7 at 3.39μ and, 4.38×10^6 at 10.6μ. An approximate table of values for I_{-1}/I_o for various materials is given in the Table.

The Table indicates the potential of KRS-5 and CdS as candidates for producing 100 percent modulation at 6328 Å with 20 watts of rf drive power.

In the infrared region of the spectrum, germanium and KRS-5 are the leading contenders for single sideband frequency translators, but the production of high percentage of modulation at infrared wavelengths will require prohibitively high rf power levels (≈2kW). It is important to realize that a good transduction system can change the efficiency by a factor of 3 so that the possibility of 50 percent modulation at 10.6 microns exists.

A high level of modulation at 10.6μ has been achieved[1] using tellurium. However, despite its very high figure of merit ($N^6 p^2/\rho v_s^3$), it is an extremely fragile material, so its use in practical systems is recommended only with considerable reservation.

Elasto-Optic Performance Parameters for Selected Crystals

Material	Relative Elasto-Optic Coefficients $\frac{N_o^6}{\rho v_s^3}(p_{ij})^2$			Modulation Ratio*** I_{-1}/I_o		
	0.63 μ	3.39 μ	10.6 μ	0.63 μ	3.39 μ	10.6 μ
Quartz	1.07×10^{-18}	2.66×10^{-19}		0.04	3.4×10^{-4}	
Cadmium Sulfide	24.4×10^{-18}	6.1×10^{-18}	4×10^{-18}	0.9	7.8×10^{-3}	5.3×10^{-4}
Zinc Oxide	10×10^{-18}	2.5×10^{-18} **	2×10^{-18} **	0.37	3.2×10^{-3}	2.6×10^{-4}
Silicon		8.9×10^{-18}	6×10^{-18} **		1.02×10^{-3}	7.9×10^{-4}
Germanium		5.3×10^{-17} **	4×10^{-17}		6.8×10^{-2}	5.3×10^{-3}
KRS5		2.7×10^{-17} **	2×10^{-17} **	≈ 1.0*	3.5×10^{-2}	2.6×10^{-3}
$LiNbO_3$				0.16		

*When the argument of $\sin^2(v/2) \approx (v/2)^2$ exceeds the range of validity of the approximation, one must return to $\sin^2(v/2)$ to avoid values of $I_{-1}/I_o > 1$.

**Most of the values of p_{ij} are estimated on the basis of the measured behavior of CdS in the visible and CdS and Si at 3.39μ.

***Values of the modulation ratio computed for 20 watts of electrical driving power applied to the transducer and 15 dB transduction loss.

[1] Dixon, R. W. and Chester, A. N., Appl. Phys. Letters, 9, p. 190, 1966.

OPTICAL MODULATORS

Internal Modulation

Page

Intensity Modulation 168

Frequency Modulation and Translation 172

INTENSITY MODULATION

Intensity modulation by internal means is achieved by coupling out a variable amount of optical power from within the laser cavity.

The term, internal modulation, is used to describe modulation schemes performed within the optical resonator.[1] Intensity modulation is also referred to as coupling modulation.

Three such schemes have been demonstrated. The common feature of these schemes is to transfer a fraction of the internal laser power from its original form, for which the resonator has a high Q (i.e., a high reflection), to a form in which it escapes readily from the resonator. This new form can be due to a modification of: (1) the polarization direction, (2) the direction of propagation, (3) the frequency.

The amount of power coupled in this manner can be made proportional to the (instantaneous) modulation voltage so that a square-law detector will recover the modulation signal.

The main advantage of these schemes over external modulation is that by acting on the internal laser energy, which may exceed the external power by more than two orders of magnitude, a given modulation power can give rise to proportionately higher absolute modulation of the output beam.

One form of intensity modulation uses an electro-optic crystal inside the resonator. The crystal orientation and biasing with respect to the laser beam is identical to that obtained when the same crystal is used externally, i.e., the crystal couples a fraction

$$\frac{I}{I_o} = \sin \frac{2\Gamma}{2}$$

from the original laser polarization to one in which the optical E vector is rotated by 90 degrees about the direction of propagation. Γ, the optical retardation, is given as before by

$$\Gamma = \frac{2\pi L}{\lambda} N_o^3 rE$$

In order to have a useful modulation scheme, a way to couple out the modified radiation must be devised. This can be done by a polarizing prism (such as Rochon or Glan-Thompson prism) which separates the two incident polarizations, or , less efficiently, by Brewster windows which reflect a fraction, typically ~ 20 percent to 60 percent, of the second polarization.

As an example, consider the case when the applied field consists of a d-c bias plus a time dependent modulation field, i.e.,

---

[1] Gürs, K., and Müller, R., Phys. Letters, 5, p. 129, 1963.

$$E = E_B + E_m(t)$$

letting $(2\pi L/\lambda)N_o^3 r = a$, yields:

$$\frac{I}{I_o} \approx \frac{a^2}{4}\left(E_B + E_m\right)^2$$

for

$$\Gamma = aE << 1;$$

and when

$$E_m << E_B,$$

$$\frac{I}{I_o} \cong \frac{a^2}{4}\left(E_B^2 + 2E_BE_m\right)$$

The radiation coupled out of the cavity is thus in the form

$$I \cong I_o \frac{a^2}{4}\left[E_B^2 + 2E_BE_m(t)\right]$$

and thus has a modulation index of $m = 2E_m/E_B$. A square law detector will yield an output current

$$I_{detector} \propto I_oE_BE_m(t)$$

thus recovering the original information signal $E_m(t)$.

The advantage of the internal scheme is now apparent. The radiation intensity inside the laser exceeds that outside by a factor equal to the inverse of the mirror transmittance. For 1 percent transmittance, to use a common value, $(I_o)_{int}/(I_o)_{ext} = 100$. It follows then that for a given modulation signal and the same E_B, the detector output is larger by 100.

A schematic diagram of a polarization modulation scheme is shown in Figure A.

Another mode of intensity modulation is based on the reflection of light from traveling sound waves.[2] A sound wave traveling in a medium (solid or liquid) placed inside the resonator intercepts the optical beam at the Bragg angle. The spatial modulation of the optical dielectric constant which is proportional to the local strain, acts as a diffraction grating and scatters a portion of the laser energy into the various diffraction orders.

---

[2] Siegman, A.E., et al., Appl. Phys. Letters, 5, p. 1, 1964.

INTENSITY MODULATION

The amount of scatter intensity is proportional to the modulation acoustic power. In addition, the scattered beam is Doppler shifted in frequency by the acoustic frequency. One scattered beam is shifted upwards while a second scattered beam, emerging in a direction opposite to the first, is shifted downwards in frequency.

A third scheme consists of shifting a fraction of the internal energy in frequency and then extracting the frequency-shifted power by an etalon mirror which has a passband at this frequency.[3] The internal frequency shift is performed by low index phase modulation inside the laser resonator by an electro-optic crystal which has an induced optical axis parallel to the optical electric field. The amount of power coupled by this scheme and its dependence on the modulation voltages is similar to that previously described for intensity modulation. A schematic diagram of this scheme is shown in Figure B.

It should be pointed out that some internal modulation schemes result in a compromise in laser design which may deleteriously affect the communications system. The mode selection problem becomes more severe and the laser output power is necessarily reduced because the reflection at the output mirror must be increased to compensate for the losses introduced into the cavity by the modulator.

[3] Peterson, Don G., and Yariv, Amnon, Appl. Phys. Letters, 5, p. 184, 1964.

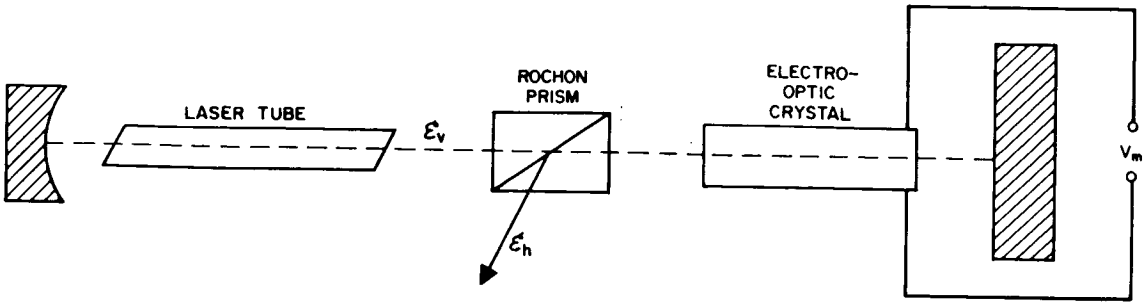

Figure A. Laser Oscillator with Internal Polarization Modulation

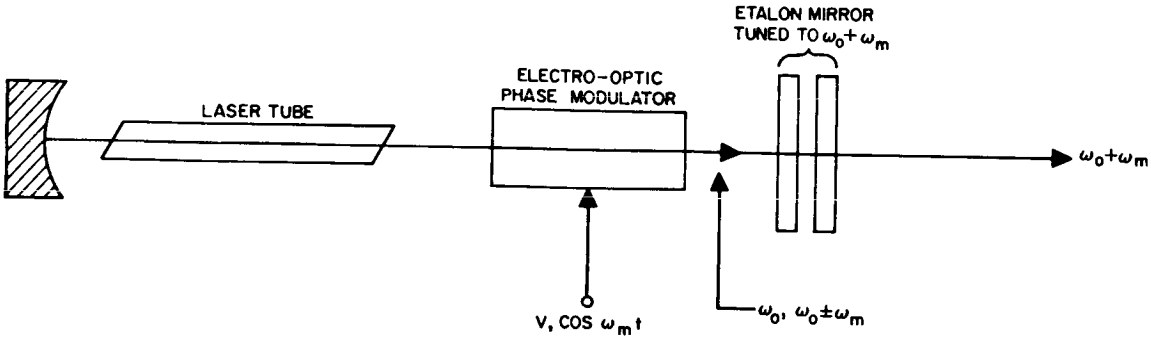

Figure B. Laser with Coupling Modulation by Internal Frequency Shifting

FREQUENCY MODULATION AND TRANSLATION

Optical frequency translation and frequency modulation may be effected by electro-optic elements properly oriented within the laser cavity resonator.

Several techniques of frequency modulation and translation of optical laser beams have been reported which employ electro-optic modulators mounted within the Fabry-Perot resonant structure of the laser. Three such devices which perform quite different operations will be discussed here briefly.

The first system,[1] illustrated in the figure is basically an SSBSC modulator and is related to the two-element scheme discussed in an earlier topic. The basic components of this system consist of a Nicol prism or its equivalent, an electro-optic modulator, a $\lambda/8$ wave plate, and a highly-reflective mirror. In the figure, the Brewster window of the laser serves as the Nicol prism.

Operation of this configuration is as follows: The vertically-polarized laser beam traverses the modulator whose induced axes of birefringence lie at 45 degrees to the vertical. The beam then passes through the eighth-wave plate and is reflected from the end mirror, located a distance $\lambda_m/8$ from the center of the modulator, where λ_m is the free-space wavelength of the modulating signal. The return beam after traversing the $\lambda/8$ plate and modulator now contains a horizontal component shifted in frequency by f_m, and part of this is reflected out of the laser by the Brewster window. The double pass through the eighth-wave plate has the effect of rotating the modulator through 45 degrees for the return beam, and the round-trip photon transit time between modulator and mirror provides the 90-degree phase shift of the modulating signal.

This system can be used outside the laser as well, provided a real Nicol prism and additional reflector are used. In either configuration, the amplitude of the extracted beam is proportional to $J_1(\Gamma_o/\sqrt{2})$, as with the previous two-element modulator.

The second type of internal device[2] is simply an electro-optic modulator, oriented for pure phase modulation; i.e., the principal induced birefringent axis is parallel to the vertical polarization of the laser mode. When the modulation frequency is adjusted to be approximately but not exactly equal to the laser axial mode spacing, the laser mode can be made to oscillate with FM phases and nearly Bessel Function amplitudes. Thus, the output is forced into the state of a frequency-modulated optical signal which is swept over the entire Doppler line-width at the modulation frequency.

This scheme promises to have valuable applications in some communication systems, but it appears to have a limited information bandwidth capability.

---

[1] Targ, R., Massey, G.A., and Harris, S.E., Sylvania Electronic Systems, Mountain View, California, internal report.

[2] Harris, S.E., and Targ, R., Appl. Phys. Letters, 5, p. 202, 1964.

The third scheme[3] is one which is especially useful as a direct baseband frequency modulator of the laser optical carrier. It involves varying the electrical length (or optical path length) of the laser cavity. An electro-optic modulator crystal is placed inside the cavity and oriented, as in the previous example, with a principal axis of induced birefringence parallel to the polarization direction. Under application of a modulator field E, the change Δf_o in the laser frequency is given by

$$\Delta f_o = \frac{cLN_o^3 rE}{2\lambda L_o}$$

where

$c \equiv$ velocity of light

$L \equiv$ modulator length

$L_o \equiv$ effective optical length of cavity

The other symbols have been defined previously. In terms of the customary expression for optical phase retardation

$$\Gamma = \frac{2\pi LN_o^3 rE}{\lambda}$$

the frequency shift may be written

$$\Delta f = \frac{c\Gamma}{4\pi L_o}$$

The deviation frequency attainable is limited by the gain profile of the laser atomic transition. For example, in a 3.39 μ laser, this limit is about 300 MHz; for the CO_2 10.6 μ laser, the limit is less than 25 MHz. An additional restriction is that the frequency cannot change faster than the cavity Q permits. It can be shown[3] that the limiting FM bandwidth is then simply f_o/Q, where $f_o = c/\lambda$ is the laser resonant frequency.

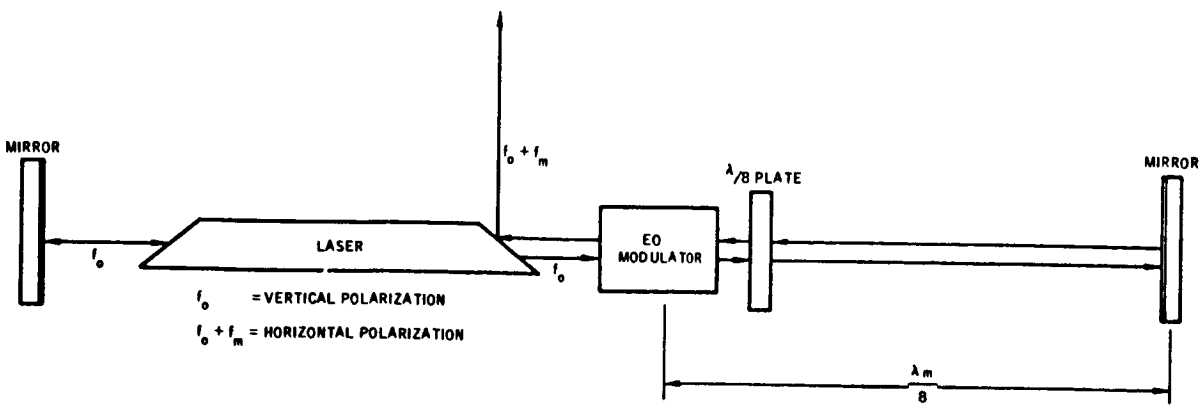

Internal SSBSC Modulator

[3] Goodwin, F.E., IEEE J. Quant. Electronics, QE-3, p. 524, 1967.

MODULATORS

Modulator Performance

	Page
Modulator Burden Considerations	176
Modulator Burden Relationships	178
Nomenclature Summary	180

MODULATOR BURDEN CONSIDERATIONS

Advances in the technology of electro-optic modulator materials and design techniques permit a reasonably accurate assessment of performance and burden characteristics for the years immediately ahead.

It may still be premature at this time to make accurate assessment of the performance and burden characteristics of optical modulators which will have continuing value to the designer of laser systems for space communications and tracking. However, great progress has been made in the past few years in the development of optical modulation techniques and materials. This work has demonstrated that all forms of modulation can be impressed on optical carriers in the band between 0.4 and 10.6 μ. At wavelengths longer than 1.5 μ, optical modulation technology is in a somewhat more primitive state; but the advent of high grade semi-insulating GaAs as a useful electro-optic modulator material in the infrared region of 2 to 12 μ has constituted a notable breakthrough for CO_2 laser applications. Moreover, the technology of synthesizing superior grade $LiNbO_3$ and $LiTaO_3$ has made possible useful and efficient modulators in very broadband applications over the wavelength range of 0.4 to 5 μ. Research and development of acoustic modulation techniques is progressing at a moderate pace, and acoustic modulators in some instances offer a significant power advantage; but on the other hand they provide modulation bandwidths far short of those believed to be needed in optical space communication systems.

In considering communication and tracking systems using infrared lasers, it must be realized that there is an inherent inverse dependence of modulation efficiency on wavelength at a given driver power level. Thus, for example, a specific modulator element requires 10 times as much voltage at 5 μ as it does at 0.5 μ to achieve the same depth of modulation. In order to keep the power burden within reasonable limits, it is therefore necessary to (1) extend the interaction length and/or (2) settle for less modulation index. An exception to this prescription is the intracavity modulation scheme which can provide a high effective modulation index for intensity modulation and reasonable frequency deviations in optical FM systems with very modest levels of driver power, when the attendant bandwidth limitations are acceptable.

The table presents, in more or less chronological order, a series of electro-optic modulators and their operating characteristics. This listing is by no means complete, but an attempt has been made to itemize those modulators which represent significant advances in their particular regime of applications. Except where otherwise noted, the performance characteristics are applicable for an optical wavelength of 6328 Å. The commercial device produced by Isomet Corporation reflects the advanced technology now reached in the field of electro-optic modulator design and production.

Characteristics of Some Electro-Optic Modulators - December 1968

Parameter	TM_{00} Mode Cavity Modulator	Traveling Wave Intensity Modulator	Polarization Modulator (NASA Contract)	Multi-Element Intensity Modulator	Resonant SSBSC Modulator	Traveling Wave SSBSC Modulator	Single Element PCM Modulator	10.6 μ Intensity Modulator	Commercial Modulator
Development Status	Built at BTL	Built at Sylvania	Built at Hughes Aircraft Company	Built at Hughes Aircraft Company	Built at Hughes Aircraft Company	Built at Hughes Aircraft Company	Built at BTL	Built at RCA	Product of Isomet Corp.
Material	KDP	KDP	KDP	KDP	KDP	KDP	$LiTaO_3$	GaAs	y-cut ADP
Crystal Dimensions	1 cm long x 2.5mm dia.	100 cm long x 2 mm wide	50 x 0.4 x 0.4 cm	16 each 1/4" x 1/4" x 1/2"	2 each 1 1/2" long x 1/2" dia.	80 x 0.4 x 0.4 cm	1 x 0.025 x 0.025 cm	6.7 x 0.3 x 0.3 cm	20 x 0.4 x 0.4 cm
Optical Attenuation	0.1 dB	6 dB	1.5 dB	0.3 dB	1.0 dB	2.0 dB	1.5 dB	0.4 dB	0.4 dB
Useful Optical Range	0.4 - 1.5 μ	0.4 - 1.5 μ	0.4 - 1.5 μ	0.4 - 1.5 μ	0.4 - 1.5 μ	0.4 - 1.5 μ	0.4 to 5 μ	2 to 12 μ	0.25 to 0.75 μ
Modulation Frequency	3 Gc	Baseband	Baseband	Baseband	850 Mc	200 Mc	Baseband	Baseband	Baseband
3 dB Bandwidth	4 MHz	3 GHz	30 MHz*	10 MHz*	5 MHz	100 MHz	220 MHz*	100 MHz*	>100 MHz
Modulating Power	1.5 W	12 W	20 W	12 W	3 W	10 W	250 mW	70 W	50 W
Modulation Index	0.13	~1.0	0.5	0.5	0.01	0.3	0.4	0.1	0.5
Extinction Ratio	Unknown	Unknown	8:1	250:1	NA	NA	80:1	~80:1	70:1
Weight	Unknown	Unknown	20 lbs	2 lbs	15 lbs	25 lbs	Unknown	Unknown	Unknown
Size	Unknown	~100 in^3	144 in^3	30 in^3	850 in^3	216 in^3	Unknown	12 in^3	80 in^3

*3dB Bandwidth limited by modulator driver and not by the electro-optic structure.

MODULATOR BURDEN RELATIONSHIPS

Weight, cost, and power burden relationships are given for 10.6 microns and 0.5 microns.

In Figures A, B, and C are presented the modulator burden relationships, in which the burdens - weight, power, and cost - are plotted as functions of the information bit rate R_B. Two curves are presented in each case, one applicable to 0.5 microns and the other to a wavelength of 10.6 microns. A communication system employing polarization modulation is assumed. (It can be shown that a minimum of 3 dB gain in signal-to-noise ratio at the receiver is achieved with polarization modulation over intensity modulation.) The burden levels indicated are applicable for 50 percent modulation index at 0.5μ using $LiNbO_3$ and 10 percent modulation index at 10.6μ using GaAs.

The functional relationships between the burdens and bit rate are taken to be linear, and of the form

$$W_M = W_{KM} + K_M R_B \text{ for weight } W_M$$

$$P_M = K_{PM} W_M = K_{PM} (W_{KM} + K_M R_B) \text{ for power } P_M$$

$$C_M = C_{KM} + K_{FM} R_B \text{ for cost } C_M$$

where

W_M = the modulator weight

W_{KM} = the modulator weight independent of bit rate

K_M = a constant relating bit rate to weight

P_M = the power used by the modulator

K_{PM} = a constant relating the modulator weight to the power used by the modulator

C_M = the modulator cost

C_{KM} = the cost of the modulator independent of the bit rate

K_{FM} = a constant relating bit rate to cost

The Table tabulates the values of these constants.

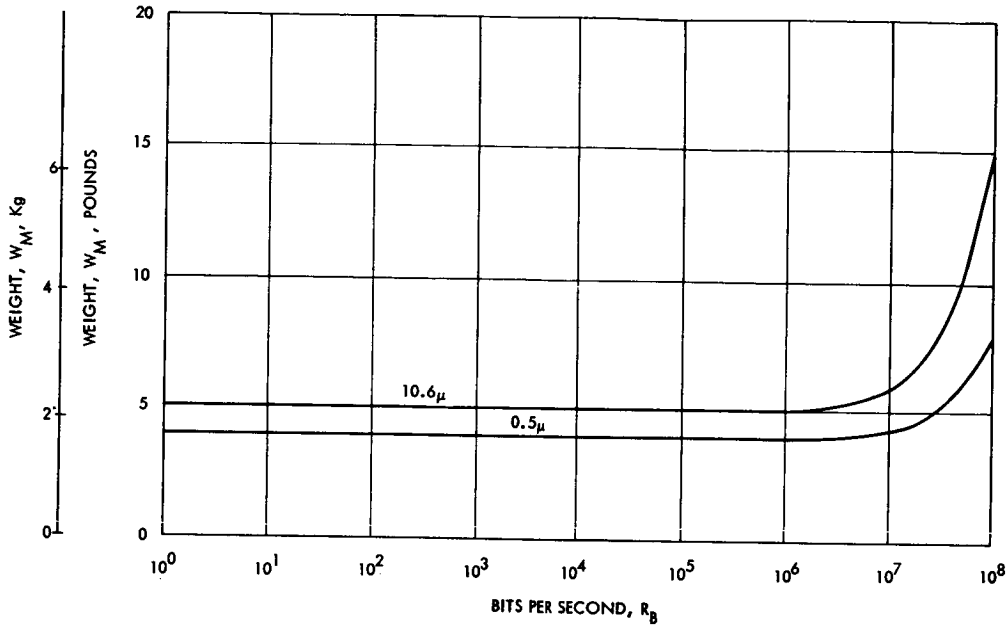

Figure A. Modulator Weight Burdens

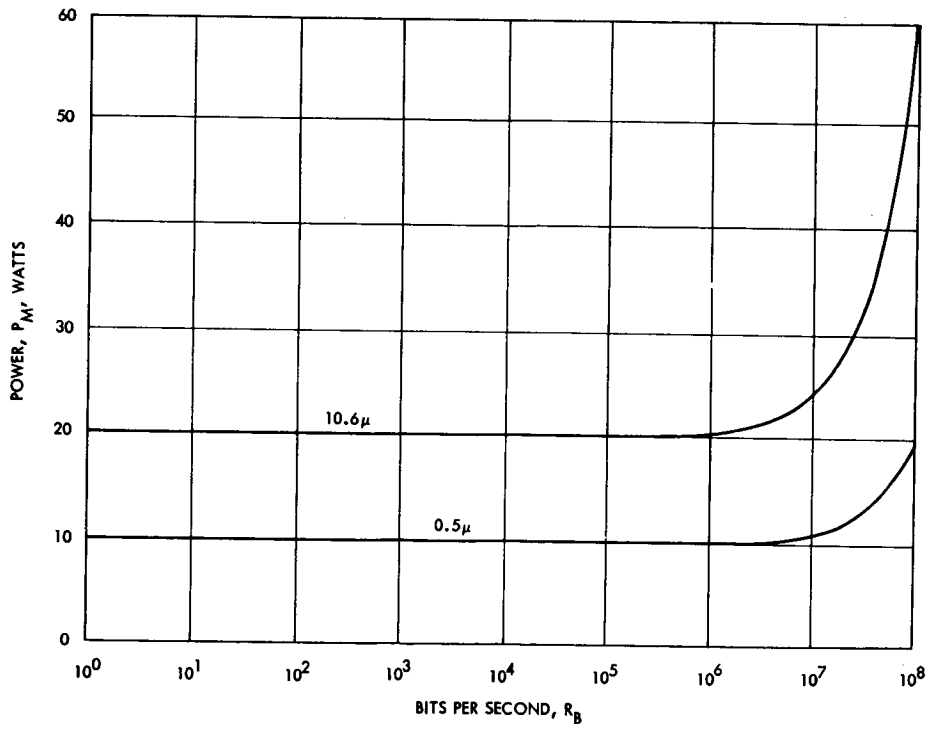

Figure B. Modulator Power Burdens

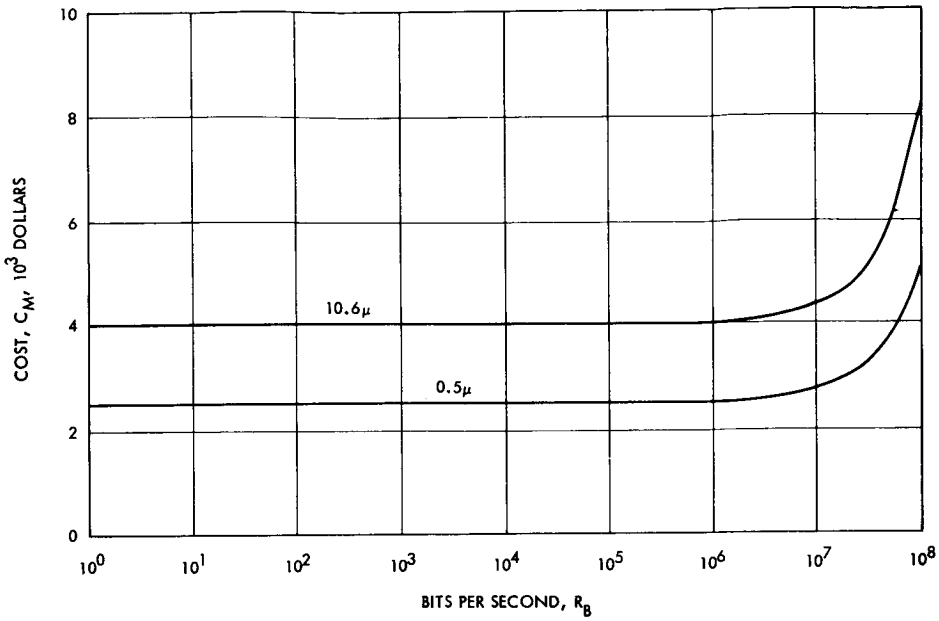

Figure C. Modulator Cost Burdens

Optical Modulator Burden Summary

Burden Constant	Wavelength	
	0.5 Micron	10.6 Micron
W_{KM}	4	5
K_M	4×10^{-8}	10^{-7}
K_{PM}	2.5	4
C_{KM}	2500	4000
K_{FM}	2.5×10^{-5}	4×10^{-5}

NOMENCLATURE SUMMARY

Since some nomenclature is repeated from topic to topic, a summary of the nomenclature used in Optical Modulators is given below.

a	beam diameter at focus; also a symbol for $(2\pi L/\lambda)N_o^3 r$
A	transducer area
B	Kerr constant
B_{ij}, B_{jk}, etc.	dielectic impermeability tensor or indicatrix, a dimensionless quantity
c	velocity of light in vacuum
C	capacitance, e.g., of an optical modulator
C_{KM}	minimum modulator cost
C_M	modulator cost
d	transducer length along the light path
D	laser beam diameter
E	electric field, dc or ac
E_B	d-c bias electric field
E_m, E_o	electric field, amplitude, or peak value
f	focal length of a lens
f_m	modulation signal frequency
f_o	frequency of the optical wave
f_s	frequency of the ultrasonic wave
g_{11}, g_{12}, etc.	quadratic electro-optic coefficients
h	transducer height
I	output intensity of a modulated light beam
I_o	beam intensity at input to modulator
I_{-1}, I_o, I_{+1}	intensities of the $n = -1$, $n = 0$, and $n = +1$ order diffracted beams
$J_n(x)$	n^{th} order Bessel function of an argument x
K_{FM}	rate of increase of modulator cost with bit rate

K_M	rate of increase of modulator weight with bit rate
K_{PM}	ratio of modulator power to weight
L	modulator length
L_o	electrical (or optical) length of a laser cavity
m	modulation index
m_i	effective modulation index of the ith harmonic of a modulation signal
n	diffraction order number
N	general symbol for refractive index
N_o	ordinary refractive index of a birefringent material
N_e	extraordinary refractive index of a birefringent material
$p_{ijk\ell}$	elasto-optic coefficient of the medium, dimensionless
P_M	modulator power requirement
r, r_{63}, r_{41}, etc.	linear electro-optic (Pockels) coefficients
R	resistance or output impedance
R_B	modulation bit rate
s_j	strain component of $\eta_{k\ell}$ for a principal crystallographic direction
S_a	acoustic power density
S_{rf}	total radio frequency or microwave frequency power input to the transducer
t	electrode spacing or plate separation
T	transduction efficiency, dimensionless; also temperature
u	symbol for $\pi N_o L/\lambda_m$
v	dimensionless Raman-Nath parameter and is equal to $2\pi d\Delta N/\lambda$
v_o	optical wave velocity

NOMENCLATURE SUMMARY

v_s	velocity of sound in an optical medium
V	voltage, dc or ac
V_m, V_o	amplitude or peak value of an applied voltage
W_{KM}	minimum modulator weight
W_M	modulator weight
Γ	relative phase shift between principal components of a polarized light beam induced by a birefringent element; e.g., an optical modulator
Γ_{eff}	effective optical phase shift at high modulation frequencies taking into account optical transit time
Γ_o	peak value of Γ
δ_{ik}	Kronecker delta
ϵ	permittivity or inductive capacity of a dielectic medium
ϵ_h	optical electric field, horizontal polarization
ϵ_v	optical electric field, vertical polarization
$\eta_{k\ell}$	strain induced in the elasto-optic medium, dimensionless
θ	angle, specifically the angle between an incident and diffracted light beam
κ_{ij}, etc.	dielectic constant of the medium, a dimensionless quantity
λ, λ_L	optical wavelength in free space
λ_m	free space signal wavelength
λ_s	sound wavelength in the diffracting medium
ρ	density of an optical medium
ω	2π times an optical frequency
ω_m	2π times a modulation signal frequency