N71-33675
NASA CR 121470

CASE FILE COPY

Second Quarterly Report

STUDY OF PROCESS VARIABLES ASSOCIATED WITH MANUFACTURING HERMETICALLY-SEALED NICKEL-CADMIUM CELLS

By

William C. Harsch

Donald J. Doan

Earl S. Carr

EAGLE-PICHER INDUSTRIES, INC.
ELECTRONICS DIVISION
COUPLES DEPARTMENT
JOPLIN, MISSOURI
64801

DECEMBER, 1970

Covering Period

May 23 through August 23, 1970

PREPARED FOR

NATIONAL AERONAUTICS AND SPACE ADMINISTRATION
GODDARD SPACE FLIGHT CENTER
GREENBELT, MARYLAND 20771

APR 1971
RECEIVED
NASA STI FACILITY
INPUT BRANCH

NOTICE

This report was prepared as an account of Government-sponsored work. Neither the United States, nor the National Aeronautics and Space Administration (NASA), nor any person action on behalf of NASA:

a. Makes warranty or representation, expressed or implied, with respect to the accuracy, completeness, or usefulness of the information contained in this report, or that the use of any information, apparatus, method, or process disclosed in this report may not infringe privately owned rights; or

b. Assumes any liabilities with respect to the use of, or for damages resulting from the use of any information, apparatus, method, or process disclosed in this report.

As used above, "person acting on behalf of NASA" includes any employee or contractor of NASA, or employee of such contractor, to the extent that such employee or contractor of NASA, or employee of such contractor prepares, disseminates, or provides access to any information pursuant to his employment with such contractor.

Requests for copies of this report should be referred to:

NATIONAL AERONAUTICS & SPACE ADMINISTRATION/
SCIENTIFIC AND TECHNICAL FACILITY
POST OFFICE BOX 33
COLLEGE PARK, MARYLAND 20740

SECOND QUARTERLY REPORT

FOR

STUDY OF PROCESS VARIABLES ASSOCIATED WITH MANUFACTURING HERMETICALLY-SEALED NICKEL-CADMIUM CELLS

BY

WILLIAM C. HARSCH
DONALD J. DOAN
EARL S. CARR

COVERING PERIOD

MAY 23 THROUGH AUGUST 23, 1970

CONTRACT NUMBER NAS5-21159

GODDARD SPACE FLIGHT CENTER

CONTRACTING OFFICER
J. A. MALONEY

TECHNICAL MONITOR
FLOYD E. FORD

PREPARED BY

EAGLE-PICHER INDUSTRIES, INC.
ELECTRONICS DIVISION
COUPLES DEPARTMENT
JOPLIN, MISSOURI
64801

FOR

NATIONAL AERONAUTICS AND SPACE ADMINISTRATION
GODDARD SPACE FLIGHT CENTER
GREENBELT, MARYLAND 20771

TABLE OF CONTENTS

ITEM	DESCRIPTION	PAGE
	ABSTRACT	i
I	INTRODUCTION	1
II	ANALYSIS OF DATA - PLAQUE MANUFACTURING STUDY. .	3
	A. Computer Programming	3
	B. Reason For and Procedure For Coding of Independent Variables	3
	C. Error Variance Analysis	5
	D. Multiple Regression Analysis-Development of Equation	7
	E. Use of the Regression Equation	10
III	IMPREGNATION-POLARIZATION EXPERIMENT	13
	A. Impregnation-Polarization Process	13
	B. Experimental Design	13
	C. Experimenting Equipment	15
	D. Experiment Testing and Control	16
IV	BATTERY SEPARATOR STUDY	19
V	CERAMIC-TO-METAL SEAL COVER ASSEMBLIES	21
VI	CONCLUSIONS AND RECOMMENDATIONS	25
VII	PROGRAM PLAN	26

APPENDIX

References

Exhibit 1 Variable Numbers For Corresponding Interactions Using a 9 Variable Matrix

Exhibit 2 Model For Thickness Using Interactions

Exhibit 3 Model For Void Using Interactions

Exhibit 4 Model For Strength Using Interactions

Exhibit 5A Computer Program For Generating Prediction Levels For Variability Study

Exhibit 5B Matrix of Prediction Levels For Variability Study Expressed in Engineering Units

Exhibit 5C Program to Produce Interactions and Code for Gardner's Regression Program

Exhibit 5D Gardner's Program

Exhibit 5E Results of Variability Analysis

DISTRIBUTION LIST

TABLE OF CONTENTS (CONTINUED)

ITEM	DESCRIPTION	PAGE
TABLE I	ANALYSIS OF VARIANCE (ERROR ANALYSIS)	6
TABLE II	MULTIPLE CORRELATION COEFFICIENTS (SQUARED) FOR VARIOUS MODELS	8
TABLE III	ANALYZED VARIATION FOR THE PLAQUE MANUFACTURING INDEPENDENT VARIABLES	10
TABLE IV	POSITIVE IMPREGNATION STUDY	13
TABLE V	NEGATIVE IMPREGNATION STUDY	14
TABLE VI	COMPARISON OF SEPARATOR TEST PROCEDURES	20

FIGURES

FIGURE 1	PLOT OF RESIDUALS VS. OBSERVATIONS FOR STRENGTH	9A
FIGURE 2	VACUUM IMPREGNATION TANKS, NITRATE/CAUSTIC	15A
FIGURE 3	STORAGE TANKS AND POWER SUPPLIES	15B
FIGURE 4	DEIONIZING UNIT	15C
FIGURE 5	SINGLE PLATE TEST SCHEMATIC	17

ABSTRACT

This report describes the second phase of experiments designed to determine the critical process variables in the manufacturing of aerospace nickel-cadmium cells. This second phase included additional analyses of plaque sintering experimental data and setting up of the impregnation and polarization process for cell plates. Also covered in this phase was a study of separator materials and ceramic-to-metal seals.

Work continued on the analysis of the plaque manufacturing data. Analysis of variance has shown that 85% of the total variation occurs within any individual plaque. It was further concluded that a 2% variation is introduced into the plaque by virtue of the manufacturing process.

Regression equations were determined with and without interactions. The results were compared and it was determined that there are significant interactions for this manufacturing process. Temperature, belt speed and dewpoint effects are non-linear due to these interactions. Hot zone temperature, belt speed, dewpoint, weight and second cooling zone temperature cause relatively strong effects on plaque characteristics. Belt speed is easily controlled but improved controls are recommended for dewpoint and temperatures of hot zones and cooling temperatures.

Additional use was made of the regression equation to predict variability of the plaque manufacturing process within the normal tolerance range of the equipment. The following conclusions were made as a result of this variability study for two (2) particular equipment settings.

A. An increase of 30°F in temperature at 1760°F causes a 2% decrease in void and thickness and an increase in strength of 12%. However, this same increase at 1860°F can cause no change in void or thickness and can cause diminished strengths of 5-6%.

B. An increase in belt speed of 1 inch/minute will cause less than a 1% change in void and thickness. Strength changes of less than 2% were shown at 1760°F but a 6% strength decrease was predicted at 1860°F with this increase in belt speed.

C. Dewpoint exhibits especially strong affects for only a plus or minus change of 5°F. Thickness and void changes of 5% were seen at 1860°F with strength changes of up to 40%. Dewpoint effects are most pronounced on the lightest weight plaques.

D. A change of 20 cfh of atmosphere amount causes no change in void or thickness and less than 1% in strength.

E. Close spacing is most desirable for uniform plaques.

F. A 16°F increase in temperature of the first cooling zone water increases thickness and void in the range of 0.0 to 0.7%, and increases strength approximately 2.5%.

G. A 16°F increase in temperature of the second cooling zone water predicted large increases in strength and significant changes in void and thickness.

H. A plaque weight increase will increase thickness and void. Strength is increased at 1760°F as plaque weight is increased, but at 1860°F strength is decreased as plaque weight is increased.

I. INTRODUCTION

The objective of this program is to develop a process procedure and control for manufacturing nickel-cadmium aerospace cells with reliable five (5) year life capability. In order to achieve these objectives, each component part will be investigated separately and collectively to determine the critical variables and related interactions.

The total program consists of four (4) distinct, yet interrelated phases. The first phase consisted of a detailed analysis of our procedures in conjunction with a review of pertinent literature of nickel-cadmium batteries to assess critical variables of the various processes that affect cell performance. The second phase will involve the evaluation and testing (verification) of the variables and their interrelation as determined in Phase 1. This will include a design of experiments to experimentally identify critical variables and to establish tolerances required for uniform performance. Phase 3 includes the detailed preparation of a Quality and Reliability Assurance Program, Acceptance and Manufacturing Flow Sheets and a complete hardware specification that can be practically implemented in a cost effective manner. This specification will be patterned after "S-716-P-23, Interim Model Specification for High Reliability Nickel-Cadmium Spacecraft Cells." The Fourth Phase of the program will be to implement the results of Phases 1 through 3 on a production basis. This effort will "prove out" the conclusions and will establish both validity of concept and applicability to production equipment and overall operational capability. During this phase, the deliverable items of separation, positive and negative plates will be prepared. Also, 20 nickel-cadmium cells of 20 ampere-hour size will be manufactured to the developed procedure. Inspection levels will be 100% minimum and complete traceability maintained.

The first quarter of this program was devoted to investigating the dry-sintering process used in manufacturing porous nickel plaque. A factorial experiment was designed to examine the sintered plaque characteristics as a function of the process variables. The data gathered from this experiment were analyzed using a step-wise multiple regression technique designed for use with the IBM 1130 computer. At the completion of analysis, plaques with different characteristics were selected for use in the impregnation factorial experiment. After the impregnation study, these plaques will be characterized both electrically and physically to determine the effects of sintering and impregnation variations. Tolerance limits will be selected and plates will be produced for a production lot of cells. Studies are also being conducted on other component parts, such as, separators, ceramic-to-metal seals, welding techniques, etc. At the completion of these component studies, cells will be built and investigated for such things as electrolyte amount, positive-negative ratio, compression, etc. The cells produced at the completion of the program will be placed on Life Cycle Testing and cycled to failure.

II. ANALYSIS OF DATA-PLAQUE MANUFACTURING STUDY

A. Computer Programming

At the close of the last Interim Report, Run No. 9 (mid level run) had been completed but the data had not been included in the eight (8) previous plaque runs for analysis. The 8 previous run analysis had been used to predict the outcome of Run No. 9 and a series of comparisons (actual vs. predicted) were presented. Several changes were instituted to shorten the (future) time of analyzing the data by the Gardner Multiple Regression Program. A disk file was setup and the regression program modified to read this file. The file is loaded with up to 60 variables and 750 observations (total to date) using a separate scaling and transformation program. The scaling (-1 to +1) routine is not part of the Gardner Program (See Section B below). This change in procedure resulted in a significant reduction in computer running time.

B. Reason For and Procedure For Coding of Independent Variables

The raw data consists of independent variables in the original engineering units; for example, temperatures of approximately 1700°F to thicknesses of 0.025", etc. The resulting coefficients would range from very small numbers to very large numbers. This presents difficulties as very large numbers or very small numbers present computation errors or numbers larger than the capability of the computer program. In order to "level" the values, a system is followed that reproducibly scales numbers so they reflect the actual run values and provides ready comparison among the coefficients. A program is available to "code" the variables by running through each variable to find the maximum and minimum value of each and then compute each variable to

find the maximum and minimum value of each and then compute each variable by proration giving a +1.000 value to the maximum and -1.000 to the minimum. The response or responses are, of course, not changed. The "raw" data is now "coded". The maxima and minima for each are punched in a new deck for future coding of prediction levels if desired. Rounding errors and subtraction and addition errors are lessened. The standard precision of the IBM 1130 is 6 figure accuracy so if numbers are subtracted larger than 6 figures, an error will be introduced. A discussion of these latter points is in Draper and Smith, Applied Regression Analysis, p. 148, John Wiley, 1966.

In order to improve the accuracy of the models, interactions of the variables are introduced as additional variables. To lower the number of variables, only first order interactions are used (e.g. temperature x dewpoint, etc). Fitting a curve (equation) is simplified by making the product as raw data and then coding the new variable. Thus, the product range from product of smaller numbers (-1) to larger numbers (+1). If the interactions were made from coded original variables, the progression of numbers would be more complex since a +1 could arise from the product of 2 large numbers (+1 x +1) as well as from 2 small numbers (-1 x -1). The computer program, thus builds the new variables (interactions) before the coding takes place. The data is built into a permanent disk file so from one raw data (original variables) deck, any new data set with interactions can be available for the regression programs.

C. Error Variance Analysis

Analysis of variance for these data requires some modification from that usually performed on data. Each plaque resulted in 9 samples (observations) and each run produced 6 plaques. There is thus an error variance associated with plaques and an error associated within runs. The plaque error includes experimental error and variations within individual plaques. The error associated with runs includes these errors and variations from plaque to plaque. There are five (5) replicated runs (1-5) and four (4) not replicated which provide an estimate of error from run to run. Table Number I tabulates the analysis of variance data necessary.

From the standpoint of production, the estimate of sigma in Table Number I that is most meaningful is the "within runs and replicates" in each. This indicates the variability to be expected when fresh start-ups will take place. The coefficient of variation (est. of sigma/mean as %) is a useful index. These are:

ITEM	WITHIN RUNS & REP. COEF. OF VARIATION	WITHIN PLAQUES COEF. OF VARIATION
Strength	= 15.4%	= 13.3%
Void	= 5.10%	= 4.4%
Thickness	= 4.11%	= 3.5%
Weight	= 2.46%	= 2.1%

To reduce these variations, other controls would have to be instituted than were used during these runs. These data can serve as a baseline for any change made. It is interesting to note that approximately 85% of the variation is within an individual plaque.

TABLE NUMBER I

ANALYSIS OF VARIANCE (ERROR ANALYSIS)

(1) Response: Strength (Mean = 507.9)

	DF	SSQ	MS	S
Total	749	22745646.	30368.	174.3
Within Plaques	666	3025477.	4543.	67.4
Within Runs	736	4276397.	5810.	76.2
Within Runs & Reps.	741	4508849.	6085.	78.0
Between Runs & Reps.	8	18236798.	2279600.	1510.

(2) Response: Void (Mean = .02295)

Total	749	.002383	.000003181	.00178
Within Plaques	666	.0006688	.00001004	.001002
Within Runs	736	.001004	.000001364	.001167
Within Runs & Reps.	741	.001014	.000001368	.001170
Between Runs & Reps.	8	.001369	.0001711	.01308

(3) Response: Thickness (Mean = .02876)

Total	749	.002369	.000003162	.1778
Within Plaques	666	.0006796	.000001020	.001010
Within Runs	736	.001022	.000001388	.001178
Within Runs & Reps.	741	.001034	.000001396	.001182
Between Runs & Reps.	8	.001334	.0001668	.01291

(4) Response: Weight/2 sq.in. (Mean = 1.6935)

Total	749	1.4381	.001919	.04381
Within Plaques	666	.8386	.001259	.03548
Within Runs	736	1.1512	.001564	.0395
Within Runs & Reps.	741	1.2812	.001729	.04158
Between Runs & Reps.	8	.1569	.01961	.1400

LEGEND

DF = Degrees Freedom
SSQ= Sum of Squares
MS = Mean Square = SSQ ÷ DF
S = Sigma = Square Root of MS

D. Multiple Regression Analysis-Development of Equation

To evaluate the effect of the independent variables in the matrix, multiple regression analyses were made with and without all possible first order interactions among the independent variables. Responses were strength, void and thickness. The independent variables are:

1. Hot Zone Temperature
2. Belt Speed
3. Dewpoint of Atmosphere
4. Atmosphere Amount
5. Plaque Spacing
6. First Cooling Chamber Water Temperature
7. Second Cooling Chamber Water Temperature
8. Plaque Sequence
9. Weight of 2 sq.in.

The regression equations were derived with and without interactions and the models (equations) are presented in the Appendix. After derivation of the regression equations, they were checked against the known data points, that is, experimental runs 1 through 8 of the fractional factorial and Run 9, the mid-level run.

The data were analyzed by a multiple regression computer program (Gardner Program discussed previously) both with and without inclusion of interactions among the independent variables. The independent data matrix was first formed (interactions formed) as raw data except temperature in which the decimal was moved 3 digits. Following this, each vector was coded with maximum equal to +1, and the minimum equal to -1, and all values were prorated between these extremes. The variables are numbered identically to the list above. The interactions

are shown in Exhibit No. 1 in the Appendix. These variables "numbers" correspond to the "x" numbers in the Appendix, Exhibits 2 - 4 of the models (equations) for each response (strength, void and thickness).

The regressions were solved without and with interactions and the "value" of the more complicated model can be judged by comparing the squared multiple correlation coefficients for each. These are listed below in Table No. II.

TABLE NUMBER II

MULTIPLE CORRELATION COEFFICIENTS
(SQUARED) FOR VARIOUS MODELS

	R^2
Strength, No Interactions	.746
Strength, With Interactions	.850
Void, No Interactions	.554
Void, With Interactions	.607
Thickness, No Interactions	.551
Thickness, With Interactions	.605

This coefficient is 1 minus the ratio of the residual sum of squares. over the total sum of squares. The "sum of squares" is a measure of the variability of the data so this coefficient measures the "amount" accounted for by the model (variables). There is an appreciable increase for the interaction models over that including no interactions.

The other statistical terms have been referenced earlier. When the coefficients are small, the program prints them in "E" format at the right side. The sign and integers following the "E" is the logarithmic characteristic and shows the digits to shift the decimal (- to the left; smaller). To graphically show a model effectiveness,

Figure 1 shows a plot of the residuals (prediction from model - actual observation) versus the observation. A random scatter shows no variables predominately causing effects. This also shows the values of the residuals resulting from the 750 observations originally used to setup the models.

Having quite complex models such as these, it is relatively easy to create a vector among the interactions which is beyond that found in the original data maxima or minima. Obviously in creating the matrix for predicting some set of values, the same maxima and minima must be used as was used to create the model. If some vector exceeds these limits either positively or negatively, an extrapolation may result. Since the model is very complex, this extrapolation may result in a predicted response that has a large error associated with it. Besides giving a response quite different from that expected, the standard error of the prediction (Y), which the program prints for each, will be substantially greater than the original data values. By printing the values for the X matrix after coding, the extrapolated vector can readily be located.

PLOT OF RESIDUALS VS. OBSERVATIONS
FOR STRENGTH (9 VAR. MATRIX
W/INT)
NOTE: A = 1 VALUE, B = 2 VALUES,
C = 3 VALUES *>26 VALUES, THE SAME VALUE

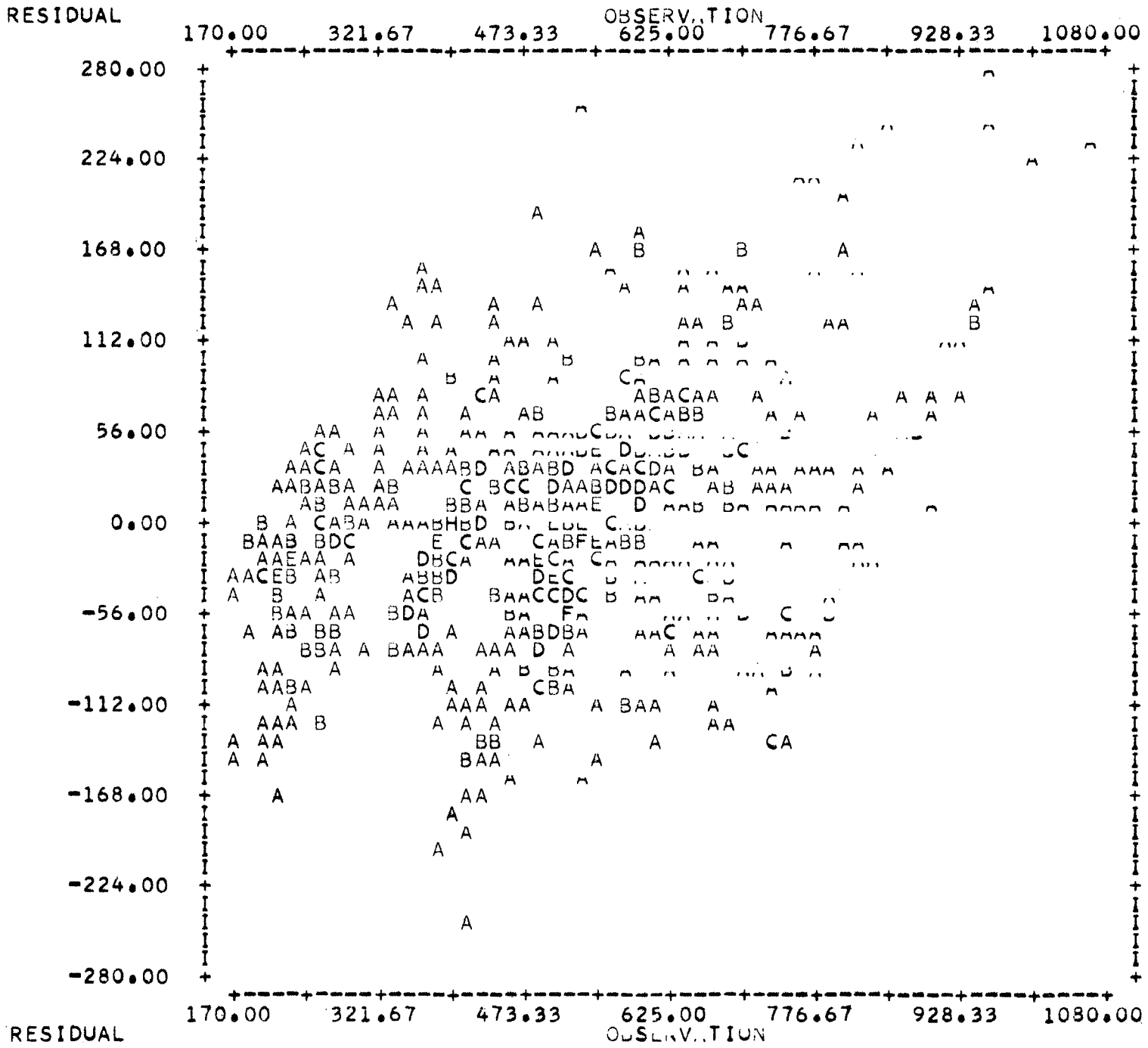

FIGURE NUMBER 1

E. Use of the Regression Equation (See Appendix, Exhibits 2-4)

The derived equation (mathematical model) is very useful. This equation can be used to:

(1) Assess Variability Within the Process

(2) Predict Plaque Characteristics for Various Furnace Settings

(3) Optimization of the Process

(1) Assess Variability Within the Process

This is done by programming maximum and minimum tolerance levels for each of the independent variables into the computer. Each variable is held constant except the one being investigated which can be varied high and low to determine the effect of changing this particular variable. In turn, all of the independent variables can be analyzed to determine the effect upon the process. This analysis has been performed for the 9 independent variables at various settings of the furnace and various changes of the other independent variables. The nominal settings and the amount of variation programmed into the computer are shown in the following table.

TABLE III

ANALYZED VARIATION FOR THE
PLAQUE MANUFACTURING INDEPENDENT VARIABLES

INDEPENDENT VARIABLE	NOMINAL SETTING	RANGE OF VARIATION
Hot Zone Temperature	1760°F, 1860°F	30°F
Belt Speed	6 in/min	1 in/min
Dewpoint	25°F, 35°F	10°F
Atmosphere Amount	800 cfh	20 cfh
Spacing	0.1"	1.8"
Cooling Zone 1	180°F, 75°F	16°F
Cooling Zone 2	83°F, 100°F	16°F
Plaque Sequence	6	2
Weight of 2 sq.in.	1.757 gm, 1.920 gm	0.24 gram

The computer run was made and the following conclusions were made for this variability study:

1. An increase of 30°F in temperature at 1760°F causes a 2% decrease in void and thickness and an increase in strength of 12%. However, this same increase at 1860°F can cause no change in void or thickness and can cause diminished strengths of 5-6%.
2. An increase in belt speed of 1 inch/minute will cause less than a 1% change in void and thickness. Strength changes of less than 2% were shown at 1760°F but a 6% strength decrease was predicted at 1860°F with this increase in belt speed.
3. Dewpoint exhibits especially strong affects for only a plus or minus change of 5°F. Thickness and void changes of 5% were seen at 1860°F and strength changes of up to 40%. Dewpoint effects are most pronounced on the lightest weight plaques.
4. A change of ± 10 cfh of atmosphere amount causes no change in void or thickness and less than 1% in strength.
5. Close spacing is most desirable for uniform plaques.
6. A 16°F increase in temperature of the first cooling zone water increases thickness and void in the range of 0.0 to 0.7%, and increases strength approximately 2.5%.
7. A 16°F increase in temperature of the second cooling zone water predicted large increases in strength and significant changes in void and thickness.
8. A plaque weight increase obviously increases thickness and void. Strength is increased at 1760°F as plaque weight is increased, but at 1860°F strength is decreased as plaque weight is increased.

NOTE: Supporting data are presented in the Appendix as Exhibit 5.

(2) Predict Plaque Characteristics for Production Settings

The equation can be used to predict plaque characteristics for a production run. In this manner, certain equipment limitations could be overcome by investigation and computation of the alternative furnace settings. This would lead to optimization of the process.

(3) Optimization of the Process

The complex interactions have shown that the process should be optimized by analysis of existing data. For example, it was shown that a plaque weight increase resulted in a stronger plaque at 1760°F, but a weaker plaque at 1860°F.

It is planned to perform this optimization process similarly in technique to the variability assessment described in (1) above. Variations of each independent variable will be programmed larger than those used in the above analysis. Also, more test data are being accumulated. These data will be added to the data of Runs 1-9 to improve the regression equation and to reduce error in the analysis (shown as S. E. (Y)). These data are being made available from production runs and other independent furnace investigations. Additional data will be accumulated on changes of dew-point and changes of cooling zones.

III. IMPREGNATION-POLARIZATION EXPERIMENT

A. IMPREGNATION-POLARIZATION PROCESS

The impregnation-polarization process is the means by which the active material is applied in a porous nickel plaque. This step is accomplished by soaking under vacuum a porous nickel plaque in either nickel or cadmium nitrate solutions. In order to convert the nitrates to the desired hydroxides, the plaques are immersed in either potassium hydroxide (KOH) or sodium hydroxide (NaOH) and a cathodic polarizing current applied.

The impregnated plaques are then washed and dried. This process is repeated until the plaques are impregnated with the desired amount of active material.

B. EXPERIMENTAL DESIGN

The designed experiments for the impregnation of polarization study will be conducted to obtain information on the effect of production parameters and error variance. This design, like that used for the raw plaque study previously reported, is a partially replicated fractional factorial of a sequential series type using twenty-one (21) variables and three (3) responses. The variables, their designation and levels are listed in Tables IV and V.

TABLE IV

POSITIVE IMPREGNATION STUDY

Variables	Designation	Levels
1	Specific Gravity of Nickel Nitrates	1.700 - 1.800
2	Free Acid	1 - 4 gm/liter
3	Temperature of Nitrate	140°F - 200°F
4	Time of Impregnation	15 minutes - 1 hour
5	Vacuum	0 - 15 Inches
6	Wash Time	10 Minutes - 30 Minutes
7	Wash (Number of Cycles)	1 - 3
8	Wash Water Temperature	R.T. - 150°F
9	pH of Wash Water	Measured
10	Type of Caustic	KOH - NaOH
11	Specific Gravity of Caustic	1.200 - 1.300
12	Temperature of Caustic	80°F - 150°F

TABLE IV (Cont.)

POSITIVE IMPREGNATION STUDY

Variables	Designation	Levels
13	Amount of NH_3 in Caustic	Measured
14	Amount of CO_2 in Caustic	Measured
15	Amount of OH in Caustic	Measured
16	Polarization Current	.1 - .4 amps/sq.in.
17	Polarization Time	15 Minutes - 1 Hour
18	Voltage of Plaque to Ref. Electrode	Measured
19	Amount of Cycles with Same Caustic	1 - 5
20	Number of Total Cycles	Measured
21	Type of Plaque	3 Types

Responses

1. Pick-up Weight
2. Capacity
3. Plate Testing (Characterization) These tests will be detailed in the Third Quarterly Report.

TABLE V

NEGATIVE IMPREGNATION STUDY

Variables	Designation	Levels
1	Specific Gravity of Cadmium Nitrate	1.800 - 1.900
2	Free Acid	.2 - .5 gm/liter
3	Temperature of Nitrate	110°F - 140°F
4	Time of Impregnation	15 Minutes - 1 Hour
5	Vacuum	0 - 15 Inches
6	Wash Time	10 Minutes - 30 Minutes
7	Wash (Number of Cycles)	1 - 3
8	Wash Water Temperature	R.T. - 150°F
9	pH of Wash Water	Measured
10	Type of Caustic	KOH - NaOH
11	Specific Gravity of Caustic	1.200 - 1.300
12	Temperature of Caustic	80°F - 150°F
13	Amount of NH_3 in Caustic	Measured
14	Amount of CO_2 in Caustic	Measured
15	Amount of OH in Caustic	Measured
16	Polarization Current	.1 - .4 Amps/sq.in.
17	Polarization Time	15 Minutes - 1 Hour
18	Voltage of Plaque to Ref. Electrode	Measured
19	Amount of Cycles with Same Caustic	1 - 5
20	Number of Total Cycles	Measured
21	Type of Plaque	3 Types

Responses

1. Pick-up Weight
2. Capacity
3. Plate Testing (Characterization)
   These tests will be detailed in the Third Quarterly Report.

All the variables will be measured and the actual numbers, not the design levels, will be used in the analysis.

Three types of raw plaque material have been selected for impregnation. One is a very low strength, high porosity plaque produced at a low sintering temperature. The second and third groups are successively stronger plaques. These plaques will be used for both positive and negative experiments. The settings for these plaques were selected as a result of the plaque investigations conducted during the first quarter. Complete data for these plaques will be included in the Third Quarterly Report.

All three types of plaques will be impregnated to the above mentioned program plan. The data gained from these plaques will be used to complete the analysis for the raw plaque study conducted during the first quarter of this program.

C. Experimenting Equipment

The equipment used for the impregnation/polarization study is an exact scale down of the production equipment. Figures 2 and 3 show the vacuum impregnation tanks, nitrate/caustic storage tanks and power supplies. The vacuum tank is equipped with a vacuum gage, thermocouples, voltage taps, power connectors and suction fan. The storage tanks have independent, controlled induction heating systems under the thickly insulated side walls. Current for polarization is supplied by three (3) Rapid Electric Power Supplies (Model S-550). All water used during the experiments will be supplied by a Model HB-455-1 Deionizing Unit produced by Illinois Water Treatment Company (See Figure 4). This unit has a 350 gal/hr. rate with

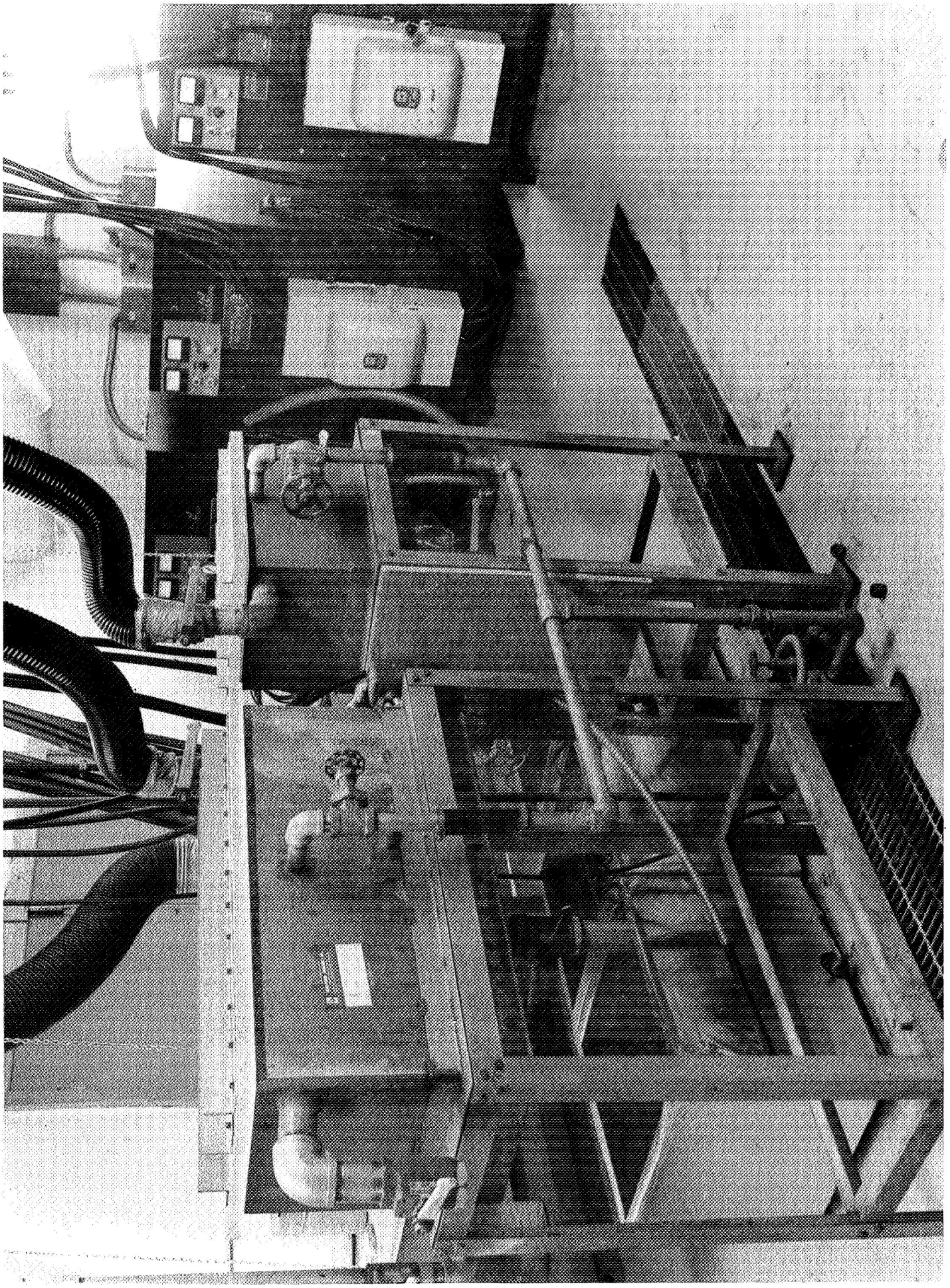

FIGURE 2

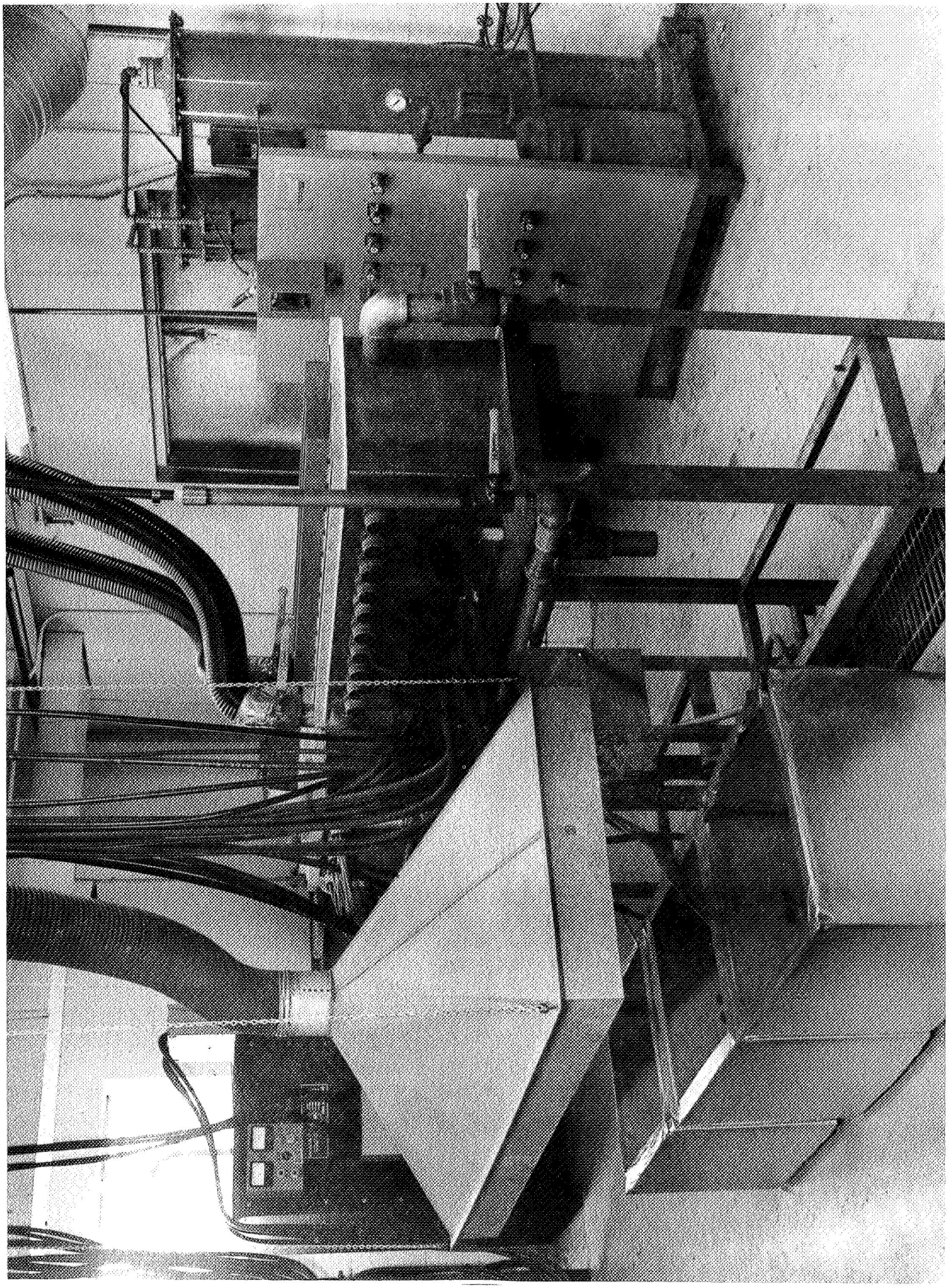

FIGURE 3

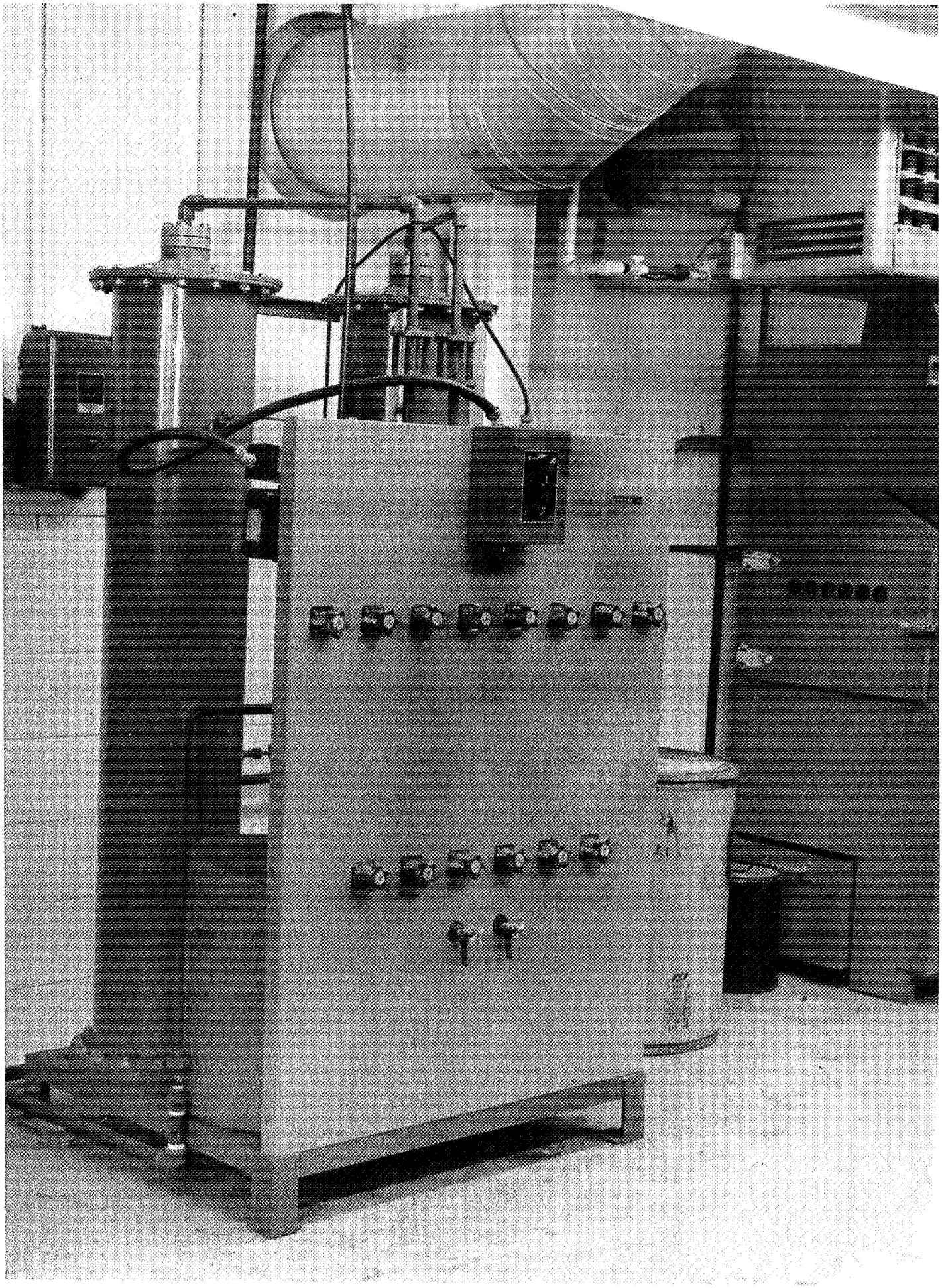

FIGURE 4

a 40,000 gallon capacity at a purity level of less than 3 ppm.

Laboratory equipment has been assembled to conduct the required chemical analysis on the nitrates and caustic used.

D. Experiment Testing and Control

In order to maintain the variables at their proper levels, as shown in the program plan, it will be necessary to measure certain properties. Although an effort will be made to hold the desired levels, the actual measurement will be used in the regression analysis.

Specific gravity of the solutions will be measured with hydrometers. Free acid of the nitrates will be measured using the titration method of Dr. A. Fleischer[1].

Temperatures will be read with thermometers and thermocouples. Vacuum can be measured with the vacuum gauge installed in the tank cover. Polarization currents will be measured using shunts on the line for each power connector going to the tank as can be seen in Figure 3. Chemical analysis of the nitrates and caustic will be conducted to measure the amounts of OH, CO_2 and NH_3. Chemical analysis of the OH content will be by titration. The standard double end point titration method will be used for CO_2 content. To determine the NH_3 content, a modified Kjeldahl distillation-titration method using 4% boric acid will be used.

Each plaque and subsequent plates will be weighed to determine the amount of active material picked up in the porous nickel plaque. A dimensional analysis will be done on each plaque before and after impregnation to determine its dimensional stability. Electrical capacity tests will be conducted on the test samples to measure the actual, useable active material. These electrical tests will be run on test samples using a Hg/HgO reference electrode and will be connected as shown in Figure 5. An attempt will be made to use the Four Point Bend Test

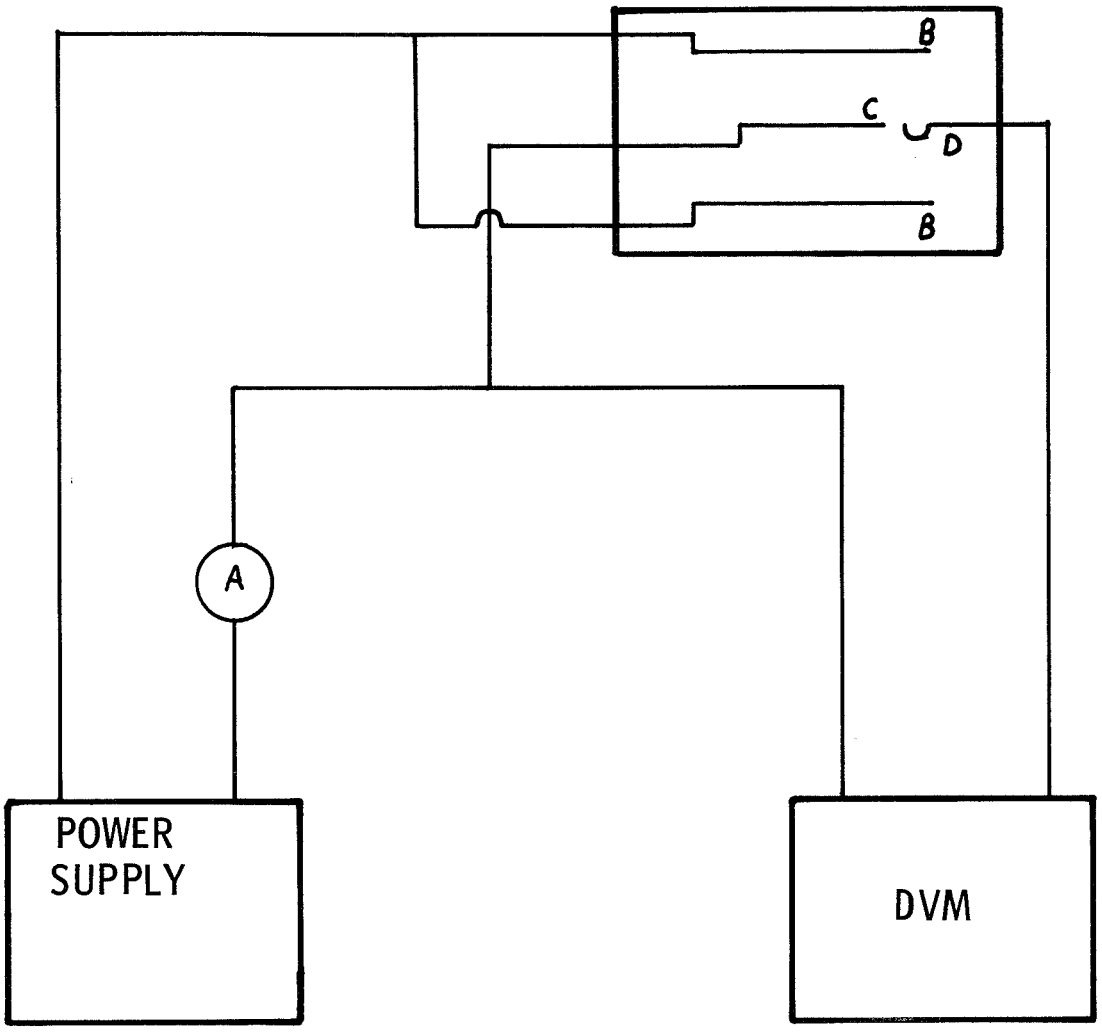

A Ammeter

B Sintered Nickel Counterelectrodes

C Test Sample

D Hg/HgO Reference Electrode

SINGLE PLATE TEST SCHEMATIC

FIGURE 5

before and after impregnation to determine the affect of impregnation on the physical strength.

IV. BATTERY SEPARATOR STUDY

The first task in this study is to develop accurate and predictable methods for screening non-woven nylon separator materials. Test methods used by various people and organizations connected with the battery industry have been investigated. The test methods used or recommended by the NASA Interim Specification[2], Fleischer & Cooper[3], Dr. T. King[4], Pellon Corporation[5], the GAC-OAO Specification[6] and Eagle-Picher are listed in Table VI.

The study thus far has been confined to the non-woven nylon type separator materials. The final objective of this study is to obtain testing methods which will give the most accurate and repeatable results to be used in screening separator material.

Future work will include the comparison of different testing methods on the same lot of separators and the feasibility of testing separator materials under compression.

A procurement and testing specification will be prepared for non-woven nylon separator material during the third quarter.

TABLE NUMBER VI - COMPARISON OF SEPARATOR TEST PROCEDURES

TEST	EAGLE-PICHER	NASA INTERIM SPEC.[2]	FLEISCHER & COOPER[3]	KING, LACKNER & HAINES[4]	PELLON CORP.[5]	OAO SPEC.[6]
1. IDENT. OR TRACE-ABILITY	Lot & Roll Number	Basic Fiber & Separator Mfg., Part, Lot & Style No., Condition (Washed or Treated)				Fiber Mfg., Part & Lot No. Date of Mfg.; Separator Mfg. Style & Lot No.; Date
2. WEIGHT	Weigh One Square Yard	1 m^2 Approx. Shape			10 x 10 cm Sample	6 ea. 6.5 cm x 2.5 cm Samples
3. THICKNESS	Cady Gage DW1	Ames Model 262 Platform Dial Micrometer; Also Variation in Thickness is Recorded.	Ames Model 262 Platform Dial Micrometer	ASTM Test	Cady Gage DW1	Ames Model 262; Also variation in thickness is recorded.
4. TENSILE STRENGTH	1" Wide Sample 3"/min. pull with fiber direction (Dev. Tests)	Both directions, Also % elongation @ break	2" x 3" Sample @ 4 in/min; Run both wet & dry	ASTM Test, Before & After a 1 hr. boil in 30% KOH	2" wide Sample	5 samples 12.7 x 2.5 cm; 3 in/min. grip separation of 3 inches repeat after 24 hrs. @ 70°C
5. WICKING RATE	1" x 6 Sample, Immerse 1/4" in KOH; Record Time to 1/2"&1"(Dev. Tests)			1"x6" Sample Immerse 1/4" in KOH; Record Time to 1/2" & 1"	1"x6" Sample, Immerse 1/4" in KOH, Record Time to 1"	
6. AIR PERMEABILITY				ASTM Test, D737-46 1/2" H_2O Head; 100-125 cfm desired		
7. ELECTROLYTE ABSORPTION	4"x4"; 1 hr. Soak 10 Second Drip, Record Weight	4 Hr. Covered Soak; wipe across lucite block, record weight.	3/4"x 1 1/4" sample; 5 min. soak, wipe on lucite block; record weight.	1" x 6" Sample; Soak 10 min., 3 min. drip, record weight		6 each samples, 6.5 x 2.5 cm; weigh & measure, soak 3 hrs. record weight & dimensional changes, soak 1 more hour.
8. ELECTROLYTE RETENTION		Sample from absorption drained 15 min. @ 45° angle on lucite.	Centrifuge @ 25 g for 2 min.	Soak 10 min., place between .010 plaque same size as sample pressure .1 oz/in^2		After second soak above, wipe on lucite plate and reweigh.
9. ELECTRICAL RESISTANCE	4" x 4" sample between ni electrodes, 10 amps applied; measure voltage drop DC	D.C. method essentially same as Fleischer	Cd Electrodes, D. C.; Ref. Hg/HgO Electrode, using a null potentiometer			Modified Fleischer Method; $Cd/Cd(OH)_2$ Electrodes; D.C., Hg/HgO Ref. Electrode
10. WETTABILITY	Time to wet out, visual.	Measurement of "R" @ 5 second intervals.			Circular specimen, 18 mm, Diam. placed flat on solution; wetting time recorded.	3 pts. @ 5 sec. intervals from Data of nine.
11. RESISTIVITY	From "R" & Thickness	From "R" & Thickness				From "R" & Thickness
12. H_2O SOLUBLES	Foaming Test on Shaking in H_2O				4"x4" sample; dry @ 104°C extract with H_2O; 4-5 hrs. Dry, Weigh, Record Wt. Loss	
13. ORGANIC LEACHABLES		10 cm^2 sample stirred overnight in methylene chloride; evap.; IR on residue.		5 Hr. Trichloroethylene Soxlett Extraction		3 samples, 10 cm^2, methane extraction; weigh residue & run IR trace.
14. POROSITY						Calculate from data of 6 & 7 above.
15. OXIDATION RESISTANCE	$KMnO_4$ Tests (Dev.)		250 ml 5% K_2MnO_4 50 ml,25% NaOH,50°C,1 Hr Clean & Weigh Sample	1.H_2O Solubles;200 ml 0.1N KOH, Titrate w/0.001N $KMnO_4$ 2. Sample boiled 100 ml 5% $KMnO_4$ 1 hr. (Wt. Loss Test)		
16. INORGANIC CONTENT		Test for Carbonate, Zinc, Chloride, Nitrate, Nickel				Same as NASA, Inorganic Analysis subject to approval
17. OTHERS					Burst Strength ASTM D1117-63 by Request	C of C for antistatic agent or wetting agents.

V. CERAMIC-TO-METAL SEAL COVER ASSEMBLIES

There are two pertinent reports that have been prepared regarding ceramic-to-metal terminal cover assemblies for hermetically-sealed cells which are especially useful for nickel-cadmium cell designers and battery users. These reports are "A Study of the State-of-the-Art of Hermetic Seals for Secondary Alkaline Spacecraft Cells"(Final Report NAS5-10432) (Ref. 7). by Dr. Willard Scott of TRW and the paper presented by Mr. R. A. Steinhauer (Ref. 8) of Hughes Aircraft Company at the NASA/GSFC Workshop on November 17, 1970. It is recommended that all battery cell designers and cell and battery users be familiar with these reports as they contain excellent descriptions of current state-of-the-art and important design parameters that must be considered for the development of high reliability ceramic-to-metal seals. The following discussion presents specific areas and recommendations based on Eagle-Picher experience and are submitted to complement the above two reports.

A specification for quality control of ceramic-to-metal terminal cover assemblies for hermetically-sealed nickel-cadmium cells is being prepared. Source Control Drawings will be prepared for each manufacturer which also contain provisions for source control of component parts. This Source Control Drawing will be complemented with a Quality Assurance Specification with the format as outlined below. Ceramic assemblies will be procured using these specifications and drawings for deliverable cells on this contract.

The metal parts used in the ceramic-to-metal seal consist of the cell cover, terminals, stress relief collars, and braze cups or caps.

The cell cover is manufactured of stainless steel with the preferred material being 304L per QQS-766 Condition A. Type 304 stainless steel has also been satisfactorily used. The only major difference in the two materials is the percentage of carbon which is 1/2% greater in Type 304.

Terminals are manufactured from stainless steel or nickel. Nickel is generally preferred by Eagle-Picher due to its better conductivity. Also, the machineability of stainless steel presents some problems. Nickel 270, as supplied by International Nickel, is preferred. This nickel is the purest nickel commercially available. Nickel 200 has been used, but porosity problems of this nickel have led to leak problems of ceramic to metal seals. International Nickel was consulted on this problem and recommended the use of Nickel 270 to eliminate the fissures and porous areas caused by impurities in the less pure grades of nickel.

Stress relief collars and upper braze cups, also referred to as sleeves and caps, can be manufactured from pure nickel or nickel-iron alloy 42 or 52. The use of nickel is not recommended for the active metal system where there is contact with titanium, as local nickel alloying with titanium occurs. Alloy 42 is preferred for the active metal system because of its closer matching thermal expansion coefficient to that of the ceramic insulator. However, alloy 42 parts must be copper plated to improve wettability during the brazing operation. Alloy 52 does not need to be copper plated and appears to be a good compromise for these parts; however, the nickel iron alloys are not corrosion resistant and must be protected from humidity exposure to prevent corrosion and eventual leakage problems.

Ceramic insulators are available in many varieties of alumina. The 94 to 95% alumina content ceramic bodies have been used in most nickel cadmium spacecraft batteries to date. Ceramic bodies are available from several vendors in the general class of 94% minimum, 99% minimum, and ultra-high purity varieties of alumina such as Coors AD999 and Vistal, or G. E. Lucalox. It is difficult to assess the improvement to be gained from higher alumina content ceramic although leakage paths (cracks) at the ceramic braze interface have been shown.[7] The braze interface area contains fused glass phases. It follows then that removal of the silica content from the ceramic insulator would be desirable. This would be true except that the metallizing material and its formula must be changed with different alumina contents. With the molymanganese system, silica must be added to the metallizing agent; with the active metal system, we are advised that no glassy phases need be added in the metallizers. The composition of the metallizing layer or the metallizing material is generally proprietary.

The braze alloy employed has been the silver copper eutectic for many space type units. Also Ceramaseal, Inc. has incorporated approximately 5% paladium in their brazing alloy for a number of space qualified seals to improve corrosion resistance. This results in a composition of 27% copper, 68% silver, and 5% paladium.

Preliminary work has begun on a quality assurance specification for the manufacture of ceramic-to-metal seals. This specification is divided into the following areas:

I. Materials Testing

   A. Metal Parts

   B. Ceramic Insulators

   C. Brazing and Metallizing Materials

II. Cleaning and Handling

   A. Cleaning Metal Parts

   B. Cleaning Ceramic

   C. Handling

   D. Storage

III. Manufacturing

   A. Brazing Operations

   B. Welding

IV. Testing

   A. Start Up - Qualification

   B. 100% Testing

V. Packaging

VI. CONCLUSIONS AND RECOMMENDATIONS

1. Analysis of variance has shown that 85% of the total variation occurs within any individual plaque. It is further concluded that a 2% variation is introduced into the plaque by virtue of the manufacturing process.
2. It is recommended to pursue additional work to reduce the 2% variation inherent in the process. This work should concentrate on uniformity improvement of individual plaques.
3. It is concluded that there are strong interactions in the plaque manufacturing process.
4. Temperature, belt speed and dewpoint effects are non-linear due to interactions.
5. Hot zone temperature, belt speed, dewpoint, weight and second cooling zone temperature cause relatively strong effects on plaque characteristics.
6. Relatively high degrees of control (with respect to amount of change) are available for atmosphere amount, belt speed and spacing.
7. Improved controls are recommended for temperature of hot zones and cooling chambers, and control of dewpoint.
8. It is also recommended and planned to conduct further optimization studies for manufacturing nickel plaques.

VII. PROGRAM PLAN

The following areas will be investigated during the third quarter of the contract.

1. Impregnation, polarization, and formation studies will be continued.
2. Based on the test results from the first experimental runs, it is planned to alter the factorial design experiment to provide data with less total time required to perform the experiments. It will be necessary to reduce the number of experiments in order to do the work in a timely manner.
3. Additional tests will be performed on the three (3) runs of unimpregnated plaque which are being used for the impregnation study.
4. The separator specification shall be prepared.
5. The plaque quality assurance specification will be finalized.
6. Ceramic-to-metal seal source control drawing will be prepared for the cover assemblies to be purchased for the contract.
7. The cell test study will be formally planned.

REFERENCES

[1]Dr. A. Fleischer, Free Acid Titration in Impregnating Solutions, Nickel or Cadmium Nitrates, Report No. 68AF11E01, November 25, 1968.

[2]NASA Interim Model Specification S-716-P-23 for High Reliability Nickel-Cadmium Spacecraft Cells dated 30 April 1969.

[3]J. E. Cooper & A. Fleischer, Characteristics of Separators for Alkaline Silver Oxide Zinc Secondary Batteries, Screening Methods, Report No. PB166780.

[4]Dr. T. E. King, Q. C. Procedures and Measurements - Polypropylene Separators For Sealed Nickel-Cadmium Batteries, Proceedings at the Symposium on Battery Separators, The Columbus Section of The Electrochemical Society, February 18-19, 1970. (T. E. King, J. L. Lackner & R. L. Haines).

[5]Pellon Alkaline Battery Separator Material Description of Test Methods dated October, 1968.

[6]GAC Specification AV-252CS-25E for Nickel-Cadmium Storage Cells Power Supply Subsystem, Orbiting Astronomical Observatory (OAO), dated 4/15/69.

[7]Dr. W. R. Scott, Final Report, A Study of The State-of-the-Art of Hermetic Seals for Secondary Alkaline Spacecraft Cells, (June 20, 1967 - 20 March 1968) NAS5-10432.

[8]R. A. Steinhauer, Design of an Improved Long Life Ceramic-to-Metal Seal for Spacecraft Nickel-Cadmium Cells, presented at the NASA/GSFC Battery Workshop November 17, 1970.

A P P E N D I X

EXHIBIT 1

VARIABLE NUMBERS FOR CORRESPONDING INTERACTIONS
USING A 9 VARIABLE MATRIX

```
D(47)=D(11)
D(01)=D(01)*.001
D(10)=D(01)*D(01)
D(11)=D(01)*D(03)
D(12)=D(01)*D(04)
D(13)=D(01)*D(05)
D(14)=D(01)*D(06)
D(15)=D(01)*D(07)
D(16)=D(01)*D(08)
D(17)=D(01)*D(09)
D(18)=D(02)*D(03)
D(19)=D(02)*D(04)
D(20)=D(02)*D(05)
D(21)=D(02)*D(06)
D(22)=D(02)*D(07)
D(23)=D(02)*D(08)
D(24)=D(02)*D(09)
D(25)=D(03)*D(04)
D(26)=D(03)*D(05)
D(27)=D(03)*D(06)
D(28)=D(03)*D(07)
D(29)=D(03)*D(08)
D(30)=D(03)*D(09)
D(31)=D(04)*D(05)
D(32)=D(04)*D(06)
D(33)=D(04)*D(07)
D(34)=D(04)*D(08)
D(35)=D(04)*D(09)
D(36)=D(05)*D(06)
D(37)=D(05)*D(07)
D(38)=D(05)*D(08)
D(39)=D(05)*D(09)
D(40)=D(06)*D(07)
D(41)=D(06)*D(08)
D(42)=D(06)*D(09)
D(43)=D(07)*D(08)
D(44)=D(07)*D(09)
D(45)=D(08)*D(09)
D(46)=D(01)*D(02)
```

*SYMBOL * = MULTIPLY
THUS = D (15) = D (01) * D (07)
MEANS VAR.(15) = VAR. (01) x VAR. (07)

EXHIBIT 2

MODEL FOR THICKNESS
USING INTERACTIONS

X	RSQR X	B COEF	SE(B)	T	ANALYSIS OF Y 1
1	0.9995	0.0039	0.0024	1.62	0.397815E-02
2	0.9985	0.0020	0.0011	1.77	0.200483E-02
3	0.9997	0.0015	0.0045	0.33	0.151467E-02
4	0.9999	0.0063	0.0051	1.22	0.635395E-02
5	0.9994	0.0024	0.0017	1.35	0.243882E-02
6	0.9999	-0.0134	0.0056	-2.38	-0.134953E-01
7	1.0008	0.0067	0.0030	2.25	0.676428E-02
8	0.9993	-0.0040	0.0024	-1.69	-0.408308E-02
9	0.9899	0.0015	0.0015	0.95	0.150703E-02
11	0.9998	-0.0033	0.0070	-0.48	-0.338785E-02
12	0.9999	-0.0060	0.0054	-1.11	-0.604179E-02
14	0.9999	0.0123	0.0054	2.28	0.123480E-01
15	0.9997	-0.0143	0.0051	-2.77	-0.143094E-01
16	0.9979	0.0041	0.0014	2.86	0.418990E-02
17	0.9988	-0.0013	0.0028	-0.45	-0.130762E-02
18	0.9984	0.0018	0.0016	1.16	0.189183E-02
19	0.9953	-0.0022	0.0008	-2.53	-0.224552E-02
20	1.0121	0.0025	0.0004	5.44	0.255702E-02
21	0.9918	-0.0002	0.0006	-0.40	-0.268951E-03
22	1.0078	-0.0017	0.0006	-2.73	-0.177146E-02
23	0.9385	-0.0000	0.0003	-0.14	-0.458826E-04
24	0.9926	0.0007	0.0006	1.08	0.700236E-03
25	1.0090	-0.0007	0.0007	-1.04	-0.751334E-03
26	0.9987	-0.0032	0.0015	-2.11	-0.321291E-02
27	1.0063	-0.0004	0.0007	-0.56	-0.442369E-03
28	0.9980	0.0120	0.0017	6.93	0.120326E-01
29	0.9865	-0.0023	0.0006	-3.33	-0.231117E-02
30	0.9987	-0.0078	0.0023	-3.41	-0.789921E-02
31	1.0013	0.0019	0.0012	1.49	0.190849E-02
32	1.0018	0.0014	0.0012	1.17	0.141855E-02
33	0.9934	-0.0029	0.0007	-3.89	-0.293936E-02
34	0.9622	-0.0010	0.0003	-2.70	-0.102036E-02
35	1.0055	0.0021	0.0007	2.99	0.218696E-02
36	-0.2991	-0.0017	0.0000	-43.96	-0.176538E-02
37	1.0156	-0.0008	0.0004	-2.14	-0.862212E-03
38	0.9381	-0.0000	0.0002	-0.04	-0.112796E-04
39	0.9747	-0.0000	0.0002	-0.17	-0.529188E-04
40	0.9962	0.0004	0.0009	0.42	0.413589E-03
41	0.9527	0.0004	0.0003	1.40	0.472265E-03
42	0.9914	0.0012	0.0005	2.18	0.129391E-02
43	0.9972	0.0011	0.0014	0.79	0.114000E-02
44	1.0006	0.0009	0.0039	0.23	0.912335E-03
45	0.9989	0.0014	0.0020	0.71	0.147520E-02
46	1.0014	-0.0013	0.0012	-1.04	-0.136015E-02

CONSTANT	MULT F	DF1	DF2	RSQR	RESIDUAL
0.271278E-01	24.57	44	705	0.605	0.1325987E-05

EXHIBIT 3

MODEL FOR VOID USING INTERACTIONS

X	RSQR X	B COEF	SE(B)	T	ANALYSIS OF Y
1	0.9995	0.0043	0.0024	1.76	0.431996E-02
2	0.9985	0.0021	0.0011	1.86	0.211242E-02
3	0.9997	0.0023	0.0045	0.51	0.236535E-02
4	0.9999	0.0061	0.0051	1.18	0.616249E-02
5	0.9994	0.0028	0.0017	1.58	0.284498E-02
6	0.9999	-0.0142	0.0056	-2.51	-0.142210E-01
7	1.0008	0.0075	0.0030	2.50	0.751034E-02
8	0.9993	-0.0042	0.0024	-1.76	-0.426057E-02
9	0.9899	0.0010	0.0015	0.65	0.102813E-02
11	0.9998	-0.0045	0.0070	-0.64	-0.450552E-02
12	0.9999	-0.0060	0.0054	-1.11	-0.601794E-02
14	0.9999	0.0129	0.0054	2.40	0.129951E-01
15	0.9997	-0.0154	0.0051	-2.99	-0.154519E-01
16	0.9979	0.0043	0.0014	2.98	0.436891E-02
17	0.9988	-0.0009	0.0028	-0.34	-0.995331E-03
18	0.9984	0.0018	0.0016	1.11	0.181176E-02
19	0.9953	-0.0023	0.0008	-2.60	-0.230708E-02
20	1.0121	0.0025	0.0004	5.44	0.255993E-02
21	0.9918	-0.0003	0.0006	-0.51	-0.338032E-03
22	1.0078	-0.0015	0.0006	-2.46	-0.159503E-02
23	0.9385	-0.0000	0.0003	-0.23	-0.731911E-04
24	0.9926	0.0005	0.0006	0.83	0.542317E-03
25	1.0090	-0.0004	0.0007	-0.56	-0.407382E-03
26	0.9987	-0.0034	0.0015	-2.26	-0.344462E-02
27	1.0063	-0.0004	0.0007	-0.54	-0.425478E-03
28	0.9980	0.0126	0.0017	7.29	0.126646E-01
29	0.9865	-0.0023	0.0006	-3.42	-0.237682E-02
30	0.9987	-0.0084	0.0023	-3.64	-0.844533E-02
31	1.0013	0.0019	0.0012	1.53	0.194862E-02
32	1.0018	0.0014	0.0012	1.23	0.149143E-02
33	0.9934	-0.0031	0.0007	-4.12	-0.311846E-02
34	0.9622	-0.0010	0.0003	-2.68	-0.100988E-02
35	1.0055	0.0022	0.0007	3.14	0.229529E-02
36	-0.2991	-0.0017	0.0000	-44.27	-0.177900E-02
37	1.0156	-0.0010	0.0004	-2.58	-0.104268E-02
38	0.9381	0.0000	0.0002	0.03	0.803825E-05
39	0.9747	-0.0001	0.0002	-0.43	-0.129724E-03
40	0.9962	0.0005	0.0009	0.60	0.595277E-03
41	0.9527	0.0004	0.0003	1.38	0.464385E-03
42	0.9914	0.0012	0.0005	2.17	0.129147E-02
43	0.9972	0.0011	0.0014	0.81	0.116360E-02
44	1.0006	0.0006	0.0039	0.16	0.648976E-03
45	0.9989	0.0015	0.0020	0.73	0.153012E-02
46	1.0014	-0.0013	0.0012	-1.05	-0.136809E-02

CONSTANT	MULT F	DF1	DF2	RSQR	RESIDUAL
0.210579E-01	24.76	44	705	0.607	0.1327772E-05

EXHIBIT 4

MODEL FOR STRENGTH USING INTERACTIONS

X	RSQR X	B COEF	SE(B)	T
1	0.9995	-711.8366	147.1942	-4.83
2	0.9985	-270.0558	68.2929	-3.95
3	0.9997	-332.0055	275.6882	-1.20
4	0.9999	-64.5635	312.2766	-0.20
5	0.9994	-1092.5688	108.2423	-10.09
6	0.9999	2241.1455	340.7495	6.57
7	1.0008	-2073.5190	180.9300	-11.46
8	0.9993	418.9835	145.5554	2.87
9	0.9899	-408.9157	94.8270	-4.31
11	0.9998	1067.5815	423.6339	2.52
12	0.9999	508.3200	326.0465	1.55
14	0.9999	-2045.2849	326.2623	-6.26
15	0.9997	2771.8266	311.4108	8.90
16	0.9979	-384.6616	88.3513	-4.35
17	0.9988	-149.4142	172.1502	-0.86
18	0.9984	-64.6407	97.8177	-0.66
19	0.9953	168.1247	53.4379	3.14
20	1.0121	-46.4051	28.3200	-1.63
21	0.9918	214.9610	39.7407	5.40
22	1.0078	-335.6113	39.0048	-8.60
23	0.9385	38.3354	18.8933	2.02
24	0.9926	292.9636	38.9793	7.51
25	1.0090	-758.8901	43.4694	-17.45
26	0.9987	837.6492	91.5216	9.15
27	1.0063	-248.6733	47.2865	-5.25
28	0.9980	-1779.7412	104.5699	-17.01
29	0.9865	159.4689	41.8363	3.81
30	0.9987	1336.7436	139.6617	9.57
31	1.0013	-141.6998	76.7382	-1.84
32	1.0018	-61.1337	73.0579	-0.83
33	0.9934	595.6982	45.5151	13.08
34	0.9622	61.9687	22.7101	2.72
35	1.0055	-573.8228	44.0088	-13.03
36	-0.2991	173.8724	2.4218	71.79
37	1.0156	401.2891	24.2828	16.52
38	0.9381	-49.4943	14.8462	-3.33
39	0.9747	-11.0186	17.8277	-0.61
40	0.9962	-316.4359	59.2106	-5.34
41	0.9527	3.1091	20.2654	0.15
42	0.9914	-64.7191	35.7152	-1.81
43	0.9972	38.1241	86.0141	0.44
44	1.0006	809.8768	238.0842	3.40
45	0.9989	-278.9562	125.1175	-2.22
46	1.0014	96.0971	78.1869	1.22

CONSTANT	MULT F	DF1	DF2	RSQR	RESIDUAL
561.53027	91.16	44	705	0.850	4822.89942

EXHIBIT 5A
COMPUTER PROGRAM FOR GENERATING
PREDICTION LEVELS FOR VARIABILITY STUDY

```
// * PROG. TO FILE IN FFFF2 A PRED SET - A GIVEN SET OF LEVELS  AND AN
// * INCREMENT OVER - ORIG AND UNDER AND LEAVE AT ORIG VALUE AND
// *  THEN PROCEED TO NEXT VARIABLE.    DATSW 9 FOR PRINT
// FOR
* LIST SOURCE PROGRAM
* ONE WORD INTEGERS
*IOCS(CARD, 1132 PRINTER, DISK)
      DIMENSION DD(80),D(80)
      DEFINE FILE 4(751,160,U,IFA)
      DATADD/80*0.0/,D/80*0.0/
      PAUSE 1111
      K=0
      NOBS=0
      READ(2,2)NVIN, NVAR
2     FORMAT(2I2)
39    PAUSE 2222
      READ(2,1) (D(I),I=1,NVIN)
1     FORMAT(12F6.0)
      K=K+1
      DO  3 I=1,NVIN
3     DD(I)=D(I)
      I01=-2
      I02=-2
      I03=-2
      I04=-2
      I05=-2
      I06=-2
      I07=-2
      I08=-2
      I09=-2
      I10=-2
      I11=-2
      I12=-2
      I13=-2
      I14=-2
      I15=-2
      I16=-2
      I17=-2
      I18=-2
      I19=-2
      I20=-2
      I21=-2
      I22=-2
      I23=-2
      I24=-2
      I25=-2
      X01=15.
      X02=.5
      X03=5.
      X04=10.
      X05=.9
      X06=9.
      X07=9.
      X08=.9
      X09=.12
      X10=.001
      X11=0.0
      X12=10.
      X13=20.
      X14=.333
      X15=0.0
      X16=5.
      X17=2.
       X18=5.
      X19=5.
      X20=0.0
      X21=.333
      X22=.333
      X23=.333
      X24=.333
      X25=0.1
C     ENTER THE DELTA THAT EACH VAR IS TO BE INCREASED - LEAVE 0 = NONE
4     CONTINUE
      IF(I01  )41,41,42
41    I01=I01+1
      DD(01)=D(01)-X01*I01
      GO TO 200
42    DD(01)=D(01)
      IF(I02  )43,43,44
43    I02=I02+1
      DD(02)=D(02)-X02*I02
      GO TO 200
44    DD(02)=D(02)
      IF(I03  )5,5,6
5     I03=I03+1
      DD(03)=D(03)-X03*I03
      GO TO 200
6     DD(03)=D(03)
      IF(I04  )7,7,8
7     I04=I04+1
      DD(04)=D(04)-X04*I04
      GO TO 200
8     DD(04)=D(04)
      IF(I05  )9,9,10
9     I05=I05+1
      DD(05)=D(05)-X05*I05
      GO TO 200
10    DD(05)=D(05)
      IF(I06  )45,45,46
45    I06=I06+1
      DD(06)=D(06)-X06*I06
      GO TO 200
46    DD(06)=D(06)
      IF(I07  )11,11,12
11    I07=I07+1
      DD(07)=D(07)-X07*I07
      GO TO 200
12    DD(07)=D(07)
      IF(I08  )13,13,14
13    I08=I08+1
      DD(08)=D(08)-X08*I08
      GO TO 200
14    DD(08)=D(08)
      IF(I09  )15,15,16
15    I09=I09+1
      DD(09)=D(09)-X09*I09
      GO TO 200
16    DD(09)=D(09)
      GO TO 340
200    CONTINUE
      NOBS=NOBS+1
      CALL DATSW(9,KK)
      IF(KK-2)35,36,36
35    WRITE(3,400)NOBS
400   FORMAT(' ','NO.=',I4)
35000 WRITE(3,37)(DD(I),I=1,NVIN)
37    FORMAT(' ',      10F12.3)
36    CONTINUE
      WRITE(4'NOBS)    (DD(I),I=1,NVIN)
      GO TO 4
340   CONTINUE
C CHANGE CARD FOR NO OF PREDS - IN POS. 12
      IF(K-4)40,410,410
40    GO TO 39
410   III=NOBS+1
      DD(01)=111111111.111
      WRITE(4'III)DD(01)
      WRITE(3,49)NOBS
49    FORMAT(' TOTAL NO. PRED. IN FILE=',I5)
      PAUSE 3333
1111  CALL EXIT
```

EXHIBIT 5B
MATRIX OF PREDICTION LEVELS
FOR VARIABILITY STUDY EXPRESSED IN ENGINEERING UNITS

```
UNREFERENCED STATEMENTS
 35000   1111

FEATURES SUPPORTED
 ONE WORD INTEGERS
 IOCS

CORE REQUIREMENTS FOR
 COMMON      0  VARIABLES     412  PROGRAM     762

 END OF COMPILATION

// XEQ          1

*FILES(4,FFFF2)

NO.=   1
    1875.000       6.000      25.000     800.000       0.100     180.000      83.000       6.000       1.920       0.028
       0.000       0.000
NO.=   2
    1860.000       6.000      25.000     800.000       0.100     180.000      83.000       6.000       1.920       0.028
       0.000       0.000
NO.=   3
    1845.000       6.000      25.000     800.000       0.100     180.000      83.000       6.000       1.920       0.028
       0.000       0.000
NO.=   4
    1860.000       6.500      25.000     800.000       0.100     180.000      83.000       6.000       1.920       0.028
       0.000       0.000
NO.=   5
    1860.000       6.000      25.000     800.000       0.100     180.000      83.000       6.000       1.920       0.028
       0.000       0.000
NO.=   6
    1860.000       5.500      25.000     800.000       0.100     180.000      83.000       6.000       1.920       0.028
       0.000       0.000
NO.=  28
    1875.000       6.000      25.000     800.000       0.100     180.000      83.000       6.000       1.757       0.028
       0.000       0.000
NO.=  29
    1860.000       6.000      25.000     800.000       0.100     180.000      83.000       6.000       1.757       0.028
       0.000       0.000
NO.=  30
    1845.000       6.000      25.000     800.000       0.100     180.000      83.000       6.000       1.757       0.028
       0.000       0.000
NO.=  31
    1860.000       6.500      25.000     800.000       0.100     180.000      83.000       6.000       1.757       0.028
       0.000       0.000
NO.=  55
    1775.000       6.000      40.000     800.000       0.100      75.000     100.000       6.000       1.757       0.028
       0.000       0.000
NO.=  56
    1760.000       6.000      40.000     800.000       0.100      75.000     100.000       6.000       1.757       0.028
       0.000       0.000
NO.=  57
    1745.000       6.000      40.000     800.000       0.100      75.000     100.000       6.000       1.757       0.028
       0.000       0.000
NO.=  82
    1775.000       6.000      40.000     800.000       0.100      75.000     100.000       6.000       1.920       0.028
       0.000       0.000
NO.=  83
    1760.000       6.000      40.000     800.000       0.100      75.000     100.000       6.000       1.920       0.028
       0.000       0.000
NO.=  84
    1745.000       6.000      40.000     800.000       0.100      75.000     100.000       6.000       1.920       0.028
       0.000       0.000
TOTAL NO. PRED. IN FILE=  108
```

EXHIBIT 5C

PROGRAM TO PRODUCE INTERACTIONS

AND CODE FOR GARDNER'S REGRESSION PROGRAM

```
// * PROG TO TRANS AND CODE INTO FILE FOR GARDNERS PROG
// * DATSW 9 ON FOR EXT. CODE, DATSW 7 ON FOR NO CODE-DATA AS IS FILED,
// * DATSW 8 ON FORPRINT OF FINAL MATRIX, CAN BE TURNED ON TO SEE WERE
// * PROG IS ASWELL, PAUSE 1111 START TO READ IN CONTROL NVIN NVAR AND IFORM
// * PAUSE 3333 IS FOR DECK TO PUNCH MAX AND MIN(INT. CODE) PAUSE 2222 END
// *  PAUSE 2222 FILING AND JOB IS COMPLETED
// FOR
*LIST SOURCE PROGRAM
* ONE WORD INTEGERS
*IOCS(CARD, 1132 PRINTER, DISK)
      DIMENSION D(80),AMAX(80),AMIN(80),II(8)
      DEFINE FILE 4(751,160,U,IFA)
      DATA/80*0./,AMAX/80*-1000000000./,AMIN/80*1000000000./,II/8*0/
      PAUSE 1111
1201   CONTINUE
      NOBS=0
      READ(2,2)NVIN,NVAR,IFORM
2     FORMAT(3I2)
       NINDV=NVAR-1
      CALL DATSW( 9,K101)
      IF(K101-2)153,154,154
153   CONTINUE
      READ(2,1  )(AMAX(I),I=1,NINDV)
      READ(2,1  )(AMIN(I),I=1,NINDV)
1     FORMAT(6F12.0,8X)
154    CONTINUE
C     READ RAW DATA-DATA MAY BE IN 20F4.1,12F6.3,10F8.3,8F10.3OR13F6.3
93    GO TO(98,92,961,96,963,751),IFORM
98    READ(2,94 )(D   (     K4),K4=1,NVIN)
   94 FORMAT(20F4.1)
      IF(D   (     1)-111.1       )751,111,751
92    READ(2,95 )(D   (     K4),K4=1,NVIN)
95    FORMAT(12F6.3)
      IF(D   (     1)-111.111     )751,111,751
961   READ(2,962)(D   (     K4),K4=1,NVIN)
962   FORMAT(10F8.3)
      IF(D   (     1)-11111.111   )751,111,751
96    READ(2,97 )(D   (     K4),K4=1,NVIN)
   97 FORMAT(8F10.3)
      IF(D   (     1)-1111111.111)751,111,751
963   READ(2,964)(D   (     K4),K4=1,NVIN)
964   FORMAT(13F6.3)
      IF(D   (     1)-     111.111)751,111,751
751   NOBS=NOBS+1
      IF(IFORM-6)1202,1203,1202
1203   CONTINUE
C FILE MUST BE READ IN WITH F12.3 FORMAT AND LAST RECORD 1111 ETC
C  MUST BE READ INTO FILE FOR CLOSE OFF IN FILE READ
C  IF  ANOTHER FORMAT USED FOR VAR 1 111111. MUST BE CHANGED
      READ(4'NOBS)(D(K4),K4=1,NVIN)
      IF(D (1)-111111111.111  )1202,111,1202
1202  CONTINUE
C     PUT IN ALL TRANSFORMATION AND ADDITION OF VAR HERE
      D(47)=D(11)
      D(01)=D(01)*.001
      D(10)=D(01)*D(01)
      D(11)=D(01)*D(03)
      D(12)=D(01)*D(04)
      D(13)=D(01)*D(05)
      D(14)=D(01)*D(06)
      D(15)=D(01)*D(07)
      D(16)=D(01)*D(08)
      D(17)=D(01)*D(09)
      D(18)=D(02)*D(03)
      D(19)=D(02)*D(04)
      D(20)=D(02)*D(05)
      D(21)=D(02)*D(06)
      D(22)=D(02)*D(07)
      D(23)=D(02)*D(08)
      D(24)=D(02)*D(09)
      D(25)=D(03)*D(04)
      D(26)=D(03)*D(05)
      D(27)=D(03)*D(06)
      D(28)=D(03)*D(07)
      D(29)=D(03)*D(08)
      D(30)=D(03)*D(09)
      D(31)=D(04)*D(05)
      D(32)=D(04)*D(06)
      D(33)=D(04)*D(07)
      D(34)=D(04)*D(08)
      D(35)=D(04)*D(09)
      D(36)=D(05)*D(06)
      D(37)=D(05)*D(07)
      D(38)=D(05)*D(08)
      D(39)=D(05)*D(09)
      D(40)=D(06)*D(07)
      D(41)=D(06)*D(08)
      D(42)=D(06)*D(09)
      D(43)=D(07)*D(08)
      D(44)=D(07)*D(09)
      D(45)=D(08)*D(09)
      D(46)=D(01)*D(02)
C CALL DATSW 7 TO LEAVE OFF CODING AND DO TRANS IN RAW DATA FINAL
      CALL DATSW(7,K301)
      IF(K301-2)43,874,874
874   IF(K101-2)43   ,873,873
873   DO 863 J=1,NINDV
      IF(D   (J)-AMAX(J)) 863,863,862
  862 AMAX(J)=D   (J)
  863 CONTINUE
      DO 865 J=1,NINDV
      IF(D   (J)-AMIN(J)) 864,865,865
  864 AMIN(J)=D   (J)
865   CONTINUE
      WRITE(4'NOBS)(D   (J),J=1,NVAR)
       GO TO 93
111   IF(K301-2)1101,877,877
877   IF(K101-2)1101,47,47
47    DO    44 I=1,NOBS
      READ(4'I)(D   (J),J=1,NVAR)
      GO TO 45
43    I=NOBS
C     FINISH CODING"THE DATA AND WRITE PROPER MATRIX INTO DISK FOR
      IF(K301-2)875,45,45
45    DO 871 J=1,NINDV
      D   (J)=((D   (J)*2.)/(AMAX(J)-AMIN(J)))-((AMAX(J)+AMIN(J))/(AMAX(
     1J)-AMIN(J)))
      IF(D   (J))103,103,104
103   D   (J)=D   (J)-.00005
      GO TO 105
104   D   (J)=D   (J)+.00005
105    CONTINUE
871    CONTINUE
875     CONTINUE
      WRITE(4'I   )(D(J),J=1,NVAR)
      CALL DATSW(8,K201)
      IF(K201-2)51,52,52
51    CONTINUE
      READ (4'I   )(D(J),J=1,NVAR)
      WRITE(3,1205)  I
1205  FORMAT(' ','NO. ',I4)
      WRITE(3,55)(D(J),J=1,NVAR)
55    FORMAT(' ',10F11.2)
52    CONTINUE
      IF(K301-2)93,876,876
876   CONTINUE
      IF(K101-2)93,44,44
44    CONTINUE
      DO 60 J=1,NINDV
      AMAX(J)=AMAX(J)+.00005
60    AMIN(J)=AMIN(J)+.00005
      WRITE(3,56)(AMAX(J),J=1,NINDV)
      WRITE(3,56)(AMIN(J),J=1,NINDV)
56    FORMAT(' ',10F12.4)
      READ(4'1)(D(J),J=1,NVAR)
      WRITE(3,57)    (D(J),J=1,NVAR)
      READ(4'NOBS)(D(J),J=1,NVAR)
      WRITE(3,57)    (D(J),J=1,NVAR)
57    FORMAT(' ',17F7.2)
      PAUSE 3333
C  PUNCH OUT THE MAX AND MIN DECK
      WRITE(2,59)(AMAX(J),J=1,NINDV)
      WRITE(2,59)(AMIN(J),J=1,NINDV)
59    FORMAT(6F12.4,8X)
C     WRITE CLOSURE MARKER FOR FILE READ USE IF NEDED
1101  III=NOBS+1
      X=111111111.111
      WRITE(4'III )X
      WRITE(3,61 )NOBS
61    FORMAT(' TOT NO. OBS=',I5)
      PAUSE 2222
      GO TO 1201
1111    CALL EXIT
      END
```

EXHIBIT 5D

GARDNER'S PROGRAM

```
UNREFERENCED STATEMENTS
 1111

FEATURES SUPPORTED
 ONE WORD INTEGERS
 IOCS

CORE REQUIREMENTS FOR
 COMMON       0  VARIABLES     532  PROGRAM    1450

 END OF COMPILATION

// XEQ          1

*FILES(4,FFFF2)

NO.     1
       1.04      -1.00      -0.70       0.90      -1.00       1.00      -1.00       1.00       0.98       1.05
      -0.57       1.01      -0.99       1.01      -0.40       1.01       1.03      -0.88      -0.33      -1.00
      -0.25      -1.00      -0.09      -0.69      -0.39      -1.00      -0.29      -0.78      -0.12      -0.54
      -0.99       0.98       0.17       0.94       1.06      -0.99      -1.00      -0.98      -0.99       0.24
       1.00       1.10       0.40      -0.21       1.15      -0.74       0.00
NO.     2
       0.94      -1.00      -0.70       0.90      -1.00       1.00      -1.00       1.00       0.98       0.94
      -0.58       0.99      -0.99       0.99      -0.44       0.99       0.98      -0.88      -0.33      -1.00
      -0.25      -1.00      -0.09      -0.69      -0.39      -1.00      -0.29      -0.78      -0.12      -0.54
      -0.99       0.98       0.17       0.94       1.06      -0.99      -1.00      -0.98      -0.99       0.24
       1.00       1.10       0.40      -0.21       1.15      -0.75       0.00
NO.     3
       0.84      -1.00      -0.70       0.90      -1.00       1.00      -1.00       1.00       0.98       0.83
      -0.59       0.96      -0.99       0.96      -0.47       0.97       0.92      -0.88      -0.33      -1.00
      -0.25      -1.00      -0.09      -0.69      -0.39      -1.00      -0.29      -0.78      -0.12      -0.54
      -0.99       0.98       0.17       0.94       1.06      -0.99      -1.00      -0.98      -0.99       0.24
       1.00       1.10       0.40      -0.21       1.15      -0.77       0.00
NO.     4
       0.94      -0.83      -0.70       0.90      -1.00       1.00      -1.00       1.00       0.98       0.94
      -0.58       0.99      -0.99       0.99      -0.44       0.99       0.98      -0.83      -0.22      -0.99
      -0.14      -0.90      -0.00      -0.54      -0.39      -1.00      -0.29      -0.78      -0.12      -0.54
      -0.99       0.98       0.17       0.94       1.06      -0.99      -1.00      -0.98      -0.99       0.24
       1.00       1.10       0.40      -0.21       1.15      -0.61       0.00
TOT NO. OBS=   109

PAGE   1     78

// JOB                                   389.57     1.78

LOG DRIVE    CART SPEC    CART AVAIL   PHY DRIVE
  0000         1111         1111         0000

V2 M08    ACTUAL   8K   CONFIG   8K

// XEQ MRP1       8

*LOCALMRP1,RPREP,HREAD,DEFIN

*LOCALMRP2,DATAR,ADJST,CORR3

*LOCALMRP3,DATAR,ADJST,CORR5,CORR6

*LOCALMRP5,MXINV,RPREP

*LOCALMRP6,MULTR,ROUT1,VDELT

*LOCALRESPR,HREAD,DEFIN,RESP

*LOCALRESP1,DATAR,ADJST,RESP2,RESP3

*FILES(1,FFFF1),(4,FFFF2)
```

EXHIBIT 5E
RESULTS OF VARIABILITY ANALYSIS

VARIABLES	OBS	SETTING AMTS.		STRENGTH Y(PRED)	STRENGTH S.E.(Y)	THICKNESS Y(PRED)	THICKNESS S.E.(Y)	VOID Y(PRED)	VOID S.E.(Y)
Hot Zone Temp.	751	1860°F	+15	579.5582	40.3560	0.0303	0.0006	0.0239	0.0006
	752			600.0585	44.6677	0.0303	0.0007	0.0239	0.0007
	753		-15	[illegible]	[illegible]	[illegible]	[illegible]	[illegible]	[illegible]
Belt Speed	754	6 in/min	+.5	[illegible]	[illegible]	[illegible]	[illegible]	[illegible]	[illegible]
	755			600.0585	44.6677	0.0303	0.0007	0.0239	0.0007
	756		-.5	579.6743	36.9382	0.0304	0.0006	[illegible]	[illegible]
Dew point	757	25°F	+5	[illegible]	[illegible]	[illegible]	[illegible]	[illegible]	[illegible]
	758			600.0585	44.6677	0.0303	0.0007	0.0239	0.0007
	759		-5	[illegible]	[illegible]	[illegible]	[illegible]	[illegible]	[illegible]
Atm Amount	760	800 cfh	+10	[illegible]	[illegible]	[illegible]	[illegible]	[illegible]	[illegible]
	761			600.0585	44.6677	0.0303	0.0007	0.0239	0.0007
	762		-10	[illegible]	[illegible]	[illegible]	[illegible]	[illegible]	[illegible]
Spacing	763	0.1 in.	+0.9	[illegible]	[illegible]	[illegible]	[illegible]	[illegible]	[illegible]
	764			600.0585	44.6677	0.0303	0.0007	0.0239	0.0007
	765		-0.9	[illegible]	[illegible]	[illegible]	[illegible]	[illegible]	[illegible]
1st Cooling Zone	766	180°F	+8	[illegible]	[illegible]	[illegible]	[illegible]	[illegible]	[illegible]
	767			600.0585	44.6677	0.0303	0.0007	0.0239	0.0007
	768		-8	[illegible]	[illegible]	[illegible]	[illegible]	[illegible]	[illegible]
2nd Cooling Zone	769	83°F	+8	[illegible]	[illegible]	[illegible]	[illegible]	[illegible]	[illegible]
	770			600.0585	44.6677	0.0303	0.0007	0.0239	0.0007
	771		-8	[illegible]	[illegible]	[illegible]	[illegible]	[illegible]	[illegible]
Sequence	772	6th Plaque	+1	[illegible]	[illegible]	[illegible]	[illegible]	[illegible]	[illegible]
	773			600.0585	44.6677	0.0303	0.0007	0.0239	0.0007
	774		-1	[illegible]	[illegible]	[illegible]	[illegible]	[illegible]	[illegible]
Weight of 2 sq.in.	775	1.920 gms	+.120	[illegible]	[illegible]	[illegible]	[illegible]	[illegible]	[illegible]
	776			600.0585	44.6677	0.0303	0.0007	0.0239	0.0007
	777		-.120	[illegible]	[illegible]	[illegible]	[illegible]	[illegible]	[illegible]
Same as above	778	1860°F	+15	[illegible]	[illegible]	[illegible]	[illegible]	[illegible]	[illegible]
	779			755.7446	50.5401	0.0287	0.0008	0.0228	0.0008
	780		-15	[illegible]	[illegible]	[illegible]	[illegible]	[illegible]	[illegible]
	781	6 in/min	+.5	[illegible]	[illegible]	[illegible]	[illegible]	[illegible]	[illegible]
	782			755.7446	50.5401	0.0287	0.0008	0.0228	0.0008
	783		-.5	[illegible]	[illegible]	[illegible]	[illegible]	0.0229	[illegible]
	784	25°F	+5	[illegible]	[illegible]	[illegible]	[illegible]	[illegible]	[illegible]
	785			755.7446	50.5401	0.0287	0.0008	0.0228	0.0008
	786		-5	[illegible]	[illegible]	[illegible]	[illegible]	0.0234	[illegible]
	787	800 cfh	+10	[illegible]	[illegible]	[illegible]	[illegible]	[illegible]	[illegible]
	788			755.7446	50.5401	0.0287	0.0008	0.0228	0.0008
	789		-10	[illegible]	[illegible]	[illegible]	[illegible]	[illegible]	[illegible]
	790	0.1 inch	+.9	[illegible]	[illegible]	[illegible]	[illegible]	[illegible]	[illegible]
	791			755.7446	50.5401	0.0287	0.0008	0.0228	0.0008
	792		-.9	[illegible]	[illegible]	[illegible]	[illegible]	[illegible]	[illegible]
	793	180°F	+8	[illegible]	[illegible]	[illegible]	[illegible]	[illegible]	[illegible]
	794			755.7446	50.5401	0.0287	0.0008	0.0228	0.0008
	795		-8	[illegible]	[illegible]	[illegible]	[illegible]	[illegible]	[illegible]
	796	83°F	+8	[illegible]	[illegible]	[illegible]	[illegible]	[illegible]	[illegible]
	797			755.7446	50.5401	0.0287	0.0008	0.0228	0.0008
	798		-8	[illegible]	[illegible]	[illegible]	[illegible]	[illegible]	[illegible]
	799	6th Plaque	+1	[illegible]	[illegible]	[illegible]	[illegible]	[illegible]	[illegible]
	800			755.7446	50.5401	0.0287	0.0008	0.0228	0.0008
	801		-1	[illegible]	[illegible]	[illegible]	[illegible]	[illegible]	[illegible]
	802	1.757 gms	+.120	[illegible]	[illegible]	[illegible]	[illegible]	[illegible]	[illegible]
	803			755.7446	50.5401	0.0287	0.0008	0.0228	0.0008
	804		-.120	[illegible]	[illegible]	[illegible]	[illegible]	[illegible]	[illegible]
Same as above	805	1760°F	+15	[illegible]	[illegible]	[illegible]	[illegible]	[illegible]	[illegible]
	806			648.0525	19.7421	0.0280	0.0003	0.0219	0.0003
	807		-15	[illegible]	[illegible]	[illegible]	[illegible]	[illegible]	[illegible]
	808	6 in/min	+.5	[illegible]	[illegible]	0.0279	[illegible]	[illegible]	[illegible]
	809			648.0525	19.7421	0.0280	0.0003	0.0219	0.0003
	810		-.5	[illegible]	[illegible]	[illegible]	[illegible]	[illegible]	[illegible]
	811	35°F	+5	[illegible]	[illegible]	[illegible]	[illegible]	[illegible]	[illegible]
	812			648.0525	19.7421	0.0280	0.0003	0.0219	0.0003
	813		-5	[illegible]	[illegible]	[illegible]	[illegible]	[illegible]	[illegible]
	814	800 cfh	+10	[illegible]	[illegible]	[illegible]	[illegible]	[illegible]	[illegible]
	815			648.0525	19.7421	0.0280	0.0003	0.0219	0.0003
	816		-10	[illegible]	[illegible]	[illegible]	[illegible]	[illegible]	[illegible]
	817	0.1 in.	+.9	[illegible]	[illegible]	[illegible]	[illegible]	[illegible]	[illegible]
	818			648.0525	19.7421	0.0280	0.0003	0.0219	0.0003
	819		-.9	[illegible]	[illegible]	[illegible]	[illegible]	[illegible]	[illegible]
	820	75°F	+8	[illegible]	[illegible]	[illegible]	[illegible]	[illegible]	[illegible]
	821			[illegible]	[illegible]	[illegible]	[illegible]	[illegible]	[illegible]
	822		-8	[illegible]	[illegible]	[illegible]	[illegible]	[illegible]	[illegible]
	823	100°F	+8	[illegible]	24.3793	0.0282	[illegible]	[illegible]	[illegible]
	824			648.0525	19.7421	0.0280	0.0003	[illegible]	[illegible]
	825		-8	[illegible]	[illegible]	[illegible]	[illegible]	[illegible]	[illegible]
	826	6th Plaque	+1	[illegible]	[illegible]	[illegible]	[illegible]	[illegible]	[illegible]
	827			648.0525	19.7421	0.0280	0.0003	[illegible]	[illegible]
	828		-1	[illegible]	[illegible]	[illegible]	[illegible]	[illegible]	[illegible]
	829	1.757 gms	+.120	[illegible]	[illegible]	[illegible]	[illegible]	[illegible]	[illegible]
	830			648.0525	19.7421	0.0280	0.0003	[illegible]	[illegible]
	831		-.120	[illegible]	[illegible]	[illegible]	[illegible]	[illegible]	[illegible]
Same as above	832	1760°F	+15	[illegible]	[illegible]	[illegible]	[illegible]	[illegible]	[illegible]
	833			[illegible]	[illegible]	[illegible]	[illegible]	[illegible]	[illegible]
	834		-15	[illegible]	[illegible]	[illegible]	[illegible]	[illegible]	[illegible]
	835	6 in/min	+.5	[illegible]	[illegible]	[illegible]	[illegible]	[illegible]	[illegible]
	836			[illegible]	[illegible]	[illegible]	[illegible]	[illegible]	[illegible]
	837		-.5	[illegible]	[illegible]	[illegible]	[illegible]	[illegible]	[illegible]
	838	35°F	+5	[illegible]	[illegible]	[illegible]	[illegible]	[illegible]	[illegible]
	839			[illegible]	[illegible]	[illegible]	[illegible]	[illegible]	[illegible]
	840		-5	[illegible]	[illegible]	[illegible]	[illegible]	[illegible]	[illegible]
	841	800 cfh	+10	[illegible]	[illegible]	[illegible]	[illegible]	[illegible]	[illegible]
	842			[illegible]	[illegible]	[illegible]	[illegible]	[illegible]	[illegible]
	843		-10	[illegible]	[illegible]	[illegible]	[illegible]	[illegible]	[illegible]
	844	0.1 in.	+.9	[illegible]	[illegible]	[illegible]	[illegible]	[illegible]	[illegible]
	845			[illegible]	[illegible]	[illegible]	[illegible]	[illegible]	[illegible]
	846		-.9	[illegible]	[illegible]	[illegible]	[illegible]	[illegible]	[illegible]
	847	75°F	+8	[illegible]	[illegible]	[illegible]	[illegible]	[illegible]	[illegible]
	848			[illegible]	[illegible]	[illegible]	[illegible]	[illegible]	[illegible]
	849		-8	[illegible]	[illegible]	[illegible]	[illegible]	[illegible]	[illegible]
	850	100°F	+8	[illegible]	[illegible]	[illegible]	[illegible]	[illegible]	[illegible]
	851			[illegible]	[illegible]	[illegible]	[illegible]	[illegible]	[illegible]
	852		-8	[illegible]	[illegible]	[illegible]	[illegible]	[illegible]	[illegible]
	853	6th Plaque	+1	[illegible]	[illegible]	[illegible]	[illegible]	[illegible]	[illegible]
	854			[illegible]	[illegible]	[illegible]	[illegible]	[illegible]	[illegible]
	855		-1	[illegible]	[illegible]	[illegible]	[illegible]	[illegible]	[illegible]
	856	1.920 gms	+.120	[illegible]	[illegible]	[illegible]	[illegible]	[illegible]	[illegible]
	857			[illegible]	[illegible]	[illegible]	[illegible]	[illegible]	[illegible]
	858		-.120	[illegible]	[illegible]	[illegible]	[illegible]	[illegible]	[illegible]

GODDARD SPACE FLIGHT CENTER
BUSINESS DATA BRANCH
ADDRESS LABEL SYSTEM
RUN DATE SEP-01-1970

MASTER LIST
REPORT NO 1932
LIST 020

WINNIE M. MORGAN
NASA HEADQUARTERS
CODE US 2

0001 label #

E. M. COHN
NASA HEADQUARTERS
CODE RNW

0003

GERALD HALPERT
GSFC
CODE 764

0006

THOMAS HENNIGAN
GSFC
CODE 761

0007

JOHN L. PATTERSON
MS 472
LANGLEY RESEARCH CENTER

0010

M. B. SEYFFERT
MS 112
LANGLEY RESEARCH CENTER

0011

W. E. RICE
MANNED SPACECRAFT CENTER
CODE EP-5

0015

JON RUBENZER
BIOSATELLITE PROJECT
AMES RESEARCH CENTER
CODE PBS, M. S. 244-2

0016

DR. R. LUTWACK, MS 198-220
JET PROPULSION LABORATORY
4800 OAK GROVE DRIVE
PASADENA, CAL 91103

0019

MR. ALVIN UCHIYAMA, MS 198-223
JET PROPULSION LABORATORY
4800 OAK GROVE DRIVE
PASADENA, CAL 91103

0020

L. A. SPANO
U.S. ARMY NATICK LAB.
CLOTHING & ORGANIC MATERIALS DIV.
NATICK, MASSACHUSETTS 01760

0025

NATHAN KAPLAN
HARRY DIAMOND LABORATORIES
ROOM 300, BUILDING 92
CONN. AVE. & VAN NESS ST., N.W.
WASHINGTON, D. C. 20438

0026

DR. J. C. WHITE
NAVAL RESEARCH LABORATORY
WASHINGTON, D. C. 20390
CODE 6160

0030

NAVAL SHIP R&D CENTER
ATTN. J. H. HARRISON
CODE M760
ANNAPOLIS, MARYLAND 21402

0031

PHILIP B. COLE
NAVAL ORDNANCE LABORATORY
SILVER SPRING, MARYLAND 20910
CODE 232

0034

NAVAL SHIP ENGINEERING CENTER
ATTN. C. F. VIGLOTTI
61570
WASHINGTON, D. C. 20360

0035

A. M. GREG ANDRUS
NASA HEADQUARTERS
CODE SAC

0004

OFFICE OF TECH. UTILIZATION
NASA HEADQUARTERS

0005

MR. CHARLES B. GRAFF
S&E-ASTR-EP
GEORGE MARSHALL SFC
NATIONAL AERO. & SPACE ADMIN.
HUNTSVILLE, ALABAMA 35812

0008

JOSEPH SHERFEY
GSFC
CODE 764

0009

DR. LOUIS ROSENBLUM
LEWIS RESEARCH CENTER
STOP 302-1

0012

DR. J. STEWART FORDYCE
LEWIS RESEARCH CENTER
STOP 6-1

0014

DR. SOL GILMAN
ELECTRONICS RESEARCH CENTER
CODE CPE

0017

MR. PAUL GOLDSMITH
JPL
M.S. 198-223

0018

U. S. ARMY
ELECTRO TECHNOLOGY LABORATORY
ENERGY CONVERSION RESEARCH DIV
MERDC
FORT BELVOIR, VIRGINIA 22060

0022

U.S. ARMY ELECTRONIC R.&D. LAB
ATTN. CODE AMSEL-KL-P
FORT MONMOUTH, NEWJERSEY 07703

0023

OFFICE OF NAVAL RESEARCH
ATTN. DIR., POWER PROGRAM
CODE 473
WASHINGTON, D. C. 20360

0028

OFFICE OF NAVAL RESEARCH
ATTN. MR. HARRY FOX
CODE 472
WASHINGTON, D. C. 20360

0029

MILTON KNIGHT /CODE AIR-340C/
NAVAL AIR SYSTEMS COMMAND
DEPARTMENT OF THE NAVY
WASHINGTON, D. C. 20360

0032

NAVAL WEAPONS CENTER
ATTN. WILLIAM C. SPINDLER
CORONA LABORATORIES
CORONA, CALIFORNIA 91720

0033

U. S. NAVAL OBSERVATORY
ATTN. ROBERT E. TRUMBULE
STIC, BLDG. 52
WASHINGTON, D. C. 20390

0036

COMMANDER,
NAVAL SHIP SYSTEMS COMMAND
ATTN. BERNARD B. ROSENBAUM
/CODE 03422/
DEPARTMENT OF THE NAVY
WASHINGTON, D. C. 20360

0037

GODDARD SPACE FLIGHT CENTER
BUSINESS DATA BRANCH
ADDRESS LABEL SYSTEM
RUN DATE SEP-01-1970

MASTER LIST
REPORT NO 1932
LIST 020

AERO PROPULSION LABORATORY
ATTN. JAMES E. COOPER
APIP-2
WRIGHT-PATTERSON AFB, OH.45433

0039

FRANCIS X. DOHERTY
EDWARD RASKIND /WING F/
A F CAMBRIDGE RESEARCH LAB.
ATTN. CRE
L. G. HANSCOM FIELD
BEDFORD, MASS 01741

0040

A.M.F.
MR.R.A.KNIGHT
AMF INC.
689 HOPE STREET
STAMFORD, CONN. 06907

0045

LIB. ACQUISITION GROUP
AEROSPACE CORPORATION
P. O. BOX 95085
LOS ANGELES, CAL 90045

0046

DR. C. L. FAUST
BATTELLE MEMORIAL INSTITUTE
505 KING AVENUE
COLUMBUS, OHIO 43201

0049

BELLCOMM
ATTN. B. W. MOSS
1100 17TH STREET, N. W.
WASHINGTON, D. C. 20036

0050

DR. HOWARD J. STRAUSS
BURGESS BATTERY COMPANY
FOOT OF EXCHANGE STREET
FREEPORT, ILLINOIS 61033

0053

DR. EUGENE WILLIHNGANZ
C & D BATTERIES
DIV. OF ELECTRIC AUTOLITE CO.
CONSHOHOCKEN, PA. 19428

0054

DR. L. J. MINNICK
G. & W. H. CORSON, INC.
PLYMOUTH MEETING
PENNSYLVANIA 19462

0058

CUBIC CORPORATION
ATTN. LIBRARIAN
9233 BALBOA AVENUE
SAN DIEGO, CAL 92123

0059

ESB, INC.
ATTN. DIRECTOR OF ENGINEERING
P. O. BOX 11097
RALEIGH, NORTH CAROLINA 27604

0062

DR GALEN FRYSINGER
ESB INC
CARL F. NORDBERG RESEARCH CTR.
19 WEST COLLEGE AVENUE
YARDLEY, PA 19067

0063

ELECTROMITE CORPORATION
ATTN. R. H. SPARKS
2117 SOUTH ANNE STREET
SANTA ANA, CAL 92704

0066

DR. W. P. CADOGAN
EMHART CORPORATION
BOX 1620
HARTFORD, CONNECTICUT 06102

0068

DR. ARTHUR FLEISCHER
466 SOUTH CENTER STREET
ORANGE, NEW JERSEY 07050

0071

STEPHAN J GASTON
GRUMMAN AEROSPACE CORP
PLANT 35 P.O.D.
BETHPAGE NEW YORK 11714
BERTHPAGE, L.I. NEW YORK 11714

0072

ROME AIR DEVELOPMENT CTR. ESD
ATTN. FRANK J. MOLLURA /EMEAM/
GRIFFIS AFB, NEW YORK 13442

0041

DR. W. J. HAMER
NATIONAL BUREAU OF STANDARDS
WASHINGTON, D. C. 20234

0043

DR. R. T. FOLEY
CHEMISTRY DEPARTMENT
AMERICAN UNIVERSITY
MASS. & NEBRASKA AVENUE, N.W.
WASHINGTON, D. C. 20016

0047

DR. H. L. RECHT
ATOMICS INTERNATIONAL DIVISION
NORTH AMERICAN AVIATION, INC.
8900 DE SOTA AVENUE
CANOGA PARK, CAL 91304

0048

MR. LOU BELOVE
SONOTONE CORPORATION
COLD SPRING, NEWYORK 10516

0051

DR. CARL BERGER
13401 KOOTENAY DRIVE
SANTA ANA, CAL 92705

0052

CALVIN COLLEGE, SCIENCE BLDG.
ATTN. PROF. T. P. DIRKSE
3175 BURTON STREET, S. E.
GRAND RAPID, MICHIGAN 49506

0055

H. GOLDSMITH
CATALYST RESEARCH CORPORATION
6101 FALLS ROAD
BALTIMORE, MARYLAND 21209

0056

DELCO REMY DIVISION
ATTN. J. A. KERALLA
GENERAL MOTORS CORPORATION
2401 COLUMBUS AVENUE
ANDERSON, INDIANA 46011

0060

E. I. DU PONT NEMOURS & CO.
ATTN. J. M. WILLIAMS
ENGINEERING MATERIALS LAB
EXPERIMENTAL STATION, BLDG.304
WILMINGTON, DELAWARE 19898

0061

E. P. BROGLIO
EAGLE-PICHER COMPANY
P. O. BOX 47
JOPLIN, MISSOURI 64801

0064

DR. MORRIS EISENBERG
ELECTROCHIMICA CORPORATION
1140 OBRIEN DRIVE
MENLO PARK, CAL 94025

0065

DR H G OSWIN
ENERGETICS SCIENCE, INC.
4461 BRONX BLVD.
NEW YORK, NEW YORK 10475

0069

MR. D. O. FEDER
BELL LABORATORIES
MURRAY HILL, NEW JERSEY 07974

0070

GENERAL ELECTRIC COMPANY
ATTN DR W N CARSON
RESEARCH & DEVELOPMENT CENTER
P. O. BOX 43
SCHNECTADY, NEW YORK
12301

0073

GENERAL ELECTRIC COMPANY
ATTN MR H THIERFELDER
MISSILE & SPACE DIVISION
SPACECRAFT DEPARTMENT
P. O. BOX 8555
PHILADELPHIA, PA. 19101

0074

GENERAL ELECTRIC COMPANY
ATTN. WHITNEY LIBRARY
P. O. BOX 8
SCHENECTADY, NEW YORK 12301

0075

GLOBE-UNION, INCORPORATED
ATTN. JOHN R. THOMAS
P. O. BOX 591
MILWAUKEE, WISCONSIN 53201

0076

HONEYWELL INC.
ATTN. LIBRARY
LIVINGSTON ELECTRONIC LAB.
MONTGOMERYVILLE, PA. 18936

0080

DR. P. L. HOWARD
CENTREVILLE, MARYLAND 21617

0081

DR. G. MYRON ARCAND
IDAHO STATE UNIVERSITY
DEPARTMENT OF CHEMISTRY
POCATELLO, IDAHO 83201

0084

MR. R. HAMILTON
INSTITUTE FOR DEFENSE ANALYSES
R&E SUPPORT DIVISION
400 ARMY-NAVY DRIVE
ARLINGTON, VIRGINIA 22202

0085

RICHARD E. EVANS
JOHNS HOPKINS UNIVERSITY
APPLIED PHYSICS LABORATORY
8621 GEORGIA AVENUE
SILVER SPRING, MARYLAND 20910

0088

DR. E.M. JOST & DR. J. W. ROSS
TEXAS INSTRUMENTS, INC.
34 FOREST STREET
ATTLEBORO, MASS 02703

0089

ARTHUR D. LITTLE, INC.
ATTN. DR. JAMES D. BIRKETT
ACORN PARK
CAMBRIDGE, MASS. 02140

0092

LOCKHEED MISSILE & SPACE CO.
ATTN. ROBERT E. CORBETT
DEPARTMENT 62-14, BLDG. 154
P. O. BOX 504
SUNNYVALE, CAL 94088

0093

TECHNICAL LIBRARIAN
P. R. MALLORY & CO., INC
3029 E. WASHINGTON STREET
INDIANAPOLIS, INDIANA 46206

0096

MARTIN MARIETTA CORPORATION
ATTN. WM. B. COLLINS, MS 1620
M. S. IMAMURA, MS 8840
P. O. BOX 179
DENVER, COLORADO 80201

0097

DR. J.E. OXLEY
GOULD IONICS, INC.
P. O. BOX 1377
CANOGA PARK, CAL 91304

0101

MR. D. C. BRIGGS
PHILCO-FORD CORPORATION
SPACE POWER & PROP. DEPT.
MS. W-49
3825 FABIAN WAY
PALO ALTO, CAL 94303

0102

PRIME BATTERY CORPORATION
15600 CORNET STREET
SANTA FE SPRINGS, CAL 90670

0105

DR HARVEY SEIGER
SPECTROLAB INC
12484 GLADSTONE AVENUE
SYLMAR, CAL 91342

0106

MR. SIDNEY GROSS
2-7814, M.S.85-86
THE BOEING COMPANY
P.O. BOX 3999
SEATTLE, WASHINGTON 98124

0077

DR. R. A. HALDEMAN
AMERICAN CYANAMID COMPANY
1937 W. MAIN STREET
STAMFORD, CONNECTICUT 06902

0079

HUGHES AIRCRAFT CORPORATION
ATTN R STEINHOVER
BLDG. 366, M. S. 524
EL SEGUNDO, CAL 90245

0082

DR. H. T. FRANCIS
IIT RESEARCH INSTITUTE
10 WEST 35TH STREET
CHICAGO, ILLINOIS 60616

0083

INSTITUTE FOR DEFENSE ANALYSES
ATTN. DR. R. BRICELAND
400 ARMY-NAVY DRIVE
ARLINGTON, VIRGINIA 22202

0086

WILLIAM C. MEARNS
INTERNATIONAL NICKEL CO.
1000-16TH STREET, N.W.
WASHINGTON, D.C. 20036

0087

DR. FRITZ R. KALHAMMER
STANFORD RESEARCH INSTITUTE
820 MISSON STREET
SOUTH PASADENA, CAL 91030

0090

LEESONA MOOS LABORATORIES
ATTN. DR. A. MOOS
LAKE SUCCESS PARK,
COMMUNITY DR.
GREAT NECK, NEW YORK 11021

0091

MALLORY BATTERY COMPANY
ATTN. R. R. CLUNE
SOUTH BROADWAY & SUNNYSIDE LA
TARRYTOWN, NEW YORK 10591

0094

DR. PER BRO
P. R. MALLORY & CO., INC.
NORTHWEST INDUSTRIAL PARK
BURLINGTON, MASS. 01801

0095

DR. JOHN MAUCHLY
MAUCHLY ASSOCIATES INC.
COMMERCE & ENTERPRISE
MONTGOMERYVILLE, PA. 18936

0098

MCDONNELL DOUGLAS
ATTN. DR. GEORGE MOE
ASTROPOWER LABORATORY
2121 CAMPUS DRIVE
NEWPORT BEACH, CAL 92663

0099

COMMANDING OFFICER
NAVAL AMMUNITION DEPOT
CODE 3052 MILEY AND MAINS
CRANE, INDIANA 47522

0103

POWER INFORMATION CENTER
UNIV. CITY SCIENCE INSTITUTE
3401 MARKET STREET, ROOM 2107
PHILADELPHIA, PA. 19104

0104

MR. GUY RAMPEL
BATTERY BUSINESS SECTION
GENERAL ELECTRIC COMPANY
P.O. BOX 114
GAINESVILLE, FLORIDA 32601

0107

RAI RESEARCH CORPORATION
36-40 37TH STREET
LONG ISLAND CITY, N.Y. 11101

0108

MR. LEON SCHULMAN
PORTABLE POWER CORPORATION
166 PENNSYLVANIA AVENUE
MOUNT VERNON, NEW YORK 10552

0109

MR IRVIN SCHULMAN
AKALINE BATTERY DIVISION
GULTON INDUSTRIES
1 GULTON STREET
METUCHEN, NEW JERSEY 08840

0110

A. MUNDEL
SONOTONE CORPORATION
SAW MILL RIVER ROAD
ELMSFORD, NEW YORK 10523

0113

LIBRARY
SOUTHWEST RESEARCH INSTITUTE
8500 CULEBRA ROAD
SAN ANTONIO, TEXAS 78206

0114

DR. A. C. MAKRIDES
TYCO LABORATORIES, INC.
BEAR HILL
HICKORY DRIVE
WALTHAM, MASS 02154

0117

UNION CARBIDE CORPORATION
DEVELOPMENT LABORATORY LIBRARY
P.O. BOX 5056
CLEVELAND, OHIO 44101

0118

WESTINGHOUSE ELECTRIC CORP.
ATTN. DR. C. C. HEIN
CONTRACT ADMIN.
RESEARCH & DEVELOPMENT CENTER
CHURCHILL BOROUGH
PITTSBURGH, PA. 15235

0121

J. W. REITER
WHITTAKER CORPORATION
3850 OLIVE STREET
DENVER, COLORADO 80237

0122

ROCKETDYNE DIVISION
NORTH AMERICAN ROCKWELL CORP.
ATTN. LIBRARY
6633 CANOGA AVE.
CANOGA PARK, CAL 91304

0111

DR. W.R. SCOTT
/M2/2154/
TRW SYSTEMS, INC.
ONE SPACE PARK
REDONDO BEACH, CAL 90278

0112

MR. A.D. TONELLI MS 7C
MCDONNELL DOUGLAS, INC.
3000 OCEAN PARK BLVD.
SANTA MONICA, CAL 90406

0115

MR C BANCROFT
R-1/2094
TRW SYSTEMS, INC.
ONE SPACE PARK
REDONDO BEACH, CAL 90278

0116

UNION CARBIDE CORPORATION
ATTN DR RALPH BRODD
CONSUMMER PRODUCTS DIVISION
P.O. BOX 6116
CLEVELAND, OHIO 44101

0119

UNIVERSITY OF PENNSYLVANIA
ATTN. PROF. JOHN OM. BOCKRIS
ELECTROCHEMISTRY LABORATORY
PHILADELPHIA, PA. 19104

0120

MR P DELUCA AND MR M READ
YARDNEY ELECTRIC CO
82 MECHANIC STREET
PAWCATUCK CONN 02891

0125

MR. WILLIAM BOYD
UTAH RESEARCH AND DEVELOPMENT
1820 SOUTH INDUSTRIAL ROAD
SALT LAKE CITY, UTAH 84104

0127