MARTIN MARIETTA
DENVER DIVISION

PRELIMINARY DESIGN OF A SHUTTLE DOCKING AND CARGO HANDLING SYSTEM

CONCEPT REVIEW AND SELECTION

August 16, 1971

Contract NAS9-11932
NASA-MSC
Technical Monitor: R. Davidson

Martin Marietta Corporation
Denver Division
Program Manager: S. Brodie

OFFICE OF PRIME RESPONSIBILITY

EW6

Reproduced by
NATIONAL TECHNICAL INFORMATION SERVICE
Springfield, Va. 22151

FACILITY FORM 602
N72-11794 (ACCESSION NUMBER)
54 (PAGES)
CR-115240 (NASA CR OR TMX OR AD NUMBER)
(THRU)
63 (CODE)
31 (CATEGORY)

NOTICE

THIS DOCUMENT HAS BEEN REPRODUCED FROM THE BEST COPY FURNISHED US BY THE SPONSORING AGENCY. ALTHOUGH IT IS RECOGNIZED THAT CERTAIN PORTIONS ARE ILLEGIBLE, IT IS BEING RELEASED IN THE INTEREST OF MAKING AVAILABLE AS MUCH INFORMATION AS POSSIBLE.

SHUTTLE ATTACHED TELEOPERATOR STUDY FLOW

MARTIN MARIETTA
DENVER DIVISION

REQUIREMENTS

TASK 1 (3.2.1)*

GENERAL REQUIREMENTS
- Shuttle
- Space Station
- Manipulator Arms

TASK 2 (3.2.2, 3.2.3)

SUBSYSTEM REQUIREMENTS
- Manipulators
- Articulation Control
- Telecommun./Video
- Man Mach.Interface
- Power
- Stowage

CONCEPTS

TASK 3 (3.1.1)

ALTERNATIVE CONCEPTS
- Arm Geometry
- Stowage Location

NASA CONCEPT SELECTION

TASK 4 (3.3, 3.1.1)

CONCEPT EVALUATION
- Technology
- Kinematics
- Initial Analysis
- Telecommunications
- Preliminary Design
- Concept Ranking

DESIGN

TASK 5 (3.4, 3.5, 3.8)

CONCEPT ANALYSIS
- Detail Requirements
- Detail Analysis
- Req. Analysis
- Utility
- Design Parameters (a,b,c,d)
- Ground Hand.Tradeoff
- Simulation

TASK 6 (3.6, 3.7,3.9)

PRELIMINARY DESIGN
- Mockup Drawings
- Preliminary Design Drawings
- Man Mach. Interface

PROGRAMMATIC

TASK 7 (3.1.3, 3.5)

DEVELOPMENT REQUIREMENTS
- Future Problems
- Time Estimates
- Cost Estimates

TASK 8 (4.2,4.5,4.6,7.0, 8.0,4.8)

PROGRAM MANAGEMENT
- Review/Interface Meetings
- Data Management
- Documentation
  - Reliability
  - System Safety
- Further Dev. Program

( )* Reference Statement of Work Paragraph Number

REQUIREMENTS

MARTIN MARIETTA
DENVER DIVISION

Based On

Manipulator System attached to a Shuttle Orbiter. Baseline Orbiter: McDonnel Douglas/Martin Marietta design without cargo erection device and with a docking port forward of the cockpit.

Categories

I. Mission Derivable II. Assigned for Analysis Purposes III. Design Guidelines

Includes

Operations and Time Required
Shuttle and Station Constraints
Cargo Minimum and Maximum Weight and Sizes
Arm Reach
Arm Deployment
Arm Stowage
Safety
Operational Computing
Crew Display and Control
Pre- and Post- Contract Velocity & Alignment Cond.
Arm Tip Velocities and Accelerations
Operational Time-Line
Manipulator Weight
Stopping Distance

Excludes

Interfaces
Reliability
Maintainability
Environmental Conditions
Safety
Training
Quality Assurance
Transportability
Commonality
Materials
Electromagnetic Radiation
Interchangeability

TELEOPERATOR OPERATIONAL REQUIREMENTS

DENVER DIVISION

T/O SYSTEM FUNCTION AND REQUIRED TIME	1. SPACE STATION	2. SPACE STATION MODULE (20,000 LB)	3. MAXIMUM ORBITER PAYLOAD (65,000 LB)	4. 5000 LB SATELLITE (14 x 20 FT)	5. 400 LB SATELLITE (2 x 4 FT)	6. DISABLED SHUTTLE ORBITER
A. PRE-CAPTURE (Deploy Arms to Ready Position) TIME: 3 MIN.	▲	▲	▲	▲	▲	▲
B. CAPTURE (Mechanically Couple) (End Effector & Object) TIME: 2 MIN.	▲	▲	▲	▲	▲	▲
C. DOCK SHUTTLE TO ORBITING OBJECT. TIME: 10 MIN.	▲	▲				▲
D. UNLOAD AND DEPLOY CARGO FROM SHUTTLE CARGO BAY. TIME: 10 MIN.		▲	▲	▲	▲	
E. MODULE UNLOAD, TRANSFER, AND DOCK TO SPACE STATION. TIME: 10 MIN.		▲				

MANIPULATOR ARM VELOCITY & ACCELERATION REQUIREMENTS:

UNLOAD & DEPLOY

Arm Functions	Distance or Angle to Travel or Rate to Achieve	Estimated or Assumed Time	V_{MAX}(FT/SEC) (Tangential Velocity at Tip or Angular Rate of Tip)	A_{MAX}(FT/SEC^2) (Tangential Acceleration at Tip)
UNLOAD AND DEPLOY (or Retrieve and Load) Cargo from (or into) Shuttle Cargo Bay				
1. Translate tip so that tip to receptacle distance (on cargo) is 1 foot.	8 ft	30 sec	0.27	0.36
2. Orient tip to match receptacle on cargo within maximum allowed misalignments.	(See Requirements)	20 sec		
3. Translate tip so that mechanical coupling is achieved between tip and receptacle on cargo.	1 ft	10 sec	0.10	0.36
4. Move cargo upward out of bay until lowest point of cargo is above highest point of bay.	16 ft	3 min	0.174	0.001
5. Move cargo away from Shuttle and stop.	26 ft	4 min	0.174	0.001
6. Orient cargo in desired attitude.		100 sec		
7. Release cargo.		20 sec		
Total Time		10 minutes		

MANIPULATOR TIP VELOCITY TIME LINE: UNLOAD & DEPLOY - TASK D

MARTIN MARIETTA
DENVER DIVISION

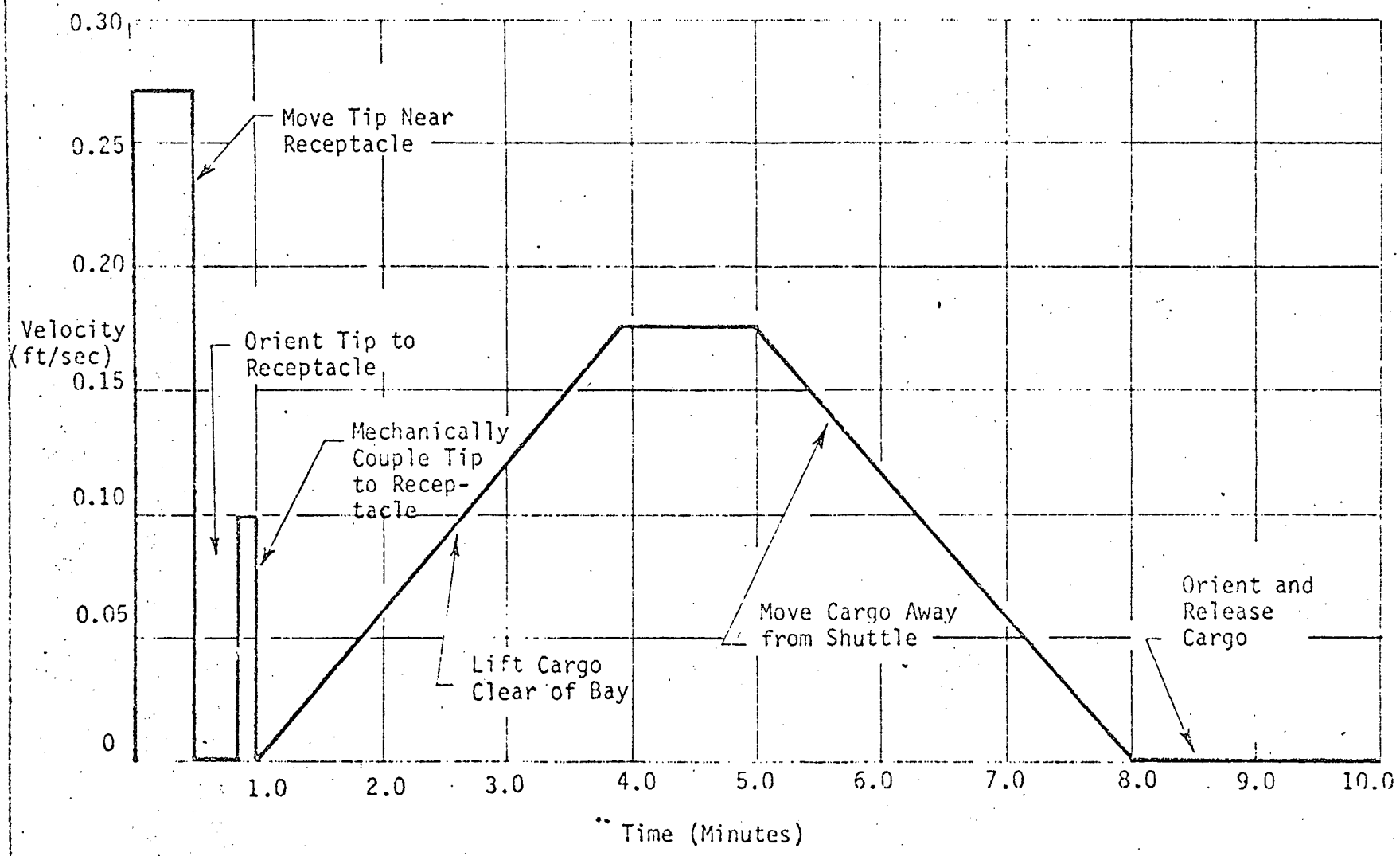

MANIPULATOR TIP VELOCITY TIME LINE: CAPTURE, DOCK & MODULE TRANSFER (TASKS B, C, E)

DENVER DIVISION

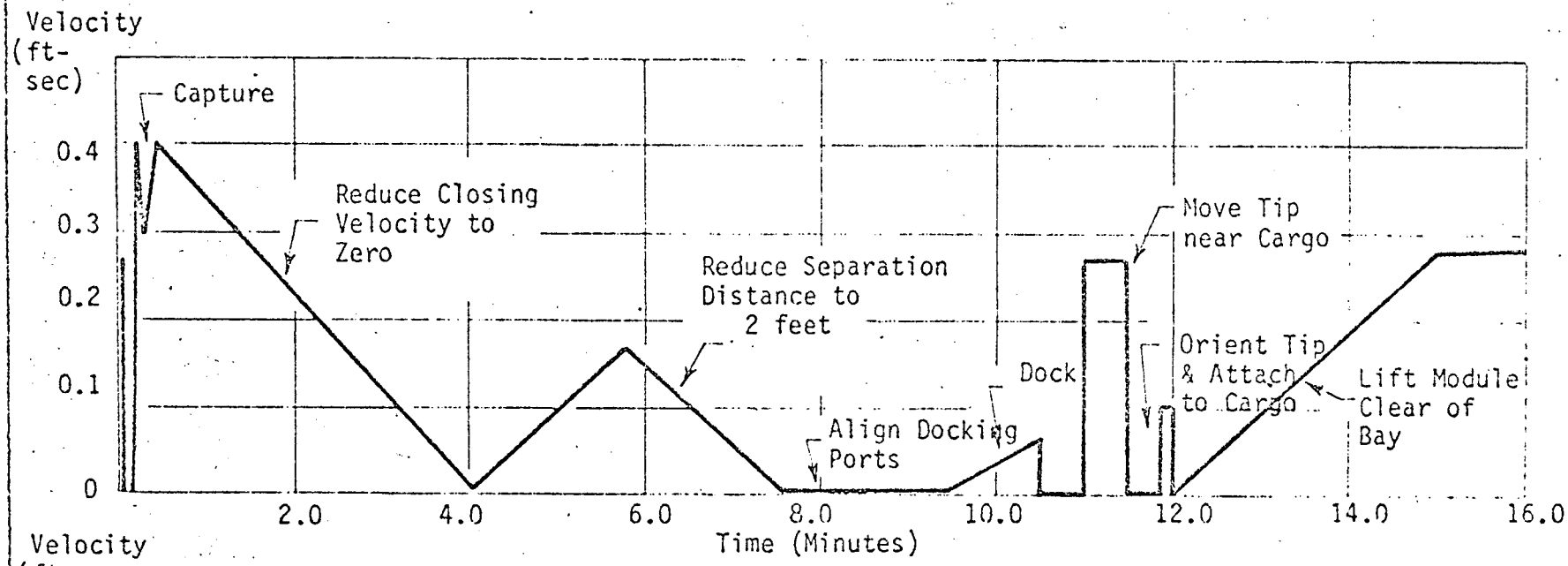

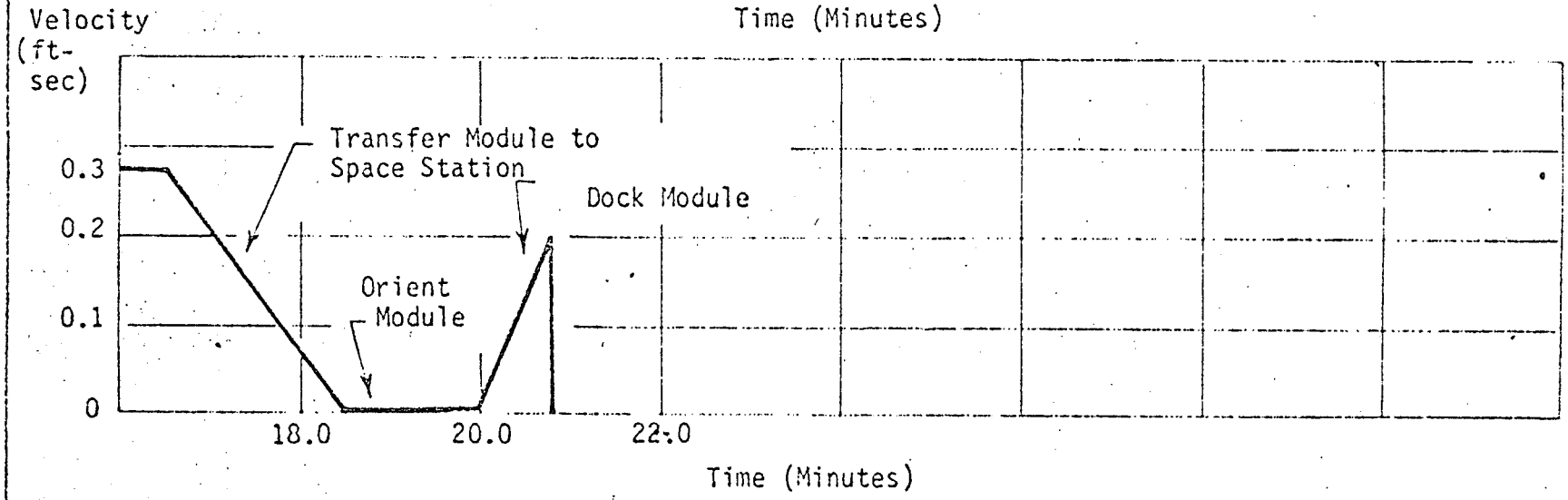

ARM TIP VELOCITY AND ACCELERATION FROM REQUIREMENTS

Problem: Arm must accelerate load at some rate, a, to some maximum velocity, V_{max}, and move a total distance, d, of 16 feet in time, t, of 180 seconds. The arm must have a deceleration capability so that it can stop the mass in 15 feet or less. What is the V_{max} and acceleration, a? Let d_1 and d_2 be the distances traveled during times t_1 and t_2, respectively. Then

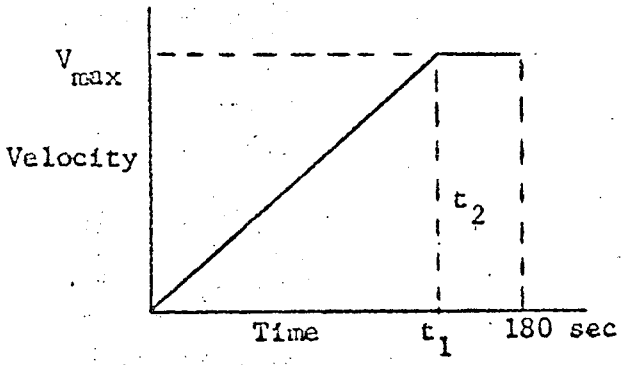

$$d = d_1 + d_2 = \frac{1}{2} a t_1^2 + V_{max} t_2$$

$$16 = \frac{1}{2} a t_1^2 + a t_1 t_2 \qquad (1)$$

$$d_1 = 15 = \frac{1}{2} a t_1^2 \text{ or } a = \frac{30}{t_1^2} \qquad (2)$$

$$t_2 = 180 - t_1 \qquad (3)$$

Substituting equations (2) and (3) into equation (1)

$$16 = \frac{1}{2} \left(\frac{30}{t_1^2}\right) t_1^2 + \left(\frac{30}{t_1^2}\right) t_1 \, (180 - t_1)$$

Solving for t_1

$$t_1 = 174 \text{ seconds}$$

Substituting into equation (2)

$$a = \frac{30}{(174)^2} = 0.001 \text{ ft/sec}^2$$

Solving for V_{max}

$$V_{max} = a t_1 = (0.001)\ (174) = 0.174 \text{ ft/sec}$$

SHUTTLE CARGO DOOR HINGE-TO-PAYLOAD STOWAGE VOLUME

MARTIN MARIETTA
DENVER DIVISION

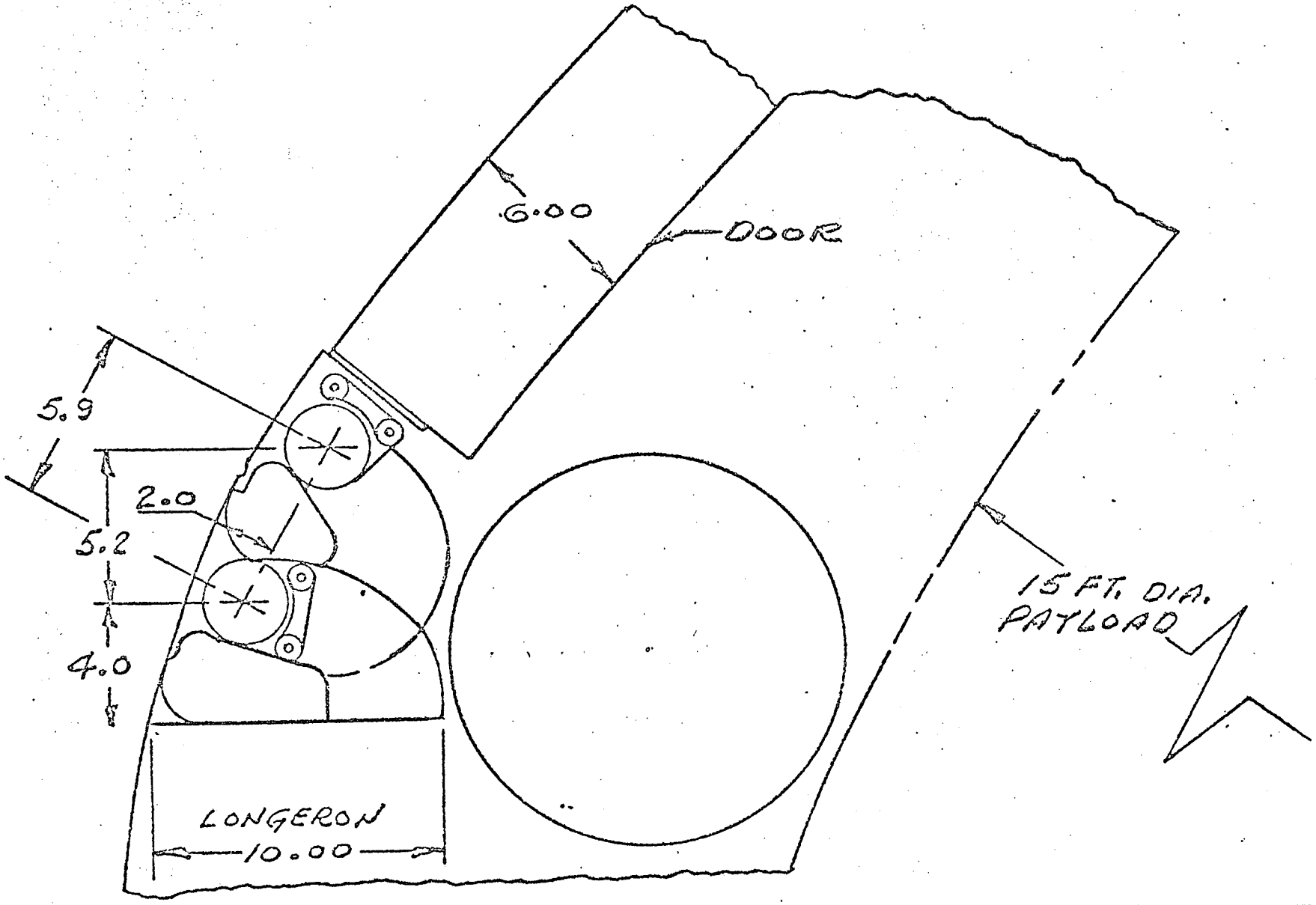

MINIMUM REACH REQUIREMENTS

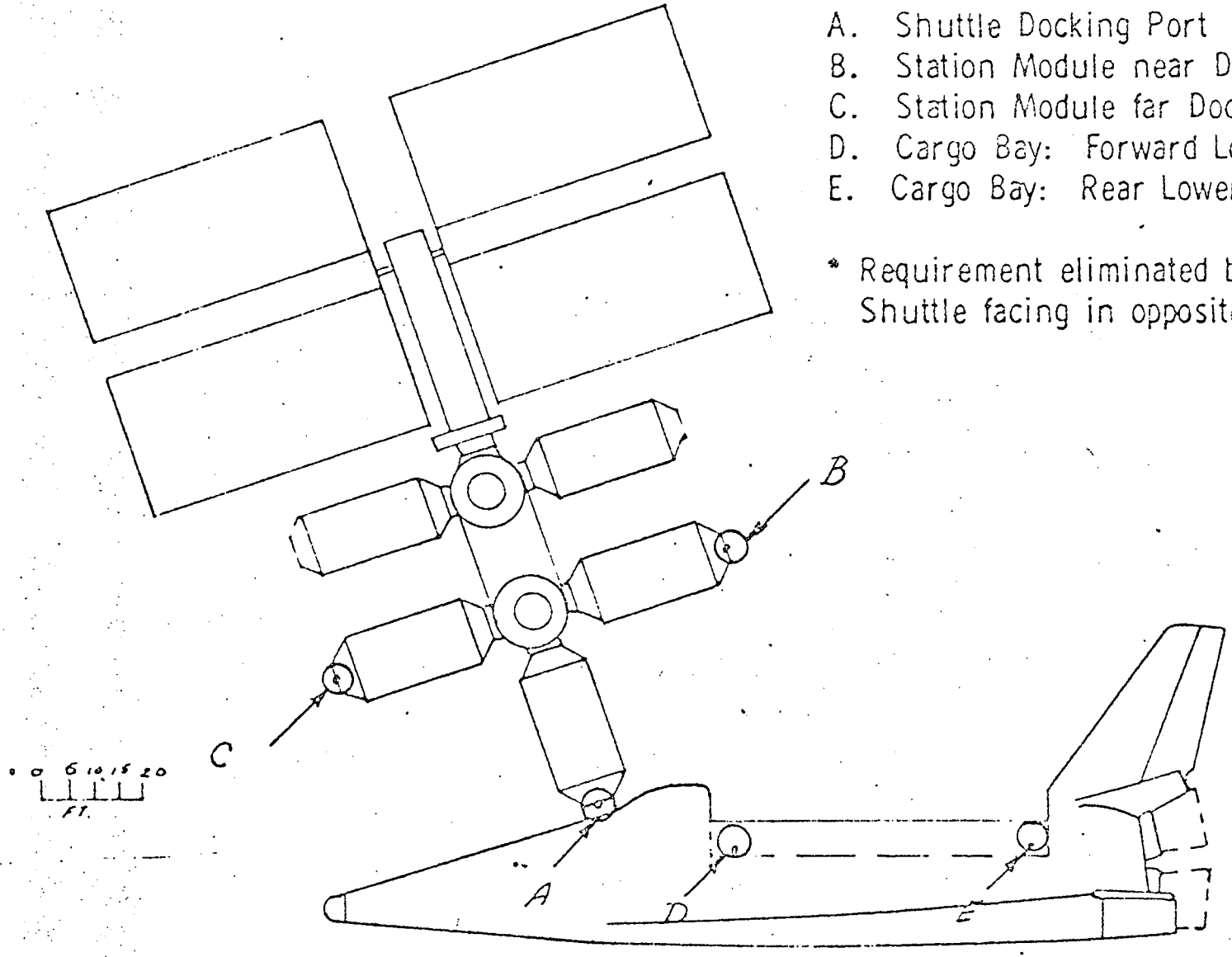

A. Shuttle Docking Port
B. Station Module near Dock. Port
C. Station Module far Dock. Port*
D. Cargo Bay: Forward Lower Point
E. Cargo Bay: Rear Lower Point.

* Requirement eliminated by docking Shuttle facing in opposite direction

MINIMUM ARM LENGTH VS ATTACHMENT POINT FOR EACH TASK

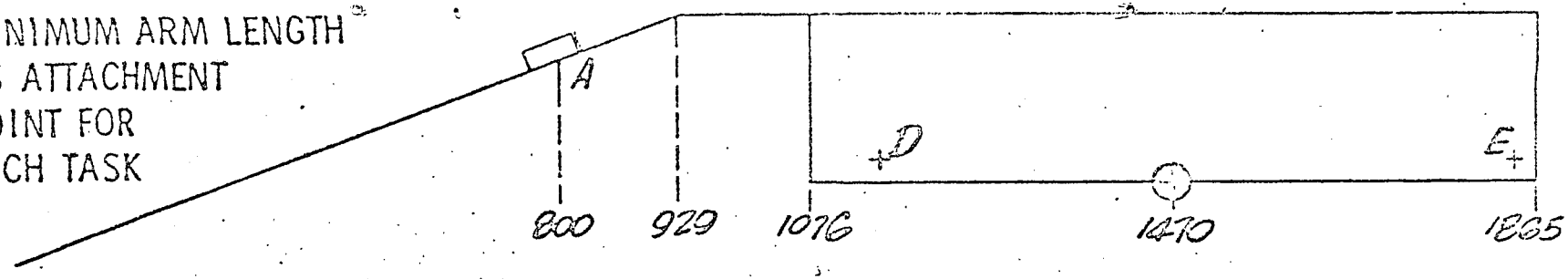

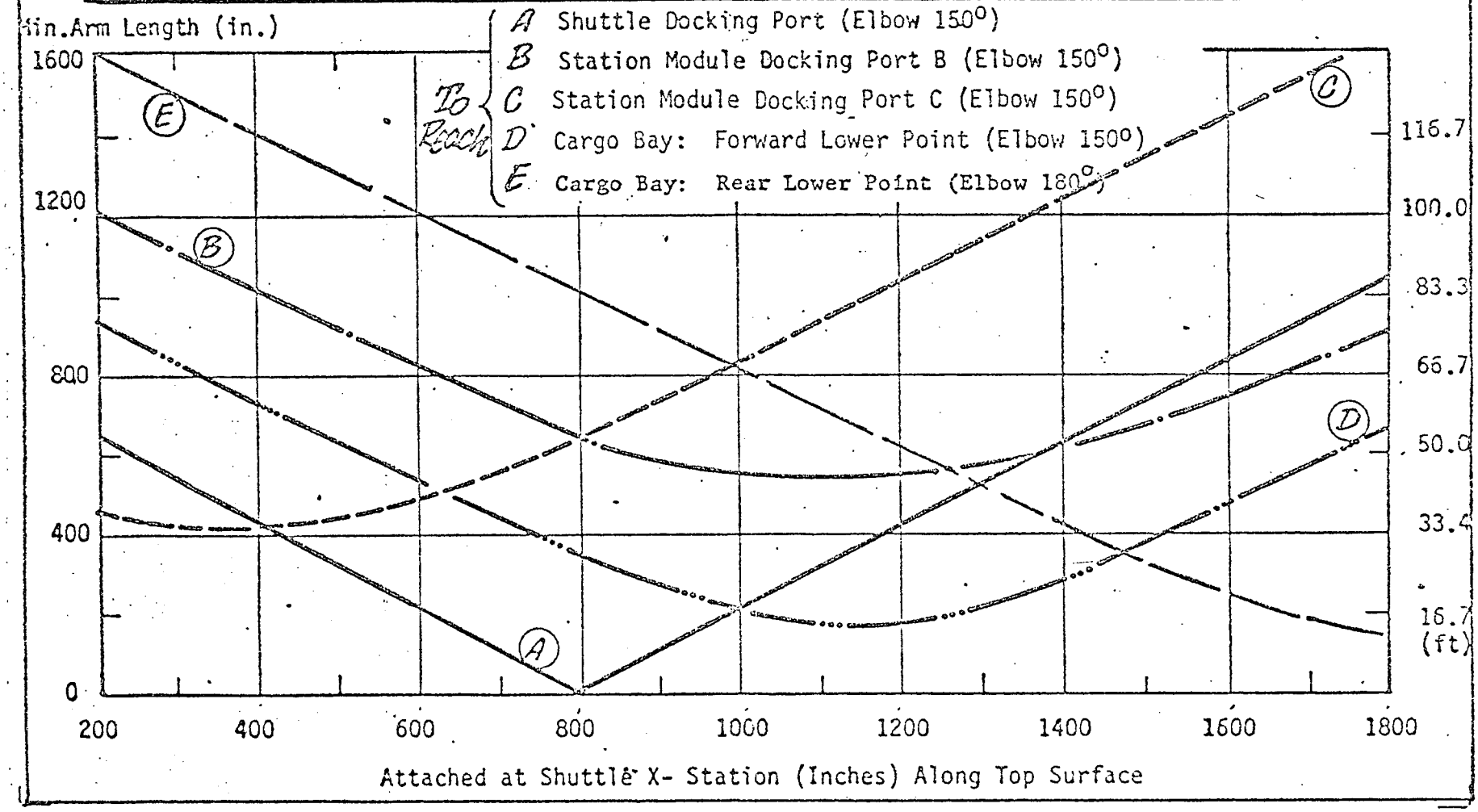

REDUCING SHUTTLE VELOCITY: FORCE VS TIME APPLIED

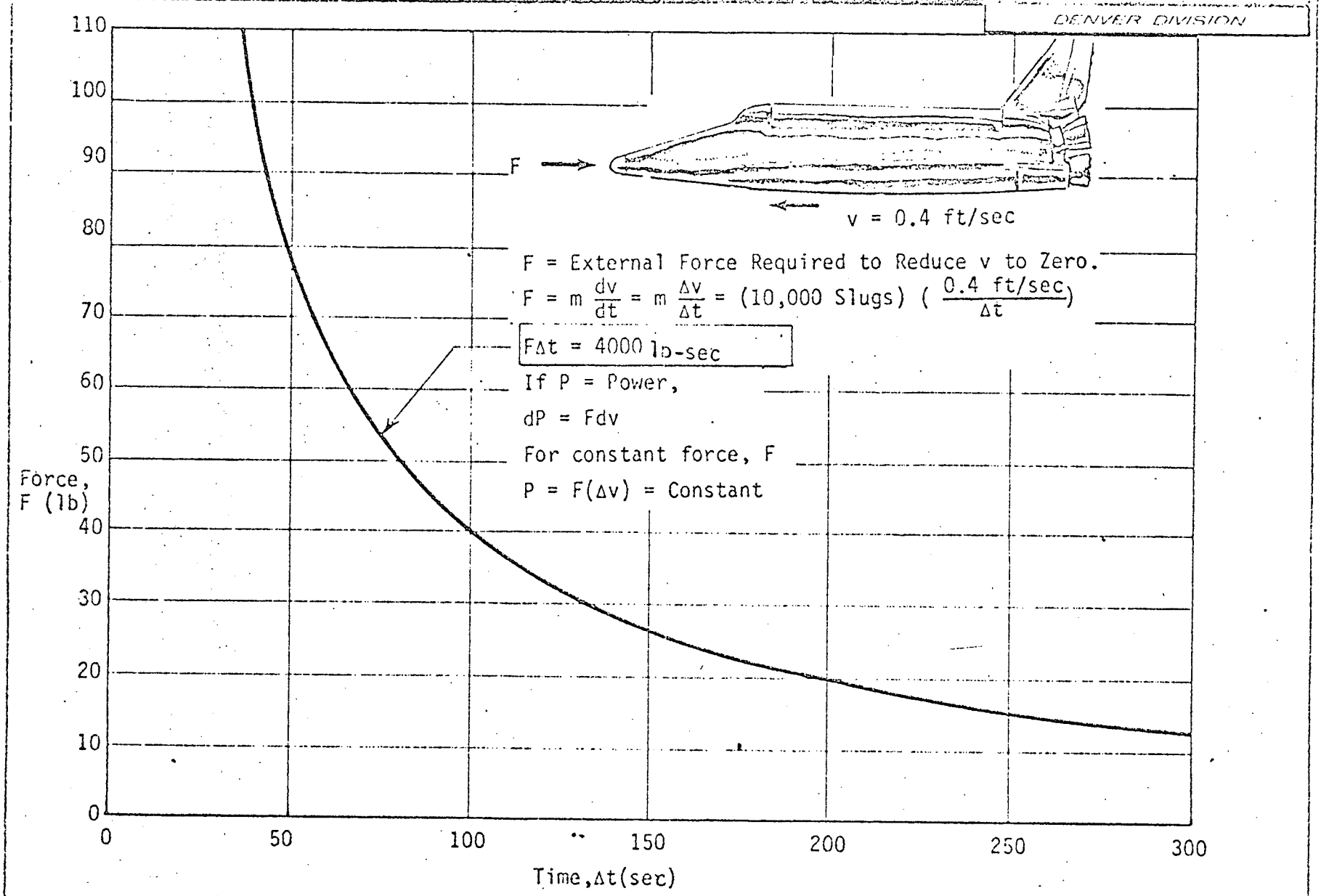

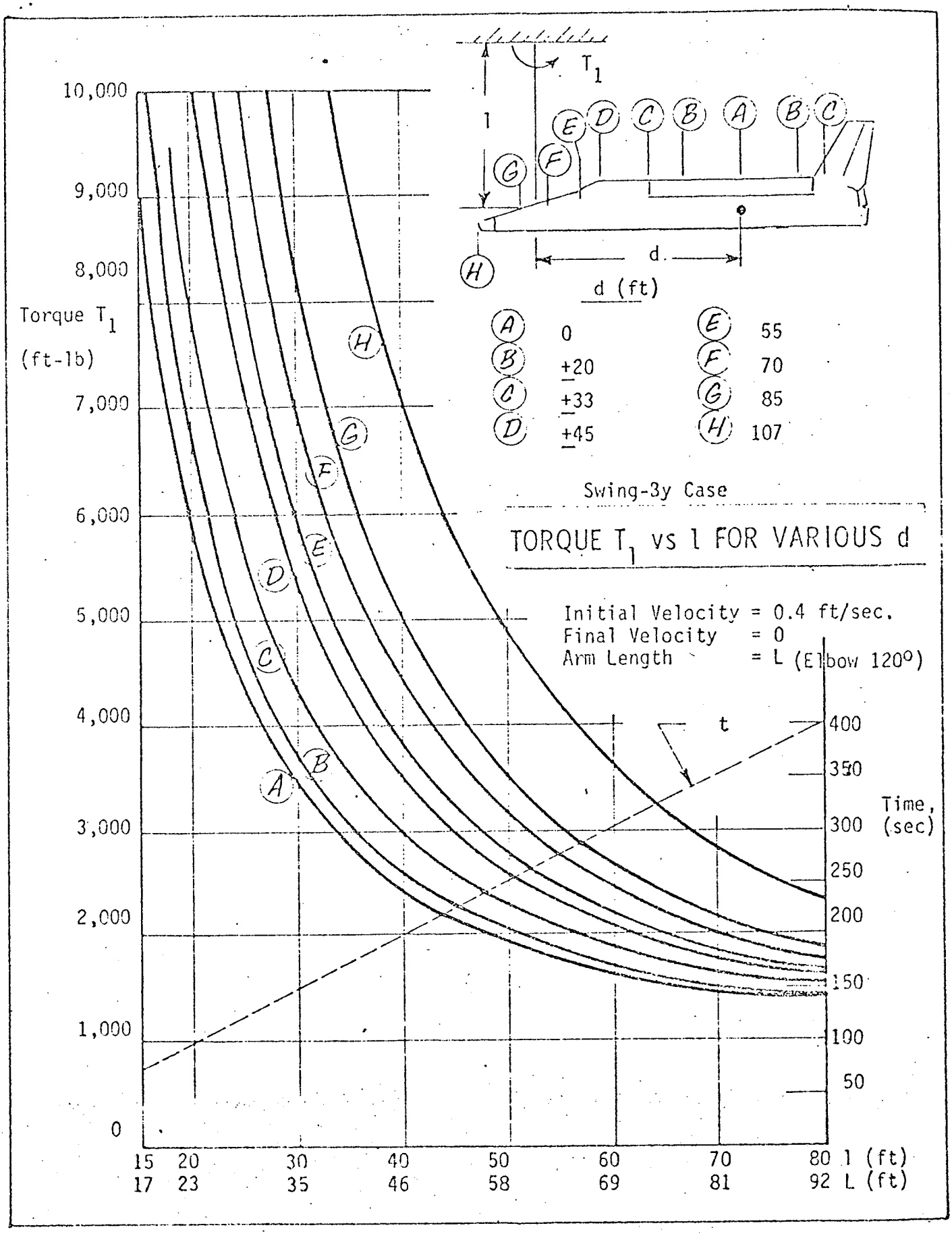
TORQUE T_1 vs l FOR VARIOUS d
Swing-3y Case
Initial Velocity = 0.4 ft/sec.
Final Velocity = 0
Arm Length = L (Elbow 120°)
Torque T_1 (ft-lb)
10,000
9,000
8,000
7,000
6,000
5,000
4,000
3,000
2,000
1,000
0
Time, (sec)
400
350
300
250
200
150
100
50
t
15 20 30 40 50 60 70 80 l (ft)
17 23 35 46 58 69 81 92 L (ft)
d (ft)
A 0
B ±20
C ±33
D ±45
E 55
F 70
G 85
H 107
T_1
l
d

REDUCING ΔV: HEAD-ON CASE

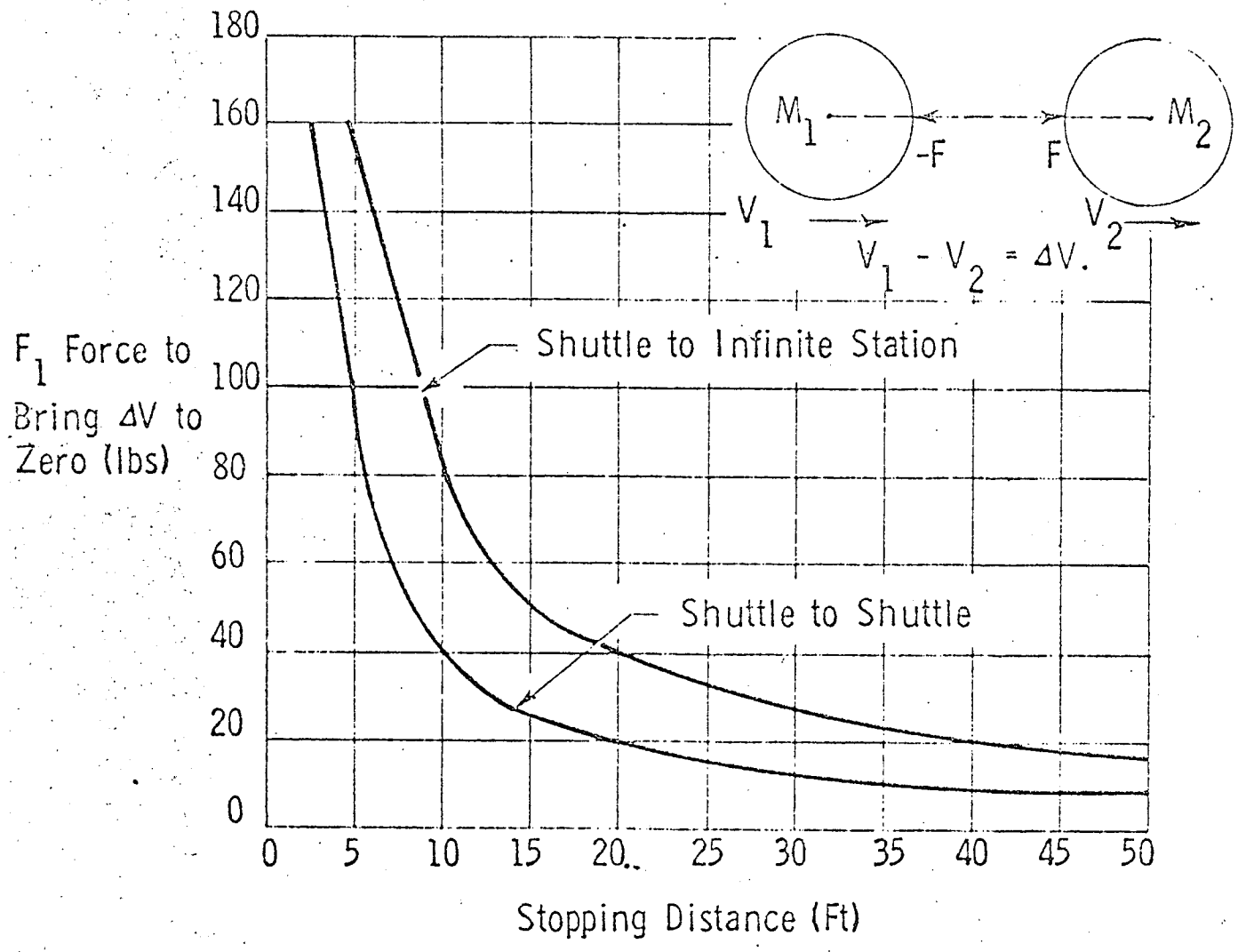

MAJOR COMPONENTS OF JOINT WEIGHT VS ARM LENGTH

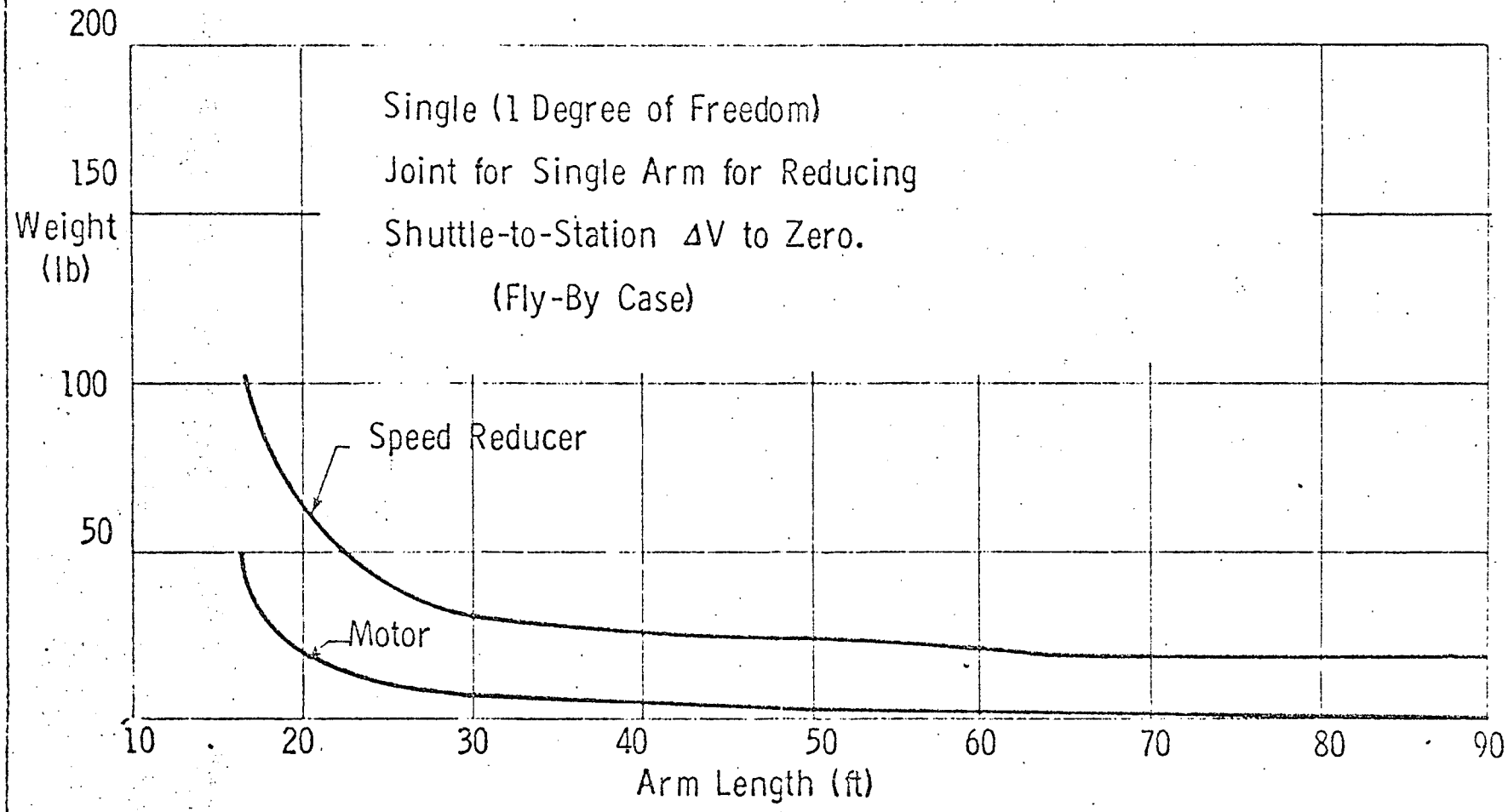

TOTAL WEIGHT OF JOINTS VS ARM LENGTH

MARTIN MARIETTA
DENVER DIVISION

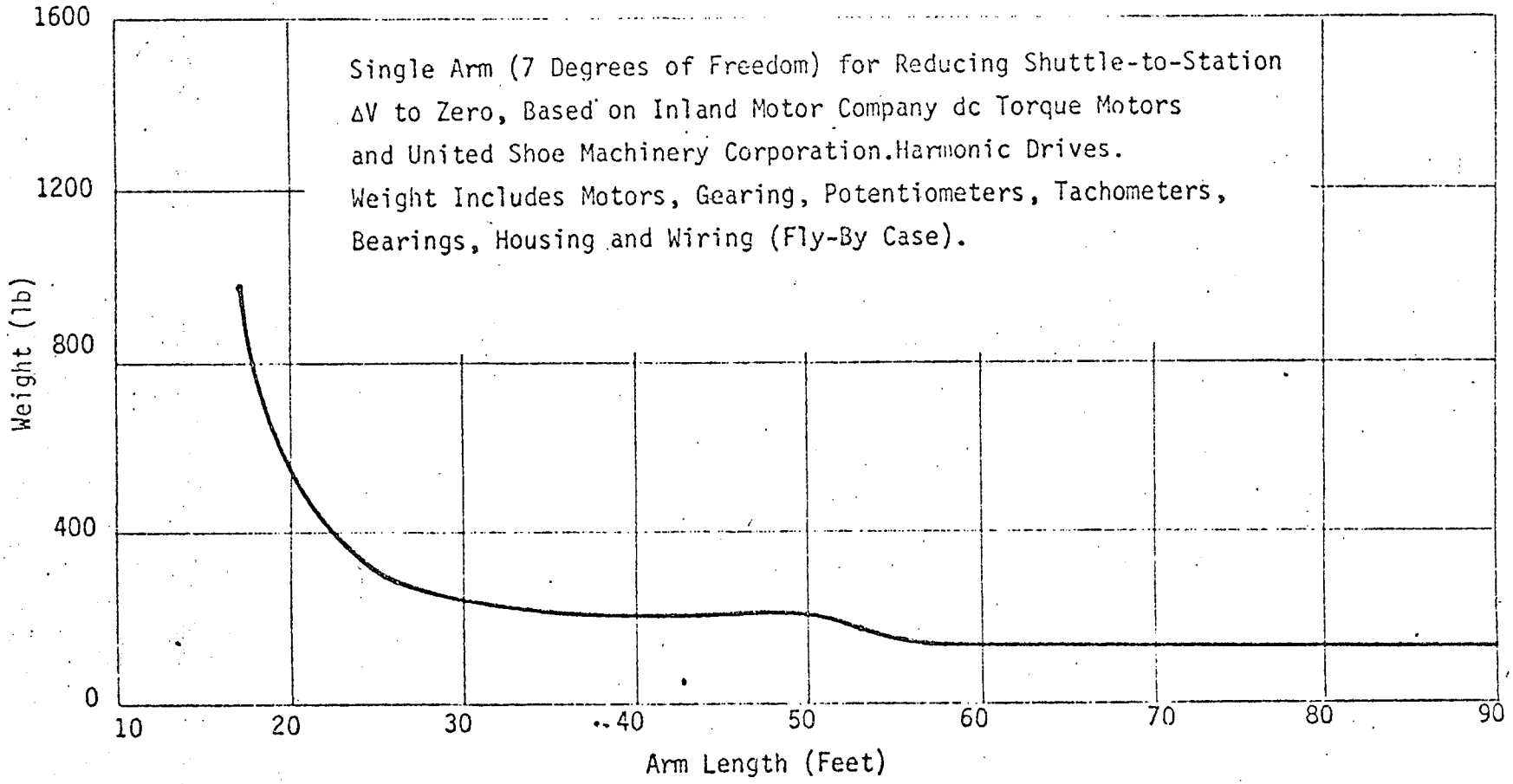

BEAM WEIGHT VERSUS ARM LENGTH - ONE APPLIED MOMENT

MARTIN MARIETTA
DENVER DIVISION

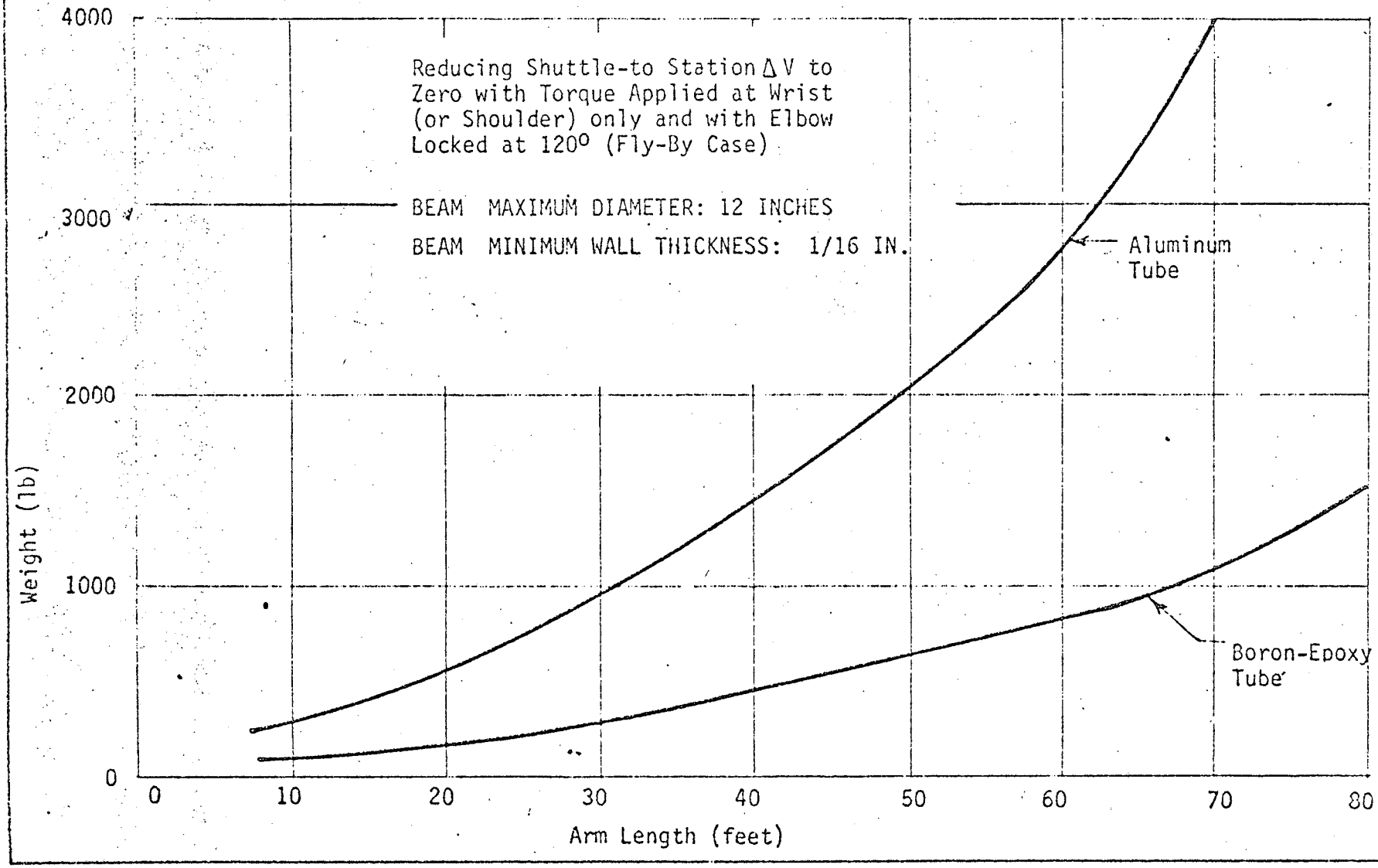

ARM WEIGHT VS ARM LENGTH - ONE APPLIED MOMENT

MARTIN MARIETTA
DENVER DIVISION

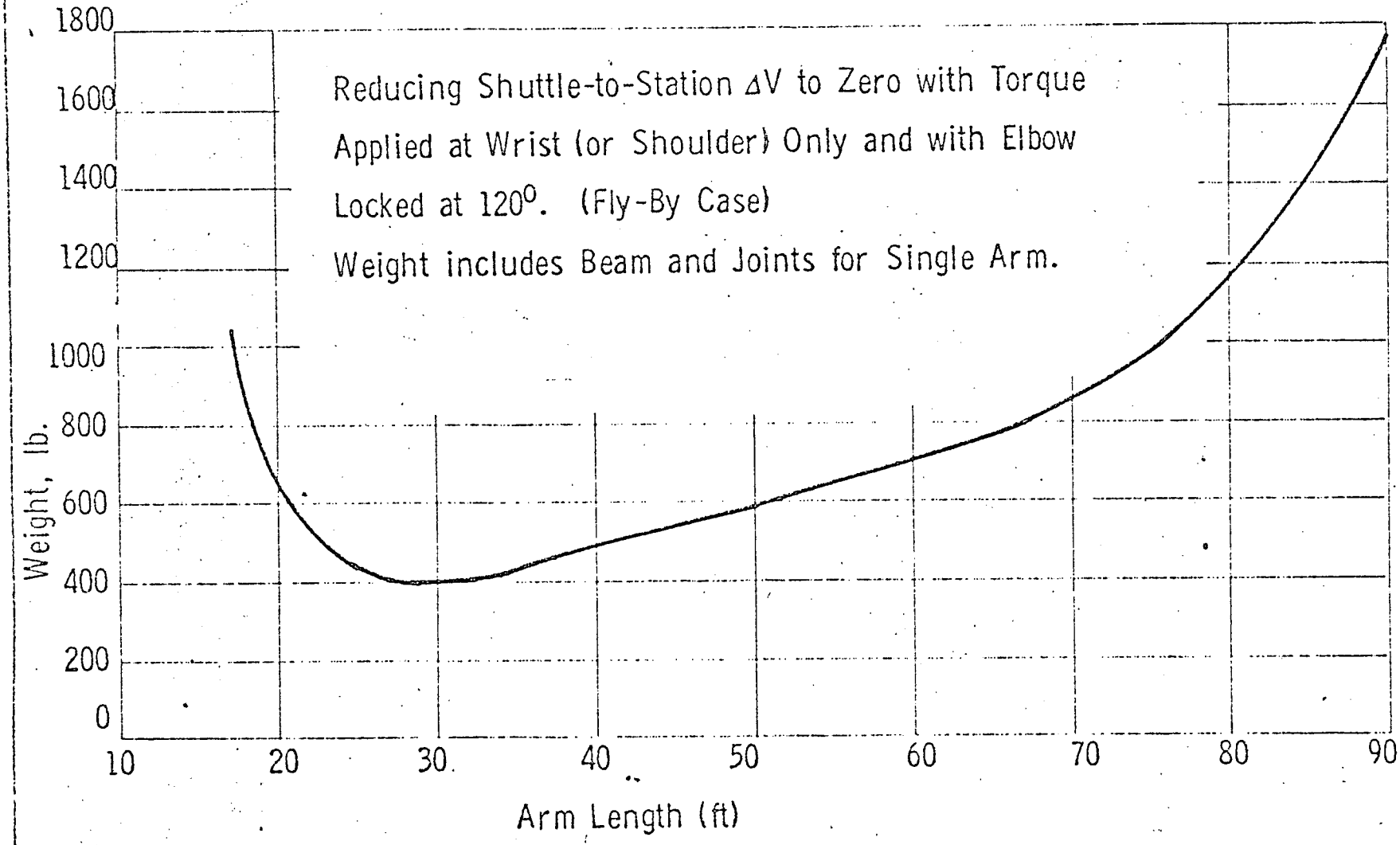

DISTRIBUTION OF TORQUE YIELDS ONE-FOURTH THE WEIGHT

DENVER DIVISION

CASE 1. ONE TORQUE MOTOR, M

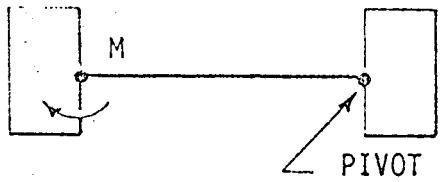

CANTILEVER DEFLECTION:

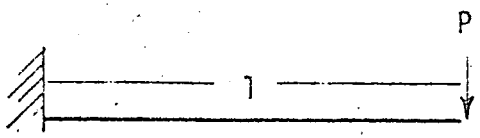

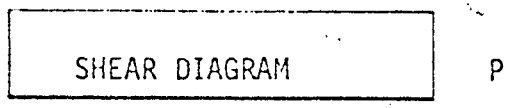

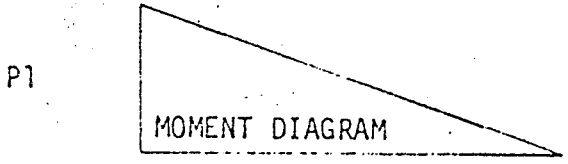

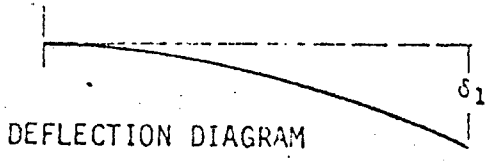

$$\delta_1 = \frac{Pl^3}{3EI}$$

CASE 2. TWO TORQUE MOTORS, M_1 and M_2:

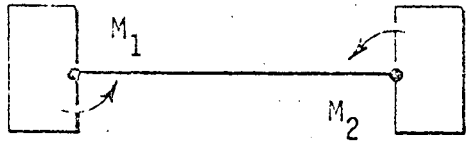

S-SHAPE DEFLECTION:

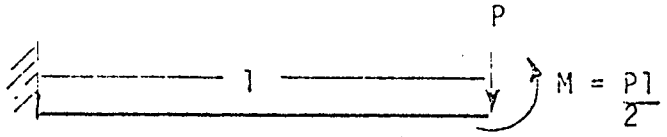

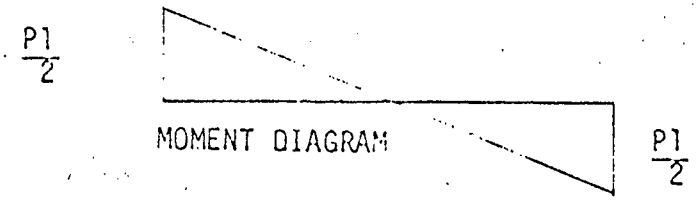

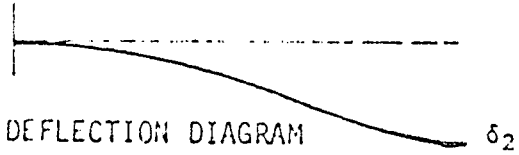

$$\delta_2 = \frac{Pl^3}{12EI}$$

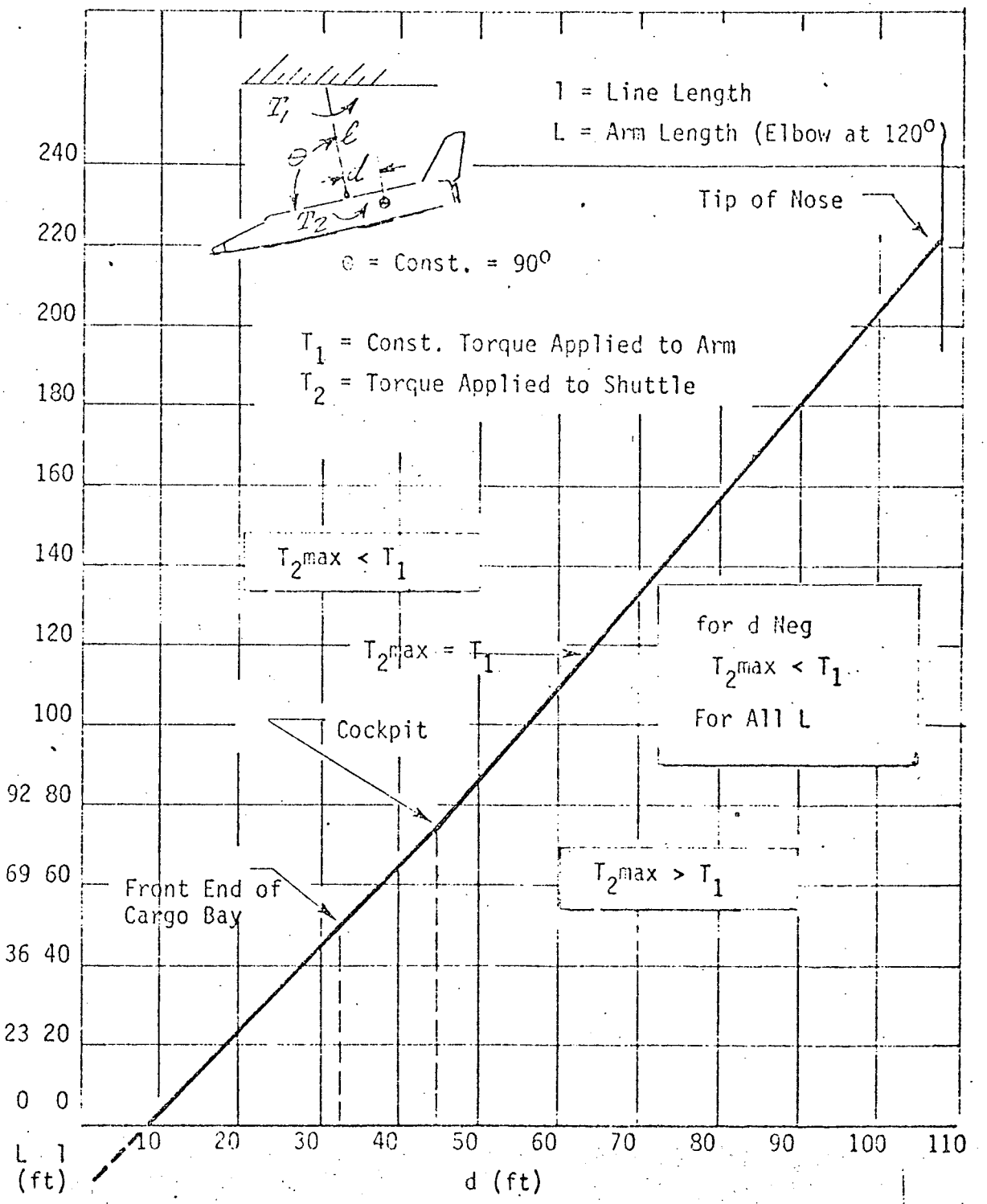

SHOULDER AND WRIST TORQUES COMPARED

BEAM WEIGHT VERSUS ARM LENGTH - TWO APPLIED MOMENTS

DENVER DIVISION

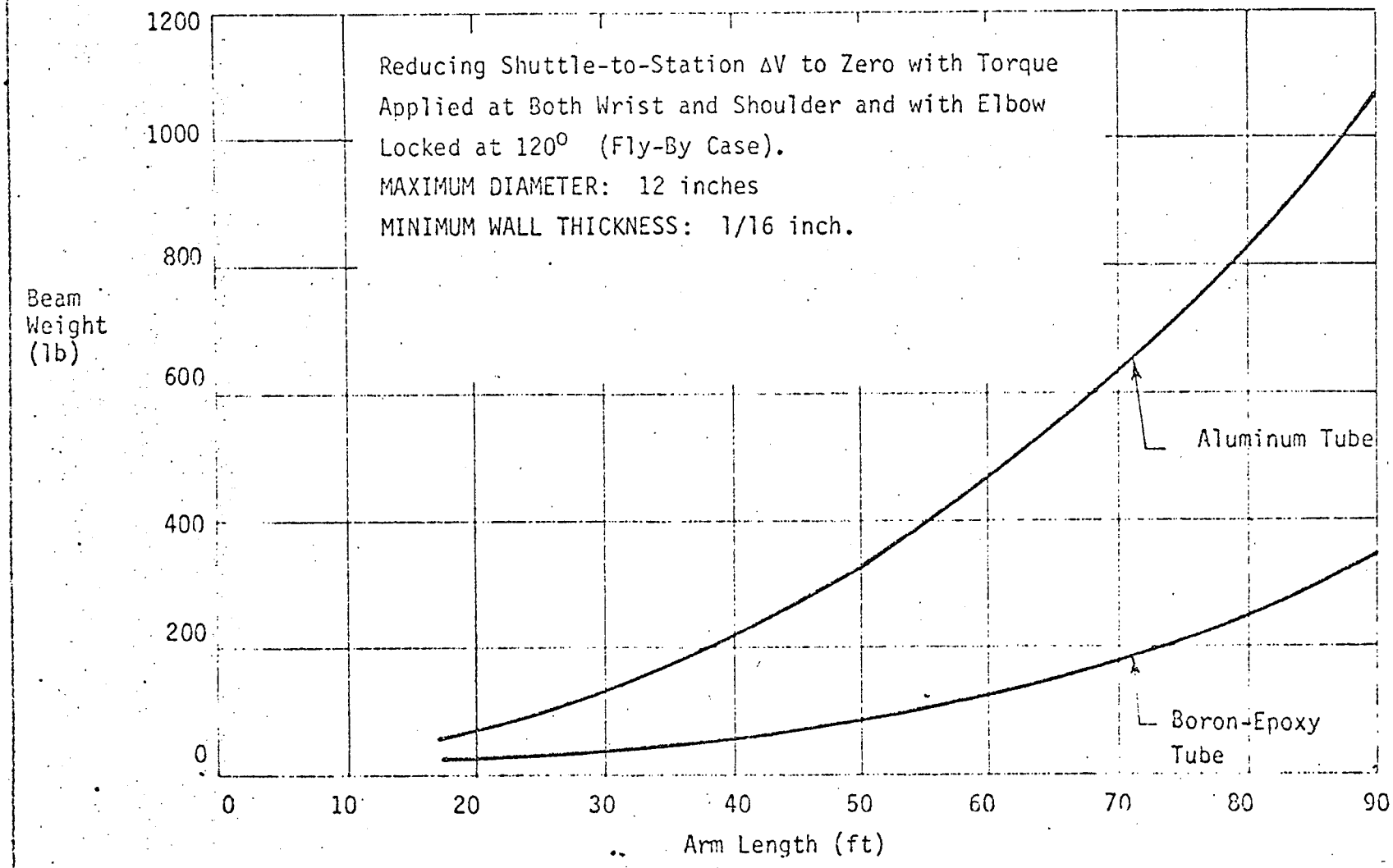

ARM WEIGHT VS ARM LENGTH - TWO APPLIED MOMENTS

MARTIN MARIETTA
DENVER DIVISION

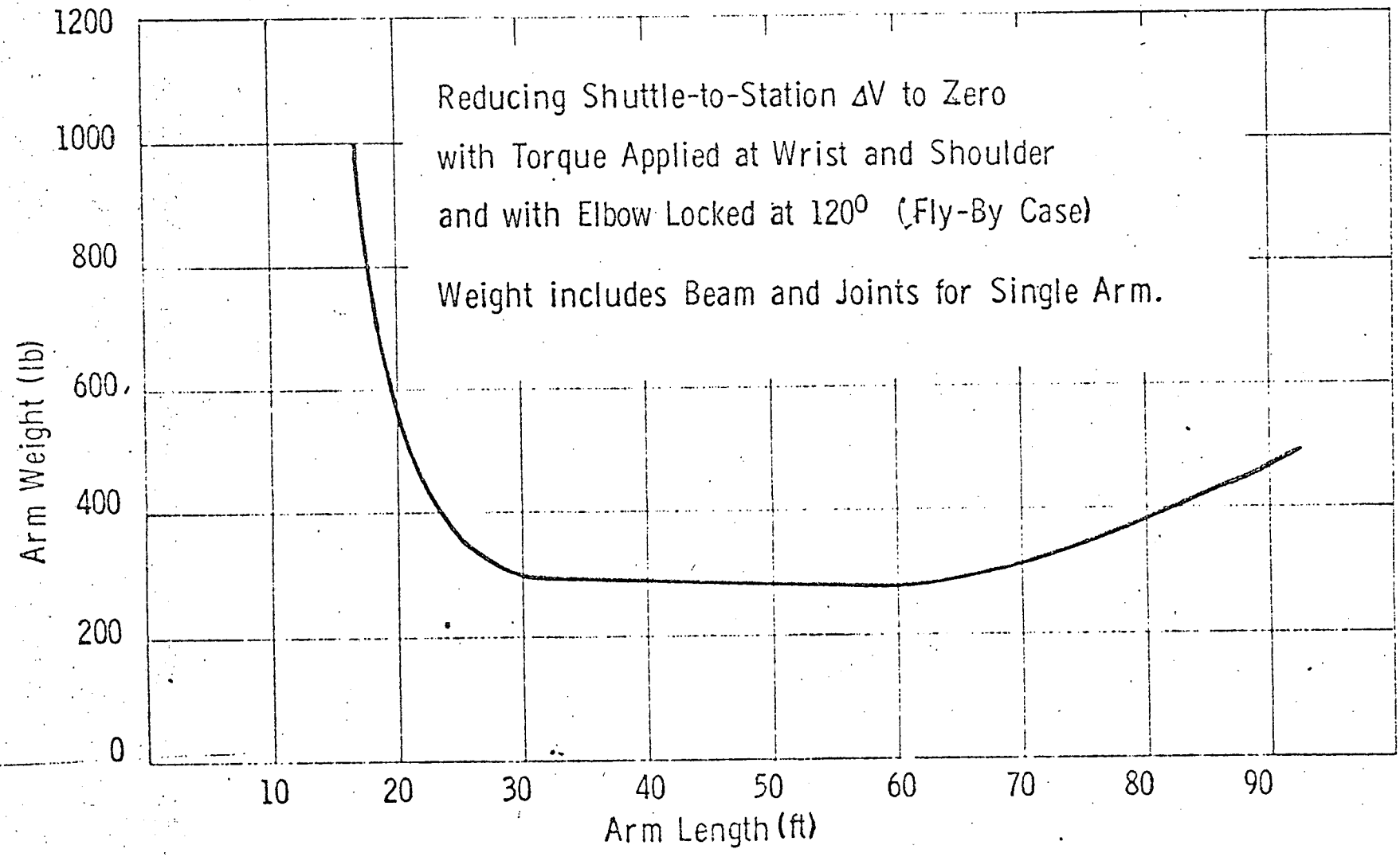

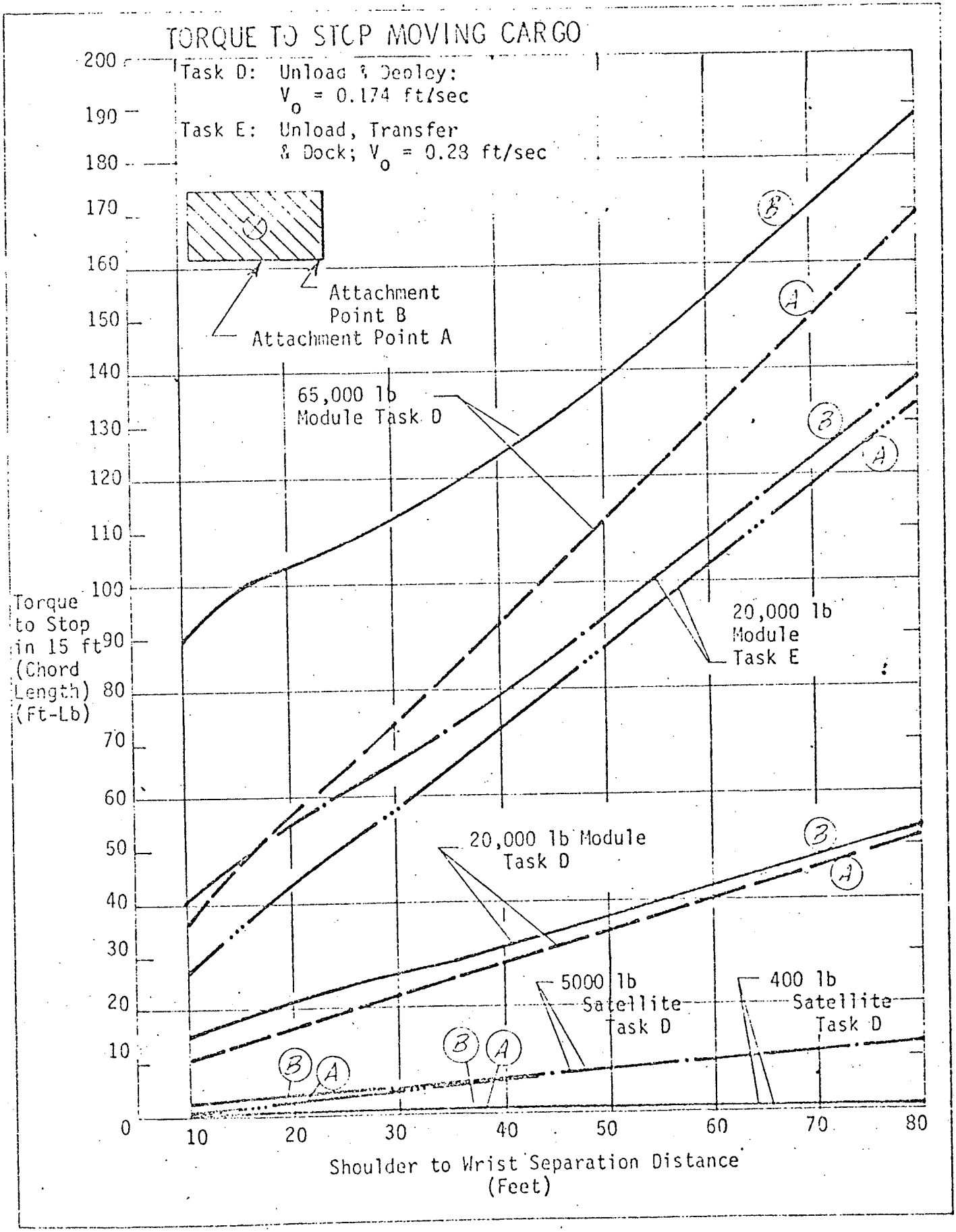
TORQUE TO STOP MOVING CARGO
Task D: Unload & Deploy: V_o = 0.174 ft/sec
Task E: Unload, Transfer & Dock; V_o = 0.23 ft/sec
Attachment Point B
Attachment Point A
65,000 lb Module Task D
20,000 lb Module Task E
20,000 lb Module Task D
5000 lb Satellite Task D
400 lb Satellite Task D
Torque to Stop in 15 ft (Chord Length) (Ft-Lb)
Shoulder to Wrist Separation Distance (Feet)
0
10
20
30
40
50
60
70
80
90
100
110
120
130
140
150
160
170
180
190
200

BEAM WEIGHT FOR CARGO HANDLING

LOCKHEED MISSILES & SPACE
DENVER DIVISION

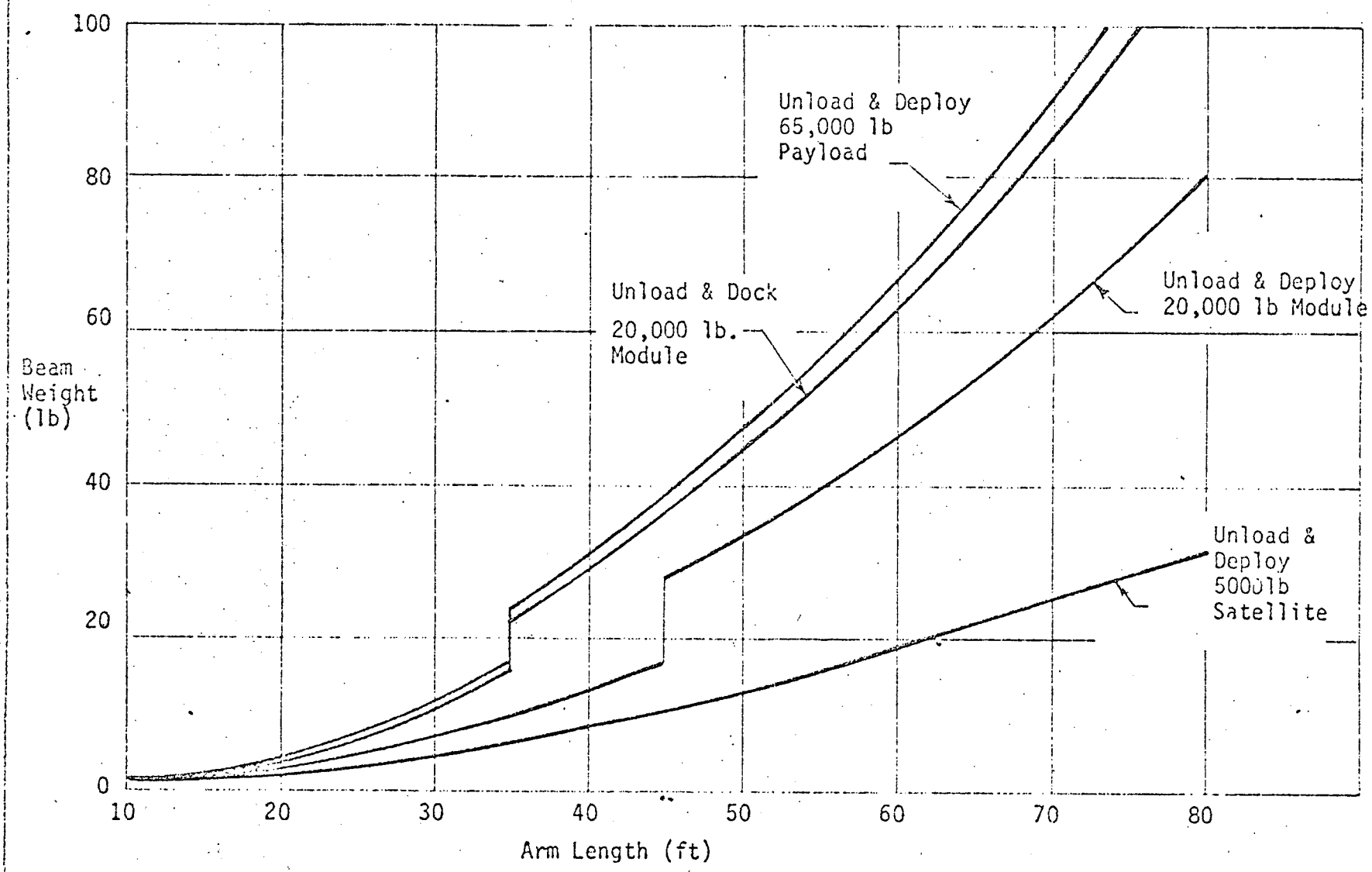

INITIAL CONCEPT SCREENING FORM FOR SYSTEM & SUBSYSTEMS

Example Scoring

	Mounting			Arm Configuration			Arm Length	
	Fixed Base	Multiple Base	Movable Base	Single Arm	Multiple Equal Arms	Multiple Unequal Arms	Fixed Length	Variable Length
Initial Cost	1	3	2	1	3	2	1	2
Development Risk								
Reliability								
Safety								
Shuttle Interface								
Crew Interface								
Control Ease								
Weight								
Power								
Complexity								
Displays								
Sensors								
Crew Workload								
Versatility								
Automatic Control								
Strength								
Structural Stability								
Stowage								
Training								
Reach Envelope								
Space Qualification								
Computational Requirements								
Volume								
Technology Status								
Ground Checkout								
Orbit Checkout								

SELECTION FROM 42 POSSIBLE CONCEPTS

Type of Operating Locations →		One Fixed Operating Location		Several Variable Operating Locations		Several Fixed Operating Locations	
Number of Arms ↓	Bases / Arm Length	One Base	Two Separate Bases	One Base	Two Separ. Bases (One Fixed)	One Base	Two Separ. Bases (One Fixed)
1 Arm	Fixed	A, I	○	C	○	F	○
	Variable	B	○	△	○	△	○
2 Ident. Arms (Size, Wt. Base, etc.)	Fixed	D	⬡	⬡	⬡	⬡	⬡
	Variable	⬡	⬡	△	△	△	△
2 Non-Ident. Arms	Both Fixed	▣	E	⬡	H	⬡	J
	Both Variable	⬡	⬡	△	△	△	△
	One Fixed, One Variab.	G	△	△	△	△	△

A, B, C, D, E, F, G, H, I, J = Selected Alternative Concepts

○ Not Applicable

▣ No Advantage to Keep Both Arms at One Operating Location

△ Redundant Means of Increasing Reach Capability

⬡ Since need for increased reach capability comes about due to the requirement to reach small (light) cargo, only one arm need have this capability. Also no need to have 2 identical arms if on separate bases.

CONCEPT A

DENVER DIVISION

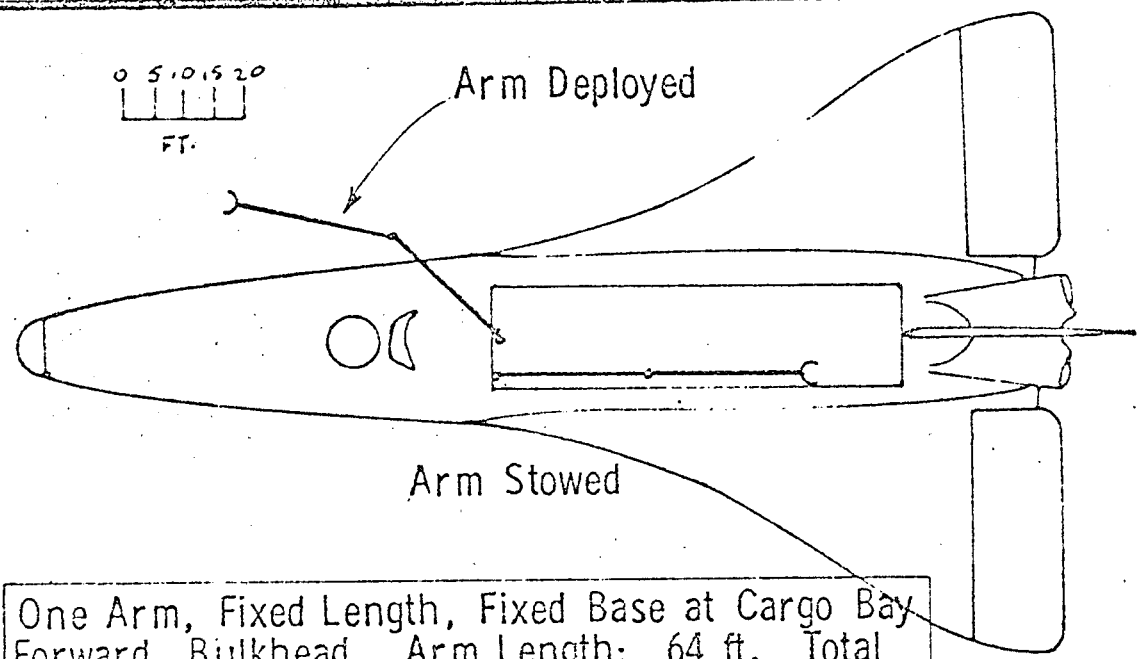

One Arm, Fixed Length, Fixed Base at Cargo Bay Forward, Bulkhead. Arm Length: 64 ft. Total Weight: 489 lb.

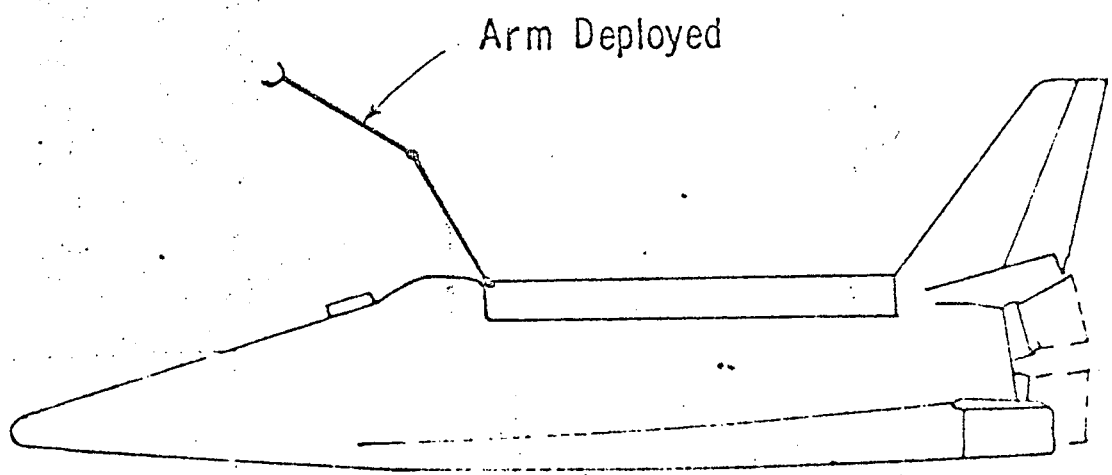

DEPLOYMENT METHOD 1

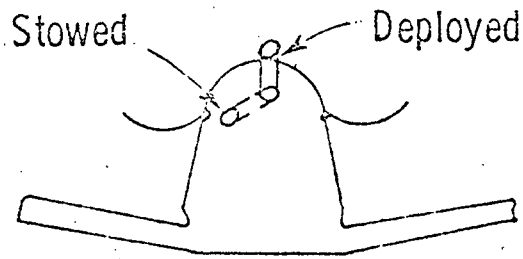

DEPLOYMENT METHOD 2

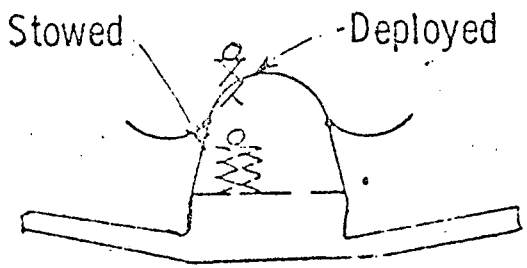

CONCEPT B

DENVER DIVISION

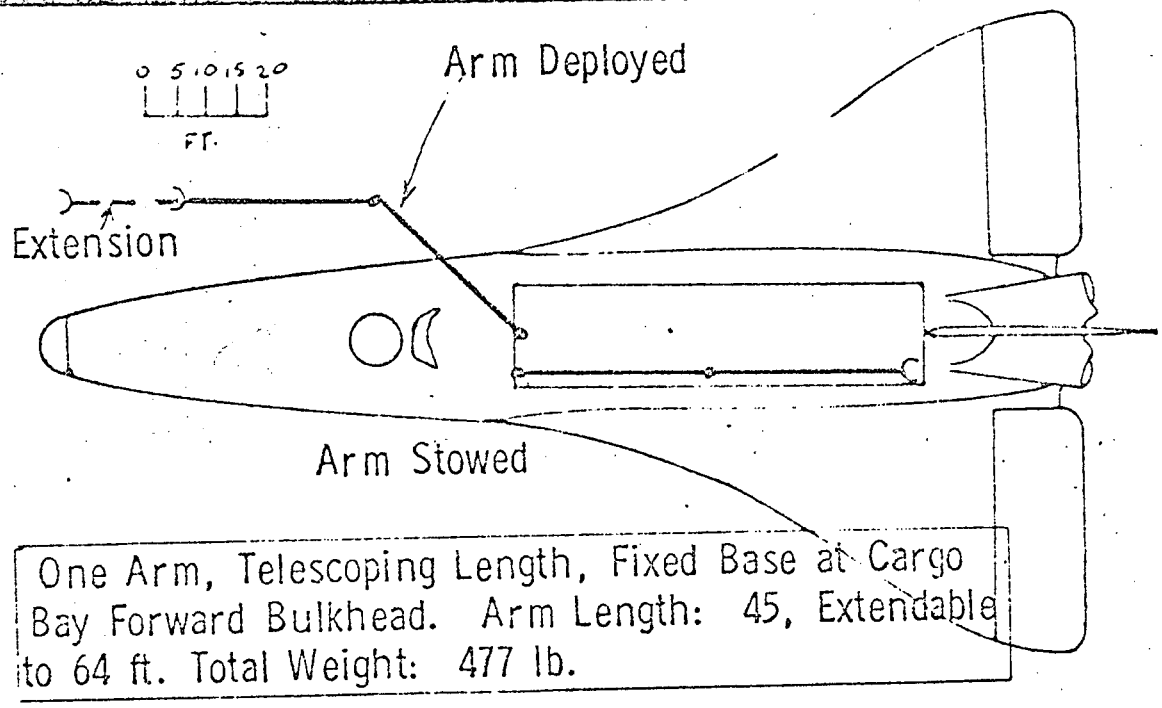

One Arm, Telescoping Length, Fixed Base at Cargo Bay Forward Bulkhead. Arm Length: 45, Extendable to 64 ft. Total Weight: 477 lb.

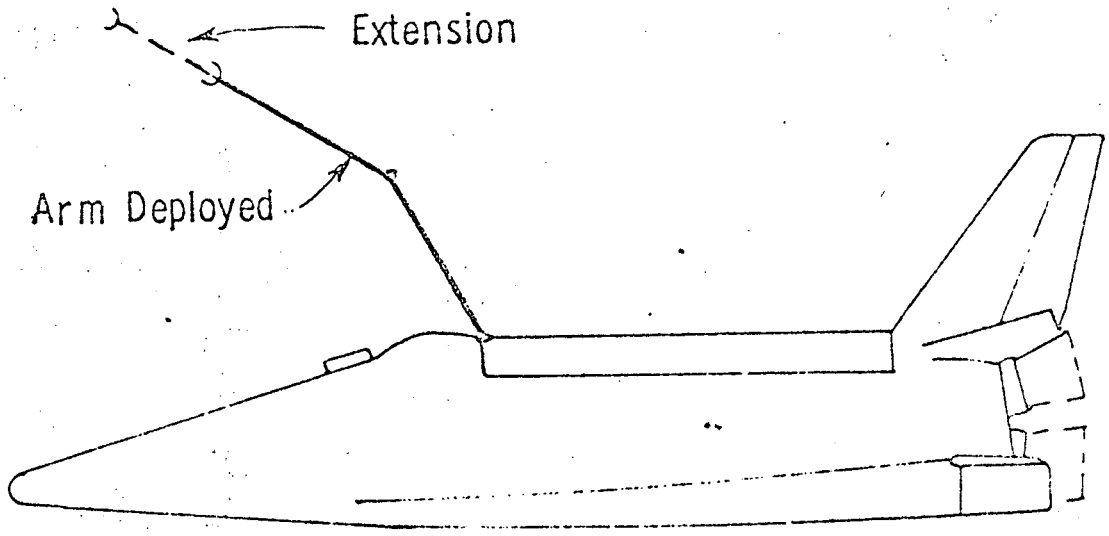

DEPLOYMENT METHOD 1

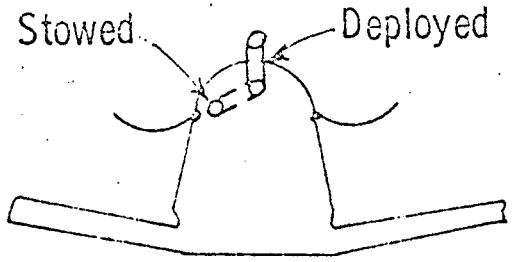

DEPLOYMENT METHOD 2

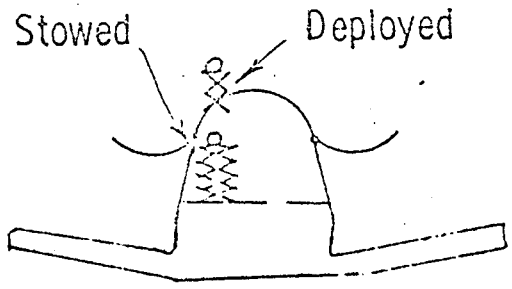

CONCEPT C

DENVER DIVISION

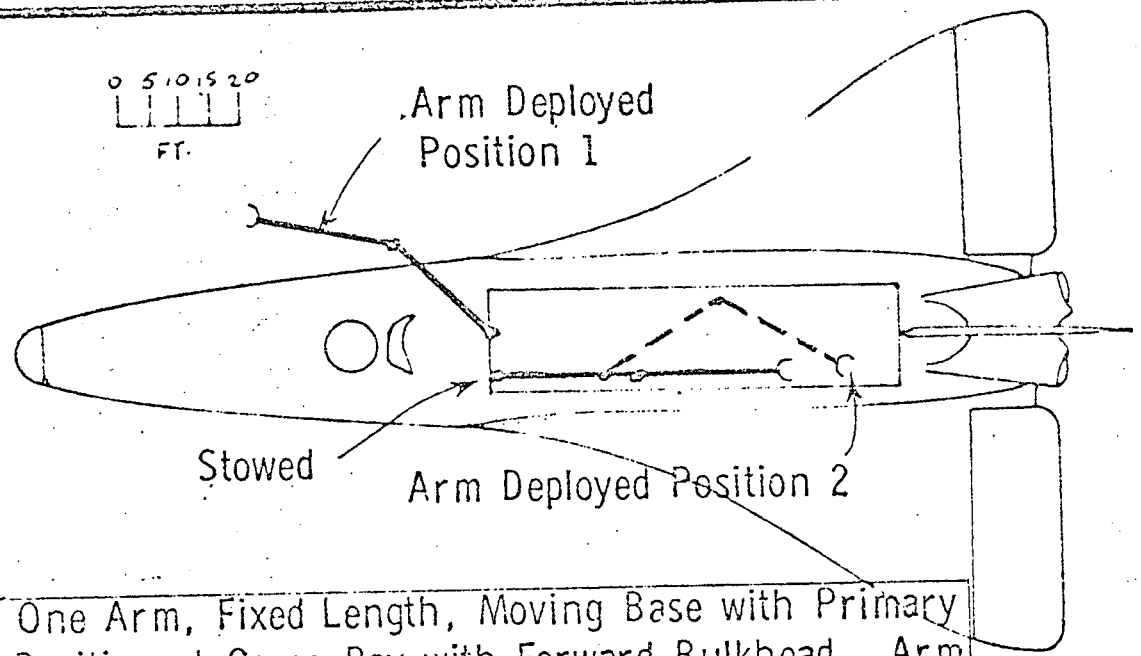

One Arm, Fixed Length, Moving Base with Primary Position at Cargo Bay with Forward Bulkhead. Arm Length 45 ft. Total Weight: 535 lb.

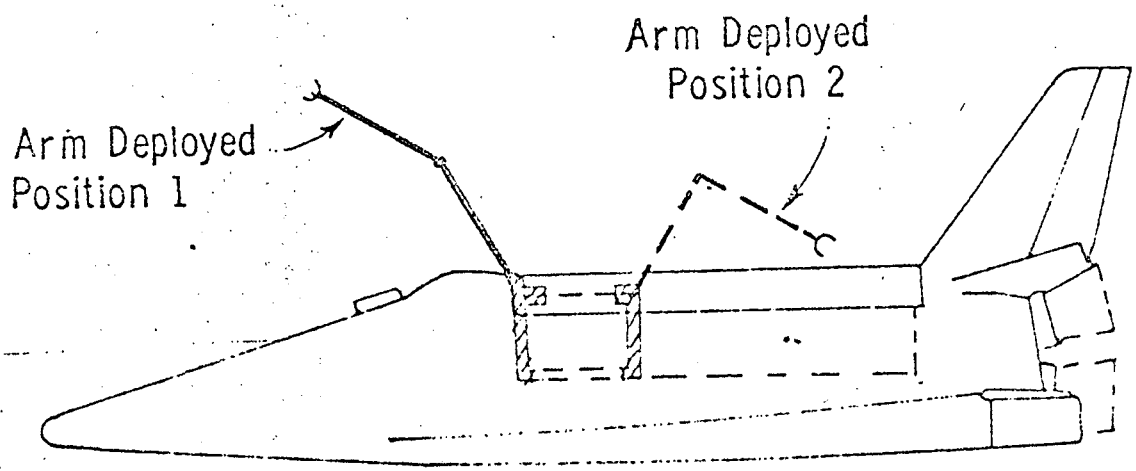

DEPLOYMENT METHOD 1

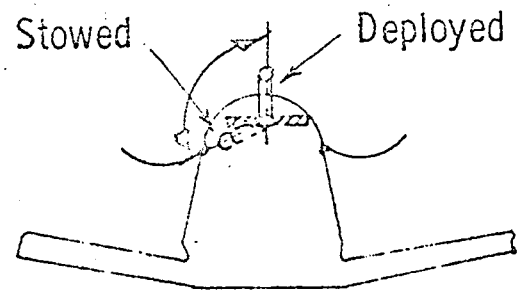

DEPLOYMENT METHOD 2

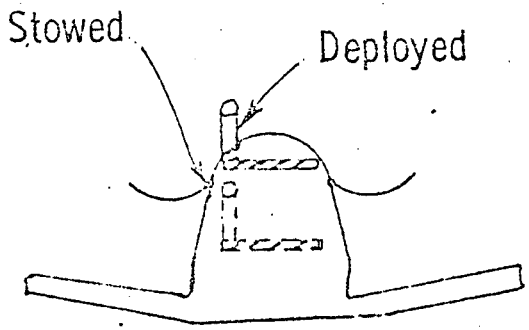

CONCEPT D

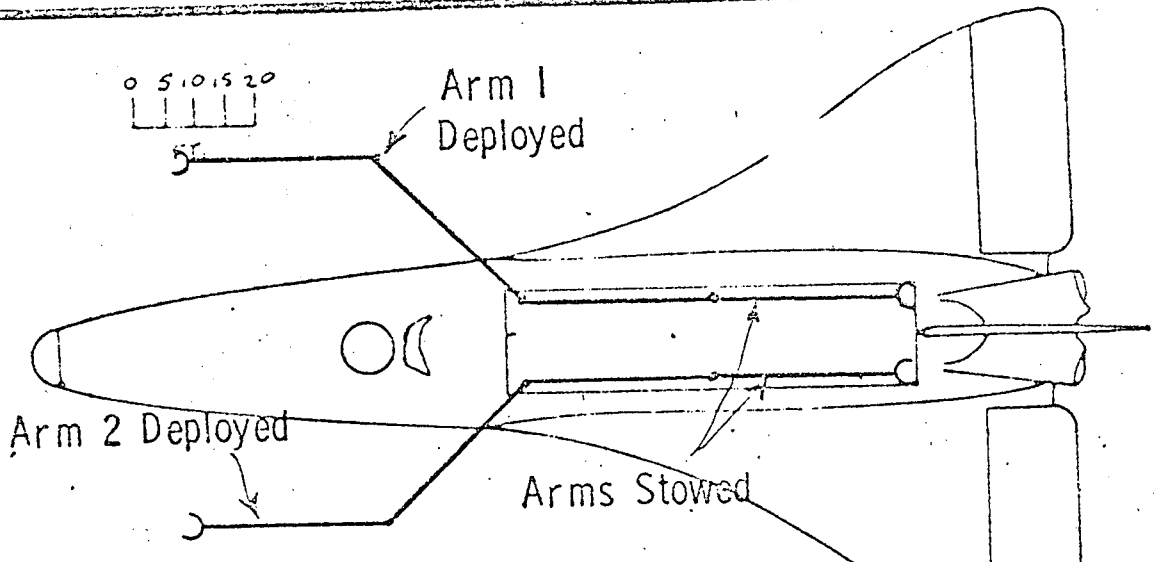

Two arms, fixed length, fixed common base at cargo bay forward bulkhead. Arm length: 65 ft each.
Total weight: 527 lb

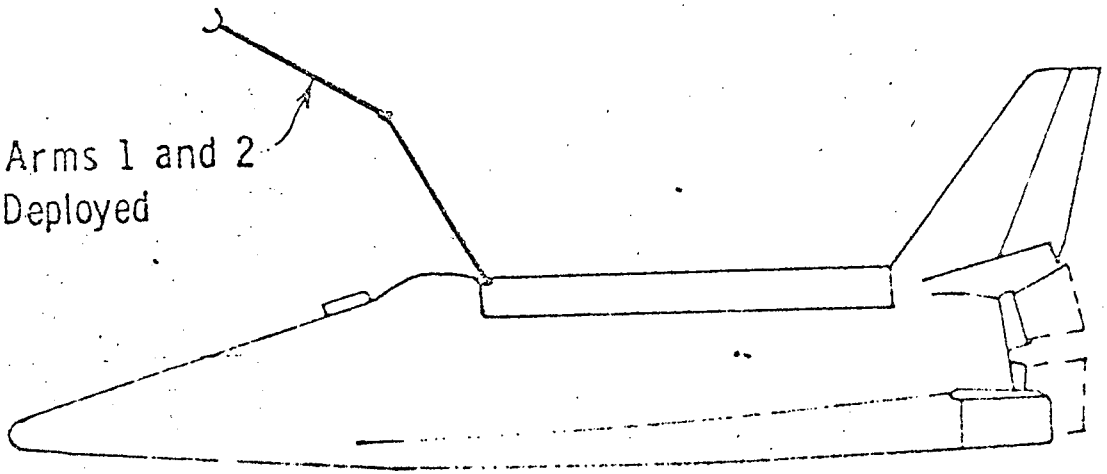

DEPLOYMENT METHOD 1

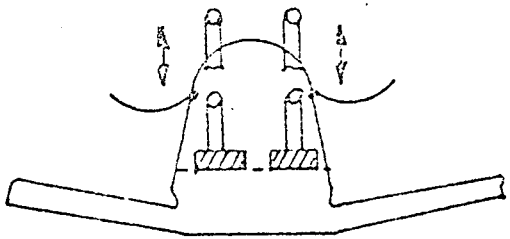

DEPLOYMENT METHOD 2

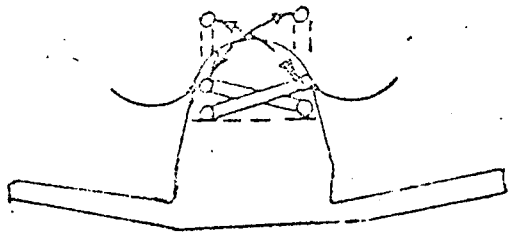

CONCEPT E

DENVER DIVISION

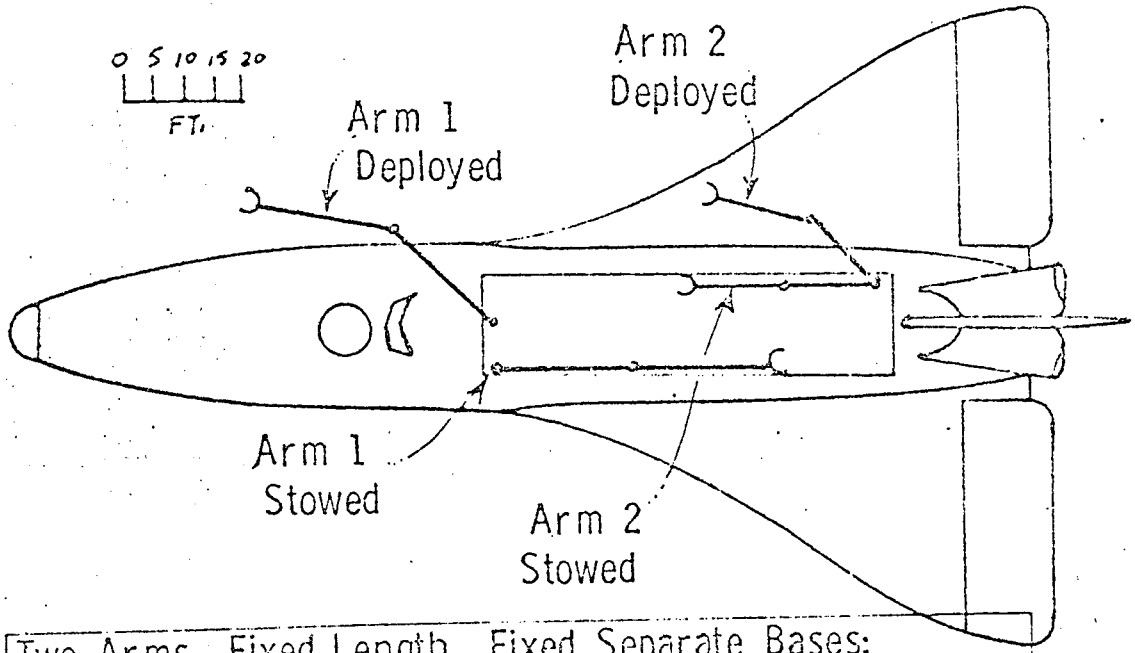

Two Arms, Fixed Length, Fixed Separate Bases: One Arm at Cargo Bay Forward Bulkhead; Other Arm at Near Bulkhead. Arm 1: Length, 45 ft; Arm 2: 31 ft. Total Weight: 578 lb.

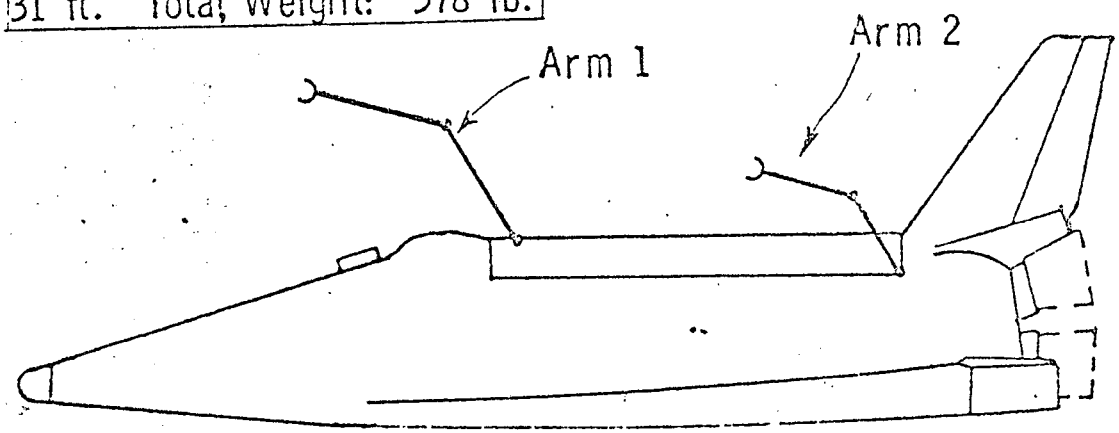

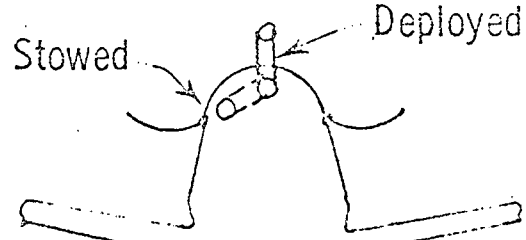

ARM 1 DEPLOYMENT METHOD 1

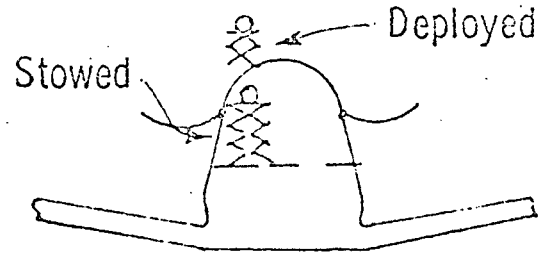

ARM 1 DEPLOYMENT METHOD 2

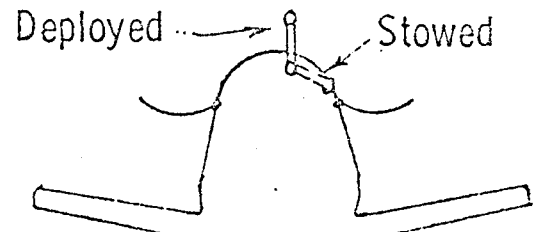

ARM 2 DEPLOYMENT METHOD 2

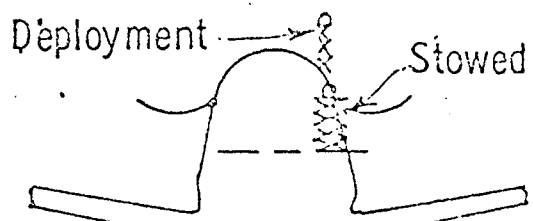

ARM 2 DEPLOYMENT METHOD 2

CONCEPT F

MARTIN MARIETTA
DENVER DIVISION

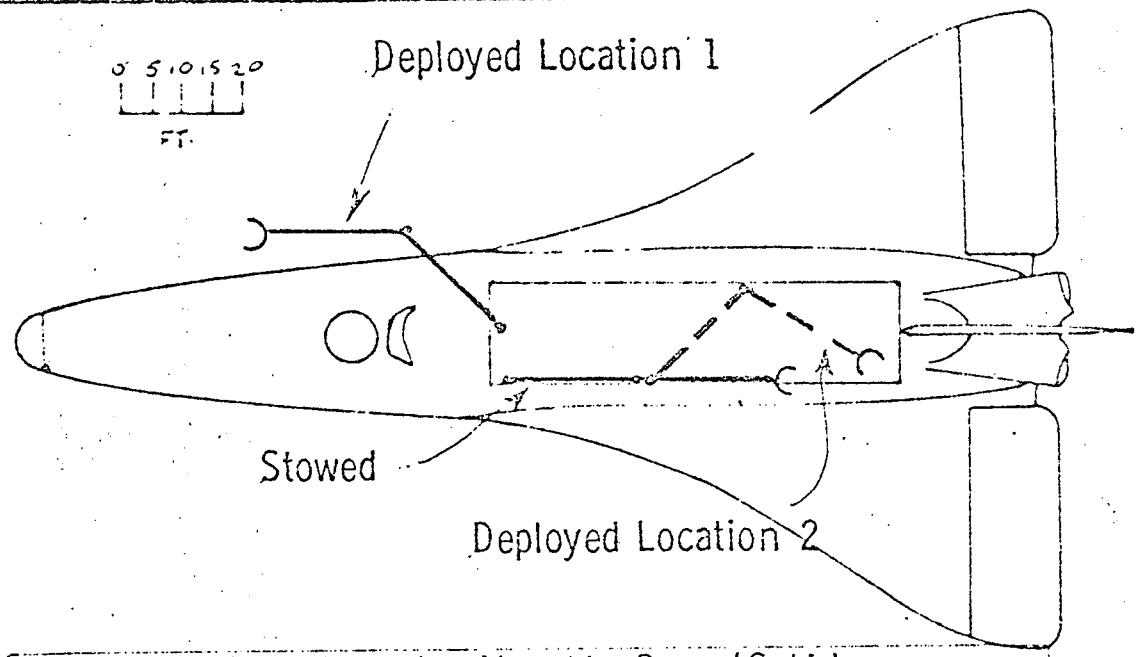

One Arm, Fixed Length, Movable Base (Self-Locomotion) with Primary Base at Cargo Bay Forward Bulkhead.
Arm Length: 45 ft ;total weight: 515 lb.

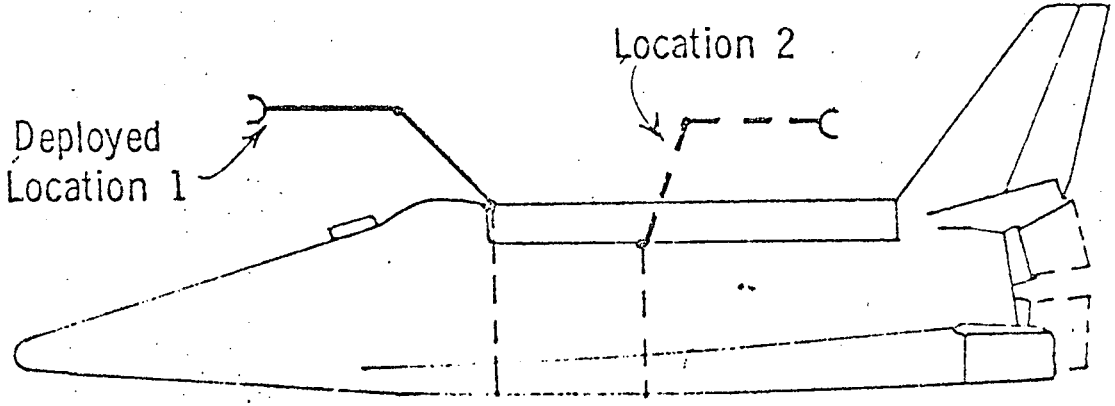

DEPLOYMENT METHOD 1

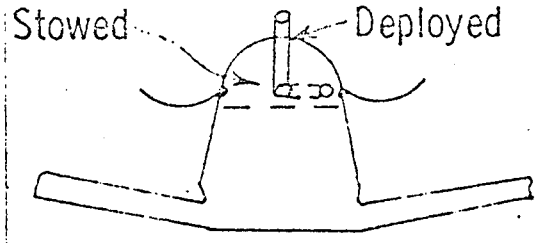

DEPLOYMENT METHOD 2

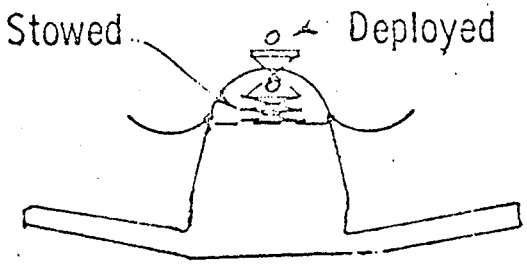

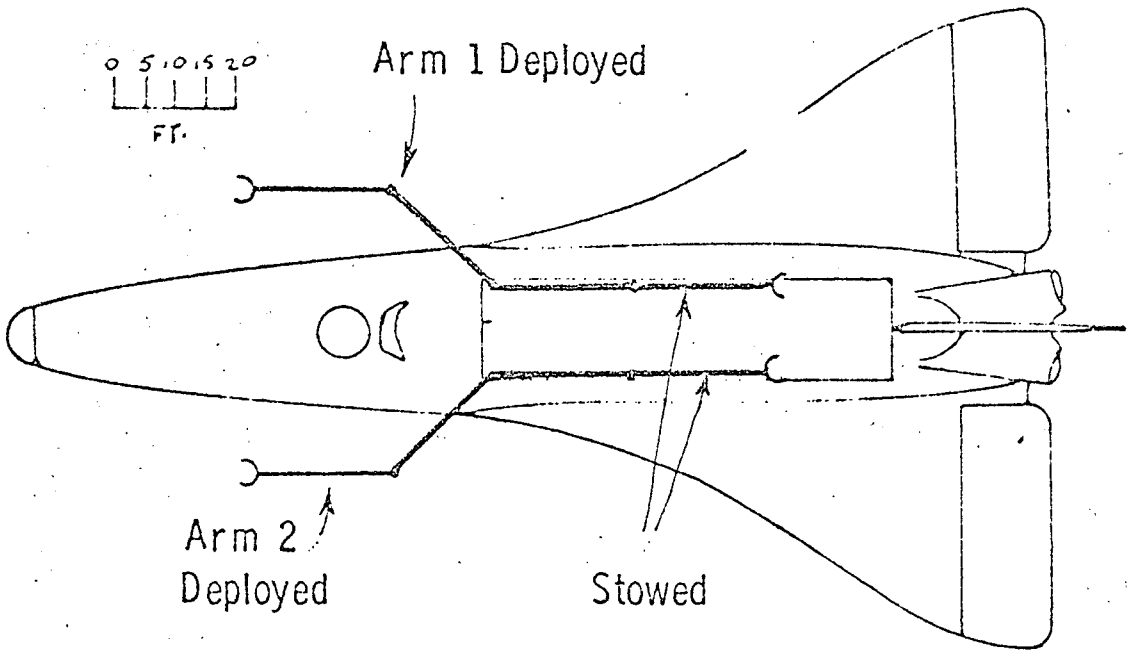

Two Arms, Fixed Common Base; One Arm Fixed Length; Other Arm Telescoping Length, Mounted at Cargo Bay Forward Bulkhead. Arm 1: Length, 46 ft; Arm 2 length 46 to 65 ft with extension.

Total Weight: 458 lb.

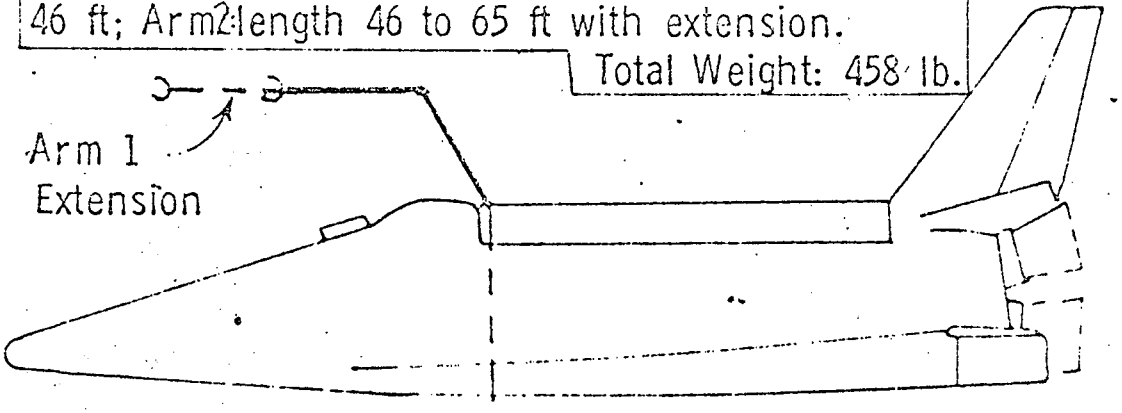

DEPLOYMENT METHOD 1

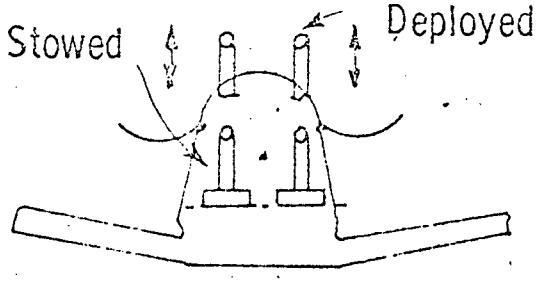

DEPLOYMENT METHOD 2

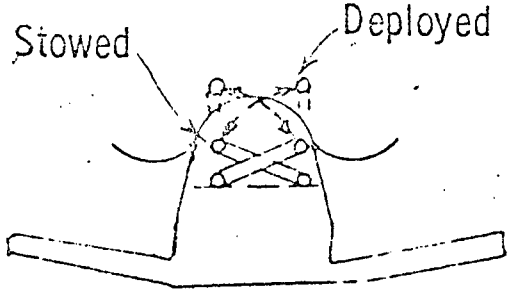

CONCEPT H

DENVER DIVISION

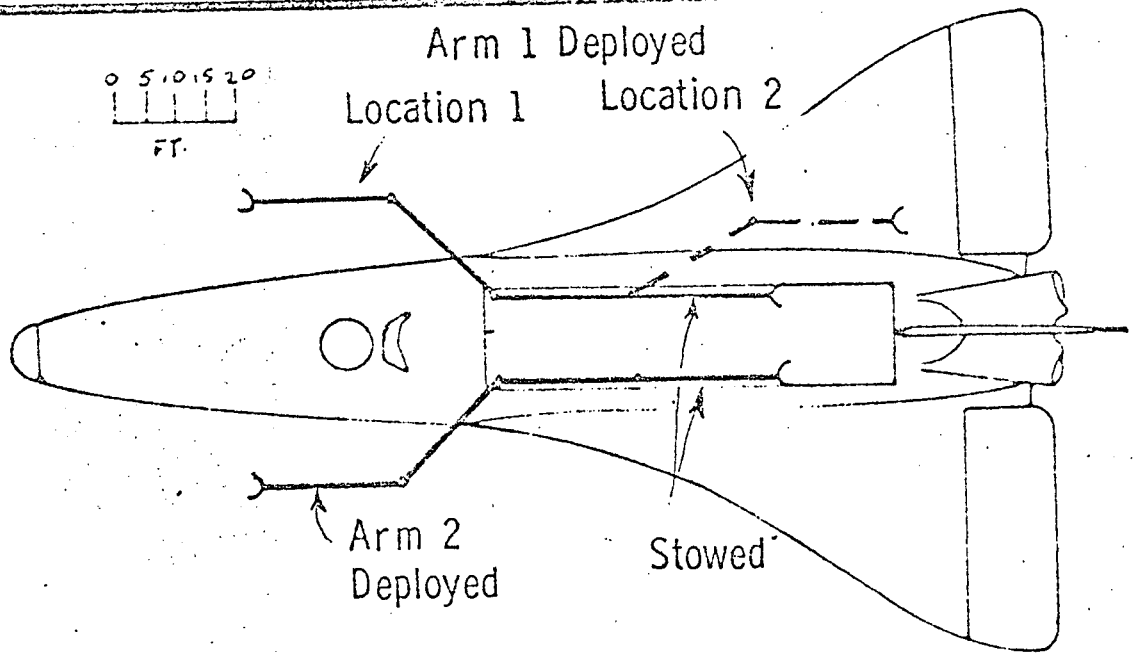

Two Arms, Fixed Length(46 ft); One Arm Fixed Base at Forward Bulkhead; Other Arm Moving Base with Primary Base at Forward Bulkhead. Total Weight: 529 lb.

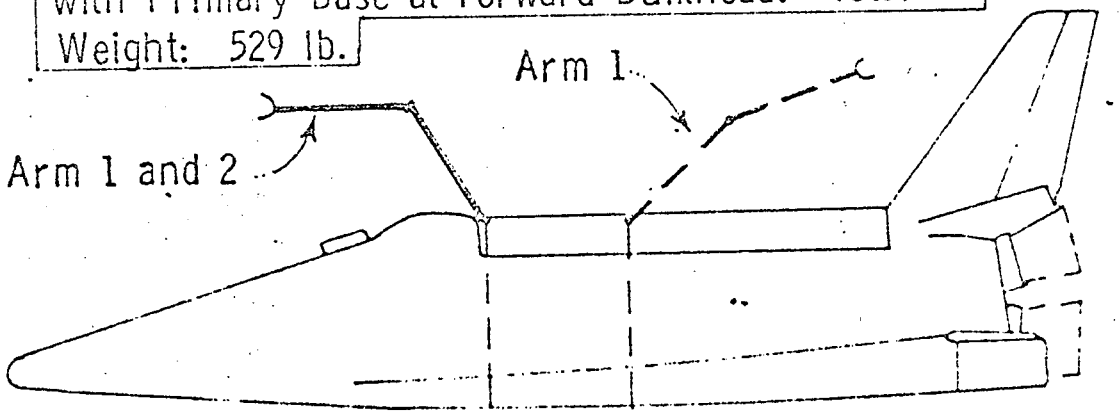

DEPLOYMENT METHOD 1

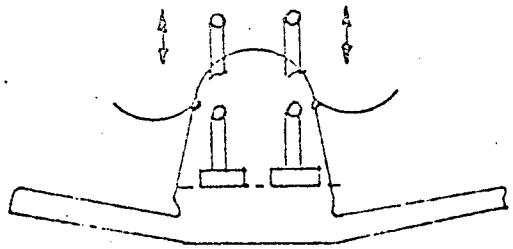

DEPLOYMENT METHOD 2

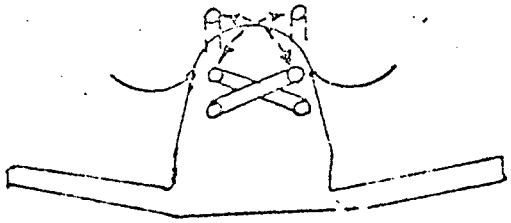

CONCEPT I

MARTIN MARIETTA
DENVER DIVISION

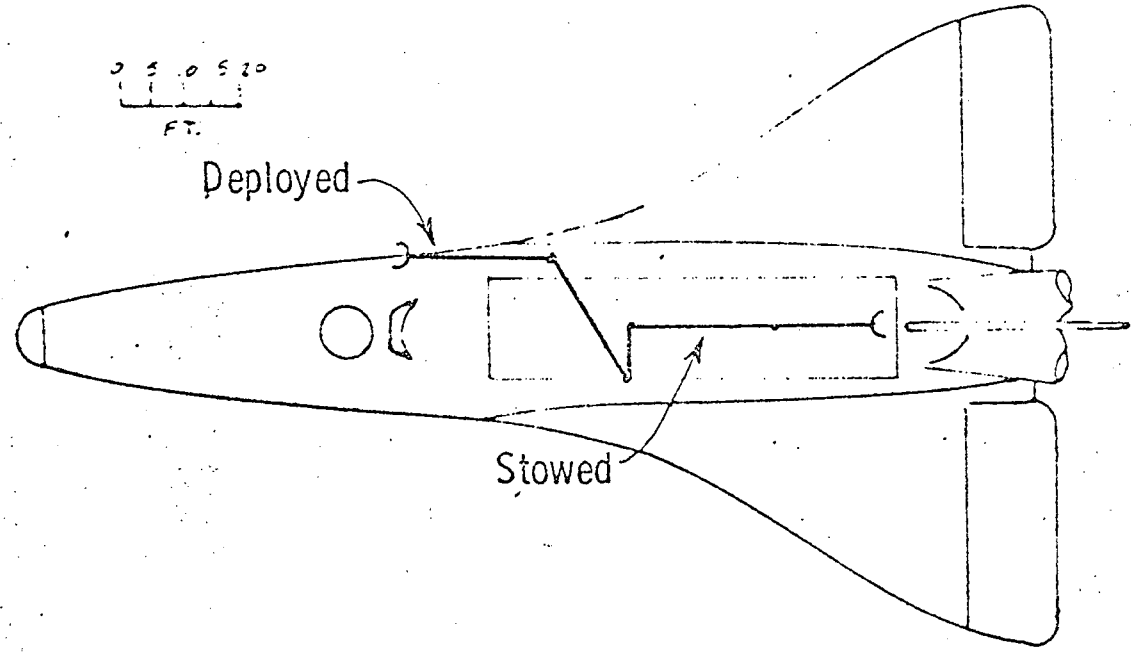

One Arm, Fixed 48 ft Length, Fixed Base at 17 ft Rearward from Forward Bulkhead.
Total weight: 482 lb.

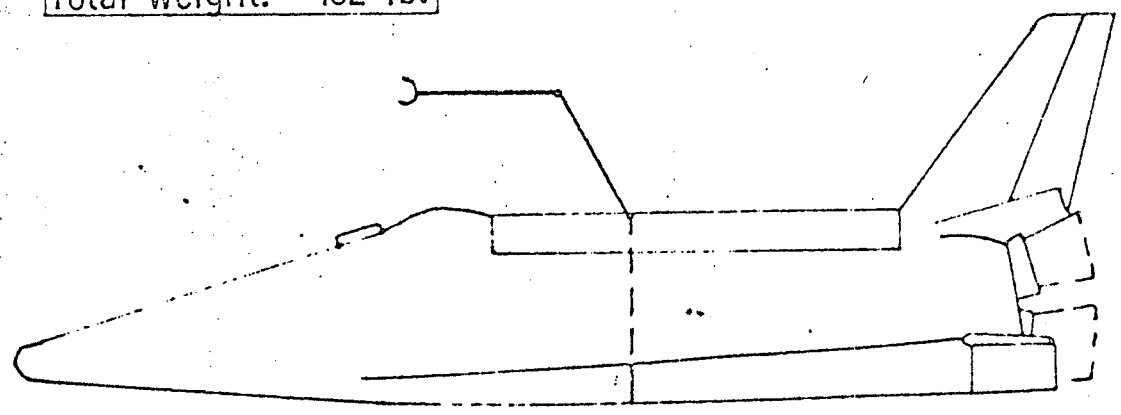

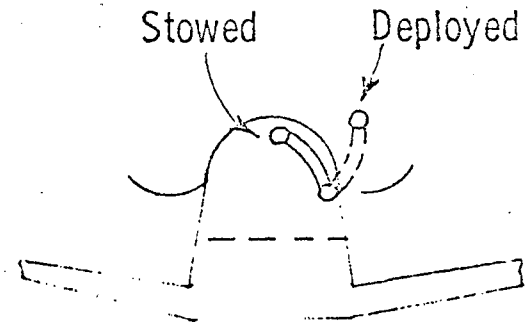

DEPLOYMENT METHOD 1

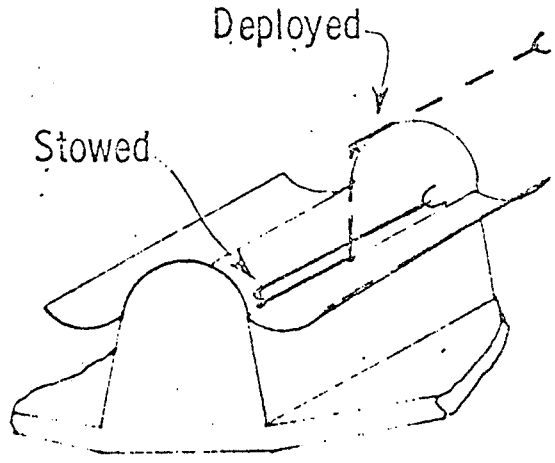

DEPLOYMENT METHOD 2

CONCEPT J

DENVER DIVISION

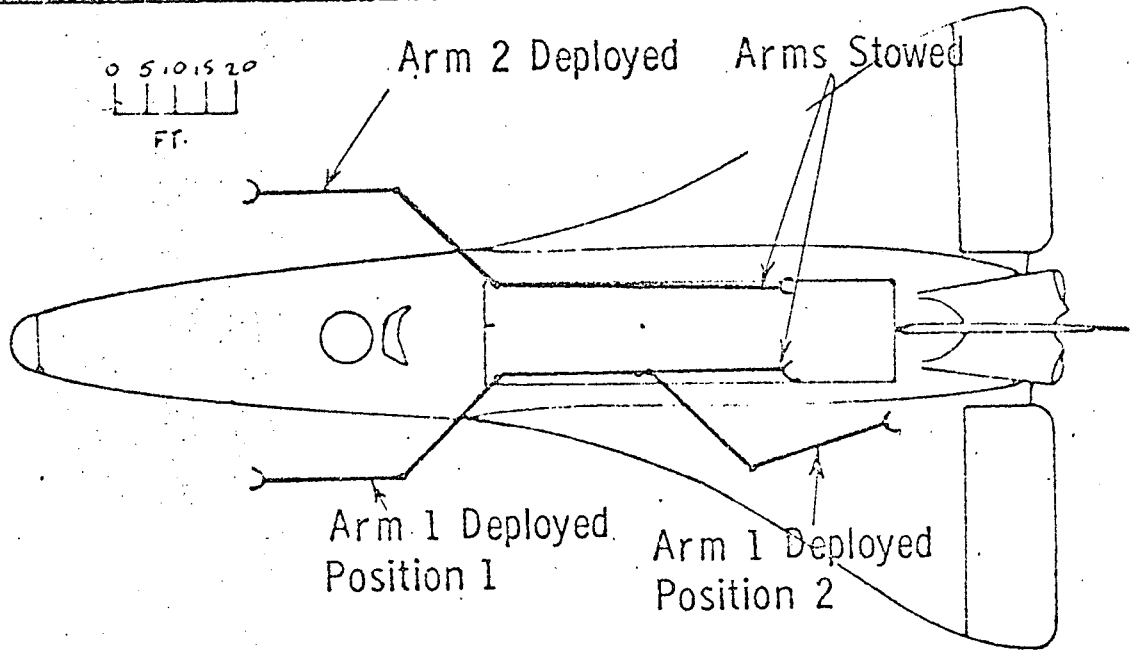

Two Arms, Fixed Length, One Arm Fixed Base; Other Arm Movable Base (self-locomotion) with Primary Position at Forward Bulkhead. Arm 1: Length 46 ft; Arm 2: Length 46 ft. Total weight: 466 lb.

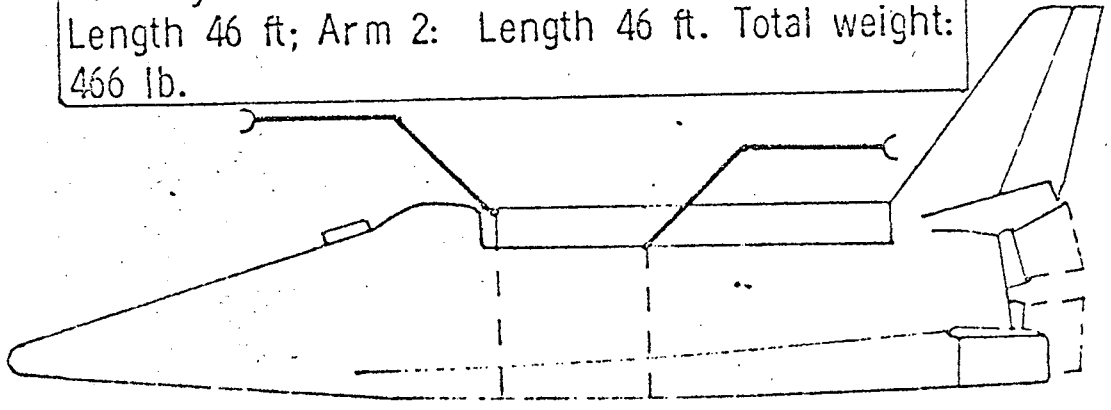

Note: Arm 1 Self-locomotion is done by a "boot-strapping" via an intermediate Shuttle surface-mounted receptacle.

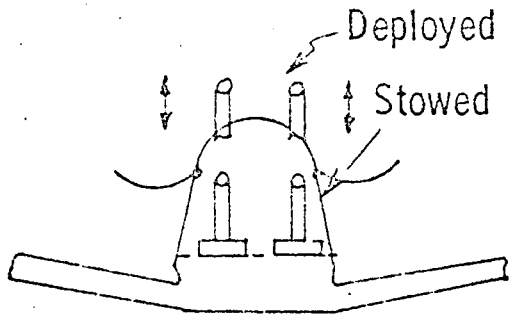

DEPLOYMENT METHOD 1

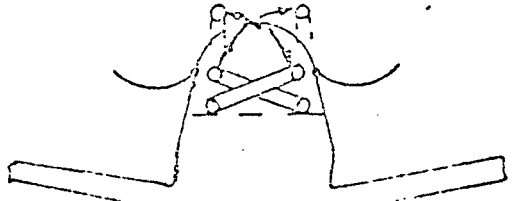

DEPLOYMENT METHOD 2

TYPICAL MANIPULATOR DEGREES OF FREEDOM

DENVER DIVISION

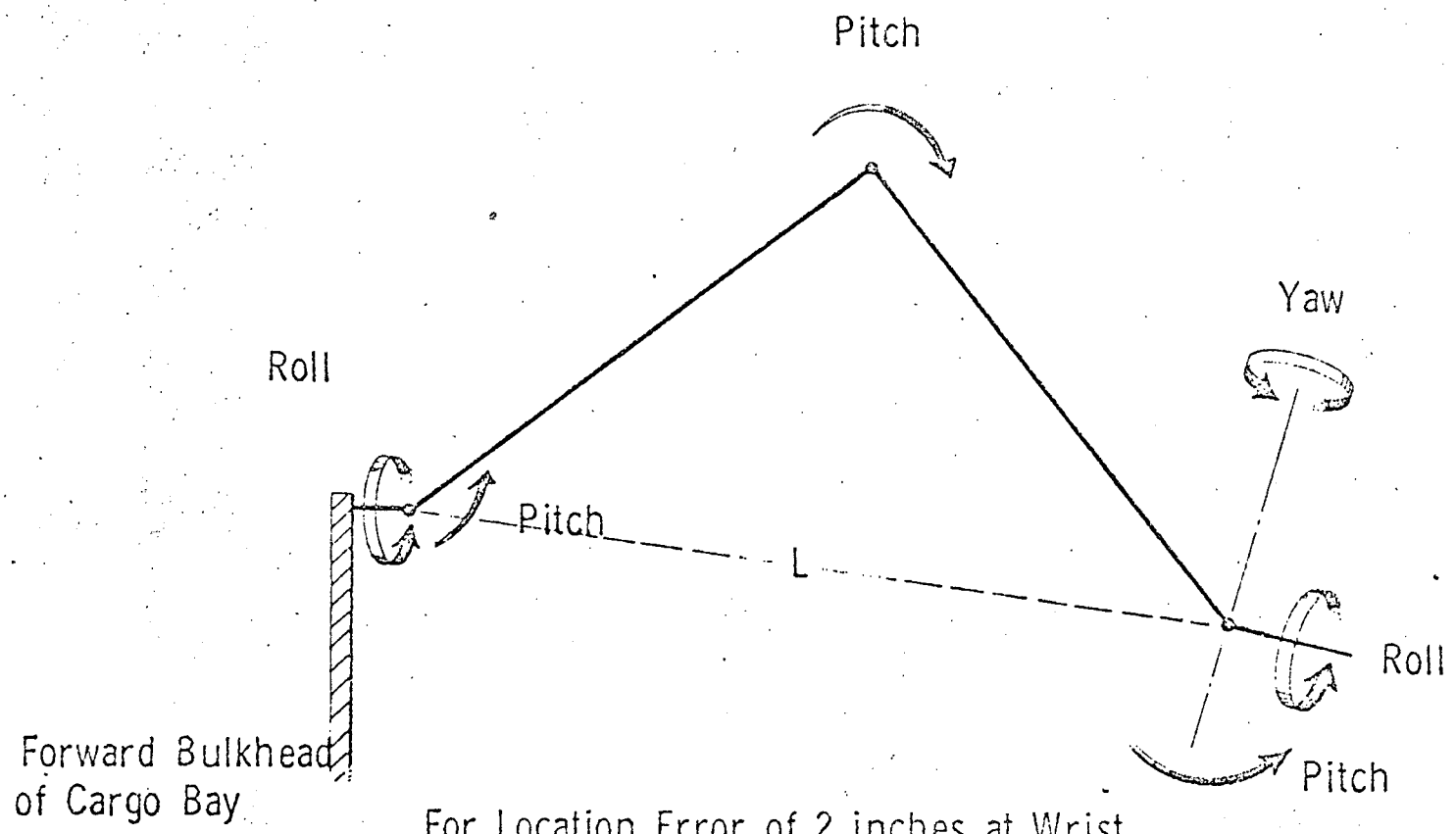

For Location Error of 2 inches at Wrist, For Equal Arm Segments, and For Equal Angular Accuracy in All Joints: The Required Angular Accuracy at Each Degree of Freedom is:

$$d = \pm \frac{2.64}{L} \text{ degrees}$$

where L is in feet.

TELEOPERATOR TELECOMMUNICATIONS SUBSYSTEM

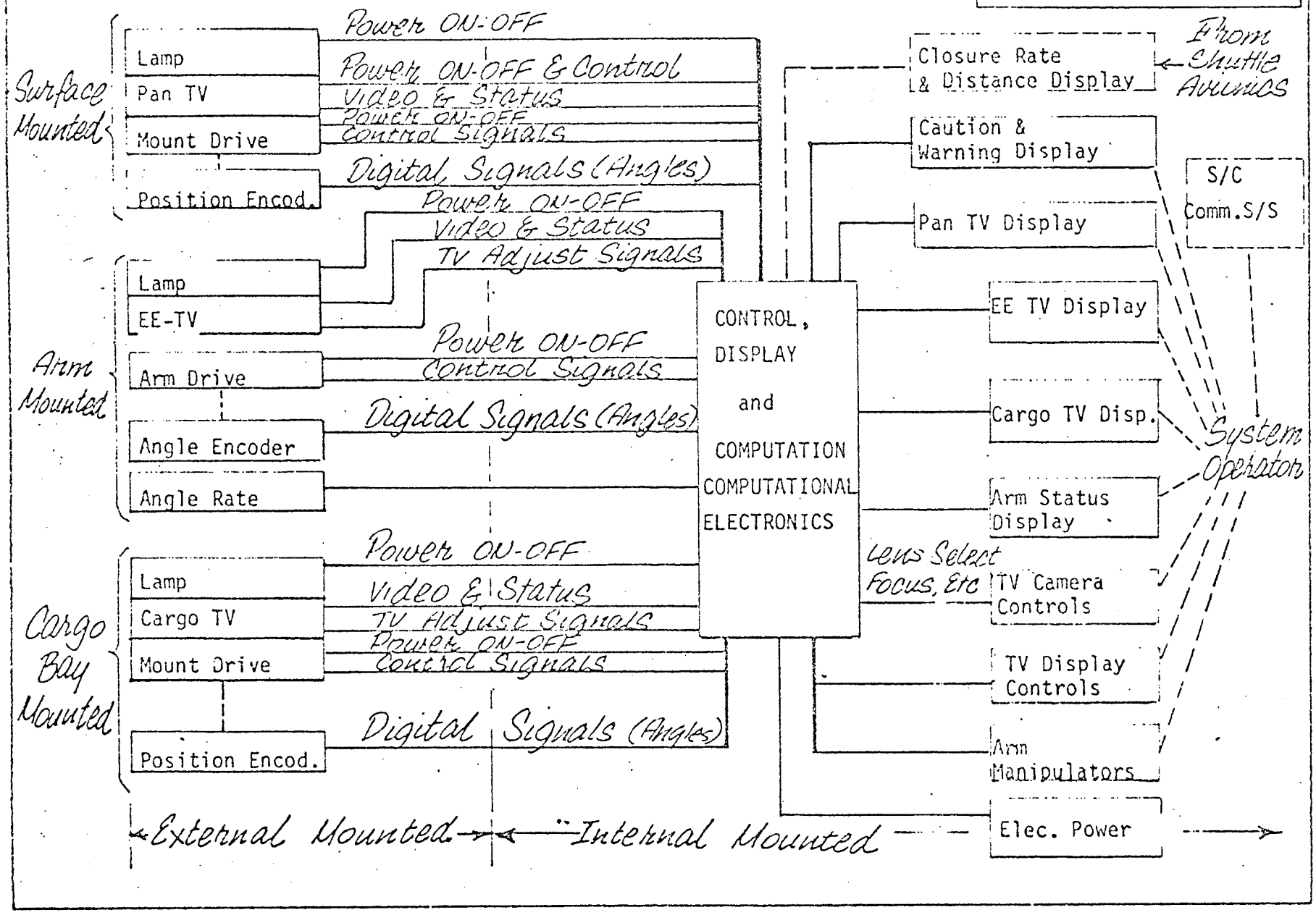

SPACE STATION CAPTURED

DENVER DIVISION

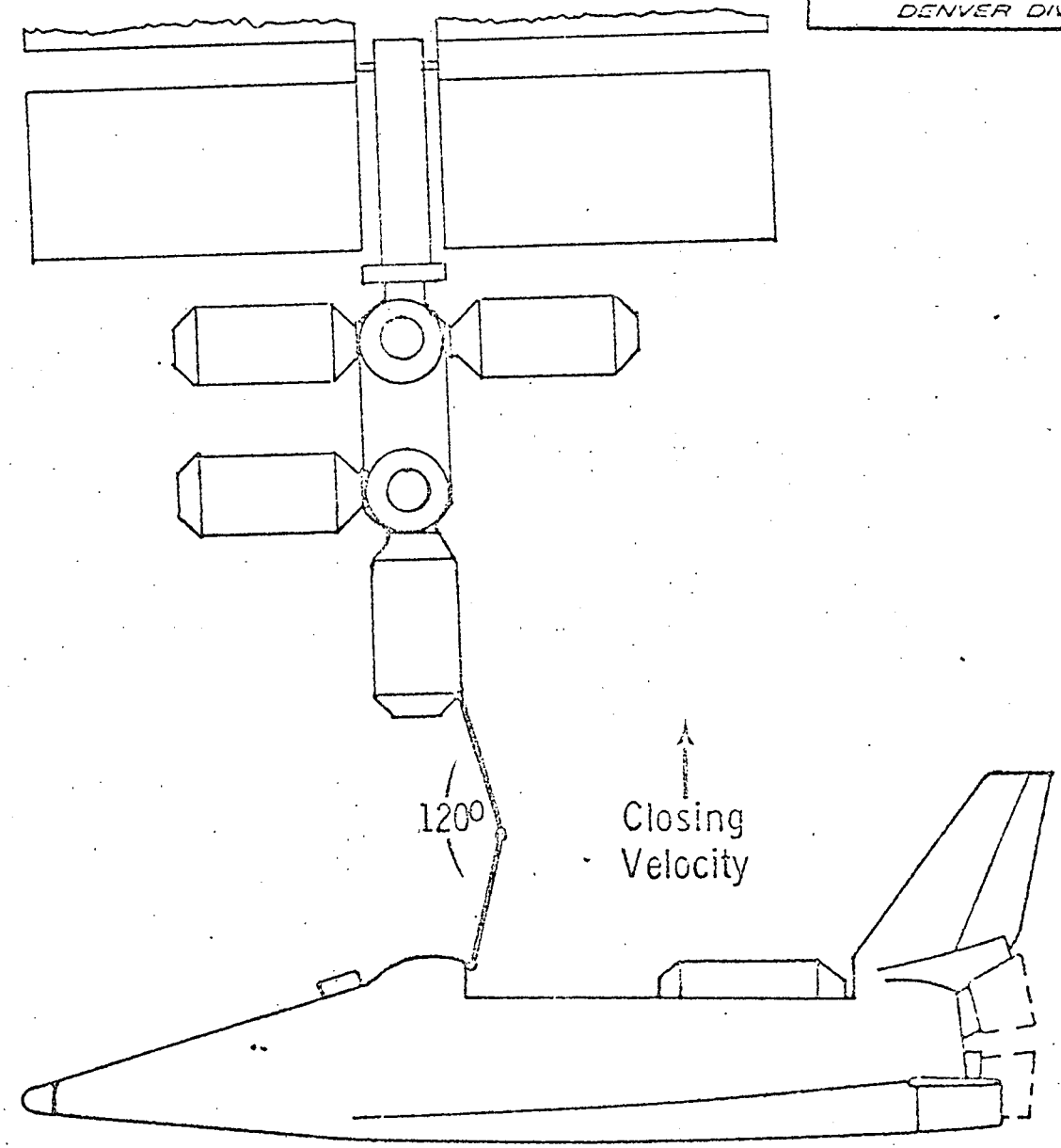

All Concepts

0 5 10 15 20
FT.

RELATIVE VELOCITY ZERO

DENVER DIVISION

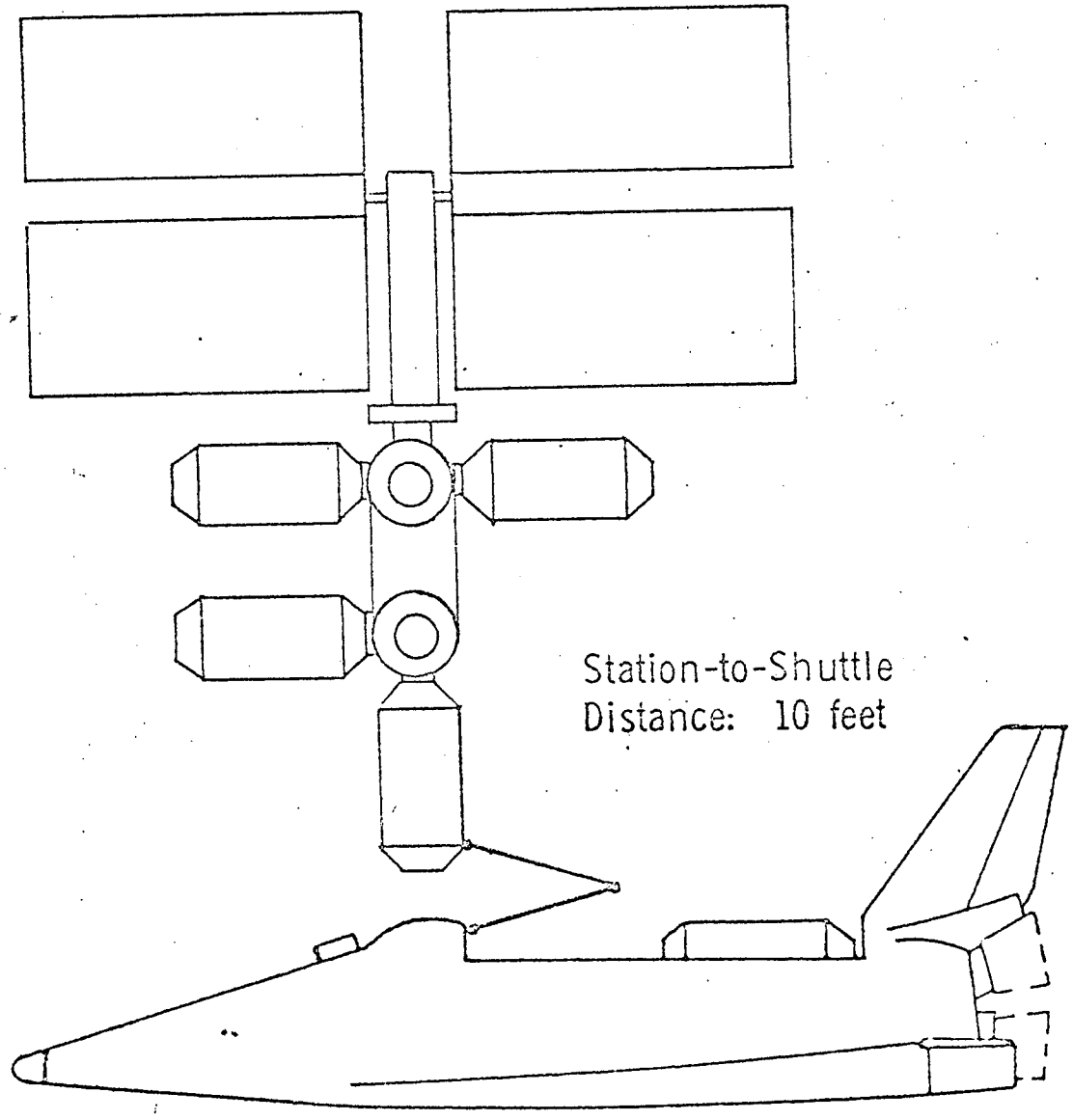

Station-to-Shuttle
Distance: 10 feet

All Concepts

0 5 10 15 20
FT.

SPACE STATION DOCKED TO SHUTTLE

Martin Marietta Corp.
DENVER DIVISION

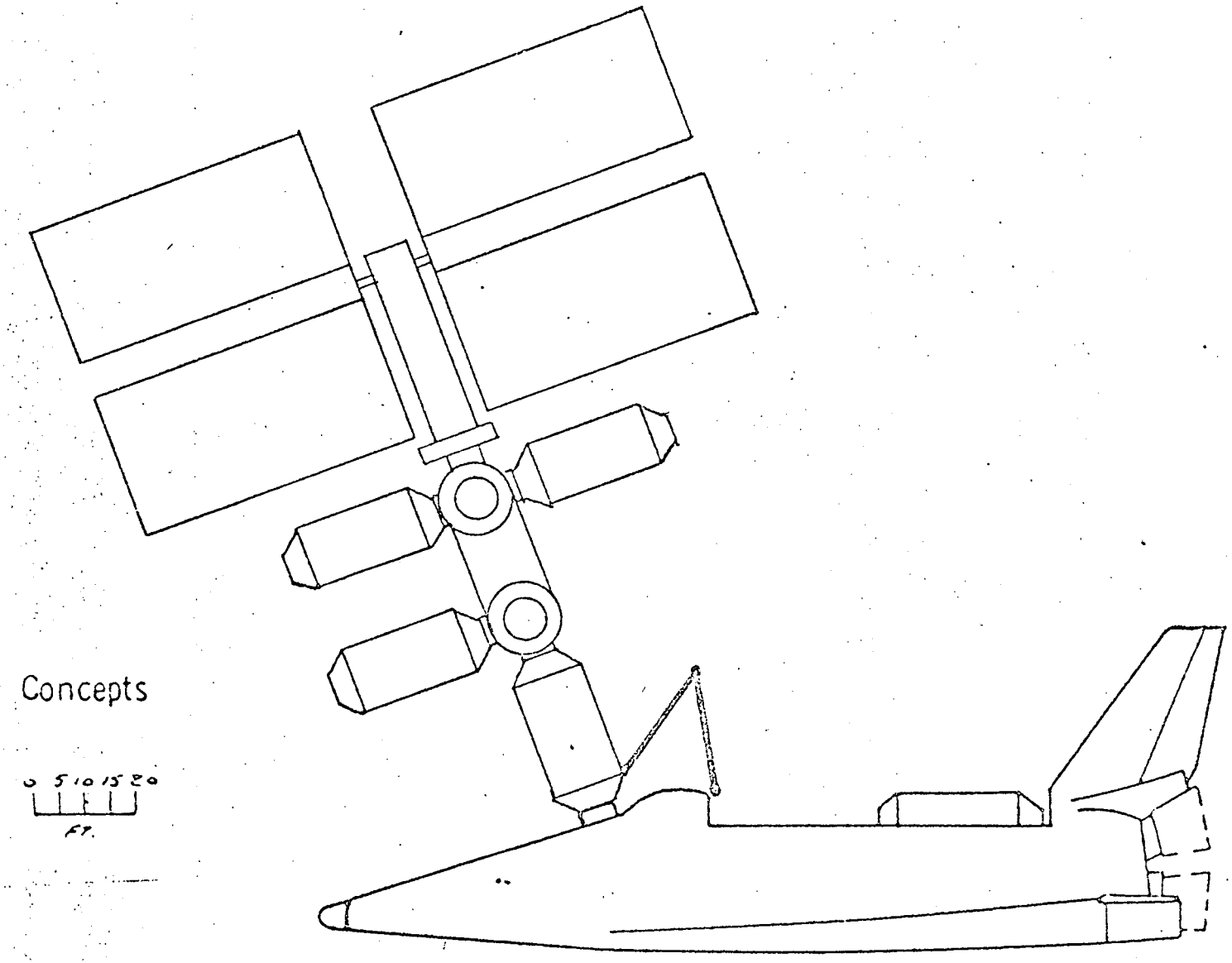

All Concepts

0 5 10 15 20
FT.

STATION MODULE UNLOAD, TRANSFER AND DOCK

DENVER DIVISION

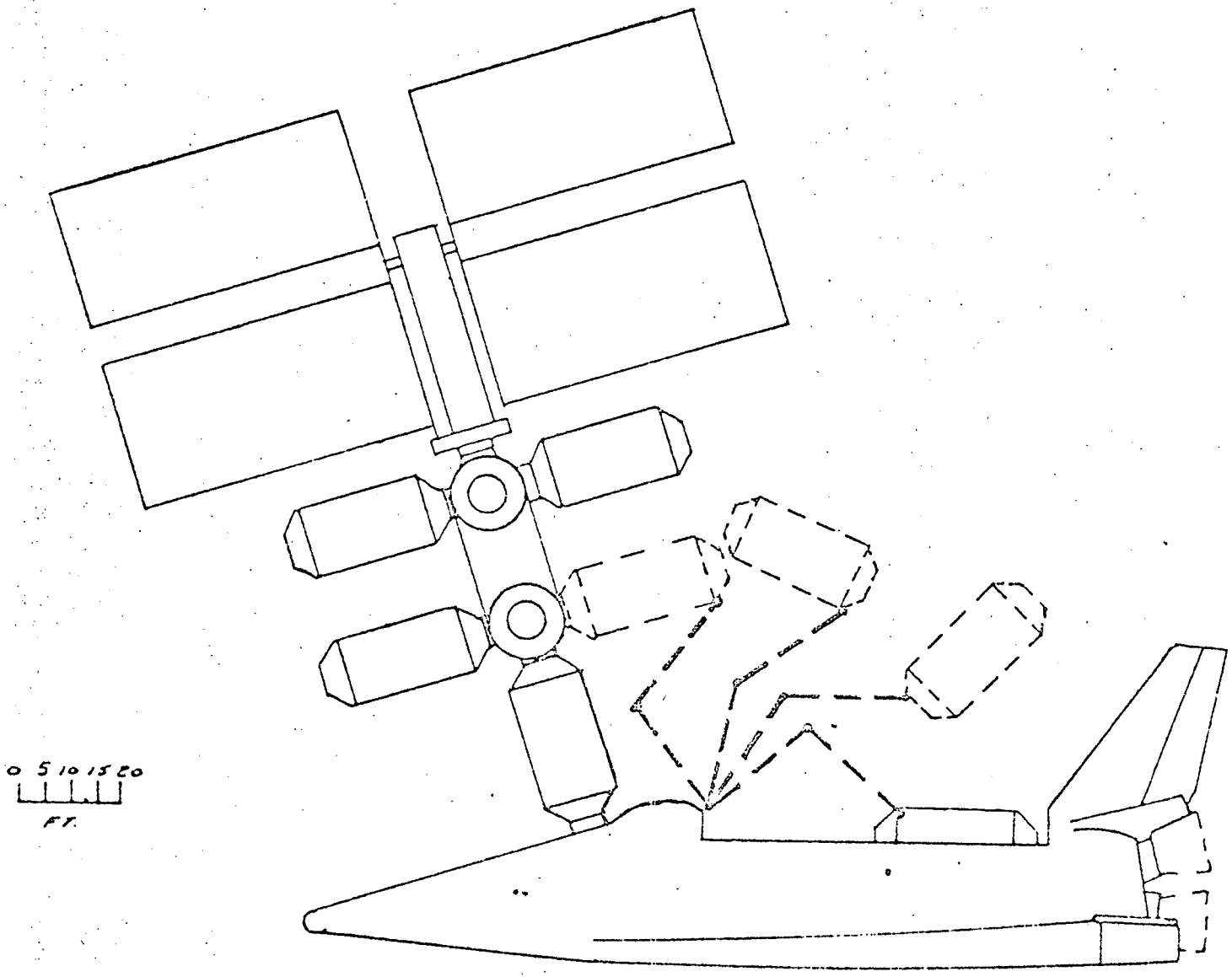

65,000 LB PAYLOAD DEPLOYMENT

MARTIN MARIETTA
DENVER DIVISION

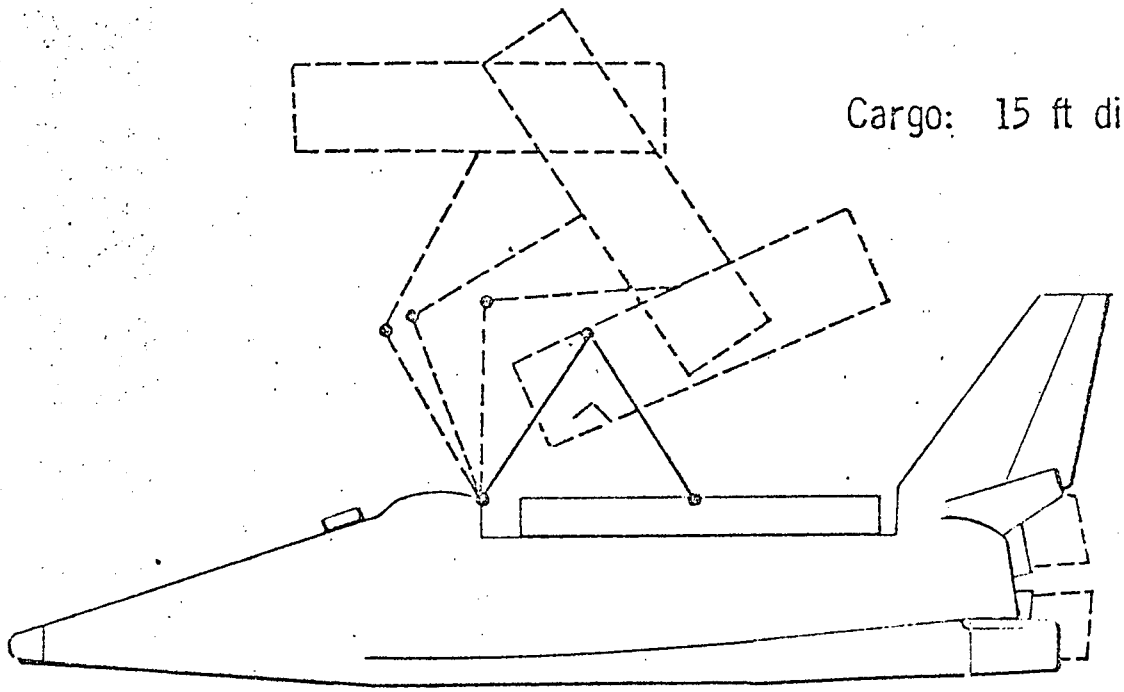

Cargo: 15 ft diameter by 60 ft long

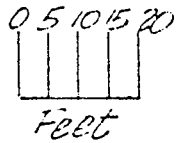

DOCKING SHUTTLE TO DISABLED SHUTTLE - 1

MARTIN MARIETTA
DENVER DIVISION

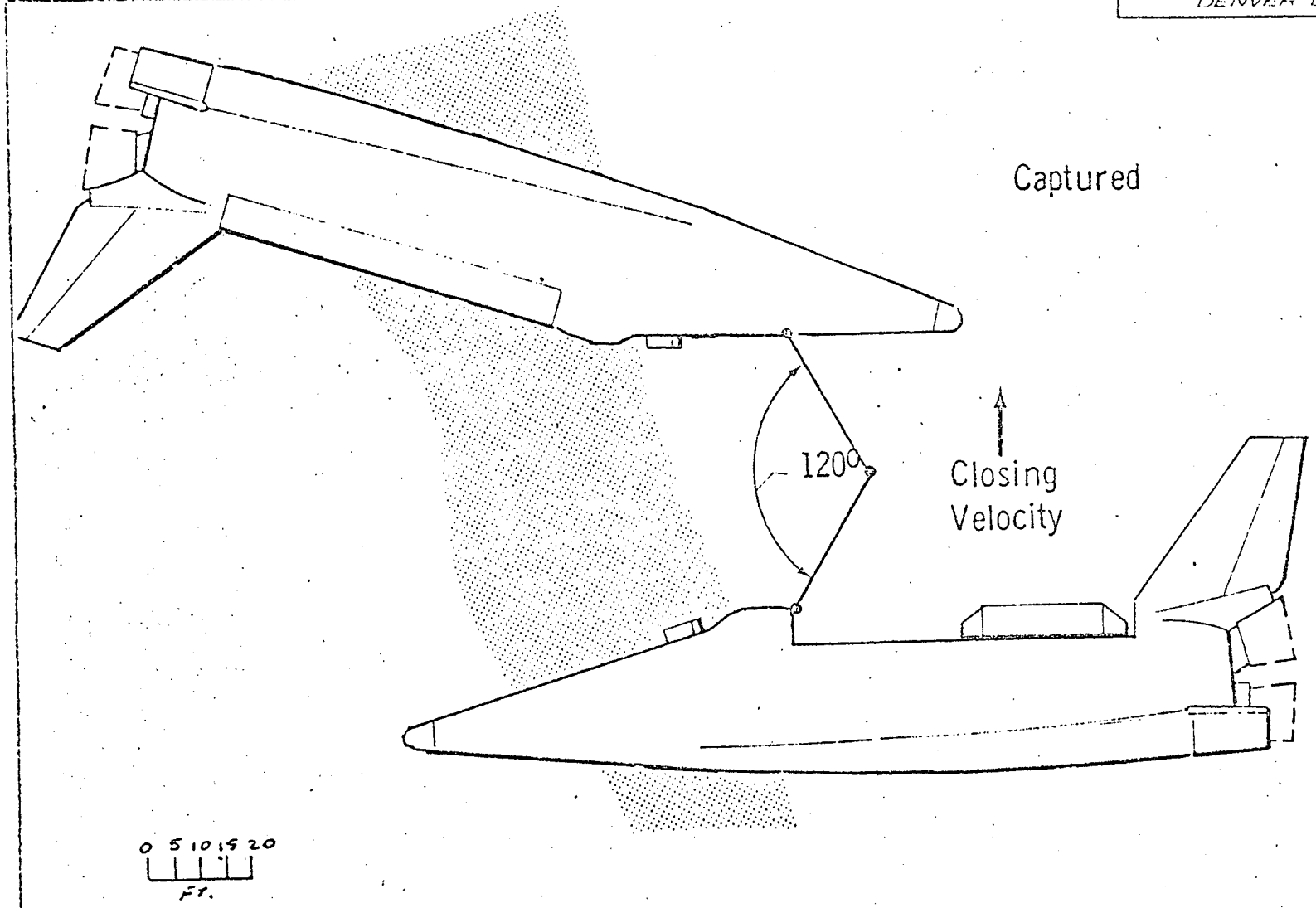

DOCKING SHUTTLE TO DISABLED SHUTTLE - 2

DENVER DIVISION

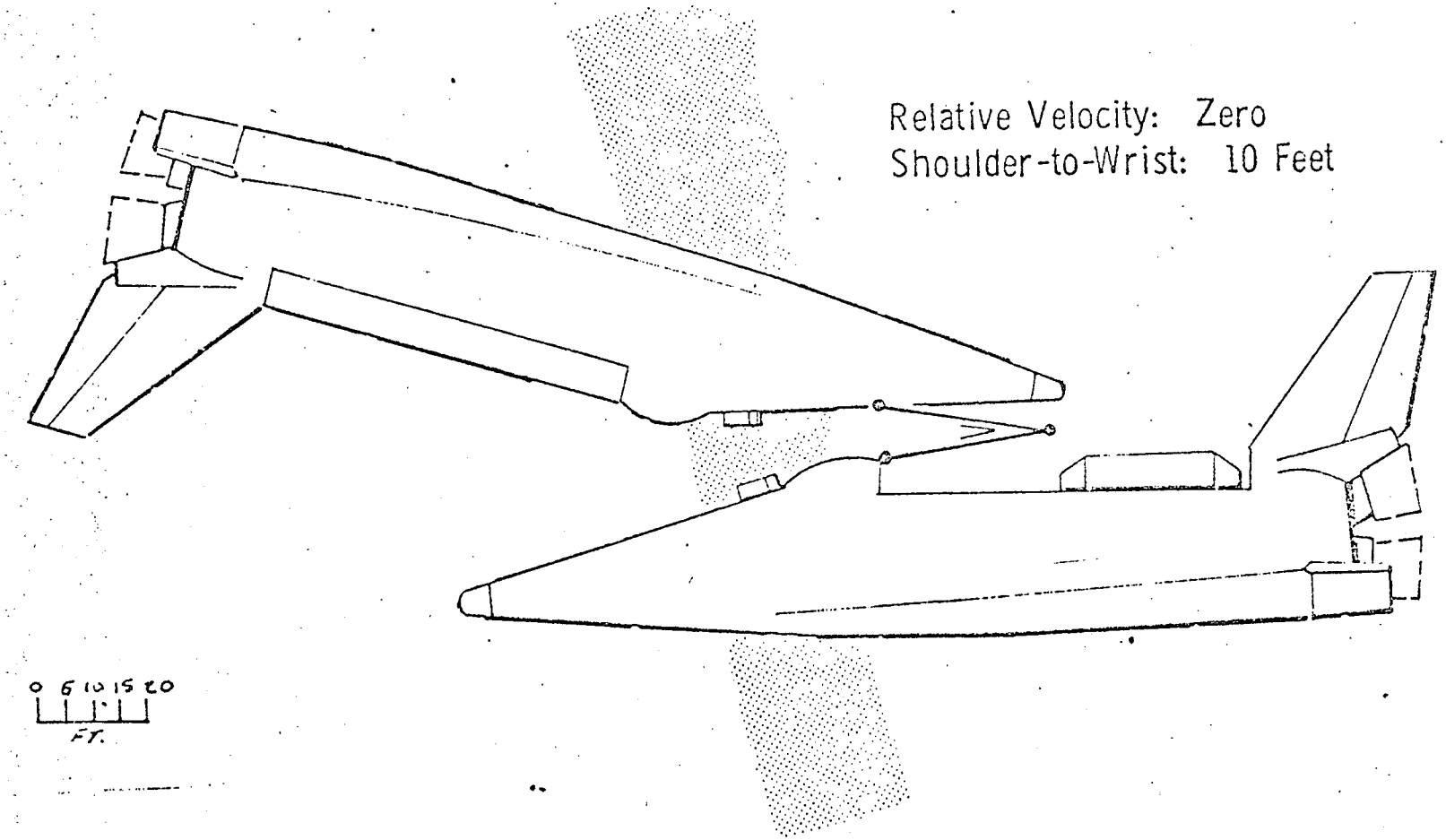

DOCKING SHUTTLE TO DISABLED SHUTTLE - 3

MARTIN MARIETTA
DENVER DIVISION

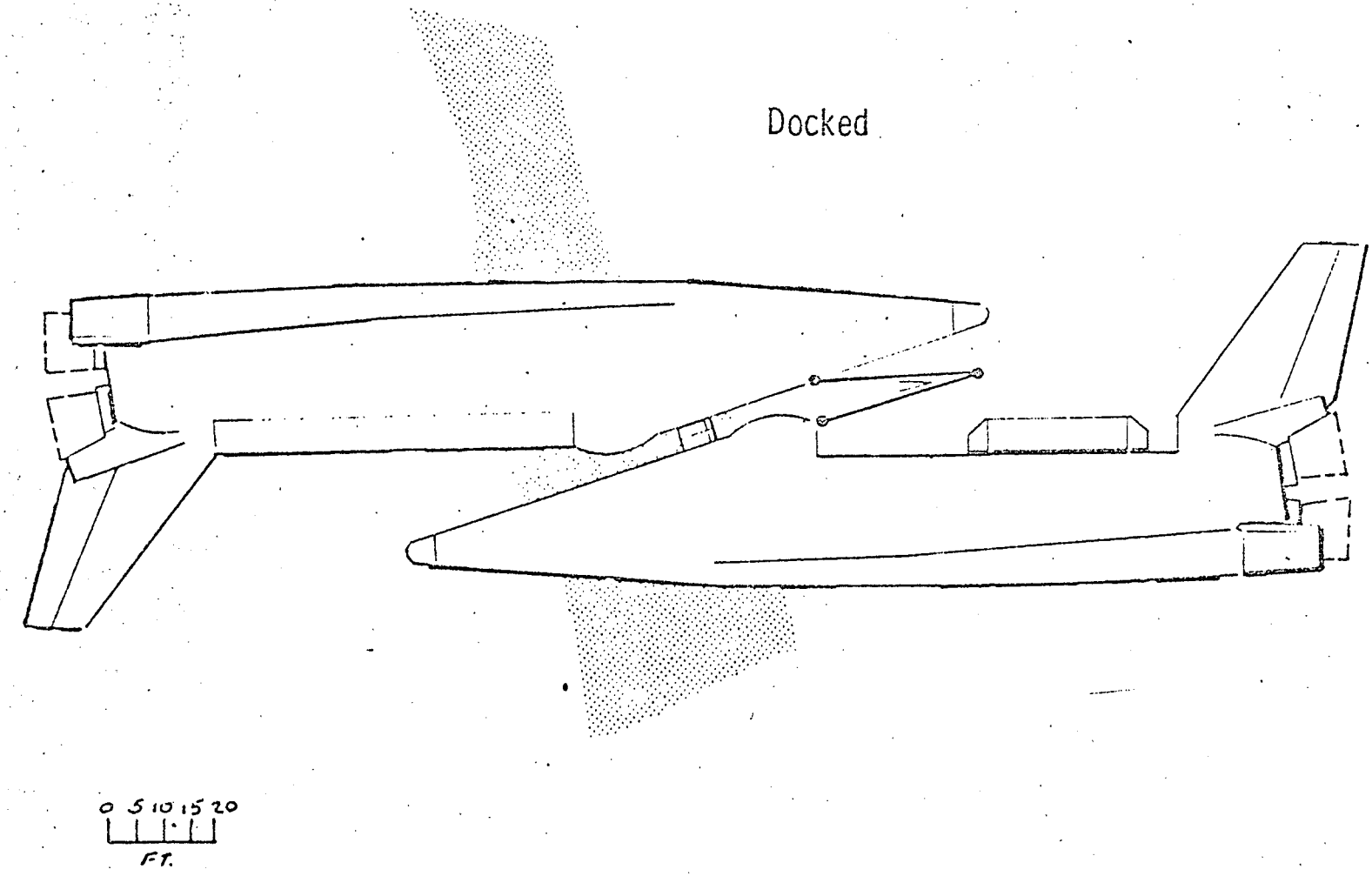

ARM FUNCTIONS FOR CONCEPTS WITH VARIABLE POSITION / LENGTH

DENVER DIVISION

Functions * / Configuration	SPACE STATION		SPACE STATION MODULE				65000# PAYLOAD		5000# SATELLITE		400# SATELLITE		DISABLED SHUTTLE	
	C	D	C	D	U	T	C	U	C	U	C	U	C	D
CONCEPT B														
Length 1	X	X	X	X	X	X	X	X	X		X		X	X
Length 2									X	X	X	X		
CONCEPT C														
Position 1	X	X	X	X	X	X	X	X	X		X		X	X
Position 2									X	X	X	X		
CONCEPT E														
Arm 1	X	X	X	X	X	X	X	X	X		X		X	X
Arm 2									X	X	X	X		
CONCEPT F														
Position 1	X	X	X	X	X	X	X	X	X		X		X	X
Position 2									X	X	X	X		
CONCEPT G														
Length 1	X	X	X	X	X	X	X	X	X		X		X	X
Length 2									X	X	X	X		
CONCEPT H														
Position 1	X	X	X	X	X	X	X	X	X		X		X	X
Position 2									X	X	X	X		
CONCEPT J														
Position 1	X	X	X	X	X	X	X	X	X		X		X	X
Position 2									X	X	X	X		

* Function Codes: C = Capture; D = Dock; U = Unload & Deploy; T = Unload, Transfer & Dock

ALTERNATIVE CONCEPTS DATA TABLE

DENVER DIVISION

Parameter \ Concept	A	B	C	D	E	F	G	H	I	J
Number of Arms	1	1	1	2	2	1	2	2	1	2
Number of TV Cameras	4	4	4	4	4	4	4	4	4	4
Manipulator Weight (lb)*	489	477	535	527	578	515	458	529	482	466
Arm 1 - Length (ft)	64	45	45	65	45	45	46	46	48	46
Base X - Location (in.)	1082	1082	1082 1300	1082	1082	1082 1300	1082	1082	1277	1082
Diameter (in.)	12	12	12	12	12	12	12	12	12	12
Wall Thickness (in.)	0.10	0.06	0.06	0.10	0.06	0.06	0.06	0.06	0.08	0.06
Torque (ft-lb)	1125	1500	1500	500	1500	1500	738	738	1225	738
Tip Force (lb)	45	77	77	18	77	77	37	37	59	37
Joint Accuracy (deg)	0.08	0.12	0.12	0.08	0.12	0.12	0.12	0.12	0.11	0.12
Arm 2 - Length (ft)	--	--	--	65	31	--	46	46	--	46
Base X - Location (in.)	--	--	--	1082	1843	--	1082	1082 1300	--	1082 1300
Diameter (in.)	--	--	--	12	2.25	--	12	12	--	12
Wall Thickness (in.)	--	--	--	0.1	0.03	--	0.06	0.06	--	0.06
Torque (ft-lb)	--	--	--	500	4	--	738	738	--	738
Tip Force (lb)	--	--	--	18	0.18	--	37	37	--	37
Joint Accuracy (deg)	--	--	--	0.08	0.17	--	0.08	0.08	--	0.08
Extension-[illegible] (ft)	--	19	--	--	--	--	19	--	--	--
Diameter (in.)	--	1.6	--	--	--	--	1.6	--	--	--
Wall Thickness (in.)	--	0.03	--	--	--	--	0.03	--	--	--
Torque (ft-lb)	--	10	--	--	--	--	10	--	--	--
Tip Force (lb)	--	0.16	--	--	--	--	0.16	--	--	--

*Baseline Arm Material; Boron Expoxy; Baseline Degrees of Freedom; 7 Per Arm + Extensions.

MANIPULATOR WEIGHT DISTRIBUTION

DENVER DIVISION

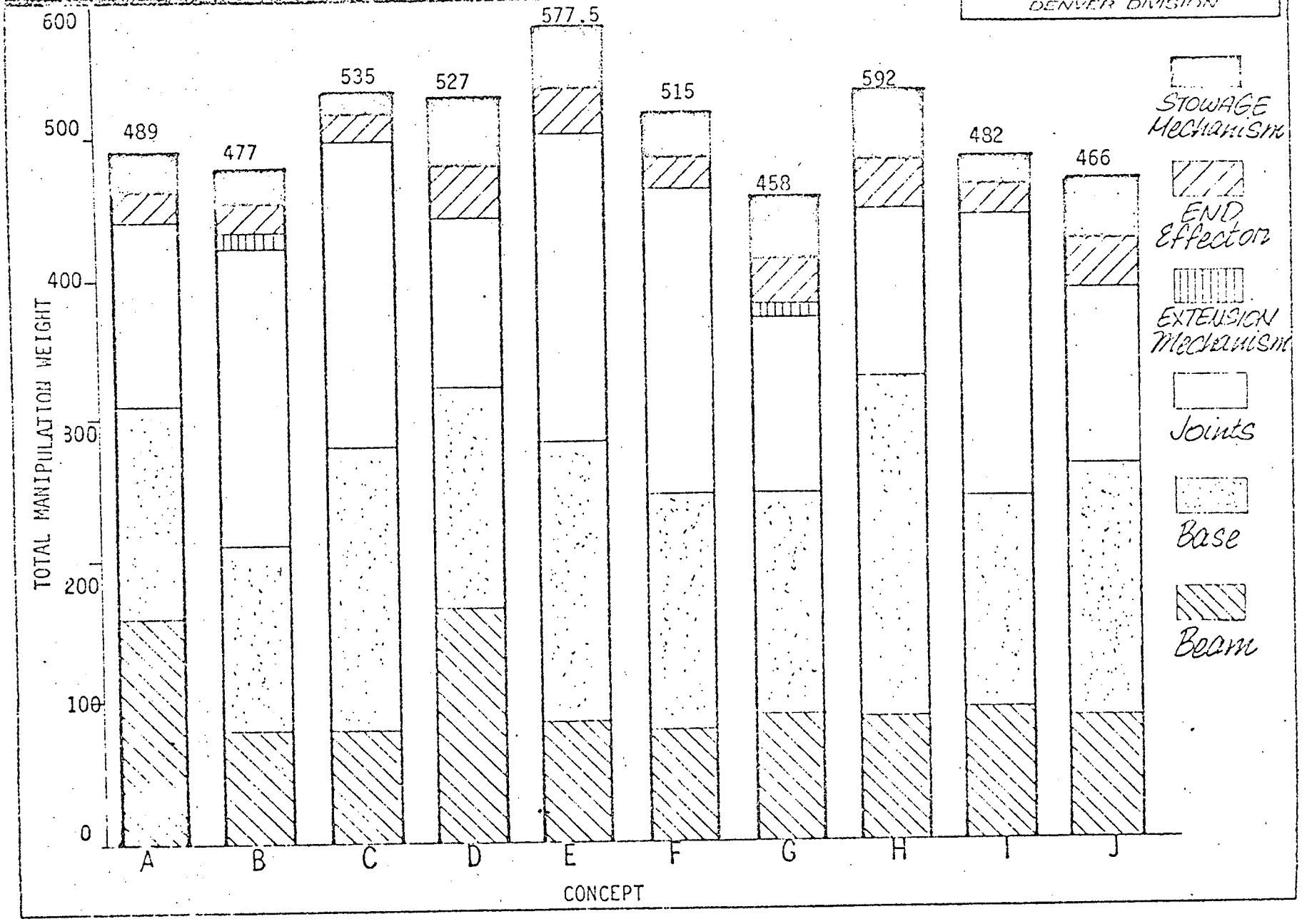

CONCEPT ADVANTAGES AND DISADVANTAGES

Configuration	Advantages	Disadvantages
Concept A One arm, Fixed Length Fixed Base	Simple design. Minimum interface problems. High reliability. Low cost. Straight forward controls and displays. Stows and deploys easily.	Long arm length. No redundancy. Orthogonal viewing at end effector not feasible. Limited capability for secondary tasks such as maintenance and repair.
Concept B One arm, Telescoping length, Fixed Base	Short basic arm length. Minimum interface problems. Better dynamic control with task dependent arm length. Minimum stowage volume.	Complex telescoping mechanism. No redundancy. Orthogonal viewing at end effector not feasible. Limited capability for secondary tasks. Additional displays required.
Concept C One arm, Fixed Length Moving Base	Short arm length. Better dynamic control with task dependent base location. High reliability.	Increased interface problems. Complex base mechanism. No redundancy. Requires additional controls and displays. Limited capability for secondary tasks.
Concept D Two arms, Fixed Length, Fixed Common Base	Good dynamic control. Redundancy for single arm failure for all non-docking tasks. Good capability for secondary tasks. Loads shared between arms.	Increased interface problems. Complex control for coordinated motion. Requires additional sensors/displays. Panoramic view more likely to be obstructed by arms. Long arm length. More complex collision avoidance.
Concept E Two arms, Fixed length, Fixed separate Bases	Short arm lengths. Provides limited redundancy for non-docking tasks. Better dynamic control with task dependent arm designs. Good capability for secondary tasks.	Increased interface problems. Separate controls/displays for each arm. High cost for development of two (2) different arms.
Concept F One arm, Fixed Length, Two Base Locations	Short arm length. Good dynamic control with task dependent base location. Minimum stowage volume.	Complex interface problems. Complex control problem to move base location. No redundancy. Limited capability for secondary tasks.

CONCEPT ADVANTAGES AND DISADVANTAGES

Configuration	Advantages	Disadvantages
Concept G Two arms, One fixed length, One telescoping Fixed Base	Good dynamic control. Redundancy for single arm failure for most cargo handling tasks. Good capability for secondary tasks. Loads shared between arms. Basic arm length short.	Complex telescoping mechanism. Additional sensors/displays required. Complex control for coordinated motion. More complex collision avoidance.
Concept H Two arms, Fixed length, One fixed Base One Moving Base	Good dynamic control. Redundancy for single arm failure for most cargo handling tasks. Good capability for secondary tasks. Loads shared between arms. Arm length short.	Increased interface problems. Complex base mechanism. Additional controls/displays required. Complex control for coordinated motion. More complex collision avoidance.
Concept I One arm, Fixed length, Fixed Base	Simple design. High reliability. Low cost. Straight forward controls and displays. Shortest total arm length to perform all tasks with fixed base, non-extendible arm.	No redundancy. Limited capability for secondary tasks. Non-symmetrical loads on shuttle.
Concept J Two arms, Fixed length One fixed base One multiple base	Good dynamic control. Redundancy for single arm failure for most cargo handling tasks. Arm length short. Good capability for secondary tasks. Loads shared between arms.	Increased interface problems. Complex control problem to move base location. Complex control for coordinated motion. Additional controls/displays required. More complex collision avoidance.

CONCEPT SCORING FORM

DENVER DIVISION

Parameter \ Concept	weighting	A	B	C	D	E	F	G	H	I	J
Cost	5										
Development Risk	5										
Shuttle Interface	5										
Weight	5										
Crew Work Load	5										
Engineering Development	5										
Probability of No Failure	3										
Mechanical Complexity	3	1	3	7	2	5	9	6	8	4	10
Secondary Task Cap. (Main. & Repair Task)	3										
Fail Operational Capability	3										
Direct Viewing Potential	3										
Stowage Volume	1										
Arm Length	1										
Crew Training	1										
Control Complexity (Computer Augmentation)	1										
Self-Maintenance Capability	1										
Telecommunications Complexity	1										
Displays	1										
Orthogonal Viewing*	1										
Collision Avoidance	1										

* Capability of viewing end effector at right angle during task performance.

ALTERNATIVE CONCEPTS RANKED

MARTIN MARIETTA
DENVER DIVISION

RANK	CONCEPT	SCORE	DESCRIPTION
1	A	216	One arm, fixed length, fixed base at cargo bay forward bulkhead.
2	I	227	One arm, fixed length, fixed base at 17 feet rearward from forward bulkhead.
3	D	254	Two arms, fixed length, fixed common base at cargo bay forward bulkhead.
4	B	272	One arm, telescoping length, fixed base at cargo bay forward bulkhead.
5	G	290	Two arms, fixed common base; one arm fixed length; other arm telescoping length, mounted at cargo bay forward bulkhead.
6	C	304	One arm, fixed length, moving base with primary position at cargo bay forward bulkhead.
7	H	325	Two arms, fixed length; one arm fixed base at forward bulkhead; other arm moving base with primary base at forward bulkhead.
8	E	354	Two arms, fixed length, fixed separate bases; one arm at cargo bay forward bulkhead; other arm at near bulkhead.
9	J	401	Two arms, fixed length; one arm fixed base; other arm movable base (self-locomotion) with primary position at forward bulkhead.
10	F	414	One arm, fixed length, movable base (self-locomotion) with primary base at cargo bay forward bulkhead.

SHUTTLE DOCKING & CARGO HANDLING MANIPULATOR
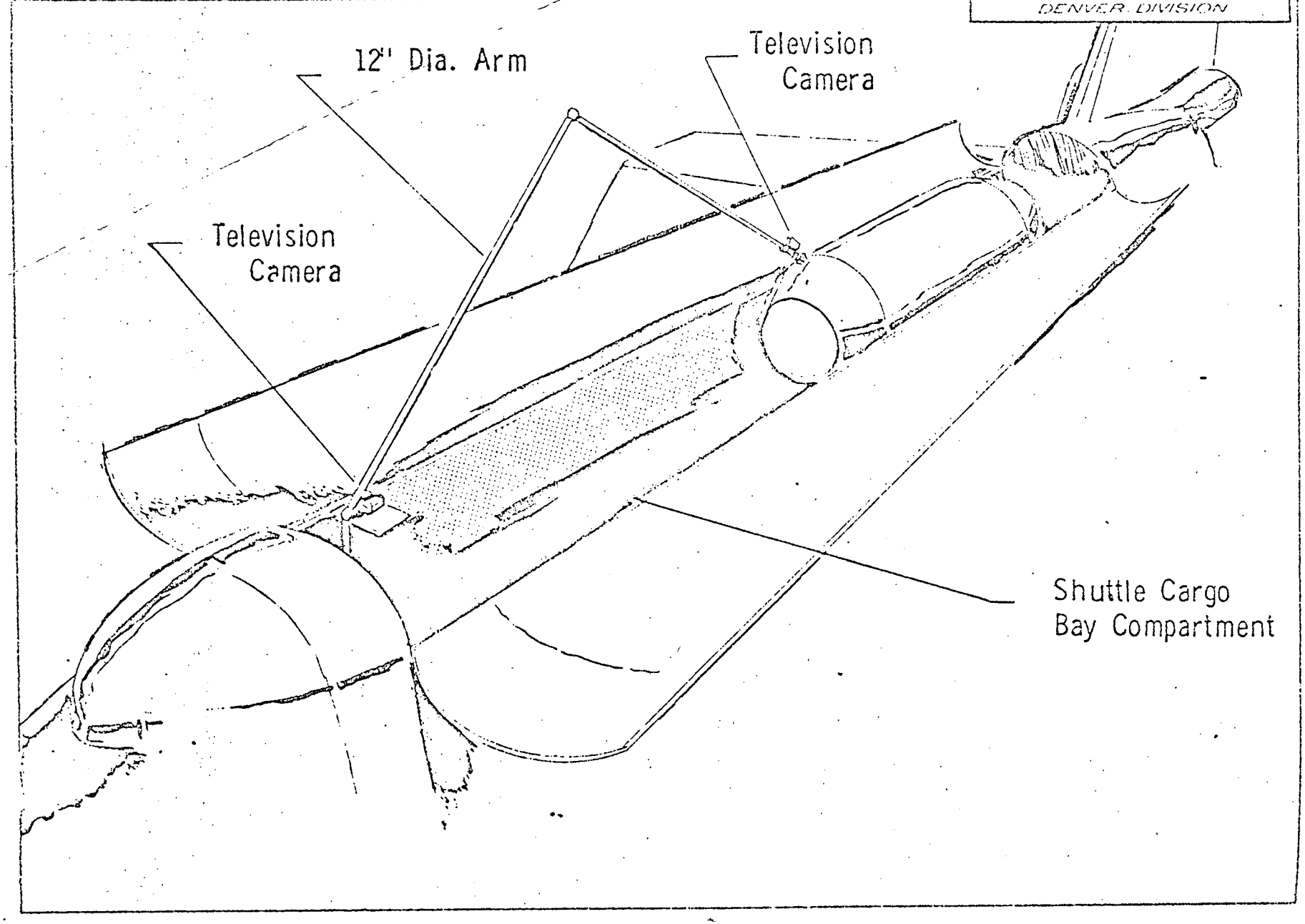
DENVER DIVISION