SOME ASPECTS OF PROPULSION FOR THE AUGMENTOR-WING CONCEPT

by

D.C. Whittley
Deputy Director - Research
The De Havilland Aircraft of Canada, Limited
Downsview, Ontario, Canada

SUMMARY

Many modern concepts for STOL and V/STOL aircraft rely on integration of the propulsion system with the wing to create favourable lift interactions and therefore they have become known as "powered-lift" concepts. A study of powered-lift concerns the management and control of the various propulsive streams or jets, with each concept having its own particular objectives and requirements. This paper describes some specific objectives of this kind which relate to the Augmentor-Wing.

Consideration is given to three aspects of the subject, namely: the augmentor flap itself, the wing ducting and augmentor primary nozzle and the choice of powerplant or engine cycle. More generally, comments are made regarding noise attenuation and the prospect for achieving a low overall noise level for jet-STOL aircraft of the future.

INTRODUCTION

Previous papers (references 1 and 2) have described how small scale tests of the augmentor flap led to the design and construction of a large 42 foot span straight wing model for tests in the NASA Ames 40' x 80' wind tunnel. (Figure 1.) These early tests placed emphasis on performance and longitudinal stability and control. Subsequently, tests have been directed toward investigation of lateral stability and control and toward aerodynamic interference due to vectored propulsive thrust and to the addition of pylon and nacelles to the model. (Figure 2.) A parallel program on one of the large moving base flight simulators at the Ames Research Center was carried out to study stability and control and handling qualities of a projected flight research aircraft. (Figure 3.) These extensions to the original program provided the technical foundation for flight research experiments and have resulted in a joint USA/Canada program to incorporate the Augmentor-Wing concept in a de Havilland Buffalo airframe using two Rolls-Royce Spey turbo-fan engines. (Figure 4.) The Boeing Company is the airframe contractor for NASA in this flight program with de Havilland under contract to the Canadian Department of Industry for provision of the powerplant and nacelle assembly. Thus, following a period of nearly five years' research on the large straight wing model, sufficient confidence has been gained to justify flight experiments with a straight wing. The need to extend research to swept wings was realized early in 1966 and long term plans were made in Canada to build a swept wing to fit on the same fuselage and use the same compressed air unit as for the large straight wing model. (Figure 5.) Agreement was eventually reached and the swept wing has now been built and has undergone one test series early this year in the Ames 40' x 80' wind tunnel. The straight wing has a thickness/chord ratio of .16 whereas the new swept wing has a thickness/chord ratio which varies from 0.125 at the root to 0.105 at the tip, and therefore is more representative of a modern high speed subsonic transport aircraft. Both wings have an aspect ratio of eight approximately.

This paper describes some of the small scale tests and background work which has been undertaken in Canada to ensure success of the large scale model tests in the NASA Ames 40' x 80' wind tunnel. This work dealt mostly with internal aerodynamics and development of the augmentor flap. Also some comments are made regarding the special requirements and constraints which an internal blowing concept, such as the Augmentor-Wing, places on the choice of powerplant.

THE AUGMENTOR FLAP

In Canada, the first suggestion for a powered spanwise slot in the wing was made by T. Higgins in 1960. The concept had three or four spanwise slots located in a multi-spar wing and was powered by the primary exhaust gas of a turbo-jet engine. (Reference 1.) This idea was modified and much simplified by the author to just a single slot located behind a conventional wing box and powered by the relatively cold by-pass air from a turbo-fan engine and this, together with the engine off-take and ducting arrangement, has become the Augmentor-Wing concept as we know it today. Optimization of the ejector has been carried out by D.B. Garland and the idea for a slot in the upper flap element to provide boundary layer control by suction is due to J.E. Farbridge.

In the following, consideration is given to the reasons for choice of an augmentor flap, the objectives from a design point of view and the performance of the flap as a propulsion device.

Many of the reasons for choice of the augmentor flap relate to its aerodynamic characteristics. These have been described in some detail in a recent paper (reference 3). In particular, it has been shown that the suction pressure set up by induction of secondary air into the flap provides a powerful mid-chord control and that this leads to satisfactory stalling characteristics of the wing, whether straight or

swept, at quite high values of lift coefficient. However, not all of the advantages relate to the aerodynamics of the wing, some, in fact, relate to the augmentor flap as a device for propulsion.

One of the earliest ideas for powered lift relates to blowing over a plain flap and using the minimum of air so that the flow just remains attached. Air for blowing the flap is obtained by bleeding the compressor of a turbo-jet or turbo-fan engine. It now appears that the level of lift which can be obtained in this way is not very much greater than available from a highly developed mechanical flap and that thrust for take-off is degraded by bleeding the compressor. The Augmentor-Wing concept represents an attempt to overcome these two objections: firstly, sufficient air is ducted to the flap so that it operates in the region of supercirculation and therefore generates substantially more lift than that available from a mechanical or "BLC" flap and also, C_{Lmax} now becomes speed dependent, and therefore, a wider stall margin can be achieved. Secondly, by-pass air is used to power the flap so that thrust degradation due to compressor bleed is avoided, also the degree of thrust augmentation achieved is sufficient to more than offset the duct loss and therefore, the previous trend toward degradation of thrust is reversed.

For take-off, at moderate flap angles (say, less than 50°), the principle of thrust recovery holds true for a deflected jet sheet so that the propulsive thrust advantage is maintained even though the jet is deflected. For landing, the augmentor flap provides a very positive means of thrust deflection through the large angles which are required to achieve a steep descent gradient.

Design and Optimization of Augmentor Flap Geometry. Design of the flap takes place within fairly well defined limits. To retain a reasonable wing box for torsional stiffness, the rear spar is located at about mid-chord therefore the ducting and flap (when stowed) must be housed within the remaining wing contour. The thickness of wing nozzle "t" is established by the desired thrust in the wing (about 35% of total) and by the corresponding pressure ratio (between 2 and 3). In order to achieve a reasonable augmentation of thrust the throat width of the ejector should be at least twelve "t" and, to establish good mixing, the length to width of the ejector should be at least five. The radius of the Coanda surface should be as large as possible (consonant with other geometric requirements) so as to give a wide operating range of flap angle.

These constraints largely define the augmentor flap geometry and the chosen design is obtained by iteration using a drafting layout. There remains one important factor, namely, the choice of location of the Coanda surface relative to tne nozzle.

By experience it has been found desirable to direct the jet downward fifteen degrees relative to the chord line. In earlier designs the Coanda surface was isolated from the main lower flap element (Figure 6) and, by a small rotation of the Coanda surface relative to the flap, a position could be found which was optimum for augmentation of thrust - the objective being to adjust the geometry so as to arrange for the velocity profile at exit to have a peak close to the centre of the passage. Subsequently it was determined that this secondary slot in the lower surface could be eliminated and a new position found for the flap (relative to the nozzle) which gave comparable results.

The optimum position for the flap is found experimentally for a range of flap angles (typically 30° to 80°) by systematic testing within a geometric grid. It has been found by experience that performance of the flap depends upon the magnitude of the "jump" which the jet takes as it turns and attaches itself to the Coanda surface. This jump distance is defined by the parameters "z" and "ℓ_z" where the distance "z" is a measure of the gap and "ℓ_z" is a measure of the horizontal displacement of the Coanda surface relative to the nozzle.

Contour plots are made of constant augmentation on graphs of z vs ℓ_z showing departure from optimum for each flap angle, an example of which is shown in Figure 7. Finally, a single pivot point is chosen which locates the flap close to its optimum position over the range of flap angles chosen.

Performance of the augmentor is defined in terms of net augmentation ratio ϕ_s, where

$$\phi_s = \frac{\text{Measured thrust}}{\text{Isentropic thrust supplied to the pipe}}$$

Within the geometric confines and requirements for an augmentor flap, the value of ϕ_s appear to lie in the range 1.3 to 1.6.

Effects of Forward Speed.

- Optimization. The procedures for optimization outlined in the previous section relate to static tests. Clearly it is considerably more difficult to carry out such an optimization in the wind tunnel because for one reason, the detailed performance of the ejector tends to become masked by the aerodynamic loads generated by the wing. In general, it has been found that a deflected flap, chosen on the basis of static tests, also gives best performance in the wind tunnel at values of blowing coefficient appropriate to take-off and landing.

- Experimental Performance. At first sight it would seem that the effect of speed on performance of the augmentor flap could be deduced from pressure surveys at the exit plane. Whereas this is possible, in practice it becomes very tedious and time consuming because of the variation in exit distribution from point to point along the span. However, by careful analysis of force data, some understanding of

performance has been obtained from various wind tunnel model tests.

There are two questions of fundamental interest. How does the augmentation ratio of the ejector vary with forward speed? and, to what extent does the thrust recovery hypothesis apply to the rather thick deflected jet sheet which issues from the augmentor flap?

Consider a wing blown with a jet strength defined by the coefficient C_{J_I} which is based on the isentropic thrust supplied to the wing nozzle. Statically the flap generates a thrust corresponding to $\phi_s C_{J_I}$ where ϕ_s is the net static augmentation ratio which takes into account both nozzle loss and ejector gain. Two multiplying factors are introduced, one which is a measure of the loss in thrust with forward velocity due to the fundamental characteristic of the ejector (K_V) and one which is a measure of the departure from a performance corresponding to full thrust recovery (K_R). Normally K_R would not be less than $\cos \delta_F$, where δ_F is the angle of flap deflection.

Thus the thrust experienced in the wind tunnel would correspond to $C_T = K_V K_R \phi_s C_{J_I}$ when expressed in coefficient form. The highest value of C_T would result with full thrust recovery ($K_R = 1$) and no loss of ejector performance with velocity ($K_V = 1$) giving $C_T = \phi_s C_{J_I}$. The lowest expectation might correspond to complete loss of augmentation ($K_V = 1/\phi_s$) and a recovery factor $K_R = \cos \delta_F$ giving $C_T = C_{J_I} \cos \delta_F$. Assuming $\phi_s = 1.3$ and $\delta_F = 50^o$, then the ratio of the maximum to minimum values of C_T would be $\phi_s : \cos \delta_F = 1.3 : 0.64$. It is quite possible to detect differences of this order of magnitude by analysis of wind tunnel test data especially since experimental values of C_{J_I} of interest may reach as high as 2:5. However, the accuracy of the method may be open to some criticism.

An expression for thrust and drag is written as follows:

$$C_{D-T} = C_D - C_T = C_{D_o} + \frac{C_L^2}{\pi A + r\, C_J} - K_V K_R \phi_s C_{J_I}$$

The wind tunnel data is plotted in the form C_D vs C_L^2 and the intercepts at $C_L^2 = 0$ are plotted versus C_{J_I}. The slope of this curve gives an experimental value of $K_V K_R \phi_s$. This process requires extrapolation of the C_D vs C_L^2 to zero C_L which introduces some loss in accuracy. Alternatively, cross plots can be made at fairly high C_L (say 3 or 4) and thereby avoid the extrapolation. This latter process is justified in the belief that the value of "r" in the expression for induced drag is small (as suggested in reference 4), and much less than the value of two given by Spence.

A typical plot using the intercepts at $C_L^2 = 0$ is shown in Figure 8 and is taken from tests of a quast-2D model in the 6' x 9' tunnel at the National Aeronautical Establishment, Ottawa. The particular configuration shown has a value of $\phi_s = 1.30$ whereas the factor $K_V K_R \phi_s$ is shown to be 1.21. Thus $K_V K_R = 0.93$ but it is not possible to determine whether the departure from ideal performance ($K_V = K_R = 1$) is due to a reduction in K_V or K_R or a combination of both.

Results from the same model show that lift and drag data collapse using C_{J_I} as parameter over the likely range of speed and blowing coefficients appropriate to operation in the STOL mode. (Figure 9.) A possible reason for the invariance of drag coefficient with speed (at constant C_{J_I}) is given in the following section.

- Theory. Much work has been carried out on ejector theory but it would appear to be of limited value to the designer (see conclusion one of reference 5). A theory has been developed by the author for use at de Havilland based on the original work of Von Kármán published in the Reissner Anniversary Volume. Space allocation does not permit this work to be presented here, nevertheless one comment is appropriate. The theory of Von Kármán accounts for a non-uniform inlet velocity distribution but assumes a uniform exit profile. His theory has been extended to account for a non-uniform exit profile (which is very much to the point from a practical point of view) and for the effect of forward speed. Theory then shows that the effect of forward speed is to reduce thrust to some new level in an asymptotic fashion. However, experiments indicate that the exit profile becomes more uniform as speed increases which, as is known, gives rise to an increase in augmentor efficiency. Thus these two effects are offset, one against the other, so that augmentor thrust seems to remain substantially constant over the speed range of interest for STOL operation. This result can only hold true if the exit distribution is non-uniform in the first place (that is, at zero forward speed), which tends to be the case for an augmentor flap because of geometric limitations which allow only a moderate mixing length between the two flap elements.

WING DUCTING AND AUGMENTOR PRIMARY NOZZLE

Ducting and Pressure Loss. The primary design objective of the ducting arrangement which supplies air to the augmentor flap is to avoid roll asymmetry in the event of engine failure. In the case of a twin-engined aircraft this can be achieved using a twin-slot nozzle arrangement with independent ducting from each engine. (See Figure 10.) Two possible arrangements for duct routing are shown in Figure 11. In the case of a four-engined aircraft, a similar duct/nozzle assembly may be used with each engine being independent; alternatively the by-pass flow may be fed to a common duct with a single slot nozzle (see Figure 12). In this latter case, since the engines feed a common duct, various two-way valves are required and the design scheme must account for starting engines individually, for engine failure and for the appropriate matching of nozzle area. One such scheme has been proposed by G. Wright of Rolls-Royce.

Experience has shown that, for an internal blowing system of the kind being considered, the pressure ratio lies somewhere between two and three depending upon choice of aspect ratio, thrust to weight ratio etc. At a pressure ratio of 2.5, the complete loss of one dynamic head represents a pressure loss of about 5% whereas a carefully designed right angle bend need only account for a loss given by $\Delta P/_q = 0.25$. Calculations suggest that, for a typical duct installation, the overall pressure loss need not exceed 8 to 10% of total pressure which would correspond to a thrust loss of 4 to 5%. The large swept wing tunnel model provides one example of a ducting system for which pressure loss measurements are available (Figure 13). The flow experiences a sudden expansion and high loss where the compressor feeds into the plenum chamber but in this respect, it is not considered to be representative of a full scale aircraft.

Nozzle Design. Experience at de Havilland relates largely to a long thin type of nozzle which is "closely coupled" to the supply pipe and which is fed from one end. If the pipe is short (as in the case of the segment used for component test in the de Havilland research laboratory), then the inlet Mach number is quite low (say 0.05), conditions in the pipe are substantially plenum and guide vanes in the nozzle are straight and set normal to the pipe. In the large model which has been tested in the NASA 40' x 80' wind tunnel (Figure 1), the pipe inlet Mach number is approximately 0.3 falling to zero at the end so that curved guide vanes must be designed accordingly. In the case of the swept wing for the large model, the complete semi-span is fed by a single pipe from root to tip and is tapered so as to maintain a constant pipe Mach number of approximately 0.29. Thus the jet issues from the swept nozzle at a constant angle to form a jet sheet which is in line with the free stream. Under these circumstances the guide vanes are curved and geometrically similar but do not act as turning vanes; they merely form a fairing to hold the duct/nozzle assembly together.

The efficiency of the nozzle has been shown to depend upon its perimeter/area ratio which, for long thin nozzles is inversely proportional to nozzle thickness 't' and independent of length. For a nozzle of thickness t = 0.25 in., efficiency is typically about 0.95.

If the guide vanes are spaced reasonably for structural purposes they do not affect the nozzle efficiency to any appreciable extent. However, the disturbance or wake created by the vanes has been shown to increase the augmented thrust when operating as part of a complete ejector. Presumably these disturbances promote better mixing and can lead to improvement up to 10% in augmentation ratio as compared to a "clean" nozzle without guide vanes. This rather surprising result has led to an increase of interest in segmented or piccolo type nozzles.

Simple piccolo type nozzles have been constructed by squeezing a tube (Figure 14). This results in a slight fish-tail shape so that, at the edges, jets from adjacent nozzles tend to impinge on each other and create "humps" in the flow. Again, this promotes greater mixing and leads to an improvement in augmentation as compared to a "clean" slot nozzle. End fed pipes fitted with piccolo type nozzles have been designed without undue loss as compared to the vane type duct/nozzle assembly.

Noise. It has long been maintained that the ejector flap provides a means for noise attenuation for the following reasons:

a) The long thin nozzle changes the characteristic dimension of the jet thus shifting the noise generated to higher frequencies when it is then more easily attenuated by the surroundings.

b) The entrainment action of the ejector reduces the relative shearing velocity between the jet and surrounding air thus greatly reducing the fundamental jet noise which is dependent on the jet shearing velocity to the eighth power.

c) The inner surfaces of the flap elements can be lined to absorb sound energy before it emanates from the exit of the ejector.

It is only fairly recently that some specific tests have been carried out to demonstrate this; for example see reference 6.

Further to this, research work is in progress at de Havilland to attenuate noise at the source by changes to design of the nozzle itself. Figure 15 shows an augmentor model mounted on an outside stand for purposes of noise measurements. Microphones are located at a radius of 25 feet at a height which corresponds to the centre line of the jet. Reductions in noise of up to 5 dB have been achieved by appropriate modifications to the nozzle as compared to a plain slot nozzle. This result helps to reinforce the view that noise generated by the augmentor flap can be attenuated so that it need not predominate relative to other noise from the propulsion system.

CHOICE OF POWERPLANT

The previous sections of the paper have described directly or indirectly some of the constraints placed upon the designer of the airframe on account of integration of the powerplant and wing. This section deals with some of the constraints on the powerplant itself.

The Requirement. Firstly, a reminder that the following comments apply to a transport type aircraft designed to operate in and out of a field length of about 2000 ft or less, having a wing loading about 75 lb/sq ft, an aspect ratio of 8 to 10 and requiring an installed thrust to weight ratio in the order of 0.4 to 0.5

Calculations have been shown that the percentage of blowing thrust to total thrust is about 35 to balance take-off and landing distances. The take-off distance considers failure of one engine at rotation speed and the landing field length is derived from the landing distance using the conventional factor of 1.67. Project design studies have shown that the ideal pressure ratio for blowing is approximately 2.5.

Three possible powerplant arrangements have been considered to suit this requirement.

(1) Separate engines for propulsion and blowing.

(2) A two stream twin spool engine with relatively high by-pass pressure ratio (to satisfy the requirement of duct sizing).

If low noise is a requirement, then cold to hot stream thrust is in the ratio of 80 : 20 approximately and all the cold flow is ducted to the wing where the noise generated by the fairly high pressure stream is attenuated by the augmentor flap. If low noise is not a primary requirement (say, for military application), then, in the case of the 80 : 20 engine only, about half of the by-pass flow need be ducted to the wing. Alternatively the engine may be like the Rolls-Royce Spey with a low by-pass ratio (i.e., less than one), but with a substantial hot thrust - by percentage about 70.

(3) A three stream engine with fairly high by-pass ratio (about 5) which generates two by-pass streams, one at a low pressure ratio (say 1.2) and a second stream at about 2.5 for blowing.

Such an engine having either two or three spools would provide low noise levels and be suited to civil STOL application.

The preferred powerplant arrangement has not been clearly identified and might vary depending on the particular aircraft requirement.

Solution one tends to be favoured by the engine manufacturer but meets some resistance from potential operators because they prefer a single type of engine for ease of maintenance. Also, use of separate engines results in a high installed thrust to weight ratio and therefore in higher operating and powerplant first costs.

Solution number two requires a fairly simple two-spool engine but, if low noise is prescribed with this class of engine, then it presents the designer with the difficult task of accommodating a high proportion of the thrust in the wing. Nevertheless this solution seems to be preferred by Boeing and NASA (see references 6 and 7). If low noise is not specified, then the Spey type of engine seems reasonably well suited to the requirement.

On the basis of present knowledge, de Havilland considers the three-stream engine as the best solution for a quiet civil STOL airliner of the future. A comprehensive review of the various options is beyond the scope of the present paper and therefore the remainder of the section will be devoted to a discussion of the three stream engine.

For take-off there is a need to generate both blowing thrust and propulsive thrust whereas for descent there remains a need for blowing thrust only - in fact, propulsive thrust becomes an embarrassment and, if present, it must be "spoiled" either by vectoring (90° deflection) or by partial reverse. However, for the baulked landing case, it is necessary to quickly regain the propulsive thrust to minimize loss of height and complete the "go-around". It is quite obvious that separate powerplants for propulsion and for blowing will provide the necessary flexibility, but if this solution is rejected, then it is desirable that the single type of powerplant remaining should have the capability of operating in different modes so as to generate thrust from the various streams in suitable proportion for take-off, for cruise and for landing. This implies an engine with variable geometry, that is, a variation in such parameters as fan blade pitch, guide vane setting or nozzle area.

For landing, the engine is required to operate as a turbo-compressor with a minimum of propulsive thrust. For take-off there is a requirement for both blowing air and propulsive thrust whereas for cruise, the primary requirement is for propulsive thrust and the blowing air should be zero or small. Furthermore, the propulsive thrust should be derived from a fairly low pressure stream (high by-pass ratio) in order to reduce noise for take-off and to achieve low sfc for cruise. This represents a demanding specification for the engine designer, because, in addition to meeting the requirement, every attempt should be made to achieve a substantial degree of commonality between the STOL blowing engine and other variants of the same engine for CTOL operation.

It is for the powerplant fraternity to consider this specification and to make a judgement as to practical feasibility. As far as the author is concerned, it is appropriate only to hint of some of the possible solutions which have arisen in the past few years as a result of collaboration between de Havilland Canada and Rolls-Royce.

The Rolls-Royce Split-Flow Spey. Before introducing some examples of a three stream engine it will be helpful to consider briefly the engine presently under development for the Buffalo/Spey research aircraft. (Figure 16.) Designated the Spey 801 SF, it is a version of the engine in which the by-pass flow has been ducted away separately and not allowed to mix with hot stream as in the case of the standard Spey. A Pegasus type nozzle has been fitted to vector the hot propulsive thrust. Figure 17 shows the level of thrust for the hot and cold streams for an engine of this general type and what would be the effect of introducing variable geometry, which in this case is a variation in primary or hot nozzle area. It can be seen that an increase in nozzle area greatly reduces the hot propulsive thrust while increasing the cold blowing thrust. Thus, by a relatively simple change, the engine behaves more like a compressor unit and therefore becomes more suited to the power demands for approach and landing.

Figure 18 shows a proposed pylon type installation for the Spey 801 SF with separate offtakes from the engine by-pass duct for blowing the wing and for cruise. Also shown in a variable primary nozzle with target type reverser.

The Two-Spool Engine with Aft Fan. Consideration has been given to an aft-fan version of the split-flow Spey. (Figure 19.) It could be argued that this is, in fact, a three-spool engine and thereby provides the required flexibility of operation. One option is to locate a thrust reverser/spoiler ahead of the fan with an effective nozzle area much greater than the standard value. Thus, in this mode of operation on approach, not only could the unwanted thrust of the fan been eliminated, but cold blowing thrust could be increased.

The Three-Spool Engine with Front Fan. It would seem that the Rolls-Royce three-spool engine (such as the Trent or the RB-211) lends itself naturally to the requirement for three streams and for variable geometry of a simple nature which could vary the relative strength of these streams to suit the three modes of operation described previously. Changes to nozzle area and guide vane angle would be appropriate in this case. (Figure 20.) Figure 21 shows an artist's impression of a proposed DHC 150-passenger Augmentor-Wing airliner based on the front fan engine. The design was prepared in response to the specification established by Eastern Airlines.

The Two-Spool Engine with Variable-Pitch Fan. The Rolls-Royce RB 419 engine represents a third proposal for a three stream engine. This engine is a derivative of the RB 410, which is a two-spool, high by-pass ratio design with geared front fan (for low noise). The 419 derivative takes air from the intermediate or I.P. compressor for flap blowing. During approach the variable pitch control is used to unload the front fan and transfer power to the I.P. compressor thus destroying propulsive thrust in exchange for blowing thrust. (Figure 22.) The engine provides the necessary flexibility to meet the requirements for cruise since it is possible to reduce or eliminate blowing thrust. Nevertheless there remain some penalties in terms of sfc and engine weight as compared to the simple high by-pass ratio engine such as RB 410.

CONCLUSIONS

The paper has described some areas of interface between engine and airframe for an augmentor-wing jet STOL transport aircraft. Project studies based on large scale wind tunnel tests have shown that there are considerable benefits to be obtained in terms of performance from the concept of powered-lift. The practical realization of these gains depends upon the development of simple and reliable design schemes for integration of powerplant and wing. It would appear that, with the Augmentor-Wing concept, it is possible to combine safety and low noise with short field performance and thereby in these respects meet the requirements for civil STOL operation.

ACKNOWLEDGEMENTS

The research programs described in this paper have been funded in part by The Defence Research Board of Canada, The Canadian Department of Industry, N.A.S.A., and de Havilland (Canada). The opinions expressed are those of the author.

REFERENCES

D.C. Whittley "The Augmentor-Wing: A New Means of Engine Airframe Integration for STOL Aircraft"
Fourth ICAS Conference, Paris 1964
AIAA Paper 64-574

D.C. Whittley "The Augmentor-Wing Research Program: Past, Present and Future"
Tenth Anglo-American Aeronautical Conference, Los Angeles, California 1967
AIAA Paper 67-741

D.C. Whittley "The Aerodynamics of High Lift Illustrated by Augmentor-Wing Research"
Twelfth Anglo-American Aeronautical Conference, Calgary, Alberta 1971

D. C. Whittley — "Maximum Lift Coefficient for STOL Aircraft: A Critical Review" CAL/USAAVLABS Symposium, Buffalo, New York 1966

K. P. Huang, E. Kisielowski — "An Investigation of the Thrust Augmentation Characteristics of Jet Ejectors" USAAVLABS Technical Report 67-8, April 1967

J. E. Middlebrooks, H. C. Tinney, D. C. Whittley — "The Evolutionary Development and Current Status of the Augmentor-Wing Concept" S. A. E. Meeting, Los Angeles, California, October 1970 S. A. E. Paper No. 700812

B. H. Wick, R. E. Kuhn — "Turbofan STOL Research at NASA" Astronautics and Aeronautics, May 1971

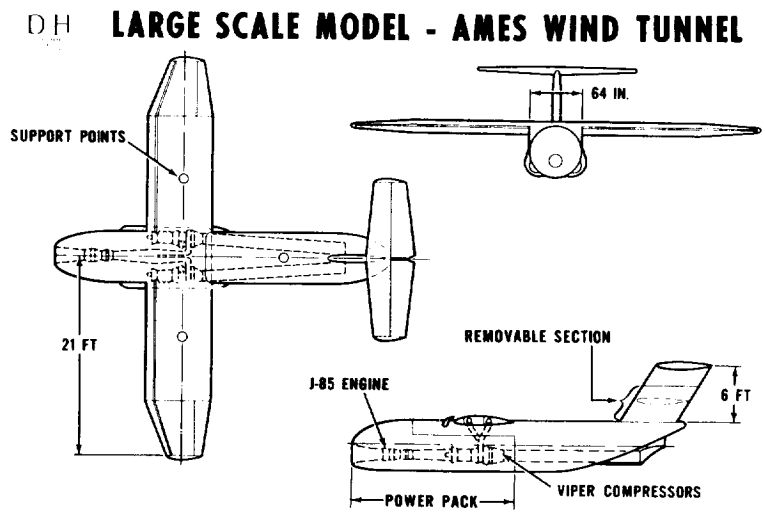

Figure 1

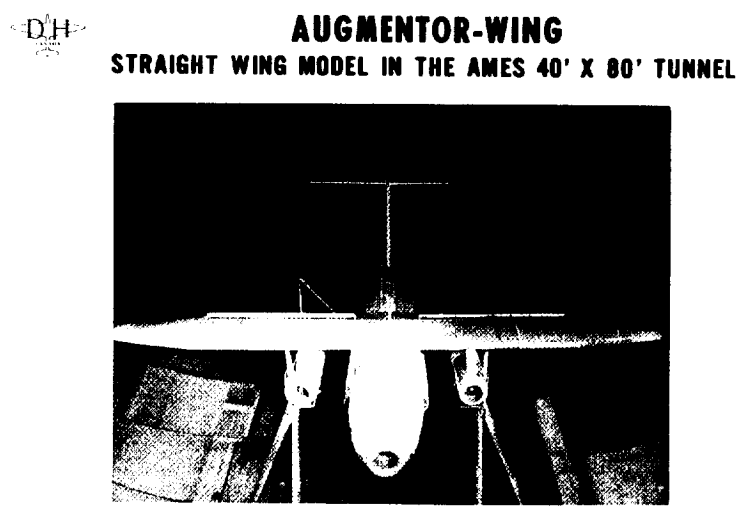

Figure 2

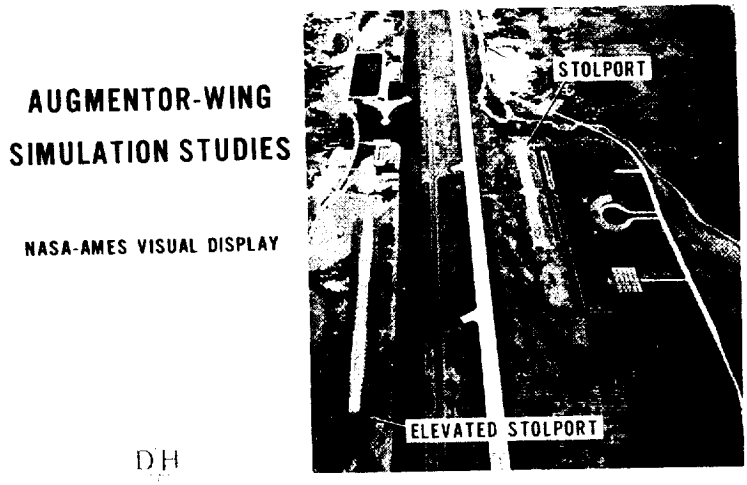

Figure 3

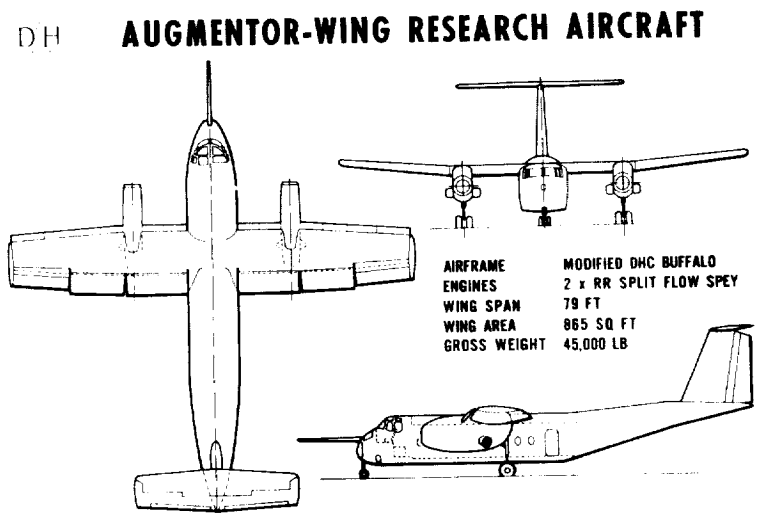

Figure 4

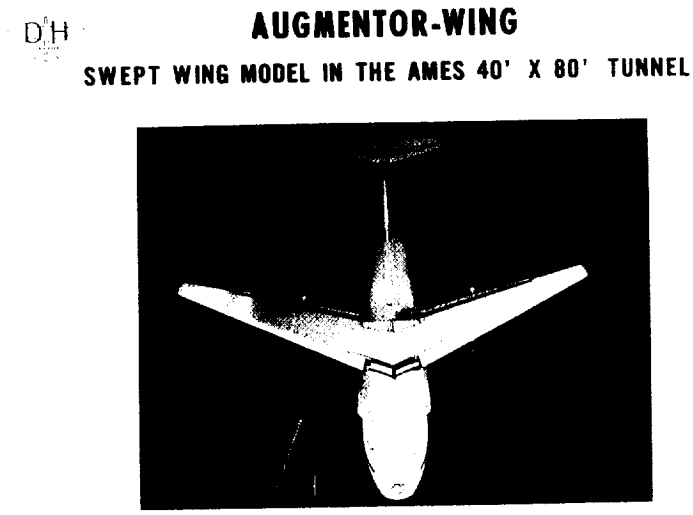

Figure 5

AUGMENTOR-WING SECTION

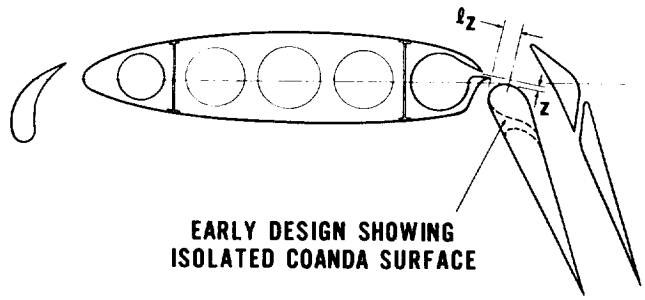

Figure 6

GEOMETRIC OPTIMIZATION CONTOUR LINES OF AUGMENTATION LOSS

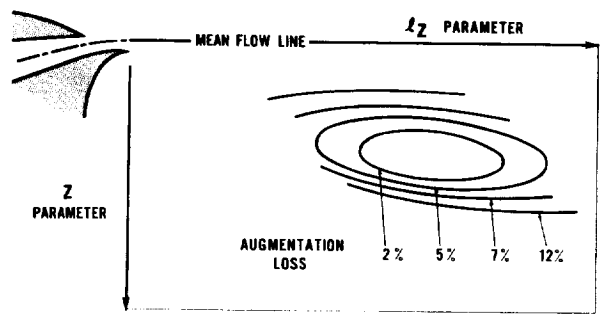

Figure 7

AUGMENTOR PERFORMANCE AT FORWARD SPEED

QUASI 2-D MODEL, FLAP ANGLE 40°

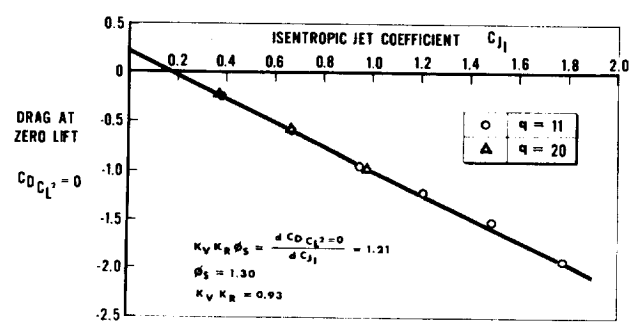

Figure 8

COLLAPSE OF LIFT AND DRAG DATA

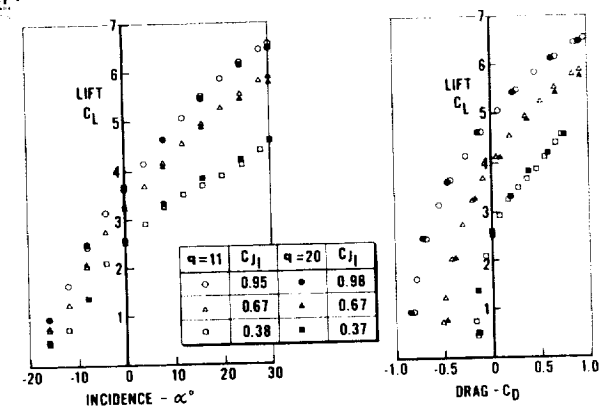

Figure 9

SCHEMATIC SHOWING DUCT AND TWIN NOZZLE FOR AUGMENTOR FLAP

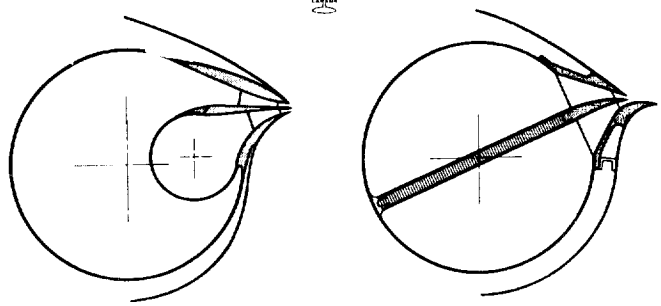

BOEING DESIGN DE HAVILLAND DESIGN

Figure 10

DUCTING ARRANGEMENTS FOR TWIN ENGINE AIRCRAFT

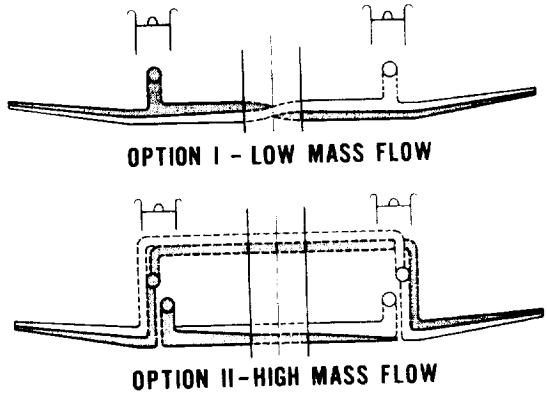

OPTION I - LOW MASS FLOW

OPTION II-HIGH MASS FLOW

Figure 11

DUCTING ARRANGEMENTS FOR FOUR ENGINE AIRCRAFT

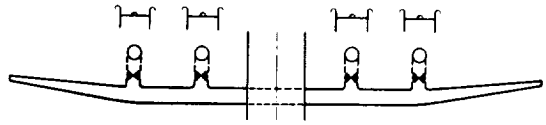

PLENUM DUCT SHOWING DIVERTER VALVE FOR EACH ENGINE

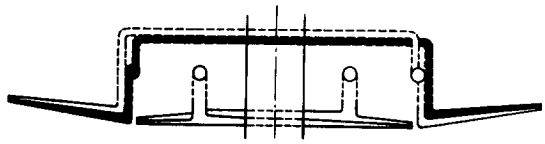

INDEPENDENT DUCTING WITH CROSS-OVER

Figure 12

DUCT SYSTEM PRESSURE LOSS

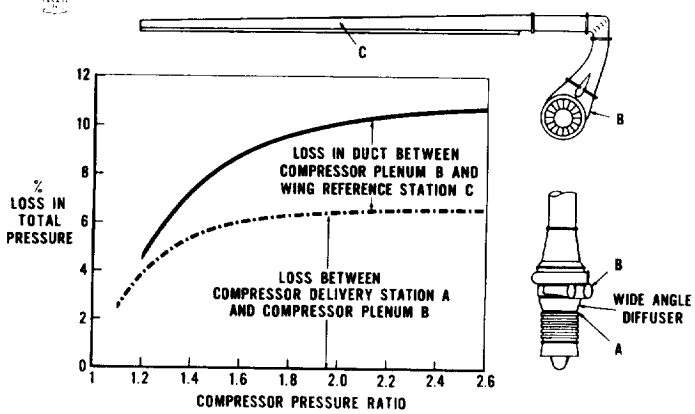

Figure 13

SEGMENTED NOZZLE

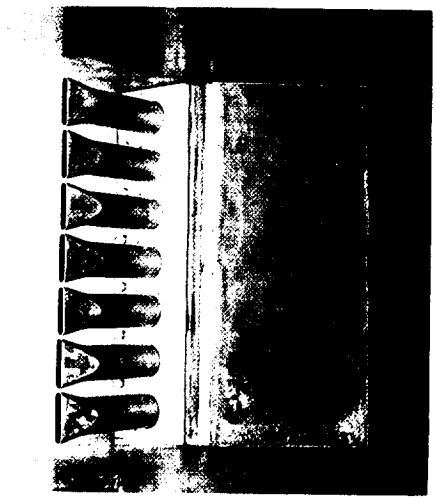

Figure 14

TEST RIG FOR NOISE MEASUREMENT

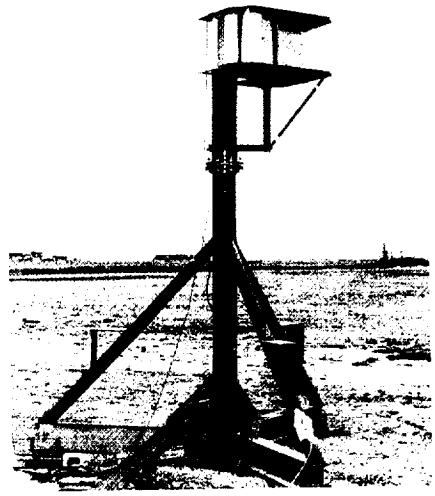

Figure 15

ROLLS-ROYCE SPEY MK 801-SF

Figure 16

TYPICAL THRUST OF SPLIT-FLOW ENGINE

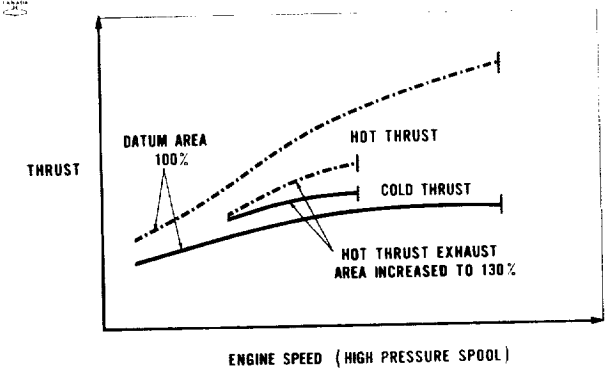

Figure 17

PYLON MOUNTED SPLIT-FLOW ENGINE

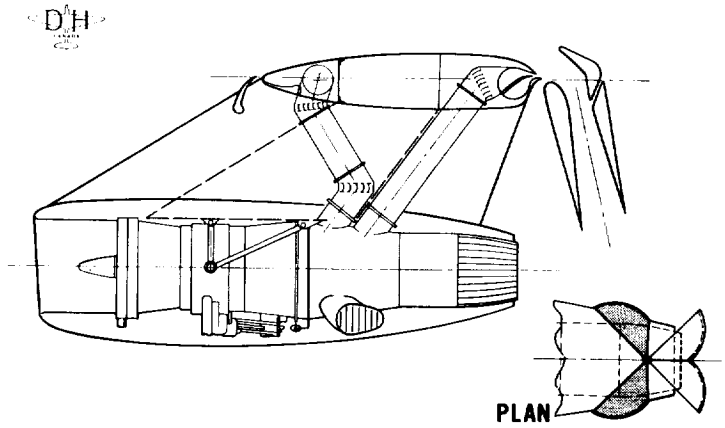

Figure 18

PYLON AND NACELLE-AFT FAN ENGINE

CRUISE CONFIGURATION

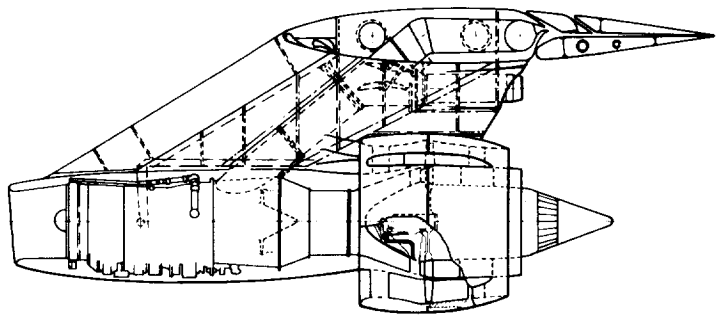

Figure 19

FRONT FAN ENGINE TECHNOLOGY

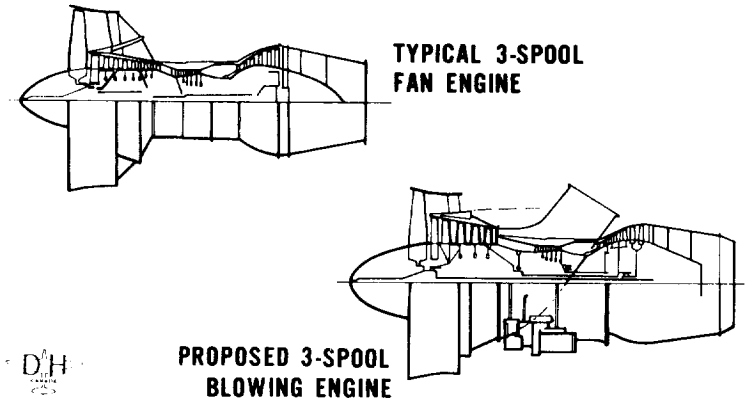

Figure 20

AUGMENTOR-WING JET-STOL AIRLINER

150 PASSENGERS, FRONT FAN CONFIGURATION

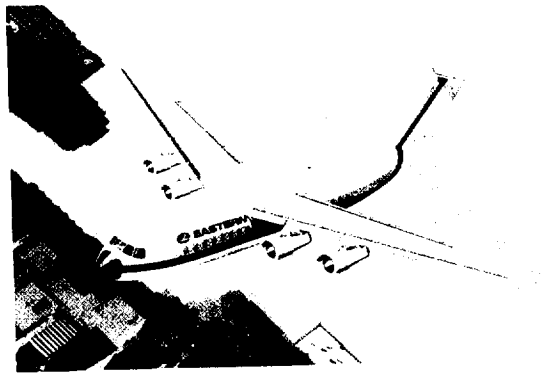

Figure 21

ROLLS-ROYCE RB 419 TYPE PROPULSION/BLOWING ENGINE

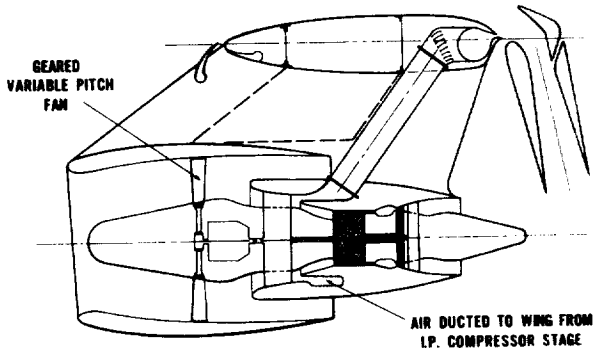

Figure 22