2

CONTRACT NAS9-9953 MSC 02471
DRL NO: MSC T-575, LINE ITEM 68

CR 115411

SD 71-217-6

MODULAR space station

PHASE B EXTENSION

PRELIMINARY SYSTEM DESIGN

Volume VI: Trades and Analyses

PREPARED BY PROGRAM ENGINEERING
JANUARY 1972

(NASA-CR-115411) MODULAR SPACE STATION PHASE B EXTENSION PRELIMINARY SYSTEMS DESIGN REPORT. VOLUME 6: TRADES AND ANALYSES A.L. Jones (North American Rockwell Corp.) Jan. 1972 527 p CSCL 22B G3/31

N72-18885

Unclas
18213

FEB 1972
RECEIVED

FACILITY FORM 602

(ACCESSION NUMBER) 527 (PAGES)
CR 115411 (NASA CR OR TMX OR AD NUMBER)
(CODE) 31 (CATEGORY)

OPEN

Reproduced by
NATIONAL TECHNICAL INFORMATION SERVICE
U S Department of Commerce
Springfield VA 22151

Space Division
North American Rockwell

12214 Lakewood Boulevard, Downey, California 90241

CONTRACT NAS9-9953 MSC 02471
DRL NO: MSC T-575, LINE ITEM 68

SD 71-217-6

MODULAR
space station
PHASE B EXTENSION

PRELIMINARY SYSTEM DESIGN
Volume VI: Trades and Analyses

JANUARY 1972
PREPARED BY PROGRAM ENGINEERING

APPROVED BY

E. G. Cole

E.G. Cole
Program Manager
Space Station Program

Space Division
North American Rockwell

12214 Lakewood Boulevard, Downey, California 90241

TECHNICAL REPORT INDEX/ABSTRACT

ACCESSION NUMBER						DOCUMENT SECURITY CLASSIFICATION	

TITLE OF DOCUMENT

MODULAR SPACE STATION PHASE B EXTENSION
PRELIMINARY SYSTEMS DESIGN REPORT
VOLUME VI TRADES AND ANALYSES

LIBRARY USE ONLY

AUTHOR(S)

A. L. JONES, R. W. ANTELL, C. W. ROBERTS, ET AL

CODE	ORIGINATING AGENCY AND OTHER SOURCES	DOCUMENT NUMBER
	NORTH AMERICAN ROCKWELL CORPORATION SPACE DIVISION, DOWNEY, CALIFORNIA	SD71-217-6

PUBLICATION DATE	CONTRACT NUMBER
JAN. 1972	NAS9-9953

DESCRIPTIVE TERMS

*MODULAR SPACE STATION, * PHASE B DEFINITION MODULAR SPACE STATION
*SPACE STATION SUBSYSTEMS TRADES, INTEGRATED SUBSYSTEMS ANALYSES
RELIABILITY, SUBSYSTEM MAINTENANCE, WATER & ATMOSPHERE MANAGEMENT
TRADES, ENERGY STORAGE TRADES, RADIATOR ANALYSES, NAVIGATION ANALYSES
MANIPULATOR ANALYSES.

ABSTRACT

THIS DOCUMENT CONTAINS TRADES AND ANALYSES CONDUCTED DURING THE MODULAR SPACE STATION PHASE B SYSTEM DEFINITION. REQUIREMENTS AND CONCEPTS CONSIDERED AND THE TRADE ANALYSIS CONDUCTED LEADING TO THE PREFERRED CONCEPT ARE PRESENTED (PRELIMINARY DESIGN ANALYSES ARE DOCUMENTED IN OTHER VOLUMES; THE SUBSYSTEMS, SD71-217-4; CONFIGURATION, SD71-217-5) INTEGRATED ANALYSES ARE PRESENTED FOR SUBSYSTEMS AND THERMAL CONTROL. SPECIFIC TRADES AND ANALYSES ARE PRESENTED FOR WATER MANAGEMENT, ATMOSPHERE CONTROL, ENERGY STORAGE, RADIATORS, NAVIGATION, CONTROL MOMENT GYROS, AND SYSTEM MAINTENANCE. A SUMMARY OF THE ANALYSES OF MANIPULATOR CONCEPTS AND REQUIREMENTS AND SUPPLEMENTAL ANALYSES OF INFORMATION MANAGEMENT ISSUES ARE PRESENTED. SUBSYSTEM RELIABILITY ANALYSES ARE PRESENTED WHICH INCLUDE A DETAILED DISCUSSION OF THE CRITICAL FAILURE ANALYSIS.

PRECEDING PAGE BLANK NOT FILMED

FOREWORD

This document is one of a series required by Contract NAS9-9953, Exhibit C, Statement of Work for Phase B Extension-Modular Space Station Program Definition. It has been prepared by the Space Division, North American Rockwell Corporation, and is submitted to the National Aeronautics and Space Administration's Manned Spacecraft Center, Houston, Texas, in accordance with the requirements of Data Requirements List (DRL) MSC-T-575, Line Item 68.

Total documentation products of the extension period are listed in the following chart in categories that indicate their purpose and relationship to the program.

ADMINISTRATIVE REPORTS	TECHNICAL REPORTS		STUDY PROGRAMMATIC REPORTS	DOCUMENTATION FOR PHASES C AND D	
				SPECIFICATIONS	PLANNING DATA
EXTENSION PERIOD STUDY PLAN DRL-62 DRD MA-207T SD 71-201	MSS PRELIMINARY SYSTEM DESIGN DRL-68 DRD SE-371T SD 71-217	MSS DRAWINGS DRL-67 DRD SE-370T SD 71-216	EXTENSION PERIOD EXECUTIVE SUMMARY DRL-65 DRD MA-012 SD 71-214	MSS PRELIMINARY PERFORMANCE SPECIFICATIONS DRL-66 DRD SE-369T SD 71-215	MSS PROGRAM MASTER PLAN DRL-76 DRD MA-209T SD 71-225
QUARTERLY PROGRESS REPORTS DRL-64 DRD MA-208T SD 71-213, -235, -576	MSS MASS PROPERTIES DRL-69 DRD SE-372T SD 71-218, -219	MSS MOCKUP REVIEW AND EVALUATION DRL-70 DRD SE-373T SD 71-220			MSS PROGRAM COST AND SCHEDULE ESTIMATES DRL-77 DRD MA-013(REV. A) SD 71-226
FINANCIAL MANAGEMENT REPORTS DRL-63 DRD MF-004	MSS INTEGRATED GROUND OPERATIONS DRL-73 DRD SE-376T SD 71-222	MSS KSC LAUNCH SITE SUPPORT DEFINITION DRL-61 DRD AL-005T SD 71-211			MSS PROGRAM OPERATIONS PLAN DRL-74 DRD SE-377T SD 71-223
	MSS SHUTTLE INTERFACE REQUIREMENTS DRL-71 DRD SE-374T SD 71-221	INFORMATION MANAGEMENT ADVANCED DEVELOPMENT DRL-72 DRD SE-375T SD 72-11			
	MSS SAFETY ANALYSIS DRL-75 DRD SA-032T SD 71-224				

This document is Volume VI of the Modular Space Station Preliminary System Design Report, which has been prepared in the following seven volumes:

I	Summary	SD 71-217-1
II	Operations and Crew Analysis	SD 71-217-2
III	Experiment Analyses	SD 71-217-3
IV	Subsystem Analyses	SD 71-217-4
V	Configuration Analyses	SD 71-217-5
VI	Trades and Analyses	SD 71-217-6
VII	Ancillary Studies	SD 71-217-7

PRECEDING PAGE BLANK NOT FILMED

CONTENTS

Page

INTRODUCTION 1

1. INTEGRATED SUBSYSTEM TRADES 5
   1.1 Study Logic 6
   1.2 Guidelines and Requirements 7
   1.3 Integrated Concept Options 14
   1.4 EPS Trades 16
   1.5 RCS Trades 24
   1.6 ECLSS Trades 36
   1.7 Integrated Subsystem Trades 38
   1.8 Cost Analysis 42
   1.9 Concept Selection 50
   1.10 Integrated Subsystem Description 56

2. INTEGRATED THERMAL CONTROL 63
   2.1 Design Requirements 63
   2.2 Design Objectives 64
   2.3 Design Orbital Conditions 65
   2.4 Thermal Control Coatings 67
   2.5 Thermal Control Sensitivity to Configuration and Coatings . . 68
   2.6 Candidate Concepts 75
   2.7 Preliminary Tradeoffs 82
   2.8 Evaluation of Absolute Criteria 83
   2.9 Primary Criteria 88
   2.10 Evaluation of Secondary Criteria 100
   2.11 FOM Evaluation Results 102
   2.12 Final Tradeoffs 103
   2.13 Comparison of Remaining Options 120

3. MANIPULATOR ANALYSIS 131
   3.1 Generic Definitions (Step 1) 131
   3.2 Identification of Operational and Overall Design Requirements (Step 2) 136
   3.3 Manipulation Synthesis and Evaluation (Step 3) 139

4. WATER MANAGEMENT TRADE 145
   4.1 Objective 145
   4.2 Requirements 145
   4.3 Trade Data 145
   4.4 Trade Study 149
   4.5 Conclusions 161

5. ATMOSPHERIC CONTROL TRADE 163
   5.1 Requirements - 163

Page

5.2 Atmospheric Ventilation Concepts 167
5.3 Preliminary Design Trades 180
5.4 Selected Concept 191
5.5 Further Study 194

6. ENERGY STORAGE TRADE 197
6.1 Energy Storage Requirements 202
6.2 Energy Storage Configuration Concept 212
6.3 Degradation Considerations 258
6.4 Thermal Requirements 258
6.5 Subsystem Interfaces 261
6.6 Energy Storage Performance Comparison 266
6.7 Evaluation Summary and Recommendations 266
6.8 References 279

7. RADIATOR ANALYSIS 281
7.1 Requirements 281
7.2 Configurations 281
7.3 Radiator Rejection Environment 281
7.4 Barbell 282
7.5 Thermal Model 290
7.6 Cruciform Configuration 303

8. NAVIGATION ANALYSIS 319
8.1 Mechanization Considerations and Error Budget 320
8.2 Measurement Scheduling 323
8.3 Results 324
8.4 References 328

9. CMG ANALYSIS 347
9.1 Maintenance Analysis 347
9.2 CMG Configuration Trade 357

10. INFORMATION MANAGEMENT, SUPPLEMENTAL ANALYSES 363
10.1 Ground Information Management Analysis 363
10.2 Voice Conference Implementation 369
10.3 MSS Tracking Implementation 371

11. MAINTENANCE TRADE ANALYSIS 377
11.1 Study Approach 377
11.2 Maintenance Approach A - Returnable Modules 378
11.3 Maintenance Approach B - Inflight Replacement 380
11.4 Replaceable Unit Classifications 380
11.5 Study Conclusions 384

12. RELIABILITY 387
12.1 Approach 387
12.2 Reliability Criteria 387
12.3 ECLSS Time-Critical Function Analysis 390
12.4 Critical Function Analysis 390
12.5 Critical Function Analysis Summaries 391

ILLUSTRATIONS

Figure		Page
1	Phase B Methodology and Key Issues	2
1-1.	Integrated Subsystem Trades Study Logic	7
1-2.	Reference MSS Configuration	10
1-3.	Integrated Subsystem Trade Approach	14
1-4.	Integrated Subsystem Concept Options Matrix	15
1-5.	Integrated Subsystem Tradeoff Steps	16
1-6.	Prime Mover Performance Comparison	19
1-7.	Skylab EPS Block Diagram	21
1-8.	Cryogenic Fluid Storage Options	26
1-9.	CO_2 Removal Cost Comparison	37
1-10.	CO_2 Removal Concepts and Characteristics	38
1-11.	Integrated Subsystem Technical Trade Summary	41
1-12.	Costing Data Format	43
1-13.	Typical Cost Methodology	43
1-14.	Integrated Subsystem Cost Comparison	48
1-15.	Integrated Sets - Operations Cost Projection	49
1-16.	Logistics Cost Sensitivity	50
1-17.	EPS/RCS/ECLSS Integrated Subsystem	58
1-18.	EPS Functional Block Diagram	58
2-1.	Reference Configuration	64
2-2.	Worst-Case Orbital Conditions	68
2-3.	Inner Module Heat Rejection From Isothermal Circumferential Radiator (α_s = 0.15)	70
2-4.	Inner Module Heat Rejection From Isothermal Circumferential Radiator (α_s = 0.25)	71
2-5.	Inner Module Heat Rejection From Isothermal Circumferential Radiator (α_s = 0.35)	72
2-6.	Inner Module Heat Rejection From Isothermal Circumferential Radiator (α_s = 0.45)	73
2-7.	Heat Rejection From Radiator Segments	74
2-8.	Passive Thermal Control Concepts	77
2-9.	Hybrid Thermal Control Concepts	79
2-10.	Active Thermal Control Concepts	80
2-11.	Solar Array Configurations 1 and 2	110
2-12.	Solar Array Configuration 3	110
2-13.	Solar Array Configuration 4	111
2-14.	Mapping of Constant View Factor Lines	111
2-15.	Central Thermal Control Pumping Power	115
2-16.	Independent Thermal Control Pumping Power	116
2-17.	Pumping Power - Active Thermal Control Concept Configurations	121
2-18.	Block Diagram - Hybrid Concept A	122
2-19.	Block Diagram - Hybrid Concept B	122
2-20.	Hybrid Concept C	123
2-21.	MSS Heat Pipe Radiator System, Hybrid Concept H1-B	124

Figure		Page
2-22.	Thermal Control Concept Cost Estimates	126
2-23.	Dual-Loop Active Thermal Control Concept	128
3-1.	Manipulator Analysis Approach	132
3-2.	Baseline Shuttle Manipulator	132
3-3.	Manipulator Performance Parameters	134
3-4.	Manipulator Operations Allocation Alternatives	134
3-5.	Manipulator Concepts	135
3-6.	Typical Viewing Concept	139
3-7.	MSS Reference Configuration	141
3-8.	Module Spacing Requirements	141
4-1.	Vehicle Water Balance - Baseline Water Usage (System I)	150
4-2.	Vehicle Water Balance - Baseline Water Usage (System II)	151
4-3.	Vehicle Water Balance - Maximum Water Usage (System I)	152
4-4.	Vehicle Water Balance - Maximum Water Usage (System II)	153
4-5.	Vapor Compression Subassembly	154
4-6.	Reverse Osmosis Subassembly	155
5-1.	Crew Latent Heat Production	164
5-2.	Candidate Concept Schematics	168
5-3.	Equivalent Weight, Concept 1	173
5-4.	Total Power, Concept 1	173
5-5.	Module CO_2 Control Flow	175
5-6.	Module Humidity Control Flow	175
5-7.	Module Flow Versus Total Cluster Flow	176
5-8.	Process Flow Versus Total Cluster Flow	176
5-9.	Module Duct Optimization	177
5-10.	Core Duct Optimization	177
5-11.	Equivalent Weight, Concept 2	178
5-12.	CO_2 Control - Analysis Model	181
5-13.	CO_2 Removal Unit Inlet Concentration	182
5-14.	Humidity Heat Exchanger Inlet Concentration Versus 6-Man Module Flow	184
5-15.	Core Duct System Diagrams	185
5-16.	Core Module Ducts - Header Concept	188
5-17.	Process Module Duct Design - Header Concept	189
5-18.	Core Module Ducts - Pooling Concept	190
5-19.	Humidity Control Analysis	192
5-20.	Atmosphere Revitalization Performance	193
5-21.	Pressure Plot	194
6-1.	Energy Storage Logic Flow Diagram	198
6-2.	Energy Storage Trade Tree	199
6-3.	Reference Integrated Subsystem Concept Option 1	200
6-4.	Integrated Subsystem Concept Option 2	201
6-5.	Initial Station Configuration	202
6-6.	Six-Man Station Electrical Loads	206
6-7.	Twelve-Man Station Electrical Loads	207
6-8.	Load Profiles Tailored to Specific Experiment Programs	208
6-9.	Orbit Dark Period Required Discharge Energy	210
6-10.	Battery Module Assembly	213
6-11.	Solar Array/Battery Functional Block Diagram (Typical One Channel of Four)	214

Figure		Page
6-12.	Battery Functional Block Diagram	215
6-13.	112-Volt Battery/Fuel Cell Supply (Typical Each Power Channel)	216
6-14.	28-Volt Battery/Fuel Cell Supply	217
6-15.	Battery Controller	219
6-16.	Battery Cell Module	220
6-17.	Maximum Limiting Voltage for Charge Control of Hermetically Sealed Nickel-Cadmium Cells	225
6-18.	Maximum Recommended Overcharge Rates for NiCd Batteries	226
6-19.	Recommended Percent Overcharge for Hermetically Sealed NiCd Battery Cells	227
6-20.	Battery Concept Power Delivery	228
6-21.	NiCd Battery Estimated Cycle Life	230
6-22.	Depth of Discharge Versus Energy Delivered	232
6-23.	EPS Power Conditioning Schematic	239
6-24.	Modular Regenerative Fuel Cell System	241
6-25.	Schematic of Typical SPE Electrolysis Cell	241
6-26.	Water Electrolysis System Heat and Mass Flow Diagram	243
6-27.	Equilibrium Module Temperature and Cell Voltage	245
6-28.	Preducted Electrolysis Module Performance	246
6-29.	Solid Polymer Electrolyte High-Pressure Water Electrolysis Performance	247
6-30.	Regenerative Fuel Cell Concept	250
6-31.	Advanced Modular Regenerative Fuel Cell Performance (5-kw Module)	251
6-32.	Static Regenerative Fuel Cell Concept	252
6-33.	Reactant Tank Sizing	255
6-34.	Effect of Energy Storage on Solar Array Size	256
6-35.	Results From Life Test at 180 F and Ambient Pressure on Cell With Platinum-Iridium Anode	259
6-36.	Degradation Rates of Perfluorinated Sulfonic Membrane in Water Electrolysis Cells	259
6-37.	Modular Regenerative Fuel Cell Utility Supply for Space Statio Station	261
6-38.	EPS Required Daily Reactant Production for REgenerative Fuel Cells	262
6-39.	EPS Excess Reactant Production Versus Season Angle	263
6-40.	EPS Energy Storage Efficiency Analyses	271
6-41.	Complexity Comparison	272
6-42.	Battery Charging T ime Profile (Initial Station 672 Cells)	274
6-43.	Energy Storage Cost Comparison	275
7-1.	Initial Station Configuration	282
7-2.	Solar Panel Temperature Profile	283
7-3.	View Factors for Module to Solar Panels, Forward Module (0-Degree Module Angle)	286
7-4.	View Factors for Module to Solar Panels, Forward Module (30-Degree Module Angle)	287
7-5.	View Factors for Module to Solar Panels, Forward Module (60- and 90-Degree Module Angeles)	288
7-6.	View Factors for Module to Solar Panels, Center Module	289

Figure		Page
7-7.	Radiator Program Network	297
7-8.	Forward Module	299
7-9.	Center Module	300
7-10.	End Module	301
7-11.	Barbell Configuration Heat Rejection	302
7-12.	Vertical Module Rejection	314
7-13.	Horizontal Module Rejection	316
7-14.	Growth Cruciform Heat Rejection Capability	317
8-1.	Star Horizon Measurements	329
8-2.	Instrument Bias Errors	330
8-3.	Markov Bias Errors in Horizon	331
8-4.	Drag and Mu Errors	332
8-5.	Gravitational Harmonics Errors	333
8-6.	Star-Horizon Measurements - Markov Biases Estimated	334
8-7.	Star-Horizon Measurements - Instrument and Markov Biases Estimated	335
8-8.	Beacon Range, Azimuth, and Elevation Measurements	336
8-9.	Beacon Range Measurements	337
8-10.	Beacon Range Rate Measurements (Two Orbits)	338
8-11.	Beacon Range Rate Measurements (Six Orbits)	339
8-12.	Beacon Range Rate Measurements (Fewer Beacon Contacts)	340
8-13.	Star Horizon Plus Beacon Range Rate Measurements	341
8-14.	Known Landmark Measurements	342
8-15.	Unknown Landmark Measurements	343
8-16.	Star Horizon Plus Known Landmarks	344
8-17.	Star Horizon Plus Unknown Landmarks	345
9-1.	Cost Versus Failure Rates - Electrical Units	359
9-2.	Cost Versus Failure Rates - Electromechanical Units	359
10-1.	MSS Communications Operations Requirements	370
10-2.	Voice Conference Implementation	371
10-3.	Detached Module Tracking Geometry	373
10-4.	Determination of Depression Angle	375
10-5.	Detached Module Tracking Geometry	375
11-1.	Maintenance Study Approach	377
11-2.	Module Replacement Impact on Buildup	379
11-3.	Subsystem Replaceable Unit Definitions	379
11-4.	First-Order Effects of IFRU Size	383
11-5.	On-Orbit Maintenance Impact on Crew Activity	384

TABLES

Table		Page
1-1	Reference MSS Configuration Data	10
1-2.	Power Requirements (SRB)	12
1-3	MSS Impulse Requirements (NR)	12
1-4	Secondary Power Generation Requirements	17
1-5	Secondary Power Generation - Matrix of Candidates	18
1-6	Weight, Volume, and Area Comparisons	18
1-7	Fuel Cell, Electrolysis Regenerative Energy Storage Comparisons to Battery Energy Storage	22
1-8.	Propellant Storage Failure Criteria	25
1-9	Typical Buildup Sequences - Initial Station	27
1-10	Cryogenic Storage Characteristics	28
1-11	Cryogenic Storage Location Summary	30
1-12	Hydrazine Package Concept Summary	33
1-13	Cryogenic With Resistojet Summary Data	34
1-14	Propellant Savings by Resistojet Utilization	35
1-15	RCS Cost Summary - Selected Subsystems	44
1-16	ECLSS Cost Summary - Selected Subsystems	45
1-17	EPS Cost Summary - Selected Subsystems	46
1-18	Programmatic Cost Summary - Integrated Set Concepts	47
1-19	Lowest Cost Concept Definition	51
1-20	Consumable Comparison	53
1-21	Daily Waste Product	54
1-22	Concept Advantages and Disadvantages Summary	55
1-23	Integrated Gaseous Storage Quantities	59
1-24	Integrated Tank Storage Concept	60
2-1	Space Station Heat Load	66
2-2	Evaluation Criteria and Point Allocations	84
2-3	Absolute Criteria Summary	85
2-4	Development Rating	87
2-5	Primary Criteria Comparison	89
2-6	Active Concept Power Conversion	91
2-7	Active Concept Resupply Costs	92
2-8	Flexibility Factors	93
2-9	Flexibility Evaluation Summary	95
2-10	Estimated Failures	96
2-11	Concept A-1 Durability/MTBF	97
2-12	Concept A-5 Durability/MTBF	97
2-13	Concept A-6 Durability/MTBF	98
2-14	Component Weight	100
2-15	Component Power	100
2-16	Concept Weight, Power, and Volume Comparisons	101
2-17	Figure of Merit Summary	102
2-18	Criteria Summary	104
2-19	Heat Rejection Capability Summary	105

Table		Page
2-20	Central Rejection Capability of Barbell Configurations	106
2-21	Central Rejection Capability of Cruciform Configuration	107
2-22	Evaluation Summary	113
2-23	Coolant Properties and Requirements	114
2-24	Single Versus Dual Loop Comparison	118
3-1	Principal Manipulator Literature	133
3-2	Manipulator Candidate Applications	137
3-3	Manipulator Performance Characteristics (Design Plateau 1)	138
3-4	Manipulation Evaluation Options	140
3-5	Manipulator Performance Characteristics	143
4-1	Water Balance, System I	146
4-2	Water Balance, System II	147
4-3	Water Balance and Requirements	148
4-4	System Characteristics	149
4-5	System Physical Characteristics and Penalties for Baseline Water Usage	156
4-6	System Physical Characteristics and Penalties for Maximum Water Usage	156
4-7	Subassembly Relative Complexity	158
4-8	Maintenance Times, Baseline Water Usage - System I Vapor Compression	159
4-9	Maintenance Time Summary	160
5-1	Atmosphere Latent Loads	165
5-2	Ventilation Requirements Summary	166
5-3	Candidate Ventilation Concepts	167
5-4	Concept Physical Characteristics	171
5-5	Concept 2 Weight and Power	179
5-6	Module Flow Control Summary	186
6-1	EPS Concept Comparisons	203
6-2	Baseline Operation Times	204
6-3	Electrical Power Requirements	205
6-4	Energy Storage Requirements	209
6-5	Battery Charging Method Comparison	221
6-6	Energy Delivery Requirements	229
6-7	Battery Energy Storage Thermal Control Delta's	235
6-8	Battery Controller Elements	237
6-9	NR Shuttle Fuel Cell	242
6-10	Three-Pound-per-Hour Electrolysis Weights	247
6-11	Space Station Electrolysis Subassembly Characteristics	249
6-12	Six-Man Space Station Modular Regenerative Fuel Cell Weights	249
6-13	500-Watt Module Characteristics (Static Regenerative Fuel Cell)	252
6-14	Required Fuel Cell Reactant Production	253
6-15	Regenerative Fuel Cell Energy Storage Thermal Control Delta's	260
6-16	Regenerative Fuel Cell Performance Comparison	265
6-17	Regenerative Fuel Cell/Battery Comparison	267
6-18	Energy Storage Thermal Comparison	270
6-19	Solar Array Area Comparison	271
6-20.	ISS Cost for Battery Charging	272

Table		Page
6-21	Electrical Power Subsystem Weight	273
6-22	Energy Storage Evaluation Matrix	277
6-23	Energy Storage Study Conclusions	278
6-24	Energy Storage Study Recommendations	278
7-1	Module-to-Module View Factors and Mirror Readings	284
7-2	Hickman Mirror Readings for Module to Solar Panels	285
7-3	Estimated Blockage (Albedo and Earth Emission)	290
7-4	Forward Module Environment	291
7-5	Center Module Environment	293
7-6	End Module Environment	295
7-7	Cruciform Forward Vertical Module Environment	304
7-8	Cruciform End Vertical Module Environment	306
7-9	Cruciform Horizontal Aft Double Module Environment	308
7-10	Cruciform Horizontal Forward Double Module Environment	310
7-11	Cruciform Horizontal Aft Single Module Environment	312
7-12	Initial Cruciform Rejection	315
8-1	Beacon Measurements	322
8-2	Landmark Measurements	322
8-3	Beacon Locations	326
9-1	Maintenance Cost Factor	348
9-2	Spin Assembly Repair	349
9-3	Repair of Gimbal Drive Unit	350
9-4	Repair of Gimbal Drive Electronics	351
9-5	CMG Weight, Cost, and Reliability Factors	352
9-6	Cost Factors for Spin Assembly	352
9-7	Cost Factors for Gimbal Drive	353
9-8	Cost Factors for Gimbal Drive Electronics	353
9-9	Maintenance of Spin Assembly (Rapid Rotor Deceleration Required)	355
9-10	Maintenance of Spin Assembly (Gradual Degradation or Loss of Spin Motor)	355
9-11	Maintenance of Gimbal Drive	356
9-12	Maintenance of Electronics	356
9-13	Crew Skill Requirements	358
9-14	Failure Rates of Electrical and Electromechanical Components	358
9-15	Cost Factors for Redundant Approach	358
9-16	Momentum of CMG Arrays (With One CMG Failure)	361
9-17	CMG Assembly Characteristics	361
9-18	Other Comparison Factors	361
9-19	Comparison Summary	362
9-20	Selection Criteria	362
10-1	Elements of Future Communications Systems	363
10-2	TDRS Performance Characteristics	364
10-3	MSFN Ground Station Communications Characteristics	366
10-4	Performance Capabilities of Land Links	367
10-5	MSS Communications Operations Requirements	368
11-1	Subsystem Replaceable Unit Definition	382
11-2	Ground Replaceable Unit Impact on Module Replacement	382
11-3	Maintenance Crew Man-Hours per Month	383

Table		Page
12-1	Allowable Number of Component Failures to Reach Operational Mode	388
12-2	CFA - Subsystem Criticality Summary	391
12-3	Criticality I and II Failure Mode Listing	392

INTRODUCTION

This document contains trades and analyses conducted during the modular space station (MSS) system definition and preliminary design. Many different analyses and trades were conducted during the study. Those which are documented in other volumes of the final report, to provide proper continuity of subject matter, are identified here to provide a general reference.

Prior to initiating the studies documented in this report, a Phase A level analysis of modular space station concepts was conducted to establish a starting point for the Phase B definition. Four classes (open, closed, cluster, and hybrid) of MSS configuration alternatives were synthesized during the Phase A study. The open class is characterized by a central core with crew and facility modules end-docked. The closed class exhibits a configuration that is more difficult for assembly and removal of modules. This configuration has aa large mass distribution and is inconvenient to centrally located functions and facilities. The cluster class, with a closely concentrated mass distribution, minimizes the propellant consumption (for specific flight modes). This concept requires modules side-docked to the central core and design for dual egress is more complex. The open class was recommended for further definition.

Both the cruciform and barbell configurational alternatives are of the open class. However, the study pointed out that the cruciform station modules could be reconfigured to a barbell with an increased length core module. The Phase B study was initiated with the barbell configuration as a baseline, with an added consideration of a manipulator which was not part of Phase A.

The basic methodology used in the study of the key issues of the Phase B (Figure 1) analyses was to conduct the study of alternatives in a series of controlled iterations. At the beginning of each iterative step the alternatives of a key study issue were established and a baseline set and held constant for the other elements and parts of the system. After review of the initial step results, undesirable alternatives were rejected and the impact or sensitivity of the fixed baseline elements was identified. Additional iterative steps were initiated to evaluate the remaining alternatives and revised baselines were established where required.

Much of the Phase B system definition trades and analyses were conducted on the baseline barbell configuration. As the study progressed, the barbell configuration inherently possessed characteristics which could not be corrected and thus produced undesirable complexities and incompatibilities. The cruciform was re-examined and was selected for the preliminary design configuration, with the RAM's and cargo module located in the Y plane and the station modules in the Z plane. This configuration requires only two special modules (core and power) for the initial station, reduces impulse requirements (propellant usage, gas storage) and momentum exchange level (reduced CMG size and number), and

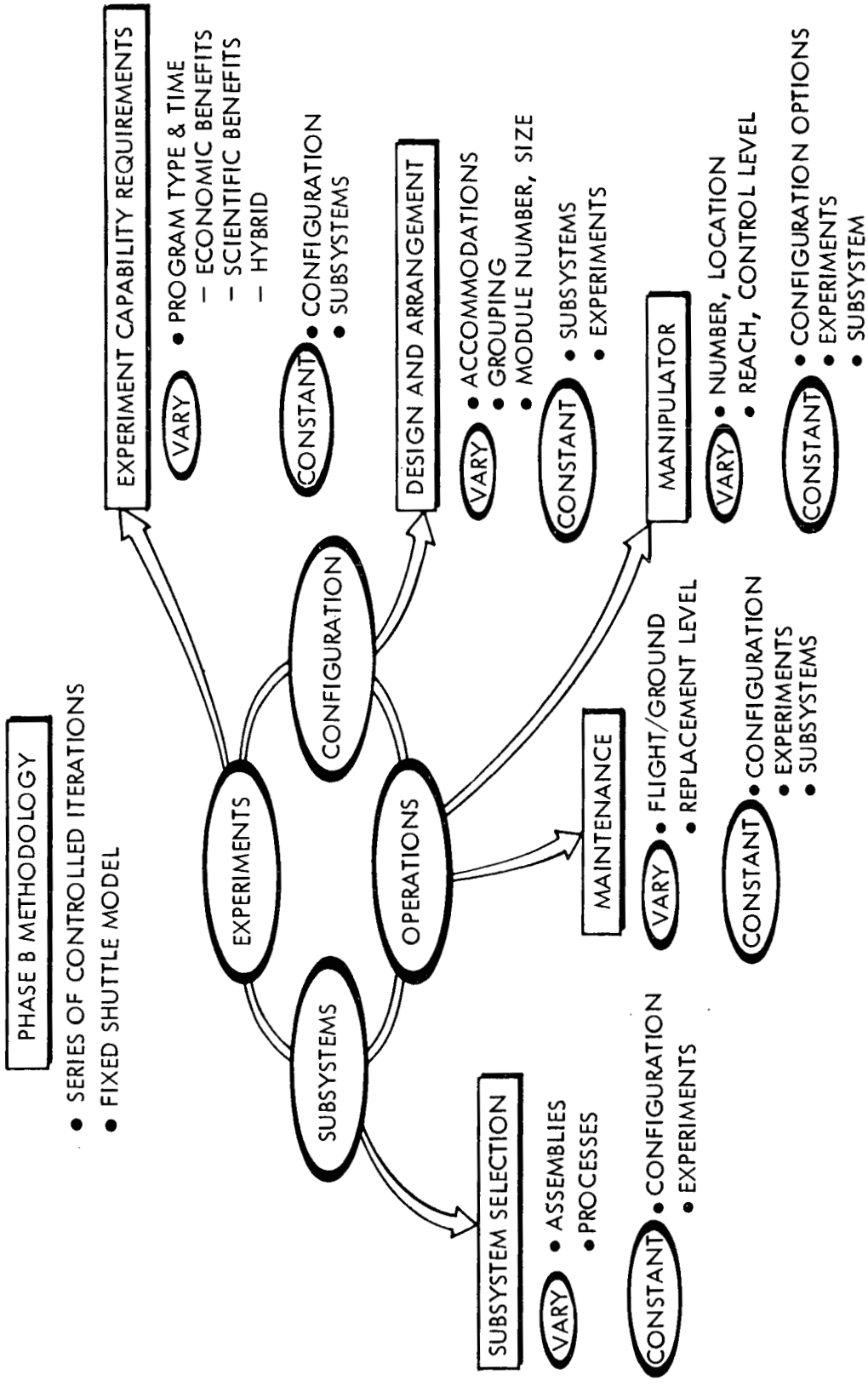

Figure 1. Phase B Methodology and Key Issues

increases stiffness. The location of station modules was selected for buildup and station operation efficiency.

The trades and analyses influencing the configuration are included in Volume V (SD 71-217-5). This consisted of eight study configurations and their associated key issues. Each issue had several alternatives. To select the preferred alternative, the subsystems and experiment accommodations were held constant, while varying the issue. Volume V includes:

1. Structural Concepts
2. Manufacturing Trades
3. Functional Allocation
4. Berthing/Docking
5. Berthing Interface
6. Module Diameter
7. Station Stiffness
8. General-Purpose Laboratory Equipment
9. Window and Optical Penetrations
10. Structural Analysis
11. Environment Protection Analysis

The experiments analyses are presented in Volume III. Other trade data for operations are discussed in Volume II.

This volume contains nine subsystems trades and analyses. These consist of the following:

1. Integrated Subsystem Trades
2. Integrated Thermal Control
3. Water Management Trade
4. Atmosphere Control Trade
5. Energy Storage
6. Radiator Analysis
7. Navigation Analysis
8. CMG Analysis

9. Information Management, Supplemental Analysis

In addition, this volume contains the reliability analysis, manipulator analysis, and maintenance trade analysis.

The safety analysis for the modular space station is presented in SD 71-224.

1. INTEGRATED SUBSYSTEM TRADES

Previous space station subsystem studies for the 33-foot diameter solar-powered station, the nuclear reactor-Brayton powered station, the radioisotope-Brayton powered station, and the Phase A modular space station (MSS) recognized and incorporated the integration possibilities of the various subsystems. The information subsystem (ISS) and the guidance and control (G&C) subsystem integration studies indicated that the G&C would require some dedicated data processing equipment but could be integrated with the ISS central processing computer for certain computational functions. The G&C would also utilize the central computer to interface with other subsystems (i.e., EPS for solar array orientation and RCS for stabilization and control). The ISS integrates with all subsystems since it provides for the functions of subsystem operations, monitoring, fault detection, and fault isolation. The degree of integration varies with the subsystem function and to the time criticality of that function. The EPS, RCS, and ECLSS present the greatest possibilities and benefits for integration. There are many concept options for each subsystem which can be combined into many compatible integrated sets utilizing various degrees of integration.

Previous space station studies conducted the subsystem selection trades and analyses at the individual subsystem level based on subsystem defined trade trees, requirements, and selection criteria. Following selection, the three subsystem concepts were integrated at the subsystem and system levels to define an integrated preliminary design. Changes to subsystem, assembly, or subassembly concept selections were not incorporated unless large incompatibilities were discovered during the preliminary design integration studies. This process, however, did not necessarily assure that the most optimum or lowest cost integrated subsystem concept would be selected for the space station.

The Phase B MSS studies were initiated with a NASA-imposed Level I guideline to emphasize cost in the selection process. The guideline (1.109A, NASA Phase B Program Definition Study Modular Space Station Guidelines and Constraints Document, MSC-03696, Rev. 7, 30 July 1971) stated: "Total cost of the program is a primary consideration. Primary emphasis is on minimum cost to IOC." In an effort to satisfy this guideline it was decided to conduct the RCS, EPS, and ECLSS selection trades and analyses as an integrated single subsystem.

The trades to reduce cost in the ISS and G&C subsystems were conducted within the individual subsystem; however, these trades incorporated the results and requirements of the EPS/RCS/ECLSS integrated trades. The G&C/ISS integrated trades were conducted under previous studies and the EPS/RCS/ECLSS integrated subsystem selection results did not influence or were not altered by these trades. The low cost ISS selection trades also were not altered by the EPS/RCS/ECLSS integrated subsystem trades; however, certain of the integrated subsystem concept options imposed reduced requirements on the ISS. The cost deltas were small and in no case were the changed requirements sufficient to produce an ISS concept change.

This section presents the analyses and trades of the EPS/RCS/ECLSS integrated subsystem for the MSS. The preliminary design of the EPS, RCS, and ECLSS was developed after the integrated concept selection and is presented in Volume IV of this report (SD 71-217-4).

1.1 STUDY LOGIC

The integrated EPS/RCS/ECLSS trade study logic is shown in Figure 1-1. Integrated subsystem concept options were established from: (1) the subsystems requirements of the Phase A studies as defined in the NASA Guidelines and Constraints document and in the NR Systems Requirements Book (SRB), (2) the MSS Phase A reference subsystems definition and characteristics, and (3) from low-cost subsystem criteria and guidelines developed by NR. Subsystem trade trees, options, and characteristics of previous studies were utilized to define low-cost candidates for each of the subsystem or assembly functions. Trades of these concepts at the individual subsystem level deleted concepts which could not satisfy the MSS requirements or which imposed large drivers or constraints on MSS configurations and mission operations. A matrix of compatible integrated concept options was constructed from the remaining subsystem options. Preliminary subsystem characteristics were then defined for all the integrated concept options.

Several of the integrated concept options were easily recognized as being potential low-cost subsystem sets. The analyses of these sets were accelerated so as to provide early subsystem data for the MSS configuration/operational trades and analyses which were being conducted concurrently with the subsystem trades. As shown in Figure 1-1 the low-cost subsystem sets progressed through the same logic flow as the mainstream trades and eventually reentered the logic loop for final impact analyses, costing, and evaluation.

The preliminary characteristics of the mainstream subsystem sets were refined through detailed analyses and trades to provide costing data and design characteristics. These characteristics were utilized to conduct impact analyses such as MSS configuration, design, operations, reliability, safety, and logistics requirements. For the candidate options surviving the impact analyses (including low-cost subsystem sets), detailed cost analyses were conducted. An evaluation analysis then resulted in a final integrated EPS/RCS/ECLSS concept.

Cost was the major evaluation factor. The trades were initiated on the basis that two cost comparisons would be developed: (1) low development costs at IOC of the initial station, and (2) initial station low development cost plus 5-year operations costs. It was initially hoped that the same selection would result from either cost criteria; however, it was soon evident that this was not the case. An integrated subsystem based on only low development costs resulted in selections such as open oxygen and water cycles for the ECLSS, Skylab technology solar array panels, nonautomated subsystem controls and fault detection and isolation, 28-volt dc electrical power system, and short component life with high maintenance. The result to the MSS program would be very high logistics costs, large manpower requirements for station operation, poor habitability, and very low program operational flexibility. It was therefore decided to select the concept options and to complete the trades

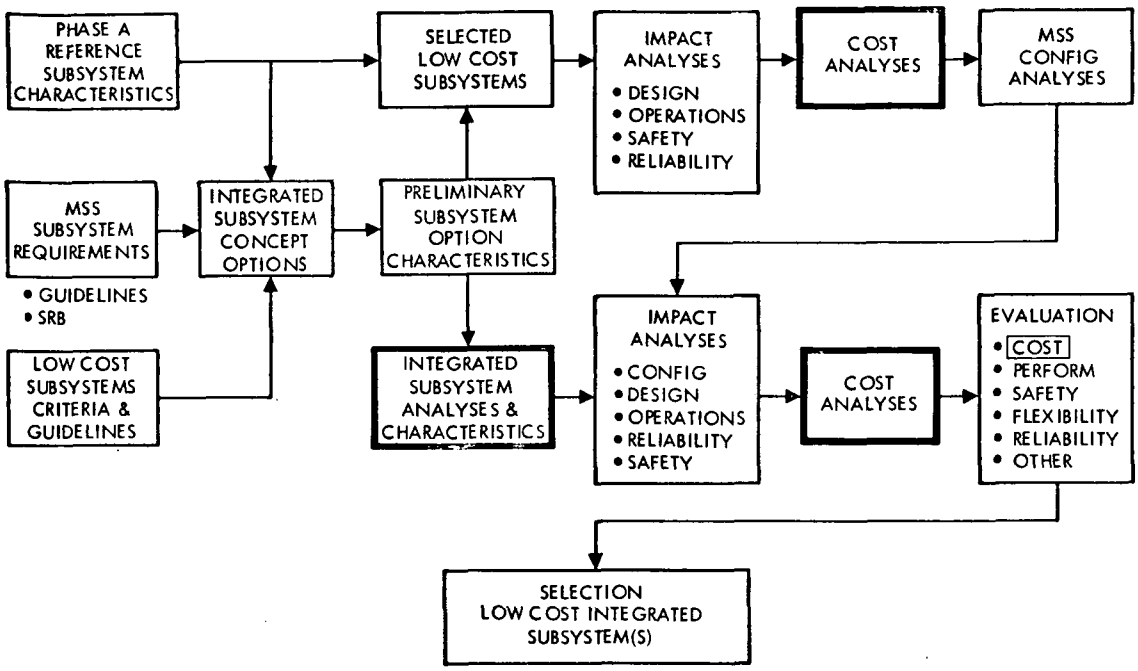

Figure 1-1. Integrated Subsystem Trades Study Logic

with the major evaluation factor being initial station low development plus 5-year operational costs.

1.2 GUIDELINES AND REQUIREMENTS

The NASA Guideline and Constraints document defined the Level I program requirements, guidelines, and constraints as established by NASA Headquarters and the Level II guidelines and constraints controlled by the manager of the Space Station Project Office. To satisfy these program requirements NR established additional requirements which were documented in the SRB. The major requirements and guidelines which influenced the integrated subsystem trades and selection are defined in this section. Each of the identified guidelines and requirements has the source identified as (1) the NASA guidelines and constraints document item number, (2) SRB, or (3) NR generated for selection trades and analyses purposes. It is emphasized that the guidelines and requirements identified were utilized for the integrated subsystems trades. They were established at the initiation of the trades and several have been changed or deleted as the MSS studies progressed.

Program Guidelines and Requirements

The program-related guidelines and requirements are:

1. Fiscal year 1975 Phase C go-ahead (1.102A).
2. February 1982 initial MSS IOC (SRB). Initially the SRB requirement was stated as January 1978 for delivery of the first module.

3. Initial MSS utilization 5 to 6 years (1.102A).
4. Growth MSS utilization 5 years (1.102A).
5. Minimum total program cost (1.109A).
6. Minimum IOC cost (1.109A).
7. Minimum subsystem development costs (1.405).

Mission/Operational Guidelines and Requirements

The MSS mission- and operational-related guidelines and requirements are:

1. 240- to 270-nautical miles by 55-degree orbit (1.105A).
2. X-POP, Z-LV MSS orientation normal flight mode (NR).
3. Local level or inertial mode orientation capability (SRB).
4. One hundred twenty-day MSS independent operation (1.205).
5. Shuttle launch frequency no greater than 30 days (1.204).
6. Thirty-day consumables beyond normal resupply (1.202).
7. Resupply time intervals no greater than 90 days (NR).
8. Six-man crew initial MSS (1.105A).
9. Twelve-man crew growth MSS (1.106).
10. Ninety-six-hour (48-hour initially) emergency MSS capability (1.4A, 2.15A Appendix B).
11. Failure criteria (SRB) - The minimum allowable number of component failures for each operational mode is:

Mode	MSS Operation (Manned)	Buildup (Unmanned)
Normal	0	0
Nominal	1	-
Degraded	2	1
Emergency	3	2

a. The station shall be capable of operating with all critical functions performed within specified values following one component failure or any portion of a subsystem inactive for maintenance. This condition shall continue until maintenance can be performed.

b. The station shall be capable of operating with some critical functions performed at a reduced level, but not below the level necessary for crew survival, following any credible combination of two component failures or one component failure with any portion of a subsystem inactive for maintenance or any credible accident (e.g., loss of any pressure-isolatable volume). This condition shall continue until maintenance can be performed, but no more than 30 days or until arrival of the next scheduled shuttle.

c. The station shall be capable of crew survival for at least 96

hours to permit restoration of operations or rescue of the crew by emergency shuttle following any credible combination of three component failures or any credible combination of component failures and portions of a subsystem inactive for maintenance or any credible accident (e.g., loss of any pressure-isolatable volume) and any single component failure.

d. The station during station buildup (premanning) shall be capable of being manned (shirtsleeve or IVA) for at least 96 hours (48 hours initially) to accommodate an emergency shuttle flight to perform maintenance following any two component failures.

e. Nontime-critical functions, ultimately critical to crew survival, require standby redundancy as a minimum.

f. Time-critical functions affecting crew survival require an alternative means of providing the function. This alternative must be provided by active redundancy, or standby redundancy automatically activated upon failure of the prime equipment, or by other equipment providing normal operation for a period equal to a maintenance cycle plus a margin of safety for maintenance difficulties including lack of access due to isolation of a damaged module.

12. Inflight maintenance of subsystems (NR).

13. IVA maintenance capability for buildup (SRB).
14. IVA maintenance capability for critical functions (SRB).

MSS Configuration Guidelines and Requirements

The MSS "reference" configuration at the initiation of the integrated subsystems trades was of a barbell concept as shown in Figure 1-2.

The initial station consisted of two core modules, a power module, two control center modules (CCM), two crew quarters modules (CQM), two research and applications modules (RAM's) and one cargo module (CM, 2 optional). The configuration did not accommodate side-docked (Y axes) modules. The growth station adds a third core module, two crew quarters modules, one medical exercise module (MEM), and a third RAM accommodation. Experimental airlocks and high-gain antenna packages can be berthed at the outboard end of the station modules. All modules were 14 feet in diameter and are assembled in orbit. Table 1-1 presents further data on the reference configuration.

Other configuration guidelines and requirements are:

1. Fifteen-foot diameter by 60-foot long packaging envelope (1.112A).
2. Design-to weight per module - 20,000 pounds (1.111).
3. Initial station includes GPL plus 2 RAM's (1.105A).
4. Cargo module storage optional (1.205).
5. Power module first launch (NR).
6. First core module second launch (NR).

REFERENCE CONFIGURATION
BARBELL CONCEPT

COMMON MODULES
14 FT DIAMETER
X 28 FT LONG

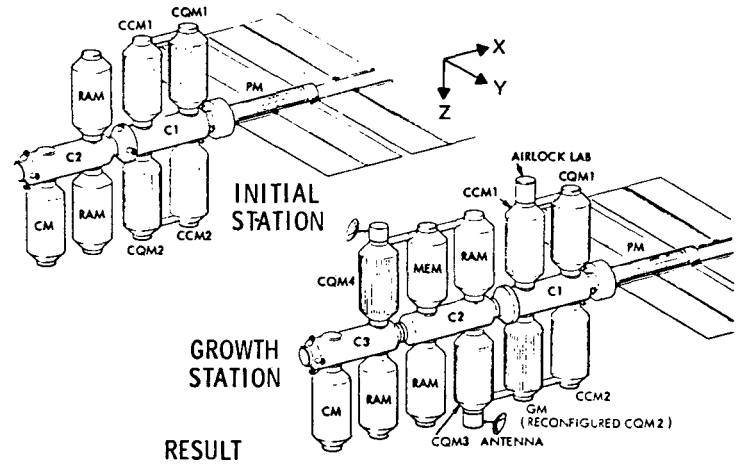

RESULT

- COMMON MODULES UNDERWEIGHT

MODULE		TARGET WEIGHT (LB)
CREW QUARTERS	C Q M 1	12,950
	C Q M 2	14,060
	C Q M 3	12,570
GALLEY	G M	15,590
CONTROL CENTER	C C M 1	15,730
	C C M 2	15,460
MEDICAL EXERCISE	M E M	13,550

Figure 1-2. Reference MSS Configuration

Table 1-1. Reference MSS Configuration Data

ORBITAL CONFIGURATION

ASSEMBLY ELEMENTS		INITIAL
• COMMON MODULES -	NUMBER	4
	SIZE & SHAPE	14 FT X 28 FT
• SPECIAL MODULES		
POWER -	NUMBER	1
	SIZE & SHAPE	14 FT X 42 FT
CORE -	NUMBER	2
	SIZE & SHAPE	12 FT X 31 FT
• CARGO MODULES -	NUMBER	2
	SIZE & SHAPE	14 FT X 29 FT
• RAMS	NUMBER	2 ATTACHED
	SIZE & SHAPE	14 FT X ?

ELEMENT LOCATION -

- MODULE SPACING - 1 FT ADJACENT MODULES ON SAME CORE
  - 2 FT ADJACENT MODULES ON DIFFERENT CORES
- RADIATORS - 360° (4000 FT^2) ALL COMMON MODULES
  - 360° (TBD FT^2) POWER MODULE
- IVA/EVA AIRLOCK - IN CORE MODULE NO. 1
- DUAL SHIRTSLEEVE EGRESS - TUNNEL DEVICE BETWEEN ADJACENT COMMON MODULES
- MANIPULATOR - 1 ON CORE MODULE

Experiment Guidelines and Requirements

The subsystem support requirements to experiments were developed by NR from experimental ("Blue Book") and operational analyses. The support requirements are:

1. Twenty-four-hour no venting (NR). Subsequent analyses have reduced the requirement to 12 hours; however, this reduction did not alter the selection.
2. Geometric axis orientation (SRB).
3. Average power initial MSS - 4.5 kilowatts (SRB).
4. Peak power initial MSS - 7.0 kilowatts (SRB).
5. RAM leakage - 1 pound per day (SRB).
6. Water supply or processing 35 pounds per day (SRB).
7. Waste processing - 67 pounds per month (SRB).
8. Metabolic oxygen - 1.2 pounds per day (SRB).
9. GPL heat rejection - 7 kw maximum (SRB).
10. RAM heat rejection - 4.5 kw per RAM (SRB).
11. Total heat rejection - 7 kw maximum (SRB).

EPS Guidelines and Requirements

The major EPS guidelines and constraints used for the study are:

1. Solar array primary power generation (1.402).
2. Separate and independent secondary (emergency) power generation (NR).
3. Five-year solar array operational life (NR).
4. Inflight maintenance without power shutdown (NR).
5. Fifteen kw minimum average power (1.402).

The MSS power requirements are presented in Table 1-2.

RCS Guidelines and Requirements

The RCS major guidelines and requirements are:

1. 1959 ARDC standard atmospheric model (SRB) (subsequently changed to 2σ mean Jacchia atmosphere).
2. Orbit 240 nautical miles, 55 degrees inclination (SRB).
3. Geometric axes MSS orientation (SRB).
4. Local-level flight mode (Z-axis nadir) (SRB).
5. Impulse requirements (NR) - The impulse values (shown in Table 1-3) were changed throughout the study to reflect the changes in MSS configuration, flight mode, and atmospheric model.

Table 1-2. Power Requirements (SRB)

Mission Phase	Start of Study Watts	Final MSS Value Watts	Duration
Buildup	2969*	355	60 day
Normal AVG	17,412	19,640	Continuous
14 hr light	20,747	25,361	14 Hr
14 hr dark	17,417	19,949	14 hr
10 hr light	15,736	16,514	10 hr
10 hr dark	12,406	11,102	10 hr
Degraded AVG	13,400	13,822	Continuous
Emergency	2,993 (48 hr)	1,750(96 hr)	
Experimental (AVG)	4,500	4,500	Continuous

*Power boom delivered first launch, solar array power available

Table 1-3. MSS Impulse Requirements (NR)

Impulse Requirement	Start of study Lb-sec	First Revision Lb-sec	Final MSS Revision Lb-sec
Orbit makeup	528,000	540,000	166,000
CMG desaturation	223,000	568,000	--
Manuevers	60,000	50,000	48,700
Shuttle docked	14,000	28,000	28,000
Emergency (2)	162,000		
Contingency		234,000	48,000
Total	987,000	1,420,000	290,000

ECLSS Guidelines and Requirements

The major ECLSS requirements are:

1. Closed wash water cycle (1.407).
2. Six-man crew with growth to 12-man crew (1.105A, 1.106, 1.301A).
3. Expendable storage capacity - 120 days (1.205).
4. Oxygen-nitrogen shirtsleeve atmosphere, 14.7 psia (1.115).
5. Ninety-six-hour emergency (48-hour initially) (1.4A, 2.15A).
6. Dual pressure volume (1.303A).
7. Repressurization of one pressure volume (1.5A).
8. Water vapor - 8 to 12 mmHg (SRB).
9. CO_2 concentration - 3.0 mmHg (1.401).
10. Thermal control - independent of orientation as design goal (1.206); no condensation.
11. Crew metabolic (SRB) - 11,900 Btu/man-day; oxygen consumption - 1.84 lb/man-day; CO_2 production - 2.25 lb/man-day.
12. Water usage (SRB) - 24 lb/man-day.
13. Thermal control (SRB) - module loss/gain - 2,000 Btu/hr; 1,000 Btu/hr.
14. Station leakage (SRB) - 20 lb/day initially, 10 lb/day final iteration.
15. Experiment Support (SRB)
    - O_2 consumption - 1.2 lb/day
    - RAM leakage - 1.0 lb/day
    - Water usage - 35 lb/day
    - Thermal control - 4500 watts maximum
    - Waste disposal - 2.2 lb/day

Costing Ground Rules

The ground rules imposed for the cost evaluation are:

1. Development plus 5-year operational program at the 6-man level.
2. Costs are in 1971 dollars.
3. Technology for D&D costs are projected to a 1975 Phase C start date.
4. Operational costs are based on logistics resupply only.
5. Three cargo modules; the RCS is charged with an additional cargo module for concepts requiring and using a fourth cargo module.
6. Costs include:

   a. Design and development.
   b. Theoretical first unit (TFU) cost.
   c. Five-year operations after IOC.

7. Costs exclude:

   a. Major test hardware.
   b. GSE.
   c. Tooling and STE at NR.
   d. Test and operations.
   e. System engineering and integration.

f. Program management.
g. Facilities.
h. Spares.
i. Tests.
j. Contractor fee.

1.3 INTEGRATED CONCEPT OPTIONS

The EPS/RCS/ECLSS integrated concept options were developed by first establishing the candidates for each subsystem. Technical trades eliminated some of the candidates which could not meet the subsystem MSS guidelines and requirements or which imposed large drivers or influences on MSS configuration or mission operations. A matrix of compatible integrated concept options was constructed from the remaining candidates. This approach is depicted in Figure 1-3 and the complete matrix is shown in Figure 1-4. Thirteen major integrated subsystem sets with numerous subsets (a total of 41) were identified and are shown in Figure 1-4.

Independent subsystems trades were conducted which reduced the 41 integrated concept options to 9. These trades are described in the next three sections. These nine remaining options were costed and ranked according to development plus five-year operational costs. The three lowest-cost concept options were evaluated and an integrated subsystem selection made. These tradeoff steps are shown in Figure 1-5.

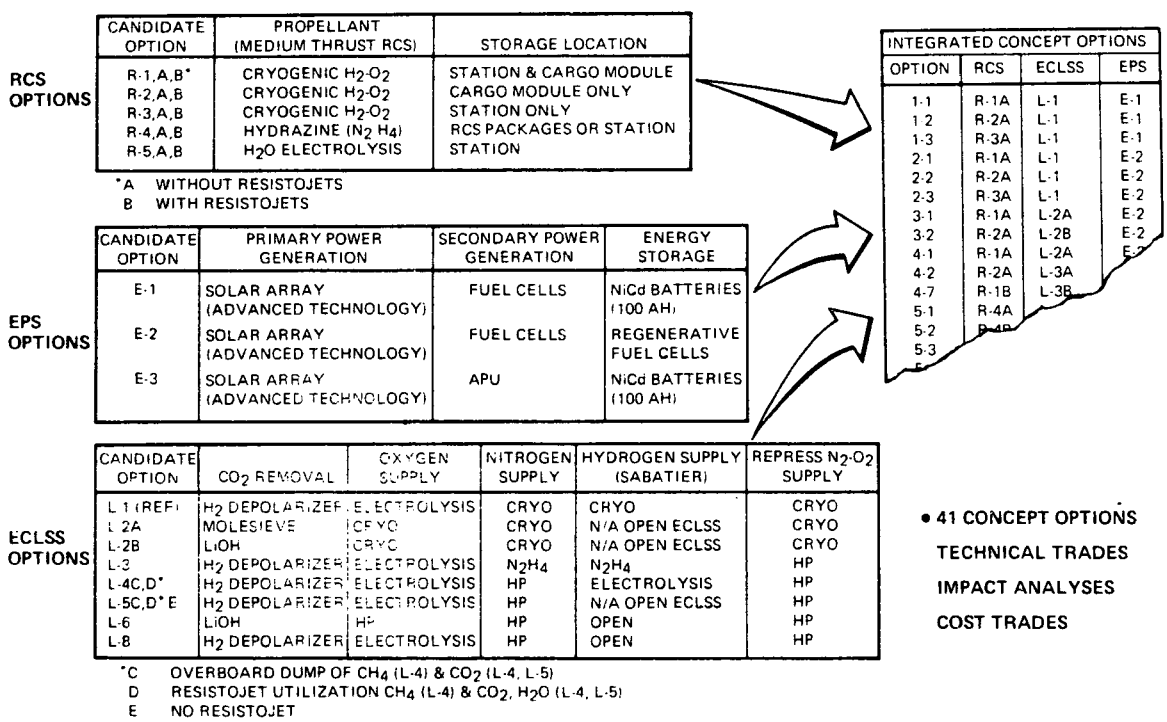

Figure 1-3. Integrated Subsystem Trade Approach

CONCEPT	RCS	ECLSS	EPS	NO. CARGO MODULES
1-1	R-1A	L-1	E-1	3
-2	R-2A	L-1	E-1	4
-3	R-3A	L-1	E-1	2
2-1	R-1A	L-1	E-2	3
-2	R-2A	L-1	E-2	4
-3	R-3A	L-1	E-2	2
3-1	R-1A	L-2A	E-1	3
-2	R-2A	L-2A	E-1	4
-3	R-1B	1-2A	E-1	3
-4	R-2B	L-2A	E-1	4
-5	R-3A	L-2A	E-1	2
-6	R-3B	L-2A	E-1	2
-7	R-1A	L-2B	E-1	3
-8	R-2A	L-2B	E-1	4
-9	R-3A	L-28	E-1	2
4-1	R-1A	L-2A	E-2	3
-2	R-2A	L-2A	E-2	4
-3	R-1A	L-2B	E-2	3
-4	R-2A	L-2B	E-2	4
-5	R-3A	L-2A	E-2	2
-6	R-3A	L-2B	E-2	2
-7	R-1B	L-2A	E-2	3
-8	R-2B	L-2A	E-2	4
-9	R-3B	L-2A	E-2	2

CONCEPT	RCS	ECLSS	EPS	NO. CARGO MODULES
5-1	R-4A	L-3	E-1	4
-2	R-4B	L-3	E-1	4
-3	R-4A	L-6	E-1	4
-4	R-4B	L-6	E-1	4
6-1	R-4A	L-3	E-2	4
-2	R-4B	L-3	E-2	4
-3	R-4A	L-8	E-2	4
-4	R-4B	L-8	E-2	4*
7-1	R-4A	L-3	E-3	4
-2	R-4B	L-3	E-3	4
8	R-5A	L-4C	E-2	3
9	R-5B	L-4D	E-2	3
10	R-5B	L-5C	E-1	3
11-1	R-5B	L-5C	E-2	3
-2	R-5A	L-5E	E-2	3
12	R-5B	L-5D	E-1	3
13	R-5B	L-5D	E-2	3

*3 IF RCS PACKAGES UTILIZED

Figure 1-4. Integrated Subsystem Concept Options Matrix

Space Division
North American Rockwell

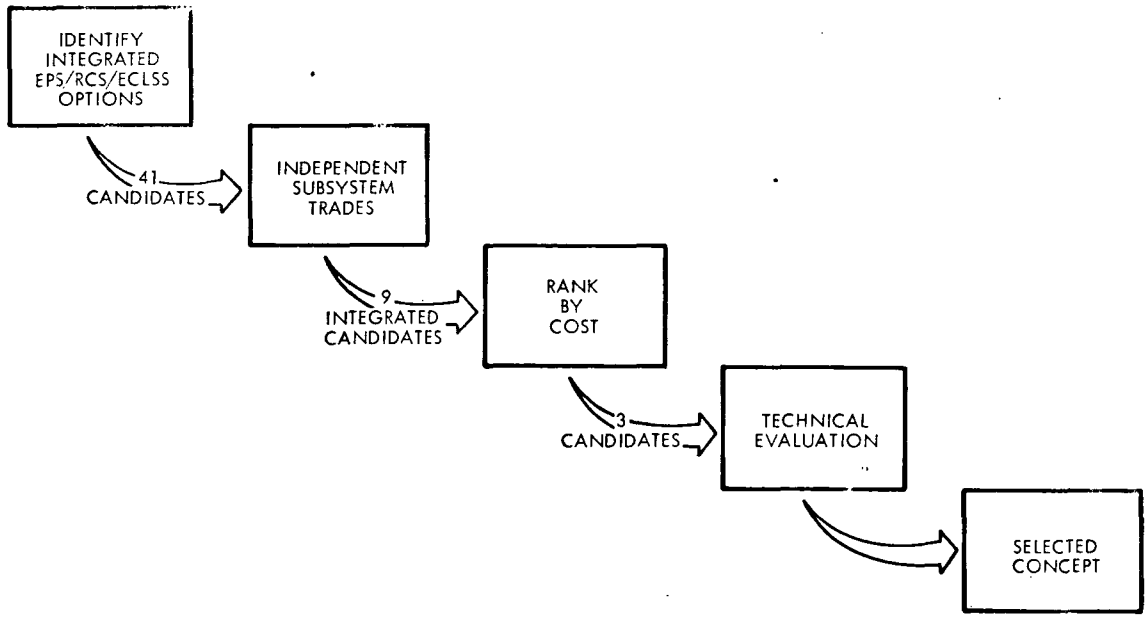

Figure 1-5. Integrated Subsystem Tradeoff Steps

1.4 EPS TRADES

The EPS candidate options considered for the integrated subsystem trades were in the areas of primary power generation, secondary power generation, and energy storage. For the solar array primary power generation the trades considered the advanced technology solar arrays presently being developed by the Lockheed Corp. under NASA/MSC contract and the Skylab technology solar arrays. The secondary power generation assembly trades considered fuel cells, hydrazine APU's, and batteries. The major EPS trade was related to the energy storage assembly where NiCd batteries and chargers were traded off against the fuel cell-water electrolysis unit combination operating as a regenerative fuel cell.

Secondary Power Generation

The secondary power generation trade was completed previously and documented in Shuttle-Launched Modular Space Station, Concept Definition, Volume 1 (SD 70-546-1, January 1971). A summary of that trade is presented here for completeness.

In selection of a secondary power concept, it is necessary to consider the combined premanning, emergency, and backup requirements. The requirements listed in Table 1-4 were used in this determination.

Table 1-4. Secondary Power Generation Requirements

Operating Mode	Power Level (24-hr. avg.)	Duration	Energy Reqmt (kwh)
Premanning	355 watts	1st 30 days 2nd 30 days	305
Emergency	3700 watts	96 hours	418
Backup	6700 watts	5 days	940

Two levels of backup were considered: (1) 30-day degraded performance satisfied by the solar array primary power generation and (2) a limited backup in the event that the solar array is unavailable (e.g., replacement of the array). (Note: Requirements for emergency were later reduced to an average of 1750 watts by the preliminary design effort.)

Initial plateaus were established for each secondary power candidate based on weight, volume, and area data (Table 1-5). Generally, fuel cells show a weight advantage over batteries but require reactant storage (large volumes) and pose difficult integration problems. For low power requirements batteries are very attractive. Solar array and batteries are light in weight, but complex because of the need for energy storage and large area and orientation requirements.

Weight, volume, and area comparisons are shown in Table 1-6. Primary batteries were rejected on the basis of weight. Solar array and batteries are not competitive for emergency or backup power levels and only applicable to the first 60 days of operation. (Note: Cryogenic storage of fuel cell reactant was rejected since the MSS no longer employs cryogenic storage in its definition.) Based on these data only high-pressure reactant gas storage with fuel cells and hydrazine APU's for those options using hydrazine in the RCS were retained for further study.

Additional weight and cost comparisons were made between the two remaining candidates.

Figure 1-6 shows parametric prime mover performance when used to generate electrical power. The fuel consumption for hydrazine-fueled prime movers is based on a theoretical energy release of 1500 Btu per pound of fuel. This represents an upper limit and probably could not be achieved in practice because of ammonia dissociation and heat losses from the decomposition chamber. A specific fuel consumption rate of 10 pounds per kilowatt-hour was the most optimistic value thought to be feasible. This results in a weight penalty over fuel cells (0.82 pound per kilowatt hour) of roughly 3600 pounds (includes storage weight) for a 96-hour emergency.

Table 1-5. Secondary Power Generation - Matrix of Candidates

Item	Core Module	Power Module	Initial Manning	6-Man Level	12-Man Level	Comment
AgZn batteries	P	BU	E	E	E	Limit ≤ 400 kwh
NiCd batteries		BU				Limit ≤ 50 kwh
Fuel cells						Limit ≤ 400 kwh (≤ 14 days)
Gaseous	P	BU	E	E		
Cryogenic	P	BU	E	E/BU	E/BU	
Solar-array batteries						
Body mount	P	BU	E			≤ 1.0 kwe
Deployed	P	BU	E			≤ 2.0 kwe
Chemical						
APU		BU	E	E/BU	E/BU	≤ 800 kwh

P = Premanning EPS
BU = Backup EPS
E = Emergency EPS

Table 1-6. Weight, Volume, and Area Comparisons

Operations	Batteries (AgZn)		Fuel Cells Gaseous Storage		APU Hydrazine		Solar Array/ Batteries		
	Weight (lb)	Volume (ft^3)	Weight (lb)	Volume (ft^3)	Weight (lb)	Volume (ft^3)	Weight (lb)	Volume (ft^3)	Area (ft^2)
Premanning									
1st 60 days	5100	40	840	80	3050*	30	200	20	275**
2nd 60 days	5100	40	840	80	3050*	30	-	-	-
Emergency	7000	55	1100	105	4180*	40	2100	40	2900**
Backup	15600	123	2580	245	9400*	90	3800	70	5250**

*10 pounds per kilowatt-hour (no allowance for tanks and conversion equipment).

**Body-mounted - reduces to 250 ft^2/KW_e for deployed and fully oriented (solar arrays).

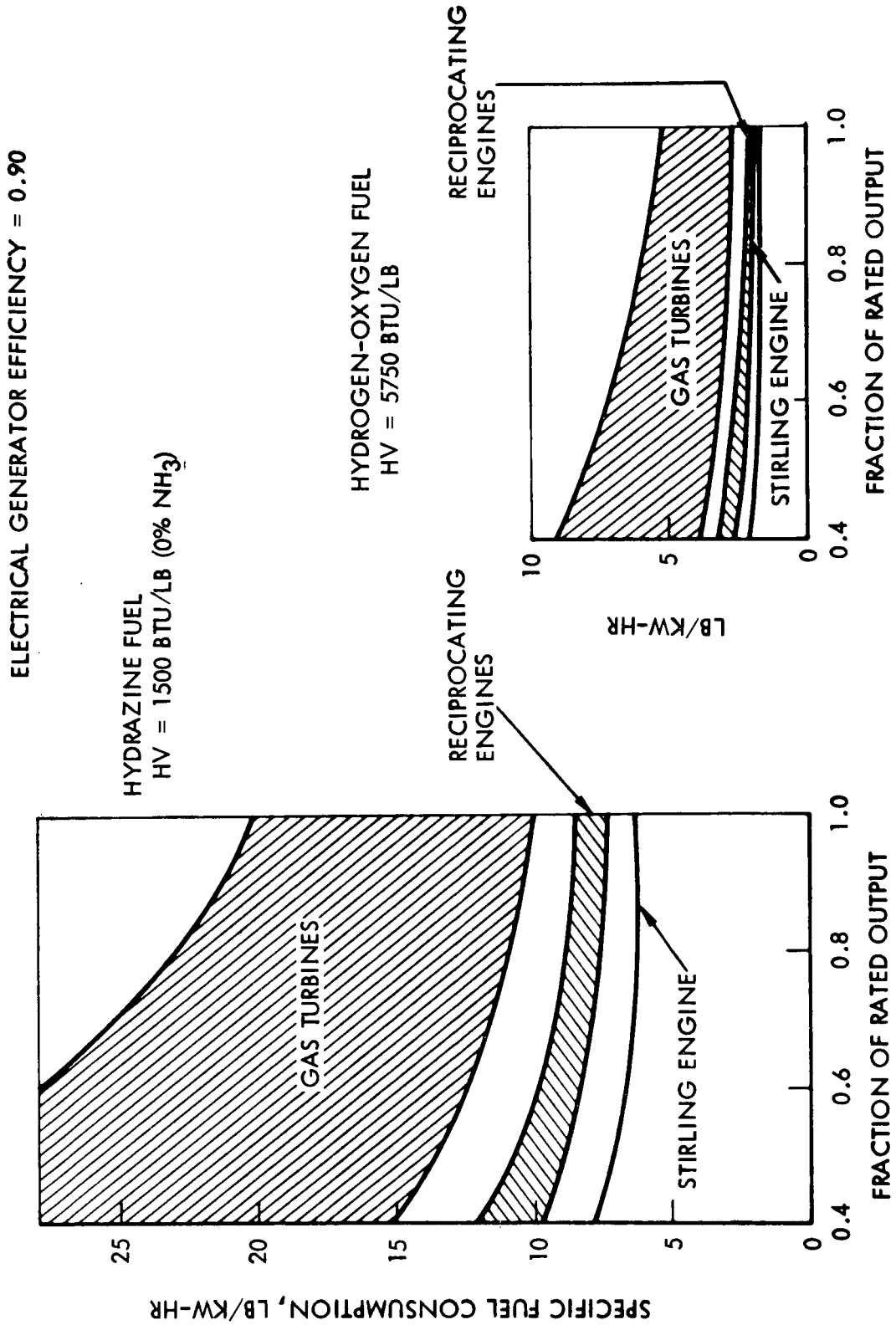

Figure 1-6. Prime Mover Performance Comparison

Current APU's have demonstrated high reliability and consistent performance for short durations (missile applications). The major development problems for longer durations are in the area of stress and heat transfer to assure adequate safety margins for high-speed components. Performance gains can be obtained by utilizing multiple stage turbines, but this gain is offset by increased complexity and development costs.

Cost comparisons showed that the hydrazine APU adds $13.4 million (D&D, TFU) above E-1 with fuel cells. (Note: The D&D of $22.19 million for APU compares to $5.68 million D&D for fuel cells.) Based on weight and cost comparisons, hydrazine APU's were rejected for secondary power in this application. It was recommended that all integrated options containing E-3 be dropped from further consideration.

Advanced Solar Arrays Versus Skylab Technology Solar Arrays

The Skylab solar array technology was considered for MSS to arrive at a low-cost initial space station. A Skylab block diagram is shown in Figure 1-7. Investigation showed that there were three utility options available for Skylab technology: (1) intact use of solar array and power conditioning, (2) use of the solar array only, and (3) use of only the power conditioning. Gross characteristics of the Skylab hardware are as follows:

Solar Array	- Two 600 ft^2 (20 ft x 25 ft) wings at 3 lb/ft^2
Power Conditioning	- Modular 500 watts (solar array string, peak power tracker, battery charger, battery, and regulator). 35 amp-hour NiCd battery 20 cells per battery 28-volt dc ± 4 system voltage
Lifetime	- One year

Option No. 1 would require integrating four equivalent Skylab power supplies into MSS configuration. This involves 8 wings and 32 battery (power) modules. Control of the hardware would be on an input-output level for each power module with some monitoring internal to each power module. The 8 wings create a strong configuration driver and the short life (one year) is not compatible with MSS life goals of five years. This approach did not adequately provide for growth and proved to be complex with poor operational flexibility. The low voltage 28-volt dc output results in increased distribution and conditioning losses and wiring penalty.

Options 2 and 3 were rejected since the problems of the array are the same as for Option 1 and it was felt that the key to cost savings is to use the hardware as developed as an intact configuration. This concept is really a series approach and the array string is an integral part of the battery (power) module.

The use of advanced technology solar arrays such as being developed by Lockheed Missile and Space Company (LMSC) will offer a significant weight advantage (i.e., 0.95 pound per square foot, including 0.3 pound per square foot for two-degree-of-freedom orientation, drive, and power transfer) compared to roughly 3.0 pounds per square foot quoted in the Skylab program.

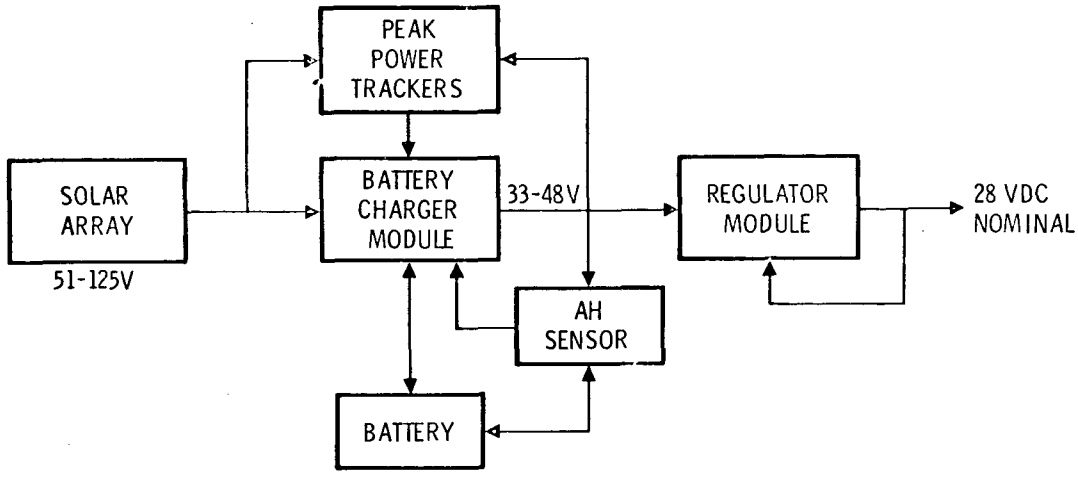

- OPTIONS
  - USE SOLAR ARRAY TECHNOLOGY
  - USE BATTERY/CHARGER/REGULATOR
  - USE TOTAL SUBSYSTEM APPROACH

Figure 1-7. Skylab EPS Block Diagram

A growth requirement of roughly 10,000 square feet of solar array area and weight constraint of 20,000 pounds for initial launch of a module prohibit use of any array at 3.0 pounds per square foot. A major modification of the Skylab array would be required to reduce the overall power module weight within launch constraints, thereby giving up much of the cost advantage associated with using existing hardware.

Regenerative Fuel Cells Versus Batteries

The major EPS trade study performed was to determine the selection of an energy storage assembly. Requirements were set based on Phase A MSS study results. A baseline fuel cell and electrolysis regenerative energy storage concept was established and compared to secondary batteries. An iteration of the battery concept employed in the Phase A study was performed to assure that comparisons would be made on a common basis. Table 1-7 shows a summary of comparisons that were made in the study. The detailed trade and analysis is presented in Section 6 of this report.

It was recommended that regenerative fuel cells be used for energy storage if shared development cost savings could be achieved. This would require electrolysis to be selected in the ECLSS trade study. For options (in the integrated subsystem trade) which did not contain electrolysis it was recommended to continue both battery and regenerative fuel cell options. Selections for these options need to be made after an overall (integrated) subsystem evaluation and a more optimized concept comparison.

Table 1-7. Fuel Cell, Electrolysis Regenerative Energy Storage Comparisons to Battery Energy Storage

Evaluation Criteria	Fuel Cells, Electrolysis Regener. Energy Storage	Battery Energy Storage
Thermal Control	Single Temperature Development (4.8 $\overline{M}$ less development cost)	Two loop development Dual temperature ranges
Charge-Discharge Efficiency	0.525	0.625 (higher efficiency)
Solar Array Area Requirement	240 ft^2 less (7540 ft^2 SA) (based on 24 hour cycling)	7780 ft^2 solar array (based on per orbit cycling)
Secondary Power Requirement (emergency, buildup)	Utilize energy storage F C's	Adds F C's to energy storage assembly (battery capacity inadequate)
ISS Interface	Four equivalent subassemblies	32 equivalent sub-assemblies (more complex)
Launch Weight	2817 pounds	9172 pounds (heavy)
Cost		
Development	14.7 $\overline{M}$ (assumes shared development)	13.7 $\overline{M}$ (includes secondary power)
Hardware	5.3	7.5 (includes secondary power)
Operations	7.9	10.0 (includes launch $250/lb)
Overall (IOC + 5 Yr Ops)	27.7	32.2
Sensitivities:	• Fuel cell lifetimes • Amount of shared development of electrolyiss & fuel cells • 24 hr cycling	• Voltage degradation • Charge scheme-- available energy & charge time constraints

The conclusions affecting these recommendations are:

1. Battery technology needs to show a battery with little or no voltage degradation over 2.5 to 5 years of operation.
2. Improved battery charging technology appears to be badly needed.
3. The regenerative fuel cell approach used in this study did not affect solar array area requirements but did impose operational considerations.
4. Development cost and five-year operations favor regenerative fuel cells. However, this conclusion is sensitive to the amount of shared development acceptable and to the fuel cell lifetime assumptions.
5. The regenerative fuel cell concept needs to be pursued in a technology program with a priority set on obtaining supporting data in sufficient depth to verify performance and establish credibility on lifetime assumptions.

1.5 RCS TRADES

The RCS trades were concerned with propellant selection for medium-thrust engines, propellant storage location, and the utilization of resistojets for certain stabilization functions.

Propellant Selection Trades

The RCS medium-thrust engine propellant candidate options were subcritical cryogenic hydrogen and oxygen, hydrazine, and gaseous hydrogen and oxygen generated on-orbit by water electrolysis. All concepts considered medium-thrust engines only or medium-thrust engines used in conjunction with biowaste resistojets. The resistojets-only concept was analyzed but rejected since the time to complete some MSS stabilization and control operations was excessive and since the experiments required considerable time without RCS operation. These trades could not be resolved at the subsystem level and were, therefore, analyzed only at the integrated subsystem level.

Propellant Storage Location Trades

Three storage locations were considered in the RCS trades:

1. A combination of station and cargo module storage (reference subsystem concept).

2. Storage on the space station where the propellants are transferred to MSS tanks from the cargo module tanks, thereby allowing the cargo module to be used in an up-down mode. No on-orbit cargo module would be required.

3. In the cargo module only or in the package concept where propellant, tanks, and engine quads are combined into removable packages stored in the cargo module.

The storage location trades were conducted at the subsystem level.

The major requirements and guidelines used in the integrated subsystem trades were described previously. The cryogenic and hydrazine propellant storage location trades established additional functional requirements. These are:

1. MSS failure criteria interpreted for propellant storage (Table 1-8).

2. Crew safety to have high priority considerations - no cryogenics or hydrazine to be stored in the normally habitable areas. Cryogenic tanks must be located outside of the pressure volume to assure performance; however, hydrazine can be located within the pressure volume in a non-habitable area.

3. EVA maintenance capability for tank replacement is acceptable.

4. No cryogenic support to experiments.

5. All cryogenic tanks to be of a common size and material. This eliminates a multiple development for later cost analyses but drives tank placement, volume allocation, and location considerations.

6. Tanks to incorporate pressure relief protection and vent capability to space if located in a habitable pressurized area.

7. RCS propellant capability must be provided at each step of the buildup.

Table 1-8. Propellant Storage Failure Criteria

Loss	Capability Requirement
1 tank failure (or IFRU)	nominal operations, continuous
2 tank failures (or 2 IFRU)	degraded operations, 30 days, orbit make-up delayed until maintenance accomplished or all functions provided with increased logistics
3 tank failures (or 3 IFRU)	96 hours, MSS stabilization for shuttle docking
4 tank failures (or 4 IFRU)	disabled RCS
1 accident (1 tank location)	degraded operations, 30 days (same as 2 IFRU failure)
1 tank location + 1 IFRU	96 hours, MSS stabilization for shuttle docking

Figure 1-8 shows the location options considered for the cryogenic fluid locations trade. The reference (hybrid) configuration used a tank farm "necklace" external to the 7-foot diameter power module with the second tank farm located in the cargo module. The all-onboard option used the power module necklace tank farm with the second source of cryogenics located on the -X end of the MSS but external to core module 2. The third option was all cargo module storage with one cargo module attached to pressure volume V_1 on the Y axis and the other to pressure volume V_2 on the Z axis.

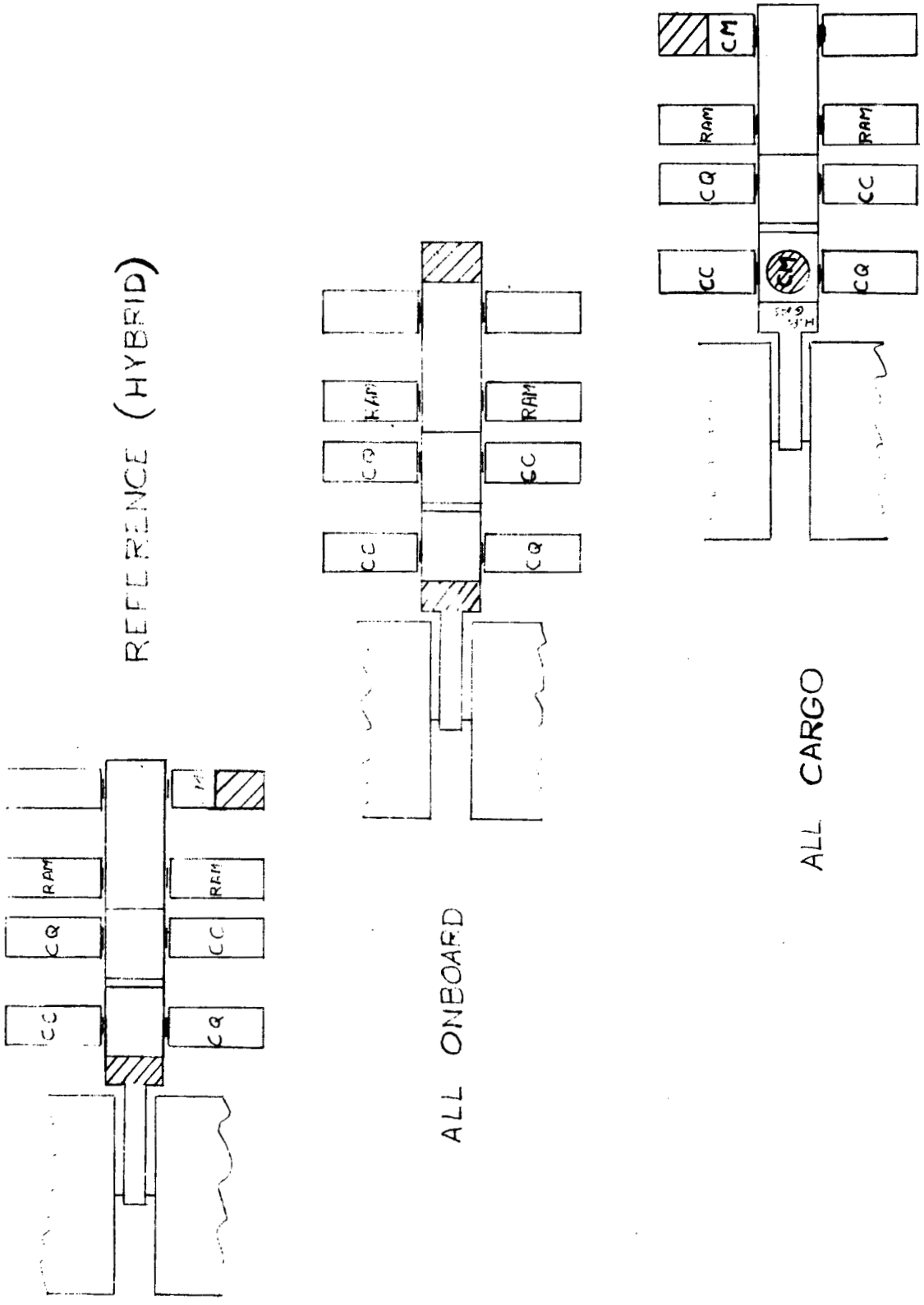

Figure 1-8. Cryogenic Fluid Storage Options

Table 1-9 defines a buildup sequence as related to each configuration. The only significant difference affecting station buildup is that the all-onboard configuration (Option 2) eliminates one launch prior to achieving manned status.

Table 1-9. Typical Buildup Sequences - Initial Station

Launch No.	Configuration		
	Option 1 Reference	Option 2 Onboard	Option 3 All Cargo
1	Power	Power	Power
2	Core #1	Core #1	Core #1
3	Control #1	Control #1	Control #1
4	Cargo	Core #2	Cargo
5	Crew quarters	Crew quarters	Crew quarters
6	Core #2	Crew quarters	Crew quarters
7	Crew quarters	Control #2	Core #2
8	Control #2	Cargo/man	Control #2
9	Cargo/man	RAM (earth viewing)	Cargo/man
10	RAM (earth viewing)	RAM (earth viewing)	RAM (earth viewing)
11	RAM (space viewing)		RAM (space viewing)

To satisfy the failure criteria, a minimum of four tanks for each storage function (oxygen, nitrogen, hydrogen) divided between the two pressure volumes is required. Table 1-10 displays one set of cryogenic storage characteristics which satisfies these requirements. All tanks are of the same diameter (48-inch ID) which represents the largest size compatible with the 60-inch docking port diameter, minimizes development costs, and is compatible to the cargo module volume constraints.

Option 1 (reference concept) requires a 60-day onboard capacity and a 90-day cargo module capability (shuttle frequency of 90-day maximum). With the defined number and size of tanks shown in Table 1-10, the hydrogen capacity exceeds requirements by seven pounds, the nitrogen capacity is minus 148 pounds, and the oxygen capacity exceeds the requirement by 3234 pounds. The nitrogen shortage is not critical because it represents a repressurization supply deficiency, not a normal operations deficiency. Since utilization of the repressurization requires a shuttle resupply flight, the slight reduction in atmospheric pressure (or slight oxygen enrichment) for a short period is not critical. The oxygen excess capability can be resolved by offloading of tanks.

Table 1-10. Cryogenic Storage Characteristics

Fluid	Option 1		Option 2	Option 3
	Onboard	Cargo Module	Onboard	Cargo Module
Oxygen				
2610 lb required*	60 days	90 days	120 days	180 days
No. of tanks	2	2	4	4
Capacity (lb)**	2922	2922	5844	5844
Hydrogen				
734 lb required*	60 days	90 days	120 days	180 days
No. of tanks	3	6	9	12
Capacity (lb)**	247	494	741	988
Nitrogen				
3190 lb required*	60 days	90 days	120 days	180 days
No. of tanks	1	2	3	4
Capacity (lb)**	1014	2028	3042	4056

*120-day requirement
**48-inch diameter tanks

The hybrid option requires dual tank and quantity gauging developments. The space station onboard tanks are operated only in the space environment and can be of a pressure shell with attached superinsulation concept (soft shell) All fluid withdrawals from these tanks are gaseous and can use a pressure differential transfer technique. Advances in zero-g quantity gauging will be required for onboard tanks. Maintenance of these tanks would require EVA operations; however, except for the gauging device the tanks are passive and should have long-life characteristics. Redundancy gauging may be required to decrease tank replacement operations. The cargo module tanks would be of the dewar type since they must operate in both space and launch pad atmospheres. A cryogenic fluid transfer method must be incorporated to provide refilling of onboard tanks but a simplified gauging technique, such as integrated flow meters, can be utilized. The expulsion device results in a decreased tank life expectancy, but the maintenance and replacement can be completed with ground operations. This option requires three cargo modules (10 tanks per cargo module), one on orbit, one on ground for resupply, and one spare. The station must provide two berthing ports on pressure volume 2 to accommodate the cargo modules. One additional disadvantage for Option 1 is that the power module engine quads create a difficult and complex installation in order to provide an accessible shirtsleeve maintenance concept due to volume constraints imposed by the solar array length, the diameter restrictions, and the weight limitations.

The Option 2 (all onboard) concept requires an additional tank farm consisting of two oxygen, two nitrogen, and six hydrogen tanks mounted on core module 2, which provides the same on-orbit capacity as Option 1. Since the cargo modules operate on an up-down mode, in that the resupply cryogenic fluids are immediately transferred to the station tanks, the program only requires two cargo modules and the station requires only one temporary berthing port. This concept still requires dual tank development, zero-g quantity gauging, and EVA maintenance techniques. It has an additional disadvantage of requiring another tank farm installation on the station. The advantages are (1) one less cargo module, (2) deletion of cargo module tank quantity guaging, and (3) no on-orbit cargo module requirements.

Tank Option 3, all-cargo module storage, requires two cargo modules to be berthed to the station. These cargo modules are identical to those for Option 1 and contains two oxygen, two nitrogen, and six hydrogen tanks each. Two cargo modules, on-orbit at full capacity, provide a 180-day capability. With this capacity four cargo modules (one spare) and three berthing ports (two continuous, one temporary) are required. Only one tank development, using the dewar type and simplified quantity gauging, is required. Positive expulsion would be required to provide transfer of residual cryogenics from the cargo module being returned to the ground to the cargo module being retained on-orbit. Careful cryogenic management of on-orbit usage in conjunction with scheduled logistics could probably delete the transfer requirement and still minimize return of cryogenics to ground. A major advantage for Option 3 is the deletion of all on-orbit maintenance of cryogenic tanks since they are returned to ground at intervals of 180 days maximum. One disadvantage relates to station buildup. Since cryogenics are not delivered until the fourth launch (see Table 1-9) high-pressure gas storage will have to be provided to maintain spacecraft stabilization and control until cryogenics are available.

Table 1-11 presents an evaluation summary for the cryogenic storage location trades. The ROM development cost estimates showed only an approximate 10 percent difference between the three concepts. Tank location Option 1 (reference concept) was the most expensive due to dual tank developments, zero-g gauging, and three cargo modules. Option 2 (all-onboard sotrage) still has all the developments of Option 1; however, the up-down cargo module operating mode provides a reduction of one cargo module. Option 3 (all-cargo module storage) provides a single tank development (expulsion fluid transfer assumed) and simplified zero-g quantity gauging, but an additional cargo module is required. Option 3 was the selected concept for the following reasons:

1. Safety is improved since tank failure (rupture) is confined to the cargo module and EVA maintenance is eliminated

2. Reduced development reduces program risk

3. Ground maintenance of storage assembly

4. Minimum costs

Table 1-11. Cryogenic Storage Location Summary

Evaluation Factors	Cryo Location Options		
	Reference	All Onboard	All Cargo
Safety	Power module susceptible to tank rupture damage	Power and core modules susceptible to tank rupture damage	Tank rupture damage confined to cargo module
Maintenance	6 passive tanks onboard (EVA maintenance)	• 16 passive tanks onboard (EVA maintenance)	• 20 positive expulsion tanks on cargo modules (ground maintenance)
	10 positive expulsion tanks on cargo module (ground maintenance	• 10 positive expulsion tanks on cargo module (ground maintenance)	Shirtsleeve RCS engine maintenance
	Difficult RCS quad maintenance (power module)	• Difficult RCS quad maintenance	
Cost	Zero-g gauging development Dual tank development 3 cargo modules ROM $97.8 M development cost	Zero-g gauging development • Dual tank development • 2 cargo modules • ROM $91.0 M development cost	• Single tank development • 4 cargo modules • Simplified gauging • ROM $87.9 M development cost
Operational flexibility	Increased shuttle frequency	Increased shuttle frequency	• Increased shuttle frequency • Increased cargo module storage • Requires extra berthing port
Miscellaneous considerations	Weight: Sensitive to power module	Weight: Sensitive to core module and power module growth	120-day high-pressure gas required for buildup

• Common requirement - all options have positive expulsion tanks in cargo module

Space Division
North American Rockwell

The central hydrazine storage location trades considered the same three location options; however, the differences between options were not as great as for cryogenic storage. The hydrazine storage developments are the same for all options which require positive expulsion tanks and quantity qauging. These are in reality delta developments to existing hardware. The only cost deltas are, therefore, related to number of cargo modules utilized, which makes Option 3 the most costly followed by Option 1, with Option 2 the least costly.

The all-cargo module storage location concept was selected for the following reasons:

1. Safety - Cargo module storage confines a toxic hazardous fluid to a nonhabitable section of the cargo modules. Distribution plumbing to the RCS quads are external to the pressure shell of the MSS station and cargo modules except for a short interface connection of double-wall construction at the two cargo module berthing ports. Tank rupture damage is confined to a replaceable cargo module while Option 1 makes the power module susceptible to damage and Option 2 makes both the power module and core module 2 susceptible to damage.

2. Maintenance - Option 3 provides for ground maintenance of all hydrazine storage hardware which is returned at or less than 180-day intervals. The 180-day return frequency reduces the requirement to develop the hardware for 10-year lifetimes. The RCS quads are shirtsleeve maintainable. The plumbing is a long-life item and with redundancy is considered to have a 10-year life expectancy.

3. Operational Flexibility - Mission or operational changes to orbital altitude, inclination, and spacecraft orientation, spacecraft changes to growth configuration, or changes to shuttle launch frequency are more easily accommodated with cargo module storage.

In addition to an integrated central hydrazine approach, a modular or plug-in concept was considered. This provides a self-contained package consisting of engine quads, propellant, and pressurant which is replaced as a unit for maintenance or propellant resupply. Four packages are installed on the station. The basic advantages of this concept are that it eliminates all hydrazine distribution throughout the station, provides only an electrical interface, requires a short-life hardware development, promotes easy on-orbit replacement, and allows for ground maintenance.

Three package concepts were studied: Concept 1 considered hydrazine packages for all RCS operations, Concept 2 used hydrazine packages plus resistojets (resistojets provide for partial orbit makeup impulse requirements), and Concept 3 used hydrazine package plus resistojet (resistojets provide all orbit makeup and CMG desaturation thrust requirements).

The basic evaluation factor was modular weight, size, and resupply weight. The development costs for all hydrazine package options are essentially the same. The resistojet development costs are partially offset by decreased propellant resupply costs with Concept 3 providing lower costs than Concept 2 because of greater utilization of the resistojets. Concept 1 is the lowest-cost option since logistics costs in general do not offset resistojet development costs during the initial space station five-year operational period.

The characteristics of the hydrazine package concepts are summarized in Table 1-12. Two package sizes were defined, a 120-day and a 60-day size. The 120-day package size for Concept 1 (no resistojets) was too large to transfer through the docking ports and the 60-day package for Concept 3 was too inefficient in the ratio of N_2H_4 weight (44 pounds) to package dry plus contingency weight (235 pounds). At the time of the trade analyses an RCS emergency contingency of 8100 lb-sec was required to restabilize the MSS due to a pressure shell puncture and the subsequent loss of one pressure volume. This is shown in Table 1-12 as 128 pounds per package. This requirement was subsequently deleted, which would reduce the size and weight for all concepts.

Concept 3, which uses resistojets to provide all orbit makeup and CMG desaturation functions by utilization of all waste gases (CO_2 and/or CH_4) and with H_2O resupply as required, was the selected concept. The selection rationale was:

1. Smallest and lowest weight packages maximize the handling safety aspects. The packages are 323 pounds each with the RCS emergency contingency or 195 pounds without the requirement.

2. The 120-day replacement packages reduces frequency of replacement.

3. Lowest resupply weight provides greater recovery of resistojet development costs in the five-year program and is the least sensitive to changes in logistics costs (dollar per pound to orbit).

The RCS propellant storage location trades were not conducted for the RCS hydrogen-oxygen propellants supplied by water electrolysis. A cost analysis indicated this RCS concept to be a viable option if shared development costs by integration into the EPS and ECLSS can be used. The trades were, therefore, conducted at the integrated subsystem level.

Resistojet Trades

The use of biowaste resistojets was considered with all medium-thrust RCS propellant options (cryogenic, hydrazine, and water electrolysis). The resistojets considered in the trade were 0.1-pound thrust and utilized either methane, carbon dioxide, water, hydrogen, or combinations of those as propellants. All gases considered for fuel are waste products generated by the ECLSS or water resupply. The function of the resistojets is to provide thrust to accomplish all or portions of orbit makeup and CMG desaturation. The remaining functions of attitude control and maneuvers require the medium-thrust engines. These functions cannot be accomplished by resistojets, since they require short-duration firing.

Table 1-12. Hydrazine Package Concept Summary

Item	Concept 1 (No Resistojets)	Concept 2 (Partial Resistojets)	Concept 3 (Maximum Resistojets)
Total impulse requirement (lb-sec/day)	6720	6720	6720
Resistojet utilization (lb-sec/day)	0	2520	6220
N_2H_4 120-day requirement (lb)	3862	2395	352
N_2H_4 weight/package (120-day) (lb)	120-day packages too large	598	88
Package dry weight (lb)		130	107
N_2H_4 contingency (lb)		128	128
120-day package total (lb)		856	323
N_2H_4 weight/package (60-day) (lb)	483	299	60-day packages inefficient
Package dry weight (lb)	123	115	
N_2H_4 contingency (lb)	128	128	
60-day package total (lb)	734	542	
Package size (in.)	61 x 24 x 30	61 x 21 x 27	57 x 21 x 24
90-day resupply (N_2H_4)			
Number of packages	6	6	4
Weight (lb)	4476	3252	969
Resistojet water resupply (lb)	--	--	766
Total 90-day resupply (lb)	4476	3252	1735

Space Division
North American Rockwell

For the cryogenic options, resistojets were considered but were eliminated because of technical and cost reasons. Table 1-13 provides trade summary data. The data indicate that the hydrogen tank boiloff presently equals the daily requirement for RCS and ECLSS operation.

Table 1-13. Cryogenic With Resistojet Summary Data

Item		Data
120-day orbit makeup	lb-sec	540,000
120-day CMG desaturation	lb-sec	568,000
Total	lb-sec	1,108,000
Daily impulse	lb-sec/day	9,233
RCS H_2 (orbit makeup and CMG)	lb/day	2.4
RCS maneuvers + ECLSS H_2	lb/day	2.1
Total H_2 requirement	lb/day	4.5
H_2 boiloff (0.5 lb/day-tank avg)	lb/day	4.5
RCS O_2 (orbit makeup and CMG)	lb/day	19.2
RCS maneuvers + ECLSS O_2	lb/day	6.4
Total O_2 requirement	lb/day	25.6
O_2 boiloff (1.25 lb/day-tank avg)	lb/day	5.0
ECLSS CO_2 production (6 men)	lb/day	13.5
ECLSS H_2O production	lb/day	3.5
Total	lb/day	17.0
Resistojet impulse equivalent	lb-sec	2,805

With cryogenic medium-thrust RCS quads the minor propellant and cost savings of one less propellant tank and resupply does not offset the development costs of the resistojet installation. Therefore, the resistojet options were deleted from all RCS options utilizing cryogenic propellants.

For the hydrazine and electrolysis RCS propellant options, resistojets offered no inherent performance advantage over the medium-thrust propulsion concept. This is based on the fact that the desired acceleration levels and pointing accuracies can be met with the medium-thrust engine quads.

In order to offset the additional development cost of a resistojet assembly, a reduction of 2560 pounds per 90-day resupply would have to be obtained over the five-year initial MSS operational period. The basic logistics cost assumed was $250 per pound and the resistojet development cost was estimated at $12 million. Table 1-14 presents the 90-day resupply savings obtained by resistojet utilization for various propellant options.

Table 1-14. Propellant Savings by Resistojet Utilization

Propellant	Resupply Savings/90 Days
Cryogenics	838 pounds
Central hydrazine	1257 pounds
Package hydrazine (resistojet for all orbit makeup and CMG desat)	2052 pounds
Electrolysis*	955 pounds
*900 lb is power credit for power not used to electrolysis H_2O.	

As indicated in the table none of the options provides enough cost savings (2560 pounds per 90 days) to offset the initial resistojet development cost.

Resistojet usage also presented a potential experiment contamination condition due to the continuous exhaust and effluents expelled through the resistojets. Their usage could not satisfy the 24-hour no-vent requirement and still provide the orbit makeup and CMG desaturation functions in reasonable time.

Resistojets were eliminated from the integrated subsystem trades because of:

1. No performance advantage

2. Resupply savings do not offset resistojet development cost

3. Potential experiment contamination since the 24-hour no-vent requirement cannot be satisfied.

One option, resistojets with hydrazine packages, was retained for subsequent trades.

1.6 ECLSS TRADES

The candidate options for the ECLSS were associated primarily with the functions of CO_2 removal and nitrogen, oxygen, and hydrogen storage. Closely related to these considerations was the major ECLSS trade of oxygen loop closure.

The ECLSS options contained in the integrated subsystem options contain both open and closed oxygen approaches. The independent ECLSS trades are centered in the CO_2 removal function where the first steps toward closure occur. Four options for CO_2 removal were considered: expendable lithium hydroxide as used on Apollo, regenerative vacuum desorbed molecular sieve, high-temperature thermally desorbed molecular sieves, and electrochemical hydrogen depolarizer approach.

The oxygen storage options were water electrolysis and cryogenic storage. High-pressure storage was utilized in some integrated concept options for repressurization, emergency, and IVA/EVA functions. The nitrogen storage options considered cryogenic storage, high-pressure storage, and hydrazine dissociation. Where hydrogen was required for Sabatier operation the supply options were water electrolysis, hydrazine dissociation, or cryogenic storage. The repressurization supply options were either cryogenic or high-pressure storage. The gaseous storage trades were conducted at the integrated subsystem level since they are directly influenced by the RCS and EPS selections and by the degree of ECLSS oxygen loop closure.

LiOH Versus Molecular Sieve

Figure 1-9 shows the relative cost of expendable LiOH and a regenerative vacuum desorbed molecular sieve. As expected, the more highly developed LiOH approach has the least cost for development. When cost of canisters and transportation to orbit are considered, however, the molecular sieve becomes the lower-cost approach after three years of operation. Figure 1-9 also shows the total five-year cost for the two options, based on a logistic rate of $510 per pound to orbit. Noting the delta cost, it is clear that the LiOH approach is much more sensitive to logistics than the molecular sieve. From the standpoint of overall costs, Figure 1-9 indicates that the regenerative molecular sieve has the advantage.

One of the integrated trade guidelines is a 24-hour no-vent requirement; the vacuum-desorbed molecular sieve shown in Figure 1-9 could not comply with this requirement. However, the thermally desorbed, high-temperature molecular sieve and the hydrogen depolarizer concepts are compatible with the 24-hour venting restriction. Figure 1-10 compares the vacuum desorbed and thermally desorbed molecular sieves and the hydrogen depolarizer concepts. By comparing the characteristics of the two molecular sieve concepts the impact of only periodic venting can be seen in the marked increases in weight, power, and volume. With the vent accumulator, the molecular sieve becomes a CO_2 removal system similar to that used in oxygen recovery concepts. In comparison to the periodic venting molecular sieve, the hydrogen depolarizer concept has a large weight, power, and volume advantage and was selected as the CO_2 removal concept to continue in the integrated trade. It should also be noted that

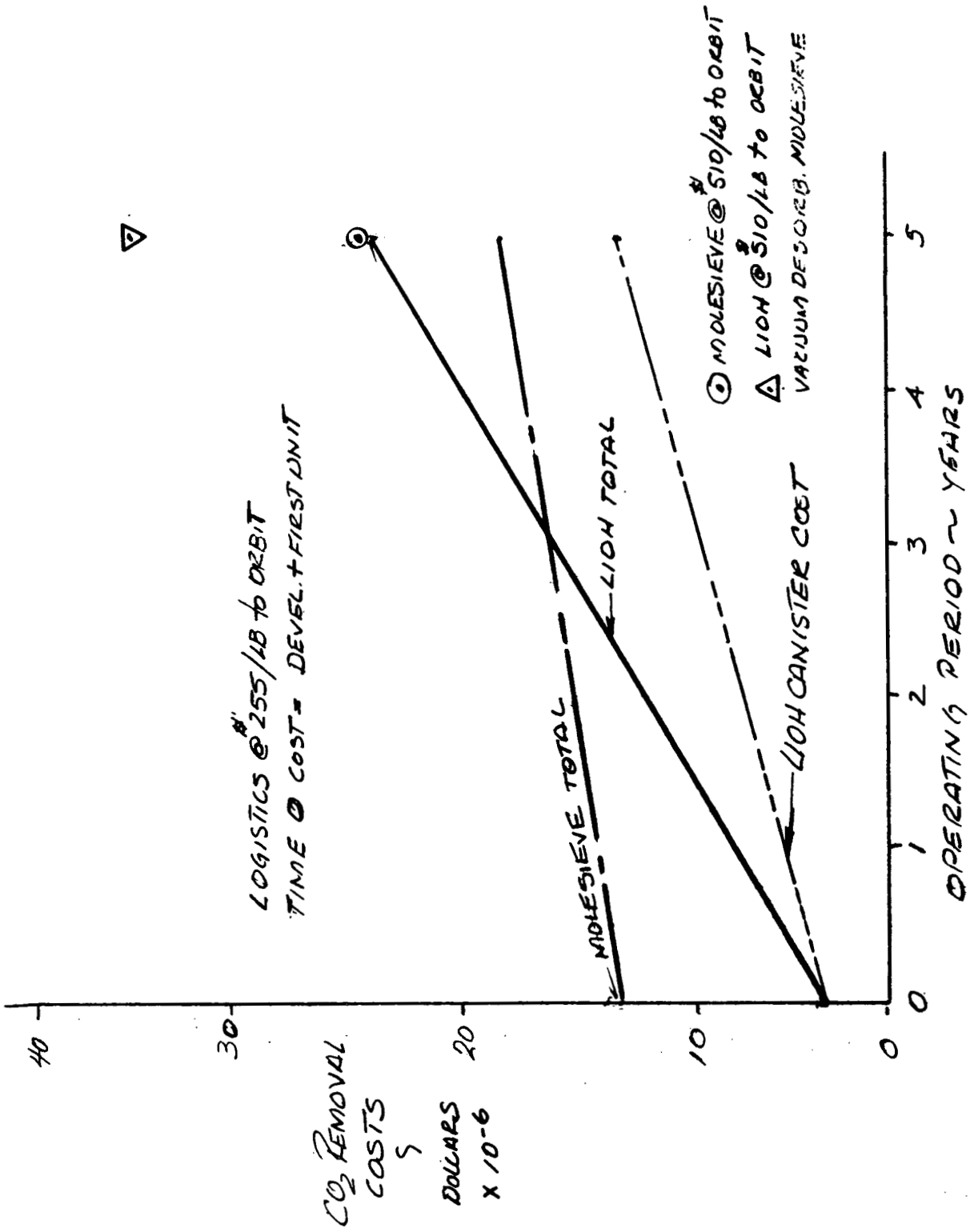

Figure 1-9. CO_2 Removal Cost Comparison

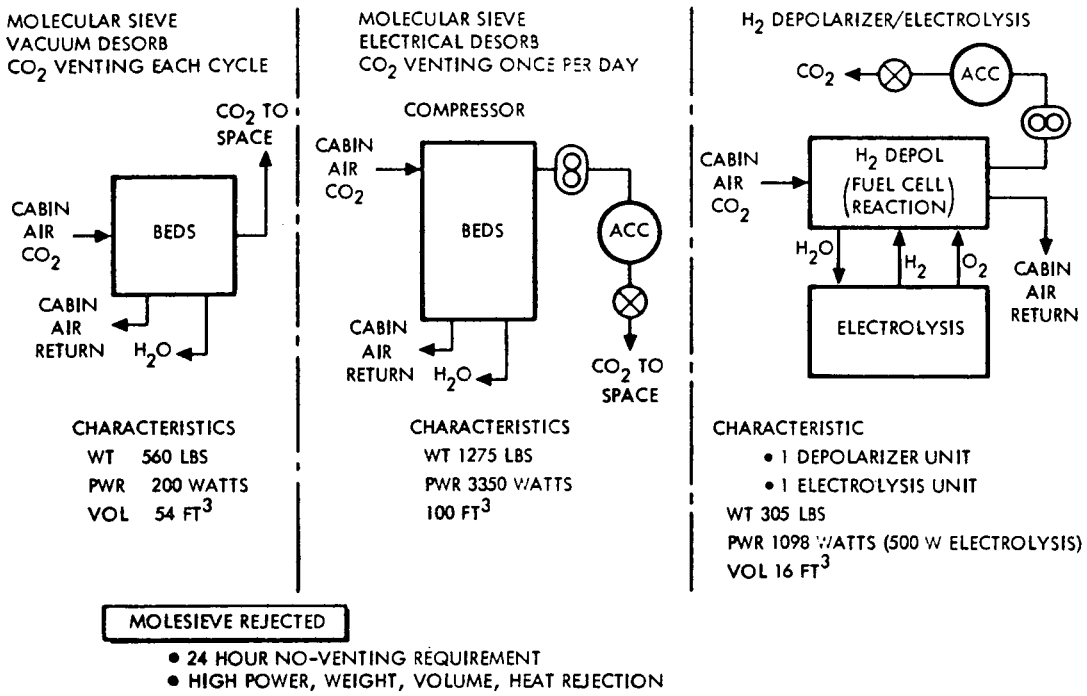

Figure 1-10. CO_2 Removal Concepts and Characteristics

electrolysis is a required function; therefore, the hydrogen depolarizer should be considered with other subsystem options that contain or require electrolysis. The hydrogen depolarizer can be utilized in either open or closed oxygen ECLSS options.

Based on the capability of LiOH to meet the periodic venting requirement, it was also carried as ECLSS open system option for integrated subsystem trade study consideration.

1.7 INTEGRATED SUBSYSTEM TRADES

The individual subsystem trades described in the previous sections produced the following results:

1. The storage of cryogenics in the cargo module reduces costs through a simplified development for zero-g gauging, a single tank development, and deletion of cryogenic liquid transfer developments. This deletes RCS Options R-1A and B and R-3A and B from the integrated subsystem concept options matrix shown previously in Figure 1-4.

2. If a central storage concept for N_2H_4 RCS propellants is used, the cargo module location also is preferred. A major consideration was safety in that the storage of a toxic and hazardous fluid is in a normally nonhabitable volume, with simplified and reduced interfaces and propellant distribution.

3. All stabilization requirements for the MSS can be satisfied with medium-thrust (10 lb_f) engines. Therefore, biowaste resistojet utilization can be justified only if the logistics cost savings will offset the development costs. For the initial station (six men), insufficient waste gases resulted in low resistojet utilization and, therefore, no cost savings. For the growth station (twelve men), the resistojet application was found to be a viable option from cost considerations. Resistojet utilization tradeoffs are strongly influenced by logistics costs for RCS propellant resupply and the impulse requirements, which in turn, are a function of atmospheric model, flight mode, and MSS configuration. Based on the conditions and requirements imposed for the integrated subsystem trades, the resistojets combined with hydrazine medium-thrust engine packages (integrated Option 6-4) were the most cost effective of all resistojet options studied. All resistojet options except Option 6-4 were, therefore, deleted from further trades. It should be emphasized that the resistojet cannot be used effectively with the 24-hour, no-venting requirement. At a 12-hour, no-vent interval the resistojet utilization becomes more efficient; however, the low thrust available from resistojets results in long firing times.

4. Where hydrazine is the selected RCS concept, the preferred installation would be removable tank and engine packages. This eliminates in-orbit hydrazine interface disconnects, deletes a fluid distribution requirement, allows for ground maintenance, and provides a modular concept which promotes mission operational flexibility. As discussed in Item 3, this concept appears to be a viable integrated option if coupled with resistojets.

5. Water electrolysis for RCS propellant generation is a viable option if electrolysis development costs can be shared. This concept maximizes shuttle and MSS safety in propellant (water) handling, transfer, and conditioning.

6. The regenerative fuel cell energy storage concept which combines an ECLSS electrolysis unit with a shuttle fuel cell is cost effective in comparison with a NiCd battery-charger concept when development costs can be shared with the ECLSS and the shuttle.

7. The vacuum desorbed molecular sieve for CO_2 removal does not meet the 24-hour (or 12-hour), no-venting experimental requirement. The high-temperature molecular sieve with added compressors and accumulators can satisfy all requirements but increases weight by a factor of 2 (560 pounds vers 1275 pounds), electrical power by a factor 17 (200 watts versus 3350 watts), and volume by a factor of 2 (54 cubic feet versus 100 cubic feet) in comparison to the vacuum-desorbed molecular sieve. Where a supply of hydrogen and oxygen is available from cryogenic storage or from water electrolysis, the hydrogen depolarizer cell becomes the preferred concept from cost, power, weight, and volume considerations. Therefore, ECLSS Option L-2A was deleted from the integrated concept option matrix.

8. For open oxygen ECLSS concepts and where hydrogen and oxygen is not available through water electrolysis or cryogenic storage, LiOH canisters for CO_2 removal is preferred. This concept results in the lowest spacecraft venting, easily satisfies the 24-hour, no vent, and 3 mm Hg $ppCO_2$ requirements but suffers the penalty of very high logistics costs. This concept also has the greatest sensitivity to increasing logistics costs and crew size.

9. The Sabatier for CO_2 reduction is the lowest cost of closed oxygen concepts and provides minimum program risk through the NASA SSP technology developments.

10. The open water cycle for the ECLSS was rejected previously due to the high operational resupply cost, sensitivity to changes in logistics costs (dollar per pound to orbit), restricted crew habitability, and crew size sensitivity.

11. Hydrazine APU's were rejected for the separate and independent secondary power generation assembly. The wide range of electrical power requirements (up to 3 kilowatts for 96 hours or 355 watts for 60 days) results in high fuel consumption and high operational logistics costs.

When the results of these individual subsystem trades are factored into the integrated subsystem concept option matrix (Figure 1-4), the 41 concept options are reduced to nine.

These remaining nine concept options are identified in Figure 1-11. Integrated concept Option 1-1 was retained for the cost and impact analyses since this concept represented the "reference" subsystem utilized to initiate the MSS Phase B studies and, therefore, formed the base from which delta costs and MSS impact analyses were developed. Detailed costs analyses and concept selection evaluations were conducted on the nine remaining integrated concept options.

SUBSYSTEM	INDEPENDENT TRADE-OFF RESULTS
RCS	• CRYOS IN CARGO MODULES • RESISTOJET WITH N_2H_4 PACKAGES • CENTRAL N_2H_4 IN CARGO MODULE • ELECTROLYSIS WITH SHARED DEVELOPMENTS
EPS	• REGENERATIVE FUEL CELLS WITH SHARED ELECTROLYSIS DEVELOPMENT
ECLSS	• LiOH OPEN O_2 & NO ELECTROLYSIS • H_2 DEPOLARIZER WITH ELECTROLYSIS • SABATIER CLOSE O_2 CYCLE • CLOSED H_2O CYCLE

REMAINING INTEGRATED CONCEPT OPTIONS			
OPTION NO.	RCS	ETC/LSS	EPS
1-1	CRYO H_2-O_2 STA & CM	CLOSED O_2 H_2 DEPOLAR	REGEN FC
2-2	CRYO H_2-O_2 CARGO MOD	SAME	SAME
3-8	CRYO H_2-O_2 CARGO MOD	OPEN O_2 LiOH	NiCd BATT
5-3	N_2H_4 CARGO MOD	OPEN O_2 LiOH	NiCd BATT
6-1	N_2H_4 CARGO MOD	CLOSED O_2 N_2H_4 DISS H_2 DEPOLAR	REGEN FC
6-3	N_2H_4 CARGO MOD	OPEN O_2 H_2 DEPOLAR	REGEN FC
6-4	N_2H_4 PKG RESISTOJET	OPEN O_2 H_2 DEPOLAR	REGEN FC
8	ELECTROLYSIS	CLOSED O_2 H_2 DEPOLAR	REGEN FC
11-2	ELECTROLYSIS	OPEN O_2 H_2 DEPOLAR	REGEN FC

Figure 1-11. Integrated Subsystem Technical Trade Summary

1.8 COST ANALYSIS

To provide a frame of reference for all costing effort indicated in the study logic shown in Figure 1-1, a cost baseline for the integrated subsystem was established based on the MSS Phase A subsystems and the costing ground rules described previously. Technical descriptive data was provided in the costing data format shown in Figure 1-12.

The "Reference Hardware" is hardware from previous or ongoing programs which is relatable or similar to MSS hardware. The main consideration here is to select program hardware for which costing data exist, such as Apollo, Saturn, or commercial equipment.

The "knowhow rating" or state of development was estimated in five categories as shown in the figure and was applied both to the reference hardware and to the new MSS hardware. For the reference hardware, the state of development was estimated to be that which existed at the start of Phase C for the reference hardware program.

The "percent new design" is an estimate of the percentage of new design that is required for one unit of the hardware (assembly, subassembly, or lower).

The complexity factor represents the performance and physical complexity of the new hardware relative to the reference hardware and does not include development status.

These charts were completed for the "baseline" (concept 1-1), and all of the integrated subsystem options remaining in the final iteration and identified previously in Figure 1-11.

Figure 1-13 shows the influence of the factors of knowhow, complexity, percent new design, and weight on the cost estimates. Further information on this methodology will be found in the MSS program cost and scheduling estimates report (SD 71-226).

This approach produced the basic costs for the design, development, test and evaluation (DDT&E), plus theoretical first unit (TFU) costs shown in Tables 1-15 through 1-17.

To provide an assessment of other program costs, excluding operations which could influence the concept selection, factors such as solar array sizing and integration impact on other subsystems were evaluated for cost sensitivity. The only areas determined to have significant impact on costs was solar array sizing, numbers of cargo modules required to support each concept, and the delta in the information subsystem interface and software requirements between the two candidate EPS concepts. The delta cost for the solar array sizing and ISS parameters are shown on Table 1-18 as "subsystem costs" and are used to adjust the DDT&E plus TFU initial costs. The cargo module deltas were shown as subsystem costs on Tables 1-15 and 1-16.

FUNCTIONAL ASSEMBLY	QUANTITY	UNIT WT LB	REFERENCE HARDWARE	STATE OF DEVELOPMENT		% NEW DESIGN	COMPLEX FACTOR	SPARES & EXPEND			REMARKS
				REF HDWR	NEW HDWR			TYPE	QTY 5 YR	UNIT WT	
			SIMILAR EQUIP COSTING DATA BASE	START OF REF HDWR PHASE C	1975 PHASE C PROJ	% OF UNIT WEIGHT WHICH IS NEW DESIGN					

- BEYOND STATE OF ART - MAJOR DEVELOPMENT REQUIRED
- SLIGHTLY BEYOND STATE OF ART - SOME DEVELOPMENT REQUIRED
- STATE OF ART - NO COMMERCIAL ITEM, PROTOTYPE BUILT
- MINOR MODIFICATION TO COMMERCIAL OR AEROSPACE ITEM
- OFF THE SHELF - NO MODIFICATION REQUIRED

PERCENTAGE FACTOR RELATING FUNCTIONAL ASSEMBLY TO REFERENCE HARDWARE

REPRESENTS PERFORMANCE & PHYSICAL COMPLEXITY NOT DEVELOPMENT STATUS

Figure 1-12. Costing Data Format

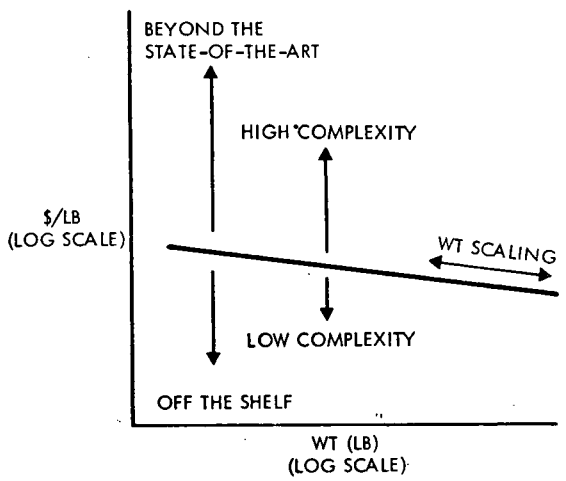

KNOW-HOW RANKING	STATE-OF-THE-ART	PRODUCTION EXPERIENCE	SPECIFICATION STATUS
1	REQUIRES NO MOD	PRODUCED IN PROD QUAN	SPEC FOR THE ITEM AS PRODUCED
2	MINOR MOD OF COMMERCIAL OR STD AEROSPACE ITEM	PRODUCED IN LIMITED QUANTITY	SPEC FOR ITEM AS PRODUCED
3	WITHIN STATE-OF-THE-ART BUT NO COMM COUNTER PART EXISTS	PROTOTYPE PRODUCED	SPEC HAS BEEN PREPARED BUT UNDER REVIEW OR REVISION
4	ITEM SLIGHTLY BEYOND CURRENT STATE-OF-THE-ART SOME DEVEL REQUIRED	EXPERIMENTAL OR PAST OPERATIONAL ITEM IN PROCESS	WORK ON A SPEC IN EARLY STAGE ONLY DEVELOPMENT DEFINED
5	ITEM SUBSTANTIALLY BEYOND CURRENT STATE-OF-THE-ART MAJOR DEVEL REQUIRED	NO PRODUCTION OF ANY KIND	NO SPEC IN SPEC STARTED

Reproduced from best available copy.

Figure 1-13. Typical Cost Methodology

Table 1-15. RCS Cost Summary - Selected Subsystems

RCS Concept Option	R1A		R2A		R4A		R4B		R5A	
Integrated Subsystem Concept	1-1		2-2 & 3-8		5-3,6-1&6-3		6-4		8&11-2	
MSS Equipment	D&D	TFU	D&D	TFU	D&D	TFU	D&D	TFU	D&D	TFU
Cryogenic Storage	21.99	2.32								
Propellant Conditioning	4.34	0.23	4.34	0.23						
Feed Control	6.71	1.95	6.71	1.95	7.79	2.02	8.68	2.28	2.85	0.54
Accumulators	0.82	0.80	0.82	0.80						
Engine Quads-O_2H_2	15.92	1.08	15.92	1.08					15.92	1.08
Engine Quads-N_2H_4					12.57	0.85	12.57	0.85		
Engine Quads-Resistojet							9.90	0.72		
Special Maintenance Equipment					9.99	0.47	9.99	0.47		
MSS TOTAL	49.78	6.38	27.79	4.06	30.35	3.34	41.14	4.32	18.77	1.62
Cargo Modules										
Cryogenic Storage	10.92	3.25	10.92	3.25						
Hydrazine Storage					7.70	0.58	7.70	0.39		
No. Modules		3		4		4		3		3
Cargo Module Buys				11.20		11.20				
Total Cargo Module	10.92	9.75	10.92	24.20	7.70	13.52	7.70	1.17	0	0
Total RCS*	60.70	16.13	38.71	28.26	38.05	16.86	48.84	5.49	18.77	1.62

*Cost Data are shown only for principal subsystem variables

Space Division
North American Rockwell

Table 1-16. ECLSS Cost Summary - Selected Subsystems

ECLSS Concept Option	L1		L2B		L3A		L4C		L5E		L6		L8C		L8D	
System Concept	1-1, 2-2		3-8		6-1		8		11-2		5-3		6-3		6-4	
MSS Equipment	D&D	TFU	D&D	TFU	D&D	TFU	D&D	TFU	D&D	TFU	D&D	TFU	D&D	TFU	D&D	TFU
Atmosphere Storage																
N_2 Conditioning	6.67	0.97	6.67	0.97												
N_2H_4 Dissociation					8.70	1.12					6.67	0.97				
CO_2 Management																
Depolarizer, Sabatier, Electrolysis	26.85	4.97			27.98	5.18	32.18	6.84	27.36	5.90			24.00	4.57	24.00	4.57
LiOH			3.24	0.34							3.24	0.34				
Special Life Support	6.67	0.90	6.67	0.90	7.56	1.77	8.01	2.17	7.77	1.97	7.56	1.77	7.77	1.97	7.77	1.97
MSS Total	40.19	6.66	16.58	2.21	44.24	8.07	40.19	9.01	35.13	7.87	17.47	3.08	31.77	6.54	31.77	6.54
Cargo Modules																
Atmosphere Storage							0.140	0.765	0.140	0.665	0.140	1.330	0.140	0.665	-	-
Water Management					0.350	0.160	1.83	0.585	1.700	0.540	-	-	1.700	0.540	-	-
Special Life Support	0.140	0.035	0.140	0.035	0.140	0.035	0.140	0.035	0.150	0.035	0.150	0.035	0.150	0.035	0.150	0.035
No. Modules		3-4**		4		4		3		3		4		4		3
Total Cargo Modules	0.140	0.035 0.105**	0.140	0.140	0.490	0.780	2.11	3.855	1.99	3.72	0.290	5.46	1.99	5.14	0.150	0.105
Total ECLSS*	40.33	6.695 6.765**	16.72	2.35	44.73	8.85	42.30	12.87	37.12	11.59	17.76	8.54	33.76	11.68	31.92	6.645

*Cost data are shown only for principal subsystem variables
**Configuration 2-2 requires 4 cargo modules

Space Division
North American Rockwell

Table 1-17. EPS Cost Summary-Selected Subsystems

EPS Concept Option	E-1		E-2	
Integrated Subsystem Concept	1-1, 3-8, 5-3		All Others	
	D&D	TFU	D&D	TFU
MSS Equipment				
Secondary Generation				
Fuel Cells	5.70	3.40	11.5	4.4
Electrolysis				
Energy Storage				
Batteries	2.00	3.70		
Total EPS*	7.70	7.10	11.5	4.4

*Cost data are shown only for principal subsystem variables.

Note: Cost delta's for solar array sizing requirements are included in the Δ subsystem costs shown in the integrated set cost summary (Table 1-18).

20

Table 1-18. Programmatic Cost Summary - Integrated Set Concepts

Cost Elements \ Integrated Sets	1-1 R-1A/L1/E1	2-2 R2A/L1/E2	3-8 R2A/L2B/E1	5-3 R4A/L6/E1	6-1 R4A/L3A/E2	6-3 R4A/L8C/E2	6-4 R4B/L8D/E2	8 R5A/L4C/E2	11-2 R5A/L5E/E2
RCS	76.83	66.97	66.97	54.91	54.91	54.91	54.33	20.39	20.39
ECLSS	47.03	47.10	19.07	26.30	53.58	45.44	38.57	55.17	48.71
EPS	14.80	15.90	14.80	14.80	15.90	15.90	15.90	15.90	15.90
Subtotal	138.66	129.97	100.84	96.01	124.39	116.25	108.80	91.46	85.00
Subsystem Costs*	-0-	-2.60	-5.40	-4.70	-2.20	-5.20	-5.20	+2.90	-0-
Adjusted DDT&E + TFU	138.66	127.37	95.44	91.31	122.19	111.05	103.60	94.36	85.00
5-Year Operations Cost**	110.00	105.00	132.00	146.00	109.00	119.00	106.00	102.00	105.00
Total	248.66	232.37	227.44	237.31	231.19	230.05	209.60	196.36	190.00

*Adjustments in concept costs for solar array & ISS 's - Concept 1-1 considered as baseline.
**Costs based on 5-year computer logistics profiles.

Note: Subsystem costs do not include costs that are constant across these sets.

Space Division
North American Rockwell

A primary ground rule was that the evaluation was to consider development and production plus five years of operation and that the costs would include logistics resupply only.

The cost impact of the resupply was determined through a computer program that superimposed the resupply requirements for each of the nine concepts on a selected constant experiment program logistics profile. The computer output was a tab run and CRT plots that gave a required shuttle flight schedule to support each concept. Logistics costs to support each concept were established from these data.

The summary of subsystem and integrated set costs presented in Tables 1-15 through 1-18 are summarized for comparison in Figure 1-14. To provide an assessment of the projected breakeven points for each concept, Figure 1-15 is a plot of the development plus hardware costs and operations costs as a function of years of operation. From the indicated breakeven points, it can be concluded that Concepts 3-8 and 5-3, despite their low initial costs, are unacceptable concepts in terms of operations costs.

To further evaluate the relative sensitivity of each of the concepts to logistics costs, Figure 1-16 shows the relative cost sensitivity of each concept to operating years. The slopes can be related to those shown on Figure 1-15, except that the least sensitive concept (8) is shown as the base and the others are scaled upward in proportion to their higher operations costs.

Based on the stated guidelines, Concepts 11-2, 8, and 6-4 were selected for further technical evaluation.

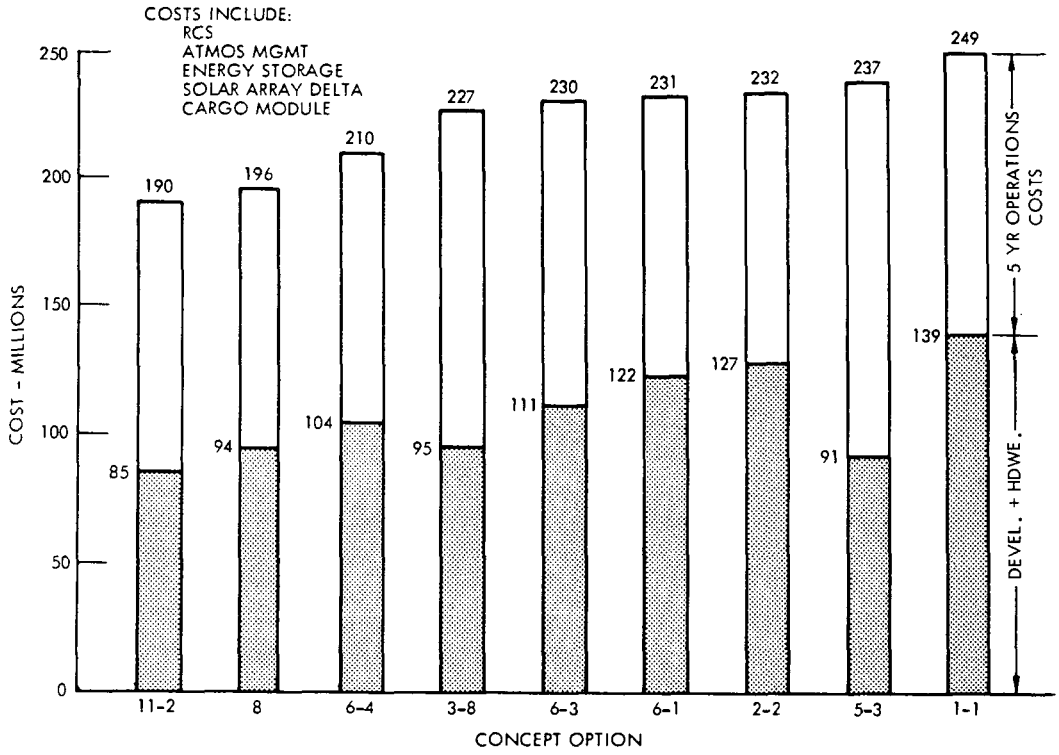

Figure 1-14. Integrated Subsystem Cost Comparison

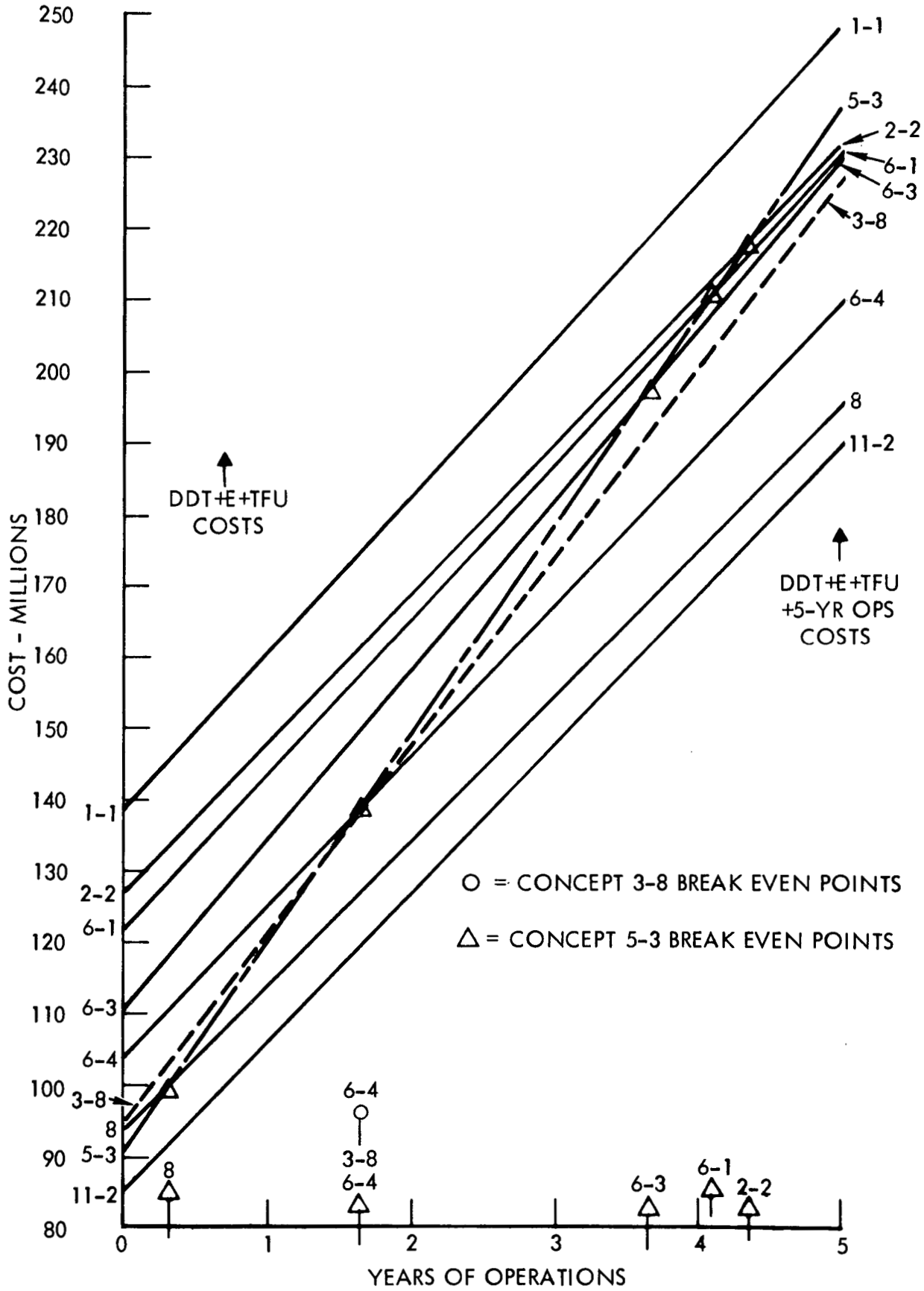

Figure 1-15. Integrated Sets - Operations Cost Projection

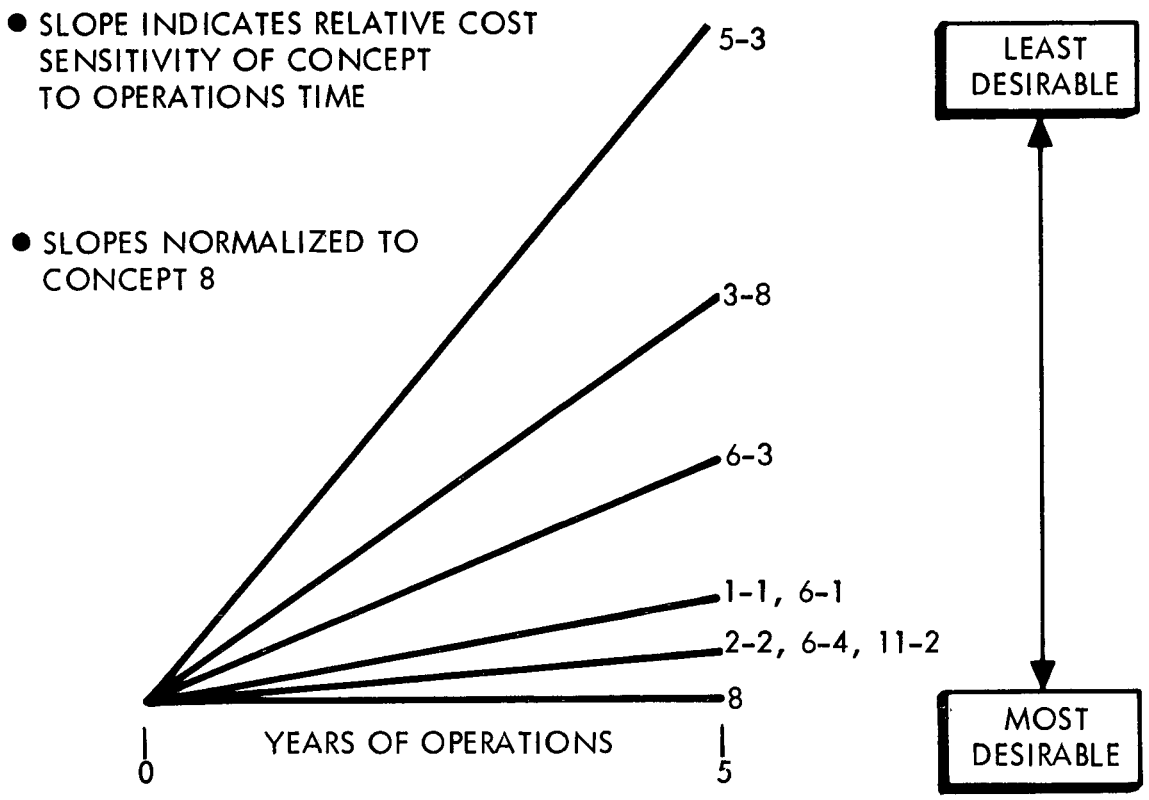

Figure 1-16. Logistics Cost Sensitivity

1.9 CONCEPT SELECTION

The major evaluation factor for the integrated subsystem selection trades was low development costs at IOC plus 5-year operational costs for the initial MSS. Information on the three lowest cost concepts as ranked by cost analyses is given in Table 1-19.

Concept option 11-2 uses water electrolysis to generate hydrogen and oxygen for the RCS = and oxygen for the ECLSS metabolic and leakage makeup. The ECLSS CO_2 management assembly uses a hydrogen deploarizer for CO_2 removal but operates in an open cycle concept in that the CO_2 is dumped overboard. No Sabatier CO_2 reduction subassembly is provided. The oxygen generation by water electrolysis uses water logistically supplied via the shuttle. Since this results in excess hydrogen the RCS is operated at a hydrogen-rich propellant ratio (oxidizer-fuel ratio of 3:1). The EPS uses a regenerative fuel cell concept for energy storage.

Concept 8 is the same as Concept 11-2 except that a Sabatier CO_2 reduction subassembly is added to provide a closed oxygen cycle for the ECLSS. CO_2 reduction and the subsequent regeneration of oxygen reduces the ECLSS water resupply essentially to zero. Therefore, to reduce the RCS water resupply and to minimize spacecraft venting, the RCS oxidizer-fuel ratio was changed from 3:1 to 8:1.

Table 1-19. Lowest Cost Concept Definition

Item	Concept 11-2	Concept 8	Concept 6-4
Development + 5 Year Operation Cost	$193 M	$197 M	$221 M
Development Costs at IOC	$ 88 M	$ 95 M	$111 M
RCS			
Propellants	Water Electrolysis	Water Electrolysis	N_2H_4 Packages
Resistojets	No	No	CO_2, Water Resistojets
O/F Ratio	3:1	8:1	N/A
ECLSS			
CO_2 Removal	H_2 Depolarizer	H_2 Depolarizer	H_2 Depolarizer
CO_2 Reduction	None (CO_2 Dump)	Sabatier	None (resistojets)
Oxygen Generation	Water Electrolysis	Water Electrolysis	Water Electrolysis
Gaseous Storage	High Pressure	High Pressure	High Pressure
EPS			
Energy Storage	Regen. Fuel Cells	Regen. Fuel Cells	Regen. Fuel Cells
Emergency Power	Fuel Cells	Fuel Cells	Fuel Cells
MSS			
No. of Cargo Modules	3	3	3

Space Division
North American Rockwell

The third lowest cost concept replaces the water electrolysis hydrogen-oxygen RCS concept with hydrazine medium-thrust engine quad packages and CO_2-water-hydrogen resistojets. The resistojets are used to provide the orbit makeup and CMG desaturation functions while the hydrazine quads provide for all other MSS stabilization and control functions. The ECLSS operates with an open oxygen cycle (i.e., no Sabatier) with the resistojets utilizing the CO_2. Since the six-man CO_2 production is insufficient to meet the impulse requirements, water resupply is used to provide the balance. Water resupply and electrolysis is used to provide the ECLSS oxygen generation with the hydrogen being used by the resistojets.

All three concepts use high-pressure storage for the nitrogen leakage and nitrogen-oxygen repressurization functions. All three also use the regenerative fuel cell energy storage concept.

Table 1-20 shows a tabulation of 90-day consumable resupply for the nine concept options (Figure 1-12). The three lowest-cost concepts also have the lowest logistics resupply requirements. Concept 8, which closes the oxygen cycles, requires 5169 pounds per 90 days consisting primarily of water and high-pressure nitrogen. The open oxygen cycle of Concept 11-2 increases the logistics resupply by 477 pounds to 5646 pounds per 90 days. The hydrazine-resistojet option (6-4) requires 5899 pounds per 90 days; however, by proper scheduling of the resupply and the storage of spare hydrazine engine packages in the power module (or other nonhabitable areas) the emergency quantity of 384 pounds could be deleted. This would reduce concept 6-4 to 5515 pound per 90 days. Closing the ECLSS oxygen cycle on Concept 6-4 would also reduce the logistics by about 255 to 300 pounds, depending on the selected Sabatier operating conditions. This would reduce Concept 6-4 to about 5250 pounds per 90-day logistics resupply, which is about 100 pounds greater than Concept 8 but about 400 pounds less than Concept 11-2.

The venting of waste products from the spacecraft was analyzed for the nine integrated options shown previously in Figure 1-11. Table 1-21 identifies the daily venting rate for waste products which are a function of the concept. MSS removal leakage, waste management, and fecal processing products are not included since these are the same for all concepts. The table categorizes the vent products as (1) oxygen nitrogen, and hydrogen gasses which are not considered to be experiment contaminates, (2) RCS propellant products which can be scheduled, and (3) waste products from processes which cannot be scheduled and therefore require special hardware (accumulators, compressors) to provide storage until venting can be scheduled. The open oxygen cycle concepts (3-8, 5-3), which use LiOH for CO_2 removal, result in the lowest venting rate since all CO_2 is retained within the canisters.

Of the three lowest-cost options, Concept 8, which uses a closed oxygen cycle for the ECLSS, produces the lowest venting rates. The RCS medium-thrust engine firings, which can be scheduled to non-experimental periods, vents 21.0 pounds per day of water. The non-scheduled gasses are 6.6 pounds per day (4.0 CH_4 and 2.6 CO_2).

Table 1-20. Consumable Comparison

Consumable	Ref	2-2	3-8	5-3	6-1	6-3	6-4	8	11-2
Cryogenic Oxygen	1461	1461	2633						
Cryogenic Hydrogen	475	475	389						
Cryogenic Nitrogen	1530	1530	1530						
Cryogenic Tanks	1800	1575	1575						
Pressurant*	170	170	143	45	70	70			
High-Pressure Oxygen	14	14	14	1460	14	14	14	14	14
High-Pressure Nitrogen				1530		1530	1530	1530	1530
High-Pressure Tanks	505	505	425	1830		930	930	930	930
N_2H_4				2963	4707	2963	264		
N_2H_4 Tanks				225	350	225	*321		
Water					332	1430	2236	2450	2882
Water Tanks					32	140	220	245	290
LiOH			2110	2110					
Emergency O_2, H_2	304	304	304						
Emergency N_2, H_4				772	772	772	384		
Total 90-Day Resupply (LB.)	6259	6034	9123	10935	6277	8074	5899	5169	5646

*N_2H_4 Packages (3) Dry Weight

Space Division
North American Rockwell

Table 1-21. Daily Waste Product (pounds per day)

Concept	Daily Vent Rate Lb/Day			
	Total	O_2, N_2, H_2	Other Excluding O_2, N_2, H_2	
			Scheduled	Storage Required
1-1	22.3	3.9	14.5 H_2O	4.9 CH_4
2-2	22.3	3.9	14.5 H_2O	4.9 CH_4
3-8	17.3	2.8	14.5 H_2O	
5-3	33.0	19.2	13.8 NH_3	
6-1	38.0	19.3	13.8 NH_3	4.9 CH_4
6-3	44.6	17.3	13.8 NH_3	13.5 CO_2
6-4	24.9	1.2	1.2 NH_3	13.5 CO_2, 9. H_2O
8	27.6	0	21.0 H_2O	4.0 CH_4, 2.6 CO_2
11-2	30-8	2.8	14.5 H_2O	13.5 CO_2

Opening the oxygen cycle (Concept 11-2) increases the non-schedulable venting requirement from 6.6 pounds per day to 13.5 pounds per day of CO_2. The RCS engine venting is reduced to 14.5 pounds per day of water due to an increase in engine I_{sp} (oxidizer-full ratio = 3:1).

Concept 6-4 produces the greatest non-schedulable venting rate of 22.5 pounds per day (13.5 CO_2 and 9.0 H_2O). These are the quantities required for resistojet operation to satisfy orbit makeup and CMG desaturation requirements. Utilizing resistojets to accomplish these functions at 24-hour intervals would result in long firing times (or many resistojet engines requiring high electrical power), which imposes mission and experimental constraints. Reducing the nonvent requirement from 24 hours to 12 hours improves the feasibility of resistojet operations but still causes operational constraints.

Table 1-22 summarizes the advantages and disadvantages which were considered in the selection evaluation of the three lowest cost concepts.

Table 1-22. Concept Advantages and Disadvantages Summary

Concept		
11-2	Lowest Cost - $193 $\bar{M}$ Safe (H_2O) Resupply Shared EPS/RCS/ECLSS Capabilities Shared development	High solar array power requirement - 47.6 kw Large resupply - 5646 lb/90 day Large non-schedulable vent rate - 13.5 lb/day High sensitivity to change in logistics cost ($/lb) Largest initial to growth resupply sensitivity
8	Lowest resupply - 5169 lb/90 day Lowest non-schedulable vent rate-6.6 lb/day Safe (H_2O) resupply Lowest sensivity to change in logistics cost ($/lb) Compatible to SSP technology Shared EPS/RCS/ECLSS capabilities Shared development Lowest initial to growth MSS resupply sensitivity	Highest solar array power requirements - 48.0 kw Lower RCS I_{sp} (O/F=3:1)
6-4	Lowest solar array power requirements - 41.4 kw Low sensitivity of initial to growth station by greater resistojet utilization (12 men)	Highest cost - $221 M Greatest resupply - 5899 lb/90 day Largest non-schedulable vent rate - 22.5 lb/day Resistojet operation at 24 hr. interval is operational impact Manual transfer of propellants Toxic RCS propellants High sensitivity to change in logistics cost ($/lb) Minimum shared capabilities and development

Concept 8 was the selected EPS/RCS/ECLSS integrated subsystem for the MSS. The major rationale are essentially the advantages listed in Table 1-22 for this concept. These are:

1. Low development plus 5-year operational costs.
2. Maximum usage of the NASA SSP technology developments. This reduces program risks and costs.
3. Lowest logistics requirements and, therefore, lowest resupply costs and lowest sensitivity to changes in resupply rates (dollars per pound to orbit).
4. All subsystems use electrochemical and chemical processes based on hydrogen and oxygen reactions, thereby providing a similarity in working fluids, hardware materials, manufacturing methods, maintenance, checkout, etc. In addition, the design approach allows for integration of gas generation, fluid distribution, and gas and water storage functions and maximizes the utilization of common hardware.
5. Increased performance capabilities by sharing of integrated hardware such as EPS supplying ECLSS/RCS hydrogen and oxygen or ECLSS supplying fuel cell reactants.
6. Improved reliability by providing multiple operational success paths through shared redundancy and also providing for hardware reduction.
7. Minimum spacecraft venting with the capability of satisfying the 24-hour no-vent experimental capability.
8. Improved logistics and on-orbit storage safety by utilizing water as the consumable for RCS and ECLSS functions.

1.10 INTEGRATED SUBSYSTEM DESCRIPTION

The EPS/RCS/ECLSS integrated subsystem simplified schematic and assignment of major assemblies and subassemblies are shown in Figure 1-17.

The EPS primary power generation assembly uses 8000 square feet (changed to 7000 ft square feet during preliminary design) of advanced technology solar arrays (Lockheed Missiles and Space Company technology contract NAS9-11039).

The energy storage assembly utilizes four regenerative fuel cell assemblies. Each assembly consists of one fuel cell (shuttle-developed at 7 KW), one electrolysis unit (ECLSS compatible and based on SSP technology), one hydrogen and one oxygen accumulator, and half of a water storage tank. Two assemblies share one water tank since additional MSS water supplies are available in event of EPS water storage failure. The assemblies also can receive hydrogen and oxygen from the ECLSS electrolysis units or deliver hydrogen and oxygen to the ECLSS and RCS for contingency or emergency operations. Each regenerative fuel cell normally operates in a closed cycle but can be operated integrated with

the ECLSS and RCS. Closed-cycle operation is preferred to increase fuel cell life by reducing catalyst poisoning due to reactant contamination. Each regenerative fuel cell assembly supports one channel of the 4-bus EPS distribution assembly as shown in Figure 1-18. As indicated in the figure the electrolysis units receive dc electrical power directly from the solar arrays while the fuel cells deliver power to primary ac buses through regulators and inverters.

The primary buses were selected during previous space station studies as 240/416 volts ac, 400 Hertz, 3-phase power and the secondary buses at both the high (240/416 volts ac) and the low (120/208 volts ac) 400 Hertz, 3-phase power. The selection again was made on cost and availability considerations. The hardware for switching large blocks of power is presently available only for ac power. The fact that commerical and military aircraft are tending toward all-ac systems utilizing computer-controlled solid-state circuit breakers was a main consideration in the selection. This minimized the cost and development risks to the program for inverters, regulators, transformers/filters, solid-state circuit breakers or switching devices, and software.

The energy storage assembly fuel cells also serve the function of the secondary power generation assembly including the "separate and independent" emergency power function. The reactants for these operating modes are supplied from high-pressure storage tanks located in the power module and the cargo module. During buildup, prior to solar array deployment, the energy storage assembly accumulators supply the reactants. These accumulators are designed to provide 3000-psi storage for buildup and to operate at 300 psi for the energy storage normal operating mode.

The ECLSS incorporates a closed oxygen and water cycle concept and is integrated in the (1) CO_2 management, (2) gaseous storage and (3) water management functional areas.

The CO_2 management assembly utilizes a hydrogen depolarizer for CO_2 removal, a Sabatier for CO_2 reduction, and water electrolysis for oxygen recovery. The water electrolysis units (one on standby redundancy) are sized to provide also the hydrogen and oxygen generation for RCS operation and in contingency operation can supply reactants to the EPS secondary power fuel cells.

The gaseous storage assembly likewise is an integrated assembly in that it supplies hydrogen, oxygen, and nitrogen to all three subsystems through a common distribution network. The habitable areas of the MSS utilize gaseous storage accumulators at a 300-psi pressure (factor of safety of 4) while power module and cargo module storage is at 3000-psi pressure (factor of safety of 2). All module interface connections are at 300 psi obtained by pressure reduction subassemblies located in the power and cargo modules. Table 1-23 identifies the gaseous and water storage quantities for the

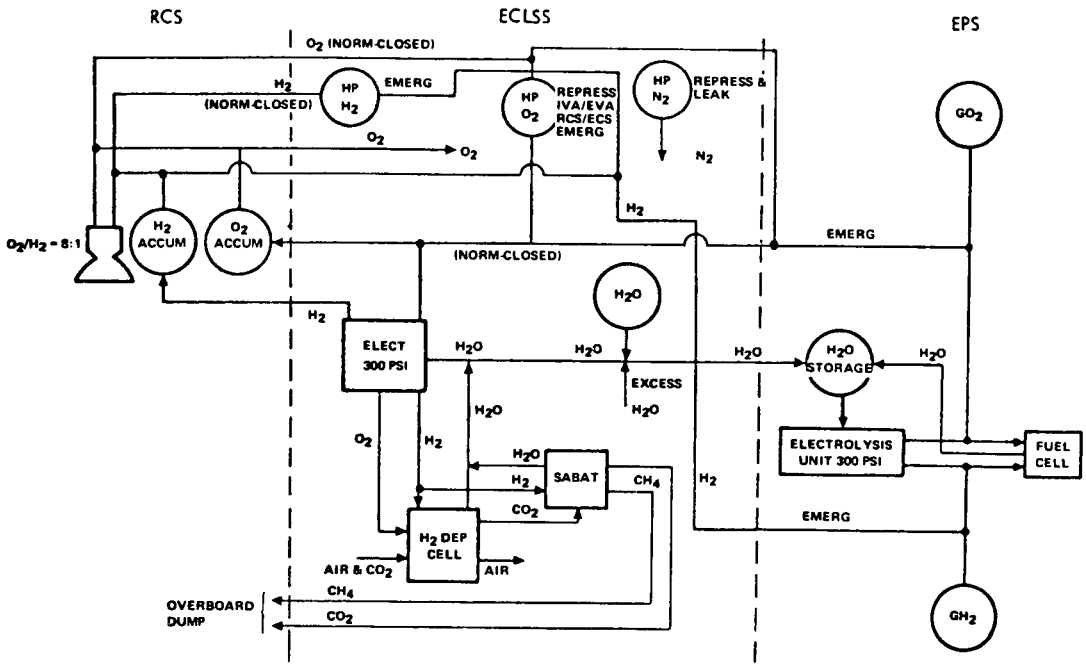

Figure 1-17. EPS/RCS/ECLSS Integrated Subsystem

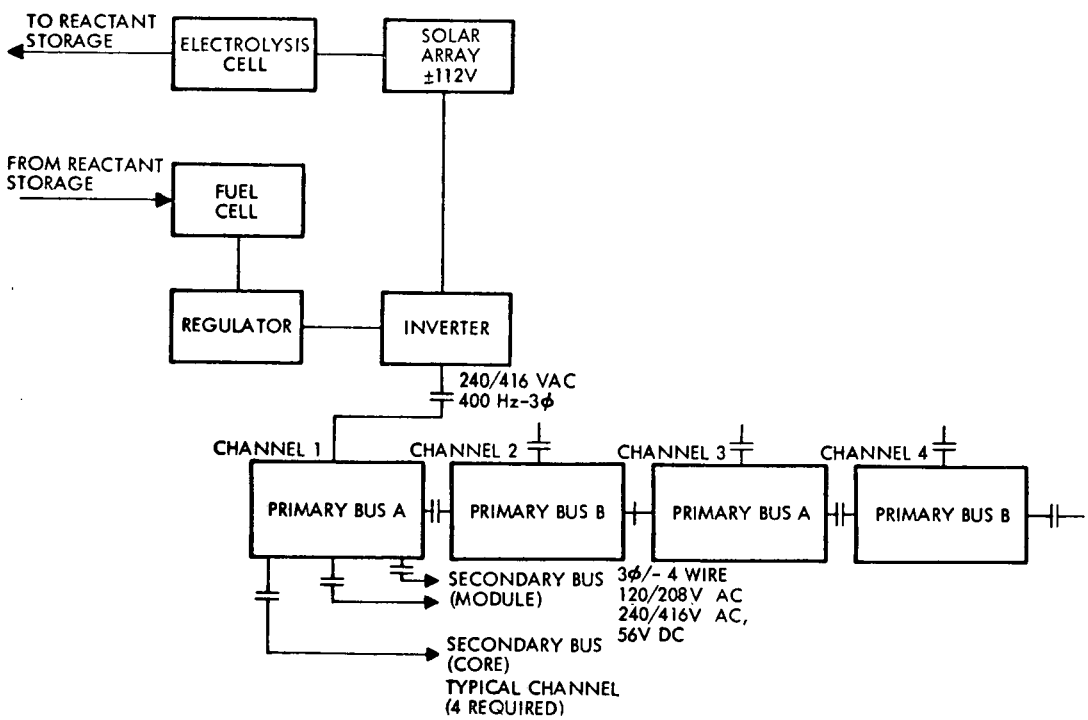

Figure 1-18. EPS Functional Block Diagram

Table 1-23. Integrated Gaseous Storage Quantities

NORMAL OPERATIONS (120 DAY)

ITEM		QUANTITY~LB	REQUIREMENT
RCS	H_2 ACCUMULATOR	1.24	11,830 LB-SEC/DAY, 24 HR STORAGE
	O_2 ACCUMULATOR	9.84	6 FIRINGS AT 1 HR INTERVALS, 300 PSI
EPS	H_2 ACCUMULATOR	4.5	300 PSI, 11.8 KWH ENERGY STORAGE
	O_2 ACCUMULATOR	35.5	+27.5 KWH FOR NIGHT/DAY AVERAGING
	H_2O STORAGE	40	
ECLSS	N_2 MAKE UP	1,125	9.4 LB/DAY CARGO MODULE STORAGE
	H_2 MAINTENANCE CONTINGENCY	4.2	SABATIER & H_2 DEPOLARIZER OPERATION
	O_2 MAINTENANCE CONTINGENCY	33.6	ALLOWS 8 HR MAINT ON ELECTROLYSIS
	H_2O STORAGE (RESUPPLY)	3,260	27.2 LB/DAY H_2O RCS & ECLSS ELECTROLYSIS
	CH_4/CO_2 STORAGE	15.4	24 HR NO DUMP FOR EXPERIMENTS
	EVA OXYGEN	12.8	0.107 LB O_2/DAY
	O_2 PRE BREATHING	128.0	1.065 LB O_2/DAY
	IVA OXYGEN	160	20 MAN-HRS
	H_2O VAPOR COMPRESS VENT TANK	6.66	(3.33 FOR EACH VOL - H_2O + GAS)
	POTABLE H_2O TANKS	808	TOTAL INCLD REDUNDANCY
	H_2O ACCUM FOR ELECT.	50	(25 LB IN EACH VOLUME)

EMERGENCY OPERATIONS (96 HOUR)

ITEM		QUANTITY~LB	REQUIREMENT
RCS	HYDROGEN	47	133,000 LB SEC, 3000 PSI STORAGE
	OXYGEN	369	
EPS	HYDROGEN (FUEL CELL)	40	3.7 KW, 3000 PSI STORAGE
	OXYGEN (FUEL CELL)	320	
ECLSS	OXYGEN	246	METABOLIC, LEAKAGE, H_2 DEP, IVA, EVA
	HYDROGEN (H_2 DEPOLARIZER)	3.2	
	WATER	205	INCLD IN POTABLE WATER TANK AMOUNT
	NITROGEN REPRESSURIZATION	1,150	20,000 FT^3, 14.7 PSI, 1/2 CORE + 3 MOD
	OXYGEN REPRESSURIZATION	350	20,000 FT^3, 14.7 PSI, 1/2 CORE + 3 MOD

BUILD-UP OPERATIONS (60 DAY)

ITEM		QUANTITY~LB	REQUIREMENT
RCS	HYDROGEN	9.8	28,000 LB-SEC STABILIZATION FOR DOCKING
	OXYGEN	77.7	GRAVITY GRADIENT ACQ, CONTINGENCY
EPS	HYDROGEN FUEL CELL	45	278 WATTS, 3000 PSI
	OXYGEN FUEL CELL	356	

six-man initial station normal operations, based on the 120-day on-orbit capability requirements defined for the integrated subsystems trades. The 96-hour emergency and the 60-day buildup quantities also are shown.

The RCS accumulator sizing is based on 24-hour storage capacity with daily orbit makeup and CMG desaturation engine firings conducted during the 10-hour nonwork night period in approximately six 1-hour intervals.

The regenerative fuel cell accumulators were sized at 11.8 kilowatt-hour energy, which is the orbital work-day requirement, plus 27.5 kilowatt-hour to allow for the 24-hour averaging.

Table 1-24 identifies the integrated tank storage concept. In most cases, the tanks are used to provide for more than one function. The failure criteria are then satisfied by the redundancy in tanks. The main advantage to this is reduced overall storage by reduction in contingency or "red line" quantities for each function.

It should be re-emphasized that the data presented represent the subsystem selection description which existed at the completion of the integrated subsystem selection trades. The preliminary design phase of the initial MSS produced several changes in requirements which in turn produced changes in the integrated subsystem equipment. With the establishment of the final subsystem requirements and the selection of the MSS cruciform configuration (barbell previously) the selection trades were reviewed. The requirement change which impacted the integrated subsystem hardware sizing the greatest and influenced the selection relates to the MSS stabilization

Table 1-24. Integrated Tank Storage Concept

ITEM	NO. TANKS	DIAM~IN.	PRESSURE	FUNCTION
OXYGEN	3	33	3,000*	RCS, ECLSS LEAKAGE, DEPOLARIZER
HYDROGEN	3	33	3,000*	RCS
OXYGEN	4	33	3,000*	EPS ENERGY STORAGE
HYDROGEN	4	33	3,000*	EPS ENERGY STORAGE
WATER	4	10	40	EPS ENERGY STORAGE
WATER	6	33	300	RCS, ECLSS ELECTROLYSIS STORAGE
WATER	4	22	40	ECLSS POTABLE
WATER	2	16	40	ECLSS VAPOR COMPRESSION VENT TANKS
METHANE	2	33	300	SABATIER CH 4 STORAGE
NITROGEN	7	33	3,000	LEAKAGE MAKEUP
NITROGEN	7**	33	3,000	REPRESSURIZATION
OXYGEN	7**	33	3,000	REPRESSURIZATION, EPS EMER, RCS EMER
OXYGEN	1	33	3,000	EVA
HYDROGEN	6**	33	3,000	RCS, EPS EMERGENCY

*3,000 PSI DETERMINED BY BUILDUP REQUIREMENTS
**EMERGENCY & REPRESSURIZATION OPERATIONS

• BUILDUP OPERATIONS ADD ONE 33 IN. WATER TANK TO CORE MODULE NO. 1

and control impulse requirements. A number of requirement changes combined to lower the 120-day impulse value from 1,420,000 lb-sec to 289,500 lb-sec. These are:

1. The barbell configured MSS was changed to a cruciform configuration.
2. The atmospheric model for RCS/ECLSS electrolysis unit sizing and power requirements and accumulator sizing was changed from the 1959 ARDC standard to the 2 mean Jacchia atmosphere as of February 1982.
3. CMG desaturation and orbit makeup could be conducted concurrently.
4. Logistics resupply could be based on the nominal Jacchia atmospheric model for a 270-nautical mile, 55-degree inclination orbit.

The reduced impulse requirements were found to impact operational (logistics) costs and the sensitivity to changes in logistics cost rates, but to have only negligible effect on development costs for the various integrated options. The final result was that total costs for all concepts were reduced, but selection was not altered. Other requirement changes were similarily reviewed and in all cases the selection was not altered, only the quantity and size of equipment was affected. The preliminary design of the integrated subsystems (EPS/RCS/ECLSS) are presented in Volume IV of this report.

2. INTEGRATED THERMAL CONTROL

The objective of the thermal control tradeoff was to examine rigorously all candidate concepts that might be used on the modular space station (MSS) to assure that the optimum concept was selected. Selection of the thermal concept for the 33-foot space station was forced to an active water-freon concept by the program guidelines. No such guideline existed for the MSS, requiring a tradeoff of all feasible thermal control concepts.

Nineteen alternative thermal control concepts were evaluated for possible application to the barbell modular space station design. These alternatives included applications of heat pipes, louvers, refrigeration assemblies, and deployable and body-mounted radiators.

The selection process consisted of a screening procedure with primary emphasis on low cost. Candidate concepts were grouped according to generic heat transport mode: passive, hybrid, or active. A figure of merit evaluation of the candidates within each generic grouping selected the best concepts for further penetration. Technical evaluation eliminated options with significant shortcomings not identified by the figure of merit screening process. Finally, cost estimates were made for the remaining alternatives and the lowest cost option which met all the performance criteria was selected.

2.1 DESIGN REQUIREMENTS

Before undertaking the tradeoff of alternative thermal control assemblies, the requirements and basic ground rules that each concept had to abide by were established. These requirements are:

1. Objectives - No attitude constraints imposed by the thermal control assembly; minimum control temperature - 40 F.

2. Configuration - Barbell with cylindrical station module, axis pointed toward earth.

3. Heat Rejection -

	Initial Station	Growth Station
Individual module (kw_t)	7.58	8.48
Station simultaneous (kw_t)	21.8/24.4	30.9/35.6

4. Design Orbital Conditions - Average hot = X-POP, $\beta = 70°$; local hot = X-POP, $\beta = 0°$.

5. Thermal Control Coating Properties - $\alpha/\varepsilon = \frac{0.36}{0.90} = 0.40$

2.2 DESIGN OBJECTIVES

The objectives for the design of the thermal control assembly (TCA) are to control temperatures within defined limits and reject internally generated heat without imposing attitude constraints on the space station. The former was satisfied by establishing a 40 F control point in each TCA to assure adequate cooling reserve for such functions as humidity control and battery thermal control. The attitudes defined by RAM sensor viewing requirements and minimum propellant consumption modes were accepted as the vehicle attitudes for TCA performance evaluation.

Configuration

Figure 2-1 illustrates the baseline configuration used in the study. The configuration is a barbell arrangement assembled by manipulators and contains four station modules, two core modules, and a power module. Four ports in the vertical plane are available for cargo modules and two research applications modules (RAM's). The growth version adds three station modules and supplies ports for three RAM's and two cargo modules. The experiment airlock and the high-gain antennas are berthed at the end of the station modules. All modules were assumed to be in one plane. The core module and power module axes are assumed parallel to the local horizontal and the axes of all station modules point to the center of the earth. Each station module is 14 feet in diameter and the spacing between modules varied from 6 inches to 6 feet during the study. The length of the modules also varied during the study, starting with a cylindrical length of 20 feet which later was extended to 28 feet.

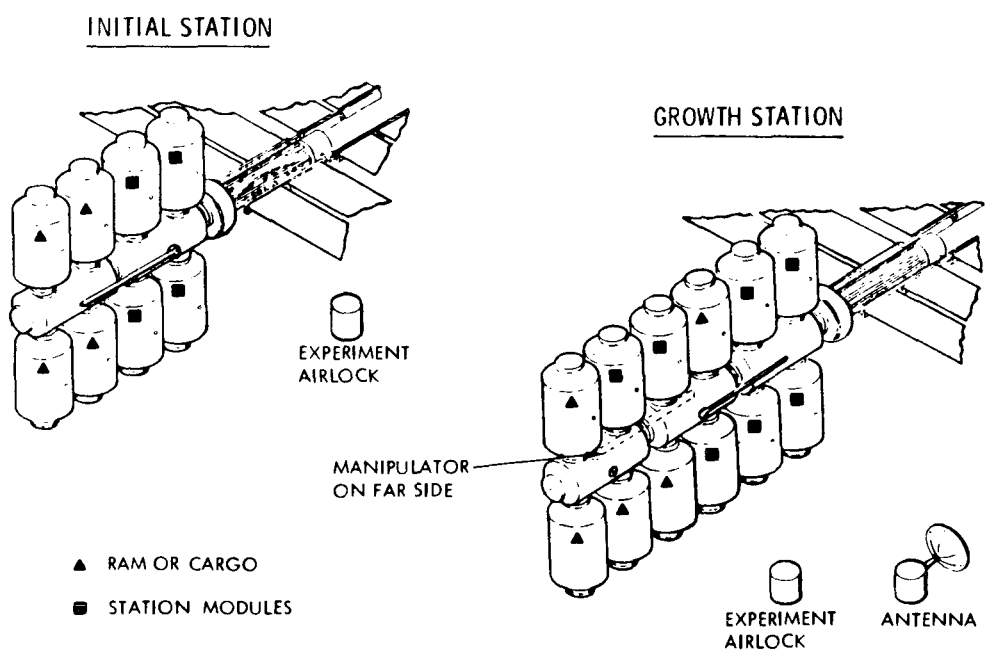

Figure 2-1. Reference Configuration

Heat Rejection Requirements

Rejection capability required of the TCA design is shown in Table 2-1. Heat generation within each module of the MSS for both the initial and the growth configurations were estimated based on the equipment located in that module. The station model assumed a solar array-battery power subsystem with one-half of the NiCd batteries located in the power module and one-half in core module 2. Heat loads specified for these modules include the variation caused by light and dark orbit environments. Loads for the remainder of the modules show the maximum generation rate within each module. The maximum simultaneous heat load is the total heat generation occurring throughout the space station. This load is lower than the total of the loads specified for each module because redundant hardware is not assumed operating.

The design points for TCA concepts differ for central and independent-type configurations. A centralized TCA utilizes a few transport loops (as few as one) to absorb, transport, and reject the generated heat load for the entire space station. This concept requires the heat transport mechanism to cross the docking interface. An independent TCA consists of individual absorbing, transport, and rejection assemblies in each module. Heat is not transported across the docking interface in these concepts. The station simultaneous load is the design condition for the central concept. Since all equipment is thermally controlled by one assembly, the maximum heat rejection requirement is defined by all the equipment that can realistically operate at one time.

Requirements for independent thermal control are defined by the maximum dissipation in any one module. The cost benefits of design commonality dictate that the maximum requirement of all the modules be used as the independent-type subsystem design requirement. The growth station requirements must be used on initial station modules for the same reason. It is not cost-effective to add radiator area to a module when the higher heat load of the growth station exists. Therefore, all independent thermal control assemblies must be sized to the maximum growth station heat rejection requirement. The central concept can be designed for a maximum initial station load and a maximum growth station load as long as more modules with external radiators are added when the new growth station modules are added. Thermal control of the power modules was treated as a problem separate from thermal control of the rest of the station and is not addressed during the study. Power module thermal control was addressed later during the preliminary design.

2.3 DESIGN ORBITAL CONDITIONS

The worst-case orbital conditions within the attitude constraints defined by experiment viewing requirements were used to evaluate alternative concept performance. End viewing from experiment modules established the Z axis of the station modules always are in the plane of the orbit. Variables within these constraints are then the definition of which axis is perpendicular to the orbit plane and what orbit inclination to the earth sun line to choose.

Table 2-1. Space Station Heat Load

Modules	Initial Station		Growth Station		
	Btu/Hr	kw	Btu/Hr	kw	
Power	27,425/22,825	8.05/6.70	44,850/33,050	13.13/9.69	
Core 1	3,365	0.99	4,390	1.29	
Core 2	12,255/22,825	3.59/6.70	15,150/33,050	4.44/9.69	
Core 3			5,380	1.58	
SM-1	21,625	6.35	24,750	7.25	
SM-2	26,050	7.63	28,100	8.23	
SM-3	25,850	7.58	27,900	8.19	
SM-4	23,775	6.96	26,850	7.88	
SM-5			28,900	8.48	Indep. Design Point
SM-6			18,200	5.34	
RAM	17,450	5.11	23,575	6.91	
Station Simultaneous*	74,275/83,075	21.8/24.4 **	105,350/120,150	30.9/35.6 **	

Key = Orbit light side/orbit dark side

*Does not include power module

**Central design point

Space Division
North American Rockwell

Minimum heat rejection environments were the only ones addressed during the evaluation because this environment coupled with the maximum rejection requirement size the assembly. Concept weight, which is a key parameter in the determination of concept cost, can, therefore, be established accurately enough to discriminate among passive, hybrid, and active options. Low heat load control, which would require definition of an alternative set of space environments, was addressed qualitatively during the tradeoff study, with quantitative analysis of this issue deferred until after selection was made.

The worst-case hot environment utilized for concept sizing depends on the thermal capacitance of the assembly. Since all concepts are required to control to a defined temperature, the lowest full sun orbit that provides the highest orbital average thermal environment is a worst case only for the high thermal capacitance concepts. These concepts would use the pressure hull as a radiator or have a large phase-change capacitor built into the assembly. Orbits in the plane of the ecliptic provide the hottest local orbital environment and, therefore, are the worst case for concepts with small thermal capacitance. Typically, radiators integrated into meteoroid bumpers have low thermal capacitance. Systems that are not required to operate to a defined control temperature may also be sized to the worst average orbital condition. However, a defined control temperature was considered necessary for the space station to maximize coolant temperature differentials available to heat exchangers and provide a definable coolant supply temperature for experiment thermal control.

The worst-case vehicle attitude differs depending on the orbit inclination to the earth-sun line. High-inclinations orbits or worst-case average environments can reject the least heat when in a Y-POP (Y axis perpendicular to the orbit plane) attitude. In this attitude the cylindrical sides of the modules are exposed to incident solar irradiation without shadowing by other modules. Modules would be continuously shadowed by other modules and the solar array when in the X-POP attitude and a high-inclination orbit. The reverse is true when the orbit plane is in the plane of ecliptic. Y-POP attitudes have shadowed modules and X-POP attitudes present the cylindrical sides to the sun.

Worst-case hot environments that must be satisfied by all concepts have now been defined as Y-POP with the orbit plane 70 degrees to the earth-sun line and X-POP with the orbit and the earth-sun line in the same plane as shown in Figure 2-2.

2.4 THERMAL CONTROL COATINGS

Justification of degraded thermal control coating properties was presented in Solar-Powered Space Station Thermal Concept Formulation (SD 70-535). The maximum degraded ratio of solar absorptance to infrared emissivity was established as 0.4 (α/ε = 0.36/0.9). This same value has been adopted for this tradeoff study although it is considerably more conservative for the application to the MSS. The conservatism is justified for two reasons: the uncertainty of the contamination surrounding the space station, and a design that can operate with greater degradation will require less frequent maintenance.

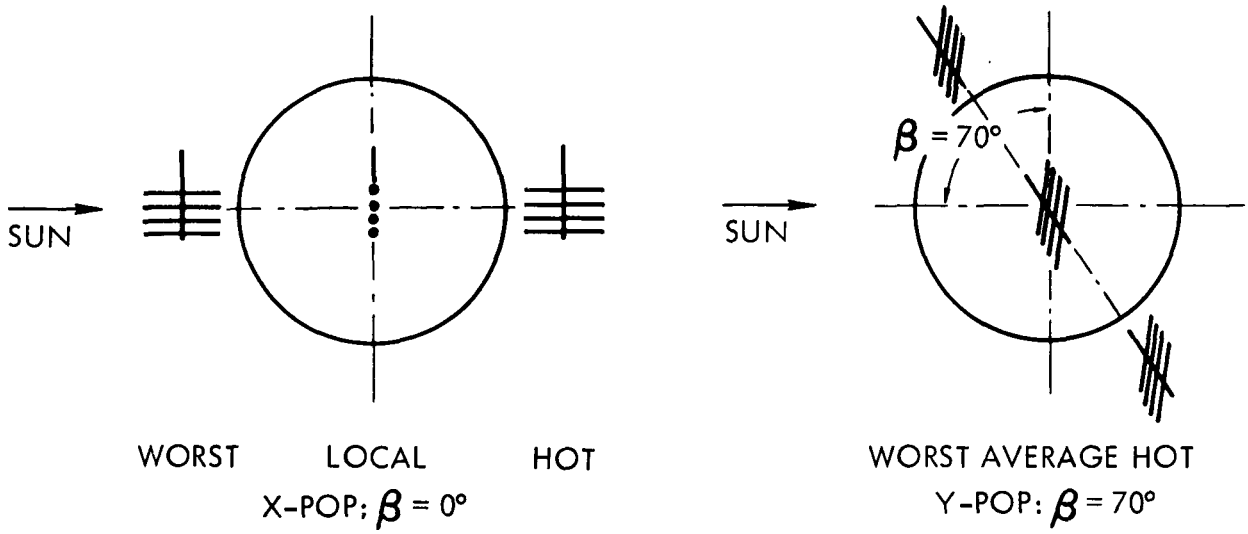

Figure 2-2. Worst-Case Orbital Conditions

The modular space station differs significantly from the 33-foot space station with regard to exposure to environments which cause coating degradation. Radiators on the 33-foot station were exposed to the boost environment during which soot deposits could occur. Fully 50 percent of the degradation of the coating was expected to occur during this flight phase. MSS modules are carried to orbit in the cargo bay of the shuttle protected from this boost environment. Therefore, this study could have chosen an α/ε of 0.3 but for the aforementioned reasons. This assumption did not influence the outcome of the tradeoff and, therefore, did not require the assumption of the less conservative value.

2.5 THERMAL CONTROL SENSITIVITY TO CONFIGURATION AND COATINGS

Heat rejection from a module in orbit was parametrically computed to gain understanding of the configuration and coating sensitivities of the TCA. The primary design parameters considered were orbital position and attitude, vehicle spacing, thermal control coating properties, and radiator location, temperature, and control system. A detailed analysis was performed to determine the hottest point in orbit (corresponding to the minimum heat rejection) as a function of the other parameters. Separation distances between modules from 0 to 15 feet were considered. A range of α_s/ε was also considered because of the uncertainty of degradation of thermal control coatings on a manned spacecraft.

Cylindrical Radiators

A 360-degree radiator was examined over a range of mean radiator temperatures. Heat rejection from a cylindrical radiator for α_s/ε values of 0.15, 0.25, 0.35, and 0.45 are shown in Figures 2-3 through 2-6. Note that for the higher values of α_s/ε, heat rejection is very small or negative (heat gained) even with large vehicle spacings with a typical mean radiator temperature of 50 F. Since heat rejection under these conditions is inadequate, other methods of improving heat rejection were considered.

Segmented Radiators

A standard method of improving heat rejection in a hot environment is to use segmented, or multiple radiators. The system consists of several radiators which are linked together but which can be by-passed if they cannot reject heat. Thus, when solar energy impinges on one side of the vehicle, the radiator fluid is routed to the radiators on the cold side of the vehicle, thus preventing heat gain from the hot side. Analyses were performed to determine the hot rejection characteristics of such a system on a MSS module.

The analyses were performed for all radiators to the environment at the location (defined by θ) which results in zero heat rejection from Radiator 1 of the inner module for the parametric pairs of radiator temperature and surface solar absorptance. This orbital location should be the hottest for the configuration and attitude of the MSS in overall heating to non-direct solar irradiated surfaces, because as θ decreases (vehicle approaches the subsolar point), the albedo heating on nondirect solar irradiated surfaces increases at a slower rate than the direct solar heating on Radiator 1 decreases. The environmental heating onto Radiator 1 is increased by increasing θ. But this will result in lower environmental heating to the total radiator system because Radiator 1 can be isolated (bypassed) and nondirect solar irradiated surfaces will experience a lower albedo flux.

The table in Figure 2-7 contains the predicted simultaneous heat rejection rates in Btu/ft^2-hr of the various radiator surfaces when rejection of Radiator 1 of the inner module is zero. The location in orbit is also presented. Figure 2-7 gives the heat rejection rates of the combined radiator system in kilowatts per longitudinal foot of radiator length and in kilowatts for a radiator system 20 feet long. The data represent the minimum capability for the conditions of the analysis. A module spacing of 2 feet was assumed.

Comparing the segmented radiator with the circumferential radiator, two significant conclusions can be made. First, a segmented design is required to achieve the required rejection rates for all concepts except those which raise the average radiator temperature such as a concept incorporating a heat pump. Second, the sensitivity to the thermal control coating absorptance is significantly reduced when a segmented radiator is used because the vehicle side not exposed to sunlight is doing most or all of the heat rejection.

INNER MODULE HEAT REJECTION FROM AN ISOTHERMAL CIRCUMFERENTIAL RADIATOR AT VARIOUS TEMPERATURES AS A FUNCTION OF SEPARATION DISTANCE BETWEEN MODULES

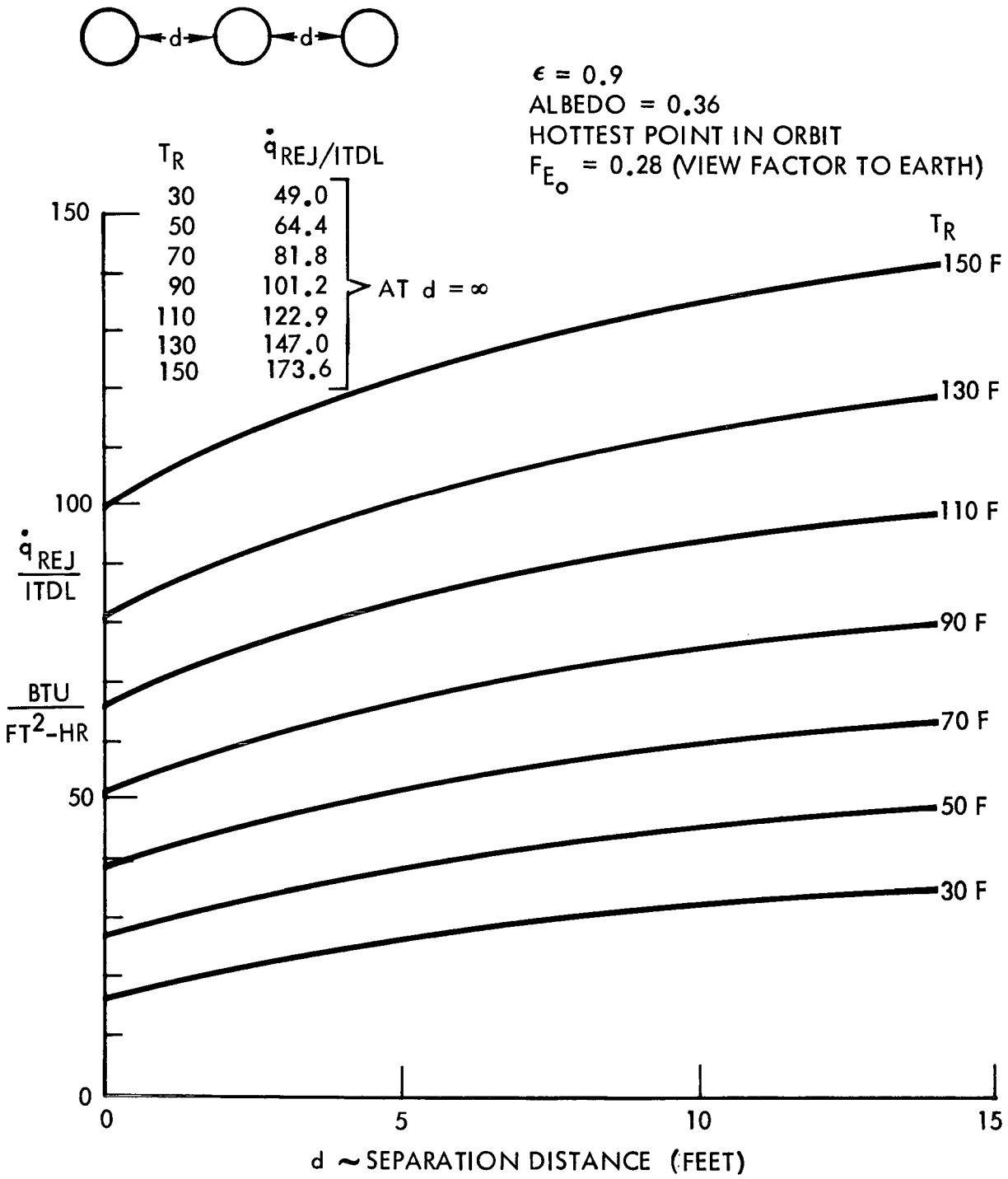

Figure 2-3. Inner Module Heat Rejection From Isothermal Circumferential Radiator (α_s = 0.15)

INNER MODULE HEAT REJECTION FROM AN ISOTHERMAL CIRCUMFERENTIAL RADIATOR AT VARIOUS TEMPERATURES AS A FUNCTION OF SEPARATION DISTANCE BETWEEN MODULES

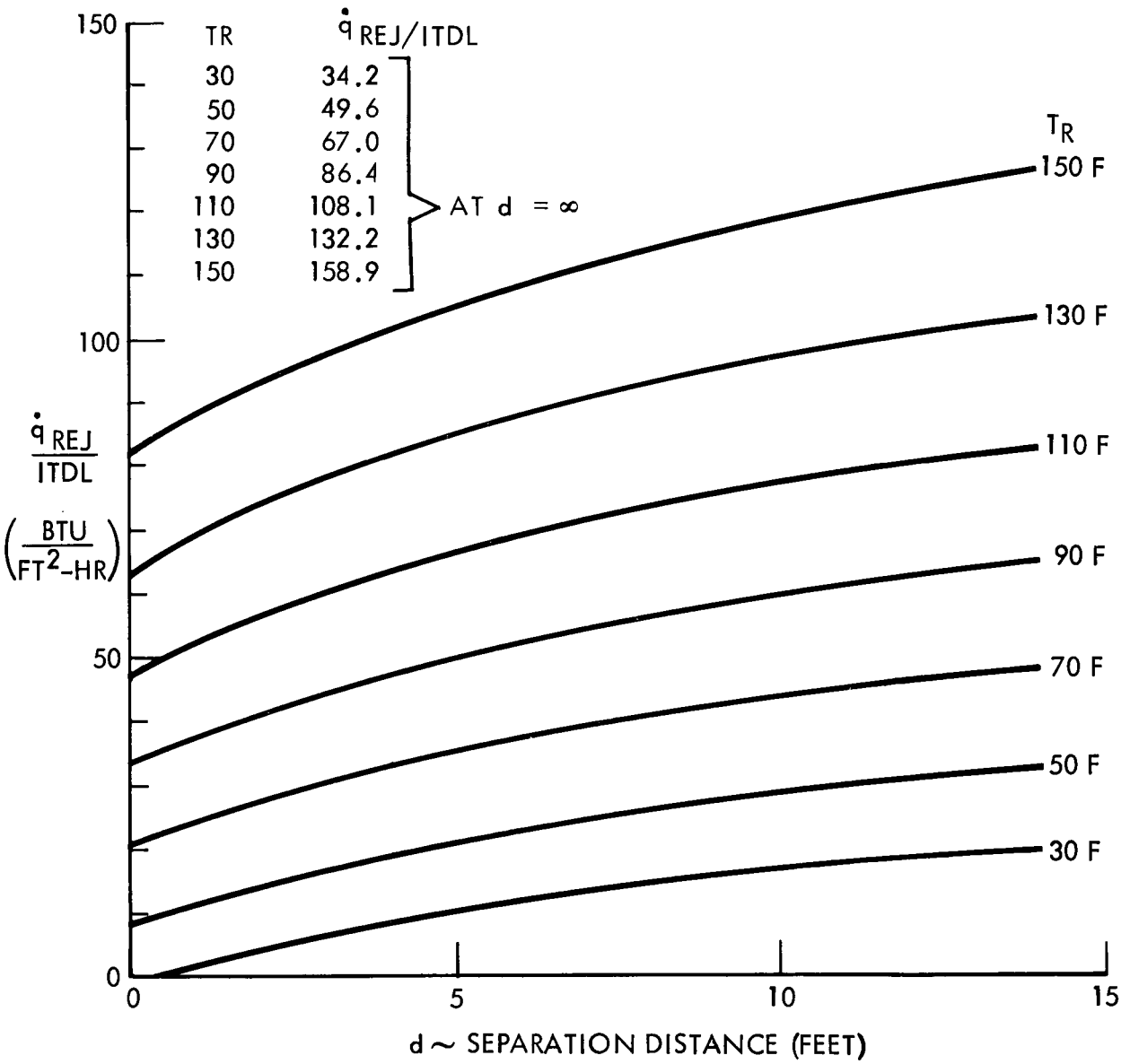

Figure 2-4. Inner Module Heat Rejection From Isothermal Circumferential Radiator (α_s = 0.25)

INNER MODULE HEAT REJECTION FROM AN ISOTHERMAL CIRCUMFERENTIAL RADIATOR AT VARIOUS TEMPERATURES AS A FUNCTION OF SEPARATION DISTANCE BETWEEN MODULES

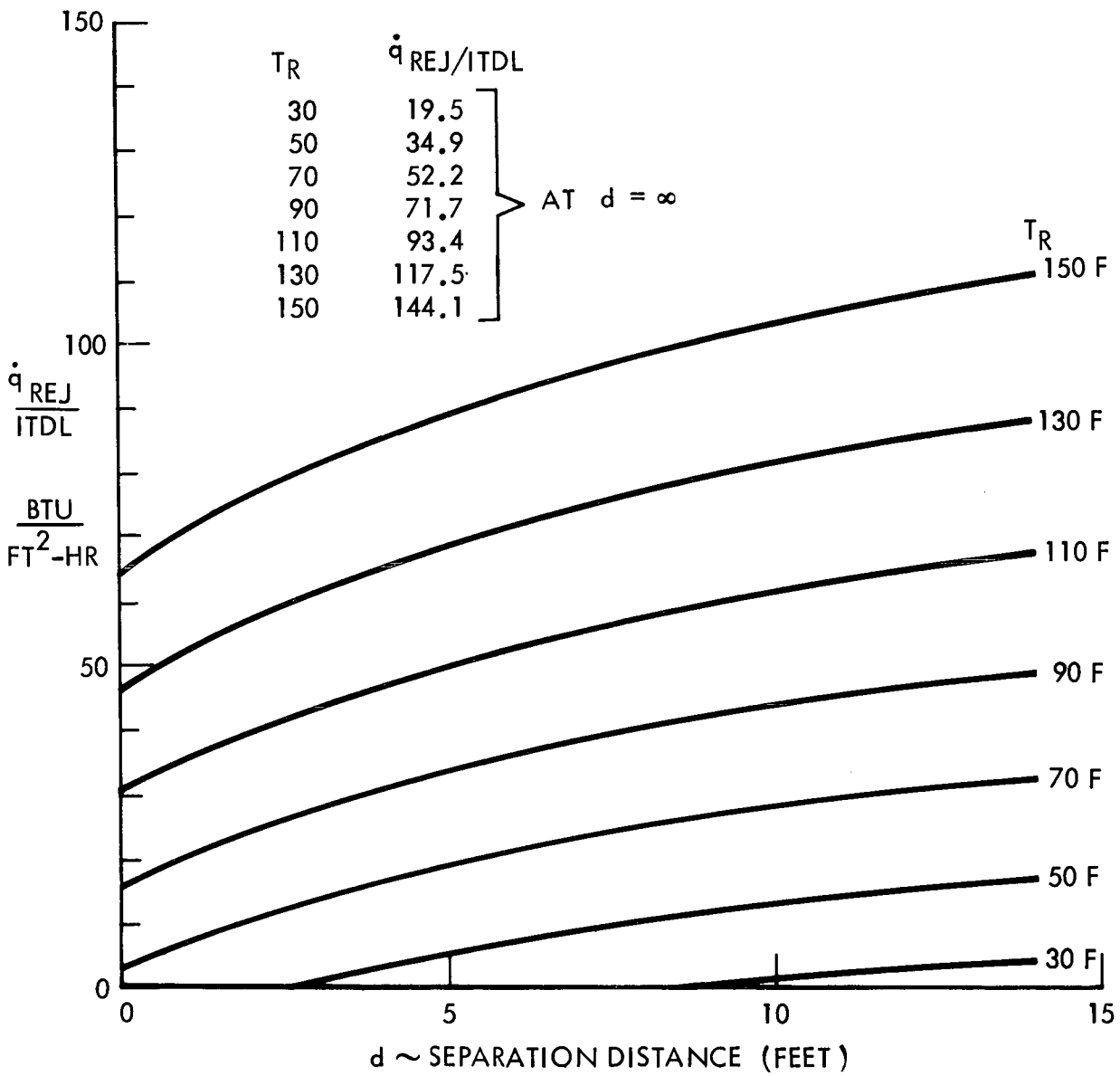

Figure 2-5. Inner Module Heat Rejection From Isothermal Circumferential Radiator (α_s = 0.35)

INNER MODULE HEAT REJECTION FROM AN ISOTHERMAL CIRCUMFERENTIAL RADIATOR AT VARIOUS TEMPERATURES AS A FUNCTION OF SEPARATION DISTANCE BETWEEN MODULES

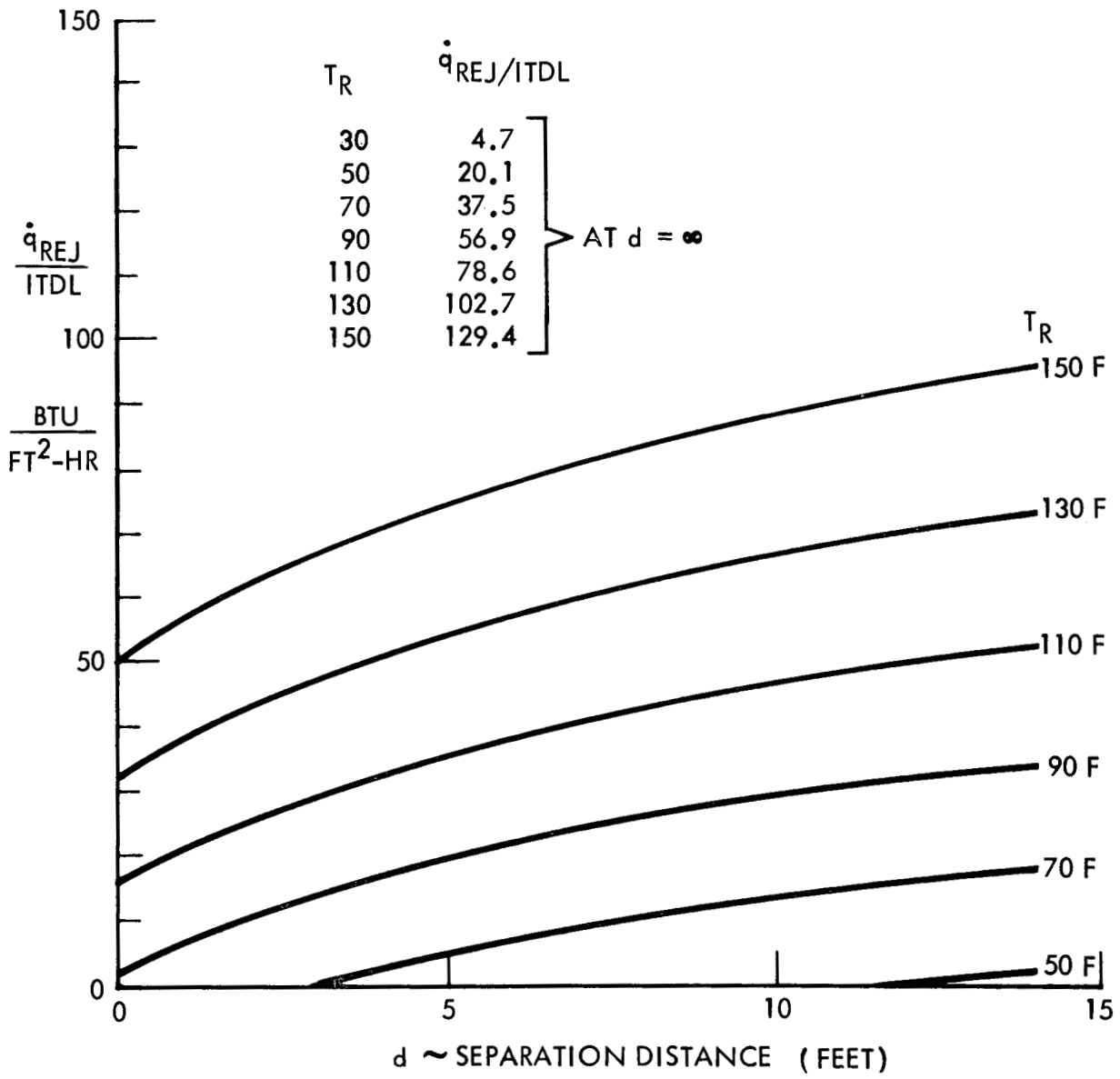

Figure 2-6. Inner Module Heat Rejection From Isothermal Circumferential Radiator (α_s = 0.45)

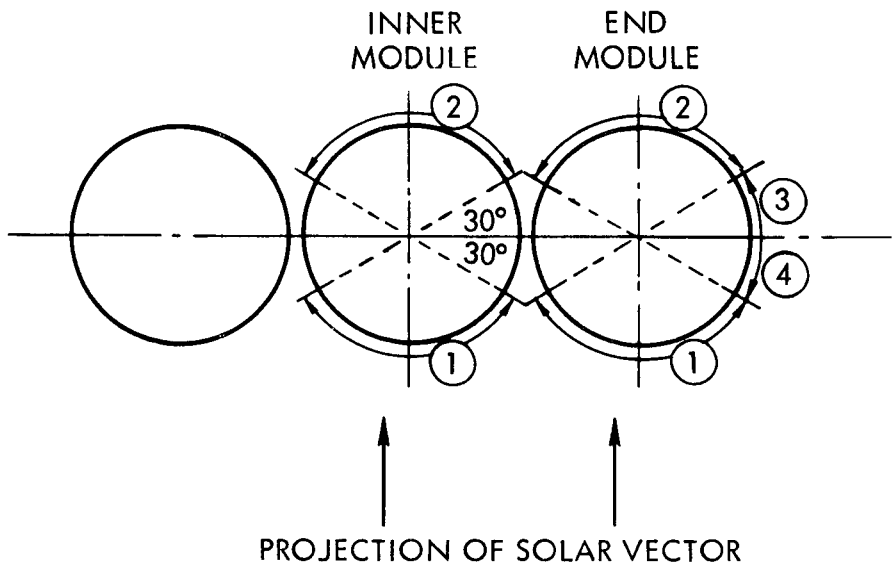

		SEGMENT (Btu/FT^2-HR)								TOTAL MODULE KW$_b$	
		1 (DL/3		2)(DL/3)		(3 (DL/12)		(4 (DL/12)		(20 FEET LONG)	
		INNER	END	INNER	END	INNER	END	INNER	END	INNER	END
T=50 F	α_s = .25	0@θ=41.1	9	68.5	73.7	NA	78.8	NA	59.2	5.90	10.08
	α_s = .35	0@θ =26	8.1	62.1	67.5	NA	73.0	NA	54.8	5.34	9.26
T=70 F	α_s = .25	0@θ =51.3	13	83.8	90.5	NA	97.2	NA	75.2	7.20	12.62
	α_s = .35	0@θ=31.2	12.4	77.7	84.2	NA	90.7	NA	70.4	6.68	11.78

Figure 2-7. Heat Rejection From Radiator Segments

Space Division
North American Rockwell

2.6 CANDIDATE CONCEPTS

Passive-Hybrid Concept Tradeoff

This section describes the synthesis and evaluation of several passive and hybrid MSS thermal control system concepts. The work done by Grumman under Contract NAS9-10436 (a study of a heat pipe system for the 33-foot space station) was utilized to the fullest extent in the areas of concept synthesis, evaluation scoring techniques, and system and component design.

Passive System Concepts

Passive thermal control concepts emphasize use of passive and semipassive thermal control elements to perform the functions of an integrated thermal control system (passive thermal control devices are typified by the absence of moving parts or mechanically operated components). With the exception of electrical heaters, passive and semipassive elements do not in general require electrical power to function; that is, they exhibit their function as a consequence of the natural physical properties of the materials comprising them.

The primary functions of an integrated thermal control system are heat removal, heat transfer, temperature and heat flow control, and heat rejection. Passive thermal control elements considered for these functions include insulation, phase-change materials, louvers, thermal coatings, thermal interface conductance materials, conductive path control techniques and space radiators.

Only the multilayer, high-performance type insulations were considered because of their advantage in a space environment and because the other types of insulation (e.g., foam, fibrous) could not feasibly meet heat loss requirements for the MSS. Phase-change materials (both solid-liquid and solid-solid) will be considered as a possible means of reducing the peak heat loads which must be rejected by the radiators. Since the use of a phase-change material will reduce the heat load to be rejected by approximately the same amount for all candidate systems, they will be considered as an optimization technique available for all systems rather than as a separate system.

Semipassive thermal control elements that were considered include heat pipes, louvers, and thermal switches. Heat pipes were considered for the internal heat transport system, and radiator heat distribution system. A special class called variable conductance heat pipes was also considered to control heat rejection as internal and environmental heat loads fluctuate. Louvers were also considered for this control function.

The operation and performance characteristics of these passive and semipassive elements were investigated in some depth during previous studies and are discussed in the Thermal Concept Formulation document previously mentioned.

From these elements, a number of passive thermal control system concepts were synthesized. All of the passive concepts are characterized by the use of a heat pipe radiator, mounted either on the micrometeoroid bumper or on the pressure wall of the station module. The advantage of a pressure wall radiator is that the thermal capacitance of the structure is available to dampen peak

heat loads. Maximum heat rejection capabilities are reduced because the micrometeoroid bumper acts like a radiation baffle. Because of the isothermal nature of heat pipes, it became obvious that to reject low temperature heat loads, the entire radiator temperature would have to be lower than the minimum source temperature. Since this would result in excessive radiator area requirements, the use of separate high and low temperature radiators was considered.

Another approach is to use an internal refrigeration system for the low temperature loads and then use only a high-temperature radiator. Although vapor compression refrigeration system is not passive, they will be used with passive candidates using only a single high-temperature radiator, A total of six passive thermal control system candidates for the modular space station was synthesized. These are depicted schematically in Figure 2-8.

The first passive candidate (P-1) is an all-heat pipe system. Cold rails (a type of heat pipe coldplate) and heat pipe heat exchangers are used to remove heat from the heat sources. Conventional heat pipes are used to transport heat and distribute it over the radiator surface. Variable conductance heat pipes are used to control the rate of heat rejection from the vehicle.

Concept P-2 uses a vapor compression refrigeration system for thermally controlling the low temperature heat loads. This allows the use of a single high-temperature heat pipe radiator rather than two separate radiators for high and low temperature cooling.

Concept P-3 is similar to P-2 except that the pressure wall is the radiating surface and louvers are used to control the heat loads in and out of the vehicle.

The fourth concept uses the air circulation system inside the pressure volume to cool the high-temperature heat loads. Heat removal and transport is by air convection. A heat pipe heat exchanger transfers the energy to a bumper mounted heat pipe radiator. Low temperature cooling is the same as for Concept P-1.

Concept P-5 is a combination of P-2 and P-4. That is, high-temperature cooling is the same as for Concept P-4 and low-temperature cooling is the same as for Concept P-2 (refrigeration system).

In the final passive concept (P-6), the high-temperature heat generating equipment is affixed directly to the pressure wall, which is the primary radiating surface as in Concept P-3. Louvers are used for control. Low temperature cooling is the same as in Concept P-3.

These six passive alternatives are the most feasible concepts using primarily passive and semipassive thermal control elements. The passive system candidates are most conducive to the independent approach to thermal control of the MSS modules and do not easily lend themselves to the centralized thermal control concept.

CONCEPT	KEY DESCRIPTORS	SCHEMATIC DIAGRAM
P-1	• ALL HEAT PIPE SYSTEM • VCHP* CONTROL • SPLIT TEMPERATURE RADIATORS	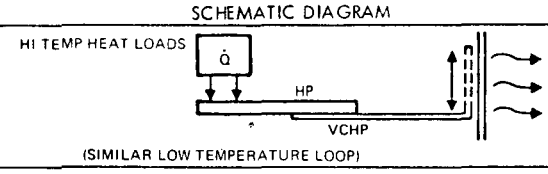
P-2	• ALL HEAT PIPE HIGH TEMPERATURE LOOP • SINGLE HIGH TEMPERATURE RADIATOR • THERMOSTATIC CONTROLLED HEAT PUMP FOR LOW TEMPERATURE LOADS	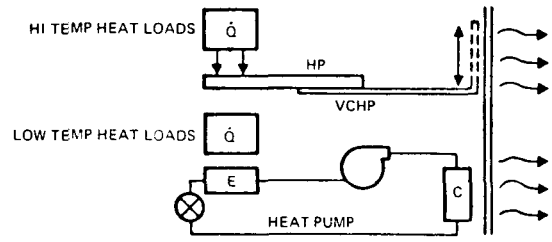
P-3	• WALL MOUNTED HEAT PIPE RADIATOR • LOUVER CONTROL SYSTEM • THERMOSTATIC CONTROLLED HEAT PUMP FOR LOW TEMPERATURE LOADS	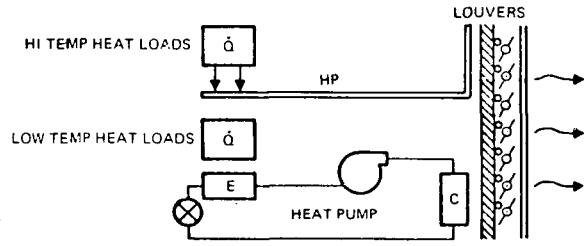
P-4	• AIR CONVECTION COOLING FOR HIGH TEMPERATURE HEAT LOADS • ALL HEAT PIPE SYSTEM FOR LOW TEMPERATURE HEAT LOADS • SPLIT TEMPERATURE RADIATORS	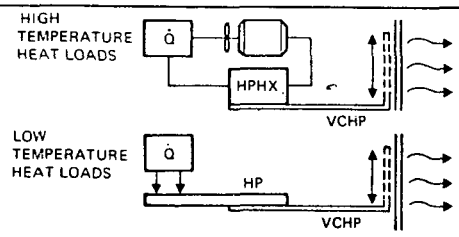
P-5	• AIR CONVECTION COOLING FOR HIGH TEMPERATURE HEAT LOADS • THERMOSTATIC CONTROLLED HEAT PUMP FOR LOW TEMPERATURE LOADS • SINGLE HIGH TEMPERATURE RADIATOR	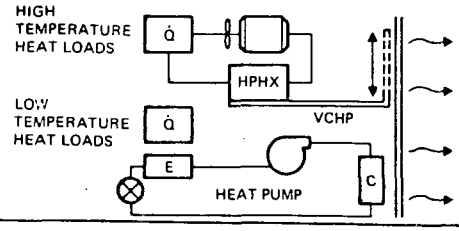
P-6	• HIGH TEMPERATURE HEAT LOADS CONDUCTED DIRECTLY TO PRESSURE WALL • THERMOSTATIC CONTROLLED HEAT PUMP FOR LOW TEMPERATURE LOADS • SINGLE WALL MOUNTED HEAT PIPE RADIATOR	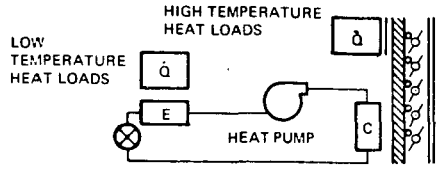

Figure 2-8. Passive Thermal Control Concepts

Hybrid System Concepts

In addition to the passive concepts, five hybrid concepts were synthesized comprising pumped fluid loops as well as the elements used to generate the passive concepts. The rationale for the hybrid concept is that the heat pipe systems offer advantages in terms of maintenance and reliability but have difficulty in providing low-temperature cooling and in transporting heat from a complicated system of heat generating equipment to the radiator. Hence, in the hybrid concepts, heat pipes are used for the radiators where low maintenance and high reliability are difficult to achieve with fluid loop radiators, and pumped fluid loop systems are used internally where maintenance is less of a problem. These concepts are depicted schematically in Figure 2-9.

The first concept (H-1) uses internal pumped fluid loop system to remove heat from the heat sources and transport it to the radiators. Separate high- and low-temperature heat pipe radiators are used for the two heat load ranges.

In Concept H-2, the high-temperature cooling system is the same as Concept P-3 and the low-temperature cooling is the same as Concept H-1.

High-temperature cooling for Concept H-3 is similar to H-1 except that a wall-mounted heat pipe radiator and louver control system are used (a bypass valve control system also is indicated but may not be required). The low-temperature cooling system is the same as for Concept P-3.

In Concept H-4, the high-temperature cooling system is the same as for Concept P-6 (heat sources coupled to pressure wall) and the low-temperature cooling system is the same as in Concept H-1 (internal loop with external low temperature heat pipe radiator).

The final concept, H-5, is a combination of Concepts P-4 and H-1. That is, high-temperature cooling is provided by the air circulation system as in P-4 and low-temperature cooling is provided by an internal fluid loop in conjunction with a low-temperature external heat pipe radiator.

Active Thermal Control Concepts

Eight active thermal control concepts were considered. The concepts were made up of different fluid system arrangements directed toward a comparison of several design issues which were (1) independent (at module level) versus central (at vehicle level) thermal control, (2) single versus dual coolant loops, and (3) body-mounted versus deployable radiators. Block diagrams and key descriptors are shown on Figure 2-10.

Concept A-1 is a dual-loop independent thermal control approach with internal and external coolant loop mated through an intercooler. All heat loads within a module are absorbed by the water loop and transferred to the external loop and rejected to space. The dual-loop approach allows the use of nontoxic fluids like water in the internal loop with the habitable volumes, and the use of very low freezing point coolants in the external loop to preclude any operational or design problems associated with radiator freeze-up.

CONCEPT	KEY DESCRIPTORS	SCHEMATIC DIAGRAM
H-1	• INTERNAL PUMPED FLUID LOOP WITH BYPASS CONTROL • EXTERNAL HEAT PIPE RADIATOR • SPLIT TEMPERATURE RADIATORS	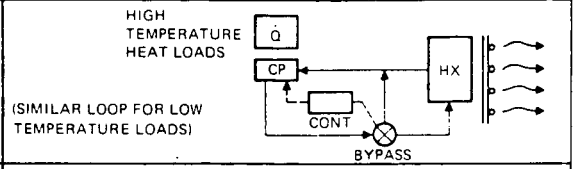
H-2	• HEAT PIPE SYSTEM WITH LOUVER CONTROL & WALL MOUNTED HEAT PIPE RADIATOR FOR HIGH TEMPERATURE LOADS • INTERNAL PUMPED FLUID LOOP WITH BYPASS CONTROL & EXTERNAL HEAT PIPE RADIATOR FOR LOW TEMPERATURE LOADS	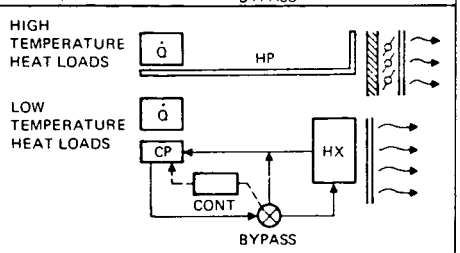
H-3	• INTERNAL PUMPED FLUID LOOP WITH BYPASS CONTROL FOR HIGH TEMPERATURE LOADS • HEAT PUMP FOR LOW TEMPERATURE LOADS • SINGLE 70F WALL MOUNTED HEAT PIPE RADIATOR WITH LOUVER CONTROL	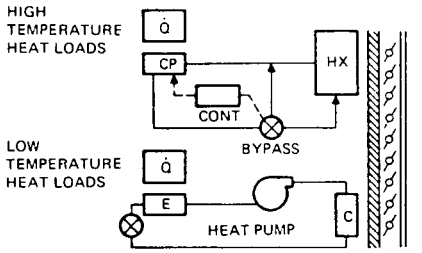
H-4	• HIGH TEMPERATURE HEAT LOADS CONDUCTED DIRECTLY TO WALL MOUNTED HEAT PIPE RADIATOR WITH LOUVER CONTROL • INTERNAL PUMPED FLUID LOOP & EXTERNAL HEAT PIPE RADIATOR FOR LOW TEMPERATURE HEAT LOADS	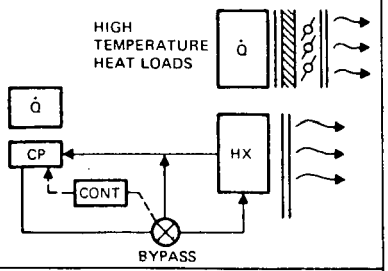
H-5	• AIR CONVECTION COOLING WITH PUMPED FLUID LOOP TRANSPORT TO BUMPER MOUNTED HEAT PIPE RADIATOR FOR HIGH TEMPERATURE LOADS • INTERNAL PUMPED FLUID LOOP WITH BYPASS CONTROL & EXTERNAL HEAT PIPE RADIATOR FOR LOW TEMPERATURE LOADS • SPLIT TEMPERATURE RADIATORS	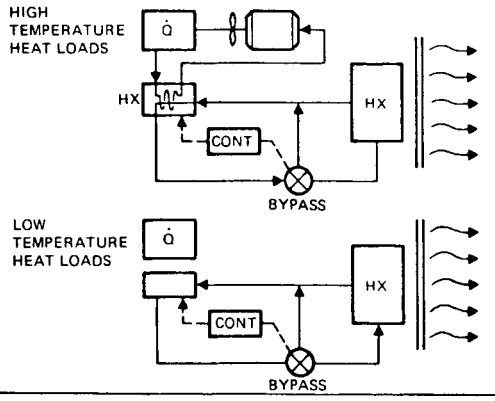

Figure 2-9. Hybrid Thermal Control Concepts

CONCEPT	KEY DESCRIPTORS	SCHEMATIC DIAGRAM
A-1	• INDIVIDUAL CONTROL AT MODULE LEVEL • DUAL LOOPS EXTERIOR INTERIOR • LOOPS REDUNDANT	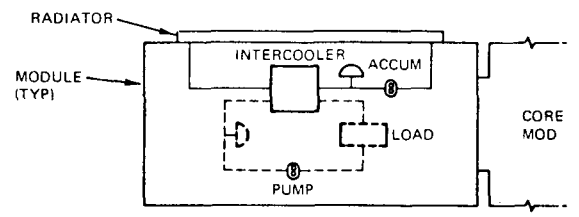
A-2	• INDIVIDUAL CONTROL AT MODULE LEVEL • SINGLE LOOP • LOOP REDUNDANT • FORCED AIR COOLING PRIMARY MODE	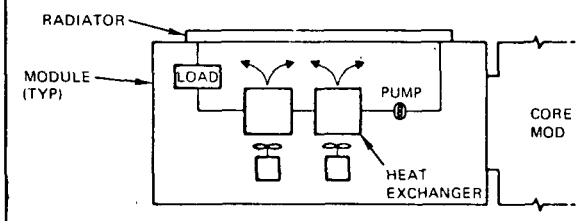
A-3	• INDIVIDUAL CONTROL AT MODULE LEVEL • SINGLE LOOP • LOOP REDUNDANT • DECREASE NO. OF HARDWARE	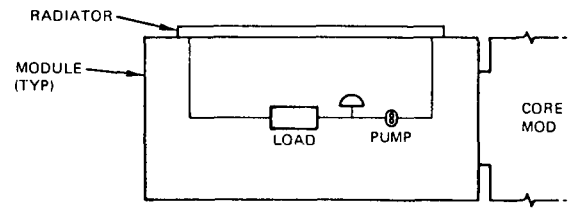
A-4	• 4 FREON LOOPS, 1 WATER LOOP • REDUNDANT FREON & WATER LOOPS • DECREASE NO. OF HARDWARE FROM CONCEPTS A-1, A-2, & A-3 • HEAT LOAD FLEXIBILITY	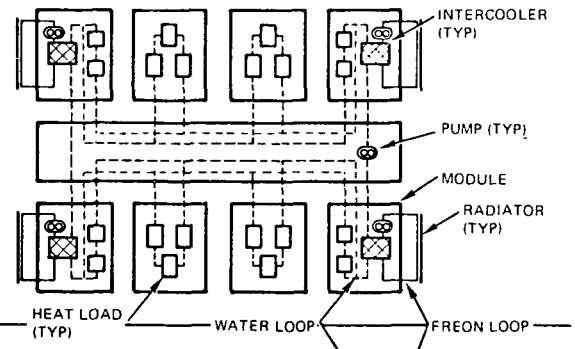
A-5	• 1 FREON LOOP, 1 WATER LOOP • REDUNDANT FREON & WATER LOOPS • DECREASE NO. OF HARDWARE FROM CONCEPT A-4 • INCREASE FLUID CONNECTORS CORE-TO-MODULES	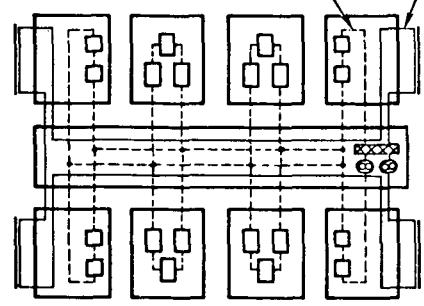

Figure 2-10. Active Thermal Control Concepts (Sheet 1 of 2)

CONCEPT	KEY DESCRIPTORS	SCHEMATIC DIAGRAM
A-6	• 1 FLUID LOOP • REDUNDANT LOOP • DECREASE NO. OF HARDWARE • FORCED AIR COOLING PRIMARY MODE	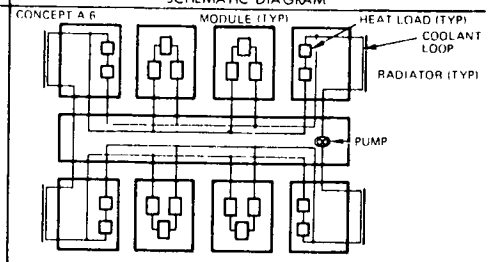
A-7	• 1 FLUID LOOP • ORIENTABLE RADIATOR(S) • 1 DEGREE FREEDOM • REDUNDANT LOOP • ELIMINATE MODULE PENETRATIONS • SIMPLIFY CONTROL	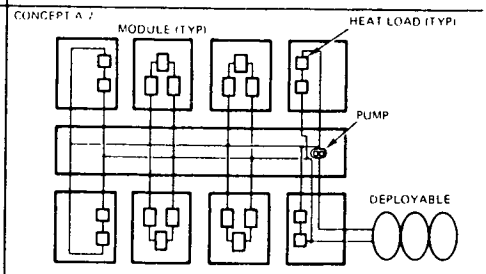
A-8	• 1 FREON LOOP, 1 WATER • ORIENTABLE RADIATOR(S) • 1 DEGREE FREEDOM • REDUNDANT LOOP • ELIMINATE MODULE PENETRATIONS • SIMPLIFY CONTROL	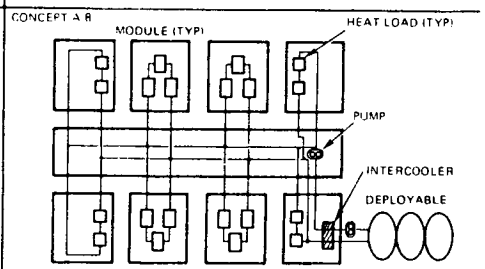

Figure 2-10. Active Thermal Control Concepts (Sheet 2 of 2)

The independent thermal control at the module level is an important consideration for modular station concepts because it eliminates a coolant system interface between modules.

Concept A-2 has a single coolant loop in the independent arrangement. For equipment cooling, air convection was selected as the primary mode. This concept has the advantages of independent arrangement and the single coolant loop has an additional advantage of less hardware than dual loops. Equipment installation flexibility is achieved by using cabin atmosphere as a cooling fluid. It should be noted, however, the air cooling cannot be utilized in decompressed cabins and, therefore, additional equipment redundancy will be required.

Concept A-3 is an independent, single-loop option in which the primary equipment cooling mode is coldplates. This concept has the advantages of a single loop and does not have the limitations for decompressed cabin operation.

Concept A-4 utilizes a dual loop in which the internal water loop circulates among all modules to provide the flexibility of heat load distribution throughout the station at the expense of additional module interface. The external loops, on the other hand, were in the independent module arrangement with the advantages of fewer interfaces. The degree of centralization shown decreases the number of systems required and reduces the amount of thermal control hardware required compared to the first three options.

Concept A-5 also is a dual loop with more centralization than A-4. Here only two loops are used to accomplish all thermal control for the total configuration. The additional centralization has an additional reduction in hardware required with the associated additional module to module coolant loop interfaces. Concept A-5 has the ability to distribute heat loads by the internal loop and rejection capability by the external loop to any module or combination of modules in the configuration. Of the concepts described, Concept A-5 is the most flexible from the standpoint of heat load distribution and rejection capability.

Concept A-6 is a central single-loop with all of the advantages of Concepts A-4 and A-5 with the added advantage of minimum number of components inherent with a single loop.

Concept A-7 is a single loop like Concept A-6 with the body-mounted radiators replaced by a deployable radiator. A major advantage of deployable radiator results from the incorporation of a orientation mechanism. The heat rejection system can be independent of vehicle attitude.

Concept A-8 is a dual-loop central deployable radiator with the same orientation advantages as Concept A-7.

Active Thermal Control Design Issues

Comparison of Concepts A-1, A-2, and A-3 of the independent concepts with A-4, A-5, A-6, A-7, and A-8 of the central concepts indicated the overall issues associated with independent versus central thermal control. Comparison of Concepts A-2, A-3, A-6, and A-7 with A-1, A-4, A-5, and A-8 indicated the differences between single and dual fluid loops. Comparing Concepts A-7 and A-8 with all the other active concepts gives indication of the issues associated with body-mounted and deployable radiators.

2.7 PRELIMINARY TRADEOFFS

A preliminary evaluation of passive, hybrid, and active thermal control concepts was made to identify which candidates merited further penetration and consideration for selection. A figure of merit (FOM) approach was adopted to normalize differences among diverse concepts. However, the process was restricted to the candidates within generic classifications. Passive and hybrid active-passive concepts were evaluated and the best candidates were carried forward into the next phase. Active systems were evaluated separately with the least promising eliminated from further consideration.

Description of Figure of Merit Procedure

The FOM procedure involves classification of all the significant physical and performance characteristics into three groupings or three evaluation filters: (1) an absolute set of criteria to which the concept must achieve a certain minimum score to be considered a viable option, (2) a set of primary criteria which represents characteristics of lesser importance to the program under consideration. The secondary criteria filter is important to the concept selection trade only if the primary criteria filter does not yield a substantial difference among concepts.

The evaluation criteria for the MSS was established by the engineering analysts as representative of the importance of the stated ground rules and program goals. Arrangement of these criteria (or characteristics) into an absolute filter, a primary evaluation group, and a secondary evaluation group is illustrated in Table 2-2. All candidate concepts must achieve a satisfactory rating on each of the absolute criteria to be considered further. The selection of cost as the primary criteria with 25 points reflects the relative top-level importance of minimizing cost for the initial MSS.

Weight, power, and volume are secondary in importance to cost, long duration, flexibility, maintainability, and reliability. Power, however, is given priority over weight and volume as represented by the point allocation. Although the FOM evaluation procedure is accomplished at three levels, a bad rating in any single characteristic generally rejects the concept, even if it is in the secondary set of criteria. That is, a very large hardware weight may reject the candidate even though it only affects four out of 100 points.

Explanation of the interpretation of each of the criteria will be made during the description of the candidate evaluations. Subjectivity was reduced as much as possible by the use of quantifiable data.

2.8 EVALUATION OF ABSOLUTE CRITERIA

Candidate concepts are required to score in all of the absolute criteria. These criteria are broken down into the subcategories of performance, safety, and availability/confidence. Comparison to this criteria eliminated a hybrid candidate, H-2, because it required so many new developments that it received a zero availability/confidence rating. Table 2-3 shows the absolute criteria point allocations for all concepts.

Performance

The performance evaluation and rating of the thermal control candidates were based on capability beyond meeting basic requirements. All candidates were judged to be capable of meeting basic requirements or they were not included in the list of candidates for consideration. Therefore, selected performance criteria were flexibility and capability margin in excess of design requirements.

The passive and the active concepts were rated differently because the design differences are conceptually different between the two generic types of thermal control systems. Active concepts differed in the ways a pumped loop system could be implemented with little change in the types of components selected. Therefore, flexibility for the active systems refers to the ability of the subsystem to handle variations in heat loads and environment while the flexibility evaluation of the passive concepts evaluates their ability to control temperature over a wide range of heat loads.

Table 2-2. Evaluation Criteria and Point Allocations

Criteria	Points Allocated	
	Total	Item
Absolute criteria	18	
Performance		6
Safety		6
Availability/confidence		6
Primary criteria	63	
Initial cost (18)		18
Nonrecurring		10
Recurring		3
Development test, integration		3
Equivalent power cost		2
Resupply cost, sensitivity		3
Evolutionary rating		2
Growth station		1
New technology		1
Commonality Rating		2
Flexibility		15
Off design		4
Environment/interface sensitivity		4
Evolutionary growth		3
Capacity growth		4
Durability		14
MTBF		4
Scheduled maintenance		3
Unscheduled maintenance		5
Crew time		1
Skill		1
Operational Impact		9
Buildup characteristics		3
Geometry/configuration		3
Redundancy		3
Secondary criteria	19	
Weight		4
Hardware weight		2
Resupply weight		2
Power		6
Peak, light side		2
Average		4
Volume		3
Complexity		6
Quantity hardware		2
Quantity instrumentation		4
Total	100	

Table 2-3. Absolute Criteria Summary

Concept	Performance	Safety	Availability/ Confidence	Total
Passive				
P1	2.5	4.0	1.5	8.0
P2	4.6	3.0	3.5	11.1
P3	2.5	3.0	3.3	8.8
P4	2.5	4.0	0.7	7.2
P5	4.0	3.0	5.0	12.0
P6	2.0	3.0	3.3	8.3
Hybrid				
H1	6.0	4.0	6.0	16.0
H2	5.5	3.5	0.0	9.0
H3	5.5	2.5	3.3	11.3
H4	2.5	3.5	1.4	7.4
H5	5.0	3.5	4.4	12.9
Active				
A1	3.1	6.0	4.4	13.5
A2	3.1	3.6	5.4	12.1
A3	3.1	3.6	6.0	12.7
A4	4.7	6.0	3.9	14.6
A5	4.7	6.0	3.9	14.6
A6	4.7	3.6	5.4	13.7
A7	6.0	3.6	2.1	11.8
A8	6.0	6.0	1.6	13.6

Passive concepts which rely on louvers and wall temperature control were rated lowest on flexibility. Louvered systems can control heat flow in one direction well but cannot easily respond to heat loads in two directions. For example, a louver system may be designed to allow a greater heat leak to the external environment if internally generated heat increases. However, if the external environment varies widely, such as in an ecliptic orbit about the earth, the louver system cannot easily adjust. It may want to open to allow a greater heat leak, but at the same time want to close to reflect solar irradiation. Concepts employing the wall as a heat sink have limited flexibility because the wall temperature is constrained by condensation and touch temperature limits. Air convection concepts are somewhat less constrained because the variations of air temperature results from an averaging of all heat loads on the air.

Active systems which have central plumbing and which are orientable received the highest grade for flexibility. Centrally plumbed concepts can take wide variations in heat load and distribute this load among other modules. Configurations which are contained in one module must limit the heat rejection within that module to the capability of that module. Orientable deployed radiators can adjust to variations in the external environment by changing the radiator's attitude relative to the earth or sun.

The heat rejection margin above design requirement was determined by evaluating the rejection capability of each option. Centrally plumbed active systems have greater margin than independently plumbed candidates because the total rejection capability is equal to the sum of that of all radiators. Conversely, the margin of an independent candidate is the difference between the maximum rejection requirement of that module and the rejection capability of that module. The design margin of passive concepts relates to the margin that can be generated by the components in the concepts. Concepts utilizing heat pumps have greater design margin because radiator inlet temperatures can be raised.

Safety

To rate the concepts on the safety criteria, two factors were considered: (1) the material used and its potential hazard, and (2) the crew equipment interface. Passive systems are in general very safe. Toxic materials such as freon or ammonia transport fluids can be restricted to low-temperature heat pipes located exterior to the pressure hull. Heat pumps and pumped fluid loops were given slightly lower ratings because of the crew interface required during maintenance. Dual-loop active systems share the same benefits of isolation of toxic fluids from the crew compartment as the heat pipe systems. Single fluid active concepts cannot achieve this isolation and can incur an additional hazard of flammability.

Availability/Confidence

The availability/confidence rating was determined by assigning scores for the development risk of each component within the definition of a concept. The systems were rated based on the number of new elements and their stage of development. The individual elements comprising the system were rated as to their stage of development according to Table 2-4.

The net scores for the systems was determined by reciprocal addition of the individual scores. The ratings were then normalized to give the highest score to the concept with the lowest development risk. Concepts with the fewest components and those utilizing hardware similar to previous programs achieved the highest score.

Since passive-hybrid and active comparisons were done separately, cross-comparisons cannot be made from these tables.

Table 2-4. Development Rating

Score	Description*
10	Existing equipment, unmodified
9	Existing equipment, modified, similar application
8	Existing equipment, modified, new application
7	Prototype, flown, unmodified
6	Prototype, not flown, unmodified
6	Prototype, flown, modified
5	Prototype, not flown, modified
4	Concept, T < 2 years
3	Concept, 2 years < T < 4 years
2	Concept, 4 years < T < 6 years
1	Concept, 6 years < T < 10 years

*Definition of descriptors:

Existing equipment - has been used on previous missions

Modified - use existing hardware as baseline but add to or delete from it

Similar application - has been used for same purpose previously

Prototype - hardware which has been tested and used experimentally

Flown - hardware has been orbited

Concept - presently under development or a completely untested idea

T - time estimated for development of the concept

2.9 PRIMARY CRITERIA

The selection criteria which reflects the objectives of this program are included in the primary criteria. Cost is the most heavily weighted parameter. Performance flexibility is rated high because it measures the ability of the concept to accept variations in requirements. This characteristic represents a cost saving to the program because changes in program requirements can be accommodated without changing subsystem hardware. Durability also represents a cost-sensitive parameter in that recurring and maintenance costs are reduced by high reliability hardware. Finally, operational impact of the candidates is of primary importance because it rewards the concept most compatible with the MSS concept. Table 2-5 summarizes the primary criteria evaluations.

Cost Evaluation

The cost evaluation is the first consideration in the primary evaluation "filter" and the most important criteria in the thermal control concept trade study as is indicated by its 25-point allocation. The cost criteria have been subdivided in four categories: initial, resupply (and operational costs), evolutionary benefit, and commonality rating. Low initial cost is the primary goal for the MSS and consequently, it has been assigned the majority of 25 points for cost. Resupply and operational costs are not of much significance to the thermal control trade. Evolution is included for an assessment of the buildup to the growth station and benefit to other future, evolving space programs (i.e., amortization). Commonality was included to account for module-to-module manufacturing commonality even though the initial cost category accounts for commonality.

The cost evaluations for the active systems were more quantitative than for the passive concepts because cost estimating relationships (CER's) exist for pumped fluid concepts. Therefore, active candidates could be scaled on the basis of key parameters with respect to previous cost experience. However, passive component data were not available during this phase of the study although it did become available later. As a result, passive candidates were evaluated by more qualitative methods such as determination of the number of new developments and estimating the relative development status of each component. This effort was similar to that accomplished relative to the availability/confidence criteria.

Initial cost was defined to include those costs incurred prior to launch and is of emphasis to the program primarily because of the time phasing of MSS dollars with the high expenditure of the shuttle development dollars. Shuttle-station cost phasing requirements cause dollars spent early to be a greater penalty than those spent nearer to launch date. Initial cost was subdivided into the categories of nonrecurring, recurring, test and integration, and electrical power equivalent cost. Nonrecurring cost was given greater emphasis than the other initial cost categories because it represents dollars spent earlier, whereas recurring and test and integration dollars are spent closer to launch.

Table 2-5. Primary Criteria Comparison

Points	Criteria	Passive						Hybrid				Active							
		P1	P2	P3	P4	P5	P6	H1	H3	H4	H5	A1	A2	A3	A4	A5	A6	A7	A8
18	Initial Cost	13.7	11.6	10.3	10.5	9.9	12.6	15.1	9.1	11.1	10.8	9	10.5	14.5	10.5	11.0	15.5	12.5	9.0
10	Nonrecurring	6.5	8.3	8.3	5.7	7.5	8.3	10.0	8.3	6.5	9.1	5	8	9.5	5	5.5	10.	7.5	4
3	Recurring	3.0	2.3	0.6	2.3	1.8	0.9	2.3	0.6	0.8	1.5	0	0	1	2	2	3	2	2
3	Dev. Integ.	2.2	1.0	1.4	0.5	0.6	3.0	1.8	0.2	2.8	0.2	3	2.5	3	1.5	1.5	1.5	1.0	1.0
2	Equiv. Power Cost	2.0	0.0	0.0	2.0	0.0	0.0	1.0	0.0	1.0	0.0	1	0	2	2	2	2	2	2
3	Resupply Cost	3.0	3.0	3.0	3.0	3.0	3.0	3.0	3.0	3.0	3.0	2	1	1	2	2	1	2	2
2	Evolutionary Rating	1.7	2.0	1.9	1.7	2.0	1.7	2.0	1.9	1.7	1.5	2	1	1	2	2	1	2	2
1	Growth Station	1.0	1.0	1.0	1.0	1.0	1.0	1.0	1.0	1.0	1.0	1	0	1	1	1	1	1	1
1	New Technology	0.7	1.0	0.9	0.7	1.0	0.7	1.0	0.9	0.7	0.5	1	1	0	1	1	0	1	1
2	Commonality Rating	2.0	0.9	1.9	2.0	0.9	1.2	0.5	1.5	0.5	0.5	2	1.5	2	1	1	1	1.5	1.5
15	Flexibility	10.9	13.6	8.7	11.3	13.0	7.9	10.4	8.8	10.4	11.3	7.9	7.7	7.9	8.9	8.9	8.9	10.5	10.5
4	Off-Design	3.0	3.5	2.4	3.2	3.0	2.0	3.0	2.3	2.4	3.2	1.2	1.2	1.2	2.8	2.8	2.8	2.8	2.8
4	Environment/Interface Sensitivity	3.0	4.0	2.0	3.2	3.5	2.0	2.5	2.3	2.4	2.8	1.8	1.6	1.8	1.8	1.8	1.8	3.4	3.4
4	Evolutionary Growth	1.9	2.6	1.5	2.1	3.0	1.5	1.9	1.7	1.8	2.1	2.3	2.3	2.3	1.5	1.5	1.5	1.5	1.5
4	Capacity Growth	3.0	3.5	2.8	2.8	3.5	2.4	3.0	2.5	2.8	3.2	2.6	2.6	2.6	2.8	2.8	2.8	2.8	2.8
14	Durability	14.0	7.9	6.5	8.0	4.9	48.	5.7	3.8	5.7	4.5	6.5	8.2	9.0	9.8	11.5	13.0	11.7	10.2
4	MTBF	4.0	2.0	1.5	2.0	1.3	1.5	1.2	0.9	1.1	1.0	1.5	1.7	2.5	2.3	3.2	3.7	3.7	3.2
3	Sched Maint	3.0	2.0	1.5	2.0	1.2	1.0	1.4	1.0	1.2	1.0	0	1.5	1.5	1.7	2.5	2.5	2.5	2.5
5	Unsched Maint	5.0	2.5	2.3	2.5	1.4	1.3	1.6	1.1	1.3	1.2	3.0	3.0	4.0	4.0	4.0	5.0	5.0	4.0
2	Crew Time/Skill	2.0	1.4	1.2	1.5	1.0	1.0	1.5	0.8	1.1	1.4	2.0	2.0	2.0	1.8	1.8	1.8	0.5	0.5
9	Operational Impact	7.0	7.8	5.3	6.8	8.3	5.4	6.4	5.2	7.3	6.5	4.3	4.1	4.3	5.5	6.1	6.4	5.5	5.2
3	Buildup Charact.	2.5	3.0	1.5	2.5	3.0	1.5	2.5	1.5	2.0	2.5	2.1	1.8	1.8	2.4	2.4	2.3	2.1	2.1
3	Geometry/Config.	2.0	3.0	2.0	2.0	3.0	2.0	2.0	2.0	3.0	2.0	1.7	1.7	1.7	2.1	2.1	2.1	1.6	1.6
3	Redundancy	2.5	1.8	1.8	2.3	2.3	1.9	1.9	1.7	2.3	2.0	.5	.6	.8	1.0	1.6	2.0	1.8	1.5
63	Total	52.3	46.8	37.6	43.3	42.0	36.3	43.1	33.3	39.7	38.1	33.7	35.0	42.7	40.7	43.5	49.8	46.7	41.4

Space Division
North American Rockwell

The cost estimation procedure for active candidates was primarily based on costing data provided by the NR costing department for Concept A-4. Cost comparisons were developed by relating other candidates to this baseline cost breakdown. The cost data for this trade reflects the Hamilton Standard Phase B cost estimates provided for the 33-foot space station. The detailed cost breakdown for Concept A-4 is shown below.

	Weight (lb)	Nonrecurring	Recurring
Water loop	10 at 100	7.45*	1.4
Intercooler	4 at 100	4.20	0.66
Freon loop	4 at 100	3.97	0.66
Radiator valves	4 at 930	4.17	1.96
Mounts, supports	95	0.52	0.08
		20.31	4.76
NR support at 40%		7.92	2.11
		28.23M	6.87

*Water loop nonrecurring detail costs

$2.62M	Hamilton Standard estimate, Phase B
.13	5% for 1971 dollars
1.169	42.5% NR
3.92	
4.67	19.2% MPC, G&A
4.67	Complexity factor 1.0
3.74	Know-how (4.0 versus 3.5) = 80%
3.74	Unique design (4 modules) 25% = 100%
$7.45M	Total

A study was performed to assess design verification testing relative cost for central and independent active and passive thermal concepts. Relative factors for this category were determined by using the analysis for testing costs, assuming the testing was one-half remains constant for all concepts. The analysis concluded that testing for central concepts is approximately twice the cost of testing for independent candidates. Testing complexity varied directly with the complexity of the candidate. Passive candidates required more instrumentation because they operate more independently within themselves.

The power equivalent cost was based on the recurring cost of the solar array. Assuming a five-year solar array lifetime, this cost is $\$2.52 \times 10^6$/kw. Nonrecurring costs are not affected by the 1- to 4-kilowatt requirements range of thermal control concepts because it is small compared with the rest of the station. The power of each active concept was determined and converted into equivalent solar array costs as shown in Table 2-6.

Power requirements for passive candidates fell into three categories: those concepts which are totally passive, very low power demand; hybrid concepts that require pumping power; and the high power concepts which include a heat pump in the design.

Table 2-6. Active Concept Power Conversion

Concept	Power (watts)	Equivalent Cost ($ million)
A-1	1400	3.52
A-2	3300	8.30
A-3	1040	2.62
A-4	1120	2.82
A-5	1120	2.82
A-6	820	2.06
A-7	820	2.06
A-8	1120	2.82

The resupply cost for thermal control concepts is not significant because there are only spare parts as up cargo. An example of these costs is shown in Table 2-7. It was assumed that resupply of a deployable radiator is not a penalty as compared with body-mounted radiator. Deployable radiators were assumed to last five years before wearout; body-mounted radiators probably also last five years. Note that deployable weight is such that it could probably ride piggyback in any shuttle trip, whereas body-mounted concepts could not. Approximate cargo resupply cost by shuttle equals $240 a pound. The resupply cost for all passive concepts was judged to vary little from one to the next. However, it is noted that the purely passive concepts such as P-1 would have absolutely no resupply cost since nothing can wear out.

The evolution category is an amortization item which attempts to give benefit for cost sharing that occurs from three major categories: evolution to growth station, evolution to other future space programs (base, planetary, lunar, etc.), and contribution to new technology, earth benefit, etc.

Table 2-7. Active Concept Resupply Costs

Concept	5-year Resupply	Weight (20 lb./pump)	Cost ($ million)	Points
A-1	15 pumps	300 lb	.072	2
A-2	15 pumps	300 lb	.072	2
A-3	7 pumps	150 lb	.036	3
A-4	7 pumps	150 lb	.036	3
A-5	5 pumps	100 lb	.024	3
A-6	2.5	50 lb	.012	3
A-7	2.5	50 lb	.012	3

All independent concepts are designed for the growth station loads, but optimum operation either may not exist for the initial station operation or components may have to be changed when the transition from initial to growth occurs. Central coolant loops with increased size in the growth configuration may require larger pumps than required for initial station configuration.

Technological evolution is attractive for all concepts which differ from the single fluid loops utilized on past programs. Concepts incorporating the most new components received the highest rating. All the passive options rate high in this category because a new technology, very large passive thermal control systems, will be established if the concept is adopted.

Deployable radiators receive the same high rating as passive options since a broadening of future technology results. Dual loops have not previously been employed and are less likely to be rejected for future programs because of the good internal contamination and external coolant freezing characteristics.

Commonality is a specific category to emphasize its status as a program goal. Basically, three types of commonality were reviewed: module-to-module commonality, part-to-part commonality, and commonality with other aerospace effort. Basically independent concepts, including all passive options, allowed for better module commonality than central active concepts. The deployable concepts rated very highly because module-to-module commonality was not affected by the radiator. A complicating exception of the commonality picture, which is actually a penalty for the central concepts, is that detached experiment modules and sorties will require independent thermal control concepts even if central control is selected for the MSS. Passive concepts do not offer good commonality with the currently conceived manned space programs; however, utilization is increasing on unmanned programs.

Flexibility

Flexibility is the ability of the system to perform under a range of operating and environmental conditions. For the evaluation, four factors

are considered: off-design flexibility, environment and interface sensitivity, evolutionary growth flexibility, and capacity growth flexibility. These factors and the terms describing them are identified in Table 2-8.

Table 2-8. Flexibility Factors

Score	Off-Design	Env. & Interface Sensitivity	Evolutionary Growth	Capacity Growth
2	High	High	High	High
1	Medium	Medium	Medium	Medium
0	Low	Low	Low	Low
Criterion Score: Multiply off-design and environment and interface sensitivity scores by 2, evolutionary growth score by 3/2, and capacity growth score by 2 and sum.				

The descriptive terms high, medium, and low flexibility are relative within concepts (passive, active, and hybrid) and are described as follows for each factor:

1. Off Design

   High - System can accommodate nominal design changes (± 25% of the temperature or heat load range) or tolerances with little or no modification.

   Medium - System requires minor modification (similar change in size, weight, or power requirements for system) to accommodate nominal change in design requirements.

   Low - System requires extensive modification change in size, weight, or power requirements of system is large compared to change in requirement, or new equipment, or equipment relocation or addition is required) to accommodate nominal changes in design requirements.

2. Environment and Interface Sensitivity

   High - The system automatically responds to fluctations in boundary conditions of the environment or at a component interface. Response of the system is such that temperature excursions are within the allowable range with ample margin.

   Medium - System is dependent on a compensating or control system to adjust to fluctuations in boundary conditions of the environment or at a component interface. Failure of the control system could result in temperature excursions approaching their allowable limits.

Low - System is strongly dependent on a compensating or control system to accommodate fluctuation in boundary conditions of the environment or at a component interface. Temperature excursions result in small margins when fluctuations occur, and failure of the control system would result in temperature violations.

3. Evolutionary Growth

High - System requires the simple addition or deletion of modular-type systems to accommodate evolutionary growth changes in the vehicle configuration or mission (e.g., zero-g configuration to artificial-g configuration, earth-orbit configuration to lunar-orbit configuration).

Medium - System requires modification to accommodate evolutionary growth changes. Modifications can be made by a modification kit approach. The basic type of system does not change.

Low - System requires extensive modification to accommodate evolutionary growth changes. The basic control and operational features of the system must be changed, or the vehicle configuration must be changed to accommodate the new thermal control system (e.g., central to independent or vice versa, passive to active, body-mounted radiators to deployable radiators.

4. Capacity Growth

High - Capacity growth changes either within the initial configuration or from the initial to larger growth configurations requires the simple addition or deletion of modular-type systems.

Medium - System requires modifications as well as addition to accommodate capacity growth changes. Modifications are local segment of the thermal control system and can be made by a modification kit approach.

Low - System requires extensive modifications and additions to accommodate capacity growth changes. Modifications affect several or all segments of the systems. May require change in the basic type of system (e.g., central to independent or vice versa, passive to active, body-mounted radiator to deployable radiators).

The flexibility evaluation of the passive concepts is summarized in Table 2-9. Each component type is assigned a rating and then each system is rated on the basis of the sum of ratings of the components that make up that concept.

Table 2-9. Flexibility Evaluation Summary

ELEMENTS OR CHARACTERISTICS	OFF DESIGN	ENV./INTERF. SENSITIVITY	EVOLUTIONARY GROWTH	CAPACITY GROWTH		PASSIVE CONCEPTS						HYBRID CONCEPTS				
						P-1	P-2	P-3	P-4	P-5	P-6	H-1	H-2	H-3	H-4	H-5
Cold Rails	2	2	1	2		X	X	X	X							
Coldplates	1	1	1	1						X	X	X		X	X	X
Variable Conductance HP	1	2	2	1		X	X		X	X						
Louvers	0	1	1	1				X			X			X	X	
Heat Pump	2	2	2	2			X	X		X	X			X		
Air Cooling	2	2	2	2					X	X						X
Flow Bypass	2	2	2	2								X		X	X	X
Segmented Radiators	2	1	1	2		X		X	X		X	X		X	X	X
Radiator Area Margin*	*	*	*	*		1	2	0	1	2	0	1		0	1	1
TOTALS	Off Design[1]					1.5	1.75	1.2	1.6	1.5	1.0	1.5		1.17	1.2	1.6
	Environment/interface sensitivity[2]					1.5	2.0	1.0	1.6	1.75	1.0	1.25		1.17	1.2	1.4
	Evolutionary growth[1]					1.25	1.75	1.0	1.4	2.0	1.0	1.25		1.17	1.2	1.4
	Capacity growth					1.5	1.75	1.4	1.37	1.75	1.2	1.5		1.25	1.4	1.6

*Rated individually as shown (average value for all factors)
1. Multiply by 2.0 for score
2. Multiply by 1.5 for score

Space Division
North American Rockwell

The data show that the systems with the highest flexibility are P-2 and P-5. Both rate high because they include a heat pump which provides room for growth in heat rejection capability. System P-5 also rates high because of the inherent flexibility of air convection as a cooling method.

Durability

Durability is a measure of the reliability and maintainability of the system. Five factors are considered within this criterion. They were failure rate (MTBF), scheduled maintenance, unscheduled maintenance, crew time, and skill. Scheduled maintenance is periodic programmed maintenance such as adjustment or periodic replacement of parts or expendables. Unscheduled maintenance is that resulting from an unexpected failure; like failure rate, this is a measure of the reliability of the system. Crew time is a measure of the time required to repair or replace the failed unit or component. Crew skill is a measure of the degree of specialization required of the personnel who fix the component.

Quantitative comparisons of active hardware was accomplished based on SSP and Hamilton Standard data. Central systems, in general, rated higher than independent concepts. The same relation holds for single versus dual plumbing arrangement. Passive concepts were more qualitatively rated with those systems requiring the most active hardware receiving the lowest ratings.

The failures to be expected for active concepts were determined by the product of estimated failure rates shown in SSP reliability studies, the number of hardware elements, and number of hours continuous operation. The estimated failures of the major components contained in all the active thermal control options is shown on Table 2-10. The radiators and associated valving were considered to be similar for all options. It is recognized that independent concepts where radiators are required on all modules ten would appear to be less durable than central concepts where only six modules have radiators. On the other hand, the central concepts appear to require more isolation and control valves to function properly. Since valving is the least reliable part in radiator systems the effects of more radiators versus more valving tend to compensate in the overall durability picture.

Table 2-10. Estimated Failures

Item	SSP Failure Rate x 10^{-6}	Operating Hours	Failures/ 2 Years
Water Pump	11.6	1775	0.261
Water Accumulator	1.78	1775	0.03
Freon Pumps	10.89	1775	0.242
Freon Accumulator	1.79	1775	0.048
Intercoolers	0.34	1775	0.006
Controllers	1.86	1775	0.032
Fans	11.6	1775	0.261
Air Heat Exchanger	.34	1775	0.006
Swivel	1.75	1775	0.031

Table 2-11 shows the expected number of failures of Concept A-1, the independent dual-loop concept which for the reference configuration has 10 systems required as follows: two in the power boom (one at low temperature for battery cooling and one at high temperature for solar array inverters), one system in the core for battery cooling, one each in both control centers and in both crew modules, and one each in the three RAM's. As indicated in Table 2-11, the operating hardware can be expected to have a total of 6.19 failures in two years. As would be expected, the pumps are the major failure items.

Table 2-11. Concept A-1 Durability/MTBF
(Independent - Dual Loops - H_2O/Freon -21)

Item	Number		Failures/2years per Component	Total Failures per 2 Years
	Install	Operating		
Water Pump	20	10	0.261	2.61
Water Accumulator	20	10	0.03	0.30
Freon-21 Pump	20	10	0.242	2.42
Freon-21 Accumulator	20	10	0.048	0.48
Intercoolers	20	10	0.006	0.06
Controllers	20	10	0.032	0.32
Total				6.19

Table 2-12 shows expected two-year failures for Concept A-5, which is a dual-loop central concept. Comparing the expected failures here with other concepts, there is a significant reduction.

Table 2-12. Concept A-5 Durability/MTBF (Central Dual Loop)

Item	Number		Failures/2 years per Component	Total Failures per 2 years
	Install	Operating		
Water Pump	6	3	0.261	0.78
Water Accumulator	6	3	0.030	0.09
Freon-21 Pump	6	3	0.242	0.72
Freon Accumulator	6	3	0.048	0.15
Intercool	6	3	0.006	0.02
Controls	6	3	0.032	0.09
Total				1.85

Table 2-13 illustrates the MTBF analysis for Concept A-6, a single-loop central system. Comparing the two-year expected failure rates shown here with the previous two, it can be seen that single loops have a definite durability advantage resulting from fewer hardware elements.

Table 2-13. Concept A-6 Durability/MTBF (Single-Loop Central)

Item	Number		Failures/2 years per Component	Total Failures per 2 years
	Install	Operating		
Cooling Pump	6	3	0.261	0.78
Coolant Accumulator	6	3	0.030	0.09
Controls	6	3	0.032	0.096
Total				0.866

Scheduled and unscheduled maintenance for the active system options was assessed in terms of crew time by establishing a relative rating. Scheduled maintenance was defined as one-half hour per month per active plumbing and control system. It was assumed that redundant non-operating systems would require some periodic inspection and checkout. However, for the purposes of this analysis it was felt that this time would be small compared to overall maintenance time and was neglected. The unscheduled maintenance time was related directly to the expected failures and was assumed to be two hours per failure on a two-year basis.

The last category in durability is crew time-skill and was based on consideration of skill required, size of hardware, and environment. Since only a few points were allotted, a point-spreading technique was used. The skill category was as follows: Generalist = 3, General Technician = 2, and Specialist = 1. It can be seen that it is desirable to accomplish all maintenance at lowest skill level possible.

Operational Impact

This criterion is given a relatively large point value to reflect the importance of the concept's effect on the operation of the station and its subsystems. Three factors are considered within this criterion: buildup characteristics, geometry/configuration, and redundancy.

Factors making up the evaluation of buildup characteristics were the sensitivity of each concept to the station buildup sequence and the performance of the concept during the buildup cycle. Passive and active independent concepts are insensitive to the buildup sequence and were therefore rated highly. Central active concepts were rated lower because a core and a station module must be placed on orbit before it can operate. Deployable concepts were rated lowest since they can displace a station module from a flight in the buildup sequence.

Performance during buildup was scored on the performance flexibility and control complexity during the buildup period when the heat load would initially be at a minimum and would increase incrementally with the buildup. The minimum heat load was assumed to be less than the minimum values for the completely built-up station. Passive concepts with heat pumps scored highest because they are less sensitive to low load conditions. The active central concepts also scored high because the heat load ratio of minimum to maximum is much larger than that of the independent concepts, and thus results in a simpler radiator control. The independent concepts require the radiator sized for maximum heat load per module rather than maximum heat load for the complete station, and thus represent a greater potential for radiator freeze-up at the low heat load conditions. A single module might be shut down.

Geometry and configuration ratings are based on the concept's sensitivity to the size and shape of a station module, the spacing between modules, module location relative to the solar array, and location of a docked shuttle. Again, the passive options that include a heat pump are the least sensitive to configurational factors because the radiator operating temperature can be raised, although with a power penalty. All body-mounted radiator concepts are sensitive to the module size because this limits the radiator size. Deployable concepts are obviously insensitive to module sizing. Independent active or passive concepts are more sensitive to the station geometry than centrally plumbed concepts because all heat generated by that module must be rejected by that module. The total radiator area requirement for a centrally plumbed concept is much less than an independent concept because the cumulative maximum heat load is greater for the independent concepts.

The scoring for module location was based on the consideration of the effect of inner or end location, the effect of shuttle docking, and the effect of interference or compromises with other station equipment. The independent concepts are downgraded because the heat rejection capability is sensitive to the location of a module relative to the solar array, adjacent modules, and to the possible blockage and interference with the shuttle docked to the station. The central concepts were scored higher because these concepts are effected less than the independent candidates because the heat rejection load can be adjusted or redistributed to other radiators not affected by a localized condition. Deployable radiators have potential problems with interference with other station equipment such as the high-gain antenna and also with shuttle docking and thus these two concepts were scored low.

The impact of redundancy on conceptual design was evaluated. Concepts which accomplish thermal functions with many independent elements such as heat pipe radiators or louvered walls were rated highly. Concepts that required the addition of the most components to meet redundancy requirements were rated the lowest. Therefore, the independent, active dual-loop concept received the lowest rating. The central, single-loop active has the fewest additional components required. Air-cooled systems place additional redundancy requirements on other subsystem because a loss of volume pressure eliminates the cooling provisions. Therefore redundant parts must exist in each volume. If critical hardware is coldplated it can still operate in a depressurized environment, providing redundancy to the hardware of the remaining active hardware.

2.10 EVALUATION OF SECONDARY CRITERIA

The secondary criteria were made up of weight, power, volume, and complexity. All parameters were evaluated quantitatively. Weight, power, and volume were defined for major components and then summed for each concept. Complexity was determined from the number of components that made up a concept and an estimate of the instrumentation required by each concept.

Table 2-14 shows the component weights used for all concepts. Component power is presented as a function of rejection system power requirements in Table 2-15.

Table 2-14. Component Weight

Component	5-10 kw (lb)	10-15 kw (lb)	15-25 kw (lb)
Pumps	20	30	40
Accumulator	20	30	40
Intercoolers	100	150	200
Equipment cooling HX	20		
Heat pump	140	210	280
Deployable radiator	650		
Radiator	354/module		
Louvers	595/module		

Table 2-15. Component Power

System Heat Load (kw)	Pump Power	Heat Pump Power (kw)
5	100	1.7
10	200	3.4
15	300	5.1
20	400	6.8

The breakdown of air to liquid-cooled heat loads are as follows. In any coldplate approach a significant part (15 to 20 percent) of electronics heat load is dissipated to atmospheric circulation system. For this analysis it was assumed that for purposes of comparison a load of 2.5 kilowatts per module was on the air equipment cooling systems. An earlier comparison of coldplate cooling and air cooling (SD 70-155-3-1) indicated that air cooling weight penalties are 4.8×10^{-2} pounds/watt cooled, and coldplate cooling is 5×10^{-3} pounds/watts cooled. Power penalty was evaluated at 6.3×10^{-4} watts/watt cooled for coldplates and 0.16 watts/watt cooled for air cooling. These penalties are for cooling section only and do not include distribution

of coolant to coldplates or air heat exchangers. The delta weight for the air approach is 110 pounds per module. The power delta per module is approximately 300 watts per module.

Table 2-16 summarizes the weight and power demand by each concept. It should be noted here that deployable radiators must have large weight on a single launch. As would be expected, the active control single-loop approach scores best. All independent loop are heavy because each module requires an installation. The totally passive option is the lightest independent concept. However, further penetration will be required since all plumbing weights are not included. Louvered system are very heavy because effectively a second meteoroid bumper has been placed on the module.

Power was evaluated on the basis of Table 2-15 for pumps and heat load. Centrally plumbed active and pure passive concepts have the lowest power demand. Heat pump systems have very high power demand assuming a coefficient of performance of about 4. Independent systems again suffer because power consuming equipment must be duplicated in each module.

Volume and complexity were evaluated in the basis of number of components. The ratings are shown in the summary table.

Table 2-16. Concept Weight, Power and Volume Comparisons

Concept	Weight*		Power
	lbs/module	total	kw
A-1	712	6680	1.4
A-2	475	4780	3.3
A-3	365	3880	1.0
A-4	388	4070	1.1
A-5	268	3110	1.1
A-6	126	1980	.8
A-7	-	1970	.8
A-8	-	2530	1.1
H-1	414	4280	2.0
H-3	1149	10150	10.0
H-4	714	6680	2.0
H-5	554	5410	4.0
P-1	354	3700	-
P-2	519	4120	8.0
P-3	1044	9300	8.0
P-4	374	3970	2.0
P-5	539	5280	10.0
P-6	1044	9290	8.0

* 970 lbs added to each option for power module thermal control assembly.

2.11 FOM EVALUATION RESULTS

Table 2-17 summarizes the results of the preliminary tradeoff. Two passive, one hybrid, and five active concepts were selected for further technical evaluation.

Table 2-17. Figure of Merit Summary

Concept	Absolute	Primary	Secondary	Total
	18	63	19	100
A-1	13.5	33.7	5.2	52.4
A-2	12.1	35.0	5.5	52.6
A-3	12.7	42.7	9.9	65.3
A-4	14.6	40.7	8.4	63.7
A-5	14.6	43.5	13.4	71.5
A-6	13.7	49.8	18.2	81.5
A-7	11.8	46.7	16.5	75.0
A-8	13.6	41.4	13.5	68.5
H-1	16.0	43.1	12.7	71.8
H-2	9.0	-	-	-
H-3	11.3	33.3	4.4	49.0
H-4	7.4	39.7	4.0	51.1
H-5	12.9	38.1	9.1	60.1
P-1	8.0	52.3	18.1	78.4
P-2	12.1	46.8	12.2	71.1
P-3	8.8	37.6	6.0	52.4
P-4	7.2	42.3	14.0	63.5
P-5	12.0	42.0	8.1	62.1
P-6	8.3	36.3	6.4	51.0

Results of the passive/hybrid evaluation show that Concepts P-1, P-2, and H-1 all rated high (above 70), with P-1 rating the highest. Concept P-1 rated particularly high in commonality, flexibility, durability, power consumption, and control complexity. It rated low only in nonrecurring initial cost, due to the low development status of many of the heat pipe assemblies comprising the system. Concept P-2, the heat pipe system augmented with a heat pump, rated very high in flexibility, operational impact, and complexity. It rated higher in availability/confidence than Concept P-1 since no heat pipe condensers are required (condensing is done with fluid systems via the heat pump loop). Concepts P-1 and P-2 will be combined into a single option called the totally passive concept with the option of a heat pump to augment heat rejection. Concept H-1 was a good compromise of low development requirements and good reliability features. As a result, it rated very high in cost and availability/confidence, and relatively high in the other areas.

Among the low scoring systems were P-3 (louver control), P-6 (wall-mounted equipment with lourver control), H-3 and H-4 (both hybrid with louver control), and H-2 which had a louver-controlled high-temperature loop and

an active low-temperature loop. Concept H-2 was rejected initially because of a very poor rating in availability/confidence. The other systems rated low in several areas primarily because the louver control design resulted in poor heat rejection capability, and a heat pump was required, which requires a considerable amount of power. They also generally rated poorly in cost and commonality because of the number of different elements in the system.

Examination of the evaluation results for the active thermal control concepts shows that the single loop centralized plumbing arrangement received the highest score. This concept, A-6, was not declared an uncontested winner because a single fluid meeting all requirements could not readily be identified. Single-loop concepts scored the highest also among the deployable and independent concept plumbing arrangements. Deployable radiator concepts were rated just below the centralized body-mounted concepts but well ahead of the independent options. Only Concepts A-1, A-2, and A-4 were rejected after this evaluation phase. Although Concept A-3 did rate low it was retained so that the control or independent issue could be penetrated in greater depth. Also, this concept could place more favorably if the station configuration were made up of fewer modules. Concept A-4 was rejected because it did not represent any technical advantage over similar concepts such as A-5 and A-6.

2.12 FINAL TRADEOFFS

The primary objective of the trade study was to evaluate the relative merits of passive, hybrid, and active concepts as they relate to the modular space station. Lesser issues were also identified during active TCA candidate evaluations discussed in the previous section - centralized versus independent plumbing arrangements; body-mounted versus deployed, orientable, radiator panels; and single versus dual fluid plumbing arrangements. These subtrades are discussed first, followed by the final evaluation and selection of the MSS thermal control concept.

Central Versus Independent Thermal Control

The active thermal control concepts were selected to give some indication as to the advantages and disadvantages of central and independent fluid loop arrangements. Two major areas of importance were evaluated: the overall hardware aspects illustrated by figure of merit efforts, and the radiator rejection performance comparisons.

Figure of Merit Considerations

Starting with a summary, data from the figure of merit evaluations (Table 2-18) show the overall scoring of all eight of the active concepts. In the absolute category, all concepts were nearly equal with a very slight edge in the favor of centralization (A-4, A-5, A-6). In the primary criteria considerations, the central approaches again appear to be slightly better. The central approaches score better here because there is less hardware involved and as such, the differences are in durability and flexibility, and costs are nearly the same. The secondary criteria show the widest margin between the independent and central options. Since the secondary parameters are weight, power, volume, and complexity, the independent approaches that contain many hardware systems and components would be expected to score low.

Table 2-18. Criteria Summary

Concept	Independent			Central				
	A-1	A-2	A-3	A-4	A-5	A-6	A-7	A-8
Absolute (18)	13.5	12.1	12.7	14.6	14.6	13.7	11.8	13.6
Primary (63)	33.7	35.0	42.7	40.7	43.5	49.8	46.7	41.4
Secondary (19)	5.2	5.5	9.9	8.4	13.4	18.2	16.5	13.5
Total (100)	52.4	52.6	65.3	63.7	71.5	81.5	75.0	68.5

In summary, the figure of merit evaluations show better scoring by the central concepts, with the primary difference being the large amount of hardware required by the independent approaches.

Rejection Performance Considerations

The primary consideration for heat rejection by an independent TCA concept is a comparison between the heat loads generated within a module and the rejection capability of the various module positions in the configuration. Although the analysis is based on an active TCA concept, this discussion applies also to passive concepts. The heat loads for the modules of the comparison configuration are shown on Table 2-2. The design heat rejection requirement for an independent concept becomes the maximum heat load attained in any module, which is 8.5 kilowatts. In order to achieve the required configuration flexibility to place any module at any position in the configuration, the rejection requirement for any module position also becomes 8.5 kilowatts.

The heat rejection capabilities of each module are shown on Table 2-19 and were determined by computer analysis and reflect transient performance. For more information concerning radiator analysis thermal modes, environments, and rejection performance, see Section 6.

Noting Table 2-20, the first barbell configuration is 20 feet long, 120-degree segment radiators, and close module spacing (12 feet). This configuration cannot meet the 8.5-kilowatt requirement of any module position and therefore would not be compatible with independent thermal control.

The second barbell configuration, with increased area and module spacing, shows a better compatibility with 8.5-kilowatt maximum requirement. As shown, the aft module with a better view of space can easily reject the maximum load with a 20-percent margin. The center module at 8.4-kilowatt capability appears to be marginal. The forward module is about 20 percent below the requirement. However, with some reallocation of hardware, this configuration appears to have adequate rejection for independent-in-the-vertical modules.

In both barbell configurations, Table 2-20 shows that the core modules will have significant heat loads to reject, in the order of 1.3 to 9.6 kilowatts. Due to docking ports and other structural elements, there is very

Table 2-19. Heat Rejection Capability Summary

Configuration	Module		Heat Rejection		8.5 kw Module Requirement	
	Position	Radiators	Btu/hr	kw	Yes	No
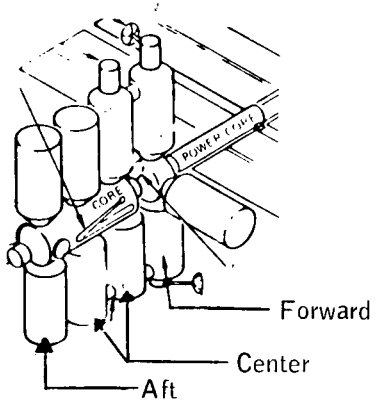 Barbell $\alpha = .35$ 40 F in, 80 F out X-POP at $\beta = 0°$	Forward	2 120° segments, 14-ft diameter	19,000	5.6		X
	Center	28-ft long, 820 ft^2 per module, 2-ft module spacing	20,000	6.0		X
	Aft		23,000	6.7		X
	Core*					
	Forward	12 180° segments, 14-ft diameter, 28-ft long, 1200 ft^2 area per module, 6-ft module spacing	25,000	7.3		X
	Center		29,000	8.4	X	
	Aft		35,000	10.2	X	
	Core*					
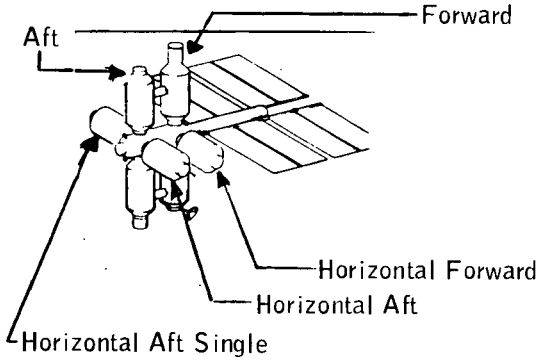 Cruciform $\alpha = .35$ 40 F in, 80 F out X-POP $\beta = 0°$	Forward	4 180° segments, 14-ft diameter, 2 at 72-in. long	22,000	6.4		X
	Aft		30,000	8.9	X	
	Horiz. Forward	2 96-in. long Area = 1200 ft^2 per module	5,000	1.4		X
	Horiz. Aft		9,000	2.6		X
	Horiz. Aft		11,000	3.2		X
	Single Core*					

* No area available for radiators • Diverter valve control

Space Division
North American Rockwell

Table 2-20. Central Rejection Capability of Barbell Configurations

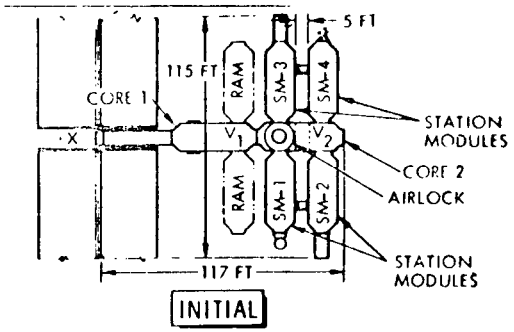

Four Station Modules

Module	Rejection (kw)	
SM-1	6.0 (820 ft^2)	
SM-2	6.7 "	
SM-3	6.0 "	
SM-4	6.7 "	
	25.4 (3280 ft^2)	24.4 kw required
SM-1	8.4 (1200 ft^2)	
SM-2	10.2 "	
SM-3	8.4 "	
SM-4	10.2 "	
	37.2 (4800 ft^2)	24.4 kw required

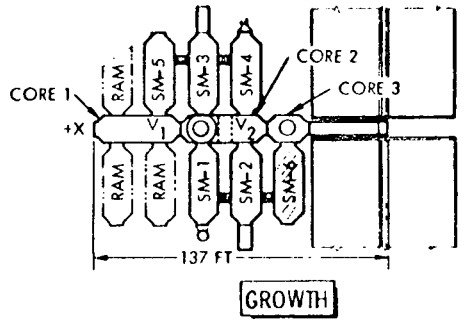

Six Station Modules

Module	Rejection (kw)	
SM-1	6.0 (820 ft^2)	
SM-2	6.0 "	
SM-3	6.0 "	
SM-4	5.6 "	
SM-5	6.0 "	
SM-6	5.6 "	
	35.2 (4920 ft^2)	35.6 kw req'd
SM-1	8.4 (1200 ft^2)	
SM-2	8.4 "	
SM-3	8.4 "	
SM-4	7.3 "	
SM-5	8.4 "	
SM-6	7.3 "	
	48.2 (7200 ft^2)	35.6 kw req'd

Space Division
North American Rockwell

little area available for radiators. Therefore, the independent approach would be inadequate for the core module heat load requirements. It should be noted that if area were available on the core comparable to that of a station module, it would show low performance capabilities similar to that of the horizontal modules of the cruciform configuration shown in Table 2-19.

As an additional data point, the selected station configuration is a cruciform and the rejection capability of the module positions is shown on Table 2-21. The cruciform with 1200-square-foot modules has only one module that could meet the maximum load. It is also clear that the horizontal modules have such low rejection that independent control would not appear feasible.

Table 2-21. Central Rejection Capability of Cruciform Configuration

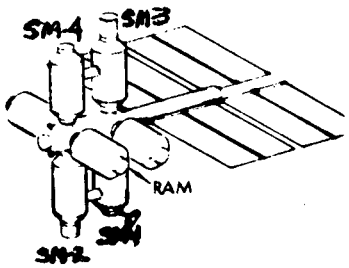

Initial

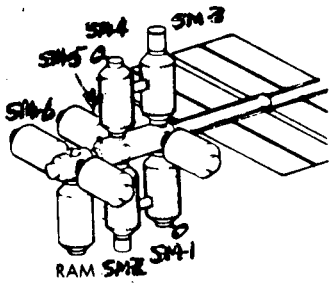

Growth

Module	Rejection (kw)*	Module	Rejection (kw)*
SM-1	7.6	SM-1	7.6
		SM-2	9.8
SM-2	9.8	SM-3	7.6
		SM-4	9.8
SM-3	7.6	SM-5	3.2***
		SM-6	4.4***
SM-4	9.8		
Total	34.8	Total	42.4
	24.4 req'd**		35.6 req'd**

*Flow proportion control
**Power boom loads not included
***Rejection and consistent orbit time

Centralized Heat Rejection

In the central approach the rejection capability is defined by the summation of all the modules in the configuration that incorporate radiators. This study considers, if possible, that only station modules would have radiators. Table 2-20 shows the rejection capability of both barbell configurations. As can be seen, both the small radiators at 820 square feet and large

radiators at 1200 square feet can easily meet the maximum rejection requirements. However, the small radiators have very little margin in both the initial and the growth cases. The larger radiators have relatively large margins with use of only station module surface areas.

Table 2-21 shows the same data as Table 2-20 for selected cruciform configuration. Again, rejection requirements are exceeded by both initial and growth station configurations. It should be noted that the rejection of the horizontal modules in Table 2-21 exceeds that of Table 2-19. This is caused by the minimum rejection capability of vertical and horizontal modules reported occurring at different orbit. In the central case, the rejection shown on Table 2-21 for SM-5 and SM-6 are at the time when rejection from the vertical modules is at a minimum. When SM-5 and SM-6 reach their minimum (shown on Table 2-19) the other four station modules are above their minimum points. This difference and combining of module rejection capability is described in Section 6.

Experiment (RAM) and Cargo Module Consideration

The independent approach would require that RAM's and cargo modules have radiators, as was the case in figure of merit analysis. In the central situation, Tables 2-20 and 2-21 show clearly that the four station modules have sufficient rejection capability to meet total station requirements. The addition of RAM and cargo module radiators increases weight and complexity of the total station TCA.

Concept Selection

The central concepts are preferred over the independent concepts for the following reasons:

1. Figure of merit analysis shows that the central approaches appear to be better for the parameters considered.

2. The rejection capability of many modules in the configuration evaluated failed to meet the design rejection requirements. It is significant that in the independent approach the amount of dissipating equipment that can be placed within a module is limited by the rejection capability of that module. This limitation on placement of equipment could cause several design complexities and operation compromises that are not required by the central approach. At this point, it is felt that such items as crew traffic patterns, habitability requirements, maintenance, and location for optimum performance should be more a significant influence on equipment location than thermal control.

3. Since the central approach employing radiators only on station modules can meet the heat rejection requirement of the total station, radiators on any other modules would cause additional complexity.

4. Since the selected station configuration is a cruciform, the low rejection capability horizontal modules would preclude the use of an independent thermal control approach. It is recognized that the cruciform configuration was not the baseline selection for this thermal control study. It is presented here to illustrate the impact of configuration selection on the active thermal control arrangements and design issues.

In the central versus independent design issue it is recognized that both the functional allocation of equipment (heat loads) and the configuration of station are very important factors and as such should be evaluated on an individual station design situation. The impact of both are such that the central versus independent issue cannot be decided for all station configuration and design requirements.

Deployable Radiators

Deployable radiators are a very attractive thermal control concept for the MSS. This concept scored very high in the figure of merit comparison of active concepts. It is the only concept that is totally insensitive to vehicle orientation and thermal coating degradation. Fluids with higher freezing points can be employed on a deployable radiator than on a body-mounted radiator because the deployed radiator can be oriented to pick up heat under what might be extreme cold conditions for a body-mounted radiator. This concept can be configured in a separate detachable module, thereby facilitating return to the ground for maintenance or refurbishment. This operation cannot be accomplished with other options without disrupting station operations by the removal of a station module.

The approach adopted for the evaluation of the deployable radiator was first to examine the possibility of integrating it with the solar array assembly. Since the solar array always seeks the sun, a plane perpendicular to the array would never be irradiated by the sun. This integration eliminates the need for a separate orientation mechanism. Because of the complexity of integration and folding deployment, other locations for a single-degree-of-freedom radiator were examined.

Heat rejection from deployable radiators at specific locations in the MSS was analyzed to determine required radiator area. Candidate locations considered were the back of the solar array, the end of the power boom, the end of a module which is docked to a core module, and docked to a core module side docking port. These locations are depicted in Figures 2-11, 2-12, and 2-13.

Sizing of the radiators was accomplished by defining the incremental view factors of radiator incremental areas to the solar array in the orientation that placed the array closest to the radiator. (They are always mutually perpendicular when maximum rejection if required.) Figure 2-14 presents the relation of radiator incremental view factor to the solar array as a function of distance of the area increment from the leading edge of the solar array

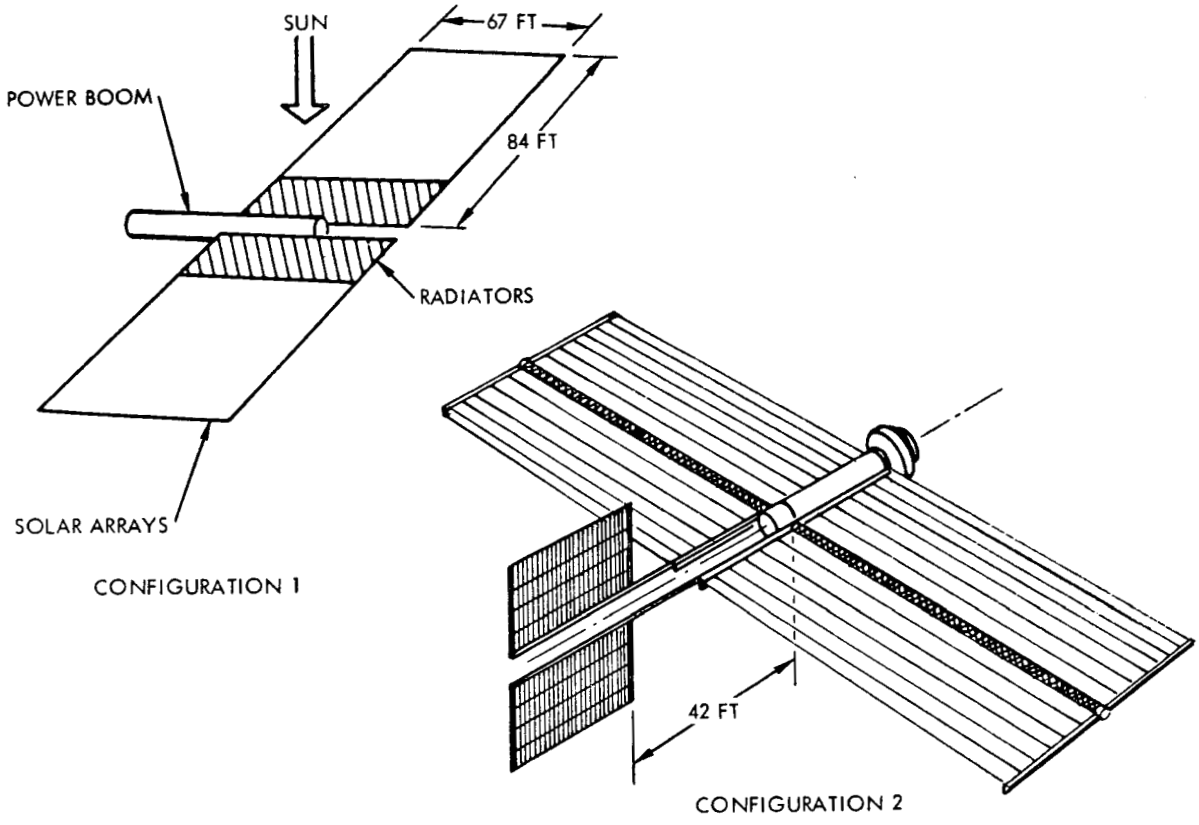

Figure 2-11. Solar Array Configurations 1 and 2

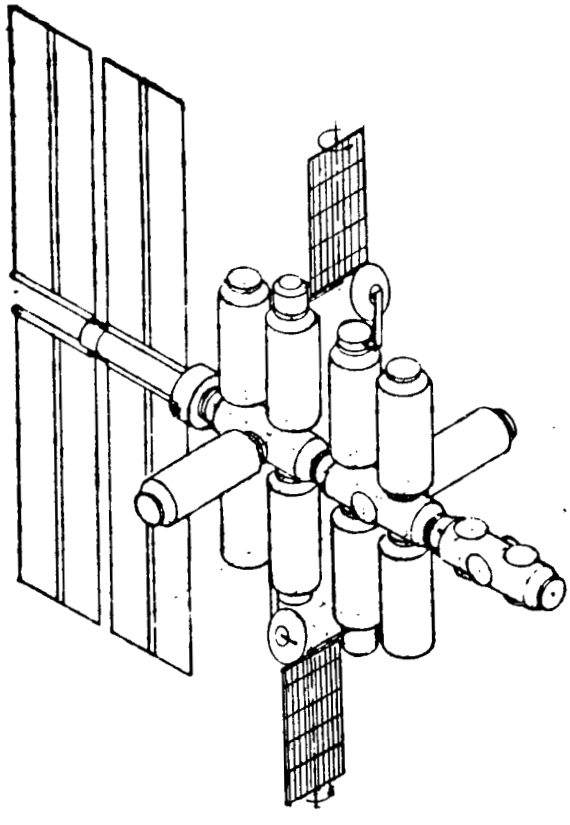

Figure 2-12. Solar Array Configuration 3

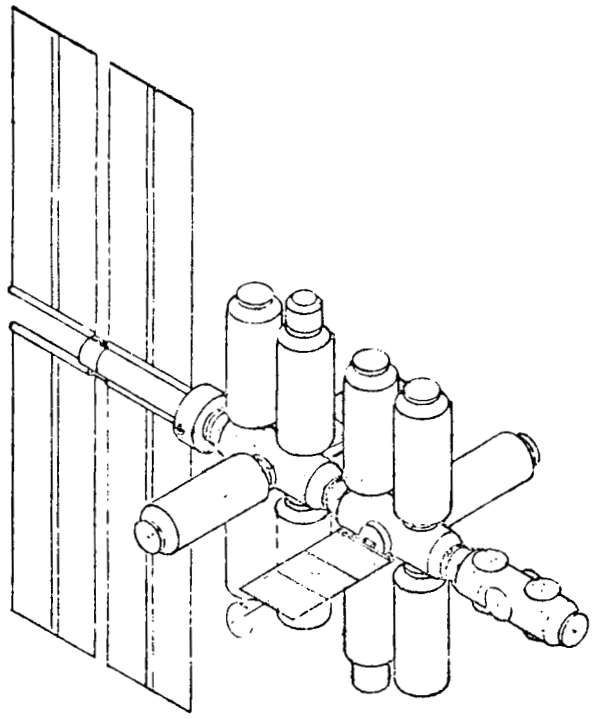

Figure 2-13. Solar Array Configuration 4

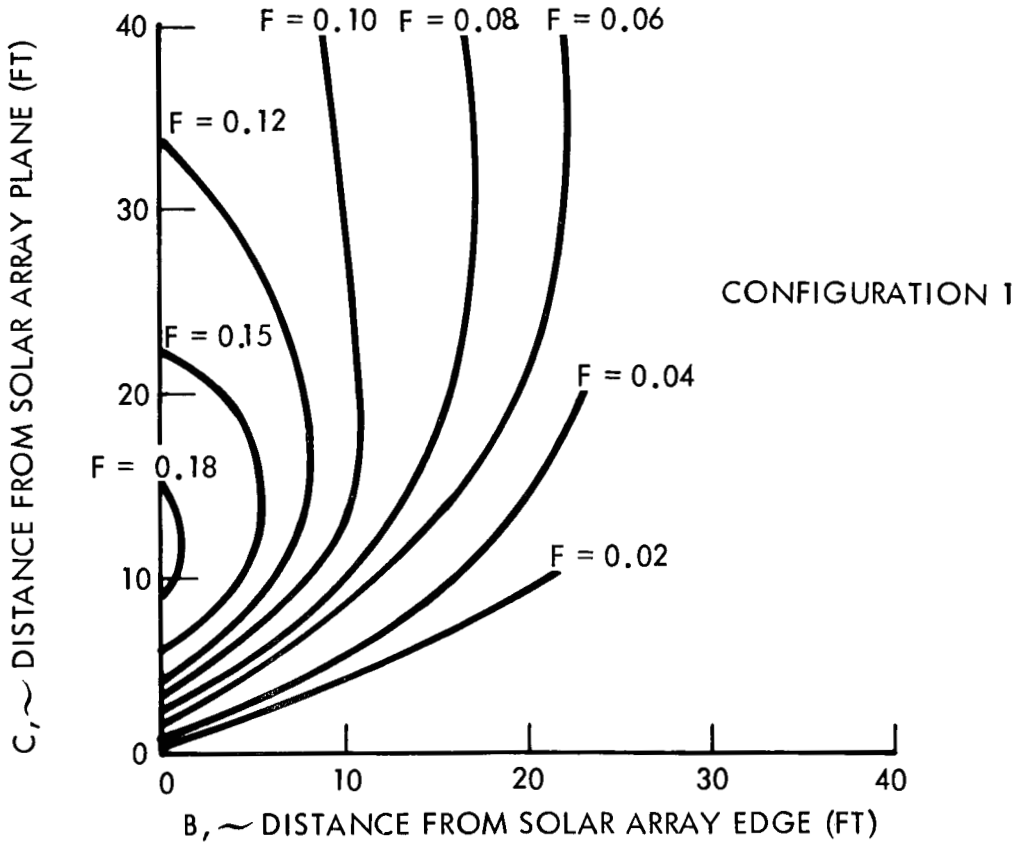

Figure 2-14. Mapping of Constant View Factor Lines

and from the plane of the solar array. The infrared energy from the solar array was then integrated across the radiator. The energy plus the incident radiation from earth and the required rejection energy defined the size of the radiator.

Configuration 1 was eliminated by the environment near the subsolar region because more energy is absorbed from the environment than can be emitted by a 50 F radiator.

Configuration 2 was selected for integration with the solar array orientation mechanism. With a two-side radiation, 2000 square feet of radiator area was required. The concept was then rejected for application to the MSS because of its design deficiencies. The design required a fluid slip ring or, if flex lines are used, the rotational movement of the solar array must be constrained. The added weight of the radiator caused the power boom to exceed the shuttle payload delivery capability. Finally, the design could not be used to gain coolant temperature control without adding another hinge at the radiator attachment point, further complicating the design.

A more feasible design results from locating the radiator at the end of a module (Configuration 3). By radiating off both sides, a 650-square-foot single-degree-of-freedom radiator is required. Two installations are necessary to meet station safety criteria and eliminate the orientation mechanism as a single-point failure. Flex lines can be used and the radiator contained to rotate within a 180-degree arc. Transients induced by re-indexing of the radiator would not be significant. This design allows temperature control to be obtained by proper radiator orientation, eliminating the need for complex valving arrangements. This capability is especially useful during the low heat loads of buildup. A modular design could be implemented easily to facilitate on-orbit replacement.

The primary problem of the installation shown in Configuration 3 is that the ends of the station modules are already being used. Two station modules have airlocks and two have high-gain antennas attached to their ends. Integration with the airlock module is the only feasible alternative. High-gain antenna pointing accuracy eliminates it as a possible integration candidate. The airlock does offer a secondary benefit as an ideal isolated location for Freon hardware with easy access for maintenance. The chief drawback of the installation is the blockage of the field of view of the high-gain antenna by the radiator. For this reason this location was rejected.

Configuration 4 represents the only feasible remaining location for deployable radiators. Docked to the core module, a slightly larger radiator (700 square feet) is required because of the radiant interaction with other station modules. This configuration has the same advantages as Configuration 3. The primary drawback of this option is its utilization of two docking ports. At the time of the tradeoff these ports were available, but a possibility of alternative cargo module berthing was under examination. Since that time these ports have been utilized by docked RAM's which makes this placement academic. However, since this side docking port utilization had not yet been defined, this concept was carried through to the end of the study.

Single Versus Dual Coolant Loops

In general, vehicles that have large variations in heat load and a desire to have no orientation constraints for thermal control have a dual coolant loop system. A low freezing point fluid is used in radiators to prevent freezing. However, these low-temperature coolants tend to be toxic in some cases and therefore a coolant like water is used in the habitable volumes. The consideration to be given here is a brief investigation of some potential single coolants and a comparison with several dual-loop approaches to determine the impact of the less complex single-loop systems.

The concepts selected for active thermal control consideration included both dual- and single-loop approaches. Table 2-22 shows the results of the figure of merit review for the four major evaluation criteria. The concepts have been arranged into dual- and single-loop approaches. The table shows that single-loop central concepts A-6 and A-7 score the best with their best scoring in most important primary criteria. This scoring justified further evaluation of the single loops.

Table 2-22. Evaluation Summary

Evaluation Criteria	Single Coolant					Dual Coolant		
	A-1	A-2	A-3	A-6	A-7	A-4	A-5	A-8
	I	I	I	C	C	C	C	C
Absolute - Safety performance, availability (18)	13.5	12.1	12.7	13.7	11.8	14.6	14.6	13.6
Primary - Cost, operation, durability, flexibility (63)	33.7	35.0	42.7	49.8	46.7	40.7	43.5	41.4
Secondary - Weight, power, volume, complexity (19)	5.2	5.5	9.9	18.2	16.5	8.4	13.4	13.5
Total (100)	52.4	52.6	65.3	81.5	75.0	63.7	71.5	68.5

I = Independent
C = Central

Fluid Properties and Requirements

The desired coolant requirements and physical properties are shown on Table 2-23. The freezing point was established at 130 F by determining the lowest steady-state temperature without an internal heat load on the cylindrical surface of a module with its Z axis parallel to the local vertical. A minimum flash point of 400 F consistent with Apollo flammability requirements. Since the fluid enters the habitable volume it must be nontoxic. An in-depth fluid evaluation was not accomplished but those listed are among those most frequently favored.

Table 2-23. Coolant Properties and Requirements

Fluid	ρ (lb/ft^3)	Cρ (Btu/lb-^{o}F)	μ Centpoises	Freezing Point (^{o}F)	Flash Point (^{o}F)	(Nontoxic) Toxicity
Water	62.4	1.0	0.8937	32	None	None
DC331	58.6	0.43	9.4	-130	420	None
DC200	54.47	0.45	1.746	-119	175	None
Freon 21	85.28	0.256	0.340	-211	None	Containable

Coolant Requirements:

Freezing point $<$ -130 F
Flash point $>$ 400 F
Toxicity - None

Pumping Power Considerations

Both the pumping power and the influences on the configuration were evaluated for single- and dual-loop configurations. The first step was to establish a baseline plumbing configuration using water as a coolant for both internal and external. With the baseline configuration and diameter of tube, the other fluids were evaluated and the required pumping power and pressure levels established. In the next step, the design pressure drops of 50-psi internal and 10-psi external were held constant and the diameter of tubing was allowed to vary. By comparing both the fixed plumbing configuration and fixed pressure drop, an indication of influences of single and dual loops can be evaluated.

Figure 2-15 shows the results of both fixed configuration and fixed pressure drop analyses. Noting first the fixed configuration case, Figure 2-15 shows that the single-loop approaches have much higher power requirements than dual loops. The higher powers are a result of the high pressure drops shown for the baseline plumbing configuration caused by the relatively low specific heats of single-loop fluids shown on Table 2-23. The lower specific heat fluids will require from two to four times as much flow as water to accomplish the heat removal at the same temperature level. The dual loops, on the other hand, have much lower power requirements which result from the use of water in the internal loop. In this case, the higher pressures result only in the external loop.

Figure 2-16 for fixed configuration shows also that dual loops have much lower pumping power when independent versus central is considered. The much larger powers of the independent is caused by the large number of independent systems. Figure 2-16 indicates clearly that from power standpoint independent, single-loop approaches cannot be tolerated.

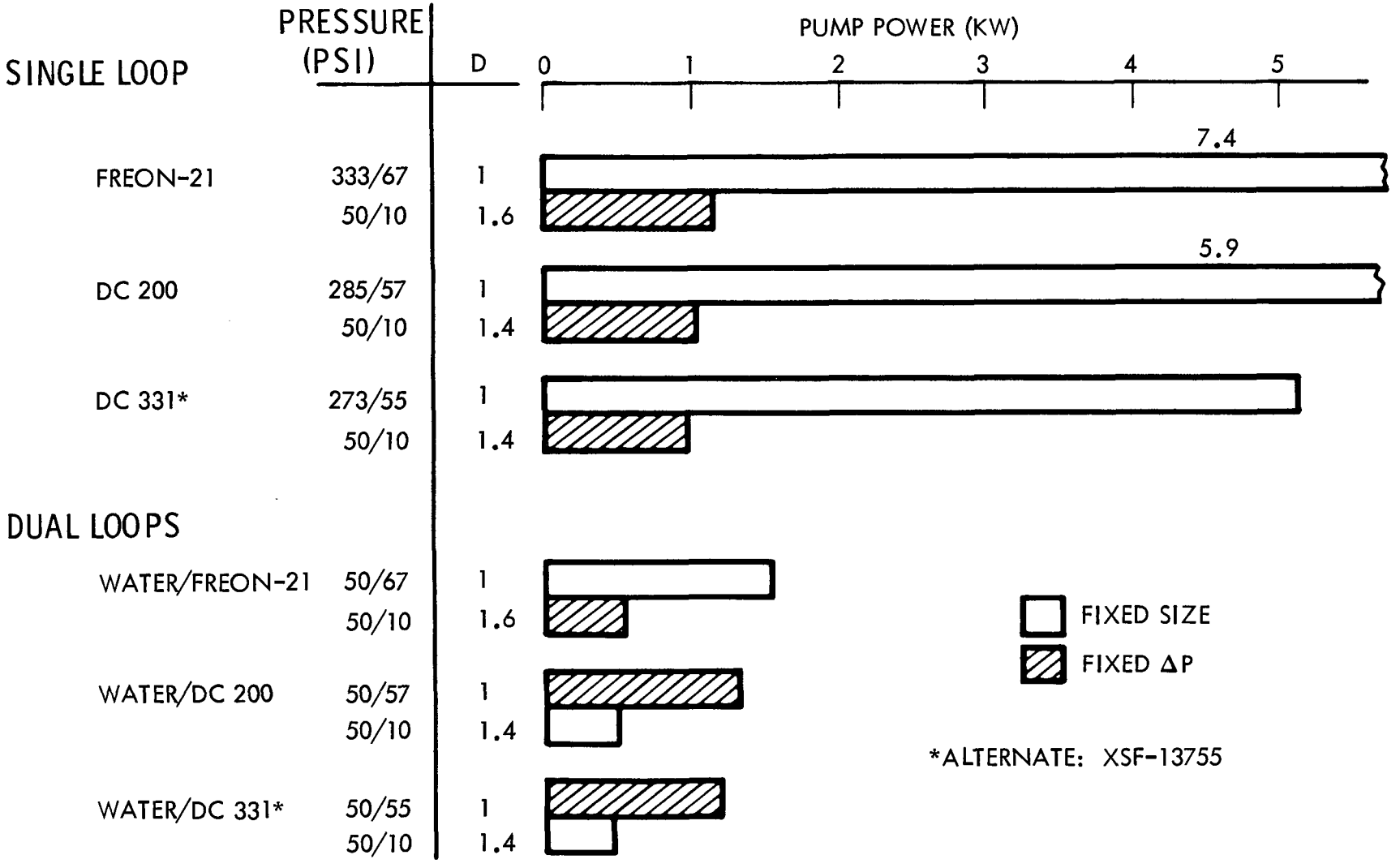

Figure 2-15. Central Thermal Control Pumping Power

Space Division
North American Rockwell

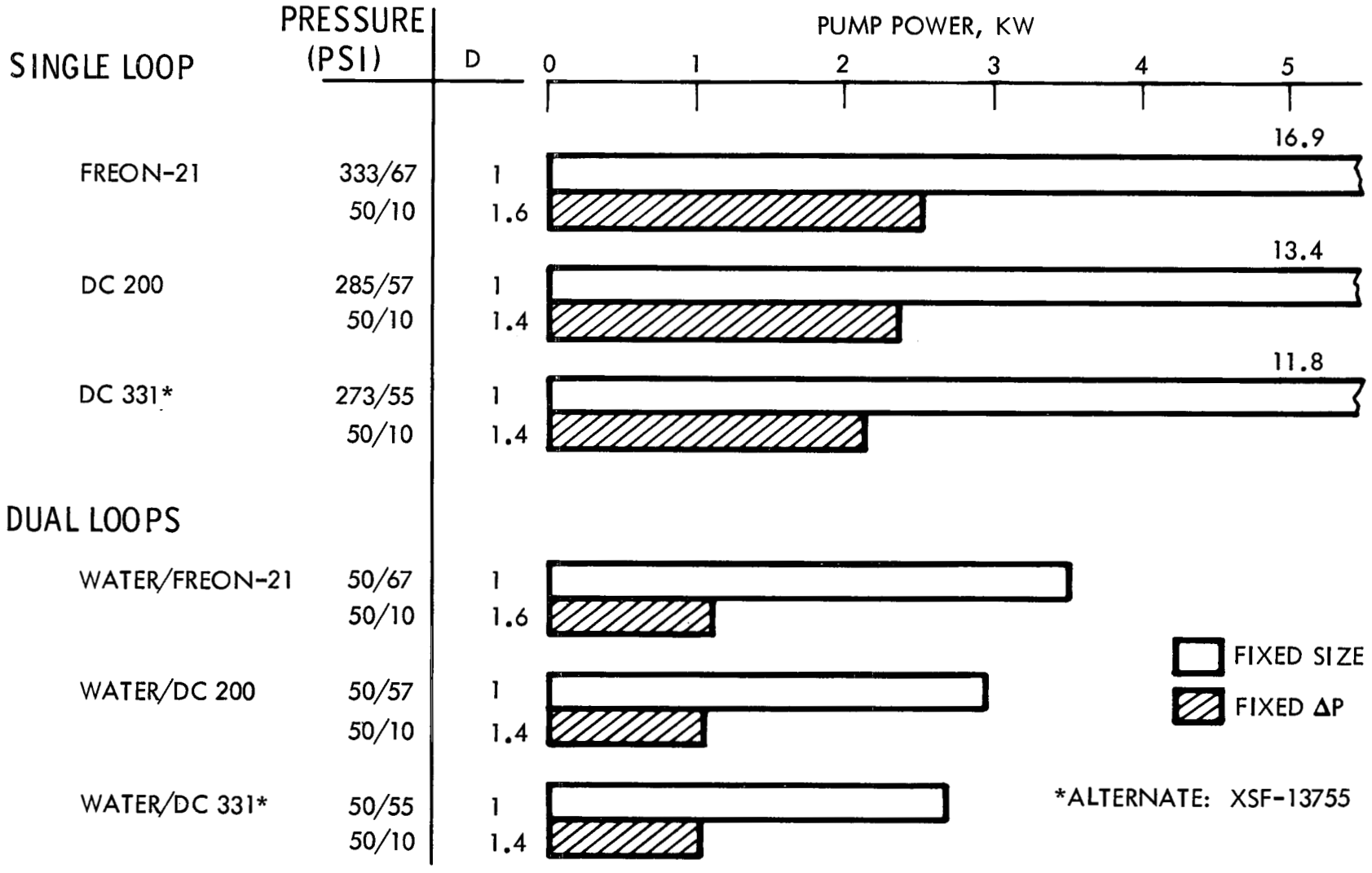

Figure 2-16. Independent Thermal Control Pumping Power

Space Division
North American Rockwell

Looking at the fixed pressure drop case for central systems, Figure 2-15 shows again that a higher power level will be required by the single loops. This difference- 500 to 1000 watts, does not appear to be major. The significant factor is shown under the column headed D. The data show that the tubing and hardware must be at least 60-percent larger than the baseline case using water in both the internal and external loops. Again, the larger hardware is only required in the external loop of the dual-loop cases. However, if the magnitude of the fixed hardware weight is small, or weight is not a key trade-off parameter, the larger sizes of hardware required by the single loop may not be significant. This factor and the impact of larger hardware can only be established once a detailed schematic with known line routing has been established.

The fixed pressure drop case illustrated on Figure 2-16 for independent thermal control shows about the same effects, in that the single loop powers are higher than dual loops and the hardware would be expected to be larger for baseline pressure drops. Comparing Figures 2-15 and 2-16, the central dual loop approach would be preferred from a pumping power standpoint.

Comparison Summary

Table 2-24 shows the comparison of the following factors between dual and single loops:

1. Power - The primary power factor is pumping power, where single loops in general require approximately two times that of a dual loop when water is used as an internal loop in the dual-loop system.

2. Weight - Use of other fluids than water in internal loops results in 40 to 60-percent increase in hardware weight. This is caused by the lower specific heats of these fluids requiring larger flow rates. These larger flows require large hardware elements to achieve reasonable pressure drops. There is no weight difference in the external loops.

3. Volume - Like the weight, the volumes of the single loops are greater than for dual loops, due again to the high flows in the internal loop for specific heat fluids.

4. Cost - Costs for the single loops are lower because there is less hardware required in the single loops, when the same number of systems are required.

5. Flammability - Single loops have a potential fire hazard when used in the cabin if the coolant can burn. This factor is one of the major reasons for selecting water as an internal coolant. Other fluids with flash points above 400 F were considered adequate for application to the MSS.

Table 2-24. Single Versus Dual Loop Comparison

Consideration	Single	Dual
Power	2 x dual	1
Weight		
Internal loop	1.4 to 1.6 (80 to 100 lb/module)	1
External loop	Same	Same
Volume	1.5 to 1.6	1
Cost	26.7	324
Safety of Internal Loop		
Flammability	Contain DC plumbing	Water
Toxicity	Contain internal cooler	Same
Corrosion	None	Water
Maintainability		
Amount	Nominal	Higher
Clean up	Oils hard	Water easy
Compatibility with ECLSS hardware	Oils unknown	Water OK
Radiator Area	1	1.1 ≈ 10 percent larger

6. Toxicity - From Table 2-22 it can be seen that the DC331 and DC200 coolants are nontoxic. Freon is toxic to some extent and therefore some containment will be required. In all cases, it must be recognized that part of the coolant toxic potential must consider the effects of vapors after passing through onboard catalytic oxidizers. In the case of Freon 21, the oxidizer outlet gases contained nitric and hydoflouric acid vapors. No data are available for the other fluids listed on Table 2-22, which is an important factor. The toxicity consideration also is a large factor for utilization of water as the internal coolant.

7. Corrosion - The oil-base DC fluids considered have little or no corrosion potential when used with aluminum. Water in the dual loop is a potential problem if inhibitors are not used. It is interesting to know that in the weight comparison above aluminum tubing was considered for both. If the corrosion problem were severe, stainless steel may be required with water. In this situation the weight of the stainless steel internal loop would become greater than the single loop of aluminum. On a program where weight is a primary selection factor the corrosion factor could become very significant.

8. Maintenance Actions - The dual loops will always require more maintenance because of the greater amount of high maintenance rotating machinery.

9. Cleanup - This is a difficult parameter to consider in detail without the aid of a functional system and background data. However, the DC fluids are of an oil base and as such would be difficult to clean up where access may be limited. Water will in time evaporate and ultimately find its way to the humidity control system. Freons have to be contained and vapors vented overboard to prevent the potential toxic hazard. In general, with the addition of barriers for Freon, the dual loops appear to have design solutions available, whereas the impact of oil-base coolant spillage cleanup is not yet clearly defined.

10. ECLSS Hardware Compatibility - As was the case with cleanup, the compatibility of oil-base coolants and other ECLSS hardware is unknown. The primary concern here is that in zero-g environment any spillage of coolant may migrate to the atmospheric processing hardware (humidity control condenser, catalytic burner, CO_2 removal, and odor removal). The effect of the lost coolant on this hardware is unknown. Perhaps oil-base coolant in humidity exchangers would impair surface wetting characteristics sufficiently to cause replacement. Water, on the other hand, is compatible with atmosphere control hardware in reasonable quantities. In this area, the water in the dual loop appears to be the better solution to coolant selection.

11. Radiator Area - Noting Figure 2-17, the intercooler causes radiators of the dual loop to operate at a lower temperature; therefore, slightly more area is required to reject the same heat load.

Loop Selection

The dual-loop approach was selected on the basis of (1) slight advantages in weight and power, (2) safety of nonflammable water and Freon, and (3) the known effects of water and Freon on ECLSS hardware. However, the desirable advantages of system simplicity and indicated lower cost of the single coolant approach have been recognized. Its primary disadvantage is the lack of knowledge associated with the impact on other subsystem hardware (ECLSS and electronics) in the event of spillage or loss of coolant that becomes entrained in the cabin atmosphere. In order to obtain additional knowledge, the study and application of single coolants have been proposed as a technology development item.

2.13 COMPARISON OF REMAINING OPTIONS

The previous sections have provided conclusions to the best active thermal control concepts for tradeoff against the hybrid and passive concepts. Central plumbing systems are definitely preferred to independent configurations. Single fluid loops are of significantly lower cost; however, a fluid that meets all requirements could not be identified. Therefore, a dual water-Freon concept was recommended for the study. It now remains to decide which concept - passive, hybrid, active or deployable - is the best candidate for the MSS.

After completing the preliminary tradeoff comparison, additional promising hybrid TCA concepts were identified. Because of the limitation of an independent thermal control concept, more emphasis was placed on the hybrid-type concepts because heat load redistribution could be accomplished easily. These concepts are shown in Figures 2-18, 2-19, and 2-20. Figure 2-18 shows a block diagram of a dual loop active heat transport system with radiator tubes replaced by heat pipes. This concept (Hybrid Concept A) is identical to that examined during the FOM evaluation. Hybrid Concept B (Figure 2-19) eliminates the flow proportioning valve by utilizing variable conductance heat pipes (VCHP) in the radiator panel. Figure 2-21 pictorially depicts an installation on a station module of a VCHP radiator panel. Penetration of the pressure hull can be eliminated by the use of header heat pipes (Hybrid Concept C) integral with the pressure hull to carry the internal heat load to the radiator rejection to space.

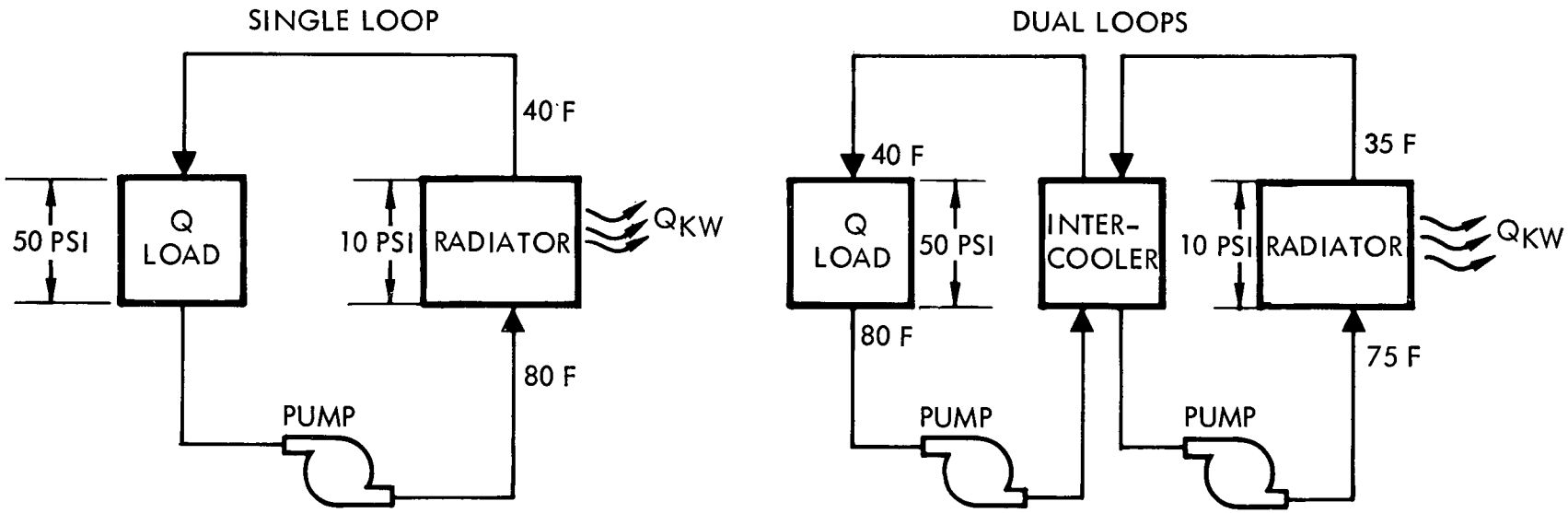

	Q_{KW} (KW)
CENTRAL THERMAL CONTROL	35
INDEPENDENT THERMAL CONTROL	8

Figure 2-17. Pumping Power - Active Thermal Control Concept Configurations

Space Division
North American Rockwell

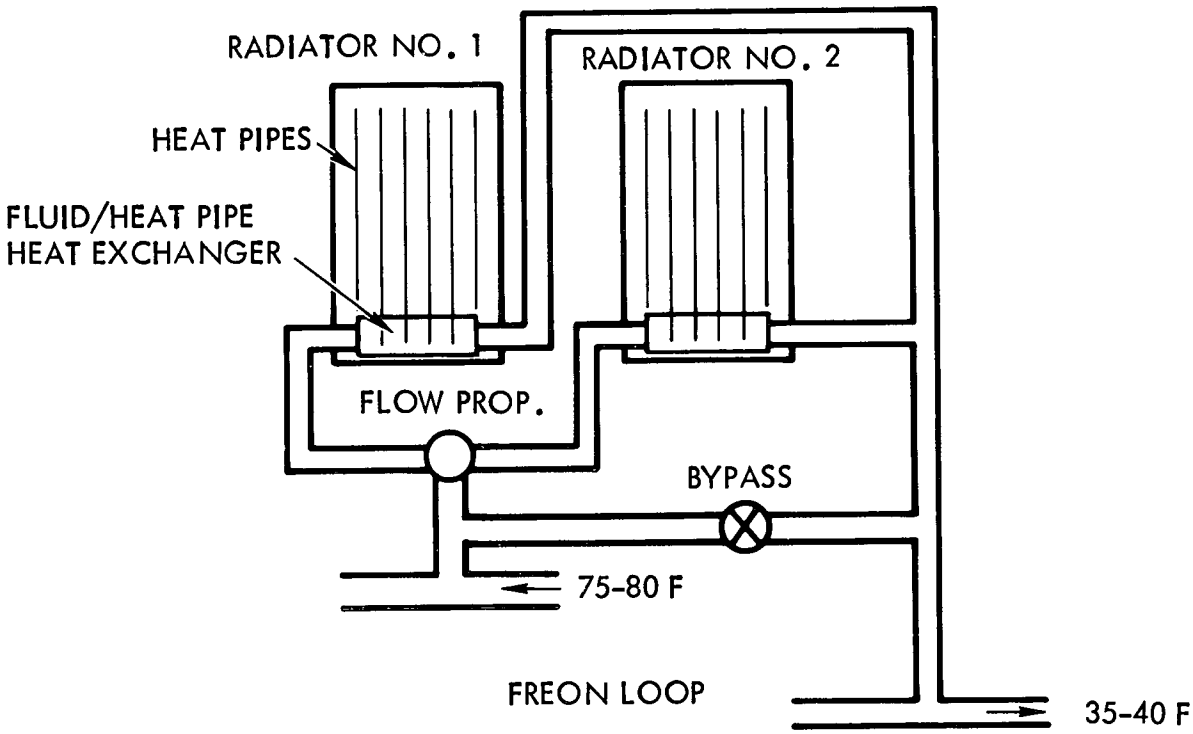

Figure 2-18. Block Diagram - Hybrid Concept A

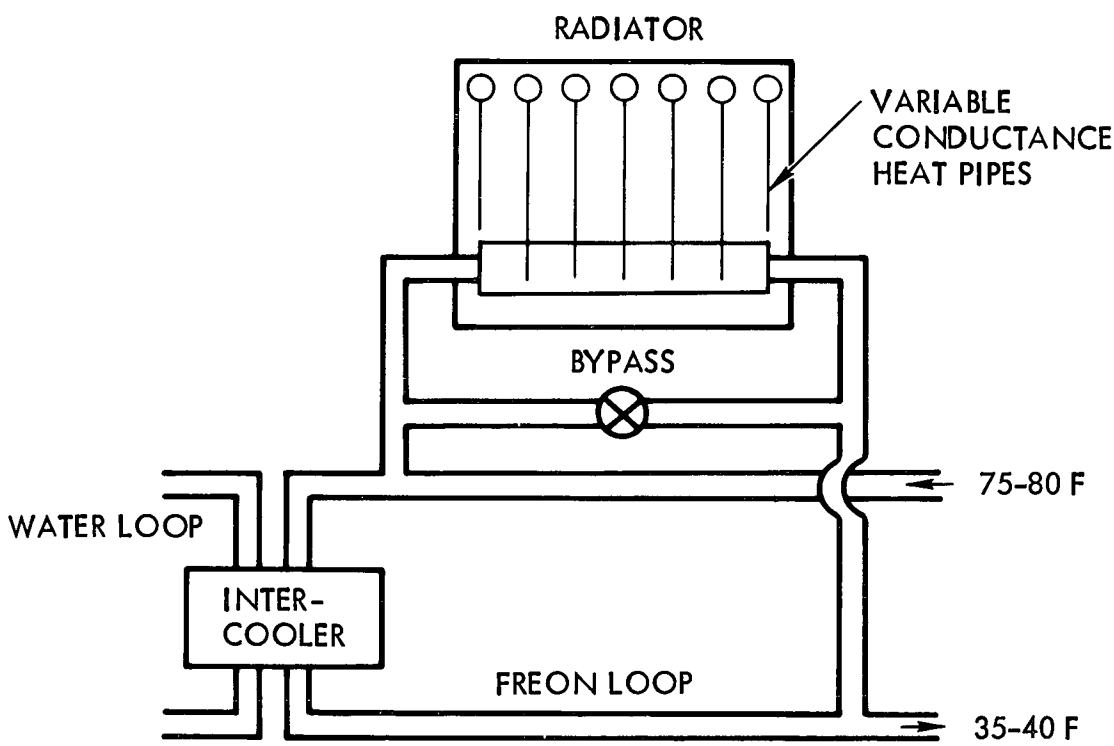

Figure 2-19. Block Diagram - Hybrid Concept B

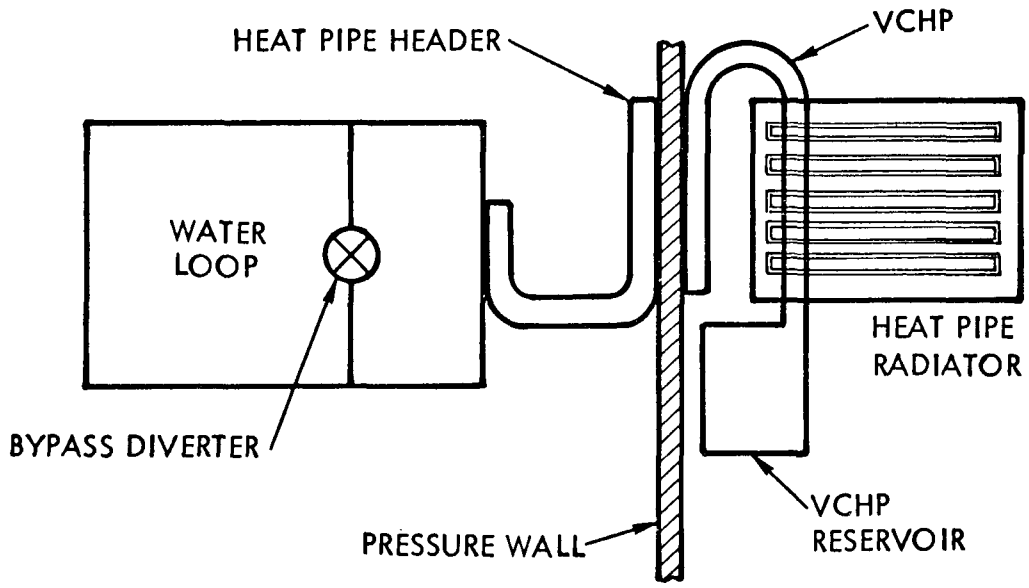

Figure 2-20. Hybrid Concept C

Hybrid Concept B provides interesting performance characteristics. The VCHP can provide area control to reduce rejection capacity under low load conditions. As the temperature in the heat pipe decreases with the coolant temperature in the fluid loop header, heat exchanger gas from the VCHP reservoir expands reducing the operating length of the heat pipe. The radiator area is thereby effectively reduced. The gas in the heat pipe can provide a second function by turning off any pipes that are net absorbers instead of rejectors. Effective radiator area can be maximized automatically by these heat pipes. A VCHP that becomes a net absorber will cause the vapor in the pipe to travel toward the internal loop header. Inert gas from the reservoir is entrained and transferred to the header end. By proper sizing the heat pipe will be filled with gas at the contact area between the VCHP and the header heat exchanger, preventing heat transfer into the coolant loop. The unique performance of this concept justifies further study and it is also recommended as a development item.

Hybrid Concept C can be utilized with either Concept A or B. It basically represents an alternative to the liquid heat exchanger as the basic interchange device between the radiator and the internal transport loop. Internally generated heat is transported by a central heat transport loop to a head heat pipe integral with the pressure hull. The heat pipe then transfers all the heat to the heat pipe radiator, eliminating any transport of fluid outside of the pressure hull. It is feasible that a single internal water loop can be utilized with this concept if the header heat pipe is a VCHP. As the temperature of the header heat pipe decreases,

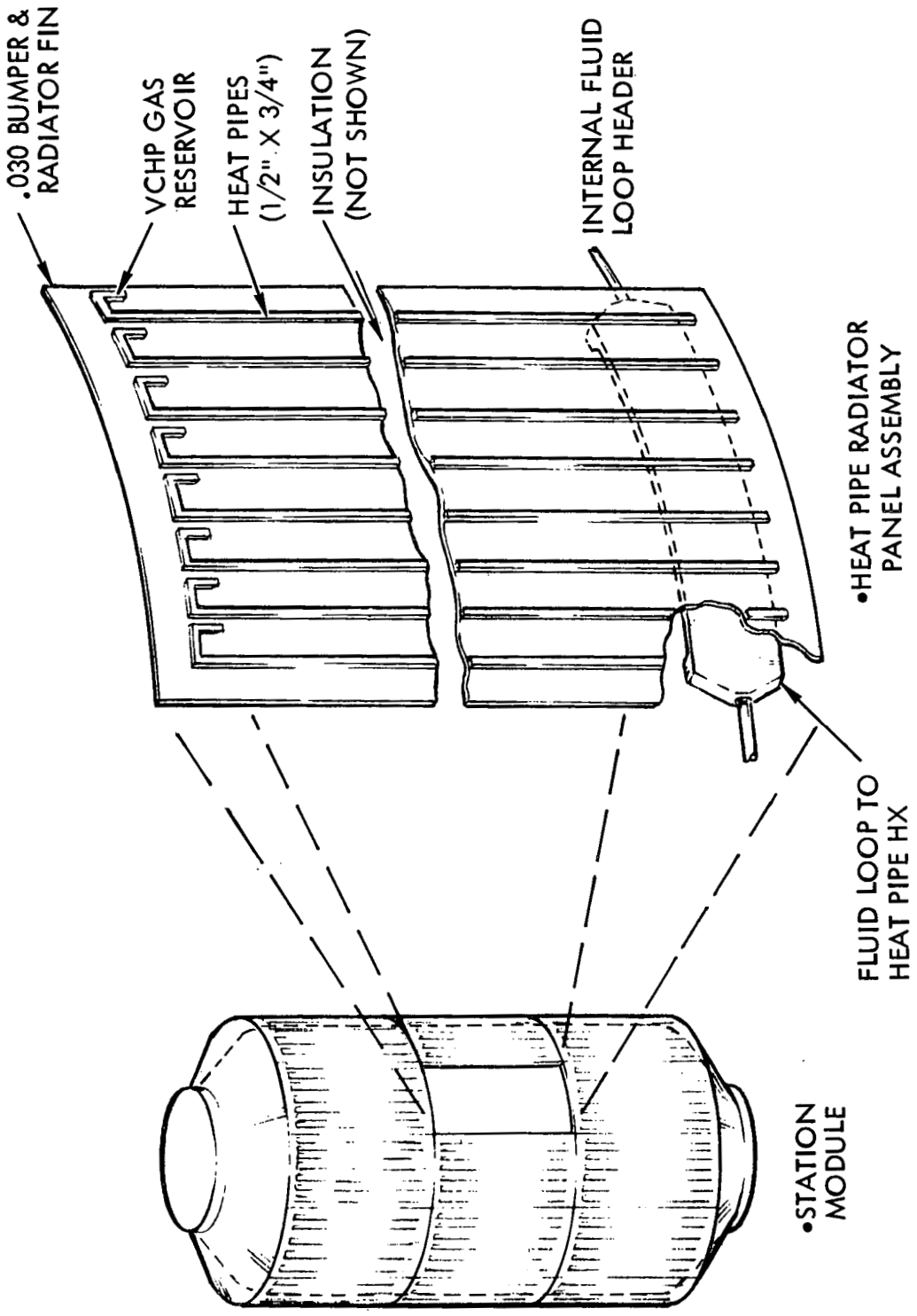

Figure 2-21. MSS Heat Pipe Radiator System, Hybrid Concept H1-B

gas expands, reducing the active radiator area and maintaining the water above freezing. This last alternative was not explored during the study because the small temperature difference between the control point and the freezing point of water. It was estimated that the size of the gas reservoir necessary to cut off enough radiator panel to prevent the heat pipe from dropping below 32 F over the heat load range identified was prohibitively large. The header heat pipes, by their nature, also cause the radiators to operate at a uniform temperature which requires larger radiator areas or split high- and low-temperature radiators to achieve the low temperature control levels required.

Figure 2-22 shows the cost estimates for the candidate TCA's. Active system cost data were based on comparative data from other active thermal control systems built by NR on the Apollo program. Costing on concepts utilizing heat pipes is based on individual heat pipe cost estimates obtained from TRW. The estimates should not be viewed as absolute dollars, but as trends which can be compared relatively. The central and independent single-loop systems were the cheapest but were rejected for technical reasons explained earlier. The totally passive concepts suffer from the same performance deficiencies of all independent thermal control concepts. Since the entire radiator must operate at the level of the temperature control desired, high- and low-temperature radiator assemblies were required, significantly increasing the cost and complexity of this option. The most promising candidates remaining are the central, dual-loop, active, body-mounted radiator; the central, dual loop, active, deployable radiator; and the hybrid active-passive concepts.

The deployable radiator concept was rejected because no place could be found to place it on the station without significant operational impact. This problem became more acute when the cruciform station configuration was selected. No attempt was made to develop a station configuration conducive to the installation of such a concept; instead it had to be compatible with a design driven by more important considerations than thermal control. This concept had the additional drawback of significantly affecting the weight of the station module to which it was attached, thereby limiting the hardware allocated to that module when launched. From a thermal control standpoint it was the only concept that was insensitive to vehicle attitude and coating degradation, but these virtues became academic when no place for its installation could be identified on the MSS.

The decision between dual active and the hybrid concepts hinged on whether the 10-percent increase in cost justified replacement of the radiator fluid tubes with heat pipes and whether another increase of 13 percent was justified to eliminate the flow proportioning valve of the active loops.

The hybrid radiator panel operates in the same manner as the active radiator. High-temperature coolant at the radiator inlet will cause the local heat pipe to operate at a high temperature. Heat pipe temperatures will decrease as the fluid moves across the radiator. In this way the disadvantages of a uniform temperature radiator typical of heat pipe

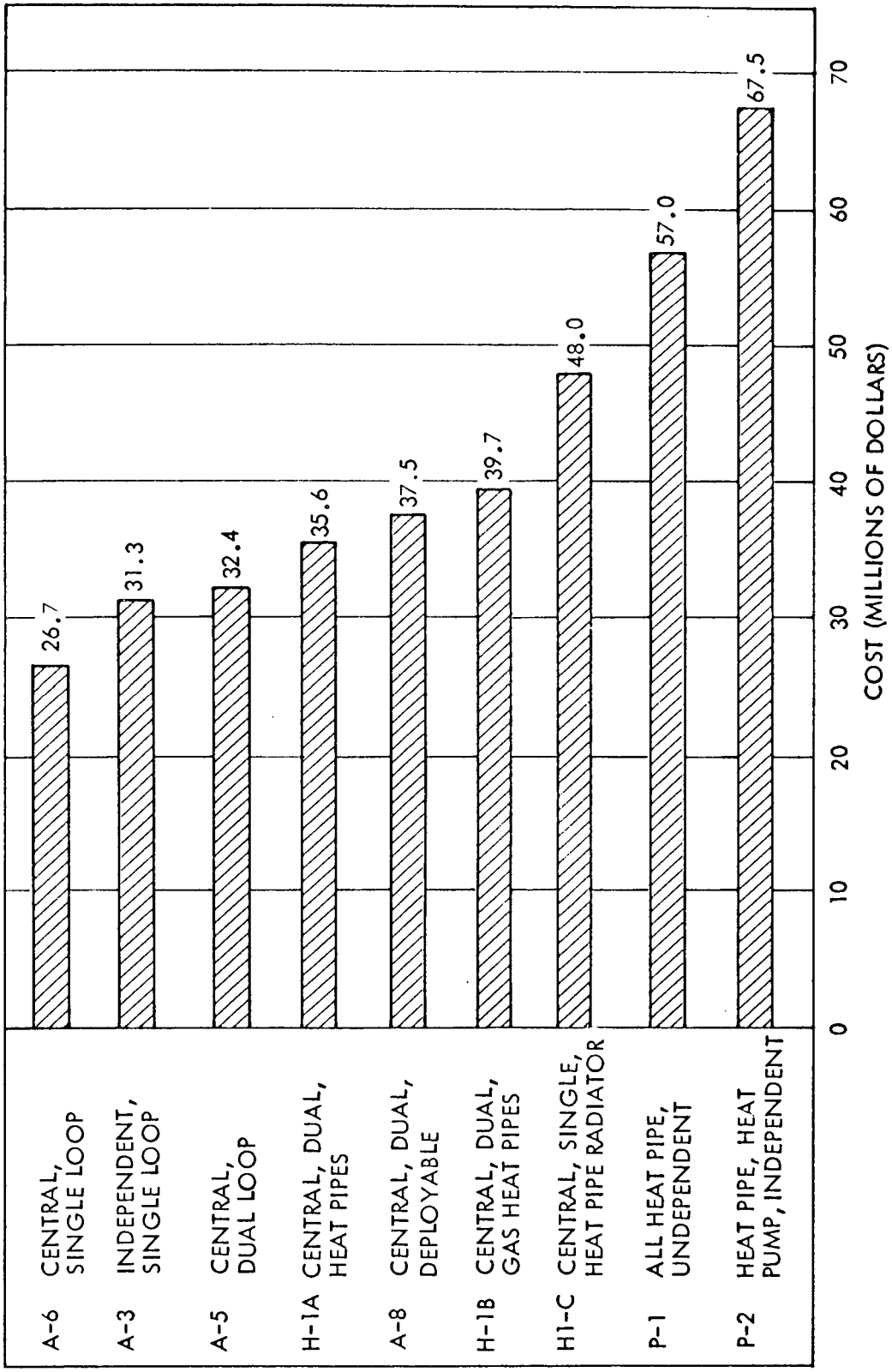

Figure 2-22. Thermal Control Concept Cost Estimates

concepts is eliminated (i.e., larger radiator area to achieve the same heat rejection).

Meteoroid puncture protection is the major benefit that Concept A set out to achieve. Unfortunately it did not significantly improve the puncture protection over the active concept. The heat pipe tubes allow the loss of a radiator tube without the loss of the entire radiator. The active concept requires armor on each tube to reduce the potential for this failure. Although the hybrid concept solves the tube puncture problem, a header heat exchanger puncture problem replaces it. The armor requirements for the header heat exchanger are approximately the same as fluid tubes and, therefore, very little weight savings occurs. Therefore, the additional expenditure for the heat pipe radiator did not buy improved performance. Actually, a slight penalty occurs in the losses from the heat exchanger to the heat pipe panel, requiring increased radiator area over a radiator in which the fluid flows directly.

Since the 10-percent expenditure for the hybrid heat pipe radiator concept could not be justified, Hybrid Concept B had to justify the full 23-percent price increase over the dual, central active concept. Since this concept only eliminated a flow proportioning valve, the expenditure does not seem justified. In addition, selection of this hybrid concept would exchange development of a radiator panel based on a heat pipe concept that is still being developed with a valve control assembly that has successfully flown on every manned Apollo flight. Clearly the development risk and the additional expenditure are not justified.

In conclusion, the dual-loop, central, active thermal control concept is the lowest cost concept that meets all of the engineering requirements defined. It is a system with a high confidence of successful development by incorporating concepts with proven performance. A dual-loop, water-freon, active thermal control concept is illustrated in Figure 2-23.

Significant conclusions reached during the study, in addition to the selection of a thermal control concept for the MSS, are:

1. Single-loop active concepts offer the cheapest thermal control concepts; however, a transport fluid that meets all performance requirements without potential effect on the operation of other subsystems could not be found.

2. Independent active thermal control, in which each module has its own assembly, is more costly, less flexible, and less reliable than a centralized thermal control concept. It is feasibly only when core modules have very low heat rejection requirements and subsystem allocation among modules is constrained by the heat rejection capability of each module.

3. Deployable radiators singularly offer solutions to most of the weaknesses of other thermal control concepts. This concept is totally insensitive to vehicle orientation and thermal coating

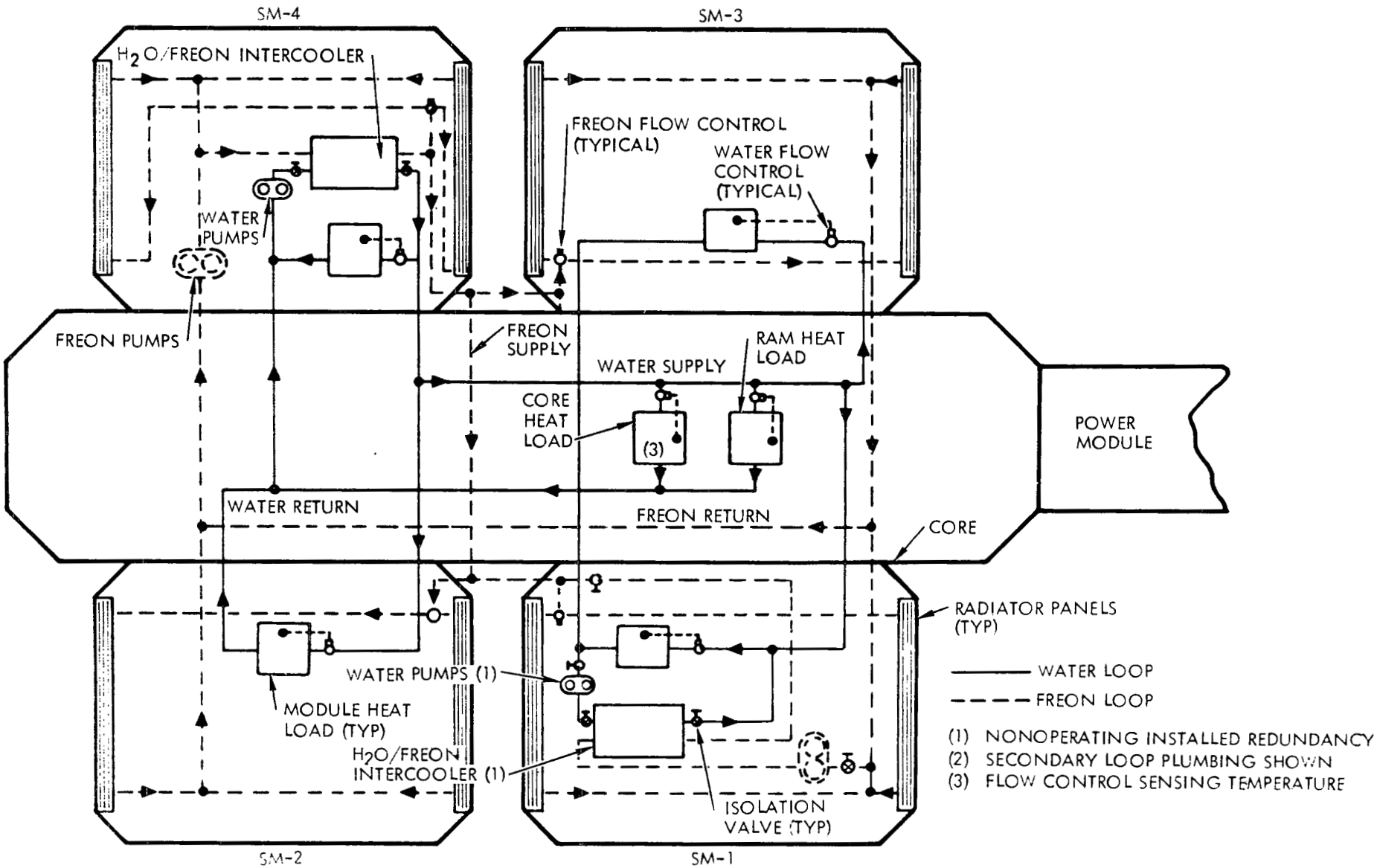

Figure 2-23. Dual-Loop Active Thermal Control Concept

Space Division
North American Rockwell

degradation. It can be replaced without affecting the basic function of the space station allowing maintenance to occur easily on the ground. A body-mounted radiator requires a duplicate station module to provide the same flexibility.

4. Passive concepts offer high reliability and simplicity of control. Effective rejection area can be selected by shutting down ineffective radiator tubes automatically by using gas-filled heat pipes. Elimination of pressure hull penetrations is also feasible with the aid of heat pipes. However, potentially high development costs for this class of concepts are not consistent with the low cost objectives of the modular space station.

5. Emphasis on cost as a selection criteria significantly favors previously developed concepts over more innovative but undeveloped concepts.

3. MANIPULATOR ANALYSIS

The objective of the analysis was to select and define a manipulator concept to accomplish on-orbit MSS system buildup and routine operations. The analysis of module direct docking versus berthing (manipulation) is contained in Volume V, Configuration Analysis (SD 71-217-5), of the MSS Preliminary System Design report.

A three-step approach (Figure 3-1) was utilized in this analysis. The first step involved the conduct of a manipulator survey, the establishment of capability plateaus, and definition of generic manipulator design and performance requirements. The second step involved the definition of the operational and overall design requirements for an MSS manipulator. The final step involved synthesizing and evaluating the manipulator concepts leading to the definition of the selected manipulation concept. The baseline shuttle orbiter used in the analyses and evaluation had two 60-foot long manipulators (Figure 3-2). The two manipulators were controlled by operators in the orbiter.

3.1 GENERIC DEFINITIONS (STEP 1)

The purpose of the first step of the manipulator study approach was to provide familiarization with the uses, applications, and development status of manipulators. The general manipulator survey included a literature search, exposure to the experience of other organizations, and the actual operation of typical manipulators currently in service. The prime documents that were utilized in the study are listed in Table 3-1.

Advantage was taken of NR's experience with the design, manufacture, and operation of underwater manipulators and teleoperators, as well as the operations experience of the Atomics International Division in the disassembly of reactors by use of manipulators and teleoperation systems. Space station study personnel gained first-hand experience by operating several manipulators and teleoperator systems in use at the Atomics International Division.

Manipulator systems generically have three major assemblies or elements: a support platform, aritculated arms, and tools. Power, command, and control capability must be provided for each assembly. The support platforms maneuver the arm assemblies into a position to perform the desired operations and are characteristically large assemblies with coarsely controlled motion. Manipulator system arms produce the tool positioning motions and forces and have multiple degrees of freedom; from three in simple systems to as many as eight in complex

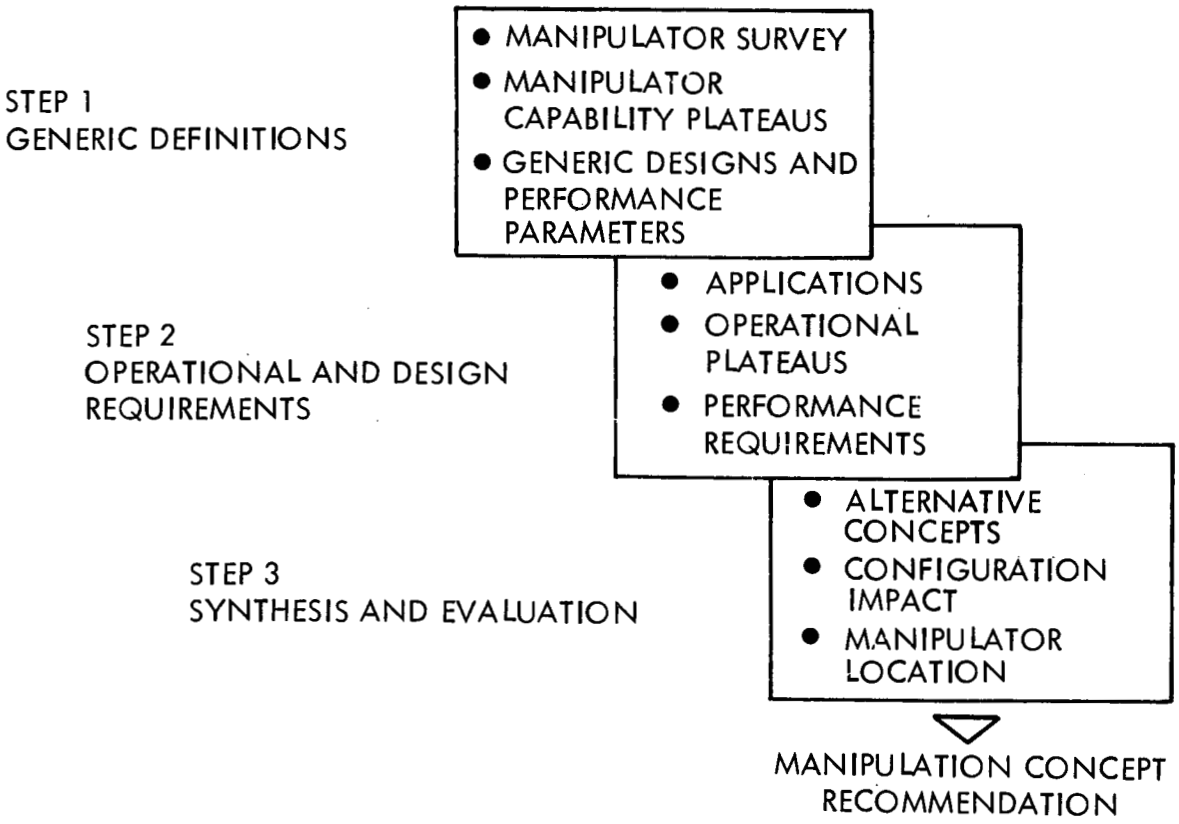

Figure 3-1. Manipulator Analysis Approach

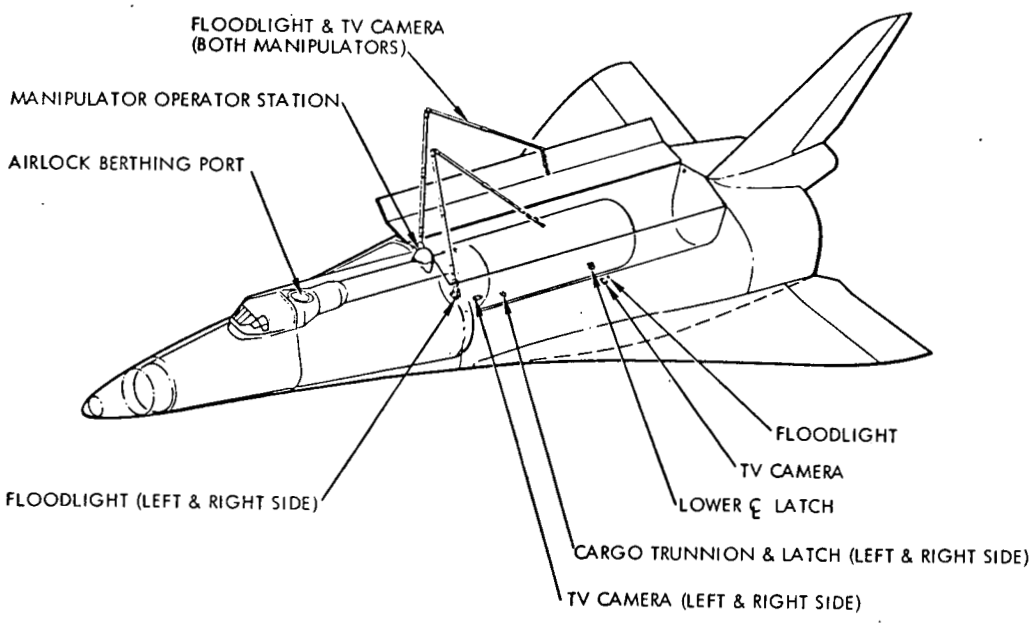

Figure 3-2. Baseline Shuttle Manipulator

Table 3-1. Principal Manipulator Literature

Title	Source	Number	Date
A Study of Teleoperator Technology, Development and Experiment Programs for Manned Space Flight Applications - Final Report, Volume 2, Technical Volume	General Electric	715D4202	1/71
Teleoperators and Human Augmentation, An AEC-NASA Technology Survey	NASA	SP-5047	12/67
ANL Consultant Support for Definition of Experiment Program in Space Operations, Techniques and Subsystems (Independent Manned Manipulator - IMM) Volume II, Technical Report	Argonne National Laboratory	Manned Space Flight Study #981-10-30-04 (Purchase Order #W-12192)	4/67
Optimum Underwater Manipulator Systems for Manned Submersibles -- Final Study Report	North American Rockwell	C6-65132	1966

sophisticated installations. The control and skill requirements and mechanization complexity increases proportionally to number of degrees of freedom. Tools provide the clamping, torqueing, or attaching interface at the end of the arms and are characteristically precision controlled assemblies.

Performance characteristics of past and existing manipulators were investigated and grouped into specifiable parameters. The performance parameters for a generic manipulator which are required to be specified to proceed with design are identified in Figure 3-3. Specification of most of these parameters are not required until detail design in Phase C.

In the MSS system berthing or docking, external inspection and maintenance, and other external operations were candidate manipulator functions. Since the baseline shuttle had manipulation capability, allocation of these functions to either the shuttle or station or the both established a matrix of operational alternatives (Figure 3-4).

ASSEMBLY/ELEMENT	WORKING VOLUME	LOAD RATING	GRIP FORCE	SPEED	WEIGHT	INDEXING	STOWABILITY VOLUME - AUTOMATION	ARTICULATENESS - DEGREES OF FREEDOM	POSITIONING ACCURACY	STIFFNESS	INERTIA	BACKLASH	STABILITY	SENSITIVITY	SELF-PROTECTIVITY	POWER REQUIREMENT	TOOL INTERCHANGE	INTENDED APPLICATIONS	CONTROLS
• SUPPORT PLATFORM																			
• MANIPULATOR ARM																			
• TOOL UNITS																			

Figure 3-3. Manipulator Performance Parameters

MANIPULATOR OPERATIONAL PLATEAUS				MANIPULATOR DESIGN PLATEAUS									
				1		2		3		4		5	
				STATION	SHUTTLE	STATION	SHUTTLE	STATION	SHUTTLE	STATION	SHUTTLE	STATION	SHUTTLE
I	BERTH SHUTTLE & DETACHED RAM'S				x	x					x	x	
II	BERTH MODULES	A	SHUTTLE STATION KEEPING					x					
		B	SHUTTLE BERTHED	x		x					x	x	
III	BERTH MODULES AND PACKAGES	A	SHUTTLE STATION KEEPING					x					
		B	SHUTTLE BERTHED	x		x					x	x	
IV	LEVEL III PLUS EXTERNAL INSPECTION AND MINOR OPERATIONS ("MACROSCOPIC" OPS)									x		x	
V	LEVEL IV PLUS EXTERNAL INSPECTION AND MAJOR OPERATIONS ("MICROSCOPIC" OPS)									x		x	

Figure 3-4. Manipulator Operations Allocation Alternatives

Berthing the shuttle to the station may be performed by manipulators on either the station or shuttle. For either choice, the remaining functions are optional. Design plateaus 1 and 2 established an approach in which the remaining functions would be to berth modules and packages to the station operational Levels II and III. Design plateaus 4 and 5 extended the remaining functions to include capability to perform operational Levels IV and V. At these levels the design complexity and control sophistication were expected to be significantly greater than at Levels II or III.

An operational alternative was also identified and a design plateau established for performing module and package berthing with the shuttle station-keeping (not attached to the station). The design plateau 3 requires performing only Level II and III operations.

Initially, four generic types of manipulator systems were considered for incorporation into the modular station design. The four were characterized by differences in the support platform concept for the manipulator arms: (1) fixed mount, or built integral to the station modules; (2) berthed at ports on the station modules; (3) self-movable package mount, attachable at multiple locations on the station; and (4) a free-flying support platform. The first three concepts are illustrated in Figure 3-5. The complexity and potential development cost of the free-flying concept did not appear to be in consonance with the program objective. Further study of this concept was deferred until requirements were established and the adequacy of the other simpler approaches were evaluated.

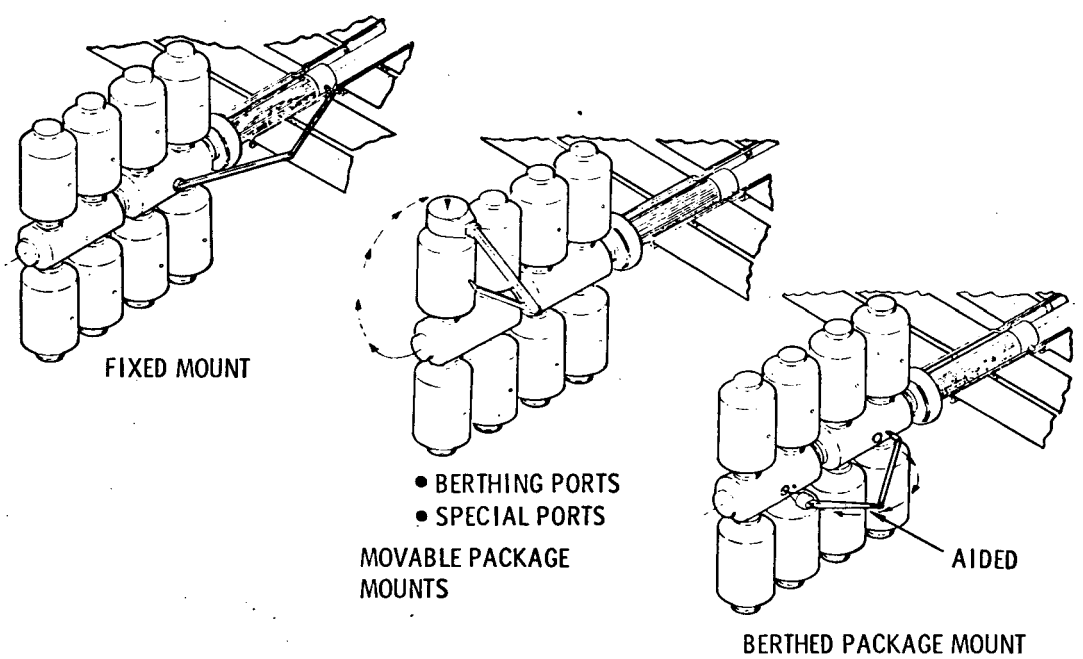

Figure 3-5. Manipulator Concepts

The fixed mount and berthed mount concepts established different approaches to manipulator arm attachment which affect maintenance and replacement requirements as well as manipulator delivery and assembly operations. The number and location of arms required throughout the station lifetime must be determined with either concept. However, berthed mount concept allows location change as station modules are added for growth, if concurrent operations are not required. The self-movable package mount has the capability to relocate the primary support platform using its own manipulator arms. Because of the additional complexity of dual-end control, the study of this concept was deferred until the adequacy of the simpler approaches were determined.

3.2 IDENTIFICATION OF OPERATIONAL AND OVERALL DESIGN REQUIREMENTS (STEP 2)

The objective of this step was to determine the operational and design requirements in sufficient detail so that manipulation concepts could be defined and alternate designs synthesized and evaluated. Thirty-three potential station manipulator applications had been identified. The operational functions and manipulation characteristics were established for each of these (Table 3-2).

Many of these candidate applications were associated with operations at plateaus 4 and 5. The implementation of these levels involves the use of special tools as well as potentially requiring special control, viewing, and reach. Since station design solutions were available for these as an alternative to manipulation, investigation of performance requirements for Levels IV and V were postponed until system evaluations of the alternative designs for Levels I, II, and III were completed.

A set of preliminary performance characteristics was generated for each of the design plateaus for operations at Levels I, II, and III. The perform-characteristics for 10 design parameters are given in Table 3-3 for both a station and a shuttle manipulator.

A design and operational alternative was whether to berth the station and shuttle together and then continue manipulation operations or to manipulate modules and packages from the shuttle cargo bay to the station while the shuttle was stationkeeping near the station. The stabilization and control of the combined shuttle-station assembly was a key issue. Configuration and subsystem analyses established control concepts and showed that by utilizing the principal axis flight mode, propellant budget requirements for periodic operations would not be significant. Considering this capability and the performance complexities, manipulation from the stationkeeping mode was deferred from further consideration. Only manipulation of modules or packages between vehicles while berthed together would be considered as an operational mode.

Requirements for viewing the manipulation operations were investigated. Two different phases of the operations produced viewing requirements. The first was for operator control of detailed or precision actions of the arm tip and tools. The second was for broader or spatial views of areas surrounding large-scale movement of modules and packages. A typical viewing concept of the first type of requirement is shown in Figure 3-6. Two views of the operation were preferred by operators of current manipulators. Direct views of

Table 3-2. Manipulator Candidate Applications

	Fault Inspect	High Dexterity	Tight Grip	Loose Grip	Hand Move I X	Hand Move II X	Hand Move Circular	Second Arm-Holder	Pull-Push Levers	Precise Movement Rate	Precise Fix Position	Move Large Masses	View 50 Square Feet	View 1 Square Foot	Micro View	Macro View	Air Blower	Mech Dexterity Function
Station Operations																		
Assemble HGA		X	X	X				X					X	X		X		X
Deploy HGA dish	X			X			X		X				X	X		X		X
Open close docking port covers				X		X			X				X	X		X		X
Open close window covers				X		X			X				X	X		X		X
Deploy retrieve FF RAMs			X							X		X	X			X		
Deploy retrieve subsatel			X							X		X	X			X		
Experiment support		X		X	X	X	X	X	X		X	X	X	X	X	X		X
EVA rescue		X								X			X			X		X
Solar array orient backup	X			X		X	X						X	X		X		X
Transfer fluids														X		X		X
Transfer and Berth Modules																		
Crew cargo module (shuttle to station)			X		X					X		X	X			X		
Crew cargo module (station to shuttle)			X		X					X		X	X			X		
Berth free-flying RAM's																		
Station modules-buildup			X		X					X		X	X			X		
Reconfigure			X		X					X		X	X			X		
Periodic Maint. and Supply																		
Clean windows													X				X	
Replace film, tapes, etc.		X		X	X				X				X	X		X		X
Repair or Replace																		
Radiators	X		X		X							X	X	X		X		X
Meteoroid bumpers	X		X		X							X	X	X		X		X
Insulation	X		X		X							X	X	X		X		X
RCS packages			X		X							X	X	X		X		X
Cryo tanks		X	X		X							X	X	X		X		X
Omni antennas		X		X	X			X						X		X		X
HGA assemblies	X	X	X	X	X			X						X		X		X
Windows		X		X	X			X	X					X		X		X
Docking ports		X	X		X			X					X	X		X		X
External skin		X		X										X	X	X		X
Experiment packages	X	X		X					X				X	X		X		X
Solar panels & assemblies	X	X	X	X		X		X				X	X	X		X		X
Disassemble hardware		X	X	X				X				X	X	X		X		X
Inspect																		
Station exterior															X	X		
Shuttle heat shield															X	X		
RAM's												X	X			X		
Station environment												X	X			X		

Table 3-3. Manipulator Performance Characteristics (Design Plateau 1)

Design Parameter	Performance Characteristics	
	Station Manipulator	Shuttle Manipulator
Working volume	Shuttle cargo bay to module/package Berthing position	Shuttle to station attach point Shuttle stationkeeping position-TBD
Load rating	Maximum torque - 385 ft lb Maximum speed (hand) = 0.167 fps Maximum speed (berthing contact) = 0.167 fps Hand/wrist rotation rate = 0.25 to 0.50 deg/sec Maximum module/package weight = 25,000 lb * Acceleration/deceleration = 0.01414 ft/sec^2 * Time to reach maximum speed = 11.8 sec	Maximum torque - 385 ft lb Maximum speed (hand) = 0.167 fps Maximum speed (berthing contact) = 0.167 fps Hand/wrist rotation rate = 0.25 to 0.50 deg/sec Maximum vehicle weight = 250,000 lb * Acceleration/deceleration = 0.001414 ft/sec^2 * Time to reach maximum speed = 188 sec
Tool degrees of freedom	None	None
Position accuracy	Hand = ±2 inches Berthing interface package = ±2 in. module = ±6 in. Berthing misalignment = 1 deg (max)	Hand = ±2 inches Berthing interface = ±6 in. Berthing misalignment = 1 deg (max)
Stability (deadband)	Hand = ±0.5 in. to ±1 in. Berthing interface package = ±1 in. module = ±2.5 in.	Hand = ±0.5 in. to ±1 in. Berthing interface = ±2.5 in.
Sensitivity		
Tools	Holding clamp(s) only No interchanges	Holding clamp(s) only No interchanges
Viewing requirements	Hand interface Module/package berthing interface	Hand interface Berthing interface
Touch and feel	Hand contact/engagement indicator Module/package berthing indicator	Hand contact/engagement indicator Shuttle berthing indicator
Grip force	High ("vise grip")	High ("vise grip")
* Values at 35-foot arm length (typical)		

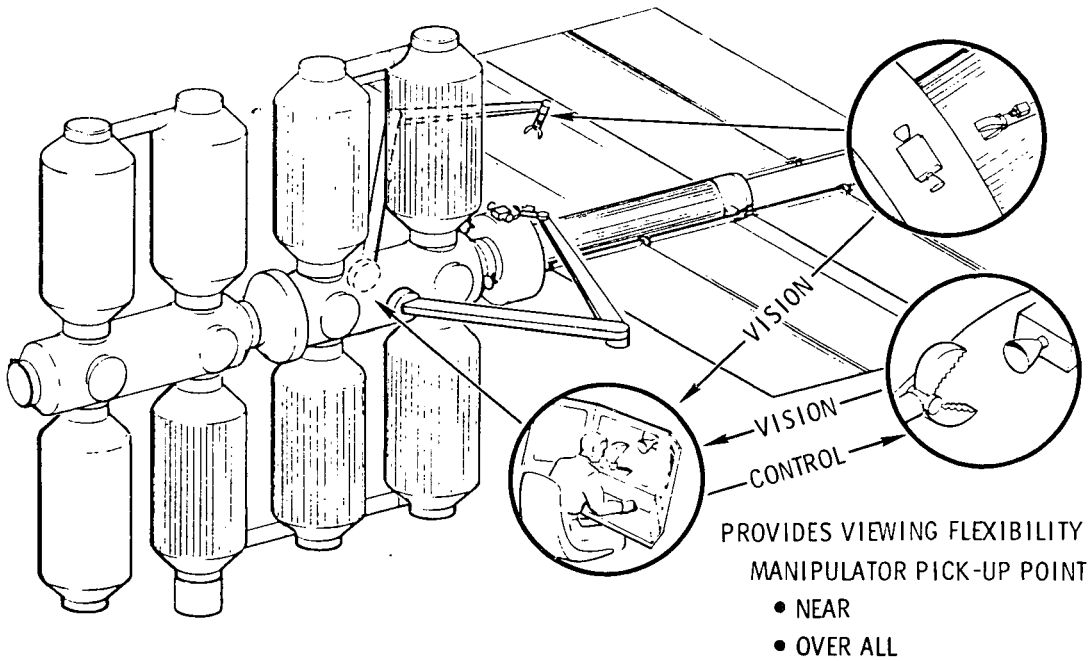

Figure 3-6. Typical Viewing Concept

the man potential applications by a control operator were impractical, and closed-loop TV was recommended for aid to the manipulator operator. Separate TV cameras located on independent manipulators was the configuration preferred by control operators.

Similar requirements were derived from investigation of the larger scale operations such as berthing a cargo module to the station cluster. With one manipulator attached to the module, a view of side clearances would be required from another source. Such a view could be provided by a TV camera on a second manipulator. Side clearances in the shuttle cargo bay could also be viewed by the operator using multiple fixed camera installations. Views of the module from the station berthing port would be required for the final closing operation. Cameras installed in the station berthing port windows could provide this view through hardwire connections to the operator (in either the station or the shuttle). These cameras could also provide limited viewing of side clearances during some of the manipulation phases.

3.3 MANIPULATION SYNTHESIS AND EVALUATION (STEP 3)

The objective of Step 3 was to synthesize and evaluate manipulation alternatives and select an MSS manipulation concept. A number of manipulation concept variations (Table 3-4) were synthesized for operational Levels I, II, and III by the combination of manipulator basic concepts and manipulator

Table 3-4. Manipulation Evaluation Options

Manipulator Location	Shuttle Berthing Location		MSS Manipulator Type
	-X End Only	End and Side	
Station only	1	2	Berthable
	3	4	Fixed mounted
Both station and shuttle	5	6	
	7	8	Berthable
Shuttle only	9	10	Baseline (fixed mount)

locations. Each of these variations were examined one at a time and evaluated utilizing the MSS candidate operations requirements and MSS manipulator design requirements established as an output of Step 2. In addition, operational plateaus 4 and 5 candidate applications were examined to determine any additional manipulator design requirements.

Three basic issues were examined: (1) number of manipulator arms (one arm or two arms), (2) position of the shuttle (end-berthed or side-berthed), and (3) manipulator location (station or shuttle).

Throughout the study the one arm versus two-arm issue was examined. The decision to consider only two-arm concepts was based on an inherent backup redundancy requirement for shuttle berthing and module berthing operations, in addition to providing an independent platform for remote viewing of manipulator operations. Both manipulator arms would not necessarily be identical but must be capable of backup operations.

Early in the analysis, an MSS reference configuration (Figure 3-7) was established for synthesizing concepts and operations. This reference configuration is basically a barbell configuration composed of two 40-foot core modules for the initial station and three 40-foot core modules for the growth station. Analysis of potential alignment error sources (Figure 3-8) resulted in a module spacing requirement of 24 inches. This module spacing was adopted for the reference configuration.

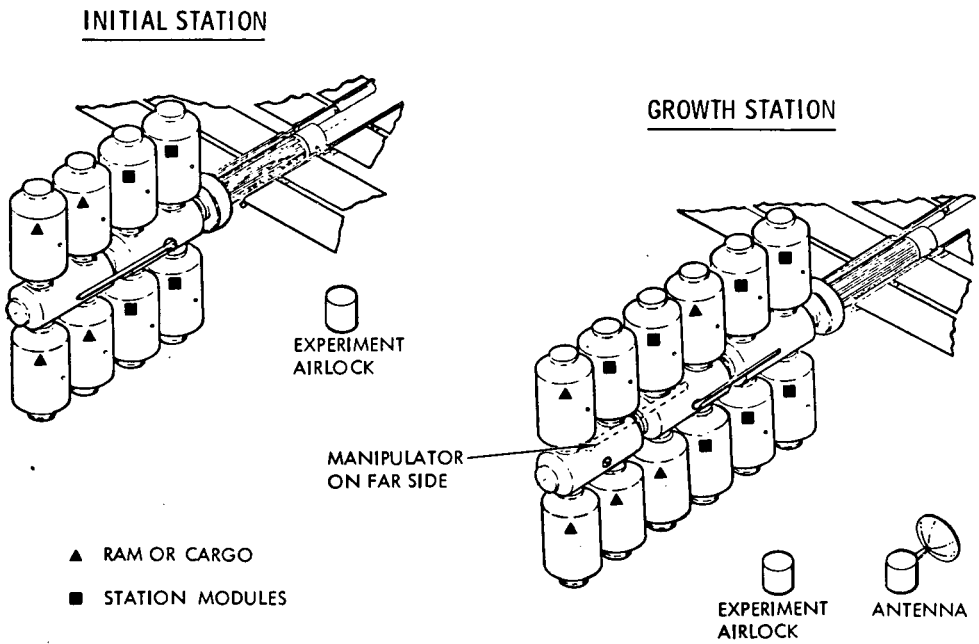

Figure 3-7. MSS Reference Configuration

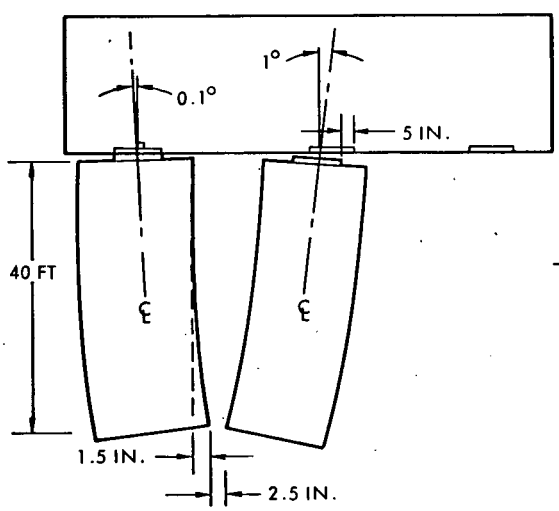

ALIGNMENT ERROR SOURCES

MANIPULATOR POSITION	5.0 IN.
ANGULAR ALIGNMENT (1^0)	8.5 IN.
MODULE MANUF (2 MODS)	3.0 IN.
STABILITY (DEADBAND)	2.5 IN.
DOCKED MODULE ALIGN ($\sim 1^0$)	1.0 IN.
TOTAL ERROR SUM	20.0 IN.
RSS OF ERRORS	10.6 IN.

RECOMMENDED SPACING REQMT = 24.0 IN.

Figure 3-8. Module Spacing Requirements

The second issue examined was the shuttle location relative to end or side berthing or both in support of MSS buildup and on-orbit operations. During initial station buildup, all operations could be accomplished with the shuttle end-berthed except for power module and core module No. 2 emplacement. Once the initial station is built up, many module or package replacements cannot be accomplished with the shuttle end-berthed on the reference MSS without a significant increase in manipulator length (to ~100 feet). A maximum limit of 60 feet was adopted for manipulator reach regardless of whether it is a shuttle-located or an MSS-located manipulator. It was concluded that station designs must be capable of berthing the shuttle orbiter on both end and side ports.

The final issue was then examined, that of whether the manipulator is located on the station or shuttle. Modular station assembly constituted the initial application of the manipulator. During station buildup operations the MSS is unmanned for several months with scheduled module berthing operations dispersed during this period. The manipulator location option--station only--is not feasible at the first step of buildup without building a manned spacecraft habitable for greater than a month. Consideration of incorporating this complexity into the MSS first module design was deferred until other alternatives were evaluated.

Station-to-shuttle berthing can be accomplished by the shuttle manipulator. However, to operate a station manipulator many major subsystems must be available at that stage of buildup and activated to carry out the assembly operations. Control consoles, data processing, communications, and life support equipment with adequate power and thermal control support as well as the manipulators would be required on the first module. Equipment with adequate performance was not included in the reference configuration. In addition to increasing MSS complexity, a core module with adequate equipment significantly exceeded the guideline weights.

Two options remain: that of a dual location (manipulators on both the MSS and shuttle) and that of manipulation by the shuttle alone. Many module or package replacements cannot be accomplished by shuttle manipulators from a shuttle end-berthed on the reference MSS configuration without requiring excessive manipulator length. If both vehicles have a manipulator, all operations can be accomplished, though some operations are excessively complex. This occurs when a module or package is "passed" from one manipulator to the other. Additional berthing ports could be added for temporary hold locations while transferring from the shuttle to station manipulator. When the MSS configuration is designed such that the shuttle may berth on the side of the MSS, a shuttle manipulator can accomplish all operations. The examiniation of station revealed that station assembly requirements could be satisfied by a shuttle manipulator.

The candidate manipulation operations at Levels IV or V, involving service or maintenance of MSS external surfaces, contained requirements applicable to the manipulator tools and the control of special tools. Since MSS design concepts were available for performing these operations, the selected manipulation concept did not include these requirements. During future Phase C design analyses, detailed trades can be made comparing cost of additional manipulator capability versus cost savings in MSS design.

The selected manipulation concept is that of using the baseline shuttle manipulators with the shuttle in an end or side-berthed mode to assemble station modules and packages. The preliminary performance requirements are summarized in Table 3-5. The capability to meet these requirements should be the subject of a detailed manipulator design and performance study with emphasis on system dynamics and structural dynamics.

Table 3-5. Manipulator Performance Characteristics

Design Parameter	Shuttle Manipulator
Working volume	Shuttle-to-station attach point
Load rating	Maximum torque = 385 ft-lb Maximum speed (hand) = 0.167 fps Maximum speed (berthing contact) = 0.167 fps Hand/wrist rotation rate = 0.25 to 0.50°/sec Maximum module/package weight = 25,000 lb *Acceleration/deceleration = 0.01414 ft/sec^2 *Time to reach maximum speed = 11.8 sec
Tool degrees of freedom	None
Position accuracy	Hand = ± 2 inches Berthing interface = ± 6 inches Berthing misalignment = 1° (max)
Stability (deadband)	Hand = ± 0.5 inches to $\pm$ 1 inch Berthing interface = ± 2.5 inches
Tools	Holding clamps only No interchanges
Viewing requirements	Hand interface Module/package berthing interface
Touch and feel	Hand contact/engagement indicator Module/package berthing indicator
Grip force	High ("vise grip")

*Values at 35-foot arm length (typical)

4. WATER MANAGEMENT TRADE

4.1 OBJECTIVE

Studies in connection with the 33-foot diameter station showed that the use of a reverse osmosis water recovery system for wash water and a vapor compression water recovery system for potable and experiment water were the optimum choice.

The study to select a water management concept for the MSS started at this point with the objective of determining if, with reduced station water requirements, the water system could be simplified by processing all the water through vapor compression units and eliminating the reverse osmosis system.

Two approaches were analyzed and compared: one (System I) utilizes vapor compression for potable water recovery and reverse osmosis for wash water recovery, and the other (System II) utilizes vapor compression for recovery of all water. To broaden the scope of the study, two cases were evaluated for each approach. The baseline case considered water usage rates as previously specified for the MSS. The high water usage case considered, in addition to the water usage rates in the baseline case, the additional water processing requirements generated by clothes and utensil washing.

4.2 REQUIREMENTS

The water requirements for the vehicle include all water which results from the various metabolic and system functions. The baseline case reflects MSS water usage requirements. The maximum usage case uses MSS requirements augmented by the clothes and utensil washing requirements being used on the space station prototype (SSP) program.

The requirements for both the baseline and the maximum usage rates are shown in Tables 4-1 and 4-2. It should be noted that the study was based on the values in these two tables; however, the current design is based on the values in Table 4-3. The current baseline water processing rate (161.4 pounds, Table 4-3) is slightly less than the trade water processing rate (162.2 pounds, Table 4-1). The figures are for the baseline rate as the current design does not call for clothes or utensil washing. The current water use rates are less than the values used in this study; therefore, weight, power, and volume requirements will be somewhat less than the tabulated results of the study.

4.3 TRADE DATA

To establish reference for analysis, systems were defined for the two water usage rates. To effect a system water balance while maintaining a reverse osmosis recovery efficiency of 80 to 90 percent, urinal flush is supplied from the reverse osmosis in the low usage case and from the vapor compression unit in the high usage case. In both cases the combined urine and

Table 4-1. Water Balance, System I (Reverse Osmosis, Vapor Compression)

Fresh Water Req.	Rate lbs/day		Waste Water Prod.	Rate Lbs/day	
	Baseline	Maximum		Baseline	Maximum
From Rev. Osmosis			To Rev. Osmosis		
Shower	28.4	28.4	Shower	24.9	24.9
Sinks & Housekeeping	30.0	30.0	Sinks & Housekeeping	26.3	26.3
Urine flush	21.0		Condensate	34.3	34.3
Residium	17.1	38.1	Clothes		220.0
Clothes		220.0	Utensils		90.0
Utensils		90.0			
	96.5	406.5	*Sub Total	85.5	395.5
Less sabatier	-11.0	-11.0			
Sub total	85.5	395.5			
From Vapor Comp.			To Vapor Comp.		
Crew	33.5	33.5	Residium	17.1	38.1
Experiments	35.0	35.0	Experiments	35.0	35.0
Water electrolysis	24.5	24.5	Urine & urine flush	41.7	41.7
Urine flush		21.0	*Sub total	93.8	114.8
Loss	-2.8	-3.5			
Sub total	95.8	117.5	Plus make up	+2.0	+2.7
			Sub total	95.8	117.5
Total	181.3	513.0	Total	181.3	513.0

*Reverse osmosis & vapor compression units sized to these figures.

Space Division
North American Rockwell

Table 4-2. Water Balance, System II (Vapor Compression)

Fresh Water Required	Rate (lb/day)		Waste Water Produced	Rate (lb/day)	
	Baseline	Maximum		Baseline	Maximum
From Vapor Comp.			To vapor comp.		
Crew	33.5	33.5	Condensate	34.3	34.3
Shower	28.4	28.4	Shower	24.9	24.9
Sinks & Housekeeping	30.0	30.0	Sinks & Housekeeping	26.3	26.3
Experiments	35.0	35.0	Experiments	35.0	35.0
Urine Flush	21.0	21.0	Urine & Urine flush	41.7	41.7
Water electrolysis	24.5	24.5	Clothes	--	220.0
Clothes	--	220.0	Utensils	--	90.0
Utensils	--	90.0	*Sub total	162.2	472.2
Loss	4.9	14.2			
	177.3	496.6			
Less Sabatier	- 11.0	- 11.	Plus make up	+ 4.1	+13.4
Total	166.3	485.6	Total	166.3	485.6

*Vapor compression unit sized to this figure

Space Division
North American Rockwell

Table 4-3. Water Balance and Requirements

Fresh Water Requirements	Rate (lbs/day)	Waste Water Production	Rate (lbs/day)
Crew*	35.5	Condensate	34.8
Shower	28.5	Shower	26.5
Sinks and Housekeeping	26.4	Sinks and Housekeeping	23.4
Experiments	35.0	Experiments	35.0
Urinal Flush Water	21.0	Urine and Urinal Flush Water	41.7
Water Electrolysis	11.8		
		Sub Total	161.4
total	158.2	Processing Loss	-3.2
		Total	158.2

*Crew: 33.5 required plus galley latent loss of 2.00 lb/day

REQUIREMENTS

Wash Water Shall be Recovered (NASA 1.407)		
Electrolysis Water Resupply	11.6	
Experiment Support	35	lb/day
Emergency Reserve	205	lb/day
Food & Drink 6.54 lb/m-D		
Miscellaneous 2.00 lb/m-D		
Store V.C. Vent gas	12 hours	
EVA Support	11.0 lb H_2O/man-event	
Potable Water Recovery Process Rate	161	lb/day

Space Division
North American Rockwell

flush water are processed in the vapor compression unit. Details of the system are shown in Figures 4-1 through 4-4. The recovery efficiency of the vapor compression assemblies is assumed to be 97 percent. This is in conformance with recent test data where solid dryers are not incorporated in the system. This effects a somewhat larger water loss but saves on weight, power, expendables, and maintenance time.

Schematics of basic reverse osmosis and vapor compression assemblies are shown in Figures 4-5 and 4-6. These concepts were used as the definition of the hardware requirements of this study. Water process rates are based on processing the nominal daily water requirements in 18 hours so that use of the redundant system will not be required after periods of routine maintenance.

The systems for this study were sized from the aforementioned guidelines and requirements. All results pertain to a single system which has the capability of processing the total water requirements. The redundant system in the second isolable volume is not included and all weights and volumes must be doubled for total vehicle hardware. Shown in Table 4-4 are the basic characteristics of each of the systems. Also shown are the membrane area for reverse osmosis and the number of stills required in the vapor compression systems.

Table 4-4. System Characteristics

	Reverse Osmosis		Vapor Compression	
	Process Rate (lb/hr)	Membrane Area (ft^2)	Process Rate (lb/hr)	Number of Stills
Baseline water usage				
System I	4.8	20	5.2	2
System II	-	-	9.0	3
Maximum water usage				
System I	22.0	85	6.4	2
System II	-	-	26.2	8

System I - Reverse osmosis and vapor compression

System II - Vapor compression

4.4 TRADE STUDY

Table 4-5 gives the physical characteristics and penalties of Systems I and II for baseline water usage rates. The table indicates that the weights of the various types are similar, with System I having a slight advantage. On the other hand, power and volume considerations favor System II. Maintenance

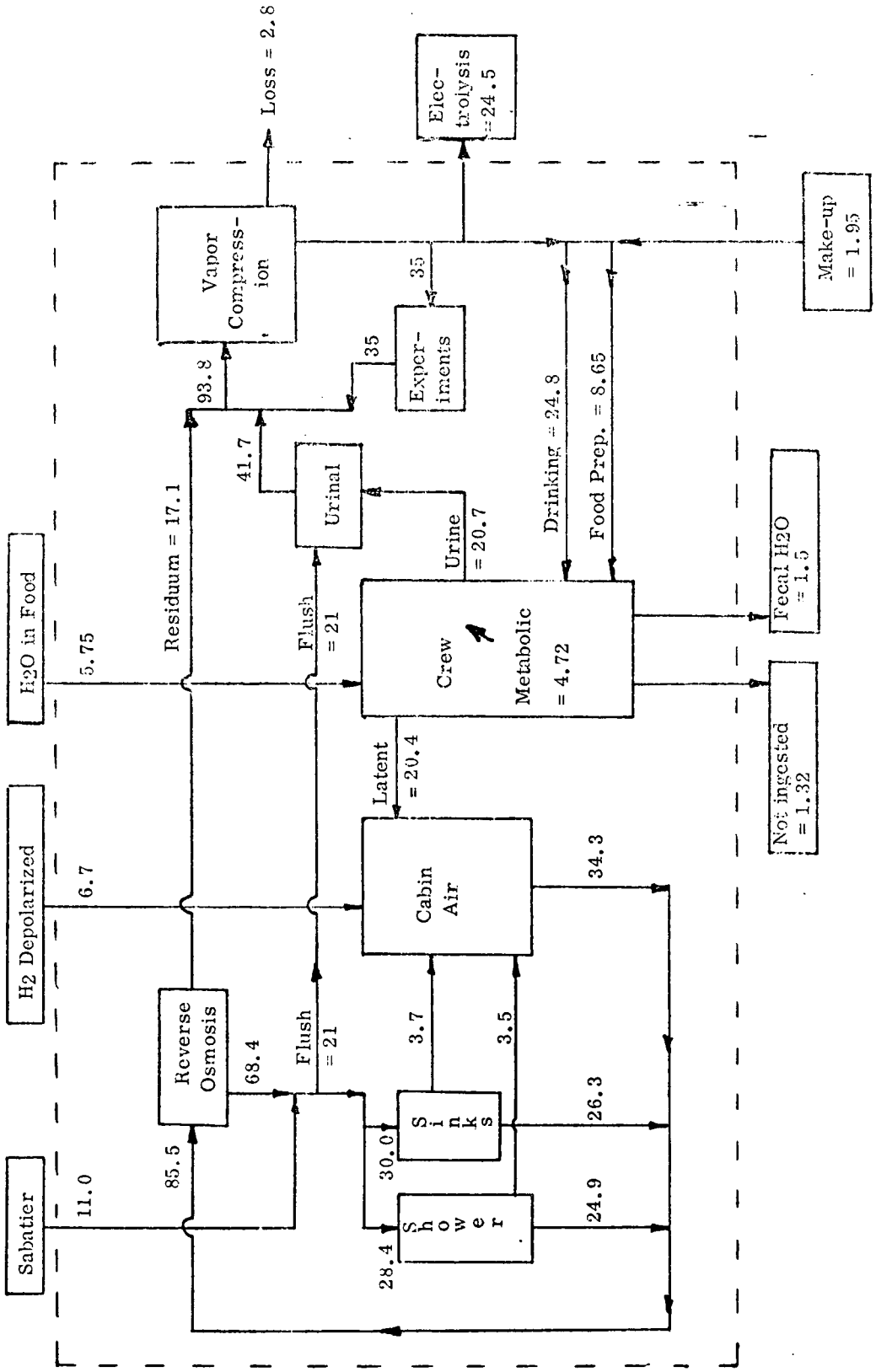

Figure 4-1. Vehicle Water Balance - Baseline Water Usage (System I)

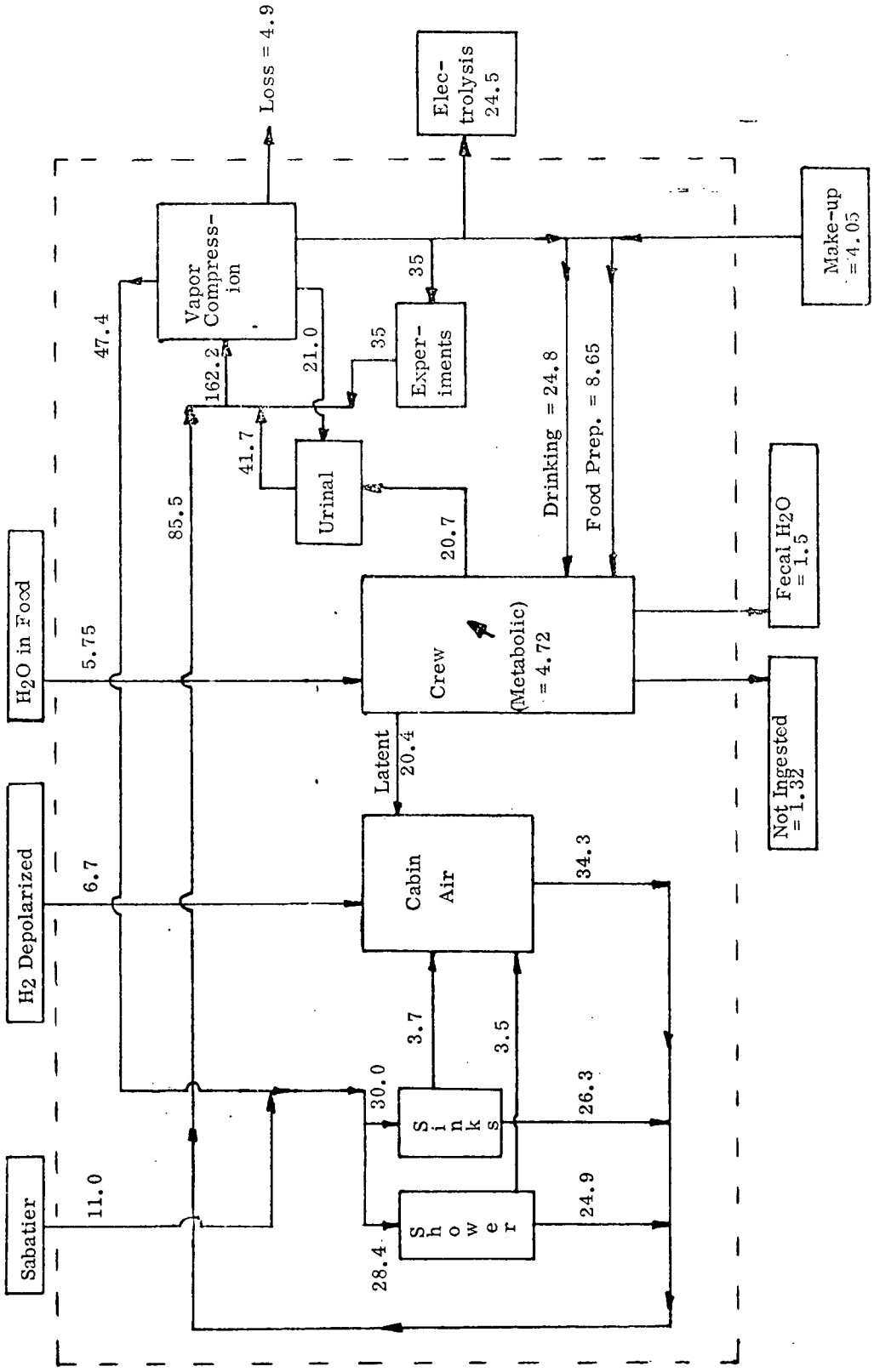

Figure 4-2. Vehicle Water Balance - Baseline Water Usage (System II)

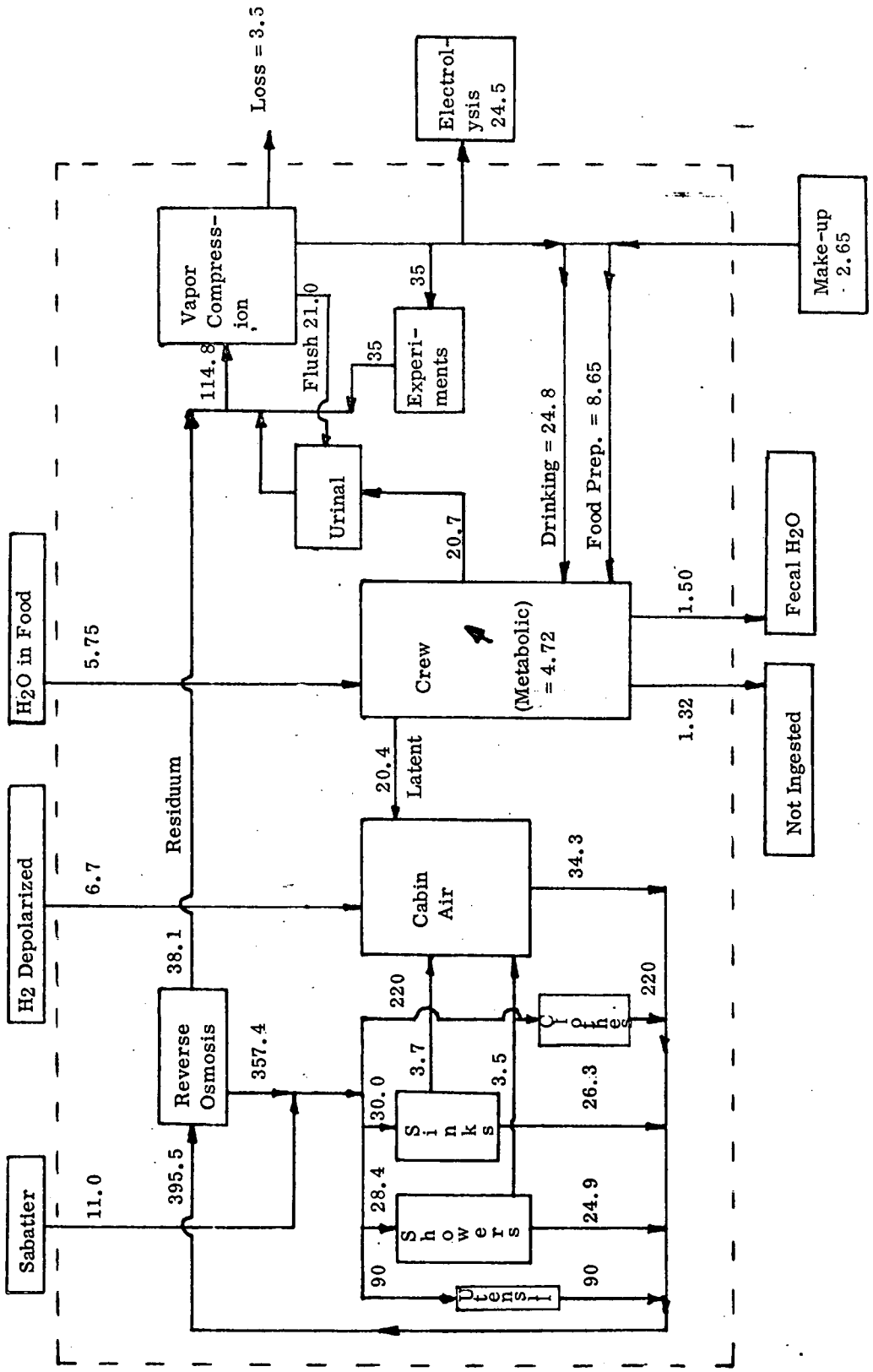

Figure 4-3. Vehicle Water Balance - Minimum Water Usage (System I)

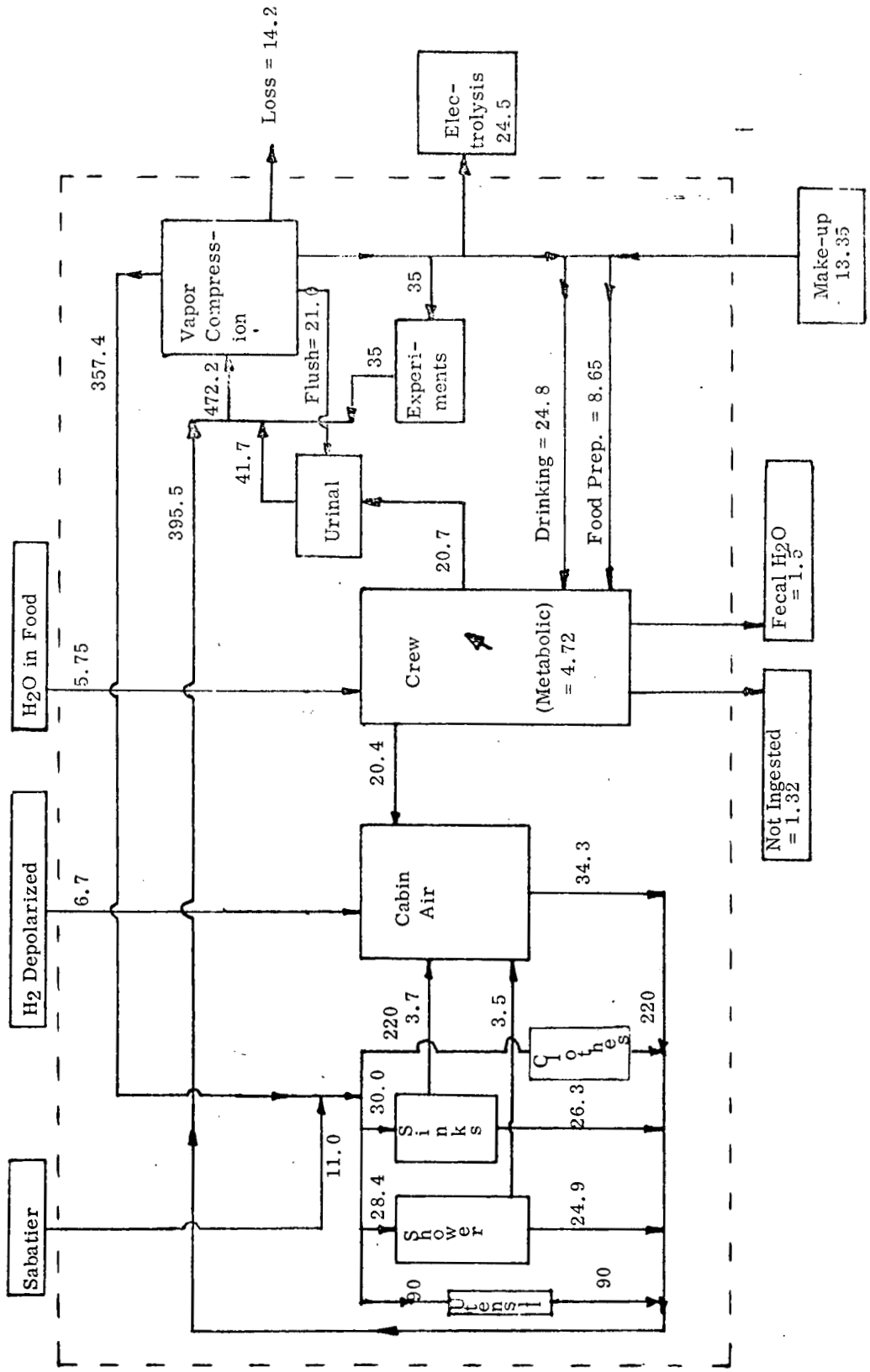

Figure 4-4. Vehicle Water Balance - Maximum Water Usage (System II)

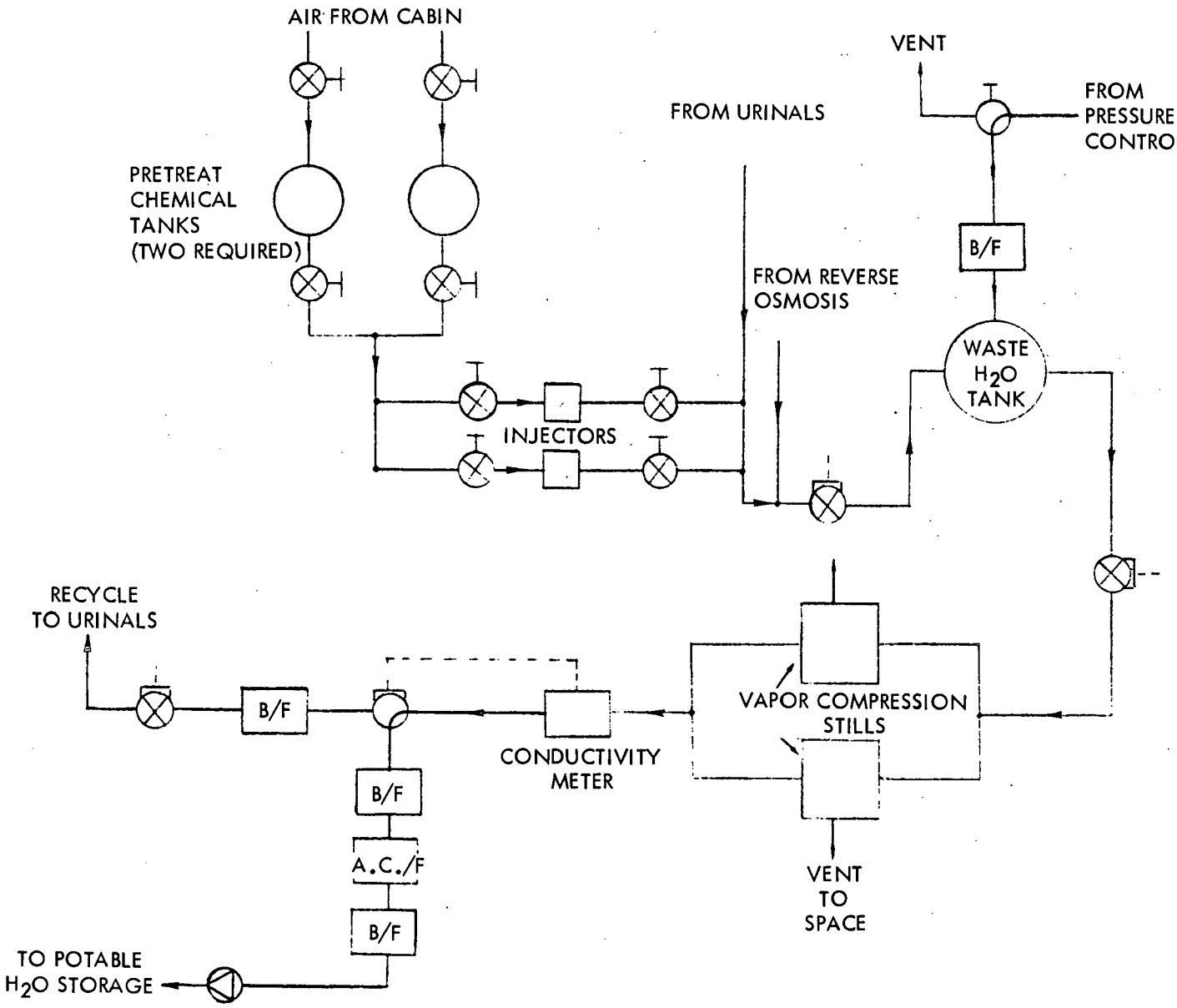

Figure 4-5. Vapor Compression Subassembly

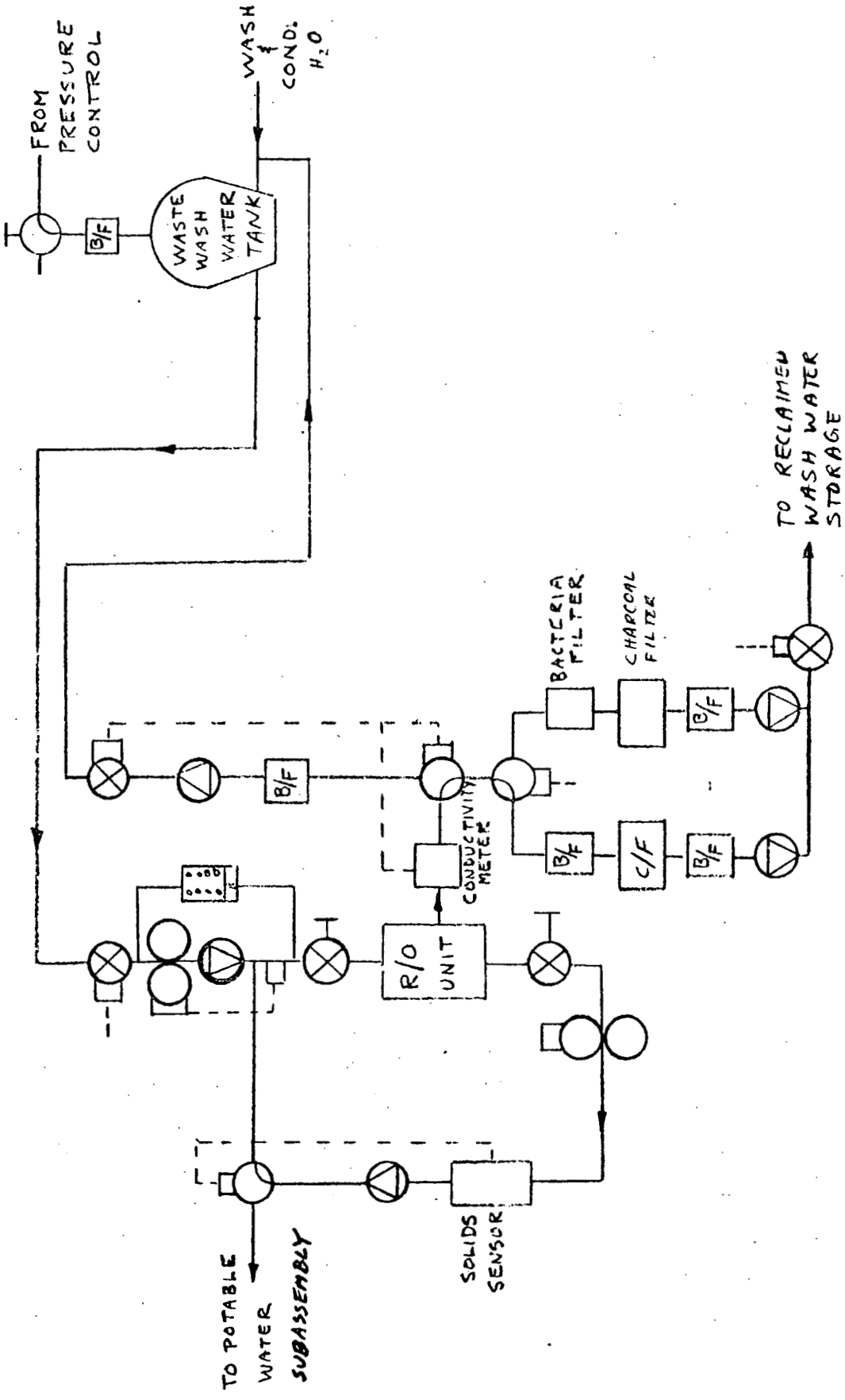

Figure 4-6. Reverse Osmosis Subassembly

considerations also favor System II because there is less hardware involved. In the last characteristic, daily makeup water, both systems are the same. Considering all the characteristics, both systems are nearly equal and additional data are required to make selection.

Table 4-5. System Physical Characteristics and Penalties for Baseline Water Usage

Item	System I			System II
	Reverse Osmosis	Vapor Compression	Total	Vapor Compression
Installed hardware weight (lb)	84	427	511	662
Launch spares weight (lb)	42	457	499	508
120-day expendable weight (lb)	34	74	108	121
120-day spares weight (lb)	5	51	56	56
Power (watts)	305	531	836	756
Installed hardware volume (ft^3)	27	43	70	67
Scheduled maintenance time (hr) 5-year period	466	480	946	493
Unscheduled maintenance time (hr)	7	14	21	23
Daily makeup water (lb)	-	1.95	1.95	4.05

Table 4-6 shows the same characteristics at maximum usage rates. It shows clearly that from weight, power, volume, and daily water makeup consideration System I is by far superior. Scheduled maintenance, on the other hand, favors System II because of less hardware.

Table 4-6. System Physical Characteristics and Penalties for Maximum Water Usage

Item	System I			System II
	Reverse Osmosis	Vapor Compression	Total	Vapor Compression
Installed hardware weight (lb)	145	487	632	1880
Launch spares weight (lb)	77	514	591	1012
120-day expendable weight (lb)	96	91	187	332
120-day spares weight (lb)	7	58	63	121
Power (watts)	425	600	1025	1521
Installed hardware volume (ft^3)	47	50	97	192
Scheduled maintenance time (hr) 5-year period	466	480	946	508
Unscheduled maintenance time (hr)	7	14	21	54
Daily makeup water (lb)	-	2.65	2.65	13.35

An additional consideration is the purity monitoring system requirement. The purity monitoring system weighs approximately 12 pounds and requires about 225 watts of power and occupies 2.1 cubic feet of space. System I requires a separate monitoring system for the reverse osmosis and the water compression systems. One of these monitoring systems is eliminated for the single vapor compression concept of System II.

Reliability Considerations

Reliability considerations are reflected by the spares, weights, and unscheduled maintenance times required. Table 4-5 shows that in both areas, System I and System II are nearly equal, which indicates also that the quantity of hardware involved is nearly equal (Table 4-4). Table 4-6 shows that at maximum usage rates System II requires almost twice as many spares and unscheduled maintenance time. This occurs because, to meet maximum rates, eight stills are required (Table 4-4). This large amount of hardware in System II accounts for the lower indicated reliability.

For baseline requirements either system would be a reasonable selection from reliability point of view. At maximum usage System I is by far the better choice.

Complexity

At baseline usage System II as shown on Table 4-7 appears to be the least complex due to the fact that only one process technique is used. The single process reduces the plumbing and distribution.

In the maximum case, System II with eight stills would be somewhat more complex.

Crew Involvement

The crew involvement considerations are reflected through a determination of the maintenance time required by the two system concepts under consideration. The unscheduled maintenance time estimates were obtained by failure rate analysis and estimated life as shown on Table 4-8 for vapor compression portion of System I. The scheduled maintenance determination shown was as indicated on Table 4-8, determined by estimating the time required to replace system filters. The data shown on Table 4-8 were compiled for both baseline and maximum usage rates and are shown in summary on Table 4-9. As would be expected, the scheduled maintenance times for System I are much higher than for System II since twice as many filters must be changed. The unscheduled maintenance at baseline usage is nearly the same with the major portion of time being required by vapor compression in both systems. In the maximum usage case System II has a somewhat larger unscheduled maintenance time due to the larger number of stills required to meet the higher processing rate.

In overall comparison, Table 4-9 shows that from a scheduled maintenance standpoint System II is the better approach. From an unscheduled maintenance time standpoint, the systems are equal at low water usage rates, and at high usage rates System I is the better. Comparing the total times, System II is the better approach.

Table 4-7. Subassembly Relative Complexity

System I	System II
1. Vapor compression unit 2. Minimum of 2 potable water tanks* 3. Potable water plumbing - supply lines 4. Potable water plumbing - return lines 5. Purity monitor system connected to potable water tanks 6. ISS control interface for monitoring system 7. Reverse osmosis unit 8. Minimum of 2 wash water tanks* 9. Wash water plumbing - supply lines 10. Wash water plumbing - return lines 11. Purity monitor system connected to fresh wash water tanks 12. ISS control interface for monitoring system	1. Vapor compression unit 2. Minimum of 2 potable water tanks 3. Potable water plumbing - supply lines 4. Potable water plumbing - return lines 5. Purity monitor system connected to potable water tanks 6. ISS control interface for monitoring system
Other Effects	Other Effects
1. Cannot urinate in shower 2. Cannot drink shower water 3. Some sinks may require three plumbing lines: a. Potable supply for drinking b. Wash supply for washing c. Wash return	1. One unit processes all waters so do not have to keep waste waters separate; can urinate in shower 2. Total water system is potable; one can drink shower water 3. All sinks only require two plumbing lines: a. Potable supply b. Potable return

*Purity monitoring system operates by monitoring "use tank" while other tank is being filled from water recovery unit

Space Division
North American Rockwell

Table 4-8. Maintenance Time, Baseline Water Usage - System 1, Vapor Compression

Item	No.	MTBF (1000 hr)	Failures 5 Years	Replace. Time/ Event	Unsched. Mission Times	Life (1000 hr)	Sched. Change Freq.	Replace. Time/ Event	Sched. Time	Total Time
Holding tank		-		4.0						
Chemical injector	1	1000	0.044	5.0	0.450	90				0.450
Check valve	3	2000	0.022	1.3	0.087	90				0.087
S.O. valve	8	1870	0.024	1.3	0.250	90				0.250
Conductivity sensor	2	200	0.220	0.6	0.044	90				0.044
Recycle accumulator	2	279	0.158	0.7	0.222	90				0.222
Controller	2	99	0.445	0.7	0.622	30	1.47	0.7	1.03	1.652
3-way sol. valve	1	772	0.057	1.3	0.074	90				0.074
Vapor comp. still	2	50	0.880	5.0	8.800	17.5	2.50	5.0	25.0	33.800
Manual s.o. valve	4	1870	0.024	1.3	0.115	90				0.115
Sol. s.o. valve	7	1093	0.040	1.3	0.364	90				0.364
3-way man. valve	2	1200	0.037	1.3	0.096	90				0.096
Pump	2	167	0.264	5.0	2.640	90				2.640
Flow control valve	2	563	0.078	1.3	0.202	90				0.202
Total unscheduled					13.966				26.03	39.966
Bacteria filter	2	-				-	10-day	0.8	296	1
Charcoal filter	1	-					15-day	0.8	98	
Chemical tanks	2	-					120-day	2.0	60	
Total scheduled									454	
Maintenance based on 5-year period										

Space Division
North American Rockwell

Table 4-9. Maintenance Time Summary

Use Rate and Maintenance Type	Maintenance Time, Hours/5 Years			
	System I			System II
	Reverse Osmosis	Vapor Compr.	Total	Vapor Compr.
Baseline Usage:				
Scheduled	473	480	953	493
Unscheduled	7	14	21	23
Total	480	494	974	516
Maximum Usage:				
Scheduled	473	480	953	508
Unscheduled	7	14	21	54
Total	480	494	974	554

Development Cost

Development costs for the two units is 6.74 million dollars for vapor compression and 1.42 million dollars for reverse osmosis. It is assumed these values would not change with changes in capacity of the basic design. This is predicated on the fact that effort is for the development of dissimilar components. The processing capacity of the units depends on the addition of similar components: additional membrane area for reverse osmosis and additional stills for vapor compression. From the above rationale, the development cost for System I is 8.16 million dollars and the development cost for System II is 6.74 million dollars for both water usage cases.

Development Risk

The vapor compression and reverse osmosis concepts are being developed as a part of the SSP program. At present, the vapor compression concept is operating "as advertised" while some problems have occurred with reverse osmosis. There has been some clogging of membranes and water quality has been lower than anticipated. It is felt that these problems can be solved with a new membrane material already developed. However, if the new membrane does not solve the problems, the weight of the reverse osmosis system could rise considerably due to additional membrane packages required and more charcoal for final filtering of the product water.

4.5 CONCLUSIONS

For baseline usable rates, System II only vapor compression is selected on the basis of reduced cost and complexity. However, it is very clear that with increased water usage rates System I, using reverse osmosis and vapor compression, would be the better selection. It should be noted that, with the selection of vapor compression as initial concept for relatively fixed rates for potable water, increases would be expected in the wash water area. With increases in the wash water area, the addition of reverse osmosis to the selected concept appears to be a logical approach to an overall flexible water management assembly.

For the high water usage case, System I requires between 1/3 and 1/2 the hardware weight, spares, and expendables weight, power, and volume of System II. Also, the makeup water resupply requirement is approximately 1/5 that required for System II (Table 4-6). These major differences more than outweigh the simplicity and development cost savings gained by utilizing the single type of processing of System II.

The choice is less clear-cut at the baseline water usage rate. For this case, System II (vapor compression) requires approximately 20 to 40 percent more hardware weight, spares weight, and power and twice as much makeup water as System I. However, System II requires less crew involvement, has lower development cost, is less complex, and has higher development confidence than System I. Hence, these factors make the vapor compression system more attractive if total vehicle and resupply constraints will allow the higher weight and power penalties.

5. ATMOSPHERIC CONTROL TRADE

The atmospheric control assembly distribution system is significant to MSS design because of the potentially large physical characteristics of weight, size, power, and complexity and because of the intimate relationship of this assembly to crew comfort and life support. The purpose of this study is to identify the preferred design and atmosphere circulation concept for atmosphere revitalization and temperature control.

The following sections present design requirements, ventilation concept trade, preliminary design trades, the selected concept, and issues for further study. Hamilton Standard Division of United Aircraft Corporation assisted in the analysis of the ventilation concept under separate subcontract to NR.

5.1 REQUIREMENTS

The requirements for atmospheric control for the initial (6-man) and growth (12-man) stations are:

Metabolic heat (total)	- Nominal:	11,900 Btu/man-day
	Range:	10,300-13,600 Btu/man-day
	Design maximum:	650 Btu/man-hour
CO_2 production	- Nominal:	2.25 lb/man-day
	Range:	1.98-3.0 lb/man-day
Latent water loss	- Nominal:	3.40 lb/man-day
		2.78-8.5 lb/man-day
H_2O generation	- 3.26 lb/hour maximum	
	Detail definition shown in Table 5-1	
Sensible heat loads	- 3.5 kw maximum per module	

The space station atmosphere temperature will be selectively maintained. Temperature selection will be on an areas basis as follows:

60 to 75 degrees F in exercise areas
65 to 80 degrees F in personal hygiene areas
65 to 75 degrees F in all other areas

All appropriate habitable compartments or enclosed areas will have independent temperature control (i.e., crew compartments, galley, personal hygiene areas, and exercise areas). CO_2 partial pressure is:

Nominal:	3 mm Hg
Maximum:	7.6 mm Hg for 14 days
Emergency maximum:	15 mm Hg for 8 hours

Cabin ventilation rates (all habitable areas) are:

Nominal: 40 ft/min
Minimum: 15 ft/min
Maximum: 100 ft/min

The water vapor partial pressure will be maintain within 8 and 12 mm Hg and no condensation will form on internal surfaces. Total pressure is 14.7 psia (oxygen-nitrogen); oxygen partial pressure is 3.1 to 3.5 psia.

The crew latent load is a function of cabin temperature and crew activity level as shown in Figure 5-1. A maximum water generation of 2.0 pounds/hour for a six-man crew was used for design purposes. The humidity model given in Table 5-1 was used for the ventilation trade studies and does not represent the final configuration which resulted from the Phase B study. The trade was conducted from a generic point of view and the final configuration is sufficiently similar to the study models that the conclusions are valid.

A summary of the approximate ventilation requirements for the MSS is given in Table 5-2 for each of the ventilation functional requirements.

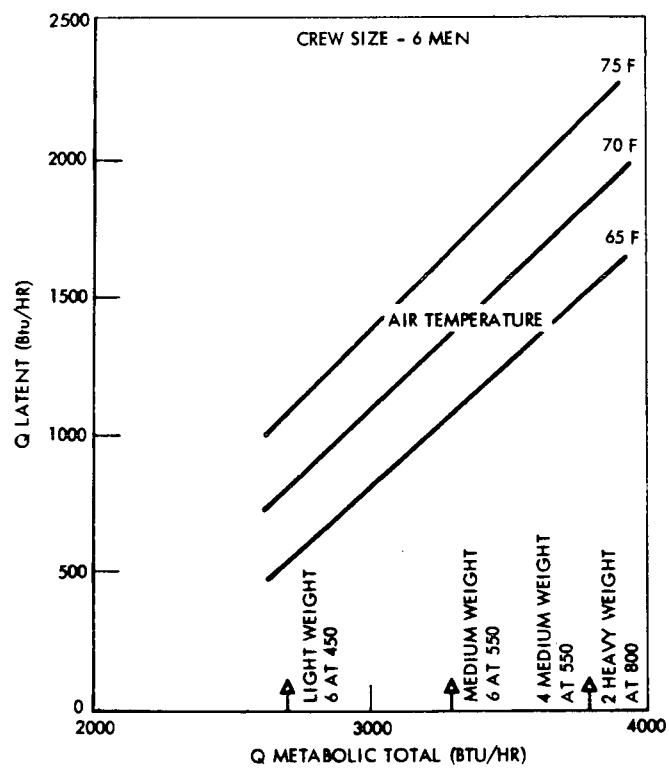

Figure 5-1. Crew Latent Heat Production

Table 5-1. Atmosphere Latent Loads

Module	Equipment Lb H_2O/Hr		Crew Lb H_2O/Hr		Total Lb H_2O/Hr	
	Minimum	Maximum	Minimum	Maximum	Minimum	Maximum
Core	0	0	0 (0)	1.67(5)	0	1.67
Power	0	0	0 (0)	.67(2)	0	.67
Crew #1	0	.22	.33 (1)	2.00(6)	.33	2.22
Crew #2	0	1.26	.67 (2)	2.00(6)	.67	3.26
Control #1	0	.02	.67 (2)	2.00(6)	.67	2.02
Control #2	0	.02	0 (0)	2.00(6)	0	2.02
Cargo	0	0	0 (0)	1.33(4)	0	1.33
RAM	0	0	0 (0)	1.33(4)	0	1.33

NOTES:

1. Number of crew indicated in parenthesis

2. Equipment humidity sources

Shower	2.04 lb H_2O/day
Sinks	3.0 lb H_2O/day
Galley	2.0 lb H_2O/day
Experiments	.1 lb H_2O/day

3. Latent model consistent with MSS design in April 1971. Current design does not alter study conclusions based on this model.

Table 5-2. Ventilation Requirements Summary

Function	Ideal Module Requirement - CFM		Remarks
	Initial Station 6-Man	Growth Station 12-Man	
Contaminant control			
Catalytic oxidizer	<10	<11	Nonmetabolic, reference Hamilton Standard
Acid gas absorbent	<78	<78	Nonmetabolic
Ammonia absorbent	50	102	Metabolic
Charcoal	100	180	Metabolic
Airborne bacteria	1000	2000	Metabolic
CO_2 control	60	120	50 percent efficiency, 3 mm Hg work day rate .8 lb CO_2/hour
Humidity control	200	300	3.26 lb H_2O/hour, 45 F sat exit, 5.0 lb H_2O/hour for 12-man
Temperature control	~1400	~1500	3 kw initial, 3.5 kw growth, 67 F in, 60 F out
Comfort circulation	~6000	~6000	40 ft min.

Space Division
North American Rockwell

5.2 ATMOSPHERIC VENTILATION CONCEPTS

The equipment concepts selected for atmospheric control are sensitive to the ventilation concepts. The selected equipment concepts for the MSS are:

Contaminants - Charcoal absorbent beds, filter and catalytic burner

CO_2 - Hydrogen depolarizer (closed oxygen system)

Humidity - Condensing heat exchanger

Temperature - Sensible heat exchanger

Comfort circulation - Fans

If independent CO_2 control in each module were desired the basic selection of a closed oxygen system and of a hydrogen depolarizer would be subject to trade with an LiOH unit.

A primary design question is therefore concerned with how much centralization should be employed for the MSS. It is reasonably apparent that relatively complex equipment such as a hydrogen depolarization unit for CO_2 removal operating with a Sabatier/electrolysis oxygen reclamation system should not be repeated in each of the eight habitable modules of the initial MSS. Therefore, a trade is established as to which functions are centralized and which are installed independently in each module. Contaminant removal and CO_2 removal can be accomplished from the same process flow. Humidity control requires a relatively small increase in atmosphere flow rate compared to the temperature control flow (Table 5-2). Considering the low-temperature coolant loop interface and the condensate water interface with the condensor, centralized humidity control is justified. The ventilation trade then reduces to selecting the best temperature and humidity control concept.

Candidate Concepts

The four basic concepts considered are listed in Table 5-3. Schematics of the four concepts are shown in Figure 5-2.

Table 5-3. Candidate Ventilation Concepts

Concept	Humidity Control	Temperature Control
1	Central, series flow	Independent
2	Central, parallel flow	Independent
3	Central, parallel flow	Central
4	Independent	Independent

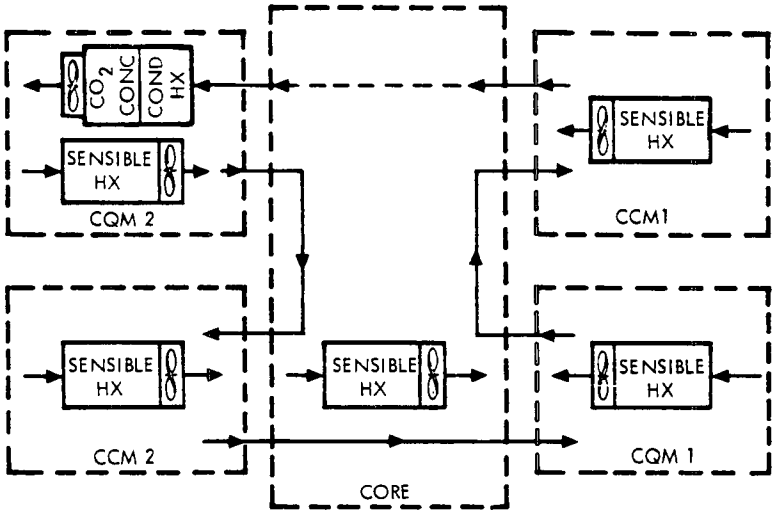

1. CENTRAL HUMIDITY CONTROL, SERIES FLOW
INDEPENDENT TEMPERATURE CONTROL

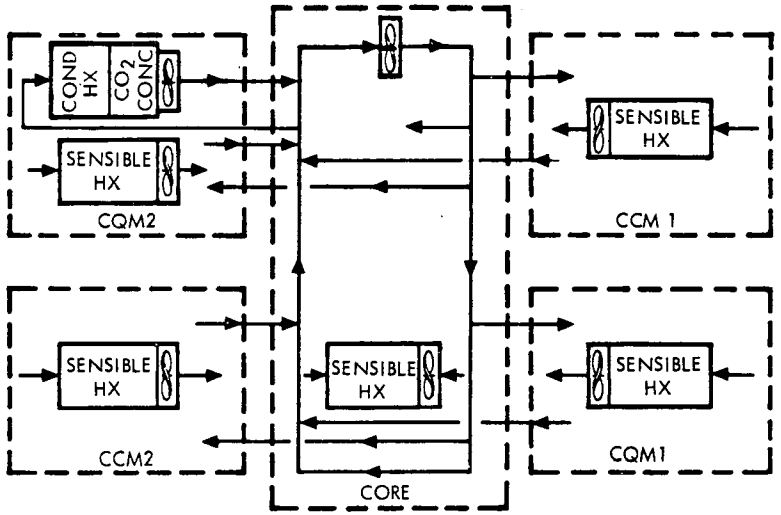

2. CENTRAL HUMIDITY CONTROL, PARALLEL FLOW
INDEPENDENT TEMPERATURE CONTROL

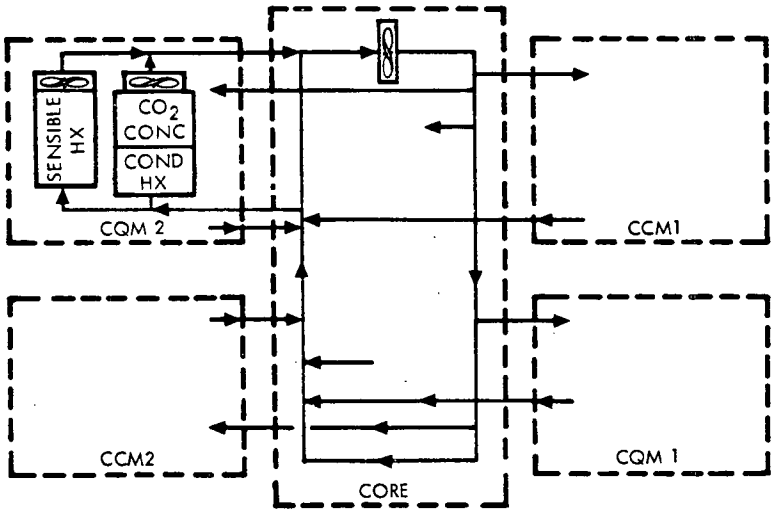

CENTRAL HUMIDITY CONTROL, PARALLEL FLOW
3. CENTRAL TEMPERATURE CONTROL, PARALLEL FLOW

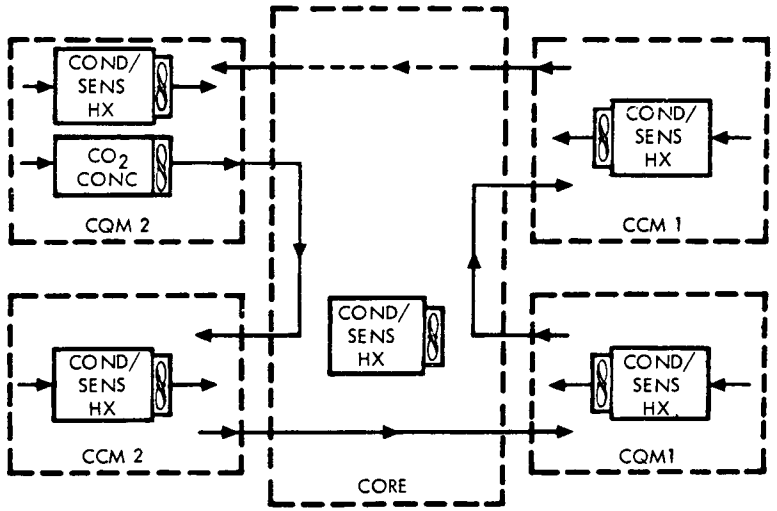

CENTRAL CO_2 CONTROL, SERIES FLOW
4. INDEPENDENT HUMIDITY/TEMPERATURE CONTROL

Figure 5-2. Candidate Concept Schematics

Space Division
North American Rockwell

Concept 1 - Series Process Flow

Concept 1 considers a central humidity control heat exchanger with process flow distributed to the individual modules in series. Temperature control is performed by individual heat exchangers located in each module.

Several advantageous features of this concept are:

1. The flow distribution method can adapt to varying numbers of modules. An add-on module can be connected into the series flow scheme (assuming no increase in total CO_2 or humidity production).

2. Adapts to the dual isolable volume scheme (with isolation valves added at the pressure bulkhead).

3. Provides the highest condensor inlet dew point PCO_2 and CO_2 concentrator inlet.

4. Can provide a backup mode to a failed cabin heat exchanger. A dual-speed air transfer fan located in the series flow ducting can provide air exchange between two adjacent modules. An adequate flow capability would be sized to maintain a 75 F temperature.

The concept does present several problems, including the following:

1. An imposition of process air heating and cooling loads with adjacent modules being controlled to alternate 65 and 75 F cabin temperatures.

2. High latent loads (or peak loads) should be located in the last series compartment before the condenser to eliminate transients. This places some restriction on location of the water and waste management equipment.

3. The series flow arrangement results in a module dependency which requires isolation provisions.

Concept 2 - Parallel Process Flow

Concept 2 uses a parallel flow arrangement to distribute air to the modules. A central circulation system using a high flow fan is located in the core module with flow distributed to the individual modules. Return flow is mixed in the return duct. Humidity and CO_2 control flow is delivered at the mixed condition to the module containing the condenser and the CO_2 process equipment. Conditioned flow is returned to the central distribution ducting. Cabin temperature control is provided by individual sensible heat exchangers. Desirable features of this concept include:

1. Flow distribution penalty is low due to lower ducting pressure drops.

2. Averaging of the process air temperature in the circulation ducting reduces the heating and cooling loads produced in alternative 65 and 75 F compartments.

3. Dual isolable volumes may be accommodated with appropriate isolation valves in the circulation ducting.

4. Individual compartments may be isolated without affecting operation of the remaining modules.

Disadvantages of the concept include:

1. Peak latent and CO_2 loads may occur in a single compartment. Flow mixing dilutes concentrations and requires larger process equipment.

2. Modular or redundant cabin heat exchangers are required because module sensible load sharing is not accommodated.

3. Large ducting volumes are required in the core module.

Concept 3 - Central Temperature and Humidity Control

The salient advantage of this concept is the result of combined sensible loads resulting in a small single heat exchanger. Humidity and CO_2 process flow and equipment are located in parallel with the sensible heat exchanger. A high flow-parallel distribution system is necessary to provide individual module thermal control.

This concept is not carried through the detailed tradeoffs primarily due to the very high volumetric flow requirements which result in large duct volumes and excessive interface port sizes. Individual module and volume isolation becomes less feasible than in other concepts. Location of the sensible heat exchanger unit would necessarily have to be in the core module since total flow could not practicably be ducted into and out of a single module containing all of the process equipment.

The centralized concept was incorporated in the design of the 33-foot diameter station and required a supply and return tank each 12 by 12 inches. Large duct sizes at module interfaces should be avoided for the MSS.

Concept 4 - Local Sensible and Latent Load Control

This candidate provides local temperature and humidity control, probably in a single heat exchanger in each module. CO_2 and trace contaminant control would be affected centrally, primarily due to the complexity of the CO_2 collection, reduction, and oxygen generation equipment. Distribution ducting would be required for the CO_2 process flow and would be similar to those of Concepts 1 or 2.

Since humidity conditioned air must be provided to the central CO_2 concentrator, about one half to three fourths of the total vehicle's latent load

is taken care of independent of the individual module units. Each compartment must, therefore, provide additional equipment to handle peak compartment latent loads of about three fourths of the vehicle total. For a five-module space station, 400 percent installed capacity is required, not including redundancy. Any advantages of combining temperature and humidity control in a single unit are overriden by this factor.

Among the disadvantages of this concept are that condensing and water separating equipment must be located in each module and no module isolation advantages result since CO_2 process flow must be circulated.

The concept is of interest when individual module liquid heat transport circuits are considered. Independent module thermal control (including humidity control) would be possible and would integrate with individual module radiator systems.

Concept Evaluations

The approximate weight and power for the four concepts are shown in Table 5-4.

Table 5-4. Concept Physical Characteristics

Concept	Weight (lb)	Power (watts)
1 - Central series humidity, independent temperature	3930	2380
2 - Central parallel humidity, independent temperature	3491	1686
3 - Central parallel humidity, central temperature	4900	3000
4 - Independent humidity, independent temperature	4200	3500

Concept 3 is deleted from further analysis because of higher weight and power and excessive duct sizes. Concept 4 is deleted from further analysis because of higher weight and power and the complexity of providing proper redundancy for eight independent modules.

The central-parallel and central-series configurations (Concepts 1 and 2) show the greatest potential from an overall perspective, and thus require a more detailed comparison. For the purposes of evaluation, a cluster of 10 habitable modules was assumed.

Concept 1 - Series Process Flow

This concept consists of a central humidity control heat exchanger and hydrogen depolarized CO_2 concentrator with the process flow distributed to the individual modules in series. In this scheme, water and CO_2 are picked up by the process flow as it passes through the cabins and are removed when it passes through the central humidity and CO_2 control units. Because the total process flow passes through each cabin the distribution of both CO_2 and

water generation has no effect on the design. Thus the humidity and CO_2 control units need only be sized to accommodate the maximum CO_2 and water generation rates at the maximum allowable concentration. The total equivalent weight includes actual hardware weight plus a power penalty of 0.71 pound per watt.

The study assumes the dry bulb temperature of the process flow entering each cabin to be 75 F and the desired ambient temperature to be 65 F. For these conditions, maximum sensible heat removal is required. While this condition defines the sensible hardware weight, the power penalty could be somewhat less by utilizing speed control on the fans. Further definition of acceptable cabin temperature control conditions is required to show the possible weight savings.

The specified humidity limits are 46 to 57 F. Because the total process flow passes through the condensing heat exchanger and the minimum cabin dew point is 46 F, the heat exchanger outlet dew point must not go below 46 F. A practical tolerance band for control is ± 2 F, thus the outlet dew point will be 48 ± 2 F. To assure adequate heat exchanger capacity under these conditions the unit should be sized to remove 3.6 pounds of water per hour at an outlet dew point of 50 F. At these conditions the required flow is 340 cfm. Since the required flow for CO_2 removal is 200 cfm, humidity control sets the flow rate.

The procedure for characterization of the series flow concept is:

1. Establish flow rate through concentrator to remove specified CO_2 generation and maintain CO_2 pp below 3.0 mm Hg.

2. Establish flow rate through latent heat exchanger to remove specified H_2O generation and maintain dew point between 46 and 57 F.

3. Select required process flow rate which is larger of Steps 1 and 2.

4. Determine duct weight at optimum conditions and the previously selected 340 cfm.

5. Characterize total system equivalent weight for the various process flow rates. Use optimum ducting of Step 4 and add weights of other hardware to determine system weight at 340 cfm (Figure 5-3).

6. Characterize total system power for various process flow rates. Use optimum ducting of Step 4 and power of other subsystems. Determine minimum system power at 340 cfm from Figure 5-4.

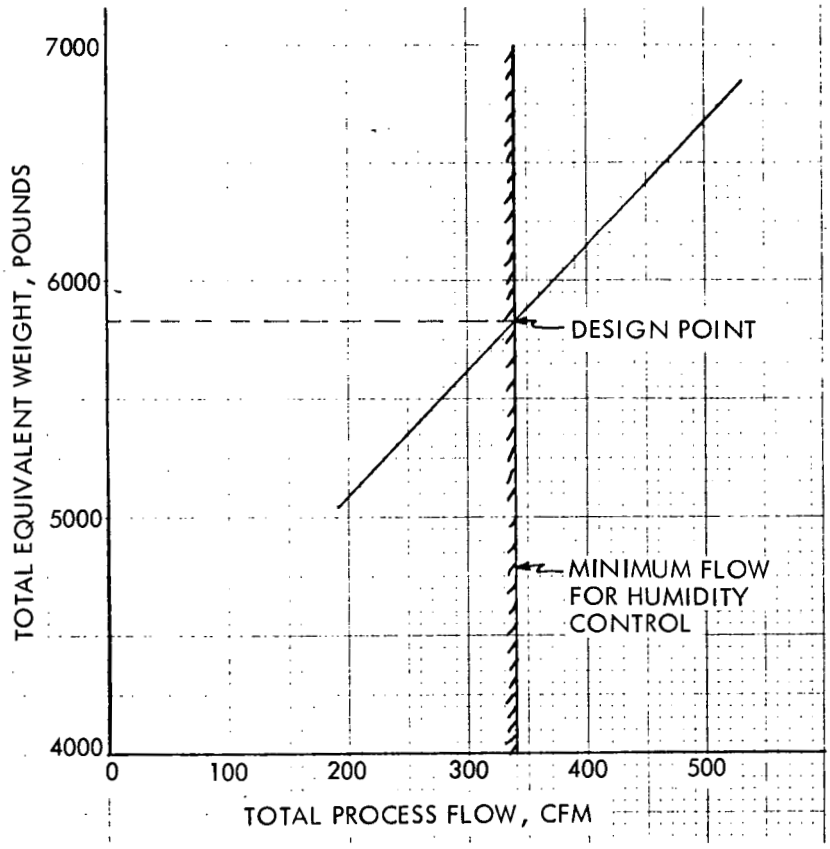

Figure 5-3. Equivalent Weight, Concept 1

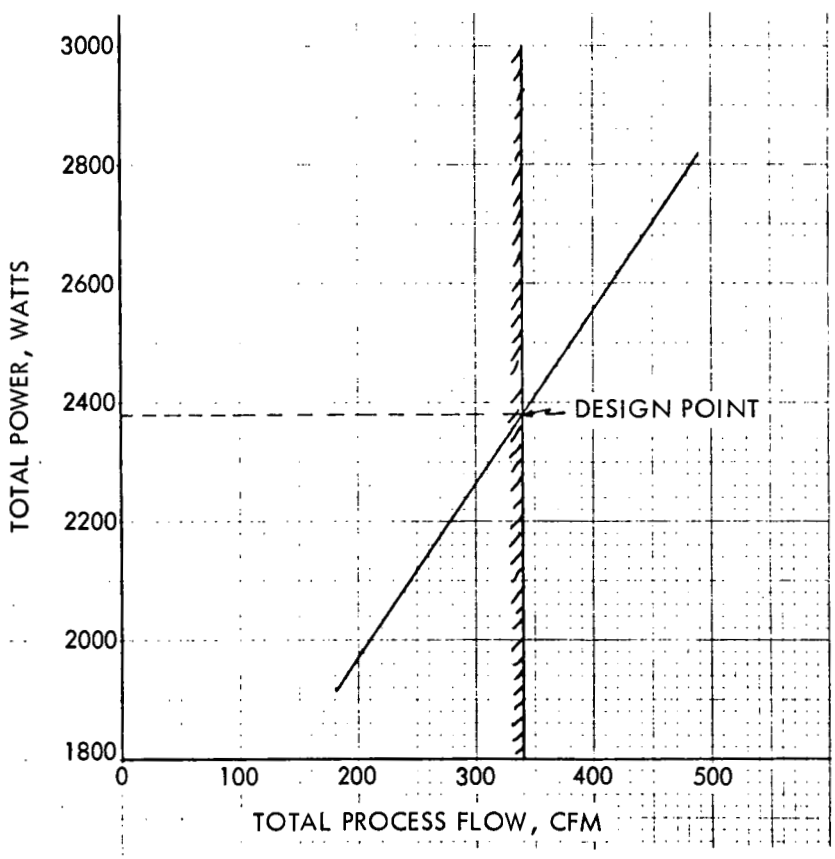

Figure 5-4. Total Power, Concept 1

Concept 2 - Parallel Process Flow

This concept consists of a central humidity control heat exchanger and hydrogen depolarized concentrator with the process flow distributed to each of the modules by a parallel flow arrangement. In this scheme there is a central circulation circuit located in the core module. The required ventilation flow for each module is ducted to the module. Return flow is ducted back to the return branch of the circulation circuit. Process flow to the condenser and CO_2 concentrator is withdrawn from the return line with the remaining circulation air bypassing the condenser. Uneven compartment loading in the parallel flow concept results in dilution. As the design of the humidity and CO_2 control units depends on concentration, the size of the units is predicated on the total process flow rate. The procedure for characterization of the parallel flow concept is:

1. Establish cabin process flow rates at various inlet CO_2 partial pressures to maintain maximum cabin CO_2 pp at 3.0 mm Hg of spec generation (Figure 5-5).

2. Establish cabin process flow rates at various inlet dew points to maintain cabin dew points between 46 and 57 F at specified water generation rates (Figure 5-6).

3. Establish the main distribution system flow rates, comprised of summation of individual module flows (Figure 5-7).

4. Establish process control flow rate for various main distribution flow rates, based on flow to remove maximum generated water at a condensing temperature of 45 F (Figure 5-8).

5. Establish loci of optimum module ducting for varying module flow rates, uses aluminum ducts 0.060-inch thick and 225 feet long (25 feet per module) (Figure 5-9).

6. Establish loci of optimum main distribution ducting for varying main distribution flow rates; uses aluminum ducts 0.60-inch thick and 100 feet long (Figure 5-10).

7. Using relationship of Step 3 and optimum results of Steps 5 and 6, establish minimum distribution system weights for various main distribution flow rates (Figure 5-11). Establish total system equivalent weight for varying main distribution flow rates; incorporates results of Step 7, process control, and temperature control subsystems. From Step 7, select minimum system weight which establishes main distribution flow rate; also establishes module flow rates, process flow rates, cabin inlet partial pressure of CO_2, and cabin inlet dew point.

8. Show vehicle equivalent weight distribution and power distribution at system optimum equivalent weight as shown in Table 5-5.

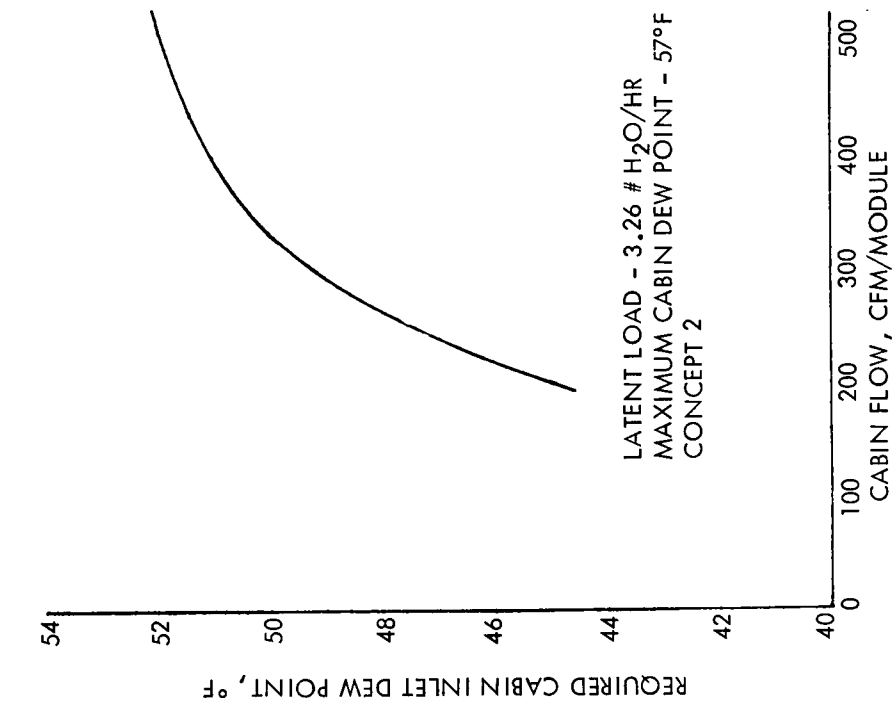

Figure 5-6. Module Humidity Control Flow

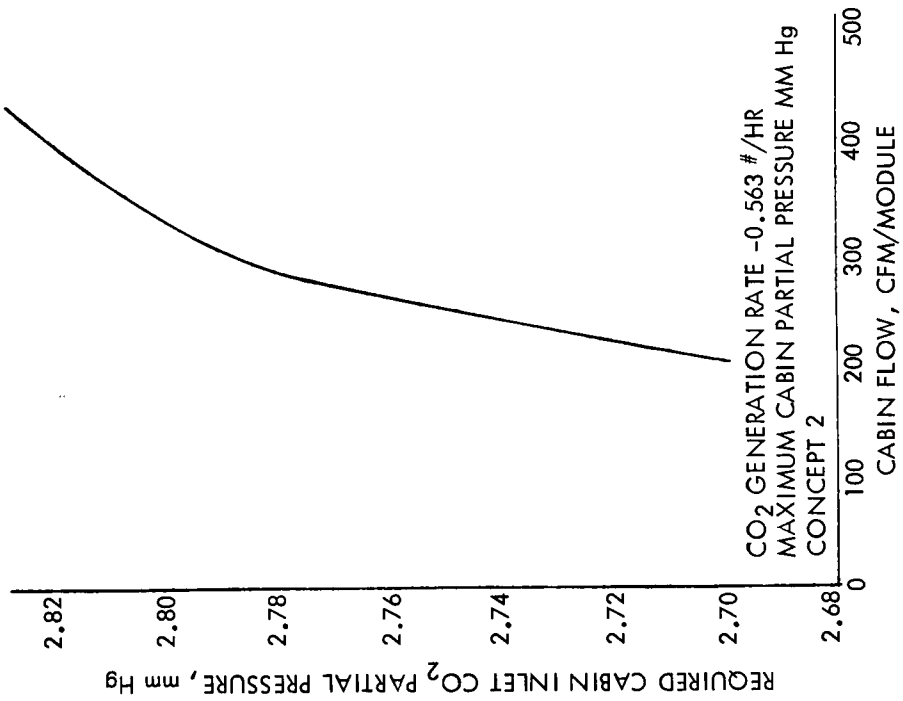

Figure 5-5. Module CO_2 Control Flow

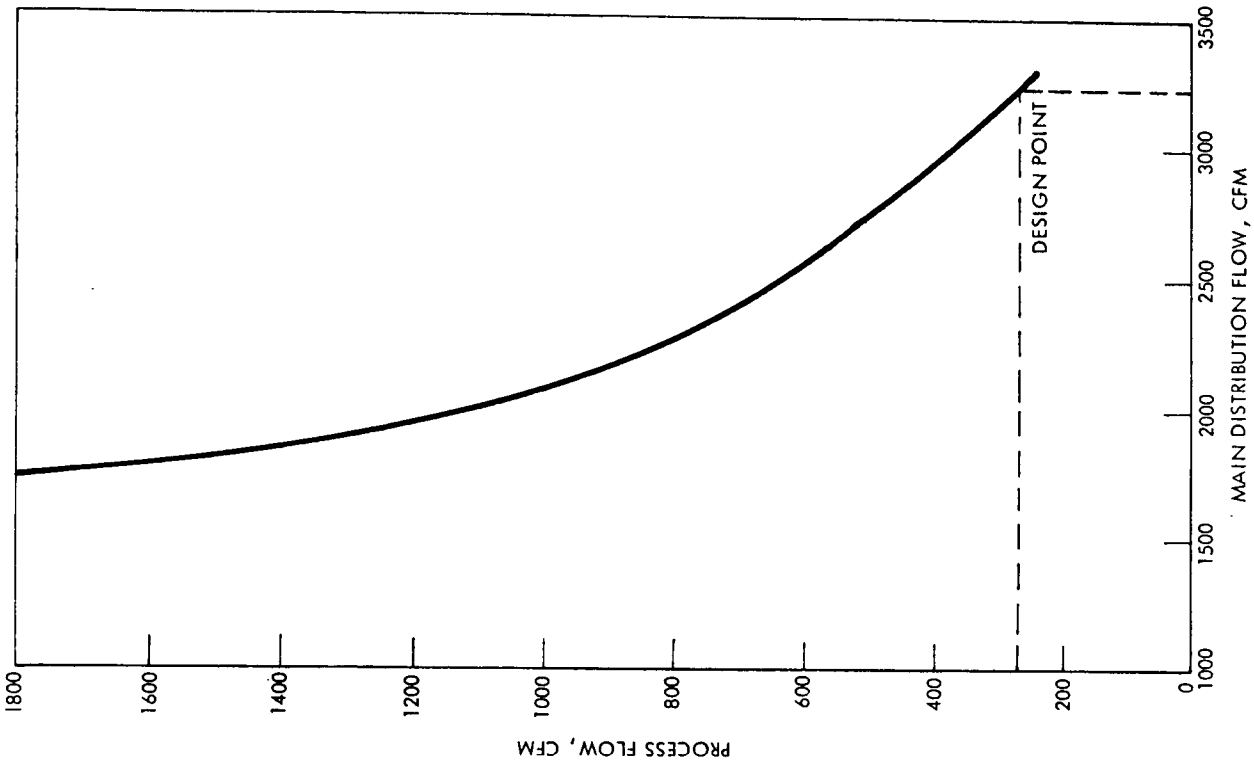

Figure 5-8. Process Flow Versus Total Cluster Flow

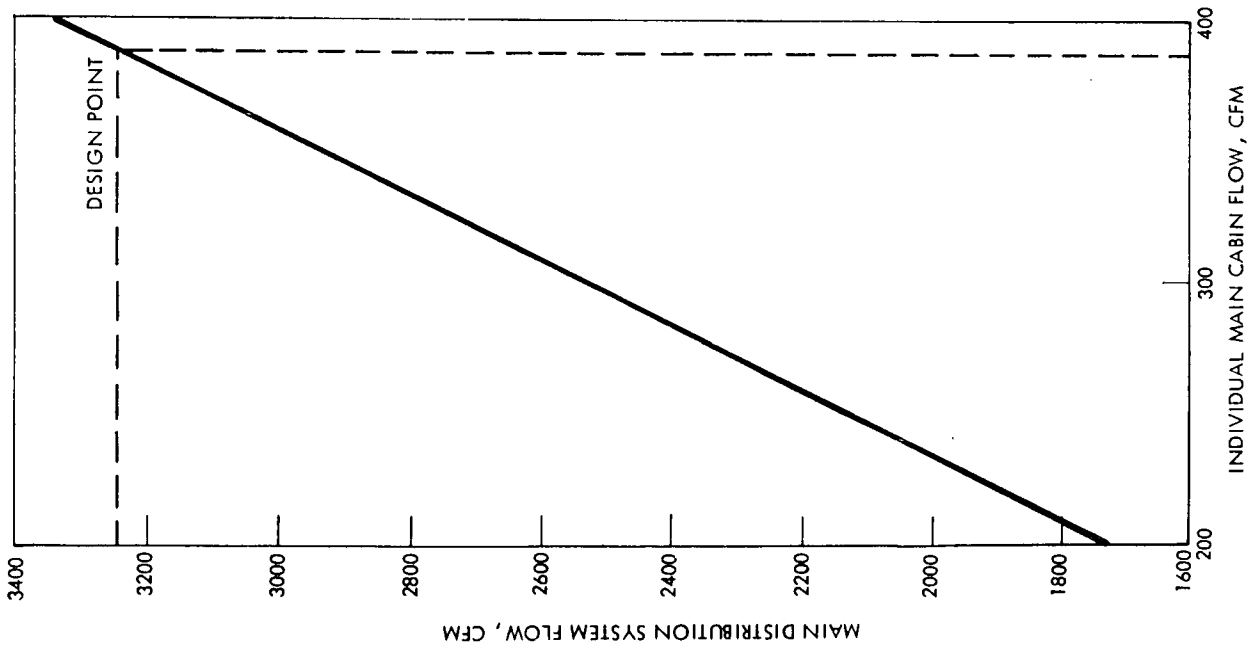

Figure 5-7. Module Flow Versus Total Cluster Flow

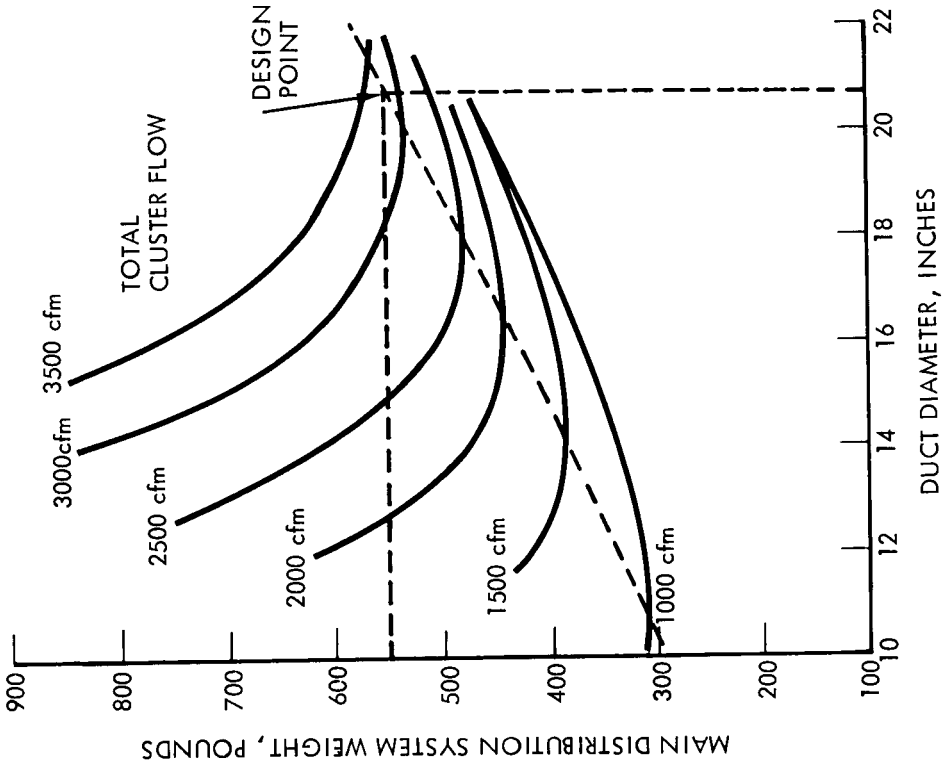

Figure 5-10. Core Duct Optimization

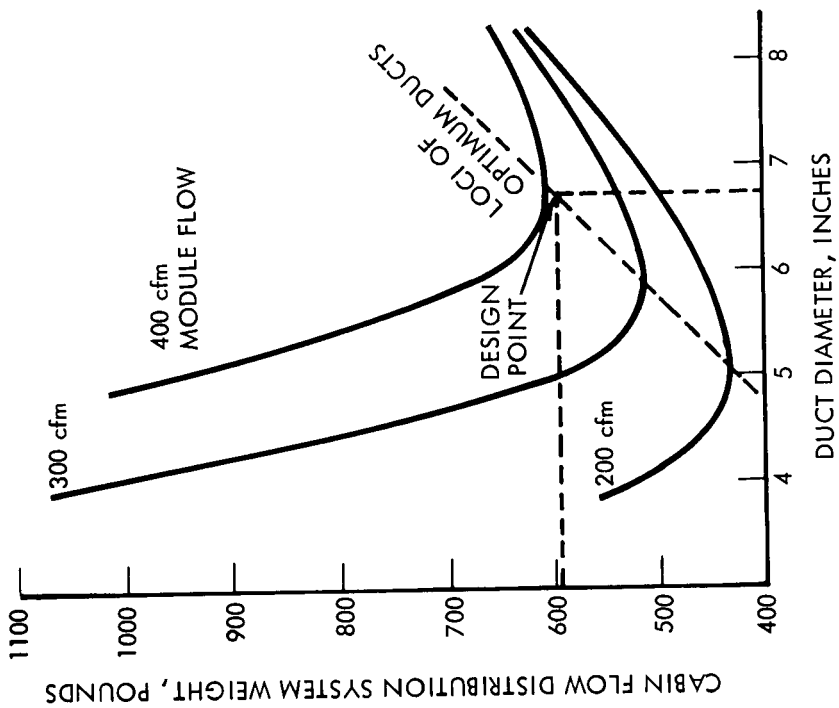

Figure 5-9. Module Duct Optimization

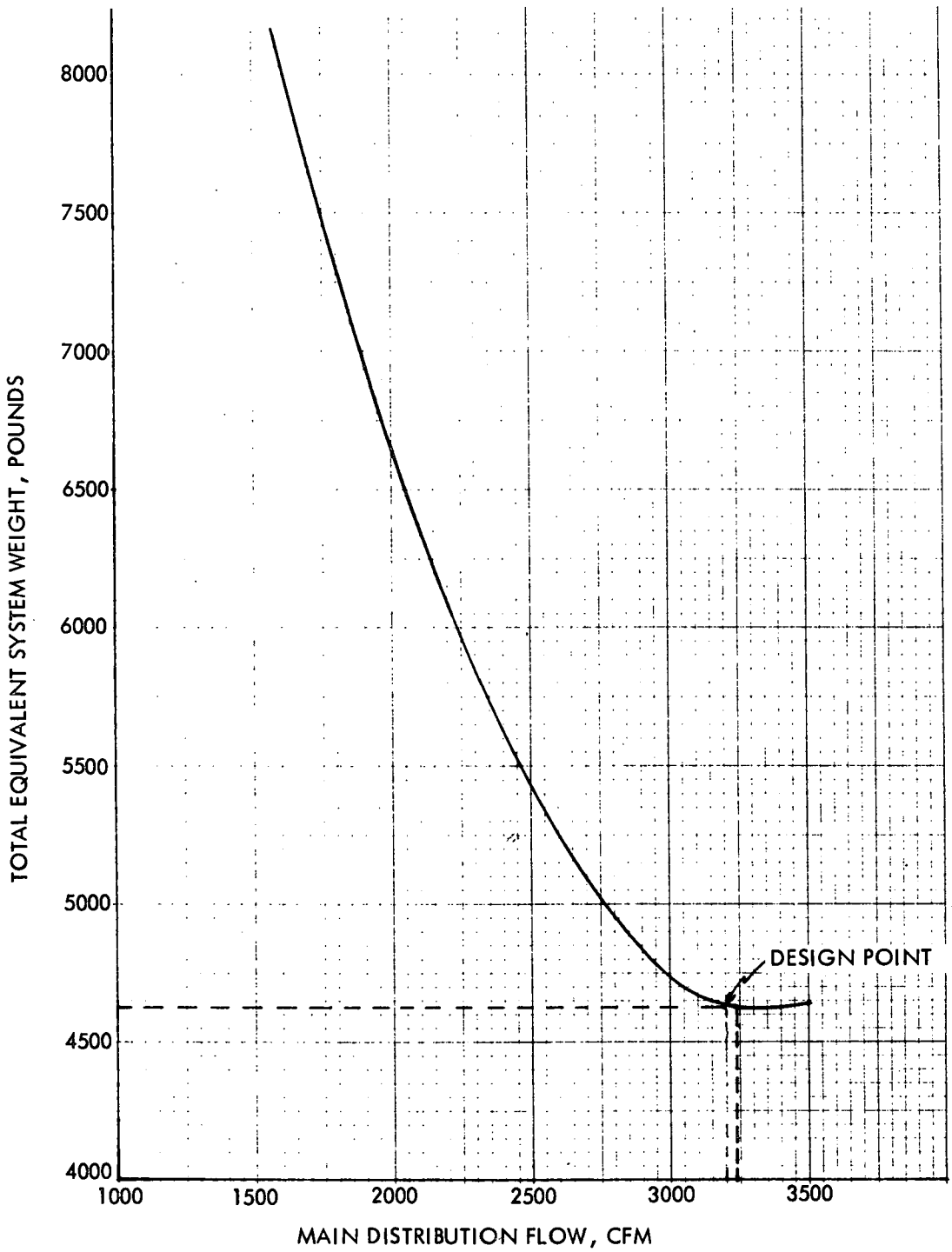

Figure 5-11. Equivalent Weight, Concept 2

Table 5-5. Concept 2 Weight and Power

Module	Weight (lb)				Power (watts)			
	Sensible Heat Exchangers	Condenser-Hydrogen Depolar.	Ducting	Total	Sensible Heat Exchangers	Condenser-Hydrogen Depolar.	Ducting	Total
Core 1 & 2	225		550	775	83		112	195
Power	110		68	178	60		17	77
CQM-1	142		68	210	78		17	95
CQM-2	310	1689	68	2067	170	458	17	645
CCM-1	81		68	149	44		17	61
CCM-2	129		68	197	71		17	88
Cargo 1 & 2	53		136	189	29		34	63
RAM 1 & 2	787		136	923	428		34	462
Total	1837	1689	1162	4688	963	458	265	1686

Space Division
North American Rockwell

Comparison

The total equivalent weight for Concept 1 (series flow) is 5820 pounds and the total power is 2380 watts. Concept 2 (parallel flow) has a total equivalent weight of 4688 pounds and the total power is 1686 watts. The series flow concept requires more power and weight than Concept 2. Concept 2 requires large air flows in the core module and may require module flow control to reduce the core flow. Concept 2, with parallel humidity and CO_2 to the modules, is the preferred concept primarily because of the power and weight advantages.

5.3 PRELIMINARY DESIGN TRADES

The application of the parallel flow humidity/CO_2 control concept with independent module temperature control to the MSS involves further detailed trades. Design issues of particular importance are (1) the need for module flow modulation and (2) the core module ducting configuration. Module flow control is an issue because of the large air flow that is caused in the core module ducts if flow control is not used and the complexity of the sensor and sensitivity of fan design if there is flow control. The core module duct configuration is significant because of the potentially large size ducts (30-inch diameter) and the potential special design to accommodate the docking positions for the modules which contain the revitalization processing equipment.

Module Flow Control Trade

The flow rate to a module depends on the number of crewmen in the module and the condition of the inlet air. The flow rate in the core module depends on the number of modules in the cluster and therefore the decision to utilize control of the flow to a module is sensitive to the particular configuration. It will be shown that module flow control is required if a large number of modules (i.e., 10) are involved and is not required for a small number of modules (< 5). It will also be shown that the centralized revitalization duct system should be designed initially to accommodate the 12-man growth MSS.

The worst case for design of the duct system occurs when all six men are in one module and all other modules are receiving a minimum 100 cfm flow or a full six-man flow rate depending on whether flow control is utilized. A simplified analysis model for CO_2 control is shown in Figure 5-12.

This model assumes 10 habitable modules which receive air revitalization. The nine modules without crew are shown as one on the diagram. The air leaving the module with six men cannot exceed 3m Hg CO_2 (P_1). The air into the module will be the mix (P_5) of the H_2 depolarizer outlet (P_4) and the bulk flow through nine modules. The flow through the nine modules actually dilutes the 3 mm Hg flow from the one module so that the CO_2 removal equipment inlet is less than 3 mm Hg. The dilution flow (W_2) is 900 cfm if 100 cfm is directed to each uninhabited module and 5400 cfm if 600 cfm is directed to each module. Figure 5-13 is a plot of the CO_2 removal equipment inlet concentration as a function of the flow to the six-man module and dilution flow shown parametrically. It is seen that dilution flow does not affect the CO_2 concentration appreciably and that concentrations of 2.7 to 29 mm Hg are feasible.

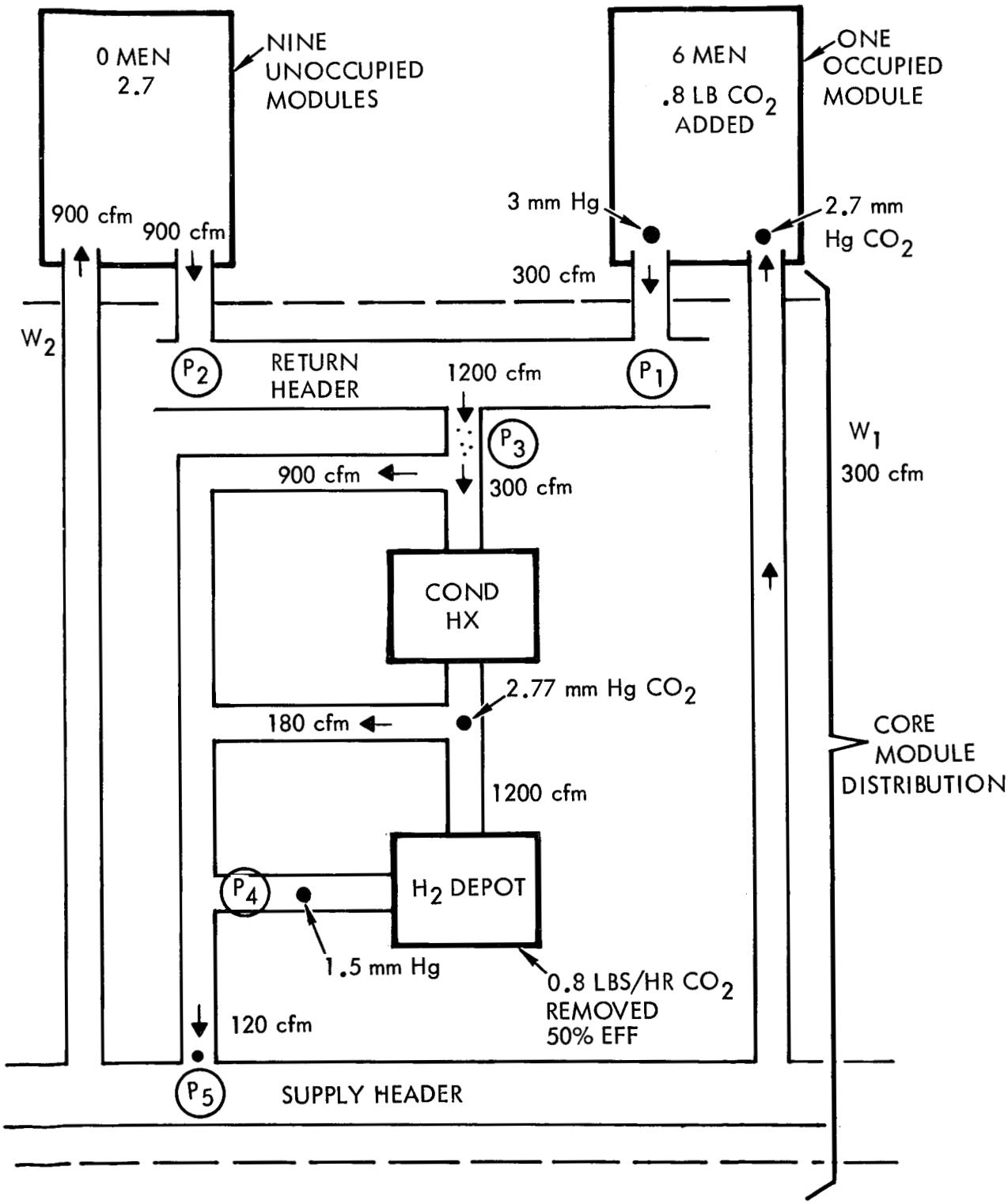

Figure 5-12. CO_2 Control - Analysis Model

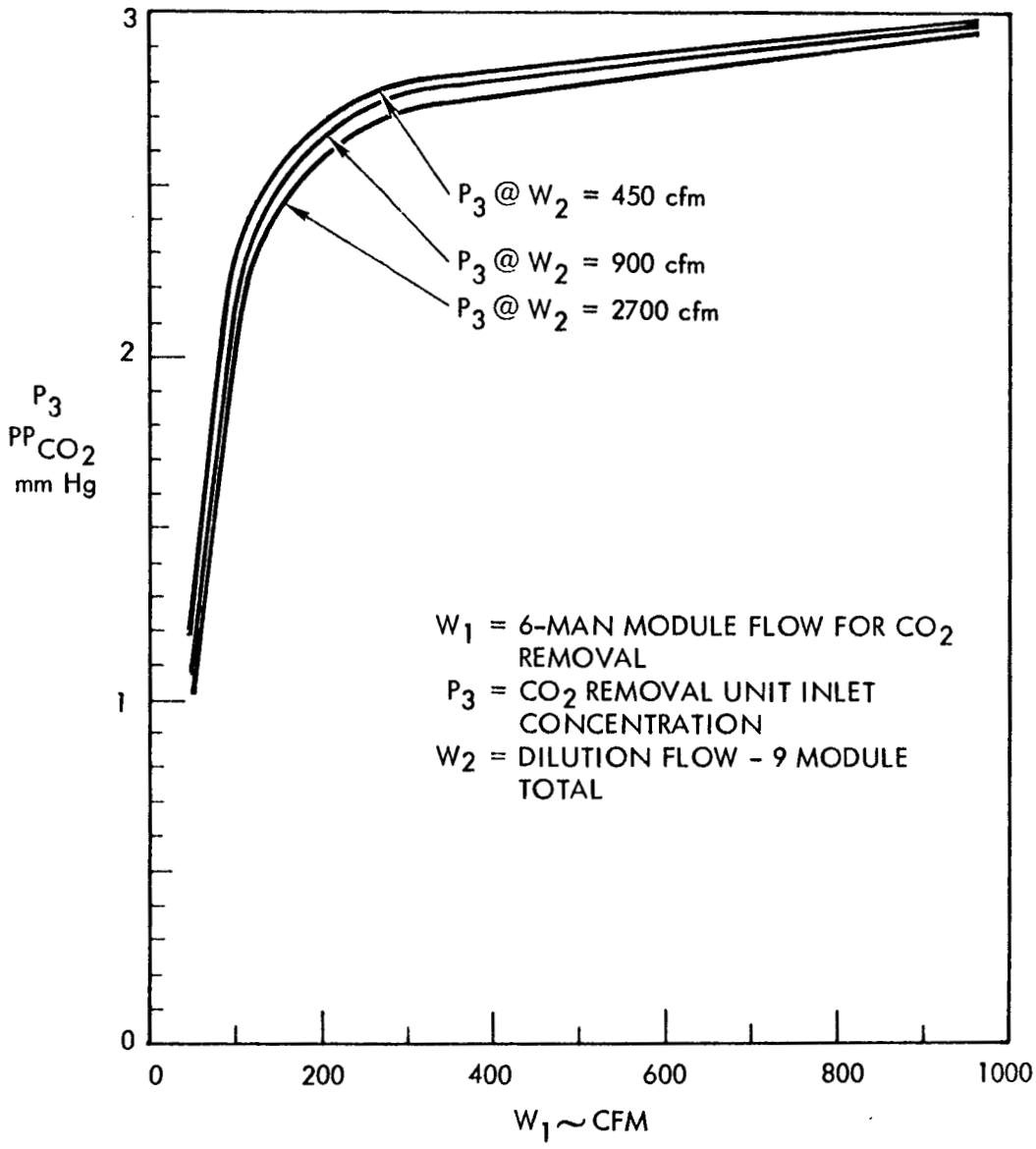

Figure 5-13. CO_2 Removal Unit Inlet Concentration

If a similar analysis procedure for humidity control is followed the plot in Figure 5-14 is achieved. The calculation assures 3.26 pounds of water per hour in one module, 12 mm Hg maximum outlet water vapor pressure, and 45 F saturation minimum from the condensing heat exchanger. Humidity control is seen to be more sensitive to dilution flow. Humidity heat exchanger inlet vapor pressures of 10 to 11 mm Hg appear feasible. A summary of characteristics based on these data applied to a 10-module initial MSS and 15-module growth MSS is shown in Table 5-6. It is stressed that the data in Table 5-6 are not adequate for preliminary design but the generic trends which result from comparing the concepts are accurate. Also, the concept of a supply and return header duct rather than a series "pool" duct affects the analysis. The core duct configuration will be discussed later.

In all cases the humidity control flow to a module is larger than the CO_2 flow requirement. The interface duct size between a module and the core does not vary appreciably (8 to 10 inches diameter). However, the core duct size does vary significantly between flow control and no flow control. The core ducts should be sized initially to accommodate the growth 12-man MSS because the growth modules "plug in" the initial core and 12-man traffic will exist within the initial cluster. For the 12-man case, 15-inch diameter ducts result in the core if module flow control is utilized and 33-inch ducts result if it is not.

The 33-inch diameter ducts represent too much of a volume penalty in the core for no flow control to be a feasible option. In addition, lower concentrations at the H_2 depolarizer and humidity heat exchanger and higher fan power are required if there is no module flow control. A major problem with module flow control is the sensor which tells the control valve what to do. There is some indication that other program considerations such as safety and duty task assignments may require the ISS to keep track of crew location. If the ISS contains information on crew location, the ISS could implement module flow control. Module flow control appears to offer the least penalty for design of the two options and is therefore recommended.

Core Ducting Configuration

The primary trade for design of the core ducts is selection of a header concept or a series pooling concept (Figure 5-15). The secondary issues include whether there should be two or four ducts at the process module interface, whether there should be special control valves within the process module to accommodate the variable crew size, and whether reverse flow in the process module is required.

The header concept assumes a single collector header which receives "used" air from each module. A portion of this used air is directed to the module with the processing equipment. The processed air is delivered to a single supply header in the core from which all modules can draw fresh air. Because only a portion of the used air is processed, a bypass duct is required to allow used air to enter the fresh air header.

In adddition, the header design must consider: (1) the entire crew can be located in either pressure volume, (2) either set of processing equipment

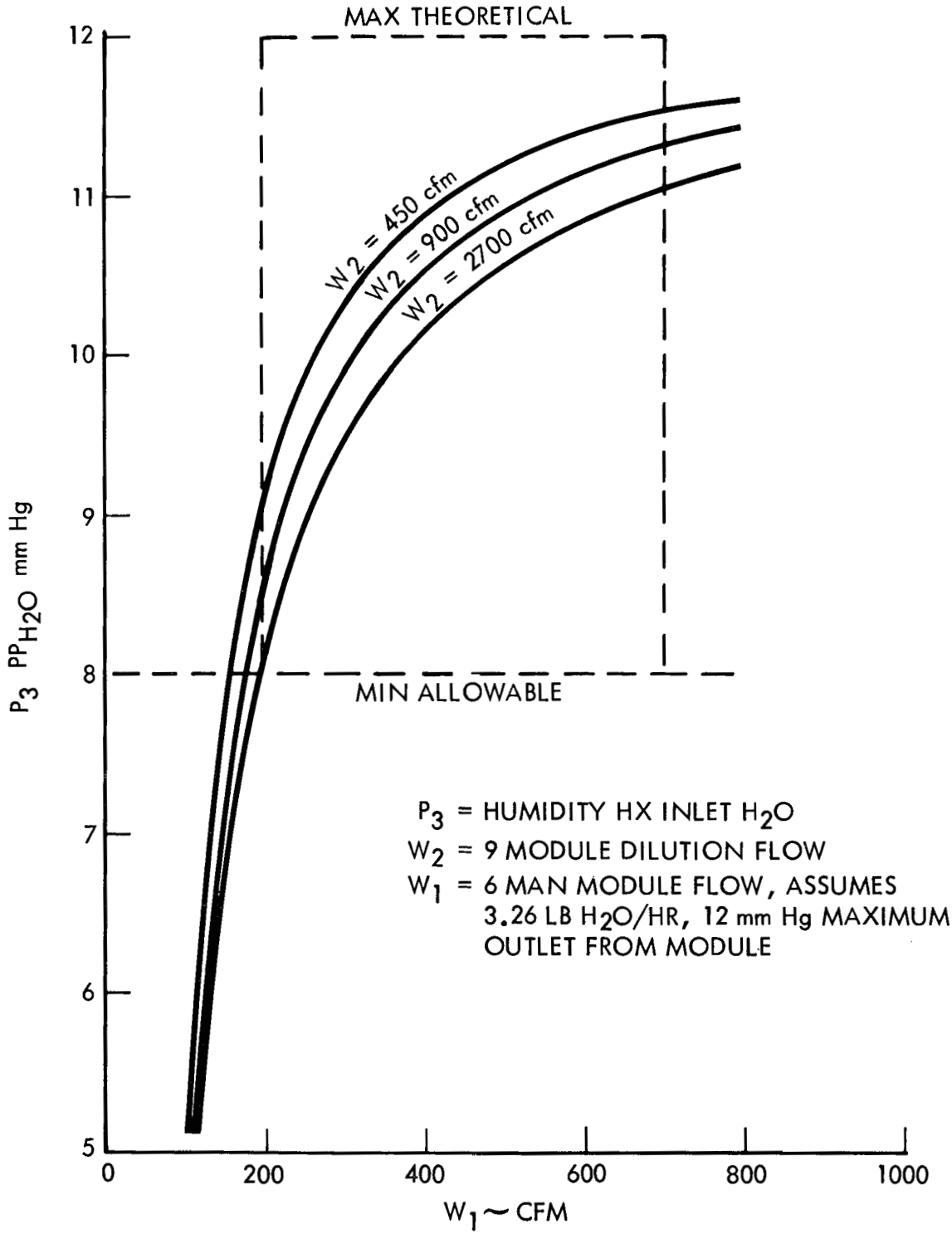

Figure 5-14. Humidity Heat Exchanger Inlet Concentration Versus 6-Man Module Flow

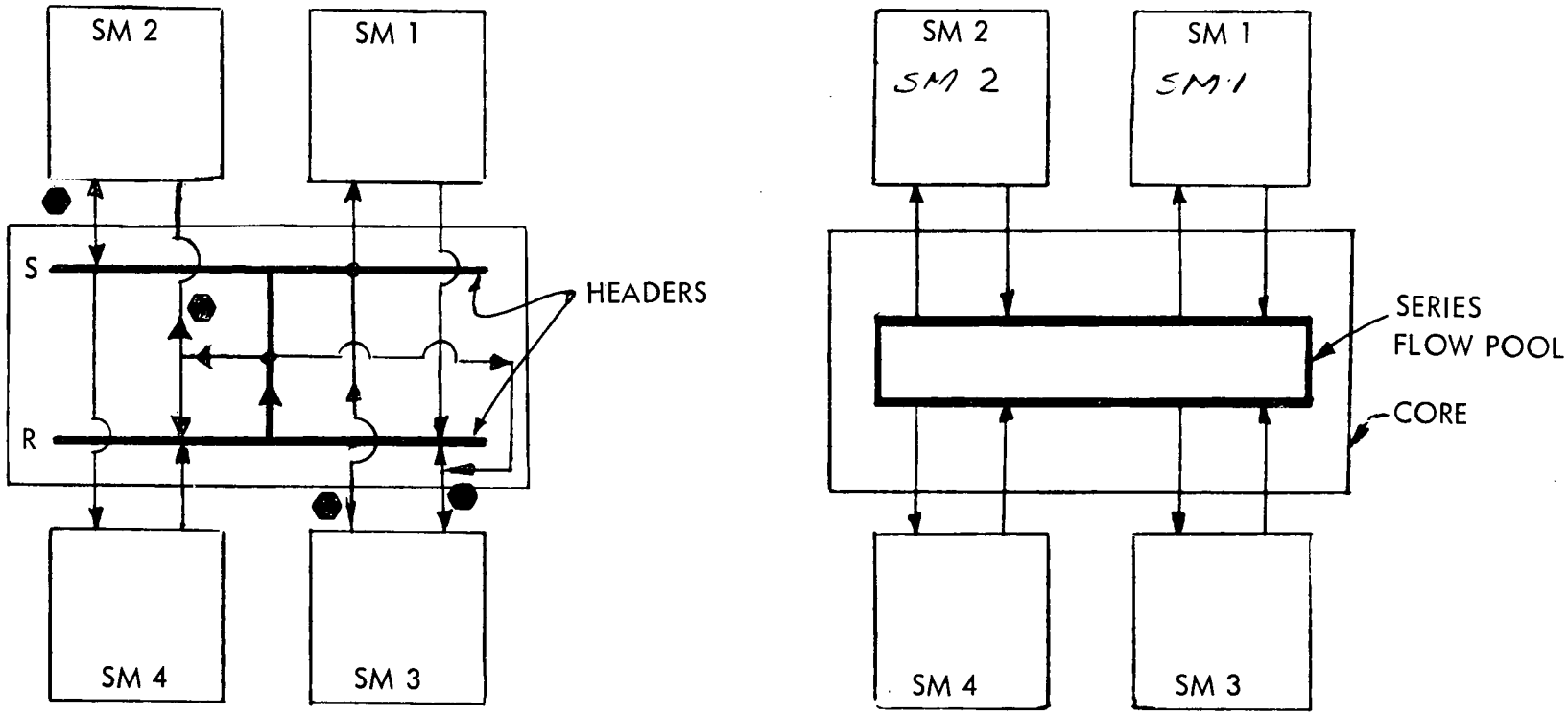

REVERSE FLOW LINES

Figure 5-15. Core Duct System Diagrams

Space Division
North American Rockwell

Table 5-6. Module Flow Control Summary

Concept	Module		Core
	CO_2 Control	Humidity Control	
1. 6 men, no flow control	440 cfm (2.77 mm in.)	640 cfm (10.9 mm in.) .38 in/100 ft ΔP 9-inch diameter	7 mods at 640 = 4480 cfm .1-inch H_2O/100 ft ΔP 25-inch diameter
2. 6 men, with flow control	300 cfm (2.77 mm in.)	500 cfm .43 in/100 ft ΔP 8-inch diameter	7 mods at 100 + 500 = 1200 cfm .2-inch H_2O/100 ft ΔP 13-inch diameter
3. 12 men, no flow control	650 cfm	780 cfm .34 in/100 ft ΔP 10-inch diameter	10 mods at 780 = 7800 cfm .06-inch H_2O/100 ft ΔP 33-inch diameter
4. 12 men, with flow control	450 cfm	610 cfm 1450 fpm, .31-in H_2O/100 ft ΔP 9-inch diameter	10 mods at 100 + 610 = 1610 cfm 1300 fpm, .2-in. H_2O/100 ft ΔP 15-inch diameter

NOTES

1. 6 men = .8 lb CO_2/hr, 3.26 lb H_2O/hr
2. 12 men = 1.2 lb CO_2/hr, 4.0 lb H_2O/hr (9 men equivalent)
3. 10 modules initial MSS, 100 cfm/module bleed
4. 15 modules growth MSS, 100 cfm/module bleed
5. 1400 cfm sensible dilution flow
6. Number of modules considers some modules do not need the full 6 or 9 men sizing

Space Division
North American Rockwell

must be capable of supporting the entire MSS, and (3) the growth modules which contain additional processing equipment (SM-5, SM-6) dock where the initial RAM and cargo modules dock. When these requirements are considered the header concept becomes very complex as indicated in the duct drawing of Figure 5-16. The dashed lines represent ducts and valves required to deliver "mixed" used air to the process modules. The supply duct for a module in which the processing equipment is operating actually reverses roles and serves as a return duct. A diagram of the control valves and the flow in a process module compatible with the header concept is shown in Figure 5-17. If the process equipment is operating the flow is in the direction of the dashed arrows on Figure 5-17. The design indicated in Figure 5-17 requires three flow control valves and would provide "purer" air to the crew if they are located in the process module than if they are in some other module. The header concept characteristics are:

1. Dedicated docking positions for modules with processing equipment.

2. Special core ducts and 12 valves.

3. Reverse flow in interface ducts for modules with processing equipment.

The series flow pooling duct concept in the core simplifies the design significantly over that of the header concept. The processing module can be docked at any docking port and only four valves are required to isolate the duct system when one pressure volume is not operable. The module supply and return ducts connect at any location on the core pool duct. The only requirement is that the module return must be downstream of the module supply on the core duct. A diagram of the pooling concept is shown in Figure 5-18. The pooling concept is the recommended selection primarily because:

1. Simplified core duct design and minimum valves.

2. Dedicated docking ports are not required. Modules with processing equipment can be docked to any port.

A secondary trade is required to define the docking interface and the application of module flow control valves. The module which contains the processing equipment is a special case in that air must be drawn to support the crew in the module and air is required for the processing equipment. To provide this air, two supply ducts could be installed for the process module, or one supply duct with either more air flow (sufficient for crew plus processing), or a portion of the process equipment outlet air could be directed to the crew.

The concept of a single set of interface ducts with increased air flow is recommended to maintain docking port interface commonality. The application of process equipment outlet air to condition the crew in the process module is not recommended because of the complexity of an additional flow control valve and the nonstandard operating environment of that particular module.

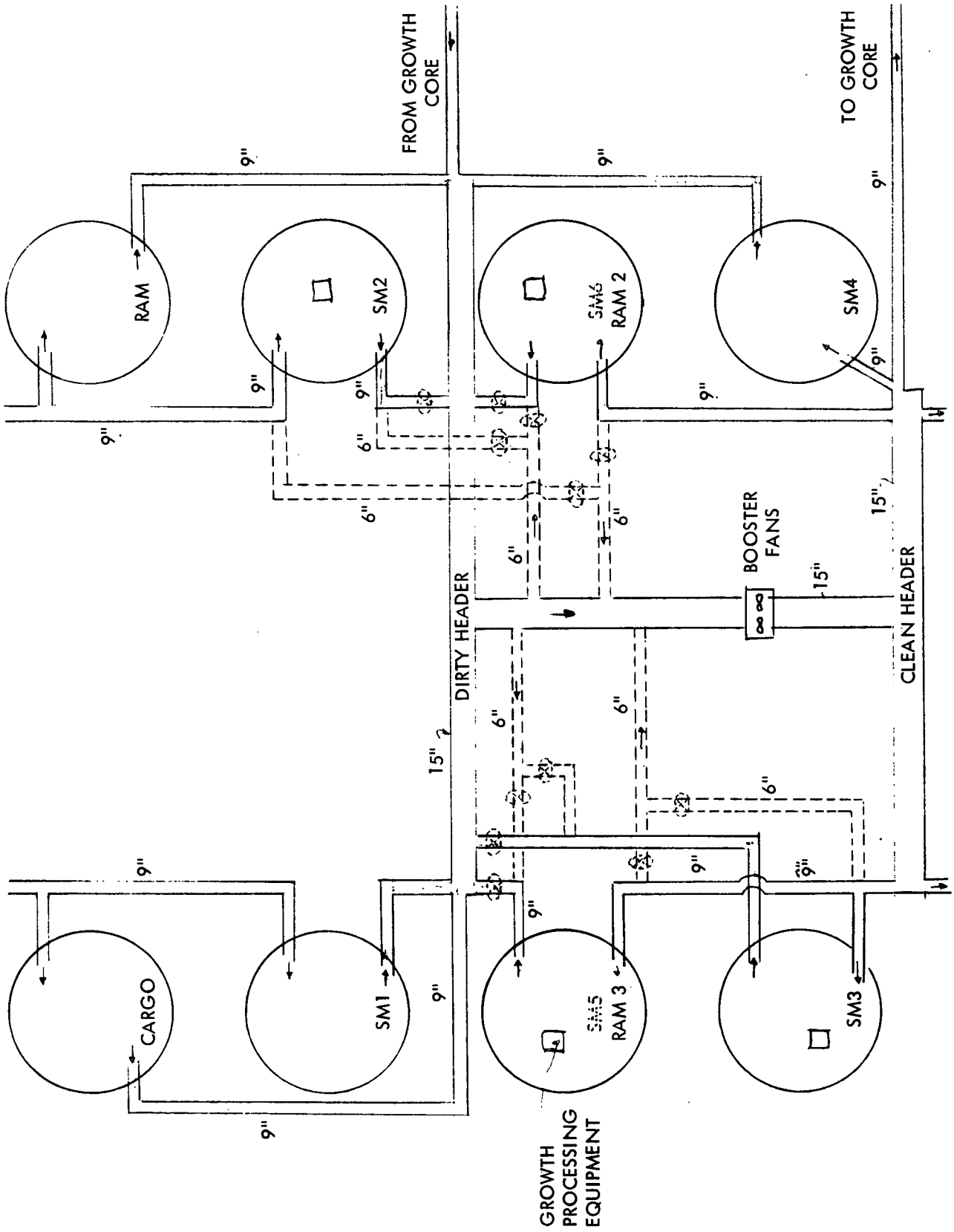

Figure 5-16. Core Module Ducts - Header Concept

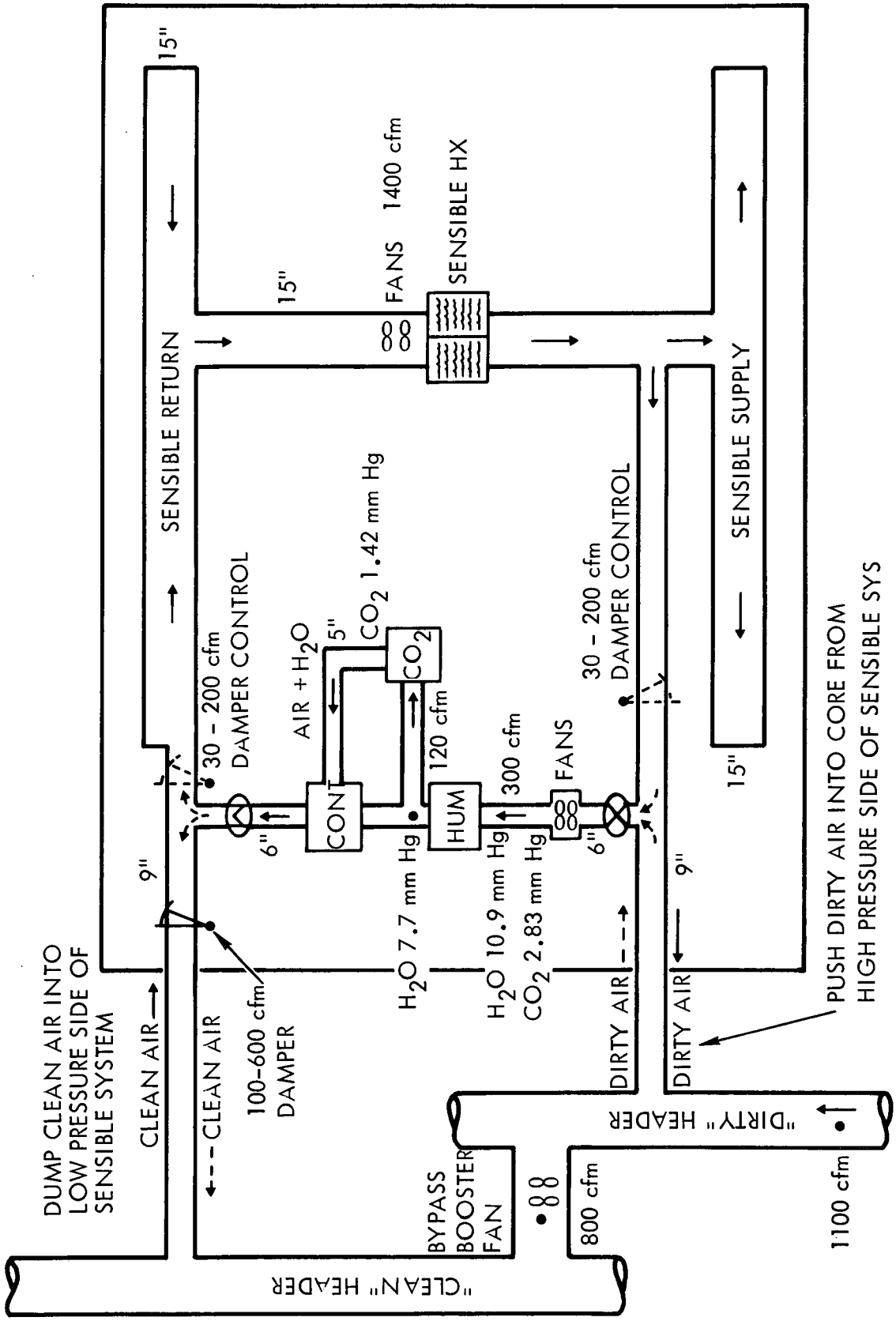

Figure 5-17. Process Module Duct Design - Header Concept

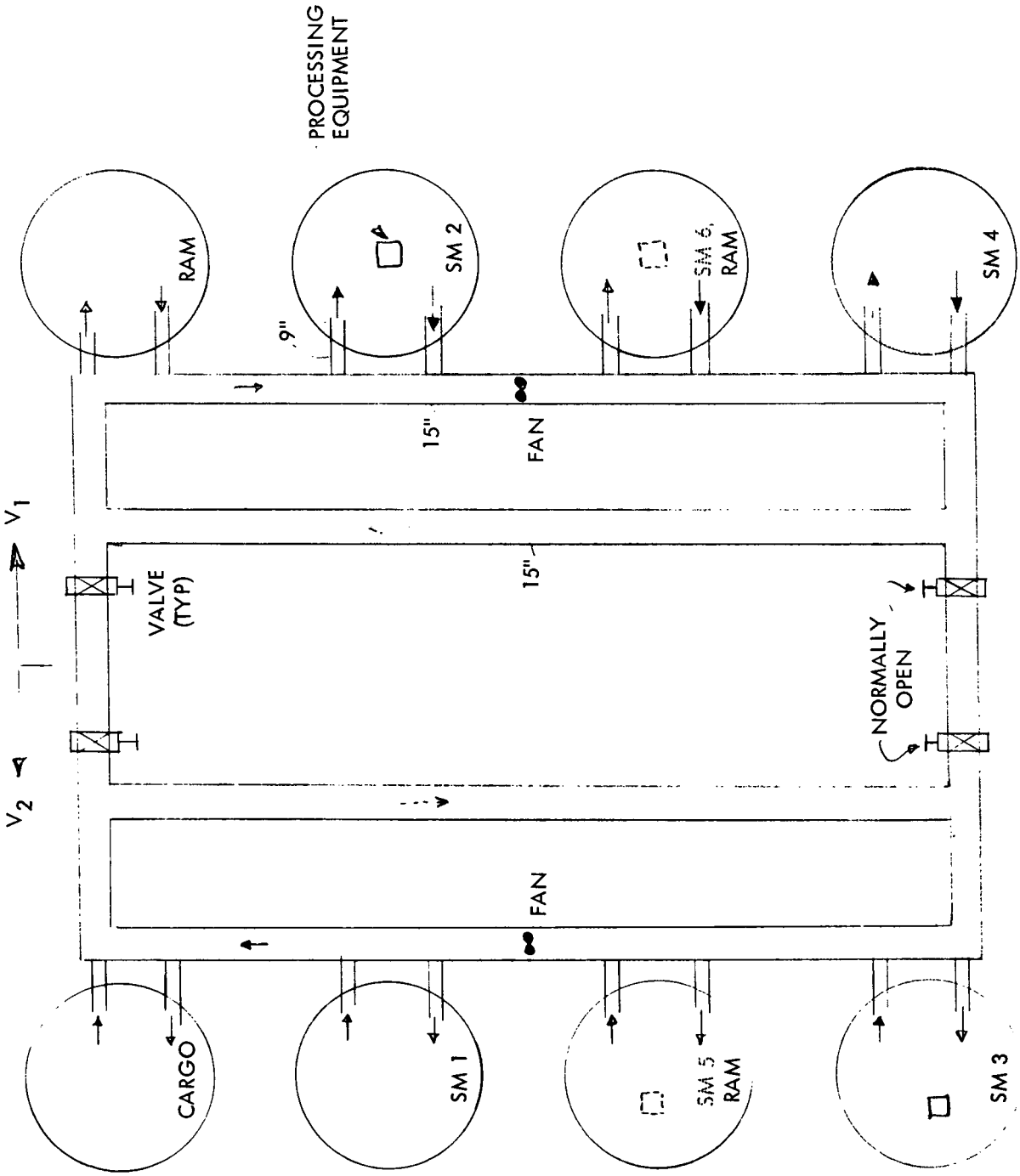

Figure 5-18. Core Module Ducts - Pooling Concept

5.4 SELECTED CONCEPT

The selected concept for MSS atmospheric control is summarized as follows:

1. Independent temperature control (sensible heat load) in each module.

2. Centralized humidity, CO_2, and contaminant control with parallel flow to the modules.

3. Module flow control sensitive to number of crew.

4. Core module pooling duct concept.

5. Common two-duct interface with larger flow for the operational processing module.

The analysis model for humidity and control flowrate determination is shown in Figure 5-19 for the worst case of six men in the process module. The flow through the module required to limit the outlet water vapor pressue to 12 mm Hg with a water generation rate of 3.26 pounds per hour (W_1) is plotted as a function of the module inlet vapor pressure on Figure 5-19. Superimposed on this same graph is a plot of the flow through the condensing heat exchanger as a function of the module inlet vapor pressure. The heat exchanger flow is sized to remove 3.26 pounds of water per hour, assuming 45 F saturation out of the heat exchanger. The optimum system flowrate occurs at about 9.9 mm Hg module inlet vapor pressure. This corresponds to 400 cfm through the module to condition six men, and 400 cfm through the condensing heat exchanger.

The performance at the maximum design conditions and the selected 800 cfm module flow is shown on Figure 5-20. If the process module is occupied by six crewmen, the module draws 800 cfm from the core. If no crewmen are in the process module the inlet flow is 500 cfm. The processing equipment draws a constant 400 cfm by means of the heat exchanger fan. A module with six crewmen is maintained to 12 mm Hg pp water and 3 mm Hg pp CO_2 maximum. The remainder of the station would operate at 2.78 mm Hg pp CO_2 and 9.9 mm Hg pp water (52.9 F dew point).

Causing flow to occur from the core to a module without installing separate fans on each interface duct requires additional study. The core pooling duct requires additional study. The core pooling duct requires a separate fan sized to provide 1500 cfm total flow. Each module incorporates a fan sized to provide 1500 cfm for temperature control. Air will flow from the core pooling duct to a module if the module is at a lower pressure. Conversely, air will flow from a module back to the core if the air is at a higher pressure than the core. This flow will occur if the module sensible fan pressure difference is greater than the core pool duct fan pressure difference. The sensible fan absolute outlet pressure must be higher than the core pool fan absolute outlet pressure. The sensible fan absolute inlet pressure must be lower than the core fan absolute inlet pressure as shown on Figure 5-21.

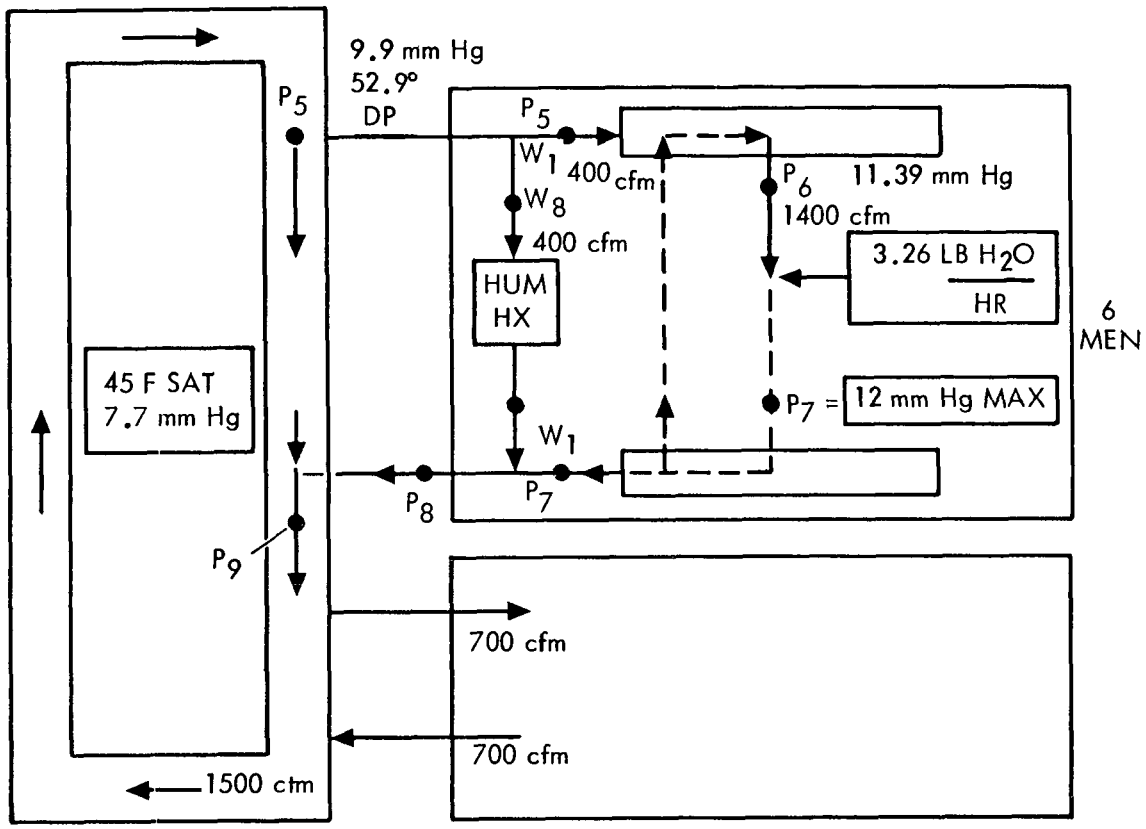

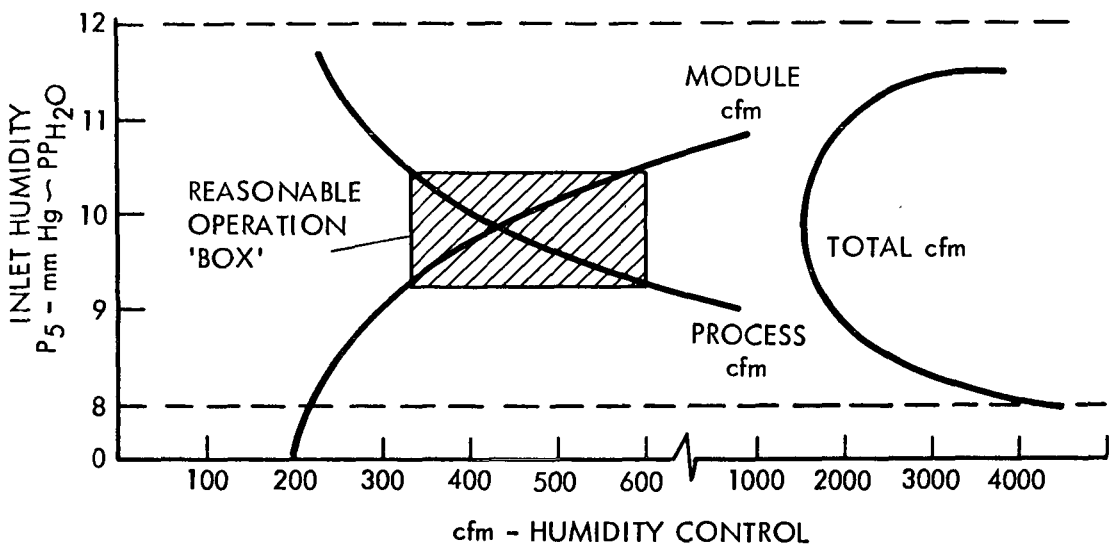

Figure 5-19. Humidity Control Analysis

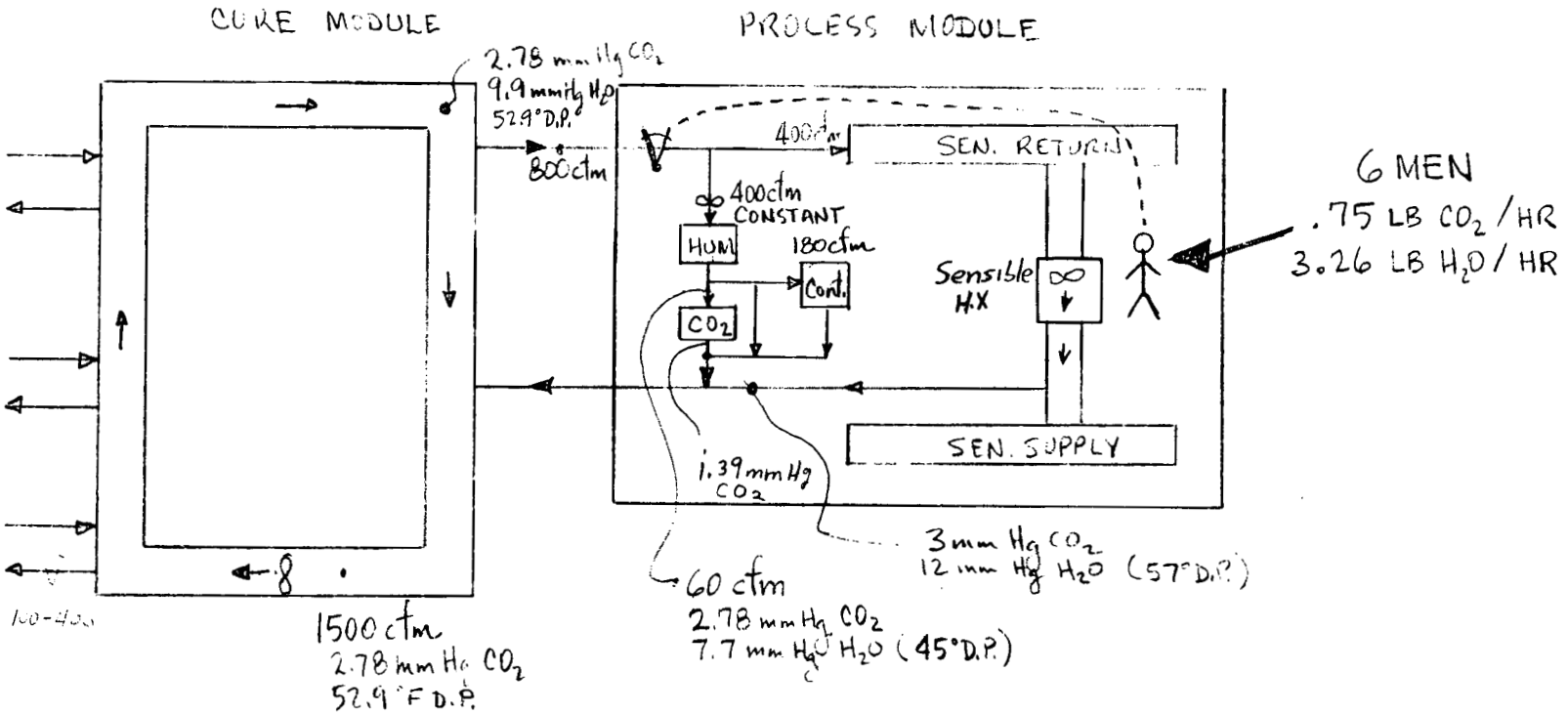

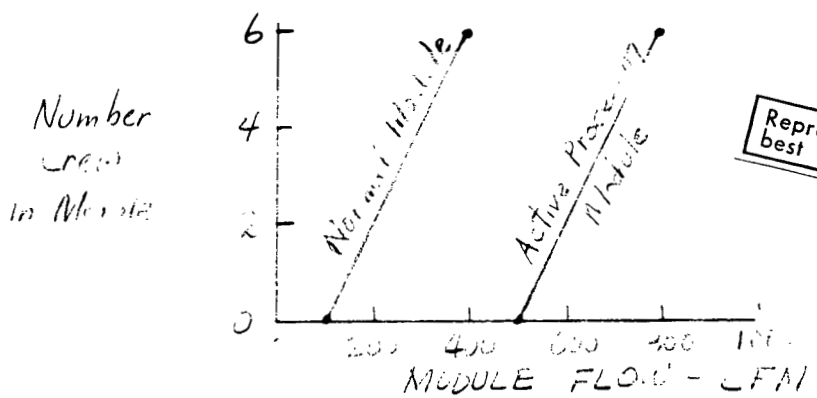

Reproduced from best available copy.

Figure 5-20. Atmosphere Revitalization Performance

Space Division
North American Rockwell

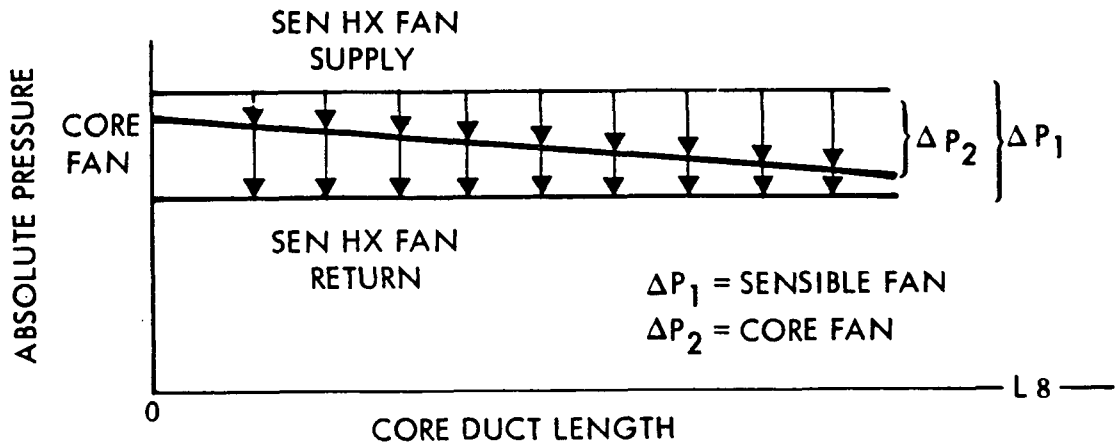

Figure 5-21. Pressure Plot

This is anticipated to require potentially delicate flow resistance balancing. Additional description of the atmospheric control assembly preliminary design is contained in Volume IV, Subsystem Analyses (SD 71-217-4), of this report.

5.5 FURTHER STUDY

The design of the atmospheric control assembly to support a modular station contains several issues which require further analysis and testing. Some of the significant issues encountered in this study are:

1. Sensible Heat Exchanger - Utilization of coolant inlet temperature below 57 F is needed to avoid large penalties in the active coolant loop design.

2. Sensing Methods for Flow Control - Detailed studies and evaluations should be conducted to determine the optimum sensing method determine the number of crew members in a module, since this number determines the air process flow requirements. The studies should include the normal air processing sensor for CO_2 level, humidity level and oxygen partial pressure as well as non air-processing related devices for counting such as electronic turnstile. In addition, the data collected and stored by ISS may have the potential of being a control approach. For example, the power consumption data of a module monitored by ISS may be related directly to crew occupancy.

3. Investigation of High Flowrate Ducts - Approximately 1000 fpm duct velocity was used to size ducts and is based on noise criteria. Pressure drop and fan power did not size ducts. Analysis and test of 2000 to 3000 fpm noiseless ducts is suggested.

4. Core Ducts - The need for ducts in the core module rather than using the core module for air pooling should be investigated further.

5. The sensitivity of fan design to cause flow between the core and a module should be verified.

6. Individual room revitalization and temperature control transient performance should be evaluated. The time response for room heating should also be evaluated.

7. The sensitivity of the circulation system design concept to the number of modules and crew loading should be evaluated further.

6. ENERGY STORAGE TRADE

During the dark portion of the orbit, electrical power is supplied by the electrical power subsystem (EPS) energy storage assembly. This section of the report delineates energy storage requirements, defines candidate configurations, and compares performance for concept evaluation.

Figure 6-1 summarizes the study logic flow followed during the energy storage trade effort. Figure 6-2 shows the energy trade tree used for this study. The flywheel alternative for energy storage was identified but not included in the detail trade analyses since preliminary estimates indicated large assembly weights. Nickel-cadmium batteries and regenerative fuel cells were retained for evaluation. Criteria used for performance comparison are listed.

The energy storage trade was performed as part of an integrated EPS/ECLSS/RCS study for subsystem selections. A portion of the EPS study was performed independently for purposes of narrowing down the overall matrix of candidates. This section reports results of the energy storage trade and recommendations fed into the integrated trade study. It must be pointed out that this trade was based on requirements as understood in the early months of the study. Changes to the requirements have occurred as a result of later MSS definition; however, an assessment of this showed no significant impact on trade study results. Final requirements and EPS definition is documented in Volume IV, Subsystem Analyses (SD71-217-4), of the MSS Preliminary Design report.

Two integrated subsystem concepts were selected for comparison. Concept 1 (Figure 6-3) is the MSS baseline which resulted from MSS Phase A study (Reference 6-1). The fuel cells are included in this concept to satisfy emergency requirements. This was driven by a guideline and constraint that specified life support for two independent and isolatable volumes. An emergency duration of 96 hours was established. This requirement results in a penalty to the battery concept of fuel cell weight and cost.

Concept 2 (Figure 6-4) is a variation substituting fuel cells and electrolysis as a regenerative energy storage assembly for the NiCd secondary batteries. Separate fuel cells for emergency were considered for Concept 2; however, it was decided that the four fuel cells in the energy storage assembly can be located to support both volumes independently in case of emergency.

Buildup power requirements are a function of buildup sequence. The MSS configuration evolved from a baseline which had the power module launched as the first step in buildup. The final configuration is based on a buildup sequence which launches an independent core module as the first step. Buildup power requirements to arrive at the final concept are not included in this trade. The selected MSS configuration is shown in Figure 6-5.

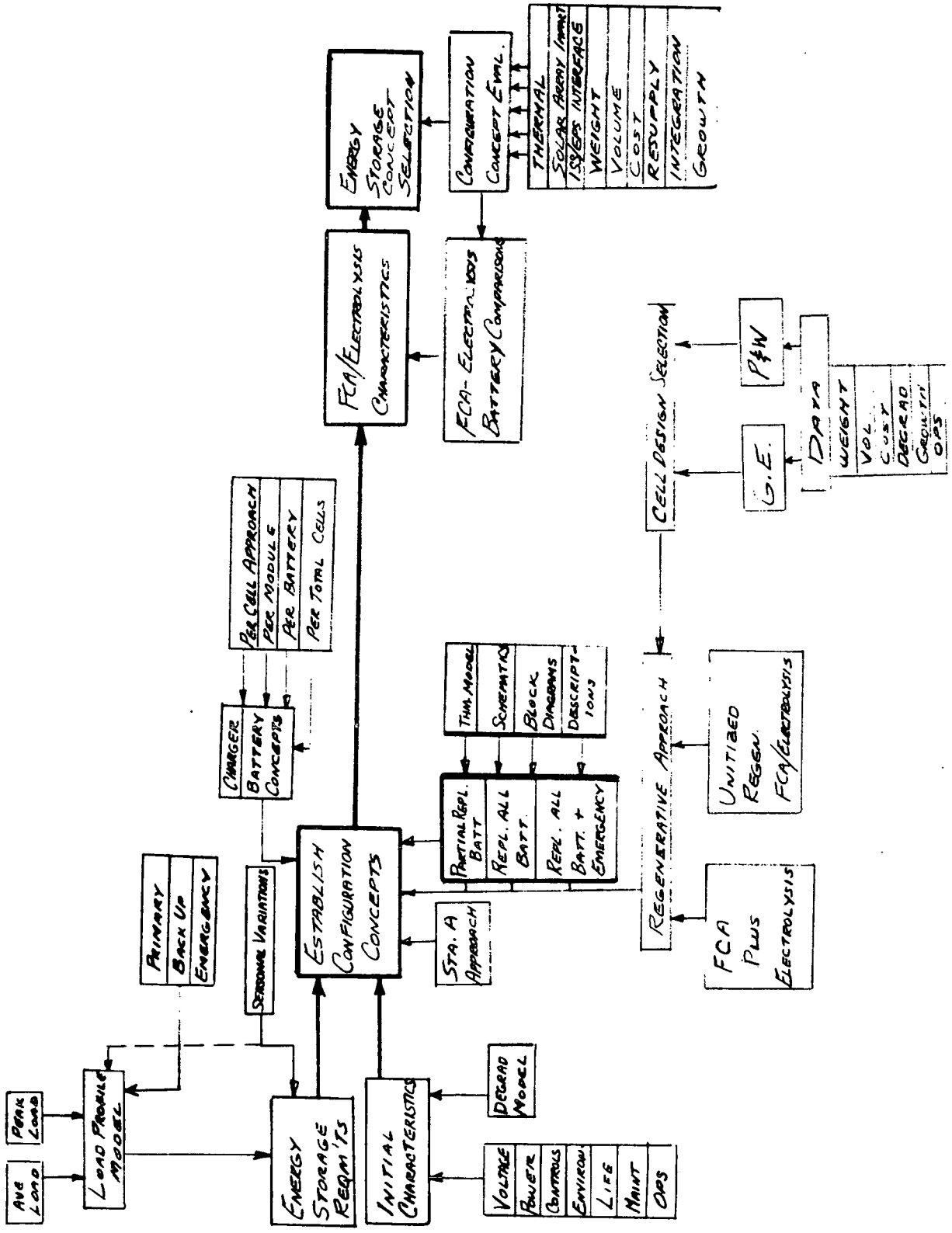

Figure 6-1. Energy Storage Logic Flow Diagram

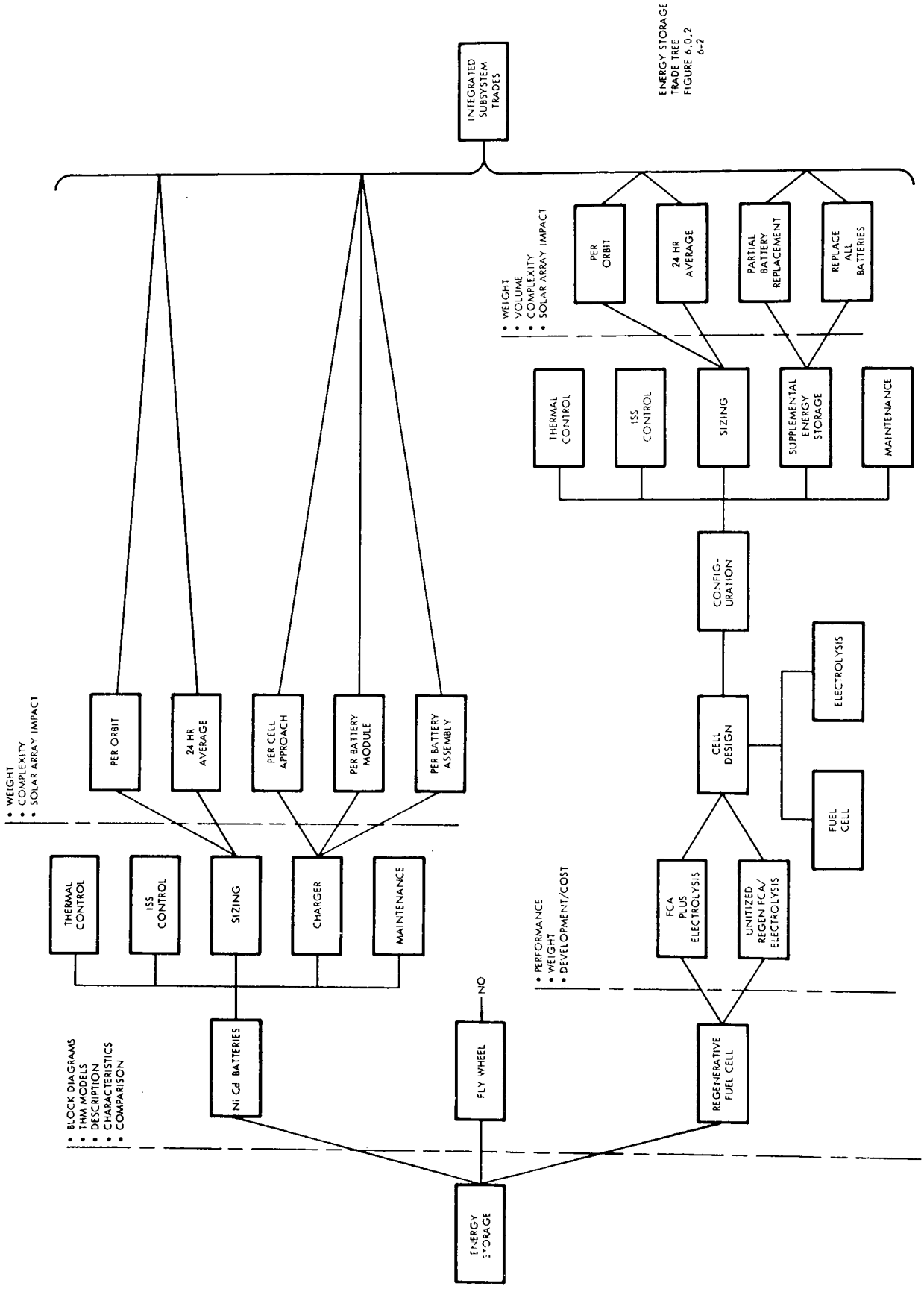

Figure 6-2. Energy Storage Trade Tree

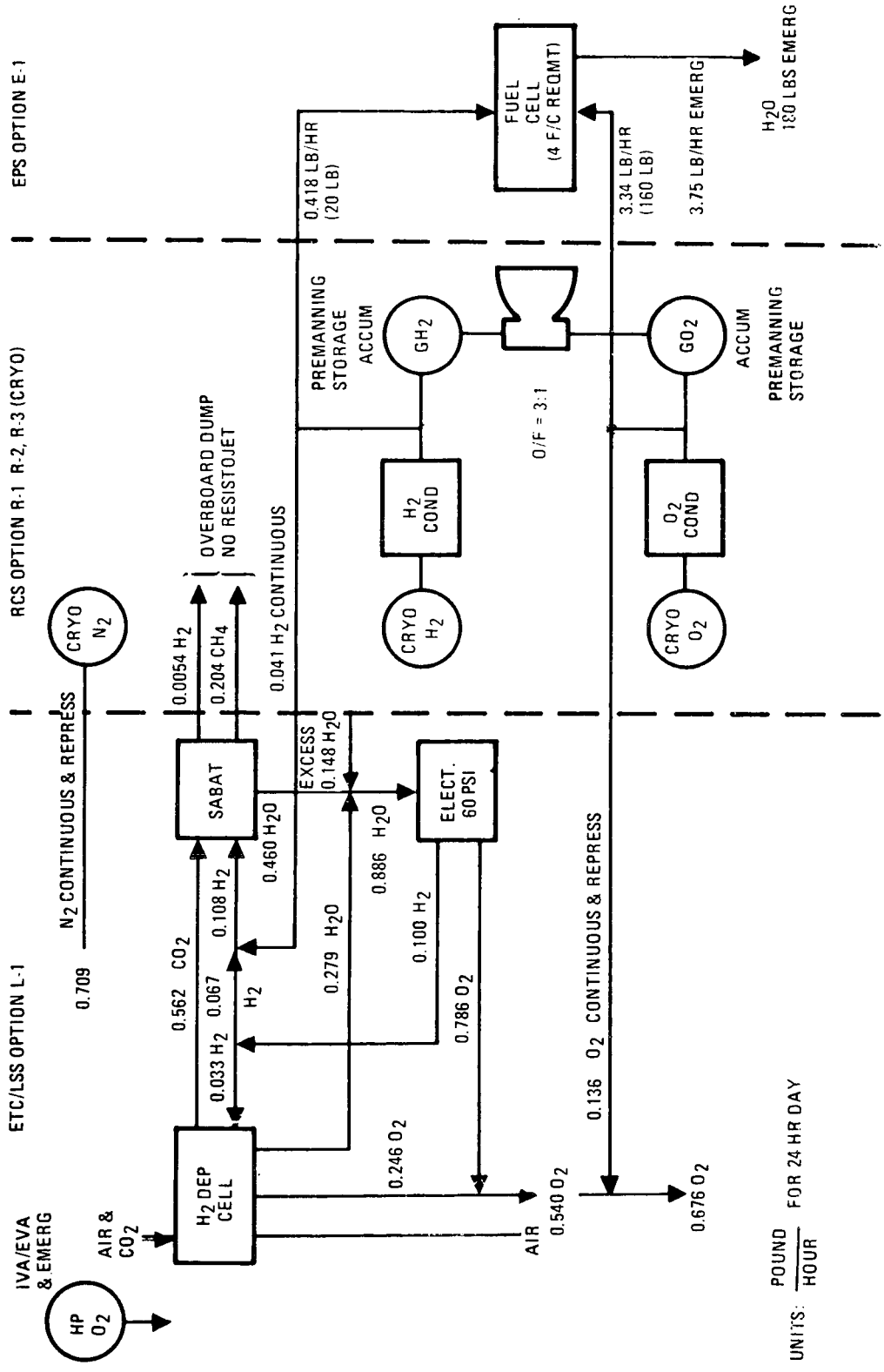

Figure 6-3. Reference Integrated Subsystem Concept Option 1

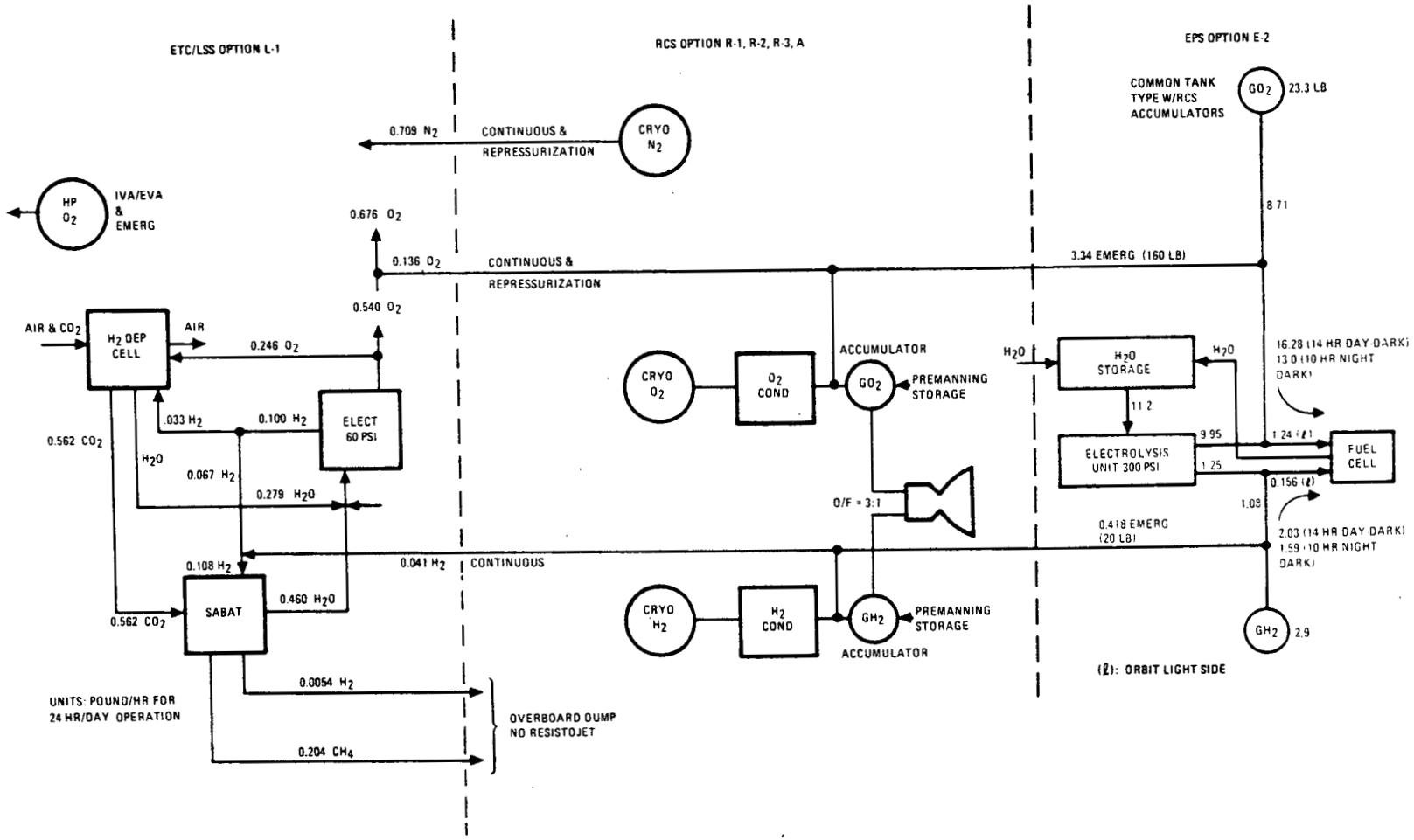

Figure 6-4. Integrated Subsystem Concept Option 2

Space Division
North American Rockwell

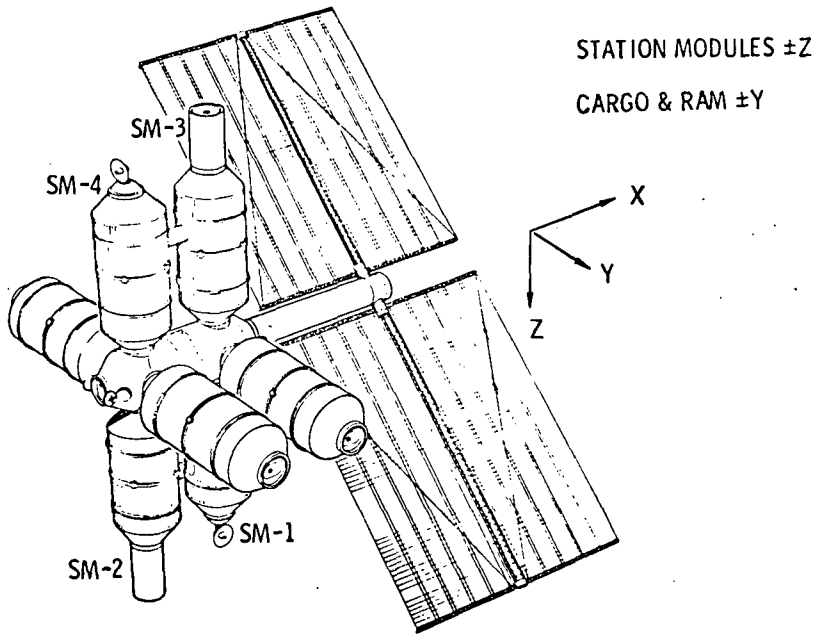

Figure 6-5. Initial Station Configuration

The integrated subsystem trade study included a hydrazine auxiliary power unit (APU) for those RCS options considering hydrazine for propulsion fuel. Cost comparisons showed that the APU added $13.3 million above Concept 1 (baseline). A weight penalty of 3600 pounds (92-hour emergency) resulted from specific fuel consumption rates of 10 lb./kwh compared to fuel cells at 0.82 lb./kwh. To make the concept competitive, improved fuel consumption rates are required which tends to drive the design to sophisticated and highly efficient closed-loop dynamic conversion equipment (i.e., increased development cost and risk). The hydrazine APU (E-3) was rejected with the recommendation made that all integrated options containing E3 be dropped from further consideration (Table 6-1).

6.1 ENERGY STORAGE REQUIREMENTS

The NASA guidelines and constraints specify an orbit of 55 degrees at an attitude between 240 and 270 nautical miles. For purposes of this study a 270-nautical-mile orbit was used as the baseline. The orbital characteristics of this baseline are given in Table 6-2.

Table 6-1. EPS Concept Comparisons

MISSION PHASE \ OPTION	EPS CONCEPTS		
	E-1	E-2	E-3
PREMANNING	SOLAR ARRAY BATTERIES	SOLAR ARRAY REGENERATIVE F/C	SOLAR ARRAY BATTERIES
NOMINAL	SOLAR ARRAY BATTERIES	SOLAR ARRAY REGENERATIVE FUEL CELLS	SOLAR ARRAY BATTERIES
EMERGENCY	FUEL CELLS	FUEL CELLS	HYDRAZINE APU'S
BACKUP (SOLAR ARRAY REPLACEMENT)	FUEL CELLS	FUEL CELLS	HYDRAZINE APU'S

RECOMMENDATION

- REJECT CONCEPT E-3 FROM FURTHER CONSIDERATION BECAUSE:
  - HARDWARE APU ADDS 13.3 $\overline{M}$ ABOVE E-1 (D&D, TFU)
    NOTE: 22.19 $\overline{M}$ D&D FOR APU
    COMPARED TO 5.68 $\overline{M}$ D&D FOR F/C
  - HEAVY WEIGHT FUEL REQUIREMENTS
    10 LB/KWH ~ 3600 LBS (92 HOUR EMERGENCY)

Space Division
North American Rockwell

Table 6-2. Baseline Operation Times

Item		Duration	
		Hours	Minutes
Orbit Period		1.576	94.56
D/L = 0.6	Light	0.985	59.1
	Dark	0.591	35.5
D/L = 0.471	Light	1.071	64.3
	Dark	0.505	30.3
Daily Operating Cycle			
Work - Light		8.75	525
Work - Dark		5.25	315
Rest - Light		6.25	375
Rest - Dark		3.75	225

Table 6-3 summarizes the electrical power loads used for energy storage trades. The reference concepts are based on the RCS using cryogenic hydrogen and oxygen without resistojets. The ECLSS was based on a closed oxygen loop using cryogenic oxygen for makeup. The basic difference in power required for the integrated trades was the amount of power required for the ECLSS electrolysis during the sunlight part of the orbit. The orbit dark period power for all concepts was essentially the same. Since it is this requirement that sizes the energy storage components, it is not necessary to consider all concepts for this portion of the study.

The data shown in Table 6-3 are presented graphically by Figures 6-6 and 6-7, showing power required by each subsystem. This power profile includes 4.5 kw_e average power allocated for experiments in the initial station and 6 kw_e for the growth station. In actual space station operation it is expected that this power will be higher during the 14-hour work period and lower during the 10-hour rest. This change will increase 14-hour work period energy storage required and decrease the 10-hour rest requirements. It is also believed that 24-hour average experiments power will vary with mission time. An example of this is shown in Figure 6-8, using data from References 6-2 and 6-3. This change would reduce the solar array area required since there is an advantage gained by matching experiment requirements and the solar array degradation curves.

Table 6-3. Electrical Power Requirements*

Type Load	24-Hr. Avg.**	Load (watts)			
		14-Hr. Work		10-Hr. Rest	
		Light	Dark	Light	Dark
Initial Station (6-man)					
AC Allocation		17,447	14,167	13,186	9,906
Average ac peaking		1,500	1,500	750	750
Total ac		18,947	15,667	13,936	10,656
DC Allocation		1,700	1,700	1,700	1,700
Feeder losses		100	50	100	50
Total	17,412	20,747	17,417	15,736	12,406
Growth Station (12-man)					
AC Allocation		29,761	22,541	22,098	14,978
Average ac peaking		2,500	2,500	1,000	1,000
Total ac		32,261	25,041	23,098	15,978
DC Allocation		2,800	2,800	2,800	2,800
Feeder losses		200	100	200	100
Total	28,650	35,261	27,941	26,098	18,878

* Same as Concept 1 and 2 of integrated trade = ECLSS = closed oxygen, electrolysis only during light portion of orbit, cryogenic consumables. Power conditioning and other EPS losses shown elsewhere.

**24-hour average based on dark/light = 0.6

Space Division
North American Rockwell

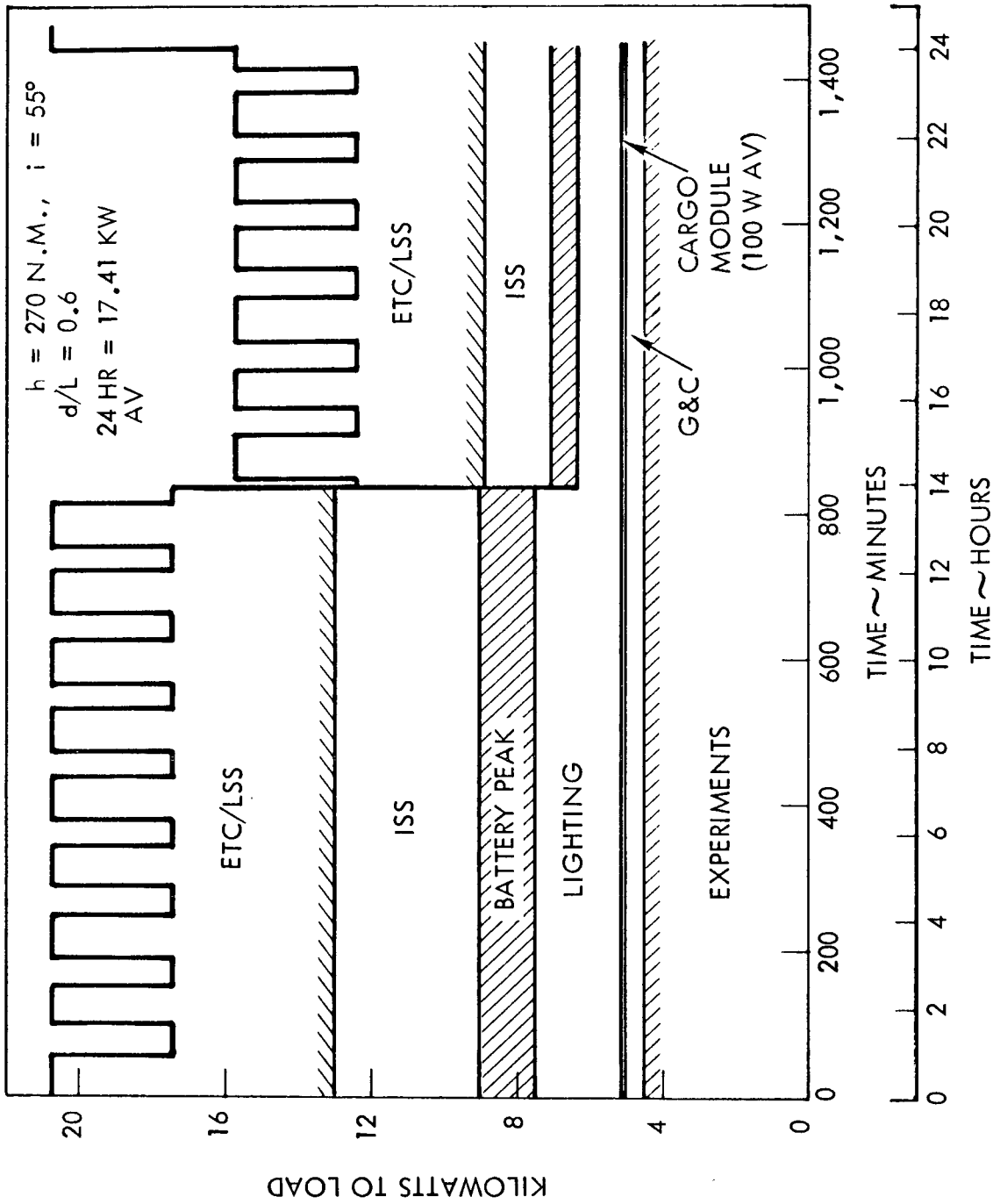

Figure 6-6. Six-Man Station Electrical Loads

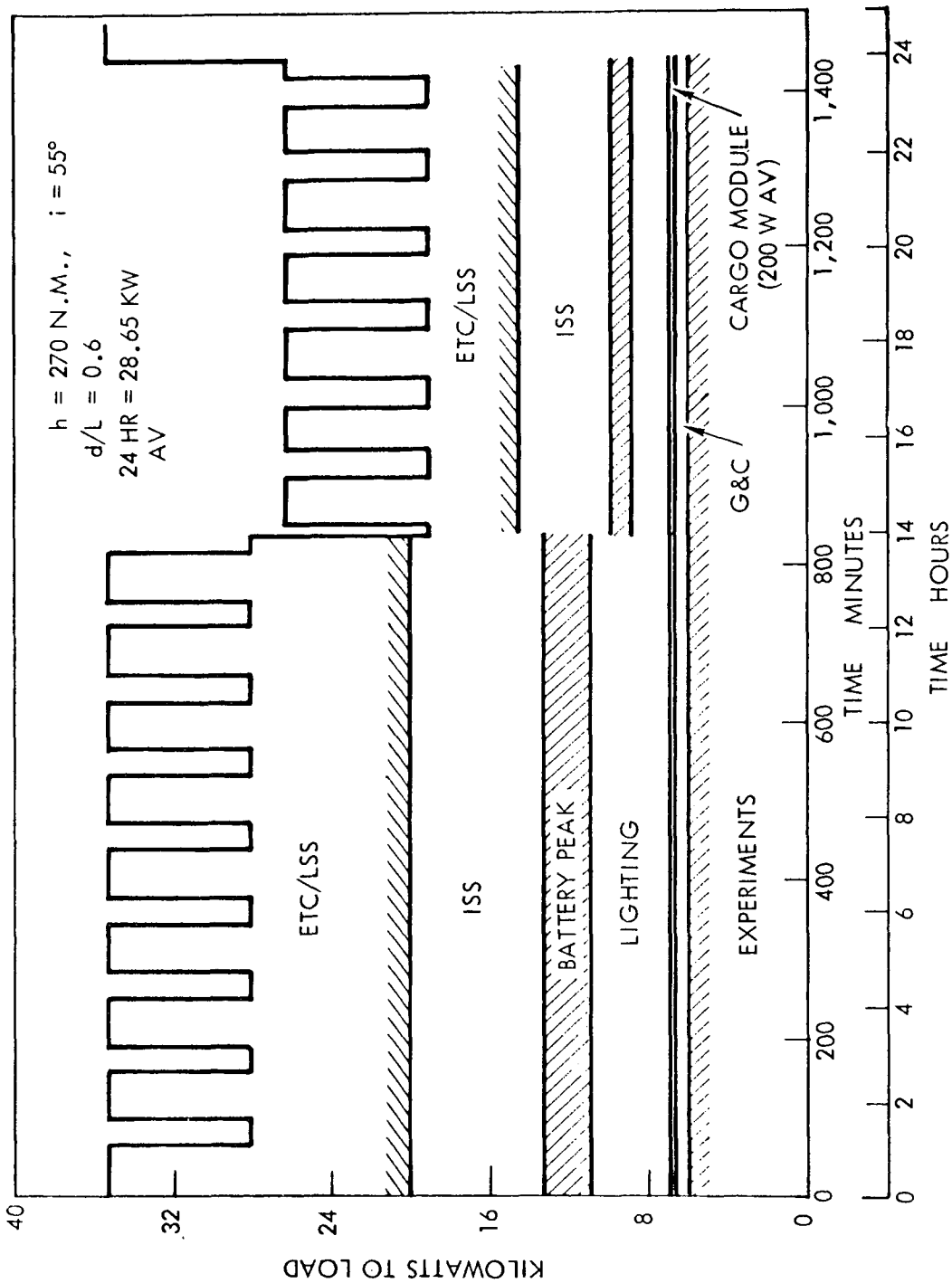

Figure 6-7. Twelve-Man Station Electrical Loads

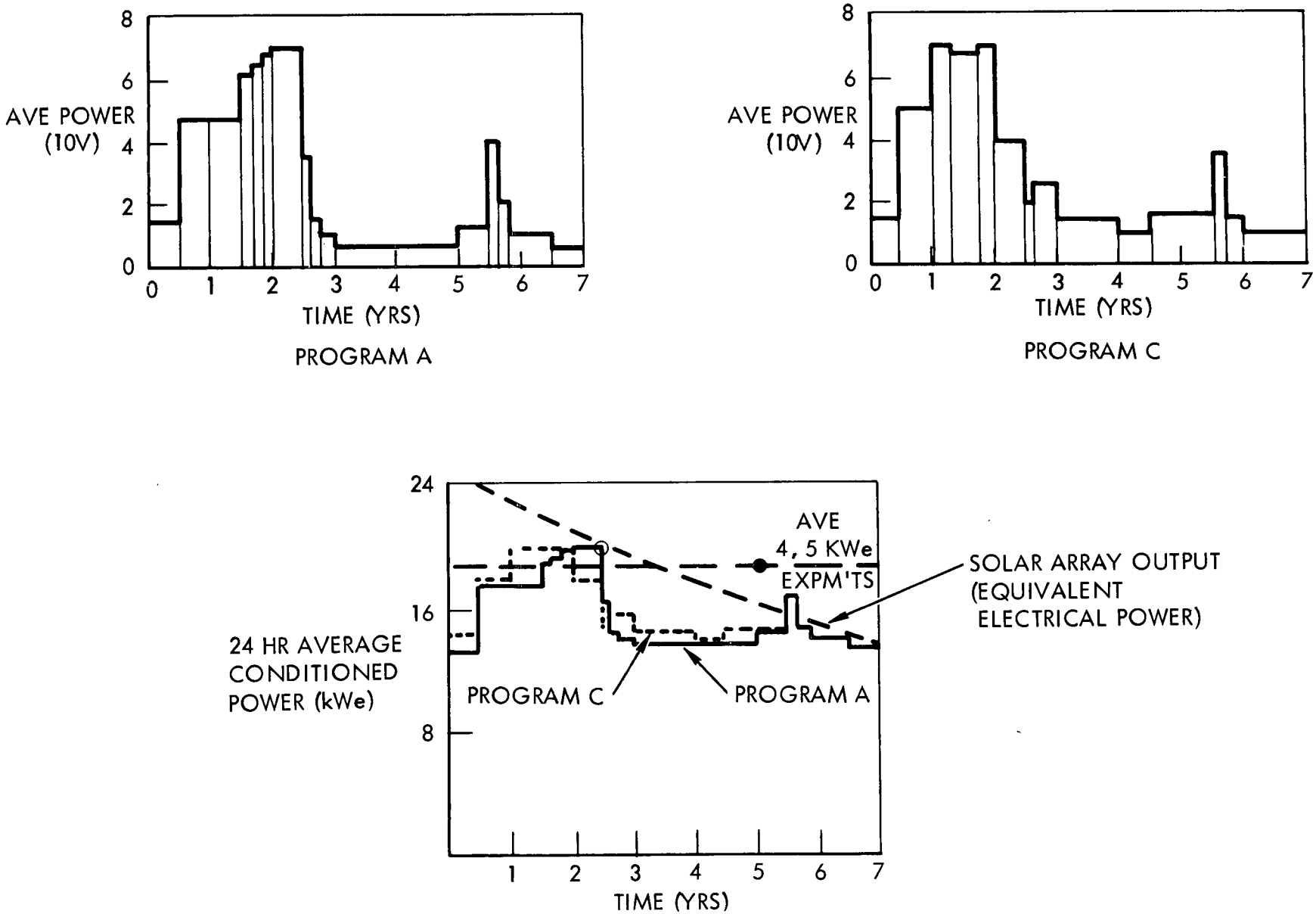

SPACE STATION & TAILORED EXPERIMENT PROGRAM - POWER PROFILE

Figure 6-8. Load Profiles Tailored to Specific Experiment Programs

Space Division
North American Rockwell

Table 6-4 shows energy storage requirements as a function of work and rest periods for both the 6- and 12-man stations. Values shown for the light portion of the orbit are those allocated for battery peaking.

Table 6-4. Energy Storage Requirements

d/L = 0.6, i = 55°, h = 270 N M

Station Size	6-Man			12-Man		
Orbit Period	24-Hr. Avg.	14-Hr. Work	10-Hr. Rest	24-Hr. Avg.	14-Hr. Work	10-Hr. Rest
Light (peak) (kwh)	1.32	1.68	.84	2.1	2.81	1.12
Dark (kwh)	10.32	11.78	8.38	16.2	18.83	12.66
Total (kwh)	11.64	13.46	9.22	18.3	21.64	13.78

For the orbit specified in the initial station, the orbit dark-light ratio will vary from 0 to 0.6 four times during the year. The required orbit dark period energy as a function of d/L is shown by Figure 6-9. The daytime peaking allocation needs to be added to the data shown to obtain total orbit energy storage required. Autotransformer (2.5%) and rectifier filter losses (4.5%) are included in the data shown. An inverter efficiency of 0.90 is also included.

Backup

The MSS component failure criteria specified a design of fail-operational, fail-degraded, and fail-safe (References 6-4 and 6-5). This is interpreted to mean that after two failures station operations must be maintained at a degraded mode. An analysis of this requirement showed that the station could operate at a level of 13.4 kilowatts in an acceptable backup mode. System requirements specify 30 days for backup operations.

Solar Array Replacement

Guidelines and constraints (Reference 6-5) specify 5-year operational life for the initial MSS. For purposes of this study, a solar array minimum design lifetime of 5 years was also taken. It was not judged to be cost-effective to use shorter lifetimes and a 10-year solar array lifetime doesn't appear likely in this time span. Replacement of the initial array will match a natural step change in requirements going to growth MSS. All solar array sizing is based on this assumption (i.e., performance degradation allowances).

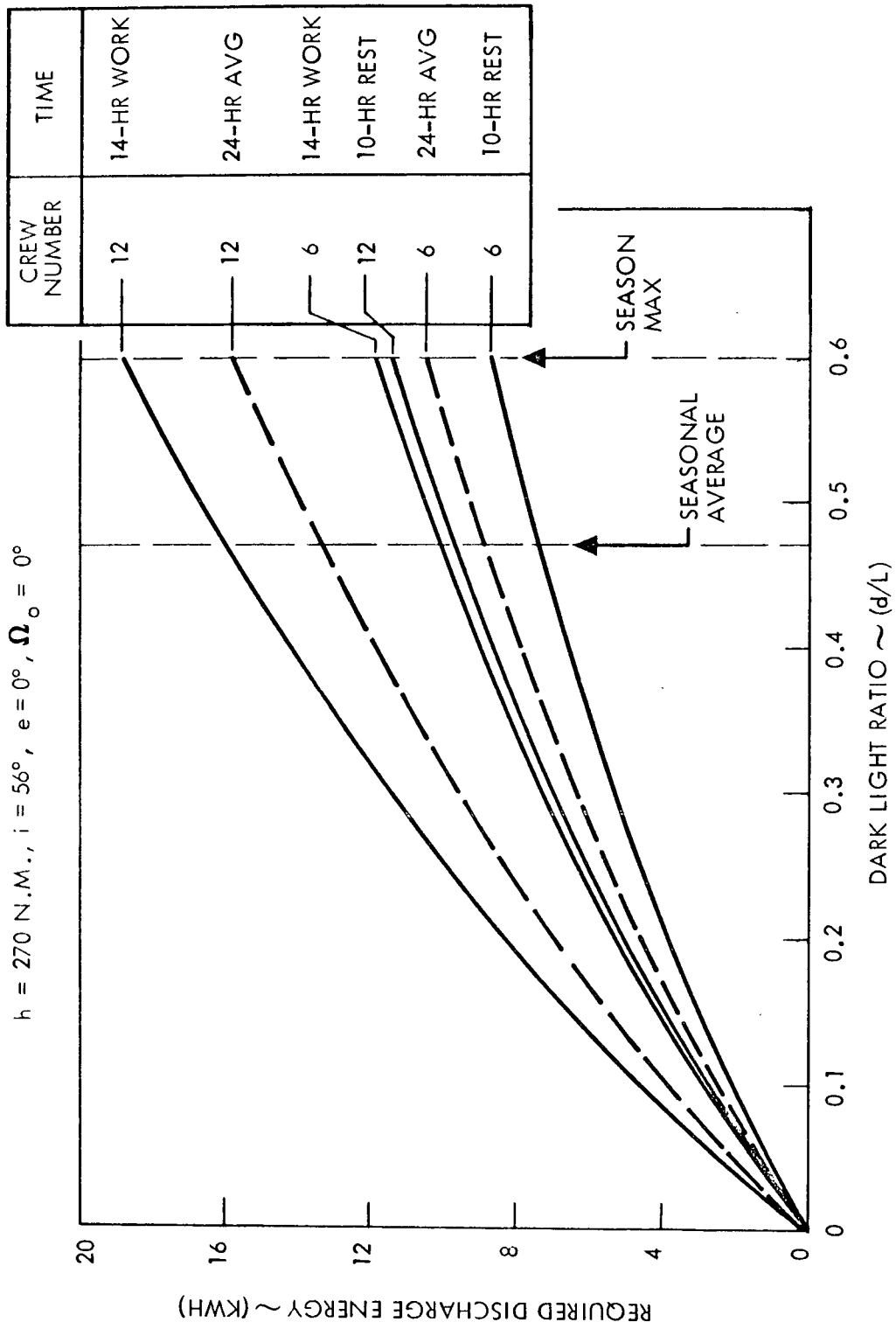

Figure 6-9. Orbit Dark Period Required Discharge Energy

Emergency

The MSS systems can operate in an emergency mode at approximately 3700 watts. Later consideration of this requirement reduced essential life support needs to 1745 watts (average) by inclusion of some scar equipment. System requirements are set at 96 hours as a minimum to assure shuttle rescue of crew.

6.2 ENERGY STORAGE CONFIGURATION CONCEPT

A number of concepts were considered in this study. Phase A MSS study results show a battery energy storage assembly. This concept was iterated so that a common basis of comparative evaluation could be made. For the regenerative fuel cell approach various levels of battery support were considered. It was concluded that all secondary batteries could be replaced and that the secondary power requirements could be satisfied by using the same fuel cells included in the energy storage assembly. Unitized regenerative fuel cells were rejected because of increased development cost. Shared technology cost with shuttle fuel cell and MSS electrolysis development efforts are necessary to arrive at a viable regenerative fuel cell energy storage concept. Weight penalties can be expected from this decision but additional flexibility and backup capability will result.

Battery Concept

Functional Description

The battery assembly consists of a group of battery modules, battery racks or enclosures, battery chargers, and control units. A battery module consists of a package of four cells with their associated sensors (Figure 6-10). The module will be the basic maintenance unit and capable of being removed and replaced by the crew while in orbit. Twenty-one modules will be connected in series to make up a battery. Power in and out will be controlled on a 20-cell or 24-cell unit with internal contactors for removing charge current on a 4-cell basis. Monitoring capability will be on a per-cell basis with time criticalities typically in the 1- to 20-second range.

Block Diagram

A typical functional diagram for one of four primary buses is shown by Figure 6-11. The total power required or delivered from the source must equal the power used by the loads plus the power stored as well as the power losses of the system. Power losses will be contributed by the battery charger, battery (charge-discharge efficiency), conditioning units (regulators, converters, inverters, etc.) and the distribution (wiring, connectors, relays, protection devices, etc.). Figure 6-12 shows the battery subassembly to include battery, charger, controller, instrumentation, and load bank.

A level of 112 volts was selected for the baseline battery configuration. Figure 6-13 shows two 84-cell string batteries supporting a primary bus (the growth MSS requires three per primary bus). This concept is similar to that described in the Phase A MSS concept definition. Because of the 4-cell module constraint, 84 or 88 cells could be used. Average cell voltage is closer to the lower end of the operating range; therefore, 84 cells were used. The size shown for battery module (i.e., 5 four-cell packages dictating battery charger size) is somewhat arbitrary but is in the same range as present 28-volt battery chargers. Figure 6-14 shows a modification to satisfy a 28-volt distribution system. Generally the same number of switching functions are required but an adjustment is needed in cell quantity to keep battery voltages balanced.

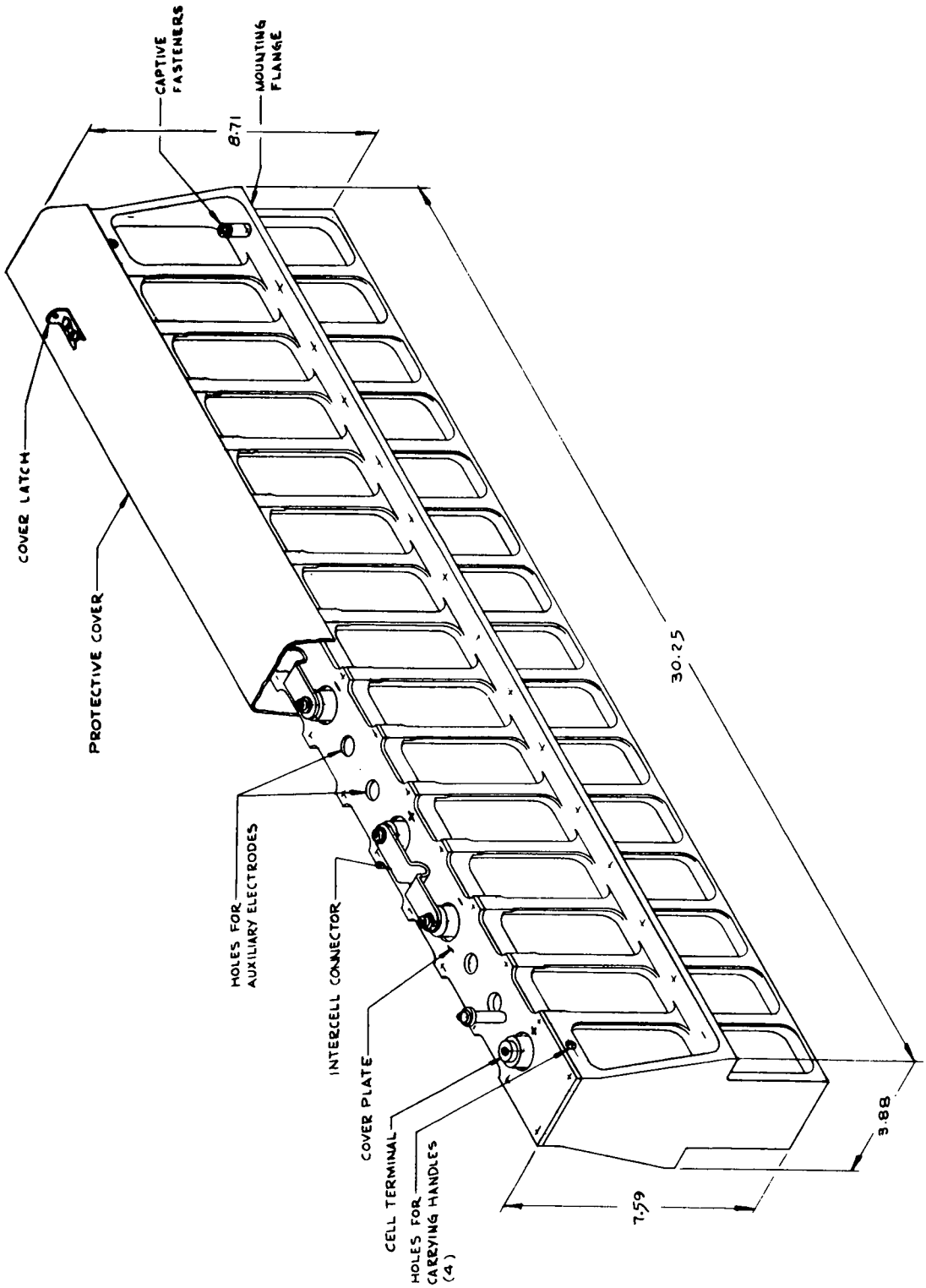

Figure 6-10. Battery Module Assembly

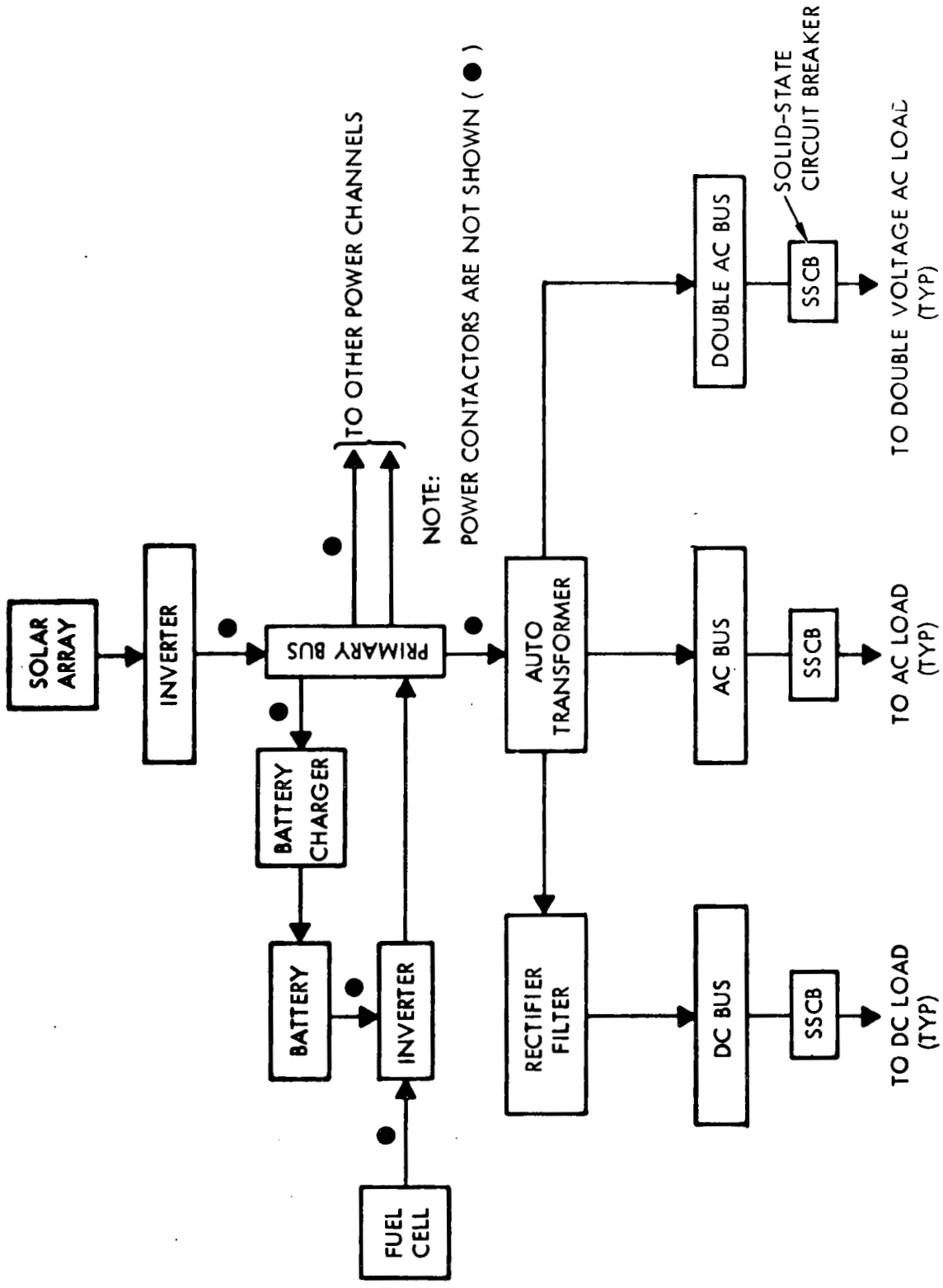

Figure 6-11. Solar Array/Battery Functional Block Diagram (Typical One Channel of Four)

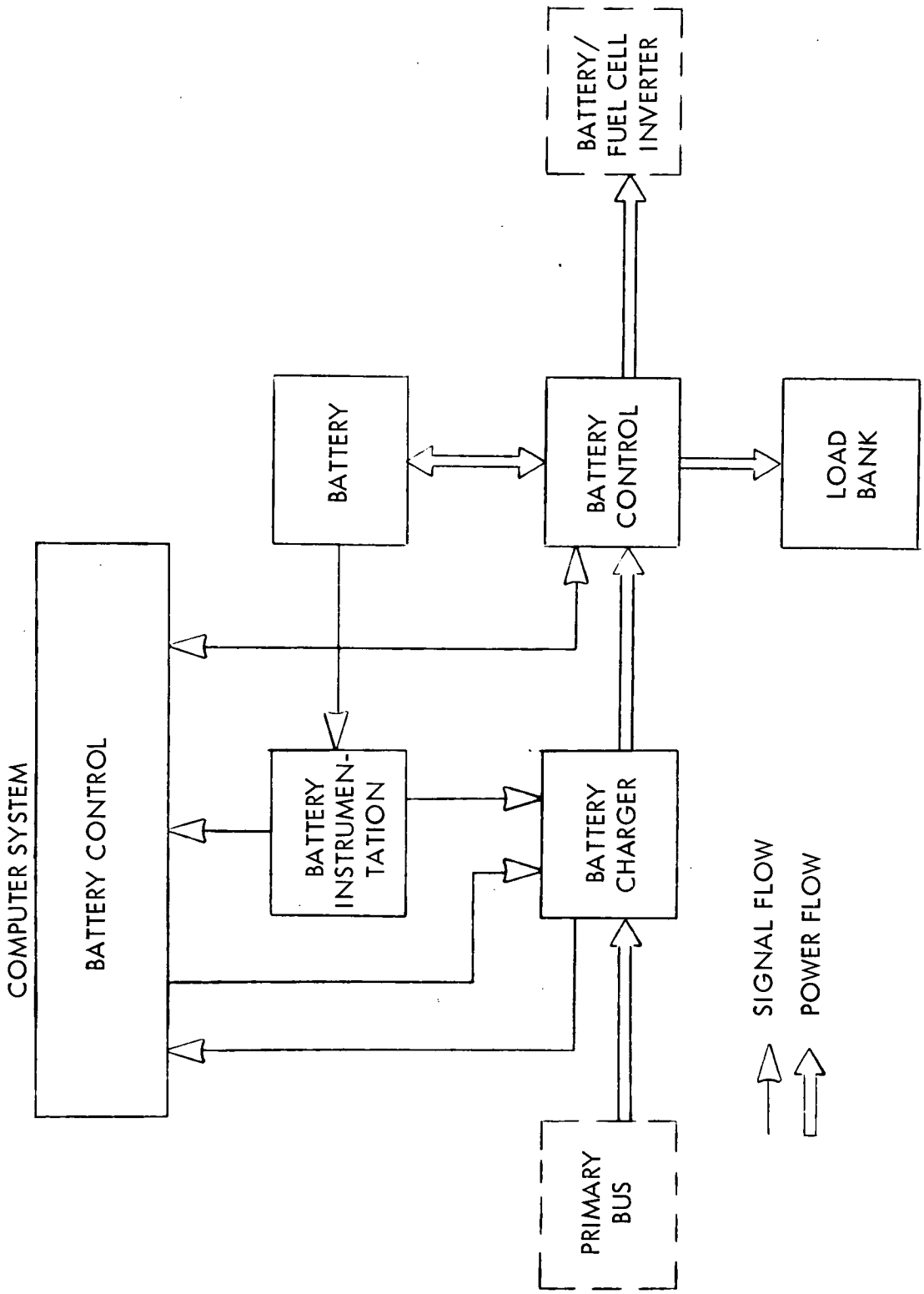

Figure 6-12. Battery Functional Block Diagram

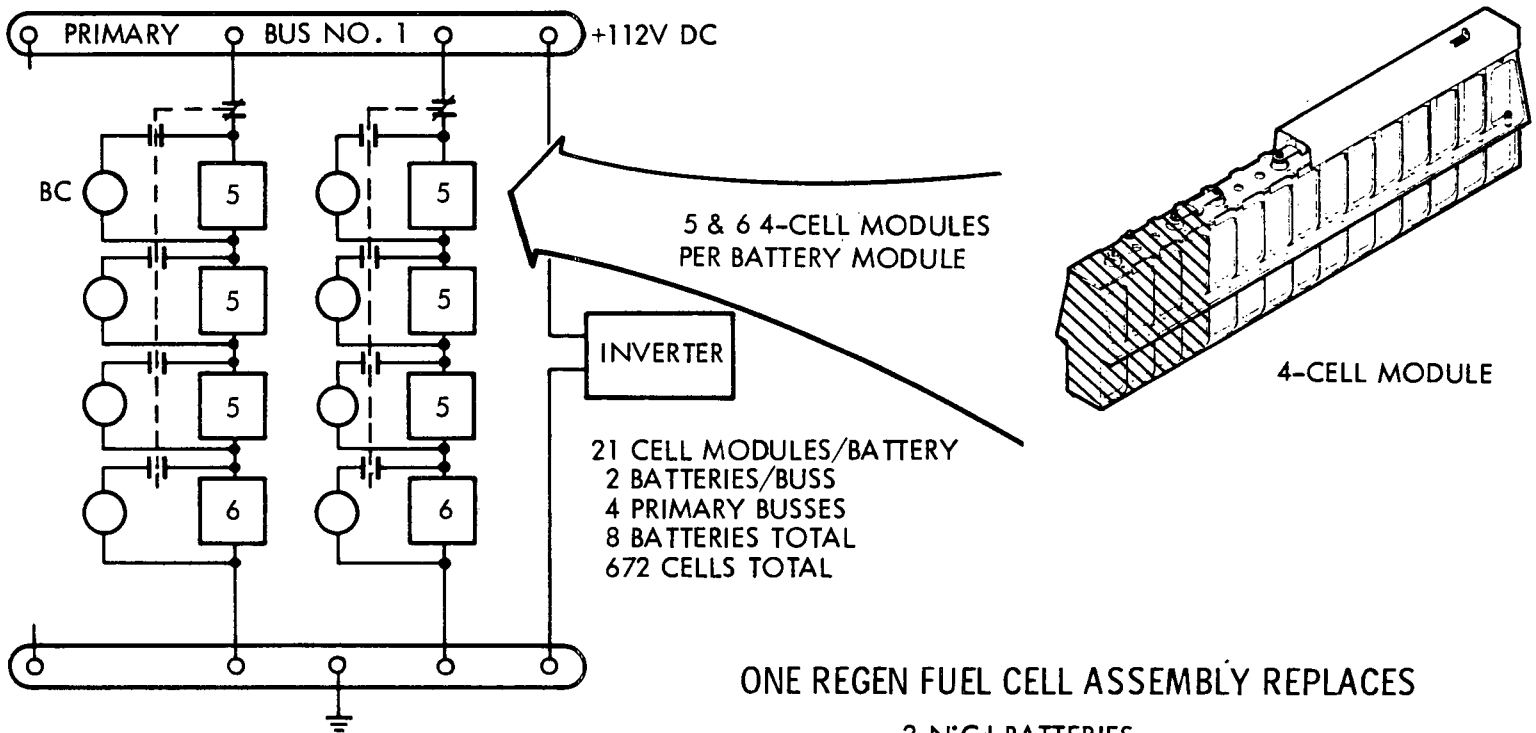

ONE REGEN FUEL CELL ASSEMBLY REPLACES

2 NiCd BATTERIES
42 CELL MODULES
168 NiCd CELLS

8 BATTERY CHARGERS

REDUCES INSTRUMENTATION

REGENERATIVE FUEL CELL REDUCES INTEGRATION COMPLEXITY

Figure 6-13. 112-Volt Battery/Fuel Cell Supply (Typical Each Power Channel)

Space Division
North American Rockwell

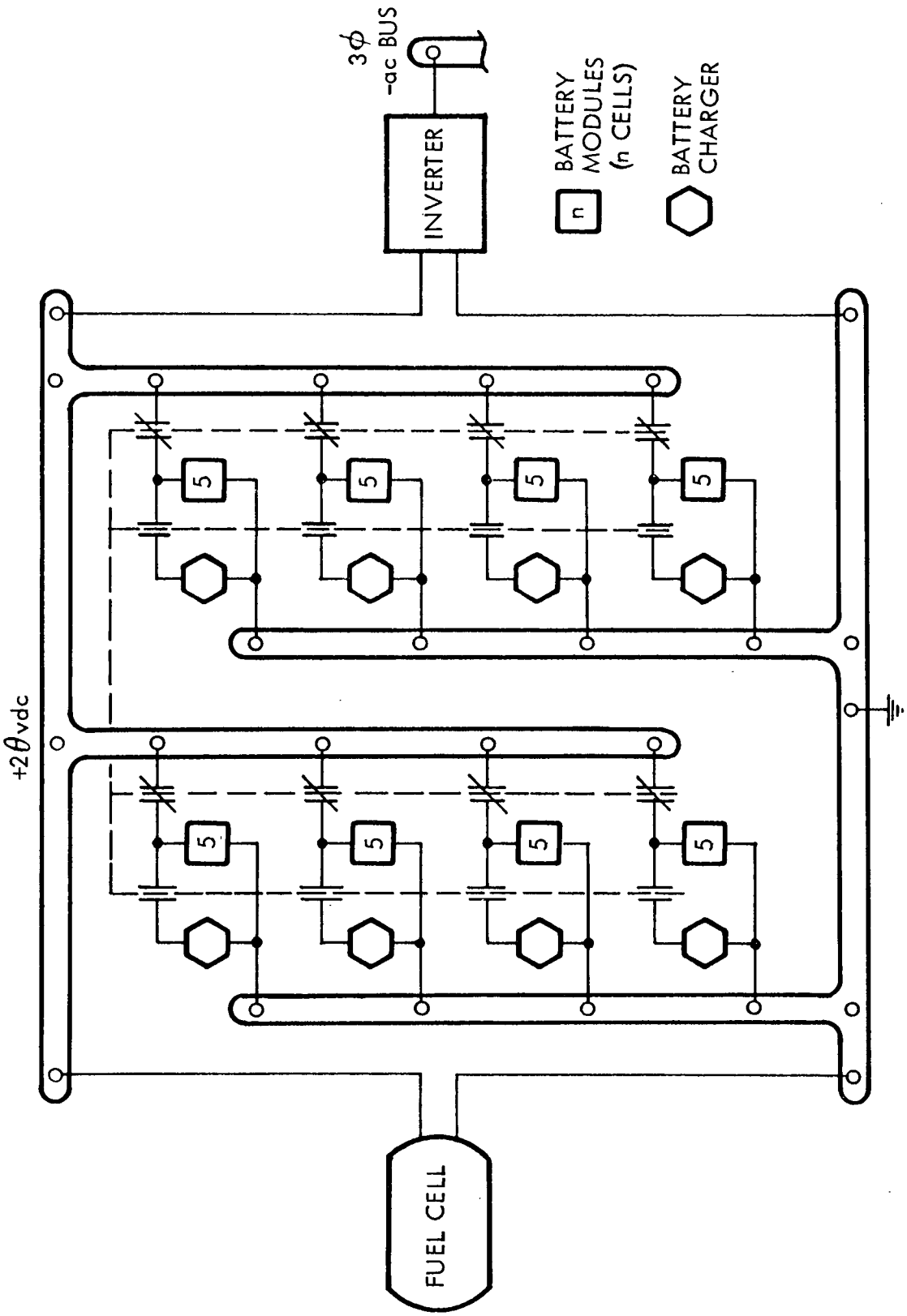

Figure 6-14. 28-Volt Battery/Fuel Cell Supply

Figure 6-15 shows the layout of battery controller. Each box identified as a battery module in Figure 6-13 includes a controller circuit similar to that shown in Figure 6-15. Purpose of the controller is to configure the battery into the proper operating mode. The controller shown in the schematic provides power control for each 4-cell module. This appears to be the maximum acceptable complexity. Instrumentation on a per-cell basis is planned (shown by Figure 6-16). During charge and discharge modes, per-cell instrumentation in conjunction with ISS senses the state of charge.

In general, total control of the battery subassembly is by the ISS with one exception. The sensing of the battery state of charge normally will use analog-type signals which in turn directly control the charger regulator circuits. Insertion of the ISS into these control loops would require analog-to-digital conversion, computer time, and digital-to-analog conversion if existing charger circuits are used. In addition, longer data links are involved that would affect overall system complexity. The state of each battery is monitored and the operating mode of the charger is selected as a function of the most sensitive cell in the group.

Battery Charging Method

Four basic charging methods were considered and are compared in Table 6-5. Constant current is used only where extremely long charge periods are available since charge current is constrained to that current at which the cells can be charged continuously without gassing or overheating. Constant voltage requires large current at the beginning of charge. Maximum permissible charge voltage must be set at the lowest allowable voltage at high temperature and compensated or the battery will not be fully recharged at the cooler temperature. To set proper limits, an accurate knowledge of the battery heat evolution characteristics, efficiency, voltage, and overcharge relationship are required. Constant voltage charging has rarely, if ever, been used in aerospace applications. A modified voltage-limited charge is a combination of constant current and constant voltage. Initial charge is at a high constant current rate until a preselected voltage (temperature-compensated) is reached. Charge current is gradually reduced (or reduced in steps) as the voltage differential (battery volts versus charge volts) decrease.

Care must be exercised in establishing the voltage limit to assure that it is not high enough to be in the range where irreversible hydrogen evolution occurs. The voltage limit must be chosen so that no individual cell voltage will approach the danger region. If one cell reaches full charge first and is not detected by the charge control sensors, that cell will be subjected to overcharge and gas may evolve. Increasing the number of series-connected cells enlarges the problem since this increases the probability of having one cell of divergent capacity and increases the masking effect. If sensing and control is established on a per-cell basis, then the guesswork will be eliminated and each individual cell can be closely controlled.

Although batteries may be capable of being charged at 1C or 2C rates during the initial charge state, the actual charge rate may be constrained to a lower value when considering cells with large capacity (i.e., 100 amp-hour).

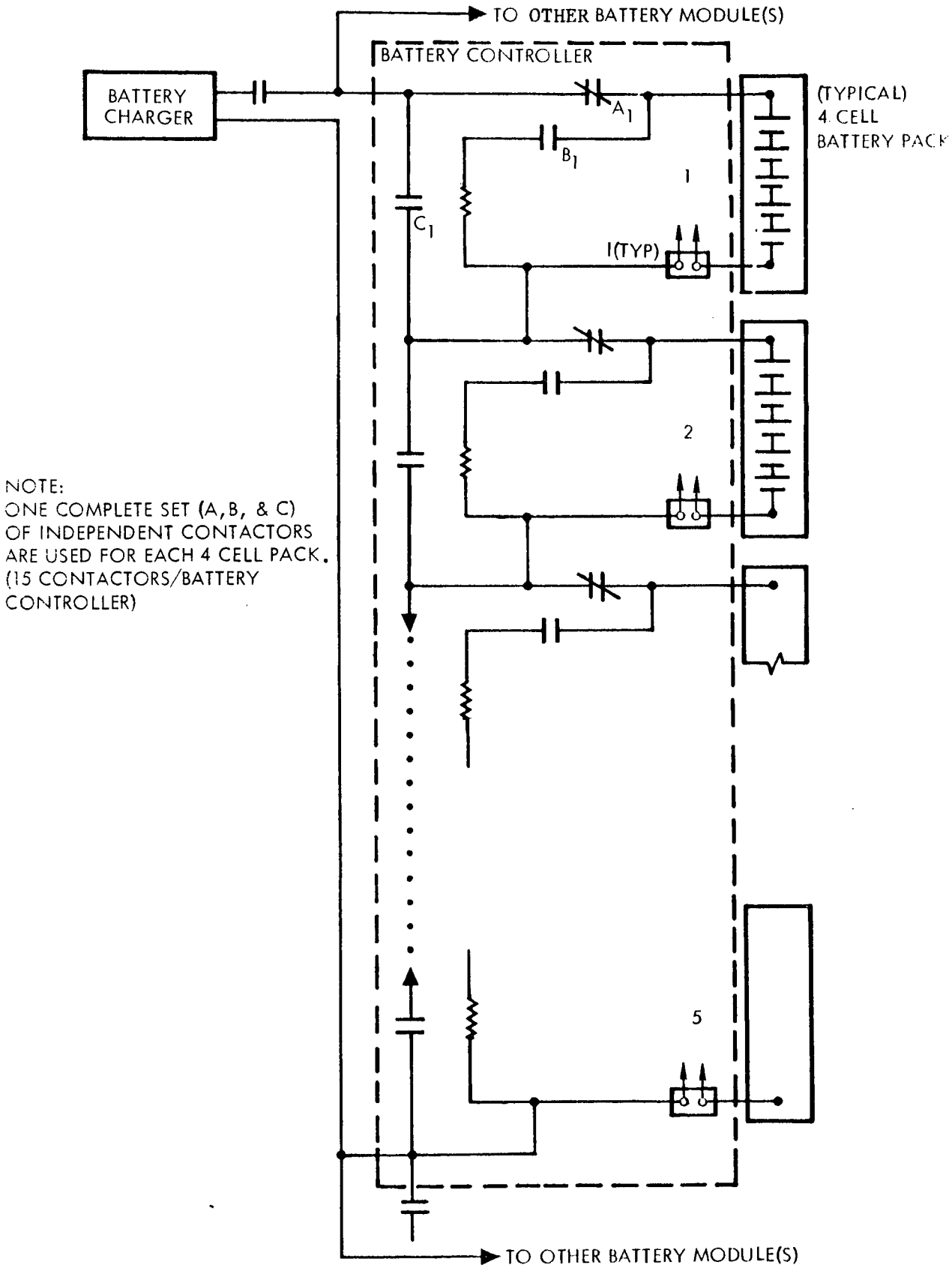

Figure 6-15. Battery Controller

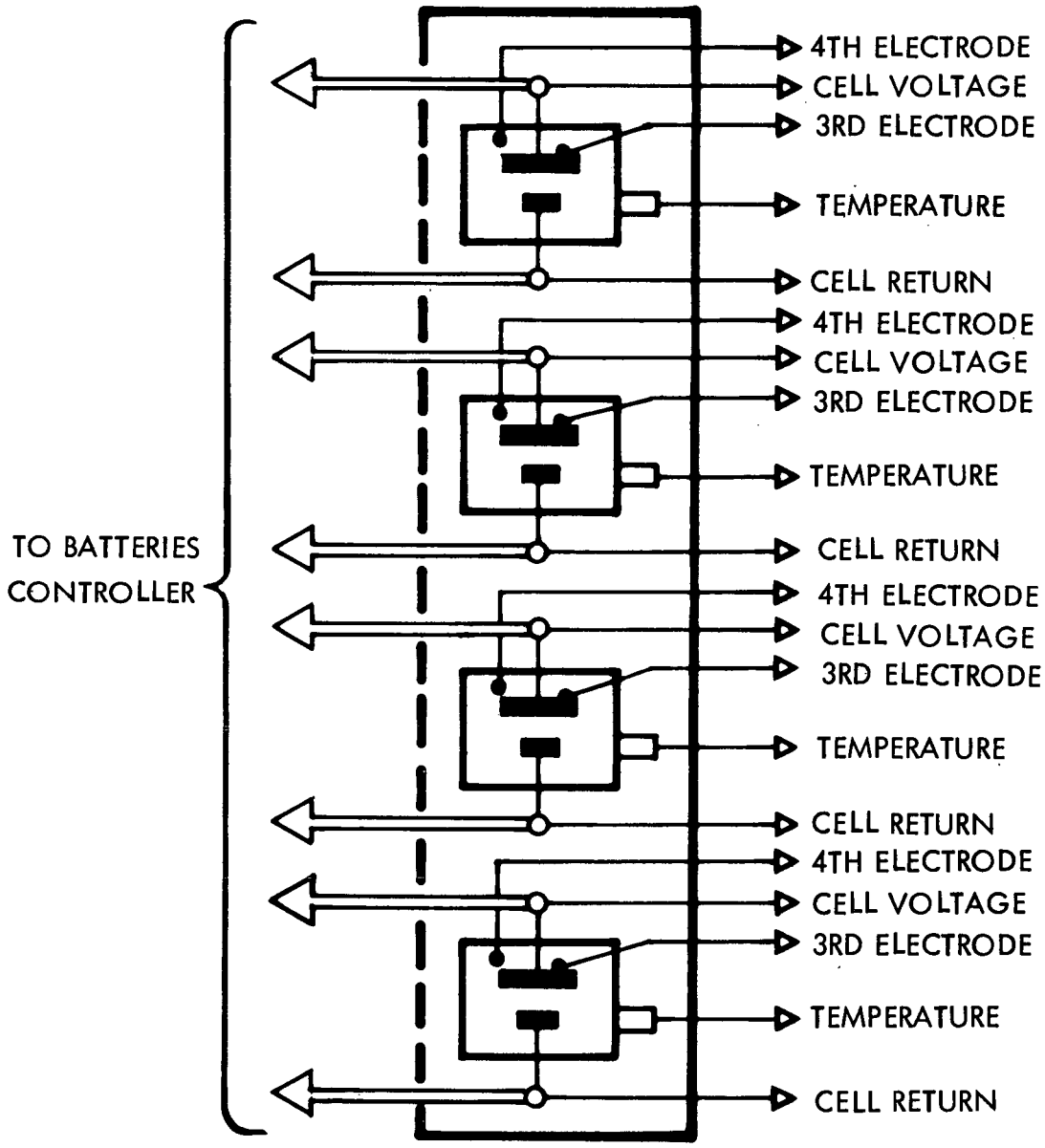

Figure 6-16. Battery Cell Module

Table 6-5. Battery Charging Method Comparison

Charging Method	Description	Advantages	Disadvantages
1. Constant Current	Current input limited to fixed value.	Simple	1. Rate limited by allowable overcharge rate. 2. Overcharge rate is temperature-dependent and rate must be limited to lowest predicted temperature to avoid gassing and overheating. 3. Long charge time required. 4. Low efficiency at high temperature and achievable state of charge is limited.
2. Constant Voltage	Constant voltage (value slightly above full charge voltage) current varies as voltage differential.	Simple; faster than Method 1	1. Rate limited by maximum allowable end of charge voltage (i.e., maximum overcharge rate). 2. Charge rate is limited (due to voltage setting) during initial charging. 3. Not temperature-compensated. Overcharge rate may be excessive and cause thermal runaway. 4. Large source required to maintain constant V at beginning of charge.
3. Modified Voltage Limited Temperature	Constant current to predetermined voltage (temperature dependent). Battery voltage is limited at that value and current is gradually reduced to final trickle charge.	1. Fairly rapid charge time 2. Temperature compensated 3. Less heat dissipation 4. Permits use of smaller battery than 1 or 2 in some instances	1. More complex. 2. Fully charged state difficult to detect. 3. Requires overtemperature, protection. 4. Requires accurate knowledge of battery parameters.
4. Controlled Pulse Charge	High-energy positive pulse each followed by a short duration discharge pulse or cell voltage decay period. Pulse amplitudes are variable.	1. Very rapid charge time 2. High efficiency 3. Low heat dissipation 4. Increased battery capacity over life 5. Reduce memory effects 6. Cell equalization	1. Complex. 2. EMI. 3. Little experience and data.

Space Division
North American Rockwell

Constraints on charge rate include limited available array power and the ability of the hardware to handle the large currents. Wiring, connectors, and particularly on-off switching controls present problems. The volume requirements can become excessive and thermal control becomes more complex. Mechanical switching components are available which will handle the large currents involved; however, they are large and heavy. Transistors are available which can handle currents of approximately 50 amperes if voltages are low. An active cooling system (glycol, water, etc.) or heat pipes may be required to cool the components.

Pulse Charging

The most recent technique for charging batteries is a modified pulse charging method as developed by McCulloch Corporation, Christie Electric, and Engineered Magnetics. Earlier attempts at pulse charging consisted of applying a series of positive pulses after the battery had been charged to 80 or 90 percent of capacity. The positive pulses were used to "top off" the battery. This technique did not prove to be much of an improvement over the tapered trickle charge of the modified voltage-limit method and therefore has not been extensively used.

The basis of the new pulse charge techniques is the control of cell polarization during the charging operation. McCulloch Corporation uses very short duration pulses while Christie Electric uses significantly longer pulses. Engineered Magnetics uses very long pulses (the initial pulse approaches the constant current charge method in duration) coupled with periods of rest while the cell undergoes self-depolarization.

The newer pulse-charging method consists of applying a large positive pulse for a short period. Interspersed with the positive pulses are negative (discharge) pulses of much shorter duration than the positive pulses. The pulse widths vary in relation to the sensed state of charge of the battery. Cell voltage monitoring takes place between the negative and positive charge pulses.

The depolarization resulting from the negative pulses reduces battery impedance and therefore heating and electrolyte losses are much lower. It is claimed that this technique results in higher charge acceptance (pulses of 2C, 3C, or even 5C rates can be used), lower temperature rise, higher charging efficiency, and longer cycle life. Battery memory effects are minimized and cell imbalance or divergence effects are greatly reduced. Batteries with divergent cells have been cycled through charge-discharge cycles and the divergence has shrunk to very small limits. An efficiency of 97 percent (ampere-hour efficiency) has been quoted for the battery-charger combination when used with vented nickel-cadmium cells. This high efficiency allows a great reduction in the amount of overcharge necessary to return 100 percent of capacity. Also battery heating will be less.

Data on the charging of sealed nickel-cadmium cells with the regulated pulse charger are very limited.

Apparently the main problem encountered with sealed cells is that of overpressure due to gassing, which occurs if the pulses are not properly adjusted for the particular type and size of cell being charged. An auxiliary electrode may be added to aid in the recombination of oxygen and will help alleviate any gassing problem that may occur.

The pulse-charging system is more complex than the other charge techniques. More components are required to control the pulses, timing, etc. The pulses are rapid and sharp and, therefore, can cause EMI problems. Extra care must be taken with wire shielding, twisting, and routing. Components and packages may also require RFI shielding. Other disadvantages which have been mentioned are the lack of data and experience with sealed nickel-cadmium cells.

Many of the properties of the pulse-charging techniques are ideally suited for space station applications. Because of the large station requirements there are a great number of batteries to be charged. Coupled with this is the central computer (ISS) capability for control of charging. By taking advantage of the pulse nature of the charger's power delivery, several chargers can be time-sequenced to provide high charge rates without overloading the solar array. This advantage derives two large benefits in battery handling. One is that by using high charge rates the overall battery charge efficiency is improved. The discharge pulse is small in comparison to the charge pulse so that it can be ignored. The other benefit is that charge times are shortened allowing greater flexibility in power scheduling of the limited capability of the array.

Additional advantages of pulse charging claimed by the developers are reduced heat generation in the battery, reduced cell divergence, lessened memory effects, increased battery capacity over its lifetime, and longer life. There is no assurance that the noted advantages will hold for large sealed cells; however, the potential benefits are significant and further investigation of the concept is needed and should be pursued.

Available Charge Power and Time

The two most significant parameters for battery operations are available charging power and time. The multi-mode charging unfortunately leads to a situation that is difficult to handle with a power-limited source. The charge times can be determined using the following relationship:

$$T_c = D \sum_{i=1}^{\text{mode}} \frac{K_i R_i}{\eta_{BA_i}}$$

where

D = depth of discharge
K = percentage of energy returned to battery
R = charge rate
η = battery amp-hour efficiency

Charge control	Tc
2 step	54.7 minutes
3 step	57.0 minutes
4 step	57.5 minutes

The actual times would depend, of course, on the selected mode changeover voltages. The main point is that all of the multi-mode techniques require the full daylight period to charge one battery. At least one battery must be available for peak loads in the daylight. Therefore in an 8-battery arrangement, only 7 are actually involved in charging operations. Based on the MSS requirements and a charge rate of R = 1.2 (83 amps), resultant power into the charger is 76.7 kilowatts.

This leads to an inordinately large array area requirement of 11,400 square feet. With the stepdown approach, the eventual total battery charging power falls to 4150 watts or an array utilization of 620 square feet. The difficulty arises because of the long times needed for recharging a battery. Techniques must be developed to power schedule the charging load (i.e., selectively charge a limited number of cells per orbit). This is where the application of new charging methods are mandatory for a successful space station battery concept. By taking advantage of the large number of chargers (32) and ISS control the question of limited array power can be handled. With this capability power can be managed by selectively controlling the number of chargers operating at any one time. This would even out the power demand curve over the entire daylight period and result in a high utilization factor for the solar array.

Charging Operations

The baseline charge method selected for the station is the multi-mode limited technique. This selection is made primarily because it is the approach with the greatest success in the past and data on the newer pulse charging method are not available. The final selection of method should be left open until more data are available.

Charge Parameters

The maximum allowable voltages which should be applied to nickel-cadmium cells are shown in Figure 6-17.

The top curve shows the maximum voltage which a single NiCd cell will tolerate without getting into the hydrogen evolution region. In a multicell battery the individual cell voltages will vary about an average and the maximum charging voltage limit must be kept low enough to assure that the higher cell voltages will not approach the danger region. The temperature dependency of the overcharge voltage is shown by the lower curve.

The requirement for sealing cells for operation in a space environment poses several problems in battery charge control. Gasses are generated during excessive overcharge which will lead to cell case rupture. To avoid excessive overcharge, the applied voltage must be limited to a value at which

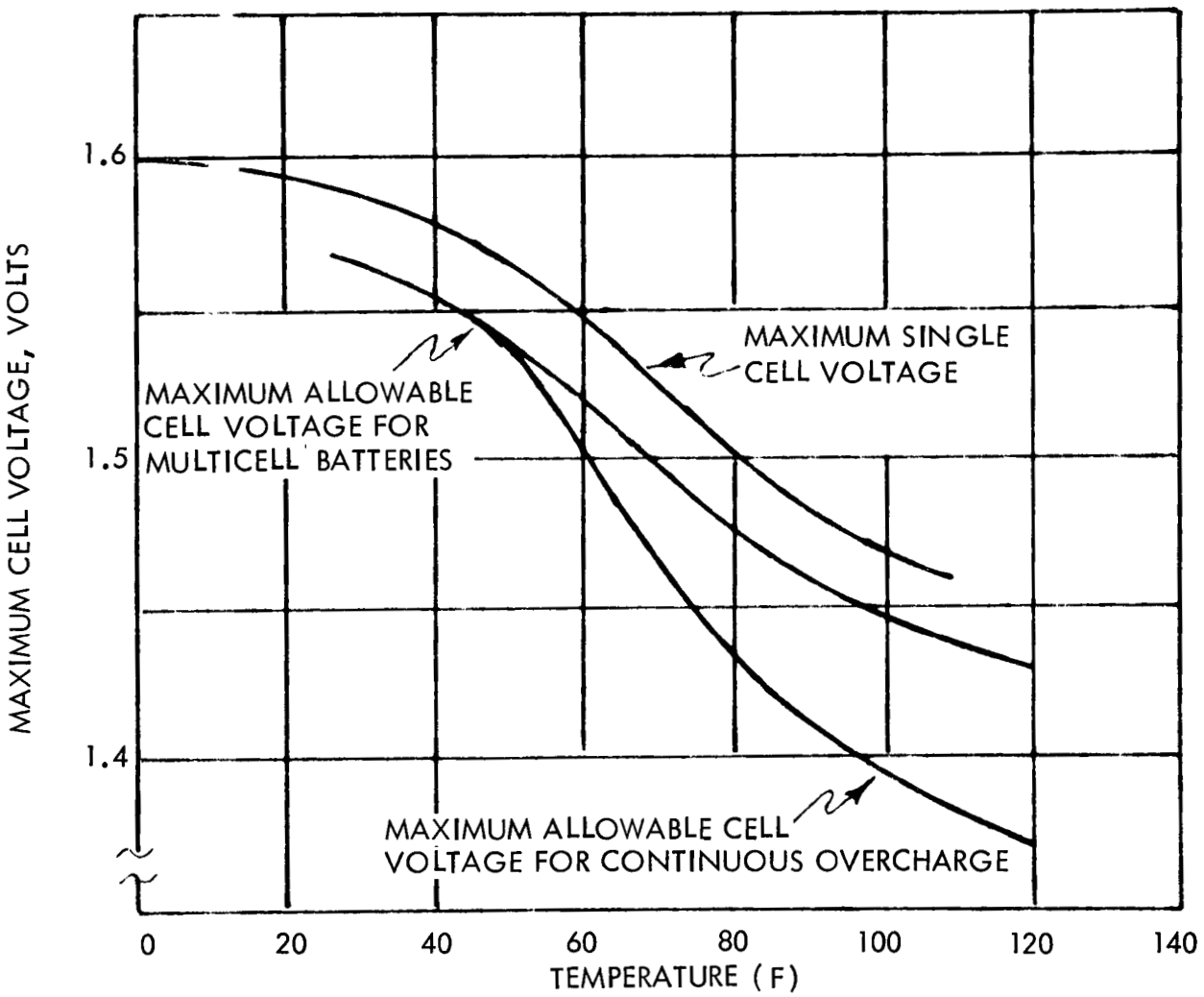

Figure 6-17. Maximum Limiting Voltage for Charge Control of Hermetically Sealed Nickel-Cadmium Cells

the rate of oxygen evaluation is small enough to permit recombination and thus prevent a buildup of destructive pressure.

Care must be exercised in setting charge parameters at higher voltages since heat generated during the overcharge will raise battery temperature, thus decreasing the potential of the overcharge reaction and allowing a higher charging current. The battery temperature permits increased current, which increases battery temperature and a runaway condition occurs which will lead to battery destruction. To combat these problems temperature compensation controls may be added to vary the maximum voltage limit with temperature. In addition, an overtemperature sensor is usually added to reduce the charging current to zero or some small trickle current when battery temperature rises to a predetermined value.

If low charging currents are applied, the amount of overcharge can be very large, especially if the system cooling capacity is high. Maximum recommended (Gulton) overcharge rates for nickel-cadmium batteries are shown in Figure 6-18. Recommended overcharge is shown in Figure 6-19.

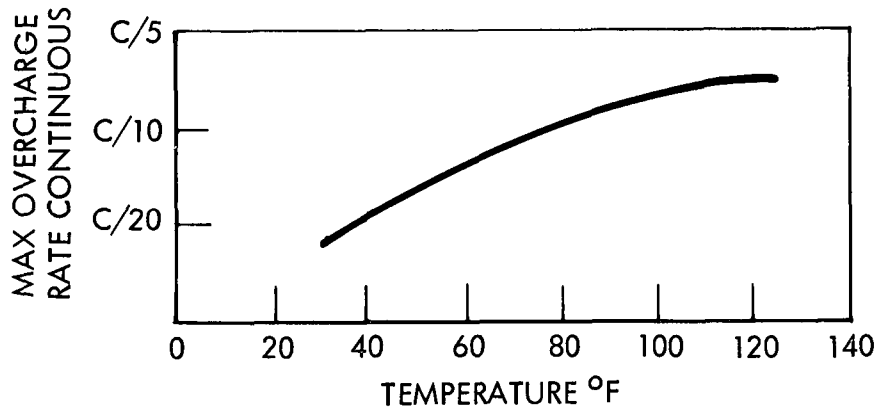

Figure 6-18. Maximum Recommended Overcharge Rates for NiCd Batteries

End of Charge

The major problem in charge control of batteries is detection of charge completion or determination of state of charge. Various methods are utilized for detecting charge completion. Among these are the sensing of battery terminal or cell voltage, internal gas pressure, temperature, and current (ampere-hour) input.

Sensing battery terminal voltage is one of the most commonly used schemes. However, the voltage rise at the end of charge is relatively small as compared to the variation in end of charge voltage due to temperature. This tends to make the switching point inaccurate. Nickel-cadmium batteries have a very small difference between the charging potential and the next higher overcharge potential which will result in oxygen evolution and

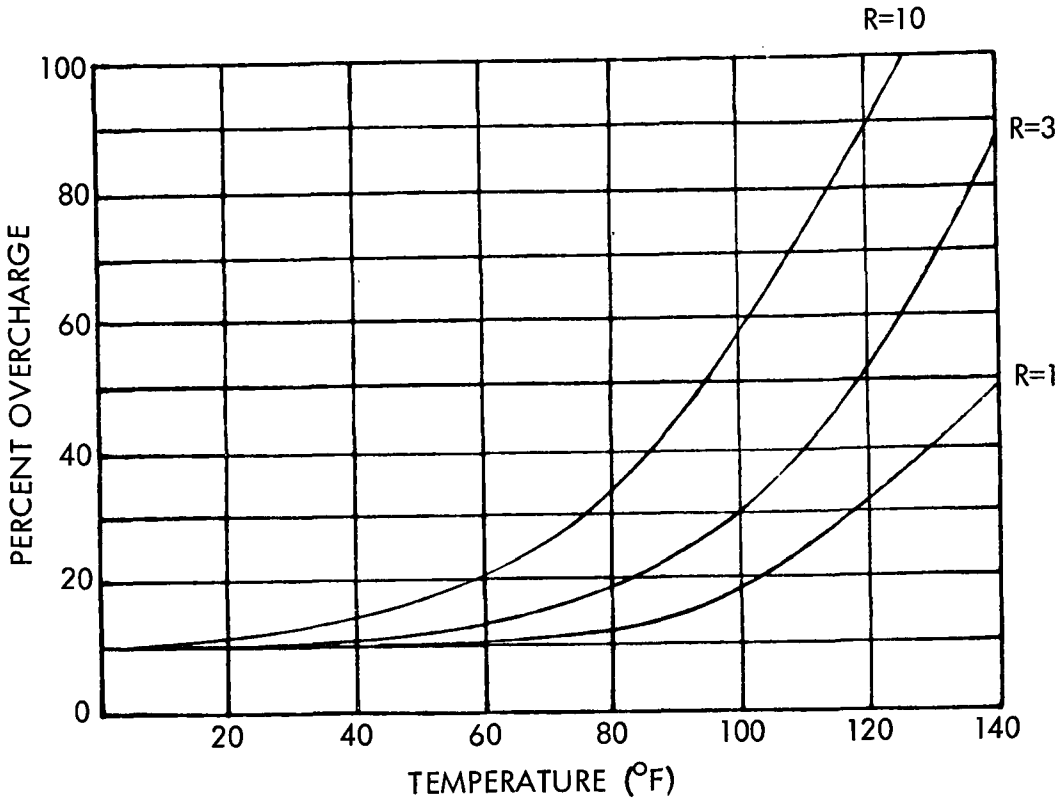

Figure 6-19. Recommended Percent Overcharge for Hermetically Sealed NiCd Battery Cells

voltage-sensing methods must be applied with great care.

Internal gas pressure may be sensed and data used to help determine completion of charge. The sensor may be a pressure switch or an auxiliary electrode which has a potential, relative to one of the normal cell electrodes, that varies as a function of gas pressure. As a cell approaches full charge, oxygen is released at the positive electrode and cell pressure will increase. Charging can be terminated when pressure reaches some predetermined level. Auxiliary electrodes of the fuel cell type also have been used. This type also acts as a recombination or scavenger electrode maintaining a low pressure until the electrode is saturated and then the pressure rises. Temperature sensing is used primarily to determine charging voltage compensation requirements and as a safety backup to prevent thermal runaway or extreme overcharging.

Current (ampere-hour) input sensing can be used if the capacity is known and changes are predictable. An amp-hour meter can keep a running account (within a known tolerance) of the current into and out of a battery. Amp-hour meters may be either an electronic or an electrochemical or coulomb meter type.

All of these methods have been tried, with varying degrees of success. The system used most frequently at present is one which senses battery terminal or cell voltage to determine the charging switch point, which is

usually temperature-compensated. All of the sensor types mentioned are available and may be used, individually or in combination.

Battery Sizing

A specific EPS configuration must be defined to establish parasitic power losses. The functional flow diagram in Figure 6-20 identifies the major factors influencing the overall battery power delivery requirement.

Two parameters are of paramount importance: energy to be delivered by the battery in one orbit, and total load demand occurring in the daylight periods. Energy delivery (E_D) establishes the size of battery and the load demand (P_L) establishes the capability of the primary power source to recharge the batteries.

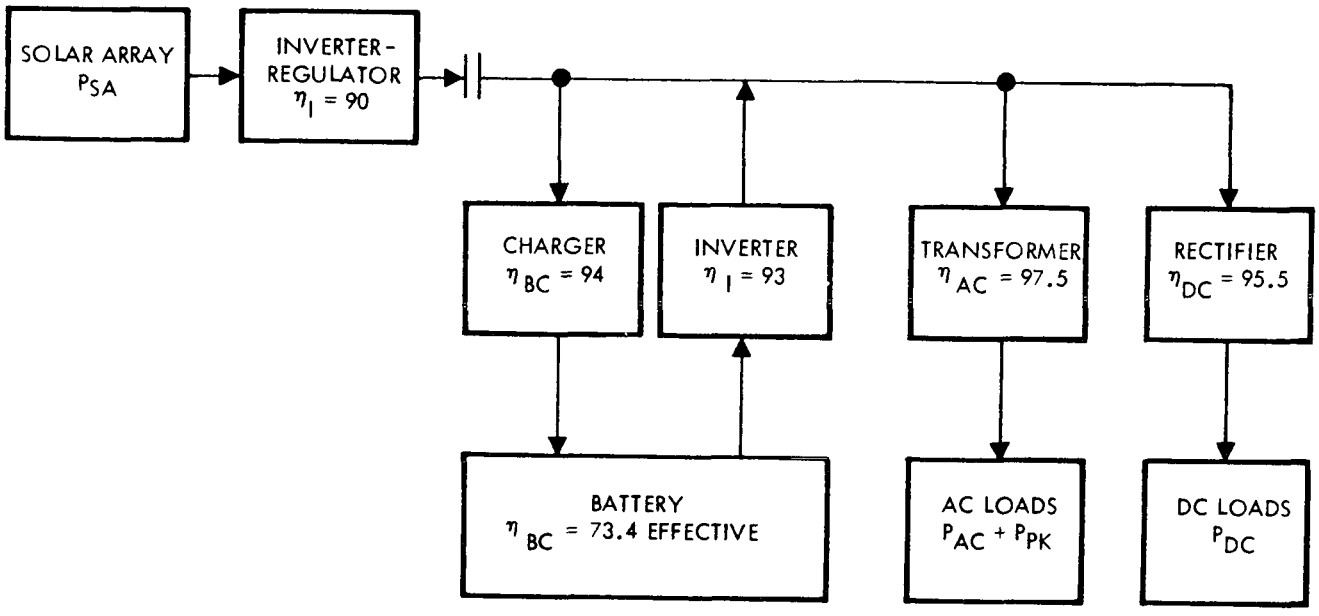

Figure 6-20. Battery Concept Power Delivery

50

The expressions used to obtain these parameters are determined from the schematic. They are:

For energy delivery:

$$E_D = \frac{1}{\eta_I} \left[\frac{P_{PK}}{\eta_{AC}} t_L + \left(\frac{P_{AC}}{\eta_{AC}} + \frac{P_{DC}}{\eta_{DC}} \right) t_D \right]$$

For subsystem power demand:

$$P_L = \frac{1}{\eta_1} \left[\frac{P_{AC}}{\eta_{AC}} + \frac{P_{DC}}{\eta_{DC}} \right] \quad \text{during light period}$$

Resultant data are listed in Table 6-6.

Table 6-6. Energy Delivery Requirements

Parameter	Requirement	
	6-Man Station	12-Man Station
Energy Delivery E_D (kwh)	13.4	21.6
Subsystem Load P_L (kw)	21.7	38.8

Depth of Discharge

A major consideration is to select the proper depth of discharge. Many studies have been performed relating the number of charge-discharge cycles available from a battery. A curve from Reference 6-6 is typical of these data and is shown in Figure 6-21. Statistically the prediction of life falls over a wide range for a given depth of discharge. The two lines on the curve represent the $\pm 3\sigma$ bounds of a normal distribution population. Emperically these curves can be represented by the following expression:

$$D = 48 (k - \log N)$$

where:

D = depth of discharge
N = number of charge-discharge cycles
K = constant
K = 4.28 at -3σ point
K = 4.74 at $+3\sigma$ point

Energy is the commodity provided by a battery. Thus, maximum utilization of the battery occurs at the point where the most energy can be delivered, i.e., the total energy delivered by a battery over its lifetime can be stated by:

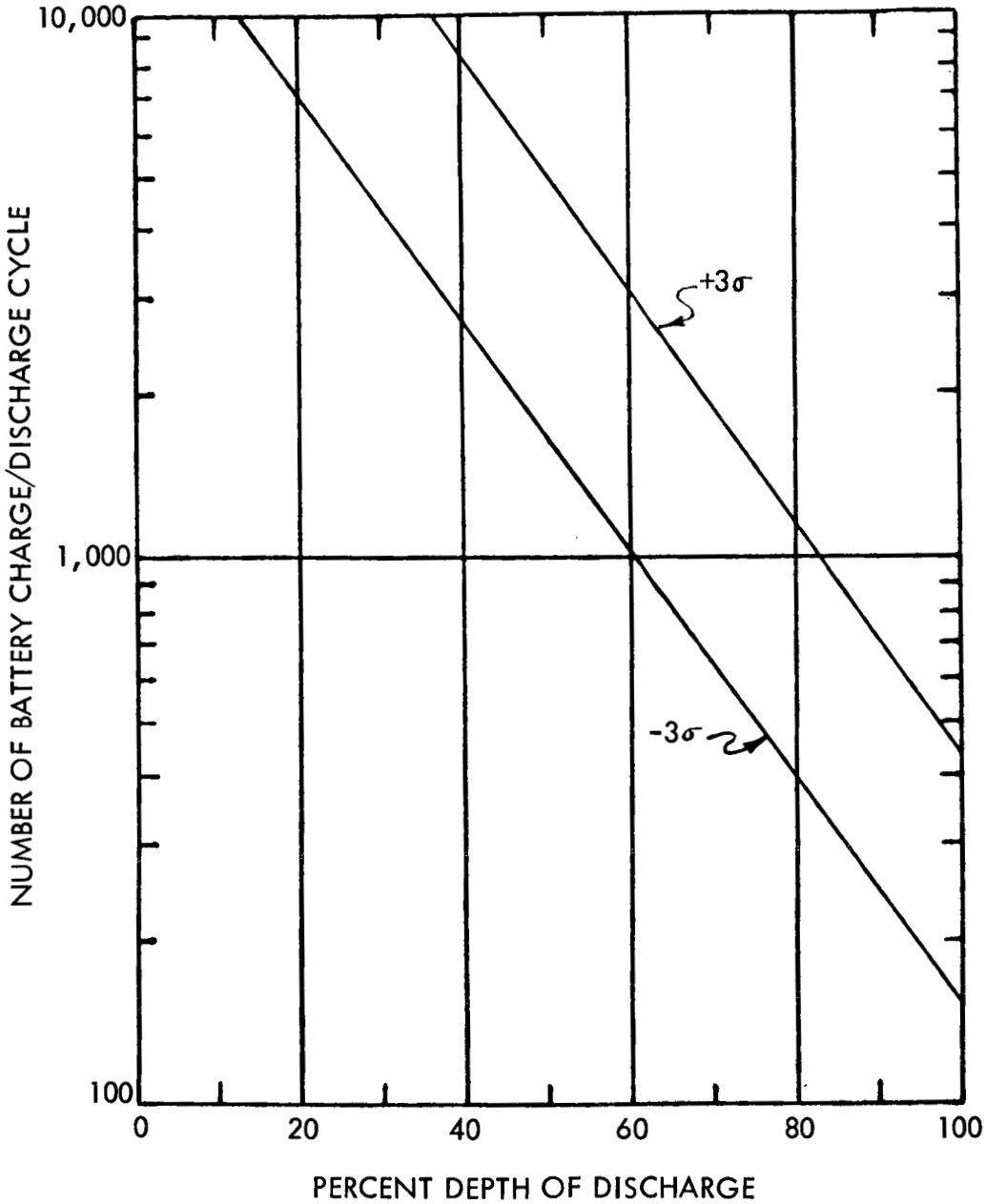

Figure 6-21. NiCd Battery Estimated Cycle Life

$$E_T = \nu_D QDCN$$

where:

E = energy
ν_D = average discharge voltage per cell
Q = number of series connected cells in battery
N = number of charge-discharge cycles - 10
C = ampere-hour rating of cell
D = average depth of discharge

Expanding the energy expression by the inclusion of lifetime data yields:

$$E_T = \nu_D QDC10^{\frac{K-D}{48}}$$

A curve representing the solution of this equation is presented in Figure 6-22. As can be seen from the curve there is a peak in the energy delivery capability of the battery. Differentiating the energy equation with respect to the depth of discharge and setting to 0 identifies this point:

$$D = \frac{48}{\text{Ln } 10} = 20.8\%$$

Voltage Degradation

Degradation of the batteries over their operating life is another factor that must be taken into consideration. A report (Reference 6-7) from the Naval Laboratories at Crane, Indiana, showed significant cell voltage degradation with battery life testing. That is to say, the cell voltage linearly decreases as the number of charge-discharge cycles increase. The rate of degradation is 39 μ volts per cycle. It was noted that this decrease in voltage did not relate to memory effects within the cell.

The Crane tests were oriented to the identification of failure indicators and the voltage measurements used as one of the candidate criteria. Voltage did not prove to be a reliable indicator and this line of investigation was terminated. This left only single data for evaluating effects of operation on cell voltage.

Integration of batteries into the EPS involves a set of requirements stated in terms of watt-hours. Batteries are normally rated in ampere-hours which include capacity, lifetime, and operating efficiencies. This eliminates the complication of defining output voltages that are a function of the rate of charge or discharge and the state of the cell's charge. Therefore, to relate battery performance to system requirements, a set of voltages must be defined. This is where the voltage degradation factor becomes important.

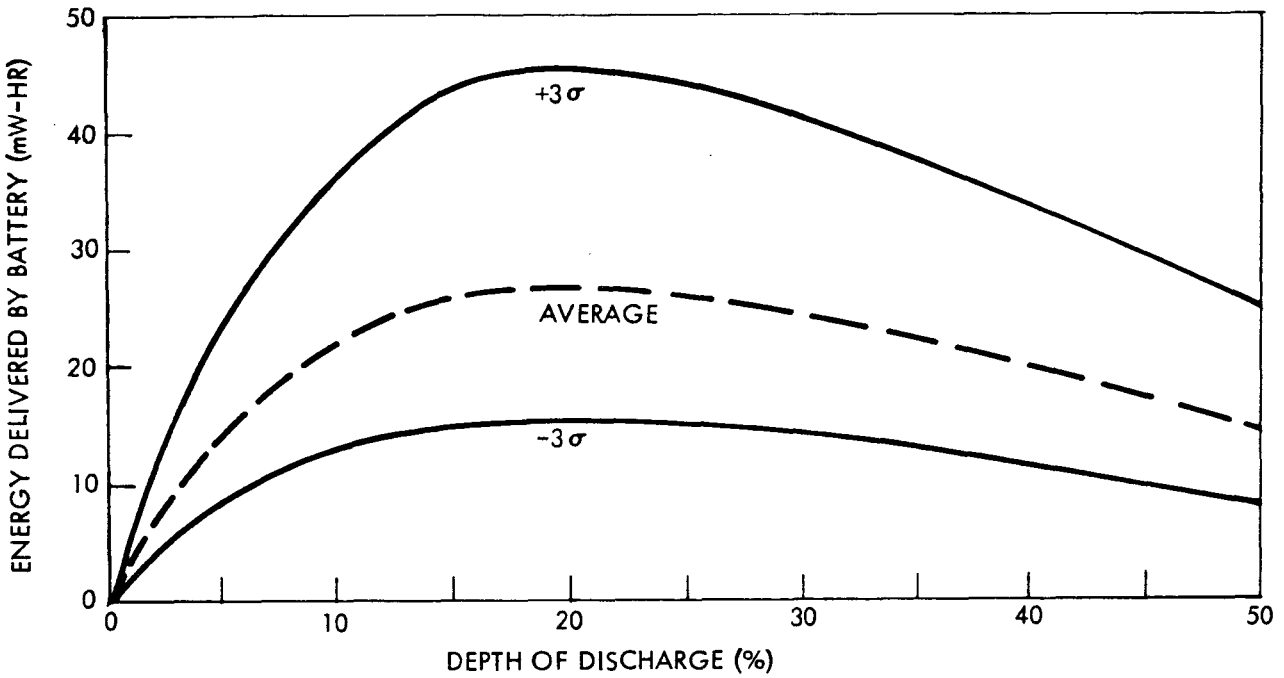

Figure 6-22. Depth of Discharge Versus Energy Delivered

Two parameters are seriously affected: long-term stiffness of bus voltage and watt-hour capacity of the cell. The width of the overall voltage swing will essentially determine the useful life of the battery rather than the ampere-hour charge-discharge cycle life. As an example, 10,000 cycles is a reasonable life for a cell operated at a 20 percent depth of discharge. Using Crane data the voltage degradation would be:

$$V_L = 39N \times 10^{-6} \; ; \; (N = 10{,}000)$$

$$= 0.39 \text{ volts}$$

The average beginning of life (BOL) cell voltage over this discharge range is 1.29 volts. Thus the percent voltage loss is 30 percent. Even though the full ampere-hour rating of the battery is available throughout its life, the total energy would be decreased by 30 percent. Since energy is required by the loads some form of compensation is needed. This could be either more cells which tend to stiffen the bus voltages or a deeper depth of discharge on the cells. It is obvious that more data are needed on battery voltage as a function of life.

Battery Capacity

The total number of cells required for the mission requirements can be established from the known data. The minimum number of cells is found by:

$$Q_S = \frac{E_D}{DC\ V_D}$$

Results from the requirements of Table 6-6 are:

6-man station -- Q_s = 520 cells

12-man station -- Q_s = 839 cells

Physical limitations also must be considered in sizing the battery. There are in the station four separate power channels, each of which includes an independent battery. Both for reliability and operating purposes there must be at least two batteries in each power channel. This allows one battery to remain in service while the other one is on charge. Thus, the minimum number of batteries needed for the station is eight.

Battery Voltage

Because the smallest replaceable battery unit is a 4-cell module, an operating battery must have an overall voltage that is some multiple of 4. Fuel cells and batteries interface with the same inverter setting battery voltage at the same level as the fuel cell. Three voltage levels are in contention for the fuel cell: 120 volts, 112 volts, and 28 volts. The 112-volt level is the one selected for the baseline battery configuration.

Battery discharge curves show that typical individual cell voltages range over 1.345 volts to 1.25 volts for a 20 percent depth of discharge in 30 minutes. This averages out to 1.29 volts because of the nonlinear discharge characteristics. A 112-volt battery therefore calls for 86 cells in series. Because of the 4-cell module constraint, 84 or 88 cells must be used. Because the average voltage is closer to the lower end of the operating range and it reduces the tendency to oversize, the lower number of cells is used. The open circuit and battery charging voltages are also not quite as severe with this selection.

With these criteria the following cell quantities are involved:

Q_B = 84 cells in a battery string with 8 batteries in the EPS (minimum).

$Q_s = 8 \times Q_B$

= 672 cells (minimum).

This meets the requirements set forth by the energy considerations of the six-man station.

In the 12-man station configuration the battery requirement can be met with 840 cells or 10 batteries. To provide a margin for energy capacity and to keep all power channels identical, three batteries per channel are selected for the growth configuration.

Battery Life

The operating life of a NiCd battery with a 20 percent dpeth of discharge will range from 1.25 to 3.5 years of continuous cyclic operation. In a 55 degree inclination orbit the average value of the D/L ratio is 0.47 as opposed to the peak of 0.60. Assuming that the annual cyclic operation decreases in proportion to the D/L ratios this would lead to a life increase as follows:

Minimum life = 1.4 years (7300 cycles)
Average life = 2.7 years (12,400 cycles)
Maximum life = 4.5 years (21,000 cycles)

Overcapacity due to configuration constraints provide a pad against power degradation. In the six-man configuration 672 cells are used compared with 520 cells required.

The results of this brief analysis show how sensitive operation is to power degradation of the cells. The primary assumption of replacement is that blocks of cell modules can be upgraded with fresh cells to maintain the requisite voltage. The older cell modules will be interchanged with other cell modules to further increase their usability. The power degradation will probably not be as severe as the Crane model would indicate. However, operational data on the large capacity cell is unavailable and is needed to relax the severity of the degradation with any confidence. At the level of design shown here, the impact of power degradation goes no further than this. A capacity allocation has been made for its effects but its sufficiency cannot be verified. The influence of the amp-hour cycle life is less severe and is well within the target life of 2.5 years.

Thermal Model

Data on the thermal performance of the 100 amp-hour NiCd cell are limited. Grumman Aircraft is presently establishing these characteristics as part of the battery technology program. In lieu of these data an approximation has been made as to the performance of the battery based on the overall energy balance where:

$$E_D + Q_D t_D = E_c + Q_c t_c$$

$$E_D = \eta_{BW} E_c$$

$$Q = \text{heat}$$

The thermal model is based on work of Foley and Webster where they have measured the heat evaluation in small NiCd cells. Based on this thermal model, a set of thermal data is shown in Table 6-7. The phasing is not known because the division of loads between the power channels has not been established. However, assuming an active ISS control of the energy storage subsystem, the net curve over an entire orbit should be approximately the same shape as an individual battery curve.

Table 6-7. Battery Energy Storage Thermal Control Delta's

Component	14-Hr. Work		10-Hr. Rest	
	Light	Dark	Light	Dark
Solar Array Inverter				
Operating Temperature (F)	-40 to 150	-	-40 to 150	-
Heat Generation (watts)	2240	0	1510	0
Battery Charger				
Operating Temperature (F)	150	-	150	-
Heat Generation (watts)	1200	0	820	0
Batteries				
Operating Temperature (F)	30 to 50	40 to 70	30 to 50	40 to 70
Heat Generation (watts)	865	6850	595	4710
Worst-Case Orbit Heat Rejection (Btu/hr)				
Orbit Time (hr.)	0.985	0.591	0.985	0.591
Solar Array Inverter	7,650	0	5,160	0
Battery Charger	4,100	0	2,800	0
Batteries	2,950	23,400	30	16,100
Total (Btu/hr.)	14,700	23,400	9,990	16,100

Subsystem Interfaces

Table 6-8 shows a component count comparison for charge controller approaches varying from per-cell to per-battery assembly. Per-cell approach appears prohibitive. The selected baseline is to control power in and out per battery module with the ability to switch 4-cell modules off the battery charger and to instrument on a per-cell level to support state of charge determination. Time criticality for battery control is in the 1- to 20-second range.

Battery Conclusions

The battery baseline for the six-man station consists of 672 (100 amp-hour) cells, 168 cell module controllers, and 32 battery chargers. Twelve-man space station requirements increase these quantities by 50 percent. The sheer size of this definition calls for new approaches to battery management throughout the station life.

The most serious technical problem to be solved is a positive and reliable method for battery charging. The battery today can handle the load with little difficulty. Improvements in cell construction techniques are needed to improve reliability and consistency between units. However, work in these areas is in progress and it is expected that evolutionary improvements will be made continuously up to and beyond the time a battery is needed for the station.

Charging methods are critical and the technique used can make or break a battery performance capability. The inherently nonlinear power demand characteristics of a battery impose special operational considerations to the power generation assembly. In the past systems took advantage of the thermal effects on array performance and used the extra energy available. In addition, lower charging rates were employed (R = 2). This tends to smooth out power demand curves over the daylight period. Charging uncertainties were handled by slow charge cycles allowing a loss in charge efficiency to pay for more reliable performance. Sizes were small enough that array penalties were acceptable.

By comparison, space station requirements are immense. A large number of batteries (32 modules) must be charged from a common source. Because of this magnitude the size of the array is of paramount importance, both from cost and operational considerations. To maximize utilization of the array, loads must match power generation capability as close as possible. For the batteries this means a fast, positively controlled charge.

The new pulse-charging techniques show promise in providing a solution to some of the problems. By having greater control of oxygen evolution during charge there appears to be some significant new options in charge methods. For example, battery manufacturers consistently recommend rates less than 1 C (R = 1) while the pulse-charger suppliers are showing 2 C (R = 0.5).

Investigation of the pulse-charge techniques should be carried on in the same manner as the multi-mode techniques. Data are needed on battery

Table 6-8. Battery Controller Elements

Parameter		6 Man Size (672 cells)				12 Man Size (1008 Cells)			
Approach	Description	Per Cell	Per Cell Module	Per Batt. Module	Per Batt. Assembly	Per Cell	Per Cell Module	Per Batt. Module	Per Batt. Assembly
Series Element Per Battery Assembly		85	22	5	2	85	22	5	2
Motor Switch	Component Count	680	176	40	16	1020	264	60	24
	Weight-lbs	3056	789	176	64	4584	1186	264	102
	Volume-ft^3	37.4	9.7	2.2	0.9	56.1	14.6	3.3	1.4
	Cost $ (ROM)	2.5M	880K	250K	100K	3.8M	1.3M	375K	150K
Contactor	Component Count	2040	528	120	48	3060	792	180	72
	Weight-lbs	3056	789	176	64	4584	1186	264	102
	Volume-ft^3	30.8	8.0	1.9	0.8	46.1	12.0	2.9	1.2
	Cost - $ (ROM)	693K	165K	55K	33K	880K	244K	72K	42K

Space Division
North American Rockwell

performance under these charging conditions. Parametric data on charge-discharge cycle life is needed as well as charge rates, depth of discharge, and thermal characteristics. Another facet of pulse charge is to gain a better understanding of the fundamental nature of the physics involved. According to McCulloch representatives, a relationship exists between the positive and negative pulses that influences battery performance. If the wrong ratio is used battery damage can occur, while on the other hand the correct ratio enhances the battery.

Every avenue of approach needs to be taken to establish better charging technique. Without them the difficulty of integrating a battery into the EPS without undue cost penalty may be insurmountable.

Fuel Cell and Electrolysis Concepts for Regenerative Energy Storage

Functional Description

Figure 6-23 shows a functional block diagram for the space station electrical power subsystem incorporating regenerative fuel cells. The energy storage assembly shown consists of an electrolysis module, gaseous reactant storage tanks, fuel cell modules, a water storage tank, and pump. During the daylight portion of the orbit solar array power is used to operate the electrolysis cell which produces gaseous hydrogen and oxygen from the water feed. The electrolysis cell operates at a pressure sufficiently high to force the hydrogen and oxygen into their respective storage tanks. During the dark part of the orbit the fuel cell uses the stored reactants to supply electrical power to space station loads. The regeneration fuel cell loop may either be a closed system or opened up to receive water from the environmental control system and to supply oxygen and hydrogen to the ECS or reaction control subsystem. Initial study EPS schematics showed power conditioning for the electrolysis unit. Figure 6-23 indicates this may be accomplished by switching at the solar array. In this case the switching would be controlled by the ISS in response to electrolysis cell demands.

Energy Storage Characteristics

Three approaches were considered for defining a regenerative fuel cell system for the space station:

1. Modular fuel cells and electrolysis units based on equipment currently being developed.

2. Modular fuel cells and electrolysis units based on advanced technology and optimized as an energy storage subsystem.

3. Integrated regenerative fuel cells.

Approach 1 was baselined for the study due to the ground rule of minimum development cost. A functional block diagram of the modular regenerative fuel system is shown by Figure 6-24. The fuel cell modules are assumed to be those currently being procured for the space shuttle. The electrolysis modules are based on the technology currently being developed for a space station

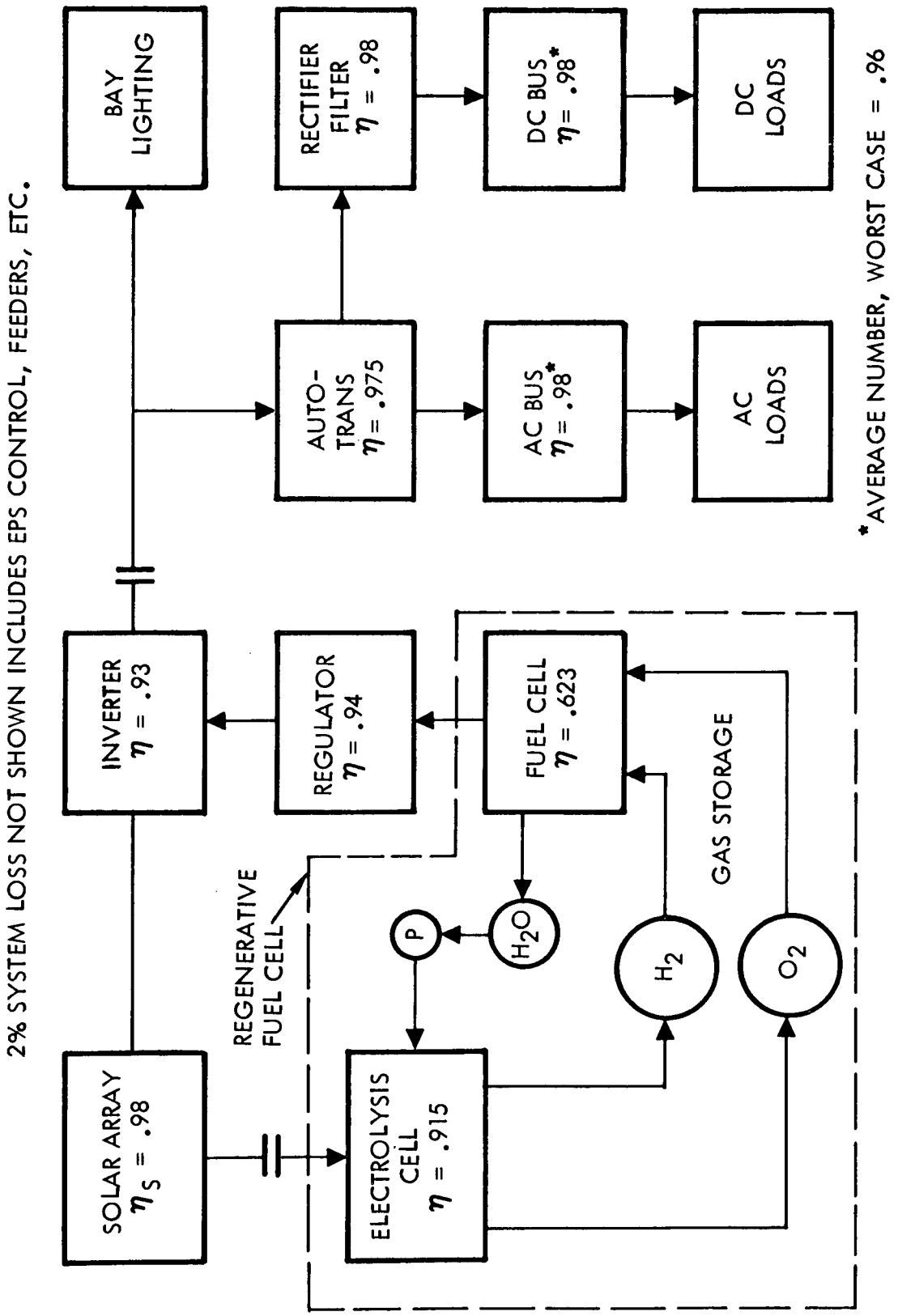

Figure 6-23. EPS Power Conditioning Schematic

electrolysis unit for supplying oxygen to the environmental control system. Fuel cell characteristics are summarized by Table 6-9. The data shown are based on Pratt and Whitney Aircraft designs for the shuttle and are documented in Reference 6-8. Used in a regenerative fuel cell system for the six-man space station, four fuel cells are used to supply the 17.4 kilowatt orbit dark power.

The electrolysis module selected for the baseline modular regenerative fuel cell concept is based on the General Electric system reported in References 6-9 and 6-10. This work is directed toward development of an electrolysis unit for a closed-cycle life support system. A typical cell is shown schematically in Figure 6-25. The ion exchange membrane (solid-polymer electrolyte) is a perfluorinated sulfonic acid. Ion conductivity is provided by the mobility of the hydrated hydrogen ions ($H^+ \cdot x\ H_2O$). Water is supplied to the oxygen evolution electrode (anode) where it is electrochemically decomposed to provide oxygen, hydrogen ions, and electrons. The hydrogen ions move to the hydrogen evolving electrode (cathode) by migrating through the solid-polymer electrolyte. The electrons pass through the external circuit to reach the hydrogen electrode. At the hydrogen electrode, the hydrogen ions and electrons recombine electrochemically to produce hydrogen gas. Figure 6-26 shows the life support electrolysis subsystem schematic, which was modified for the baseline modular regenerative fuel cell applications.

System excess process water is circulated continuously, through the hydrogen side of the electrolysis stack at a fixed rate, by the water circulating metering pump to control the stack temperature. Makeup water for electrolysis is added to the system as required. The hydrogen produced by the electrolysis process will exit from the stack with the cooling water entrained in it. The liquid will be separated from the hydrogen stream by a two-phase static gas separator. The oxygen produced by the electrolysis process will contain no liquid water and will be discharged directly through a pressure regulator to control the exit dew point. The heat exchangers are sized to maintain the system process water temperature and the generated oxygen and hydrogen at the desired gas delivery temperature level.

An ion exchange column is located getween the circulating pump and the stack to reduce the level of any contaminants entering the system in the makeup feed water supply. Sizing of this component depends on level and type of contaminants. The delivered hydrogen from the gas separator will be regulated by an absolute gas pressure regulator utilizing the vacuum of space as a reference. A differential regulator in the water line maintains the required delta-V within the separator for proper operation. During the eclipse period of the mission orbital cycle, the electrolysis power is removed; thus the gas production rate during stack operation is higher than the average daily crew consumption rate.

Possible modifications of the electrolysis subsystem for regenerative fuel cell application is elimination of the H_2/H_2O regenerative heat exchanger and operates the H_2/H_2O phase separator at a higher temperature. Since hydrogen is not being supplied to the Sabatier unit, the dew point need not be reduced to 70 F. Also the power conditioners may not be required in their

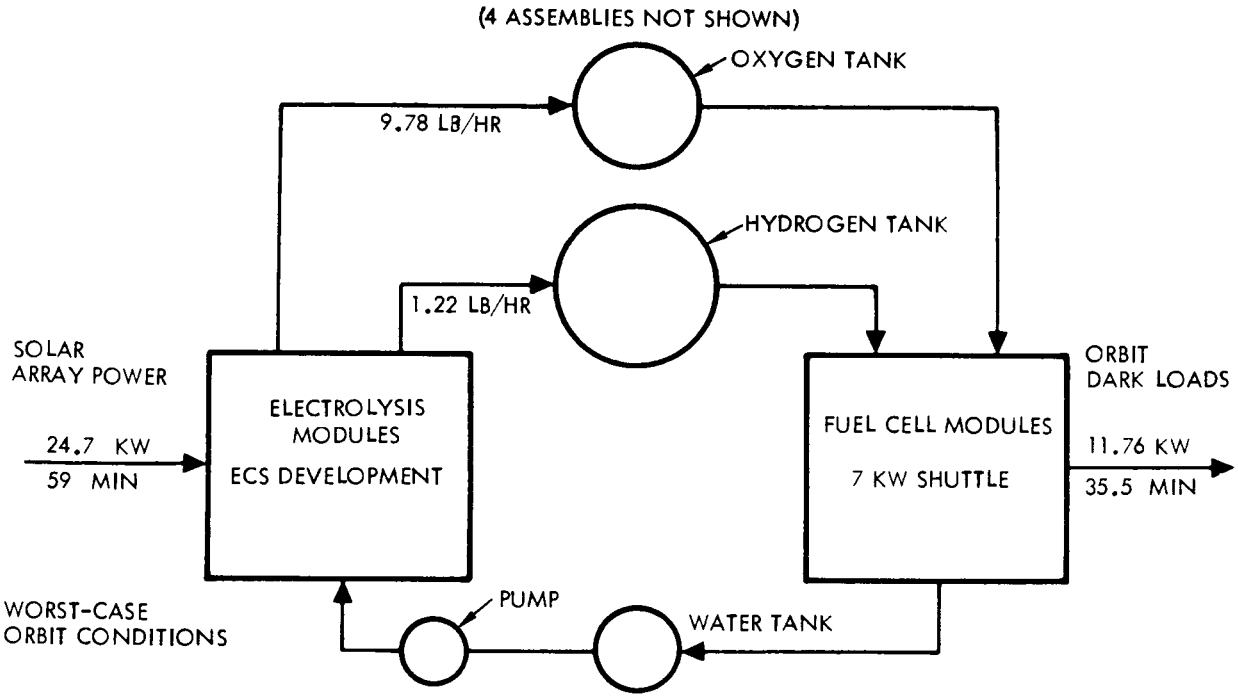

Figure 6-24. Modular Regenerative Fuel Cell System

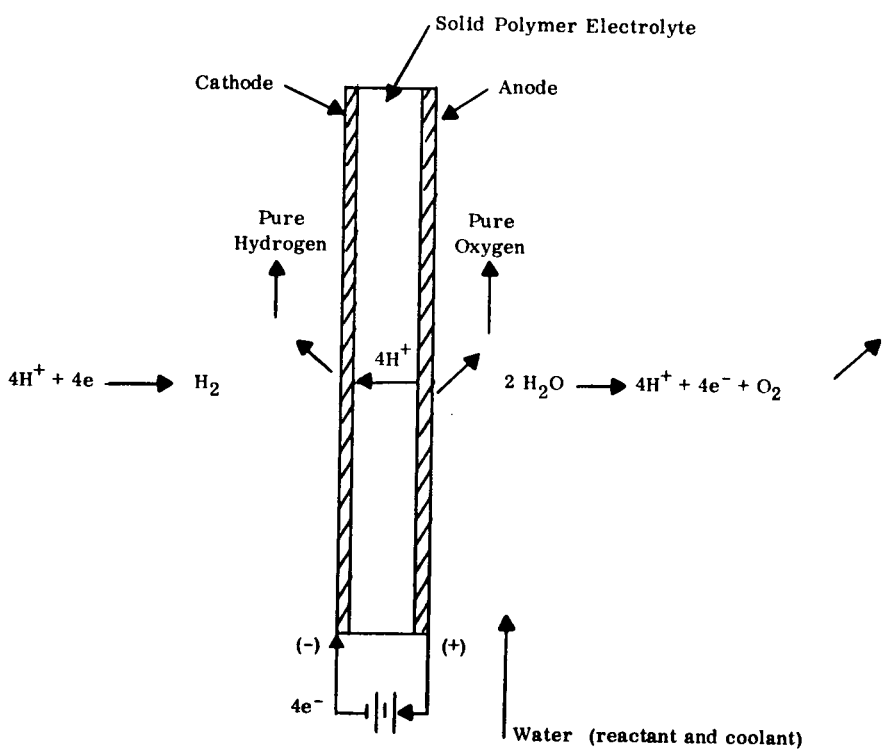

Figure 6-25. Schematic of Typical SPE Electrolysis Cell

Table 6-9. NR Shuttle Fuel Cell

Item	Characteristic
NR Baseline Requirements	
Sustained power (kw)	7
Peak power within voltage regulation (kw)	10
Minimum Power within voltage regulation (kw)	1.5
Voltage regulation band	27.6 - 31.0 V ±6%
Reactant Supply	
Minimum pressure (psia)	200
Grade	Fuel Cell
Open cycle cooling	No
Open cycle water removal	No
Operating life (hr.)	5000
NR Baseline EM Configuration	
Nominal voltage	29
Sustained power rating (kw)	7
Weight (lb.)	202
Specific weight (lb/kw)*	29
Envelope (in.)	14x4.5x24
Specific volume (ft^3/kw)*	0.4
Specific reactant consumption (including purge) (lb/kwh)*	0.82
Heat rejection (Btu/kwh)*	1900
Total cell area (ft^2)	67
Cell area ($ft.^2$)	2.2
Number of cells	31

*At sustained power rating.

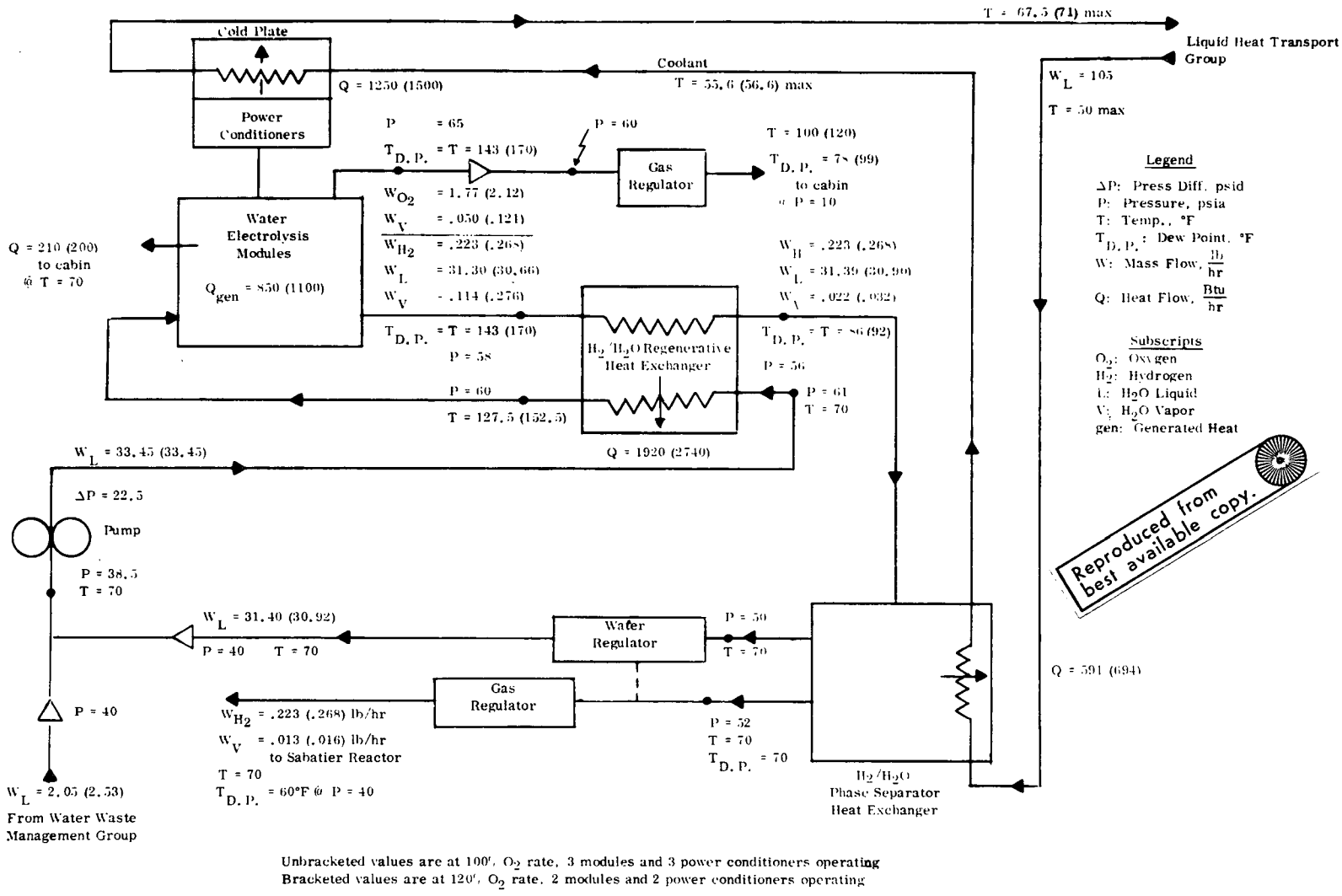

Unbracketed values are at 100% O_2 rate, 3 modules and 3 power conditioners operating
Bracketed values are at 120% O_2 rate, 2 modules and 2 power conditioners operating

Figure 6-26. Water Electrolysis System Heat and Mass Flow Diagram

Space Division
North American Rockwell

present form.

The state points shown by Figure 6-26 are for a water electrolysis rate of 2 pounds per hour at 100 percent oxygen rate and 2.5 pounds per hour for the 120 percent O_2 rate. The required space station reactant production rate of 3 pounds per hour may be obtained by resizing the existing water electrolysis modules or by increasing the number of existing units.

Figure 6-27 is a performance map of equilibrium module temperature and average cell performance at 50, 75, 100 and 120 percent oxygen generation rates at constant process water flow rate. Also shown are two transient extremes when oxygen rate may be suddenly changed from 50 to 120 percent and vice-versa before the cell can acquire the new equilibrium temperature. Figure 6-28 is a performance map showing predicted module voltage versus current or oxygen generation rate. The module operating temperature is allowed to float depending on the oxygen generation rate (or current) with only a small variation in input voltage. Because of a wide tolerance of the water electrolysis cell to variation in operating temperature, no active thermal controls are required to maintain satisfactory performance. Electrolysis power required as a function of cell operating pressure, temperature, and current density is shown by Figure 6-29.

Table 6-10 summarizes electrolysis subassembly weights for a two-module configuration sized to produce 3 pounds of reactant per hour.[1] The weights shown are for a maximum working pressure of 60 psia. Total subassembly weight must be increased by 45 pounds to operate at a maximum pressure of 400 psia. Table 6-11 summarizes electrolysis assembly characteristics. These data are an extrapolation of that reported in Reference 6-11 and do not represent an optimization for a regenerative fuel cell.

Table 6-12 summarizes regenerative fuel cell weights for the six-man space station. Structural weights for integration are not included.

Figure 6-30 depicts a concept for Approach 2, advanced modular regenerative fuel cell.[2] For this case the electrolysis stack and components are mounted inside the cylindrical h ydrogen tank. The Mark I weights are based on near-term technology (shuttle) and the Mark II weights are based on long-term goals. The weights shown include all ancillary equipment. These data are of a preliminary nature and further analysis is necessary to firm up the weights shown. The illustrated concept is for a nominal 5 kilowatt module. The tanks are sized for a 14-hour work period worst orbit case (11.76 kw hours). Figure 6-31 shows performance characteristics for the advanced modular regenerative fuel cell.

---

[1]Data transmitted by L. J. Nuttal, Aircraft Equipment Division, General Electric Company.
[2]Data transmitted by P. E. Grevstad, Pratt & Whitney Aircraft.

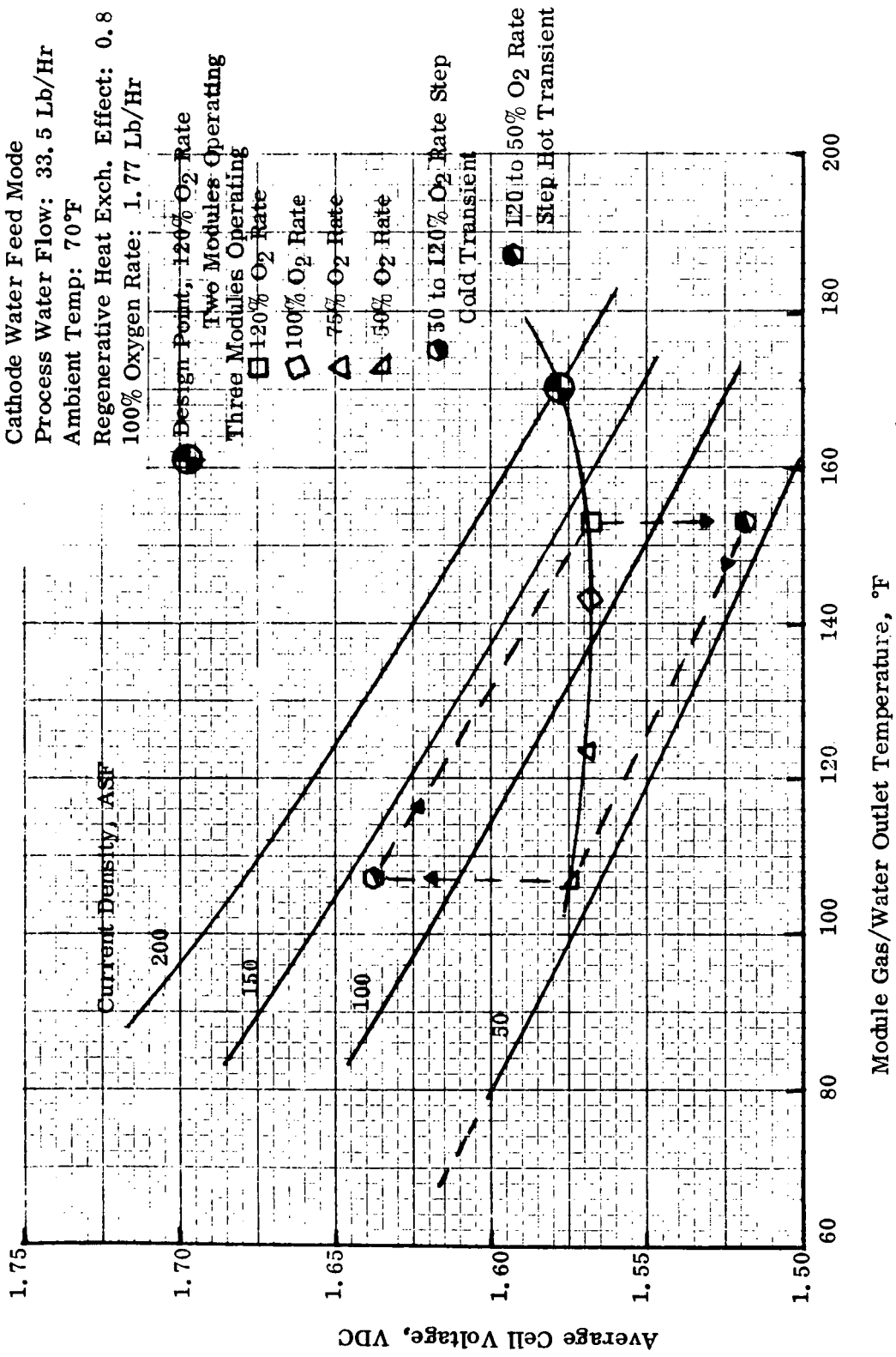

Figure 6-27. Equilibrium Module Temperature and Cell Voltage

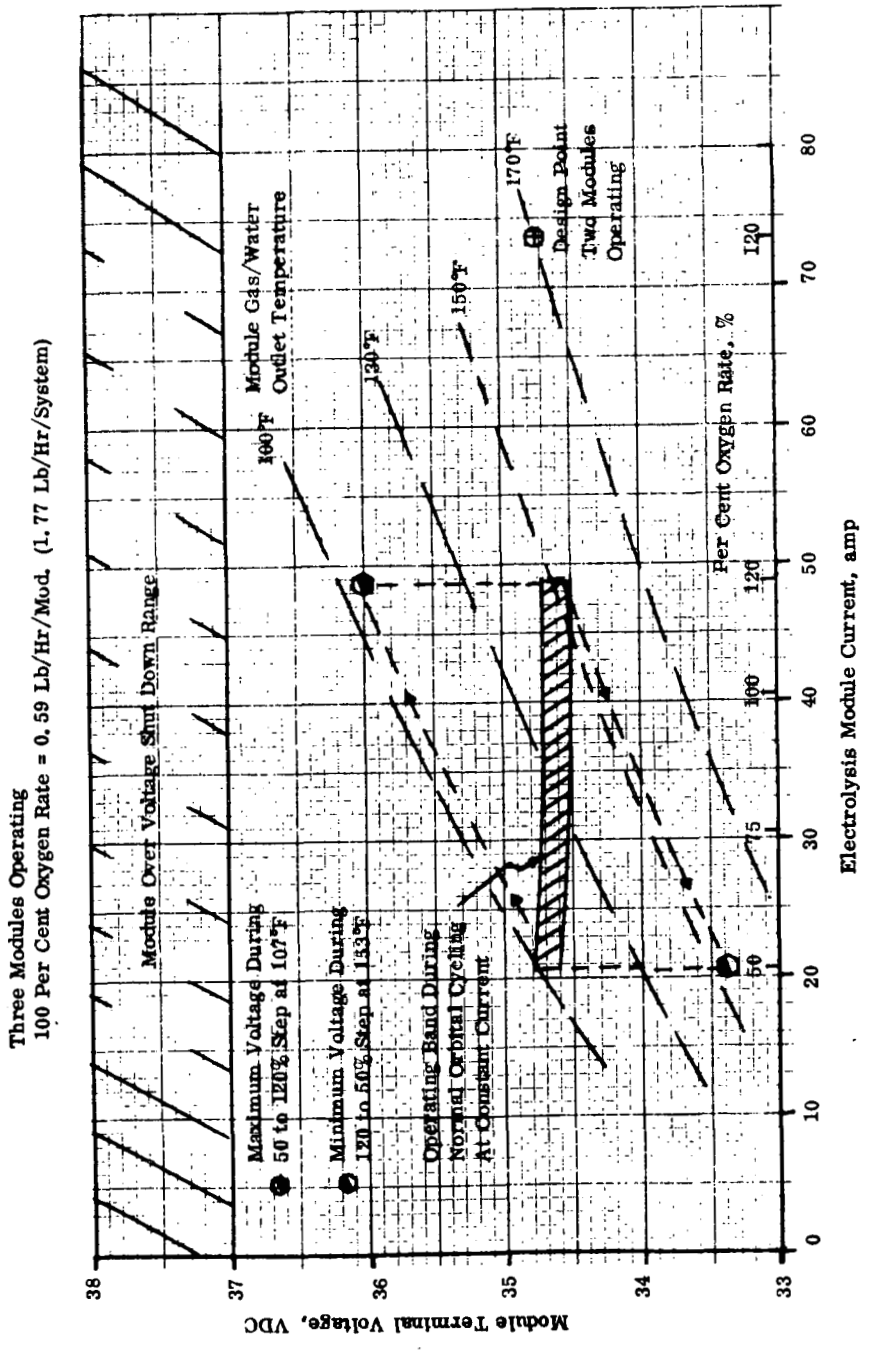

Figure 6-28. Preducted Electrolysis Module Performance

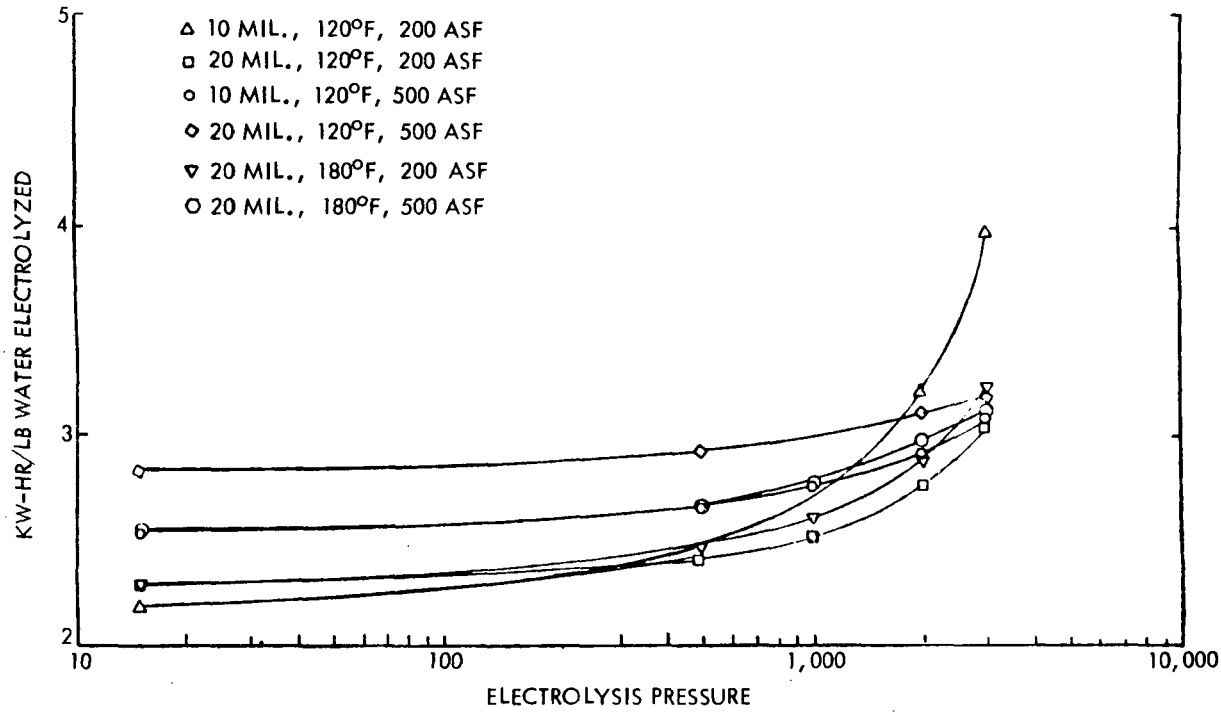

Figure 6-29. Solid Polymer Electrolyte High-Pressure Water Electrolysis Performance

Table 6-10. Three-Pound per Hour Electrolysis Weights

Item	Quantity	Total Estimate Unit Weight	Total Weight
1. Process water check valve	1	.25	.25
2. Makeup water check valve	1	.25	.25
3. O_2 side-check valve	2	.25	.50
4. O_2 regulator	1	1.50	1.50
5. H_2 regulator	1	1.50	1.50
6. H_2-H_2O differential regulator	1	1.50	1.50
7. H_2O pump	1	8.50	8.50
8. H_2/H_2O separator	1	18.00	18.00
9. Water filter	1	.50	.50
10. Pump P switch	1	--	--
11. Separation P switch	1	--	--
12. Deionizer	1	8.00	8.00
13. Separation solenoid valve-H_2/H_2O	-	--	--
14. Separation solenoid valve-H_2/H_2O	-	--	--
15. Separation solenoic valve-H_2	-	--	--
16. Pump control electronics	1		
17. Separation control electronics	1		
18. Reset control electronics	1		

Table 6-10. Three-Pound per Hour Electrolysis Weights (Cont)

Item	Quantity	Total Estimate Unit Weight	Total Weight
19. Power conditioners	2	15.00	30.00
20. Stack container	2	42.60	85.20
21 Stack assembly			
22. H_2O QD's	19		4.18
23. H_2/H_2O QD's	5		1.10
24. O_2 QD's	7		1.54
25. H_2 QD's	6		1.32
26. H_2 isolation valve	2		
27. H_2/H_2O heat exchange	1	18.00	18.00
28. H_2/H_2O isolation valve	1		
29. H_2O isolation valve	1		
30. H_2 isolation valve	1		
31. Cond. trap	-		
32. O_2 sensor	2	1.00	2.00
33.	1		
34. O_2 sensing electronics	1		
35. Lines and fittings	1	25.00	25.00
36. Structures and mounting	-	--	--
37. Electrical wire and connectors	1	20.00	20.00
38. Makeup water valve			
39. H_2 solenoid valve	1	--	--
40. Gas relief valve	2	--	--
41. H_2 relief valve	2	--	--
42. O_2 relief valve	2	.75	.75
43. H_2O relief valve	1	.75	.75
44. Maintenance manual valves	4	.90	4.50
45. Pressure gauge	4	.50	2.00
46. Pressure switch	2	--	--
47. Container sensing electronics	2	--	--
48. Power conditioner switch	2	--	--
49. Water vent valve	1	--	--
-- Pressure transducer	2	.25	.50
-- Electronic controller	1	12.00	12.00
-- Conductivity sensor	2	1.00	2.00
-- Biological filter	1	5.00	5.00
-- Orifice	1	.50	.50
-- Pressure transducers	11	.25	2.75
-- Coldplate	2	6.00	12.00
-- Contactors	1	5.00	5.00
Total			277.00

Table 6-11. Space Station Electrolysis Subassembly Characteristics

Item	Characteristic
Reactant generation rate	3 lb/hr
Number installed electrolysis modules	2
Input voltage	+112 vdc
Input power to electrolysis unit	7.15 kw
Working pressure	400 psia
Cell membrane thickness	20 mil
Unit weight	322 lb.
Dimensions (in.)	24 x 24 x 48
Replacement items	Schedule
Deionizer	1 year
Phase/separator	180 days

Table 6-12. Six-Man Space Station Modular Regenerative Fuel Cell Weights

Item	Weight (lb.)
Fuel cells	980*
Electrolysis units (4)	1288
Water storage and pumps (4)	60
Reactant storage tanks	
Hydrogen	384
Oxygen	208
Reactant	40
Total	2960
Maximum usable energy stored	38,400 w-hr**
Specific energy	13.0 hr/lb

*Revised Weight = 816 lb (Reference 3)
**Tanks Sized for 24-hour day

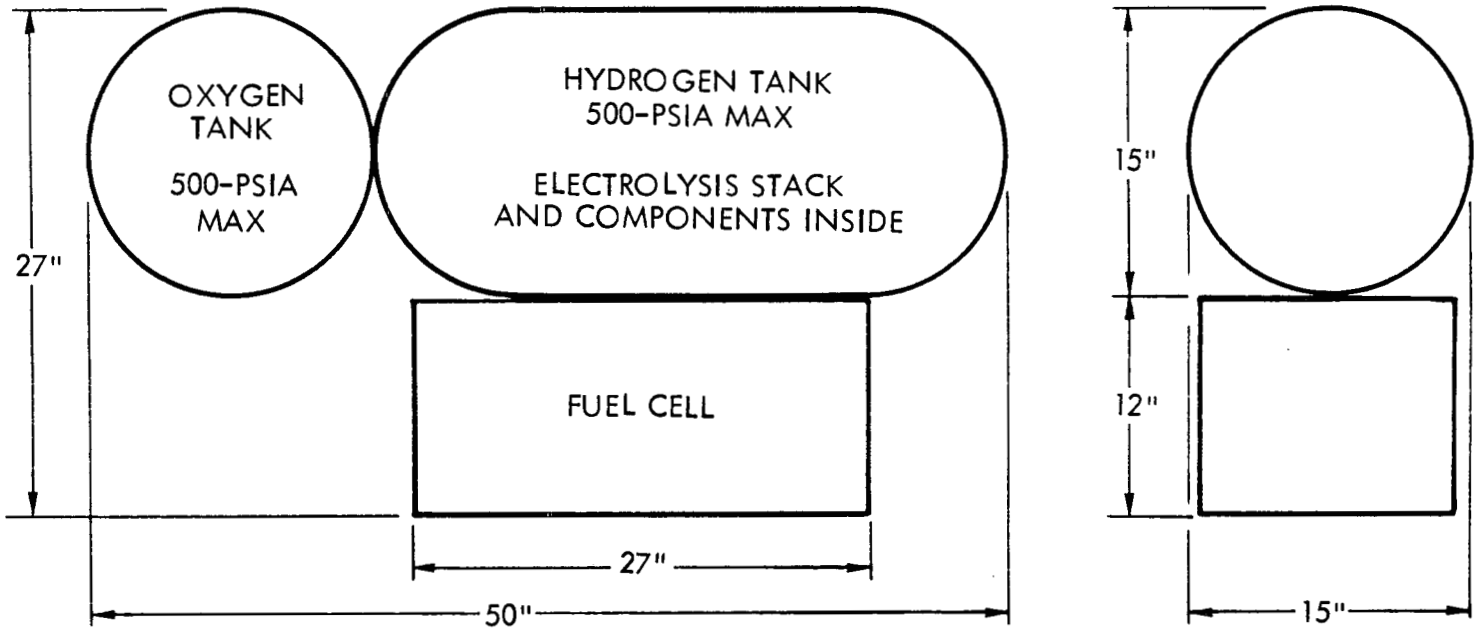

WEIGHTS:	MARK I	MARK II
ELECTROLYSIS SYSTEM (LB)	110	65
FUEL CELL SYSTEM (LB)	140	75
TANKAGE (LB)	50	40
TOTAL (LB)	300	180
WATT-HR/LB	40	67

Figure 6-30. Regenerative Fuel Cell Concept

Space Division
North American Rockwell

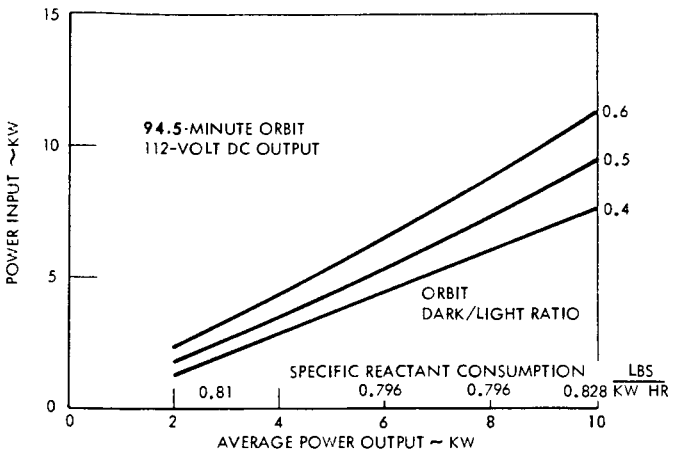

A. CHARGE-DISCHARGE POWERS BATTERY MODE

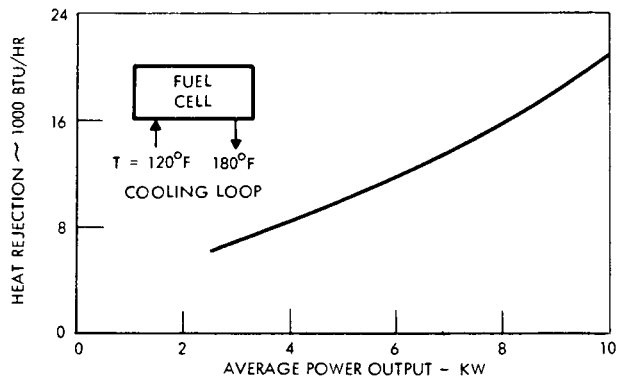

B. HEAT REJECTION
PRIMARY FUEL CELL AND BATTERY
MODES OF OPERATION

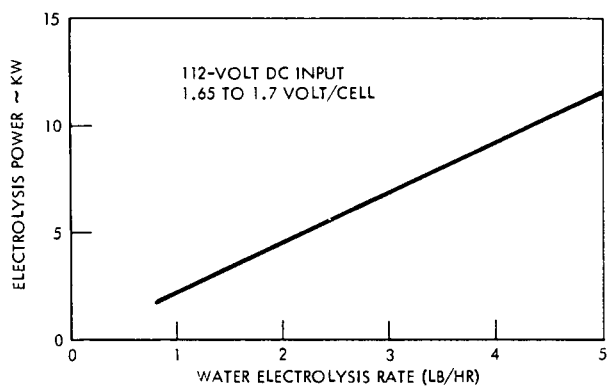

C. REACTANT GENERATION MODE
WATER ELECTROLYSIS RATE
NO POWER CONDITIONING LOSS

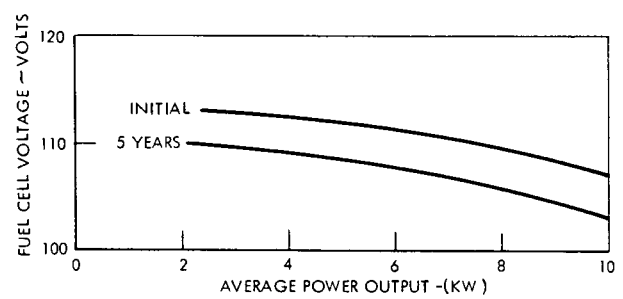

C. PERFORMANCE AND LIFE

Figure 6-31. Advanced Modular Regenerative Fuel Cell Performance (5-kw Module)

The third approach considered for regenerative fuel cells is that shown by Figure 6-32 (Reference 6-12). In this case the fuel cell and the electrolysis cell membranes are in a common container. The container also provides volumes for water storage and gaseous reactant storage. The cell is static in the sense that either capillary forces or pressure is used to move water to the electrolysis cell membranes and the gaseous products to their respective storage areas. Table 6-13 summarizes characteristics for a 500-watt static regenerative fuel cell. The energy storage capacity is sized to deliver 500 watts for 1.2 hours (synchronous orbit). The charge-discharge efficiency is 57 percent.

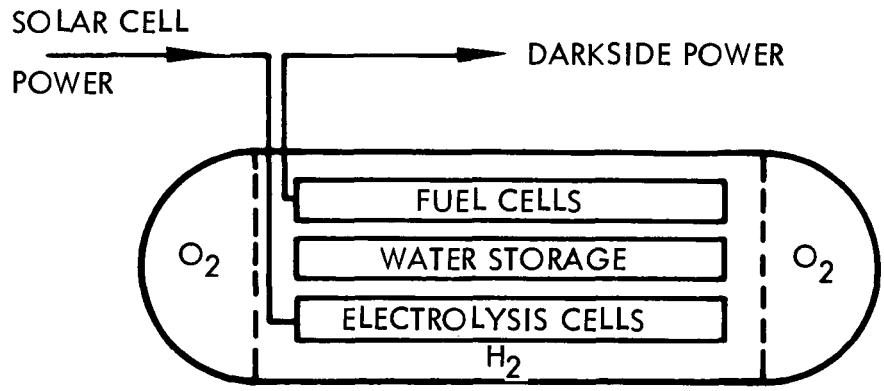

Figure 6-32. Static Regenerative Fuel Cell Concept

Table 6-13. 500-Watt Module Characteristics
(Static Regenerative Fuel Cell)

Item	Characteristic
Steady State Power (watts)	500
Transient Power (watts)	1000
Energy Capacity (watt-hours)	600
Size (in.)	7.26
Weight (lb)	15
Energy Density (watt-hour/lb.)	40
Efficiency, Nominal (%)	57

Energy Storage Sizing

The following considerations influence the sizing of a regenerative fuel cell energy storage assembly:

1. Eclipse period station power requirements
2. Solar array utilization
3. Charge-discharge efficiency
4. Orbit parameters
5. Required operational life
6. Safety

From the power required data of Section 6.1, necessary fuel cell reactant production is shown by Table 6-14. The energy requirements shown include a 12 percent allowance for conditioning and distribution losses. This has increased to 17 percent for the final EPS mechanization, which has a small

Table 6-14. Required Fuel Cell Reactant Production

(h = 270 n.m., i = 55°, d/L = 0.6)

Orbit Period	14-hr. Work	10-hr. Rest	24-hr. Avg.
Daylight peaking	1.68	.84	1.32
Eclipse	11.78	8.38	10.32
Total (kw-hr. orbiter)	13.46	9.22	11.64
Total (lb. reactant/orbit)	11.02	7.56	9.55
Total (lb. reactant/hr.)	11.20	7.70	9.70
Lb/Hr./Electrolysis Unit*	2.76	1.92	2.42

*4 units (one per primary bus)

effect on regenerative fuel cell sizing. The reactant quantities shown are based on a fuel cell specific reactant consumption (SRC) of 0.82 pound per kilowatt hour.

The maximum electrolysis reactant generation rate required is 2.76 pounds per hour. However, examination of the power profile shown by Figure 6-33 suggests that excess solar array power available during the 10-hour rest period be used to generate reactant at a higher rate than that required for the rest period. The excess reactant is stored for use during the 14-hour work period. Figure 6-34 shows the effect of 24-hour solar array utilization on solar array power. It is seen that for a fixed charge-discharge efficiency a reduction of approximately 5 kilowatts of solar array power results. However, the 10-hour rest period reactant production rate must be increased to 2.80 pounds per hour and the 14-hour rest period date is decreased to 2.25 pounds per hour per electrolysis unit. For this particular case there is essentially no increase in electrolysis generating capacity required. However, extra reactant storage must be provided to accumulate the excess hydrogen and oxygen generated during the 10-hour rest period (delta is 26.6 kilowatt-hour). The variation in reactant storage pressure for a 24-hour day is shown by Figure 6-33.

For the case illustrated, four hydrogen tanks and four oxygen tanks are used for fuel cell reactant supply and as accumulators for the electrolysis units. A gas residual sufficient to maintain a 70-psia minimum pressure is allowed. Maximum pressure of 330 psia occurs at the end of the 14-hour work day. The 150 F storage temperature is based on storing gas directly from the electrolysis unit. This was based on an earlier decision to eliminate the H_2/H_2O regenerative heat exchanger and the H_2/H_2O phase separator heat exchanger from the ECS electrolysis scheme. However, the final electrolysis unit weights used in this study does include the above items.

The accumulator tanks will be pressurized by the electrolysis unit. At a pressure of 300 to 400 psia, an increase of electrolysis power of up to 10 percent above that necessary for operation at 60 psia is required (Figure 6-30). Average power increase over a 24-hour period is estimated to be 5 percent.

The weight penalty increase in the electrolysis cell is estimated to be 45 pounds per 3 pound/hour unit. The largest weight penalty due to generating and storing reactant during the 10-hour rest period is gaseous storage tanks. A total tank weight of 1108 pounds is used to obtain baseline EPS weights.

- H_2 = 4.46 LB 4 TANKS, (0.96 LB RESIDUAL) 10.9 FT^3 EACH
- O_2 = 35.5 LB 4 TANKS (7.5 LB RESIDUAL) 5.45 - 1.1

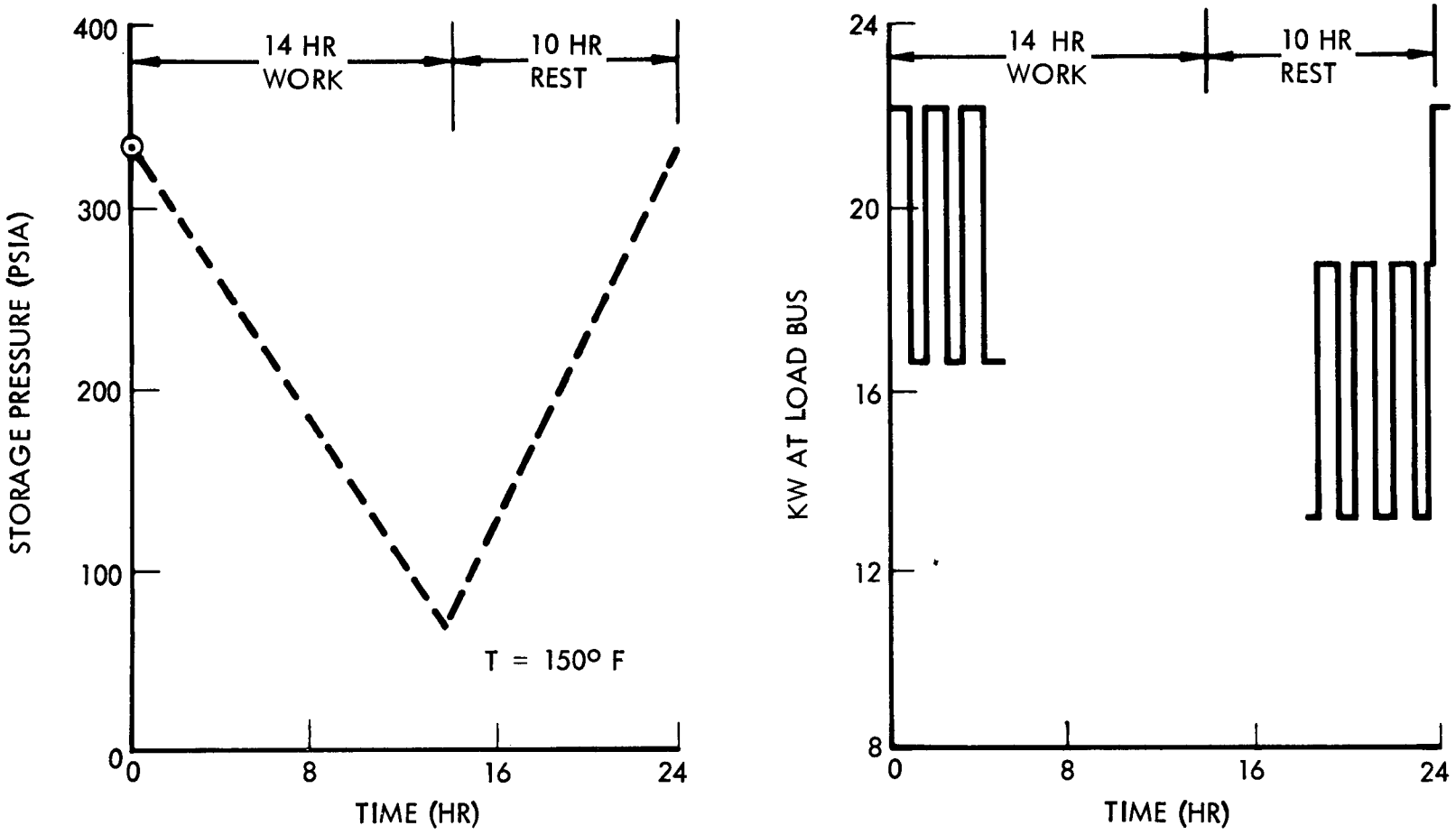

A. REACTANT STORAGE PRESSURE

B. POWER PROFILE INITIAL STATION

Figure 6-33. Reactant Tank Sizing

Space Division
North American Rockwell

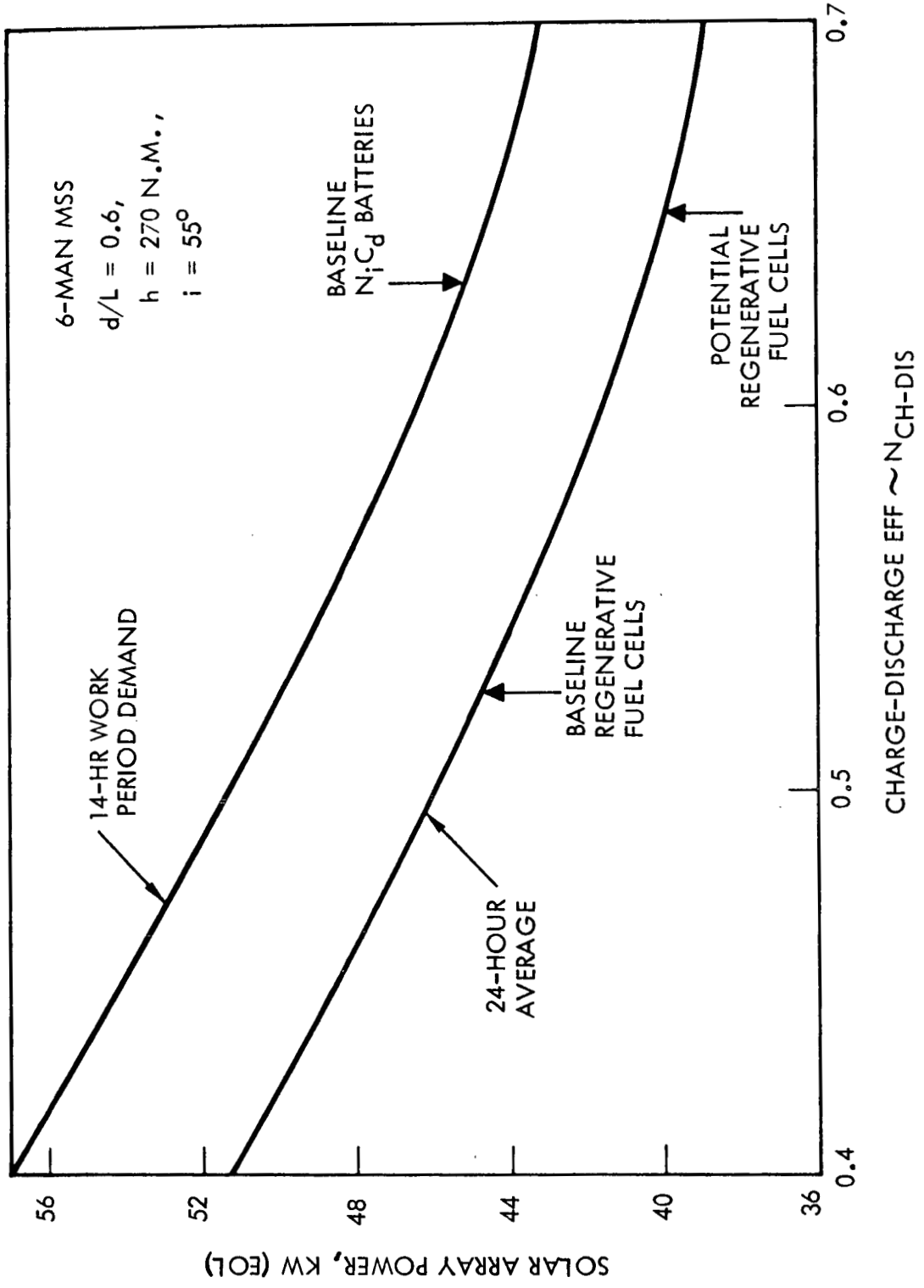

Figure 6-34. Effect of Energy Storage on Solar Array Size

These weights are based on a station buildup gaseous storage pressure of 3000 psia and as such are not representative of the true penalty for 24-hour reactant generation averaging. Tank weights sized for the maximum 300 psia pressure and a safety factor of 4 are estimated to weigh 592 pounds. If the tanks are sized for the orbit-to-orbit requirement of the 14-hour work period, the total amount of gas required including residuals is 13.5 pounds (tank weight = 128 pounds). Therefore a substantial reduction in tankage weight may be made by operating on an orbit-to-orbit basis. However, this is largely offset by a required increase in solar array weight.

This effect is shown by Figure 6-34. For a fixed charge-discharge efficiency, an approximate 10 percent reduction in solar array power ($\sim$ area) will result, if excess solar array power available during the 10-hour rest period is stored and used during the 14-hour work period.

6.3 DEGRADATION CONSIDERATIONS

Reference 6-13 reports on the effect of design and operating factors on the performance and life of the Pratt and Whitney alkaline electrolyte, hydrogen-oxygen, matrix fuel cells. The primary cause of degradation is electrolyte volume loss. Carbonation of the electrolyte is the major cause of volume loss. Cell electrolyte carbonation data and materials corrosion tests show that the glass fiber and epoxy cell frame contributes significantly to electrolyte carbonation. Low operating temperature reduces frame corrosion and increases cell life. Experience has shown that cells which have decayed because of electrolyte degradation can have their performance restored by flushing with fresh electrolyte. Reference 6-13 reports that one cell has accumulated more than 6400 load hours and 38 startups with an electrolyte change of 5000 hours. A high power density cell run in conjunction with this program has accumulated more than 6000 hours and 29 startups without changing the electrolyte. It may be concluded that the matrix fuel cell has the potential to meet the space station lifetime goals. By operating in the closed-cyle regenerative mode, near chemically pure reactant could be used.

An advantage of the General Electric SPE water electrolysis cell is its ability to maintain virtually invariant performance for periods of operation up to two years. Figure 6-35 (Reference 6-14) shows results of an SPE cell tests where voltage degradation set in at 15,000 hours. The degradation was caused by cell sheet delamination. More recent SPE's of single-ply construction avoid this problem.

It was also found during post-test analysis that the electrolyte material had undergone a perceptible degradation, losing approximately 15 percent of its weight over the two-year test period. Extensive monitoring of both electrolysis and fuel cell testing with the SPE material available in 1968 established a very slow but measurable degradation rate as represented by the curve at the right of Figure 6-35. In the following year, efforts by DuPont and General Electric succeeded in reducing the degradation rate by a factor of more than 15 to 1 to the level represented by the curve at the left of Figure 6-36. This has effectively eliminated electrolyte degradation as a life-limiting factor for equipment lifetimes of concern in practical applications.

Another significant factor is the effect of reduced cell temperature upon relative degradation rates.

6.4 THERMAL REQUIREMENTS

Table 6-15 summarizes thermal control requirements for the regenerative fuel cell system operating on a 24-hour maximum solar array utilization basis. Reactant production rate during the 14-hour work period is 9.02 pounds per hour. During the 10-hour rest period the additional solar array power available allows a reactant production rate of 11.2 pounds per hour. Therefore, electrolysis cell heat rejection is greatest during the 10-hour rest period. The data shown are for the final mechanization of the EPS. The electrolysis

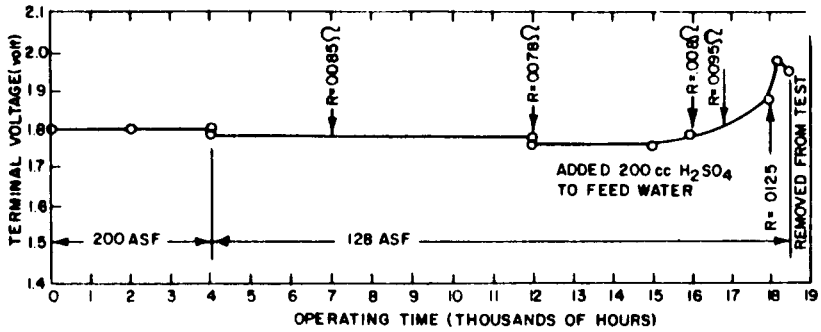

Figure 6-35. Results From Life Test at 180 F and Ambient Pressure on Cell With Platinum-Iridium Anode

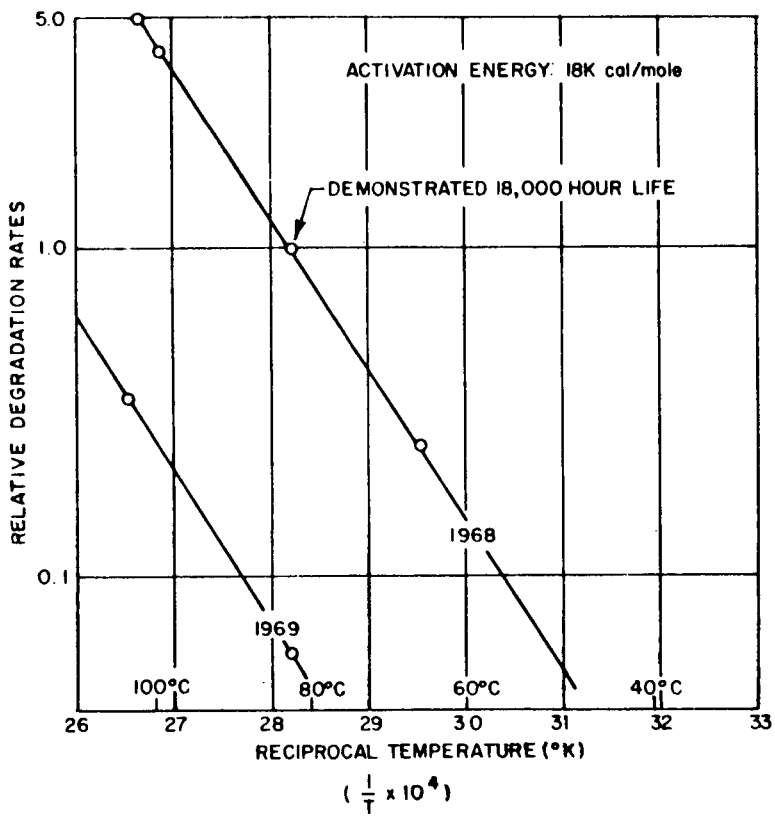

Figure 6-36. Degradation Rates of Perfluorinated Sulfonic Membrane in Water Electrolysis Cells

Table 6-15. Regenerative Fuel Cell Energy Storage Thermal Control Delta's

Component	14-Hr. Work		10-Hr. Rest	
	Light	Dark	Light	Dark
Electrolysis Units				
Maximum coolant inlet temperature (F)	152	--	152	--
Maximum coolant outlet temperature (F)	170	--	170	--
Heat generation (watts)		--		--
Fuel Cells				
Maximum coolant inlet temperature (F)	120	120	120	120
Maximum coolant outlet temperature (F)	222	222	219	219
Heat generation (watts)	1030	12080	510	8470
Worst-Case Orbit Heat Rejection (Btu/hour)				
Orbit time (hour.)	0.985	0.591	0.985	0.591
Electrolysis units	12,600	--	15,600	--
Fuel cells	3,520	41,200	17,140	28,900
	16,120	41,200	17,140	28,900

power conditioning is eliminated and input to the electrolysis unit and is controlled by the ISS and solar array switching. The electrolysis efficiency shown allows for operating the cell at constant 400 psia pressure, which is conservative.

6.5 SUBSYSTEM INTERFACES

The regenerative fuel cell energy storage assembly could function purely as a battery or in a broader sense be a space station utility. The latter function is illustrated by Figure 6-37. By opening the regenerative fuel cell loop, and by increasing electrolysis capacity, it could supply oxygen and hydrogen to the environmental control system and the attitude control system. However, the baseline electrolysis system has an excess capacity during much of the year. This is shown by Figure 6-38 as a function of dark-to-light ratio. Figure 6-39 shows EPS excess reactant production capability versus season angle. A total annual excess capability exists to

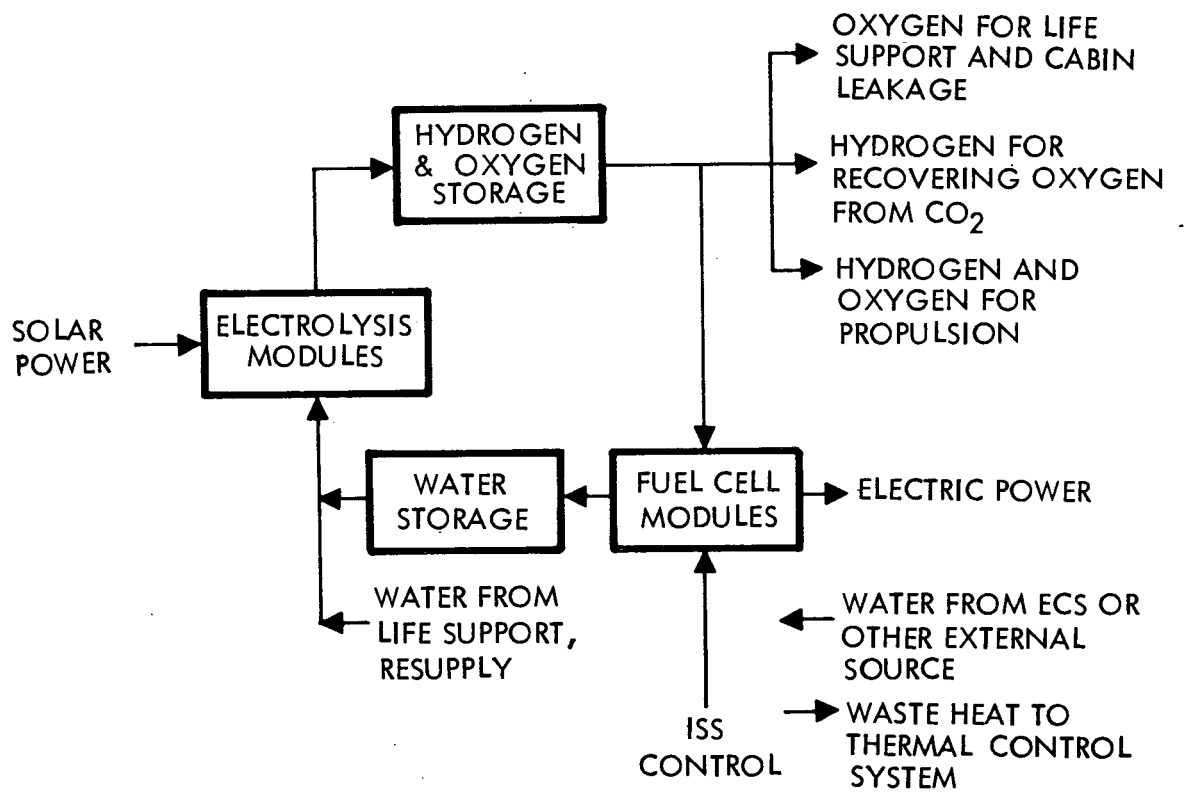

Figure 6-37. Modular Regenerative Fuel Cell Utility Supply for Space Station

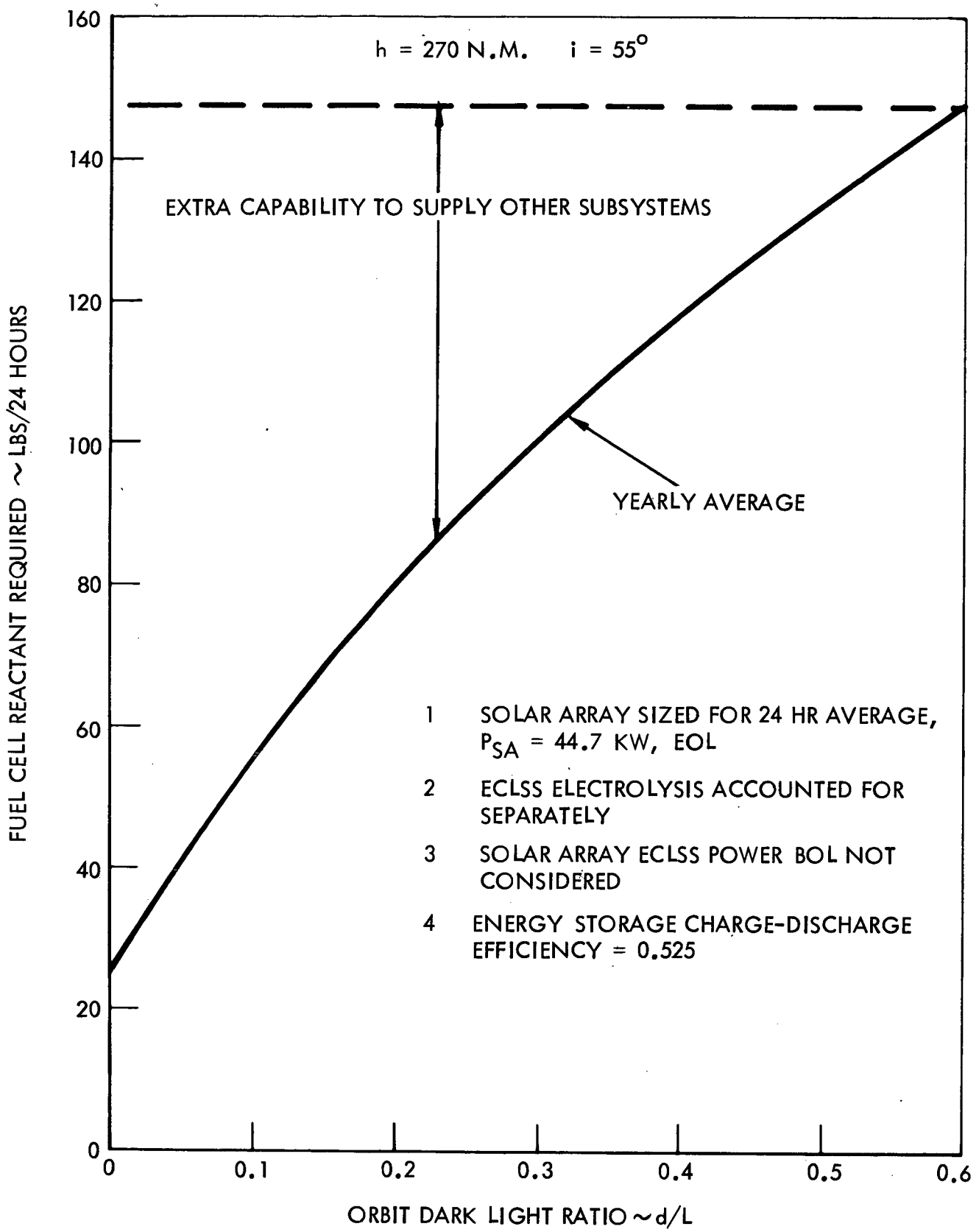

Figure 6-38. EPS Required Daily Reactant Production for Regenerative Fuel Cells

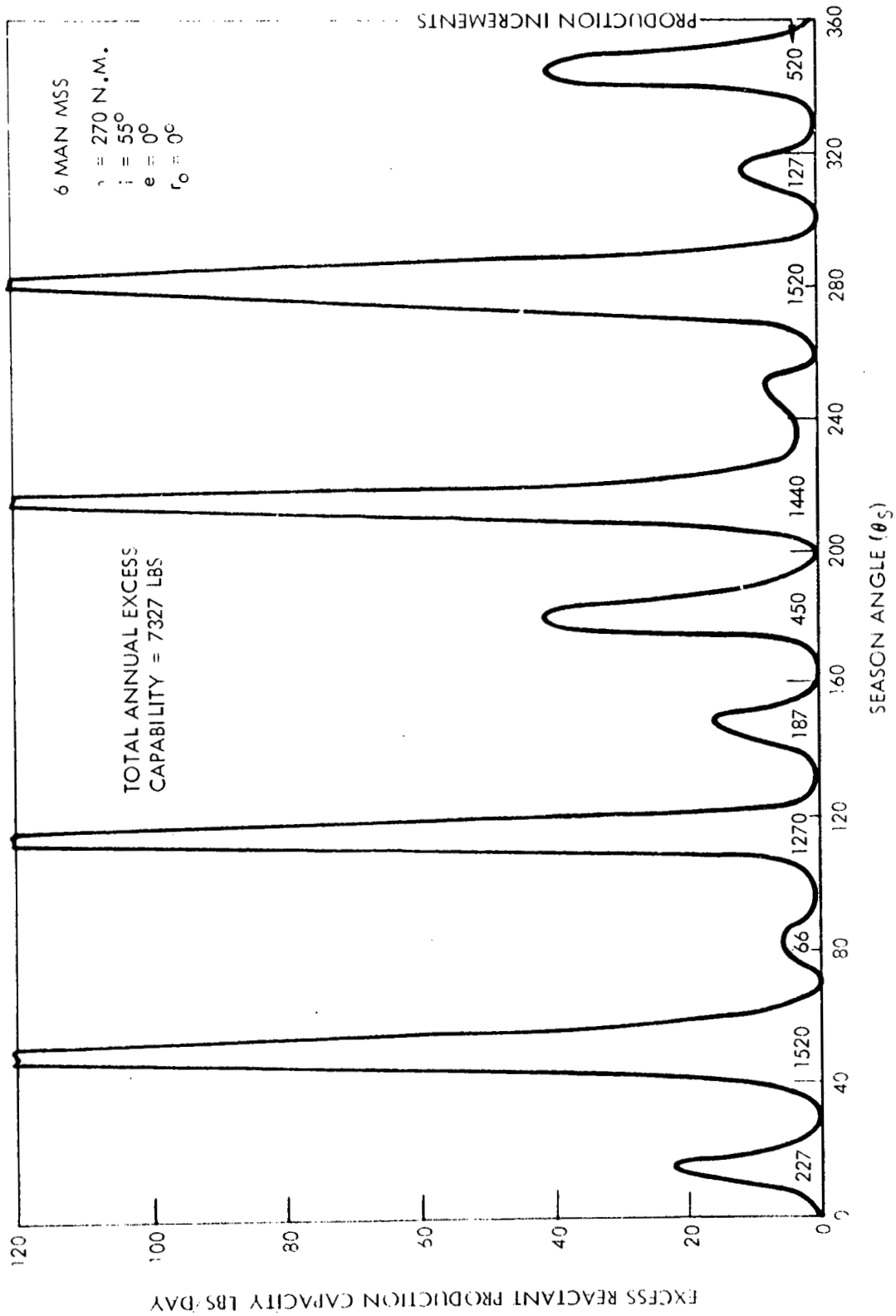

Figure 6-39. EPS Excess Reactant Production Versus Season Angle

electrolyze 7327 pounds of water. The major problem is storage of the hydrogen and oxygen for use during periods of low excess reactant production capacity. In the case of orbit makeup, it might be possible to schedule RCS engines for operation during periods of excess reactant production capacity. Further effort is required to determine how excess electrolysis capability might be used.

Regenerative fuel cells offer the greatest potential for weight reduction of solar array powered spacecraft in near-earth orbit. Ground rules for the current study emphasized minimum subsystem development cost. Therefore a modular regenerative fuel cell concept was baselined using the proposed shuttle fuel cell and an electrolysis cell being developed for supplying oxygen to the environmental control system. Regenerative fuel cell design parameters were not optimized for use as an energy storage subsystem.

An extensive study was made on integrating the baseline regenerative fuel cell with the reaction control and the environmental control and life support subsystem. Results of this analysis favored selection of regenerative fuel cells over nickel-cadmium batteries. The weight difference is approximately 5000 pounds in favor of the regenerative fuel cell.

If money were allocated for development of regenerative fuel cells for the space station, Table 6-16 shows further weight savings that could be obtained. The advanced modular regenerative fuel cell, previously discussed, is sized to 5-kilowatt output per module and is integrated with the electrolysis module. Near-term technology is assumed. The integrated (static) fuel cell includes both power generation and electrolysis in a common pressure vessel. In the case of the advanced modular fuel cell, the tanks were enlarged to increase the energy storage capacity from 11.76 kilowatt-hours to 38.40 kilowatt-hours. The integrated (static) device is the one previously described and originally sized for synchronous orbit. For Case 1, forty 500-watt units are required to deliver the 20-kilowatt 14-hour work eclipse power. At 600 watt-hours per unit, they are only discharged 50 percent. For Case II, sixty-four 500-watt units are required to deliver the 38.40 kilowatt-hours on a 24-hour average basis. For this mode of operation there is a 23.6 kilowatt-hour energy deficit during the 14-hour work orbits which is made up with the extra solar array power recharging the regenerative fuel cells during the 10-hour rest period. It is noted that a specific power of 40 watt-hours per pound is obtained, even using a device optimized for another mission.

This suggests that a regenerative fuel cell might be sized to accommodate both manned and unmanned spacecraft. The volume of each integrated (static) unit is approximately 0.75 cubic foot; 64 cells would therefore require 48 cubic feet distributed in the various station modules.

Further effort is justified to define regenerative fuel cells from the following considerations:

1. Modular versus integrated (static)
2. Commonality with manned and unmanned spacecraft requirement.

Table 6-16. Regenerative Fuel Cell Performance Comparison

Design Capacity	Configuration		
	Modular	Advanced Modular	Integrated (1) (Static)
Case I			
11.76 KW·Hr			
Weight, lb	2496	1425	600(2)
W·Hr/lb	4.7	9.8	19.6
Case II			
38.40 KW·Hr			
Weight, lb	2960	1925	960(3)
W·Hr/lb	13.0	22.6	40

Case I - Worst Case Orbit, 14 Hr Work

Case II - 24 Hour Average, Minimum Solar Array Size

(1) 500 watt fuel cell designed for synchronous orbit

(2) 40 required for worst case orbit load, 24.0 KW·hours stored, 100% reserve, power limited

(3) 64 required for beginning of 14 hour work period, energy limited

3. Module size
4. Effect of power density and operating temperature on degradation and/or lifetime.

In conclusion, it is the only single assembly that offers great potential for weight reduction of solar array electrical power systems in near-earth orbit.

6.6 ENERGY STORAGE PERFORMANCE COMPARISON

Table 6-17 summarizes partial study results comparing regenerative fuel cells with mickel-cadmium batteries for energy storage. The data shown were generated early in the study and in certain instances does not exactly agree with preliminary design data (Section 4). For example, there has been an increase in electrolysis unit weight and a decrease in fuel cell weight. These discrepancies do not change the relative comparison between fuel cells and batteries depicted by Table 6-17.

In comparing regenerative fuel cell weight and volume with batteries, the values shown by the separate fuel cell and electrolysis columns must be summed. For example, orbit eclipse energy requirements may be met with a regenerative fuel cell system weighing 2222 pounds compared with batteries weighing 9172 pounds. Either system would require replacement in 2-1/2 years. Tankage weights for the regenerative fuel cells will vary from 128 to 592 pounds, depending on whether energy is stored for a single 14-hour work period orbit or for a 24-hour period.

The solar array areas shown are based on sizing the energy storage assembly for either the worst-case orbit (14-hour work period) or a 24-hour average. For the latter case, excess solar array power available during the 10-hour rest period is used to store energy for use during the higher eclipse energy requirement of the 14-hour work period. This mode of operation will allow a solar array area reduction of 10 to 12 percent for either regenerative fuel cells or batteries. However, an additional 3,440 pounds of batteries are required to operate in this mode. The add-on batteries would be discharged to a 70- to 80-percent depth every day for a total of 900 cycles over a 2-1/2-year period. Electrolysis cell size are unaffected by energy storage mode, since they have excess capacity during the 10-hour rest period. The solar array areas shown are based on a charge-discharge efficiency of 0.525 for the regenerative fuel cell and 0.625 for the nickel-cadmium batteries.

The larger ISS complexity due to batteries is the requirement for monitoring and fault isolation for the 672 cells.

6.7 EVALUATION SUMMARY AND RECOMMENDATIONS

Significant technical advantages were found for the fuel cell electrolysis regenerative energy storage concept. The following evaluation was made in this trade study.

Table 6-17. Regenerative Fuel Cell/Battery Comparison

Characteristics	Regen. Fuel Cell		Battery	Comments
	Fuel Cell	Electro-lysis		
Type	NR Shuttle	GE Solid Polymer Technology	NiCd RSN-110	Electrolysis Cell Specified by NAS1-9750 and being developed for ECS
Performance				
Minimum Power	1.5 kw	2.5 lb Reactant Per Hour Per Unit	Limited by EPS Components	
Maximum Sustained Power	7 kw			
Peak Power	10 kw			
Voltage	112 VDC	108 VDC	113-107 VDC	
Voltage Regulation	+5%-11%	+5%-5%	--	
Overload--Fault Clear.	100 amp for 4 sec		--	
SRC (at rated power)	0.82		--	
Thermal Eff.	0.622	0.925	0.734	
Operating pressure, psia	200-1100 psia	300 psia	--	400 psia possible for electrolysis
Weight--Volume				
Weight/Unit	245 lb	260	44.9	
Volume/Unit	6 ft^3	5.1 ft^3	0.593 ft^3	
Specific Weight	29 lb/kw	5.4 wh/lb	1.3 wh/lb	20% D.D. for battery
Initial Launch Weight	1078 lb	1144 lb	9172 lb	includes mts & supports
Volume	26.4 ft^3	28.1 ft^3	156	
Resupply	980	1040	8320	Once in 5 yrs
Heat Rejection				
Coolant Inlet Temp.	120 F	127 F	Light 30-50 F	Battery operating temp.
Coolant Outlet Temp.	220 F	143 F	Dark 40-70 F	

Table 6-17. Regenerative Fuel Cell/Battery Comparison (Continued)

Characteristics	Regen. Fuel Cell		Battery	Comments
	Fuel Cell	Electro-lysis		
Solar Array Requirements				
Worst Case Orbit				
Area	8520 ft^2	--	7800 ft^2	For 24 Hr Average
Weight	7810 lb	--	7150 lb	
24-Hour Average				
Area	7560 ft^2	--	6980 ft^2	An additional 3440 lb of batteries are required
Weight	6940 lb	--	6400 lb	
Lifetime				
Present	2000-5000*	17,000 hr	2-1/2 yr	GE testing of water electrolysis Cells include 2 yr cont. testing
Advanced Goal	10,000 Hr*	--		
S.S. Study Assumption				
Initial Station	8,200 hr	13,680 hr		P&W has run 32,000 hr bench test with single module
Growth Station	16,400 hr	27,360 hr		
Crew Maintenance				
Scheduled	56	143	504	
Unscheduled	51	129	480	
ISS Complexity				
Analog Meas.	32	44	3500	
Discrete Meas.	12	32	96	
On-Off Commands	16	15	1500	
Settings	8	8	0	
Display Comp.	4	8	16	

*Based on grade reactant

Table 6-17. Regenerative Fuel Cell/Battery Comparison (Continued)

Characteristics	Regen. Fuel Cell		Battery	Comments
	Fuel Cell	Electro-lysis		
Lewis Advanced Shuttle Goals				
Life*	10,000 hr			Growth sta. fuel cell life made possible by closed loop reactant system, eliminating contaminants
Specific Weights	20 lb/KW			
Specific Volume	0.5 ft^3/KW			
Voltage	112+5%-11%			
Minimum Power	1.4 KW			
Sustained Power	7 KW			
Peak Power	21 KW			
SRC	0.7 lb/KWH			
Cell Current Dens.	100-350 ASF			
Cell Temp.	190-250 F			
Maintenance	(1) 4-1/2 hr/IFRU (2) 0.1 hr/month	(1) 4-1/2 hr/IRFU	(1) 30 min. IFRU (2) 3.73 hr/month	
*Based on grade reactant				

Thermal Control

A comparison of thermal control requirements show that the battery concept imposes an additional development requirement on the thermal control assembly due to its low-temperature demands (i.e., 40 F). The development of dual loops to provide 130 F and 40 F thermal control resulted in a cost penalty estimated at $4.8 million (Table 6-18).

Solar Array Area

Effective utilization of solar array area was a major consideration. The battery approach is more efficient on a charge-discharge comparison based on a per orbit cycle. Figure 6-40 shows this comparison (0.625 versus 0.525).

Table 6-19 shows the effect of charge-discharge efficiency on solar array area requirement. On a per-orbit basis, the battery approach saves 720 square feet; however, the regenerative fuel cell concept is more adaptable to a combination of per orbit and 24-hour cycling. Since the load profile has a 14-hour high power demand and a 10-hour relatively low power

Table 6-18. Energy Storage Thermal Comparison

Parameter	Concept	
	E-1 Batteries	E-2 Ref. F.C
Heat Load 130°F 40°F	 7.0 KW 1.0 KW	10.5 KW
Radiator Area 130°F 40°F	 350 ft^2 626 ft^2	455 ft^2
Complexity	Two system each redundant 8 pump packages 8 coolant loops	One system redundant 4 pump packages 4 coolant loops
Cost factor Non recur. Recur. Total	 13.2 M 1.9 M 15.1 M	 9.5 M 0.8 M 10.3 M

demand (refer to Figure 6-6), excess gas generation during the 10-hour low demand period can be stored and used during the 14-hour high power demand period. In this way, the load demand is more averaged out and solar array area requirement reduced. On this basis, the regenerative fuel cell area requirement can be reduced sufficiently to give it an advantage. The same approach may be possible for batteries but weight and complexity increases to the point of discouragement.

ISS/EPS Interface Complexity

The battery approach used in the comparison consisted of 84 cells per battery with battery charging provided for each 20 - 24 cells. Each primary bus is supported by two batteries or a total of 8 batteries. The ISS interface consisted of battery charging at a 20 - 24 cell module level with the ability to switch 4-cell modules and instrumentation on an individual cell basis. The regenerative fuel cell approach essentially replaces two complete batteries on a primary bus with a single fuel cell and electrolysis cell set. Power and monitoring is achieved on the modular level with complexity reduced by a factor of 8 (or greater) (Figure 6-41). The cost savings to the ISS was estimated to be a minimum savings of two preprocessors at roughly $520,000 (Table 6-20).

NiCd BATTERY ENERGY STORAGE

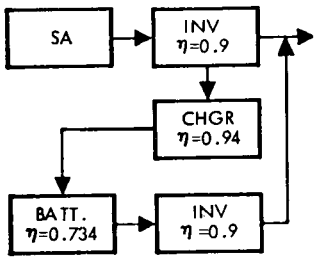

$\eta_{BC} = (0.9)(0.94)(0.734) = 0.625$

LOW POTENTIAL FOR EFFICIENCY IMPROVEMENT

REGENERATIVE FUEL CELL ENERGY STORAGE

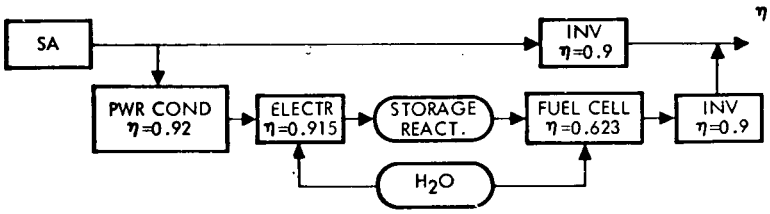

$\eta_{RFC} = (0.92)(0.915)(0.623) = 0.525$

POTENTIAL FOR FUEL CELL EFFICIENCY IMPROVEMENT WITH SHUTTLE ADVANCED FUEL CELL TECHNOLOGY

Figure 6-40. EPS Energy Storage Efficiency Analyses

Table 6-19. Solar Array Area Comparison

SOLAR ARRAY AREA SENSITIVE TO
- ENERGY STORAGE CONCEPT EFFICIENCY
- ENERGY STORAGE CAPACITY

ENERGY STORAGE CONCEPT	NiCd BATTERIES	REGENERATIVE FUEL CELLS
CHARGE/DISCH EFFICIENCY	0.625	0.525
CASE 1		
SOLAR ARRAY SIZED TO 14 HR WORK DAY		
LOAD + ENERGY STORAGE	31.21 KW	31.21 KW
TOTAL EPS LOSSES	13.64	17.79
SOLAR ARRAY POWER *	14.85	49.00
SOLAR ARRAY AREA, FT^2	7,780	8,500
ENERGY STORAGE WEIGHT LB	9,172	2,508
EPS SUBSYSTEM WEIGHT LB	22,932	16,815
CASE 2		
SOLAR ARRAY SIZED TO 24 HOUR AVERAGE		
LOAD + ENERGY STORAGE	27.85 KW	27.85 KW
TOTAL EPS LOSSES	11.75	15.65
SOLAR ARRAY POWER *	39.6	43.50
SOLAR ARRAY AREA (FT^2)	6,980	7,540
ENERGY STORAGE WEIGHT (LB)	12,612	2,817
EPS SUBSYSTEM WEIGHT, (LB)	25,620	16,351

*END OF LIFE POWER, 36% DEGRADATION ASSUMED

DECREASED SOLAR ARRAY AREA FOR REGENERATIVE FUEL CELL ENERGY STORAGE

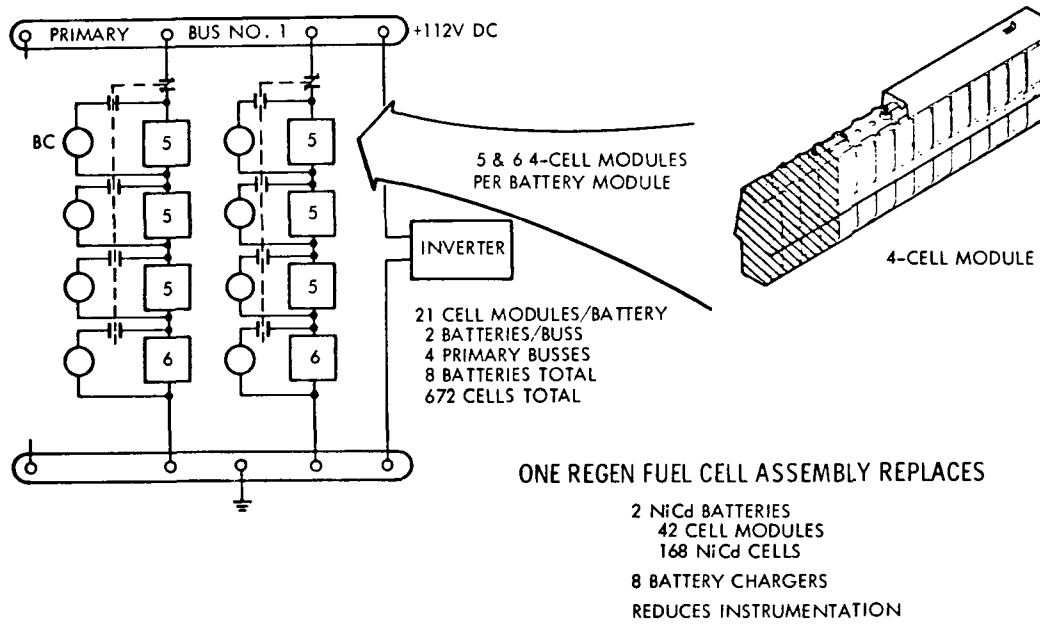

REGENERATIVE FUEL CELL REDUCES INTEGRATION COMPLEXITY

Figure 6-41. Complexity Comparison

Table 6-20. ISS Cost for Battery Charging

Item	Cost
Basic cost of computer	$ 33,000
Integration at subcontractor	13,200
Integration at NR	18,480
Software	64,680
Subtotal per preprocessor	129,360
Second preprocessor	129,360
Final integration, test, program management, burden, G&C, etc.	258,720
Estimated cost	$517,440

Assumption:

Add one preprocessor for each volume (Note: one-half batteries in each volume).

Battery Charge/Charge Control Constraint

Available battery charging energy from the solar array is limited to about 13.6 kilowatts. Using a conventional four-step charge scheme (Figure 6-42), it would be possible to fully charge one battery per orbit and partial charge the remaining batteries. Considerable technology improvements are required to satisfy battery charging and control to obtain efficiency and life characteristics assumed for the space station battery concept.

Initial Launch Weights

The regenerative fuel cell concept has a decided weight advantage. Table 6-21 shows weight comparisons (16,351 pounds regenerative fuel cell versus 22,932 pounds batteries). Launch weight constraints (20,000 pounds design to weight per module) can more easily be met with the regenerative fuel cell approach; however, batteries offer considerable flexibility by off loading at initial launch.

Table 6-21. Electrical Power Subsystem Weight (lb)

Assembly	6-Man Station (8,000 sq ft)			12-Man Station (10,000 sq ft)		
	NiCd Batteries	Reg. Fuel Cells Modular	Reg. Fuel Cells Adv.*	NiCd Batteries	Reg. Fuel Cell Modular	Reg. Fuel Cell Adv.*
Electrical Power Generation	7,630	7,630	7,630	9,538	9,538	9,538
Secondary Power Generation	1,078	1,016	1,016	1,078	1,183	1,183
Energy Storage Tanks	9,172	2,222 595**	1,330 **595	13,900	3,095 **900	1,995 **900
Power Conditioning	1,660	1,496	1,496	2,222	1,955	1,955
Distribution, Control and Wiring	2.908	2,908	2,908	5,090	5,090	5,090
Lighting	484	484	484	836	836	836
Initial On-Orbit	22,932	16,351	15,459	32,664	22,597	21,497

Note: Regenerative fuel cells:

Modular - P&W shuttle fuel cell + GE electrolysis
Advanced - P&W estimates $5kW_e$ size Mark I; Mark II weights 40% less

*Scaled from 5 kw modules
**Designed for 1200 psia

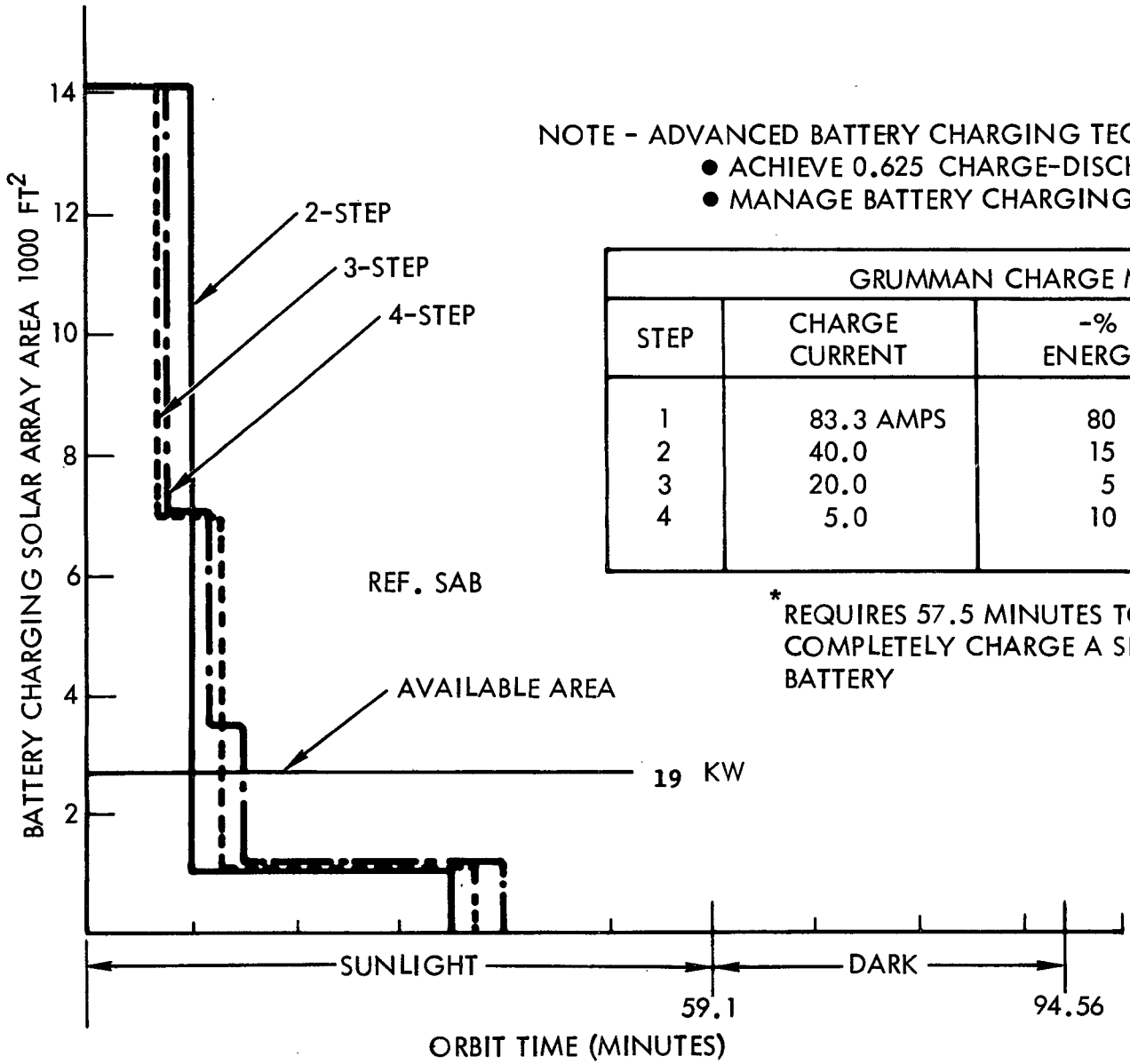

NOTE - ADVANCED BATTERY CHARGING TECHNOLOGY REQUIRED:

- ACHIEVE 0.625 CHARGE-DISCHARGE EFFICIENCY
- MANAGE BATTERY CHARGING WITHIN AVAILABLE ENERGY

GRUMMAN CHARGE MODEL*			
STEP	CHARGE CURRENT	-% ENERGY	ESTIMATED
1	83.3 AMPS	80	97.2
2	40.0	15	96.3
3	20.0	5	96.0
4	5.0	10	60.0

*REQUIRES 57.5 MINUTES TO COMPLETELY CHARGE A SINGLE BATTERY

Figure 6-42. Battery Charging Time Profile (Initial Station 672 Cells)

Space Division
North American Rockwell

Cost

A summary of cost comparisons is given in Figure 6-43. This shows a lower cost (approximately $7 million) for regenerative fuel cells based on savings attributed to shared development (i.e., shuttle fuel cells and ECLSS electrolysis). This cost advantage improves with operating time by about an additional $1 million because of lower resupply weights. Energy storage costs are sensitive to at least three parameters: amount of shared development, charge-discharge efficiency, and lifetimes. Figure 6-43 indicates relative cost sensitivity and shows that for a resupply cycle of ≥ 1.4 years the regenerative fuel cell concept is competitive to the reference battery approach at 2.5-year replacement. Improved fuel cell performance and a reduced battery performance can affect a crossover of approximately 10 months ($\leq$ 0.84 year). The table detailing the cost items assumes a 2.5-year replacement cycle for both concepts. The major life-limit component is believed to be the fuel cell. The advanced shuttle fuel cell technology development has a goal of 10,000 hours or a 3.56-year regenerative fuel cell equivalent. As an energy storage device the fuel cell will operate primarily in a closed cycle, thereby increasing normal life by reducing catalyst poisoning by reactant contamination. In addition, the shuttle fuel cell is sized sufficiently to allow for low-current densities for energy storage application. On these considerations, a lifetime of 2.5 years appears to be readily attainable in the 1982-87 initial station operational time period.

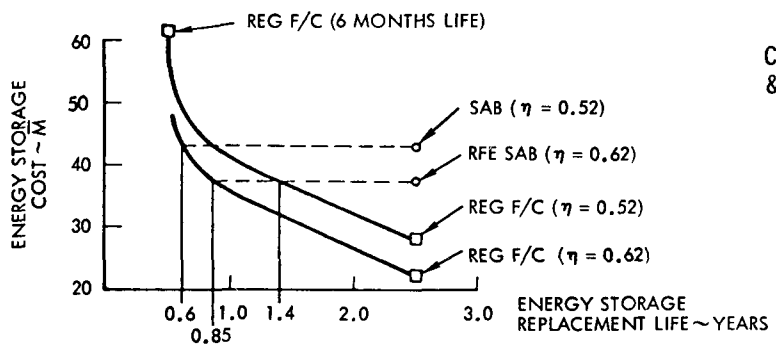

COST SENSITIVE TO LIFE TIME & EFFICIENCY

ADVANCED SHUTTLE FUEL CELL TECHNOLOGY LIFE GOAL IS 10,000 HR (~3.56 YEAR EQUIVALENT)

SHARED DEVELOPMENT COSTS

- ECLSS ELECTROLYSIS
- SHUTTLE FUEL CELLS

COST ITEM	REGEN FUEL CELL	Ni Cd BATTERIES
INITIAL WEIGHT ($ 250/LB)	$ 3.93 (15,748 LB)	5.66 (22,638 LB)
INITIAL VOLUME (11,800/FT³)	1.12 (94.8 FT³)	2.50 (211 FT³)
INITIAL POWER ΔSA AREA	—	2.51
ENERGY STORAGE DEVELOPMENT	14.49	7.95
SECONDARY POWER DEVELOPMENT	—	5.79
ENERGY STORAGE INITIAL HARDWARE	5.26	3.53
SECONDARY POWER INITIAL HARDWARE	—	3.98
INITIAL IOC COST $ M̄	24.80	31.92
RESUPPLY HARDWARE ENERGY STORAGE	4.04	3.01
BATTERY CHARGER (ΔS)	—	0.51
RESUPPLY WEIGHT ($ 250/LB) (DELTA $)	—	1.75
INITIAL IOC + 5 YRS OPERATION COSTS	$ 28.84 M̄	37.19 M̄

Figure 6-43. Energy Storage Cost Comparison

Matrix Comparison

An energy storage evaluation matrix was prepared based on special emphasis evaluation criteria developed in the 33-foot diameter space station study (Reference 6-15). Table 6-22 shows a relative rating for both concepts. Weight is the parameter used in judging maximum utility and minimum resupply. Cost is the comparator for the criteria of minimum development risk, minimum cost per kilowatt, and growth station delta. Inherent redundancy in the battery approach was the determinant factor in its advantage for maximum ability to retain power. Fuel cell ability to provide large power for extended periods (limited only by reactant supply) accounts for its superiority for minimum operational constraints. Since fuel cells are the normal emergency source and the regenerative fuel cell approach increases fuel cell redundancy, this concept was judged better for maximum crew safety.

White ratings on each criteria are subjective, it is felt that the 14 to 5 comparative ranking would be difficult to overcome for any battery approach. Regenerative fuel cells appears to have a significant technical advantage over batteries for the space station application.

Energy Storage Conclusions and Recommendations

Final EPS study conclusions of the energy storage trades are given in Table 6-23 with the recommendations summarized in Table 6-24. It was recommended that regenerative fuel cells be used for energy storage if shared development cost savings can be achieved. This would require electrolysis to be selected in the ECLSS trade study. For the options (in the integrated subsystem trade) which did not contain electrolysis it was recommended to continue both battery and regenerative fuel cell options. Selections for these options need to be made after an overall subsystem evaluation and a more optimized concept comparison.

It was concluded that the battery technology development needs to show a battery with little or no voltage degradation since degradation seriously impacts battery weights. Improved battery charging technology appears to be badly needed. Battery charging available energy is limited and selective cell charging is required. Full charge needs to be achieved at relatively high charge currents to reduce charge time. Some form of pulse charging looks to be promising to permit treating a larger number of cells as a battery module. Minimizing cell divergency is the key to this consideration.

The regenerative fuel cell approach used in the study did not impact solar array area requirement but did impose special operational considerations. Development cost and 5-year operations favor the regenerative fuel cells. However, this conclusion is sensitive to the amount of shared development acceptable with shuttle fuel cells and ECLSS electrolysis cell development. The regenerative fuel cell operational costs are also sensitive to lifetime assumption. This is thought to be primarily applicable to the fuel cell lifetime. Extended lifetimes are used in the trade study based on

Table 6-22. Energy Storage Evaluation Matrix

Criteria	Solar Array Fuel Cell Electrolysis	Solar Array Secondary Batteries
Maximum Utility (10 years)	29,090 lb. (3)	59,360 lb.)
Minimum Development (Risk)	14.49→22.16	14.56 (3)
Minimum Resupply (lb)	2517 (5 yr.)→5035 (10 yr.) (3)	9740 (5 yr.→29554 (10 yr.)
Maximum Ability to Retain Power		168 modules [2]
Minimum Operational Constraint	3	
Minimum Cost per kwh ($M) (5 years)	1.15 $\frac{\overline{M}}{KWH}$ △1	2.47 $\frac{\overline{M}}{KWH}$
Maximum Crew Safety	△1	
Growth Station Delta	29.3 M (10 yr.) (3)	49.15 M (10 yr.)
Total	(14)	△5

Rating ○ = 3 Best
□ = 2 Better
△ = 1 Good

Note: Relative values only.

Space Division
North American Rockwell

Table 6-23. Energy Storage Study Conclusions

E-2 offers significant technical advantages Weight Volume Complexity Thermal control Maintenance E-2 Sensitive to development cost and lifetimes E-2 offers significant potential for improvement to reduce solar array area Improved charge/discharge efficiency 15% (advanced shuttle fuel cell, NASA-Lewis) Maximum Flexibility in energy storage (400 watt-hours/lb.) Maximum utilization of excess EPS electrolysis capability during off-peak conditions (average 20 lb./day for initial station)
Note: On a more optimized comparison it is expected that E-2 will significantly improve its competitive advantage.

Table 6-24. Energy Storage Study Recommendations

<u>With</u> shared electrolysis development costs: Select regenerative fuel cells for energy storage <u>Without</u> shared electrolysis development costs: Continue both E-1 and E-2 options (Note: Requires additional study for optimized concept comparisons)

advanced shuttle fuel cell goals, degraded energy density and performance requirements, and controlled/closed system operations (no impurities in the closed loop). There are limited data available to support the conclusions of this study. It is strongly recommended that the regenerative fuel cell concept be pursued in a technology program with a priority set on obtaining supporting data in sufficient depth to verify performance and establish credibility on lifetime assumptions.

6.8 REFERENCES

6-1 Shuttle-Launched Modular Space Station, Volume 1 Concept Definition. North American Rockwell Corporation, Space Division, SD70-546-1, January 1971.

6-2 EL-170 Experiments Book for the Shuttle-Launched Station. Space Station Organization, General Electric Company Report 71SD4207 (January 29, 1971) (Contract No. M9W8XDZ-68066D)

6-3 Experiment Capabilities Study. North American Rockwell Corporation, Space Division, ERB 30 (May 4, 1971)

6-4 Modular Space Station Systems Requirements Book. North American Rockwell Corporation, Space Division, SD71-205 (September 7, 1971)

6-5 Phase B Program Definition Study Modular Space Station Guidelines and Constraints. NASA/MSC, MSC-03696 (Revision 6) (June 25, 1971)

6-6 Nussberger, A. A., and Schmill, W., Electrical Power Systems for Cluster Space Station Design, North American Rockwell Corporation, Space Division, SD68-640 (October 1, 1968)

6-7 Analysis and Evaluation of Spacecraft Battery Life Test Data. Quality Evaluation Laboratory, United States Naval Ammunition Depot, Crane, Indiana, QE/C 67-592 (NASA Star N69-16725) (November 1967).

6-8 Space Shuttle Fuel Cell Programs. L. M. Handley Engineering Department, Pratt & Whitney Aircraft Division, United Aircraft Company (April 21, 1971)

6-9 Recent Improvements in Water Electrolyses with a Solid Polymer Electrolyte Acid System. Direct Energy Conversion Business Section, General Electric Company, September 1970

6-10 Water Electrolysis Cell Module, Direct Energy Conversion Business Section, General Electric Company, report prepared for NASA Langley Research Center (Contract No. NAS1-9750).

6-11 Development of a Solid Polymer Electrolyte Water Electrolysis Cell Module. Aircraft Equipment Division, General Electric Company, Contract No. NAS1-9750 (December 1970)

6-12 Grevstad, P. E., RegenerativeFuel Cell Utility Supply System for Space Station to North American Rockwell Seal Beach, Calif.. Pratt & Whitney Aircraft Brochure dated (November 12, 1970).

6-13 Wood, K. O., and Bell, W. F., The Effect of Design and Operating Factors on Life and Performance of Matrix Fuel Cells. Pratt and Whitney Aircraft Report PWA-4145 (Contract NAS3-13229, NASA CR-72906) (February 28, 1971)

6-14 Nuttall, L. J., and Titterington, W. A., General Electric Company Solid Polymer Electrolyte Water Electrolysis Systems, Aircraft Equipment Division, ASME Publication No. 71-AV-9 (April 9, 1971)

6-15 Space Station Program Phase B Definition Special Emphasis Tasks Summary Report. North American Rockwell Corporation, Space Division, SD70-145 (13 March 1970).

6-16 Bauer, P., Batteries for Space Power Systems. TRW (1968);(available as NASA SP-172).

6-17 Bacher, J. and Rusta, D., The Analysis of Voltage-Limited Battery Charging Systems. IEEE Transactions on Aerospace and Electronic Systems, AES 4 (September 1968)

6-18 Gladstone, B. and Newman, W., Demand Pulse Charging for Nickel-Cadmium Batteries. Proceedings of the Power Sources Conference (1968)

6-19 Sparks, R. H. and Wright, W. H., Integral Electronic Charge Controls for High Performance Secondary Batteries. IEEE Transactions on Aerospace and Electronic Systems, AES5 (September 1969).

6-20 Preuse, K. E., Shair, R. C., Betz, F. E. and Sylvia, J., Parametric Charge Studies for Aerospace Nickel-Cadmium Batteries, 3rd Intersociety Energy Conversion Conference (September 1968)

6-21 Preuse, E. E., et al, Recent Battery Developments for Aerospace Systems. IEEE Transactions on Aerospace and Electronic Systems, AES2, (July 1966)

6-22 Bacher, J. and Nekrasov, P., Analysis of the Operating Parameters of Secondary Batteries in an Orbiting Space Vehicle Application. 4th Intersociety Energy Conversion Conference (September 1969)

6-23 Kantner, E. and Bene, J., Large Capacity Nickel-Cadmium Aerospace Cells of Improved Design. NAECON 70 Record (May 1970)

6-24 Business Contact Record, NR and Christie Electric Corporation. November and December 1970)

6-25 Meeting Report, NR and McCulloch Corporation, (August 1970)

6-26 Fuel Cell Power for RAM North American Rockwell Corporation, M. L. Parsons, Pratt & Whitney Aircraft brochure (September 15, 1971).

7. RADIATOR ANALYSIS

The transient performance was determined by an IBM 360 computer using the General Thermal Analyzer Program, XF 0014. The performance was established on an individual module basis and the individual module rejections were summed to obtain the total vehicle heat rejection.

7.1 REQUIREMENTS

The heat rejection requirements imposed on the radiator subassembly were obtained by the summation of individual equipment loads that could occur for the expected duty cycles of both crew and equipment. The rejection requirements for initial and growth stations are 103,000 and 152,807 Btu/hour, respectively.

7.2 CONFIGURATIONS

During the study program the transient heat rejection capability was established for the two configurations shown on Figure 7-1. The selected cruciform configuration has modules in two planes (Y and Z) of the core, where the barbell has modules only in one plane (Z) of the core. In the following discussion the cruciform modules, indicated by SM-1 through -4 in Figure 7-1 and all modules of barbell configuration will be referred to as vertical modules. The remaining modules of the cruciform configuration, excluding the power module, will be referred to as horizontal modules.

7.3 RADIATOR REJECTION ENVIRONMENT

The radiator rejection environment includes all the absorbed energy from all external sources which included direct solar, earth emission, albedo, module interchange, and solar panel interchange. The Vehicle Orbiting Thermal Environment (VOTE) computer routine (YF 0007) was used for sun and earth inputs, and the cluster interchange was hand-calculated using a Hickman mirror and a 1/30-scale model to obtain the required view factors (module-module, solar panel-module). Blockage was estimated.

Sun and earth inputs were obtained for a 240-nautical mile, circular earth orbit with the module axis coincident with the earth local vertical. The core module axis was perpendicular to the orbit plane (X-POP) and the solar panels remained normal to the solar vector; thus, the modules were earth-oriented while the solar panels pivoted to remain solar-oriented. For this study the orbit plane was considered coincident with the ecliptic (a beta angle of zero) to obtain the limiting maximum heat rejection capability.

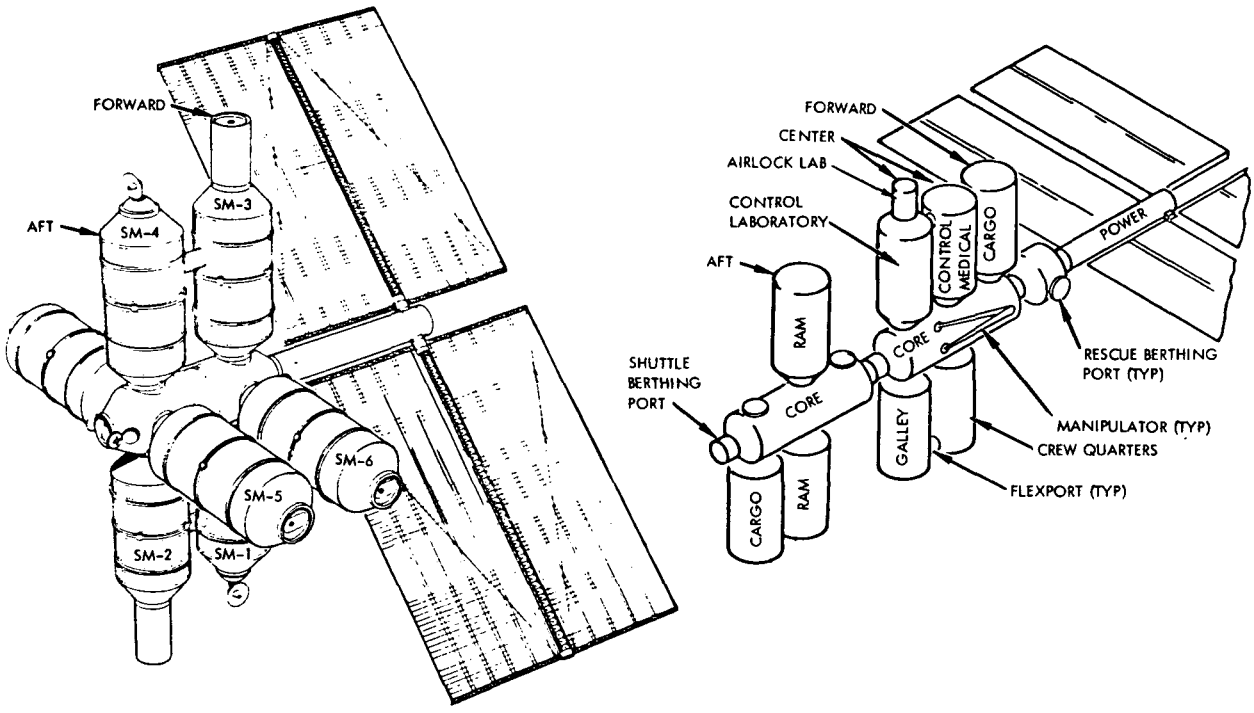

Figure 7-1. Initial Station Configuration

7.4 BARBELL

The cluster interchange included absorbed heat from the solar panels, core, and adjacent modules. The surface temperature (for interchange calculations) was taken as a 50 F for both the core and the adjacent modules, but the profile of Figure 7-2 was used for the solar panels. The view factors between surfaces were obtained for a basic barbell configuration with 6-foot clearance between modules. The view factors for adjacent modules and the core were combined and are given in Table 7-1 with the Hickman mirror readings. Readings were taken at 30-degree increments around the module at three locations along the axis.

The view factors given are typical for all modules at symmetrical locations. These view factors are constant over the orbit since there is no relative movement between the modules; however, the view factors for the solar panels vary as they pivot throughout the orbit. Mirror readings for the solar panels were also taken at 30-degree increments around the module but several observations were necessary to obtain all possible solar panel positions. The mirror readings between the solar panel and forward module are shown on Table 7-2. The view factors for forward and center modules are shown on Figures 7-3 through 7-6. The view factors to the solar array were found to be negligible for aft modules.

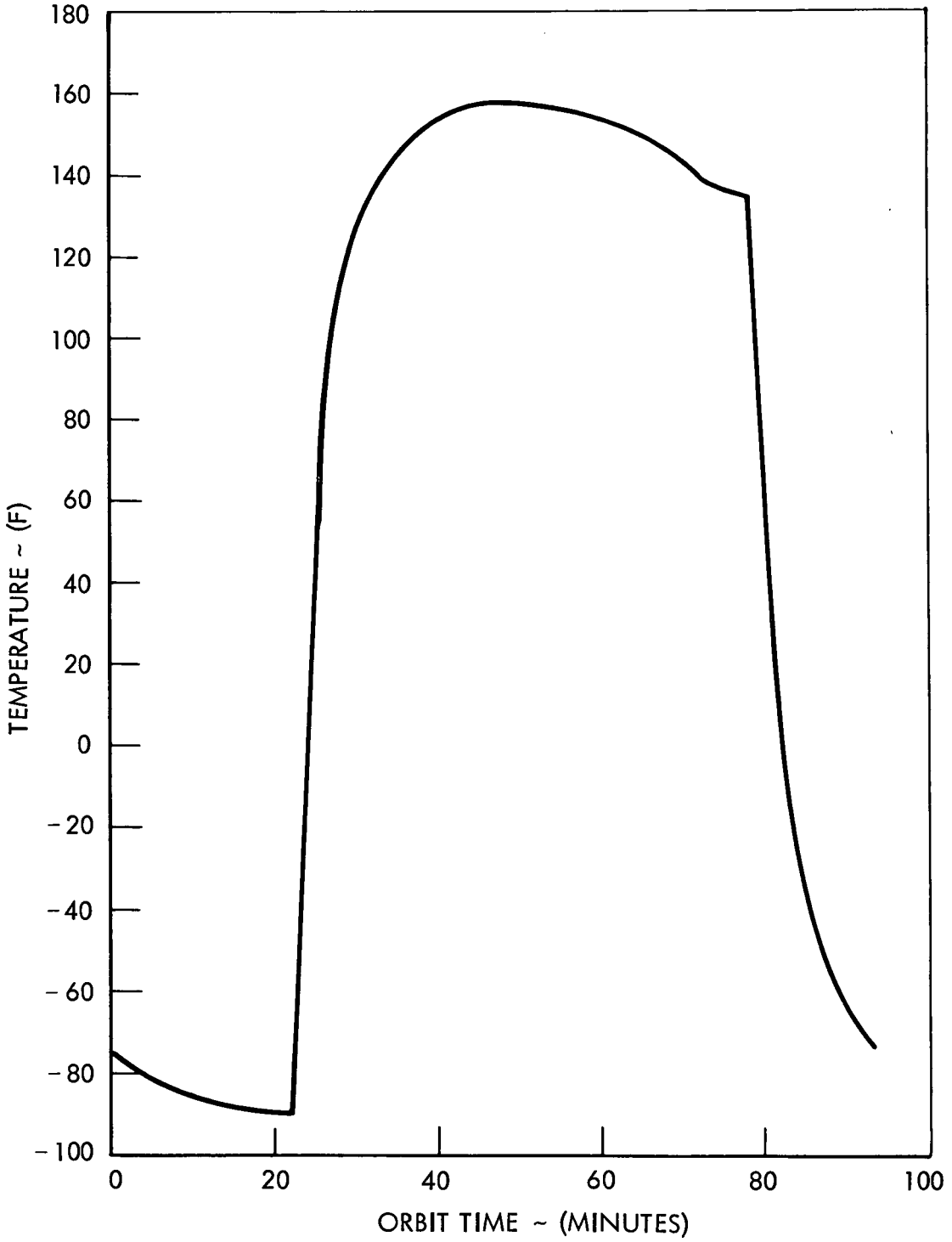

Figure 7-2. Solar Panel Temperature Profile

Table 7-1. Module-to-Module View Factors and Mirror Readings

Mirror Readings	Module Angle			
	0	30	60	90
Module position				
1 (module)	14.0	11.0	2.5	0
(core)	1.0	2.0	0.5	0
2 (module)	19.0	16.0	3.5	0
(core)	0.5	0.4	0.5	0
3 (module)	14.0	11.0	2.5	0
(core)	0.2	0.3	0.3	0
Average (M + C)	16.2	13.6	3.3	0
View factor - FF (M + C)	0.405	0.340	0.082	0

The amount of sun and earth inputs blocked by the solar panels and other modules was estimated from a scale drawing. The X-POP attitude is such that at a zero degree beta angle there is no direct solar blockage by either solar panels or modules; also, the solar panel movement and position are such that their blockage of earth emission and albedo is insignificant. The blockage of earth emission and albedo by the core and modules is the only blockage included in this study. The estimated magnitudes are given in Table 7-3 and are constant over the orbit period. As indicated, the blockage has the effect of reducing the VOTE absorbed heats proportional to the view of modules and core.

The radiator environment was defined as the sum of the absorbed heats (C2) from direct solar, blocked earth emission and albedo, module interchange including the core, and from the solar panels. Values were obtained at true anomaly increments of 30 degrees around the orbit for each module, and are given in Tables 7-4, 7-5, and 7-6.

Table 7-2. Hickman Mirror Readings for Module to Solar Panels

(FORWARD MODULE)		SOLAR PANEL ROTATION ANGLE (WITH X AXIS)						
SOLAR PANEL ROLL ANGLE	MODULE ANGLE	0	30	60	90	120	150	180
0°	0	0	12.0	14.0	14.5	14.0	12.0	0
	30	3.5	8.5	11.0	13.0	14.0	15.5	3.5
	60	1.0	3.0	5.0	8.0	9.0	5.5	1.0
	90	0	0.2	1.3	2.0	2.5	1.8	0
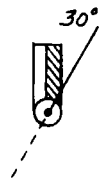 30°	0	6.5	7.0	13.0	16.5	15.0	13.0	6.5
	30	5.0	7.0	12.0	14.5	15.0	14.0	5.0
	60	2.5	4.0	6.0	9.0	10.0	10.0	2.5
	90	0.5	1.0	2.0	3.5	4.0	4.0	0.5
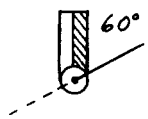 60°	0	6.0	8.5	10.5	11.0	8.5	2.0	6.0
	30	6.5	9.0	11.0	11.0	8.0	2.0	6.5
	60	5.0	8.0	9.0	9.5	7.0	2.0	5.0
	90	4.0	5.5	7.0	7.0	5.0	1.0	4.0
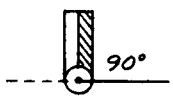 90°	0	8.0	10.0	12.0	13.0	10.0	4.0	8.0
	30	5.0	8.0	9.0	9.0	7.0	1.0	5.0
	60	4.0	7.0	7.0	7.0	5.0	1.0	4.0
	90	2.5	3.0	4.0	4.0	3.0	2.0	2.5
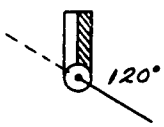 120°	0	6.0	8.5	10.5	11.0	8.5	2.0	6.0
	30	4.0	6.0	7.0	8.0	6.0	1.0	4.0
	60	2.5	4.0	5.0	5.0	4.0	1.0	2.5
	90	1.5	2.0	2.5	2.5	2.0	0.5	1.5
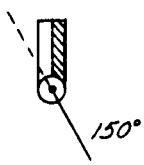 150°	0	6.5	7.0	13.0	16.5	15.0	13.0	6.5
	30	4.0	8.0	10.0	13.0	13.0	6.0	4.0
	60	1.5	2.0	4.0	6.0	5.0	1.8	1.5
	90	0.3	0.8	1.0	1.4	1.5	0.5	0.3

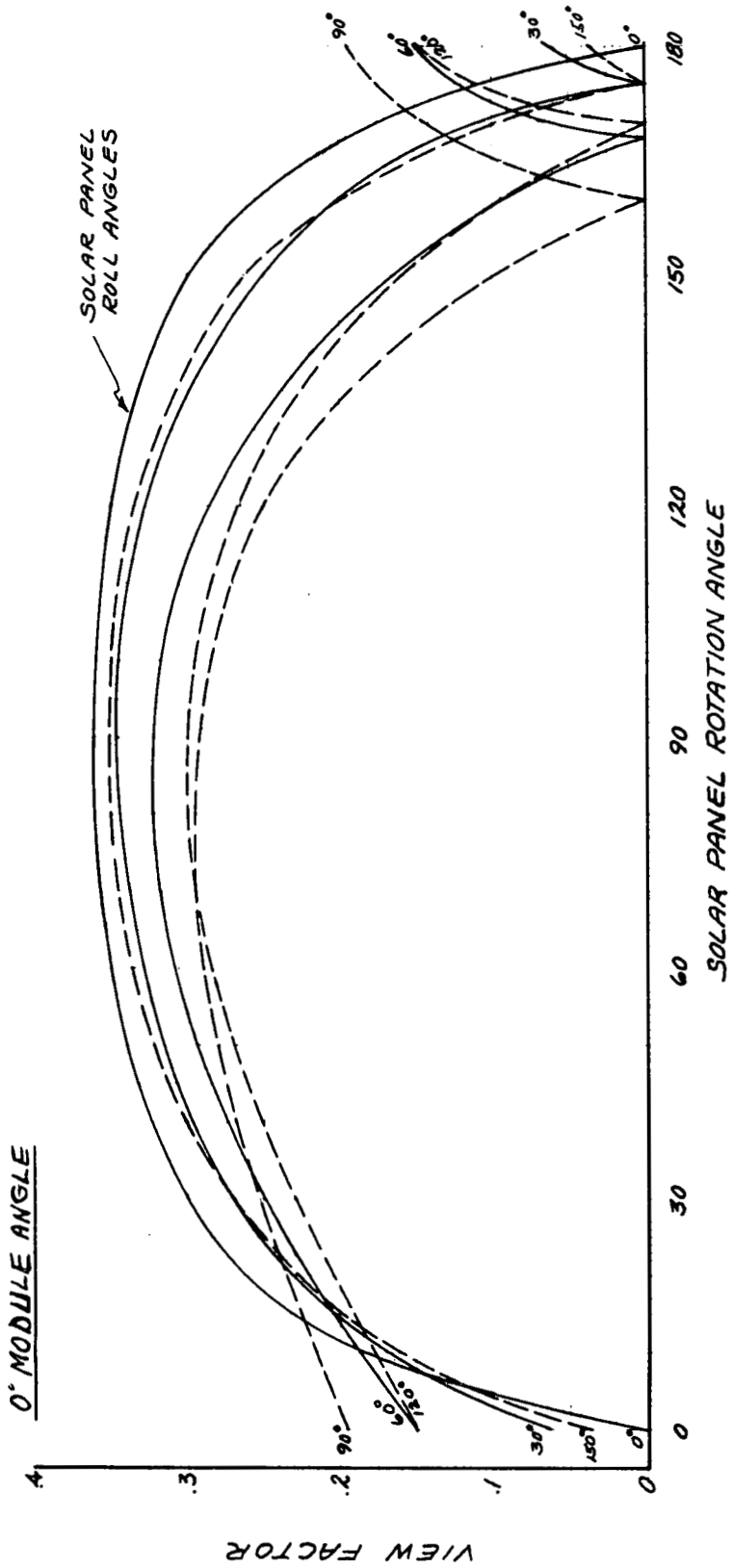

Figure 7-3. View Factors for Model to Solar Panels, Forward Module (0-Degree Module Angle)

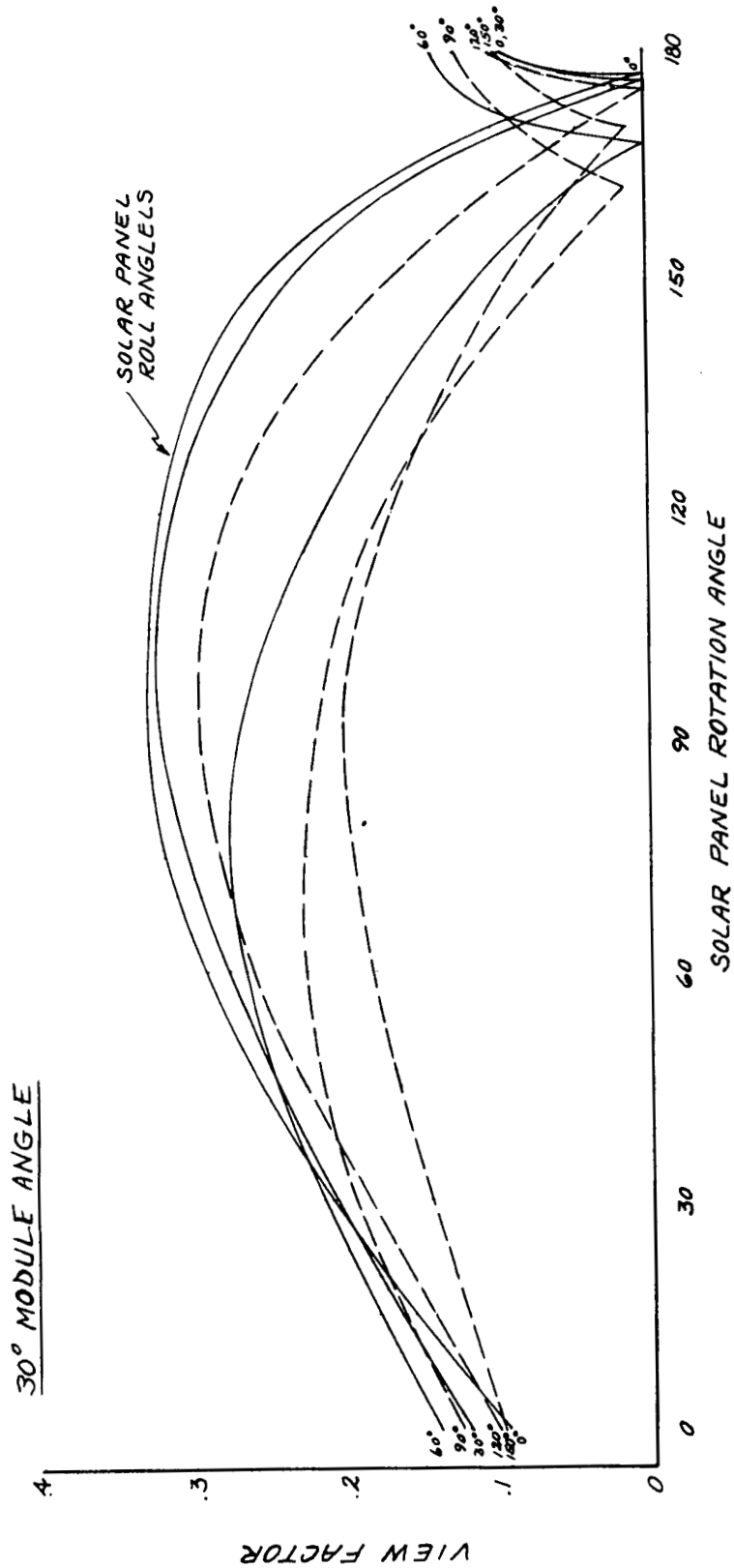

Figure 7-4. View Factors for Module to Solar Panels, Forward Module (30-Degree Module Angle)

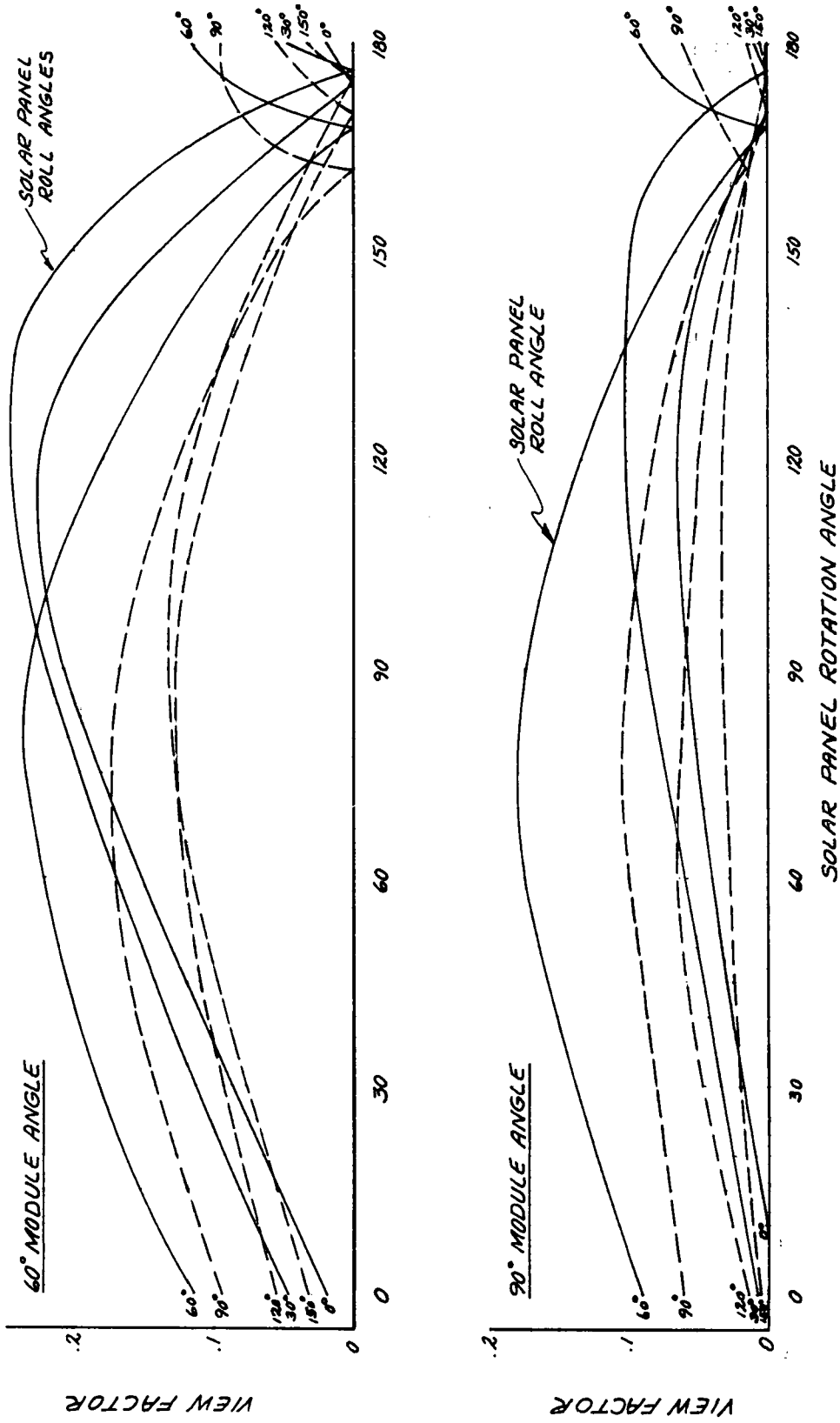

Figure 7-5. View Factors for Module to Solar Panels, Forward Module (60- and 90-Degree Module Angles)

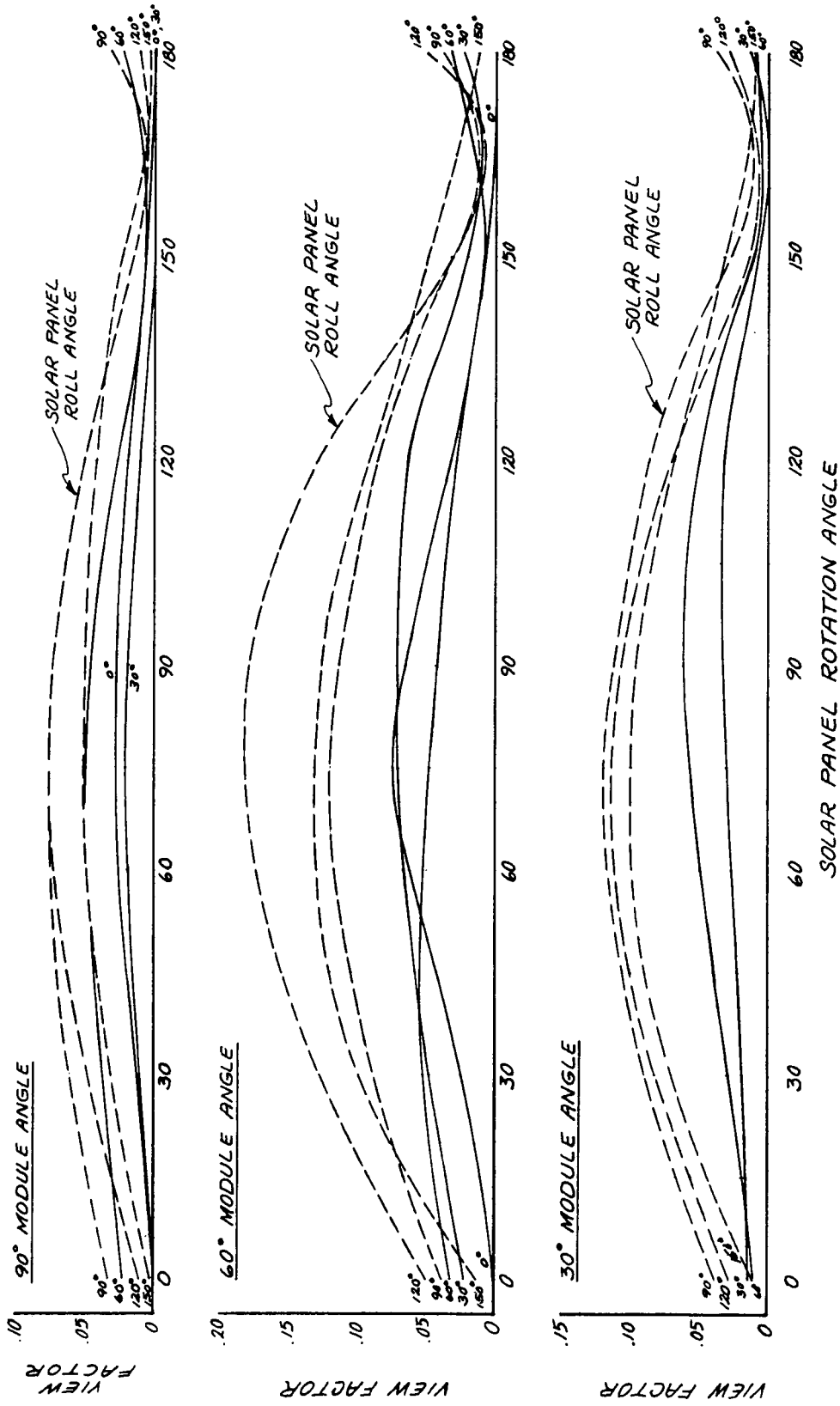

Figure 7-6. View Factors for Module to Solar Panels, Center Module

Table 7-3. Estimated Blockage (Albedo and Earth Emission)

Module Angle	Blockage
0	$\underline{9} = \underline{9}'$ (1 - FF) = 0.60 $\underline{9}'$
30	$\underline{9} = \underline{9}'$ (1 - 3/4 FF) = 0.73 $\underline{9}'$
60	$\underline{9} = \underline{9}'$ (1 - 3/4 FF) = 0.94 $\underline{9}'$
90	$\underline{9} = \underline{9}'$ = 1.0 $\underline{9}'$

$\underline{9}$ = Net absorbed heat

$\underline{9}'$ = Absorbed heat without blockage

7.5 THERMAL MODEL

The thermal model prepared for this study was a modification of that used in earlier studies. It was a nodal network for transient solution in the General Thermal Analyzer computer routine (XF 0014). Since all modules were considered externally identical, a common model was used. The model represented two radiator panels, each 180 degrees of a 14-foot diameter, and 28 feet long. The surface was represented by 24 nodes--four along the axis and six circumferentially. Each surface node represented the fin and tubes and was connected to a fluid node through a combined conduction and convection resistor. Other fluid nodes included a common supply and an outlet for each panel. Conduction between surface nodes was neglected but all fluid nodes were joined by flow (wc_p) conductors. The network is shown in Figure 7-7 and shows seven circumferential divisions per panel, but the edge divisions (0 and 180 degrees) are common to both panels.

Nominal values were used for the conductors shown in the Figure 7-7 and are based on the following constants:

Tube spacing - 4 inches

Tube diameter - 0.25 inch ID, 0.02 inch wall

Fin thickness - 0.020 inch aluminum

Film coefficient - 200 Btu/hr-ft^2 °F

α/ε - 0.36/0.9

The model was completed by adding the radiator environment (C_2) time-dependent absorbed heat curves.

Table 7-4. Forward Module Environment

α = .36
ϵ = .90
β = 0
h = 240 N.M.

X-POP MODULE AXIS DOWN LV

TRUE ANOMALY		0	30	60	90	120	150	180	210	240	270	300	330	360
MODULE ANGLE 210	DS	0	—	—	—	—	0	79.5	68.9	39.8	0	—	—	0
	RS	0	—	—	—	—	—	0	7.7	13.4	15.5	13.4	7.7	0
	SP	0	—	—	—	—	—	—	—	—	—	—	—	0
	EE	13.1	—	—	—	—	—	—	—	—	—	—	—	13.1
	MOD	28.7	—	—	—	—	—	—	—	—	—	—	—	28.7
	C2	41.8	41.8	41.8	41.8	41.8	41.8	121.3	118.4	95.0	57.3	55.2	49.5	41.8
240	DS	0	—	—	—	—	0	137.8	119.5	69.1	0	—	—	0
	RS	0	—	—	—	—	—	0	7.7	13.4	15.5	13.4	7.7	0
	SP	0	—	—	—	—	—	—	—	—	—	—	—	0
	EE	16.9	—	—	—	—	—	—	—	—	—	—	—	16.9
	MOD	6.6	—	—	—	—	—	—	—	—	—	—	—	6.6
	C2	23.5	23.5	23.5	23.5	23.5	23.5	161.3	150.7	106.0	39.0	36.9	31.2	23.5
270	DS	0	—	—	—	—	0	159.3	138.1	79.9	0	—	—	0
	RS	0	—	—	—	—	—	0	7.7	13.4	15.5	13.4	7.7	0
	SP	0	1.0	0.6	2.0	2.8	0.2	0	1.0	2.7	13.5	20.2	1.5	0
	EE	18.0	—	—	—	—	—	—	—	—	—	—	—	18.0
	MOD	0	—	—	—	—	—	—	—	—	—	—	—	0
	C2	18.0	19.0	18.6	20.0	20.8	18.2	177.3	164.8	114.0	47.0	51.6	27.2	18.0
300	DS	0	—	—	—	—	0	138.0	119.7	69.3	0	—	—	0
	RS	0	—	—	—	—	—	0	7.7	13.4	15.5	13.4	7.7	0
	SP	3.9	6.3	2.6	3.2	3.5	1.4	1.1	6.3	12.1	21.4	25.8	10.3	3.9
	EE	18.0	—	—	—	—	—	—	—	—	—	—	—	18.0
	MOD	0	—	—	—	—	—	—	—	—	—	—	—	0
	C2	21.9	28.2	24.5	25.1	25.4	23.3	157.1	151.7	112.8	54.9	57.2	36.0	21.9
330	DS	0	—	—	—	—	0	79.8	69.2	40.1	0	—	—	0
	RS	0	—	—	—	—	—	0	7.7	13.4	15.5	13.4	7.7	0
	SP	19.5	19.0	4.8	4.3	4.3	3.5	5.4	18.9	22.4	28.2	31.4	26.2	19.5
	EE	18.0	—	—	—	—	—	—	—	—	—	—	—	18.0
	MOD	0	—	—	—	—	—	—	—	—	—	—	—	0
	C2	37.5	37.0	22.8	22.3	22.3	21.5	103.2	113.8	93.9	61.7	62.8	51.9	37.5

DS = DIRECT SOLAR
RS = REFLECTED SOLAR
SP = SOLAR PANEL INTERCHANGE
EE = EARTH EMISSION
MOD = MODULE INTERCHANGE
C2 = TOTAL HEAT ABSORBED

Space Division
North American Rockwell

Table 7-4. Forward Module Environment (Cont)

X-POP MODULE AXIS DOWN LV

α = .36
ϵ = .9
β = 0
h = 240 N.M.

TRUE ANOMALY		0	30	60	90	120	150	180	210	240	270	300	330	360
MODULE ANGLE 0	DS	0	—	—	—	—	—	—	—	—	—	—	—	0
	RS	0	—	—	—	—	—	0	7.7	13.4	15.5	13.4	7.7	0
	SP	0	12.1	7.1	6.7	4.6	11.1	0	12.0	33.0	44.0	33.6	81.9	0
	EE	18.0	—	—	—	—	—	—	—	—	—	—	—	18.0
	MOD	0	—	—	—	—	—	—	—	—	—	—	—	0
	C2	18.0	30.1	25.1	24.7	22.6	29.1	18.0	37.7	64.4	77.5	65.0	107.6	18.0
30	DS	79.8	0	—	—	—	—	—	—	—	0	39.8	69.0	79.8
	RS	0	—	—	—	—	—	0	7.7	13.4	15.5	13.4	7.7	0
	SP	19.5	23.4	6.6	4.3	3.1	2.9	5.4	23.2	30.8	28.2	22.9	21.3	19.5
	EE	18.0	—	—	—	—	—	—	—	—	—	—	—	18.0
	MOD	0	—	—	—	—	—	—	—	—	—	—	—	0
	C2	117.3	41.4	24.6	22.3	21.1	20.9	23.4	48.9	62.2	61.7	94.1	116.0	117.3
60	DS	138.0	0	—	—	—	—	—	—	—	0	69.8	119.4	138.0
	RS	0	—	—	—	—	—	0	7.7	13.4	15.5	13.4	7.7	0
	SP	3.9	9.2	5.5	3.2	1.7	1.0	1.1	9.1	25.3	21.4	12.3	7.1	3.9
	EE	18.0	—	—	—	—	—	—	—	—	—	—	—	18.0
	MOD	0	—	—	—	—	—	—	—	—	—	—	—	0
	C2	159.9	27.2	23.5	21.2	19.7	19.0	19.1	34.8	56.7	54.9	112.5	152.2	159.9
90	DS	159.3	0	—	—	—	—	—	—	—	0	79.3	137.8	159.3
	RS	0	—	—	—	—	—	0	7.7	13.4	16.5	13.4	7.7	0
	SP	0	1.4	4.3	2.0	0.4	0.1	0	1.4	19.8	13.5	2.8	1.1	0
	EE	18.0	—	—	—	—	—	—	—	—	—	—	—	18.0
	MOD	0	—	—	—	—	—	—	—	—	—	—	—	0
	C2	177.3	19.4	22.3	20.0	18.4	18.1	18.0	27.1	51.2	47.0	113.5	164.6	177.3
120	DS	137.8	0	—	—	—	—	—	—	—	0	68.6	119.2	137.8
	RS	0	—	—	—	—	—	0	7.7	13.4	15.5	13.4	7.7	0
	SP	0	—	—	—	—	—	—	—	—	—	—	—	0
	EE	16.9	—	—	—	—	—	—	—	—	—	—	—	16.9
	MOD	6.6	—	—	—	—	—	—	—	—	—	—	—	6.6
	C2	161.3	23.5	23.5	23.5	23.5	23.5	23.5	31.2	36.9	39.0	105.5	150.4	161.3
150	DS	79.5	0	—	—	—	—	—	—	—	0	39.5	68.7	79.5
	RS	0	—	—	—	—	—	0	7.7	13.4	15.5	13.4	7.7	0
	SP	0	—	—	—	—	—	—	—	—	—	—	—	0
	EE	13.1	—	—	—	—	—	—	—	—	—	—	—	13.1
	MOD	28.7	—	—	—	—	—	—	—	—	—	—	—	28.7
	C2	121.3	41.8	41.8	41.8	41.8	41.8	41.8	49.5	55.2	57.3	94.7	118.2	121.3
180	DS	0	—	—	—	—	—	—	—	—	—	—	—	0
	RS	0	—	—	—	—	—	0	7.7	13.4	15.5	13.4	7.7	0
	SP	0	—	—	—	—	—	—	—	—	—	—	—	0
	EE	10.8	—	—	—	—	—	—	—	—	—	—	—	10.8
	MOD	42.6	—	—	—	—	—	—	—	—	—	—	—	42.6
	C2	53.4	53.4	53.4	53.4	53.4	53.4	53.4	61.1	66.8	68.9	66.8	61.1	53.4

DS = DIRECT SOLAR
RS = REFLECTED SOLAR
SP = SOLAR PANEL INTERCHANGE
EE = EARTH EMISSION
MOD = MODULE INTERCHANGE
C2 = TOTAL HEAT ABSORBED

Space Division
North American Rockwell

Table 7-5. Center Module Environment

α = .36
ϵ = .90
β = 0
h = 240 N.M.

X - POP MODULE AXIS DOWN LV

TRUE ANOMALY		0	30	60	90	120	150	180	210	240	270	300	330	360
MODULE ANGLE 0	DS	0	—	—	—	—	—	—	—	—	—	—	—	0
	RS	0	—	—	—	—	—	0	4.6	8.1	9.3	8.1	4.6	0
	SP	0	—	—	—	—	—	—	—	—	—	—	—	0
	EE	10.8	—	—	—	—	—	—	—	—	—	—	—	10.8
	MOD	42.6	—	—	—	—	—	—	—	—	—	—	—	42.6
	C2	53.4	53.4	53.4	53.4	53.4	53.4	53.4	58.0	61.5	62.7	61.5	58.0	53.4
30	DS	79.8	0	—	—	—	—	—	—	—	0	39.8	69.0	79.8
	RS	0	—	—	—	—	—	0	5.6	9.8	11.3	9.8	5.6	0
	SP	0	2.4	0.5	1.3	0.8	0.3	0	2.4	2.2	8.5	6.2	2.2	0
	EE	13.1	—	—	—	—	—	—	—	—	—	—	—	13.1
	MOD	28.7	—	—	—	—	—	—	—	—	—	—	—	28.7
	C2	121.6	44.2	42.3	43.1	42.6	42.1	41.8	49.8	53.8	61.6	97.6	118.6	121.6
60	DS	138.0	0	—	—	—	—	—	—	—	0	68.8	119.4	138.0
	RS	0	—	—	—	—	—	0	7.2	12.6	14.6	12.6	7.2	0
	SP	0	4.4	1.5	1.3	1.5	0.4	0	4.4	7.1	8.5	11.2	2.7	0
	EE	16.9	—	—	—	—	—	—	—	—	—	—	—	16.9
	MOD	6.6	—	—	—	—	—	—	—	—	—	—	—	6.6
	C2	161.5	27.9	25.0	24.8	25.0	23.9	23.5	35.1	43.2	46.6	116.1	152.8	161.5
90	DS	159.3	0	—	—	—	—	—	—	—	0	79.3	137.8	159.3
	RS	0	—	—	—	—	—	0	7.7	13.4	15.5	13.4	7.7	0
	SP	0	0	1.1	1.1	0.3	0.1	0	0	4.9	7.3	2.2	0.5	0
	EE	18.0	—	—	—	—	—	—	—	—	—	—	—	18.0
	MOD	0	—	—	—	—	—	—	—	—	—	—	—	0
	C2	177.3	18.0	19.1	19.1	18.3	18.1	18.0	25.7	36.3	40.8	112.9	164.0	177.3
120	DS	137.8	0	—	—	—	—	—	—	—	0	68.6	119.2	137.8
	RS	0	—	—	—	—	—	0	7.2	12.6	14.6	12.6	7.2	0
	SP	0	—	—	—	—	—	—	—	—	—	—	—	0
	EE	16.9	—	—	—	—	—	—	—	—	—	—	—	16.9
	MOD	6.6	—	—	—	—	—	—	—	—	—	—	—	6.6
	C2	161.3	23.5	23.5	23.5	23.5	23.5	23.5	30.7	36.1	38.1	104.7	149.9	161.3
150	DS	79.8	0	—	—	—	—	—	—	—	0	39.8	69.0	79.8
	RS	0	—	—	—	—	—	0	5.6	9.8	11.3	9.8	5.6	0
	SP	0	—	—	—	—	—	—	—	—	—	—	—	0
	EE	13.1	—	—	—	—	—	—	—	—	—	—	—	13.1
	MOD	28.7	—	—	—	—	—	—	—	—	—	—	—	28.7
	C2	121.6	41.8	41.8	41.8	41.8	41.8	41.8	47.4	51.6	53.1	91.4	116.4	121.6
180	DS	0	—	—	—	—	—	—	—	—	—	—	—	0
	RS	0	—	—	—	—	—	0	4.6	8.1	9.3	8.1	4.6	0
	SP	0	—	—	—	—	—	—	—	—	—	—	—	0
	EE	10.8	—	—	—	—	—	—	—	—	—	—	—	10.8
	MOD	42.6	—	—	—	—	—	—	—	—	—	—	—	42.6
	C2	53.4	53.4	53.4	53.4	53.4	53.4	53.4	58.0	61.5	62.7	61.5	58.0	53.4

DS = DIRECT SOLAR
RS = REFLECTED SOLAR
SP = SOLAR PANEL INTERCHANGE
EE = EARTH EMISSION
MOD = MODULE INTERCHANGE
C2 = TOTAL HEAT ABSORBED

Space Division
North American Rockwell

Table 7-5. Center Module Environment (Cont)

α = .36
ϵ = .90
β = 0
h = 240 N.M.

X - POP MODULE AXIS DOWN LV

TRUE ANOMALY		0	30	60	90	120	150	180	210	240	270	300	330	360
MODULE ANGLE 210	DS	0	—	—	—	—	0	79.5	68.9	39.8	0	—	—	0
	RS	0	—	—	—	—	—	0	5.6	9.8	11.3	9.8	5.6	0
	SP	0	—	—	—	—	—	—	—	—	—	—	—	0
	EE	13.1	—	—	—	—	—	—	—	—	—	—	—	13.1
	MOD	28.7	—	—	—	—	—	—	—	—	—	—	—	28.7
	C2	41.8	41.8	41.8	41.8	41.8	41.8	121.3	116.3	91.4	53.1	51.6	47.4	41.8
240	DS	0	—	—	—	—	0	137.8	119.5	69.1	0	—	—	0
	RS	0	—	—	—	—	—	0	7.2	12.6	14.6	12.6	7.2	0
	SP	0	—	—	—	—	—	—	—	—	—	—	—	0
	EE	16.9	—	—	—	—	—	—	—	—	—	—	—	16.9
	MOD	6.6	—	—	—	—	—	—	—	—	—	—	—	6.6
	C2	23.5	23.5	23.5	23.5	23.5	23.5	161.3	150.2	105.2	38.1	36.1	30.7	23.5
270	DS	0	—	—	—	—	0	159.3	138.1	79.9	0	—	—	0
	RS	0	—	—	—	—	—	0	7.7	13.4	15.5	13.4	7.7	0
	SP	0	4.4	0.5	1.1	0.7	0	0	0.5	2.2	7.3	5.0	0	0
	EE	18.0	—	—	—	—	—	—	—	—	—	—	—	18.0
	MOD	0	—	—	—	—	—	—	—	—	—	—	—	0
	C2	18.0	22.4	18.5	19.1	18.7	18.0	177.3	164.3	113.5	40.8	36.4	25.7	18.0
300	DS	0	—	—	—	—	0	138.0	119.7	69.3	0	—	—	0
	RS	0	—	—	—	—	—	0	7.2	12.6	14.6	12.6	7.2	0
	SP	0	2.4	2.4	1.3	1.0	0.7	0	2.4	11.0	8.5	7.3	4.9	0
	EE	16.9	—	—	—	—	—	—	—	—	—	—	—	16.9
	MOD	6.6	—	—	—	—	—	—	—	—	—	—	—	6.6
	C2	23.5	25.9	25.9	24.8	24.5	24.2	161.5	152.8	116.4	46.6	43.4	35.6	23.5
330	DS	0	—	—	—	—	0	79.8	69.2	40.1	0	—	—	0
	RS	0	—	—	—	—	—	0	5.6	9.8	11.3	9.8	5.6	0
	SP	0	2.0	1.3	1.3	0.3	0.4	0	1.9	6.0	8.5	2.2	2.7	0
	EE	13.1	—	—	—	—	—	—	—	—	—	—	—	13.1
	MOD	28.7	—	—	—	—	—	—	—	—	—	—	—	28.7
	C2	41.8	43.8	43.1	43.1	42.1	42.2	121.6	118.5	97.7	61.6	53.8	50.1	41.8

DS = DIRECT SOLAR
RS = REFLECTED SOLAR
SP = SOLAR PANEL INTERCHANGE
EE = EARTH EMISSION
MOD = MODULE INTERCHANGE
C2 = TOTAL HEAT ABSORBED

Space Division
North American Rockwell

Table 7-6. End Module Environment

α = .36
ϵ = .90
β = 0
h = 240 N.M.

X-POP MODULE AXIS DOWN LV

TRUE ANOMALY		0	30	60	90	120	150	180	210	240	270	300	330	360
MODULE ANGLE 0	DS	0	—	—	—	—	—	—	—	—	—	—	—	0
	RS	0	—	—	—	—	—	0	4.6	8.1	9.3	8.1	4.6	0
	SP	0	—	—	—	—	—	—	—	—	—	—	—	0
	EE	10.8	—	—	—	—	—	—	—	—	—	—	—	10.8
	MOD	42.6	—	—	—	—	—	—	—	—	—	—	—	42.6
	C2	53.4	53.4	53.4	53.4	53.4	53.4	53.4	58.0	61.5	62.7	61.5	58.0	53.4
30	DS	79.8	0	—	—	—	—	—	—	—	0	39.8	69.0	79.8
	RS	0	—	—	—	—	—	0	5.6	9.8	11.3	9.8	5.6	0
	SP	0	—	—	—	—	—	—	—	—	—	—	—	0
	EE	13.1	—	—	—	—	—	—	—	—	—	—	—	13.1
	MOD	28.7	—	—	—	—	—	—	—	—	—	—	—	28.7
	C2	121.6	41.8	41.8	41.8	41.8	41.8	41.8	47.4	51.6	53.1	91.4	116.4	121.6
60	DS	138.0	0	—	—	—	—	—	—	—	0	68.8	119.4	138.0
	RS	0	—	—	—	—	—	0	7.2	12.6	14.6	12.6	7.2	0
	SP	0	—	—	—	—	—	—	—	—	—	—	—	0
	EE	16.9	—	—	—	—	—	—	—	—	—	—	—	16.9
	MOD	6.6	—	—	—	—	—	—	—	—	—	—	—	6.6
	C2	161.5	23.5	23.5	23.5	23.5	23.5	23.5	30.7	36.1	38.1	104.9	150.1	161.5
90	DS	159.3	0	—	—	—	—	—	—	—	0	79.3	137.8	159.3
	RS	0	—	—	—	—	—	0	7.7	13.4	15.5	13.4	7.7	0
	SP	0	—	—	—	—	—	—	—	—	—	—	—	0
	EE	18.0	—	—	—	—	—	—	—	—	—	—	—	18.0
	MOD	0	—	—	—	—	—	—	—	—	—	—	—	0
	C2	177.3	18.0	18.0	18.0	18.0	18.0	18.0	25.7	31.4	33.5	110.7	163.5	177.3
120	DS	137.8	0	—	—	—	—	—	—	—	0	68.6	119.2	137.8
	RS	0	—	—	—	—	—	0	7.7	13.4	15.5	13.4	7.7	0
	SP	0	—	—	—	—	—	—	—	—	—	—	—	0
	EE	18.0	—	—	—	—	—	—	—	—	—	—	—	18.0
	MOD	0	—	—	—	—	—	—	—	—	—	—	—	0
	C2	155.8	18.0	18.0	18.0	18.0	18.0	18.0	25.7	31.4	33.5	100.0	144.9	155.8
150	DS	79.5	0	—	—	—	—	—	—	—	0	39.5	68.7	79.5
	RS	0	—	—	—	—	—	0	7.7	13.4	15.5	13.4	7.7	0
	SP	0	—	—	—	—	—	—	—	—	—	—	—	0
	EE	18.0	—	—	—	—	—	—	—	—	—	—	—	18.0
	MOD	0	—	—	—	—	—	—	—	—	—	—	—	0
	C2	97.5	18.0	18.0	18.0	18.0	18.0	18.0	25.7	31.4	33.5	70.9	94.4	97.5
180	DS	0	—	—	—	—	—	—	—	—	—	—	—	0
	RS	0	—	—	—	—	—	0	7.7	13.4	15.5	13.4	7.7	0
	SP	0	—	—	—	—	—	—	—	—	—	—	—	0
	EE	18.0	—	—	—	—	—	—	—	—	—	—	—	18.0
	MOD	0	—	—	—	—	—	—	—	—	—	—	—	0
	C2	18.0	18.0	18.0	18.0	18.0	18.0	18.0	25.7	31.4	33.5	31.4	25.7	18.0

DS = DIRECT SOLAR
RS = REFLECTED SOLAR
SP = SOLAR PANEL INTERCHANGE
EE = EARTH EMISSION
MOD = MODULE INTERCHANGE
C2 = TOTAL HEAT ABSORBED

Space Division
North American Rockwell

Table 7-6. End Module Environment (Cont)

α = .36
ϵ = .90
β = 0
h = 240 N.M.

X-POP MODULE AXIS DOWN LV

TRUE ANOMALY		0	30	60	90	120	150	180	210	240	270	300	330	360
MODULE ANGLE 210	DS	0	—	—	—	—	0	79.5	68.9	39.8	0	—	—	0
	RS	0	—	—	—	—	—	0	7.7	13.4	15.5	13.4	7.7	0
	SP	0	—	—	—	—	—	—	—	—	—	—	—	0
	EE	18.0	—	—	—	—	—	—	—	—	—	—	—	18.0
	MOD	0	—	—	—	—	—	—	—	—	—	—	—	0
	C2	18.0	18.0	18.0	18.0	18.0	18.0	97.5	94.6	71.2	33.5	31.4	25.7	18.0
240	DS	0	—	—	—	—	0	137.8	119.5	69.1	0	—	—	0
	RS	0	—	—	—	—	—	0	7.7	13.4	15.5	13.4	7.7	0
	SP	0	—	—	—	—	—	—	—	—	—	—	—	0
	EE	18.0	—	—	—	—	—	—	—	—	—	—	—	18.0
	MOD	0	—	—	—	—	—	—	—	—	—	—	—	0
	C2	18.0	18.0	18.0	18.0	18.0	18.0	155.8	145.2	100.5	33.5	31.4	25.7	18.0
270	DS	0	—	—	—	—	0	159.3	138.1	79.9	0	—	—	0
	RS	0	—	—	—	—	—	0	7.7	13.4	15.5	13.4	7.7	0
	SP	0	—	—	—	—	—	—	—	—	—	—	—	0
	EE	18.0	—	—	—	—	—	—	—	—	—	—	—	18.0
	MOD	0	—	—	—	—	—	—	—	—	—	—	—	0
	C2	18.0	18.0	18.0	18.0	18.0	18.0	177.3	163.8	111.3	33.5	31.4	25.7	18.0
300	DS	0	—	—	—	—	0	138.0	119.7	69.3	0	—	—	0
	RS	0	—	—	—	—	—	0	7.2	12.6	14.6	12.6	7.2	0
	SP	0	—	—	—	—	—	—	—	—	—	—	—	0
	EE	16.9	—	—	—	—	—	—	—	—	—	—	—	16.9
	MOD	6.6	—	—	—	—	—	—	—	—	—	—	—	6.6
	C2	23.5	23.5	23.5	23.5	23.5	23.5	161.5	150.4	105.4	38.1	36.1	30.7	23.5
330	DS	0	—	—	—	—	0	79.8	69.2	40.1	0	—	—	0
	RS	0	—	—	—	—	—	0	5.6	9.8	11.3	9.8	5.6	0
	SP	0	—	—	—	—	—	—	—	—	—	—	—	0
	EE	13.1	—	—	—	—	—	—	—	—	—	—	—	13.1
	MOD	28.7	—	—	—	—	—	—	—	—	—	—	—	28.7
	C2	41.8	41.8	41.8	41.8	41.8	41.8	121.6	116.6	91.7	53.1	51.6	47.4	41.8

DS = DIRECT SOLAR
RS = REFLECTED SOLAR
SP = SOLAR PANEL INTERCHANGE
EE = EARTH EMISSION
MOD = MODULE INTERCHANGE
C2 = TOTAL HEAT ABSORBED

Space Division
North American Rockwell

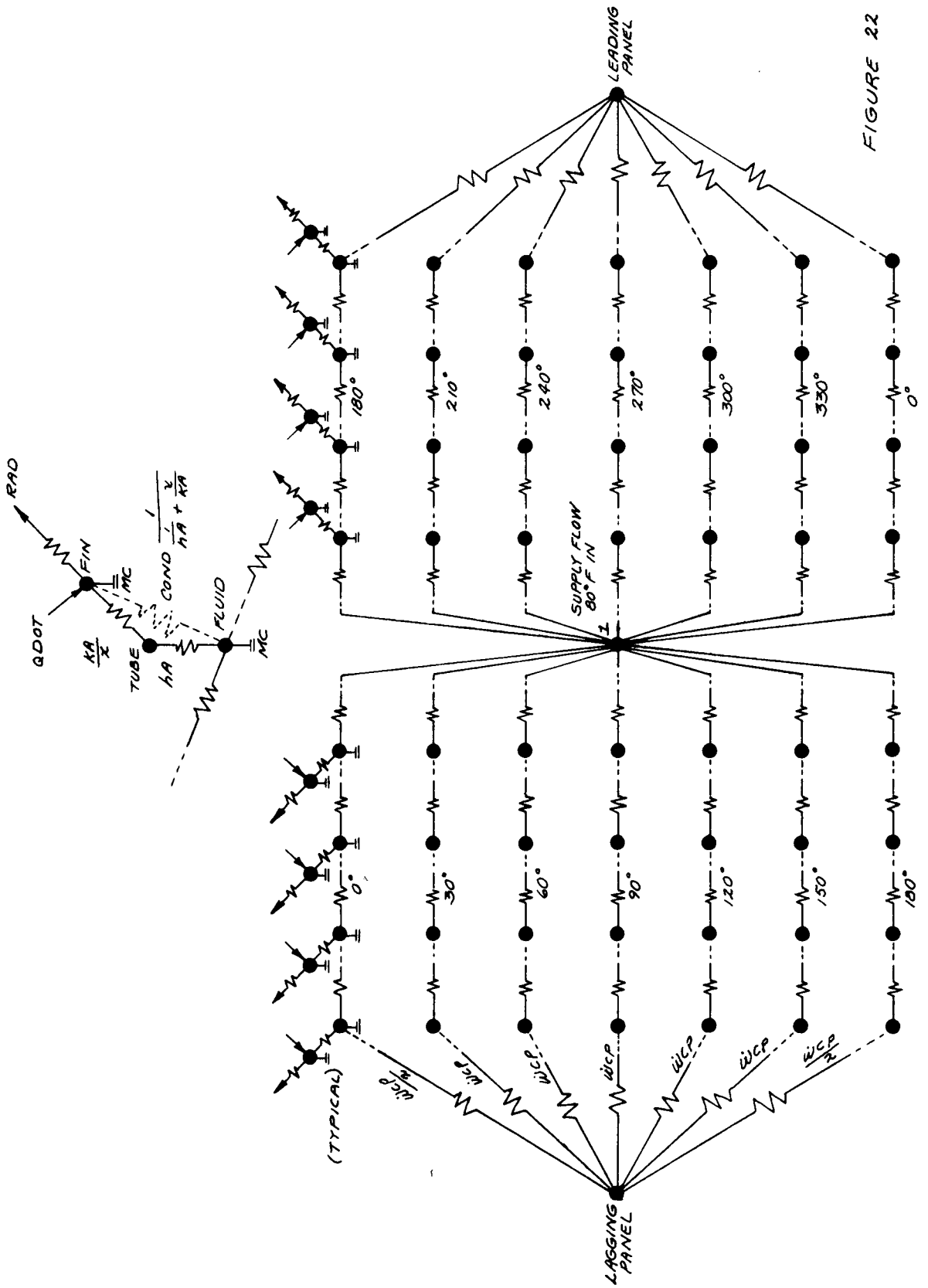

Figure 7-7. Radiator Program Network

To provide the required 40 F outlet temperature, computer solutions were obtained for the above model using several flow rates, each constant over the orbit period. Figures 7-8, 7-9, and 7-10 show the panel outlet temperatures for the selected flow rates (actually wc_p, as this is the program input). The intersection of each flow curve with 40 F indicates the time in orbit that the flow produces a 40 F outlet. Combining these points (times and flows) yields an orbital profile of the flows that provide a 40 F outlet. Since all runs were made with an 80 F inlet, the heat rejection capability is 40 (80-40) times the flow capacity (wc_p). Figures 7-8, 7-9, and 7-10 show this capability for each panel.

Neither panel can provide a 40 F outlet for the entire orbit. Both panels are effective in the earth's shadow, but the leanding panel is exposed to direct solar heating before the subsolar point and the lagging panel after subsolar. Solar heating is sufficient to reduce the heat rejection (at 40 F outlet) to zero at 10 minutes before subsolar for the leading panel, and 10 minutes before the sun-set terminator for the lagging panel; therefore, to reject a constant heat lead requires some form of area or flow control which allows activating the panel which can provide the required 40 F outlet temperature.

Providing a diverter valve results in effective heat rejection. A diverter valve could be controlled so that all flow was directed to the lagging panel up to four minutes past subsolar. At this time the lagging panel capability is decreasing the the leading panel is increasing. The flow could be diverted to the leading panel and maintained until its capability decreased. With this approach, one valve cycle would be required for each orbit and the maximum steady heat load that could be rejected is the capability of one panel where the panel curves intersect; however, this approach could result in a severe load limitation for a Y-POP or uncontrolled attitude.

The maximum heat rejection could be improved by using a proportioning valve rather than a diverter valve. A proportioning valve could be controlled similar to that of the Apollo Block II radiators so that both panels could be active. With this approach, the flow would be divided between the panels when their rejection capabilities were similar and diverted to the more favorable panel when there was a difference. The maximum steady heat load that could be rejected is the lowest capability of one panel when the other cannot reject. Though the proportioning valve would require continuous power, it provides effective heat rejection in the Y-POP and other attitudes.

Summing the rejection capability minimum for the various positions, the total heat rejection capability for both initial and growth configurations is shown on Figure 7-11. In both cases the indicated rejection requirements are exceeded by a significant margin.

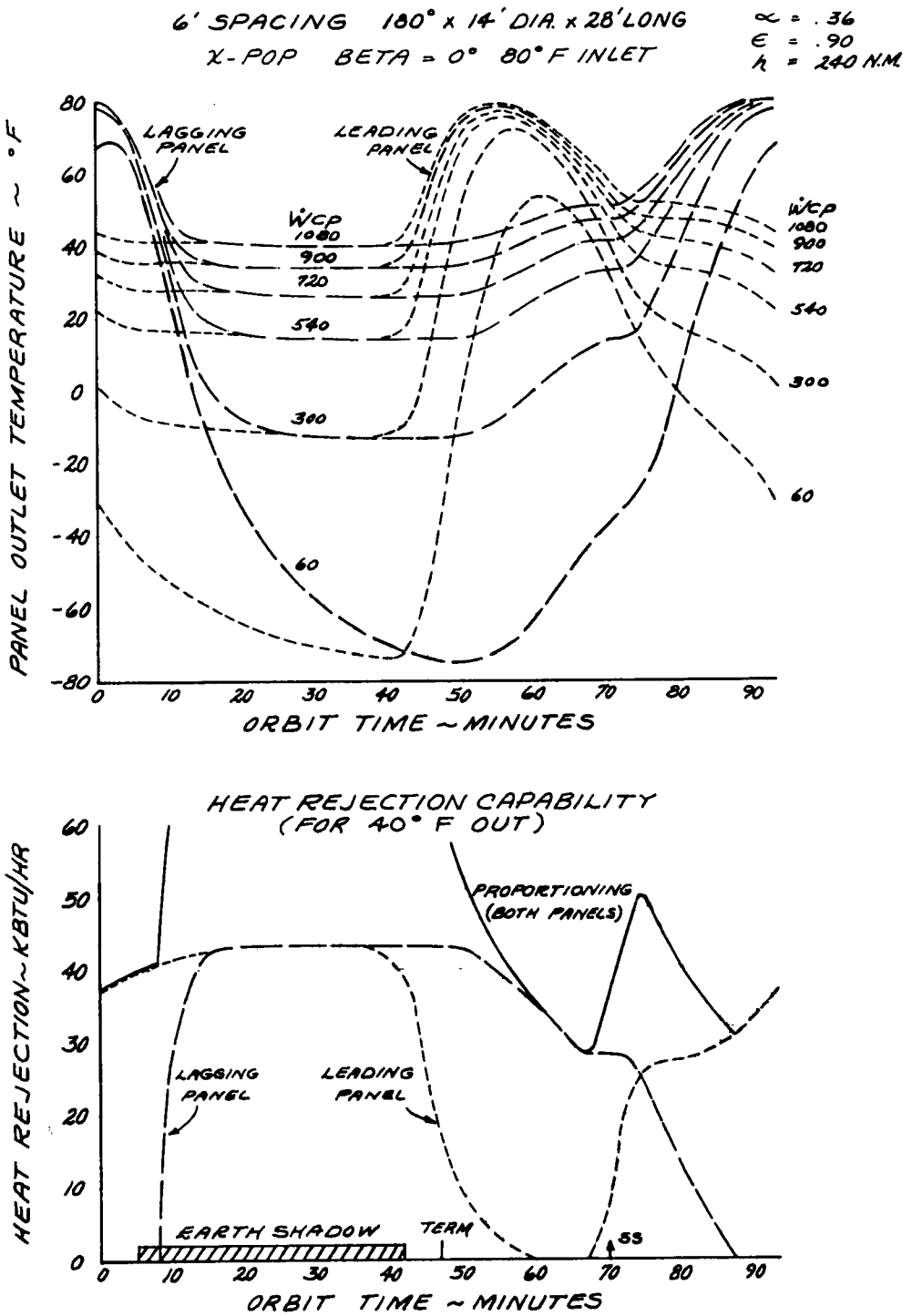

Figure 7-8. Forward Module

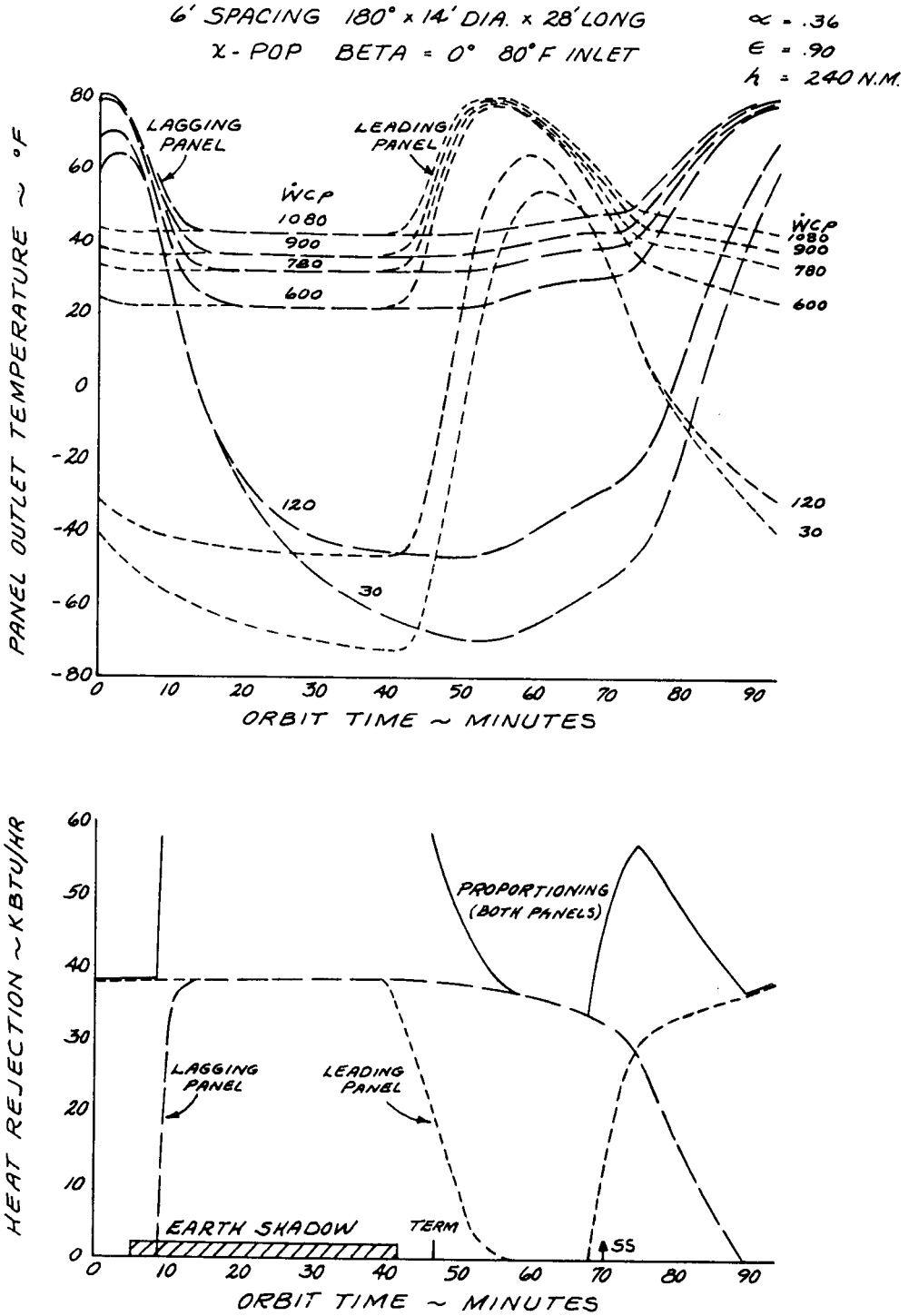

Figure 7-9. Center Module

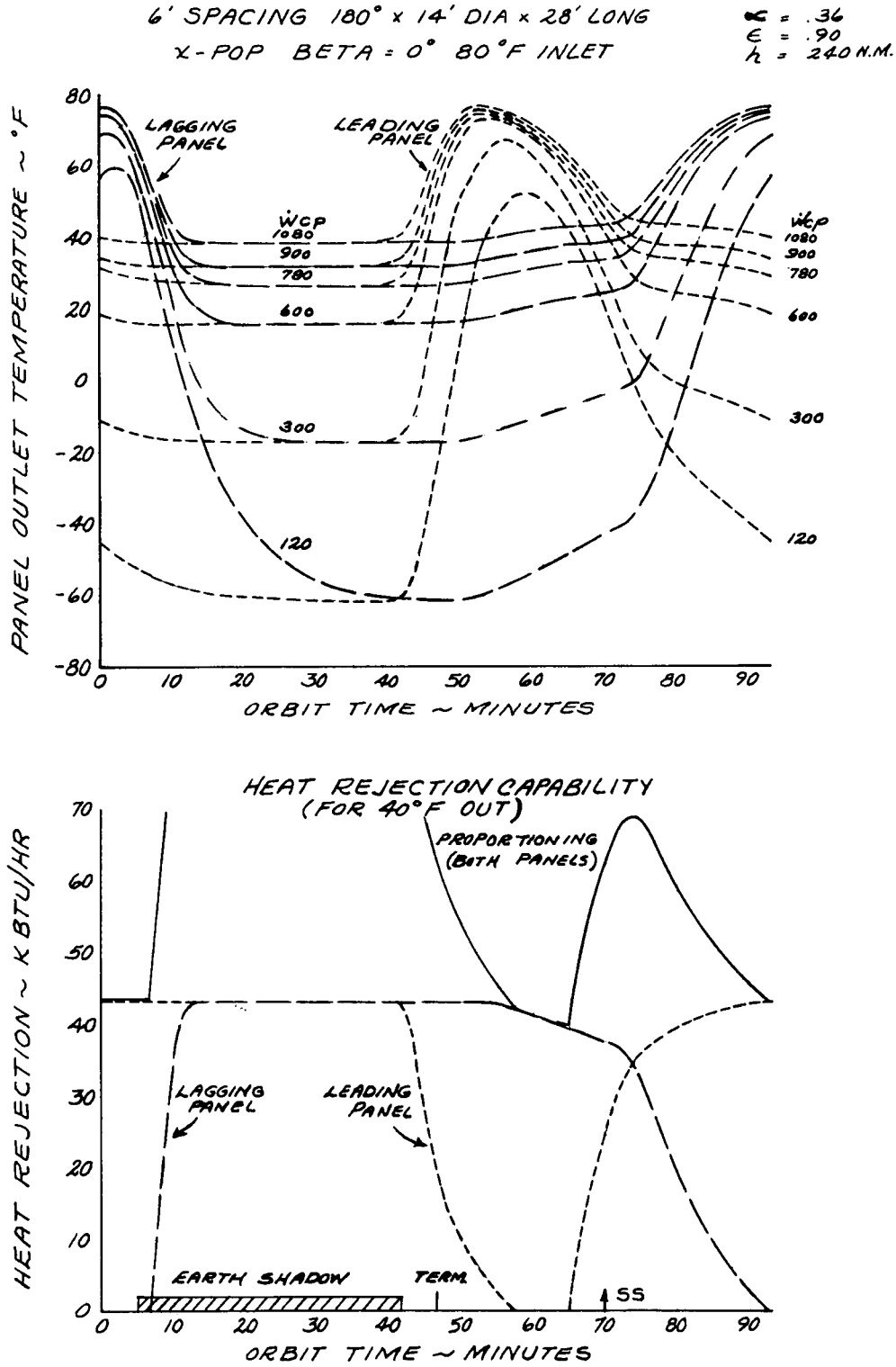

Figure 7-10. End Module

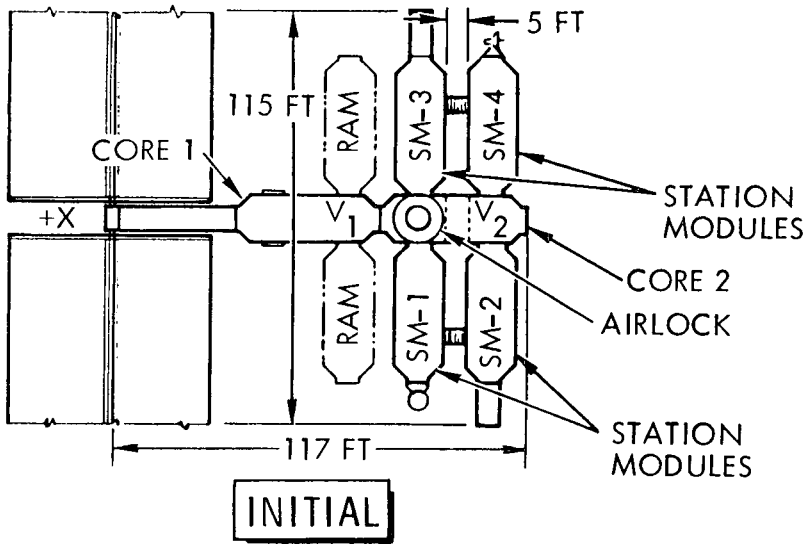

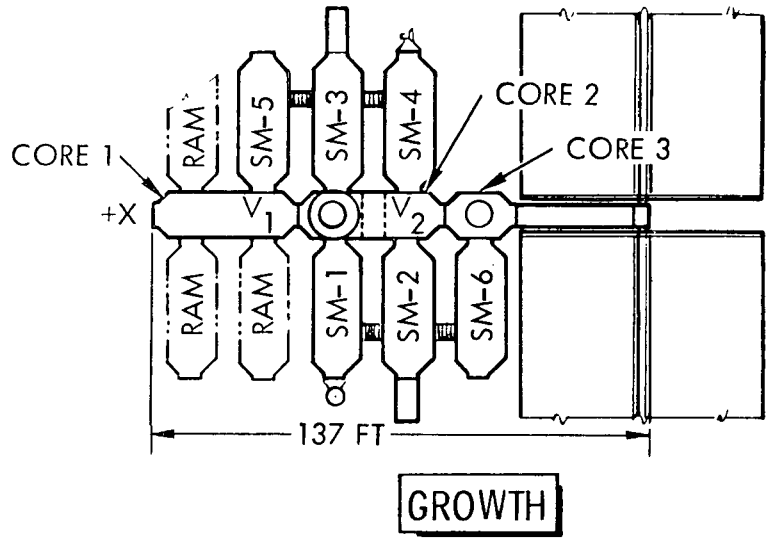

MODULE	REJECTION	
	KW	BTU/HR
SM-1	9.8	33,500
SM-2	10.5	39,500
SM-3	9.8	33,500
SM-4	10.5	39,500
INITIAL TOTAL	39.6	134,000
SM-5		
SM-6		
GROWTH TOTAL	55.6	190,000

REJECTION	
KW	BTU/HR
9.8	33,500
9.8	33,500
9.8	33,500
8.2	28,000
9.8	33,500
8.2	28,000

Figure 7-11. Barbell Configuration Heat Rejection

Space Division
North American Rockwell

7.6 CRUCIFORM CONFIGURATION

The rejection environment parameters for the cruciform configuration were obtained in the same fashion as for the barbell configuration.

The resulting environments used to determined the rejection capability of the cruciform modules are shown on Tables 7-7 through 7-11.

The heat rejection capability of the vertical module is shown on Figure 7-12. The rejection capability with respect tooorbit time has the same shape and approximate values of the barbell. The minimum capability occurs at 63 minutes, orbit time, just before subsolar.

The total rejection at the minimum point for all modules combined is shown on Table 7-12. As can be seen, the minimum capability exceeds the requirement indicated on Table 7-1 by a significant margin.

Figure 7-13 shows the horizontal module position rejection capability. The posistions available are indicated by SM-5 and SM-6 with both modules on the same side of the core. The aft single (indicated by "SGL" on Figure 7-13) position was not available for utilization on a growth configuration. The total rejection of SM-1 through SM-6 in the growth configuration is shown on Figure 7-14 which indicates that the total heat rejection requirements cannot be rejected by the area available on the six station modules. However, it should be recognized that the out-of-tolerance time is very short. Figure 7-14 also shows that the design requirement can be achieved by use of single aft horizontal module instead of SM-6. This indicates that the growth configuration is somewhat heat rejection limited at near the growth requirements.

Table 7-7. Cruciform Forward Vertical Module Environment

$\alpha = .36$
$\epsilon = .9$
$\beta = 0$
$h = 240$ N.M.

X - POP MODULE AXIS DOWN LV

TRUE ANOMALY		0	30	60	90	120	150	180	210	240	270	300	330	360
MODULE ANGLE 0	DS	0	—	—	—	—	—	—	—	—	—	—	—	0
	RS	0	—	—	—	—	—	0	7.7	13.4	15.5	13.4	7.7	0
	SP	0	12.1	7.1	6.7	4.6	11.1	0	12.0	33.0	44.0	33.6	81.9	0
	EE	18.0	—	—	—	—	—	—	—	—	—	—	—	18.0
	MOD	0	—	—	—	—	—	—	—	—	—	—	—	0
	C2	18.0	30.1	25.1	24.7	22.6	29.1	18.0	37.7	64.4	77.5	65.0	107.6	18.0
30	DS	79.8	0	—	—	—	—	—	—	—	0	39.8	69.0	79.8
	RS	0	—	—	—	—	—	0	7.7	13.4	15.5	13.4	7.7	0
	SP	19.5	23.4	6.6	4.3	3.1	2.9	5.4	23.2	30.8	28.2	22.9	21.3	19.5
	EE	18.0	—	—	—	—	—	—	—	—	—	—	—	18.0
	MOD	3.4	—	—	—	—	—	—	—	—	—	—	—	3.4
	C2	120.7	44.8	28.0	25.7	24.5	24.3	26.8	52.3	65.6	65.1	97.5	119.4	120.7
60	DS	138.0	0	—	—	—	—	—	—	—	0	68.8	119.4	138.0
	RS	0	—	—	—	—	—	0	7.7	13.4	15.5	13.4	7.7	0
	SP	3.9	9.2	5.5	3.2	1.7	1.0	1.1	9.1	25.3	21.4	12.3	7.1	3.9
	EE	18.0	—	—	—	—	—	—	—	—	—	—	—	18.0
	MOD	6.6	—	—	—	—	—	—	—	—	—	—	—	6.6
	C2	166.5	33.8	30.1	27.8	26.3	25.6	25.7	41.4	63.3	61.5	119.1	158.8	166.5
90	DS	159.3	0	—	—	—	—	—	—	—	0	79.3	137.8	159.3
	RS	0	—	—	—	—	—	0	7.7	13.4	15.5	13.4	7.7	0
	SP	0	1.4	4.3	2.0	0.4	0.1	0	1.4	19.8	13.5	2.8	1.1	0
	EE	18.0	—	—	—	—	—	—	—	—	—	—	—	18.0
	MOD	10.5	—	—	—	—	—	—	—	—	—	—	—	10.5
	C2	187.8	29.9	32.8	30.5	28.9	28.6	28.5	37.6	61.7	57.5	124.0	175.1	187.8
120	DS	137.8	0	—	—	—	—	—	—	—	0	68.6	119.2	137.8
	RS	0	—	—	—	—	—	0	7.7	13.4	15.5	13.4	7.7	0
	SP	0	—	—	—	—	—	—	—	—	—	—	—	0
	EE	16.9	—	—	—	—	—	—	—	—	—	—	—	16.9
	MOD	17.1	—	—	—	—	—	—	—	—	—	—	—	17.1
	C2	171.8	34.0	34.0	34.0	34.0	34.0	34.0	41.7	47.4	49.5	116.0	160.9	171.8
150	DS	79.5	0	—	—	—	—	—	—	—	0	39.5	68.7	79.5
	RS	0	—	—	—	—	—	0	7.7	13.4	15.5	13.4	7.7	0
	SP	0	—	—	—	—	—	—	—	—	—	—	—	0
	EE	13.1	—	—	—	—	—	—	—	—	—	—	—	13.1
	MOD	38.4	—	—	—	—	—	—	—	—	—	—	—	38.4
	C2	131.0	51.5	51.5	51.5	51.5	51.5	51.5	59.2	64.9	67.0	104.4	127.9	131.0
180	DS	0	—	—	—	—	—	—	—	—	—	—	—	0
	RS	0	—	—	—	—	—	0	7.7	13.4	15.5	13.4	7.7	0
	SP	0	—	—	—	—	—	—	—	—	—	—	—	0
	EE	10.8	—	—	—	—	—	—	—	—	—	—	—	10.8
	MOD	50.1	—	—	—	—	—	—	—	—	—	—	—	50.1
	C2	60.9	60.9	60.9	60.9	60.9	60.9	60.9	68.6	74.3	76.4	74.3	68.6	60.9

DS = DIRECT SOLAR
RS = REFLECTED SOLAR
SP = SOLAR PANEL INTERCHANGE
EE = EARTH EMISSION
MOD = MODULE INTERCHANGE
C2 = TOTAL HEAT ABSORBED

Space Division
North American Rockwell

Table 7-7. Cruciform Forward Vertical Module Environment (Cont)

X-POP MODULE AXIS DOWN LV

α = .36
ϵ = .9
β = 0
h = 240 N.M.

TRUE ANOMALY		0	30	60	90	120	150	180	210	240	270	300	330	360
MODULE ANGLE 210	DS	0	—	—	—	—	0	79.5	68.9	39.8	0	—	—	0
	RS	0	—	—	—	—	—	0	7.7	13.4	15.5	13.4	7.7	0
	SP	0	—	—	—	—	—	—	—	—	—	—	—	0
	EE	13.1	—	—	—	—	—	—	—	—	—	—	—	13.1
	MOD	37.0	—	—	—	—	—	—	—	—	—	—	—	37.0
	C2	50.1	50.1	50.1	50.1	50.1	50.1	129.6	126.7	103.3	65.6	63.5	57.8	50.1
240	DS	0	—	—	—	—	0	137.8	119.5	69.1	0	—	—	0
	RS	0	—	—	—	—	—	0	7.7	13.4	15.5	13.4	7.7	0
	SP	0	—	—	—	—	—	—	—	—	—	—	—	0
	EE	16.9	—	—	—	—	—	—	—	—	—	—	—	16.9
	MOD	12.2	—	—	—	—	—	—	—	—	—	—	—	12.2
	C2	29.1	29.1	29.1	29.1	29.1	29.1	166.9	156.3	111.6	44.6	42.5	36.8	29.1
270	DS	0	—	—	—	—	0	159.3	138.1	79.9	0	—	—	0
	RS	0	—	—	—	—	—	0	7.7	13.4	15.5	13.4	7.7	0
	SP	0	1.0	0.6	2.0	2.8	0.2	0	1.0	2.7	13.5	20.2	1.5	0
	EE	18.0	—	—	—	—	—	—	—	—	—	—	—	18.0
	MOD	4.1	—	—	—	—	—	—	—	—	—	—	—	4.1
	C2	22.1	23.1	22.7	24.1	24.9	22.3	181.4	168.9	118.1	51.1	55.7	31.3	22.1
300	DS	0	—	—	—	—	0	138.0	119.7	69.3	0	—	—	0
	RS	0	—	—	—	—	—	0	7.7	13.4	15.5	13.4	7.7	0
	SP	3.9	6.3	2.6	3.2	3.5	1.4	1.1	6.3	12.1	21.4	25.8	10.3	3.9
	EE	18.0	—	—	—	—	—	—	—	—	—	—	—	18.0
	MOD	2.1	—	—	—	—	—	—	—	—	—	—	—	2.1
	C2	24.0	26.4	22.7	23.3	23.6	21.5	159.2	153.8	114.9	57.0	59.3	38.1	24.0
330	DS	0	—	—	—	—	0	79.8	69.2	40.1	0	—	—	0
	RS	0	—	—	—	—	—	0	7.7	13.4	15.5	13.4	7.7	0
	SP	19.5	19.0	4.8	4.3	4.3	3.5	5.4	18.9	22.4	28.2	31.4	26.2	19.5
	EE	18.0	—	—	—	—	—	—	—	—	—	—	—	18.0
	MOD	1.3	—	—	—	—	—	—	—	—	—	—	—	1.3
	C2	38.8	38.3	24.1	23.6	23.6	22.8	104.5	115.1	95.2	63.0	64.1	53.2	38.8

DS = DIRECT SOLAR
RS = REFLECTED SOLAR
SP = SOLAR PANEL INTERCHANGE
EE = EARTH EMISSION
MOD = MODULE INTERCHANGE
C2 = TOTAL HEAT ABSORBED

Space Division
North American Rockwell

Table 7-8. Cruciform End Vertical Module Environment

α = .36
ϵ = .9
β = 0
h = 240 N.M.

X-POP MODULE AXIS DOWN LV

TRUE ANOMALY		0	30	60	90	120	150	180	210	240	270	300	330	360
MODULE ANGLE 0	DS	0	—	—	—	—	—	—	—	—	—	—	—	0
	RS	0	—	—	—	—	—	0	4.6	8.1	9.3	8.1	4.6	0
	SP	0	—	—	—	—	—	—	—	—	—	—	—	0
	EE	10.8	—	—	—	—	—	—	—	—	—	—	—	10.8
	MOD	49.4	—	—	—	—	—	—	—	—	—	—	—	49.4
	C2	60.2	60.2	60.2	60.2	60.2	60.2	60.2	64.8	68.3	69.5	68.3	64.8	60.2
30	DS	79.8	0	—	—	—	—	—	—	—	0	39.8	69.0	79.8
	RS	0	—	—	—	—	—	0	5.6	9.8	11.3	9.8	5.6	0
	SP	0	—	—	—	—	—	—	—	—	—	—	—	0
	EE	13.1	—	—	—	—	—	—	—	—	—	—	—	13.1
	MOD	39.5	—	—	—	—	—	—	—	—	—	—	—	39.5
	C2	132.4	52.6	52.6	52.6	52.6	52.6	52.6	58.2	62.4	63.9	102.2	127.2	132.4
60	DS	138.0	0	—	—	—	—	—	—	—	0	68.8	119.4	138.0
	RS	0	—	—	—	—	—	0	7.2	12.6	14.6	12.6	7.2	0
	SP	0	—	—	—	—	—	—	—	—	—	—	—	0
	EE	16.9	—	—	—	—	—	—	—	—	—	—	—	16.9
	MOD	18.3	—	—	—	—	—	—	—	—	—	—	—	18.3
	C2	173.2	35.2	35.2	35.2	35.2	35.2	35.2	42.4	47.8	49.8	116.6	161.8	173.2
90	DS	159.3	0	—	—	—	—	—	—	—	0	79.3	137.8	159.3
	RS	0	—	—	—	—	—	0	7.7	13.4	15.5	13.4	7.7	0
	SP	0	—	—	—	—	—	—	—	—	—	—	—	0
	EE	18.0	—	—	—	—	—	—	—	—	—	—	—	18.0
	MOD	11.0	—	—	—	—	—	—	—	—	—	—	—	11.0
	C2	188.3	29.0	29.0	29.0	29.0	29.0	29.0	36.7	42.4	44.5	121.7	174.5	188.3
120	DS	137.8	0	—	—	—	—	—	—	—	0	68.6	119.2	137.8
	RS	0	—	—	—	—	—	0	7.7	13.4	15.5	13.4	7.7	0
	SP	0	—	—	—	—	—	—	—	—	—	—	—	0
	EE	18.0	—	—	—	—	—	—	—	—	—	—	—	18.0
	MOD	6.9	—	—	—	—	—	—	—	—	—	—	—	6.9
	C2	162.7	24.9	24.9	24.9	24.9	24.9	24.9	32.6	38.3	40.4	106.9	151.8	162.7
150	DS	79.5	0	—	—	—	—	—	—	—	0	39.5	68.7	79.5
	RS	0	—	—	—	—	—	0	7.7	13.4	15.5	13.4	7.7	0
	SP	0	—	—	—	—	—	—	—	—	—	—	—	0
	EE	18.0	—	—	—	—	—	—	—	—	—	—	—	18.0
	MOD	3.4	—	—	—	—	—	—	—	—	—	—	—	3.4
	C2	100.9	21.4	21.4	21.4	21.4	21.4	21.4	29.1	34.8	36.9	74.3	97.8	100.9
180	DS	0	—	—	—	—	—	—	—	—	—	—	—	0
	RS	0	—	—	—	—	—	0	7.7	13.4	15.5	13.4	7.7	0
	SP	0	—	—	—	—	—	—	—	—	—	—	—	0
	EE	18.0	—	—	—	—	—	—	—	—	—	—	—	18.0
	MOD	0	—	—	—	—	—	—	—	—	—	—	—	0
	C2	18.0	18.0	18.0	18.0	18.0	18.0	18.0	25.7	31.4	33.5	31.4	25.7	18.0

DS = DIRECT SOLAR
RS = REFLECTED SOLAR
SP = SOLAR PANEL INTERCHANGE
EE = EARTH EMISSION
MOD = MODULE INTERCHANGE
C2 = TOTAL HEAT ABSORBED

Space Division
North American Rockwell

Table 7-8. Cruciform End Vertical Module Environment (Cont)

α = .36
ϵ = .9
β = 0
h = 240 N.M.

X- POP MODULE AXIS DOWN LV

TRUE ANOMALY		0	30	60	90	120	150	180	210	240	270	300	330	360
MODULE ANGLE 210	DS	0	—	—	—	—	0	79.5	68.9	39.8	0	—	—	0
	RS	0	—	—	—	—	—	0	7.7	13.4	15.5	13.4	7.7	0
	SP	0	—	—	—	—	—	—	—	—	—	—	—	0
	EE	18.0	—	—	—	—	—	—	—	—	—	—	—	18.0
	MOD	3.4	—	—	—	—	—	—	—	—	—	—	—	3.4
	C2	21.4	21.4	21.4	21.4	21.4	21.4	100.9	98.0	74.6	36.9	34.8	29.1	21.4
240	DS	0	—	—	—	—	0	137.8	119.5	69.1	0	—	—	0
	RS	0	—	—	—	—	—	0	7.7	13.4	15.5	13.4	7.7	0
	SP	0	—	—	—	—	—	—	—	—	—	—	—	0
	EE	18.0	—	—	—	—	—	—	—	—	—	—	—	18.0
	MOD	6.3	—	—	—	—	—	—	—	—	—	—	—	6.3
	C2	24.3	24.3	24.3	24.3	24.3	24.3	162.1	151.5	106.8	39.8	37.7	32.0	24.3
270	DS	0	—	—	—	—	0	159.3	138.1	79.9	0	—	—	0
	RS	0	—	—	—	—	—	0	7.7	13.4	15.5	13.4	7.7	0
	SP	0	—	—	—	—	—	—	—	—	—	—	—	0
	EE	18.0	—	—	—	—	—	—	—	—	—	—	—	18.0
	MOD	6.9	—	—	—	—	—	—	—	—	—	—	—	6.9
	C2	24.9	24.9	24.9	24.9	24.9	24.9	184.2	170.7	118.2	40.4	38.3	32.6	24.9
300	DS	0	—	—	—	—	0	138.0	119.7	69.3	0	—	—	0
	RS	0	—	—	—	—	—	0	7.2	12.6	14.6	12.6	7.2	0
	SP	0	—	—	—	—	—	—	—	—	—	—	—	0
	EE	16.9	—	—	—	—	—	—	—	—	—	—	—	16.9
	MOD	12.8	—	—	—	—	—	—	—	—	—	—	—	12.8
	C2	29.7	29.7	29.7	29.7	29.7	29.7	167.7	156.6	111.6	44.3	42.3	36.9	29.7
330	DS	0	—	—	—	—	0	79.8	69.2	40.1	0	—	—	0
	RS	0	—	—	—	—	—	0	5.6	9.8	11.3	9.8	5.6	0
	SP	0	—	—	—	—	—	—	—	—	—	—	—	0
	EE	13.1	—	—	—	—	—	—	—	—	—	—	—	13.1
	MOD	34.0	—	—	—	—	—	—	—	—	—	—	—	34.0
	C2	47.1	47.1	47.1	47.1	47.1	47.1	126.9	121.9	97.0	58.4	56.9	52.7	47.1

DS = DIRECT SOLAR
RS = REFLECTED SOLAR
SP = SOLAR PANEL INTERCHANGE
EE = EARTH EMISSION
MOD = MODULE INTERCHANGE
C2 = TOTAL HEAT ABSORBED

Space Division
North American Rockwell

Table 7-9. Cruciform Horizontal Aft Double Module Environment

α = .36
ϵ = .9
β = 0
h = 240 NM

TRUE ANOMALY		0	21	30	60	90	120	150	159	180	210	240	270	300	330	360
MODULE ANGLE 0	DS	0	—	—	—	—	—	—	—	—	—	—	—	—	—	0
	RS	0	—	—	—	—	—	—	—	0	7.7	13.4	15.5	13.4	7.7	0
	SP	0	—	—	—	—	—	—	—	—	—	—	—	—	—	0
	EE	18.0	—	—	—	—	—	—	—	—	—	—	—	—	—	18.0
	MOD	49.4	—	—	—	—	—	—	—	—	—	—	—	—	—	49.4
	C2	67.4	67.4	67.4	67.4	67.4	67.4	67.4	67.4	67.4	75.1	80.8	82.9	80.8	75.1	67.4
30	DS	0	—	—	—	—	—	—	—	0	39.8	69.0	79.8	34.6	0	0
	RS	0	—	—	—	—	—	—	—	0	2.4	4.2	4.9	4.2	2.4	0
	SP	8.3		4.8	0.5	0	0.5	0.3		1.2	4.8	2.2	0	3.4	2.2	8.3
	EE	5.7	—	—	—	—	—	—	—	—	—	—	—	—	—	5.7
	MOD	39.5	—	—	—	—	—	—	—	—	—	—	—	—	—	39.5
	C2	53.5		50.0	45.7	45.2	45.7	45.5		46.4	92.2	120.6	129.9	87.4	49.8	53.5
60	DS	0	—	—	—	—	—	—	—	0	68.8	119.4	138.0	59.8	0	0
	RS	0	—	—	—	—	—	—	—	0	0.1	0.2	0.2	0.2	0.1	0
	SP	8.3		9.7	0.8	0	0.6	0.9		1.2	9.6	3.3	0	4.5	6.5	8.3
	EE	0.2	—	—	—	—	—	—	—	—	—	—	—	—	—	0.2
	MOD	18.3	—	—	—	—	—	—	—	—	—	—	—	—	—	18.3
	C2	26.8		28.2	19.3	18.5	19.1	19.4		19.7	97.0	141.4	156.7	83.0	25.1	26.8
90	DS	0	—	—	—	—	—	—	—	0	79.3	137.8	159.3	69.0	0	0
	RS	0	—	—	—	—	—	—	—	—	—	—	—	—	—	0
	SP	6.2		1.9	0.3	0	0	0.6		0.9	1.9	1.1	0	0	4.4	6.2
	EE	0	—	—	—	—	—	—	—	—	—	—	—	—	—	0
	MOD	11.0	—	—	—	—	—	—	—	—	—	—	—	—	—	11.0
	C2	17.2		12.9	11.3	11.0	11.0	11.6		11.9	92.2	149.9	170.3	80.0	15.4	17.2
120	DS	0	—	—	—	—	—	—	—	0	68.6	119.2	137.8	59.8	0	0
	RS	0	—	—	—	—	—	—	—	0	0.1	0.2	0.2	0.2	0.1	0
	SP	0	—	—	—	—	—	—	—	—	—	—	—	—	—	0
	EE	0.2	—	—	—	—	—	—	—	—	—	—	—	—	—	0.2
	MOD	6.9	—	—	—	—	—	—	—	—	—	—	—	—	—	6.9
	C2	7.1	7.1	7.1	7.1	7.1	7.1	7.1	7.1	7.1	75.8	126.5	145.1	67.1	7.2	7.1
150	DS	0	—	—	—	—	—	—	—	0	39.5	68.7	79.5	34.5	0	0
	RS	0	—	—	—	—	—	—	—	0	2.4	4.2	4.9	4.2	2.4	0
	SP	0	—	—	—	—	—	—	—	—	—	—	—	—	—	0
	EE	5.7	—	—	—	—	—	—	—	—	—	—	—	—	—	5.7
	MOD	3.4	—	—	—	—	—	—	—	—	—	—	—	—	—	3.4
	C2	9.1	9.1	9.1	9.1	9.1	9.1	9.1	9.1	9.1	51.0	82.0	93.5	47.8	11.5	9.1
180	DS	0	—	—	—	—	—	—	—	—	—	—	—	—	—	0
	RS	0	—	—	—	—	—	—	—	0	7.7	13.4	15.5	13.4	7.7	0
	SP	0	—	—	—	—	—	—	—	—	—	—	—	—	—	0
	EE	18.0	—	—	—	—	—	—	—	—	—	—	—	—	—	18.0
	MOD	0	—	—	—	—	—	—	—	—	—	—	—	—	—	0
	C2	18.0	18.0	18.0	18.0	18.0	18.0	18.0	18.0	18.0	25.7	31.4	33.5	31.4	25.7	18.0

DS = DIRECT SOLAR
RS = REFLECTED SOLAR
SP = SOLAR PANEL INTERCHANGE
EE = EARTH EMISSION
MOD = MODULE INTERCHANGE
C2 = TOTAL HEAT ABSORBED

Space Division
North American Rockwell

Table 7-9. Cruciform Horizontal Aft Double Module Environment (Cont)

α = .36
ϵ = .9
β = 0
h = 240 NM

TRUE ANOMALY		0	21	30	60	90	120	150	159	180	210	240	270	300	330	360
MODULE ANGLE 210	DS	0	—	—	—	—	—	0	27.3	0	—	—	—	—	—	0
	RS	0	—	—	—	—	—	—	—	0	14.5	25.3	29.2	25.3	14.7	0
	SP	0	—	—	—	—	—	—	—	—	—	—	—	—	—	0
	EE	33.9	—	—	—	—	—	—	—	—	—	—	—	—	—	33.9
	MOD	3.4	—	—	—	—	—	—	—	—	—	—	—	—	—	3.4
	C2	37.3	37.3	37.3	37.3	37.3	37.3	37.3	64.6	37.3	51.8	62.6	66.5	62.6	52.0	37.3
240	DS	0	—	—	—	—	—	0	47.4	0	—	—	—	—	—	0
	RS	0	—	—	—	—	—	—	—	0	21.1	36.6	42.3	36.7	21.2	0
	SP	0	—	—	—	—	—	—	—	—	—	—	—	—	—	0
	EE	49.1	—	—	—	—	—	—	—	—	—	—	—	—	—	49.1
	MOD	6.9	—	—	—	—	—	—	—	—	—	—	—	—	—	6.9
	C2	56.0	56.0	56.0	56.0	56.0	56.0	56.0	103.4	56.0	77.1	92.6	98.3	92.7	77.2	56.0
270	DS	0	—	—	—	—	—	0	54.8	0	—	—	—	—	—	0
	RS	0	—	—	—	—	—	—	—	0	24.2	42.1	48.6	42.2	24.4	0
	SP	6.2		1.9	0.3	0	0	0.6	0.7	0.9	1.9	1.1	0	0	4.4	6.2
	EE	56.5	—	—	—	—	—	—	—	—	—	—	—	—	—	56.5
	MOD	11.0	—	—	—	—	—	—	—	—	—	—	—	—	—	11.0
	C2	73.7		69.4	67.8	67.5	67.5	68.1	123.0	68.4	93.6	110.7	116.1	109.7	96.3	73.7
300	DS	0	—	—	—	—	—	0	47.5	0	—	—	—	—	—	0
	RS	0	—	—	—	—	—	—	—	0	21.1	36.6	42.3	36.7	21.2	0
	SP	8.3		5.8	1.0	0	0.5	1.5	1.4	1.2	5.7	4.4	0	3.4	10.9	8.3
	EE	49.1	—	—	—	—	—	—	—	—	—	—	—	—	—	49.1
	MOD	18.3	—	—	—	—	—	—	—	—	—	—	—	—	—	18.3
	C2	75.7		73.2	68.4	67.4	67.9	68.9	116.3	68.6	94.2	108.4	109.7	107.5	99.5	75.7
330	DS	0	—	—	—	—	—	0	27.5	0	—	—	—	—	—	0
	RS	0	—	—	—	—	—	—	—	0	14.5	25.3	29.2	25.3	14.7	0
	SP	8.3		1.9	0.8	0	0.3	0.7	0.9	1.2	1.9	3.3	0	2.2	5.5	9.3
	EE	33.9	—	—	—	—	—	—	—	—	—	—	—	—	—	33.9
	MOD	39.5	—	—	—	—	—	—	—	—	—	—	—	—	—	39.5
	C2	81.7		75.3	74.2	73.4	73.7	74.1	101.8	74.6	89.8	102.0	102.6	100.9	93.6	81.7

DS = DIRECT SOLAR
RS = REFLECTED SOLAR
SP = SOLAR PANEL INTERCHANGE
EE = EARTH EMISSION
MOD = MODULE INTERCHANGE
C2 = TOTAL HEAT ABSORBED

Space Division
North American Rockwell

Table 7-10. Cruciform Horizontal Forward Double Module Environment

α = .36
ϵ = .9
β = 0
h = 240 NM

TRUE ANOMALY		0	21	30	60	90	120	150	159	180	210	240	270	300	330	360
MODULE ANGLE 0	DS	0														0
	RS	0								0	7.7	13.4	15.5	13.4	7.7	0
	SP	40.4		29.1	3.1	0	1.9	4.4		5.7	28.7	13.1	0	13.5	32.8	40.4
	EE	18.0														18.0
	MOD	0														0
	C2	58.4		47.1	21.1	18.0	19.9	22.4		23.7	54.4	44.5	33.5	44.9	58.5	58.4
30	DS	0								0	39.8	69.0	79.8	34.6	0	0
	RS	0								0	2.4	4.2	4.9	4.2	2.4	0
	SP	25.9		19.4	4.9	3.1	3.7	4.1		3.6	19.1	20.7	20.3	26.9	30.6	25.9
	EE	5.7														5.7
	MOD	3.4														3.4
	C2	35.0		28.5	14.0	12.2	12.8	13.2		12.7	70.4	103.0	114.1	74.8	42.1	35.0
60	DS	0								0	68.8	119.4	138.0	59.8	0	0
	RS	0								0	0.1	0.2	0.2	0.2	0.1	0
	SP	19.7		10.7	1.5	0.7	1.4	3.4		2.8	10.5	6.6	4.5	10.1	25.1	19.7
	EE	0.2														0.2
	MOD	6.9														6.9
	C2	26.8		17.8	8.6	7.8	8.5	10.5		9.9	86.5	133.3	149.8	77.2	33.3	26.8
90	DS	0								0	79.3	137.8	159.3	69.0	0	0
	RS	0														0
	SP	12.4		2.9	0.3	0	0.5	2.7		1.8	2.9	1.1	0	3.4	19.7	12.4
	EE	0														0
	MOD	11.0														11.0
	C2	23.4		13.9	11.3	11.0	11.5	13.7		12.8	93.2	149.9	170.3	83.4	30.7	23.4
120	DS	0								0	68.6	119.2	137.8	59.8	0	0
	RS	0								0	0.1	0.2	0.2	0.2	0.1	0
	SP	0														0
	EE	0.2														0.2
	MOD	18.3														18.3
	C2	18.5	18.5	18.5	18.5	18.5	18.5	18.5	18.5	18.5	87.2	137.9	156.5	78.5	18.6	18.5
150	DS	0								0	39.5	68.7	79.5	34.5	0	0
	RS	0								0	2.4	4.2	4.9	4.2	2.4	0
	SP	0														0
	EE	5.7														5.7
	MOD	39.5														39.5
	C2	45.2	45.2	45.2	45.2	45.2	45.2	45.2	45.2	45.2	87.1	118.1	129.6	83.9	47.6	45.2
180	DS	0														0
	RS	0								0	7.7	13.4	15.5	13.4	7.7	0
	SP	0														0
	EE	18.0														18.0
	MOD	49.4														49.4
	C2	67.4	67.4	67.4	67.4	67.4	67.4	67.4	67.4	67.4	75.1	80.8	82.9	80.8	75.1	67.4

DS = DIRECT SOLAR
RS = REFLECTED SOLAR
SP = SOLAR PANEL INTERCHANGE
EE = EARTH EMISSION
MOD = MODULE INTERCHANGE
C2 = TOTAL HEAT ABSORBED

Space Division
North American Rockwell

Table 7-10. Cruciform Horizontal Forward Double Module Environment (Cont)

α = .36
ϵ = .9
β = 0
h = 240 NM

TRUE ANOMALY		0	21	30	60	90	120	150	159	180	210	240	270	300	330	360
MODULE ANGLE 210	DS	0	—	—	—	—	—	0	27.3	0	—	—	—	—	—	0
	RS	0	—	—	—	—	—	—	—	0	14.5	25.3	29.2	25.3	14.7	0
	SP	0	—	—	—	—	—	—	—	—	—	—	—	—	—	0
	EE	33.9	—	—	—	—	—	—	—	—	—	—	—	—	—	33.9
	MOD	39.5	—	—	—	—	—	—	—	—	—	—	—	—	—	39.5
	C2	73.4	73.4	73.4	73.4	73.4	73.4	73.4	100.7	73.4	87.9	98.7	102.6	98.7	88.1	73.4
240	DS	0	—	—	—	—	—	0	47.4	0	—	—	—	—	—	0
	RS	0	—	—	—	—	—	—	—	0	21.1	36.6	42.3	36.7	21.2	0
	SP	0	—	—	—	—	—	—	—	—	—	—	—	—	—	0
	EE	49.1	—	—	—	—	—	—	—	—	—	—	—	—	—	49.1
	MOD	18.3	—	—	—	—	—	—	—	—	—	—	—	—	—	18.3
	C2	67.4	67.4	67.4	67.4	67.4	67.4	67.4	114.8	67.4	88.5	104.0	109.7	104.1	88.6	67.4
270	DS	0	—	—	—	—	—	0	54.8	0	—	—	—	—	—	0
	RS	0	—	—	—	—	—	—	—	0	24.2	42.1	48.6	42.2	24.4	0
	SP	12.4	—	2.9	0.3	0	0.5	2.7	2.4	1.8	2.9	1.1	0	3.4	19.7	12.4
	EE	56.5	—	—	—	—	—	—	—	—	—	—	—	—	—	56.5
	MOD	11.0	—	—	—	—	—	—	—	—	—	—	—	—	—	11.0
	C2	79.9	—	70.4	67.8	67.5	68.0	70.2	124.7	69.3	94.6	110.7	116.1	113.1	111.6	79.9
300	DS	0	—	—	—	—	—	0	47.5	0	—	—	—	—	—	0
	RS	0	—	—	—	—	—	—	—	0	21.1	36.6	42.3	36.7	21.2	0
	SP	19.7	—	22.3	2.3	0.7	0.9	1.6	2.0	2.8	22.0	9.8	4.5	6.7	12.0	19.7
	EE	49.1	—	—	—	—	—	—	—	—	—	—	—	—	—	49.1
	MOD	6.9	—	—	—	—	—	—	—	—	—	—	—	—	—	6.9
	C2	75.7	—	78.3	58.3	56.7	56.9	57.6	105.5	58.8	99.1	102.4	102.8	99.4	89.2	75.7
330	DS	0	—	—	—	—	—	0	27.5	0	—	—	—	—	—	0
	RS	0	—	—	—	—	—	—	—	0	14.5	25.3	29.2	25.3	14.7	0
	SP	25.9	—	27.1	6.2	3.1	3.1	3.0	3.2	3.6	26.8	26.2	20.3	22.4	21.8	25.9
	EE	33.9	—	—	—	—	—	—	—	—	—	—	—	—	—	33.9
	MOD	3.4	—	—	—	—	—	—	—	—	—	—	—	—	—	3.4
	C2	63.2	—	64.4	43.5	40.4	40.4	40.3	68.0	40.9	78.6	88.8	86.8	85.0	73.8	63.2

DS = DIRECT SOLAR
RS = REFLECTED SOLAR
SP = SOLAR PANEL INTERCHANGE
EE = EARTH EMISSION
MOD = MODULE INTERCHANGE
C2 = TOTAL HEAT ABSORBED

Space Division
North American Rockwell

Table 7-11. Cruciform Horizontal Aft Single Module Environment

TRUE ANOMALY		0	21	30	60	90	120	150	159	180	210	240	270	300	330	360
MODULE ANGLE 0	DS	0														0
	RS	0								0	7.7	13.4	15.5	13.4	7.7	0
	SP	32.3		23.3	2.5	0	1.5	3.5		4.6	23.0	10.6	0	10.8	26.2	32.3
	EE	18.0														18.0
	MOD	9.2														9.2
	C2	59.5		50.5	29.7	27.2	28.7	30.7		31.8	57.9	51.2	42.7	51.4	61.1	59.5
30	DS	0									0	34.5	79.8	69.2	40.1	0
	RS	0								0	2.4	4.2	4.9	4.2	2.4	0
	SP	18.1		13.6	3.4	2.2	2.6	2.9		12.5	13.4	14.5	14.2	18.8	21.4	18.1
	EE	5.7														5.7
	MOD	12.5														12.5
	C2	36.3		31.8	21.6	20.4	20.8	21.1		20.7	34.0	71.4	117.1	110.4	82.1	36.3
60	DS	0									0	59.6	138.0	119.7	69.3	0
	RS	0								0	0.1	0.2	0.2	0.2	0.1	0
	SP	11.8		6.4	0.9	0.4	0.8	2.0		1.7	6.3	4.0	2.7	6.1	15.1	11.8
	EE	0.2														0.2
	MOD	12.9														12.9
	C2	24.9		19.5	14.0	13.5	13.9	15.1		14.8	19.5	76.9	154.0	139.1	97.6	24.9
90	DS	0									0	68.9	159.3	138.1	79.9	0
	RS	0														0
	SP	6.2		1.4	0.2	0	0.2	1.4		0.9	1.4	0.6	0	1.7	9.8	6.2
	EE	0														0
	MOD	11.0														11.0
	C2	17.2		12.4	11.2	11.0	11.2	12.4		11.9	12.4	80.5	170.3	150.8	100.7	17.2
120	DS	0									0	59.6	137.8	119.5	69.1	0
	RS	0								0	0.1	0.2	0.2	0.2	0.1	0
	SP	0														0
	EE	0.2														0.2
	MOD	7.5														7.5
	C2	7.7	7.7	7.7	7.7	7.7	7.7	7.7	7.7	7.7	7.8	67.5	145.7	127.4	76.9	7.7
150	DS	0									0	34.5	79.5	68.9	39.8	0
	RS	0								0	2.4	4.2	4.9	4.2	2.4	0
	SP	0														0
	EE	5.7														5.7
	MOD	4.4														4.4
	C2	10.1	10.1	10.1	10.1	10.1	10.1	10.1	10.1	10.1	12.5	48.8	94.5	83.2	52.3	10.1
180	DS	0														0
	RS	0								0	7.7	13.4	15.5	13.4	7.7	0
	SP	0														0
	EE	18.0														18.0
	MOD	5.3														5.3
	C2	23.3	23.3	23.3	23.3	23.3	23.3	23.3	23.3	23.3	31.0	36.7	38.8	36.7	31.0	23.3

Space Division
North American Rockwell

Table 7-11. Cruciform Horizontal Aft Single Module Environment (Cont)

TRUE ANOMALY		0	21	30	60	90	120	150	159	180	210	240	270	300	330	360
MODULE ANGLE 210	DS	0	26.9	0	—	—	—	—	—							0
	RS	0	—	—	—	—	—	—	—	0	14.5	25.3	29.2	25.3	14.7	0
	SP	0	—	—	—	—	—	—	—							0
	EE	33.9	—	—	—	—	—	—	—							33.9
	MOD	4.4	—	—	—	—	—	—	—							4.4
	C2	38.3	65.2	38.3	38.3	38.3	38.3	38.3	38.3	38.3	52.8	63.6	67.5	63.6	53.0	38.3
240	DS	0	46.8	0	—	—	—	—	—							0
	RS	0	—	—	—	—	—	—	—	0	21.1	36.6	42.3	36.7	21.2	0
	SP	0	—	—	—	—	—	—	—							0
	EE	49.1	—	—	—	—	—	—	—							49.1
	MOD	7.5	—	—	—	—	—	—	—							7.5
	C2	56.6	103.4	56.6	56.6	56.6	56.6	56.6	56.6	56.6	77.7	93.2	98.9	93.3	77.8	56.6
270	DS	0	54.1	0	—	—	—	—	—							0
	RS	0	—	—	—	—	—	—	—	0	24.2	42.1	48.6	42.2	24.4	0
	SP	0	—	—	—	—	—	—	—							0
	EE	56.5	—	—	—	—	—	—	—							56.5
	MOD	11.0	—	—	—	—	—	—	—							11.0
	C2	67.5	121.6	67.5	67.5	67.5	67.5	67.5	67.5	67.5	91.7	109.6	116.1	109.7	91.9	67.5
300	DS	0	47.0	0	—	—	—	—	—							0
	RS	0	—	—	—	—	—	—	—	0	21.1	36.6	42.3	36.7	21.2	0
	SP	11.8	12.3	13.4	1.4	0.4	0.5	1.0		1.7	13.2	5.9	2.7	4.0	7.2	11.8
	EE	49.1	—	—	—	—	—	—	—							49.1
	MOD	12.9	—	—	—	—	—	—	—							12.9
	C2	73.8	121.3	75.4	63.4	62.4	62.5	63.0		63.7	96.3	104.5	107.0	102.7	90.4	73.8
330	DS	0	27.2	0	—	—	—	—	—							0
	RS	0	—	—	—	—	—	—	—	0	14.5	25.3	29.2	25.3	14.7	0
	SP	18.1	18.4	19.0	4.3	2.2	2.2	2.1		2.5	18.8	18.3	14.2	15.7	15.3	18.1
	EE	33.9	—	—	—	—	—	—	—							33.9
	MOD	12.5	—	—	—	—	—	—	—							12.5
	C2	64.5	92.0	65.4	50.7	48.6	48.6	48.5		48.9	79.7	90.0	89.8	87.4	76.4	64.5

Space Division
North American Rockwell

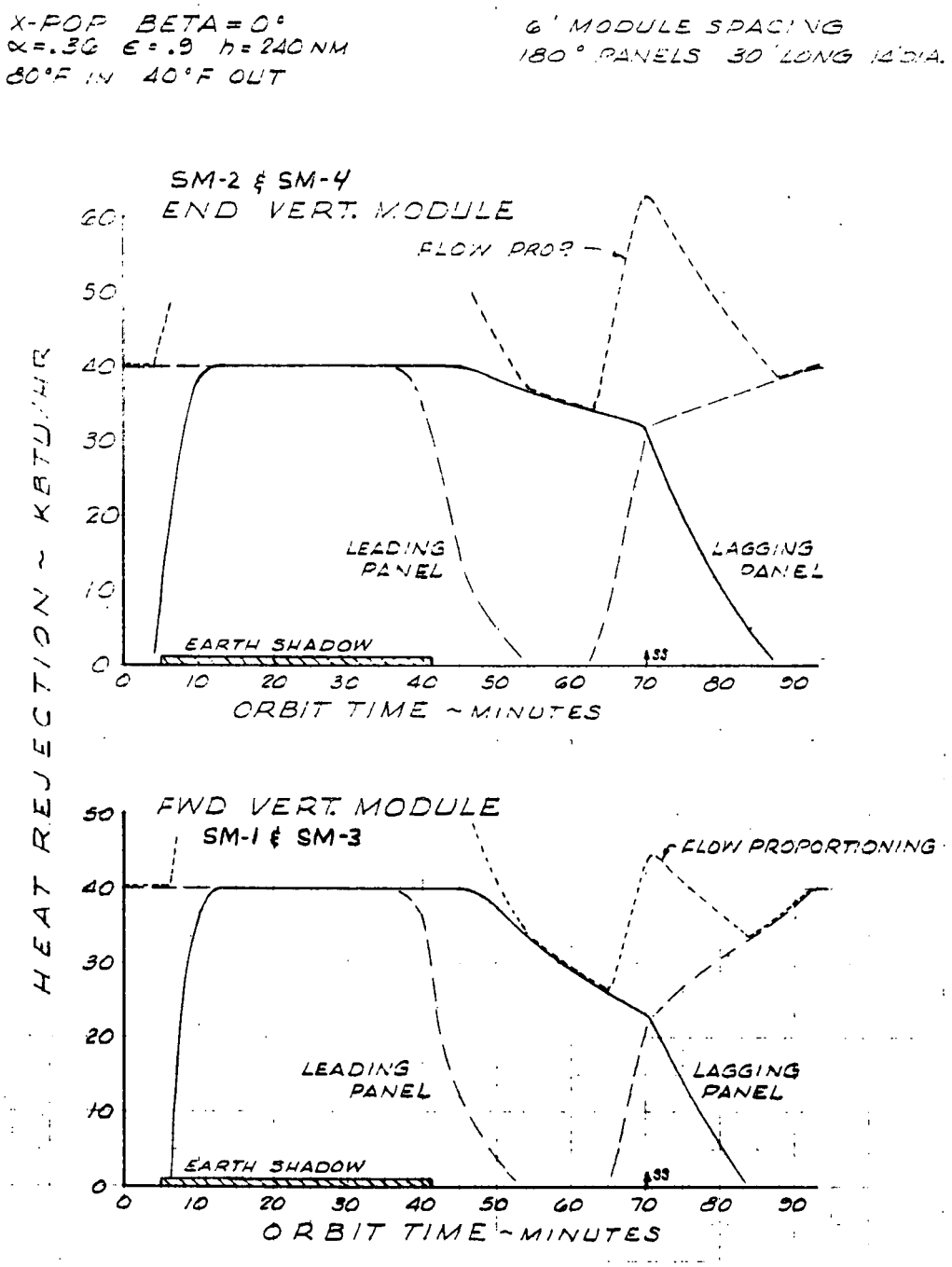

Figure 7-12. Vertical Module Rejection

Table 7-12. Initial Cruciform Rejection

Module	Coolant Flow (lb/hr)	Rejection at 63 Minutes [Btu/hr (kw)]
SM-1	2600	26,000 (7.6)
SM-2	3360	33,600 (9.8)
SM-3	2600	26,000 (7.6)
SM-4	3360	33,600 (9.8)
Total		119,200 (34.8)
Required		103,095 (30.3)

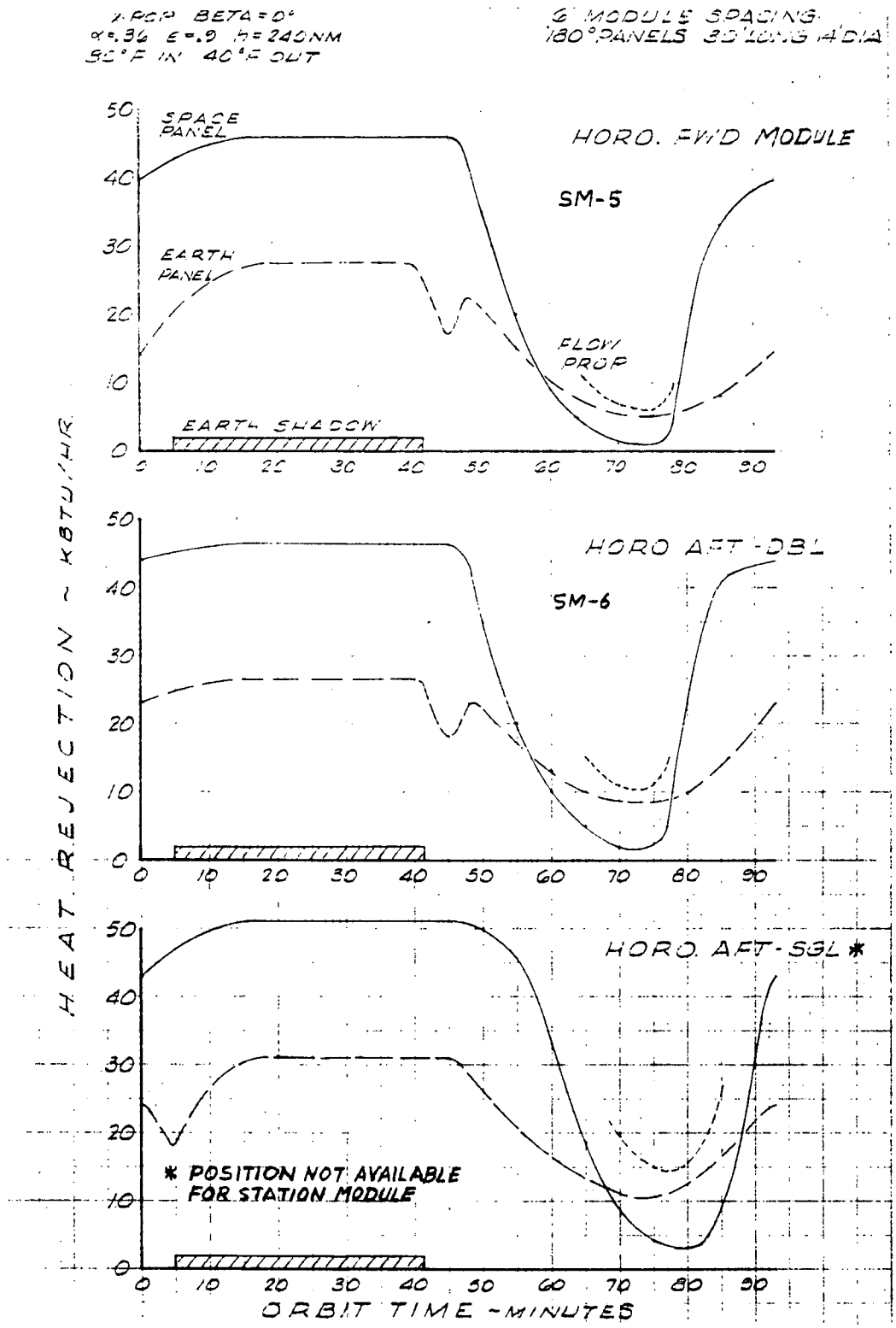

Figure 7-13. Horizontal Module Rejection

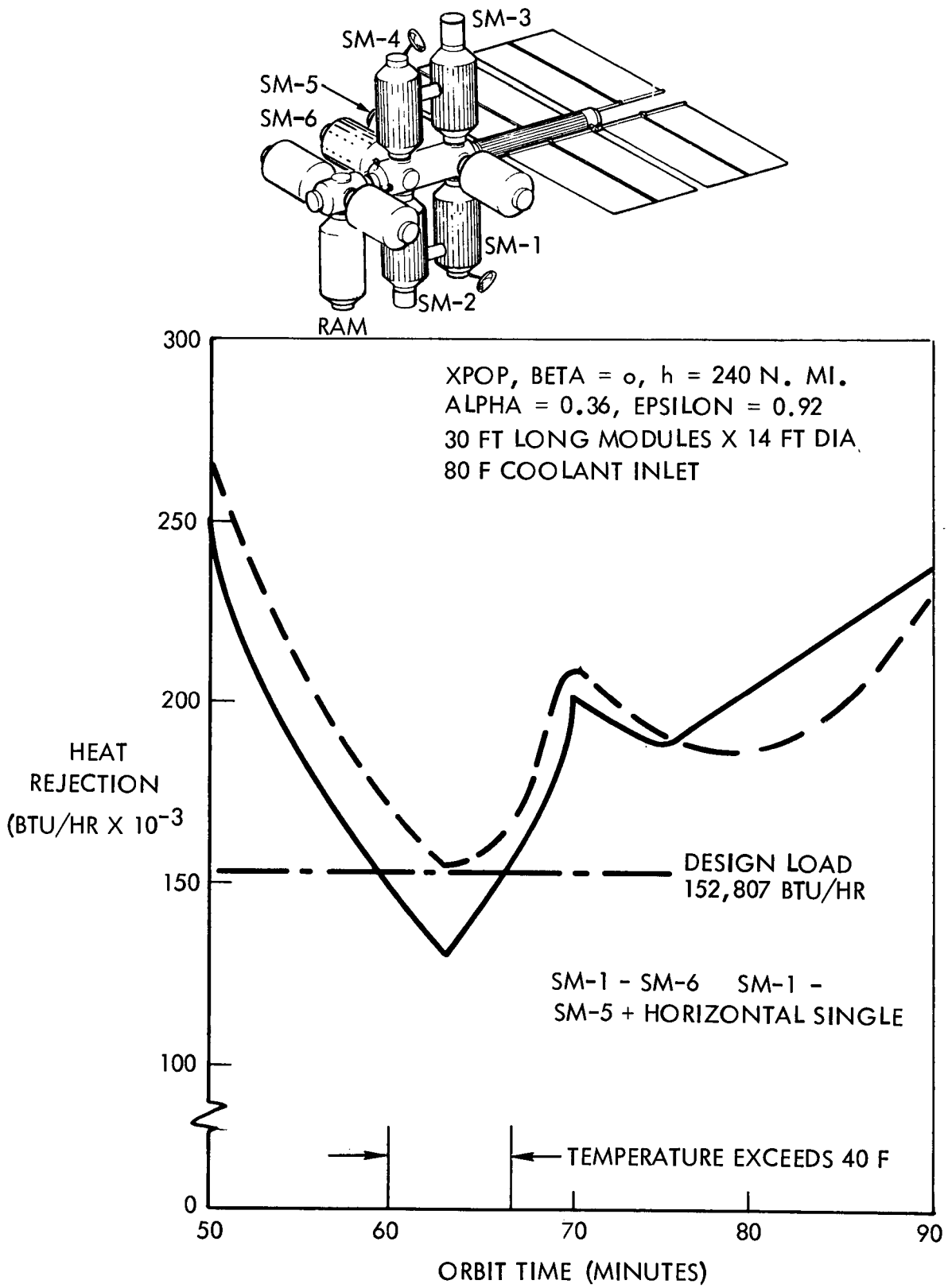

Figure 7-14. Growth Cruciform Heat Rejection Capability

8. NAVIGATION ANALYSIS

Autonomous navigation is desirable for space vehicles for several reasons. One of these is the high cost of maintaining and operating a ground tracking network. It is not doubted that ground tracking will be in existence, but rather that the devotion of a tracking facility to a particular vehicle is costly. However, even infrequent state updates from ground tracking networks are valuable as an aid in estimating instrument biases, etc., and should not be overlooked. Nevertheless, the approach taken in this study is to assume that ground tracking cannot be depended on and other techniques must be used.

Star-horizon measurements can be considered to be completely autonomous and are capable of providing sufficiently accurate navigation to allow pointing an instrument at an earth target to within 0.25 degree one sigma. Downrange accuracy is the most difficult to achieve and an error of 3800 feet or less is required to attain the pointing accuracy. This type of accuracy should also be sufficient for rendezvous targeting. Other mission objectives or perhaps attainment of a higher pointing accuracy which might be desired to enhance the value of experimental data would require replacement or augmentation of the star-horizon measurement with some other type measurement.

Landmark tracking is an attractive alternative because it is almost as completely autonomous as the star-horizon measurement (cloud cover obscuration of landmarks makes its performance less predictable). In order to achieve higher accuracies without requiring an inordinate amount of crew time, the landmark sighting process must be automated. The automatic acquisition and identification of known landmarks is feasible using optical correlation with spatial filtering techniques but the computer requirements are burdensome and the accuracy attainable has not been demonstrated.

Most of the problems with known landmarks can be eliminated using unknown landmark tracking techniques at the sacrifice of some accuracy. A highly accurate approach is the tracking of ground beacons - which, of course, sacrifices some autonomy. If the reason for autonomy, however, is merely cost reduction, beacons are very attractive. They do not have to be manned as is the case with ground tracking stations and maintenance requirements are not severe if they are conveniently located. If they are located, for example, at existing installations within the continental U.S., maintenance problems should be minimal. None of these measurements must be performed to the exclusion of others, of course. In fact, both landmark tracking and beacon tracking provide complementary performance to star-horizon measurements, and the performance of each is enhanced by the combination.

It was determined by this study that star-horizon measurements provide adequate accuracy for the space station mission and thus are chosen as the sole navigation measurement. The equipment used for star-horizon measurements also is required to perform as control sensors and thus must be on board.

Any other navigation measurements would be in addition to star-horizon measurements and are thus ruled out on the basis of cost. If other programs (e.g., space shuttle or military vehicles) require the placement of ground beacons for navigation they certainly could be an advantage.

Other techniques such as Navsats, TDRS tracking, star occultation measurements, and ejected probes are possible candidates but are beyond the scope of this study.

8.1 MECHANIZATION CONSIDERATIONS AND ERROR BUDGET

This section details the measurement characteristics of the various equipment and phenomena used for the navigation measurements. All numbers quoted are one sigma contributions.

Star-Horizon Measurements

This measurement utilizes gimballed star trackers and horizon edge trackers remotely located on the vehicle. The remoteness of the star trackers from the horizon trackers is necessitated by their individual viewing requirements. Because of the structural and thermal flexibility of the vehicle, the star trackers and horizon trackers are aligned to each other by means of a 3-axis autocollimator link. The dominant error sources in the measurement include horizon radiance profile uncertainty, instrument errors, calibration errors, mounting alignment uncertainties, and base-to-base (autocollimator) alignment uncertainties.

Horizon Radiance Profile

The errors in horizon altitude are assumed to be exponentially correlated in time and space with an autocorrelation function of the form (References 8-1 and 8-2):

$$\phi(\lambda, \delta) = C^2 e^{-\frac{|\lambda|}{\lambda_e}} e^{-\frac{|\delta|}{\delta_e}}$$

where λ = time between two measurements

δ = distance between two measurements

λ_e = 10 days

δ_e = 2500 nautical miles

C = 2887 feet

Neglecting the 10-day time constant as long compared to the duration between measurements, the equivalent angular error can be computed for a 240-nautical-mile orbit as

$$\sigma = \frac{2887}{1305 \times 6076} = 0.355 \text{ mr} = 0.0208 \text{ deg.}$$

and the space correlation coefficient as

$$K = e^{\frac{181}{-2500}} = e^{\frac{2000}{-2500}} \simeq 0.5$$

since the distance between line-of-sight of the heads on the ground is about 2000 miles. The vehicle ground trace travels at a rate of about 4 nautical miles per second so that an equivalent time correlation coefficient can be computed as

$$K_t = e^{\frac{4\Delta t}{-2500}} = 0.91 \text{ for } \Delta t = 1 \text{ min}$$

Instrument Errors

Star tracker errors (Reference 8-3) are:

Resolver digitizer	9 $\widehat{\text{sec}}$
Mechanical	2 $\widehat{\text{sec}}$
Signal/noise	5 $\widehat{\text{sec}}$
Thermal	5 $\widehat{\text{sec}}$
RSS	12 $\widehat{\text{sec}}$ $\simeq 0.0033°$

Horizon tracker errors (Reference 8-4) are (per axis):

Resolution	0.0033 deg
Cross coupling	0.0033 deg
Quantization	0.0050 deg
Output	0.0150 deg
RSS	0.0165 deg

Total RSS instrument error $\leq$0.017 deg = 0.3 mr (White)

Alignment Errors

The alignment errors are:

Horizon tracker calibration	7 $\widehat{\text{sec}}$
Horizon tracker mounting	7 $\widehat{\text{sec}}$

Star tracker calibration	7 $\widehat{sec}$
Star tracker mounting	7 $\widehat{sec}$
Base-to-base (autocollimator)	2 $\widehat{sec}$

for star-horizon measurements, we have an RSS error of 14.1 $\widehat{sec}$ = 0.068 mr (constant bias). For stadiametric measurements we have an RSS error of 9.9 $\widehat{sec}$ = 0.048 mr (constant bias).

Beacon and Landmark Measurements

Beacon measurement errors are listed in Table 8-1 and landmark measurement errors are listed in Table 8-2.

Table 8-1. Beacon Measurements

Measurement	White Noise	Bias
Range	50 ft	50 ft
Azimuth	1.5 mr	1 mr
Elevation	1.5 mr	1 mr
Range rate	1.67 ft/sec	1.67 ft/sec

Table 8-2. Landmark Measurements

Measurement	White Noise	Bias
Unknown Landmark		
Azimuth	0.145 mr	0.1 mr
Elevation	0.145 mr	0.1 mr
Known Landmark		
Azimuth	0.145 mr	0.145 mr
Elevation	0.145 mr	0.145 mr

Model Errors

Model errors are:

Drag	=	$\pm$ 100%
Gravity		
Mu	=	$\pm 0.422 \times 10^{-12}$ (ft^3/sec^2)
J2	=	$\pm 0.03 \times 10^{-6}$
J3	=	$\pm 0.2 \times 10^{-6}$
J4	=	$\pm 0.05 \times 10^{-6}$
J5	=	$\pm 0.1 \times 10^{-6}$
J6	=	$\pm 0.8 \times 10^{-6}$

8.2 MEASUREMENT SCHEDULING

In general, it is desirable to make as many measurements as possible as quickly as possible. This generality is usually limited by consideration of data processing requirements, measurement availability, nonlinearities, and correlation in the measurement noise. Noise correlation effects cause a trade between white noise and correlated noise--the greater the measurement frequency, the greater the reduction in white noise but the greater the increase in correlated noise. Thus, for any particular type of measurement there is an optimum frequency (based on this trade) depending on the relative effects of white and correlated noise. This optimum frequency may not be the same for each measurement type. Measurements which are highly contaminated by correlated noise such as star horizon measurements should have a lower frequency than measurements whose noise is mostly white or has a short correlation time such as beacon measurements.

For directional measurements, such as star horizon measurements using only one star tracker or beacon, or landmark measurement when more than one beacon or landmark is available, a decision is required in which direction to make the measurement. Several relatively sophisticated approaches to this problem could be taken by applying error measures to each alternative and choosing the one that satisfies some minimization criterion (such as error ellipsoid volume or trace ratios). A more simplified predetermined approach is used here. Thus, for star-horizon measurements using one star tracker the measurement may be made in the downrange only, crosstrack only, or constant azimuth direction, or may be alternated between downrange and crosstrack.

Beacon (and landmark) measurements are made in order of a beacon priority rating. It is unlikely that the situation of overlapping beacons would occur very often unless deliverately planned, in which case the appropriate criteria could be substituted. Beacon and landmark measurements are made every 30 seconds whenever a beacon or landmark is in sight. A beacon is in sight if its elevation angle is greater than 5 degrees, whereas a landmark is considered to be in sight if its elevation angle is greater than 20 degrees. Beacons can be situated on any land area although there are certainly geographic and political preferences. Landmarks can be situated only on land on the daylight side of the earth.

8.3 RESULTS

The error models of the previous sections were used in a digital program to simulate the various navigation measurements. The results of this simulation are discussed in this section. Because of time limitations, very little attempt was made to vary parameters. Thus, unless otherwise stated, all parameter values are the same as described in the previous section.

The CRT output for each case is similar in format although some frames may be left out for a particular case because of redundancy, inapplicability, or lack of information content. The first frame of each case has two graphs. The top graph is labled RMS Error. The three-position components of error (in feet) are plotted on this graph and it includes all errors--estimated, neglected, biases, Markov noise, etc. The bottom graph is labeled Standard Derivation and is similar to the top graph except that only estimated errors are included.

The horizontal axis of all graphs is the problem time in minutes (one orbit is about 94 minutes). Each plot is labeled with symbols such as X, Y, R, etc.; these are only to distinguish the plots and do not represent data points or measuremnets. The next frame, if present, represents the effects of neglected biases in the star trackers and horizon scanners. It may have as many as three graphs representing altitude, roll, and pitch (into which these biases are mapped). The next frame represents the effects of neglected Markov biases which are represented as altitude, downrange, and crosstrack. The following frame represents the effects of model errors and drag, and on the following frame are represented errors due to the J terms. Following this frame are the effects of all other neglected biases in any other measurements which are made.

For all the cases studies, a circular 55-degree inclination orbit at 240 nautical miles is assumed with initial position uncertainties in each axis of 10,000 feet and velocity errors of 3.3 fps in each axis.

The first case depicts the navigation uncertainty if star-horizon measurements are made every five minutes starting at $t = 0$. Both star trackers are used. In this case, the state vector is not augmented and comparison of the RMS error and the standard deviation shown on Figure 8-1 indicates that the effect of neglected errors is large. Figure 8-2 shows the effect of mounting biases (stadiametric measurements are not performed, so the altitude bias makes no contribution). Figure 8-3 shows the effect of Markov biases in the horizon.

Obviously, this is a large contributor to the downrange error. Figures 8-4 and 8-5 show the effects of drag and gravity uncertainties. Is should be noted that even though these effects are not estimated as part of the measurement their effect is considerably less than if no measurements had been taken. This is because of the degaining effect of the filter in a closed-loop operation.

Since the Markov bias appears to dominate, the next case (3) shows the effect of estimating it on-board. Figure 8-6 shows that the RMS downrange error is reduced to 3700 feet, the crosstrack error to 1800 feet, and the altitude error to 1050 feet. We note that this case meets the space station navigation requirements (3800 feet downrange, 2200 feet crosstrack, and 1500 feet altitude).

Since the constant biases are significant and contribute to the error, the next case (4) shows the effect of estimating them as well as the Markov biases. Figure 8-7 shows that this increases the standard deviations but the RMS error decreases slightly. This, of course, is an indication that if a choice must be made, it is more important to estimate the Markov bias in the horizon than the instrument biases. There are two reasons for this: (1) the Markov biases are larger and therefore more dominant and (2) the instrument biases are only weakly observable.

In addition to (or in place of) star-horizon measurements, beacon and landmark measurements could also be performed. Additional onboard hardware is required to perform these measurements and, in the case of beacons, ground beacons have to be placed and surveyed. Due to lack of time it was not possible to vary beacon and landmark locations to determine optimum location or to determine the effects of overlapping beacons, etc. Also, in the case of landmarks, cloud cover obscuration, which is a major factor in determining performance, has not been studied. Beacon locations were chosen as shown in Table 8-3 to support the orbit navigation requirements for shuttle missions (Reference 8-5). The first eight beacons are located on qualified space shuttle abort fields and are located solely in the United States. The last three--Guam, Hawaii, and Alaska--were added to provide coverage on orbits not over the U.S. mainland.

For convenience, the landmarks used have been given the same location as the beacons. Although there is no reason to restrict landmarks to the U.S., the given locations do meet the requirements of being on land and in daylight.

In the following case (9), only beacon range, azimuth, and elevation measurements were taken. Figure 8-8 shows the results of the beacon measurements with no biases estimated on board. Beacon 3 was sighted at t = 7 minutes and tracked until 7 was sighted; Beacon 7 was lost at t = 16.5 minutes, for a total tracking duration of 9.5 minutes. No beacons were sighted for the rest of the orbit. Beacon 1 was sighted at t = 102.5 minutes and tracked until Beacon 7 was sighted. Beacon 7 was tracked until 112.5 minutes for a total tracking duration of 10 minutes. Figure 8-8 shows that the RMS error was sharply reduced during the tracking passes but builds up quite rapidly during the remainder of the first orbit. After the second tracking pass the error buildup is slower but the downrange error will increase again if no more beacons are sighted.

Table 8-3. Beacon Locations

No.	Location	Latitude	Longitude
1	Biggs AFB	31.85°N	106.38°W
2	Cape Kennedy	28.65°N	80.57°W
3	Chennault Field	30.05°N	93.2°W
4	Fairchild AFB	47.8°N	117.5°W
5	Minot AFB	48.5°N	101.5°W
6	San Nicolas Is.	33.23°N	119.45°W
7	Westover AFB	42.2°N	72.5°W
8	Wurtsmith AFB	44.5°N	83°W
9	Anderson AFB, Guam	13.58°N	144.92°E
10	Honolulu International	21.33°N	157.92°W
11	Alaska	65°N	165°W

The next case (15) shows the effect of taking range-only measurements as opposed to range, azimuth, and elevation of the previous case. Figure 8-9 is practically identical to Figure 8-8. This is an indication of the fact that the azimuth and elevation measurements are not significant.

The next case (10) substitutes a range rate measurement for the range measurement of the previous case. Figure 8-10 shows a degradation in performance over the range-only case. This degradation is caused by the large white noise propagation error during the first orbit and the error due to the neglected range rate bias during the second orbit.

This case was run again for a duration of six orbits. The convergence is shown in Figure 8-11 and is brought about by the fact that all the orbits passed over the U.S. Beacon 3 was sighted at t = 7 minutes and tracked until lost at which time Beacon 7 was in sight. Beacon 7 was tracked until t = 16.5 minutes for a total tracking duration of 9.5 minutes. On the second orbit Beacon 1 was acquired at t = 102.5 minutes and before it was lost Beacon 7 was reacquired and tracked until t = 112.5 minutes for a total duration of 10 minutes. On the third orbit, Beacon 6 was acquired at t = 198.5 minutes and tracking continued until Beacon 8 was sighted. Beacon 8 was lost at t = 208.5 minutes for a total tracking duration of 10 minutes. On the fourth orbit Beacon 10 was sighted at time t = 286 minutes and lost at t = 290.5 minutes for a tracking duration of 4.5 minutes. Beacon 4 was then acquired at t = 297.5 minutes and tracked until Beacon 5 was acquired. Beacon 5 was lost at t = 304 minutes for a total duration of 6.5 minutes. On the fifth orbit Beacon 4 was resighted at t = 396 minutes. Beacons 5 and 7 were resighted before tracking was lost and tracking continued until t = 408 minutes for a duration of 12 minutes. At the end of the fifth orbit Beacon 9 was sighted

at t = 470 minutes and tracked until t = 474.5 minutes for a duration of 4.5 minutes. On the sixth orbit Beacon 4 was resighted at t = 493 minutes and tracked until Beacons 5, 3, and 2 were acquired. Beacon 2 was lost at t = 506.5 minutes for a duration of 13.5 minutes.

It is noted that because it was possible to acquire one or more beacons every orbit, it was possible to reduce the maximum RMS downrange error to less than 1000 feet.

This case was re-run with a less fortuitously placed orbit. Figure 8-12 shows what the error would have looked like if the process had been started several orbits later than the previous run. This time, Beacon 6 was sighted at t = 35.5 minutes and lost at t = 39 minutes for a sighting duration of 3.5 minutes. The downrange error was allowed to propagate for two orbits to almost 80,000 feet before Beacon 10 was sighted at t = 226 minutes. Beacon 10 was lost at t = 230 minutes after 4 minutes of sightings. Beacon 9 was sighted 2 orbits later at t = 414 minutes and lost at 416.5 minutes for a total duration of 2.5 minutes.

The next case (14) shows the effect of adding star-horizon measurements to the beacon measurements of the previous case. Figure 8-13 shows how the star-horizon measurements bound the error by eliminating the larger error buildup between beacon sightings. Also, comparing the results with Case 4 (star-horizon measurements only), it can be seen that the error converges to a considerably lower value (about 1500 feet downrange) than with either case separately.

In the next case (19), we substitute known landmarks for the beacons. This is essentially the same as the beacon range, azimuth, and elevation measurement (Case 9) without the range measurement. Figure 8-14 shows the effect of only the azimuth and elevation measurements. It should be pointed out, however, that the sighting durations are not comparable for beacons and known landmarks because of the requirement for a minimum elevation angle of 20 degrees for landmarks (as opposed to 5 degrees for beacons). Thus, Landmark 2 is sighted at t = 10.5 minutes and lost at t = 11 minutes, for a total of only 0.5 minute of sighting. Landmark 1 is sighted at t = 103 minutes in the second orbit and lost at t = 105 minutes, for a total sighting time of 2 minutes. Landmark 8 is sighted at t = 111 minutes and lost at t = 111.5 minutes for a duration of 0.5 minute. From Figure 8-14 it is clear that the error is a result of propagation over a long duration with no sightings.

The next case (22) is the same as the previous case but it is assumed that the landmark location is unknown. Figure 8-15 shows that the performance is considerably degraded.

The next case (21) shows the effect of combining the known landmark measurement with the star-horizon measurement. Figure 8-16 shows that the effect is to eliminate the large error buildup during periods of no landmarks. Comparing this with Case 4, it can be seen that the error is bounded by the error of the star-horizon measurement but converges to a considerably lower value.

The final case (24) shows the combination of star-horizon and unknown landmark tracking. Figure 8-17 shows that this case is substantially similar to the previous case, Thus, in combination with star-horizon measurements there is little difference between known and unknown landmarks.

8.4 REFERENCES

8-1. R. J. Farrar, Survey of Autonomous Navigation Schemes for Space Shuttle Missions. Report TDR-0172 (2531-03)-3, Aerospace Corporation, El Segundo, Calif., (Aug. 1, 1971).

8-2. W. G. McArthur, "Horizon Sensor Navigation Errors Resulting from Statistical Variations in the CO_2 14-16 Micron Radiation Band," Ninth Symposium on Ballistic Missile and Space Technology, San Diego, Calif. (Aug. 1964).

8-3. Description of a High Performance Solid-State Star Tracker KS199. Report EO 436, Kollsman Instrument Corp., Syosset, N.Y. (July 21, 1971).

8-4. Quantic Industries Mod IV High Accuracy, High Reliability Horizon Sensor System. Report ETD 321, Quantic Industries, Inc., San Carlos, Calif. (March 15, 1970).

8-5. E. Muller/P. Phillion, Update to Space Shuttle Ground Beacon Orbit Navigation Analyses. MIT, 23A STS Memo 35-71 (July 12, 1971).

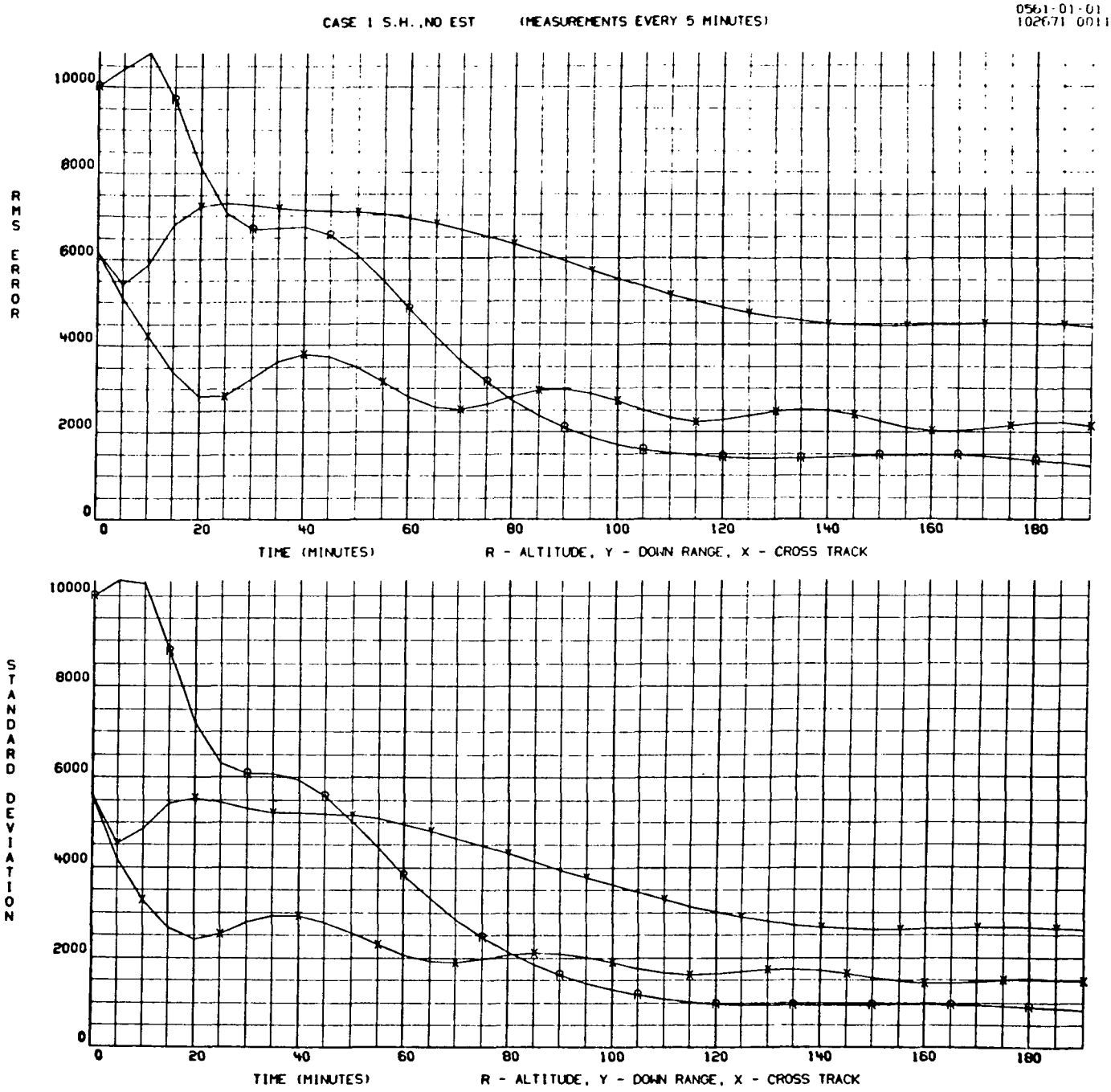

Figure 8-1. Star Horizon Measurements

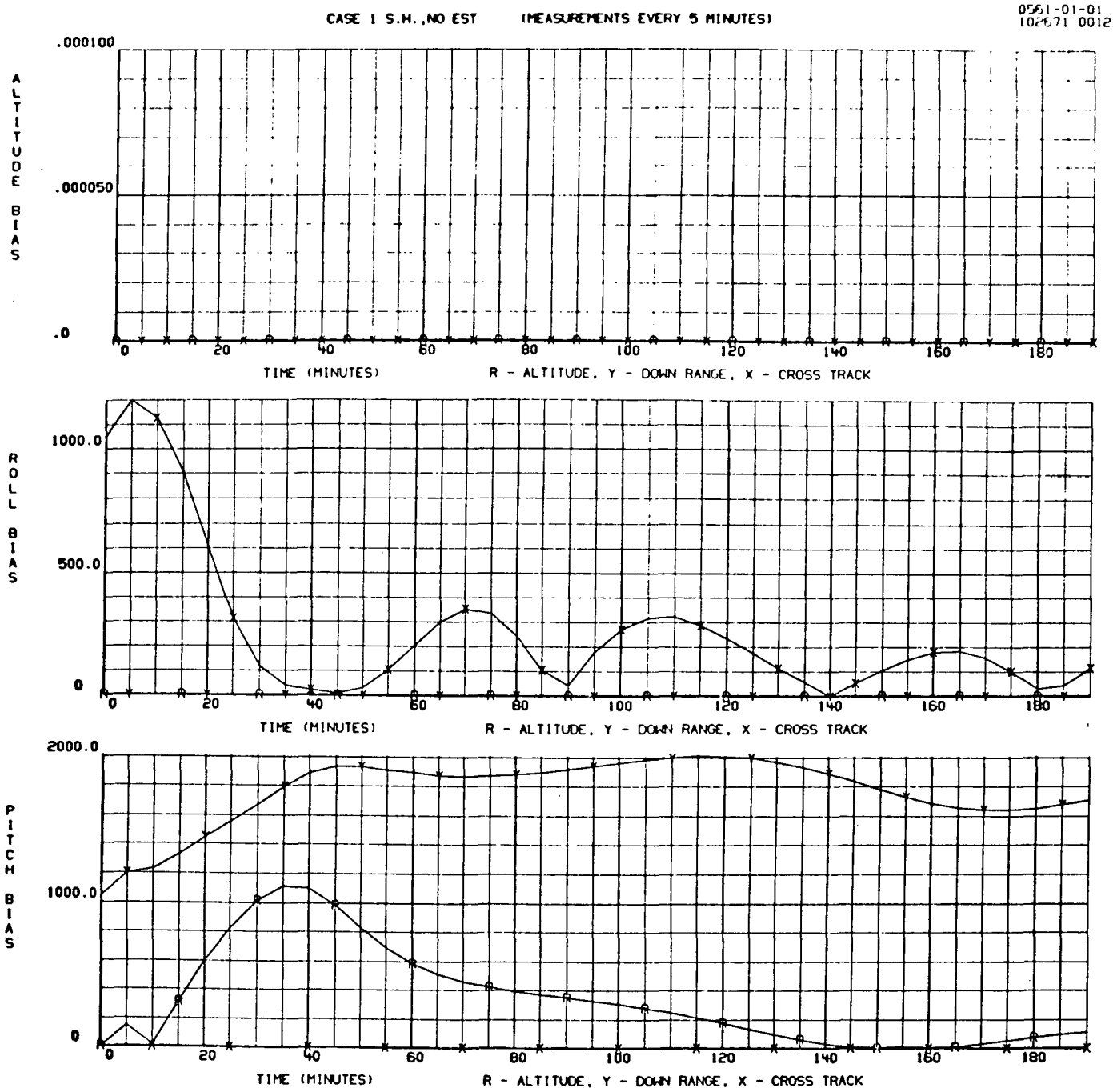

Figure 8-2. Instrument Bias Errors

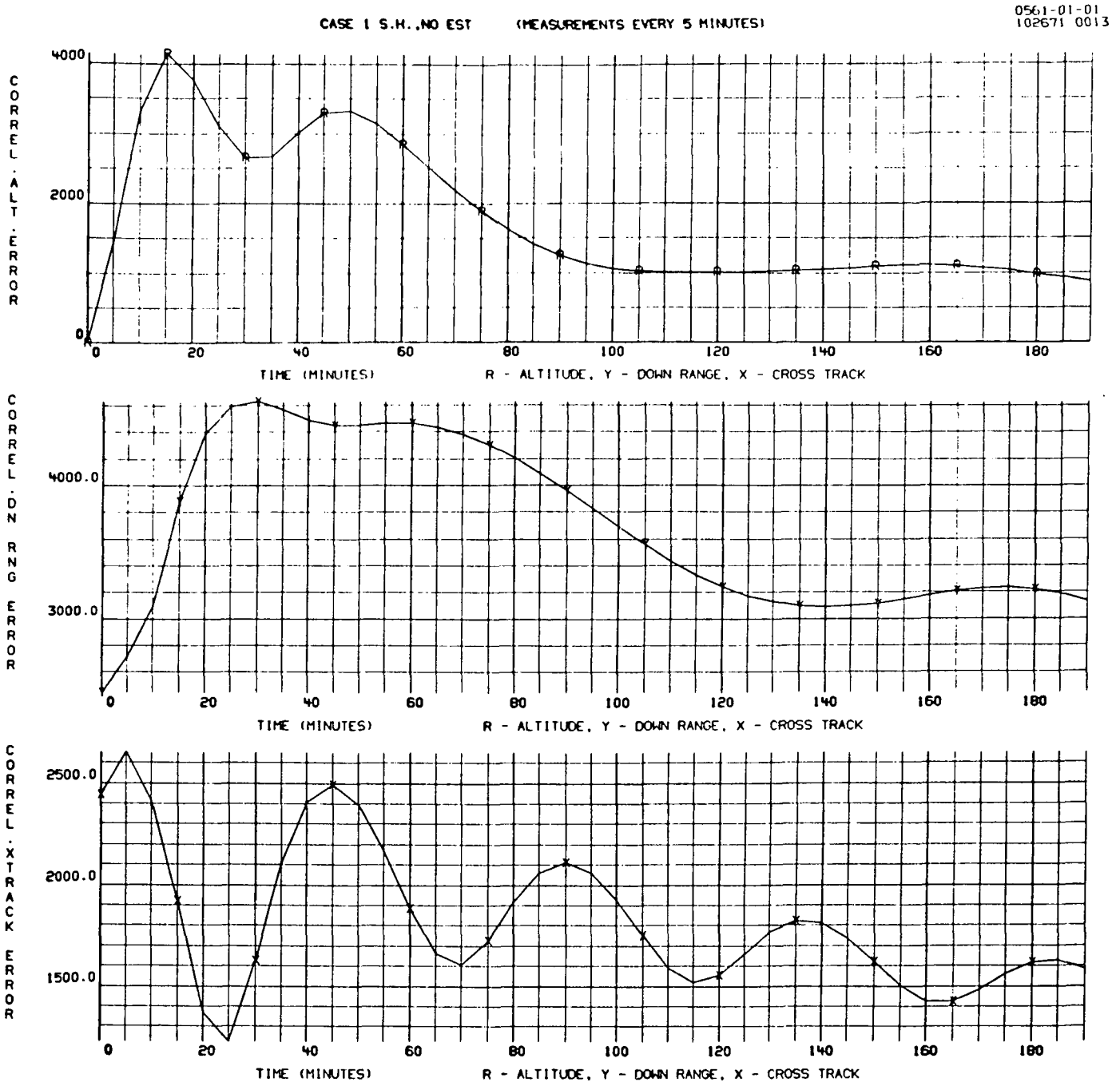

Figure 8-3. Markov Bias Errors in Horizon

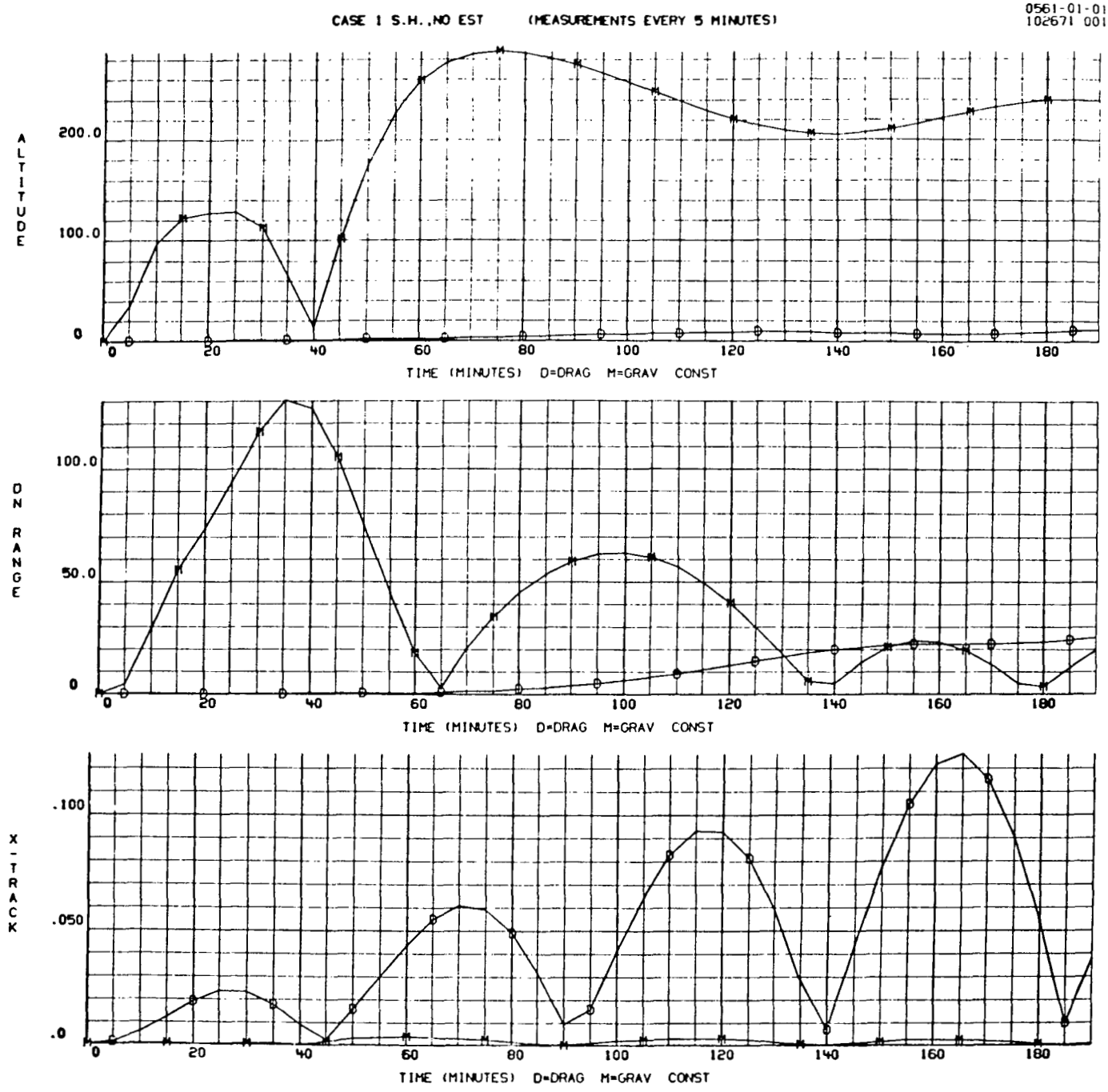

Figure 8-4. Drag and Mu Errors

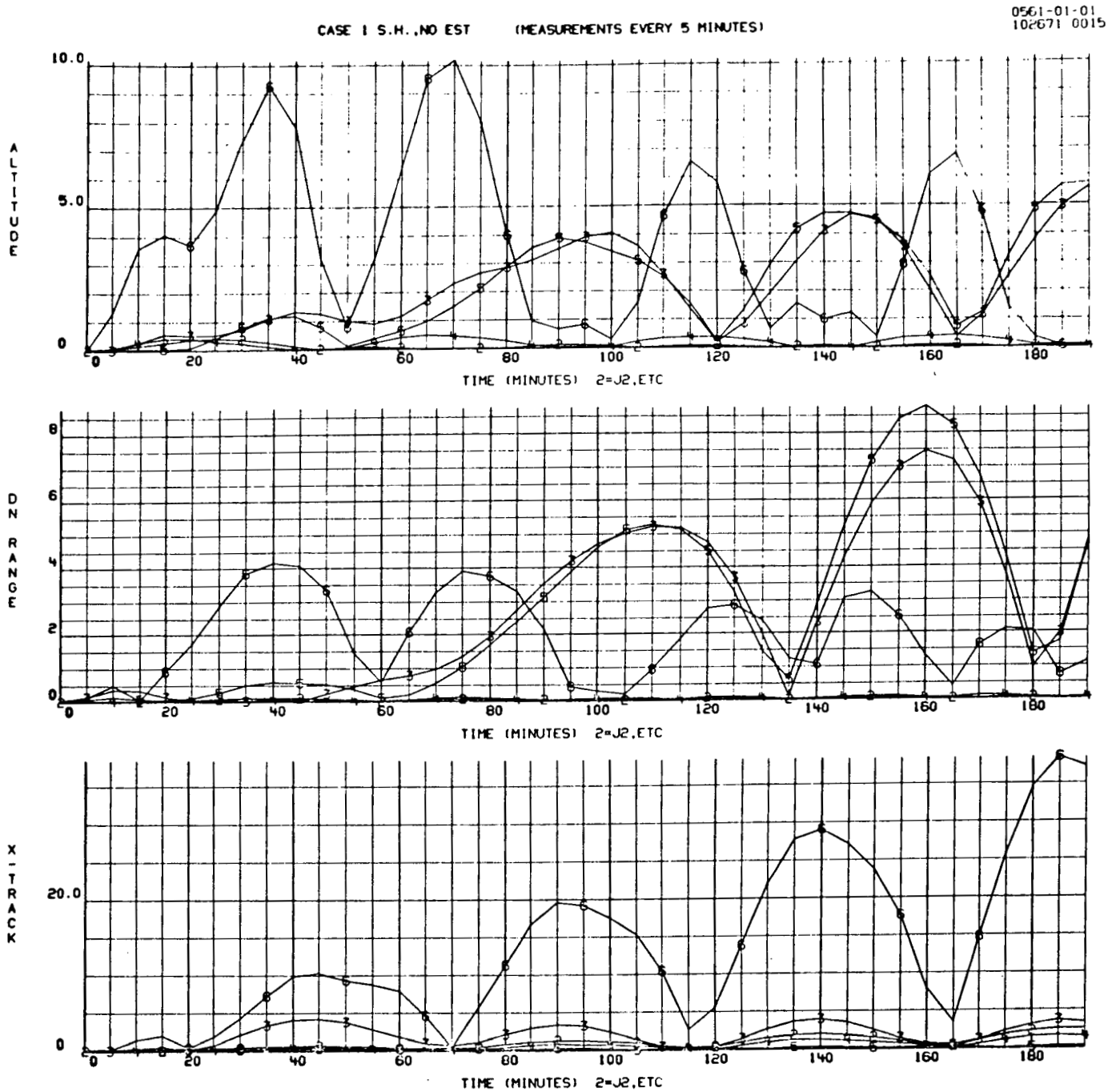

Figure 8-5. Gravitational Harmonics Errors

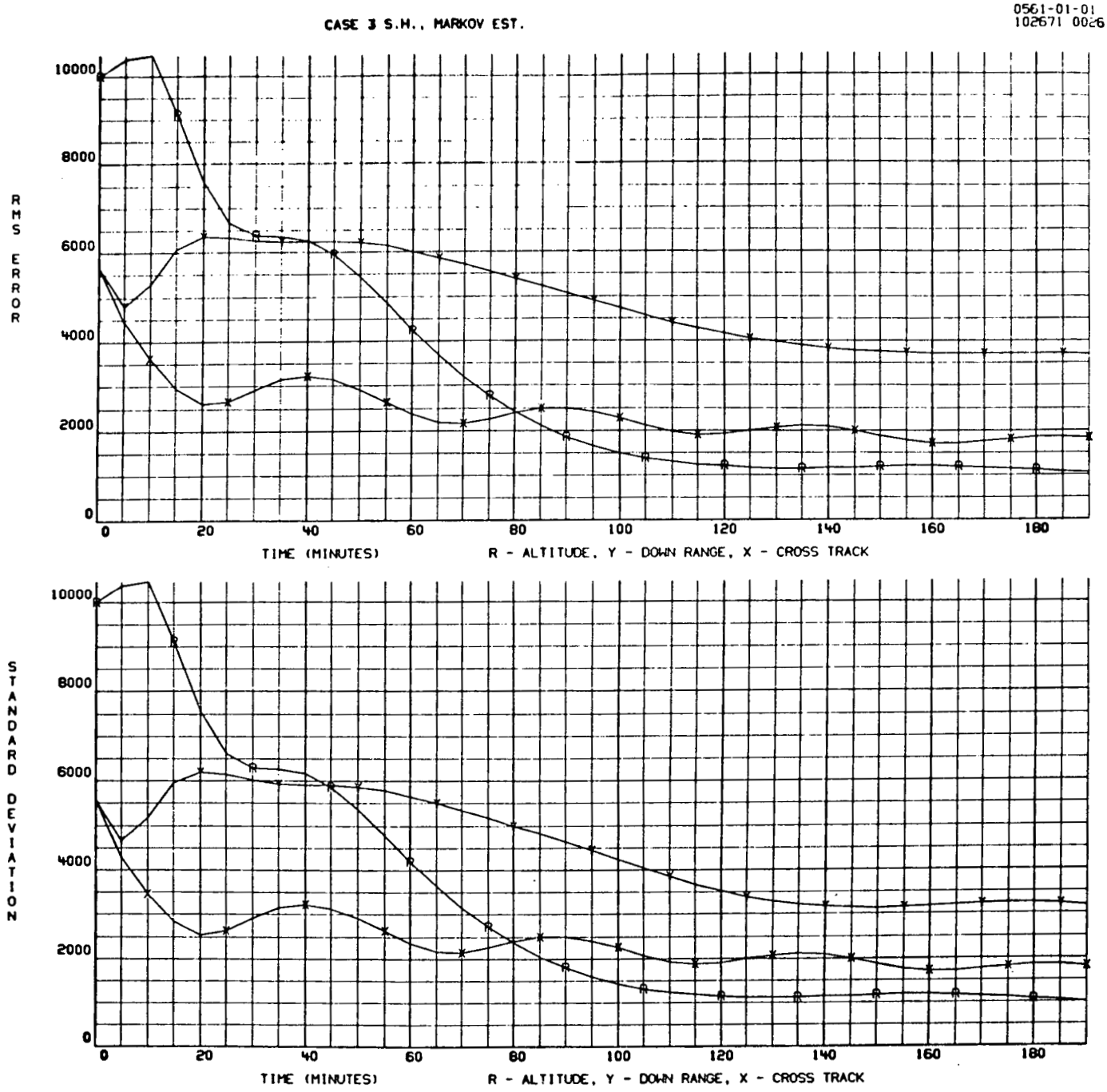

Figure 8-6. Star-Horizon Measurements - Markov Biases Estimated

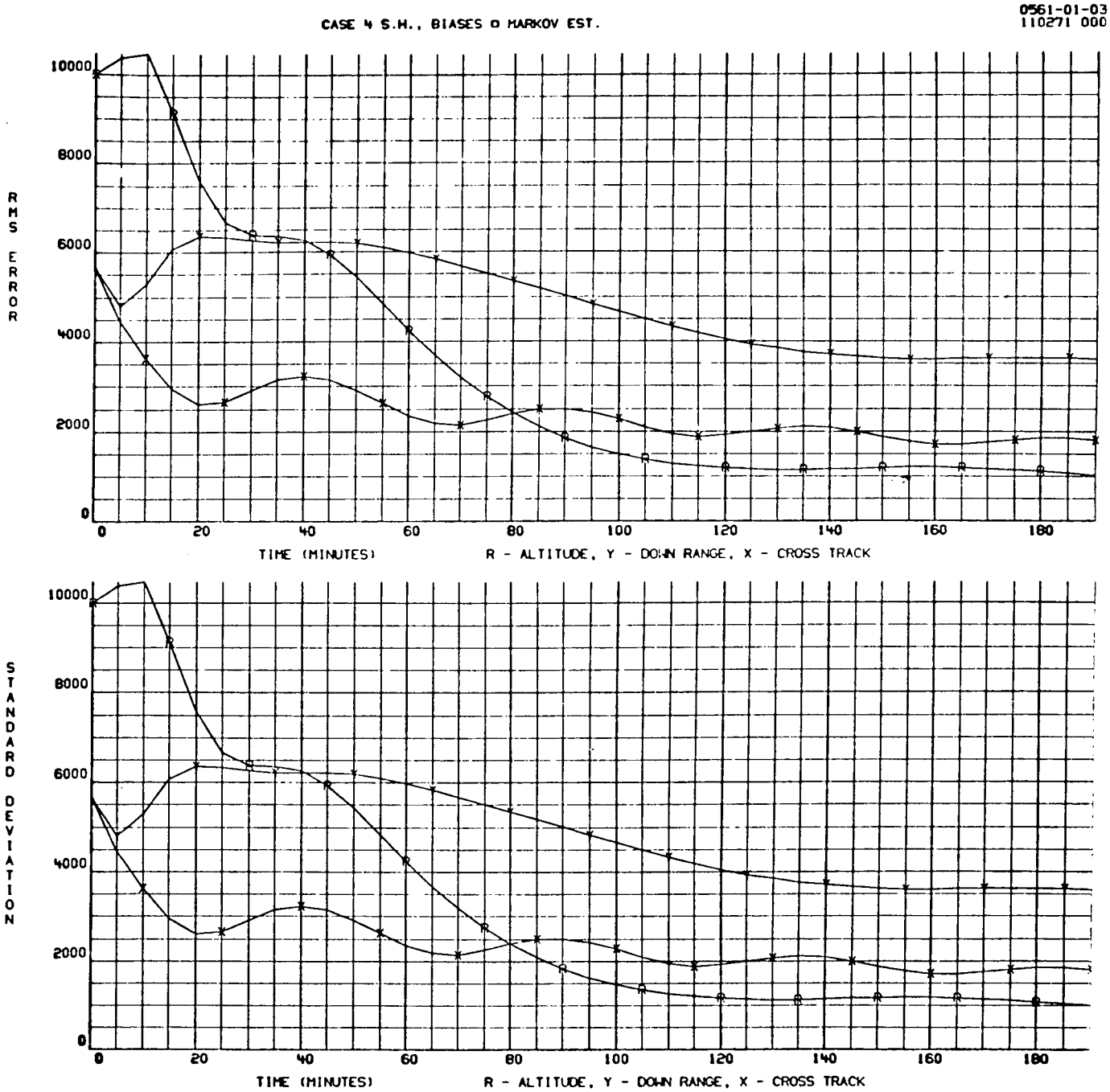

Figure 8-7. Star-Horizon Measurements - Instrument and Markov Biases Estimated

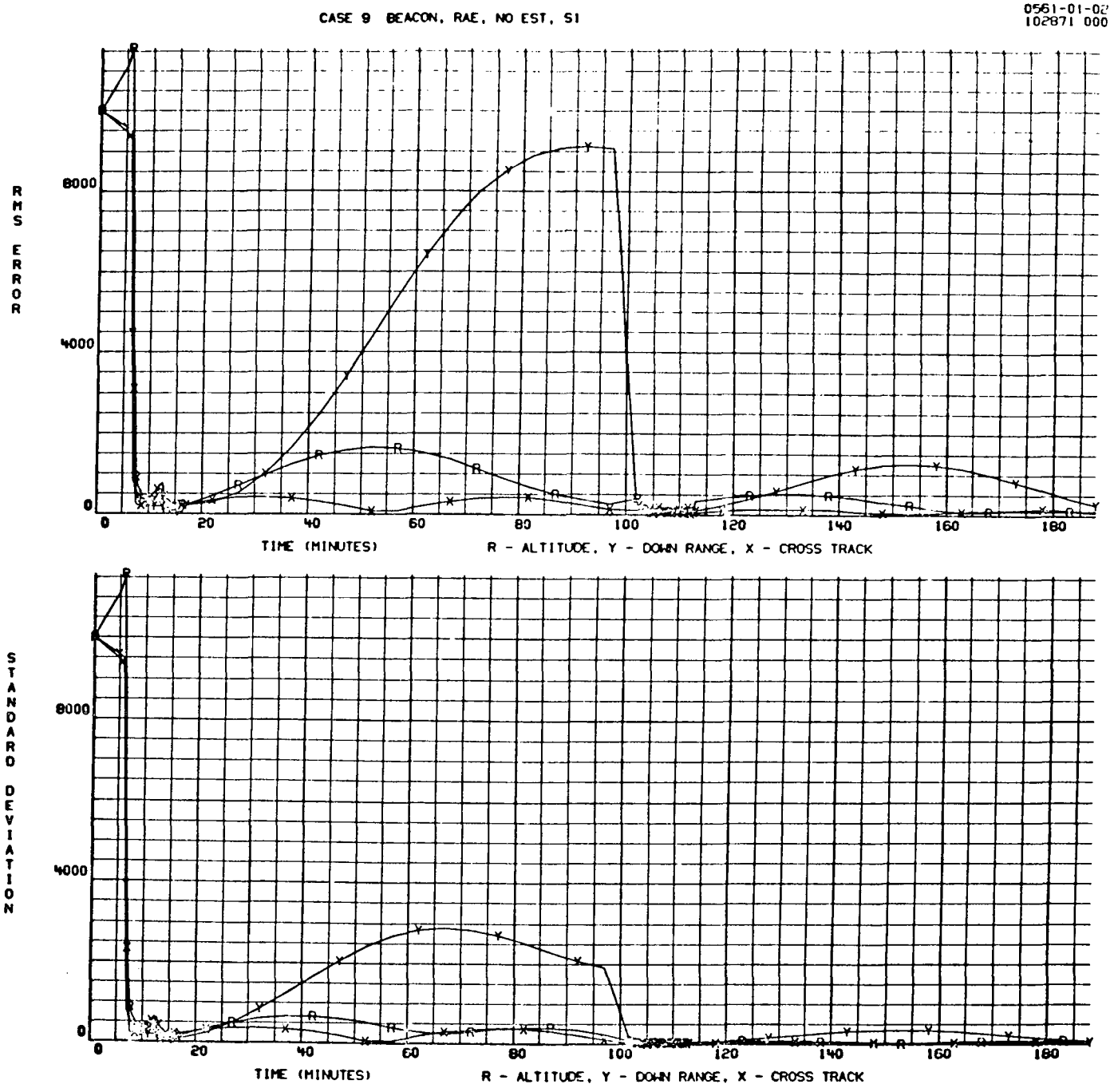

Figure 8-8. Beacon Range, Azimuth, and Elevation Measurements

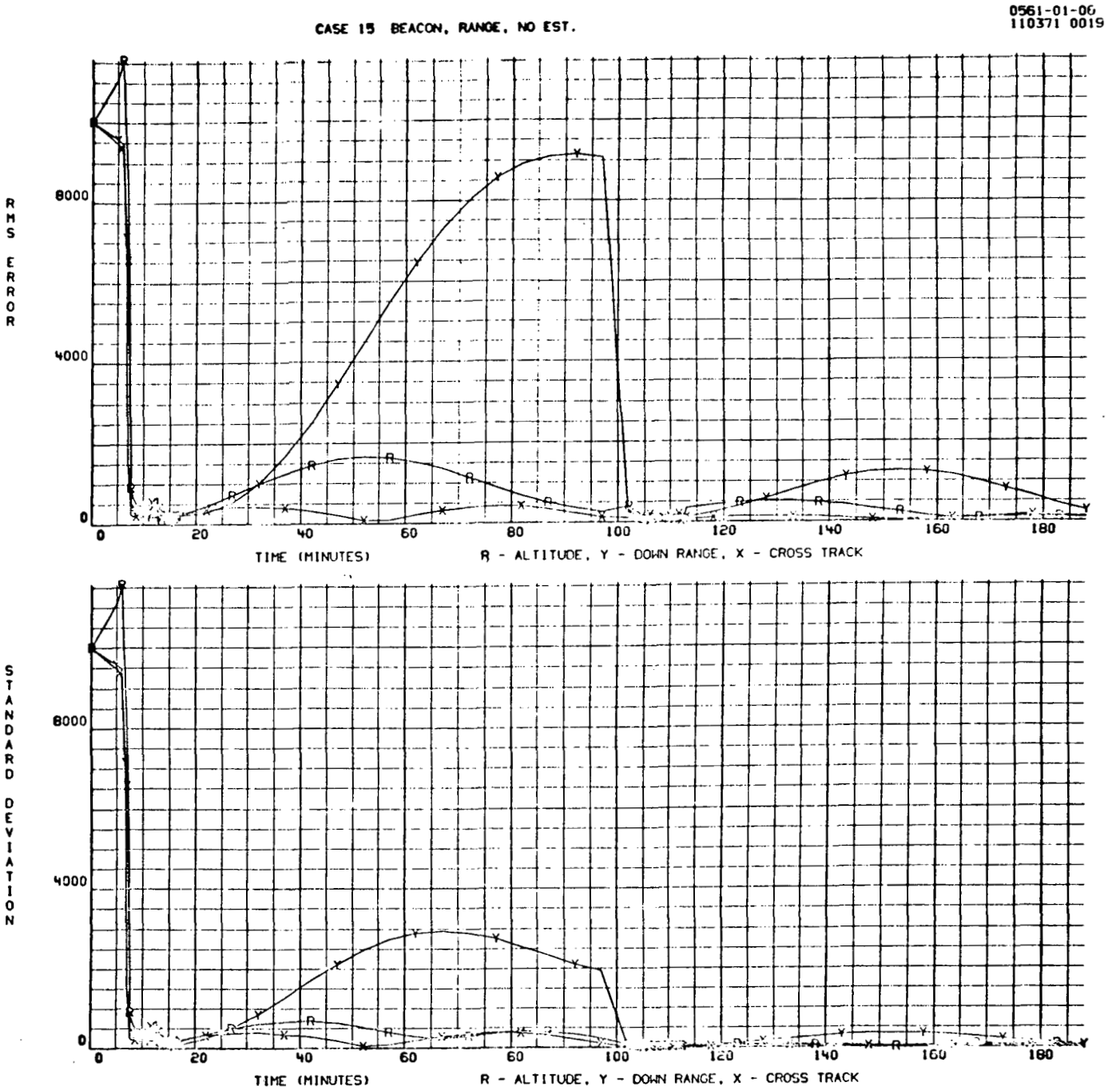

Figure 8-9. Beacon Range Measurements

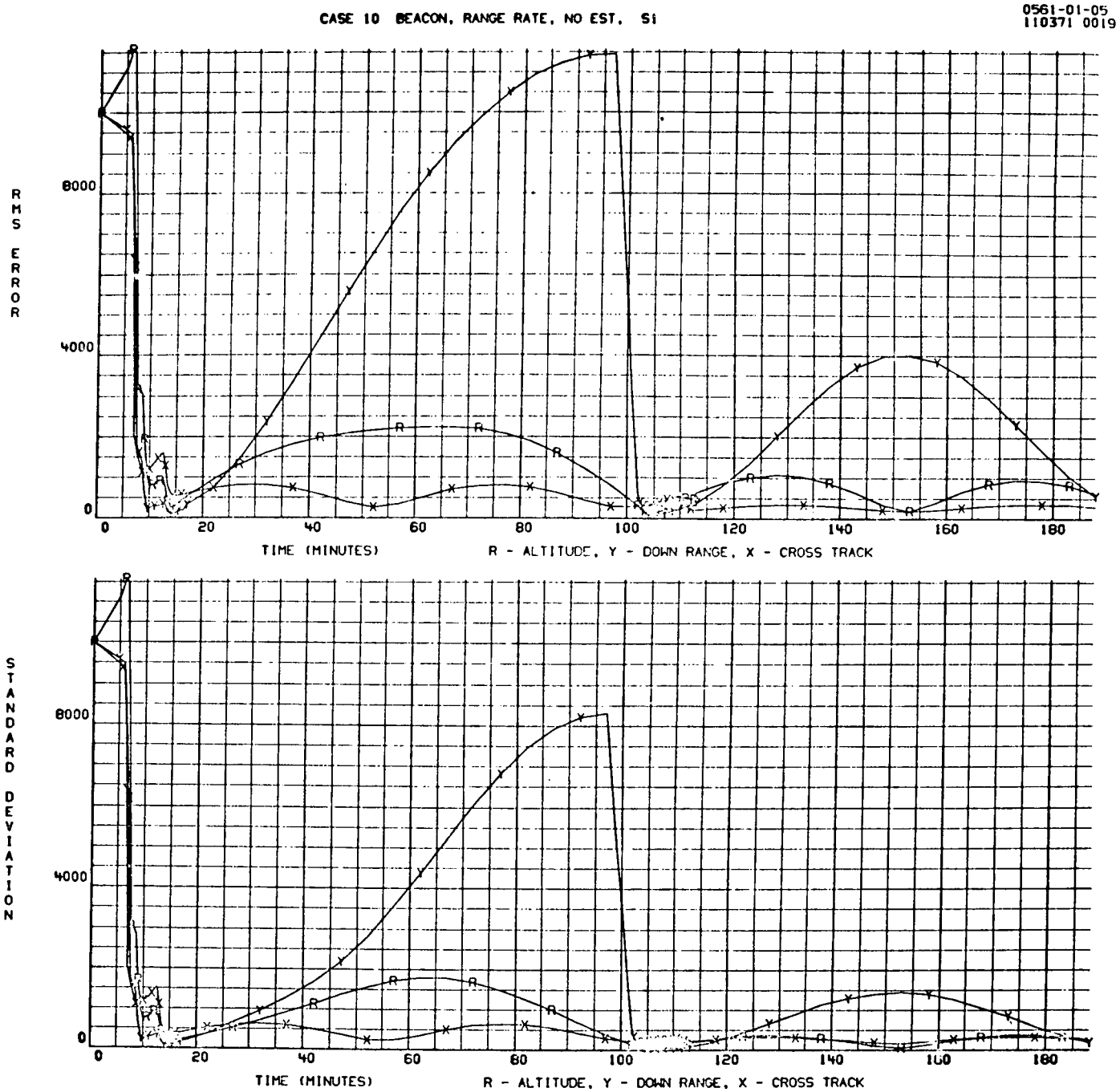

Figure 8-10. Beacon Range Rate Measurements (Two Orbits)

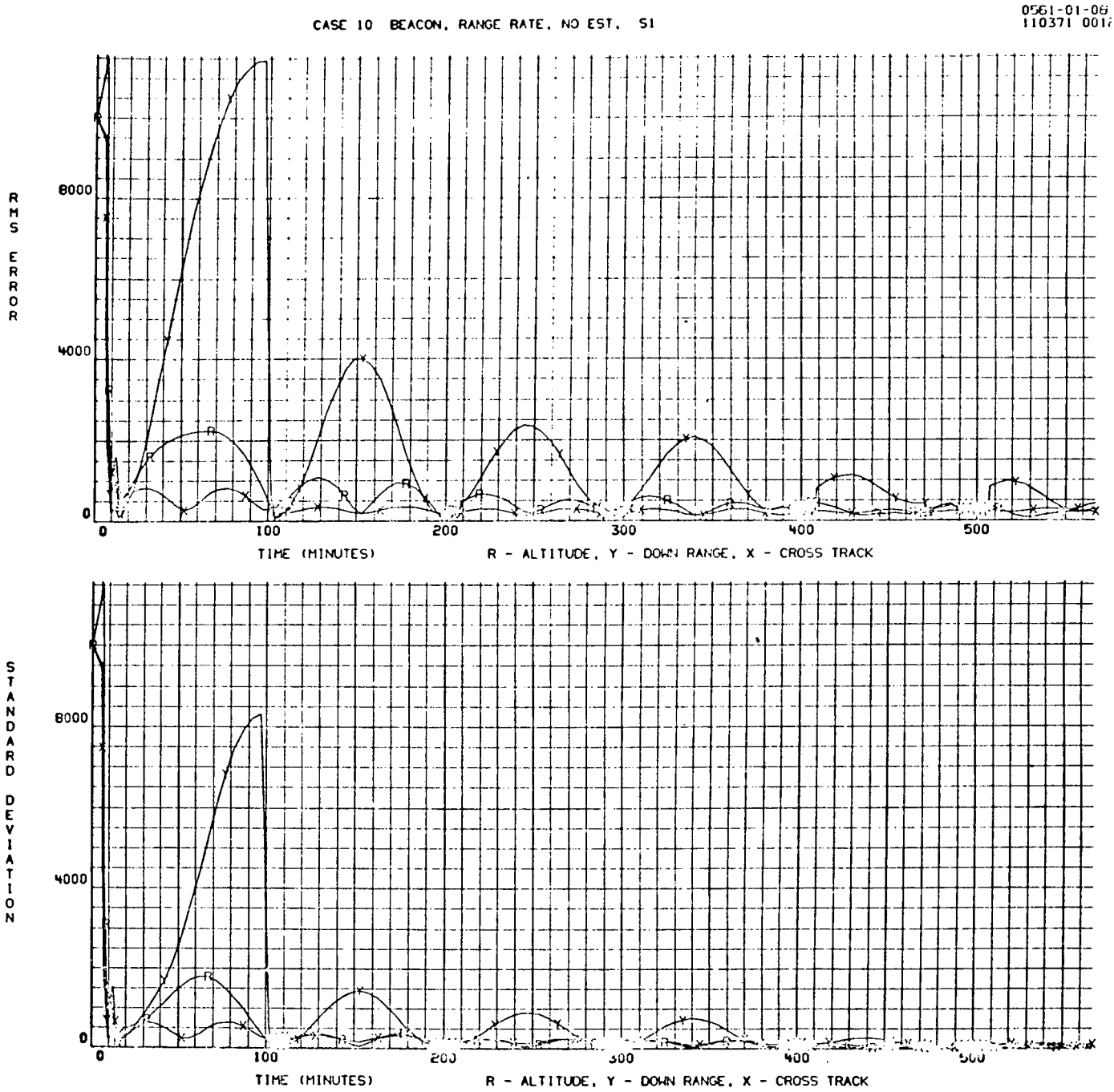

Figure 8-11. Beacon Range Rate Measurements (Six Orbits)

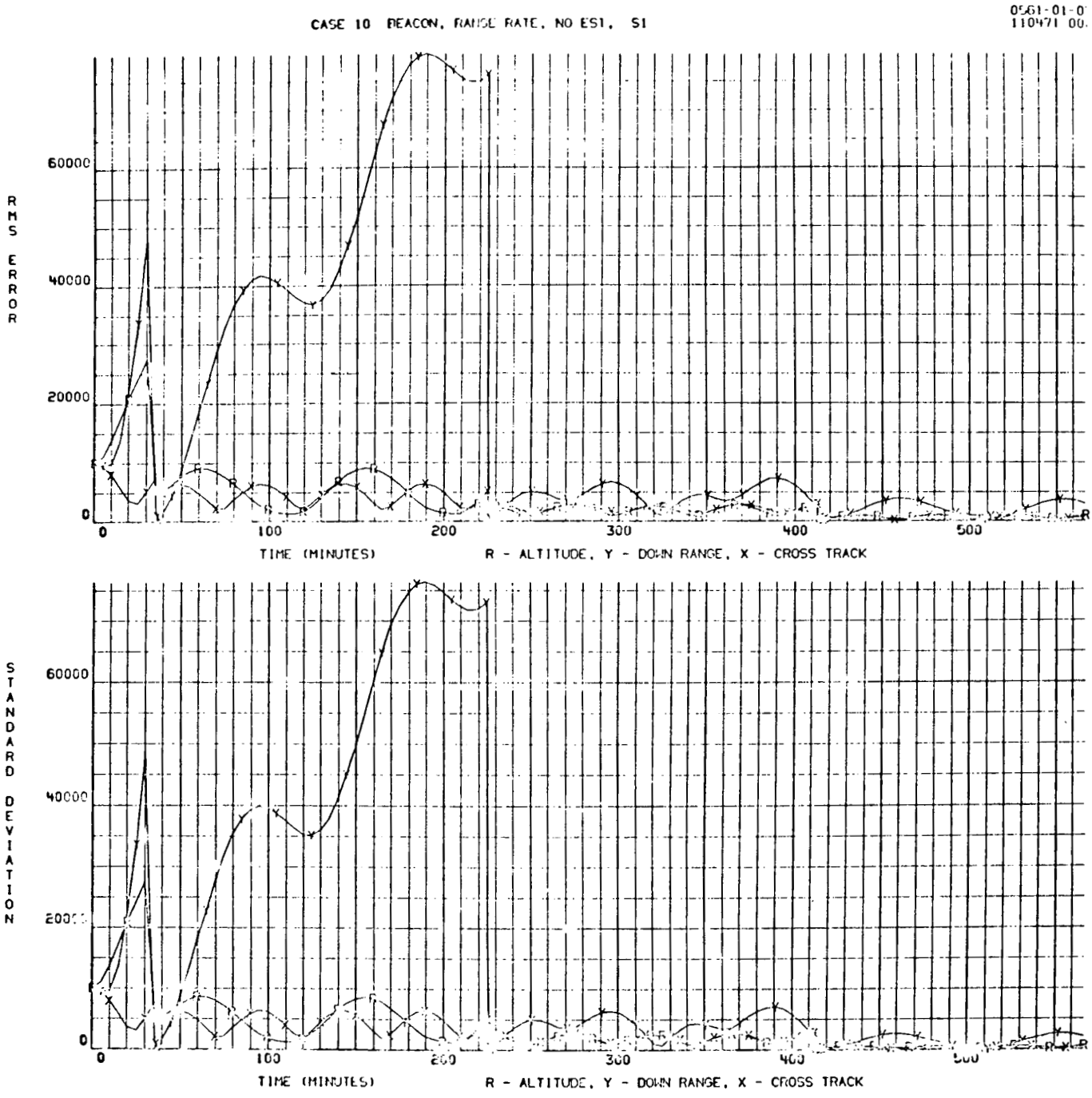

Figure 8-12. Beacon Range Rate Measurements (Fewer Beacon Contacts)

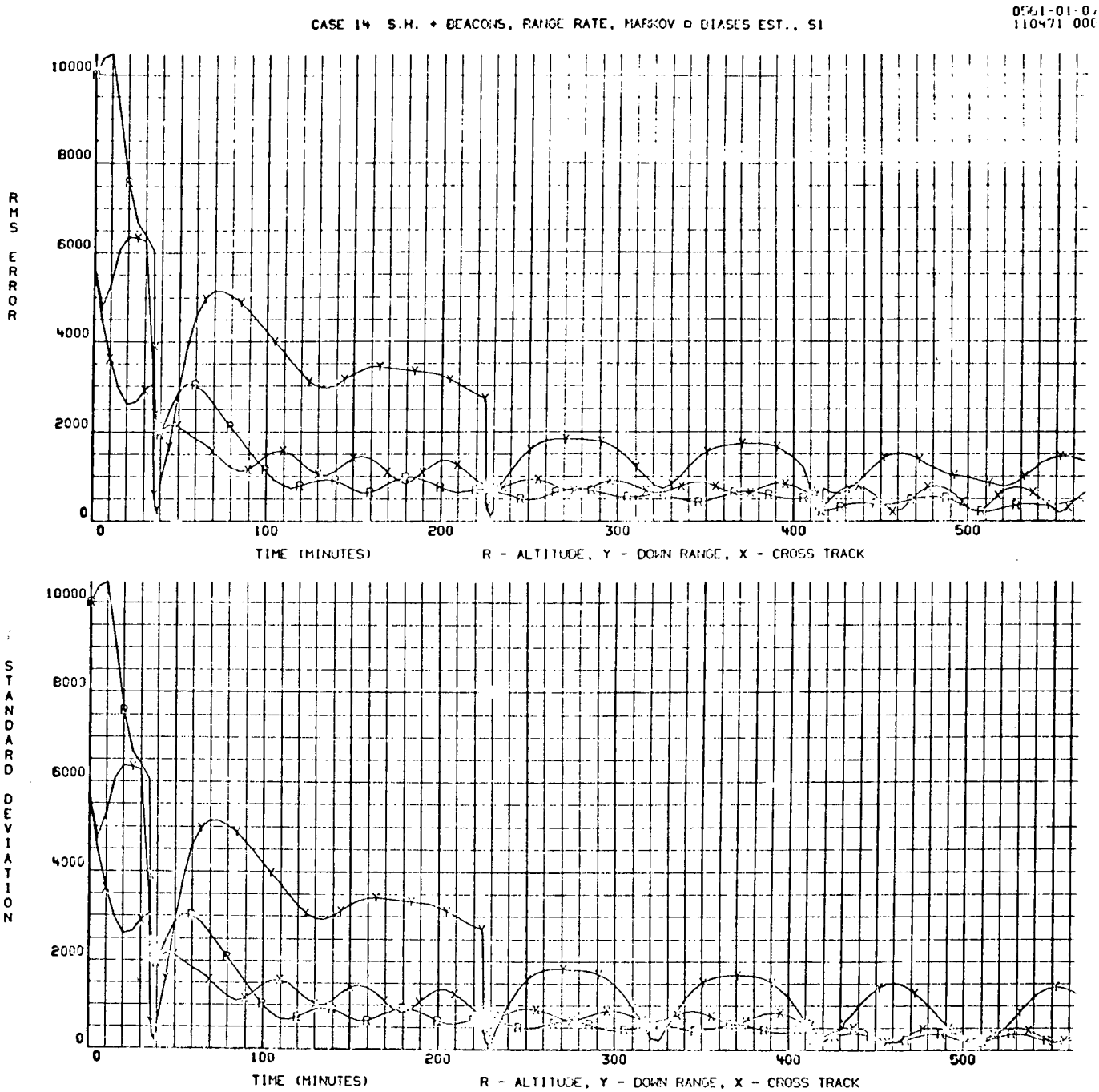

Figure 8-13. Star Horizon Plus Beacon Range Rate Measurements

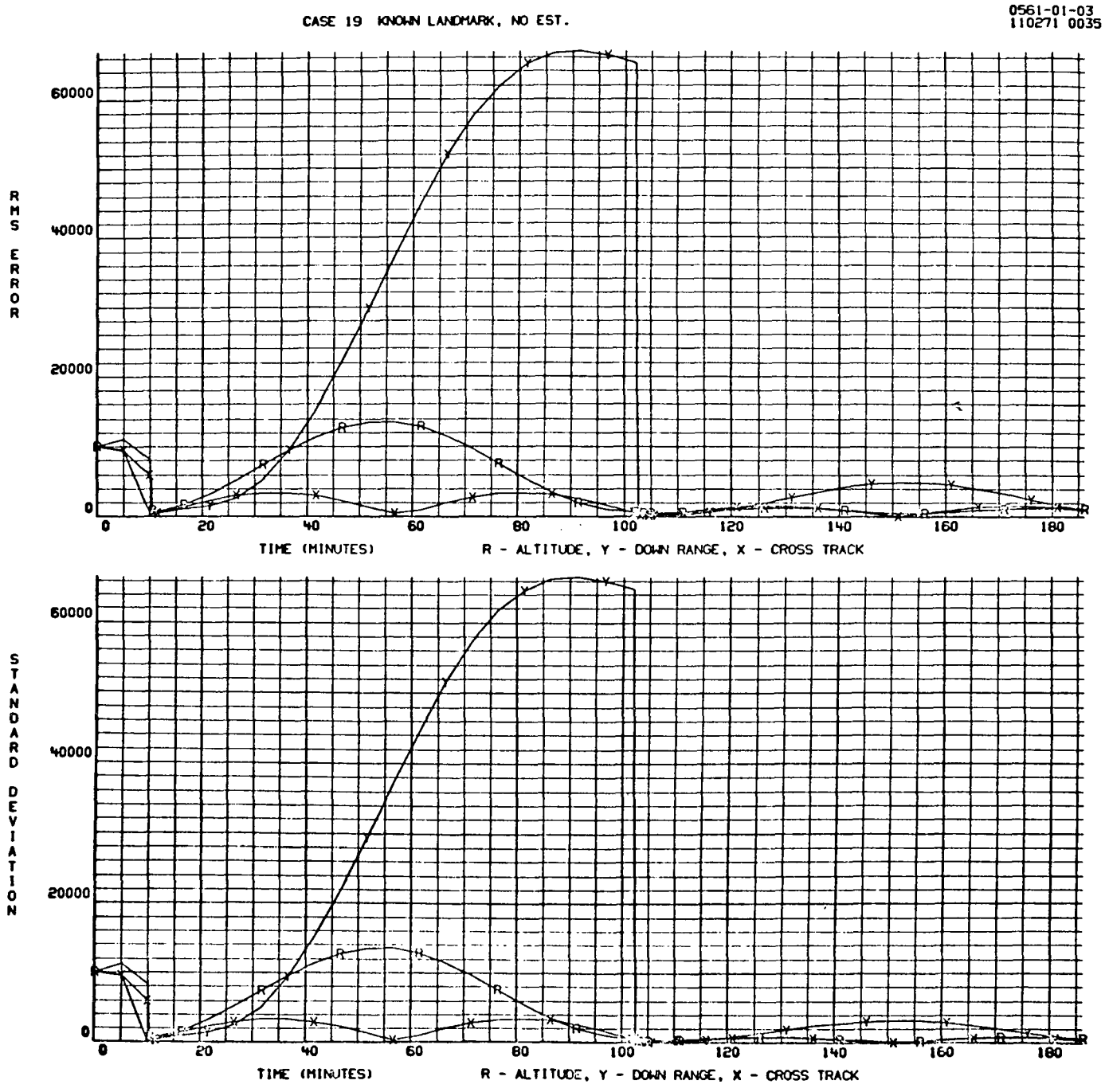

Figure 8-14. Known Landmark Measurements

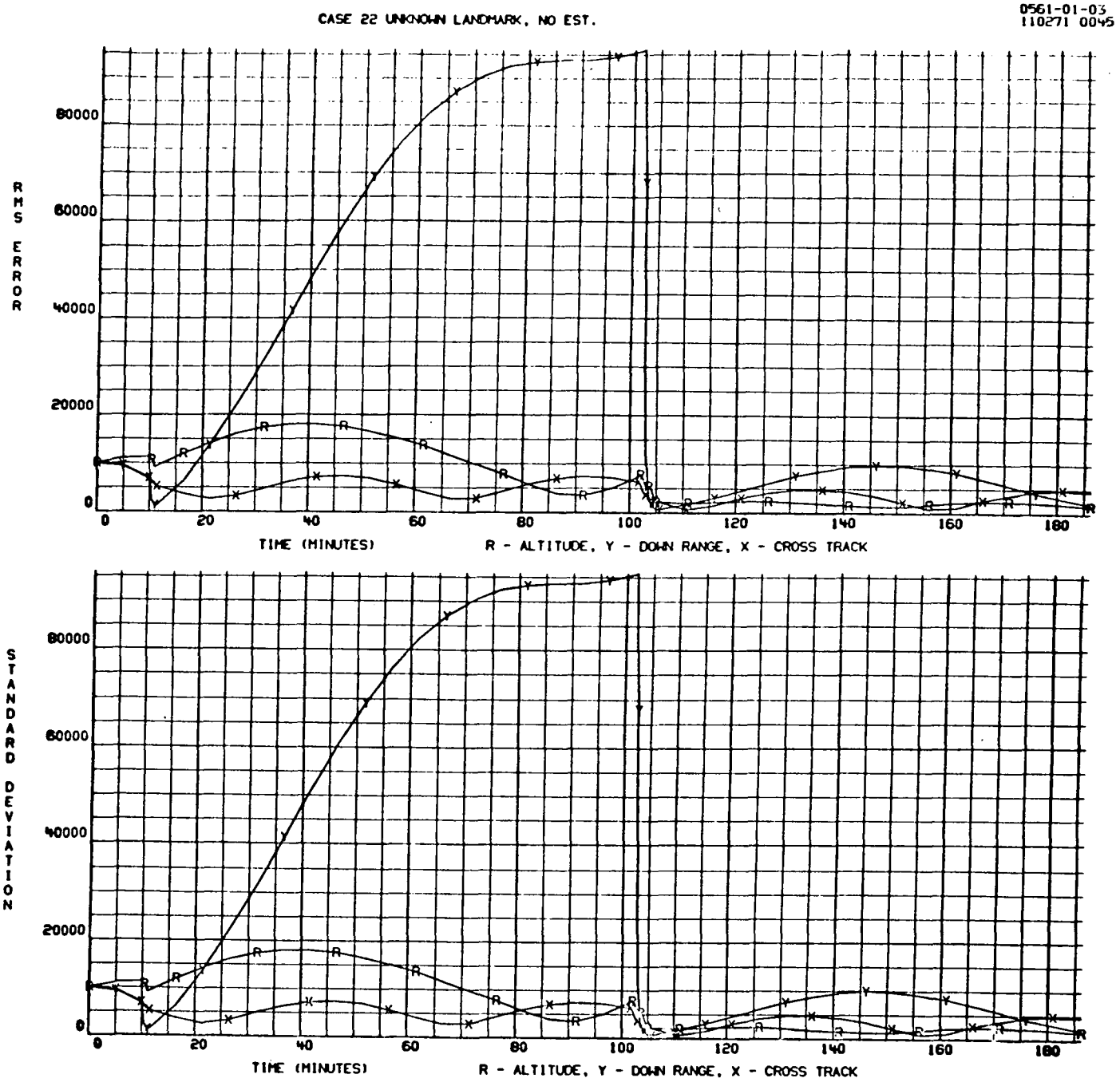

Figure 8-15. Unknown Landmark Measurements

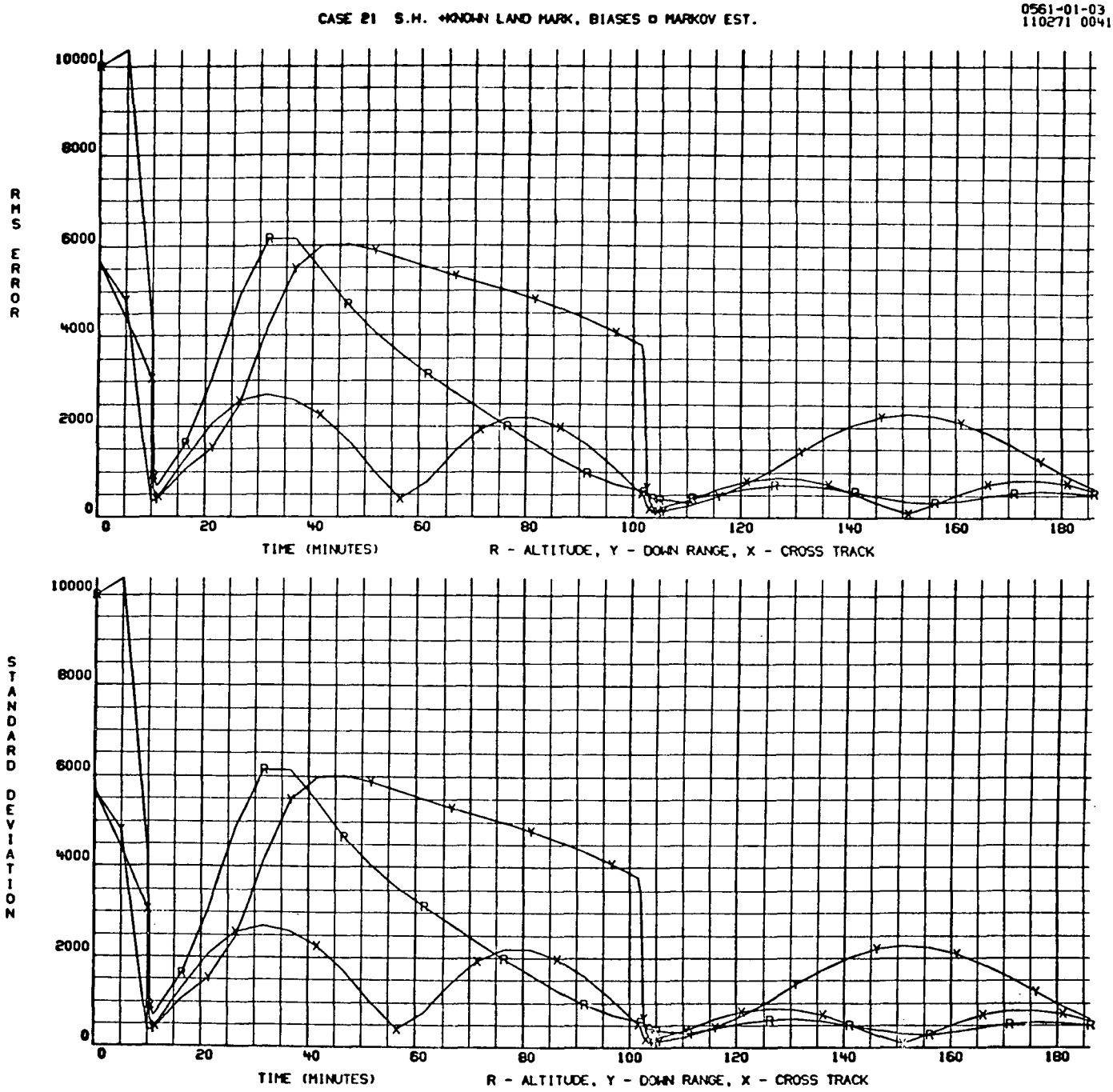

Figure 8-16. Star Horizon Plus Known Landmarks

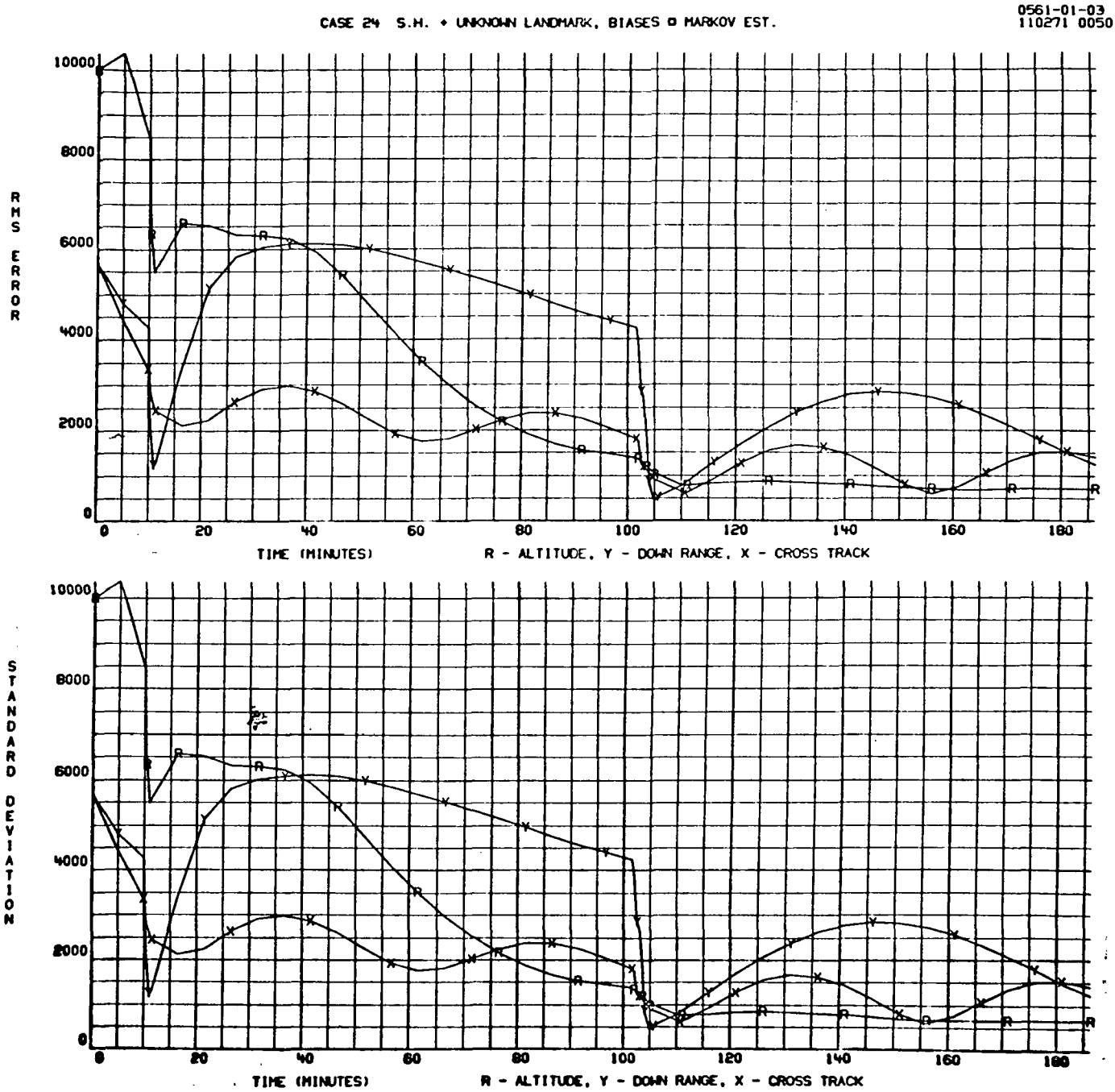

Figure 8-17. Star Horizon Plus Unknown Landmarks

9. CMG ANALYSES

This section documents the details of a subcontract effort conducted by the Aircraft Equipment Division of General Electricl Company. Two main subjects are covered - CMG maintenance and configuration trade evaluation. The reader is also referred to Volume IV, Subsystem Analyses (SD71-217-4), for design details on the control moment gyro (CMG) assembly.

9.1 MAINTENANCE ANALYSIS

There are three aspects of CMG maintenance. The first is a tradeoff analysis that was used to select the method of maintenance that should be employed. The second is the procedures used to replace the faulty modules; an estimate of crew time also is made for each of these procedures. Finally there is a brief discussion of the benefits associated with increased electronic redundancy.

Maintenance Concept Trade

Three methods of maintenance of the CMG's were examined. One consisted of total replacement of the CMG in the event of a failure along with ground repair, a second was replacement of the faulty module only and repairing it on the ground, and the third was similar to the second except that the repair is done aboard the station rather than on the ground.

The tradeoff analysis was performed by using a cost factor equation as defined in Table 9-1. The purpose of this equation is to relate the significant factors of the maintenance methods. Such a quantitative measure can be used to assess one method relative to the others. The factors of the equation are defined in Table 9-1. These figures also show the magnitude of the constants used and the rationale.

Three elements of the CMG were investigated as part of the analysis: the spin assembly, the gimbal drive unit, and the gimbal drive electronics. Tables 9-2, 9-3, and 9-4 show some of the maintenance characteristics for each of these CMG components as a function of the methods being analyzed. Table 9-5 indicates the weight and cost factors that were used in the evaluation equation.

The results obtained from using the cost factor equation for the three selected components and the three maintenance methods are shown in Tables 9-6, 9-7, and 9-8. The module replacement with ground repair concept is the lowest cost for all three modules. This would be the case even if the factor Ax and Px were not used in the equation. These factors relate the development and production costs. A significant element to the equation is the factor L, which represents the ability of the component to perform after it has been repaired. Notice that ground repair is assumed perfect relative to inflight repair which is considered less than perfect.

Table 9-1. Maintenance Cost Factor

$$CF = [(A + P)\ rX + FWy + ZDt_1 + FV + SV + Ct_2 + Tt_3 + E]L$$

Constants	Rate	Rationale
A - Development	$117,000/channel	Est. 30 CMG's
P - Production	200,000/channel	Est. 30 CMG's
R - Resupply	250/lb	Shuttle
D - Downtime	10,000/hr	Estimate
F - Facilities - Repair	50,000/ft^3	$2 B Station & 40,000 ft^3
S - Storage space	5,000/ft^3	10% of facilities
C - Crew maintenance	400/hr	Estimate
T - Training crew	100/hr	Estimate
W - Weight CMG channel		

Variables:

r - Repair factor (fraction of cost to make repair-0.1 to 1)
X - Component cost fraction
y - Component weight fraction
Z - Experiment time loss
V - Volume - facilities or storage
E - Repair equipment
L - Repair degradation factor
t_1 - Downtime
t_2 - Crew maintenace time
t_3 - Crew training time

Space Division
North American Rockwell

Table 9-2. Spin Assembly Repair

Repair Approach	Repair Procedure (After Shutdown)	Crew Requirements	Down Time Hrs	Status After Repair	Facilities	Resupply Cost & Weight % of CMG
1. Replace CMG	Unplug leads, remove four mounting bolts, replace failed CMG with new unit.	Minimum mechanical skills. Little training. Two crewmen preferred.	1	No Degradation	No special facilities.	C - 100% W - 100%
2. Replace Spin Assembly	Insert gimbal alignment pins, remove inner gimbal drive & sensor unit, lift out spin assembly, replace with new unit.	Minimum mechanical skills. Some training. Two crewmen preferred.	3	No Degradation	Alignment Pins.	C - 36% W - 45%
3. Repair in Orbit	Equalize spin assembly pressure with ambient, remove end caps, oilers, bearing modules, install new bearing modules & oilers, adjust bearing preload.	Skilled technician required. Well trained. Two crewmen required.	6	Rotor balance inferior (3X) Danger of dirt in bearings with resulting noise & shorter life.	Clean assembly area. Special tools & instruments. Spare parts.	C - 5% W - 5%

Space Division
North American Rockwell

Table 9-3. Repair of Gimbal Drive Unit

Repair Approach	Repair Procedure (After Shutdown)	Crew Requirements	Down Time Hrs	Status After Repair	Facilities	Resupply Cost & Weight % of CMG
1. Replace CMG	Unplug leads, remove four mounting bolts, replace failed CMG with new unit.	Minimum mechanical skills. Little training. Two crewmen preferred.	1	No Degradation	No special facilities.	C - 100% W - 100%
2. Replace Drive Unit	Insert gimbal alignment pins, remove failed gimbal drive unit (four bolts), replace with new unit.	Minimum mechanical skills. Some training. One crewman required.	1½	No Degradation	Alignment Pins.	C - 11.5% W - 12.5%
3. Repair Drive Unit	Remove failed gimbal drive unit as in 2. above, place in clean area, disassemble, inspect, replace motor, bearings, gears as required.	Skilled technician. Well trained. One crewman required.	10	Slight Degradation	Clean assembly area - 3 cu.ft. Special tools. Inspection equipment. Spare parts.	C - 4% W - 4%

Space Division
North American Rockwell

Table 9-4. Repair of Gimbal Drive Electronics

Repair Approach	Repair Procedure (After Shutdown)	Crew Requirements	Down Time Hrs	Status After Repair	Facilities	Resupply Cost & Weight % of CMG
1. Replace CMG	Unplug leads, remove four mounting bolts, replace failed CMG with new unit.	Minimum mechanical skills. Little training. Two crewmen preferred.	1	No Degradation	No special facilities.	C - 100% W - 100%
2. Replace Electronics	Remove electronics module & replace with new module.	Minimum skills. Minimum training. One crewman required.	0.2	No Degradation	No special facilities.	C - 4.5% W - 2.0%
3. Repair in Orbit	Remove electronics module, place in lab repair area. Determine failed component, replace from spare parts supply. Check operation. Replace.	Skilled technician. Well trained. One crewman required.	4	Reduced Reliability	Electronic Lab test & repair area.	C - <½% W - <½%

Space Division
North American Rockwell

Table 9-5. CMG Weight, Cost, and Reliability Factors

Component	Weight %	Cost %	Failures Per Million Hours
Spin assembly	44.5	35.5	2.0
Spin motor electronics	1.5	4.0	6.0
Gimbal	8.5	7.5	--
Gimbal drive (I.G.)	12.5	11.5	1.7
Drive electronics (I.G.)	2.0	4.5	2.7
Sensor (I.G.)	3.5	5.0	1.0
Sensor electronics (I.G.)	1.0	2.5	1.2
Gimbal drive (O.G.)	12.5	11.5	1.7
Drive electronics (O.G.)	2.0	4.5	2.7
Sensor (O.G.)	3.5	5.0	1.0
Sensor electronics (O.G.)	1.0	2.5	1.2
Outer support	7.5	6.0	--
Total	100.0	100.0	21.2

Table 9-6. Cost Factors for Spin Assembly

Factor	Replace CMG Channel-Ground Repair*	Replace Spin Assembly-Ground Repair*	Repair In Orbit
Ax	117.0	41.5	6.0
Px	200.0	71.0	8.5
RWy	75.0	33.5	2.5
Dt	10.0	30.0	60.0
Fv	--	--	--
Sv	200.0	50.0	15.0
Ct	0.8	2.4	4.8
Tt	1.0	5.0	20.0
E	--	1.0	15.0
SUM	603.8	234.4	131.8
L	1	1	.2
CF	603.8	234.4	263.6

Numbers in $1000.
*First repair cycle.

Table 9-7. Cost Factors for Gimbal Drive

Factor	Replace CMG Channel-Ground Repair	Replace Gimbal Drive-Ground Repair	Repair in Orbit
Ax	117.0	13.5	4.7
Px	200.0	23.0	8.0
RWy	75.0	9.4	4.0
Dt	10.0	15.0	100.0
Fv	--	--	150.0
Sv	200.0	5.0	5.0
Ct	.8	.6	4.0
Tt	1.0	3.0	10.0
E	--	1.0	17.0
Sum	603.8	70.5	302.7
L	1	1	1.11
CF	603.8	70.5	336.3

Numbers in $1000.

Table 9.8 Cost Factors for Gimbal Drive Electronics

Factor	Replace CMG Channel-Ground Repair	Replace Electronic Module-Ground Repair	Repair in Orbit
Ax	117.0	5.3	.6
Px	200.0	9.0	1.0
RWy	75.0	1.5	.2
Dt	10.0	2.0	40.0
Fv	--	--	100.0
Sv	200.0	.5	--
Ct	.8	.1	1.6
Tt	1.0	1.0	10.0
E	--	--	15.0
Sum	603.8	19.4	168.4
L	1	1	1.43
CF	603.8	19.4	240.6

Numbers in $1000.

The module replacement concept is clearly cheaper than complete CMG replacement with ground repair because of the larger weight of the latter. The real issue of this tradeoff is ground repair versus on-orbit repair of the faulty module. The issue is decided in favor of ground repair due to the inexpensive shuttle transportation system (although not cheap enough to warrant changing the entire CMG) compared with the extra cost required for facilities and increased requirements on the crew.

Maintenance Procedures

This subsection presents the maintenance procedures associated with the selected CMG maintenance concept. Time estimates, as well as design features, to implement the maintenance and special facilities requirements are considered. The CMG maintenance items to be included are:

1. The spin assembly.
2. The gimbal drive and sensors.
3. The electronics modules (drive, sensor, spin)

Spin Assembly

There are three types of spin assembly failures:

1. A failure which requires a rapid deceleration of the rotor (such as a rubbing contact with the rotor).

2. A gradual degradation where a decision is made at some point to repair or replace the failed unit (high spin bearing friction).

3. Loss of spin motor torque (open circuit of motor windings).

The first type of failure is treated differently than the latter two types. Table 9-9 gives crew procedures and time estimates for Case 1 and Table 9-10 gives similar data for Cases 2 and 3. Item 2 of Table 9-10 may need clarification. By positioning the momentum vector of the decelerating CMG in the direction of the anticipated secular momentum, the CMG can be made to decelerate at a rate to oppose the buildup of the secular momentum. Thus, the remaining CMG's will saturate at a slower rate.

Gimbal Drive and Sensor Module

The gimbal drive may fail due to high friction, open torque windings, loss of the tachometer signal, etc. Maintenance of the gimbal drive also will consist of the replacement of the failured unit and a subsequent ground repair. Maintenance procedures are given in Table 9-11. The manual precession of the spin assembly to a locking position could be accomplished by a 50 ft-lb torque (approximately 50-lb force) for a maximum of 16 seconds if locking positions are no more than 45 degrees apart.

The sensor module is similar to the gimbal drive.

Table 9-9. Maintenance of Spin Assembly
(Rapid Rotor Deceleration Required)

Crew Procedure	Time Estimate (minutes)
1. Open power switch	--
2. Bleed gas into gimbal housing, reverse spin motor drive, monitor rotor to stop.	10
3. Rotate spin assembly to null position and insert stop pins at inner and outer gimbals.	2
4. Remove sensor and gimbal drive modules. (Loosen and remove bolts)	15
5. Pull inner gimbal stop pins and remove spin assembly.	15
6. Position new spin assembly and insert stop pins.	20
7. Replace sensor and gimbal drive module, remove pins.	20
8. Spin up rotor, close drive loop.	180
	262

Table 9-10. Maintenance of Spin Assembly
(Gradual Degradation or Loss of Spin Motor)

Crew Procedure	Time Estimate (minutes)
1. Continue to operate CMG until speed is 1/2 to 1/4 (of rated)	60 - 120
2. Position CMG to take maximum advantage of slowdown and operation in gimbal nulling mode.	1 - 2
3. Decelerate CMG rotor in accordance with vehicle momentum requirements.	60 - 180
4. When rotor is stopped, place CMG at null position and insert stop pins.	2
5. Remove sensor and gimbal drive modules. (Loosen and remove bolts)	15
6. Pull inner gimbal stop pins and remove spin assembly.	15
7. Position new spin assembly and insert stop pins.	20
8. Replace sensor and gimbal drive modules, remove pins	20
9. Spin up rotor, close drive loop.	180
	252

Table 9-11. Maintenance of Gimbal Drive

Crew Procedures	Time Estimate (minutes)
1. Remove gimbal drive power.	--
2. Apply torque (manual) to spin assembly to precess CMG into a lock position and insert stop pins.	5
3. Remove gimbal drive module (remove bolts)	10
4. Replace gimbal drive module with spare unit. (Remove stop pins)	15
5. Close Drive loop.	--
	30
Note: Procedure and time is similar for sensor module.	

Electronic Modules

The electronic modules are designed to be readily replaced. The spin motor electronics, however, will be located on the spin assembly where it will not be accessible at all times unless the CMG can be precessed to a favorable position. The spin electronics consists of two channels. Either of the two can fail without loss of motor torque sufficient to cause deceleration of the CMG rotor. Therefore, if one electronic channel fails, the replacement of this channel could be delayed until the spin assembly is in a position which allows replacement. No degradation in performance would result.

For the electronics maintenance is as shown in Table 9-12.

Table 9-12. Maintenance of Electronics

Crew Procedures	Time Estimate (minutes)
1. Shut off power and unplug failed unit	2
2. Replace with spare and turn on power	2

Design Features and Facilities

With the maintenance procedures outlined there are few special design features and no special facility requirements. Design requirements include:

1. A valve to bleed in gas to the evacuated spin assembly.

2. Stop or alignment pins in each gimbal axis to allow assembly and disassembly of the spin assembly, gimbal drive, or sensor modules. Alignment holes should be provided at least every 45 degrees.

3. Accessible and readily changeable electronic modules. Individual modules would include single channel of spin motor electronics, single channel of gimbal drive electronics, and sensor electronics.

Crew Skills

Crew skill requirements for CMG maintenance are given in Table 9-12. Type of skill and training period are listed. Greatest skill requirements are in the area of failure detection and analysis.

Reliability Improvement

Another approach to maintenance of CMG operation over the 10-year life is to improve the reliability of each component as much as practical and to use redundant elements where possible. The components of each CMG channel may be divided into the electromechanical components, where redundancy is not as easily realized, and the electrical elements, where operation may be switched from one redundant unit to another.

Table 9-14 gives the failure rates for the two classifications of components. The use of redundancy in the electrical components will increase reliability to an acceptable level (R 0.9 in 10 years) with two standby sets of electronics (Figure 9-1).

For the electromechanical components, obtaining an acceptable reliability may be prohibitive in terms of cost (see Figure 9-2). Also, with improved electromechanical reliability, other penalties (such as increased power, weight, size and reduced performance) will exist.

Taking the failure rates of Figures 9-1 and 9-2, we may determine the cost factors for several degrees of subsystem sophistication to improve reliability. Table 9-15 indicates that a cost of 2X (X is cost of nonredundant CMG channel) is justified for improving reliability.

9.2 CMG CONFIGURATION TRADE

A comprehensive CMG configuration comparison was made in previous studies. This analysis concluded that there were three candidates which were preferred:

1. The 5-skew single gimbal
2. The 3-planar double gimbal
3. The 4-skew single gimbal

The 3-planar double-gimbal configuration (3PM) was eventually selected for the 33-foot station.

Table 9-13. Crew Skill Requirements

Maintenance Item	Type of Skill	Approximate Training Time
1. Spin assembly	Mechanical dexterity (auto mechanic)	1 week
2. Gimbal drive	Mechanical dexterity (auto mechanic)	2 days
3. Sensor unit	Mechanical dexterity (auto mechanic)	2 days
4. Electronics	Minimum electronic repair (home TV repair)	2 hours
5. Failure detection and analysis	Skilled in deduction and improvising with a good working knowledge of equipment operation.	6 months

Table 9-14. Failure Rates of Electrical and Electromechanical Components

Component	Failure Rates (per million hrs)	Reliability (10 year period)
Spin assembly	2.0	
Gimbal drives (2)	3.4	
Sensor unit (2)	2.0	
Total electromechanical	7.4	0.523
Spin motor electronics	6.0	
Gimbal drive electronics (2)	5.4	
Sensor electronics(2)	2.4	
Total electrical	13.8	0.297

Table 9-15. Cost Factors for Redundant Approach

Factor	Initial Cost of X	2X	3X
(A+P)x	317.0	634.0	951.0
RWy	140.0	41.5	23.0
Dt	625.0	185.3	103.0
Ct	1.5	0.4	0.2
Tt	1.9	0.5	0.3
CF	1085.4	861.7	1077.5

Numbers in $1000.00

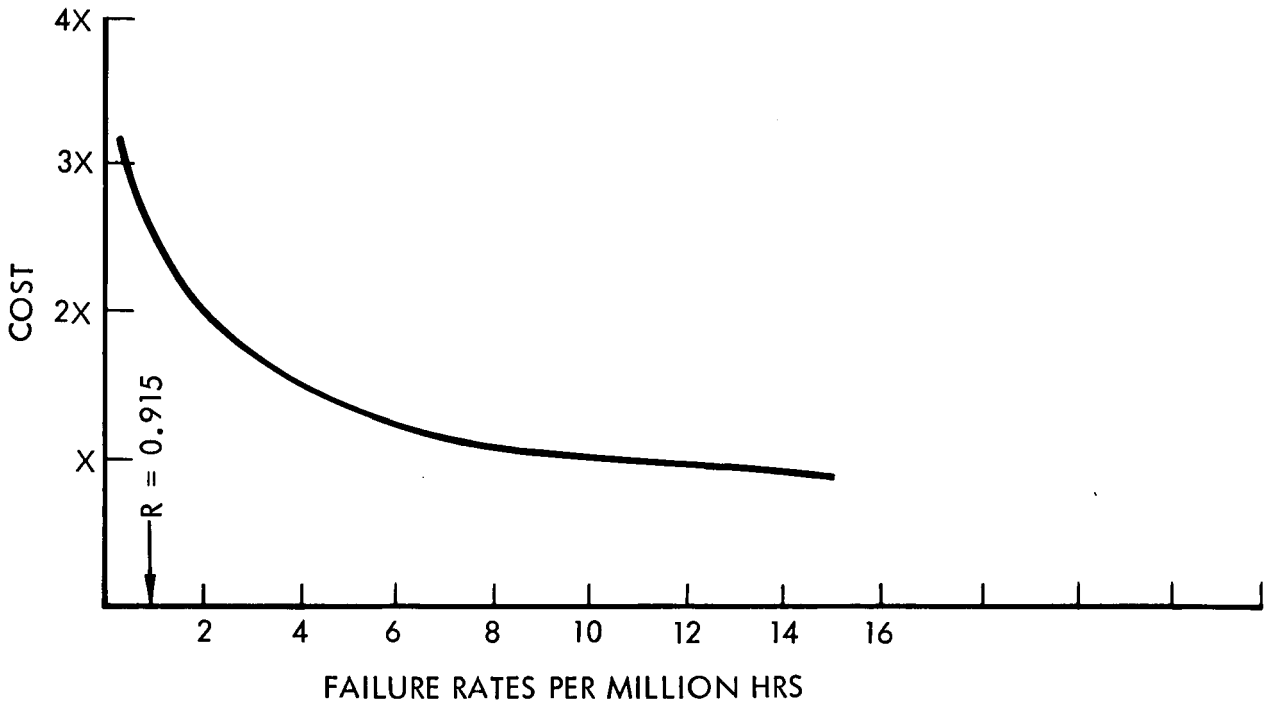

Figure 9-1. Cost Versus Failure Rates - Electrical Units

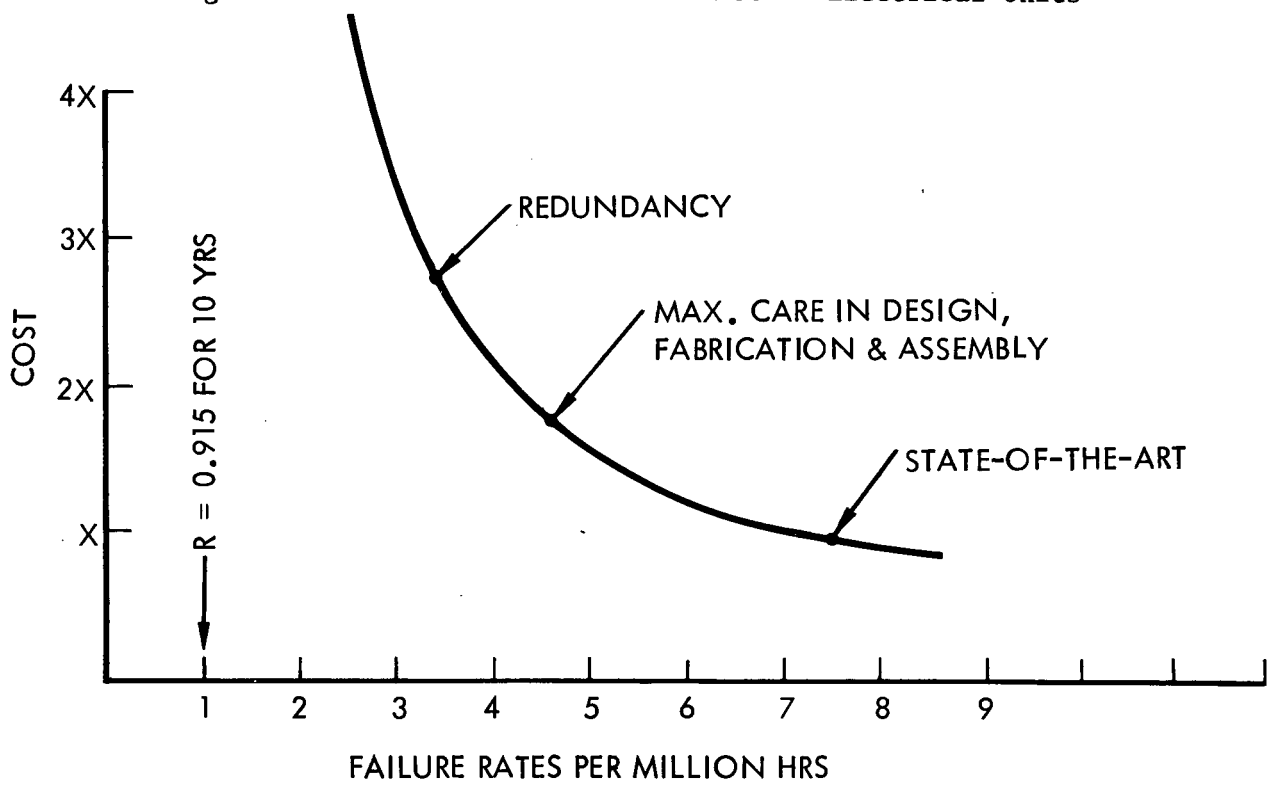

Figure 9-2. Cost Versus Failure Rates - Electromechanical Units

For the modular station, two requirements have evolved which may change the conclusions made on the 33-foot station: one, the gyros must be sized to meet the full momentum requirements per orbit with one failed CMG channel; two, volume of the CMG becomes more critical for the smaller station.

These requirements, coupled with progress made in CMG technology, calls for an updated tradeoff.

Summary

Of the three most suitable candidate configurations considered, the single-gimbal 5-skew array rates highest by any criteria picked. Second choice is the double-gimbal 3PM array. The addition of a fourth gyro (4PM) is not recommended by any criteria and is inferior to the 3PM in the normal comparative factors of weight, power, volume, and reliability.

Since development of the 5-skew array in the size range required is nearing completion, this approach should be seriously considered.

Candidate Systems

The three candidate systems which were preferred previously and which will meet the full momentum requirement with one CMG channel failure are:

1. A three-gyro, double-gimballed, planar array (3PM - 3-gyro parallel mount)

2. A four-gyro, double-gimbal, planar array (4PM)

3. A five-gyro, single-gimbal, skewed array (5 skew)

The four-gyro, single-gimbal, skewed array was discarded due to limited momentum capability with one gyro failed.

Trade Study

The momentum capability of each candidate configuration with one gyro failed is shown in Table 9-16. For the 5-skew array, full momentum utilization is not assumed. The individual CMG momentum appears in the right-hand column as H. Momentum requirements are assumed to be H_x = 310 + ft-lb-sec and Hy = Hz = 3100 ft-lb-sec (in plane components).

The CMG assembly data are given in Table 9-17. For equivalent weight, the assigned power constant is 0.5 pound per watt and the assignable volume constant is 3 pounds per cubic foot. (The latter has been increased by a factor of three to indicate the volume limitations of the modular station.)

Table 9-17 is based on the optimum weight CMG.

Table 9-16. Momentum of CMG Arrays (With One CMG Failure)

Candidate Configuration	Momentum		CMG Momentum - H
	X Axis	Y-Z Plane	
3PM	0.52H*	1.93H	1600
4PM	0.77H*	2.9H	1070
5 skew	0.8H	3.0H	1030

H - CMG momentum - ft-lb-sec
* - ± 15° inner gimbal angle

Table 9-17. CMG Assembly Characteristics

Candidate Configuration	System Wt. (lb)*	Avg. Power (watts)	Clearance Volume (cu.ft)	Equivalent (wt lbs)
3PM	835	153	140	1332
4PM	1035	187	168	1633
5 skew	703	245	105	1141

*Includes electronics but not mount

Table 9-18. Other Comparison Factors

Factors	CMG Configuration		
	3PM	4PM	5 Skew
Development and design costs	2.0	1.5	1.0
Degradation with one failure	2.0	1.0	2.0
East of maintenance	2.0	2.5	1.0
Feasibility and simplicity of anti-hangup	1.0	1.0	2.0
Performance margin	2.0	2.0	1.0
Nutation damper capability	1.0	1.0	2.0
Total	10.0	9.0	9.0
Comparative No. (X)	1.11	1.00	1.00

Other comparative factors are compared in Table 9-18. Equal weighting is given to each factor.

The summary for each of the major factors appears in Table 9-19. It is apparent here that the 5-skew CMG subsystem rates highest regardless which selection criteria are considered. The 3PM array is the second choice.

This conclusion is verified in the five selection criteria used in Table 9-20.

Table 9-19. Comparison Summary

Normalized Factor	CMG Configuration		
	3PM	4PM	5 skew
System Eq. Weight (W)	1.17	1.43	1.00
Failure Rates (F)	1.76	2.35	1.00
System Complexity (C)	1.05	1.40	1.00
Other Factors (X)	1.11	1.00	1.00

Table 9-20. Selection Criteria

Criteria Used	Selection Criteria Number		
	3PM	4PM	5 skew
A = 1/7 (4W+2F+C)	1.32	1.69	1.00
B = 1/9 (4W+2F+C+2X)	1.28	1.84	1.00
C = 1/8 (2W+2F+C+2X)	1.14	1.37	1.00
D = 1/6 (2W+F+C+2X)	1.23	1.43	1.00
E = 1/75 (4W+5F+C+2X)	1.18	1.37	1.00
Note: Lower number is more favorable			

Aside from the tradeoff results, there are logical reasons why the 5 skew is now favored:

1. The momentum loss is less when a failure occurs.

2. The direct gimbal drive of the 5 skew reduces system weight and improves reliability considerably.

3. Recent progress in single-gimbal CMG systems has increased momentum utilization. However, full momentum utilization is not assumed for the tradeoff.

4. The utilization of the CMG's for wobble damping may not be as significant as originally assumed.

One conclusion which continues to appear is that the use of additional gyros of the same type (3PM versus 4PM) is not justifiable.

10. INFORMATION MANAGEMENT, SUPPLEMENTAL ANALYSES

The basic information system design is presented in Volume IV, Subsystems Analyses (SD 71-217-4). That document presents the MSS communications requirements, analyses, and subsystem design.

This section presents three supplemental analyses pertaining to ground communications for the MSS. These analyses are ground information management analysis, voice conference implementation, and MSS tracking implementation.

10.1 GROUND INFORMATION MANAGEMENT ANALYSIS

A trade analysis to define the MSS ground communications network was conducted in cooperation with the MSC IMS working group. The objective was to identify the ground sites for MSFN remote stations, data relay satellite ground station, net switching center, and the experiment data/control center. Table 10-1 lists the model ground network elements provided by NASA and both COMSAT and potential tracking/data relay satellite (TDRS). Table 10-2 amplifies the TDRS performance and operating characteristics. Table 10-3 amplifies the performance capabilities of the selected MSFN remote sites.

Table 10-1. Elements of Future Communications Systems

Element	Characteristics
Ground network	85' antenna stations: Goldstone, Madrid, Canberra, Rosman, Fairbanks 30' antenna stations: principally launch area coverage sites, to include MILA; others furnished on request. Systems: Apollo Unified S-Band Frequencies: 2200 - 2300 MHz (s/c to ground); 2025 - 2120 MHz (ground to s/c) Communications lines: 48K Hz or 72K bits/second to each station References: MG 400 reports, MSFN Ground Systems, September 1968; X530-70-45, STADAN Manual, December 1970
Synchronous satellite	Systems: VHF and Ku-band relay of FM or PM signals Number of satellites: Two plus one on-orbit spare Location of satellites: 15°W, 145°W. Spare somewhere between Location of ground station: GSFC Location of communications switching center: undetermined

Table 10-2. TDRS Performance Characteristics

Item	Characteristic
Systems	VHF and Ku-band relay of FM or PM signals
Number of satellites	Two plus one on-orbit spare
Location of satellites	15°W, 145°W - spare somewhere between
Location of ground station	GSFC
Location of communications switch center	Undetermined
Acquisition Method	VHF - initiated by ground or user spacecraft via order wire Ku - scheduled or called up via VHF order wire Note - spacecraft should have programmed antenna tracking for acquisition and subsequent auto-tracking
Forward link (ground through satellite to spacecraft) Transmission frequency (satellite to spacecraft)	VHF - 126-130 MHz Ku - 13.4-14.2 GHz
EIRP to spacecraft	VHF - voice channel - 30 dbw digital command - 27 dbw Ku - 52 dbw
Relay technique	Linear frequency translation, negligible distortion
Types of modulation	VHF - voice - FM or PM (analog or digital) command - PM (digital) Ku - FM or PM, analog or digital Note - AM not permissible since limiting amplifiers are used
Reverse link (spacecraft through satellite to ground)	VHF - 136-144 MHz Ku - 14.4-15.35 GHz
System noise figure	VHF - 6 db Ku - 6 db (1200°K system noise temperature, including earth contribution)
Bandwidth (RF)	VHF - 2 MHz (spread spectrum) Ku - 200 MHz

Table 10-2. TDRS Performance Characteristics (continued)

Item	Characteristic
Channelization	VHF - each statellite will accommodate up to 20 users at up to 10 KBPS each plus one voice channel to be shared among manned spacecraft Ku - each satellite will accommodate two users at 50 MBPS each
Relay technique	Linear frequency translation, negligible distortion
Types of modulation accommodated	VHF and Ku - FM or PM, analog or digital Note - AM not permissible since limiting amplifiers are used. Standard color video (analog or digitized) may be handled on Ku.
Antennas	VHF - 16 db endfire array, 26°, cross-polarized Ku - 5 ft. parabolic dish (2 on each satellite), RH circular polarization
Tracking accuracy	Ku - 6 meters systematic, 2 meters random (range) 0.05 meter per second (velocity) with 10-second integration time 0.60 meter per second (velocity) with one-second integration time

Table 10-3. MSFN Ground Station Communication Characteristics

Goldstone/Madrid/Honeysuckle Creek

Transmitter	Receiver
Frequency - 2090-2120 MHz	Frequency - 2270-2300 MHz
Carrier EIRP - 94 or 97 dbw	Receiver noise figure - 1.7 db
85-foot antenna gain - 51 db	85-foot antenna gain - 52 db
Power amplifier carrier output - 20 kw or 40 kw	IF bandwidth - 6.0 MHz
Carrier modulation - PM (coherent)	Carrier modulation - PM (coherent)
Voice subcarrier - 30 kHz, FM (100-3000 Hz) ± 7.5 Hz deviation	Carrier frequency 2282.5
Updata subcarrier - 70 kHz, FM ±5.0 kHz deviation	Voice subcarrier - 1.25 MHz, FM
2 kHz sine wave, biphase modulation	Telemetry subcarrier - 1.024 MHz, FM 1.6 kbps, 51.2 kbps
1 kHz sync tone	Television - FM direct on carrier
	Carrier frequency - 2272.5 MHz

Space Division
North American Rockwell

Table 10-4 amplifies the performance capabilities of the landline links between the existing switching center (GSFC) and MSC for Skylab. These capabilities would be available to MSS at no cost; MSS would be charged for any modifications to this model, and the landline operating costs from the network switching center to mission control and the experiment data/control center (EDCC). The study was to locate the network switching center and the EDCC to minimize total program costs.

Table 10-4. Performance Capabilities of Land Links

MSFN-COMSAT-GSFC-MCC Link

- Limited to 96 kbps, total
- Operated full-time, handles 9.5×10^9 bits per day
- Cannot handle real-time voice without interruption (4 1/2 hours)
- Without TDRS either:
  - Experiment data severely curtailed
  - Exotic data reduction and processing onboard

TDRS Link

- Capability of 20 voice plus 2 medium (video) channels (3 mbps)
- Must be time-shared with competing space elements
- Requires 2 or 3 directive antennas on MSS

Table 10-5 provides the NR estimate of data transmission requirements for the MSS at IOC. These data incidate that the 24-hour average, if dumped to the MSFN remote sites, would saturate the landline links of the model network. Therefore, it was recommended that the primary link to ground be via the K-band capability of the TDRS. The same multiplex modes described for Station A can be utilized on K-band link except that PRN ranging is not needed. The S-band link to MSFN is retained for ground ranging, MSS buildup operations data, and a secondary link to MCC for normal station operations. The S-band capability of the MSS also serves the shuttle voice, data, and ranging requirements.

MSS buildup operations (during the unmanned phases) require quiescent conditions to minimize stored energy resources. The solution postulated provided a wake-up receiver that could, by RF command, turn on the S-band transmitter-receiver for periodic ranging and vehicle telemetry. This wake-up receiver function should be available before and after the relatively short time the MSS is within line of sight of the MSFN site. Therefore, the VHF capability of the TDRS was selected for this function.

Table 10-5. MSS Communications Operations Requirements

Estimation of Experiment Data Rates

Full integrated FPE schedule -	384×10^9 bits per day acquired
Station A (12 men) scaled to -	180×10^9 bits per day acquired
Initial MSS (6 men) estimated at -	*100×10^9 bits per day acquired
Station A (9 scientists) scaled to -	2×10^9 bits per day transmitted 3×10^9 bits per day transported
Initial MSS (3 scientists) estimated at -	10×10^9 bits per day transmitted 15×10^9 bits per day transported

Rationale: scientists have only 1/3 the hours and 1/3 the skills, thus are only 1/9 as effective in reducing data onboard

10×10^9 bits per day must be cleared in 10 hours or less

Rationale: crew on single 10-hour shift basis; TDRS must be shared with other elements

Assume: 6 hours of active transmission

Required Rate: $\frac{10 \times 10^9 \text{ bits}}{21.6 \times 10^3 \text{ sec}} = 0.46 \times 10^6$ bits per second

Note: this is approximately equal to station A medium telemetry rate; at high rate (5.0 mbps) total time is 36 minutes per day.

*Assumes 2 RAM's, one of which is earth resources at 94×10^9 bits per day

Space Division
North American Rockwell

Figure 10-1 illustrates the communication linkages to be used. The remaining question of network switching center location is readily answered by reference to Table 10-5. The network switching center must link, by landline, to MCC and the EDCC. Although the data load to MCC for mission control and experiment operations control is relatively light and within the Skylab landline capability without modification (and thus no cost), the data load to the EDCC would saturate this link 24 hours a day. Obviously this is not a viable choice, if only because other missions (shuttle and detached RAM's) must share this link. Increasing the capability of the GSFC-to-EDCC link would be charged to MSS; relocating the network switching center to be co- ocated with MCC and EDCC would be a no-cost alternative. Therefore, the network switching center location was chosen to be at MCC.

10.2 VOICE CONFERENCE IMPLEMENTATION

A study guideline (2.40406) states that a voice conference capability among station, shuttle and ground, and among EVA (local), station, and ground will be provided.

Figure 10-1 illustrates the various communication link frequencies for the MSS. In addition, the shuttle will also have a VHF link through the TDRS to ground. While there are up to 20 voice and data channels on VHF from user (MSS or shuttle or detached RAM) to TDRS, there is only one return channel, which is normally used for order-wire service. As far as is known, the shuttle does not carry K-band equipment.

If the conference capability were set up using the common VHF carriers, the TDRS ground station would become the common relay switching center. The shuttle would use VHF frequency to the TDRS, the MSS would use a different frequency; both would receive the common frequency. In this concept, the shuttle cannot communicate directly to MSS, and the path is from shuttle to TDRS to ground, retranslated and sent from ground to TDRS to MSS. The return path from MSS to shuttle is the same.

This concept is feasible but has two disadvantages: it requires the MSS-shuttle voice to pass through the TDRS twice, an unnecessary complication in procedure, and the single return link from TDRS to user forces a simplex mode of operation.

An alternative implementation concept uses the MSS as the common relay switching center. Shuttle to and from MSS would be on S-band, as full duplex; MSS to and from TDRS could be either VHF or K-band with K-band preferred to allow full duplex in all links. The translation from K-band to S-band would be accomplished at baseband, using the MSS telephone system. In this way, the voice signals are available to all MSS personnel, all shuttle crew, and all MCC (ground) crew. Figure 10-2 illustrates this concept, which is recommended.

The EVA-MSS-MCC conference capability would be implemented in similar fashion except the EVA has either a hardline umbilical to MSS or uses the VHF external communications equipment.

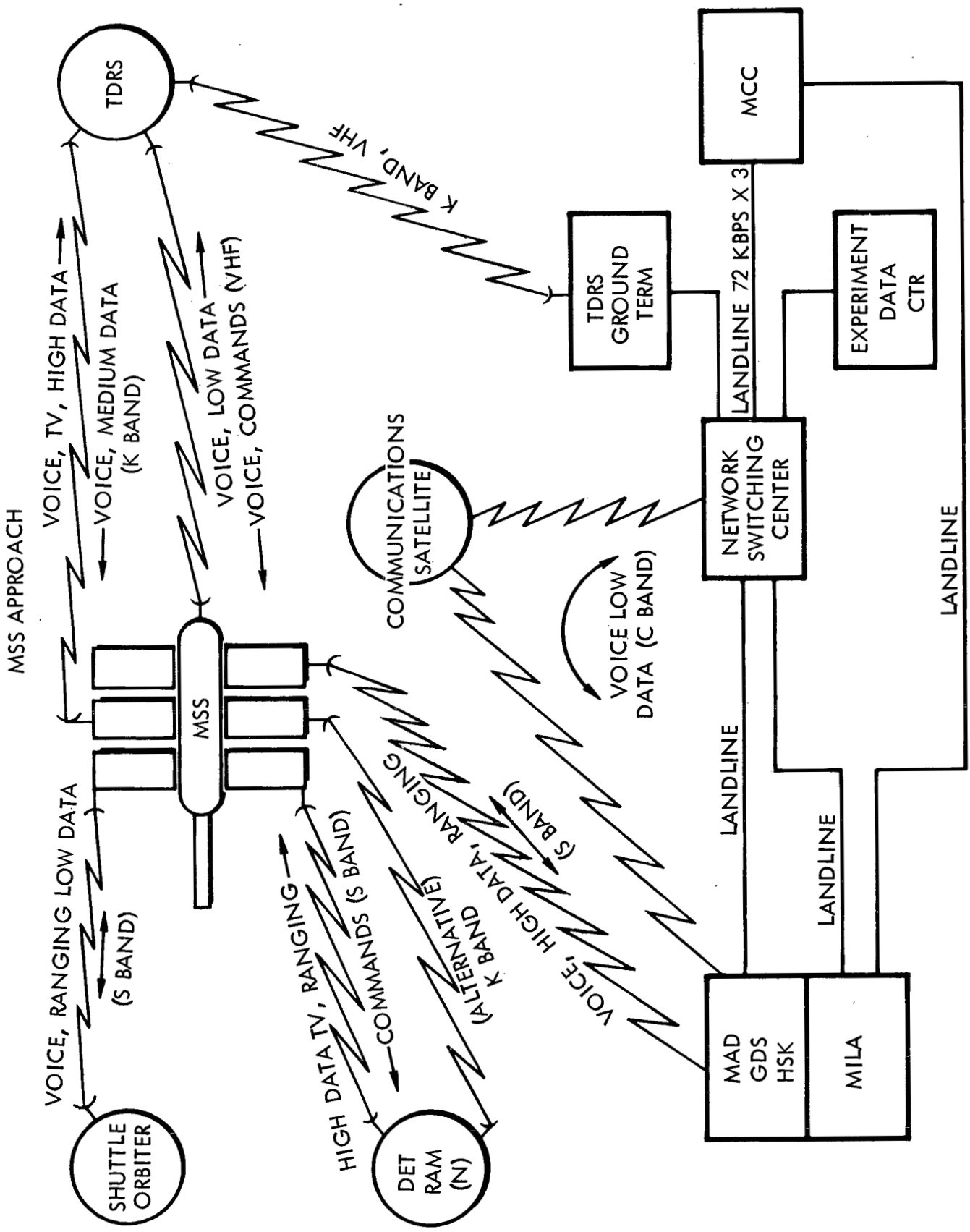

Figure 10-1. MSS Communications Operations Requirements

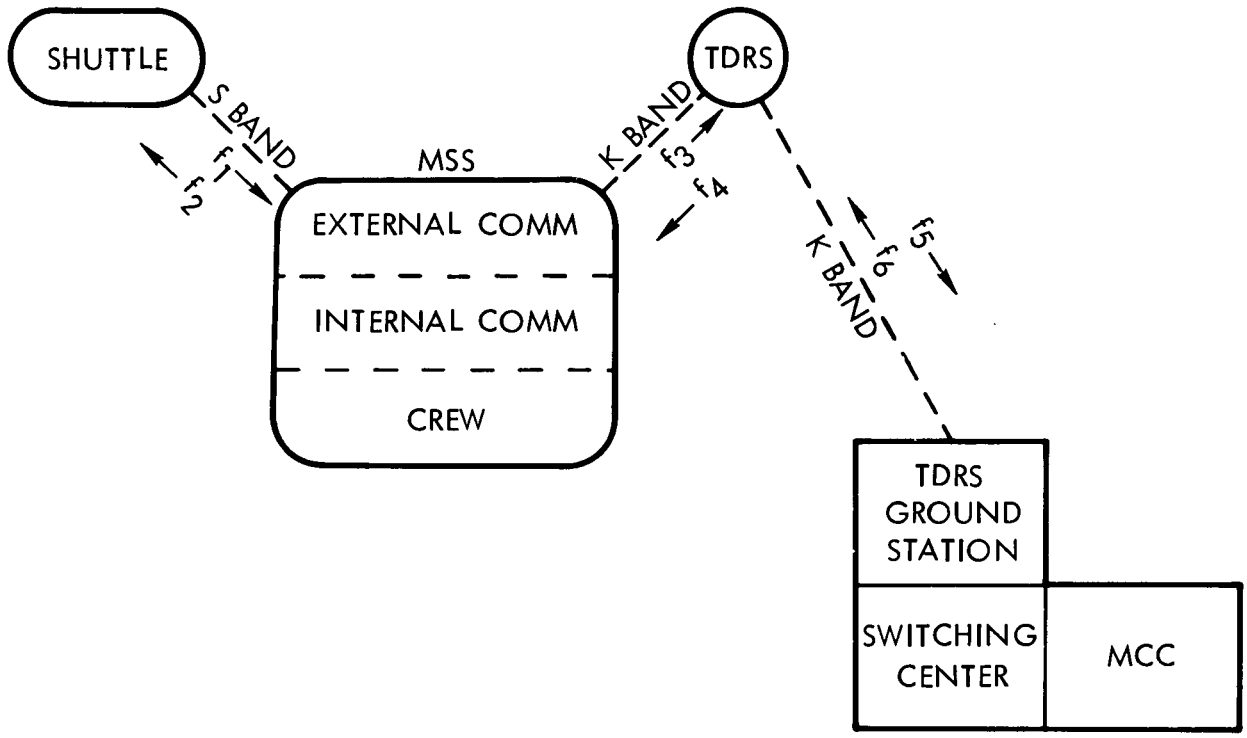

Figure 10-2. Voice Conference Implementation

10.3 MSS TRACKING IMPLEMENTATION

This subsection discusses the "other vehicle" tracking requirements. From the basic design the S-band directive antenna was deleted and a K-band directive antenna dedicated to the TDRS link was to be installed on the initial station. The link to shuttle and detached RAM remained at S-band using fixed antennas. As a result the radar capability that had been integrated with the S-band directive antenna was lost and a substitute means of tracking the shuttle and detached RAM's needs to be implemented.

Metric Tracking Definition

Metric refers to measuring (not the metric system) the relative distance, bearing, and velocities from some fixed measuring point in a selected set of coordinates. Usually time, as a parameter, is used for correlation with other measurements and other systems.

One such measurement of seven parameters is a "position fix", a single point in reference space. For a target that has relative motion, a time series of fixes are needed to establish a track. A minimum of three fixes are necessary to establish the analytical coefficients of an ellipse, such as any earth-centered orbit. Usually, due to random and systematic errors, many more fixes are made, then smoothed by integration and averaging before the orbit parameters (again a seven-term expression) can be derived with confidence.

"Tracking" refers to a computation process that derives an analytical equation that is a best fit to the measured data. By defining an initial condition an estimate of the target's position at any future or past time may be calculated. Thus tracking means the capability to calculate a reliable estimate (prediction) of the target's position.

Because of gravitational anomalies, solar wind, atmospheric drag, gravitational influences of sun, moon, large planets, and even nearby vehicles, the orbit is not a true ellipse; therefore, it is necessary to update the orbit parameters periodically by adding additional measurements. The length of time the orbit calculated from the parameters is "reliable" is determined by the accuracy required of the position estimate (the ephemerides). The updating measurements need not be a full position flux; usually a range and doppler measurement is adequate. In fact, except for the initial calibration measurement, the updating measurements can be reduced to range, or doppler, or range-rate, or angles-only. As a result, if the initial condition can be known in other ways, a full radar capability is not needed.

The study guidelines require that the MSS track the shuttle as a backup to the shuttle rendezvous capability. The shuttle is fully capable of conducting the rendezvous maneuver unaided; the station normally acts similar to GCA aircraft landing control (i.e., measuring the approach rate and providing voice guidance to the incoming vehicle). The GCA operator has wave-off authority but cannot directly control the other vehicle. His information display indicates a desired approach and glide path against which is plotted the actual measured position. The analog for the station operator would be a display of the desired range and approach rate compared to the actual measured values. Angle of approach and angular rates are not important during the ballistic trajectory and have meaning only prior to terminal phase initiation (TPI) and subsequent to braking to a stationkeeping position. For the latter situation, visual contact flying is possible, supplemented by closure-rate data. Prior to TPI an angle measurement from station to shuttle is useful only if all the other data needed to compute the shuttle relative state vector are also available. More to the point, the key parameters are altitude and relative orbital position, which are known from sources other than radar measurements. The altitude of each vehicle is known within that vehicle's guidance system; add to that a measure of the range (and range rate) and either vehicle can determine the projected state vector. As an initial conclusion, a straightforward measurement of range, by the S-band PRN ranging capability, is adequate to fulfill the shuttle requrement and a rendezvous radar is not needed.

The station will perform the navigation of free-flying detached RAM's assigned to its control; the station must establish the detached RAM position relative to the station to within one mile (spherical) up to distances of 450 miles. In distinction to the shuttle, the detached RAM has no knowledge of its own altitude or other state vector data; the station must, therefore, acquire sufficient data to determine the detached RAM location. Two factors are pertinent. The first is that the detached RAM trajectory must be co-planar with the station; energy requirements to establish any other plane are very high. If any other plane is desired the change would be large (such as 55 to 90 degrees), in which case the detached RAM cannot be considered to be controlled by the station since they would not share an unobstructed line of

sight. The conclusion is that the azimuth angle is always near zero. The second factor is that the detached RAM's trajectory is ballistic (i.e., no energy is used to maintain or control its position) and the only effect on a conservative orbit are environmental factors such as atmospheric drag. The detached RAM trajectory may be elongated to several hundred miles in the velocity direction; it does not deviate from a co-altitude height by more than five miles. In particular, if the initial conditions are correct, the co-altitude condition exists at the point of maximum elongation. Thus at this point the detached RAM location is co-planar and co-altitude and at a distance of about 450 miles from the station.

The geometry can be shown as in Figure 10-3 (scale exaggerated). The MSS trajectory is shown as an arc of a circle for simplicity, and the detached RAM trajectory relative to MSS is shown with dashed lines. The locus of a range measurement vector would trace a sphere about the MSS; prior knowledge limits this locus to the intersection in the orbital plane with the MSS trajectory, and provides an estimate of the detached RAM relative position. The depression angle, α, indicates the LOS angular relationship to the MSS coordinate axes. Either the range (LOS) or the depression angle (α) are sufficient to define the chord of an arc.

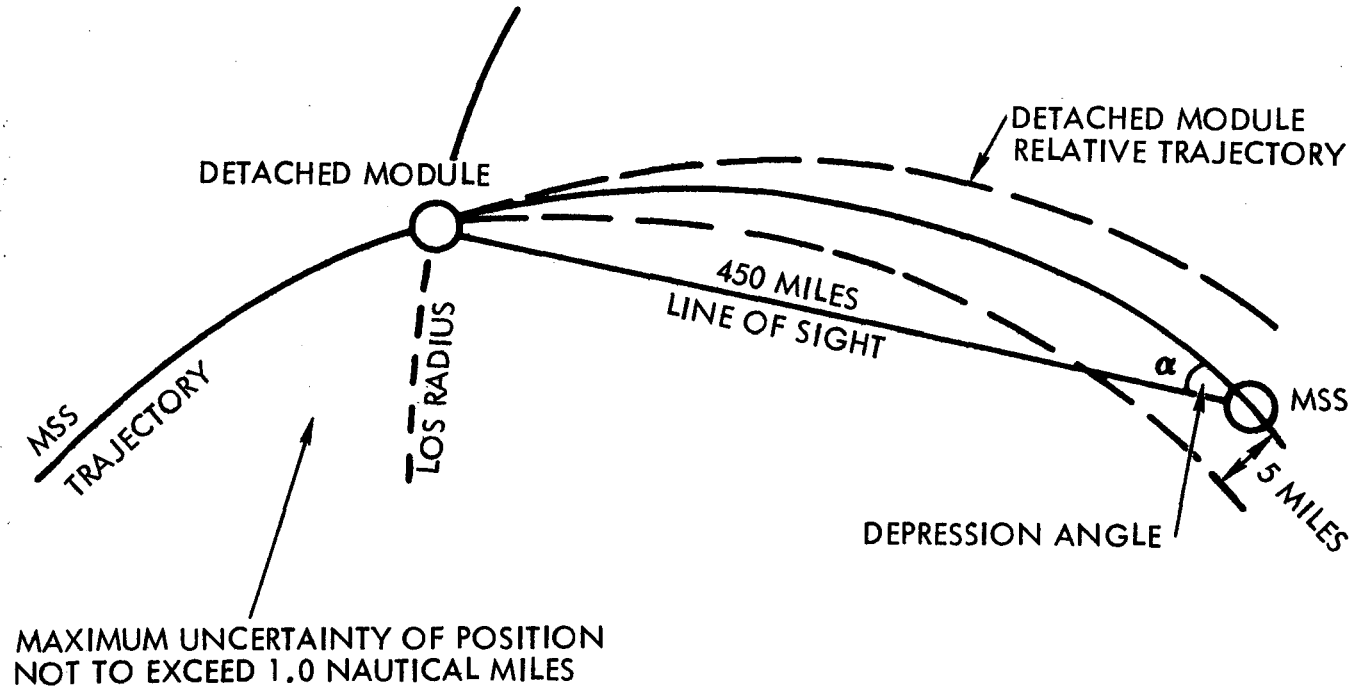

Figure 10-3. Detached Module Tracking Geometry

To demonstrate the sufficiency of range-only techniques, the resolution requirements for both range and angle measurements are calculated for the 450-nautical mile condition described:

1. Limiting range (LOS) is 450 nautical miles.

2. Navigation accuracy required is $\pm$ 0.5 nautical mile.

3. Range measurement resolution is $\frac{0.5}{450} = 1.1 \times 10^{-3}$

Range is determined by a measurement of the time a modulation pulse needs to travel from the MSS to the detached RAM and return to the MSS along the line of sight. For this example the time measurement has the same resolution requirement (1.1×10^{-3}) as the range. The MSS design concept postulates a 500-kiloHertz PRN range code, which provides a time resolution of $\pm 2 \times 10^{-6}$ or the equivalent of $\pm$500 feet at any range.

For angle measurement it is the depression angle (α) that must be determined. For the same geometry conditions the needed resolution can be calculated as follows (Figure 10-4):

1. Depression angle at 450 nautical miles equals 4.2 degrees.

2. Tolerable error in range is 0.5 nautical mile.

3. Angle resolution equals: $\frac{0.5 \text{ mile}}{3710 \text{ miles}} = 134 \times 10^{-6} = 0.5'$ (minute of angle)

An angle measurement accuracy of 134 parts per million is feasible by interferometric techniques provided the baseline can be calibrated and maintained to about 10 ppm. Considering the MSS structure (distance between antenna packages) as the foundation for the baseline, it appears that an interferometer is not feasible.

In comparing the range-only and angle-only resolution requirements for the long-range condition, it has been demonstrated that the angular requirement is more precise than can be provided on the MSS and that the range requirement is fulfilled by the MSS design concept. The conclusion is that a range-only measurement is adequate to satisfy the detached RAM navigation requirement at long range. It is necessary to examine the short-range condition as well.

The position measuring geometry when the detached RAM is near ($\pm$ 5 miles) the MSS is illustrated in Figure 10-5. Range-only measurement, plus the prior knowledge that the detached RAM and the MSS are co-planar, would indicate the detached RAM is at location X, while the desired estimate of its position is along the local vertical at point Y. This dislocation can be a significant error for very short ranges where the angle of elevation or depression (α) exceeds a few degrees. Thus the range-only measurement should be multiplied by $\cos \alpha$ to determine point Y.

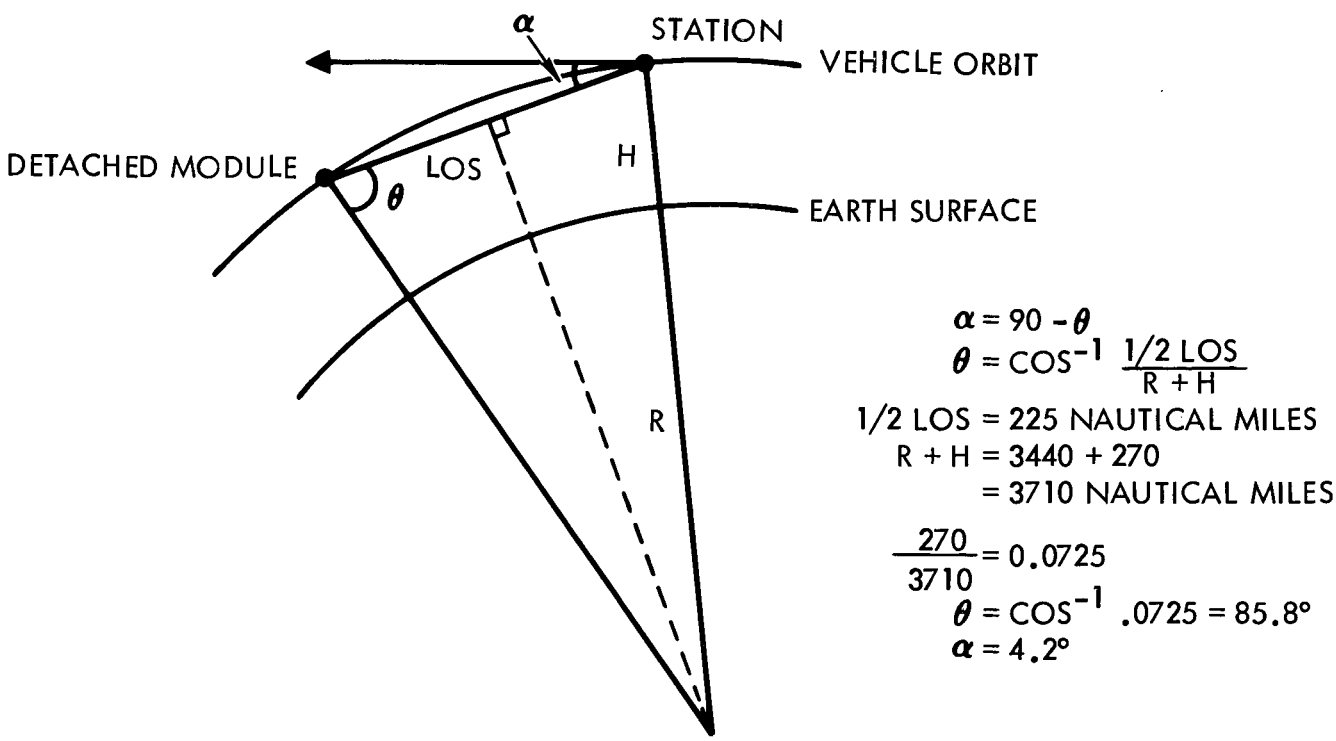

Figure 10-4. Determination of Depression Angle

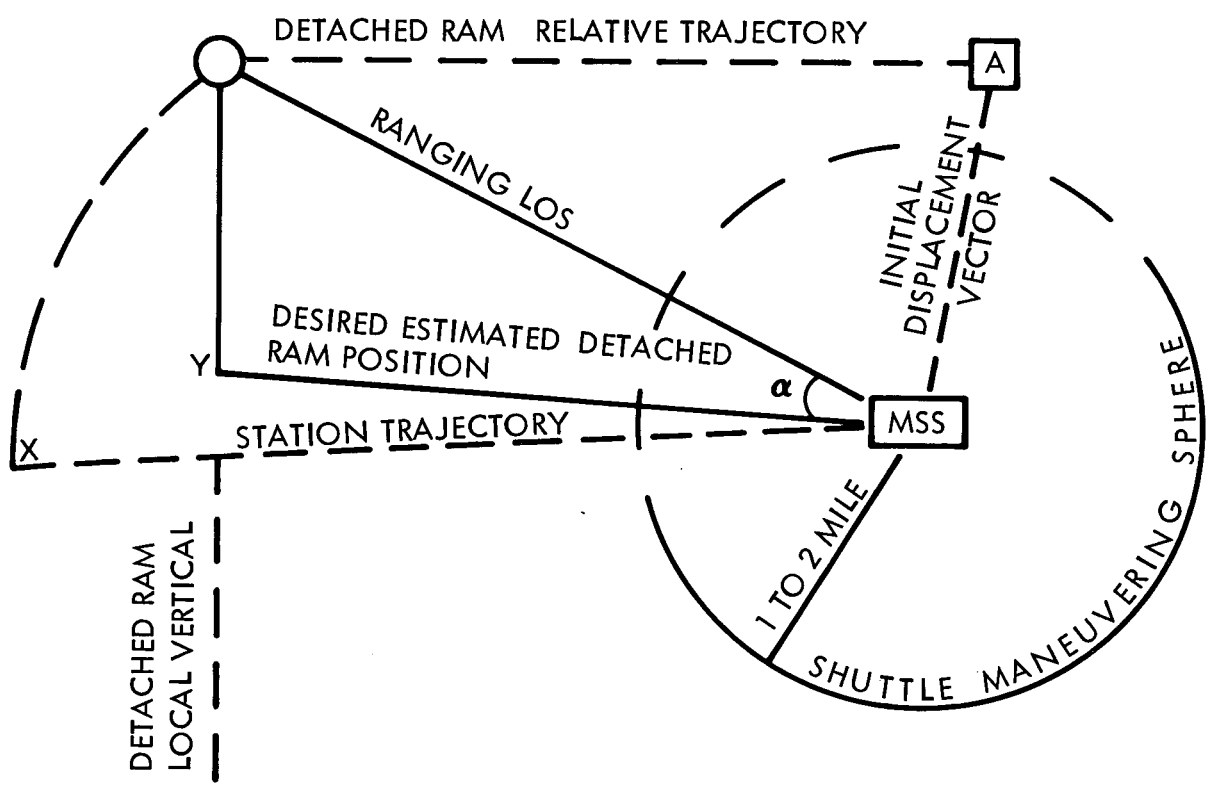

Figure 10-5. Detached Module Tracking Geometry

The angular resolution requirement in the short-range condition is much less severe than for the long-range condition analyzed before; an estimate within one to two degrees is adequate. This angle data may be obtained in a number of different ways:

1. When the detached RAM was initially released by the shuttle at Point A, this initial condition plus subsequent range-only measurements can be fitted to a precise mathematical curve, from which the angle can be calculated.

2. If the angle cannot be estimated in some way, a telescope (or sextant) sighting can be made and utilized to correct the ephemeris prediction.

3. The shuttle guidance system can provide data needed to measure the initial displacement vector.

4. The detached RAM guidance system can also provide this data (if it is provided with one).

5. The detached RAM guidance system, since it continuously detects its own velocity change, can supplement the MSS range-only measurement by telemetering the velocity data to MSS.

With these probable sources of initializing and supporting data it is possible to estimate the angle, α, with the desired accuracy. It can be concluded that range-only is, therefore, sufficient for both long- and short-range conditions.

11. MAINTENANCE TRADE ANALYSIS

The modular space station has the unique capability of being able to return major components, up to and including complete modules, to earth. To exploit this capability, a study was performed to examine the maintenance issues and establish the requirements that would be imposed on the crew and system level operations for both on-orbit and ground maintenance. Ground maintenance also is considered as a means to reduce crew effort. Maintenance criteria developed as a result of this study were used in subsequent study phases to assure a consistency in maintenance philosophy for station design and operations.

11.1 STUDY APPROACH

The MSS maintenance study was performed in a two-step process (Figure 11-1). The first step was an analysis performed to determine system level impacts, advantages, and problems attendant to maintenance approach near the extremes of complete module return to earth or all in-flight replacement. Step 2 involved classifying MSS replaceable units into two categories; in-flight replacement units (IFRU) and ground replaceable units (GRU). The GRU's were evaluated to determine their impact on system-level operations (i.e., effect on station operation with unit removed), while the IFRU's were evaluated to determine crew operations impact. Both of these were then evaluated to provide a design and operations assessment that would provide the data and design guidelines to serve as a basis for developing MSS maintenance criteria and requirements.

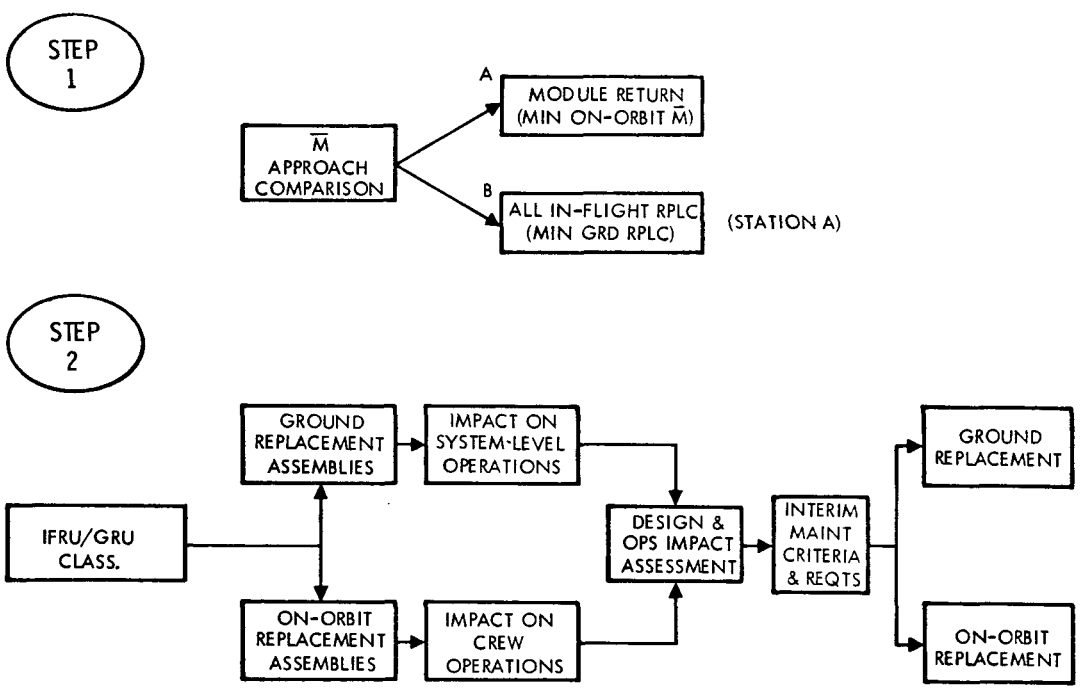

Figure 11-1. Maintenance Study Approach

11.2 MAINTENANCE APPROACH A - RETURNABLE MODULES

To assist in the analysis of returnable modules, two categories of modules were established:

1. Non-returnable - Modules not scheduled to be returned to the ground because of dependency requirements imposed by the other station modules. All assemblies within these modules must be in-flight replaceable. The core modules were identified in this category.

2. Returnable - These modules were subdivided into those having scheduled returns (cargo and research and applications modules) and those for which their return schedule can be characterized as being random (power and station modules).

For the initial station, five returnable modules were studied for their impact on system-level operations, and eight modules were studied for the growth station. To assess the impact of replacing modules during the station buildup phase, the time relationship for buildup as a function of shuttle launches was established. This relationship is shown in Figure 11-2; the buildup time for the initial station is 11 months.

Assuming a shuttle flight frequency of one per month, only one additional flight would be available to support module replacement. The figure also illustrates that if four modules were to be replaced per year, the buildup time for the initial station would increase from 11 to 22 months. Nine replacements per year would not allow the station buildup to be completed. It is therefore apparent that replacement of modules becomes very sensitive to the buildup of the station.

To minimize module return, the module mean-time between failure (MTBF) must be sufficiently high to assure that the probability of adequate shuttle launches (Ps) could be achieved without any operational impact. Figure 11-3 illustrates that Ps = 50 percent would be unacceptable and that Ps = 90 percent becomes reasonable from a shuttle support standpoint. With a Ps = 90 percent, the module MTBF would range from 2.4 to 5 years. For a module, MTBF's of these magnitudes become very difficult to achieve without high levels of active/standby redundancy at the subassembly and component levels. From this analysis it was concluded that the returnable module approach must be limited for the following reasons:

1. High module MTBF required during initial station buildup to preclude exceeding available shuttle launches.

2. High module MTBF's require high MTBF's at the subassembly and component levels.

3. Active/standby redundancy increases; all spares required as in-place redundancy adds complexity.

4. Ground and on-orbit checkout complexity increases because of added redundancy.

- ASSUMPTIONS
  - AVAILABLE REPLACEMENT LAUNCHES IN 1ST YEAR = 1
  - BUILDUP TO INITIAL STATION WITHIN 1 YR
  - SHUTTLE LAUNCH RATE 1 FLIGHT PER MONTH
- OBSERVATION
  - IF THE STATION MODULE REPLACEMENT INTERVAL IS 12 MONTHS THERE WOULD BE 4 REPLACEMENT FLIGHTS REQUIRED PER YEAR
  - THE BUILDUP TIME WOULD DOUBLE

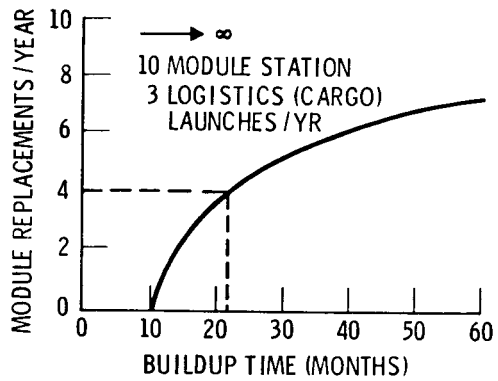

Figure 11-2. Module Replacement Impact on Buildup

MISSION PHASE	REPLACEABLE MODULES	NUMBER OF AVAILABLE LAUNCHES	MODULE MTBFS	
			P_S = 50%	P_S = 90%
INITIAL BUILDUP	5	1	1.8 (YR)	5 (YR)
NORMAL OPS	5	8	1.5 (YR)	2.4 (YR)
GROWTH BUILDUP	8	4	2.6 (YR)	5 (YR)
NORMAL OPS (NOMINAL RESUPPLY)	8	6	2.2 (YR)	3.6 (YR)

- INITIAL BUILDUP REQUIRES 11 MONTHS TO ACCOMPLISH
- CORE MODULES REQUIRE ON-ORBIT MAINTENANCE

P_S = PROBABILITY OF ADEQUATE SHUTTLE LAUNCHES FOR MODULE REPLACEMENTS

Figure 11-3. Module MTBF of P_s of 50 Percent and 90 Percent

11.3 MAINTENANCE APPROACH B - INFLIGHT REPLACEMENT

This approach is an extension of the approach used for Station A (i.e., designing all units for inflight replacement). While previous data have shown that this is the desired direction, there are three areas where difficult design solutions make this approach questionable. These are the design of major structural assemblies (seals, primary structures), complex or location-constrained assemblies (insulation panels, external radiators), and equipment that is hazardous to remove or replace. In addition to the difficulty of design, a further disadvantage is the high probability of EVA being required to support maintenance activities. There are design solutions for these problems but cost could prohibit their selection.

While neither maintenance approach, in its pure form, appears reasonable, an approach that closely parallels inflight replacement would be desirable.

11.4 REPLACEABLE UNIT CLASSIFICATIONS

To assess the impact of IFRU's and GRU's on system-level operations and crew operations, it was necessary to define and classify all MSS replaceable units. Replaceable unit classes are:

1. IFRU Type I - On-orbit replacement; requires ISS fault detection and fault isolation.

2. IFRU Type II - On-orbit replacement; no ISS support.

3. GRU Type I -- No on-orbit replacement; ISS fault detection and isolation required.

4. GRU Type II - No on-orbit replacement; no ISS support required.

The rationale used in classifying the replaceable items was:

1. For IFRU's:

   a. Critical function
   b. Short or limited life ($<$ 3 years)
   c. Simple replacement
   d. Nonhazardous removal
   e. Scheduled maintenance

2. For GRU's

   a. Location constraint
   b. Complex replacement
   c. Requires EVA
   d. Long life ($>$ 3 years)
   e. Hazardous removal
   f. Requires special skills, tools, or processes

It should be noted that there were some subassembly components whose characteristics might satisfy one or more of the GRU rationale items (i.e., long life (> 3 years) but because the replacement was simple, they were classified as IFRU's (e.g., circuit breakers). Table 11-1 is a typical sample of subsystem replaceable unit definition data, which include classification and type, estimated life in years, quantity of units for the initial station, estimated crew time required to complete the removal/replacement portion of the maintenance activity, and driver rationale. Approximately 4100 replaceable units were identified (3300 IFRU's, 760 GRU's) for the initial station. Data concerning these units were evaluated with the redundancies of like units (e.g., 1200 circuit breakers) being considered.

GRU Failure Impact

To minimize GRU impact on module replacement, failure rates were reduced by accepting degradation (Table 11-2). For those GRU's whose degradation was both gradual and predictable, design margins were used to increase their MTBF by a factor of 10 from the initial estimates. To reduce GRU impact further, the number of GRU's was reduced by a factor of two by reevaluating the recommended GRU's and sorting out the assemblies that had a potential for being designed as IFRU's (e.g., accumulators, coldplates, water storage tanks).

The effect of both of these changes was to more than double the mean module replacement interval estimates, from 1.5 to 3.7 months. While this is a significant improvement over the original estimates, it is not high enough to be an acceptable program goal.

IFRU Failure Impact

To understand better the effect of IFRU level (size) on crew operations and design complexity, the first-order effect of IFRU size was studied for a station with a given number of components (Figure 11-4). With the consideration that any component failure will require replacement of an IFRU to restore the function, it follows that the average weight of IFRU's and the total weight of spares replaced per month will vary inversely with the increase in the number of IFRU's. The total number of spares will increase as well as the ISS capability to identify failed IFRU's and the isolation provisions to permit IFRU removal without affecting other parts of the subsystem.

Since each component failure will require an IFRU replacement, it follows that the number of IFRU replacements per month will not be affected by IFRU size, and if an average crew time for IFRU replacements can be assumed, then the total amount of crew maintenance time is relatively independent of IFRU size.

A summary of crew man-hours per month required for maintenance (both scheduled and unscheduled) was developed using replaceable unit definition data as the data base. Table 11-3 summarizes crew activity required for all maintenance phases for the initial station at a subsystem level.

Table 11-1. Subsystem Replaceable Unit Definitions

STUDY CONTINUATION SHEET — SHEET 1 OF 8

TITLE: ETC/LSS MAINTENANCE CATEGORIES (REFERENCE SUBSYSTEM)

UCN S810015
INITIATOR GIANFORMAGGIO
DATE: MARCH 9, 1971

ASSEMBLY SUBASSEMBLY COMPONENT	QUANT FOR INITIAL STATION	ESTIM LIFE YR	IFRU I	IFRU II	GRU I	GRU II	CREW TIME HR	RATIONALE REMARKS
• ATMOSPHERE STORAGE								0.42 HR/MONTH
N2 SUPPLY								
CONDITIONING HX	2	23			X		1.0	EST LONG LIFE/PASSIVE
SURGE TANK	2	23			X		2.0	EST LONG LIFE/PASSIVE
PUMPDOWN								
RECEIVERS	1	10			X		10.0	EST LONG LIFE/PASSIVE
L COMPRESSOR	1	1.6	X				1.0	SHORT LIFE · ROTATING
S COMPRESSOR	8	1.6	X				3.0	SHORT LIFE · ROTATING
PRESSURE REGULATORS	8	1.2	X				0.5	
• ATMOSPHERIC CONTROL								
PRESSURE CONTROL								
N2 FILTER	2	0.5		X				
N2 REGULATORS	2	1.2	X					
O2 FILTER	2	0.5		X				
O2 REGULATOR	2	1.2	X					
TIMER	2	2.3	X					
O2 CONTROLLER	2	2.3	X					
PP O2 SENSOR	10	0.3	X					
CABIN PRESS. RER	2	0.3						
CABIN DUMP VALVES	10							

IFRU · INFLIGHT REPLACEABLE UNIT
GRU · GROUND REPLACEABLE UNIT
TYPE I · ISS REQUIRED TO DETECT & ISOLATE FAILED UNIT
TYPE II · NO ISS SUPPORT REQUIRED

Table 11-2. Ground Replaceable Unit Impact on Module Replacement

REPLACEABLE MODULES	REPLACEMENT INTERVALS (MONTHS) INITIAL	A CHANGES	A & B CHANGES
CQM-1	5-1/2	6-1/2	14
CQM-2	5-1/2	6-1/2	14
CC-1	9-3/4	13-1/2	28
CC-2	9-3/4	13-1/2	28
POWER	10-3/4	15-1/2	17.7
MEAN REPLACEMENT INTERVALS	1-1/2	2	3.7

(A) REDUCED FAILURE RATES OF SELECTED GRUS BY A FACTOR OF 10 BY ACCEPTING DEGRADATION
- INSULATION PANELS

(B) REDUCE NUMBER OF GRUS BY FACTOR OF 2 (POTENTIAL IFRUS)
- ACCUMULATORS
- COLDPLATES
- WATER STORAGE TANKS

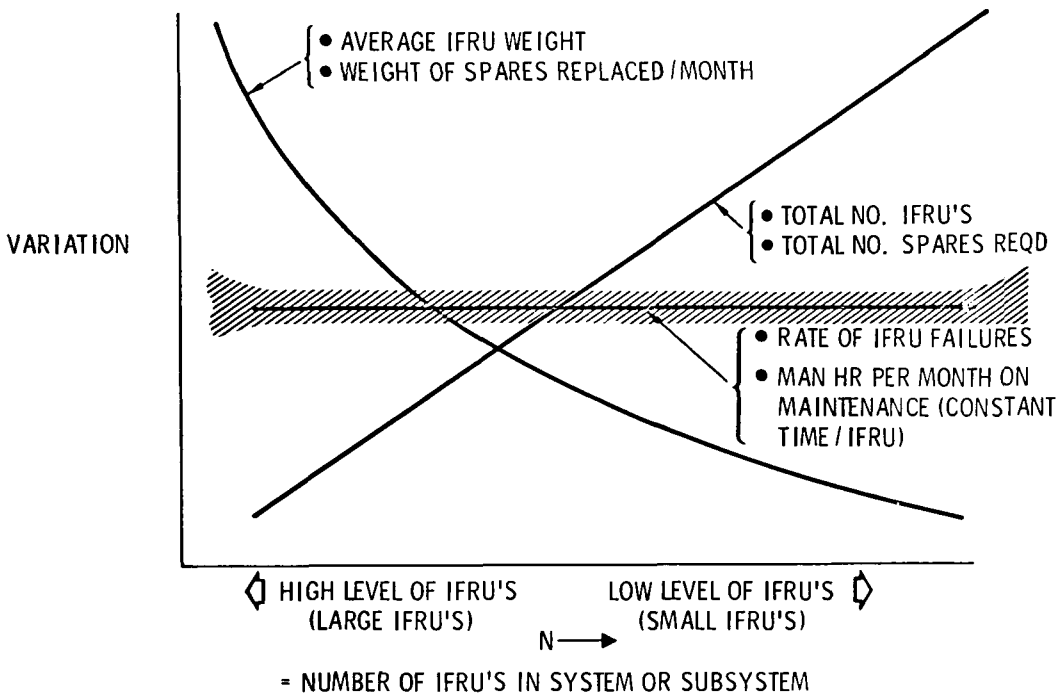

Figure 11-4. First-Order Effects of IFRU Size

Table 11-3. Maintenance Crew Man-Hours per Month

SUB-SYSTEM	SCHEDULED MAINTENANCE							UNSCHED MAINT TOTAL	TOTALS
	INSP	SERVICE	TEST & C/O	IFRU R&R	IFRU P&C	BENCH REPAIR/ CALIB	SUB-TOTAL		
STRUCT	3.7		1.8				5.5	37.3	42.8
EPS	1.0			4.7	1.5	2.0	9.2	4.8	14.0
RCS								1.8	1.8
ETC/LSS	4.0	16.0		20.8	18.5	1.0	60.3	44.2	104.5
G&C	0.2	0.2	0.5				0.7	1.3	2.0
ISS			3.5				3.5	9.3	12.8
SUBTOTAL	8.9	16.0	5.8	25.5	20.0	3.0	79.2	98.7	177.9

The total hours for maintenance (approximately 178) are consistent with recommended scheduling allocations for the six-man station. If the present estimates of maintenance man-hour requirements are incorrect (i.e., too high or too low), the following impact occurs with experiment operations. Because maintenance is a part of scheduled station operations, additional maintenance hours will decrease time available for experiment operations. When maintenance is required for a critical subsystem, completing the maintenance action will have a high priority and could also involve the use of unscheduled crew man-hours (free time). Figure 11-5 shows the on-orbit maintenance time available from unscheduled crew time, if required, for critical maintenance activities.

11.5 STUDY CONCLUSIONS

The study has shown that station and experiment operations are sensitive to the module replacement-ground maintenance approach. As a result, the following recommendations are presented.

1. All maintenance activities performed on-orbit as nominal operational mode.

2. No routine plan for module replacement for subsystem maintenance.

3. Provide capability for module replacement, but consider as an unscheduled major event resulting from an accident, not a failure.

4. Reallocate functions to permit mission continuation at a reduced level during module replacement.

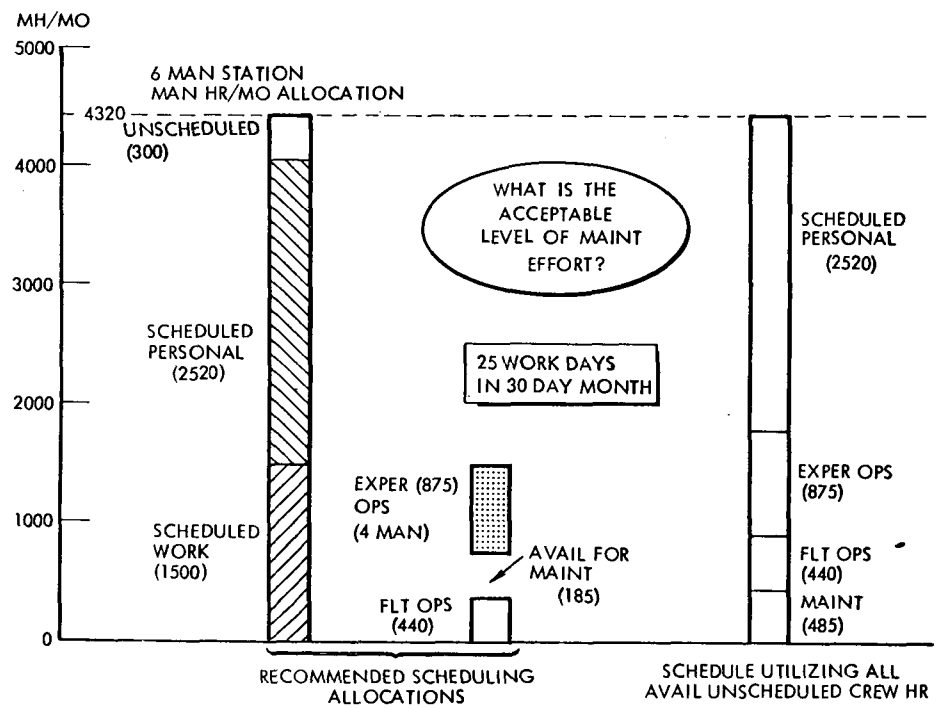

Figure 11-5. On-Orbit Maintenance Impact on Crew Activity

In support of these recommendations and to assure consistency in maintenance philosophy for station design and operations in subsequent study phases, the following maintenance criteria were developed:

1. In the design of such things as insulation panels, berthing port seals, and radiator panels, material selection will afford a useful life of at least 10 years.

2. The maximum envelope size for an IFRU is 40 by 40 by 50 inches except IFRU's and expendables for critical functions which must be capable of passing through secondary access hatches of 22 by 22 by 50 inches.

3. IFRU's which are required to be operational during various phases of buildup require considerations for IVA maintenance (i.e., performance of maintenance by a pressure-suited crewman).

4. IFRU's which are part of time-critical functions will allow for two consecutive unsuccessful repairs before resulting in a critical condition.

5. Isolation valves for IFRU replacement will be kept to a minimum where the IFRU has a lower random failure rate than the isolation valve or where redundant loops can be utilized during maintenance.

6. A minimum of 0.5 hour will be allowed for failure detection, isolation, and verification following repair, in addition to the estimated repair time, for each maintenance or group of maintenance actions.

7. Maintenance activity may be deferred for a period of 30 days where lost functions are not critical to crew safety or space station survival.

8. Equipment determined to be critical for crew life support or space station survival requires onboard spares.

9. To minimize crew maintenance activity, ease of maintenance will be a design goal.

10. Replaceable units will be designed so that the removal of the unit does not disturb integral structure of the module.

11. Primary module thermal insulation should be designed and installed in panels that can be removed and replaced.

12. Scheduled maintenance will not result in the loss of normal space station operations.

13. Spare IFRU's will be located as close to the point of intended use as practical. Consideration may be applied to duplicate spares in each pressure volume.

14. IFRU's will not exceed 60 pounds where possible (1-g limit for one crewman), 120 pounds as an upper limit (zero-g for one crewman), where practical.

15. Where reconfiguration is anticipated at some future date, preplanned installation techniques should be established and incorporated before the first launch of the module.

16. Provisions will be incorporated for limited checkout of new replacement items before bringing the subsystem back on line.

17. Considerations will be given to the placement of appropriate sensors for all items requiring inspection on-orbit which are inaccessible or require frequent testing.

18. Utility jumpers will be designed for a minimum useful life of 10 years.

19. If allowable downtime is about to expire, repair activity will take priority over scheduled maintenance.

20. Atmospheric makeup should consider increased in-station leakage due to progressive seal degradation.

21. Where critical functions are involved, equipment space allocations will allow for performance of IVA maintenance.

Maintenance Time Allocations

The following times for scheduled and unscheduled maintenance will be used as design goals during normal operation following buildup for the six-man configuration:

Subsystem	Hours/Month
Guidance and control	5
ISS	15
ECLSS	110
RCS	5
Structure and mechanisms	35
EPS	30

12. RELIABILITY

The following section includes the reliability criteria and requirements derived and utilized during the MSS Phase B study. Also included in this section is the result of a special study conducted on ECLSS time-critical functions and the critical function analyses (CFA's) conducted on all subsystems during preliminary design.

12.1 APPROACH

Early in the study, basic criteria were established using NASA guidelines and constraints and criteria established by NR in past studies, as well as deriving new criteria considered unique for the MSS. These criteria were continuously modified, added to, or deleted, as systems analyses provided a better understanding of their implications.

Failure tolerance criteria were established to determine the level of redundancy required within the subsystems. Levels of redundancy were established during the trades and iterated and refined on the selected concepts during preliminary design. These refinements established Phase B requirements.

In some cases, it was necessary to perform special studies to determine the sensitivity of the design to the criteria such as time-critical functions within the ECLSS.

During the preliminary design for the selected concepts, critical function analyses were conducted to verify the adequacy of the design in meeting the criteria and to establish requirements for use in subsequent program phases.

Functional criticalities for various failure modes were established. The criticality definitions are provided in a later section. Also included in this section is the single-point failure summary which lists Criticality I and II failure modes requiring additional design attention in later program phases.

12.2 RELIABILITY CRITERIA

This subsection presents the failure tolerance criteria established during the Phase B study in addition to the general criteria and guidelines and constraints.

Table 12-1 defines the minimum allowable number of component failures which may result in the indicated operational mode.

Table 12-1. Allowable Number of Component Failures to Reach Operational Mode

Operational Mode	Station Operation (Manned)	Buildup (Unmanned)
Normal	0	0
Nominal	1	-
Degraded	2	1
Emergency	3	2

Other criteria are:

1. The station will be capable of operating with all critical functions performed within specified values following one component failure or any portion of a subsystem inactive for maintenance. This condition will continue until maintenance can be performed.

2. The station will be capable of operating with some critical functions performed at a reduced level, but not below the level necessary for crew survival, following any credible combination of two component failures or one component failure with any portion of a subsystem inactive for maintenance or any credible accident (e.g., loss of any pressure-isolatable volume). This condition will continue until maintenance can be performed, but no more than 30 days or until arrival of the next scheduled shuttle.

3. The station will be capable of crew survival for at least 96 hours to permit restoration of operations or rescue of the crew by emergency shuttle following any credible combination of three component failures or any credible combination of component failures and portions of a subsystem inactive for maintenance or any credible accident (e.g., loss of any pressure-isolatable volume) and any single component failure.

4. The station, during station buildup (premanning), will be capable of being manned (shirtsleeve or IVA) for performance of maintenance and station assembly tasks following any one component failure. This capability will continue until arrival of the next scheduled shuttle.

5. The station, during station buildup (premanning), will be capable of being manned (shirtsleeve or IVA) for at least 96 hours to accommodate an emergency shuttle flight to perform maintenance following any two component failures.

6. Nontime-critical functions, ultimately critical to crew survival, require standby redundancy as a minimum.

7. Subsystem or component failures will not propagate sequentially; equipment will be designed to fail safe.

8. Design application of electrical and electronic components and parts will provide appropriate derating and controlled margins of performance so that performance variables will not cause unacceptable subsystem interactions related to long useful life requirements.

9. All critical life-limited components and subsystems will be designed to allow ground and orbit inspection.

10. Space station configuration design and arrangements will provide access for inspection of critical hardware, including pyrotechnics (on the ground) after device installation.

11. Hardware design will be based on use of such material that wear, corrosion, lubricant depletion, etc., will not degrade performance beyond specified tolerances for subsystem or structural performance.

12. Equipment or material sensitive to contamination will be handled in a controlled environment. Fluids and materials will be compatible with the combined environment in which they are employed. Process specifications will be formulated to prescribe handling and application methods.

13. Time-critical functions affecting crew survival require an alternative means of providing the function. This alternative mode must be provided by active redundancy, or standby redundancy automatically activated upon failure of the prime equipment, or by other equipment providing normal operation for a period equal to a maintenance cycle plus a margin of safety for maintenance difficulties, including lack of access due to isolation of a damaged module.

14. Loss of redundancy for critical functions will be detectable (automatically by the information subsystem and the crew).

15. Redundant paths, such as fluid lines, electrical wiring, and connectors, will be located so that an event which damages one path is not likely to damage the other.

16. Conservative factors of safety will be provided where critical single-failure point modes of operation cannot be eliminated (pressure vessels, pressure lines, valves, etc.).

17. All of the subsystems that incorporate an automated fail/operational capability will be designed to provide crew notification and data management system cognizance of component malfunction until the anomaly has been corrected.

12.3 ECLSS TIME-CRITICAL FUNCTION ANALYSIS

A special analysis was conducted on the ECLSS during the trade studies to determine time-critical functions. For this analysis, functions were considered critical if loss affected personnel safety or mission continuation. Time-critical was defined as those functions which, following a failure, exceed proper performance levels in less than one hour. The detailed analysis is described in Volume IV, Subsystem Analyses (SD 71-217-4), of the MSS Preliminary Design Report. The pertinent results of this study are presented in the following paragraphs.

It was established that oxygen supply is not time-critical in that there is a 2- to 8-day supply of oxygen in the cabin atmosphere with no resupply. The 96 hours of emergency oxygen stores are not strictly required because the oxygen partial pressure is 2.5 psia after 96 hours with no oxygen supply and six men all in one pressure volume. Humidity control, atmosphere temperature control, and active thermal control are the most time-critical of all the ECLSS functions. Relative humidity rises to 100 percent within six hours with no control. To avoid condensation of the structure, it may be necessary to install four condensers rather than the "two plus maintenance" concept currently selected. Without sensible tmperature control, the steady-state air temperature will rise 15 to 20 F within one hour. A concept of 2 1/2-capacity heat exchangers in each module was selected to maintain temperatures at 75 F rather than the single heat exchanger previously selected.

The 96-hour LiOH emergency system for CO_2 removal is not strictly required as the CO_2 concentration after 96 hours is 14 mm Hg which is within the allowable emergency performance range. Active thermal control has several installed redundancies; however, the freon and water loop headers and the intercoolers are not strictly consistent with the "three IFRU to emergency" failure criteria. Water supply consists of a single plumbing distribution system and does not strictly observe the failure criteria.

12.4 CRITICAL FUNCTION ANALYSES

Critical function analyses (CFA's) were conducted on the MSS Phase B selected concepts for the preliminary design. The analyses were conducted to establish and document failure criticalities, identify potential hazards, and provide recommendations. The recommendations provided design requirements for use during the MSS Phase B preliminary design, in addition to identifying design constraints for subsequent phases.

All CFA's were performed on the preliminary design at the assembly level (Level 6) consistent with contract direction. Where data were available, the CFA's were performed to a lower level consistent with the preliminary design.

The following criticality definitions were used in the generation of CFA's:

Criticality I - Single failure causing loss of personnel

Criticality II - Single failure whereby the next associated failure may cause loss of crew, or a single failure mode that causes return of one or more crew member to earth, or subsystem loss of function essential to continuation of space operations and scientific investigations

Criticality III - All other failures

12.5 CRITICAL FUNCTION ANALYSIS SUMMARIES

Summaries are provided for a numerical count of all failure criticalities (Table 12-2). A separate narrative summary, listing Criticalities I and II, is provided in Table 12-3.

Table 12-2. CFA - Subsystem Criticality Summary

Subsystem	Criticality Level		
	I	II	III
1. Structures	2	5	11
2. Environmental control/ life support	2	5	22
3. Electrical power	3	4	22
4. Guidance and control	1	1	14
5. Reaction control	2	18	22
6. Information	-	6	33
7. Crew and habitability	2	6	12
Total	12	45	136

The critical function analyses are presented under the following index:

1.0 Structures and Mechanical
2.0 ECLSS
3.0 Electrical Power
4.0 Guidance and Control
5.0 Reaction Control
6.0 Information Management
7.0 Crew and Habitability

Table 12-3 Criticality I and II Failure Mode Listing

Subsystem	Failure Mode	Failure Effect	Criticality Category
1.0 Structures & Mechanical	1. Sidewall, airlock and berthing/docking bulkhead; rupture, fracture or puncture.	Major leakage loss of module atmosphere to space. Possible crew hazard.	I
	2. Module support fitting fails structurally.	Shuttle orbiter damage could result during high "g" maneuvering or emergency landing operations. Possible shuttle crew hazard.	I
	3. Hatch does not seal properly.	Leakage loss of a module atmosphere to space. Possible crew hazard.	II
	4. Hatch jam closed.	Loss of the main transfer route for personnel, cargo, and equipment between modules.	II
	5. Flexiport leaks excessively.	Leakage loss of a module atmosphere to space. Possible crew hazard. Loss of the dual egress capability.	II
	6. Mating ring mechanisms become deformed or are damaged excessively.	Module berthing/docking is delayed or prevented.	II
	7. Utility interface is damaged and cannot be successfully mated.	Module utilization is delayed or lost. Possible shirtsleeve repair or module return to earth.	II

Space Division
North American Rockwell

Table 12-3 Criticality I and II Failure Mode Listing (Cont)

Subsystem	Failure Mode	Failure Effect	Criticality Category
2.0 Environmental Control/Life Support (ECLSS)	1. High pressure (3000 psi) N_2, O_2 and H_2 storage tanks rupture or excessive leakage.	Possible damage to equipment or personnel hazard.	I
	2. Storage tank pressure control components rupture or excessive external leakage.	Possible loss of the stored gas for emergency operations - crew hazard possibility.	II
	3. H_2 storage tank pressure control component rupture or excessive external leakage.	Potential fire hazard.	II
	4. IVA or EVA support plumbing malfunction during use.	Possible catastrophic condition endangering the life of the operating crewman.	I
	5. Trace contaminants exceed tolerance levels.	Progressive degradation of crew performance and health.	II
	6. H_2 or CH_4 excessive leakage from sabatier reactor.	Potential fire or explosion resulting in crew injury or damage to adjacent equipment.	II
	7. Leakage of combustible H_2 from the electrolysis unit.	Potential fire or explosion resulting in crew injury or damage to adjacent equipment.	II
3.0 Electrical Power	1. Array output degraded or lost (one wing does not deploy).	Station power generating capability is limited to 50% of potential -- buuildup operations are delayed.	II

Space Division
North American Rockwell

Table 12-3 Criticality I and II FAilure Mode Listing (Cont)

Subsystem	Failure Mode	Failure Effect	Criticality Category
3.0 Electrical Power (Continued)	2. Array output degraded or lost (partial deployment of solar panels on one wing).	Loss of up to 50% of the station power capability -- buildup operations are delayed.	II
	3. External leakage of electrolysis units.	O_2, H_2 or water could be released into the volume that contains the electrolysis units. Possible H_2 explosive hazard.	I
	4. Rupture - rapid pressure release (O_2 accumulator)	Possible physical damage to adjacent equipment or injury to crew.	II
	5. Rupture - rapid pressure release (H_2 accumulator)	Possible physical damage to adjacent equipment or injury to crew. Loss of H_2 reactant supply for fuel cells. Possible hazard of fire or explosion if H_2 should be combined with the station atmosphere in the presence of an ignition source.	I
	6. Fracture - low rate pressure release.	Slow loss of H_2 from an accumulator or line into a pressurized volume. (loss affects 25% of the reactant supply.) Hazardous condition exists when H_2 mixes with the station atmosphere. Fire could occur.	I

Space Division
North American Rockwell

Table 12-3 Criticality I and II Failure Mode Listing (Cont)

Subsystem	Failure Mode	Failure Effect	Criticality Category
3.0 Electrical Power (Continued)	7. Reactant or coolant leakage (fuel cell).	Release of a combustible gas (H_2), oxidizer (O_2), or water. Possible explosive hazard; however, an ignition source is required.	II
4.0 Guidance & Control	1. Asymmetric thrust - loss of thrust at one of two translating thrusters.	Generation of unwanted rotational torques - (difficulty in accomplishing functions dependent on the affected thruster).	II
	2. Control moment gyros - structural failure of rotor or support equipment.	Possible damage to adjacent equipment or injury to personnel.	I
5.0 Reaction Control	1. Tank wall rupture - (accumulator tank).	H_2 & O_2 - possible fragmentation of tank sidewall and damage to adjacent equipment or injury to personnel. Loss of 25% or more of the associated accumulated gas.	I
	2. Tank fitting leakage.	H_2 only - possible fire and/or explosion when mixed with the station atmosphere in the presence of an ignition source.	I
	3. Burst disc relief valve leaks externally (accumulator tank assembly).	Loss of 25% or more of the associated accumulated gas.	II

Space Division
North American Rockwell

Table 12-3 Criticality I and II Failure Mode Listing (Cont)

Subsystem	Failure Mode	Failure Effect	Criticality Category
5.0 Reaction Control (Continued)	3. (Continued)	H_2 only - possible fire and/or explosion when mixed with the station atmosphere in the presence of an ignition source.	
	4. Vent valve leaks externally (accumulator tank assembly).	H_2 & O_2 - loss of 25% or more of the associated accumulated gas.	II
		H_2 only - possible fire and/or explosion when mixed with the station atmosphere in the presence of an ignition source.	
	5. Vent manifold leaks externally (accumulator tank assembly).	H_2 & O_2 - loss of 25% or more of the associated accumulator gas.	II
		H_2 only - possible fire and/or explosion when mixed with the station atmosphere in the presence of an ignition source.	
	6. Transducer leaks externally or ruptures (accumulator tank assembly).	H_2 & O_2 - loss of 25% or more of the associated accumulator gas.	II
		H_2 only - possible fire and/or explosion when mixed with the station atmosphere in the presence of an ignition source.	
	7. Propellant feed manifold leaks externally.	H_2 or O_2 - loss of 25% or more of the associated accumulator gas.	II

Space Division
North American Rockwell

Table 12-3 Criticality I and II Failure Mode Listing (Cont)

Subsystem	Failure Mode	Failure Effect	Criticality Category
5.0 Reaction Control (Continued)	7. (Continued)	H_2 only - possible fire and/or explosion when mixed with the station atmosphere in the presence of an ignition source.	
	8. System isolation valve leaks externally (propellant feed system).	H_2 or O_2 - loss of 25% or more of the associated accumulator gas. H_2 only - possible fire and/or explosion when mixed with the station atmosphere in the presence of an ignition source.	II
	9. Burst disc relief valve leaks externally (propellant feed system).	H_2 or O_2 - loss of 25% or more of the associated accumulator gas. H_2 only - possible fire and/or explosion when mixed with the station atmosphere in the presence of an ignition source.	II
	10. Burst disc relief valve opens inadvertently or ruptures (propellant feed system).	Loss of subsystem capability. Possible loss of all gas in the associated accumulator.	II
	11. Interface coupling leaks externally (propellant feed system).	H_2 or O_2 - loss of 25% or more of the associated accumulator gas. H_2 only - possible fire and/or explosion when mixed with the station atmosphere in the presence of an ignition source.	II

Space Division
North American Rockwell

Table 12-3 Criticality I and II Failure Mode Listing (Cont)

Subsystem	Failure Mode	Failure Effect	Criticality Category
5.0 Reaction Control (Continued)	12. Line pressure transducer leaks externally (propellant feed system).	H_2 or O_2 - loss of 25% or more of the associated accumulator gas. H_2 only - possible fire and/or explosion when mixed with the station atmosphere in the presence of an ignition source.	II
	13. Pressure regulator valve leaks externally (propellant feed system).	H_2 or O_2 - loss of 25% or more of the associated accumulator gas. H_2 only - possible fire and/or explosion when mixed with the station atmosphere in the presence of an ignition source.	II
	14. High pressure regulator valve fails open (propellant feed - EPS interface).	Possible loss of RCS function during buildup.	II
	15. High pressure regulator valve fails closed (propellant feed - EPS interface).	Possible loss of RCS function during buildup.	II
	16. Check valve leaks externally (propellant feed - EPS interface).	H_2 or O_2 - loss of 25% or more of the associated accumulator gas. H_2 only - possible fire and/or explosion when mixed with the station atmosphere in the presence of an ignition source.	II

Space Division
North American Rockwell

Table 12-3 Criticality I and II Failure Mode Listing (Cont)

Subsystem	Failure Mode	Failure Effect	Criticality Category
7.0 Crew & Habitability (Continued)	2. Pressure garment assembly fails to maintain required pressure levels (O_2 environment).	Possible crewman hazard.	I
	3. IVA umbilical connections and hoses malfunction during IVA operations.	Possible crewman hazard.	I
	4. Portable life support system becomes inoperative during EVA operations.	Possible crewman hazard.	II
	5. Crew mobility aids and restraints fail structurally.	Possible crewman injury.	II
	6. Crew sleeping and seating restraints fail structurally.	Possible crewman injury.	II
	7. Excessive leakage of toxic refrigerant from freezer or refrigerator.	Possible crew hazard.	II
	8. Microwave oven malfunction.	Possible crewman injury (excessive radiation or microwave burn).	II

Space Division
North American Rockwell

Table 12-3 Criticality I and II Failure Mode Listing (Cont)

Subsystem	Failure Mode	Failure Effect	Criticality Category
5.0 Reaction Control (Continued)	17. Check valve fails open.	Possible loss of RCS function during buildup.	II
	18. Rocket engine explosion.	Possible damage to external equipment or pressure hull from concussion or shrapnel.	II
6.0 Information Subsystem (ISS)	1. Open or shorted mass memory module.	Possible loss of mission objectives data from non-repeatable experiments.	II
	2. Loss of Central Timing Unit (CTU) output.	Degradation of computer functions should both units fail.	II
	3. Loss of Central Processor Assembly capabilities.	Mission objectives would not be accomplished should both processors fail.	II
	4. Degraded or no output of RACU.	May result in loss of primary mission objectives.	II
	5. Open or shorted Shuttle/ Module Interface Unit.	Possible mission termination by shuttle orbiter.	II
	6. Degraded or no output from the Build-Up Command/Central and Data Processing Sub-assembly (BUCCDP).	Possible mission termination prior to core/power module buildup.	II
7.0 Crew & Habitability	1. Degraded operation of the emergency O_2 face mask.	Possible crewman hazard.	II

Space Division
North American Rockwell

SUBSYSTEM Structures & Mechanical

CRITICAL FUNCTION ANALYSIS

DATE 9-8-71

ITEM IDENTIFICATION & FUNCTION

1.0 Structures and Mechanical

The major hardware groups within the structures and mechanical subsystem are: primary structure, secondary structure, environmental shielding, berthing, and general purpose lab furnishings.

CFA SEQUENCE

1.0 STRUCTURES AND MECHANICS

1.1 PRIMARY STRUCTURES

- Sidewall, Bulkheads, Etc.
- Module Support Fitting
- Manipulator Fitting

1.2 SECONDARY STRUCTURE

- Hatches
- Windows
- Cargo Handling Rails
- Flexiport

1.3 ENVIRONMENTAL SHIELDING

- Insulation
- Hatch Protective Cover
- Radiation Shield

1.4 BERTHING

- Mating Ring
- Latches
- Utility Interface

1.5 GENERAL PURPOSE LAB FURNISHINGS

- Lab Equipment
- Lab Furnishings
- Airlock Rails
- Airlock Hatch

PREPARED BY J. Beekman	SUBSYSTEM P.E.	RELIABILITY P.E.

SUBSYSTEM Structures & Mechanical

CRITICAL FUNCTION ANALYSIS

DATE 9-8-71

ITEM IDENTIFICATION & FUNCTION

1.1 Primary Structure
Analysis of the primary structure considers module sidewalls, airlock bulkheads, docking/berthing bulkhead, and fittings*.

*Refers to the four support devices which are used to restrain a module within the space shuttle cargo bay and four space shuttle manipulator pickup fittings used to handle station modules during berthing operations.

FAILURE MODE	PRIMARY CAUSES	FAILURE EFFECT & TIME TO EFFECT
1. Sidewall, airlock and berthing/docking bulkheads-rupture fracture, puncture, etc.	Explosion or overpressure Mechanical damage Accidental collision Corrosion	Major loss of module atmosphere to space. Probable crew hazard. Requires module return to earth for repair. Time: Immediate to minutes

RATIONALE/RECOMMENDATIONS/REF. DOCUMENTS	CRITICALITY
Rationale: Failure modes or accidents which produce sudden local energy releases in excess of 50 BTU exceed the MSS design requirement.	I

ITEM IDENTIFICATION & FUNCTION

1.1 Primary Structure (Continued)

FAILURE MODE	PRIMARY CAUSES	FAILURE EFFECT & TIME TO EFFECT
2. Module support fitting fails structurally.	Overload condition	Shuttle orbiter damage could result during high "G" maneuvering or emergency landing operations. Possible shuttle crew hazard. Time: Immediate

RATIONALE/RECOMMENDATIONS/REF. DOCUMENTS	CRITICALITY
Rationale: The fitting strength is designed for the worst case condition of shuttle crash landing.	I

PREPARED BY J. Beekman	SUBSYSTEM P.E. A. J. Stefan	RELIABILITY P.E. J. R. Bigbee

SUBSYSTEM Structures and Mechanical

CRITICAL FUNCTION ANALYSIS

DATE 9/15/71

ITEM IDENTIFICATION & FUNCTION		
1.1 Primary Structure (Continued)		
FAILURE MODE	**PRIMARY CAUSES**	**FAILURE EFFECT & TIME TO EFFECT**
3. Manipulator pickup fitting fails structurally.	Overload condition	Reduction or loss of module handling capability during berthing operations. Possible hazard to station or shuttle crew. Time: Immediate
RATIONALE/RECOMMENDATIONS/REF. DOCUMENTS		**CRITICALITY**
Rationale: The pickup fitting strength is designed for the maximum weight module (25K pounds) in the worst case berthing operation.		II

ITEM IDENTIFICATION & FUNCTION		
FAILURE MODE	**PRIMARY CAUSES**	**FAILURE EFFECT & TIME TO EFFECT**
RATIONALE/RECOMMENDATIONS/REF. DOCUMENTS		**CRITICALITY**

PREPARED BY J. Beekman	SUBSYSTEM P.E.	RELIABILITY P.E.

SUBSYSTEM Structure & Mechanical

CRITICAL FUNCTION ANALYSIS

DATE 9-8-71

ITEM IDENTIFICATION & FUNCTION

1.2 Secondary Structure
Secondary structure includes module partitions, floors, utility distribution, storage devices, doors and hatches, windows, cargo handling devices, and flexiports.

FAILURE MODE	PRIMARY CAUSES	FAILURE EFFECT & TIME TO EFFECT
1. Hatch does not seal properly.	Environmental deterioration of seal material	Significant loss of module atmosphere. Possible crew hazard

RATIONALE/RECOMMENDATIONS/REF. DOCUMENTS

Rationale: Hatch seals are accessible for service, maintenance and replacement in the docked configuration. Ports not in use depend on hatch seals to retain the station atmosphere. Two hatch seals are located concentrically.

CRITICALITY

II

ITEM IDENTIFICATION & FUNCTION

1.2 Secondary Structure (Continued)

FAILURE MODE	PRIMARY CAUSES	FAILURE EFFECT & TIME TO EFFECT
2. Hatch jambs closed.	Thermal environment Corrosion Contamination	Loss of the main transfer route for personnel, cargo, and equipment between modules. Possible delay in mission objectives.

RATIONALE/RECOMMENDATIONS/REF. DOCUMENTS

Rationale: An alternate route between modules (flexiport) is available for personnel transfer. Hatch mechanisms have manual overrides and are maintainable in a shirtsleeve environment.

CRITICALITY

II

PREPARED BY J. Beekman | SUBSYSTEM P.E. A J Stifer | RELIABILITY P.E. J.R. Bigler

SUBSYSTEM Structures & Mechanical

DATE 9-8-71

CRITICAL FUNCTION ANALYSIS

ITEM IDENTIFICATION & FUNCTION		
1.2 Secondary Structure (Continued)		
FAILURE MODE	**PRIMARY CAUSES**	**FAILURE EFFECT & TIME TO EFFECT**
3. Window crazes or clouds (becomes opaque).	Environment - Thermal - Radiation	Loss of mission capability requiring external viewing. Loss of inner station visual viewing capability (through closed hatches)
RATIONALE/RECOMMENDATIONS/REF. DOCUMENTS		**CRITICALITY**
Rationale: Retractable window cover plates are provided for external viewing windows to act as thermal barriers, protective shields and air-tight caps (for window removal and servicing).		III

ITEM IDENTIFICATION & FUNCTION		
1.2 Secondary Structure (Continued)		
FAILURE MODE	**PRIMARY CAUSES**	**FAILURE EFFECT & TIME TO EFFECT**
4. Cargo handling mechanisms or rails fail structurally	Overloading, accidental damage, wearout.	Cargo handling capability through the hatchways is degraded
RATIONALE/RECOMMENDATIONS/REF. DOCUMENTS		**CRITICALITY**
Rationale: Mechanisms and rails are maintainable in a shirtsleeve environment. Repair parts as required are deliverable during scheduled resupplies.		III

PREPARED BY J. Beekman	SUBSYSTEM P.E.	RELIABILITY P.E.

SUBSYSTEM Structures & Mechanical

CRITICAL FUNCTION ANALYSIS

DATE 9-8-71

ITEM IDENTIFICATION & FUNCTION		
1.2 Secondary Structure (Continued)		
FAILURE MODE	**PRIMARY CAUSES**	**FAILURE EFFECT & TIME TO EFFECT**
5. Flexiport tube or seal leaks excessively.	Sealing surface damaged. Seal material deterioration from environmental exposure.	Station atmosphere loss. Loss of dual egress capability (Module to Module)
RATIONALE/RECOMMENDATIONS/REF. DOCUMENTS		**CRITICALITY**
Rationale: Flexiport seals are redundant but are not maintainable on orbit.		II

ITEM IDENTIFICATION & FUNCTION		
FAILURE MODE	**PRIMARY CAUSES**	**FAILURE EFFECT & TIME TO EFFECT**
RATIONALE/RECOMMENDATIONS/REF. DOCUMENTS		**CRITICALITY**

PREPARED BY J. Beekman	SUBSYSTEM P.E.	RELIABILITY P.E.

SUBSYSTEM Structures & Mechanical

CRITICAL FUNCTION ANALYSIS

DATE 9-8-71

ITEM IDENTIFICATION & FUNCTION

1.3 Environmental Shielding - The environmental shields provide passive protection to the station equipment and occupants from temperature extremes, micrometeoroids, and radiation.

FAILURE MODE	PRIMARY CAUSES	FAILURE EFFECT & TIME TO EFFECT
1. Inadequate superinsulation* performance. *Superinsulation-multiple layers of metalized mylar sheets separated at intervals by webbing.	Degradation of metalized film or mylar due to environmental exposure. Micrometeoroid damage	Excessive demand on station active thermal control (ECLSS) Localized cold spots could produce moisture condensation on inner station sidewalls or equipment. Possible equipment damage.

RATIONALE/RECOMMENDATIONS/REF. DOCUMENTS	CRITICALITY
Rationale: Thermal control equipment has been designed to allow for the effects of thermal insulation degradation which are anticipated over the MSS operational life.	III

ITEM IDENTIFICATION & FUNCTION

1.3 Environmental Shield (Continued)

FAILURE MODE	PRIMARY CAUSES	FAILURE EFFECT & TIME TO EFFECT
2. Loss of protective cover (over berthing port or window)	Docking collision	Increased station heat loss.

RATIONALE/RECOMMENDATIONS/REF. DOCUMENTS	CRITICALITY
Rationale: Thermal control equipment has been designed to compensate for some minor heat losses beyond the anticipated loads.	III

PREPARED BY J. Beekman	SUBSYSTEM P.E.	RELIABILITY P.E.

SUBSYSTEM Structures & Mechanical

CRITICAL FUNCTION ANALYSIS

DATE 9-8-71

ITEM IDENTIFICATION & FUNCTION		
1.3 Environmental Shield (Continued)		
FAILURE MODE	**PRIMARY CAUSES**	**FAILURE EFFECT & TIME TO EFFECT**
3. Partial loss or damage to a module micrometeoroid bumper.	Micrometeoroid impact, docking collision.	Local loss of thermal and micrometeoroid protection.
RATIONALE/RECOMMENDATIONS/REF. DOCUMENTS		**CRITICALITY**
Rationale: The frequency of micrometeoroids penetrating the spherical plane through which the modular space station will be in earth orbit has been estimated from detailed observations. Calculations have indicated with a 0.9 probability, that meteoroid penetration of the pressure hull should not occur within a ten year station life.		III

ITEM IDENTIFICATION & FUNCTION		
1.3 Environmental Shield (Continued)		
FAILURE MODE	**PRIMARY CAUSES**	**FAILURE EFFECT & TIME TO EFFECT**
4. Partial loss or damage to a module's radiation shield (micrometeoroid, radiators, & insulation).	Micrometeoroid impact, docking collision.	The crew's total natural radiation dose would be exceeded during extended periods of exposure and and during the short periods associated with significant solar-flare activity.
RATIONALE/RECOMMENDATIONS/REF. DOCUMENTS		**CRITICALITY**
Rationale: Crew could take refuge in other modules during solar flare activity to take advantage of maximum effective shielding.		III

PREPARED BY J. Beekman	SUBSYSTEM P.E.	RELIABILITY P.E.

SUBSYSTEM Structures & Mechanical

DATE 9-8-71

CRITICAL FUNCTION ANALYSIS

ITEM IDENTIFICATION & FUNCTION

1.4 Berthing - Berthing involves and includes the shuttle manipulator operations which enable the unloading of a module from the shuttle cargo bay to place it in contact with the space station at an appropriate berthing port. A prerequisite to this operation is the docking by the shuttle to the space station core module docking adaptor at the core module (-X) axis end. Note: During the second launch the shuttle will bring the docking adaptor into orbit and berth it to its docking port then dock to the core module side berthing port and then berth the power module.

FAILURE MODE	PRIMARY CAUSES	FAILURE EFFECT & TIME TO EFFECT
1. Mating ring fails to provide a compatible structural interface between module & station.	Structural damage or failure	Module berthing could not be accomplished. Station modules require return to earth. Damaged core module port would be unusable.

RATIONALE/RECOMMENDATIONS/REF. DOCUMENTS	CRITICALITY
Rationale: Core modules are non-returnable. Modules however, could be berthed to another berthing port if available.	II

ITEM IDENTIFICATION & FUNCTION

1.4 Berthing (Continued)

FAILURE MODE	PRIMARY CAUSES	FAILURE EFFECT & TIME TO EFFECT
2. Latch fails to close properly during berthing operations.	Mechanical or structural failure	No direct effect upon the berthing operation. 3 sets (12 units) are provided per port with one set of latches required to operate to assure a successful berthing.
3. Latch fails to release	Mechanical or structural failure	Delay in undocking operations. - Latches contain manual override provisions.

RATIONALE/RECOMMENDATIONS/REF. DOCUMENTS	CRITICALITY
Rationale: Units may be manually operated after berthing.	III

PREPARED BY J. Beekman	SUBSYSTEM P.E.	RELIABILITY P.E.

SUBSYSTEM Structures & Mechanical

CRITICAL FUNCTION ANALYSIS

DATE 9-8-71

ITEM IDENTIFICATION & FUNCTION		
1.4 Berthing (Continued)		
FAILURE MODE	**PRIMARY CAUSES**	**FAILURE EFFECT & TIME TO EFFECT**
4. Utility interface cannot be successfully mated (electrical & mechanical)	Structural damage or misalignment	Module utilization is delayed or lost.

RATIONALE/RECOMMENDATIONS/REF. DOCUMENTS	CRITICALITY
Rationale: Minor damage can be repaired in a shirtsleeve environment following successful berthing. Major utility interface damage to a station or cargo module would require return to earth for repair. Similar damage to a core module port would require berthing to an unused port if available.	II

ITEM IDENTIFICATION & FUNCTION		
FAILURE MODE	**PRIMARY CAUSES**	**FAILURE EFFECT & TIME TO EFFECT**

RATIONALE/RECOMMENDATIONS/REF. DOCUMENTS	CRITICALITY

PREPARED BY J. Beekman	SUBSYSTEM P.E.	RELIABILITY P.E.

SUBSYSTEM Structures & Mechanical

DATE 9-8-71

CRITICAL FUNCTION ANALYSIS

ITEM IDENTIFICATION & FUNCTION

1.5 General Purpose Lab Furnishings - Furnishings consist of special equipment, work benches, and storage cabinets located in the following lab areas: medical/biological, physics, data analysis, optical supply & maintenance, electrical/electronics maintenance, mechanical maintenance & photo processing. Special handling equipment associated with the airlocks are also included.

FAILURE MODE	PRIMARY CAUSES	FAILURE EFFECT & TIME TO EFFECT
1. Special lab equipment fails to function properly	Accidentally damaged	Equipment maintenance would be delayed and/or degraded. Photographic processing would be delayed. Data analysis could be delayed. Medical & biological services could be degraded.

RATIONALE/RECOMMENDATIONS/REF. DOCUMENTS	CRITICALITY
Rationale: Damaged equipment may be removed and replaced with a repaired or spare unit.	III

ITEM IDENTIFICATION & FUNCTION

1.5 General Purpose Lab Furnishings (Continued)

FAILURE MODE	PRIMARY CAUSES	FAILURE EFFECT & TIME TO EFFECT
2. General lab equipment (maintenance benches, storage cabinets, etc.) fails to provide the necessary facilities for proper maintenance operations and equipment storage.	Accidental damage	Equipment maintenance would be delayed and/or degraded. Special lab equipment could be damaged.

RATIONALE/RECOMMENDATIONS/REF. DOCUMENTS	CRITICALITY
Rationale: Alternate work areas and storage facilities are available if required.	III

PREPARED BY J. Beekman	SUBSYSTEM P.E.	RELIABILITY P.E.

SUBSYSTEM Structures & Mechanical

CRITICAL FUNCTION ANALYSIS

DATE 9-8-71

ITEM IDENTIFICATION & FUNCTION		
1.5 General Purpose Lab Furnishings (Continued)		
FAILURE MODE	**PRIMARY CAUSES**	**FAILURE EFFECT & TIME TO EFFECT**
3. Airlock equipment handling rails do not provide the necessary guide support (structural failure or binding).	Accidentally damaged Loosening of attachment points	Airlock equipment handling could not be facilitated. Equipment damage on impact.
RATIONALE/RECOMMENDATIONS/REF. DOCUMENTS		**CRITICALITY**
Rationale: Airlock equipment handling rails are maintainable in a shirtsleeve environment. Commonality with similar equipment used in cargo handling will provide parts for emergency repair.		III

ITEM IDENTIFICATION & FUNCTION		
1.5 General Purpose Lab Furnishings (Continued)		
FAILURE MODE	**PRIMARY CAUSES**	**FAILURE EFFECT & TIME TO EFFECT**
4. Airlock external hatch will not open fully.	Accidentally damaged	Experiments requiring full access of the airlock hatch could not be accomplished.
RATIONALE/RECOMMENDATIONS/REF. DOCUMENTS		**CRITICALITY**
Rationale: Two airlocks are provided on the initial station. Experiments might be relocated or the airlocks switched by a shuttle operation.		III

PREPARED BY J. Beekman	SUBSYSTEM P.E.	RELIABILITY P.E.

SUBSYSTEM Structures & Mechanical

DATE 9-8-71

CRITICAL FUNCTION ANALYSIS

ITEM IDENTIFICATION & FUNCTION		
1.5 General Purpose Lab Furnishings (Continued)		
FAILURE MODE	**PRIMARY CAUSES**	**FAILURE EFFECT & TIME TO EFFECT**
5. Airlock external hatch fails to close completely.	Hatch or mechanism damage.	Airlock cannot be utilized. Time critical experiments could be impacted.
RATIONALE/RECOMMENDATIONS/REF. DOCUMENTS		**CRITICALITY**
Rationale: On-orbit repair requires IVA or EVA. The failure mode could require return to earth of the airlock.		II

ITEM IDENTIFICATION & FUNCTION		
FAILURE MODE	**PRIMARY CAUSES**	**FAILURE EFFECT & TIME TO EFFECT**
RATIONALE/RECOMMENDATIONS/REF. DOCUMENTS		**CRITICALITY**

PREPARED BY J. Beekman	SUBSYSTEM P.E.	RELIABILITY P.E.

SUBSYSTEM ECLSS

DATE 8-12-71

CRITICAL FUNCTION ANALYSIS

ITEM IDENTIFICATION & FUNCTION 2.0 ENVIRONMENTAL CONTROL AND LIFE SUPPORT SUBSYSTEM
The ECLSS provides the following functions to the modular space station: Storage of life support gases, control of the MSS atmosphere, control of the MSS equipment heat loads, management of water, management of waste products, CO_2 removal and reduction, electrolysis of water, and special life support.

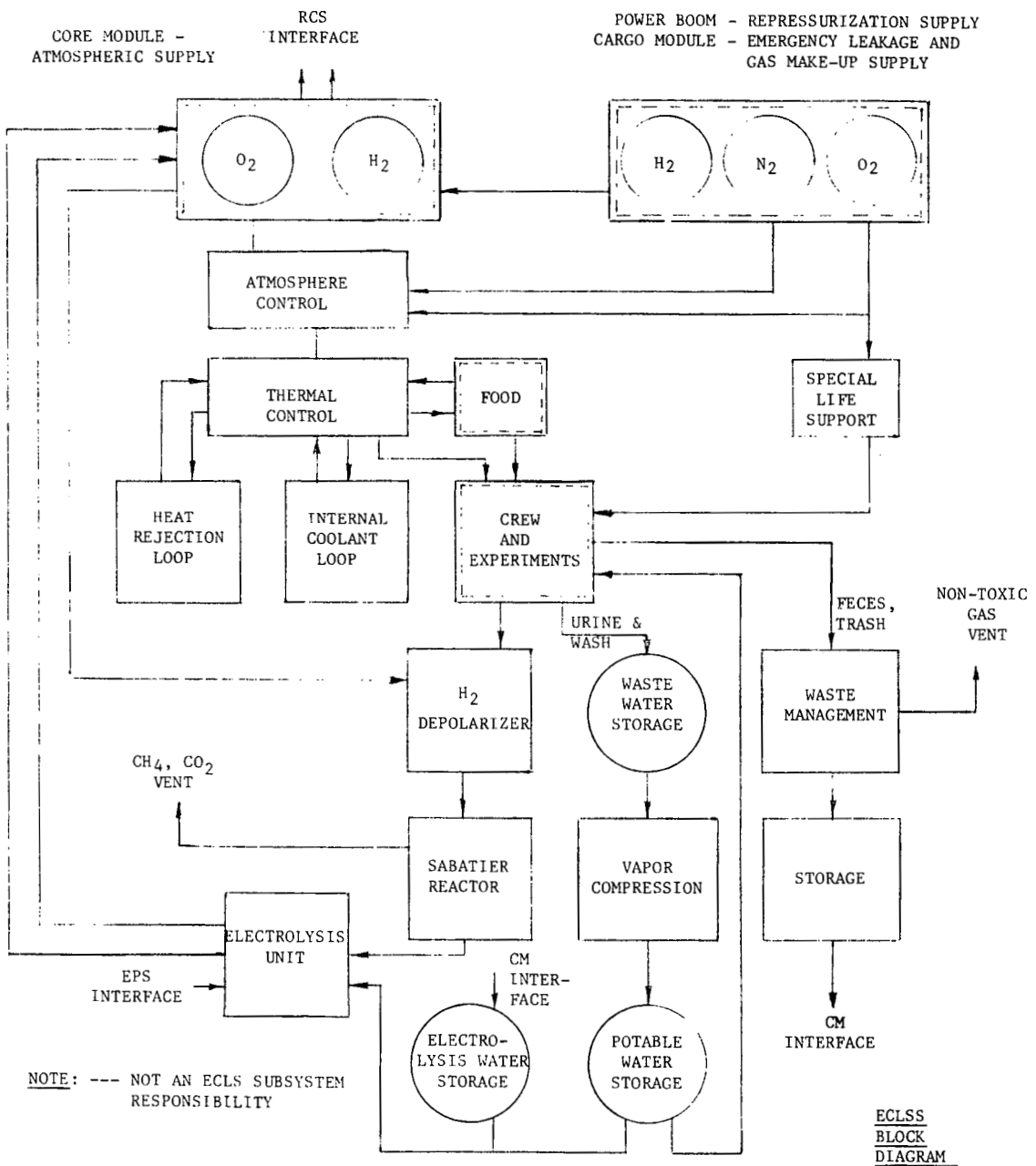

ECLSS BLOCK DIAGRAM

PREPARED BY J. M. Beekman	SUBSYSTEM P.E.	RELIABILITY P.E.

SUBSYSTEM ECLSS

CRITICAL FUNCTION ANALYSIS

DATE 8-12-71

ITEM IDENTIFICATION & FUNCTION

CFA SEQUENCE

2.0 ENVIRONMENTAL CONTROL LIFE SUPPORT SYSTEM

2.1 GASEOUS STORAGE AND INTERFACES

2.1.1 H_2, O_2 and N_2 Tanks
2.1.2 Power Module/Core Module Interface
2.1.3 Station Module/Core Module Interface
2.1.4 Cargo Module/Core Module Interface
2.1.5 RAM/Core Module Interface

2.2 ATMOSPHERE CONTROLS

2.2.1 Temperature - Heat Exchanger
2.2.2 Humidity - Wicks and Wick Separators
2.2.3 Pressure - Regulators
2.2.4 Circulation - Fans, Drives and Ducting
2.2.5 Contaminant - Sorbent Bed, Catalytic Burner

2.3 THERMAL CONTROL

2.3.1 Internal Coolant Loop - Cold Plates
2.3.2 Heat Rejection Loop - Radiators
2.3.3 Passive Temperature Control

2.4 WATER MANAGEMENT

2.4.1 Water Reclamation Unit - Waste Water Storage,
Water Reclamation Unit - Vapor Compression Unit
2.4.2 Purity Control - Transducer - H_2O Purity Sensing
2.4.3 Potable Water Storage - Potable Water Storage Tank

2.5 WASTE MANAGEMENT

2.5.1 Trash Processing and Storage
2.5.2 Fecal Processing and Storage
2.5.3 Food Wastes and Other Dangerous Waste Processing and Storage

2.6 CO_2 MANAGEMENT

2.6.1 CO_2 Removal - Hydrogen Depolarizer
2.6.2 CO_2 Reduction - Sabatier Reactor

2.7 H_2O STORAGE AND ELECTROLYSIS

2.7.1 H_2O Tank - Electrolysis Make-Up
2.7.1.1 Cargo Module Interface
2.7.2 H_2O Electrolysis Unit

2.8 SPECIAL LIFE SUPPORT

2.8.1 Fire Control - Estinguishers, Etc.
2.8.2 IVA Support
2.8.3 PLSS Support

PREPARED BY V. Shoemaker	SUBSYSTEM P.E.	RELIABILITY P.E.

SUBSYSTEM ECLSS

CRITICAL FUNCTION ANALYSIS

DATE 8-12-71

ITEM IDENTIFICATION & FUNCTION 2.1 GASEOUS STORAGE AND INTERFACES - The following are ECLSS storage requirements and module interfaces: N_2 tanks for emergency repressurization and atmosphere leakage makeup, O_2 tanks for emergency repressurization, 96 hour emergency ECLSS and EPS operation, EVA/IVA emergency operations, RCS maneuvering, and H_2 tanks for 96 hour emergency EPS operation, and RCS maneuvering. The ECLSS subsystem requires interfaces between the following space station modules: core/power, core/station, core/cargo, and core/RAM for the initial station. The growth station requires the following similar interfaces: core 1/growth, growth/station, and growth/RAM.

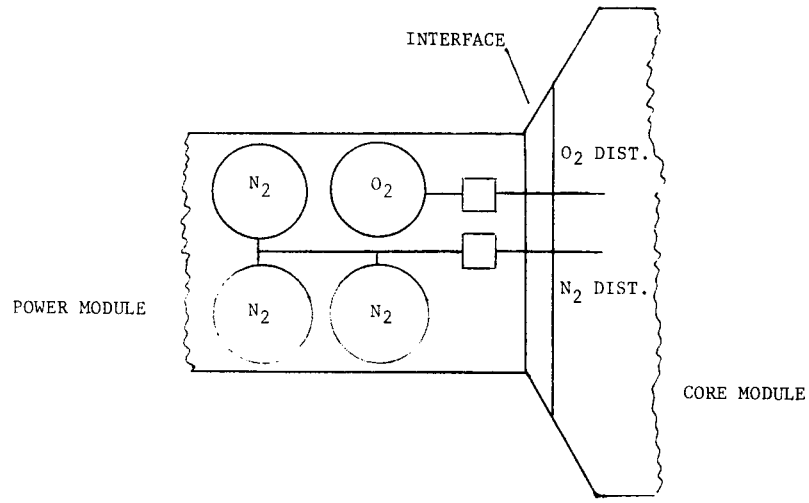

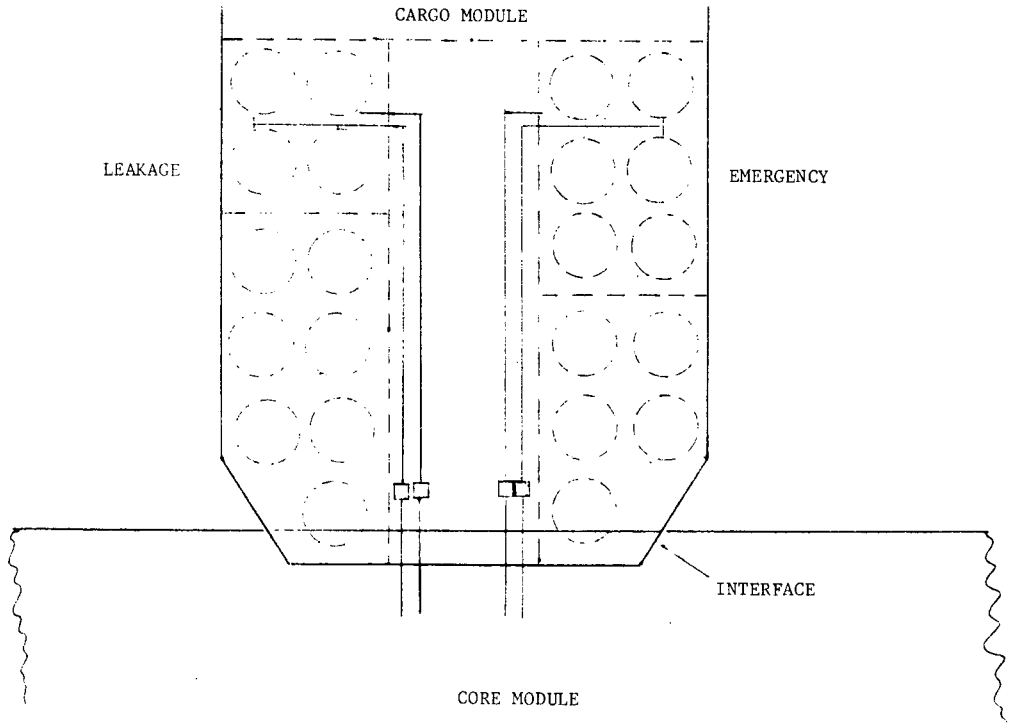

PREPARED BY V. Shoemaker	SUBSYSTEM P.E.	RELIABILITY P.E.

SUBSYSTEM Modular Space Station

DATE 8-12-71

CRITICAL FUNCTION ANALYSIS

ITEM IDENTIFICATION & FUNCTION 2.1.1 H_2, O_2 and N_2 TANKS - 3000 psia tanks are provided for gas storage in the cargo and power modules. Station modules and the growth core contain only tanks to be pressurized at 300 psia or less. (1) O_2 and (3) N_2 reservoirs are located in the power boom. The cargo modules contain the balance of H_2, O_2 and N_2 reserves necessary for the MSS requirements. All reservoirs are inflight replaceable units (IFRU). Note: The tanks provided for RCS use, accumulate H_2 and O_2 from the ECLSS electrolysis units. The ECLSS O_2 for the breathable atmosphere is drawn from the RCS O_2 accumulator.

FAILURE MODE	PRIMARY CAUSES	FAILURE EFFECT & TIME TO EFFECT
(1) Tank wall explosive rupture or fracture.	Material or processes Accidental puncture Overpressurization Regulator sticking or diaphragm rupture Radiation or atmosphere heat Overpressure or physical impact	Explosive gas release with associated structural damage. Partial loss of gas supply Overpressurization of station Unbalance of station atmosphere partial pressure Time - immediate to hours.

RATIONALE/RECOMMENDATIONS/REF. DOCUMENTS	CRITICALITY
Tank hazards are reduced through the following design features: 1) Blow out rupture discs in reservoirs with diffuser nozzles, 2) Control of reservoir temp.(insulation and radiation shielding), 3) Containment shielding around tanks, 4) Fail closed regulators plus manual bypass flow control valves, 5) All reservoirs are isolated to prevent failure propogation, 6) All reservoirs are multi number so loss of any reservoir is not critical.	I

ITEM IDENTIFICATION & FUNCTION 2.1.2 POWER MODULE/CORE MODULE INTERFACE - Includes: O_2 and N_2 supply lines, power boom to core interconnects and related valves for repressurization. NOTE: H_2 and O_2 gases and primary electrical feeders for EPS are also at this interface.

FAILURE MODE	PRIMARY CAUSES	FAILURE EFFECT & TIME TO EFFECT
(1)Gas leakage	Material or process Accidental impact or strain Valve malfunction or seal damage	Loss of gas resulting in inability to repressurize. Possible atmosphere unbalance. Possible over pressurization. Possible fire or explosion (needs an ignition source) Time - Minutes to hours

RATIONALE/RECOMMENDATIONS/REF. DOCUMENTS: The following features are incorporated:	CRITICALITY
1. Manual backup isolation valves 2. Protected line routing 3. Pressure loss warning devices	II

PREPARED BY V. Shoemaker	SUBSYSTEM P.E.	RELIABILITY P.E.

SUBSYSTEM ECLSS

DATE 8-12-71

CRITICAL FUNCTION ANALYSIS

ITEM IDENTIFICATION & FUNCTION 2.1.3 STATION MODULE/CORE MODULE INTERFACE - Includes: Repressurization O_2 and N_2 supply lines and station to core interconnects (air, water, and freon). Note: H_2 and O_2 gases are also carried across the SM 1 and SM4 interfaces.

FAILURE MODE	PRIMARY CAUSES	FAILURE EFFECT & TIME TO EFFECT
(1) Gas leakage	Material or process defects. Accidental impact or strain Valve malfunction or seal damage	Loss of gas resulting in inability to repressurize. Possible atmosphere unbalance Possible overpressurization Possible fire or explosion (Need an ignition source) Time - minutes to hours

RATIONALE/RECOMMENDATIONS/REF. DOCUMENTS	CRITICALITY
The following features are incorporate: 1. Manual backup isolation valves. 2. Protected line routing. 3. Pressure loss warning devices	II

ITEM IDENTIFICATION & FUNCTION 2.1.4 CARGO MODULE/CORE MODULE INTERFACE - Includes O_2 and N_2 supply lines, cargo module to core interconnects and related valves for N_2 leakage makeup; O_2 for IVA, EVA and emergency supply; H_2 for emergency EPS operation.

FAILURE MODE	PRIMARY CAUSES	FAILURE EFFECT & TIME TO EFFECT
(1) Gas leakage	Material or process Accidental impact or strain Valve malfunction	Possible atmosphere unbalance Possible H_2 expulsion Possible overpressurization Loss of gas and possible loss of emergency EPS function Time: minutes to hours

RATIONALE/RECOMMENDATIONS/REF. DOCUMENTS	CRITICALITY
1. Manual backup isolation valves 2. Protected line routing 3. Pressure warning devices	II

PREPARED BY V. Shoemaker	SUBSYSTEM P.E.	RELIABILITY P.E.

SUBSYSTEM ECLSS

DATE 8-12-71

CRITICAL FUNCTION ANALYSIS

ITEM IDENTIFICATION & FUNCTION 2.1.5 RAM/CORE MODULE INTERFACE -

Includes: O_2 and N_2 supply lines and RAM to core interconnects (air and water).

FAILURE MODE	PRIMARY CAUSES	FAILURE EFFECT & TIME TO EFFECT
1. Gas leakage	Material or process defects Accidental impact or strain Valve malfunction or seal damage	Loss of gas resulting in inability to repressurize Possible atmosphere unbalance. Possible overpressurization Time - minutes to hours

RATIONALE/RECOMMENDATIONS/REF. DOCUMENTS	CRITICALITY
The following features are incorporate 1. Manual backup isolation valves 2. Protected line routing 3. Pressure loss warning devices	III

ITEM IDENTIFICATION & FUNCTION

FAILURE MODE	PRIMARY CAUSES	FAILURE EFFECT & TIME TO EFFECT

RATIONALE/RECOMMENDATIONS/REF. DOCUMENTS	CRITICALITY

PREPARED BY V. Shoemaker	SUBSYSTEM P.E.	RELIABILITY P.E.

SUBSYSTEM ECLSS

CRITICAL FUNCTION ANALYSIS

DATE 8-12-71

ITEM IDENTIFICATION & FUNCTION 2.2 ATMOSPHERIC CONTROL - SUBSYSTEM CONSISTS OF: (2) Humidity control units with duct fans, (2) charcoal beds plus (4) small local charcoal beds, (5) sensible heat exchangers, with fans, (31) local fans, (2) O_2 partial pressure controls, (6) pressure sensors, (2) contaminant control units, (2) gas and bacteria monitors, (7) explosion detectors, (5) pressure relief units, related ducting and supply lines. System controls humidity, gas partial pressure and total atmospheric pressure, gas circulation, atmospheric contamination, atmospheric temperature, and warns of contamination and explosive hazards.

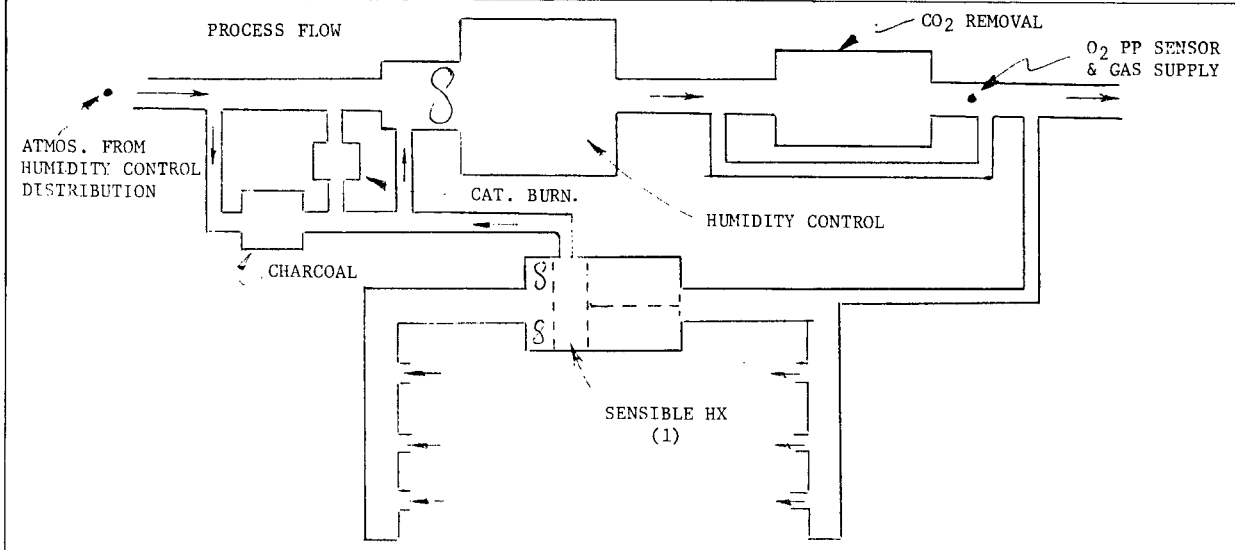

(1) TYPICAL PER MODULE

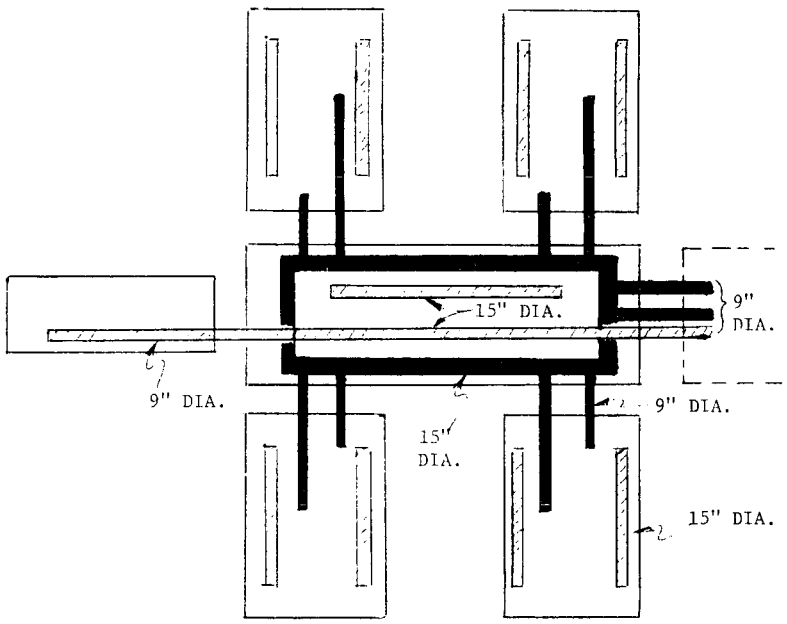

- MAIN AIR FLOW SEPARATE FOR EACH MODULE
  - MIN. SMOKE SPREAD
  - CORE DUCTS TOO LARGE IF CENT.
- CENTRALIZED REVITILIZATION
  - BLEED FROM ALL MODULES FOR CO_2, HUMIDITY, CONTAMINANT
  - EQUIP. TOO COMPLEX TO REPEAT IN EACH MODULE
  - PROVIDES UTILITY SUPPORT TO RAM & CARGO MODULES
- CORE SENSIBLE HX SYSTEM PROVIDES FOR POWER BOOM & GROWTH CORE

PREPARED BY V. Shoemaker	SUBSYSTEM P.E.	RELIABILITY P.E.

SUBSYSTEM ECLSS

DATE 8-12-71

CRITICAL FUNCTION ANALYSIS

ITEM IDENTIFICATION & FUNCTION 2.2.1 TEMPERATURE - HEAT EXCHANGERS (5)
One unit is located in each station module and core. The fan assembly circulates cabin air thru the heat exchanger which absorbs excess heat in coolant water (active thermal subsystem) to maintain the specified atmospheric temperature.

FAILURE MODE	PRIMARY CAUSES	FAILURE EFFECT & TIME TO EFFECT
1. Degradation or loss of ability to control the air temperature.	Failure of a heat exchanger or fan component or drive. Leakage of the heat exchanger coolant. Excessive heat source (fire, etc.)	Atmospheric overtemp. Excess humidity or water drops in the humidity control heat exchanger. At 1 hour the temperature will rise to approximately 95°F under a 3 KW air heat load; 85°F under a 2 KW heat load.

RATIONALE/RECOMMENDATIONS/REF. DOCUMENTS	CRITICALITY
Each station module and the core have a separate heat exchanger unit. The failure of one unit will not seriously effect the module operations unless the condition continues and temperature or moisture affects other operations. Single failure of dual heat exchanger maintains 75F air temperature and loss of selectability.	III

ITEM IDENTIFICATION & FUNCTION 2.2.2 HUMIDITY CONTROL - (2) Operating units in station module 2, (1) standby unit in station module -3. The unit is a condensing heat exchanger that collects water in wicking. The condensed water is ultimately pumped to the water management system. The unit contains a blower which draws air from the station module and core module volumes and forces the air thru the heat exchanger where the humidity is reduced, the air is delivered to the CO_2 removal unit and then back to the SM's.

FAILURE MODE	PRIMARY CAUSES	FAILURE EFFECT & TIME TO EFFECT
1. Degradation or loss of ability to control the station humidity.	Corrosion Clogged wicking Blower malfunction Pump malfunction	Condensation forms on walls if no control for 8 hrs (65°F Dew pt) R.H. = 100% at 13 hrs.

RATIONALE/RECOMMENDATIONS/REF. DOCUMENTS	CRITICALITY
In case of operating unit failure load will be switched to standby unit, at which time primary unit can be repaired.	III

PREPARED BY V. Shoemaker	SUBSYSTEM P.E.	RELIABILITY P.E.

SUBSYSTEM ECLSS

DATE 8-12-71

CRITICAL FUNCTION ANALYSIS

ITEM IDENTIFICATION & FUNCTION 2.2.3 Pressure Regulation - An automatic control regulates the O_2 partial pressure at 3.0 to 3.5 psia and a total pressure regulator controls the total pressure at approximately 14.7 psia by N_2 addition. Pressure sensors are located in each station module and the core module to warn of any out-of-tolerance conditions.

FAILURE MODE	PRIMARY CAUSES	FAILURE EFFECT & TIME TO EFFECT
1. Regulates too low	Spring or diaphragm failure	Loss of O_2 partial press. men/module time @ 2 psia 6 — 2 days 3 — 4 days
	Accidental impact	
	Loss of gas source	Total MSS failure - Vol. 1 + Vol 2 = 8 days
2. Regulates too high		O_2 rich atmosphere (increases the potential fire hazard risk)

RATIONALE/RECOMMENDATIONS/REF. DOCUMENTS	CRITICALITY
The primary regulation system (SM-2) has 2 units in one as a redundancy measure - in addition there is an identical standby unit in SM-3.	(1) III,(2)III

ITEM IDENTIFICATION & FUNCTION
2.2.3 Pressure Regulation (continued)
Pressure relief valves allow venting in the event of overpressurization.

FAILURE MODE	PRIMARY CAUSES	FAILURE EFFECT & TIME TO EFFECT
(3) Module pressure relief valve leaks.	Seal contamination	Possible loss of a module atmosphere.
(4) Pressure relief valve fails closed.	Mechanical interference	No effect

RATIONALE/RECOMMENDATIONS/REF. DOCUMENTS	CRITICALITY
1. Module hatches provide the capability for isolation from the rest of the MSS complex in the event of this occurrence and until corrective maintenance can be performed. 2. Pressure relief valves are designed with redundant valves and ports.	(3)II, (4) III

PREPARED BY J. Beekman	SUBSYSTEM P.E.	RELIABILITY P.E.

SUBSYSTEM ECLSS

DATE 8-12-71

CRITICAL FUNCTION ANALYSIS

ITEM IDENTIFICATION & FUNCTION 2.2.4 CIRCULATION - This system consists of ducting and fans to draw off used air from each station module and core and to deliver the humid and mixed gas products to the contamination control unit, humidity control unit and CO_2 unit. These units remove toxic elements, bacteria, moisture and CO_2 from the atmosphere. There are individual local fans in each module, in addition to the humidity unit blower and sensible heat exchanger fans, to supply adequate air circulation.

FAILURE MODE	PRIMARY CAUSES	FAILURE EFFECT & TIME TO EFFECT
1. Loss of circulation capability.	Fan malfunctions or loss of power. Accidental duct blockage or air diversion.	Partial loss of humidity and thermal control resulting in some crew discomfort. Time: Hours to days

RATIONALE/RECOMMENDATIONS/REF. DOCUMENTS	CRITICALITY
As there are 7 local fans in each SM, one or two fan failures would have little effect. A humidity blower plus sensible heat exchanger fan failure covered in section 2.2.2 (2.2.1) and a duct failure could isolate circulation in an affected module allowing humidity and contaminant buildup.	III

ITEM IDENTIFICATION & FUNCTION 2.2.5 CONTAMINANT CONTROL - (2) sorbent beds (2) catalytic burners (2) charcoal beds (2) bateria filters (4) local charcoal beds
The ducted air bleed from the SM's and core is pumped through 1 set of the above units (the other set is on standby) to remove toxic gases, odors, and bacteria. The catalytic burner oxidizes trace gases to CO_2 and H_2O, while the sorbent bed absorbs NH_3 and residual organic acids. The charcoal absorbs and odor constituents and other residual organics. The bacteria filter removes bacteria.

FAILURE MODE	PRIMARY CAUSES	FAILURE EFFECT & TIME TO EFFECT
1. Loss of ability to control module atmosphere contaminants.	Excessive or incompatible contaminants poisoning the catalysts. Filter or bed elements not changed when saturated or "blown" through. Over or under voltage on heater so burner temp. is not maintained.	Excessive toxic gas, ammonia, odors and bacteria in atmosphere can affect comfort and health of crew. Time - normal station operation- 6 to 10 days Abnormal condition (leaks, spills, etc.) - hours

RATIONALE/RECOMMENDATIONS/REF. DOCUMENTS	CRITICALITY
One set of each of the contaminant control units is located in the humidity control system. One is operative the other on standby so in case of any unit failure, the load would be transferred to the standby unit. Each unit has replaceable beds or filters which have scheduled changes. Contaminant detectors will warn of out-of-tolerance conditions requiring immediate action.	II

PREPARED BY V. Shoemaker	SUBSYSTEM P.E.	RELIABILITY P.E.

SUBSYSTEM ECLSS

DATE 8-12-71

CRITICAL FUNCTION ANALYSIS

ITEM IDENTIFICATION & FUNCTION 2.3 THERMAL CONTROL - This system removes heat from the station and rejects it to space. The station has a primary and secondary water coolant loop interconnected to coldplates and atmospheric heat exchangers. These loops interconnect with primary and secondary freon loops through the redundant heat exchangers. The redundant freon loops connect to space radiators on each station module. Redundant water and freon pumps circulate the respective fluids. The radiator freon loops have diverter valves for light/dark operations.

THERMAL CONTROL

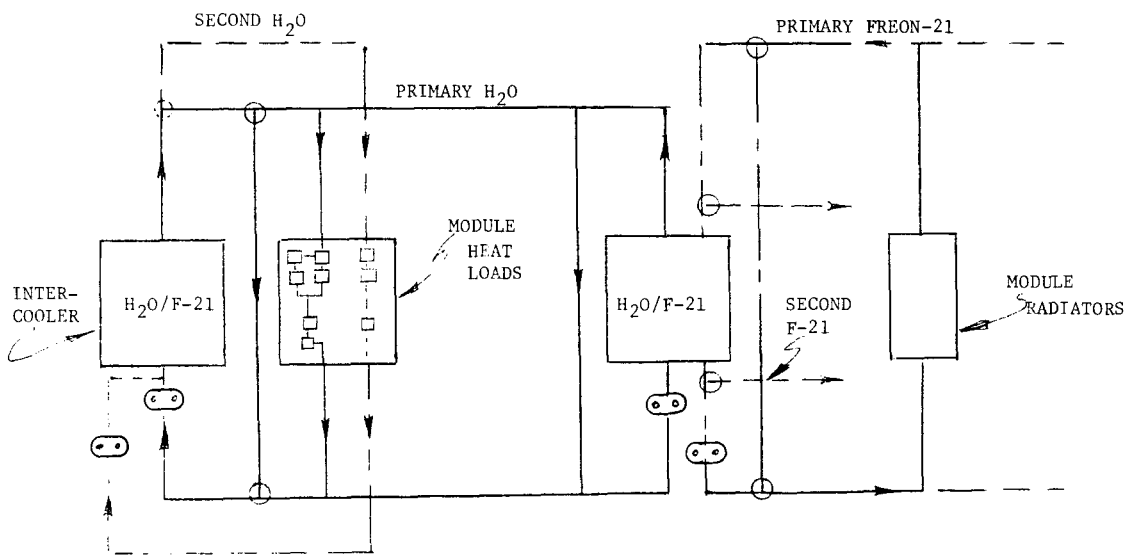

PREPARED BY V. Shoemaker	SUBSYSTEM P.E.	RELIABILITY P.E.

SUBSYSTEM ECLSS

DATE 8-12-71

CRITICAL FUNCTION ANALYSIS

ITEM IDENTIFICATION & FUNCTION 2.3.1 INTERNAL COOLANT LOOP - This loop absorbs the generated heat of the station through coldplates and heat exchangers. The system consists of coldplates (150) heat exchangers (20) pumps (4) accumulators (2) and related plumbing. There is a primary loop for all normal operations, and a secondary loop to all critical functions. This loop used only in case of failure of primary loop. This loop is the water loop and includes the water to freon heat exchangers (2) which are valved interchangeably with primary and secondary loops.

FAILURE MODE	PRIMARY CAUSES	FAILURE EFFECT & TIME TO EFFECT
1. Loss of ability to accumulate the internal generated heat.	Failure of a pump part and/or pump drive.	Overheating of units to be cooled - degrades or stops unit performance. Time - minutes
	Loss of drive power	
	Subsystem coolant loss	
	Loss of accumulator pressure	Excessive humidity or water in atmosphere time - seconds

RATIONALE/RECOMMENDATIONS/REF. DOCUMENTS	CRITICALITY
The primary system has redundant pumps and can be valved to use the secondary systems freon/water heat exchanger. The secondary system is less extensive than the primary system, but will handle all critical functions. It also has redundant pumps and interchangeability of heat exchangers with the primary system.	III

ITEM IDENTIFICATION & FUNCTION 2.3.2 - Heat Rejection Loop - This system accepts heat from the internal coolant loop through the water freon heat exchanger. It distributes the heat to the external radiators where the heat is radiated to space. The system consists of a primary and secondary loop. Each loop contains pumps (2), radiators (32 panels), distribution plumbing, freon accumulators, valving controls to allow radiator insulation, and modulating valves to control the flow proportional to the heat loads.

FAILURE MODE	PRIMARY CAUSES	FAILURE EFFECT & TIME TO EFFECT
1. Loss of ability to transfer and reject the station heat loads.	Failure of a pump and/or pump drive.	Overheating of thermally sensitive components and assemblies.
	Loss of drive power	Time - hours to days
	Subsystem coolant loss through puncture (meteorite, docking error)	Crew discomfort and possible interruption of normal station activities.
	Loss of accumulator pressure.	Time: hours
	Pump cavitation	

RATIONALE/RECOMMENDATIONS/REF. DOCUMENTS	CRITICALITY
The primary and secondary systems are completely redundant. Secondary system radiator panel groups may be substituted individually if desired. Each system is capable of handling the MSS heat load alone. Excess radiator panel capability (four panels) is incorporated into the design.	III

PREPARED BY V. Shoemaker	SUBSYSTEM P.E. [illegible]	RELIABILITY P.E. [illegible]

SUBSYSTEM ECLSS

CRITICAL FUNCTION ANALYSIS

DATE 8-12-71

ITEM IDENTIFICATION & FUNCTION 2.4 WATER MANAGEMENT - The system collects urine and waste water and processes it thru a vapor compression unit (2) to purify the water. It stores the purified water in holding tanks (4) where it is maintained at 160°F to maintain purity. Purity monitors (2) constantly sample the water. The water is distributed to use ports. Purity is maintained in transit by silver ion injection into the water. The system consists of dual units, one for regular use, one as a backup standby.

WATER MANAGEMENT

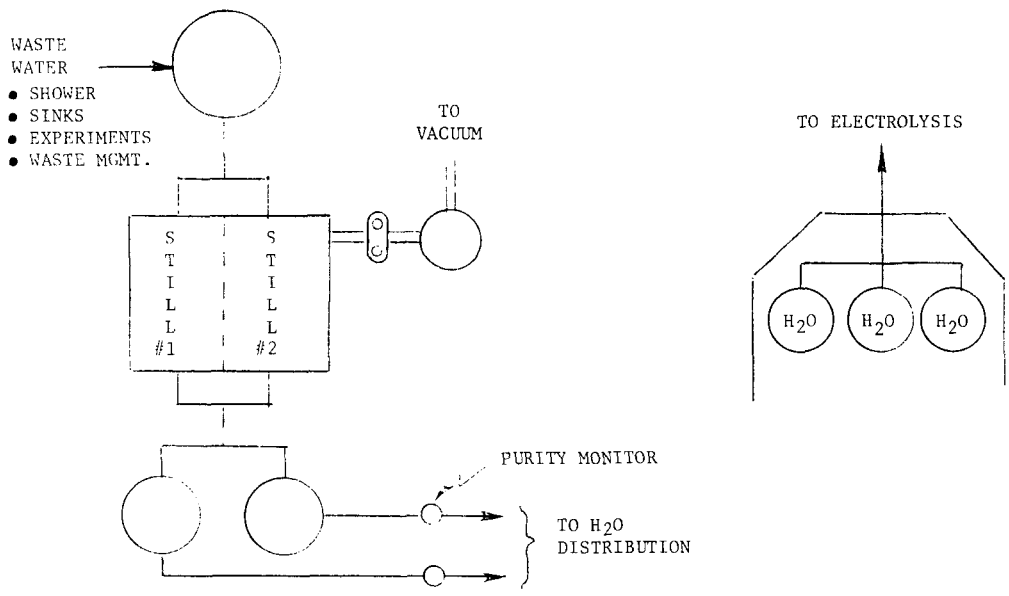

PREPARED BY V. Shoemaker	SUBSYSTEM P.E.	RELIABILITY P.E.

SUBSYSTEM ECLSS

DATE 8-12-71

CRITICAL FUNCTION ANALYSIS

ITEM IDENTIFICATION & FUNCTION 2.4.1 WATER RECLAMATION UNIT - WASTE WATER STORAGE
This unit stores waste water prior to the purification treatment. It consists of (4) tanks, two in the standard operational unit and two in the backup standby unit.

FAILURE MODE	PRIMARY CAUSES	FAILURE EFFECT & TIME TO EFFECT
1. Leakage and loss of waste water.	Puncture from an accidental impact. Material or process induced failures. Externally induced corrosion.	Atmosphere contamination Loss of recoverable water. Possible crew health hazard.

RATIONALE/RECOMMENDATIONS/REF. DOCUMENTS	CRITICALITY
NOTE: Waste water tanks and vapor compression units are each subassemblies of the water reclamation units (WRU). Two waste water tanks are included in each WRU. A WRU is located in SM-1 and SM-4.	III

ITEM IDENTIFICATION & FUNCTION 2.4.1 (Continued) - Vapor Compression Unit - The vapor compression unit receives the waste water and purifies it by vapor distillation and delivers the purified water to the pure water holding tanks. There are (2) units, one operating, one standby. Each unit is redundant in itself. The unit processes all waste water; ie: urine, wash water, humidity condensate, lab water, etc.

FAILURE MODE	PRIMARY CAUSES	FAILURE EFFECT & TIME TO EFFECT
2. Loss of capability to recover waste water.	Failure of a compressor and/or compressor drive. Failure of a heater or heater supply. Condenser leakage.	Delivery of impure water or no water. Time - immediate Note - one pure water tank is always on reserve and it holds 1 1/2 days supply of water.

RATIONALE/RECOMMENDATIONS/REF. DOCUMENTS	CRITICALITY
Regular servicing of unit	III

PREPARED BY V. Shoemaker	SUBSYSTEM P.E. [signature]	RELIABILITY P.E. [signature]

SUBSYSTEM ECLSS

DATE 8-12-71

CRITICAL FUNCTION ANALYSIS

ITEM IDENTIFICATION & FUNCTION - 2.4.2 Purity Control - This system assures a pure water supply. The water is heated and held at 160°F in the potable water tanks (4). This pastuerizes the water, killing the bacteria. (2) silver ion generators inject silver ions into the water to maintain purity during transport in the delivery lines. (2) purity monitors constantly sample the purified water to determine water purity (salt content, P.H, organic & bacteria level).

FAILURE MODE	PRIMARY CAUSES	FAILURE EFFECT & TIME TO EFFECT
1. Loss of water purity control	Pastuerization heater control malfunction or element burnout.	Possible delivery of impure water.
	Electrodes shorting out - battery failure	
	Timer and/or temp. control malfunction	Time 10 to 36 hours.
	No silver ion production	
	Purity monitor loss or out-of calibration.	

RATIONALE/RECOMMENDATIONS/REF. DOCUMENTS	CRITICALITY
The "use" water is stored in a "use" tank which is isolated from the vapor compression unit. The vapor compression unit delivers water to a second tank which is monitored for purity. The tanks hold a 36 hour supply of water, so in case of a component failure there is a reserve of pure water.	III

ITEM IDENTIFICATION & FUNCTION 2.4.3 Potable Water Storage - These tanks (4) receive water from the vapor compression units. One tank is filling while the other tank is isolated for the station water supply.

The filling tank is monitor for purity. When the filling tank is full and the delivery tank is empty, the process is reversed. The tank water heaters are included under purity control.

FAILURE MODE	PRIMARY CAUSES	FAILURE EFFECT & TIME TO EFFECT
1. Tank leakage and loss of storage	System overpressure	Release of water into the station atmosphere.
	Material, process or corrosion weakening.	Possible contamination of instruments or electrical and mechanical hardware.
	Accidental impact, ie: fracture or puncture (bladder rupture)	Time: Immediate

RATIONALE/RECOMMENDATIONS/REF. DOCUMENTS	CRITICALITY
As the water system is redundant, two of the (4) tanks are operational and two of tanks are on standby in the redundant system.	III

PREPARED BY V. Shoemaker	SUBSYSTEM P.E. K Lautsch	RELIABILITY P.E. J. R. Bigbee

SUBSYSTEM ECLSS

CRITICAL FUNCTION ANALYSIS

DATE 8-12-71

ITEM IDENTIFICATION & FUNCTION 2.5 WASTE MANAGEMENT - This system has three functions: 1) Fecal collection, drying and storage; 2) urine collection and delivery to waste tank; and 3) station trash processing (compacting and drying of station trash).
The fecal collectors(2) consist of a collector, a shredder, a feces deposit cylinder and a vacuum dryer.
The urine collectors(2) consist of a collector and an air liquid separator.
The trash collector(2) consist of a collection bin, a compactor, and a dryer.

FECAL & URINE COLLECTION

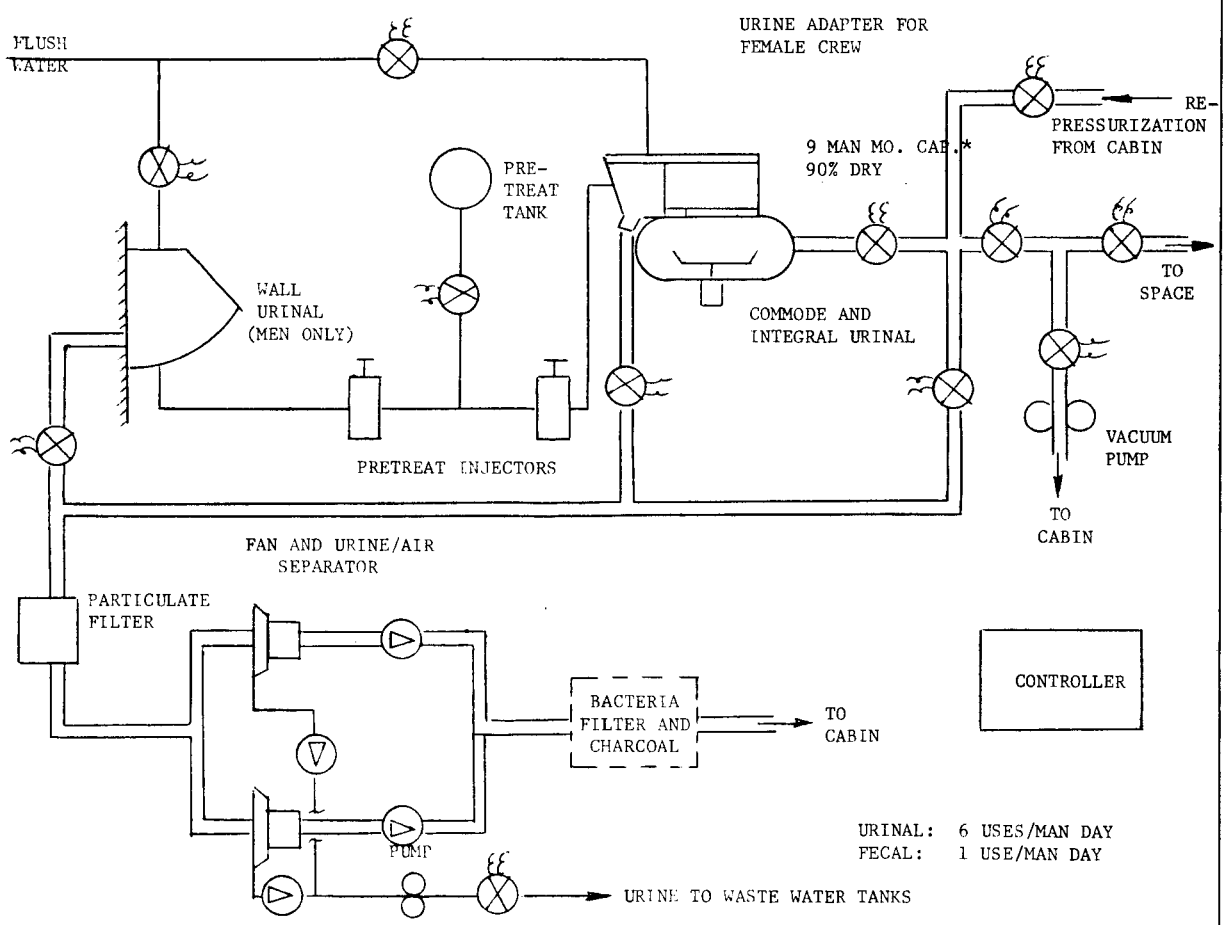

URINAL: 6 USES/MAN DAY
FECAL: 1 USE/MAN DAY

* NO SECONDARY PERFORMANCE

PREPARED BY V. Shoemaker	SUBSYSTEM P.E.	RELIABILITY P.E.

SUBSYSTEM ECLSS

CRITICAL FUNCTION ANALYSIS

DATE 8-12-71

ITEM IDENTIFICATION & FUNCTION 2.5.1 TRASH PROCESSING - The units receive the trash in a bin, where the trash is dried by electric heating elements and the moisture evacuated to space. The dried trash is compressed in a bag by a motor driven compactor. The bagged and compressed trash is stored in the cargo module.

FAILURE MODE	PRIMARY CAUSES	FAILURE EFFECT & TIME TO EFFECT
(1) Loss of capability to process trash.	Electric heater control or element failure.	Accumulation of undried, uncompressed trash requiring more storage volume. Probable generation of bacteria and gaseous products. TIME: days to weeks

RATIONALE/RECOMMENDATIONS/REF. DOCUMENTS	CRITICALITY
All functional units are redundant	III

ITEM IDENTIFICATION & FUNCTION 2.5.2 FECAL COLLECTOR AND PROCESSOR- The feces are deposited in the unit by forced air from an air blower. The material is shredded and centrifically slung to the surface of a drum container by a rotating blade. When defecation is complete, the drum is sealed and vented to vacuum to dehydrate the feces film. When the drum is full it is sealed and the drum stored. A new drum is installed.

FAILURE MODE	PRIMARY CAUSES	FAILURE EFFECT & TIME TO EFFECT
1) Loss of capability to collect and process feces.	Drum seal leakage Drum, slinger or blower drive motor failure. Isolation valve leakage	Crew inconvenience Possible atmosphere contamination. Increased maintenance task requirement. Time - immediate

RATIONALE/RECOMMENDATIONS/REF. DOCUMENTS	CRITICALITY
There are (2) units, however loss of one inconveniences the crew through the necessity to time-share the remaining unit.	III

PREPARED BY V. Shoemaker	SUBSYSTEM P.E. [signature]	RELIABILITY P.E. [signature]

SUBSYSTEM ECLSS

DATE 8-12-71

CRITICAL FUNCTION ANALYSIS

ITEM IDENTIFICATION & FUNCTION 2.5.3 URINE COLLECTOR - The urine collector receives the urine and directs it by means of an air flow. The urine enters a separator where the carrier air is separated and the urine pumped onto the waste water tanks.

FAILURE MODE	PRIMARY CAUSES	FAILURE EFFECT & TIME TO EFFECT
1)Loss of capability to collect and process urine.	Liquid gas membrane rupture Blower or pump motor failure.	Atmospheric contamination Inactivation of unit Time immediate

RATIONALE/RECOMMENDATIONS/REF. DOCUMENTS	CRITICALITY
There are (2) units, however loss of one is a minor inconvenience to the crew through the necessity the necessity to travel to the other location.	III

ITEM IDENTIFICATION & FUNCTION

FAILURE MODE	PRIMARY CAUSES	FAILURE EFFECT & TIME TO EFFECT

RATIONALE/RECOMMENDATIONS/REF. DOCUMENTS	CRITICALITY

PREPARED BY V. Shoemaker	SUBSYSTEM P.E. H.E. Gaubatz	RELIABILITY P.E. J.C. Bigbee

SUBSYSTEM ECLSS

DATE 8-12-71

CRITICAL FUNCTION ANALYSIS

ITEM IDENTIFICATION & FUNCTION 2.6 CO_2 MANAGEMENT - The H_2 depolarizer draws in CO_2 rich atmosphere and removes a major portion of the CO_2 then returns the CO_2 lean atmospheres to the station modules. The removed CO_2 is ducted to sabatier reactor where the CO_2 is reacted to CH_4 (for RCS use) and water (which is returned to the electrolysis unit). There are (2) sets of H_2 depolarizer and sabatier combinations. One set is always on the line while the other is on standby.

CO_2 MANAGEMENT

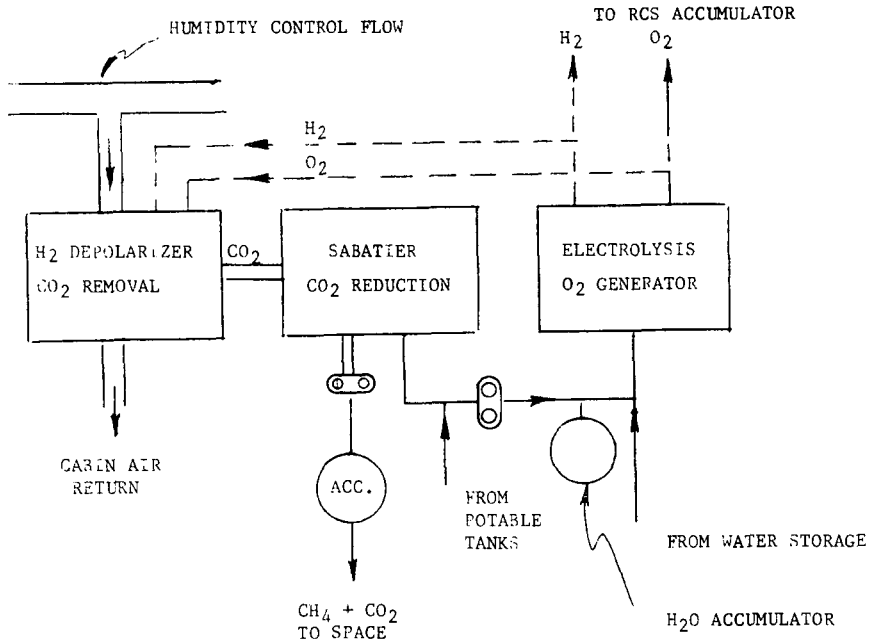

PREPARED BY V. Shoemaker	SUBSYSTEM P.E.	RELIABILITY P.E.

SUBSYSTEM ECLSS

DATE 8-12-71

CRITICAL FUNCTION ANALYSIS

ITEM IDENTIFICATION & FUNCTION 2.6.1 CO_2 REMOVAL (HYDROGEN DEPOLARIZER) - This unit receives cabin air and reduces the CO_2 content by an electrochemical action, (thru synthesis with H_2 and O_2) and is fed into the depolarizer. The concentrated CO_2 is then piped to the sabatier unit and the CO_2 lean atmosphere is returned to the station. There are (2) H_2 depolarizers, one primary and one secondary standby unit:

FAILURE MODE	PRIMARY CAUSES	FAILURE EFFECT & TIME TO EFFECT
1) Loss of capability to remove CO_2	Contaminated feed air Corrosion or physical damage Clogged pores in the plate type electrodes. Shorted electrodes	Increase in atmosphere CO_2 content. Time For 1 module, 15 hrs To max. allowable CO_2 Conc. For station, 96 hrs to max. allowable CO_2 conc.

RATIONALE/RECOMMENDATIONS/REF. DOCUMENTS	CRITICALITY
There are (2) H_2 depolarizers - one operational, one standby plus LiOH absorbers for emergency standby.	III

ITEM IDENTIFICATION & FUNCTION 2.6.2 CO_2 REDUCTION (SABATIER REACTOR) - This unit receives CO_2 from the H_2 depolarizer and by the addition of H_2 converts the CO_2 to CH_4 and H_2O. The CH_4 is delivered to the RCS, and the water is delivered to the electrolysis unit to be converted back to O_2 and H_2. There are (2) sabatier units. One operational, one standby

FAILURE MODE	PRIMARY CAUSES	FAILURE EFFECT & TIME TO EFFECT
(1) Leakage of H_2 or CH_4	Seal or plumbing leak	Potential release of toxic or combustible gas resulting in a hazard to personnel. Time - immediate
(2) Loss of capability to reduce CO_2	Heater control malfunction or element breakage (thermal control loss)	Loss of O_2 in CO_2 which would be vented overboard. Time - the effect on loss of O_2 supply (from CO_2) would be in weeks because of the H_2O reserves.

RATIONALE/RECOMMENDATIONS/REF. DOCUMENTS	CRITICALITY
NOTE: H_2 and CH_4 gases are only handled in double walled containers through a safety imposed groundrule.	(1) I, (2) III

PREPARED BY V. Shoemaker	SUBSYSTEM P.E.	RELIABILITY P.E.

SUBSYSTEM ECLSS

DATE 8-12-71

CRITICAL FUNCTION ANALYSIS

ITEM IDENTIFICATION & FUNCTION 2.7 H_2O STORAGE AND ELECTROLYSIS - The electrolysis unit coverts H_2O to H_2 and O_2. It converts H_2O at a rate adequate for the crew metabolic use (breathing rate) and the station O_2 leakage rate. The H_2 goes to RCS, H_2 depoloarizer, and sabatier. The water supply comes from the resupply water stored in the cargo module. This system includes a small water tanks (5 gal) which stores the water produced by the sabatier unit during the dark part of the orbit cycle. The electrolysis unit operates only during the light cycle.

FAILURE MODE	PRIMARY CAUSES	FAILURE EFFECT & TIME TO EFFECT

RATIONALE/RECOMMENDATIONS/REF. DOCUMENTS	CRITICALITY

ITEM IDENTIFICATION & FUNCTION 2.7.1 H_2O TANKS AND ELECTROLYSIS MAKEUP - (3) tanks in the core module supply water to the electrolysis unit which converts the water to H_2 and O_2 for RCS and ECLSS use. The tanks are pressurized to 300 psi by N_2 gas. The water from these tanks is not recovered, therefore these tanks are in the logistics resupply cycle.

FAILURE MODE	PRIMARY CAUSES	FAILURE EFFECT & TIME TO EFFECT
1) H_2O tank leakage and loss of storage capability.	Corrosion, materials or process System overpressure Accidental impact, ie: fracture or rupture of tank and bladder	Loss of water Loss of use of water in affected tank. Requiring unscheduled resupply. *2 to 3 weeks

RATIONALE/RECOMMENDATIONS/REF. DOCUMENTS	CRITICALITY
*There are (3) tanks. The loss of one or even two tanks are not critical except that unscheduled resupply would be required as a constant supply of water for electrolysis is critical.	III

PREPARED BY V. Shoemaker	SUBSYSTEM P.E.	RELIABILITY P.E.

SUBSYSTEM ECLSS

DATE 8-12-71

CRITICAL FUNCTION ANALYSIS

ITEM IDENTIFICATION & FUNCTION 2.7.1.1 CARGO MODULE INTERFACE - The cargo module is a resupply unit. As the water tanks are in the cargo module the water supply lines interface with the station to supply water for the electrolysis unit.

FAILURE MODE	PRIMARY CAUSES	FAILURE EFFECT & TIME TO EFFECT
1) Leaking or damaged connector	Bad docking or Seal damage	Inability to transfer water to space station. Time - immediate

RATIONALE/RECOMMENDATIONS/REF. DOCUMENTS	CRITICALITY
Water transfer is made through redundant paths so that the failure or damage of one coupling does not inactivate the system. Additional water can be obtained from the station potable water system.	III

ITEM IDENTIFICATION & FUNCTION 2.7.2 ELECTROLYSIS UNIT - This unit electrolyses water for various uses, i.e.: O_2 for metabolic and atmosphere leakage makeup, H_2 for the sabatier reactor and H_2 and O_2 for RCS maneuvering, H_2 depolarizer and EPS emergency. There are (2) electrolysis units, one operational, one standby.

FAILURE MODE	PRIMARY CAUSES	FAILURE EFFECT & TIME TO EFFECT
1) H_2/O_2 leakage	Seal or connector leakage Accidental impact	Possible fire or explosion hazard. Atmosphere contamination Time - immediate
2) Loss of capability to electrolyze H_2O	Cooling loss Shorted electrodes Contaminated feed water	Limiting of RCS ECLSS and EPS functions. Time - hours

RATIONALE/RECOMMENDATIONS/REF. DOCUMENTS	CRITICALITY
There is a redundant unit, however loss of two units would affect RCS, as emergency H_2 and O_2 storage is programmed for EPS and ECLSS.	(1) II, (2) III

PREPARED BY V. Shoemaker	SUBSYSTEM P.E.	RELIABILITY P.E.

SUBSYSTEM ECLSS

DATE 8-12-71

CRITICAL FUNCTION ANALYSIS

ITEM IDENTIFICATION & FUNCTION 2.8 SPECIAL LIFE SUPPORT - This system supplies fire detection sensors (30), CO_2 fire extinguishers (10), O_2 bottle and masks (14) for fire detection and control. Water connectors (2), O_2 connectors(2) and heat exchangers (2) in each core module for IVA operations, an O_2 supply tank (1), LiOH cartridges (8), and water for the EVA suit ECLSS unit.

FAILURE MODE	PRIMARY CAUSES	FAILURE EFFECT & TIME TO EFFECT

RATIONALE/RECOMMENDATIONS/REF. DOCUMENTS	CRITICALITY

ITEM IDENTIFICATION & FUNCTION 2.8.1 FIRE CONTROL - This system detects fires in any of the station modules through a group of (7) fire detectors per module. Each module contains (2) CO_2 fire fighting devices and (2) O_2 bottles and masks for crewman use during fire fighting. Note: If a fire becomes unmanageable, the module is isolated and the atmosphere evacuated.

FAILURE MODE	PRIMARY CAUSES	FAILURE EFFECT & TIME TO EFFECT
1) Fire detector malfunction	Electronic circuitry breakdown Loss of sensor power supply.	Lag in time for fire detection. Time - immediate
2) CO_2 bottle leakage	Materials, processes impact, etc.	Contaminated atmosphere - possible extra demand on CO_2 reduction equipment. Time - immediate

RATIONALE/RECOMMENDATIONS/REF. DOCUMENTS	CRITICALITY
As there are (7) fire detectors per module, the failure of one detector does not mean the fire will not be detected as the other detectors will register a fire, however some loss of time in fire detection could be experienced.	III

PREPARED BY V. Shoemaker	SUBSYSTEM P.E.	RELIABILITY P.E.

SUBSYSTEM ECLSS

DATE 8-12-71

CRITICAL FUNCTION ANALYSIS

ITEM IDENTIFICATION & FUNCTION 2.8.2 IVA SUPPORT - Each core module has suit connector ports for IVA use. There are (2) sets of connectors in each volume. Each set of connectors supply 2 IVA suits. The connectors supply O_2 and cooling water for IVA activity heat.

FAILURE MODE	PRIMARY CAUSES	FAILURE EFFECT & TIME TO EFFECT
1) IVA support plumbing failure during use.	Physical damage Damaged seals Physical impact or strain	Requires use of alternate connectors Reduced O_2 or H_2O supply to suits Possible single point failure could endanger life of crewman.

RATIONALE/RECOMMENDATIONS/REF. DOCUMENTS	CRITICALITY
Note: IVA suit life support functions are monitored during use through the umbilical. Also a safety initiated groundrule requires that the "buddy"system rule be followed during all IVA activities.	I

ITEM IDENTIFICATION & FUNCTION 2.8.3 PLSS SUPPORT - This storage system supports the IVA suit PLSS packs with O_2, water and LiOH cartridges. The recharge O_2 is supplied from (1) high pressure storage tank in the cargo module; the water is supplied from electrolysis water reservoir, and (8) LiOH canisters are stored in the cargo module.

FAILURE MODE	PRIMARY CAUSES	FAILURE EFFECT & TIME TO EFFECT
1) Charging process failure.	Material or process	Delay in EVA

RATIONALE/RECOMMENDATIONS/REF. DOCUMENTS	CRITICALITY
	III

PREPARED BY V. Shoemaker	SUBSYSTEM P.E.	RELIABILITY P.E.

SUBSYSTEM EPS

CRITICAL FUNCTION ANALYSIS

DATE 8-6-71

ITEM IDENTIFICATION & FUNCTION

BLOCK DIAGRAM AND CFA SEQUENCE

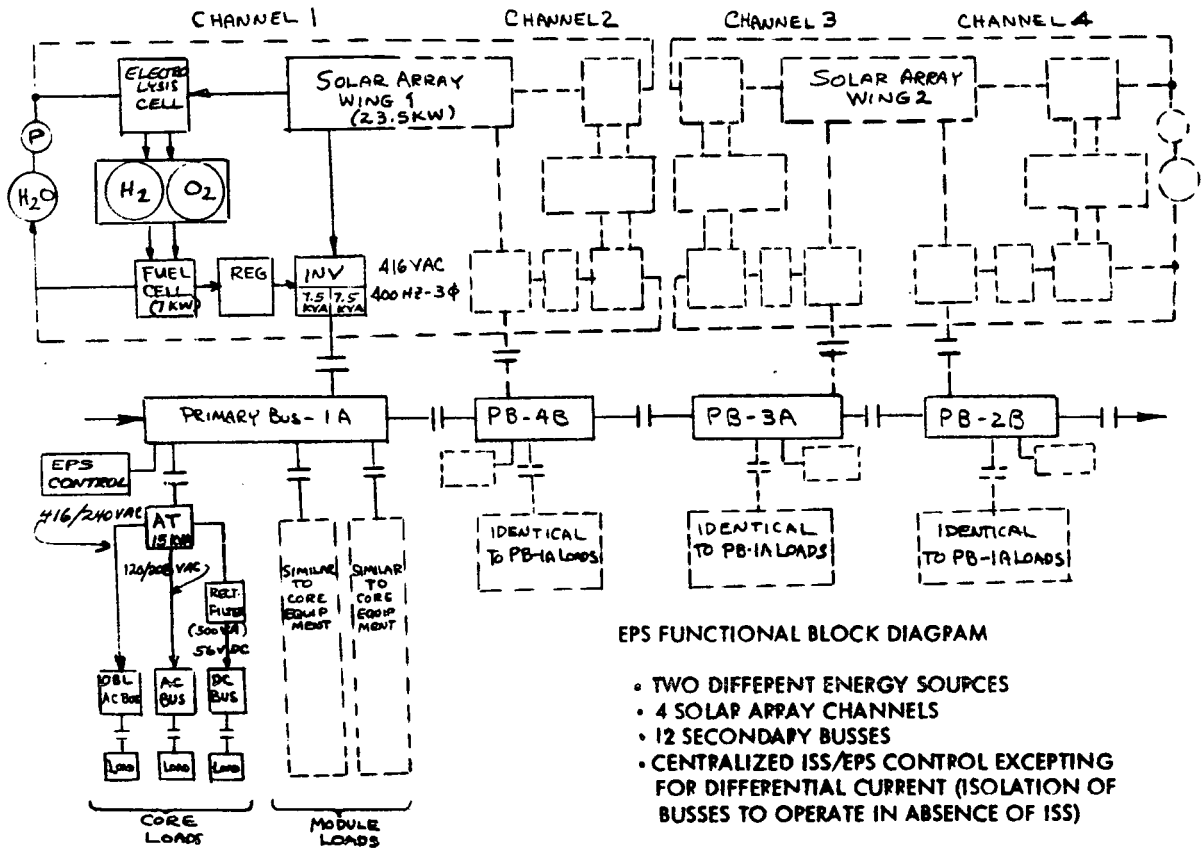

EPS FUNCTIONAL BLOCK DIAGRAM

- TWO DIFFERENT ENERGY SOURCES
- 4 SOLAR ARRAY CHANNELS
- 12 SECONDARY BUSSES
- CENTRALIZED ISS/EPS CONTROL EXCEPTING FOR DIFFERENTIAL CURRENT (ISOLATION OF BUSSES TO OPERATE IN ABSENCE OF ISS)

3.0 ELECTRICAL POWER SUBSYSTEM
3.1 PRIMARY POWER GENERATION AND STORAGE
3.1.1 Solar Array Complex
3.1.2 Electrolysis Cell
3.1.3 Gas Accumulators and Lines
3.2 SECONDARY POWER GENERATION
3.2.1 Fuel Cell (Heat Rejection, see ECLSS Analysis)
3.2.2 Electrolysis Feedwater Pump and Lines
3.2.3 Regulator
3.3 POWER CONVERSION
3.3.1 Inverter
3.3.2 Power Contactor (Inv. to PDB)
3.4 PRIMARY DISTRIBUTION
3.4.1 Primary Distribution Bus
3.4.2 Power Contactor (PDB to PDB inter-tie)
3.4.3 Power Contactor (PDB to SDB - Core Module)
3.4.4 Power Contactor (PDB to SDB - Station Module)
3.5 SECONDARY DISTRIBUTION
3.5.1 Double AC Bus
3.5.2 Solid State Circuit Breaker
3.6 SECONDARY DISTRIBUTION
3.6.1 Autotransformer
3.6.2 Normal AC Bus
3.6.3 Solid State Circuit Breaker
3.6.4 Autotransformer (Tertiary Winding)
3.6.5 Rectified/Filter
3.6.6 DC Bus
3.6.7 Solid State Circuit Breaker

PREPARED BY J. M. Beekman	SUBSYSTEM P.E. [illegible]	RELIABILITY P.E. [illegible]

SUBSYSTEM EPS

DATE 8-6-71

CRITICAL FUNCTION ANALYSIS

ITEM IDENTIFICATION & FUNCTION

3.1.1 Solar Array Complex

Physically the solar array is composed of deployable module sets of solar cells, capable of dual plane orientation through two, turret-mounted, rotatable wings. Remote switching control of the wing sub-circuits is incorporated into the array design and is arranged to deliver four independent circuits per wing. Array deployment is accomplished through automatic buildup of two extending truss beams.

FAILURE MODE	PRIMARY CAUSES	FAILURE EFFECT & TIME TO EFFECT
Array output is degraded or lost	Array does not deploy, orient, or generate due to failure of array mechanisms or electrical components.	
1. One wing does not deploy.	Lock jams with wing stowed. Positioning mechanism failure prevents swing out. Deployment mechanism jams prior to extension.	The station power generating capability is limited to 50% of potential. Must be corrected before manned operations. T.O.E.: Immediate

RATIONALE/RECOMMENDATIONS/REF. DOCUMENTS	CRITICALITY
Rationale: Successful manned operations depends on full capability provided during buildup. Recommendation: Provide alternate success path for deploy mechanisms without EVA. References: Space Station Solar Array Technology Program, Midterm Review-May 5, 1971 Lockheed Missile & Space Co.	III

ITEM IDENTIFICATION & FUNCTION

3.1.1 Solar Array Complex (continued)

FAILURE MODE	PRIMARY CAUSES	FAILURE EFFECT & TIME TO EFFECT
2. Partial Deployment of solar panels on one wing.	Deployment mechanism jams during extension.	Loss of up to 50% of the station power capability. Buildup operations are delayed. T.O.E: Immediate

RATIONALE/RECOMMENDATIONS/REF. DOCUMENTS	CRITICALITY
Rationale: Failure Mode 2 is Crit II - Deployment of less than half of one wing's panels would preclude nominal station operations.	III

PREPARED BY J. Beekman	SUBSYSTEM P.E. A.A. Musberger	RELIABILITY P.E. J.P. Hughes

SUBSYSTEM EPS

CRITICAL FUNCTION ANALYSIS

DATE 8-6-71

ITEM IDENTIFICATION & FUNCTION		
3.1.1 Solar Array Complex (continued)		
FAILURE MODE	**PRIMARY CAUSES**	**FAILURE EFFECT & TIME TO EFFECT**
3. Array does not attain the proper sun acquisition direction. 4. Array wing does not attain the proper sun acquisition inclination.	The turret and/or drive array rotating mechanisms; bearings, gears, clutch, etc., - lock or prevent normal array directing operations. The wing support beam rotating mechanisms and/or drives; bearings gears, clutches, etc.--lock or prevent normal inclination operations.	Array generating capability is reduced but depends on the amount of deviation from the optimum pointing orientation. (Solar cell output, however, decreases only 2 percent with the first 12 degree pointing error). Time: Immediate Loss of both degrees of orientation results in emergency condition - loss of one degree of orientation can be compensated by spacecraft.
RATIONALE/RECOMMENDATIONS/REF. DOCUMENTS		**CRITICALITY**
Rationale: Failure modes 3 and 4 are judged to be non-critical since proper orientation may be achieved through rotation of the entire station - utilizing CMG or RCS control. (The impact on certain experiments could however, result in a Criticality II classification).		III

ITEM IDENTIFICATION & FUNCTION		
3.1.1 Solar Array Complex (continued)		
FAILURE MODE	**PRIMARY CAUSES**	**FAILURE EFFECT & TIME TO EFFECT**
5. Local failures in electrical components or circuits.	Progressive degradation of current carrying circuit elements or aging of solar cell active materials.	Loss of approximately 30% of the station power generating capability. Time: Deferred (Months to years)
RATIONALE/RECOMMENDATIONS/REF. DOCUMENTS		**CRITICALITY**
Rationale: The array is sized to allow for expected array degradation and still deliver average station power requirements over the 5 year predicted life.		III

PREPARED BY J. Beekman	SUBSYSTEM P.E. A. B. Neuberger	RELIABILITY P.E. J. R. Bigbee

SUBSYSTEM _____ DATE 8-6-71

CRITICAL FUNCTION ANALYSIS

ITEM IDENTIFICATION & FUNCTION

3.1.2 Water Electrolysis Units

Water electrolysis is accomplished by a solid polymer electrolyte process and the products are utilized in a closed loop system as the reactant supply for the secondary power generation function.

Units required: 4 Initial 6 Growth (total)

FAILURE MODE	PRIMARY CAUSES	FAILURE EFFECT & TIME TO EFFECT
1. Loss of output from one electrolysis unit.	Circuit interruptions through electrical connector contacts shorting or parts demating. Redundant element failures. Under voltage causing trip-out of an internal protective device.	Loss of backup capability - The three remaining electrolysis units are sized to process the station's nominal water/gas conversion requirements. Time: immediate

RATIONALE/RECOMMENDATIONS/REF. DOCUMENTS	CRITICALITY
Rationale: Wiring and connectors are considered to be very reliable elements. Confidence is progressively developed through checkout cycles at the component assembly and system's stages. Preventive maintenance plus prompt component failure detection and assessment means are incorporated into the electrolysis unit design. Report: Development of a solid polymer electrolyte water electrolysis cell module-G.E. Report Contract NAS1-9750	III

ITEM IDENTIFICATION & FUNCTION

3.1.2 Water Electrolysis Units (continued)

NOTE: The closed loop operation of these units in the electric power subsystem enhances longer life and reduced maintenance through avoidance of contaminant introduction.

FAILURE MODE	PRIMARY CAUSES	FAILURE EFFECT & TIME TO EFFECT
2. External leakage	Improperly torqued joints, environmental stressing or accidental damage could be instrumental in causing leakage.	O_2, H_2 or water could be released into the volume that contains electrolysis units.

RATIONALE/RECOMMENDATIONS/REF. DOCUMENTS	CRITICALITY
Rationale: Although lines and fittings are considered very reliable, the possibility exists of a release of H_2 gas combining with the station atmosphere in the presence of an ignition source sometime during the station lifetime. Recommendation: Electrolysis units should be vented, or enclosed and monitored for H_2 leakage.	III

PREPARED BY J. Beekman	SUBSYSTEM P.E. A.G. Nussberger	RELIABILITY P.E. F.R. Sigler

SUBSYSTEM EPS

CRITICAL FUNCTION ANALYSIS

DATE 8-6-71

ITEM IDENTIFICATION & FUNCTION		
3.1.3 Gas Accumulators and Lines The accumulator tanks and plumbing collect, hold and transfer fuel cell reactants generated by the electrolysis units. Units required 4 initial, 6 growth (for each O_2 and H_2 assemblies)		
FAILURE MODE	PRIMARY CAUSES	FAILURE EFFECT & TIME TO EFFECT
1. Rupture-rapid pressure release (O_2 accumulator)	Accidental damage to tank structure	Possible physical damage to adjacent equipment or injury to crew. Loss of O_2 reactant gas supply for fuel cells. Time: Immediate
RATIONALE/RECOMMENDATIONS/REF. DOCUMENTS		CRITICALITY
Rationale: O_2 accumulator pressures are limited to 300 psia for manned operations. Recommendations: Provide method of limiting the total loss of the integrated gas supply in the event of a tank rupture.		II

ITEM IDENTIFICATION & FUNCTION		
3.1.3 Gas Accumulators and lines (continued)		
FAILURE MODE	PRIMARY CAUSES	FAILURE EFFECT & TIME TO EFFECT
2. Fracture-low rate pressure release-leakage (O_2 accumulator and lines)	Environmental stresses inducing material weakening and cracks or loosening of torqued couplings.	Slow loss of O_2 from an accumulator or line into a pressurized volume. (Affects 25% of reactant supply) Time: Deferred
RATIONALE/RECOMMENDATIONS/REF. DOCUMENTS		CRITICALITY
Rationale: System gas pressures are limited to 300 psia for manned operations. Recommendations: System gas pressures might be monitored for unscheduled depletions.		III

PREPARED BY J. Beekman	SUBSYSTEM P.E. H.A. Nussberger	RELIABILITY P.E. J.P. Digiko

SUBSYSTEM EPS

CRITICAL FUNCTION ANALYSIS

DATE 8-6-71

ITEM IDENTIFICATION & FUNCTION		
3.1.3 Gas Accumulators and lines (continued)		
FAILURE MODE	**PRIMARY CAUSES**	**FAILURE EFFECT & TIME TO EFFECT**
3. Rupture - rapid pressure release (H_2 accumulator)	Accidental damage to tank structure	Possible physical damage to adjacent equipment or injury to crew. Loss of H_2 reactant supply for fuel cells. Possible hazard of fire or explosion if H_2 should be combined with the station atmosphere in the presence of an ignition source. Time: Immediate

RATIONALE/RECOMMENDATIONS/REF. DOCUMENTS	CRITICALITY
Rationale: H_2 accumulator pressures are limited to 300 psia for manned operations. Recommendations: 1. Provide method of preventing the total loss of the integrated gas supply in the event of a tank rupture. 2. H_2 components should be enclosed and monitored or vented to preclude hazard potential.	I

ITEM IDENTIFICATION & FUNCTION		
3.1.3 Gas Accumulators and lines (continued)		
FAILURE MODE	**PRIMARY CAUSES**	**FAILURE EFFECT & TIME TO EFFECT**
4. Fracture-low rate pressure release-leakage (H_2 accumulator and lines)	Environmental stresses inducing material weakening and cracks or loosening of torqued couplings.	Slow loss of H_2 from an accumulator or line into a pressurized volume. (Affects 25% of the reactant supply). Hazardous condition exits when H_2 mixes with the station atmosphere. Fire could occur.

RATIONALE/RECOMMENDATIONS/REF. DOCUMENTS	CRITICALITY
Rationale: System gas pressures are limited to 300 psia for manned operations. Recommendations: H_2 components and lines should be enclosed and monitored or vented to preclude the fire hazard potential.	I

PREPARED BY J. Beekman	SUBSYSTEM P.E. A.R. Nussberger	RELIABILITY P.E. J.P. Biglio

SUBSYSTEM EPS

DATE 8-6-71

CRITICAL FUNCTION ANALYSIS

ITEM IDENTIFICATION & FUNCTION

3.2 Secondary Power Generation

The power required during eclipse periods is generated by fuel cells with the reactant supply built up by the H_2O electrolysis units. Accumulator tanks store reactant gases at approximately 300 psia and provide a proper supply to fuel cells upon demand during non-illuminated array periods. Emergency power reactants (enough for 96 hours) are delivered from separate, dedicated reserves) maintained under ECLSS responsibilities. Emergency tanks are located in the cargo module and store fuel cell reactants at TBD psia. Pressure reduced to 300 psia at core interface. Energy storage reactant tanks at 300 psia (not required for emergency) NOTE: Build-up tanks store at 3000 psia.

RATIONALE/RECOMMENDATIONS/REF. DOCUMENTS	CRITICALITY

ITEM IDENTIFICATION & FUNCTION

3.2.1 Fuel Cell

Fuel cells will be included in active cooling loops. Single loop failures will not degrade performance.

Units required 4 initial 6 growth (total)

FAILURE MODE	PRIMARY CAUSES	FAILURE EFFECT & TIME TO EFFECT
1. Loss of one fuel cell output	Scheduled maintenance periods, interruption of a reactant supply, or internal unit shutdowns due to containination.	Possible loss of power on one of the four primary busses. Normal operation however ties all busses together such that the loss of one fuel cell would cause only momentary bus voltage fluctuation. The remaining fuel cells adjust to produce a proportionate output increase. Time: Immediate

RATIONALE/RECOMMENDATIONS/REF. DOCUMENTS	CRITICALITY
Rationale: Fuel cells are rated such that average station load requirements can be supplied with one unit down for both the initial and growth stations. NOTE: Peak load handling capability cannot be met with one unit out. Reference Document:	III

PREPARED BY J. Beekman	SUBSYSTEM P.E. A.A. Nussberger	RELIABILITY P.E. J.R. Sighs

SUBSYSTEM EPS

DATE 8-6-71

CRITICAL FUNCTION ANALYSIS

ITEM IDENTIFICATION & FUNCTION		
3.2.1 Fuel Cell (continued)		
FAILURE MODE	**PRIMARY CAUSES**	**FAILURE EFFECT & TIME TO EFFECT**
2. Reactant or coolant leakage	Loosening of torqued couplings, thermal stressing causing piping fatigue and subsequent cracking.	Release of combustible gas (H_2), oxidizer (O_2) or water. Possible explosive hazard, however an ignition source is required. Time: Deferred
RATIONALE/RECOMMENDATIONS/REF. DOCUMENTS		**CRITICALITY**
Rationale: Fuel cells are completely enclosed in canisters. Purge capability is provided in the active sections using identical gases.		II

ITEM IDENTIFICATION & FUNCTION		
3.2.2 Electrolysis Feedwater Pump and Lines Units required 2 initial 2 growth (totals)		
FAILURE MODE	**PRIMARY CAUSES**	**FAILURE EFFECT & TIME TO EFFECT**
1. H_2O is not transferred as required.	Pump or pump drive bearings fail, impeller or rotor binds, lines are blocked or restricted.	Loss of Redundancy.
RATIONALE/RECOMMENDATIONS/REF. DOCUMENTS		**CRITICALITY**
Rationale: One feedwater pump is capable of returning all fuel cell water products to the electrolysis cells for both initial and growth stations.		III

PREPARED BY J. Beekman	SUBSYSTEM P.E. A.A. Nussberger	RELIABILITY P.E. J.R. Sigler

SUBSYSTEM EPS

CRITICAL FUNCTION ANALYSIS

DATE 8-6-71

ITEM IDENTIFICATION & FUNCTION

3.2.3 Regulator

The regulator serves to unite varied D.C. sources prior to A.C. conversion. Regulators are needed to overcome the inherent poor regulation of individual fuel cells when it is desired to gain the advantages of operating several units in parallel. In addition, during peak load periods, the regulator permits fuel cell outputs to be combined with and supplement the solar array outputs.

~~Units required 4 initial 8 growth~~

FAILURE MODE	PRIMARY CAUSES	FAILURE EFFECT & TIME TO EFFECT
1. Loss of one regulator output.	Subassembly module fails open due to environment, age, component weakness, etc.	Partial reduction in station power capability. Time: Immediate

RATIONALE/RECOMMENDATIONS/REF. DOCUMENTS

Rationale: Regulators are designed on a modular concept and are switchable through ISS controls for automatic failure detection and substitution action.

Ref. Documents: Data Processing Assembly Configuration (Prelim), Autonetics Report DP 101 Revised 6-1-71

Data Acquisition and Control Redundancy Concepts, Autonetics Report DP 105 Revised 8-5-71

CRITICALITY

III

ITEM IDENTIFICATION & FUNCTION

FAILURE MODE	PRIMARY CAUSES	FAILURE EFFECT & TIME TO EFFECT

RATIONALE/RECOMMENDATIONS/REF. DOCUMENTS

CRITICALITY

PREPARED BY J. Beekman

SUBSYSTEM P.E. G.A. Nussberger

RELIABILITY P.E. J.P. Bigler

SUBSYSTEM EPS

DATE 8-6-71

CRITICAL FUNCTION ANALYSIS

ITEM IDENTIFICATION & FUNCTION

3.3 Power Conversion

D.C. Power, derived from the solar arrays and fuel cells, is acted on by the inverter units to produce regulated 3 phase, A.C. Power. The four separate inverter outputs are fed through isolating power contactors to the primary distribution buses.

FAILURE MODE	PRIMARY CAUSES	FAILURE EFFECT & TIME TO EFFECT

RATIONALE/RECOMMENDATIONS/REF. DOCUMENTS	CRITICALITY

ITEM IDENTIFICATION & FUNCTION

3.3.1 Inverter

The inverter serves to change primary and secondary source outputs (112 VDC nominal) to 416/240 VAC, 3 phase, 400 cycle power.

Units required 8 initial 12 growth (total)

FAILURE MODE	PRIMARY CAUSES	FAILURE EFFECT & TIME TO EFFECT
1. Loss of one inverter output.	Subassembly module fails open due to environment, age, component weakness, etc.	Partial reduction in station power capability. Time: Immediate

RATIONALE/RECOMMENDATIONS/REF. DOCUMENTS	CRITICALITY
Rationale: Inverters are designed on a modular concept and are switchable through ISS controls for automatic failure detection and substitution action. Ref. Documents: Data Processing Assembly Configuration (Prelim) Autonetics Report DP 101 Rev. 6-1-71 Data Acquisition and Control Redundancy Concepts, Autonetics Report DP 105 Rev. 8-5-71	III

PREPARED BY J. Beekman	SUBSYSTEM P.E. [signature]	RELIABILITY P.E. [signature]

SUBSYSTEM EPS

CRITICAL FUNCTION ANALYSIS

DATE 8-6-71

ITEM IDENTIFICATION & FUNCTION		
3.3.2 Power Contactor (SSC) The power contactors serve to connect or isolate the individual inverter outputs and the individual primary buses. During all normal mission functions the power contactors remain in the closed position. Units required 4 initial 4 growth (total)		
FAILURE MODE	PRIMARY CAUSES	FAILURE EFFECT & TIME TO EFFECT
1. Contactor fails open or inadvertenly opens	Contact transfer mechanism binds through contamination. Transfer occurs through an incidental signal.	No loss of solar array output. Loads can be switched through other contactor to other inverter or electrolysis, by EPS reconfiguration.
2. Contactor fails closed or inadvertently closes		Loss of capability to isolate the inverter from the primary bus.
RATIONALE/RECOMMENDATIONS/REF. DOCUMENTS		CRITICALITY
Rationale: Inadvertent opening or closing is noted, assessed and acted on from remote, control centers. Power contactors are designed for on-board, plug-in replacement.		III

ITEM IDENTIFICATION & FUNCTION		
FAILURE MODE	PRIMARY CAUSES	FAILURE EFFECT & TIME TO EFFECT
RATIONALE/RECOMMENDATIONS/REF. DOCUMENTS		CRITICALITY

PREPARED BY J. Beekman	SUBSYSTEM P.E. R.A. Musberger	RELIABILITY P.E. J.L. Sighs

SUBSYSTEM EPS

DATE 8-6-71

CRITICAL FUNCTION ANALYSIS

ITEM IDENTIFICATION & FUNCTION

3.4 Primary Distribution
Primary power distribution covers the transfer of power to secondary buses, the inter-tieing of primary buses to other primary buses, and the four primary buses themselves.

FAILURE MODE	PRIMARY CAUSES	FAILURE EFFECT & TIME TO EFFECT

RATIONALE/RECOMMENDATIONS/REF. DOCUMENTS	CRITICALITY
	N/A

ITEM IDENTIFICATION & FUNCTION 3.4.1 Primary Distribution Bus

The primary buses serve as common supply points for all attached secondary loads related to a particular power channel. Through primary bus inter-ties, power capacity from other channels are pooled thus providing system stabilization. Primary buses and feeders are located and routed independently within the core module.

Units Required 4 initial and growth (total)

FAILURE MODE	PRIMARY CAUSES	FAILURE EFFECT & TIME TO EFFECT
1. Open	Accidental Damage	Secondary loads on the affected primary bus will be interrupted. Time: Immediate
2. Short		Currents in excess of normal requirements trip protective circuitry and separate the affected bus and secondary loads from the rest of the station buses. Time: Immediate

RATIONALE/RECOMMENDATIONS/REF. DOCUMENTS	CRITICALITY
Rationale: Primary buses have complete circuit protection providing isolation in the event of internal faults. The ISS provides system fault assessment when normal bus loads are dropped. Critical loads are automatically switched to unaffected buses through the associated interfacing devices (the "RACU" is defined and described under the ISS data processing function.)	III

PREPARED BY J. Beekman	SUBSYSTEM P.E. [signature]	RELIABILITY P.E. [signature]

SUBSYSTEM EPS

CRITICAL FUNCTION ANALYSIS

DATE 8-6-71

ITEM IDENTIFICATION & FUNCTION

3.4.2 Power Contactor (SSC)

The primary bus inter-tie power contactors serve to connect or isolate the primary buses to provide the "ring bus" capability of primary distribution. During all normal mission functions, the power contactors remain in the closed position.

Units required 4 initial and growth

FAILURE MODE	PRIMARY CAUSES	FAILURE EFFECT & TIME TO EFFECT
1. Contactor fails open or inadvertenly opens	Contact transfer mechanism binds through contamination. Transfer occurs through an incidental signal.	No immediate effect. Proper closing of the remaining ring - bus contactors will complete or maintain the inter-tie.
2. Contactor fails closed or inadvertently closes.		Loss of capability to isolate one primary bus from all others.

RATIONALE/RECOMMENDATIONS/REF. DOCUMENTS	CRITICALITY
Rationale: Inadvertent contactor operations are noted, assessed and acted on from remote, control centers. Power contactors are designed for on-board, plug-in replacement.	III

ITEM IDENTIFICATION & FUNCTION

3.4.3 Power Contactor (SSC)

The core module main power contactors serve to connect or isolate secondary core module loads from the associated primary bus. During all normal mission functions, the power contactors remain in the closed position.

Units required 4 initial and growth.

FAILURE MODE	PRIMARY CAUSES	FAILURE EFFECT & TIME TO EFFECT
1. Contactor fails open or inadvertently opens.	Contact transfer mechanism binds through contamination.	Loss of voltage on one of the core module secondary buses. Time: Immediate
2. Contactor fails closed or inadvertently closes.	Transfer occurs through an incidental signal.	Loss of capability to isolate one core module secondary bus from the associated primary bus. Time: Immediate

RATIONALE/RECOMMENDATIONS/REF. DOCUMENTS	CRITICALITY
Rationale: Inadvertent contactor operations are noted, assessed and acted on from remote, control centers under ISS responsible functions. Power contactors are designed for on-board, plug-in replacement.	III

PREPARED BY J. Beekman	SUBSYSTEM P.E. [signature]	RELIABILITY P.E. [signature]

SUBSYSTEM EPS

DATE 8-6-71

CRITICAL FUNCTION ANALYSIS

ITEM IDENTIFICATION & FUNCTION		
3.4.4 Power Contactor (SSC) The station module main power contactors serve to connect or isolate secondary station module loads from the associated primary bus. During all normal mission functions, the power contactors remain in the closed position. Units required 4 initial 8 growth		
FAILURE MODE	PRIMARY CAUSES	FAILURE EFFECT & TIME TO EFFECT
1. Contactor fails open or inadvertently opens	Contact transfer mechanism binds through contamination. Transfer occurs through an incidental signal.	Loss of voltage on one of the station module secondary buses. Time: Immediate
2. Contactor fails closed or inadvertently closes		Loss of capability to isolate one one station module secondary bus from the associated primary bus. Time: Immediate

RATIONALE/RECOMMENDATIONS/REF. DOCUMENTS	CRITICALITY
Rationale: Inadvertent contactor operations are noted, assessed and acted on from remote, control centers under ISS responsible functions. Power contactors are designed for on-board, plug-in replacement.	III

ITEM IDENTIFICATION & FUNCTION		
FAILURE MODE	PRIMARY CAUSES	FAILURE EFFECT & TIME TO EFFECT

RATIONALE/RECOMMENDATIONS/REF. DOCUMENTS	CRITICALITY

PREPARED BY J. Beekman	SUBSYSTEM P.E. [signature]	RELIABILITY P.E. [signature]

SUBSYSTEM EPS

DATE 8-6-71

CRITICAL FUNCTION ANALYSIS

ITEM IDENTIFICATION & FUNCTION

3.5 Secondary Distribution (unconditioned power)
Unconditioned power is supplied through "CM" or "SM" main power contactors to double AC buses for selected station loads which are capable of operating within the normal primary bus voltage and frequency limits. (240/416 V. AC 3Ø, 400 Hz, 4 wire)

FAILURE MODE	PRIMARY CAUSES	FAILURE EFFECT & TIME TO EFFECT

RATIONALE/RECOMMENDATIONS/REF. DOCUMENTS	CRITICALITY

ITEM IDENTIFICATION & FUNCTION

3.5.1 Double AC Bus
The double AC buses serve as common supply points for all attached double AC loads related to a particular power channel.

Units required TBD initial TBD growth

FAILURE MODE	PRIMARY CAUSES	FAILURE EFFECT & TIME TO EFFECT
1. Open	Accidental damage	Double ac bus loads are interrupted. Time: Immediate
2. Short		Currents in excess of normal requirements will trip protective circuitry and separate the affected buses and secondary loads from the associated primary bus. Time: Immediate

RATIONALE/RECOMMENDATIONS/REF. DOCUMENTS	CRITICALITY
Rationale: Secondary buses have complete circuit protection which provides isolation in the event of internal faults. The ISS provides system fault assessment when normal bus loads are dropped. Critical loads are automatically switched to unaffected buses through the associated interfacing (RACU) devices.	III

PREPARED BY J. Beekman	SUBSYSTEM P.E.	RELIABILITY P.E.

SUBSYSTEM EPS

DATE 8-6-71

CRITICAL FUNCTION ANALYSIS

ITEM IDENTIFICATION & FUNCTION		
3.5.2 Solid State Circuit Breaker (double AC bus loads) The circuit breaker connects or disconnects, indicates status of "open" or "closed", provides overcurrent protection, accomplishes load transfer and self testing between ac loads and the double ac bus.		
FAILURE MODE	PRIMARY CAUSES	FAILURE EFFECT & TIME TO EFFECT
1. Circuit breaker fails open or opens inadvertently.	Contamination of control circuits or incidental or erroneous transfer command.	Momentary loss of power to one of the double ac load circuits. Time: Immediate
2. Circuit breaker fails closed or closes inadvertently.		Loss of capability to isolate one double ac load from the double ac bus. Time: Immediate
RATIONALE/RECOMMENDATIONS/REF. DOCUMENTS		CRITICALITY
Rationale: The capability is provided for the control and protection of critical loads by the ISS computer.		III

ITEM IDENTIFICATION & FUNCTION		
FAILURE MODE	PRIMARY CAUSES	FAILURE EFFECT & TIME TO EFFECT
RATIONALE/RECOMMENDATIONS/REF. DOCUMENTS		CRITICALITY

PREPARED BY J. Beekman	SUBSYSTEM P.E.	RELIABILITY P.E.

SUBSYSTEM EPS

CRITICAL FUNCTION ANALYSIS

DATE 8-6-71

ITEM IDENTIFICATION & FUNCTION

3.6 Secondary Distribution (conditioned power)
Unconditioned power is supplied through "CM" or "SM" power contactors to an autotransformer which steps-down the double ac for the normal ac bus station loads.
(120/208 vac, 3Ø, 400 Hz, 4 wire)

FAILURE MODE	PRIMARY CAUSES	FAILURE EFFECT & TIME TO EFFECT

RATIONALE/RECOMMENDATIONS/REF. DOCUMENTS	CRITICALITY

ITEM IDENTIFICATION & FUNCTION

3.6.1 Autotransformer
The autotransformer steps down the primary bus voltage (416 vac, 3Ø, 400 Hz, 3 wire) to 120/208 vac, 3Ø, 400 Hz, 4 wire for normal ac bus loads. A delta connected tertiary winding for the autotransformer is incorporated in the design to eliminate harmonic voltage. Active, dual cooling loops are also incorporated.

Units required 12 initial 16 growth

FAILURE MODE	PRIMARY CAUSES	FAILURE EFFECT & TIME TO EFFECT
1. Partial or complete output loss	Physical stresses induced through coolant loop breakdowns; overheating or freezing of coolant. Example: open winding	The autotransformer output is unbalanced or lost completely. Time: Immediate. The normal ac bus loads are interrupted.
2. Internal fault	Winding shorts in a potting void through trapped contaminants.	Currents in excess of normal will exist in the shorted path causing protective devices to trip out and separate the affected buses and secondary loads from the associated primary bus. Time: Immediate

RATIONALE/RECOMMENDATIONS/REF. DOCUMENTS	CRITICALITY
Rationale: Current unbalance in the autotransformer is detected by standard equipment and through ISS action the unit is de-energized by opening the associated "CM" or "SM" power contactor. The ISS also provides system fault assessment when normal loads are dropped. Critical loads are automatically switched to unaffected buses through the associated interfacing (RACU) devices.	III

PREPARED BY J. Beekman	SUBSYSTEM P.E. [signature]	RELIABILITY P.E. [signature]

SUBSYSTEM EPS

DATE 8-6-71

CRITICAL FUNCTION ANALYSIS

ITEM IDENTIFICATION & FUNCTION

3.6.2 Normal AC Bus

The normal AC buses serve as common supply points for all attached normal ac loads related to a particular power channel.

Units required____initial____growth

FAILURE MODE	PRIMARY CAUSES	FAILURE EFFECT & TIME TO EFFECT
1. Open	Accidental Damage	Normal ac bus loads are interrupted. Time: immediate Currents in excess of normal requirements will trip protective circuitry and separate the affected bus and secondary loads from the associated primary bus. Time: immediate
2. Short		

RATIONALE/RECOMMENDATIONS/REF. DOCUMENTS	CRITICALITY
Rationale: Secondary buses have upstream circuit protection which provides isolation in the event of internal faults. The ISS provides system fault assessment when normal bus loads are dropped. Critical loads are automatically switched to unaffected buses through the associated interfacing (RACU) devices.	III

ITEM IDENTIFICATION & FUNCTION

3.6.3 Solid State Circuit Breaker (Normal AC bus loads)

The circuit breaker connects or disconnects, indicates status of "open" or "closed", provides overcurrent protection, accomplishes load transfer and self testing, between AC loads and the normal AC bus.

Units required TBD initial TBD growtih

FAILURE MODE	PRIMARY CAUSES	FAILURE EFFECT & TIME TO EFFECT
1. Circuit breakers fails open or opens inadvertently.	Contamination of control circuits or an incidental or erroneous transfer command.	Momentary loss of power to one of normal AC load circuits. Time: Immedaite
2. Circuit breaker fails closed or closes inadvertently.		Loss of capability to isolate one normal AC load from the normal AC bus. Time: Immedate

RATIONALE/RECOMMENDATIONS/REF. DOCUMENTS	CRITICALITY
Rationale: The capability is provided for the automatic switching control and protection of critical loads through ISS direction.	III

PREPARED BY J. Beekman	SUBSYSTEM P.E. [signature]	RELIABILITY P.E. [signature]

SUBSYSTEM EPS

CRITICAL FUNCTION ANALYSIS

DATE 8-6-71

ITEM IDENTIFICATION & FUNCTION
3.6.4 Autotransformer Tertiary Winding Sub-circuit

The autotransformer tertiary winding serves the dual function of providing harmonic suppression for the ac loads and as the electrical power source for the station dc supply.

FAILURE MODE	PRIMARY CAUSES	FAILURE EFFECT & TIME TO EFFECT
1. Partial or complete output loss	Physical stresses induced through coolant loop breakdowns; overheating or freezing of coolant. Example: open winding	Partial or total loss of output power to the rectifier filter. The autotransformer output is unbalanced. Time: Immediate
2. Internal Fault	Winding shorts in a potting void through trapped contaminants.	Currents in excess of normal will exist in the shorted path causing protective devices to trip out and separate the affected buses and secondary loads from the associated primary bus. Time: Immediate

RATIONALE/RECOMMENDATIONS/REF. DOCUMENTS	CRITICALITY
Rationale: Current unbalance in the autotransformer is detected by standard devices and through ISS action the unit is de-energized by opening the associated "CM" or "SM" power contactor. The ISS also provides system fault assessment when normal loads are dropped. Critical loads are automatically switched to unaffected buses through the associated interfacing (RACU) devices.	III

ITEM IDENTIFICATION & FUNCTION
3.6.5 Rectifier/Filter

The rectifier/filter assembly converts conditioned AC power (240 VAC, 3Ø, 400 HZ) from the autotransformer teriary winding to D.C. power (56 VDC, 2 wire) through static rectification and filtering.
Units required 12 initial 16 growth.

FAILURE MODE	PRIMARY CAUSES	FAILURE EFFECT & TIME TO EFFECT
1. Partial or complete loss of output.	Open circuits occurring in sub module series rectifier strings through overcurrent, aging of components, etc., or in other control or filter sub modules.	Partial or total loss of output to the associated D.C. bus. Time: Immediate
2. Internal fault	Shorted circuits or components within rectification, control or filter sub modules through insulation breakdown contamination, etc.	Currents in excess of normal will exist in the shorted module and cause either protective devices to trip out or destructive fault clearing through a "burn open" mode. Time: Immediate

RATIONALE/RECOMMENDATIONS/REF. DOCUMENTS	CRITICALITY
Rationale: Current unbalance or overloading is detected by standard devices and through ISS action, the unit is de-energized by opening the associated "CM" or "SM" power contactor. The ISS also provides system fault assessment when normal loads are dropped. Critical loads are autoamtically switched to unaffected buses through the associated interfacing (RACU) devices.	III

PREPARED BY J. Beekman	SUBSYSTEM P.E. [signature]	RELIABILITY P.E. [signature]

SUBSYSTEM EPS

DATE 8-6-71

CRITICAL FUNCTION ANALYSIS

ITEM IDENTIFICATION & FUNCTION

3.6.6 D.C. Bus

The DC buses serve as a common supply points for all attached DC loads related to a particular power channel.

Units required 12 initial 16 growth

FAILURE MODE	PRIMARY CAUSES	FAILURE EFFECT & TIME TO EFFECT
1. Open	Accidental Damage	DC bus loads are interrupted Time: Immediate
2. Short		Currents in excess of normal requirements will trip protective circuitry and separate the affected bus and other related secondary load from the associated primary bus. Time: Immediate

RATIONALE/RECOMMENDATIONS/REF. DOCUMENTS	CRITICALITY
Rationale: Secondary buses have upstream circuit protection which provides isolation in the event of internal faults. Critical loads, when identified, can be automatically switched to unaffected buses through the associated interfacing (RACU) devices.	III

ITEM IDENTIFICATION & FUNCTION

3.6.7 Solid State Circuit Breaker (DC bus loads)

The circuit breaker connects or disconnects, indicates status of "open" or "closed," provides over-current protection, accomplished load transfer and self testing between DC loads and the DC bus.

Units required TBD initial TBD growth

FAILURE MODE	PRIMARY CAUSES	FAILURE EFFECT & TIME TO EFFECT
1. Circuit breaker fails open or opens inadvertently.	Contamination of control circuits or an incidental or erroneous transfer command.	Loss of power to one of the DC load circuits.
2. Circuit breaker fails closed or closes inadvertently.		Loss of capability to isolate one of the DC loads from the DC bus.

RATIONALE/RECOMMENDATIONS/REF. DOCUMENTS	CRITICALITY
Rationale: The capability is provided for the automatic switching control and protection of critical loads, when identified, through ISS direction.	III

PREPARED BY J. Beekman	SUBSYSTEM P.E. [illegible]	RELIABILITY P.E. [illegible]

SUBSYSTEM Guidance & Control

DATE 8-30-71

CRITICAL FUNCTION ANALYSIS

ITEM IDENTIFICATION & FUNCTION

4.0 GUIDANCE AND CONTROL SUBSYSTEM

Major hardware groupings within the G&C subsystem include: Guidance and navigation sensors, sensor data converters, computation and command control generators, control signal converters, and propulsion and attitude controls. G&C subsystem functions are: attitude stabilization, attitude control, station and free-flyer experiments module guidance and navigation, and docking/attitude control.

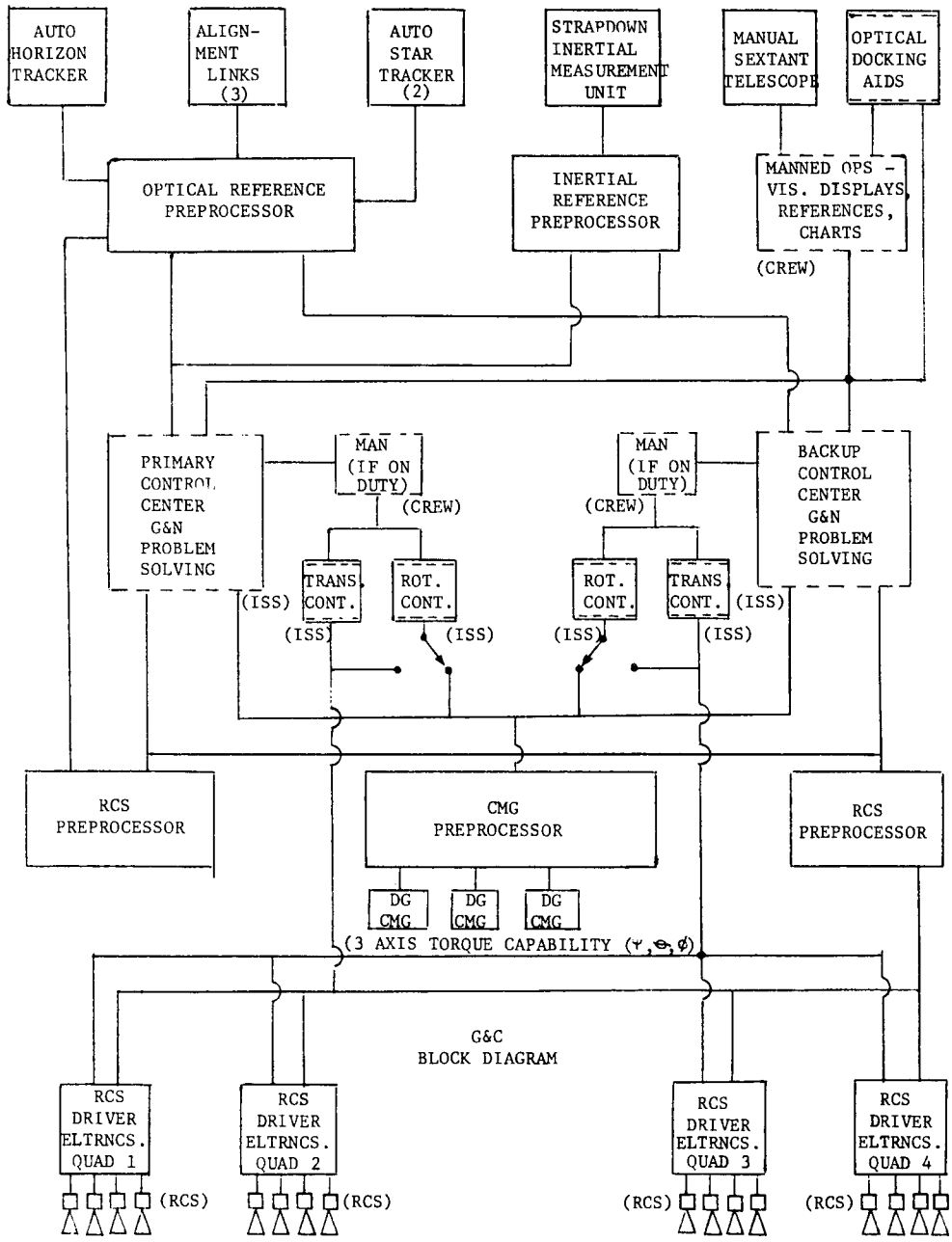

PREPARED BY J. Beekman	SUBSYSTEM P.E.	RELIABILITY P.E.

SUBSYSTEM Guidance & Control

DATE 8-30-71

CRITICAL FUNCTION ANALYSIS

ITEM IDENTIFICATION & FUNCTION

4.1 ATTITUDE STABILIZATION

Attitude stabilization is achieved through interaction of the inertial reference assembly (IRA), the optical reference assembly (ORA), the data processor assembly (DPA), the reaction control system electronics assembly (RCSEA), and the control moment gyro assembly (CMGA).

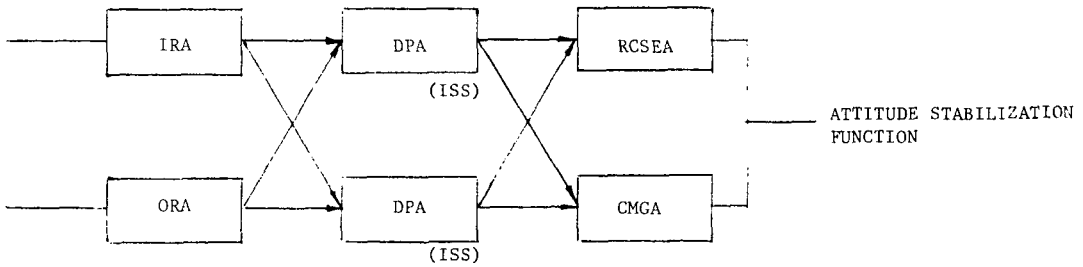

AS SHOWN, THE HARDWARE SETS ARE ARRANGED TO ACCOMPLISH FUNCTIONS INDEPENDENTLY AND HAVE THE CAPABILITY FOR CROSS CONNECTION WHERE NECESSARY.

RATIONALE/RECOMMENDATIONS/REF. DOCUMENTS	CRITICALITY

ITEM IDENTIFICATION & FUNCTION

4.1 ATTITUDE STABILIZATION (Continued)

FAILURE MODE	PRIMARY CAUSES	FAILURE EFFECT & TIME TO EFFECT
1. Loss of rate damping (in one or more axes)	Total failure of ISS (DPA) redundant outputs. Failure of inertial reference pre-processor. Loss of inertial reference assembly "RACU". Loss of the coldplate function serving the ISS (DPA) or IRA preprocessor. Loss of power to the ISS (DPA) or IRA preprocessor. Loss of timing signal to ISS(DPA) or the ISS (DPA) to the central computer. Loss of data bus to the central computer. Loss of central timing(to all subsystem)	Oscillation about a desired attitude or inability to meet experiment attitude deviation tolerances. Loss of ability or degraded capability to perform docking between the modular space station and other spacecraft.

RATIONALE/RECOMMENDATIONS/REF. DOCUMENTS	CRITICALITY
Rationale: Redundant means to accomplish rate damping is provided (in the event of a failure in a preferred operation mode) and is automatically substituted by preprogrammed computer control techniques. During manned operations the option of implementing the repair and/or maintenance of equipment plus the use of manual controls is available through crew action. RECOMMENDATION: Provide for remote switching from the Space Shuttle during the initial manning phase.	III

PREPARED BY J. Beekman	SUBSYSTEM P.E. A Cormack	RELIABILITY P.E. J.R. Bigler

SUBSYSTEM Guidance and Control

CRITICAL FUNCTION ANALYSIS

DATE 8-30-71

ITEM IDENTIFICATION & FUNCTION		
4.1 ATTITUDE STABILIZATION (CONTINUED)		
FAILURE MODE	PRIMARY CAUSES	FAILURE EFFECT & TIME TO EFFECT
2. Loss of attitude reference (one or more axes) rate damping remains.	Guidance and control computing malfunction or malfunctions of related central computer operations which affect the G&C functions. (see causes from prior failure mode)	Inability to hold or orient to any required attitude for station or experiment purposes. Loss of ability or degraded capability to perform docking between the modular space station and other spacecraft.

RATIONALE/RECOMMENDATIONS/REF. DOCUMENTS	CRITICALITY
RATIONALE: An alternate and independent attitude reference source is provided (in the event of a failure in a preferred operational mode) and is automatically substituted by preprogrammed computer control techniques. During manned operations the option of implementing the repair and/or maintenance of equipment plus the use of manual controls is available through crew action.	III

ITEM IDENTIFICATION & FUNCTION		
4.1 ATTITUDE STABILIZATION (Continued)		
FAILURE MODE	PRIMARY CAUSES	FAILURE EFFECT & TIME TO EFFECT
3. Loss of both rate damping and attitude reference. (This is a reasonable single failure mode since the rate signal is derived by dividing the change in attitude by the change in time)	(see causes from prior failure modes)	Complete loss of attitude stabilization control will allow vehicle tumbling. (Accelerations and rates depend on disturbance torque/time profiles).

RATIONALE/RECOMMENDATIONS/REF. DOCUMENTS	CRITICALITY
RATIONALE: An alternate and independent source of rate damping and attitude reference is provided (in the event of a failure in the preferred operational mode) and is automatically substituted by preprogrammed computer control techniques. During manned operations the option of implementing the repair and/or maintenance of equipment plus the use of manual controls is available through crew action.	III

PREPARED BY J. Beekman	SUBSYSTEM P.E. A. Cornwell	RELIABILITY P.E. J.R. Bigbie

SUBSYSTEM Guidance and Control

DATE 8-30-71

CRITICAL FUNCTION ANALYSIS

ITEM IDENTIFICATION & FUNCTION

4.2 ATTITUDE CONTROL - EXPERIMENT SUPPORT

High accuracy and long term control of attitude is required for certain specified experiments and is achieved through the optical reference assembly (ORA) interacting with the data processor assemblies (DPA), the reaction control system electronics assembly (RCSEA), and the control moment gyro assembly (CMGA).

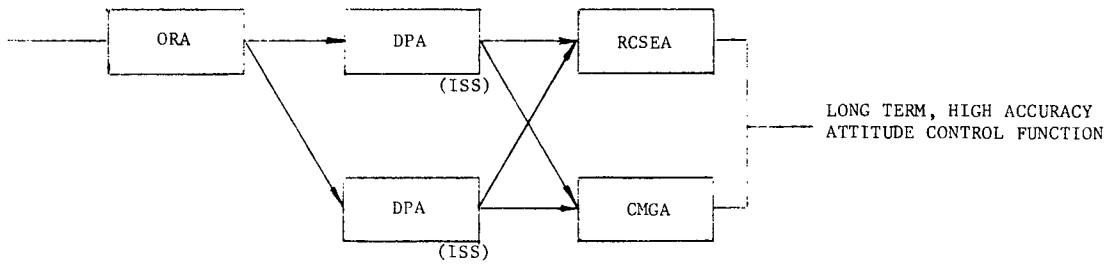

NOTE - THE INERTIAL MEASUREMENT UNIT CANNOT PROVIDE A LONG-TERM REFERENCE TO THE REQUIRED ACCURACY, SINCE ITS DRIFT RATES DO NOT REMAIN CONSTANT AND HENCE MUST BE CALIBRATED PERIODICALLY BY THE OPTICAL REFERENCES TO ACHIEVE HIGH ACCURACY.

RATIONALE/RECOMMENDATIONS/REF. DOCUMENTS

CRITICALITY

ITEM IDENTIFICATION & FUNCTION

4.2 ATTITUDE CONTROL - EXPERIMENT SUPPORT (Continued)

FAILURE MODE	PRIMARY CAUSES	FAILURE EFFECT & TIME TO EFFECT
1. Loss of attitude reference (of the accuracy required by experiments).	Loss of power to an optical sensor, or to a "RACU", or to an optics pre-processor. Star-tracker internal failure. Horizon-sensor internal failure. Data bus failure. G&C computing failure. "RACU" failure. Central timing failure.	Inability to orient to a desired attitude to the pointing accuracy required. Inability to navigate to an accuracy necessary to support experiment demands.

RATIONALE/RECOMMENDATIONS/REF. DOCUMENTS

RATIONALE: Redundant optical sensors are provided. Sensor power is remotely controlled and supplied from a dual input solid state device having selective control of the independent supplies.

CRITICALITY

III

PREPARED BY J. Beekman

SUBSYSTEM P.E. A. Cowell

RELIABILITY P.E. J. R. Biglio

SUBSYSTEM Guidance and Control

CRITICAL FUNCTION ANALYSIS

DATE 8-30-71

ITEM IDENTIFICATION & FUNCTION

4.2 ATTITUDE CONTROL - STATION SUPPORT

Attitude control for routine space station support is achieved through interaction of the inertial reference assembly (IRA), the optical reference assembly (ORA), the data processor assemblies (DPA), the reaction control system electronics assembly (RCSEA), and the control moment gyro assembly (CMGA).

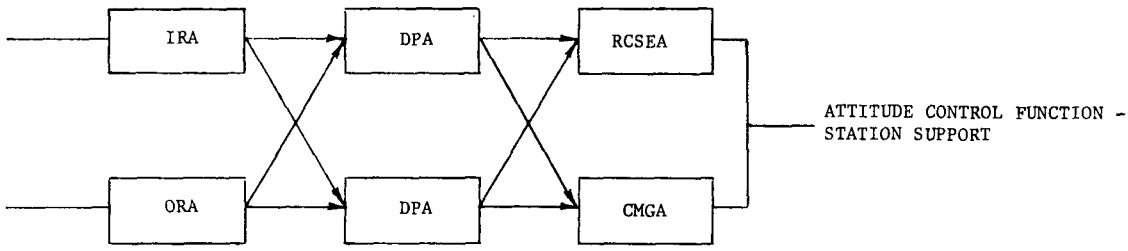

RATIONALE/RECOMMENDATIONS/REF. DOCUMENTS	CRITICALITY

ITEM IDENTIFICATION & FUNCTION

4.2 ATTITUDE CONTROL - STATION SUPPORT (Continued)

FAILURE MODE	PRIMARY CAUSES	FAILURE EFFECT & TIME TO EFFECT
1. Loss of control (Reference sensing devices)	Loss of attitude reference.	Inability to counteract disturbance torques* within the required tolerances. *Encountered from spacecraft docking, aerodynamics, gravity gradient torques, etc.

RATIONALE/RECOMMENDATIONS/REF. DOCUMENTS	CRITICALITY
RATIONALE: Criticality is established by the initial manning requirement where the space shuttle must dock with the unmanned modular space station. (Once manned, later dockings could be delayed until a control malfunction is repaired). Attitude hold during buildup docking is accomplished through redundantly controlled inertial torque and reaction thrust generating systems. Command communication links are redundant to initiate automatic G&C functions. A manual mode for attitude hold is incorporated for ground control prior to manning.	III

PREPARED BY J. Beekman	SUBSYSTEM P.E.	RELIABILITY P.E.

SUBSYSTEM Guidance & Control

DATE 8-30-71

CRITICAL FUNCTION ANALYSIS

ITEM IDENTIFICATION & FUNCTION
4.2 ATTITUDE CONTROL - STATION SUPPORT (Continued)

FAILURE MODE	PRIMARY CAUSES	FAILURE EFFECT & TIME TO EFFECT
2. Loss of Control (G&C activation & sequencing)	Loss of G&C equipment power, improper or incomplete activation of G&C equipment sequencing and failure to activate ISS/RCS equipment.	Inability to counteract disturbance torques. (continued)

RATIONALE/RECOMMENDATIONS/REF. DOCUMENTS	CRITICALITY
RATIONALE: Wakeup and command receivers are redundant and are powered from separate batteries during the buildup phase for initiating operation of equipment required for attitude control.	III

ITEM IDENTIFICATION & FUNCTION
4.2 ATTITUDE CONTROL - STATION SUPPORT (Continued)

FAILURE MODE	PRIMARY CAUSES	FAILURE EFFECT & TIME TO EFFECT
3. Loss of control (computer operations)	Failure in the CMG steer law computer (CMG preprocessor)	Inability to counteract disturbances torques. (continued)

RATIONALE/RECOMMENDATIONS/REF. DOCUMENTS	CRITICALITY
RATIONALE: The capability is provided by the central computer to detect CMG preprocessor induced errors. Further central computer capability will allow preprogrammed action to automatically maintain attitude control through the redundant RCS controls or provide for remote manual switching.	III

PREPARED BY J. Beekman	SUBSYSTEM P.E. A. Cornish	RELIABILITY P.E. J. R. Fighi

SUBSYSTEM Guidance & Control

CRITICAL FUNCTION ANALYSIS

DATE 8-30-71

ITEM IDENTIFICATION & FUNCTION 4.2 ATTITUDE CONTROL - STATION SUPPORT (Continued)		
FAILURE MODE 4. Loss of Control (Signal conversion)	PRIMARY CAUSES G&C central computing failures; RCS "RACU", preprocessor, driver electronics and data bus failures; or loss of power inputs to any of the above devices.	FAILURE EFFECT & TIME TO EFFECT Inability to counteract disturbance torques. (continued)
RATIONALE/RECOMMENDATIONS/REF. DOCUMENTS RATIONALE: Data processing assemblies (ISS responsibility) are redundant. RCS "RACU's" and preprocessor sets are redundant and are capable of providing inputs to four RCS quad driver units. Data buses (ISS responsibility) are redundant. Power supplies to all the above units are redundant and automatically switchable by either local or central control.		CRITICALITY III

ITEM IDENTIFICATION & FUNCTION 4.2 ATTITUDE CONTROL - STATION SUPPORT (Continued)		
FAILURE MODE 5. Loss of control (Miscellaneous)	PRIMARY CAUSES Multiple failures in any of the following equipment sets: both ISS computers; the inertial reference assembly and the optical reference assembly; both data buses; both power bus input sources; both reaction in control preprocessors; or all RCS propellant systems.	FAILURE EFFECT & TIME TO EFFECT Inability to counteract disturbance torques. (continued)
RATIONALE/RECOMMENDATIONS/REF. DOCUMENTS RATIONALE: The probability of multiple failures occurring is remote, however the capability to overcome or at least reduce disturbance torques is achieved through electrical locking of single gimbal drives in selected CMG's. Stabilizing through this mode is dependent on commands generated by G&C software.		CRITICALITY III

PREPARED BY J. Beekman	SUBSYSTEM P.E. A. Cowell	RELIABILITY P.E. J.R. Griffin

SUBSYSTEM Guidance & Control

DATE 8-30-71

CRITICAL FUNCTION ANALYSIS

ITEM IDENTIFICATION & FUNCTION

4.3 NAVIGATION - STATION SUPPORT

Navigation for the modular space station is achieved through the optical reference assembly (ORA) interacting with the data processor assemblies.

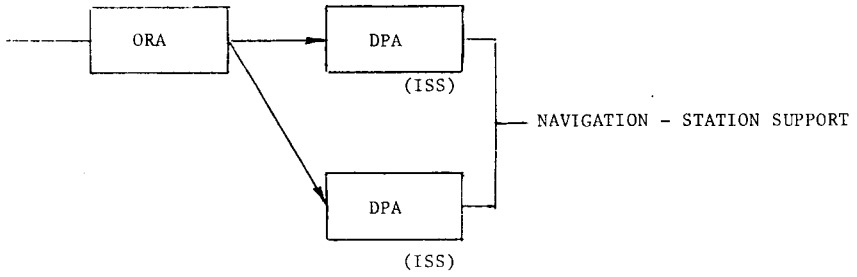

RATIONALE/RECOMMENDATIONS/REF. DOCUMENTS	CRITICALITY

ITEM IDENTIFICATION & FUNCTION

4.3 NAVIGATION - STATION SUPPORT (Continued)

FAILURE MODE	PRIMARY CAUSES	FAILURE EFFECT & TIME TO EFFECT
1. Loss of optical navigation capability.	Failure in optical preprocessor, horizon tracker, star tracker, or a combination of a preprocessor and a sensor failure.	Error allowance is exceeded in less than one-fourth orbit. Orbit decay would occur if no corrective action were taken to restore the navigation capability.

RATIONALE/RECOMMENDATIONS/REF. DOCUMENTS	CRITICALITY
RATIONALE: Star tracker optics and electronics are redundant. A four head horizon edge tracker is supplied although only three out of four heads are required; circuits are redundant. Electronics for the horizon edge tracker are packaged as a unit but are redundantly designed so that no single failure will affect performance. The optical preprocessor is an inflight replaceable unit (IFRU).	III

PREPARED BY J. Beekman	SUBSYSTEM P.E. [illegible]	RELIABILITY P.E. [illegible]

SUBSYSTEM GUIDANCE & CONTROL

CRITICAL FUNCTION ANALYSIS

DATE 8-30-71

ITEM IDENTIFICATION & FUNCTION

4.4 GUIDANCE - STATION SUPPORT
Computation by the data processor assemblies (DPA) are required to determine the change in MSS velocity vector, attitude, thrust and time parameters to accomplish orbit make-up and control commands for docking.

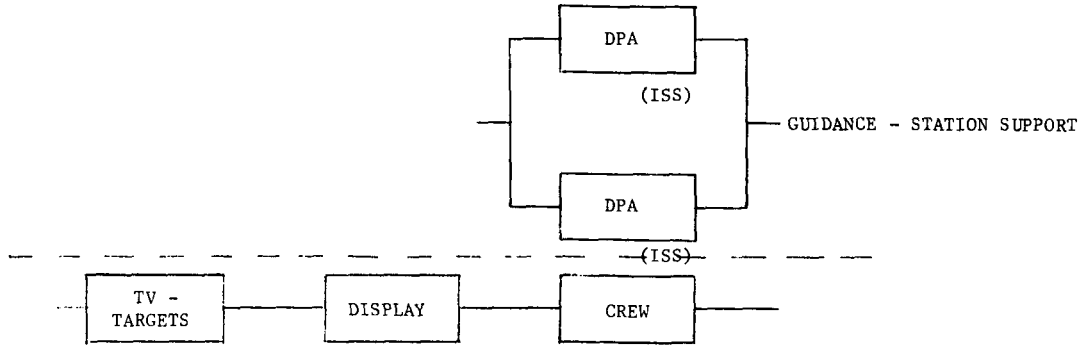

BACK-UP GUIDANCE SYSTEM - SHOWN FOR INFORMATION
(NOT G&C SUBSYSTEM RESPONSIBILITY)

RATIONALE/RECOMMENDATIONS/REF. DOCUMENTS	CRITICALITY

ITEM IDENTIFICATION & FUNCTION

4.4 GUIDANCE - STATION SUPPORT (Continued)

FAILURE MODE	PRIMARY CAUSES	FAILURE EFFECT & TIME TO EFFECT
1. Loss of computational capability.	Failure in the ISS computer, data bus, or guidance display parameters.	Inability to semi-automatically or automatically accomplish MSS guidance. Manual computation of guidance to the accuracy required to maintain orbit is possible but is normally too tedious. The manual backup method utilizes TV displayed illuminated targets and circle/cross-hair locaters. Ranging rates cannot be accurately obtained by this system.

RATIONALE/RECOMMENDATIONS/REF. DOCUMENTS	CRITICALITY
RATIONALE: Redundant data bus and computing assemblies are provided. Dual command control centers plus portable remote centers allow for redundant command inputs and data displays for all guidance requirements. In the remote event of multiple failures, and since orbit guidance is not deemed time critical, equipment maintenance using onboard spares or delivery of IFRU assemblies by the Space Shuttle vehicle is suggested in preference to manual guidance calculation.	III

PREPARED BY J. Beekman	SUBSYSTEM P.E. A. Cornelle	RELIABILITY P.E. J.R. Bigler

SUBSYSTEM GUIDANCE & CONTROL

DATE 8-30-71

CRITICAL FUNCTION ANALYSIS

ITEM IDENTIFICATION & FUNCTION

4.5 NAVIGATION - EXPERIMENT SUPPORT
Navigation for the free-flying experiment satellites is achieved through use of the optical ref. assembly (ORA), ground tracking and onboard doppler measurements interacting with the data processor assembly (DPA). NOTE: Navigation involving the space shuttle during resupply visits is considered as a special case since the shuttle has autonomous navigational capability and the MSS function serves as a backup.

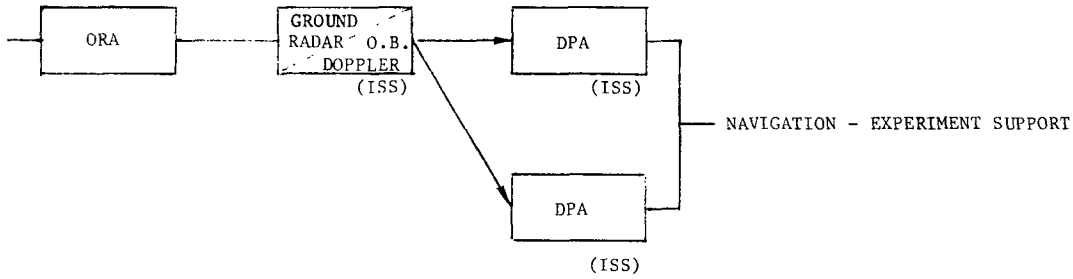

RATIONALE/RECOMMENDATIONS/REF. DOCUMENTS	CRITICALITY

ITEM IDENTIFICATION & FUNCTION
4.5 NAVIGATION - EXPERIMENT SUPPORT (Continued)

FAILURE MODE	PRIMARY CAUSES	FAILURE EFFECT & TIME TO EFFECT
1. Loss of navigational capability for free-flying satellites. Note: Occultation by the earth is not considered as a loss, since it should only occur for a fraction of an orbit if at all. The state vector would be propagated in the G&C computer until the next acquisition.	Failure in optical preprocessor, horizon edge tracker, star tracker, or a combination of a preprocessor and a sensor failure. Loss of range or range rate by the ISS during operations. Loss of ground tracking data. Loss of ISS memory data for satellite communication and control.	Inability to direct a satellite in an initial orbit, normal desired orbit or retrieval orbit when required.

RATIONALE/RECOMMENDATIONS/REF. DOCUMENTS	CRITICALITY
RATIONALE: Star tracker optics and electronics are redundant. A four head horizon edge tracker is supplied although only three out of four heads are required; circuits are redundant. Electronics for the horizon edge tracker are packaged as a unit but are redundantly designed so that no single failure will affect performance. The optical preprocessor is an inflight replaceable unit (IFRU).	III

optical capability.

PREPARED BY J. Beekman | SUBSYSTEM P.E. A. Cornwell | RELIABILITY P.E. J. P. Bigli

SUBSYSTEM GUIDANCE & CONTROL

CRITICAL FUNCTION ANALYSIS

DATE 8-30-71

ITEM IDENTIFICATION & FUNCTION

4.6 GUIDANCE - EXPERIMENT SUPPORT

Guidance for free-flying experiment satellites is achieved through computations by the data processor assemblies (DPA) from read back data displays of the satellite attitude and rate conditions.

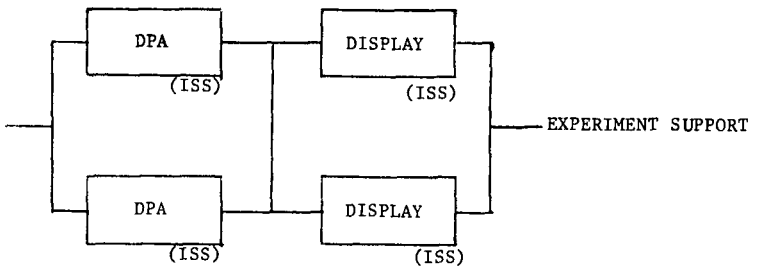

RATIONALE/RECOMMENDATIONS/REF. DOCUMENTS	CRITICALITY

ITEM IDENTIFICATION & FUNCTION

4.6 GUIDANCE - EXPERIMENT SUPPORT (continued)

FAILURE MODE	PRIMARY CAUSES	FAILURE EFFECT & TIME TO EFFECT
1. Loss of guidance capability for free-flying satellites.	Failure in the ISS computer, data bus or guidance display parameters.	Inability to place a satellite in a desired orbit, maintain or change its path accurately, and successfully retrieve it when required.

RATIONALE/RECOMMENDATIONS/REF. DOCUMENTS	CRITICALITY
RATIONALE: Redundant computer and data bus assemblies are provided. Free-flying satellite guidance commands are initiated from the experiment control console or the station control console as a backup. Data displays of F/F satellite guidance parameters can be displayed on both control consoles during operational changes to assure proper ISS control.	III

PREPARED BY J. Beekman	SUBSYSTEM P.E. A. Conrad	RELIABILITY P.E. J. R. Griffin

SUBSYSTEM GUIDANCE & CONTROL

DATE 8-30-71

CRITICAL FUNCTION ANALYSIS

ITEM IDENTIFICATION & FUNCTION
4.7 TRANSLATION/ATTITUDE CONTROL
Translation/attitude control is achieved through use of the capabilities established for the modular space station stabilization and attitude control but applied specifically to docking with passive experiment modules.

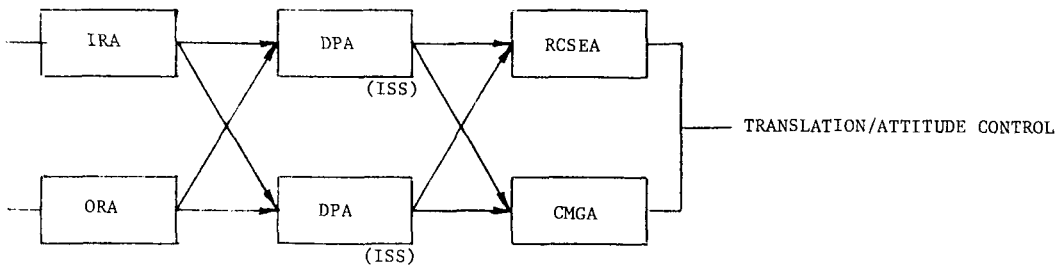

RATIONALE/RECOMMENDATIONS/REF. DOCUMENTS

CRITICALITY

ITEM IDENTIFICATION & FUNCTION
4.7 TRANSLATION/ATTITUDE CONTROL (continued)

FAILURE MODE	PRIMARY CAUSES	FAILURE EFFECT & TIME TO EFFECT
1. Loss of change of velocity (ΔV) Capability - pointing, stabilization, command, and thrust control.	Failures in the stabilization, attitude controls; Interruption of ISS functions due to loss of cooling.	Inability to accomplish translation/ attitude control.

RATIONALE/RECOMMENDATIONS/REF. DOCUMENTS
RATIONALE: Redundant means of providing stabilization and attitude control for translation/ attitude manuevers is provided through the dual referencing assemblies, processors and torque or thrust generating devices (RCSEA & CMGA).

CRITICALITY
III

PREPARED BY J. Beekman

SUBSYSTEM P.E. A Cowell

RELIABILITY P.E. J. R. Stefko

SUBSYSTEM GUIDANCE & CONTROL

CRITICAL FUNCTION ANALYSIS

DATE 8-30-71

ITEM IDENTIFICATION & FUNCTION		
4.7 TRANSLATION/ATTITUDE CONTROL (Continued)		
FAILURE MODE	**PRIMARY CAUSES**	**FAILURE EFFECT & TIME TO EFFECT**
2. Asymmetric Thrust (Loss of thrust at one of two thrusters)	Failure of a driver electronics or thruster. Loss of power to a driver/thruster. Failure of a quad propellants supply system.	Generation of unwanted rotational torques - difficulty in accomplishing functions dependent on the affected thruster.
RATIONALE/RECOMMENDATIONS/REF. DOCUMENTS		**CRITICALITY**
RATIONALE: Automatic controls are provided to override such malfunctions. Rotationale torques resulting from thruster malfunctions are compensated by automatic introduction of offsetting CMG torques. During manned operations, the design of non-redundant assemblies (Rocket engine nozzles, etc.) allows for repair or replacement.		II

ITEM IDENTIFICATION & FUNCTION		
4.7 TRANSLATION/ATTITUDE CONTROL (Continued)		
FAILURE MODE	**PRIMARY CAUSES**	**FAILURE EFFECT & TIME TO EFFECT**
3. CMG* rotor disintegrates *(Control moment gyro)	Structural or quality flaw	Possible damage to adjacent equipment or injury to personnel
RATIONALE/RECOMMENDATIONS/REF. DOCUMENTS		**CRITICALITY**
It is recommended that the CMG design incorporate rotor containment protection for the safety of the crew and of adjacent equipment in the event of a rotor structural failure.		I

PREPARED BY J. Beekman	SUBSYSTEM P.E.	RELIABILITY P.E.

SUBSYSTEM RCS

CRITICAL FUNCTION ANALYSIS

DATE 8-5-71

ITEM IDENTIFICATION & FUNCTION
5.0
Reaction Control System (RCS) - The Reaction Control System provides the impulses necessary for control of the station on command from the Guidance and Control Subsystem.

SYSTEM SKETCH AND CFA SEQUENCE

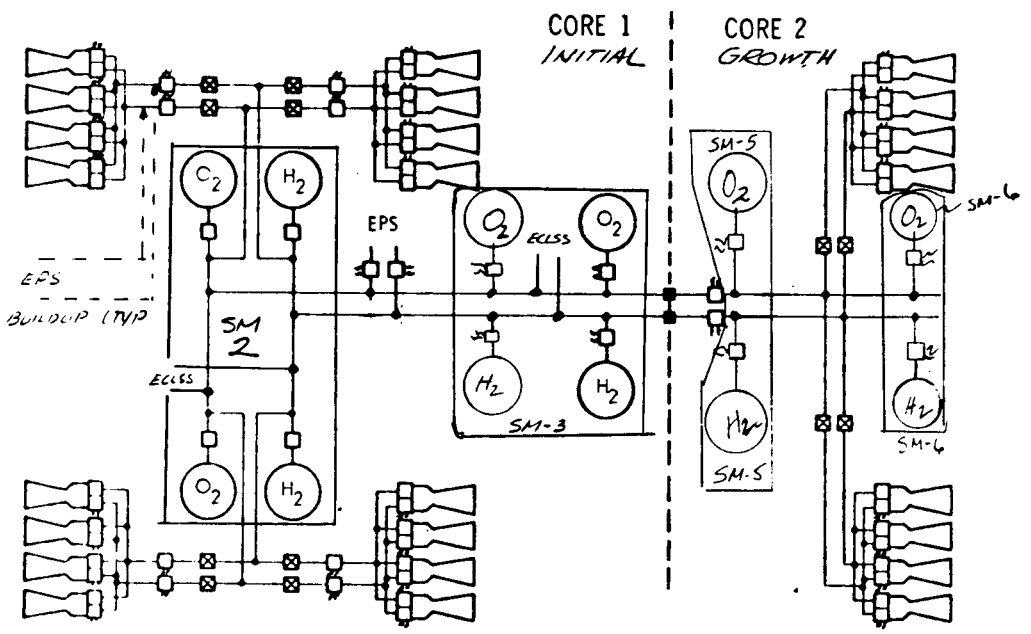

5.0 REACTION CONTROL SUBSYSTEM

5.1 PROPELLANT ACCUMULATOR ASSEMBLIES

5.1.1 Accumulator Tanks
5.1.2 O_2 & H_2 Accumulator Burst Disc Relief Valves
5.1.3 Electrically Actuated N.C. Vent Valves
5.1.4 Accumulator Assembly Vent Manifolds
5.1.5 Accumulator Tank Transducers

5.2 PROPELLANT FEED

5.2.1 Propellant Feed Manifolds
5.2.2 Electrically Actuated Isolation Valves
5.2.3 Burst Disc Relief Valves
5.2.4 Couplings
5.2.5 Line Pressure Transducers
5.2.6 Pressure Regulator Valves
5.2.7 Check Valves

5.3 ENGINE ASSEMBLY

5.3.1 Burst Disc Relief Valves
5.3.2 Propellant Manifolds
5.3.3 Engine Cluster Transducers
5.3.4 Rocket Engines

PREPARED BY J.O. Bartlett	SUBSYSTEM P.E.	RELIABILITY P.E.

SUBSYSTEM RCS

CRITICAL FUNCTION ANALYSIS

DATE 8-5-71

ITEM IDENTIFICATION & FUNCTION

5.1 Propellant Accumulator Assemblies - O_2 and H_2 gases are supplied from the EC/LSS and stored in accumulator tanks at a pressure above that required for engine operation. Associated hardware includes: valving for automatic overpressure relief and tank venting, vent lines and manifolds, and instrumentation for monitoring accumulator tank pressure, flows, and temperatures. These assemblies are located in SM2 and SM3.

FAILURE MODE	PRIMARY CAUSES	FAILURE EFFECT & TIME TO EFFECT

RATIONALE/RECOMMENDATIONS/REF. DOCUMENTS

Recommend that H_2 manifolds and lines be double jacketed and vented to a vacuum to prevent the possibility of a fire hazard due to a H_2 leak.

CRITICALITY

ITEM IDENTIFICATION & FUNCTION

5.1.1 Accumulator tanks - gaseous O_2 and H_2 are stored at a nominal pressure of 300 psia is 4 sets of accumulator tanks. Two tank sets are located in the SM2 and two sets are located in the SM3. The accumulator tank sets are located in the same modules as the ECLSS electrolysis units.
Quantity Required: Accumulator tank set consists of two O_2 and two H_2 tanks with a total of four sets required (4 O_2 tanks and 4 H_2 tanks).

FAILURE MODE	PRIMARY CAUSES	FAILURE EFFECT & TIME TO EFFECT
1. Tank wall rupture.	Materials and processes and accidental damage.	Oxygen: 1. Possible fragmentation damage to surrounding equipment or injury to personnel. 2. Loss of 25% or more of accumulated oxygen.
2. Tank fitting leakage.		Hydrogen: 1. Possible explosion, fire*, or damage to surrounding equipment or personnel. 2. Loss of 25% or more of accumulated hydrogen. Time: Immediate to hours *Requires ignition source and oxidizer.

RATIONALE/RECOMMENDATIONS/REF. DOCUMENTS

1. Accumulator tanks are in flight replaceable units. 2. Accumulator tanks will be protected from over-pressurization by individual tank relief valves set for 350 psia. 3. Electrically actuated dump valves are incorporated in the system to allow for individual tank maintenance. 4. Recommend tanks contain high pressure integral blowout plugs to prevent the possibility of excessive tank pressurization. 5. Recommend possible tank shielding, external coating, or enclosure. 6. Accumulators are monitored for pressure and temperature. 7. H_2 ~~components are located in N_2 filled enclosures. 8. Over-pressurization protection if also~~ provided by system burst disk relief valves. 9. Tanks will be designed to a high factor of safety. 10. Accumulator tank material should be of the non-fragmentation type to preclude**

CRITICALITY

I

PREPARED BY J. O. Bartlett | SUBSYSTEM P.E. E. K. Weyer 11/23/71 | RELIABILITY P.E. G. L. Sigler

**the possibility of personnel hazard if tank rupture occurs.

SUBSYSTEM RCS

DATE 8-5-71

CRITICAL FUNCTION ANALYSIS

ITEM IDENTIFICATION & FUNCTION

5.1.2 O_2 and H_2 Accumulator Burst Disc Relief Valves - Automatically relieves overpressure of a propellant accumulator tank. One BDRV is required for each accumulator tank.

Quantity Required: Total of 8.

FAILURE MODE	PRIMARY CAUSES	FAILURE EFFECT & TIME TO EFFECT
1. Excessive external leakage	Materials and processes and accidental damage.	1.1 Possible damage or fire* to surrounding equipment or personnel.
2. Valve opens below normal operating pressure.	Materials and processes contamination. Corrosion.	1.2 Loss of 25% or more of accumulated O_2 or H_2.
3. Fails to open when required.		2.1 Loss of 25% of more of accumulated O_2 and H_2.
		3.1 None - overpressurization protection provided by other system relief valves.
		Time: Seconds of hours.
		*Possible fire in presence of an ignition source and an oxidizer (for the H_2 relief valves).

RATIONALE/RECOMMENDATIONS/REF. DOCUMENTS

Recommend location H_2 components in N_2 gas environment. Criticality II in the H_2 system because of the possibility of of a fire hazard - failure modes 2 and 3 are Criticality III. Fails closed is not considered critical because the valve only opens during an abnormal condition of overpressurization. Also, tank pressure is monitored and an identical BDRV in the other tanks would function to relieve an overpressure condition. (Tanks are also protected from overpressurization by integral sidewall blowout plugs.

CRITICALITY

*(1) II, (2) III, (3) III

ITEM IDENTIFICATION & FUNCTION

5.1.3 Electrically Actuated Normally Closed Vent Valves - Provides the capability to vent overboard the accumulated propellant gas in associated tanks. Valves may be operated manually or remotely and contain position indicators which will have the capability to be monitored at the valve or a remote station.

Quantity Required: One vent valve is required for each accumulator tank. Total of 8 required.

FAILURE MODE	PRIMARY CAUSES	FAILURE EFFECT & TIME TO EFFECT
1. Rupture or leakage.	Materials and processes	1.1 Possible damage or fire* to surrounding equipment or personnel.
2. Fails to remain closed (excessive leakage).	Materials and processes. Electrical failure (short) contamination.	1.2 Loss of 25% or more of accumulated propellant gas.
3. Non-critical - fails to open when required.	Materials and processes. Electrical open circuit.	2.1 Loss of 25% or more of accumulated propellant gas.
		Time: Seconds to hours.
		*Possible fire in presence of an ignition source and an oxidizer for the H_2 vent valves only.

RATIONALE/RECOMMENDATIONS/REF. DOCUMENTS

Failure of the valve to open is not considered critical because the tank can be vented through the other accumulator tank vent valves; however, all of the accumulated O_2 or H_2 would have to be dumped.

This valve is used when maintenance service is to be performed on an accumulator or its associated equipment and during initial SM hookup to vent the accumulator tanks before adding O_2 or H_2. Recommend locating the vent valve in an N_2 gas environment. Criticality II associated ~~with the H_2 valves because of the potential fire hazard and Criticality III is associated with~~ failure mode 2.

CRITICALITY

(1) II, (2) III, (3) III

PREPARED BY J. O. Bartlett

SUBSYSTEM P.E. [illegible] 11/23/71

RELIABILITY P.E. [illegible]

SUBSYSTEM RCS

CRITICAL FUNCTION ANALYSIS

DATE 8-5-71

ITEM IDENTIFICATION & FUNCTION

5.1.4 Accumulator Assembly Vent Manifolds - Manifold lines connect the accumulator, burst disc relief valves, and electrically activated vent valves.

FAILURE MODE	PRIMARY CAUSES	FAILURE EFFECT & TIME TO EFFECT
Rupture or leakage.	Materials and processes. Accidental damage.	1. H_2 only - possible fire in the presence of an ignition source and an oxidizer. 2. Loss of 25% or more of the accumulated O_2 or H_2. Time: Seconds to Hours.

RATIONALE/RECOMMENDATIONS/REF. DOCUMENTS	CRITICALITY
Recommend locating H_2 components in N_2 gas environment. Criticality II in the H_2 system because of the possibility of a fire hazard.	II

ITEM IDENTIFICATION & FUNCTION

5.1.5 Accumulator Tank Transducers - Pressure, temperature, and flow sensing transducers are provided for monitoring the operation of the accumulators. One transducer set is required for each accumulator.

Quantity Required: 2 pressure, 1 temperature, and 1 flow transducer per accumulator - Total -- 16 pressure, 8 temperature and 8 flow are required.

FAILURE MODE	PRIMARY CAUSES	FAILURE EFFECT & TIME TO EFFECT
1. External leakage or rupture	Materials and processes. Accidental damage.	1.1 Loss of 25% or more of accumulated O_2 or H_2. 1.2 H_2 only - possible fire in the presence of an ignition source and an oxidizer. Time: Seconds to hours
2. Improper output signal.	Materials and processes. Accidental damage.	2.1 Control center would receive false data causing incorrect corrective action of the subsystem. Time: Immediate

RATIONALE/RECOMMENDATIONS/REF. DOCUMENTS	CRITICALITY
Recommend locating H_2 components in N_2 gas environment. Failure mode (1) is criticality II in the H_2 system because of the possibility of a fire hazard.	(1) II, (2) III

PREPARED BY J. O. Bartlett	SUBSYSTEM P.E. E. K. Dreyer 11/23/71	RELIABILITY P.E. J. L. Griffin

SUBSYSTEM RCS

DATE 8-5-71

CRITICAL FUNCTION ANALYSIS

ITEM IDENTIFICATION & FUNCTION

5.2 Propellant Feed - The propellant feed system supplies the necessary propellant to the engines and consists of the propellant accumulator assemblies, the engine assemblies and the ECLSS and the EPS feed line interfaces. The propellant feed system is primarily located in the core module with the accumulator tanks and their associated hardware located in SM2 and SM3.

5.2.1 Propellant Feed Manifolds - Connects the propellant accumulator tanks to the engine quads.

FAILURE MODE	PRIMARY CAUSES	FAILURE EFFECT & TIME TO EFFECT
Rupture or leakage.	Materials and processes. Accidental damage.	1. H_2 only - possible fire in the presence of an ignition source and an oxidizer. 2. Partial or complete loss of accumulated O_2 or H_2. Time: seconds to hours.

RATIONALE/RECOMMENDATIONS/REF. DOCUMENTS	CRITICALITY
H_2 manifold and lines should be double jacketed to prevent the possibility of fire hazards associated with manifold leakage. (Manifold outer jacket vented to vacuum.)	II

ITEM IDENTIFICATION & FUNCTION

5.2.2 Electrically Actuated Isolation Valves - These valves are used to isolate various portions of the subsystem during maintenance activities or corrective action as a result of component failures. Typical are the valves that control flow between the EPS and the RCS and ECLSS. All valves are located in the core module; are bi-stable, and have position indicators for both remote and local monitoring. The valves may also be operated manually at the valve location or remotely from the control center. ~~Quantity: 11 O_2 and 11 H_2, total 22.~~

FAILURE MODE	PRIMARY CAUSES	FAILURE EFFECT & TIME TO EFFECT
1. Rupture or Leakage.	Materials and processes. Accidental damage.	1.1 Possible fire* and damage to surrounding equipment or personnel. 1.2 Possible loss of all or part of the accumulated O_2 or H_2. Time: Seconds to hours.
2. Fails to open	Materials and processes. Electrical failure. Contamination.	2.1 Loss of capability to isolate the propellant feed lines from interfacing equipment. 2.2 Same as 1.2
3. Fails closed.	Materials and processes. Electrical failure. Contamination.	3.1 Reduced subsystem capability. *H_2 only, requires an ignition source and an oxidizer.

RATIONALE/RECOMMENDATIONS/REF. DOCUMENTS	CRITICALITY
Recommend locating H_2 components in N_2 gas environment. Criticality II in the H_2 system because of the possibility of a fire hazard. Failure Modes 2 and 3 are Criticality III due to the redundant capability to supply RCS functions.	(1) II, (2) III, (3) III

PREPARED BY J. O. Bartlett	SUBSYSTEM P.E. [illegible]	RELIABILITY P.E. [illegible]

SUBSYSTEM RCS

CRITICAL FUNCTION ANALYSIS

DATE 8-5-71

ITEM IDENTIFICATION & FUNCTION

5.2.3 Burst Disc Relief Valves - These valves are set to open at 350 psia, and protect the subsystem from excessive pressure. The most probable source of excessive pressure would be from the EPS during the buildup phase.

Quantity Required: 2

FAILURE MODE	PRIMARY CAUSES	FAILURE EFFECT & TIME TO EFFECT
1. External leak	Materials and processes. Accidental damage.	1.1 Possible damage or fire* to surrounding equipment or personnel. 1.2 Possible loss of all of the accumulator supply of O_2 or H_2 gas 1.3 Potential loss of the subsystem.
2. Opens prematurely (rupture).	Materials and processes. Corrosion.	2.1 Possible loss of all of the accumulated O_2 or H_2. 2.2 Loss of use of subsystem.
3. Fails to open when required.	Materials and processes. Contamination.	3.1 Loss of pressure protection of O_2 or H_2 manifolds could result in damage to the engine quad regulators. Time: Immediate to hours.

*H_2 only requires ignition source and an oxidizer.

RATIONALE/RECOMMENDATIONS/REF. DOCUMENTS

Recommend locating H_2 components in N_2 gas environment.
Failure Modes 1 and 2 are Criticality II since the system propellant supply would be depleted resulting in the system becoming inoperative. Recommend burst disc relief valve combination.

CRITICALITY

(1) II,
(2) II,
(3) III

ITEM IDENTIFICATION & FUNCTION

5.2.4 Couplings - These units are located at the interfaces between modules. They permit the gases to pass between the separable modules so that the RCS is not restricted to a single module. During IOC operations a mated set of couplings for O_2 and a set for H_2 is located between the core module and SM2 and between the core module and SM3. Unmated half sets for O_2 and H_2 are located at the aft end of the core module for the growth configuration.
Quantity Required: 8 mated sets, 4 unmated units.

FAILURE MODE	PRIMARY CAUSES	FAILURE EFFECT & TIME TO EFFECT
1. Rupture or leakage	Materials and processes. Accidental	1.1 Possible damage or fire* to surrounding equipment or personnel. 1.2 Possible loss of 25% or more of accumulated O_2 or H_2.
2. Failure to couple.	Materials and processes. Accidental damage. Contamination.	2.1 Loss of associated accumulator tank. Time: Immediate to hours.
3. Failure to uncouple - (non-critical)		*H_2 only - Requires an ignition source and an oxidizer.

RATIONALE/RECOMMENDATIONS/REF. DOCUMENTS

Failure to uncouple is not considered critical because it is not normally accomplished.

Criticality II in the H_2 system because of the potential fire hazard.

CRITICALITY

(1) II,
(2) III,
(3) III

PREPARED BY J. O. Bartlett | SUBSYSTEM P.E. [illegible] 11/23/71 | RELIABILITY P.E. [illegible]

SUBSYSTEM RCS

CRITICAL FUNCTION ANALYSIS

DATE 8-5-71

ITEM IDENTIFICATION & FUNCTION

5.2.5 Line Pressure Transducers - Transducers are required to provide assessment of pressures. One transducer is located in the O_2 line and one in the H_2 line of the core module.

Quantity required: 2

FAILURE MODE	PRIMARY CAUSES	FAILURE EFFECT & TIME TO EFFECT
1. Rupture or external leakage	Materials and processes. Accidental damage.	1.1 Loss of part or all of accumulated O_2 or H_2 resulting in eventual loss of the RCS. 1.2 H_2 only - possible fire in the presence of an ignition source and an oxidizer. Time: Seconds to burn.
2. Improper Output Signal	Materials and processes. Accidental damage. Contamination.	2.1 Control center receives false pressure data causing incorrect assessment and operation of the subsystem. Time: Immediate

RATIONALE/RECOMMENDATIONS/REF. DOCUMENTS

Recommend locating H_2 components in N_2 gas environment.

Failure Mode 1 is Criticality II in the H_2 system because of the possibility of a fire hazard.

Failure Mode 2 in Criticality III.

CRITICALITY

(1) II,
(2) III

ITEM IDENTIFICATION & FUNCTION

5.2.6 Pressure Regulator Valves - Two types of pressure regulators are utilized. One ty is located at the EPS interface to reduce the gas pressure from 2200 psia to 300 psia during the buildup phase. The other regulators control the propellant feed pressure to each rocket engine quad from 300 to approximately 50 psia. Both type of regulators are located in the core module.
Quantity Required: 2 (2200 to 300 psia), 8 (300 to 50 psia).

FAILURE MODE	PRIMARY CAUSES	FAILURE EFFECT & TIME TO EFFECT
1. Rupture of external leakage	Materials and processes. Accidental damage.	1.1 Possible damage or fire* to surrounding equipment or personnel. 1.2 Partial loss of accumulated O_2 or H_2. 1.3 Low pressure units-loss of use of an engine cluster. 1.4 High pressure units - loss of buildup RCS use.
2. Regulates to a high pressure setting or full open.	Materials and processes. Accidental damage. Contamination.	2.1 Low pressure units - possible loss of an engine cluster. 2.2 High pressure units - possible loss or RCS during buildup.
3. Regulates to a low pressure setting or closed.	Materials and processes. Accidental damage. Contamination.	3.1 Low pressure units - loss of use of engine cluster. 3.2 High pressure units - loss of RCS use in buildup. *H_2 only - requires ignition and oxidizer

RATIONALE/RECOMMENDATIONS/REF. DOCUMENTS

Recommend locating H_2 components in N_2 gas environment. Failure Mode 1 is Criticality II in the H_2 system because of the possibility of a fire hazard.
Failure Modes 2 and 3 for high pressure units are Criticality II, low pressure is Criticality III.
The high pressure units are not functional after the buildup period. However, failure open events could cuase relief valves to open partially depleting the propellant supply.

CRITICALITY

(1) II,
(2) II

PREPARED BY J. O. Bartlett | SUBSYSTEM P.E. E.K. Meyer 11/23/71 | RELIABILITY P.E. J.R. Bigbee

SUBSYSTEM RCS

CRITICAL FUNCTION ANALYSIS

DATE 8-5-71

ITEM IDENTIFICATION & FUNCTION

5.2.7 Check Valves - These units permit reverse flow from the RCS to the EPS after the buildup period. They are used to bypass the pressure regulators, and are located in the core module.

Quantity Required: 2, one on the O_2 system and one in the H_2 system.

FAILURE MODE	PRIMARY CAUSES	FAILURE EFFECT & TIME TO EFFECT
1. Rupture or leakage	Materials and processes. Accidental damage.	1.1 Possible damage to or fire* to surrounding equipment or personnel 1.2 Loss of part or all of accumulated O_2 or H_2. 1.3 Loss of buildup RCS use.
2. Failed open.	Materials and processes. Accidental damage. Contamination.	2.1 Possible loss of RCS during buildup.
3. Partially restricted or closed - not critical.		

RATIONALE/RECOMMENDATIONS/REF. DOCUMENTS

Failed closed is not considered critical, however, it does reduce the possibility of EPS receiving O_2 or H_2 from the RCS in the event of a power emergency or contingency condition. If the pressure regulators are replaced with tubing after the buildup period, the check valves may be removed. Recommend locating H_2 components in an N_2 gas environment. Failure open mode is considered to be critical due to the systems burst disc relief valves providing over pressure protection, however, system operating pressure would be reduced resulting in degradation of system performance (function of EPS system control).

CRITICALITY

(1) II,
(2) II,
(3) III

ITEM IDENTIFICATION & FUNCTION

FAILURE MODE	PRIMARY CAUSES	FAILURE EFFECT & TIME TO EFFECT

RATIONALE/RECOMMENDATIONS/REF. DOCUMENTS

CRITICALITY

PREPARED BY J. O. Bartlett

SUBSYSTEM P.E. E.K. Meyer 11/21/73

RELIABILITY P.E. J.R. Sigler

SUBSYSTEM RCS

CRITICAL FUNCTION ANALYSIS

DATE 8-5-71

ITEM IDENTIFICATION & FUNCTION

5.3 Engine Assembly - The O_2 and H_2 gases are burned in the engines to produce the required station control impulses. This assembly consists of engines (with injector valves), burst disc relief valves, and the associated manifolds. Engine assemblies are located externally on the core module XY plane at Station 100 and 580.

5.3.1 Burst Disck Relief Valves - Relieves over pessure in the engine manifolds. One unit for O_2 and one unit for H_2 on each engine cluster. Units are located externally on the core module.

Quantity Required: 8

FAILURE MODE	PRIMARY CAUSES	FAILURE EFFECT & TIME TO EFFECT
1. External leakage or rupture	Materials and processes. Accidental damage	1.1 Possible damage or fire* to surrounding equipment. 1.2 Loss or part of the accumulated O_2 or H_2. 1.3 Possible engine damage.
2. Valve opens below normal operating pressure.	Materials and processes.	2.1 Loss of part of the accumulated O_2 or H_2. 2.2 Loss of use of engine cluster.
3. Fails to open when required.		Time: Immediate to hours. *H_2 only - requires an ignition source and an oxidizer.

RATIONALE/RECOMMENDATIONS/REF. DOCUMENTS	CRITICALITY
Failed closed mode is not considered critical because the valve would only open as a result of the associated pressure regulator failing open. The subsystem can operate satisfactorily with one engine cluster inoperative.	(1) III, (2) III, (3) III

ITEM IDENTIFICATION & FUNCTION

5.3.2 Propellant Manifolds - Manifold connects the engine valves and relief valves to the propellant distribution assembly.

FAILURE MODE	PRIMARY CAUSES	FAILURE EFFECT & TIME TO EFFECT
Rupture or leakage.	Materials and processes. Accidental damage.	1. H_2 only - possible fire in the presence of an ignition source and an oxidizer. 2. Loss of part of the accumulated O_2 or H_2. 3. Loss of one engine cluster. Time: Immediate to hours.

RATIONALE/RECOMMENDATIONS/REF. DOCUMENTS	CRITICALITY
Not considered to be critical because manifolds are located externally on the core module and are protected from overpressurization by burst disc relief valves.	III

PREPARED BY J. O. Bartlett | SUBSYSTEM P.E. E. K. Meyer 11/23/71 | RELIABILITY P.E. J. L. Griffin

SUBSYSTEM RCS

CRITICAL FUNCTION ANALYSIS

DATE 8-5-71

ITEM IDENTIFICATION & FUNCTION

5.3.3 Engine Cluster Transducers, Pressure and Temperature - Transducers are provided for monitoring the operational characteristics of the engine cluster. One transducer set is required for each propellant manifold.

Quantity Required: 2 pressure and 2 temperature transducers per engine cluster, Total: 8 pressure and 8 temperature transducers.

FAILURE MODE	PRIMARY CAUSES	FAILURE EFFECT & TIME TO EFFECT
1. External leakage or rupture	Materials and processes. Accidental damage.	1.1 Loss of part of the accumulated O_2 or H_2. 1.2 H_2 only - possible fire in the presence of an ignition source and an oxidizer. Time: Seconds to hours.
2. Improper output signal.	Materials and processes. Accidental damage.	2.1 Control center receives false data causing incorrect assessment and operation of the engine cluster. Time: Immediate

RATIONALE/RECOMMENDATIONS/REF. DOCUMENTS	CRITICALITY
	(1) III, (2) III

ITEM IDENTIFICATION & FUNCTION

5.3.4 Rocket Engines - The rocket engines are pressure fed, gaseous bipropellant (O_2 and H_2) thrustors which may be operated in the pulse or steady state mode by electrically operated integral engine valves. Each of the engine valves will contain position indicator switches. The engines are located on the outside of the core module.

Quantity Required: 16

FAILURE MODE	PRIMARY CAUSES	FAILURE EFFECT & TIME TO EFFECT
1. Failure explosion	Materials and processes. Pressure temperature anomaly.	1.1 Possible damage to equipment in the immediate area form concussion or shrapnel. Time: Immediate
2. Engine valve external leakage or rupture.	Materials and processes. Accidental damage.	2.1 Possible loss of part of the accumulated O_2 or H_2. 2.2 Engine cluster would become inoperative as a result of isolating the failure. Time: Immediate
3. Engine valve fails closed. (Continued)	Materials and processes. Accidental damage. Contamination. Electrical failure. (Continued)	3.1 Affected engine would become inoperative. Time: Immediate (Continued)

RATIONALE/RECOMMENDATIONS/REF. DOCUMENTS	CRITICALITY
Criticality II for failure mode 1 - engine explosion. The rocket engine clusters are inflight replaceable units in a shirtsleeve environment. Failure modes 2 and 3 are criticality III.	(1) II, (2) III, (3) III

PREPARED BY J. O. Bartlett	SUBSYSTEM P.E. [illegible] 11/23/71	RELIABILITY P.E. [illegible]

SUBSYSTEM RCS

CRITICAL FUNCTION ANALYSIS

DATE 8-5-71

ITEM IDENTIFICATION & FUNCTION		
5.3.4 Rocket Engines (Continued)		
FAILURE MODE	**PRIMARY CAUSES**	**FAILURE EFFECT & TIME TO EFFECT**
4. Engine valves fails open.	Materials and processes. Accidental damage. Contamination. Electrical short.	4.1 One engine cluster would become inoperative as a result of isolating the failure. 4.2 Partial loss of accumulated O_2 or H_2. Time: Immediate to minutes.
5. Engine injector restricted.	Accidental damage. Contamination.	5.1 Reduction in engine thrust. 5.2 Possible engine wall burn out.

RATIONALE/RECOMMENDATIONS/REF. DOCUMENTS	CRITICALITY
	(1) III, (2) III

ITEM IDENTIFICATION & FUNCTION		
FAILURE MODE	**PRIMARY CAUSES**	**FAILURE EFFECT & TIME TO EFFECT**

RATIONALE/RECOMMENDATIONS/REF. DOCUMENTS	CRITICALITY

PREPARED BY J. O. Bartlett	SUBSYSTEM P.E. [illegible]	RELIABILITY P.E. [illegible]

SUBSYSTEM Information Subsystem

CRITICAL FUNCTION ANALYSIS

DATE 7/13/71

ITEM IDENTIFICATION & FUNCTION

6.0 Information Subsystems (ISS) - The ISS performs major functions consisting of data processing, command/control, external and internal communications and software utilization as noted below.

CFA SEQUENCE

6.0 INFORMATION SUBSYSTEMS

6.1 DATA PROCESSING

6.1.1 Data Bus Control
6.1.2 Central Timing Assembly
6.1.3 Central Processor
6.1.4 RACU
6.1.5 Build-up Data Processor

6.2 COMMAND/CONTROL AND MONITORING ASSEMBLY

6.2.1 Operational Control Console Subassembly
6.2.2 Commander's Control Console
6.2.3 Emergency G&C Control
6.2.4 Portable Control Unit
6.2.5 Local Monitor Alarm
6.2.6 Microfilm Projector

6.3 EXTERNAL COMMUNICATIONS

6.3.1 K-band Antenna
6.3.2 K-band Antenna Mounted Electronics
6.3.3 K-band (Non-Integrated Electronics)
6.3.4 S-band Antenna
6.3.5 S-band Transponder
6.3.6 VHF Antenna
6.3.7 VHF Transponder
6.3.8 Build-up Communications Subassembly

6.4 INTERNAL COMMUNICATIONS

6.4.1 Communications Rack

6.4.1.1 Modulation Processor
6.4.1.2 Central Switching and Self Test Unit
6.4.1.3 Facsimile Unit
6.4.1.4 Paging Amplifier
6.4.1.5 Printer

6.4.2 Recording Subassembly
6.4.3 Audio Video Units
6.4.4 Hard Wire Intercommunications
6.4.5 Shuttle Module Interfaces Unit
6.4.6 TV Camera, Color
6.4.7 TV Camera, B&W
6.4.8 TV Monitors, Color

6.5 SOFTWARE ASSEMBLY

6.5.1 Computer Programs
6.5.2 Microfilm
6.5.3 Printer/Facsimile Paper

PREPARED BY G. H. Drozd	SUBSYSTEM P.E.	RELIABILITY P.E.

SUBSYSTEM Information Subsystem (Data Processing)

CRITICAL FUNCTION ANALYSIS

DATE 7/18/71

ITEM IDENTIFICATION & FUNCTION

6.1 Data Processing Assembly (DPA) - Data processing consists of acquisition, processing, distribution, and storage of information and provides the central timing generation and distribution function. The data processing assembly consists of the data bus control, central timing subassembly, central processor subassembly, and the remote acquisition and control units. The build-up data processing assembly is only used during the build-up.

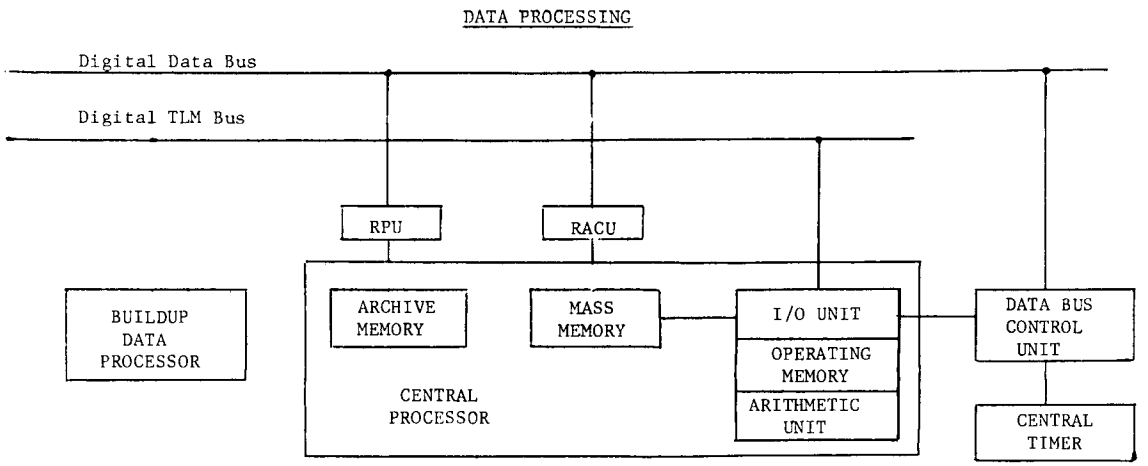

ITEM IDENTIFICATION & FUNCTION

6.1.1 Data Bus Control - The data bus control unit controls the data flow (command and response) on the data bus. The unit interfaces with the input/output processors and the digital data bus. Total of 4 control units are utilized (two each in SM1 and SM2).

FAILURE MODE	PRIMARY CAUSES	FAILURE EFFECT & TIME TO EFFECT
Unit becomes inoperative.	Thermal and mechanical stresses. Time degrading factors (metal migration, contamination, etc.)	Receipt of data bus intelligence at the central processors and subsystem functional loops would be impaired. Mission success and crew safety are not affected by single failures. Time: Immediate to months

RATIONALE/RECOMMENDATIONS/REF. DOCUMENTS	CRITICALITY
Multiple units provide the necessary redundant control; either unit has the capability for complete control. Data bus control units will also contain internal redundant functions.	III

PREPARED BY G. H. Drozd	SUBSYSTEM P.E. C R Gerber	RELIABILITY P.E. J R Sigler

SUBSYSTEM Information Subsystem (Data Processing)

CRITICAL FUNCTION ANALYSIS

DATE 7/18/71

ITEM IDENTIFICATION & FUNCTION

6.1.2 Central timing subassembly - The central timing unit provides time references for all computer functions and generates timing pulses to allow synchronizing of power system inverter regulators.

Two Units are required - one in the primary control center (SM1) and the other in SM4.

FAILURE MODE	PRIMARY CAUSES	FAILURE EFFECT & TIME TO EFFECT
Degraded or no output.	Thermal stress Material degradation Contamination (Chemical Reaction)	Single failure would have no effect on crew safety. Failure of both units would cause the loss of both computer functions. No effect of system oper. since redundant unit is available. Solid state circuit breaker protection is provided. Time: Immediate to months

RATIONALE/RECOMMENDATIONS/REF. DOCUMENTS	CRITICALITY
The timing units are modular constructed and are readily replaceable.	II

ITEM IDENTIFICATION & FUNCTION

6.1.3 Central Processor Subassembly - The processor supervises the entire station management and operation functions. Logic functions and math computations are performed on data. Operations for analyzing, sorting, transfering, routing, anomaly detection and processing commands are directed and coordinated. Two units are required - one in the primary control center (SM1) and the other unit is located in SM4. Each CP is internally redundant.

FAILURE MODE	PRIMARY CAUSES	FAILURE EFFECT & TIME TO EFFECT
Degraded or no output (includes open, unstable and drift)	Thermal/mechanical stress Material degradation (metal migration, oxide layer puncture, etc.) Other chemical reactions	1. Mission success and crew safety are not affected by single failures. Standby redundancy is provided. If both units fail, mission objectives could not be accomplished. Monitor alarm system inoperative. 2. Units are protected with adequate overload sensing and automatic circuit breaker protection. Time: Immediate to months.

RATIONALE/RECOMMENDATIONS/REF. DOCUMENTS	CRITICALITY
Either processor is capable of maintaining operational functions. The central processor controls the overall fault isolation systems.	II

PREPARED BY G. H. Drozd	SUBSYSTEM P.E. C R Gerber	RELIABILITY P.E. J L Bryles

SUBSYSTEM Information Subsystem (Data Processing)

CRITICAL FUNCTION ANALYSIS

DATE 7/18/71

ITEM IDENTIFICATION & FUNCTION

6.1.4 Remote Acquisition and Control Unit (RACU) - The unit accepts data from the subsystems, experiment sensors and the display/control consoles, digitizes and/or formats the data for transmission to the processor assembly. Unit also accepts commands for the retrieval of information from the subsystems

Total Quantity - 81 units, distributed as follows: 24 core, 9 power, 12 each in SM1, SM2, SM3, SM4.

FAILURE MODE	PRIMARY CAUSES	FAILURE EFFECT & TIME TO EFFECT
Degraded or no output (includes open, unstable short and drift).	Thermal stress Structural fatigue Chemical Reaction (metal migration, contamination, etc.)	1. A RACU failure and another related failure is not expected to affect crew safety. Single failure may result in loss of primary mission data objectives. 2. Possible crew hazard only if short is sustained and circuit breaker fails.

RATIONALE/RECOMMENDATIONS/REF. DOCUMENTS	CRITICALITY
1. Central processor software detects failure, selects backup RACU (for critical functions) and signals operator via C&W displays on console. 2. Adequate circuit breaker and overload sensing devices are recommended.	II

ITEM IDENTIFICATION & FUNCTION

6.1.5 Build-up Command/Control and Data Processing Assembly - Acquires and transfers data commands during build-up only. This component will be disengaged when SM1 arrives and supervisory control is transferred to the stations operation central processor. Total quantity of 2 (core and power module require one each).

FAILURE MODE	PRIMARY CAUSES	FAILURE EFFECT & TIME TO EFFECT
Degraded or no output (includes open, unstable short and drift).	Thermal/mechanical stress Material degradation (metal migration, oxide layer puncture, contamination, etc.) Other chemical reactions	1. Could effect the safety of the shuttle crew. 2. Activation/deactivation of selected module subsystem operations could not be performed. 3. Prevents Shuttle monitoring of module system safety parameters. 4. T/M transmissions to the ground of critical system status would be degraded. 5. Shuttle could not verify via S-band that module is in a revisitable state after unberthing and prior to departure. Time: Immediate to weeks.

RATIONALE/RECOMMENDATIONS/REF. DOCUMENTS	CRITICALITY
After core/power module mating either subassembly would have the capability to provide the necessary control and communication link.	II

PREPARED BY G. H. Drozd | SUBSYSTEM P.E. [signature] | RELIABILITY P.E. [signature]

SUBSYSTEM Information Subsystem (Data Processing)

CRITICAL FUNCTION ANALYSIS

DATE 7/18/71

ITEM IDENTIFICATION & FUNCTION

6.2 Command/Control and Monitoring - Command/control and monitoring system provides the station occupants with the capability of overriding the automated functions and initiate flight management, operations management and planning and scheduling functions.

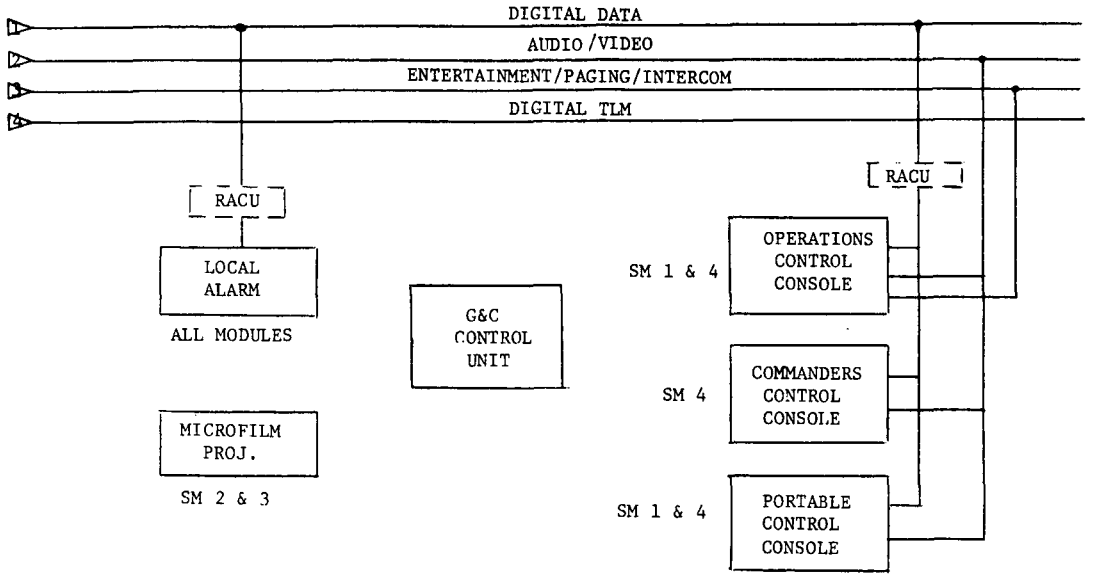

ITEM IDENTIFICATION & FUNCTION

6.2.1 Operational Control Console Subassembly - The operational control console consists of multipurpose, multiformat, callable displays, keyboard controls and alarms for man decision making capability over all major functions of the station. Control consoles are located in SM1 and SM4.

FAILURE MODE	PRIMARY CAUSES	FAILURE EFFECT & TIME TO EFFECT
Inoperable (may contain open, short, etc.)	Vibration/shock stress Thermal stress Material degradation	Failure of one console does not restrict system operation because of redundant console located in other station volume. Time: Immediate to months

RATIONALE/RECOMMENDATIONS/REF. DOCUMENTS	CRITICALITY
Loss of both operational control consoles would not jeopardize crew safety. Emergency operation would be attainable through utilization of the commanders and/or the portable control console.	III

PREPARED BY G. H. Drozd	SUBSYSTEM P.E. C. Gerber	RELIABILITY P.E. J. R. Bigelow

SUBSYSTEM Information Subsystem

DATE 7/13/71

CRITICAL FUNCTION ANALYSIS

ITEM IDENTIFICATION & FUNCTION

6.2.2 Commander's Control Console - The command console provides the commander with the capability of operating and management monitoring of the modular space station functions.

Control console is located in SM1 and SM4.

FAILURE MODE	PRIMARY CAUSES	FAILURE EFFECT & TIME TO EFFECT
Inoperable (may contain open short, etc.).	Vibration/shock stress Thermal stress Material degradation	Loss of command console capability will not jeopardize crew safety or station missions. Console capability is attainable from the operational and/or portable control consoles. Time: Immediate to months.

RATIONALE/RECOMMENDATIONS/REF. DOCUMENTS	CRITICALITY
	III

ITEM IDENTIFICATION & FUNCTION

6.2.3 Emergency G&C Control - Allows maneuvering and/or stablization control of the station in an emergency operational mode. The unit contains a hand controller and display panel.

G&C emergency controls are provided for each pressure volume in the core module.

FAILURE MODE	PRIMARY CAUSES	FAILURE EFFECT & TIME TO EFFECT
Control becomes inoperative.	Short (open circuit)	Failure of one unit does not restrict system operation because of redundant controls provided. Time: Immediate

RATIONALE/RECOMMENDATIONS/REF. DOCUMENTS	CRITICALITY
	III

PREPARED BY G. H. Drozd	SUBSYSTEM P.E. C N Gerber	RELIABILITY P.E. J. R. Sighs

SUBSYSTEM Information Subsystem

CRITICAL FUNCTION ANALYSIS

DATE 7/13/71

ITEM IDENTIFICATION & FUNCTION

6.2.4 Portable Control Consoles - The portable control units will provide the necessary capability for local maintenance support and provide back-up capability to the fixed control consoles.

2 portable control units are utilized with one located in SM1 and 1 in SM4.

FAILURE MODE	PRIMARY CAUSES	FAILURE EFFECT & TIME TO EFFECT
Inoperable (may contain open, short, etc.)	Mechanical stress (shock) Thermal stress Material degradation	No primary effect upon the station or crew members. Unit is not used for main station operations. Time: Immediate

RATIONALE/RECOMMENDATIONS/REF. DOCUMENTS	CRITICALITY
Total of 3 units are used throughout the station which provides the station with redundant capability.	III

ITEM IDENTIFICATION & FUNCTION

6.2.5 Local Monitor Alarm System - System consists of a light matrix panel display (and other alarm devices) which alerts the crew whenever a critical condition exists.

Monitor alarms are located in each module for a total of 7 required.

FAILURE MODE	PRIMARY CAUSES	FAILURE EFFECT & TIME TO EFFECT
Degraded or no output capability.	Mechanical stress Thermal stress Chemical reaction associated with circuitry.	No effect upon the crew members since numerous alarm displays are provided throughout the space station. Time: Immediate to months

RATIONALE/RECOMMENDATIONS/REF. DOCUMENTS	CRITICALITY
The monitor and alarm function will also generate an audio alarm signal during an emergency situation to all entertainment outputs in parallel and bypassing the local controls.	III

PREPARED BY G. H. Drozd	SUBSYSTEM P.E. C.P. Gerber	RELIABILITY P.E. J. L. Sigler

SUBSYSTEM Information Subsystem

DATE 7/13/71

CRITICAL FUNCTION ANALYSIS

ITEM IDENTIFICATION & FUNCTION

6.2.6 Microfilm Projector System - System provides microfilm records and display panels for crew utilization associated with analysis aids, avocation references and reference material on station as a general library.

Projector systems are located in station modules #2 and 3.

FAILURE MODE	PRIMARY CAUSES	FAILURE EFFECT & TIME TO EFFECT
1. Damaged film	Chemical reaction Mishandling	Loss of film display does not effect mission or crew safety
2. Inoperative projector	Short (open circuit)	

RATIONALE/RECOMMENDATIONS/REF. DOCUMENTS	CRITICALITY
Duplicate equipment and material is available for crew usage.	III

ITEM IDENTIFICATION & FUNCTION

FAILURE MODE	PRIMARY CAUSES	FAILURE EFFECT & TIME TO EFFECT

RATIONALE/RECOMMENDATIONS/REF. DOCUMENTS	CRITICALITY

PREPARED BY G. H. Drozd	SUBSYSTEM P.E. C R Gerber	RELIABILITY P.E. J. P. Sigler

SUBSYSTEM Information Subsystem

CRITICAL FUNCTION ANALYSIS

DATE 7/13/71

ITEM IDENTIFICATION & FUNCTION

6.3 External Communications - External communications provides data transmission capability between the station and ground and vehicle to vehicle. The uplink and downlink communications is transmitted by way of a relay satellite system as well as direct communications to the ground station.

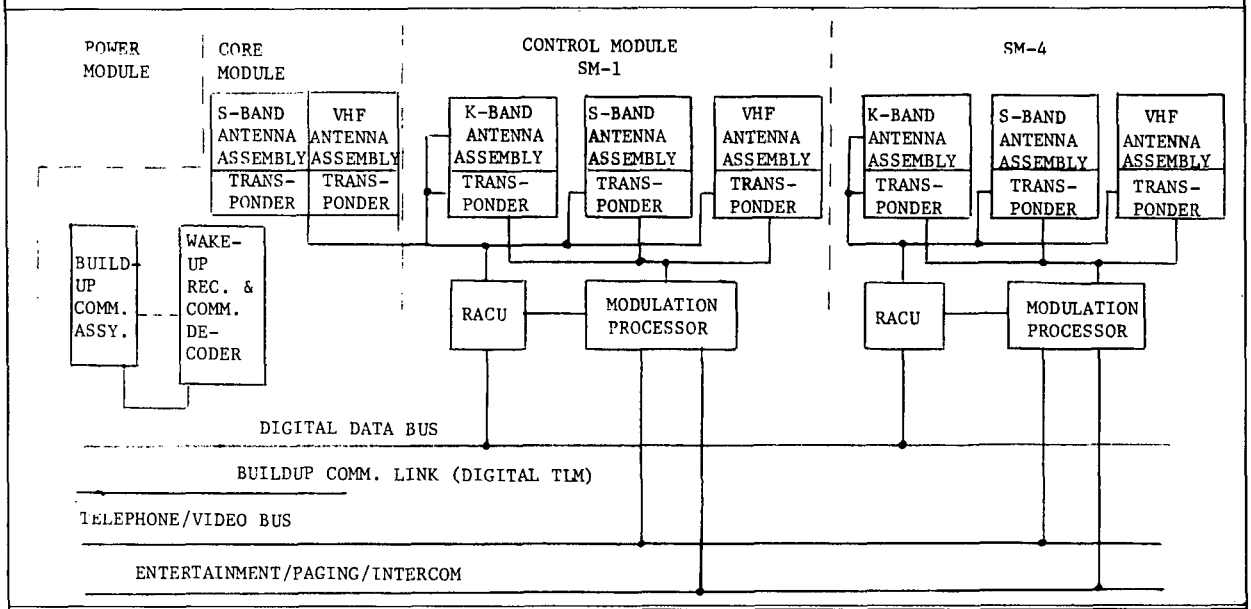

ITEM IDENTIFICATION & FUNCTION

6.3.1 K-Band Antenna - Hi gain steerable parabolic 5 ft diameter antenna used to provide wide band communication link through the TDRS. The antenna includes the reflector/subreflector, feedhorn unit, the control electronics and the antenna mount with associated gimbals.

Two antennas are required with one located on SM1 and SM4.

FAILURE MODE	PRIMARY CAUSES	FAILURE EFFECT & TIME TO EFFECT
Failure to employ acquisition and track TDRS.	Seizure of or excessive friction in the positioning gimbals due to thermal/mechanical stresses and or contamination.	Reduction in station's ground communication. Capability via K-Band is available.

RATIONALE/RECOMMENDATIONS/REF. DOCUMENTS	CRITICALITY
Control electronics are redundant for each antenna and either antenna can be used for the basic communications link. The VHF/TDRS and S-band/MSFN can be used as backup to the K-band system if K-band becomes inoperative.	III

PREPARED BY G. H. Drozd	SUBSYSTEM P.E. C N Gerber	RELIABILITY P.E. J. R. Biglio

SUBSYSTEM Information Subsystems

DATE 7/13/71

CRITICAL FUNCTION ANALYSIS

ITEM IDENTIFICATION & FUNCTION

6.3.2 K-band Antenna Mounted Electronics - The electronics includes the RF amplifier, RF preamplifier, RF combining elements and RACU's.

Two electronic subassemblies are required, one for each antenna located in SM1 and SM4.

FAILURE MODE	PRIMARY CAUSES	FAILURE EFFECT & TIME TO EFFECT
Loss of transmission/reception signal.	Degradation of components due to time/solar radiation Thermal/vacuum environment Contamination resulting from component outgassing, sublimation, and molecular migration.	Reduction in station's ground communication capability via K-band.

RATIONALE/RECOMMENDATIONS/REF. DOCUMENTS	CRITICALITY
Electronic subsystems are redundant for each antenna. The VHF/TDRS band and S-band/MSFN can be used as backup to the K-band system.	III

ITEM IDENTIFICATION & FUNCTION

6.3.3 K-Band (Non-Integrated Electronics) - The non-integrated electronics includes the RF exciter/modulator, RF receiver/demodulator and the auto-track processing assembly.

Two non-integrated electronic subsystems are required for each antenna located in SM1 and SM4.

FAILURE MODE	PRIMARY CAUSES	FAILURE EFFECT & TIME TO EFFECT
Loss of operational output.	(Same as 6.3.2)	Reduction in station's ground communication capability via K-band.

RATIONALE/RECOMMENDATIONS/REF. DOCUMENTS	CRITICALITY
The non-integrated electronics are redundant for each antenna.	III

PREPARED BY G. H. Drozd	SUBSYSTEM P.E. O.R. Gerber	RELIABILITY P.E. J. R. Bigler

SUBSYSTEM Information Subsystem

CRITICAL FUNCTION ANALYSIS

DATE 7/13/71

ITEM IDENTIFICATION & FUNCTION

6.3.4 - S-Band Antenna - six semi directive antennas provide communication links between the shuttle orbiter, detached RAM and the remote MSFN ground terminal.

There are two semi-directive antennas on each of SM-1, SM-4 and core module.

FAILURE MODE	PRIMARY CAUSES	FAILURE EFFECT & TIME TO EFFECT
Loss of signal (transmission reception) from an affected antenna during the critical period of buildup.	Damaged during station build-up operations.	Reduction in capability to: 1. Provide the shuttle orbiter with a cooperative point target for the final rendezvous to station keeping maneuver. 2. Provide turnaround ranging to be compatible with MSFN capabilities. 3. Accept a shuttle command for attitude stabilization during the docking operation. 4. Verify that core is re-visitable after shuttle separation and prior to deorbit.

RATIONALE/RECOMMENDATIONS/REF. DOCUMENTS	CRITICALITY
Antenna degradation will be detected through onboard checkout and eventually replaced where applicable. Communication link is maintained through use of multiple antennas; an automatic circuit will select the antenna that produces the greatest signal strength.	III

ITEM IDENTIFICATION & FUNCTION

6.3.5 S-Band Transponder - The transponder includes the power amplifier, exciter, modulators, preamplifiers receiver range unit and range code generator. Selectable crystals are provided to satisfy the RF frequency channels.

Total of 4 transponders are utilized; 2 are used from the core module after buildup resulting in 2 transponders each located in SM1 and SM4.

FAILURE MODE	PRIMARY CAUSES	FAILURE EFFECT & TIME TO EFFECT
Loss of channel selection capability Loss of mode selection capability Loss or range and doppler indication Loss of demodulated signal Loss of modulated signal	(Same as 6.3.2)	Reduction in communications/tracking/ ranging capabilities.

RATIONALE/RECOMMENDATIONS/REF. DOCUMENTS	CRITICALITY
Alternate modes of operation are provided by the use of multiple transponder/antenna systems. Failures will be detected through onboard checkout.	III

PREPARED BY G. H. Drozd	SUBSYSTEM P.E. C R Gerber	RELIABILITY P.E. J R Sigler

SUBSYSTEM Information Subsystems

CRITICAL FUNCTION ANALYSIS

DATE 7/13/71

ITEM IDENTIFICATION & FUNCTION

6.3.6 VHF Antenna - Fixed antennas provide the necessary communication coverage to and from the TDRS and for voice data communication between the EVA.
Total of 6 antennas are required with 2 each located on the core module and station modules 1 and 4.

FAILURE MODE	PRIMARY CAUSES	FAILURE EFFECT & TIME TO EFFECT
Loss of signal (transmission/ reception) from an affected antenna during the critical period of buildup.	Damaged during station buildup operations.	Reduction in capability to provide (1) the necessary ground command through the TDRS link to the first modules wake-up receiver for activating the S-band equipment. (2) A stabilized attitude command originating from the ground through the VHF - TDRS link for docking operations.

RATIONALE/RECOMMENDATIONS/REF. DOCUMENTS	CRITICALITY
Communication link is maintained through the use of multiple antennas. EVA crewmen will also have a capability for hardline communications.	III

ITEM IDENTIFICATION & FUNCTION

6.3.7 VHF Transponder - Transponder includes the preamplifier, power amplifier, exciter, modulators and receiver range unit.

Total of 4 transponders are utilized; 2 are removed from the core module after completion of station buildup with 2 each located in station modules 1 and 4.

FAILURE MODE	PRIMARY CAUSES	FAILURE EFFECT & TIME TO EFFECT
Unit fails to function.	(Same as 6.3.2)	Same as 6.3.6 (VHF Antenna) Reduction in capability to provide EVA RF communications.

RATIONALE/RECOMMENDATIONS/REF. DOCUMENTS	CRITICALITY
Communication link is maintained through the use of multiple transponder/antenna systems. EVA crewmen will also have the capability for hardline communication.	III

PREPARED BY G. H. Drozd	SUBSYSTEM P.E.	RELIABILITY P.E.

SUBSYSTEM Information Subsystems

CRITICAL FUNCTION ANALYSIS

DATE 7/13/71

ITEM IDENTIFICATION & FUNCTION

6.3.8 Buildup Communications Subassembly - The buildup communications unit consists of a VHF wakeup receiver and the telemetry tracking command units (S-band and VHF transmission/receiver, turnaround ranging, and automatic antenna select). During the buildup period, the VHF (ground commands and T/M) through the TDRS and S-band communication to the shuttle orbiter are utilized.
Total of two subassemblies are utilized in the core module.

FAILURE MODE	PRIMARY CAUSES	FAILURE EFFECT & TIME TO EFFECT
Loss of operational output as a result of shorts or open circuits.	Degradation of components Due to time/solar radiation/thermal/ vacuum environment.	1. Reduction in wakeup receiver capability to activate the S-band equipment via the TDRS link from ground. 2. Shuttle communications via S-band would become interrupted; however continuation of shuttle communication is assured through the use of multiple subassemblies.

RATIONALE/RECOMMENDATIONS/REF. DOCUMENTS	CRITICALITY
Multiple S-band transmission/receivers and wakeup receivers are also used in the dual buildup communication subassembly to assure continued communications are available during this critical period.	III

ITEM IDENTIFICATION & FUNCTION

FAILURE MODE	PRIMARY CAUSES	FAILURE EFFECT & TIME TO EFFECT

RATIONALE/RECOMMENDATIONS/REF. DOCUMENTS	CRITICALITY

PREPARED BY G. H. Drozd	SUBSYSTEM P.E. C. Gerber	RELIABILITY P.E. J. L. Bigler

SUBSYSTEM Information Subsystems

DATE 7/13/71

CRITICAL FUNCTION ANALYSIS

ITEM IDENTIFICATION & FUNCTION

6.4 Internal Communications - Internal communications provides the intercommunication of intelligence between attached modules which includes audio entertainment/paging and telephone/video distribution network.

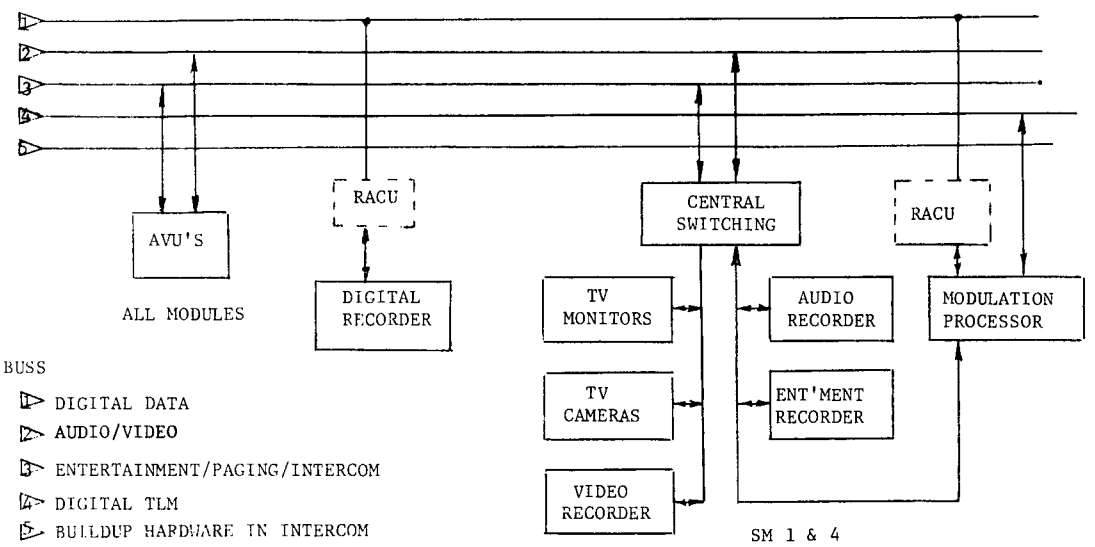

ITEM IDENTIFICATION & FUNCTION

6.4.1 Communications Rack - The communications rack consists of 2 modulation processors, a central switching and self test unit, paging amplifier, facsimile unit and a printer.

Total of 2 communications racks are used with racks located in station modules #1 and #4.

FAILURE MODE	PRIMARY CAUSES	FAILURE EFFECT & TIME TO EFFECT
(See following pages for component breakdown.)		

RATIONALE/RECOMMENDATIONS/REF. DOCUMENTS	CRITICALITY

PREPARED BY G. H. Drozd | SUBSYSTEM P.E. C M Perbes | RELIABILITY P.E. J. R. Biglio

SUBSYSTEM Information Subsystem

CRITICAL FUNCTION ANALYSIS

DATE 7/13/71

ITEM IDENTIFICATION & FUNCTION

6.4.1.1 Modulation Processor - Contains oscillators, modulator, and demodulator circuitry for the generation of subcarrier frequencies, voice modulation and demodulation of a carrier frequency and to remove audio intelligence from in-coming subcarriers. (includes video and digital also.)

Total of 2 processors are utilized in each communications rack.

FAILURE MODE	PRIMARY CAUSES	FAILURE EFFECT & TIME TO EFFECT
Shorted or no output.	Thermal/mechanical stress. Material degradation as a result of chemical action between materials.	May temporarily suspend transmission and receiving operations. A failure would not have an effect on the mission success or crew safety due to the use of multiple units.

RATIONALE/RECOMMENDATIONS/REF. DOCUMENTS	CRITICALITY
Buildup communications could be used as a backup source for RF communications during an emergency.	III

ITEM IDENTIFICATION & FUNCTION

6.4.1.2 Central Switching and Self Test Unit - Selects the proper carrier frequency and routes to the destination switch signals from telephones, intercomm, CTTV, entertainment TV, and recorders. The self test performs automatic checkout of the central switching unit and displays status through the control consoles. Self test checkout is commanded through the data processing assembly. Total of one unit is utilized for each communication rack.

FAILURE MODE	PRIMARY CAUSES	FAILURE EFFECT & TIME TO EFFECT
Shorted or no output.	Thermal/mechanical stress. Material degradation as a result of chemical action between materials.	No effect on crew safety. Single failure not expected to have effect on accomplishing mission objectives due to each control center containing a central switching unit and self test unit. Failure of both units is backed up by hardwire intercom via entertainment bus.

RATIONALE/RECOMMENDATIONS/REF. DOCUMENTS	CRITICALITY
Multiple units are utilized with each unit capable of handling station requirements.	III

PREPARED BY G. H. Drozd	SUBSYSTEM P.E. O.R. Gerber	RELIABILITY P.E. J.P. Bizzio

SUBSYSTEM Information Subsystems

DATE 7/13/71

CRITICAL FUNCTION ANALYSIS

ITEM IDENTIFICATION & FUNCTION

6.4.1.3 Facsimile Unit - Transmits high quality graphic data between the space station and ground.

Total of one unit is required to facilitate experiment operations.

FAILURE MODE	PRIMARY CAUSES	FAILURE EFFECT & TIME TO EFFECT
Degraded or no output.	Thermal/mechanical stress Material degradation as a result of chemical action between materials.	Crew safety or mission success is not affected by a unit failure.

RATIONALE/RECOMMENDATIONS/REF. DOCUMENTS	CRITICALITY
	III

ITEM IDENTIFICATION & FUNCTION

6.4.1.4 Paging and entertainment amplifier - amplifies signals from paging microphone or entertainment recorder to the AVU's located throughout the station.

One unit is utilized for each communication rack.

FAILURE MODE	PRIMARY CAUSES	FAILURE EFFECT & TIME TO EFFECT
Degraded or no output.	Thermal/mechanical stress. Material degradation as a result of chemical action between materials.	Crew safety or mission success is not affected.

RATIONALE/RECOMMENDATIONS/REF. DOCUMENTS	CRITICALITY
Total of two units are provided with each unit capable of handling station demands.	III

PREPARED BY G. H. Drozd	SUBSYSTEM P.E. C.D. Gerber	RELIABILITY P.E. J.R. Sigler

SUBSYSTEM Information Subsystems

CRITICAL FUNCTION ANALYSIS

DATE 7/13/71

ITEM IDENTIFICATION & FUNCTION

6.4.1.5 Printer - Printer is used to obtain hard copies from either station or ground transmissions.

Total of two units are utilized.

FAILURE MODE	PRIMARY CAUSES	FAILURE EFFECT & TIME TO EFFECT
Degraded or no output.	Thermal/mechanical stress Material degradation as a result of chemical action between materials.	Crew safety or mission success is not affected by a unit failure.

RATIONALE/RECOMMENDATIONS/REF. DOCUMENTS	CRITICALITY
Two units are provided in each control center with each capable of handling station demands.	III

ITEM IDENTIFICATION & FUNCTION

6.4.2 Recording Subassembly - The recording assembly consists of a video recorder, an audio recorder, an entertainment recorder

Total of 2 recording subassemblies are utilized with units located in station modules #1 and #4.

FAILURE MODE	PRIMARY CAUSES	FAILURE EFFECT & TIME TO EFFECT
Units fail to record.	Thermal/mechanical stress Material degradation as a result of chemical action between materials.	1. Single failure not expected to have effect on accomplishment of mission objectives unless experiment data portion is not repeatable. 2. No effect on crew safety. 3. System operation temporarily interrupted until recorder is replaced.

RATIONALE/RECOMMENDATIONS/REF. DOCUMENTS	CRITICALITY
Recommend that non repeatable experiments contain sufficient provisions to preclude the loss of data if recorder fails.	III

PREPARED BY G. H. Drozd	SUBSYSTEM P.E. [signature]	RELIABILITY P.E. [signature]

SUBSYSTEM Information Subsystems

DATE 7/13/71

CRITICAL FUNCTION ANALYSIS

ITEM IDENTIFICATION & FUNCTION

6.4.3 Audio Video Units - The audio video units consist of speakers, video jacks, phone dial units, and head-set units.

Total of 20 units, distributed as follows: 3 core, 1 power, 6 SM1, 6 SM4, 2 SM2, 2 SM3.

FAILURE MODE	PRIMARY CAUSES	FAILURE EFFECT & TIME TO EFFECT
Shorted or no output.	Damaged due to mishandling. Material degradation. Thermal/mechanical stress.	No effect upon crew safety or mission success.

RATIONALE/RECOMMENDATIONS/REF. DOCUMENTS	CRITICALITY
Individual units are replaceable; the use of multiple units located throughout the station ensures continuation of operation.	III

ITEM IDENTIFICATION & FUNCTION

6.4.4 Hard Wire Intercommunication - Provides for communication between the various station module.

Total of 7 units are required with units located in each station module including the cargo module.

FAILURE MODE	PRIMARY CAUSES	FAILURE EFFECT & TIME TO EFFECT
Shorted or open	Damaged due to mishandling. Material degradation. Thermal/mechanical stress.	Failure of the inter-communication system would not present a hazard to the crew. Crew communication could still be accomplished by phone.

RATIONALE/RECOMMENDATIONS/REF. DOCUMENTS	CRITICALITY
	III

PREPARED BY G. H. Drozd	SUBSYSTEM P.E. C.R. Gerber	RELIABILITY P.E. J.P. Bigler

SUBSYSTEM Information Subsystems

CRITICAL FUNCTION ANALYSIS

DATE 7/13/71

ITEM IDENTIFICATION & FUNCTION

6.4.5 Shuttle/Module Interface Unit - Provides the interface to the shuttle orbiter for monitoring module status while located within the shuttle cargo bay. Provides the hardwire interface to the orbiter intercom, C&W, and data subassemblies when orbiter is berthed to station.

One unit is required as part of the shuttle preparation for modular space station implementation.

FAILURE MODE	PRIMARY CAUSES	FAILURE EFFECT & TIME TO EFFECT
Unit becomes inoperative. (shorted or open)	Damaged due to mishandling or boost/space environmental stresses.	1. Loss of caution/warning between the module and shuttle prevents the timely warning of serious malfunctions or hazardous conditions to the shuttle crew. Possible mission termination. 2. Loss of voice intercom (hardware) from MSS to shuttle after man entry. RF voice communication would also be available.

RATIONALE/RECOMMENDATIONS/REF. DOCUMENTS	CRITICALITY
Interface connections would be verified by test to ensure signal continuity is complete.	II

ITEM IDENTIFICATION & FUNCTION

6.4.6 TV Cameras, Color

Total of 2 cameras are utilized. Cameras will be located in station modules #1 and #4.

FAILURE MODE	PRIMARY CAUSES	FAILURE EFFECT & TIME TO EFFECT
No output (short or open circuit).	Thermal/mechanical stress. Material degradation Chemical reaction of circuit components.	No effect upon the mission due to the redundancy provided.

RATIONALE/RECOMMENDATIONS/REF. DOCUMENTS	CRITICALITY
B&W camers can also be utilized as backup.	III

PREPARED BY G. H. Drozd	SUBSYSTEM P.E. C R Gerber	RELIABILITY P.E. J R Figlio

SUBSYSTEM Information Subsystems

CRITICAL FUNCTION ANALYSIS

DATE 7/13/71

ITEM IDENTIFICATION & FUNCTION

6.4.7 TV Cameras, B&W

Total of 2 cameras are utilized. Cameras will be stored in station modules #1 and #4.

FAILURE MODE	PRIMARY CAUSES	FAILURE EFFECT & TIME TO EFFECT
No output (short or open circuit).	Thermal/mechanical stress. Material degradation. Chemical reaction of circuit components.	No effect upon the mission due to the redundancy provided by other camers.

RATIONALE/RECOMMENDATIONS/REF. DOCUMENTS	CRITICALITY
Color cameras can be used as backup. During buildup operations it is recommended that dual cameras be utilized at docking ports to ensure shuttle docking capabilities are readily accomplished.	III

ITEM IDENTIFICATION & FUNCTION

6.4.8 TV Monitors, Color - Total of 9 monitors are provided with 4 each located in station modules #1 and #4 and one in station module 3.

FAILURE MODE	PRIMARY CAUSES	FAILURE EFFECT & TIME TO EFFECT
Video output is lost.	Thermal/mechanical stress. Material degradation. Chemical reaction of circuit components	No effect on mission due to the redundancy provided in the availability of other monitors.

RATIONALE/RECOMMENDATIONS/REF. DOCUMENTS	CRITICALITY
Phone communication can be used as backup.	III

PREPARED BY G. H. Drozd	SUBSYSTEM P.E. C. R. Gerber	RELIABILITY P.E. J. R. Sigler

SUBSYSTEM Information Subsystem

CRITICAL FUNCTION ANALYSIS

DATE 7/13/71

ITEM IDENTIFICATION & FUNCTION		
6.5 Software Assembly - The software assembly provides the capability to integrate the hardware assemblies of the ISS for the operation of the space station, the management of the subsystems, the checkout of the subsystem and the performance of the experiments. Software consists of computer programs, microfilm, and printer paper.		
FAILURE MODE	PRIMARY CAUSES	FAILURE EFFECT & TIME TO EFFECT
Items not legible or reproducible.	Damaged as a result of storage and/or handling.	No effect upon the station or crew safety.
RATIONALE/RECOMMENDATIONS/REF. DOCUMENTS		CRITICALITY
Computer programs will contain the capability to be updated or modified as applicable by selected crew members. Active software resides in the DPA mass memory; in case of software failure, programs and data can be replaced from archive memory (tapes); new or revised programs arrive by shuttle (on tape) or are transmitted from ground via TDRS. Modification on-board is possible for selected parameters of non-operations-critical data.		III

ITEM IDENTIFICATION & FUNCTION		
FAILURE MODE	PRIMARY CAUSES	FAILURE EFFECT & TIME TO EFFECT
RATIONALE/RECOMMENDATIONS/REF. DOCUMENTS		CRITICALITY

PREPARED BY G. H. Drozd	SUBSYSTEM P.E. C R Gerber	RELIABILITY P.E. S. P. Biggs

SUBSYSTEM Crew/Habitability

CRITICAL FUNCTION ANALYSIS

DATE 9-16-71

ITEM IDENTIFICATION & FUNCTION

7.0 Crew/Habitability Subsystem

This system is associated with the crew personal equipment, general emergency equipment, furnishings, recreation/exercise/crew care and food management.

CFA SEQUENCE

7.0 Crew/Habitability Subsystem

7.1 Personal Equipment
1. Clothing/linens, personal hygiene and grooming aids
2. Personal radiation dosimeters

7.2 General Emergency Equipment
1. Portable lights
2. Tools
3. Radiation measurement device
4. Emergency O_2 Mask
5. Pressure garment assembly (PGA)
6. IVA umbilical connections and hoses
7. Portable life support system (PLSS)
8. Mobility aids/restraints
9. First aid kits

7.3 Furnishings
1. Seating and sleeping restraints
2. Desks, tables, chairs, and bunks

7.4 Recreation/Exercise/Crew Care
1. Passive recreation devices
2. Medical/dental diagnostic equipment
3. Ergometer/isotonic equipment
4. Miscellaneous medical equipment and supplies/cabinetry

7.5 Food Management
1. Supply and storage (refrigerator/freezer)
2. Preparation
3. Service/cleanup

PREPARED BY G. H. Drozd	SUBSYSTEM P.E. C.B. Buckman	RELIABILITY P.E. J.P. Bigler

SUBSYSTEM Crew/Habitability

CRITICAL FUNCTION ANALYSIS

DATE 9-16-71

ITEM IDENTIFICATION & FUNCTION

7.1 Personal Equipment
Personal equipment includes the crew members clothing, linens, personal hygiene and grooming aids, and radiation dosimeters.

FAILURE MODE	PRIMARY CAUSES	FAILURE EFFECT & TIME TO EFFECT
1. Personal hygiene or grooming aid breaks during use.	Overstress Wearout	Minor injury as a result of handling broken device. Time: Immediate

RATIONALE/RECOMMENDATIONS/REF. DOCUMENTS	CRITICALITY
Recommendations: Selection of crew personal equipment should be made toward minimizing potential hazards, i.e., electric razors are used in preference to other razor types.	III

ITEM IDENTIFICATION & FUNCTION

7.1 Personal Equipment (Continued)

FAILURE MODE	PRIMARY CAUSES	FAILURE EFFECT & TIME TO EFFECT
2. Personal radiation dosimeters become inoperable (not capable of measuring accumulated radiation dosage of the crewmember)	Accidentally damaged	None - Individual radiation exposure levels could be obtained by reference to other crew member dosimeters and the ambient/cumulative radiation detection devices.

RATIONALE/RECOMMENDATIONS/REF. DOCUMENTS	CRITICALITY
An ambient/cumulative radiation detection device will be provided within the core module.	III

PREPARED BY G. H. Drozd	SUBSYSTEM P.E. C E Buckman	RELIABILITY P.E. J. R. Bigbie

SUBSYSTEM Crew/Habitability

DATE 9-16-71

CRITICAL FUNCTION ANALYSIS

ITEM IDENTIFICATION & FUNCTION

7.2 General Emergency Equipment
General emergency equipment consists of the following equipment: tools, portable lights, radiation detectors, emergency O_2 face masks, pressure garment assemblies, IVA umbilicals, portable life support systems, mobility aids and restraints, and first aid kits.

FAILURE MODE	PRIMARY CAUSES	FAILURE EFFECT & TIME TO EFFECT
1. Portable lights become inoperable.	Battery or bulb failure	No direct effect due to the availability of additional lights located in each module.

RATIONALE/RECOMMENDATIONS/REF. DOCUMENTS	CRITICALITY
Spare batteries, bulbs, etc. are available to continue specialized tasks which are time critical, i.e., medical examination. Batteries for the portable lamps are of the rechargable type. The lamp units are connected so as to illuminate automatically in the event of a module lighting outage.	III

ITEM IDENTIFICATION & FUNCTION

7.2 General Emergency Equipment (Continued)

FAILURE MODE	PRIMARY CAUSES	FAILURE EFFECT & TIME TO EFFECT
2. Tool becomes inoperative	Possible accidental damage	Equipment and/or station repair capability is degraded.

RATIONALE/RECOMMENDATIONS/REF. DOCUMENTS	CRITICALITY
	III

PREPARED BY G. H. Drozd	SUBSYSTEM P.E. C R Buckman	RELIABILITY P.E. J. C. Bigbee

SUBSYSTEM Crew/Habitability

CRITICAL FUNCTION ANALYSIS

DATE 9-16-71

ITEM IDENTIFICATION & FUNCTION		
7.2 General Emergency Equipment (Continued)		
FAILURE MODE	**PRIMARY CAUSES**	**FAILURE EFFECT & TIME TO EFFECT**
3. Radiation measurement device becomes inoperable.	Accidentally damaged.	Determination of ambient radiation levels would be impaired.
RATIONALE/RECOMMENDATIONS/REF. DOCUMENTS		**CRITICALITY**
A radiation measurement device will be provided in the core module. Personal cumulative radiation dosimeters are also provided for each crewmember.		III

ITEM IDENTIFICATION & FUNCTION		
7.2 General Emergency Equipment (Continued)		
FAILURE MODE	**PRIMARY CAUSES**	**FAILURE EFFECT & TIME TO EFFECT**
4. Emergency O_2 face mask system becomes inoperable or contains excessive leakage.	Mishandling	Three face mask sets are provided in each habited module. (Excludes the power and cargo modules.)
RATIONALE/RECOMMENDATIONS/REF. DOCUMENTS		**CRITICALITY**
One of the two fire fighting face mask sets (available in each habitable module - 15 minute supply each) could be utilized if a failure occurred in an emergency O_2 mask. Periodic inspections will reduce possibility of inadequate O_2 supply or inoperative units.		II

PREPARED BY G. H. Drozd	SUBSYSTEM P.E. C K Buckman	RELIABILITY P.E. J. R. Griffin

SUBSYSTEM Crew/Habitability

CRITICAL FUNCTION ANALYSIS

DATE 9-16-71

ITEM IDENTIFICATION & FUNCTION		
7.2 General Emergency Equipment (Continued)		
FAILURE MODE	**PRIMARY CAUSES**	**FAILURE EFFECT & TIME TO EFFECT**
5. Pressure garment assembly (PGA) fails to hold adequate pressure (excessive leakage of the 100% oxygen environment)	Damaged seals or torn suit material Pressure control unit becomes inoperative.	Time critical - Could endanger life of crew member if suit leakage rate is in excess of life support system make-up rate or if required pressure could not be maintained.
RATIONALE/RECOMMENDATIONS/REF. DOCUMENTS		**CRITICALITY**
Periodic maintenance and inspections are scheduled to check each PGA pressure integrity which will reduce the possibility of a suit being damaged when required for use. Two pressure garment assemblies are located in each station pressure volume.		I

ITEM IDENTIFICATION & FUNCTION		
7.2 General Emergency Equipment (Continued)		
FAILURE MODE	**PRIMARY CAUSES**	**FAILURE EFFECT & TIME TO EFFECT**
6. IVA umbilical connection or hose leaks excessively or restricts the flow of O_2 and/or conditioning water to the suit.	Damaged seals Umbilical connection not made properly Hoses become restricted (kinked) Damaged hoses	Could endanger life of crew member Time: Immediate to minutes
RATIONALE/RECOMMENDATIONS/REF. DOCUMENTS		**CRITICALITY**
A MSS guideline and constraint* requires that two or more crewmen participate in any pressure suit activity and that rescue provisions will be provided. A total of four umbilicals are available within the MSS to help alleviate this problem. * Paragraph 3.1.3.7.G		I

PREPARED BY G. H. Drozd	SUBSYSTEM P.E. C. E. Brockman	RELIABILITY P.E. J. R. Griffin

SUBSYSTEM Crew/Habitability

CRITICAL FUNCTION ANALYSIS

DATE 9-16-71

ITEM IDENTIFICATION & FUNCTION		
7.2 General Emergency Equipment (Continued)		
FAILURE MODE	**PRIMARY CAUSES**	**FAILURE EFFECT & TIME TO EFFECT**
7. Portable life support systems (PLSS) with an attached oxygen purge system (OPS) becomes inoperative or leaks O_2 excessively.	Electrical/mechanical equipment failure.	EVA operations would be impaired. Could endanger life of crew member.
RATIONALE/RECOMMENDATIONS/REF. DOCUMENTS		**CRITICALITY**
Critical components of the PLSS contain sufficient redundancy to assure operation of the life support functions. PLSS equipment would be periodically inspected to assure a reliable functional unit. Two units are located in each station pressure volume. The buddy system would allow both crewmen to operate from one PLSS in an emergency.		II

ITEM IDENTIFICATION & FUNCTION		
7.2 General Emergency Equipment (Continued)		
FAILURE MODE	**PRIMARY CAUSES**	**FAILURE EFFECT & TIME TO EFFECT**
8. Mobility aids & restraints become loose or fail structurally.	Wear, breakage, loosening of attach points (screws, rivets, etc.)	Immediate impairment or temporary loss of mobility or restraint could result in crew injury caused by impact.
RATIONALE/RECOMMENDATIONS/REF. DOCUMENTS		**CRITICALITY**
Items will be periodically inspected to assure structural integrity of the equipment. Mobility aids and restraints are being designed for worst case loading conditions.		II

PREPARED BY G. H. Drozd	SUBSYSTEM P.E. C. L. Brockman	RELIABILITY P.E. J. P. Bigho

SUBSYSTEM Crew/Habitability

DATE 9-16-71

CRITICAL FUNCTION ANALYSIS

ITEM IDENTIFICATION & FUNCTION		
7.2 General Emergency Equipment (Continued)		
FAILURE MODE	**PRIMARY CAUSES**	**FAILURE EFFECT & TIME TO EFFECT**
9. First aid kits - antiseptic agents become evaporated.	Loss of hermetic seals.	Unable to provide emergency medical aid.

RATIONALE/RECOMMENDATIONS/REF. DOCUMENTS	CRITICALITY
First aid kits are located in each module. Also, primary and backup medical care facilities are available in the MSS.	III

ITEM IDENTIFICATION & FUNCTION		
FAILURE MODE	**PRIMARY CAUSES**	**FAILURE EFFECT & TIME TO EFFECT**

RATIONALE/RECOMMENDATIONS/REF. DOCUMENTS	CRITICALITY

PREPARED BY G. H. Drozd	SUBSYSTEM P.E. C. E. Brickman	RELIABILITY P.E. J. P. Bugio

SUBSYSTEM Crew/Habitability

CRITICAL FUNCTION ANALYSIS

DATE 9-16-71

ITEM IDENTIFICATION & FUNCTION

7.3 Furnishings
Furnishings consist of the restraints provided for seating and sleeping; work areas, dining, special surfaces (desks/tables), and necessary chairs and bunks.

FAILURE MODE	PRIMARY CAUSES	FAILURE EFFECT & TIME TO EFFECT
1. Seating and sleeping restraints break, bind, or become loose.	Wear, breakage, loosening of attach points (screws, rivets, buckles, etc.)	Immediate impairment or temporary loss of crew restraint which could result in crew injury caused by impact.

RATIONALE/RECOMMENDATIONS/REF. DOCUMENTS	CRITICALITY
Restraints will be periodically inspected to assure structural integrity is maintained. Restraints are being designed for worst case loading conditions.	II

ITEM IDENTIFICATION & FUNCTION

7.3 Furnishings (Continued)

FAILURE MODE	PRIMARY CAUSES	FAILURE EFFECT & TIME TO EFFECT
2. Furnishing (desk, work table, chair, etc.) fails structurally.	Equipment misuse, overstress of material due to an unusual vehicle maneuver.	Possible damage to surrounding equipment or personnel due to unrestrained furnishing.

RATIONALE/RECOMMENDATIONS/REF. DOCUMENTS	CRITICALITY
Rationale: Furnishings are selected and tested to demonstrate structural integrity under worst case conditions.	III

PREPARED BY G. H. Drozd	SUBSYSTEM P.E. C. B. Buckmann	RELIABILITY P.E. J. P. Bigler

SUBSYSTEM Crew/Habitability

DATE 9-16-71

CRITICAL FUNCTION ANALYSIS

ITEM IDENTIFICATION & FUNCTION

7.4 Recreation/Exercise/Crew Care
This section consists of recreation devices, ergometer/isotonic equipment, medical and dental diagnostic treatment equipment, pharmaceutical and miscellaneous medical supplies, and various supply and storage cabinetry.

FAILURE MODE	PRIMARY CAUSES	FAILURE EFFECT & TIME TO EFFECT
1. Recreational devices - craftwork, musical instruments, and/or motion picture equipment becomes inoperative.	Mechanical/electrical failure.	Reduced recreational activity

RATIONALE/RECOMMENDATIONS/REF. DOCUMENTS	CRITICALITY
	III

ITEM IDENTIFICATION & FUNCTION

7.4 Recreation/Exercise/Crew Care (Continued)

FAILURE MODE	PRIMARY CAUSES	FAILURE EFFECT & TIME TO EFFECT
2. Medical and Dental diagnostic treatment equipment including x-ray becomes inoperative or malfunctions.	Electrical/mechanical equipment failure.	Loss of capability to provide complete medical and dental diagnosis.

RATIONALE/RECOMMENDATIONS/REF. DOCUMENTS	CRITICALITY
The design requirements of critical medical care and diagnostic equipment incorporate provisions for easy maintenance and reliable operation.	III

PREPARED BY G. H. Drozd	SUBSYSTEM P.E. C. H. Buckman	RELIABILITY P.E. J. R. Bigler

SUBSYSTEM Crew/Habitability

CRITICAL FUNCTION ANALYSIS

DATE 9-16-71

ITEM IDENTIFICATION & FUNCTION		
7.4 Recreation/Exercise/Crew Care (Continued)		
FAILURE MODE	**PRIMARY CAUSES**	**FAILURE EFFECT & TIME TO EFFECT**
3. Bicycle ergometer and isotonic equipment becomes inoperative or malfunctions.	Component mechanical failure.	Reduced capability in maintaining general crew physical conditioning.
RATIONALE/RECOMMENDATIONS/REF. DOCUMENTS		**CRITICALITY**
		III

ITEM IDENTIFICATION & FUNCTION		
7.4 Recreation/Exercise/Crew Care (Continued)		
FAILURE MODE	**PRIMARY CAUSES**	**FAILURE EFFECT & TIME TO EFFECT**
4. Miscellaneous medical equipment and supplies with associated cabinetry fail to provide the intended service.	Electrical/mechanical equipment failure. Chemical reaction associated with some of the medical supplies and pharmaceutical agents/drugs.	Degraded medical service.
RATIONALE/RECOMMENDATIONS/REF. DOCUMENTS		**CRITICALITY**
		III

PREPARED BY G. H. Drozd	SUBSYSTEM P.E. C. G. Buchman	RELIABILITY P.E. J. L. Bigler

SUBSYSTEM Crew/Habitability

DATE 9-16-71

CRITICAL FUNCTION ANALYSIS

ITEM IDENTIFICATION & FUNCTION

7.5 Food Management

Food management consists of food supply/storage, preparation, and service/cleanup.

FAILURE MODE	PRIMARY CAUSES	FAILURE EFFECT & TIME TO EFFECT
1. Supply/storage freezer and refrigerator lose capability of operation.	Electrical/mechanical equipment failure.	Frozen or refrigerated food supply would be subject to spoilage.
2. Excessive leakage of toxic refrigerant.	Thermal/dynamic environment.	Possible contamination of the station stmosphere.

RATIONALE/RECOMMENDATIONS/REF. DOCUMENTS	CRITICALITY
The refrigerator and freezer are both located in station module #3; and although neither are redundant, dried food supplies are available in both the main and backup galleys with provisions for reconstitution. Toxic gas sensors would be located in the near vicinity of the equipment for immediate detection of leaking gas.	(1) III (2) II

ITEM IDENTIFICATION & FUNCTION

7.5 Food Management (Continued)

FAILURE MODE	PRIMARY CAUSES	FAILURE EFFECT & TIME TO EFFECT
3. Preparation - Microwave or resistance oven becomes inoperative or malfunctions.	Electrical equipment malfunction.	Degraded capability to provide warm cooked meals. Possible excessive radiation dosage or microwave burn.

RATIONALE/RECOMMENDATIONS/REF. DOCUMENTS	CRITICALITY
Operating and maintenance procedures will be readily available to minimize the possibility of injury to the operator.	II

PREPARED BY G. H. Drozd	SUBSYSTEM P.E. C B Buckman	RELIABILITY P.E. J.R. Biglio

SUBSYSTEM Crew/Habitability

CRITICAL FUNCTION ANALYSIS

DATE 9-16-71

ITEM IDENTIFICATION & FUNCTION		
7.5 Food Management (Continued)		
FAILURE MODE	**PRIMARY CAUSES**	**FAILURE EFFECT & TIME TO EFFECT**
4. Service/cleanup - inability to dispose of food wastes and trash.	Equipment malfunction.	Possible buildup of microbiological and bacteriological contaminants.
RATIONALE/RECOMMENDATIONS/REF. DOCUMENTS		**CRITICALITY**
An alternate disposal system is available in the experiments area. Disposal equipment is maintainable. Disinfectants are utilized to reach and control wastes in inaccessible areas.		III

ITEM IDENTIFICATION & FUNCTION		
FAILURE MODE	**PRIMARY CAUSES**	**FAILURE EFFECT & TIME TO EFFECT**
RATIONALE/RECOMMENDATIONS/REF. DOCUMENTS		**CRITICALITY**

PREPARED BY G. H. Drozd	SUBSYSTEM P.E. C B Buckman	RELIABILITY P.E. J. P. Hughes