EMBER 1971

MDC G

# SPACE STATIO

MSFC-DPD-235/DR NO. SE- 4

# MODULAR SPACE STATION DETAILED PRELIMINARY DESIGN

## Volume II

## Sections 4.9 Through 6

CONTRACT NAS8-25140

N72-21882

(NASA-CR-123543) MODULAR SPACE STATION DETAILED PRELIMINARY DESIGN. VOLUME 3: SECTIONS 4.9 THROUGH 6 (McDonnell-Douglas Astronautics Co.) Nov. 1971 370 p CSCL 22B

G3/31 22810

RECEIVED DEC 1971

**MCDONNELL DOUGLAS ASTRONAUTICS COMPANY**

MARTIN MARIETTA CORPORATION IBM International Business Machines Corporation MCDONNELL DOUGLAS CORPORATION

Reproduced by
NATIONAL TECHNICAL INFORMATION SERVICE
U S Department of Commerce
Springfield VA 22151

360p.

CAT. 31

MCDONNELL DOUGLAS

CONTRACT NAS8-25140
MSFC-DPD-235/DR NO. SE-04

# MODULAR SPACE STATION DETAILED PRELIMINARY DESIGN

## Volume III
## Sections 4.9 Through 6

NOVEMBER 1971

MDC G2582

APPROVED BY:

VERN D. KIRKLAND
PROGRAM INTEGRATION/OPERATIONS
DIRECTOR
SPACE STATION PROGRAM


**MCDONNELL DOUGLAS ASTRONAUTICS COMPANY**

*5301 Bolsa Avenue, Huntington Beach, CA 92647*

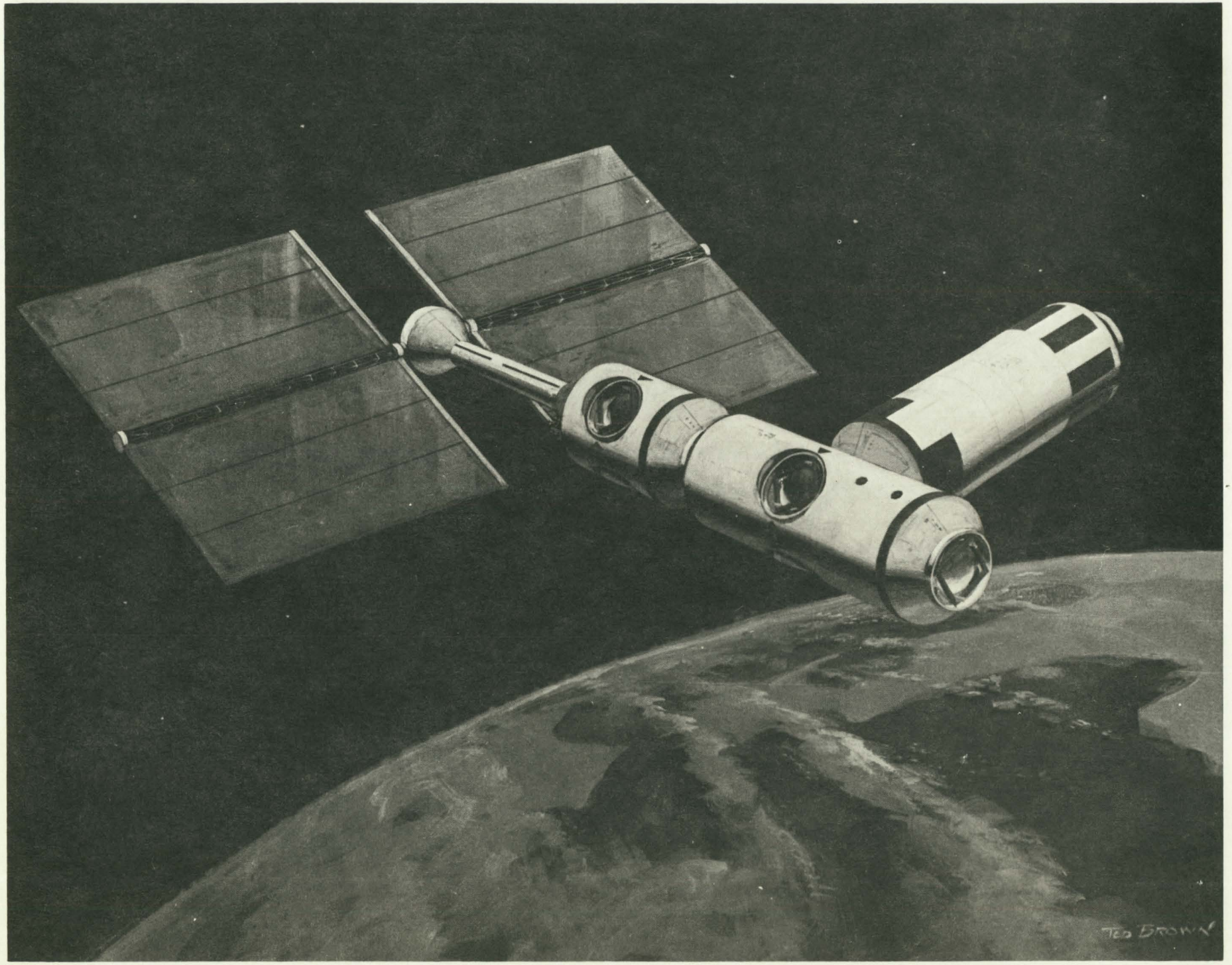
TED BROWN

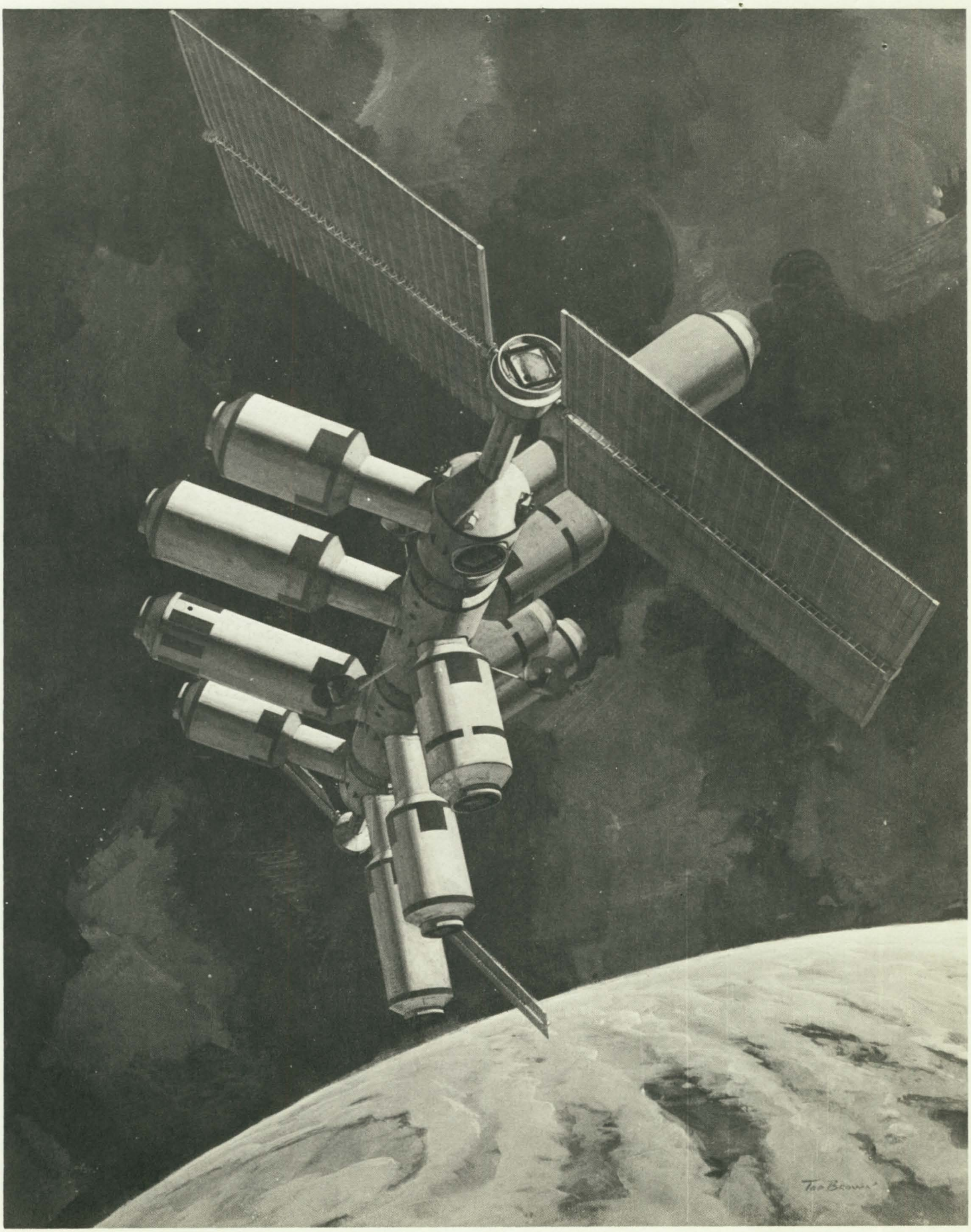
TED BROWN

PRECEDING PAGE BLANK NOT FILMED

# PREFACE

The work described in this document was performed under the Space Station Phase B Extension Period Study (Contract NAS8-25140). The purpose of the extension period has been to develop the Phase B definition of the Modular Space Station. The modular approach selected during the option period (characterized by low initial cost and incremental manning) was evaluated, requirements were defined, and program definition and design were accomplished to the depth necessary for departure from Phase B.

The initial 2-1/2-month effort of the extension period was used for analyses of the requirements associated with Modular Space Station Program options. During this time, a baseline, incrementally manned program and attendant experiment program options were derived. In addition, the features of the program that significantly affect initial development and early operating costs were identified, and their impacts on the program were assessed. This assessment, together with a recommended program, was submitted for NASA review and approval on 15 April 1971.

The second phase of the study (15 April to 3 December 1971) consists of the program definition and preliminary design of the approved Modular Space Station configuration.

A subject reference matrix is included on page v to indicate the relationship of the study tasks to the documentation.

This report is submitted as Data Requirement SE-04, Volume III; Volume I contains Sections 1 through 4.4; Volume II contains Sections 4.5 through 4.8.

DATA REQUIREMENTS (DR's)
MSFC-DPD-235/DR NOs.
(contract NAS8-25140)

| Category | Designation | DR Number | Title |
|---|---|---|---|
| Configuration Management | CM | CM-01 | Space Station Program (Modular) Specification |
| | | CM-02 | Space Station Project (Modular) Specification |
| | | CM-03 | Modular Space Station Project Part 1 CEI Specification |
| | | CM-04 | Interface and Support Requirements Document |
| Program Management | MA | MA-01 | Space Stations Phase B Extension Study Plan |
| | | MA-02 | Performance Review Documentation |
| | | MA-03 | Letter Progress and Status Report |
| | | MA-04 | Executive Summary Report |
| | | MA-05 | Phase C/D Program Development Plan |
| | | MA-06 | Program Option Summary Report |
| Manning and Financial | MF | MF-01 | Space Station Program (Modular) Cost Estimates Document |
| | | MF-02 | Financial Management Report |
| Mission Operations | MP | MP-01 | Space Station Program (Modular) Mission Analysis Document |
| | | MP-02 | Space Station Program (Modular) Crew Operations Document |
| | | MP-03 | Integrated Mission Management Operations Document |
| System Engineering and Technical Description | SE | SE-01 | Modular Space Station Concept |
| | | SE-02 | Information Management System Study Results Documentation |
| | | SE-03 | Technical Summary |
| | | SE-04 | Modular Space Station Detailed Preliminary Design |
| | | SE-06 | Crew/Cargo Module Definition Document |
| | | SE-07 | Modular Space Station Mass Properties Document |
| | | SE-08 | User's Handbook |
| | | SE-10 | Supporting Research and Technology Document |
| | | SE-11 | Alternate Bay Sizes |

FOLDOUT FRAME 1

FOLDOUT FRAME 2

## SUBJECT REFERENCE MATRIX

LEGEND:

- CM Configuration Management
- MA Program Management
- MF Manning and Financial
- MP Mission Operations
- SE System Engineering and Technical Description

| | CM | | | | MA | | MF | MP | | | | | | SE | | | | | |
|---|---|---|---|---|---|---|---|---|---|---|---|---|---|---|---|---|---|---|---|
| | **CM-01** Space Station Program (Modular) Specification | **CM-02** Space Station Project (Modular) Specification | **CM-03** Modular Space Station Project Part I CEI Spec | **CM-04** Interface and Support Requirement Document | **MA-05** Phase C/D Program Development Plan | **MA-06** Program Option Summary Report | **MF-01** Space Station Program (Modular) Cost Estimates Document | **MP-01** Space Station Program (Modular) Mission Analysis Document | **MP-02** Space Station Program (Modular) Crew Operations Document | **MP-03** Integrated Mission Management Operations Document | **SE-01** Modular Space Station Concept | **SE-02** Information Management System Study Results | **SE-03** Technical Summary | **SE-04** Modular SS Detailed Preliminary Design | **SE-06** Crew/Cargo Module Definition Document | **SE-07** Modular Space Station Mass Properties Document | **SE-08** User's Handbook | **SE-10** Supporting Research and Technology | **SE-11** Alternate Bay Sizes |
| **2.0** Contractor Tasks | | | | | | | | | | | | | | | | | | | |
| 2.1 Develop Study Plan and Review Past Effort (MA-01) | | | | | | | | | | | | | | | | | | | |
| 2.2 Space Station Program (Modular) Mission Analysis | | | | | | | | ● | | | | | | | | | | | |
| 2.3 Modular Space Station Configuration and Subsystems Definition | | | | | | | | | | | | | | ● | | | | | |
| 2.4 Technical and Cost Tradeoff Studies | | | | | | | ● | | | | | | | | | | | | |
| 2.4.4 Modular Space Station Option Summary | | | | | | | | | | | ● | | | | | | | | |
| 2.5 Modular Space Station Detailed Preliminary Design | | | | | | | | | | | | | | ● | | | | | |
| Mass Properties | | | | | | | | | | | | | | | | ● | | | |
| 2.6 Crew Operational Analysis | | | | | | | | | ● | | | | | | | | | | |
| 2.7 Crew Cargo Module | | | | | | | | | | | | | | | ● | | | | |
| Mass Properties | | | | | | | | | | | | | | | | ● | | | |
| 2.8 Integrated Mission Management Operations | | | | | | | | | | ● | | | | | | | | | |
| 2.9 Hardware Commonality Assessment | | | | | | | | | | | | | ● | | | | | | |
| 2.10 Program Support | | | | | ● | | | | | | | | | | | | | | |
| 2.11 Requirements Definition | | | | | | | | | | | | | | | | | | | |
| Space Station Program (Modular) | ● | | | | | | | | | | | | | | | | | | |
| Space Station Project (Modular) | | ● | | | | | | | | | | | | | | | | | |
| Modular Space Station Project–Part 1 CEI | | | ● | | | | | | | | | | | | | | | | |
| Interface and Support Requirements | | | | ● | | | | | | | | | | | | | | | |
| 2.12 Plans | | | | | ● | | | | | | | | | | | | | | |
| 2.13 Costs and Schedules | | | | | | | ● | | | | | | | | | | | | |
| 2.14 Special Emphasis Task Information Management (IMS) | | | | | | | | | | | | ● | | | | | | | |
| Modular Space Station Mass Properties | | | | | | | | | | | | | | | | ● | | | |
| User's Handbook | | | | | | | | | | | | | | | | | ● | | |
| Supporting Research and Technology | | | | | | | | | | | | | | | | | | ● | |
| Technical Summary | | | | | | | | | | | | | ● | | | | | | |
| MOD 29 | | | | | | | | | | | | | | | | | | | ● |
| MOD 40 | | | | | | ● | | | | | | | | | | | | | |

PRECEDING PAGE BLANK NOT FILMED

Volume III

CONTENTS


| | | | |
|---|---|---|---|
| 4.9 | COMMUNICATIONS SUBSYSTEM | | 1 |
| | 4.9.1 | Summary | 1 |
| | 4.9.2 | Requirements | 5 |
| | 4.9.3 | Selected Subsystem | 10 |
| | 4.9.4 | Design Analyses and Trade Studies | 61 |
| 4.10 | DATA MANAGEMENT SUBSYSTEM | | 104 |
| | 4.10.1 | Summary | 104 |
| | 4.10.2 | Requirements | 109 |
| | 4.10.3 | Selected Subsystem Design | 121 |
| | 4.10.4 | Design Analyses and Trade Studies | 201 |
| 4.11 | ONBOARD CHECKOUT SUBSYSTEM | | 236 |
| | 4.11.1 | Summary | 236 |
| | 4.11.2 | Requirements | 239 |
| | 4.11.3 | Selected Subsystem Design | 258 |
| | 4.11.4 | Design Analyses and Trade Studies | 276 |
| 5 | SPACE STATION INTERFACES | | 293 |
| 5.1 | SPACE SHUTTLE | | 293 |
| | 5.1.1 | Vehicle Description | 293 |
| | 5.1.2 | Operations | 298 |
| | 5.1.3 | Interface Requirements | 307 |
| 5.2 | LOGISTICS MODULE | | 312 |
| | 5.2.1 | Vehicle Description | 312 |
| | 5.2.2 | Vehicle Operation | 315 |
| | 5.2.3 | Interface Requirements | 318 |
| | 5.2.4 | GSS Considerations | 318 |
| 5.3 | RESEARCH AND APPLICATIONS MODULES | | 318 |
| | 5.3.1 | Introduction | 318 |
| | 5.3.2 | Vehicle Descriptions | 319 |

5.3.3 RAM/Space Station Interfaces 328
5.3.4 Module Operational Characteristics 338
5.3.5 Growth Space Station Considerations 340

6 RATIONALE FOR A ZERO-GRAVITY MODULAR SPACE STATION 345
6.1 INTRODUCTION 345
6.2 PROGRAM AND DESIGN CONSIDERATIONS 345
6.3 PHYSIOLOGICAL CONSIDERATIONS 351
6.4 REMEDIAL OPTIONS 353
6.5 SUMMARY 354

Volume III

FIGURES


| | | |
|---|---|---|
| 4.9-1 | Radio Frequency Allocations | 2 |
| 4.9-2 | Communications Subsystem Assembly Group Breakdown | 4 |
| 4.9-3 | Module No. 1 Communications Equipment Complement | 15 |
| 4.9-4 | Module No. 2 Communications Equipment Complement | 17 |
| 4.9-5 | Transmit System Loss Budget | 20 |
| 4.9-6 | Receive System Loss Budget | 21 |
| 4.9-7 | Acquisition System Loss Budget | 22 |
| 4.9-8 | EVA VHF Voice Transmitter/Receiver | 28 |
| 4.9-9 | EVA VHF Voice Transmitter/Receiver Modem | 30 |
| 4.9-10 | VHF Data Transmitter/Receiver | 32 |
| 4.9-11 | VHF Voice Transmitter/Receiver | 33 |
| 4.9-12 | S-Band PM Transponder | 35 |
| 4.9-13 | S-Band Exciter | 37 |
| 4.9-14 | S-Band Power Amplifier | 39 |
| 4.9-15 | S-Band Wideband Receiver | 41 |
| 4.9-16 | Narrow Band PM Receiver | 42 |
| 4.9-17 | $K_u$-Band Power Amplifier | 44 |
| 4.9-18 | $K_u$-Band Exciter | 45 |
| 4.9-19 | $K_u$-Band Exciter Modem | 47 |
| 4.9-20 | Ranging Unit | 48 |

| | | |
|---|---|---|
| 4.9-21 | Data Bus Channel Frequency Allocations | 51 |
| 4.9-22 | Audio Terminal Unit | 52 |
| 4.9-23 | Analog Sync/Test Modem | 55 |
| 4.9-24 | Space Station Orbit Geometry | 63 |
| 4.9-25 | Earth Blockage as a Function of Angular Separation | 64 |
| 4.9-26 | ISS Antenna Locations | 66 |
| 4.9-27 | Azimuth and Elevation Scanning Angles | 67 |
| 4.9-28 | High-Gain Antenna System Viewing Angles | 69 |
| 4.9-29 | Space Station Antenna Coverage Illustrating Antenna Mechanical Constraints | 71 |
| 4.9-30 | Video Data Requirements | 81 |
| 4.9-31 | Digital Data Requirements | 82 |
| 4.9-32 | FDM System | 89 |
| 4.9-33 | TDM System | 92 |
| 4.9-34 | SDM System | 94 |
| 4.10-1 | DMS Simplified Block Diagram | 106 |
| 4.10-2 | DMS Trade Study Summary | 108 |
| 4.10-3 | DMS Functional Elements | 122 |
| 4.10-4 | DMS Assembly Block Diagram | 127 |
| 4.10-5 | Analog Channel Allocation Chart | 134 |
| 4.10-6 | Analog Data Distribution | 135 |
| 4.10-7 | Digital Data Distribution | 138 |
| 4.10-8 | Modem Block Diagram | 140 |
| 4.10-9 | Data Bus Terminal Interfaces | 142 |
| 4.10-10 | Data Bus Terminal Block Diagram | 142 |
| 4.10-11 | Remote Data Acquisition Unit | 144 |

| | | |
|---|---|---|
| 4.10-12 | Camera and Control Unit | 148 |
| 4.10-13 | Command Interface Unit | 149 |
| 4.10-14 | Modular Space Station Computing Facility Overview | 151 |
| 4.10-15 | SUMC Central Processing Unit | 153 |
| 4.10-16 | Main Memory Module | 155 |
| 4.10-17 | Input/Out Controller | 156 |
| 4.10-18 | Auxiliary Memory | 158 |
| 4.10-19 | Digital Bulk Data Storage | 160 |
| 4.10-20 | Simplified Block Diagram Video Recording Subsystem | 163 |
| 4.10-21 | Experiment/Secondary Command and Control Center | 165 |
| 4.10-22 | Typical Programmable Function Keyboard Operation | 174 |
| 4.10-23 | Onboard Image Processing | 179 |
| 4.10-24 | DMS Software Items | 182 |
| 4.10-25 | Data Buses Connection Diagram | 194 |
| 4.10-26 | Digital Data Profile Case 534-G (3-Month Average Peak Day | 203 |
| 4.10-27 | Modular Space Station Two Computing Facilities Concept | 212 |
| 4.10-28 | Main Memory Power and Hardware Cost Estimates | 221 |
| 4.10-29 | Hybrid Optical/Digital Image Processing Concept | 224 |
| 4.10-30 | Modular Installation Section | 226 |
| 4.10-31 | Basic Structural Members | 231 |
| 4.10-32 | Installation Section—Wiring and Cooling Configuration | 232 |
| 4.10-33 | Basic Replaceable Electrical Assembly | 234 |

| | | |
|---|---|---|
| 4.11-1 | OCS Assembly Group Breakdown | 240 |
| 4.11-2 | OCS Block Diagram | 259 |
| 4.11-3 | Stimuli Generation Unit | 262 |
| 4.11-4 | Local Caution and Warning Unit | 264 |
| 4.11-5 | Checkout Data Processing Operations | 275 |
| 5-1 | Baseline Orbiter Configuration | 294 |
| 5-2 | Shuttle/Module Interface | 296 |
| 5-3 | Orbiter Attitude Control Jets | 297 |
| 5-4 | Orbiter Crew Accommodations | 299 |
| 5-5 | Payload Interface with Shuttle Operations | 300 |
| 5-6 | Docking Clearance | 302 |
| 5-7 | T-Bar Docking Aid | 303 |
| 5-8 | Docking Simulation | 305 |
| 5-9 | Distribution of Orbiter Control Errors | 306 |
| 5-10 | Final Manning Operations—First Logistics Module | 308 |
| 5-11 | Longitudinal cg Limitation | 310 |
| 5-12 | Logistics Module Inboard Profile | 313 |
| 5-13 | Logistics Module | 317 |
| 5-14 | Module Structural Types | 325 |
| 5-15 | Operational Timeline for Cosmic Ray Physics Lab | 341 |
| 5-16 | Module On-Orbit Schedule | 342 |

Volume III

TABLES


| | | |
|---|---|---|
| 4.9-1 | Communications Requirements | 6 |
| 4.9-2 | RF Communications Link Summary | 12 |
| 4.9-3 | Mast-Mounted Equipment Weight Estimate | 19 |
| 4.9-4 | Low-Gain Antenna Performance Characteristics | 26 |
| 4.9-5 | Signal Handling Capability | 36 |
| 4.9-6 | RF Link Calculation—ISS to/from DRSS | 73 |
| 4.9-7 | RF Link Calculation—ISS to/from DRSS | 74 |
| 4.9-8 | RF Link Calculation—ISS to Shuttle | 75 |
| 4.9-9 | RF Link Calculation—ISS to Ground (Direct) | 76 |
| 4.9-10 | RF Link Calculation—Shuttle to ISS | 77 |
| 4.9-11 | RF Link Calculation—ISS to/from EVA | 78 |
| 4.9-12 | Coverage Gaps and Coverage Time | 80 |
| 4.9-13 | Experiment Data Requirements and Allocations | 83 |
| 4.9-14 | Network Configuration Options | 85 |
| 4.9-15 | Audio Distribution System Tradeoff Characteristics Summary | 97 |
| 4.10-1 | Key Subsystem Design Requirements | 110 |
| 4.10-2 | DMS Functional Requirements | 111 |
| 4.10-3 | Computation Requirements Summary | 115 |
| 4.10-4 | DMS Performance Requirements | 116 |
| 4.10-5 | DMS Operational Requirements | 118 |

| | | |
|---|---|---|
| 4.10-6 | Experiment Data Acquisition Summary | 120 |
| 4.10-7 | Subsystem Data Acquisition Summary | 121 |
| 4.10-8 | Modular Space Station—ISS Configuration—Program P1268 | 124 |
| 4.10-9 | Audio Channel Performance Characteristics | 136 |
| 4.10-10 | Video Channel Performance Characteristics | 136 |
| 4.10-11 | Digital Channel Performance Characteristics | 139 |
| 4.10-12 | Warning Functions | 169 |
| 4.10-13 | Typical Speech Generator Words | 172 |
| 4.10-14 | Dedicated Displays | 173 |
| 4.10-15 | Experiments Data Summary | 204 |
| 4.10-16 | Processing Requirements Estimating Parameters | 206 |
| 4.10-17 | Processing Requirements Summary | 207 |
| 4.10-18 | Experiment Operations Processing Estimates | 208 |
| 4.10-19 | Station Operations Processing Estimates | 209 |
| 4.10-20 | Data Acquisition and Distribution Requirements Summary | 210 |
| 4.10-21 | Subsytem Computing Assemblies Summary | 214 |
| 4.10-22 | Experiment Computing Assemblies Summary | 216 |
| 4.10-23 | Auxiliary Memory Comparison | 219 |
| 4.11-1 | Summary of Kec OCS Design Approach Trade Studies and Issues | 237 |
| 4.11-2 | Subsystems Onboard Checkout Data Points | 238 |
| 4.11-3 | Modular Space Station—ISS Configuration—Program P1268 | 241 |
| 4.11-4 | OCS Features | 242 |
| 4.11-5 | Key OCS Program and Project Requirements | 243 |
| 4.11-6 | General Modular Space Station OCS Requirements | 248 |

| | | |
|---|---|---|
| 4.11-7 | Checkout Parameter Type and Usage Summary | 249 |
| 4.11-8 | Power/Subsystem Module Checkout Parameter Profile | 250 |
| 4.11-9 | Power/Subsystem Module Checkout Parameter Profile | 251 |
| 4.11-10 | GPL Subsystem Module Checkout Parameter Profile | 252 |
| 4.11-11 | OCS Trade Study Review—Automation versus Crew Participation | 278 |
| 4.11-12 | OCS Trade Study Review—Onboard versus Ground Checkout | 279 |
| 4.11-13 | OCS Trade Study Review—Centralized versus Decentralized Equipment Distribution | 280 |
| 4.11-14 | Subsystem Line Replaceable Units | 282 |
| 5-1 | Shuttle Rescue Capability | 309 |
| 5-2 | Load Factors | 311 |
| 5-3 | Logistic Module Mass Summary | 316 |
| 5-4 | Mode of Accommodation Summary | 320 |
| 5-5 | Final FPE/Subgroup Designations | 322 |
| 5-6 | Experiment Module Experiments | 331 |
| 5-7 | Experiment Module Requirements | 335 |
| 6-1 | Impact of Artificial Gravity on the Space Station Experiment Program | 347 |

## 4.9 COMMUNICATIONS SUBSYSTEM

The communications subsystem provides radio frequency (RF) communications between the Initial Space Station (ISS) and the ground, either directly to the NASA ground network or through the NASA data relay satellite system (DRSS). Communications are also provided between the ISS and Space Shuttle during rendezvous and docking operations and for crewman engaged in extravehicular activity (EVA). The ISS RF communications channel requirements and frequency allocations are summarized in Figure 4.9-1. In addition to these capabilities, the Growth Space Station (GSS) will incorporate the capability to support free-flying experiment modules (FFM's).

The internal communications system provides nominal voice communications between crew quarters, equipment compartments, duty stations, and docked modules. Emergency voice communications, public address, and entertainment audio reception capabilities are also provided.

The definition and preliminary design of the communications subsystem was supported by the Collins Radio Company and Radiation, Incorporated under funded subcontracts. Collins Radio provided analytical support and the assembly level descriptions for the RF and internal communications system. Radiation, Inc. performed the blockage analysis and provided definition of the high gain antenna system.

### 4.9.1 Summary

The RF communications system operating frequencies, radiated power, and by the results of trade studies and analyses that were performed. The results of the communications network trade study showed that the experiment data requirements could be satisfied by implementing the $K_u$-band system on the ISS and thus utilizing the DRSS wideband capability. The results of the high-gain antenna blockage analysis revealed that blockage due to the docked modules could be eliminated by proper antenna selection and switchover. It was also determined that the effect of the solar arrays would be minimal.

The RF communications system operating frequencies, radiated power, and receiving system sensitivities are often dictated by the characteristics and

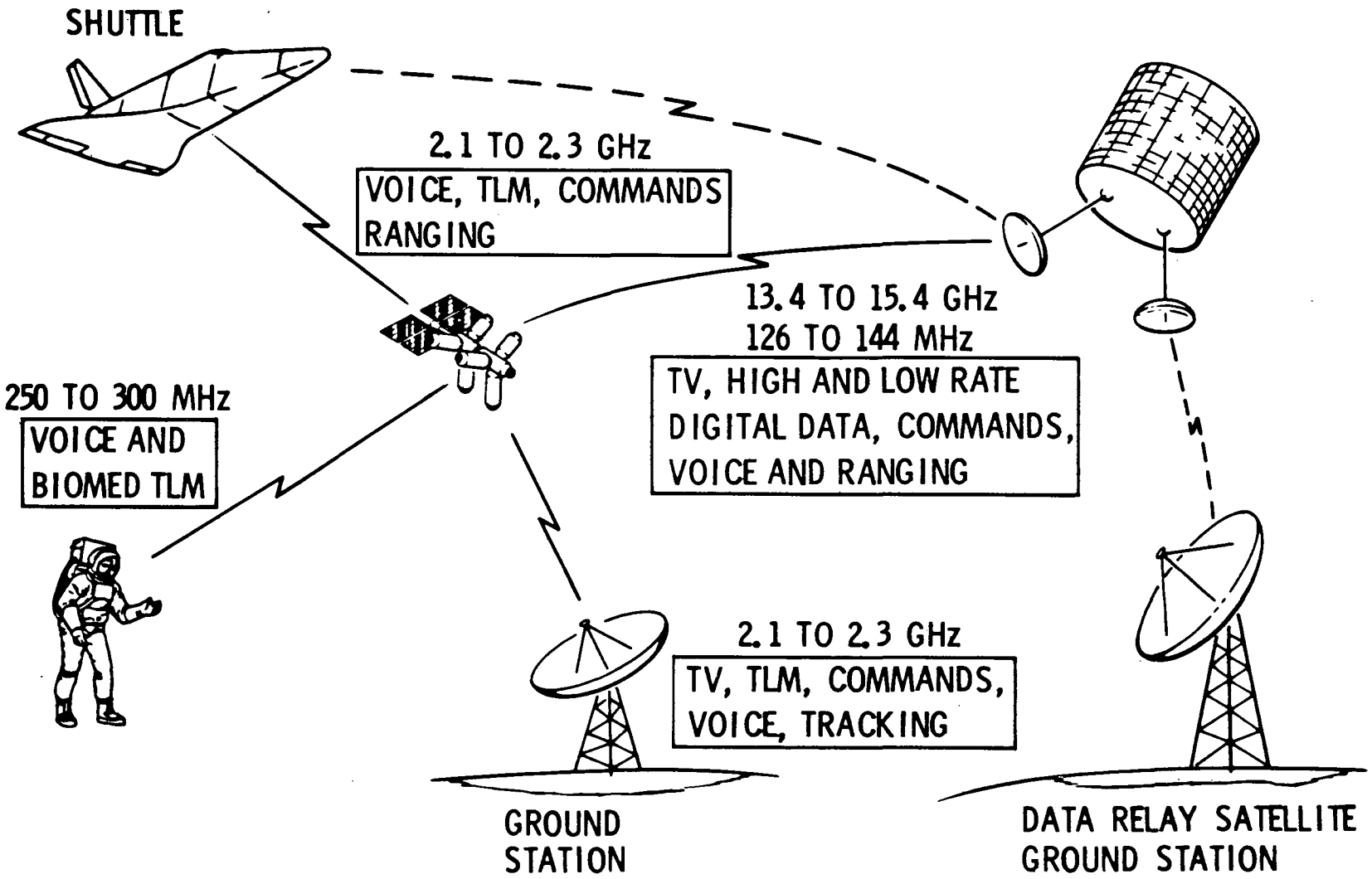


Figure 4.9-1. Radio Frequency Allocations

capabilities of existing program support elements, such as the NASA ground network, and planned support such as the NASA DRSS. These characteristics were utilized in conjunction with the operational communications range requirements to perform detailed RF link analyses. The results of these trade studies and analyses were utilized to define the RF communications system described as follows. An assembly group breakdown of the communications subsystem is shown in Figure 4. 9-2 and is described as follows.

Direct communications with the ground stations are provided by a 1 watt S-band transponder which receives voice, commands, and ranging information at approximately 2. 1 GHz and transmits voice, telemetry, and ranging data at a frequency between 2. 2 and 2. 3 GHz. An S-band FM exciter and power amplifier having a power output of 20 watts operating between 2. 2 and 2. 3 GHz is also provided for the transmission of video and digital experiment data. Two-way voice, low rate data, and ranging communications with the Shuttle are also provided by the same S-band transponder used for direct ground communications. However, a 20-watt power amplifier operating in conjunction with the transponder is required to provide simultaneous voice, data and ranging at ranges up to 200 kilometers. A common, low-gain S-band antenna system will be utilized for communications with both the ground and the Shuttle.

Communications with the DRS are provided by $K_u$-band transmitting and receiving systems operating in the 14. 4 to 15. 35 GHz and 13. 4 to 14. 2 GHz frequency bands respectively. A power output of 20 watts operating in conjunction with an 8-ft diameter high-gain antenna is required to provide for commercial quality television or up to 10 Mbps digital data transmissions through the DRSS. Multiple voice channels, medium data rates up to 100 kbps, and turned-around ranging transmissions are provided simultaneously with the wideband transmission on a separate carrier. A receiving system noise temperature of approximately 1,000$^{\circ}$ Kelvin is required for the reception of television from the relay satellite. Simultaneous reception of multiple voice, medium rate data, and ranging information is also provided.

Two-way voice and up to 10 kbps low data rate communications between the Space Station and DRSS are also provided in the VHF band at frequencies

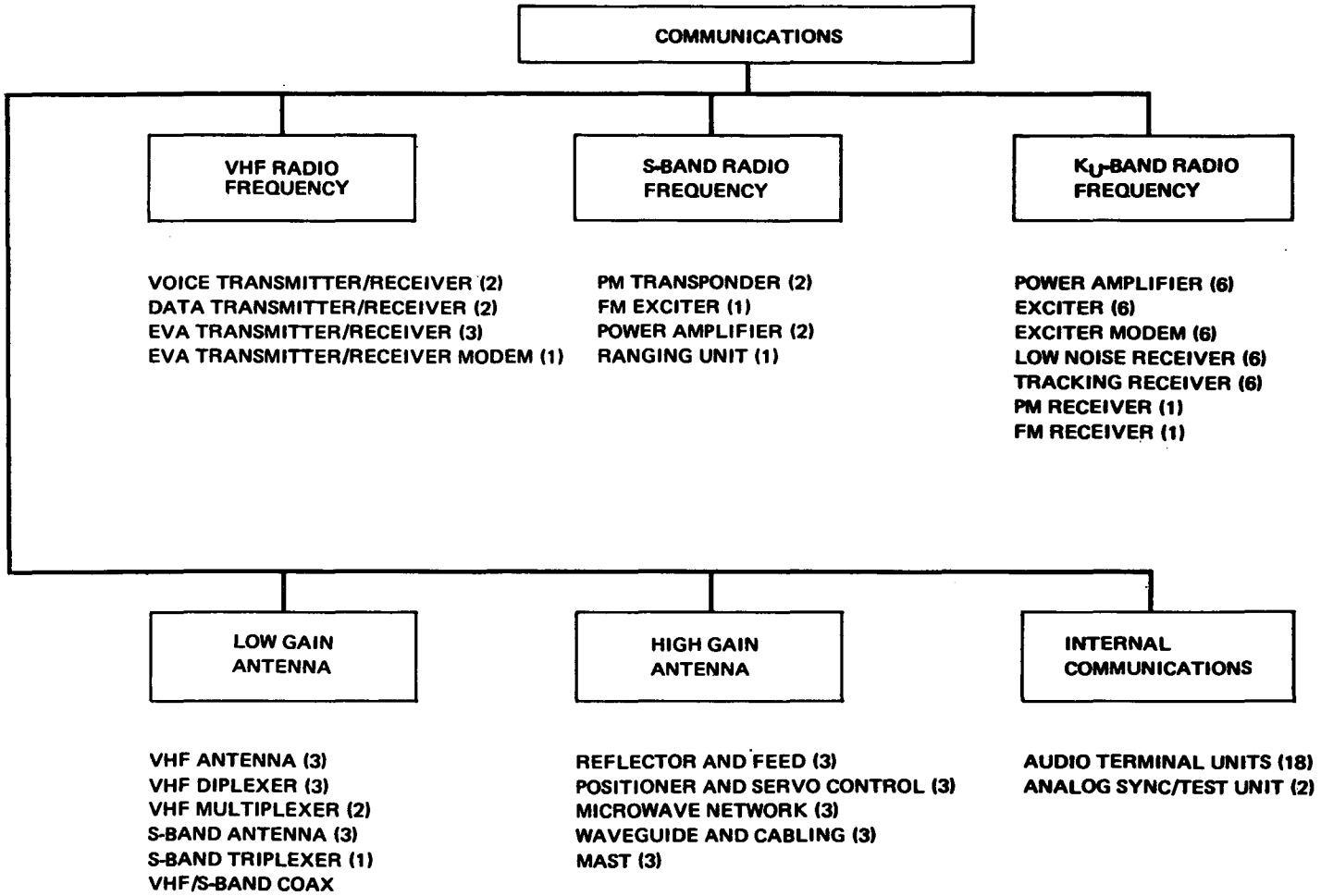


Figure 4.9-2. Communications Subsystem Assembly Array Breakdown

between 126 and 130 MHz and 136 to 144 MHz. These links utilize a low-gain antenna system which will provide nearly omnidirectional coverage. A power output of 20 watts per channel is required for the voice and data transmissions to the DRSS.

Full duplex voice communications with crewmen engaged in extravehicular activity (EVA) and the reception of crew biomedical telemetry are provided. These channels will utilize frequencies in the 250 to 300 MHz band and will be multiplexed into the VHF antenna system used for relay satellite communications.

In addition to the RF communications system trade studies and analyses, the internal communications trade study performed during the 33-ft Space Station study was reevaluated. It was determined that the internal communications system should be configured as a frequency division multiplexed (FDM) system. This is the same result that was obtained in the original study.

The subsystem design concept is within the current state-of-the-art with the possible exception of the $1,000^{\circ}$ Kelvin $K_u$-band receiving system noise temperature. However, lower noise receiver front end device development is progressing rapidly, and suitable devices should be available in the very near future. The selection of the most optimum high gain antenna system acquisition and tracking technique and the development of the required operational procedures are other areas that will require more detailed study.

### 4.9.2 Requirements

The key program and project level requirements affecting the design of the communications subsystem as specified in the Space Station Program (Modular) Specification (DR-CM-01) and Space Station Project (Modular) Specification (DR-CM-02) are listed in Table 4.9-1 by paragraph number. The RF communications requirements have been established by the operational support requirements, experiment data transmission requirements, and the NASA guidelines and constraints. An analysis of the experiment data requirements can be found in Section 4.9.4.3. The internal communications requirements are directly dependent on the level of manning and the number of modules utilized.

Table 4.9-1

COMMUNICATIONS REQUIREMENTS

1. Space Station Program (Modular) Specification (DR-CM-01)
   3.1.3.10 The capability shall be provided for monitoring the Space Station in an unmanned condition to confirm the existence of a habitable environment and the functional capabilities of critical life sustaining subsystems.

   3.1.3.13 The Initial Space Station must provide communications with the ground and other cooperating spacecraft, but not necessarily simultaneously. Interruptions in data communications with the ground network for as long as 5 hrs will be acceptable for the Initial Space Station.

   3.1.3.14 Nearly continuous duplex voice communications with the ground must be provided beginning with the initial manned flight. A synchronous satellite communications system will be available and provide wideband data as well as voice bandwidth communications. (A description of this system will be furnished by NASA.) Reception of wideband data, as required, should be divided between ground network stations and the synchronous satellite communications system. This division will be determined by cost considerations (see 3.1.1.3) and experiment requirements.

   3.1.3.15 A synchronous satellite communication system will be available to support the first MSS launch. The system will operate in VHF (136 MHz) and Ku (15 GHz) bands.

   3.7.1.4.12 As a goal, no orientation restrictions will be imposed by subsystems; i.e., electrical power, thermal control, communications.

2. Space Station Project (Modular) Specification (DR CM-02)
   3.1.3.1.11 During unmanned phases of operations, ground-based mission operations shall provide ephemeris updates based on ground network tracking data; monitor and support major buildup and activation activities associated with the orbiting vehicle; and maintain the responsibility for final approval of each launch to the Space Station configuration.

Table 4.9-1

COMMUNICATIONS REQUIREMENTS (Cont)

3.1.3.1.13 The orbital position and ephemeris data of the ISS Space Station shall be determined by the ground network, with the Station module configuration providing tracking transponders.

3.1.3.2.13 Mission operations shall provide the capability of activating and commanding on-orbit subsystems for selected operations.

3.1.3.3.10 During buildup and sustained operations, all unmanned orbital configurations shall provide those subsystem operations (including data, command, and control) necessary to provide successful manning and activation.

3.2.1.1.9 Space Station information management shall be compatible with all station module derivatives, experiments, experiment modules, logistic vehicles, tugs, relay satellite, and ground communication systems.

3.2.1.1.10 System, experiment, and mission status information shall be available onboard, on the ground, or both onboard and on the ground, as required. This information may be processed or raw, and real-time or delayed.

3.2.1.1.12 The Space Station shall provide continuous tracking capability for terminal rendezvous, docking, and other orbital operations.

3.2.1.2.3 Full redundant duplex communications capability shall be provided between the activation crewmen and the Shuttle crew.

4.9.2.1 RF Communications Requirements

The detailed RF communications requirements for each of the links are described in the following sections.

4.9.2.1.1 Space Station to Ground (Via DRSS)

These RF links will be utilized primarily to provide wideband video, digital data, and multiple voice transmission and reception. Alternate links will also provide duplex voice and low rate data. These links will be designed to meet the following requirements:

Mode 1: One full duplex channel, consisting of the following:

A. Up to 100 kbps of digital data having a bit error rate (BER) of $10^{-5}$ or less.

B. Up to eight voice channels, each having a 90 percent word intelligibility.

C. A pseudo random noise (PRN) ranging code.

Mode 2: One full duplex color television channel to International Radio Consultative Committee (CCIR) commercial standards with a 39 db peak-to-peak signal to weighted rms noise ratio and a single voice channel having a 90 percent word intelligibility.

Mode 3: One downlink 10 Mbps digital data channel time-shared with the downlink television channel of Mode 2 having a BER of $10^{-5}$ or less.

Mode 4: One uplink channel consisting of multiple voice and entertainment audio time-shared with the uplink channel of Mode 2.

Mode 5: One full duplex voice channel with a 90 percent word intelligibility.

Mode 6: One downlink 10 kbps data channel having a BER of $10^{-5}$ or less.

Mode 7: One uplink 10 kbps command channel having a BER $10^{-6}$ or less.

4.9.2.1.2 Space Station-to-Ground (Direct)

The Space Station-to-Ground network link, which is a direct link bypassing the DRSS, utilizes two RF transmission modes. Mode 1 will be utilized during the module buildup process to provide duplex voice, tracking and ranging, telemetry, and command capability. During the initial mission phases, the

ground will primarily be utilized to provide Space Station position information. Mode 2 will be utilized to support backup experiment data transmissions in the event of relay satellite outages. The following signal qualities are required.

Mode 1: One full duplex voice channel with 90 percent word intelligibility.
One down telemetry channel with up to 51.2 kbps capacity and a BER of $10^{-5}$ or less.
One up command channel and 1 kbps data rate and a BER of $10^{-6}$ or less.
One turnaround ranging channel compatible with the MSFN PRN ranging system.

Mode 2: One down video channel having a 3 MHz maximum frequency response. The predetection rms signal-to-rms noise will be 20 db or greater.
One down digital data channel time-shared with the video with up to 1 Mbps capacity and a BER of $10^{-5}$ or less.

4.9.2.1.3 Space Station-to-Space Shuttle

These circuits will be utilized during the Space Station buildup process and logistics resupply or crew transfer operations. These circuits are very similar to those of 4.9.2.1.2. Simultaneous operation of the channels defined in Mode 1 is required after manning. During unmanned operations, only the channels defined in Mode 2 are required.

Mode 1: One full duplex voice channel with a 90 percent word intelligibility.
One telemetry channel with up to 10 kbps capacity and a BER of $10^{-5}$ or less.
One command channel with up to a 1 kbps capacity and a BER of $10^{-6}$ or less.
One turnaround PRN ranging channel

Mode 2: The telemetry, command, and ranging channels defined in Mode 1.

4.9.2.1.4 Modular Space Station to EVA

The following circuits are required to support EVA operations:

Mode 1: One full duplex voice channel for each crewman with a 90 percent word intelligibility.
One up to seven analog data channels from each crewman.

Mode 2: One simplex voice channel with a 90 percent word intelligibility.

4.9.2.2 Internal Communications Requirements

The internal communications system will provide the capability of accommodating up to 36 channels for the distribution of telephone, public address, and emergency signals between various terminals within the Modular Space Station and to docked logistics modules and RAM's. The onboard telephone system will provide the same privacy afforded telephone users on the Earth. No requirements have been identified to date to provide "secure" voice communications. The internal communications requirements in terms of the number of audio channels required are shown below.

A. An emergency call and public address capability to all modules simultaneously.
B. A selective module paging capability. This will require a minimum of nine channels (one per ISS module plus one per docked module).
C. Two channels dedicated for EVA communications.
D. Two channels dedicated for Shuttle communications.
E. Two channels dedicated for VHF and S-band communications to the ground.
F. Two channels minimum dedicated to power module.
G. Nine channels minimum dedicated to crew/operations module.
H. Three channels minimum dedicated to the GPL module.
I. One channel dedicated to each of six docked modules.
J. One audio reference channel.

The total channel requirements have thus determined to be one baseband and 36 dedicated channels.

4.9.3 Selected Subsystem Design

The selected subsystem design described in this section is capable of satisfying the requirements defined in the previous section. The operating

frequencies, type of antenna system, radiated power levels, and receiving-system sensitivities are determined by the characteristics of the NASA DRSS, ground stations, and Shuttle, and the operational requirements and quality and quantity of information to be transmitted and received. The frequency, information rates, modulation techniques, signal quality required, transmitter power, antenna gain, and link margin for each channel are summarized in Table 4.9-2. The detailed calculations for each channel are presented in Section 4.9.4.2.

4.9.3.1 Subsystem Description

The VHF and S-band equipments utilized for communications with the DRSS, Shuttle, NASA ground stations, and EVA are located in the Power/Subsystems Module. A block diagram showing the VHF and S-band equipment, including low-gain (omni) antennas, transmitters, receivers, modems and audio terminals is presented in Figure 4.9-3.

The $K_u$-band and S-band equipments required to provide wideband data transmission and reception with the DRSS are located in the Crew/Operations Module. A block diagram depicting the high-gain antenna system, power amplifiers, exciters, receivers, and modems is shown in Figure 4.9-4. The analog sync/test unit which generates the reference signals required for operation of the onboard telephone system and audio terminals located in this module are also shown.

The total complement of RF equipments is contained within the Power/Subsystem and Crew/Operations Modules. However, additional audio terminals are required in the GPL and docked modules.

Descriptions and lower-level block diagrams of the high- and low-gain antenna systems, RF system, and internal communications system are provided in the following sections.

4.9.3.1.1 Antenna System Description

Descriptions of the $K_u$-band high-gain and VHF and S-band low-gain antenna assembly groups are presented in the following sections.

Table 4.9-2

RF COMMUNICATIONS LINK SUMMARY

| Channel Range (km) | Frequency (GHz) | Information | Modulation Technique | $C/N_o$ (db-Hz) | Power (watts) | Antenna Gain (db) | Margin (db) |
|---|---|---|---|---|---|---|---|
| ISS to DRSS | 14.5 | Television | FM | 88.0 | 20 | 48.8 | +3.7 |
| | | 10 Mbps data | FSK | 88.0 | | | +3.7 |
| 42,600 | | Multiple voice | FM/PM | 75.0 | | | +13.7 |
| | | 100 kbps data | PSK/PM | 64.6 | 20 | 48.8 | +13.7 |
| | | Ranging | PM | 35.0 | | | +30.3 |
| DRSS to ISS | 13.5 | Television | FM | 85.2 | 6 | 44 | +2.0 |
| | | Multiple voice | FM/PM | 72.2 | | | +12.0 |
| | | 100 kbps data | PSK/PM | 61.8 | 6 | 44 | +12.0 |
| 42,600 | | Ranging | PM | 35.0 | | | +28.6 |
| ISS to DRSS | 0.136 | Voice | FM | 53.8 | 20 | 3.0 | +3.7 |
| | | data | PSK | 54.6 | | | +2.9 |
| 42,600 | | | | | | | |
| DRSS to ISS | 0.130 | Voice | FM | 51.0 | 25 | 16 | +6.8 |
| | | Data | PSK | 51.8 | 12.5 | | +4.0 |
| 42,600 | | | | | | | |
| ISS to Shuttle | 2.3 | Voice | FM/PM | 50.8 | | | +2.7 |
| | | 10 kbps data | PSK/PM | 51.6 | 20 | 0.0 | +3.0 |
| | | Ranging | PM | 32.0 | | | +9.6 |
| 200 | | | | | | | |

Table 4.9-2 (page 2 of 2)

RF COMMUNICATIONS LINK SUMMARY

| Channel Range (km) | Frequency (GHz) | Information | Modulation Technique | $C/N_o$ (db-Hz) | Power (watts) | Antenna Gain (db) | Margin (db) |
|---|---|---|---|---|---|---|---|
| Shuttle to ISS | 2.1 | Voice | FM/PM | 50.8 | 10 | +3.0 | +4.2 |
| | | 1 kbps data | FM/PM | 42.4 | | | +4.4 |
| | | Ranging | PM | 32.0 | | | +6.5 |
| 200 | | | | | | | |
| ISS to Ground (Direct) | 2.3 | Video | FM | 83.0 | 20 | 0.0 | +5.3 |
| | | 1 Mbps data | FSK | 75.0 | | | +13.3 |
| 2,200 | | Voice | FM/PM | 53.0 | 1.0 | 0.0 | +11.7 |
| | | 51.2 kbps data | PSK/PM | 60.5 | | | +11.7 |
| | | Ranging | PM | 32.0 | | | +11.7 |
| ISS to EVA | 0.300 | Voice | FM | 50.8 | 0.001 | -10.0 | +15.3 |
| 0.1 | | | | | | | |
| EVA to ISS | 0.250 | Voice | FM | 50.8 | 0.001 | -6.0 | +7.1 |
| | | Tlm | FM/FM | 61.8 | | | +7.2 |
| 0.1 | | | | | | | |

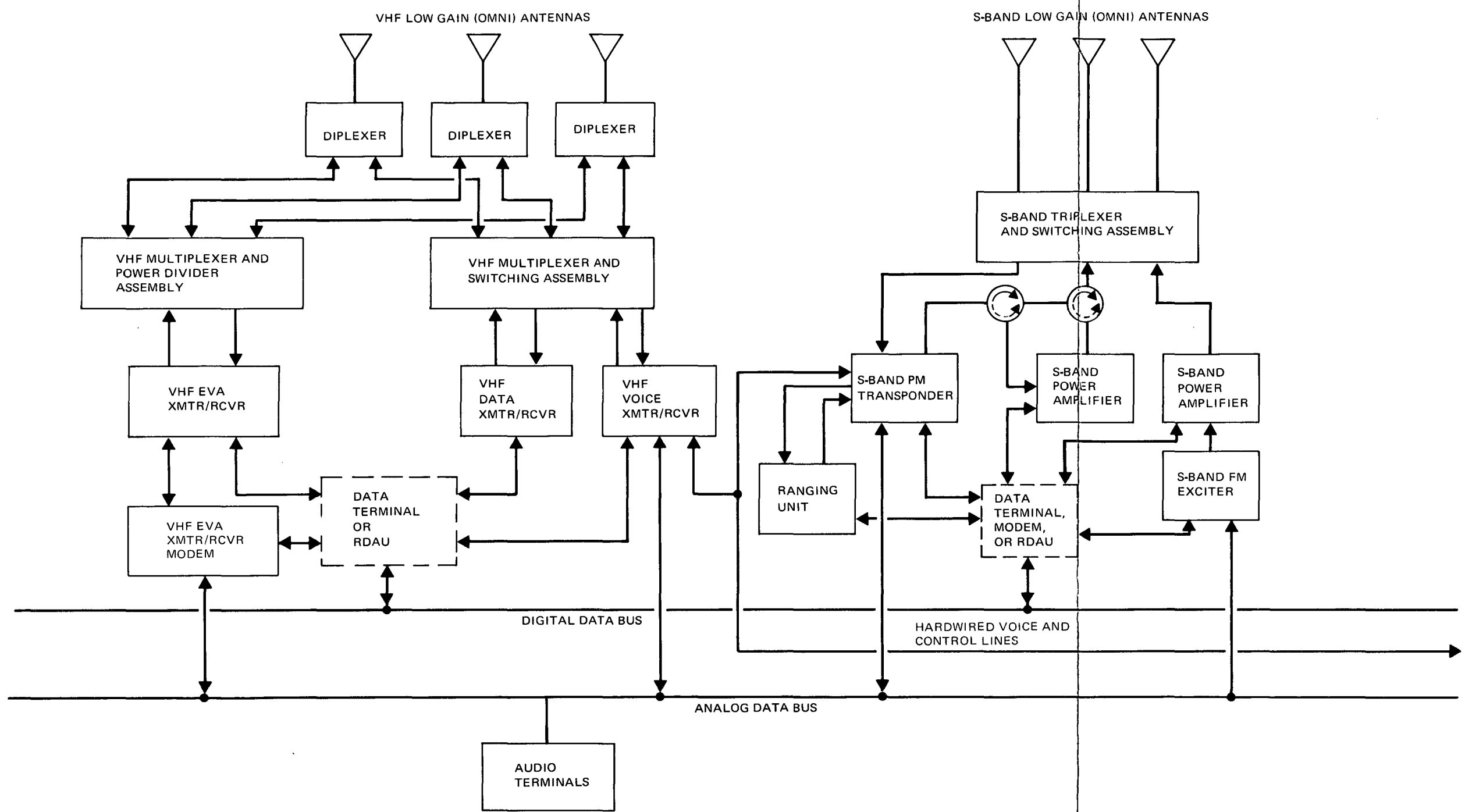


Figure 4.9-3. Power/Subsystem Module Communications Equipment Complement

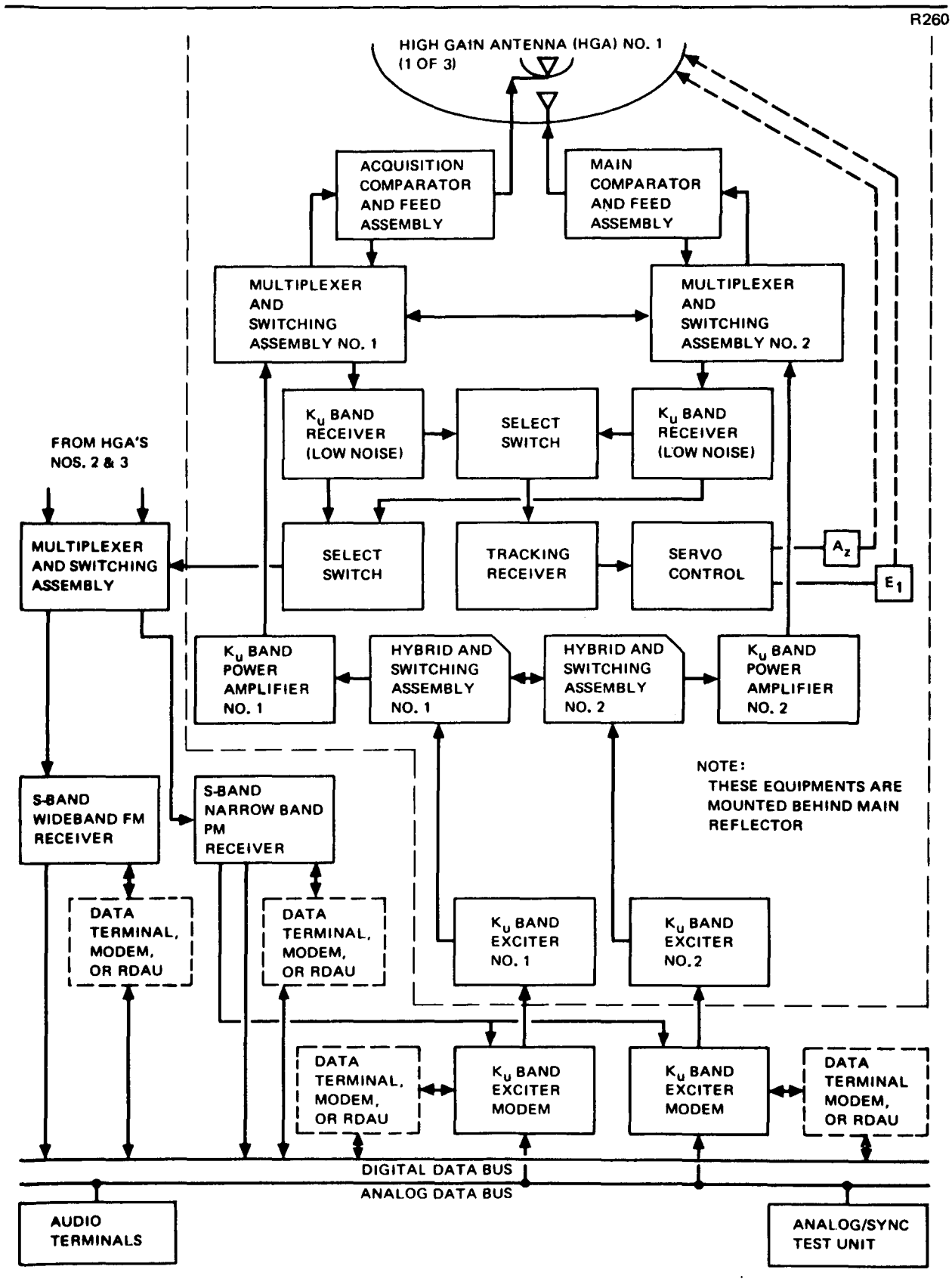


**Figure 4.9-4. Crew/Operations Module Communications Equipment Complement**

## High-Gain Antenna Assembly Group

The high-gain antenna assembly group consists of three independently controlled 8-ft parabolic reflectors which are located on the crew/operations module and are separated by 120 degrees. They are located at 60, 180, and 300 degrees referenced to the +Z axis. This assembly group consists of the main and acquisition aid antennas, feed subassembly, pseudo-monopulse comparators, couplers, diplexers and switches, low noise tunnel diode amplifiers, mixer and local oscillator, power amplifiers and exciters and drive system which are located at the end of the antenna mast.

The following high-gain antenna assembly group design information was provided by Radiation, Incorporated. The design was based on the performance requirements shown below:

| | |
|---|---|
| Nominal transmit frequency | 14.5 GHz |
| Nominal receive frequency | 13.5 GHz |
| Minimum G/T (including all losses) | 15.0 db/°K |
| Minimum EIRP (including all losses) | 60.0 dbw |
| Minimum antenna RF bandwidth | 20.0 MHz |

The mast-mounted equipment performance is summarized below:

| | |
|---|---|
| Transmit | |
| Power amplifier output (20 watts) | 13 dbw |
| System loss (maximum) | 1.5 db |
| Antenna gain (minimum) | 50.0 db |
| EIRP (minimum) | 61.5 dbw |
| Receive | |
| Antenna gain (minimum) | 49.4 db |
| System loss (maximum) | 2.0 db |
| System temperature (maximum) (6.5 db noise figure) | 30.0 db/°K |
| $G/T_S$ (minimum) | 17.4 db/°K |

| | |
|---|---|
| Acquisition | |
| Antenna gain (minimum | 29 db |
| Insertion loss (maximum) | 1.7 db |

The anticipated system performance margins are based on the current state-of-the-art for RF components. The detailed performance breakdown of the transmit, receiver, and acquisition portions of the system are presented in Figures 4.9-5, -6, and -7. The preliminary weight estimates of the mast mounted equipment are given below in Table 4.9-3.

The feed system selection is the shaped-subreflector Cassegrain approach using a multimode monopulse primary horn with pseudomonopulse tracking. The transmit signal is coupled in through the diplexer, which is an orthomode transducer since the transmit and receive circular polarizations are orthogonal. The orthomode transducer provides about 20 db of isolation between the transmit and receive circuits. An additional 80 to 100 db can be provided by a bandpass filter with very small insertion loss. A single bandpass filter is used after the coupler instead of three bandpass filters (sum, azimuth difference, and elevation difference lines) prior to the coupler

Table 4.9-3
MAST MOUNTED EQUIPMENT WEIGHT ESTIMATE

| | |
|---|---|
| Reflector | 15 lb |
| Subreflector | 2 lb |
| Subreflector support | 2 lb |
| Microwave network | 10 lb |
| Feed support | 12 lb |
| Positioner/gimbal structure | 30 lb |
| Preamplifiers (2) | 10 lb |
| Tracking receiver (2) | 10 lb |
| T TA power amplifiers (2) | 20 lb |
| Transmitter exciters (2) | 6 lb |
| Thermal control | 10 lb |
| Miscellaneous waveguide, coax, wiring, etc. | 15 lb |
| Total Weight (Excluding the Mast) | 142 lb |

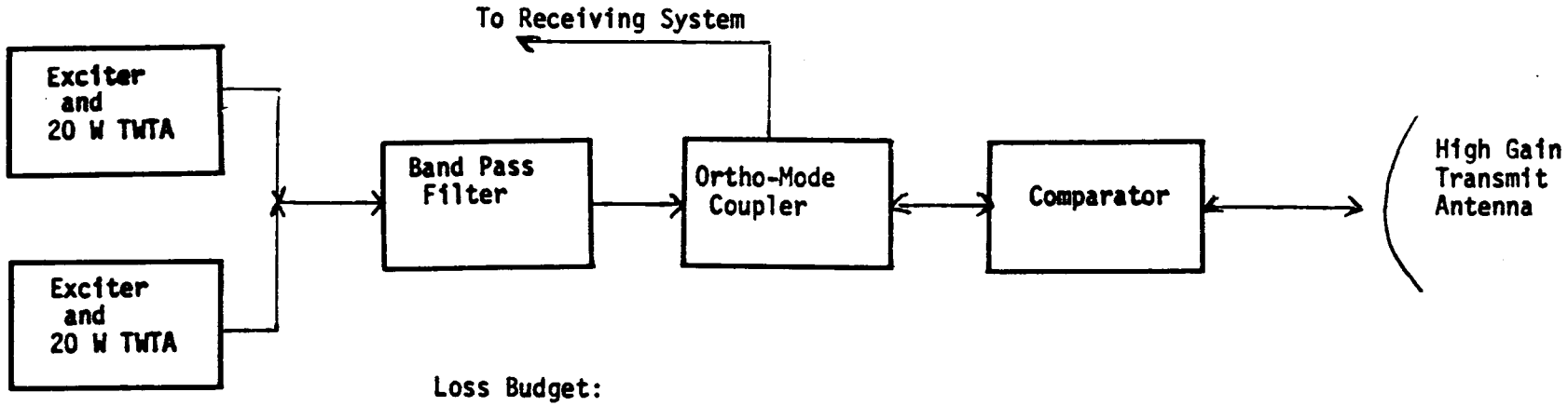


Loss Budget:

| | |
|---|---|
| 8' WR 750 Al. | 0.5 db |
| Comparator | 0.4 db |
| Ortho-Mode Coupler | 0.1 db |
| Horn & Phasing Sec. | 0.1 db |
| Band Pass Filter | 0.2 db |
| Switch | 0.2 db |
| TOTAL | 1.5 db |

Figure 4.9-5. Transmit System Loss Budget

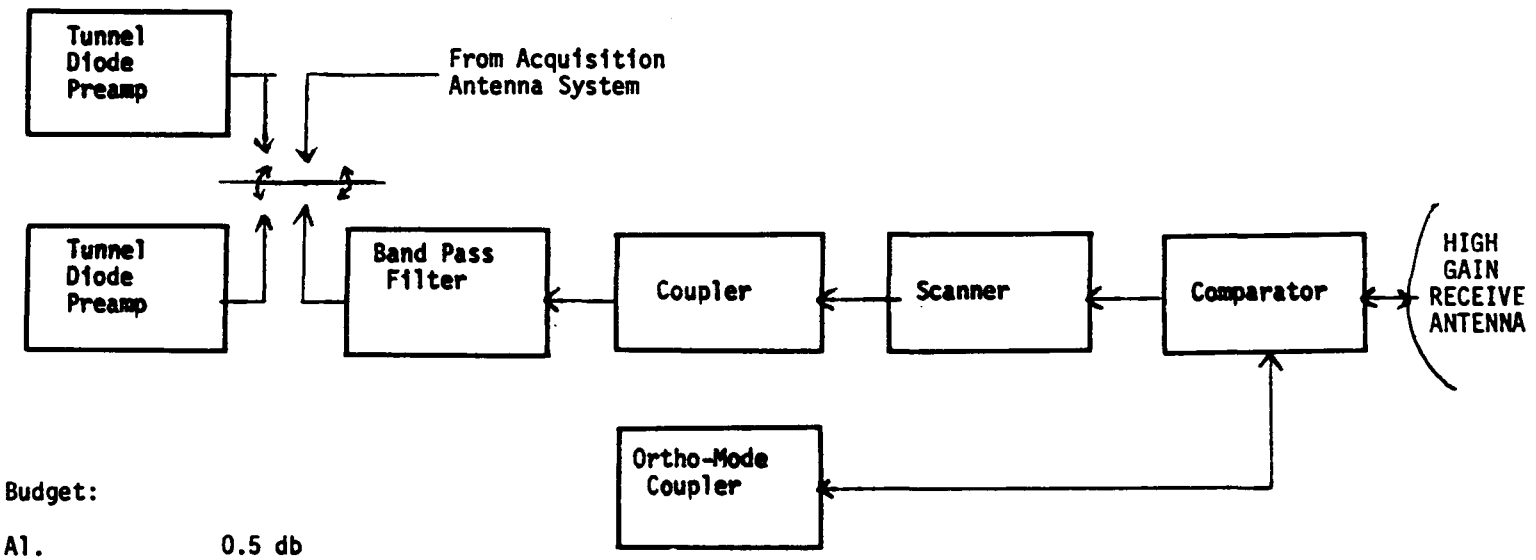


Loss Budget:

| | |
|---|---|
| 8' WR 750 Al. | 0.5 db |
| Comparator | 0.4 db |
| Coupler | 0.5 db |
| Ortho-Mode Coupler | 0.1 db |
| Band Pass Filter | 0.2 db |
| Horn & Phasing Sec. | 0.1 db |
| Switch | 0.2 db |
| TOTAL | 2.0 db |

Figure 4.9-6. Receive System Loss Budget

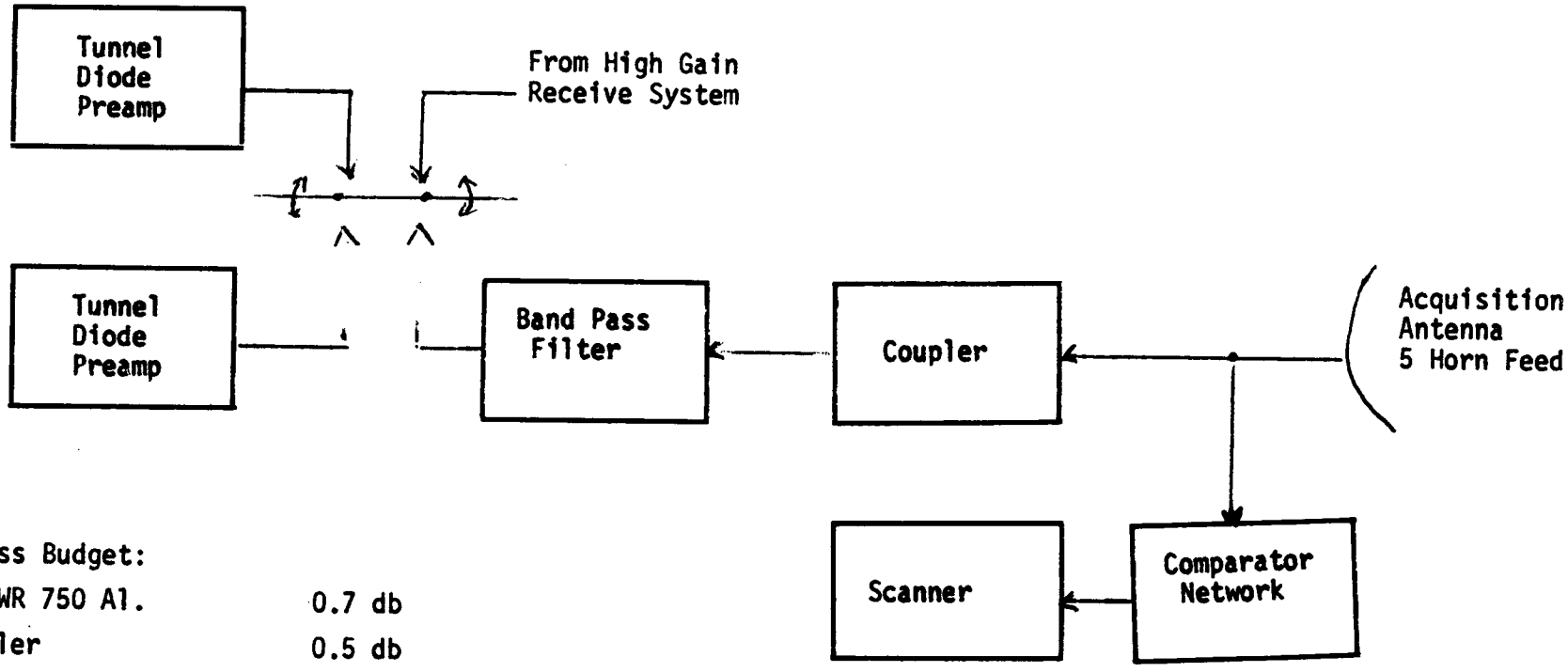


Loss Budget:

| | |
|---|---|
| 12' WR 750 Al. | 0.7 db |
| Coupler | 0.5 db |
| Band Pass Filter | 0.2 db |
| Feed Horn | 0.1 db |
| Switch | 0.2 db |
| TOTAL | 1.7 db |

Figure 4.9-7. Acquisition System Loss Budget

because of the difficulty of obtaining identical phase characteristics in all three filters. The comparator provides about 30 db of isolation between sum and difference ports, which reduces the power into the scanner to an acceptable level.

The acquisition antenna system is located behind the subreflector and is a 1-ft diameter paraboloidal reflector fed by a five-horn apex feed. All pseudomonopulse components are located behind the subreflector, and a single waveguide is routed down a single spar to the preamplifier. A well-insulated housing for the scanner will be located between the subreflector and the paraboloidal reflector.

The subreflector, along with the acquisition antenna system, will be supported from the feed support cone by a conical radome. The acquisition antenna transmission lines will be routed down a single spar to the rear of the reflector.

Detailed RF and Mechanical Design

Feed Support Cone Design—The feed will consist of a Cassegrain-type feed system with the microwave network packaged in the feed support cone and a lightweight composite subreflector supported by a conical radome of low dielectric materials. The use of lightweight construction in the feed package has resulted in a total weight of approximately 12 lb.

The feed support structure is conical and extends from the dish hub to the multihorn feed. This truncated cone configuration is a laminate, constructed of graphite fibers and epoxy. This material is selected because of its high specific strength and specific modulus.

Subreflector and Acquisition Feed — The subreflector and acquisition feed is approximately 12 in. in dia., and is constructed using extremely lightweight fabrication techniques.

The back side of the subreflector may be a parabolic-shaped aluminum foil surface that functions as the reflector for an acquisition antenna. The

reflector is fed from an apex feed supported by spars that are attached to the outside edge at the 12 in. dia.

The acquisition feed would be a lightweight, multihorn feed connected by coax cable to the preamps. A remote switching mechanism is used to switch from the high gain to the acquisition antenna.

The weight of the subreflector with acquisition feed is approximately 2 lb or less.

Dielectric Subreflector Support — The dielectric subreflector support which positions the subreflector at the focal point of the reflector is constructed of a single thin-wall, low-loss, composite structure weighing approximately 2 lb.

Microwave Network — The microwave network is enclosed in the feed cone support. The microwave network will consist of a multihorn feed, comparator network, scanner, polarizers, and coupler. This network will be designed to be packaged in modules to decrease weight and increase packageability. By using this multiple-component manufacturing technique, weight is decreased due to the decrease in the number of flanges and waveguide wall thickness to obtain a system weight of approximately 10 lb or less. Also the ability to package the feed in a more dense package is increased. This lowers the RF line loss between the horns and receiver and also lowers the projected aspect ratio of the feed cone, which causes secondary blockage.

Operational Procedures

The high-gain antenna system acquisition, handover, and switchover procedures required to initiate and to maintain RF communications with the data relay satellites are described as follows.

The acquisition and tracking procedure requires initial pointing information generated by the onboard computer. Upon acquisition and lock of an RF signal transmitted by the DRSS by the high-gain antenna pseudomonopulse tracking system, the drive information from the computer is terminated. In the event

that the RF tracking signal "drops out" during a communications pass, the computer will be called upon to drive the antenna until the RF signal is reacquired.

Prior to an anticipated communications contact with a relay satellite, the computer will be required to run a prepass simulation to determine the look angles to the DRSS. It is estimated that the look-angle predications should be performed in 30-sec to 1-min increments. Each look angle will then be tested to determine which antennas are blocked by the docked modules and solar arrays as a function of time. The optimum antenna for providing communications during the next pass will then be selected. In the event that the prepass simulation shows that switchover from one antenna to another is required during a communications pass to eliminate blockage due to the docked modules, the second antenna will be slewed into position and acquire the DRSS RF signal prior to the time that the blockage will occur. Since the blockage analysis has shown that there is overlapping coverage for the docked modules, it is anticipated that the switchover procedure will cause little or no loss of communications.

The computational and storage requirements imposed by the antenna selection and pointing procedure and the other communications functions should be well within the 10,000 operations per second computation rate and 15,000 words of storage allocated for the communications subsystem.

Low-Gain Antenna Assembly Group

The low-gain antenna assembly group consists of separate VHF and S-band antenna systems. Both of these systems consist of flushmounted, slot-type antenna elements located on the power module and separated by 120 degrees. They are located approximately at 60, 180, and 300 deg referenced to the +Z axis. The performance characteristics of the low-gain antenna system are summarized in Table 4.9-4.

The VHF system consists of three "dumbbell" circumferential slot antennas, diplexers, a multiplexer and power divider, and a multiplexer and switching assembly. The multiplexer and power divider assembly allows the three

Table 4.9-4

LOW-GAIN ANTENNA PERFORMANCE CHARACTERISTICS

| | |
|---|---|
| VHF System | |
| Gain | |
| Individually | 0 db minimum over a 120 deg beam-width referenced to a right-hand circularly polarized (RCP) source. |
| Simultaneously | -10 db minimum over 90 percent of sphere referenced to an RCP source. |
| Insertion loss | |
| Individually | 2 db (maximum) |
| Simultaneously | 7 db (maximum) |
| Impedance | 50 ohm (nominal) |
| S-band System | |
| Gain | |
| Individually | -3 db minimum over a 120 deg beam-width referenced to a RCP source. |
| Simultaneously | -13 db minimum over 90 percent of a sphere referenced to an RCP source. |
| Insertion loss | |
| Individually | 2 db (maximum) |
| Simultaneously | 7 db (maximum) |
| Impedance | 50 ohms (nominal) |

antennas to be fed simultaneously, thus eliminating any requirement for antenna switching during EVA operations. The link margins are more than adequate to compensate for the multipath effects produced by feeding the antennas simultaneously. However, for normal voice and low data-rate communications with the DRSS, the multiplexer and switching assembly will allow the optimum antenna to be selected. It will also be capable of switching in all three antennas simultaneously in a contingency mode.

The S-band system consists of three circumferential slot antennas which can be selected individually or fed simultaneously. The triplexer allows for the simultaneous reception of one carrier and the transmission of two carriers.

The selection of the optimum VHF and S-band low-gain antennas and their locations cannot be made until either subscale or full-scale antenna pattern measurements are performed.

4.9.3.1.2 RF Assembly Descriptions

The RF assemblies for the VHF, S-band and $K_u$-band systems are described in this section. Block diagram, functional descriptions, monitor outputs, and physical characteristic summaries are provided for each assembly. The following descriptions were provided by the Collins Radio Company.

A. EVA VHF Voice Transmitter/Receiver – The EVA VHF voice transmitter/receiver (line replaceable units) LRU's provide for the transmission and reception of voice communications between personnel engaged in EVA and the Space Station. It also provides for simultaneous reception of biomedical data from the EVA units. The transmitter provides an output of 1 milliwatt, frequency modulated with 6 kHz peak-to-peak baseband voice signals from the EVA voice transmitter/receiver modem. The receiver has a noise figure of 4 db and a predetection bandwidth of 50 kHz. A block diagram of the LRU is shown in Figure 4.9-8.

   The receiver demodulates the incoming frequency-modulated signals consisting of baseband voice and biomedical data subcarriers and provides the composite signal as an output to the EVA voice transmitter/receiver modem.

   Monitoring outputs are provided for control functions, VCO and crystal oscillator output, transmitter and receiver modulation levels, transmitter rf output, output VSWR, and receiver AGC level.

   The LRU weighs 2 lb and needs 3 watts of power. The estimated MTBF is 640,000 hr.

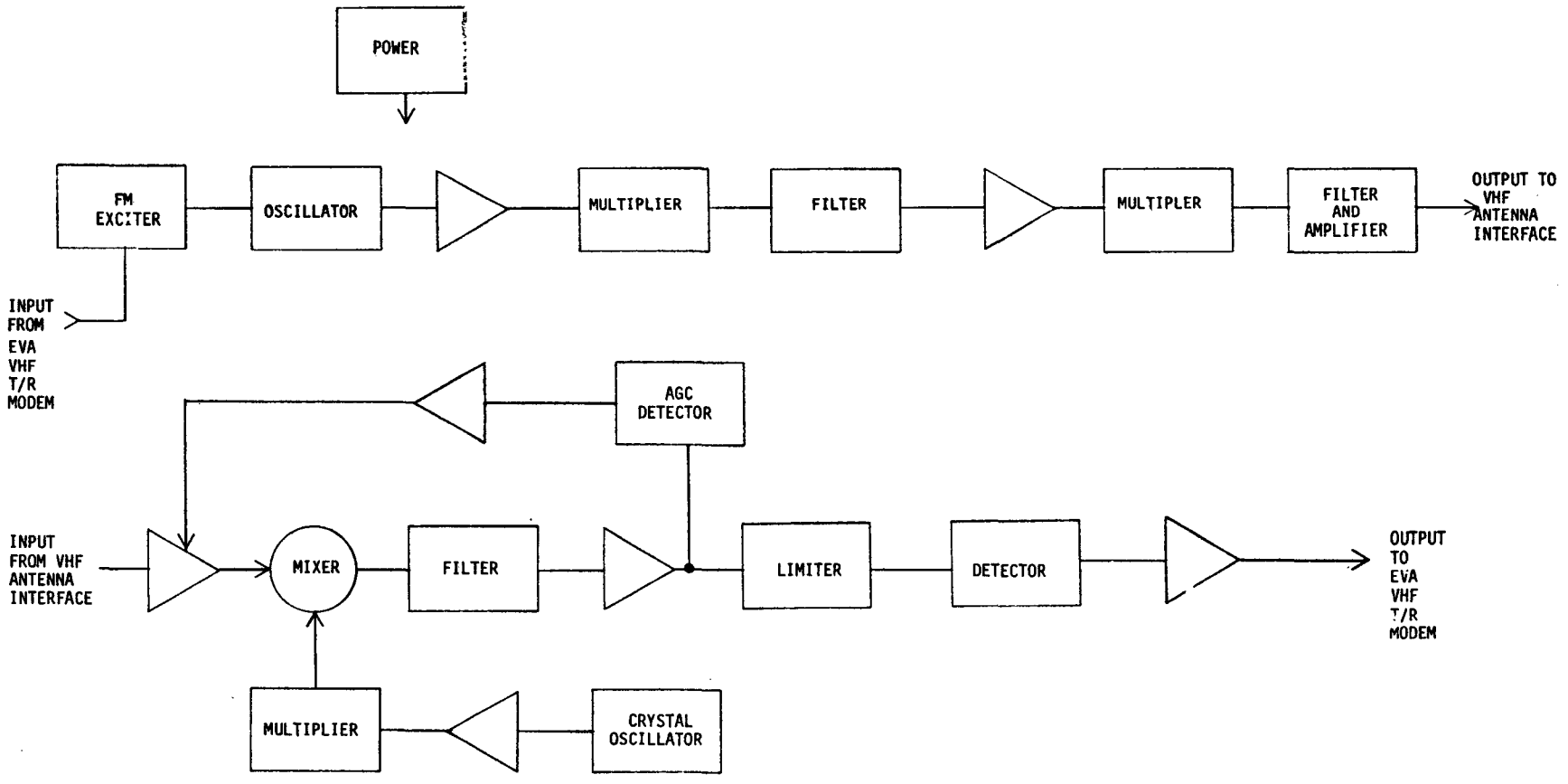


**Figure 4.9-8. EVA VHF Voice Transmitter/Receiver**

B. EVA Voice Transmitter/Receiver Modem – The EVA voice transmitter/receiver modem LRU provides an interface between a group of three transmitters and receivers used to handle EVA voice and biomed signals, and the analog/digital data bus. A block diagram of the unit is shown in Figure 4.9-9.

The unit contains circuitry similar to that of the audio terminal units discussed later, to enable the unit to be dialing up from any other audio terminal unit in the station, and to provide the composite voice signals from the three receivers as an output on that same circuit.

Two of the receiver inputs contain biomedical data signals in the form of modulated subcarriers, and circuitry is provided to separate them from the voice signals, demodulate them, and provide the data as outputs to a digital data terminal.

Conferencing is accomplished (by means of commands received via the digital data terminal) by routing the voice signal received from one crew member to the audio output associated with the transmitter tuned to the second crew member's receiver. Squelch circuitry is provided to suppress noise in the circuits when they are not in actual use; however, override capability is provided.

Voice signals originating from the onboard controller can be used to modulate any or all of the audio outputs.

Monitor outputs are provided to verify the presence of biomedical data subcarriers audio inputs and outputs, and the status of the various mode switches.

The LRU weighs 10 lb and requires 10 watts of primary power. The estimated MTBF is 385,000 hr.

C. VHF Data Transmitter/Receiver – The VHF data transmitter/receiver LRU provides digital data communications between the Space

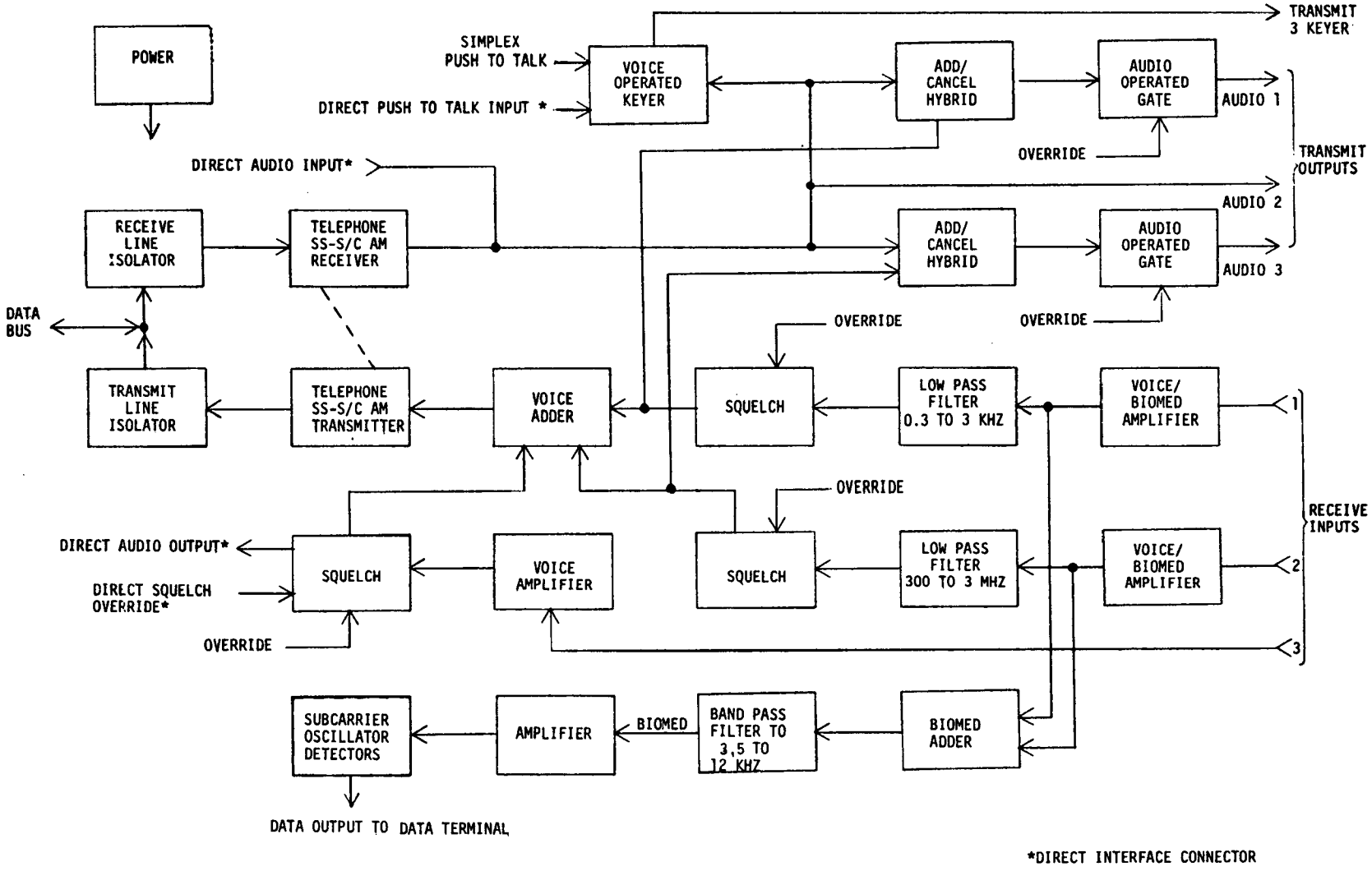


**Figure 4.9-9. EVA VHF Voice Transmitter/Receiver Modem**

Station and a relay satellite in the frequency band from 126 MHz to 144 MHz. Frequency modulation is used on both transmission and reception. A block diagram is shown in Figure 4.9-10. The transmitter provides a 20 watt RF output, with data rates up to 10 kbps, and deviations of up to 10 kHz peak to peak. The receiver accepts inputs having the same modulation characteristics and provides the detected signals as an output to a digital data terminal. The receiver will have a noise figure of 4 db and a 50 kHz predetection bandwidth.

Monitor outputs are provided for the control functions, VCO and crystal oscillator output, transmitter and receiver modulation levels, for the rf power output level, VSWR on the output, and for the receiver AGC level.

The unit weighs 13 lb and requires a maximum of 42 watts. The MTBF is estimated to be 640,000 hr.

D. VHF Voice Transmitter/Receiver – The VHF voice transmitter/receiver LRU provides voice communications between the Space Station and a relay satellite in the 126 MHz to 144 MHz frequency band. Frequency modulation is used on both transmission and reception. A block diagram is shown in Figure 4.9-11. The transmitter provides a 20 watt RF output, with baseband voice modulation and a peak-to-peak diviation of 6 kHz. The receiver accepts an input having the same modulation characteristics and provides the detected voice signal as an output. The receiver will have a noise figure of 4 db and a 50 kHz predetection bandwidth. Control of the LRU is by means of an associated digital data terminal; however, the LRU contains circuitry similar to that in the audio terminal unit which interfaces directly with the analog data bus and enables any audio terminal unit on the bus to access the RF channel by simply dialing its assigned number.

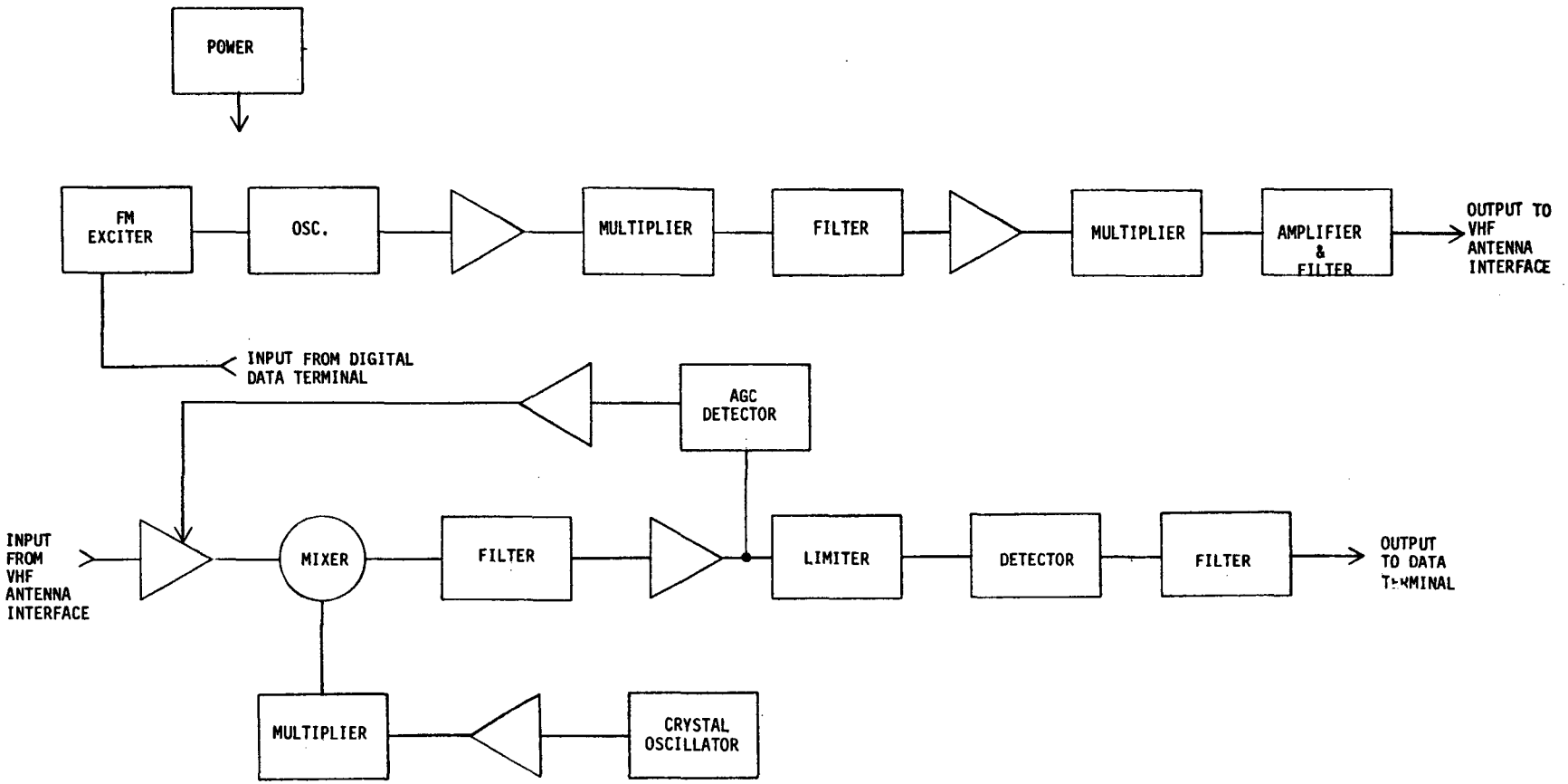


Figure 4.9-10. VHF Data Transmitter/Receiver

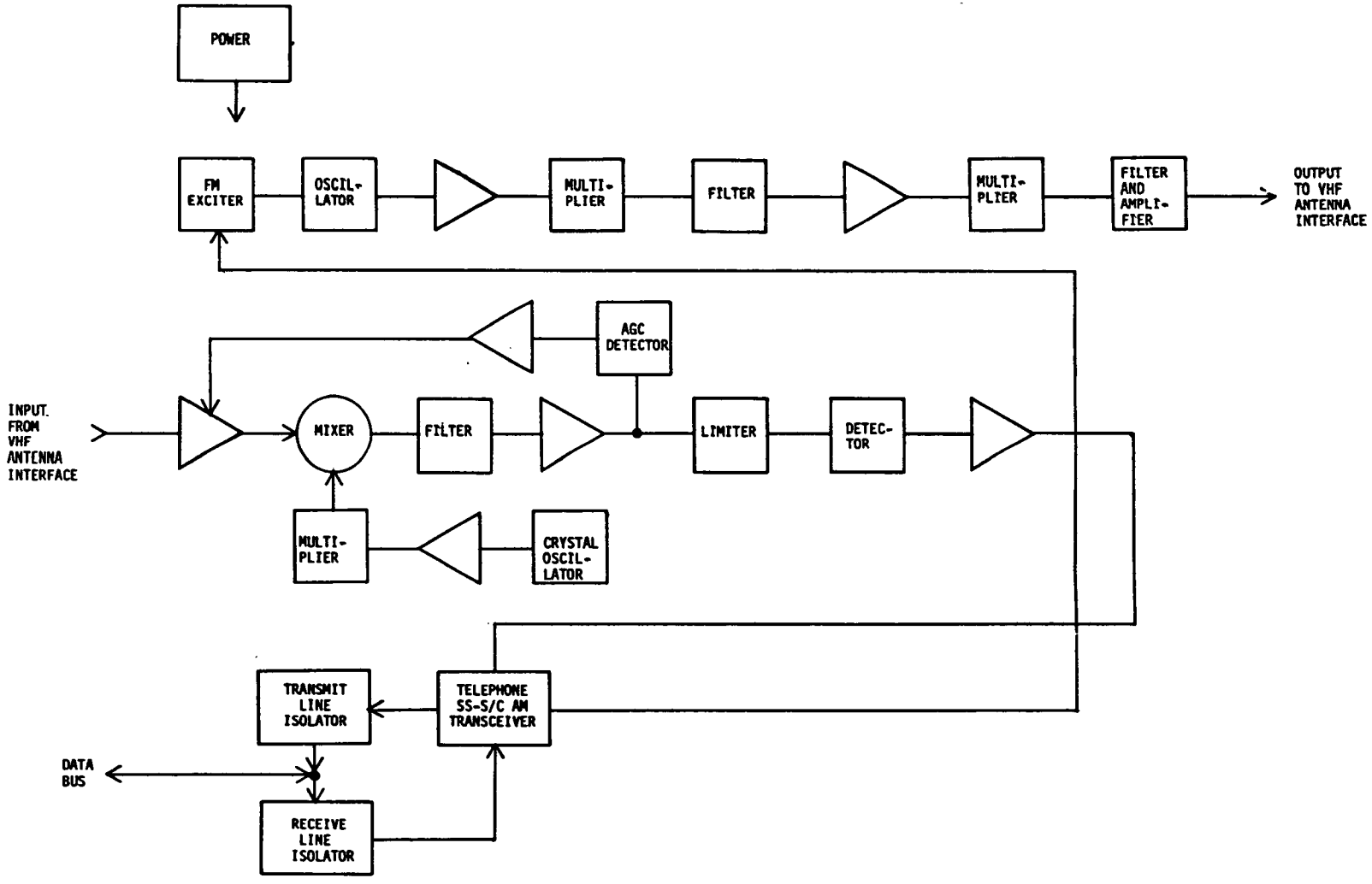


Figure 4.9-11. VHF Voice Transmitter/Receiver

Monitor outputs are provided for the control functions, VCO and crystal oscillator outputs, modulation input, transmitter modulation output, the output level, the VSWR on the output.

The unit weighs 15 lb and requires a maximum of 48 watts. The estimated MTBF is 170,000 hr.

E. S-Band PM Transponder — The S-band PM transponder is the LRU which provides for the transmission and reception of voice, data, and ranging signal between the Space Station and Shuttle, and between Space Station and ground station. The voice and data subcarrier frequencies are identical to those used on the Apollo command module.

A block diagram of the unit is shown in Figure 4.9-12. The unit contains circuitry similar to the audio terminal units to select one of the voice channels on the analog data bus for transmission and reception over the RF circuits. The selection of the channel, as well as all other control functions and the readout of monitor data is done over the digital data bus via a digital data terminal. The digital data terminal is also the interface between the bus and both the incoming digital data on a 70 kHz subcarrier and the outgoing digital data which is transmitted as biphase modulation on a 1.024 MHz subcarrier.

The unit also interfaces with the ranging unit to receive and transmit baseboard PRN ranging signals.

Table 4.9-5 summarizes the signal-handling capability.

All of the above subcarriers are transmitted and received as PM modulation of the S-band carrier.

The RF circuitry consists of a solid-state, phase-lock transponder, with an output power of 1 watt and a receiver noise figure of 7 db.

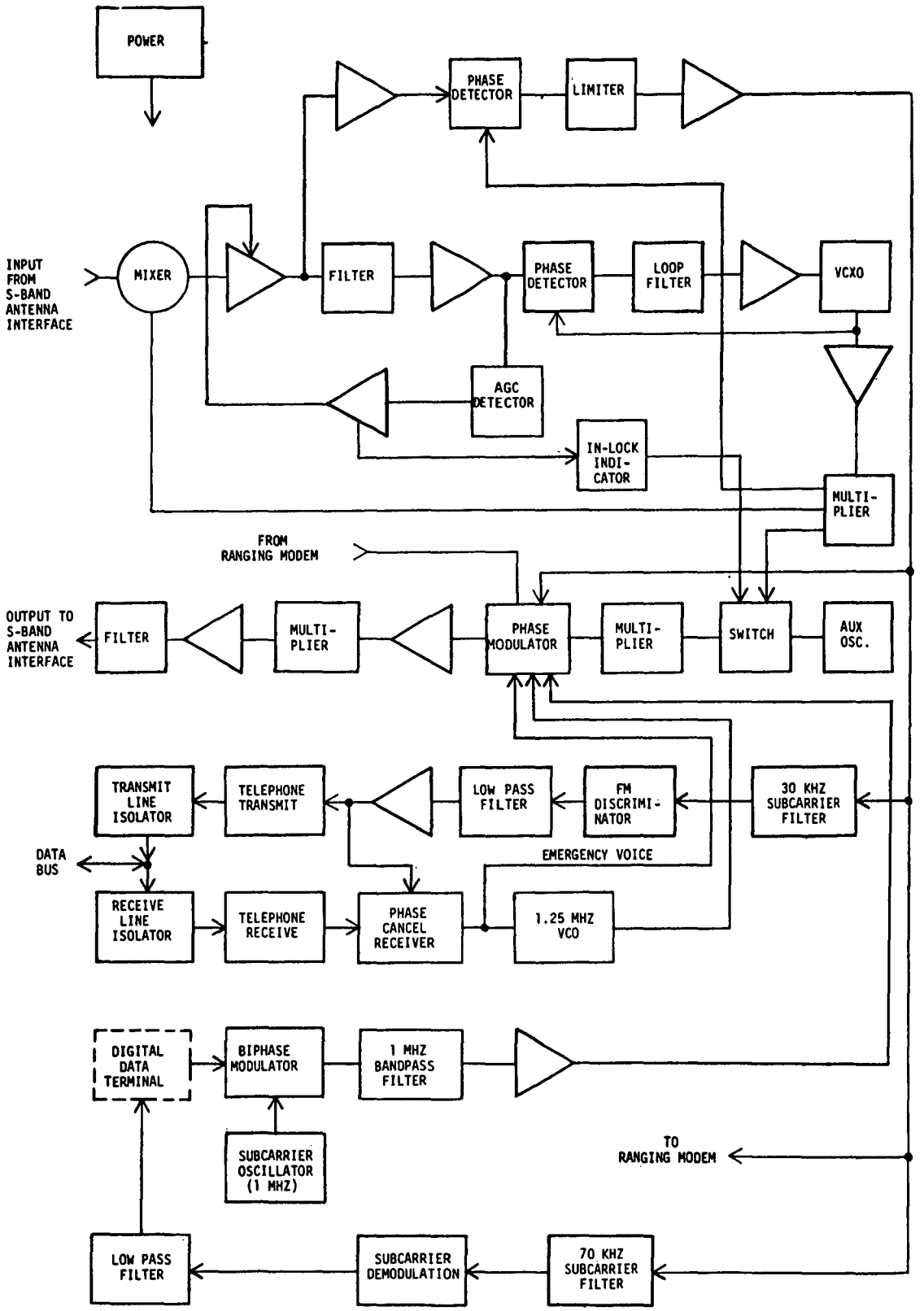


**Figure 4.9-12. S-Band PM Transponder**

Table 4.9-5

SIGNAL-HANDLING CAPABILITY

| | |
|---|---|
| 1. | One voice channel input and output. Transmitted as FM modulation on a 1.25 MHz subcarrier, received as FM modulation on a 30 kHz subcarrier. |
| 2. | One data channel output of 51.2 kbps, transmitted as biphase modulation on a 1.024 MHz subcarrier. |
| 3. | One data channel input of kbps, received as FM modulation on a 70 kHz subcarrier. The signal on the subcarrier consists of a biphase modulated 2 kHz tone plus a 1 kHz reference tone. |
| 4. | PRN ranging signals transmitted and received as baseband PM modulation of the S-band carrier. |

Monitor outputs are provided for the control functions, subcarrier outputs, demodulation outputs, phase modulator output, receiver AGC level, output power level and VSWR and phase-lock loop status.

This LRU weighs 23 lb and requires 36 watts of power. The estimated MTBF is 42,600 hr.

F. S-Band FM Exciter — The S-band FM exciter LRU generates a 40 to 100 milliwatt RF signal to drive the S-band power amplifier, and frequency modulates it with either a wideband digital data signal or a television signal. A block diagram of the unit is shown in Figure 4.9-13. The unit interfaces with a digital data terminal

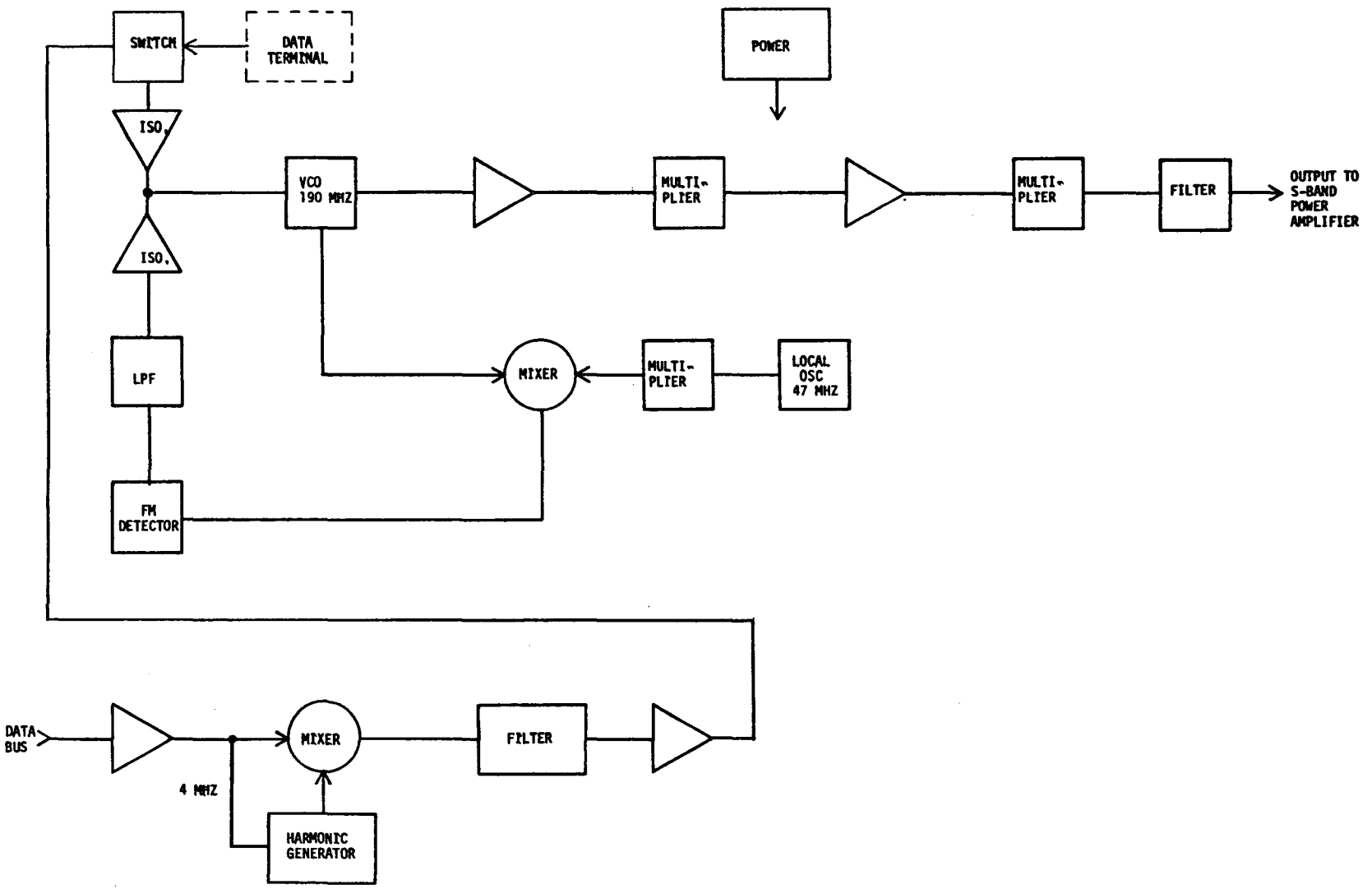


Figure 4.9-13. S-Band Exciter

F. S-band FM Exciter — (Cont)

for control and monitor functions, and receives its digital data input from that source. It also interfaces directly with the analog data bus to obtain the television signal input. The LRU contains the channel selection circuitry necessary to side-step the desired channel down to baseband for transmission.

Monitor outputs are provided for the control functions, Lo output, harmonic generator output, modulation detector, video channel selection, and the RF output level.

The LRU weighs 3 lb and requires 5 watts of primary power; the estimated MTBF is 310,000 hr.

G. S-Band Power Amplifier — The S-band power amplifier LRU provides amplification of the 40 to 100 milliwatt input from the S-band FM exciter to the 20-watt output level necessary to support wideband data transmissions. The required power level is generated through a hybrid arrangement of power transistors as shown in the block diagram of Figure 4.9-14.

Monitor outputs are provided for the RF input and output levels, VSWR on the output, temperature, and the ON/OFF control.

The LRU weighs 5 lb and requires 60 watts of primary power. The estimated MTBF is 200,000 hr.

H. S-Band Wideband Receiver — The S-band wideband receiver LRU's provide for the reception of signals (from a relay satellite), which have been down converted from $K_u$-band.

The incoming signal is frequency modulated with a baseband video signal plus a 4.5 MHz subcarrier frequency modulated with a voice signal, or an FDM signal consisting of 36 SSB voice signals in the band from 60 kHz to 204 kHz, plus entertainment channel

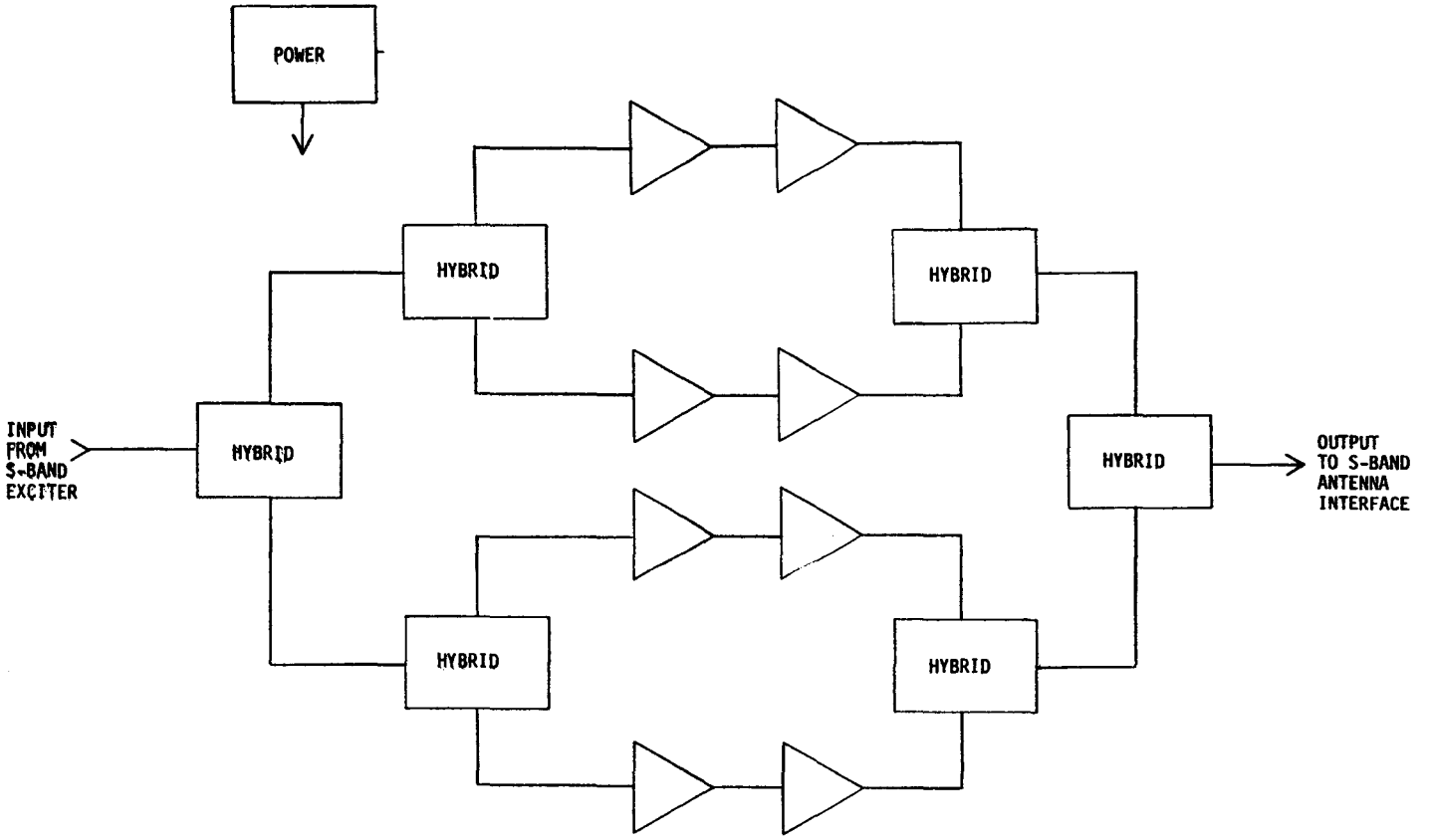


Figure 4.9-14. S-Band Power Amplifier

subcarriers at 1.0 MHz, 1.35 MHz, and 1.7 MHz. Figure 4.9-15 shows the block diagram.

In the video mode, the incoming video signal is side-stepped to desired analog data bus channel and placed on the bus with the 4.5 MHz subcarrier. In the voice mode, the demodulated voice and entertainment channel spectrum is placed on the analog data bus.

Monitoring outputs are provided for the control functions, crystal oscillator output, FM detector output, receiver AGC level, and the selected analog data bus video channel

The LRU weighs 25 lb and uses 35 watts of power. The estimated MTBF is 120,000 hr.

I. S-Band Narrow-band Receiver – The S-band narrow-band receiver provides for the reception of signals (from a relay satellite) which have been down coverted from $K_u$-band. The incoming information is in the form of PCM/PSK modulation of a subcarrier, multiple-voice channels, frequency modulated on a 4.5 MHz subcarrier, and a baseband pseudorandom ranging code. A block diagram is shown in Figure 4.9-16.

The receiver phase locks to the incoming S-band signal and coherently detects the ranging signal (which is provided to the $K_u$-band exciter for retransmission) and the modulated subcarriers. The PSK detector extracts the digital data on a subcarrier and provides the information as an output to a digital data terminal. An FM discriminator detects the multiple voice channels on the 4.5 MHz subcarrier and provides the voice as an output to the analog data bus.

Monitoring outputs are provided to the control functions, crystal oscillator output, detector output, loop lock status, data and voice subcarrier presence, and the receiver AGC level.

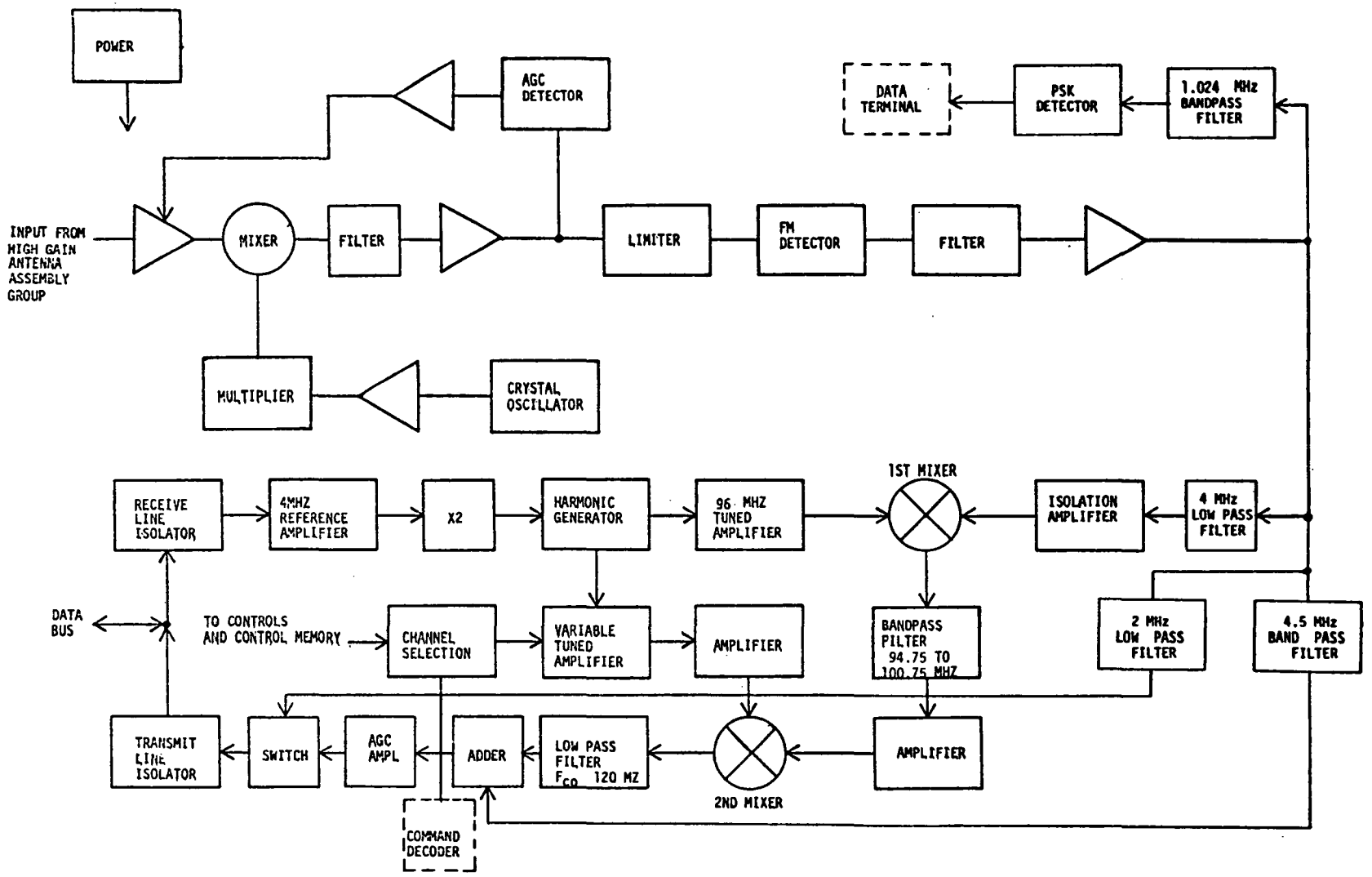


**Figure 4.9-15. S-Band Wideband Receiver**

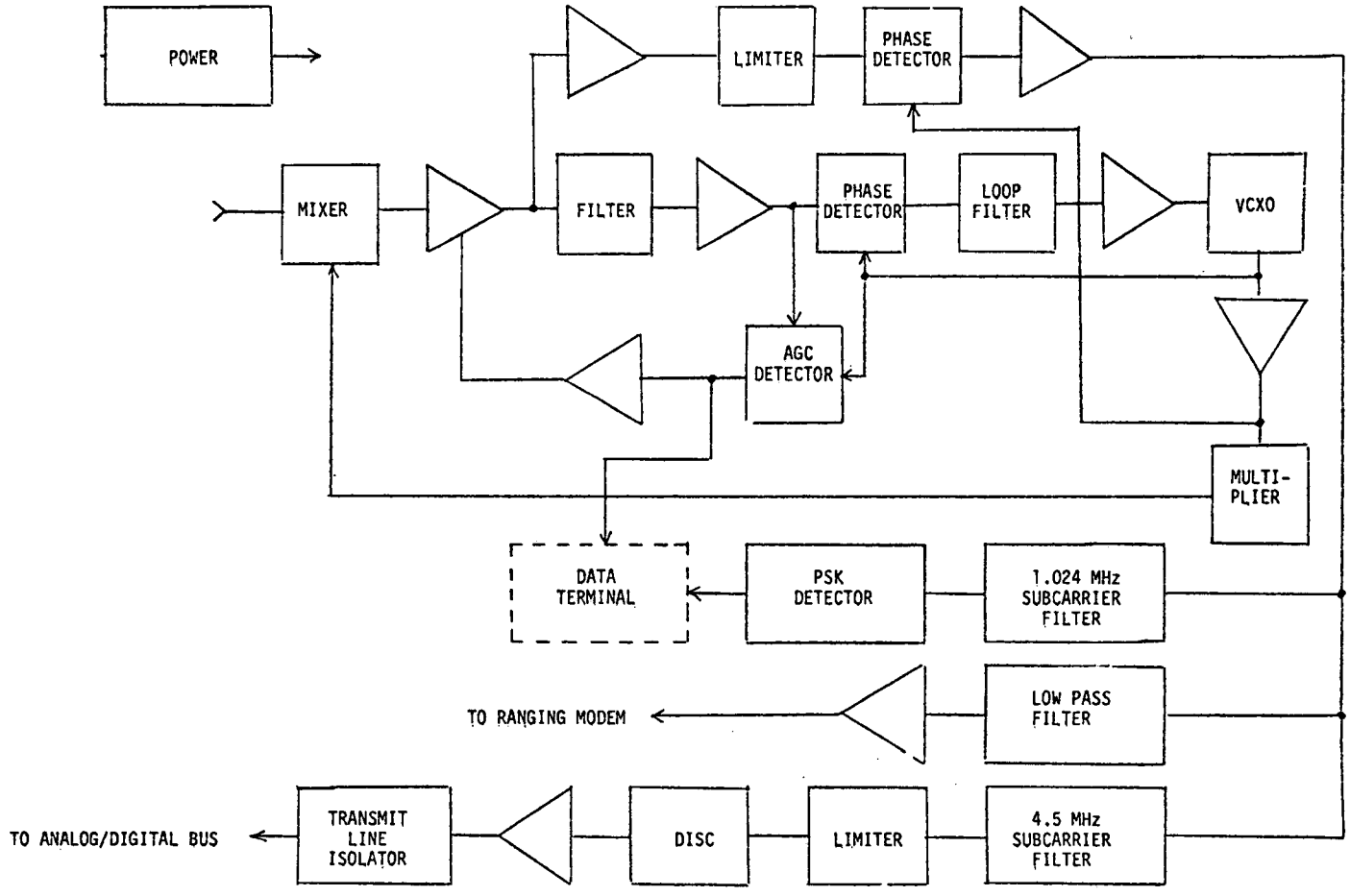


**Figure 4.9-16. S-Band Narrow Band PM Receiver**

The unit weighs 20 lb and consumes 24 watts of power. The estimated MTBF is 89,000 hr.

J. $K_u$-Band Power Amplifier — The $K_u$-band power amplifier LRU provides amplification of a 20 to 50 milliwatt input from the $K_u$-band exciter to the 20-watt output level necessary to support wideband signal transmissions to Earth via a relay satellite. The LRU contains both the TWT amplifier and its associated power supplies. The amplifier has a 0.5 db bandwidth of 40 MHz. A block diagram of the unit is shown in Figure 4.9-17.

Monitor outputs are provided for the RF output power level, VSWR on the output, power supply voltages, temperature, and the ON/OFF and warm-up cycle status.

The LRU weighs 10 lb and requires 80 watts of power. The estimated MTBF is 70,000 hr.

K. $K_u$-Band Exciter — The $K_u$-band exciter LRU generates a 50 milliwatt $K_u$-band RF signal to drive the $K_u$-band power amplifier, and incorporates provision for either phase or frequency modulating that carrier with digital or analog data. Inputs are provided for digital signals from the ranging unit and a digital data terminal, and for a wideband analog signal from a signal modem. It will output digital data rates up to 10 MBPS and analog signals over the range from 10 Hz to 7.75 MHz. The modulation level extends to 10 MHz peak-to-peak on FM and 2 radians peak-to-peak on PM. A block diagram of the unit is shown in Figure 4.9-18.

Monitor outputs are provided for the control functions, oscillator output, 400-MHz amplifier output modulation level, VSWR, and the RF output level.

The LRU weighs 3 lb and requires 5 watts of primary power. The estimated MTBF is 920,000 hr.

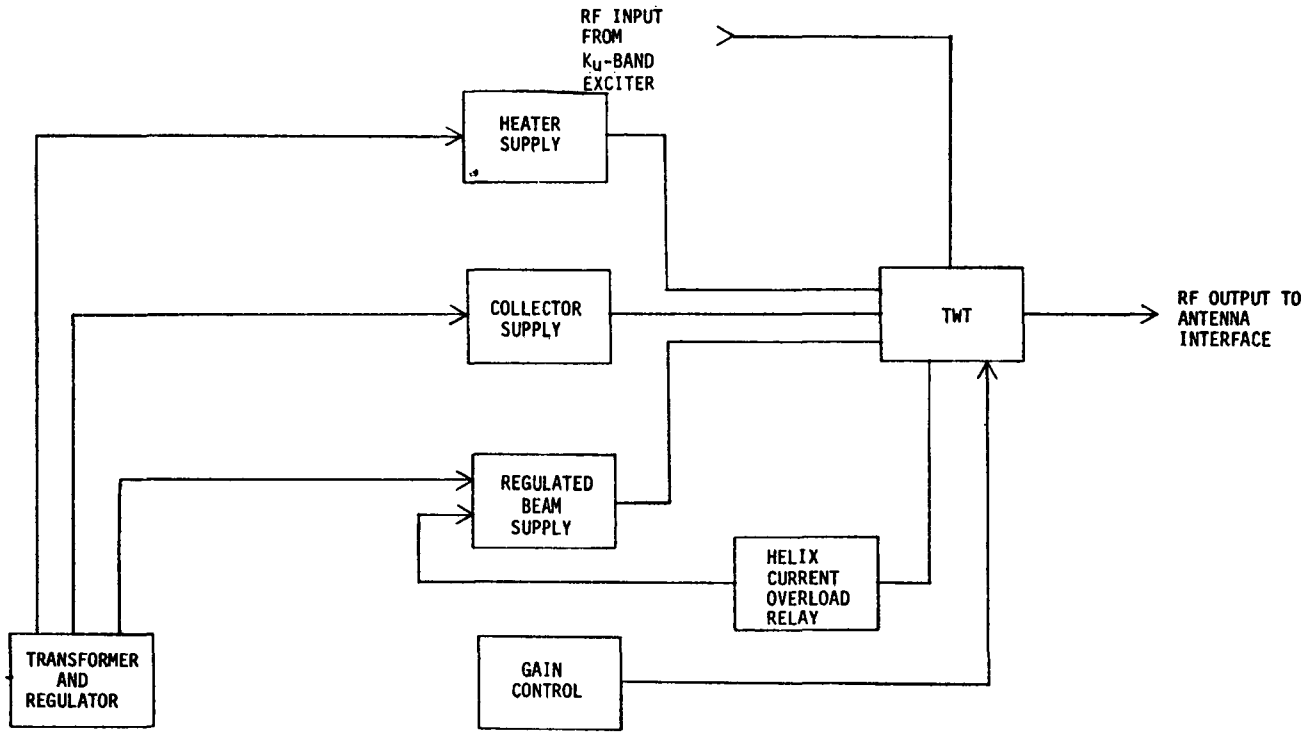


Figure 4.9-17. $K_u$-Band Power Amplifier

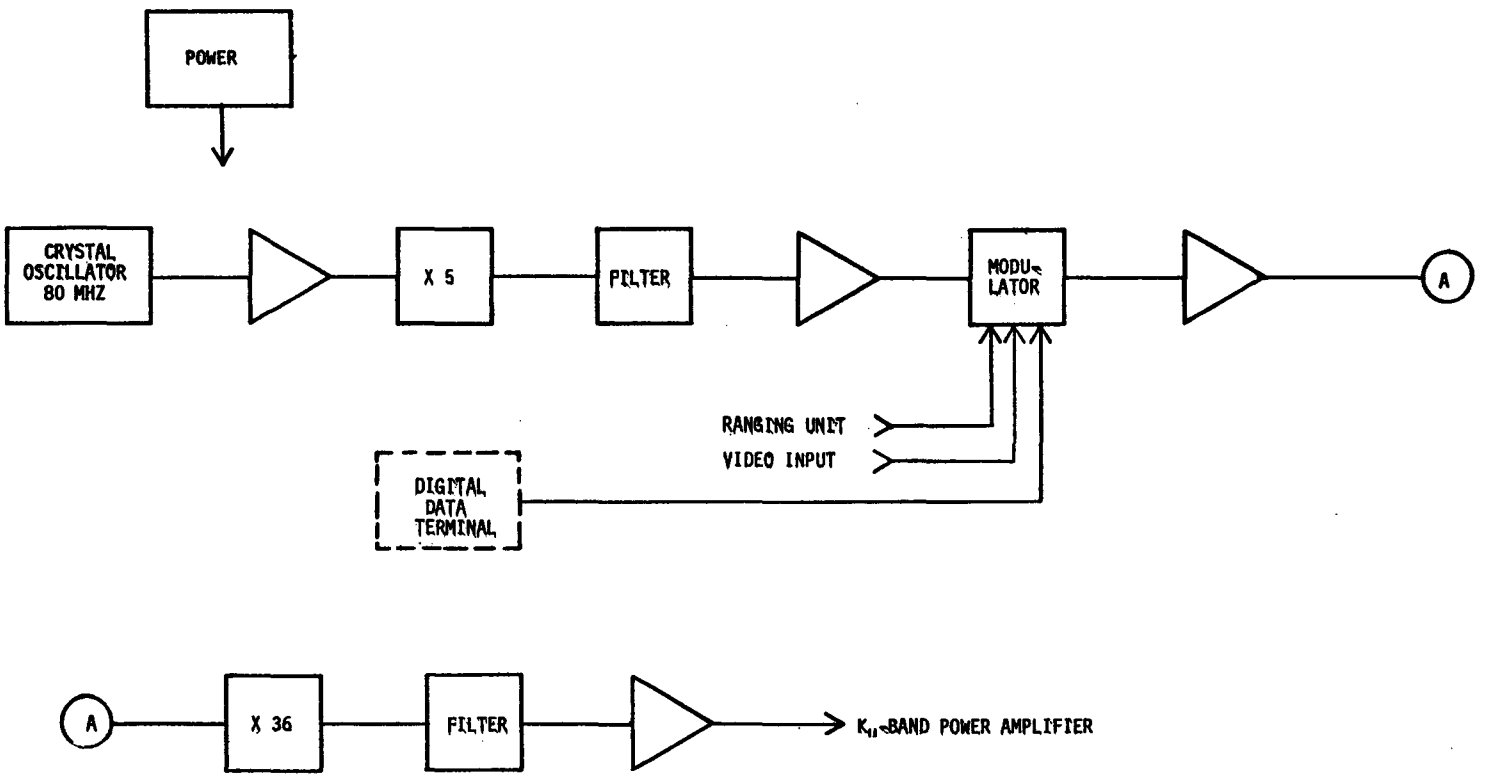


Figure 4.9-18. $K_u$-Band Exciter

L. $K_u$-Band Exciter Modem—The $K_u$-band exciter modem LRU provides an interface between the analog/digital data bus and the $K_u$-band exciter, for the control and processing of analog signals. A block diagram of the unit is shown in Figure 4.9-19. Under direction of commands received from a digital data terminal, the unit sidesteps and inverts the selected television channel so that it appears as a vestigial lower sideband signal with the carrier centered at 6.5 MHz. The FDM voice spectrum which was separated from the rest of the signals on the bus by the 500 kHz lowpass filter, is then added back in to form a composite signal consisting of all the voice channels but just the one selected video channel. The composite signal is then provided as an output to the $K_u$-band exciter.

Monitor outputs are provided to indicate the selected channel, ON/OFF status, and the modulation levels.

The LRU weighs 6 lb and will require 6 watts of power. The estimated MTBF is 300,000 hr.

Ranging Unit

The ranging unit LRU operates in conjunction with the S-band PM transponder (and a cooperative ranging system in the Shuttle) to determine the range to that vehicle. It also operates in conjunction with the $K_u$-band exciter/PA system, cooperative ranging system in the FFM's, and the S-band data receiver (and its associated $K_u$-band front-end circuitry) to determine the range to those vehicles. The unit provides ranging out to 1,850 kilometers with a resolution of 120 meters and an accuracy of ±75 meters. A block diagram of the unit is shown in Figure 4.9-20.

The unit generates a pseudorandom coded NRZ signal and provides it as an output to either one or two transmitters. It accepts the returned PRN code from one of five receivers and from the delay

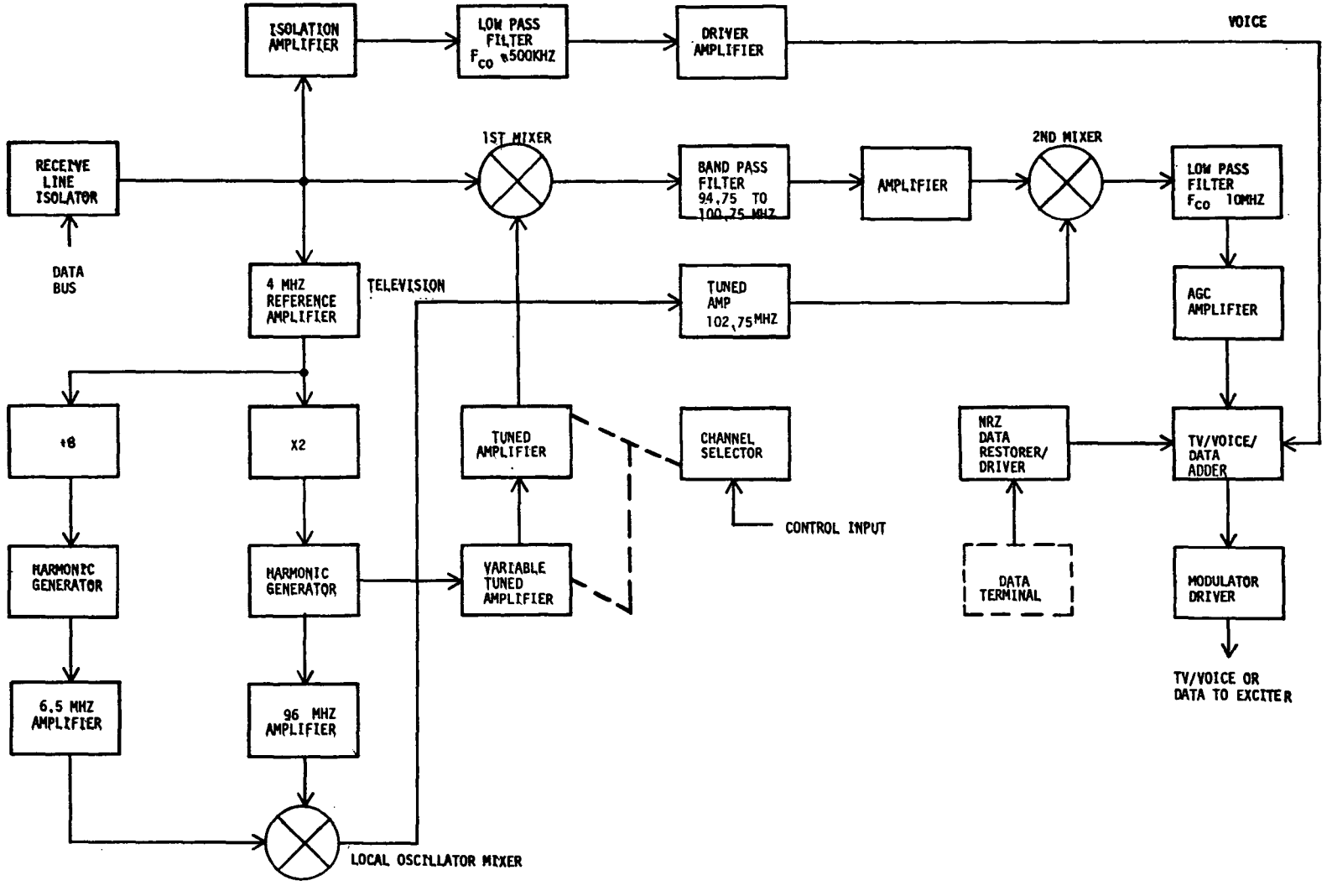


**Figure 4.9-19. $K_u$-Band Exciter Modem**

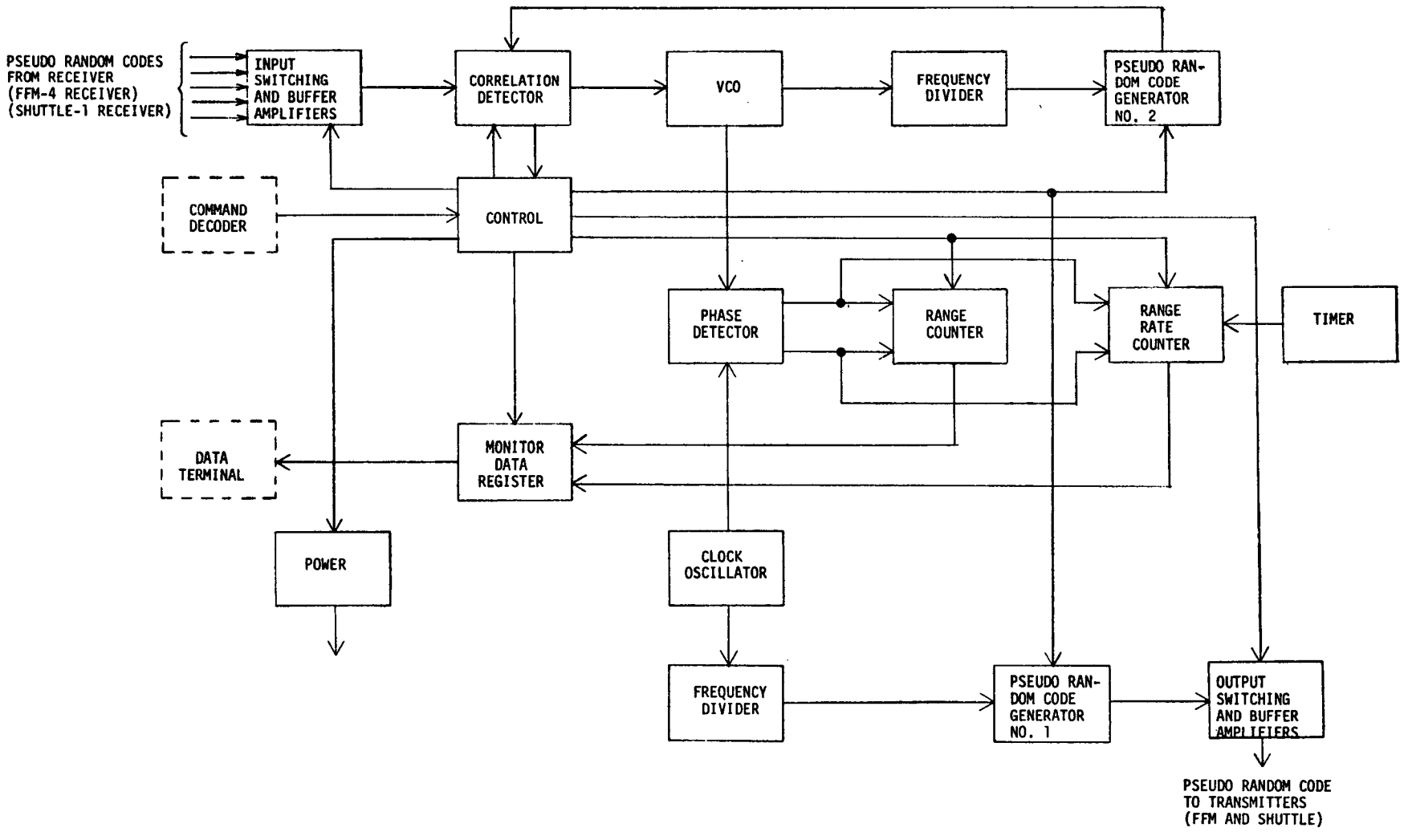


Figure 4.9-20. Ranging Unit

as a function of time determines range and range rate to the cooperating vehicle. The range and range rate information is provided as an output to a digital data terminal.

Monitor outputs are provided for the control functions, code and clock output levels, selected transmitter/receiver combination, and the ranging acquisition/tracking status.

The unit weighs 7 lb and uses 11 watts of power. The estimated MTBF is 225,000 hr.

4.9.3.1.3 Internal Communications System Description

Functionally, the intercommunications system for the modular space station closely resembles a standard Bell Telephone system. Except for special circuits which may be deliberately locked out of some terminals to restrict operational access, each terminal unit can obtain private access to any other terminal unit by simply "dialing" it. Conference capability is provided under control of the called terminal.

Communications between the various terminal units are carried on a common analog/digital data bus in a frequency division multiplex (FDM ) format. Thirty-six 300 to 3,000 Hz channels are provided. Each of the decks in the Space Station will have one of these channels assigned to it for a public address function unique to that deck. In addition, the baseband 300 to 3,000 Hz channel on the bus is common to all terminals on all decks for use as a public address or emergency "all stations" circuit.

As described previously, all the features of the intercom system are extended to the ground when $K_u$-band DRSS communications are available, so that a ground terminal can "dial" any terminal in the Space Station and vice versa.

The voice bandwidth channels can, of course, be used for data phone, facsimile, or teletype service if so desired.

In addition to the voice channels, the audio terminal units are configured to receive any one of three wide-band (50 Hz to 15,000 Hz) channels assigned to entertainment use.

The intercommunications signals are distributed throughout the Space Station on an analog bus which also carries television information. The format of signals on the bus is shown in Figure 4.9-21. The voice signals are transmitted in the form of single-sideband suppressed carrier amplitude modulation on channels spaced 4 kHz apart in the band from 60 to 204 kHz. The entertainment signals are transmitted in the form of frequency modulation on subcarriers of 1.0, 1.35, and 1.7 MHz.

The selection of the FDM format for the Space Station internal communication was the subject of tradeoff studies early in the Space Station program and a subsequent reevaluation study for the Modular Space Stations. The FDM system was chosen (among other reasons) for the ease with which it could grow and interface with added terminals as the Space Station grew in modular increments.

As the station is built up, expansion of the intercommunication system is accomplished the instant the analog bus of the new section is tied to that of the old, and all that is required is expansion of the directories to include the added terminal numbers.

Physically, each audio terminal unit is an LRU, and at this time includes the channel selection mechanism (touch-tone keys). Electrical interfaces are provided for primary power, connection to the analog bus, and connectors to a microphone and headphone/speaker or other terminal equipment such as a teletype or dataphone station. The unit would weigh 4 lb and require 4 watts of power. The MTBF is estimated as 188,000 hr.

In addition to channel select, controls would be included for VOX/PTT operation, conference mode selection, and emergency alert tone actuation.

A block diagram of the audio terminal unit is shown in Figure 4.9-22.

(1) Public Address, Emergency Call, 300 to 3,000 Hz
(2) Telephone Carrier Reference, 4,000 Hz sine wave
(3) Emergency Call Tone, 5,000 Hz Sine Wave
(4) Emergency Alert Tone, 6,000 Hz Sine Wave
(5) **36** Telephone Channels, 60 kHz to **204** kHz, SSB-Sc-AM 300 to 3,000 Hz Audio
(6) 3 Entertainment channels, 1.0 MHz ± 75 kHz, 1.35 MHz ± 75 kHz, 1.7 MHz ± 75 kHz
(7) Television Carrier Reference, 4 MHz Sine Wave
(8) to (15) Television and Video Channels, 4.75 MHz Baseband 6 MHz Vestigial Sideband AM, Carrier Frequencies Space at 8 MHz Intervals starting with 8 MHz, 2 MHz Guard Band.
(16) Onboard Generated Test Channel, 4.75 MHz Baseband, 6 MHz Vestigial Sideband AM, Located in the Interval of 70.75 to 76.75 MHz.

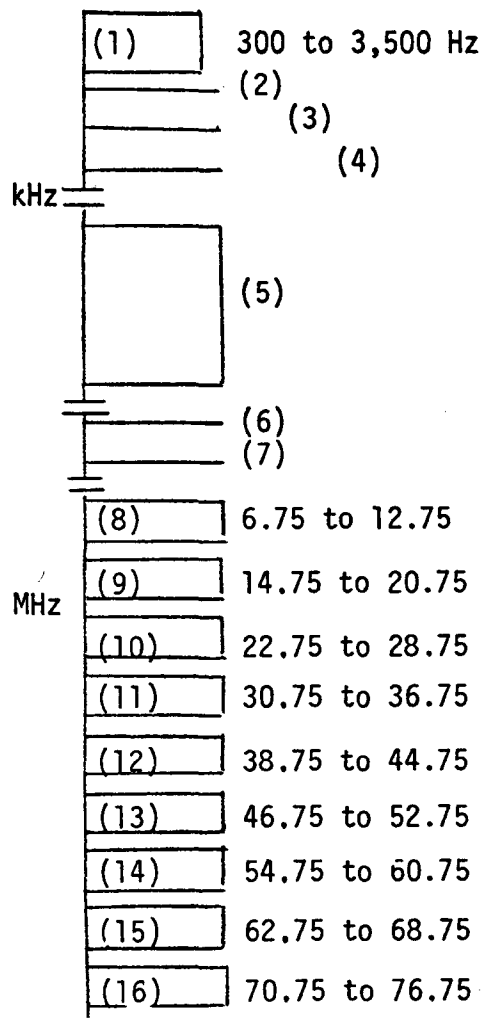


**Figure 4.9-21. Data Bus Channel Frequency Allocations**

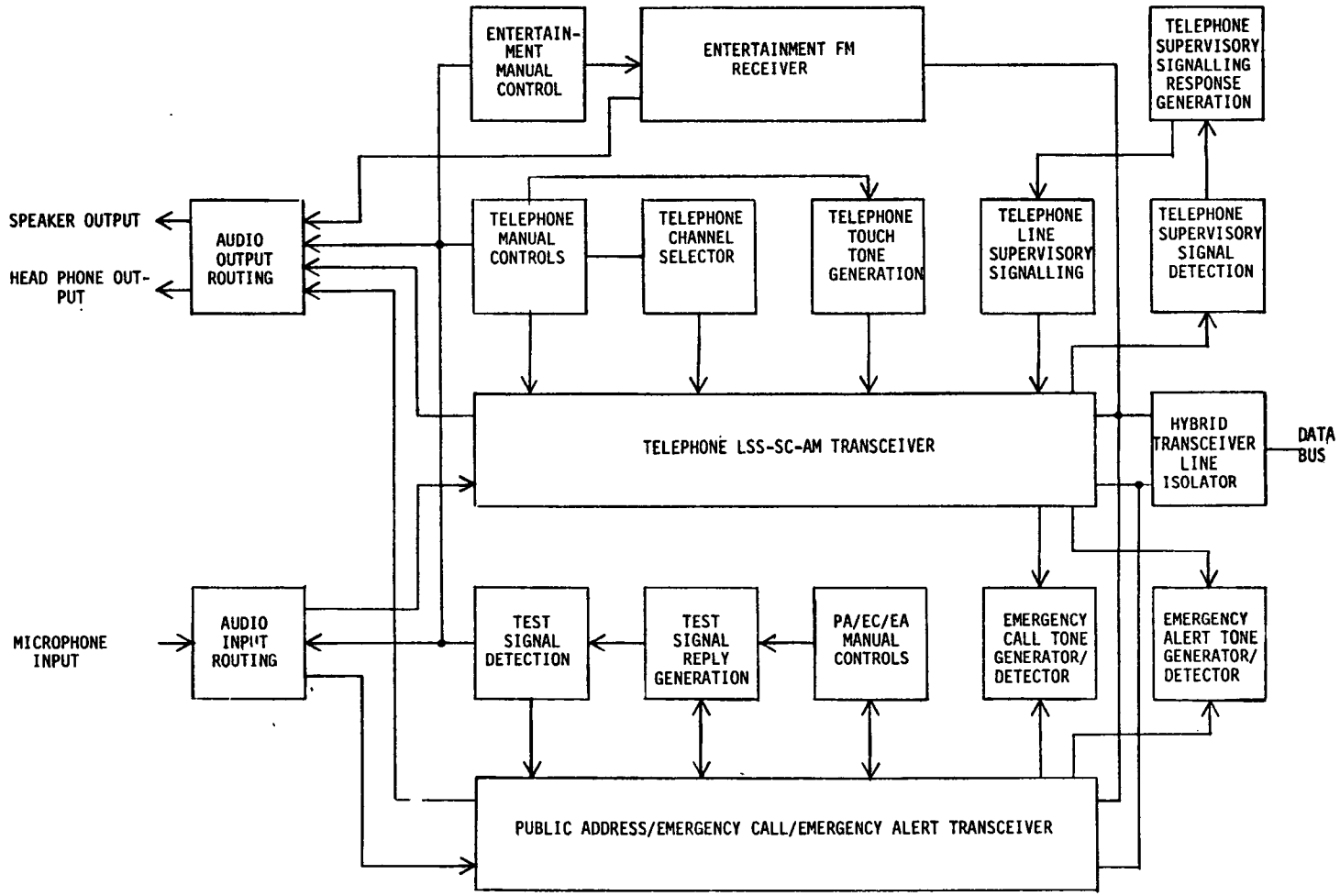


**Figure 4.9-22. Audio Terminal Unit**

The heart of the voice channel system is the telephone LSB-SC-AM transceiver, which is tunable (by means of 10 push-button touch-tone matrix) in 4 kHz increments to any of the 36 channels located in the band from 60 to 204 kHz. The transmit and receive functions are tuned to the same frequency source of their own, they are all normally referenced to a 4 kHz reference tone on the analog data bus. The reference tone is provided by a separate sync tone generator unit. Dialing another station number results in tuning your station to the unique "home" frequency of the provided by a separate sync tone generator unit. Dialing another station number results in tuning your station to the unique "home" frequency of the called station. If the called station is off-hook, a busy signal will be received, and no connection can be made unless the called station selects conference mode. All of the supervisory signals are compatible with Bell-system practice.

Microphone input signals are normally blocked until a VOX threshold level is reached, in order to prevent noise buildup in the channel when several terminals are conferenced. The VOX switch may be overridden in the selectable PTT mode of operation, however. Transmit sidetone is provided.

Automatic gain control (AGC) of received signals is provided in order to maintain nearly constant audio output levels over a wide range of input signal levels.

Operation of the entertainment receiver is straightforward, consisting simply of tuning of the receiver to the selected subcarrier frequency and demodulating the FM signal present on that subcarrier.

The public address/emergency call/emergency alert transceiver provides for transmission and reception of audio signals in the 300 to 3,000 Hz baseband channel on the analog/digital data bus. The microphone VOX/PTT operation and receiver AGC functions described above also apply to this channel.

Actuation of the emergency call control at any station enables that station to transmit to all other stations on the bus. At the same time, a 5-kHz tone is placed on the analog data bus which, when received by any station, causes a visual indicator to be energized.

Actuation of the emergency alert control at any station causes a 6-kHz tone to be transmitted on the analog data bus which, when detected by any station on the bus, causes them to emit an aural alert signal over the headphone/speaker system.

Since the audio terminal units normally interface directly with a human operator who can immediately assess their performance, monitoring is inherent.

Analog Sync/Test Unit

Provisions for automatic testing and generation of synchronizing signals for the internal communications system are incorporated in the analog sync/test unit whose block diagram is shown in Figure 4.9-23.

The unit provides two synchronizing tones as outputs on the analog/digital data bus, a 4-kHz reference for the audio terminal units, and a 4 MHz reference for the television signals on the bus. Both of these reference signals on the bus are continually monitored for amplitude and frequency stability, and an out-of-tolerance condition will automatically result in replacing the faulty signal on the bus with a signal from backup generators contained within the unit. The status of the reference signals is provided as a monitor output.

In addition to the generation of synchronizing signals, the unit provides two basic test functions. For the television receivers on the bus, it provides (on a dedicated test channel as shown in Figure 4.9-21) a selection of test patterns for alignment and checkout.

For checkout of the audio terminal units, a double loop test is established, in which the test unit transmits a test tone on the home channel frequency of a selected audio terminal unit and in reply receives a test tone bank on the baseband channel. A loop is also established over the same channels in the other direction to verify the operation of the other transmit and receive functions. Either manual selection of the channel to be tested or automatic sequencing through all channels can be accomplished. The test unit automatically evaluates the status of the channel and provides the data as an output.

The sync/test unit is a single LRU weighing 5 lb. The power consumption will not exceed 10 watts, and the estimated MTBF is 174,000 hr.

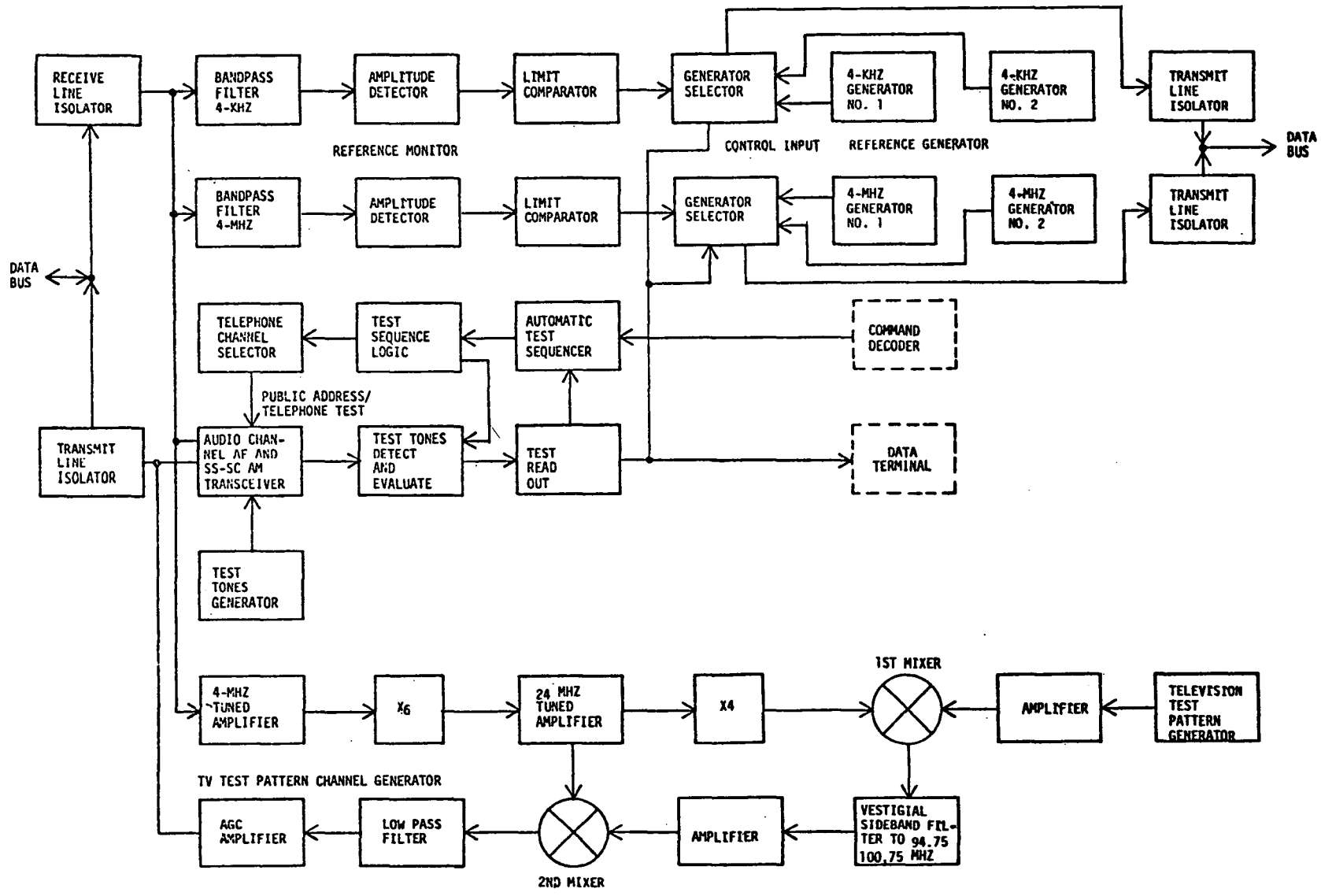


**Figure 4.9-23. Analog Sync/Test Modem**

4.9.3.2 Interfaces

The communications subsystem interfaces with the other program and project elements and with the other Space Station subsystems are described in the following sections.

4.9.3.2.1 External Interfaces

The radio frequency interfaces between the ISS and the ground (either directly or indirectly via the DRSS, the Shuttle Orbiter, and EVA crewman) have been described in the previous section and will not be repeated here. During ISS buildup, the Space Station module analog data bus must be connected to the Shuttle Orbiter intercom system in order to provide voice communications between the module activation crew and the Orbiter crew.

Voice communications between the ISS and attached RAM's and Logistics Modules are provided by the interconnected analog data buses. The reference signals required for proper operation of the audio terminal units located in the RAM's and Logistics Modules are provided by the analog sync/test unit located in the Crew/Operations Module.

Experiment data generated in the attached RAM's will be transferred via the interconnected digital data bus. Therefore, an RF interface with these modules is not required.

4.9.3.2.2 Internal Interfaces

The transmitters and receivers associated with each antenna system are located as close to the antennas as possible in order to minimize the transmission line losses. Therefore, there is no transfer of RF energy between modules. All voice, video, and digital data are transferred between modules on either the analog or digital data bus.

The RF systems located in the Power/Subsystems and Crew/Operations Modules interface primarily with the data management subsystem (DMS). The remote data acquisition units (RDAU's) provide discrete command outputs which control the operation of the RF and antenna systems. The RDAU's also accept analog and bilevel outputs which are utilized for monitoring operational status or readiness, verifying performance, and isolating faulty units.

Digital words are provided by digital data terminals which select the optimum high- and low-gain antennas, and control the pointing of the high-gain antennas during a relay satellite acquisition or handover. Digital experiment data is provided to the transmitters by a digital data modem. Video information interfaces directly with the analog data bus and is routed to or from video recorders, cameras, and monitors.

Guidance, navigation, and attitude information is required by the computer in order to select and point the antennas. However, there is no direct interface with the subsystem providing this information.

4.9.3.3 Operations

The communications subsystem will support Space Station operations during deployment, station buildup prior to manning, and normal manned on-orbit operations.

4.9.3.3.1 Deployment Operations

During the period when the Space Station modules are in the process of being activated prior to being released, voice communications will be provided between crewman in the deployed module and the Shuttle Orbiter crew. The baseband voice channel normally utilized for public address or emergency voice communications is used to provide this capability. This capability is available in all modules.

Prior to deployment of the Power/Subsystems Module, the VHF and S-band transmitters, receivers, and low-gain antenna system will be checked out to verify performance. After deployment, and open-loop S-band RF link will be employed as a backup to the hardline voice communications.

Prior to deployment of the Crew/Operations Module, the $K_u$-band equipments will be checked out. After module deployment, the three high-gain antenna masts will be raised to their normal positions. As a minimum, a visual inspection of the antennas will be made to insure that no physical damage has occurred. Backup RF communications are not available for this module until it is docked to the Power/Subsystems Module.

The GPL does not contain any RF equipment; however, hardline voice communications are available as in the previous modules orbited.

4.9.3.3.2 Buildup Operations

Prior to launch of the Crew/Operations and subsequent modules, the module(s) already in orbit will be checked out by the ground via the VHF and S-band RF equipment located in the Power/Subsystems Module to verify vehicle status and safety. Uplink command capability will be available for control and to effect subsystem reconfiguration if necessary. Orbit determination will be provided by the ground tracking stations utilizing the coherent turnaround capability of the S-band PM transponder.

During Shuttle Orbiter rendezvous and docking operations with the unmanned Station, the Station is capable of receiving command and control information, transmitting telemetry status data, and turning around a Shuttle Orbiter initiated ranging code at ranges up to 300 km over the S-band link. After docking, the S-band RF system can provide open-loop backup voice communications. Near-continuous two-way data communications contact with the ground via the VHF link through the DRSS are also available to support buildup operations. Due to the low data rates encountered during this phase, operation of the high-gain antenna system is not required.

While the Station is unmanned, there are two methods for controlling the operations of the communications subsystem. The first method requires that both the VHF and S-band receivers be left in a stand-by or "ON" condition. The transmitters are then energized by ground commands. The second method utilizes stored program commands generated by the computer to cycle operation of the transmitters and receivers on a scheduled basis.

4.9.3.3.3 Normal On-Orbit Operations

During normal on-orbit operations, the communications subsystem provides for the transmission and reception of the following types of information.

A. Direct Ground Link
   1. Command, voice, and ranging reception.
   2. Telemetry, voice, and ranging transmission.

B. DRSS Link

1. Television, multiple-voice, entertainment audio, digital data, and ranging reception.
2. Television, experiment data, multiple-voice, digital data and ranging transmission.

C. Shuttle Orbiter Link

1. Voice, command, and ranging reception.
2. Voice, telemetry, and ranging transmission.

D. EVA Link

1. Voice and Biomedical Telemetry Reception.
2. Voice Transmission.

The primary function of the direct to ground communications link during normal operations will be to track the Space Station and to provide position updating information. The command, voice, telemetry, and experiment data dumps can be utilized during relay satellite system down periods or outages. It is expected that ground station support can be phased out after the operational procedures required for communications with the DRSS are established to a high degree of confidence.

The high-gain antenna system is utilized primarily for support of experiment operations by providing a wideband uplink and downlink capability. Experiment data transmissions can be handled on a scheduled basis or can be called up on short notice by the VHF voice link through the relay satellite. In order to establish a solid wideband RF link with the DRSS, it will be necessary to perform a cooperative high-gain acquisition procedure.

During manned operations, the VHF link through the DRSS will primarily be utilized for administrative and procedural voice and low data-rate traffic between the station commander and ground flight controller. In addition to the data and ranging links described in section 4.9.3.1.2, duplex voice communications will also be available during Shuttle Orbiter rendezvous and docking operations. Simultaneous voice, data, and ranging capability can be provided at ranges up to 200 km.

During EVA operations, duplex voice communications are available between the station commander and EVA crewmen. The capability to receive biomedical and pressure suit telemetry information which can be displayed on the display and control console is included.

The internal communications system provides voice communications within the ISS and the docked modules. Normal voice communications are provided by an onboard telephone which is compatible with and similar in operation to the Bell Telephone system. Public address and individual module paging capability is also provided. A "direct dial" capability is also available between personnel on the Station and the ground when the high-gain antennas are operating.

4.9.3.3.4 Contingency Operations

During contingency operations the crew will have the capability to communicate with the ground directly on an intermittent basis using the S-band system or through the DRSS on a nearly continuous basis using the VHF system. The operation of the S-band or VHF transmitting and receiving equipments can be controlled by either the portable display and control consoles or by hardwired control lines which are available at each docking port. Voice communications are available from any of the core modules or attached modules by utilizing the audio terminals which access the transmitters and receivers through the analog data bus. In addition, hardwired voice capability to the VHF and S-band equipments is available at each docking port. Duplex voice and low-rate communications utilizing the S-band system will consume a peak prime power of 52 watts. The VHF system will require a peak power of 112 watts. If only VHF voice is required, then 67 watts of prime power will be required.

4.9.3.4 GSS Considerations

The main impact on the baseline ISS communications subsystem is the requirement to support free-flying experiment modules (FFM's). The location and size of the FFM station-keeping loop will determine the maximum range of which communications are required and the type of coverage which must be provided by the Space Station antenna system. The number of modules that are required to be supported simultaneously will also influence

the antenna system coverage (beamwidth) and determine the number of receivers required. At a minimum, the GSS communications subsystem must provide the following capabilities.

A. Transmit command control information and a ranging code.

B. Receive the turned-around ranging code and determine FFM range and range rate.

C. Receive video and digital experiment data and vehicle status data.

During the 33-ft Space Station study, it was determined that a $K_u$-band medium-gain antenna system having a gain of 24 db and a beamwidth of 10 deg was required to support the FFM's in the station-keeping that was located behind the Space Station and had a maximum range of 1,850 kilometers. In the normal horizontal attitude, the high-gain antenna system located on the Crew/Operations Module would be blocked by the solar arrays on the second power module. This blockage can be eliminated by locating a medium-gain antenna system on the end of the solar array mast. The additional $K_u$-band power amplifier, exciter, and low-noise receivers and the S-band video and data receivers would also be located in the second Power/Subsystems Module. It is estimated that the additional equipment required to support the FFM's would weigh less than 200 lb.

The additional GSS modules will contain additional audio terminal units, which in turn will require more dedicated audio channels on the analog data bus. The ease with which the frequency division multiplex (FDM) system could be expanded was one reason an FDM system was chosen over a TDM system. It is estimated that 12 additional audio terminals and 12 additional channels on the analog data bus will be required to support operations in the additional Crew/Operations and Power Subsystems Modules.

### 4.9.4 Design Analyses and Trade Studies

#### 4.9.4.1 High-Gain Antenna System Blockage Analysis

The purpose of the high-gain antenna system blockage analysis was to assess the amount of communications outage time with the DRSS that can be expected. The communications link between the DRSS may be broken because of one or more of the following orbit or configuration dependent factors.

A. The communications line-of-sight (LOS) may be blocked by one of the docked modules.

B. The line-of-sight may be blocked by the large solar panels.

C. The Earth blocks the line-of-sight to one or both of the relay satellites during each orbit.

D. Some amount of outage time may occur during antenna, RF, and data acquisition and possibly during hand-over.

E. The gimbal system used for positioning the antenna may experience gimbal lock or rate limitations due to the keyhole effect when certain tracking trajectories are encountered.

A system design goal is the limitation of outage time due to all of the above effects to less than 10 percent of the total time.

A Space Station orbit inclination of 55 deg and altitude of 455 km were used in the analysis. Figure 4.9-24 shows the Earth occultation criteria used. A minimum angular separation of 5 deg between the line-of-sight to the relay satellite and the line tangent to the Earth's surface was used so that atmospheric refraction and attenuation effects and multipath interference will not affect link performance. Utilization of the 5 deg angular separation results in a LOS to the relay satellite that lies 15 deg below the Space Station local horizontal at Earth occultation. The maximum percentage of the time that the Earth blocks the LOS to two satellites separated by 130 deg as a function of the angular separation discussed above is shown in Figure 4.9-25. It can be seen that a maximum blockage due to the Earth of 8.6 percent results from using the 5 deg angular separation.

The blockage due to docked modules was isolated from considerations of orbital mechanics by developing a computer program which generates a series of locations for the position of the synchronous relay satellite that are equivalent to a complete elevation and azimuth scan. The Space Station coordinates used are described as follows:

A. The +X axis is aligned with the vehicle axis and is in the direction of the Space Station motion.

B. The +Z axis is defined by the vector from the center of the Earth.

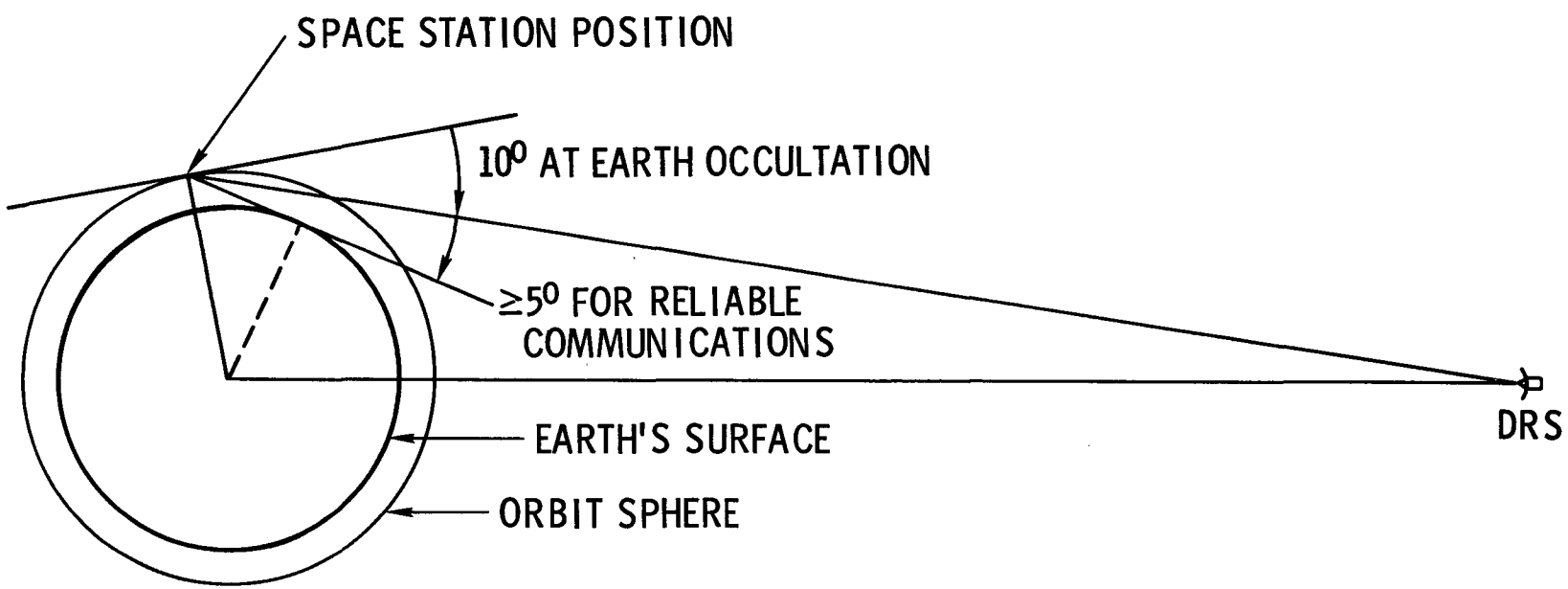


Figure 4.9-24. Space Station Orbit Geometry

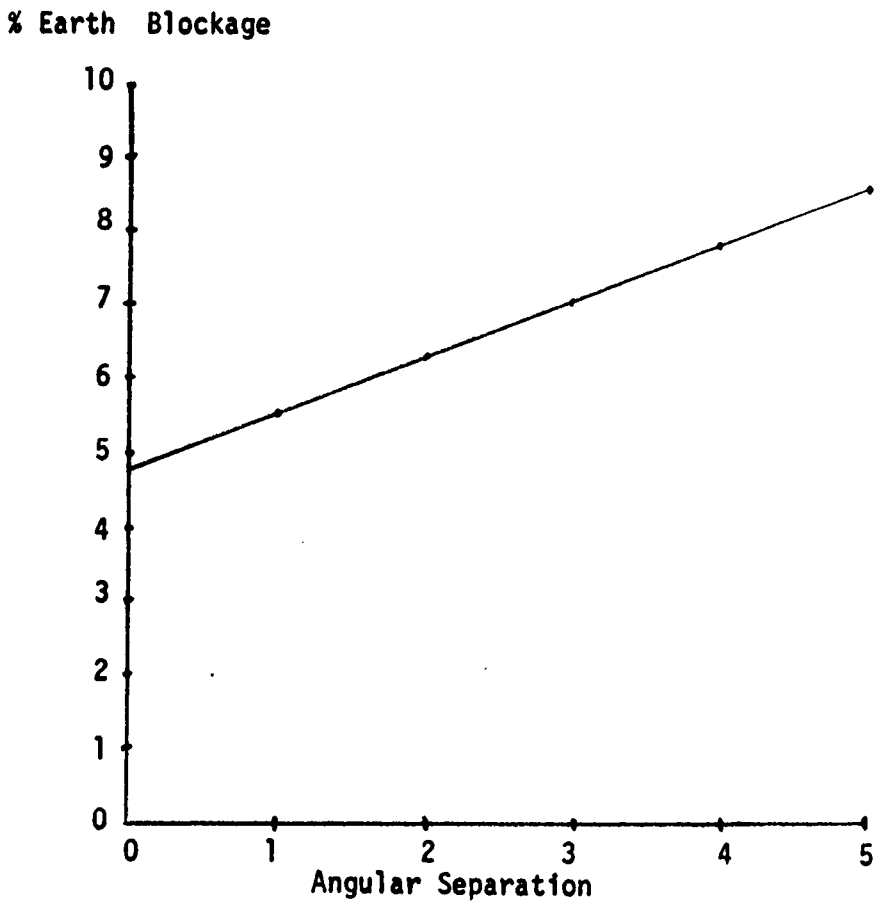


**Figure 4.9-25. Earth Blockage as a Function of Angular Separation**

C. The +Y axis is perpendicular to the Y-Z plane and is directed toward the right if observer is facing forward and standing on the top side of the Space Station.

The Space Station configuration in Figure 4.9-26 shows the locations of the three high-gain antennas. It was assumed in the analysis that all docked modules were 14 ft in diameter and 45 ft long.

The evaluation of module blockage was accomplished in two stages. The first stage was the determination of a four-sided figure which represents the module shape when observed from the antenna position. This four-sided figure was generated for each of the docked modules with respect to each of the docked modules with respect to each of the three antennas. Then using a technique developed by Swofford,[1] the interception of the vector from the antenna location to the relay satellite and the quadrilateral determined above were assessed.

Several antenna locations were investigated with this computer program. For the ISS configuration, the three antennas were configured with 20-ft booms and were mounted 20 ft aft of the intersection of the Power/Subsystems and Crew/Operations Modules at the locations shown in Figure 4.9-26. A data generator was used to create a vector corresponding to the DRS position, and that vector was scanned through all combinations of aximuth (AZ) and elevation (EL) where $0 \leq AZ \leq 180°$ & $0 \leq EL \leq 90°$. The AZ and EL angles are shown in Figure 4.9-27, and the X-Y-Z axes correspond to the spacecraft coordinate system.

Determining the effect of solar array blockage is complicated by the fact that the array position is a function of the sun angle relative to the Space Station attitude and also varies with time and season.

---

[1] Doyle P. Swofford. A Method for the Thermal Analysis of Spacecraft Including All Multiple Reflections and Shading Among Diffuse, Gray Surfaces. NASA TND-5910, July 1970.

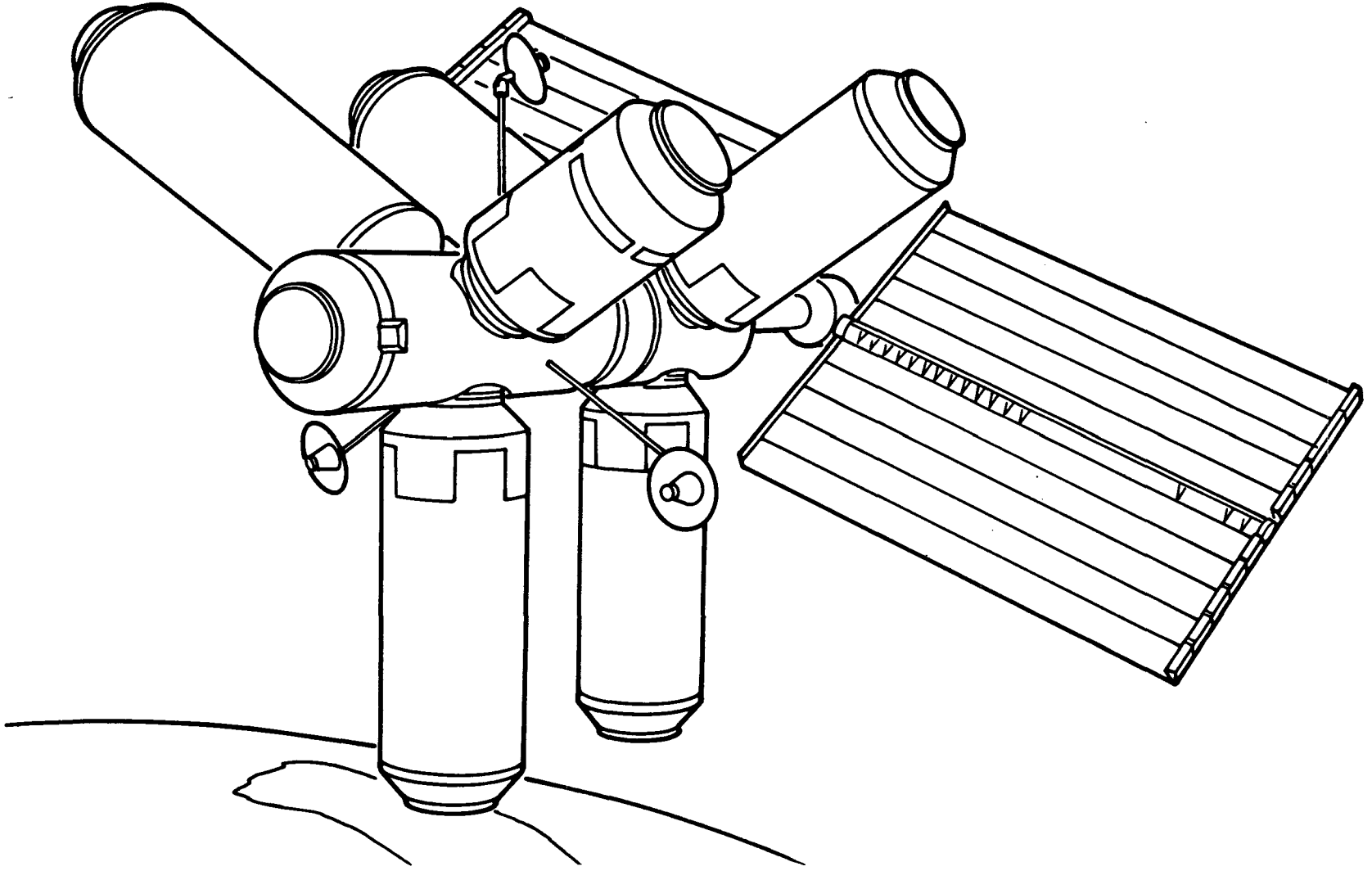

Figure 4.9-26. ISS Antenna Locations

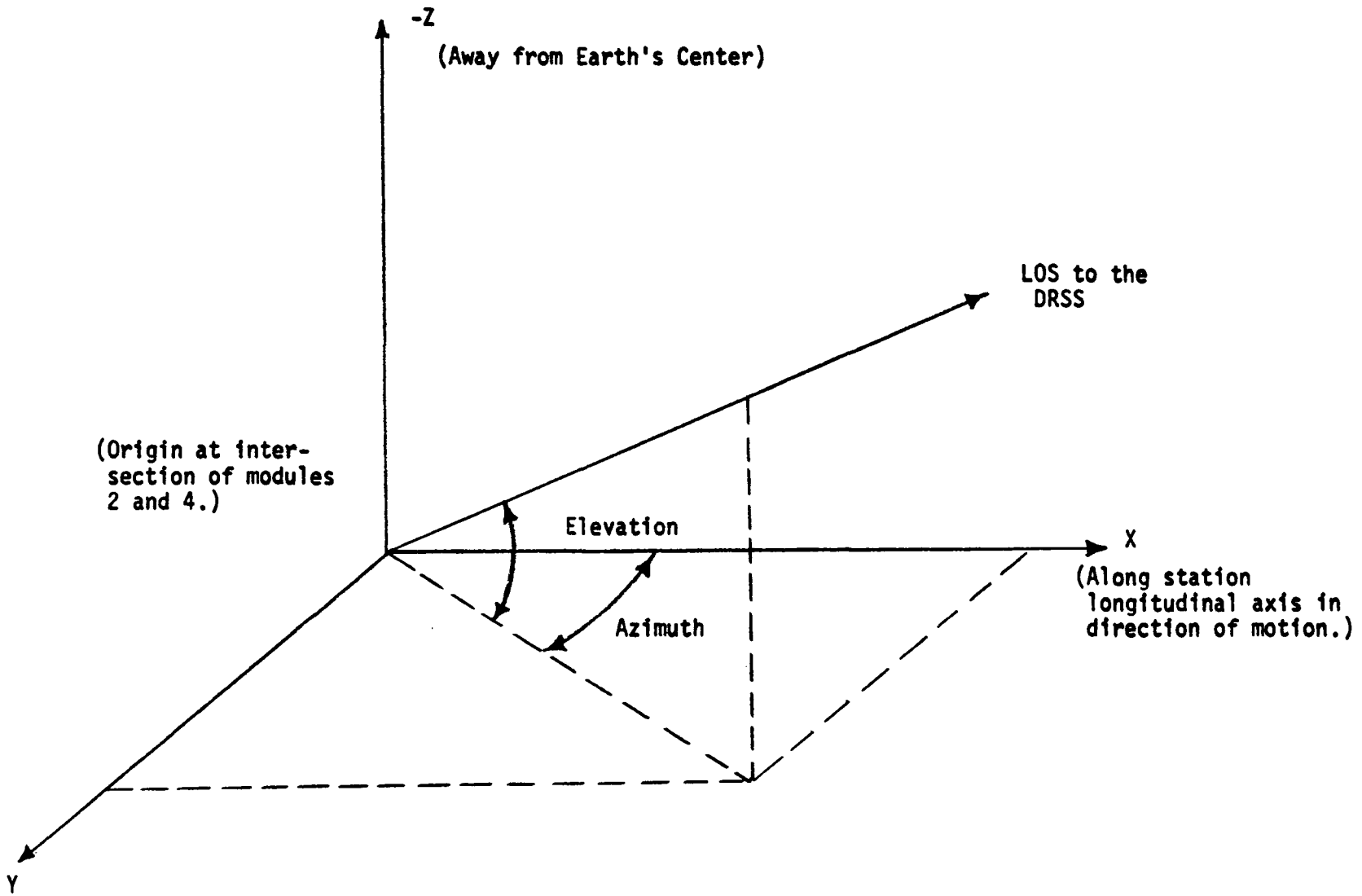


Figure 4.9-27. Azimuth and Elevation Scanning Angles

The "static" blockage due to the solar panels in their worst-case position (normal to the Space Station X-axis) has been computed to be less than 6 percent.

A flight simulation program was also run to determine if there were any viewing angles which were not required to be covered due to orbital constraints and to determine the maximum azimuth and elevation rates that would be encountered. The highest rates observed in the data generated were less than 0.1 deg/second.

A composite plot of the required antenna viewing angles and blockage due to the docked modules and solar arrays for the top and one of the side antennas when the Space Station is in the normal horizontal attitude is shown in Figure 4.9-28.

This plot shows that the antennas are not required to point below an elevation angle 15 deg below the local vehicle horizontal between azimuth angles from 0 to 55 deg and 125 to 180 deg. Pointing of the antennas inside the "semicircle" is not required. This is due to the orbital inclination, and was determined by the flight path simulations. The "clear" area represents simultaneous coverage by both the top and one of the side antennas. The "single-hatched" areas represent those viewing angles where one of the antennas, but not both simultaneously, is blocked by a docked module. The "double-hatched" areas represent blockage of two antennas simultaneously due to the solar arrays. The area shown is the maximum possible area swept by the arrays but does not truly represent the blockage at any given time. In order for the solar arrays to be oriented so that they present the maximum blockage, the sun, the relay satellite, and Space Station X-axis must line up or be nearly in line. A cursory examination of the Space Station trajectory and relay satellite locations revealed that this is a very unlikely occurrence. It can therefore be tentatively concluded that, although the solar arrays blockage envelope appears rather large, the effect of the solar arrays on communications should be minimal.

Based on the results of the blockage analysis, the gimbal system must satisfy the antenna tracking requirements and ideally utilize the Space

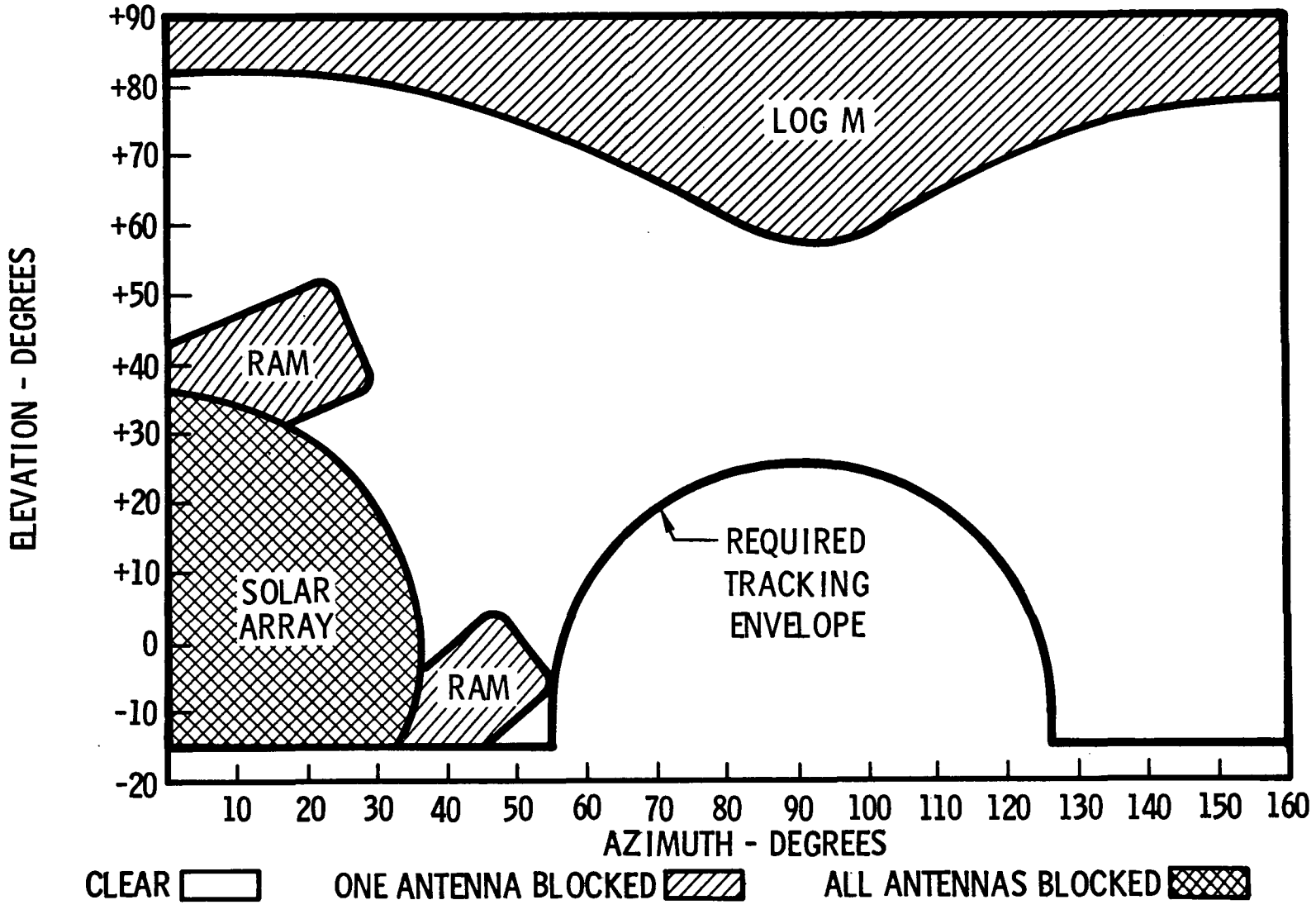


Figure 4.9-28. High-Gain Antenna System Viewing Angles

Station blockage and predicted ephemeric patterns to minimize the "keyhole" problem and simplify the design.

The large blocked area under the Space Station forces a substantially different operation for the side antennas compared with the top antenna.

A. Top Antenna—The top antenna can continuously track a significant percentage of all transmission passes, providing it has the capability to point below the fore-and-aft horizon. This operational constraint can be easily met with an X-Y type antenna mount. The gimbal lock position (keyhole) for this configuration is on the Space Station horizon at ± 90 deg azimuth and is well out of any viewed areas.

B. Side Antennas—The side antennas have almost no requirement to look to the side (in the region of ± 90° AX, 0° EL). A gimbal configuration which uses this constraint to good advantage is an AZ-EL-type mount with the "keyhole" off the end of the mast.

C. General—Neither of the proposed gimballing systems requires unlimited angular freedom. This is an important feature which eliminates a requirement for slip rings to provide signals and power to the outer gimbal or antenna.

Figure 4.9-29 illustrates a polar projection of the antenna coverage when antenna mechanical constraints are imposed.

Based on the results of the study, the following conclusions have been reached:

A. Blockage due to docked modules can be eliminated by antenna switchover during a transmission pass.

B. Blockage due to the solar arrays is not significant.

Computer simulations have also revealed that about 65 percent of the transmission passes can be handled continuously (no handoffs) by one or the other of the side antennas.

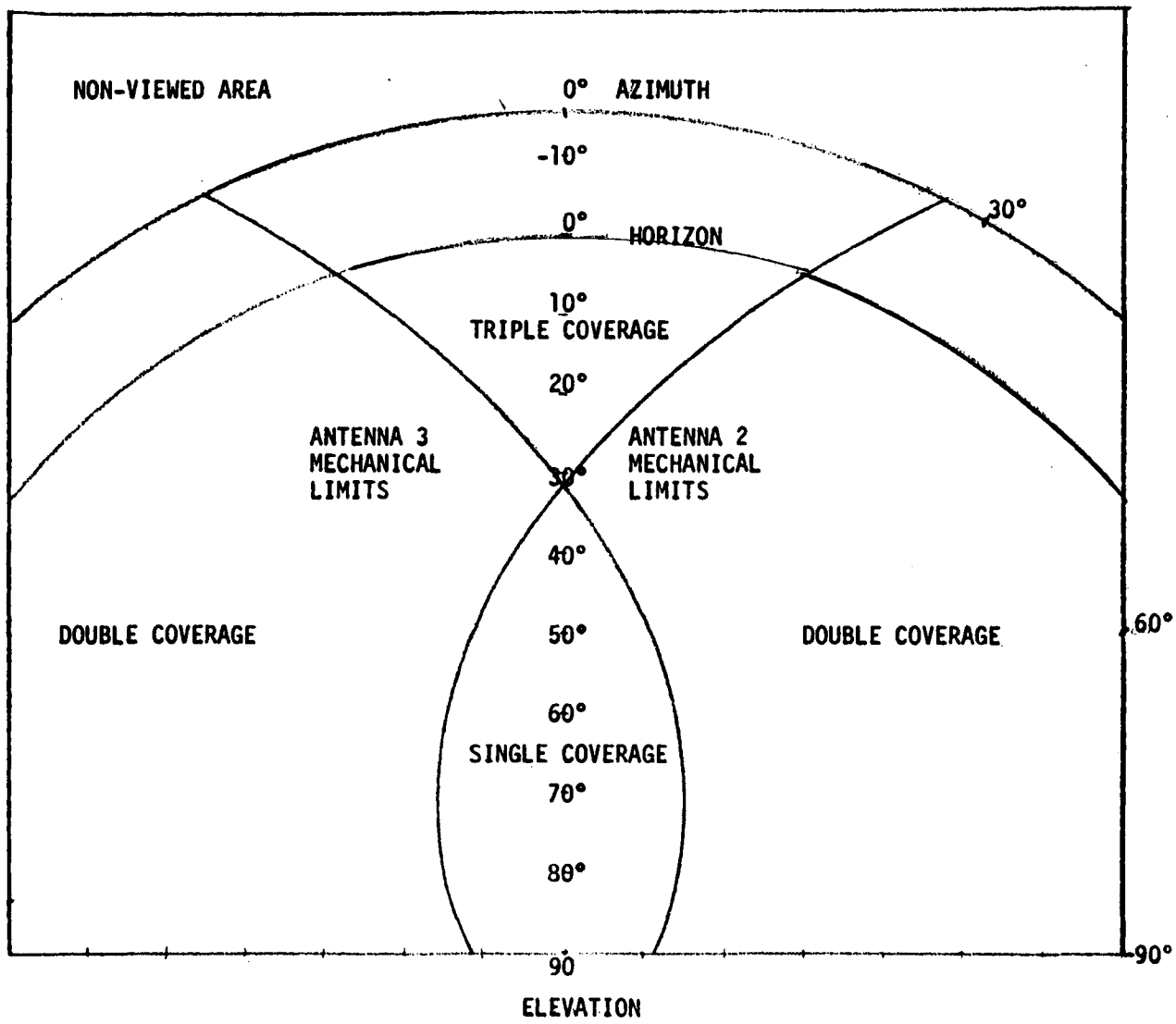


SPACE STATION ANTENNA COVERAGE
ILLUSTRATING
ANTENNA MECHANICAL CONSTRAINTS
(Blockages Not Shown)

**Figure 4.9-29. Space Station Antenna Coverage Illustrating Antenna Mechanical Constraints**

4.9.4.2 Radio Frequency (RF) Link Analysis

During the study, RF link analyses were performed for each of the ISS RF links. The pertinent RF communications characteristics are summarized in Table 4.9-2. This includes type of information and rate, modulation technique, carrier-to-noise spectral density ratio (i.e., a measure of signal quality), RF power output, antenna gain and margin (i.e., signal-to-noise ratio above or below that required for satisfactory link performance).

The RF power requirement for each link is determined by the equivalent isotropically radiated power (EIRP), which is the product of the antenna system gain and the transmitter output power. The per-channel EIRP required for a link is given by:

$$\text{EIRP} = \frac{(C/N_o)LMk}{(G/T)}$$

Expressed in db, this becomes:

$$\text{EIRP (dBW)} = (C/N_o) + L + M + k - (G/T)$$

where

$C/N_o$ = desired carrier power-to-noise density ratio (db-Hz)
$L$ = total losses in the link (db)
$M$ = desired margin (db), usually taken as 3 db
$k$ = Boltzmann's constant: $1.38 \times 10^{-23}$ joules/°K
= -228.6 dbw/Hz°K
$G/T$ = receiver gain-to-temperature ratio (db/°K)

The detailed link calculations for all links except the uplink directly from the ground—which is very strong—are shown in Tables 4.9-6, 4.9-7, 4.9-8, 4.9-9, 4.9-10, and 4.9-11.

It should be noted that all links exhibit positive margins using the stipulated transmitter powers and antenna gains.

Table 4.9-6

RF LINK CALCULATION—ISS TO/FROM DRSS

| Parameter | ISS to DRSS Television | DRSS to ISS Television |
|---|---|---|
| Frequency (GHz) | 14.5 | 13.5 |
| Total $C/N_o$ desired (db-Hz) | 85.0 | 85.0 |
| Link $C/N_o$ desired (db-Hz) | 88.0 | 85.2 |
| Path loss (db) (42, 600 km) | 208.2 | 207.6 |
| Polarization and pointing loss (db) | 1.5 | 1.5 |
| Repeater noise (db) | -- | 0.5 |
| Circuit loss (db) | 3.0 | 2.0 |
| Modulation loss (db) | 0.0 | 0.0 |
| Margin desired (db) | 3.0 | 3.0 |
| Receive G/T (db/°K) | 14.0 | 18.2 |
| EIRP required (dbw) | 61.1 | 53.0 |
| Transmitter antenna gain (db) | 48.8 | -- |
| Transmitter power required (dbw) | 12.3 | -- |
| Transmitter power required (w) | 17.0 | -- |
| EIRP available (dbw) | 61.8 | 52.0 |
| Excess margin (db) | +0.7 | -1.0 |

Table 4.9-7

RF LINK CALCULATION—ISS TO/FROM DRSS

| Parameter | ISS to DRSS | | DRSS to ISS | |
|---|---|---|---|---|
| Frequency (GHz) | 0.136 | 0.136 | 0.130 | 0.130 |
| Total $C/N_o$ desired (db-Hz) | 50.8 | 51.6 | 50.8 | 51.6 |
| Link $C/N_o$ desired (db-Hz) | 53.8 | 54.6 | 51.0 | 51.8 |
| Path loss (db) (42,600 km) | 167.7 | 167.7 | 167.3 | 167.3 |
| Polarization and pointing loss (db) | 4.0 | 4.0 | 4.0 | 4.0 |
| Repeater noise (db) | -- | -- | 0.5 | 0.5 |
| Circuit loss (db) | 2.0 | 2.0 | 2.0 | 2.0 |
| Modulation loss (db) | 0.0 | 0.0 | 0.0 | 0.0 |
| Margin desired (db) | 3.0 | 3.0 | 3.0 | 3.0 |
| Receive G/T (db/°K) | -13.4 | -13.4 | -27.0 | -27.0 |
| EIRP required (dbw) | 15.3 | 16.1 | 26.2 | 26.0 |
| Transmitter antenna gain (db) | +3.0 | +3.0 | -- | -- |
| Transmitter power required (dbw) | 12.3 | 13.1 | -- | -- |
| Transmitter power required (w) | 17.0 | 20.4 | -- | -- |
| EIRP available dbw) | 13.0 | 13.0 | 30.0 | 27.0 |
| Excess margin (db) | +0.7 | -0.1 | +3.8 | +1.0 |

Table 4.9-8

RF LINK CALCULATION—ISS TO SHUTTLE

| | Voice | Data | Ranging |
|---|---|---|---|
| Frequency (GHz) | 2.3 | 2.3 | 2.3 |
| Total $C/N_o$ desired (db-Hz) | 50.8 | 51.6 | 32.0 |
| Link $C/N_o$ desired (db-Hz) | 50.8 | 51.6 | 32.0 |
| Path Loss (db) (200 km) | 145.8 | 145.8 | 145.8 |
| Polarization and pointing loss (db) | 4.0 | 4.0 | 4.0 |
| Repeater noise (db) | -- | -- | 1.0 |
| Circuit loss (db) | 4.0 | 4.0 | 4.0 |
| Modulation loss (db) | 7.3 | 6.2 | 18.2 |
| Margin desired (db) | 3.0 | 3.0 | 3.0 |
| Receive G/T (db/$^{o}$K) | -27.0 | -27.0 | -27.0 |
| EIRP required (dbw) | 13.3 | 13.0 | 6.4 |
| Transmitter antenna gain (db) | 0.0 | 0.0 | 0.0 |
| Transmitter power required (dbw) | 13.3 | 13.0 | 6.4 |
| Transmitter power required (w) | 21.4 | 20.0 | 4.4 |
| EIRP available (dbw) | 13.0 | 13.0 | 13.0 |
| Excess margin (db) | -0.3 | 0.0 | +6.6 |

Table 4.9-9

RF LINK CALCULATION—SHUTTLE TO ISS

| Parameter | Voice | Data | Ranging |
|---|---|---|---|
| Frequency (GHz) | 2.1 | 2.1 | 2.1 |
| Total $C/N_o$ desired (db-Hz) | 50.8 | 42.4 | 32.0 |
| Link $C/N_o$ desired (db-Hz) | 50.8 | 42.4 | 32.0 |
| Path loss (db) (200 km) | 145.0 | 145.0 | 145.0 |
| Polarization and pointing loss (db) | 4.0 | 4.0 | 4.0 |
| Repeater noise (db) | -- | -- | -- |
| Circuit loss (db) | 4.0 | 4.0 | 4.0 |
| Modulation loss (db) | 3.6 | 11.8 | 20.1 |
| Margin desired (db) | 3.0 | 3.0 | 3.0 |
| Receive G/T (db/°K) | -30.0 | -30.0 | -30.0 |
| EIRP required (dbw) | 11.8 | 11.6 | 9.5 |
| Transmitter antenna gain (db) | +3.0 | +3.0 | +3.0 |
| Transmitter power required (dbw) | 8.8 | 8.6 | 6.5 |
| Transmitter power required (w) | 7.6 | 7.2 | 4.5 |
| EIRP available (dbw) | 13.0 | 13.0 | 13.0 |
| Excess margin (db) | +1.2 | +1.4 | +3.5 |

Table 4.9-10

RF LINK CALCULATION—ISS TO GROUND (DIRECT)

| Parameter | Video | Voice | Data | Ranging |
|---|---|---|---|---|
| Frequency (GHz) | 2.3 | 2.3 | 2.3 | 2.3 |
| Total $C/N_o$ desired (db-Hz) | 83.0 | 53.0 | 60.5 | 32.0 |
| Link $C/N_o$ desired (db-Hz) | 83.0 | 53.0 | 60.5 | 32.0 |
| Path loss (db) (2,200 km) | 166.6 | 166.6 | 166.6 | 166.6 |
| Polarization and pointing loss (db) | 4.0 | 4.0 | 4.0 | 4.0 |
| Repeater noise (db) | -- | -- | -- | 1.0 |
| Circuit loss (db) | 2.0 | 2.0 | 2.0 | 2.0 |
| Modulation loss (db) | 0.0 | 11.0 | 3.5 | 25.3 |
| Margin desired (db) | 3.0 | 3.0 | 3.0 | 3.0 |
| Receive G/T (db/$^{o}$K) | 19.7 | 19.7 | 19.7 | 19.7 |
| EIRP required (dbw) | 10.3 | -8.7 | -8.7 | -14.4 |
| Transmitter antenna gain (db) | 0.0 | 0.0 | 0.0 | 0.0 |
| Transmitter power required (dbw) | 10.3 | -8.7 | -8.7 | -14.4 |
| Transmitter power required (w) | 10.7 | 0.14 | 0.14 | 0.04 |
| EIRP available (dbw) | 13.0 | 0.0 | 0.0 | 0.0 |
| Excess margin (db) | +2.3 | +8.7 | +8.7 | +14.4 |

Table 4.9-11

RF LINK CALCULATION—ISS TO/FROM EVA

| Parameter | ISS to EVA | EVA to ISS | |
|---|---|---|---|
| | Voice | Voice | Telemetry |
| Frequency (GHz) | 0.300 | 0.250 | 0.250 |
| Total $C/N_o$ desired (db-Hz) | 50.8 | 50.8 | 61.8 |
| Link $C/N_o$ desired (db-Hz) | 50.8 | 50.8 | 61.8 |
| Path loss (db) (100m) | 62.1 | 60.5 | 60.5 |
| Polarization and pointing loss (db) | 6.0 | 6.0 | 6.0 |
| Repeater noise (db) | - | - | - |
| Circuit loss (db) | 9.0 | 9.0 | 9.0 |
| Modulation loss (db) | 0.0 | 13.8 | 2.9 |
| Margin desired (db) | 3.0 | 3.0 | 3.0 |
| Receive G/T (db/°K) | -35.4 | -39.4 | -39.4 |
| EIRP required (dbw) | -62.3 | -46.1 | -46.2 |
| Transmitter antenna gain (db) | -10.0 | -6.0 | -6.0 |
| Transmitter power required (dbw) | -52.3 | -40.1 | -40.2 |
| Transmitter power available (w) | 0.001 | 0.001 | 0.001 |
| EIRP available (dbw) | -40.0 | -36.0 | -36.0 |
| Excess margin (db) | +12.3 | +4.1 | +4.2 |

4.9.4.3 Communications Network Trade Study

The quantity and quality of experiment data to be returned to the ground in real-time, near-real-time, or on a delayed-dump basis strongly influence the ISS communications subsystem configuration. The basic question that will be resolved is whether to utilize the DRSS wideband $K_u$-band capability during the ISS or to delay implementation of the $K_u$-band capability until the GSS. Other factors that were considered in the trade study were the overall system capabilities, overall system costs, and qualitative considerations. In the trade study it was assumed that the timely return of the experiment data to the data processing center was required.

4.9.4.3.1 Network Options

The following network options or configurations were considered in the study:

A. Option I —Seven ground stations (basic network plus Guam and Hawaii).

B. Option II —Five ground stations (basic network, consisting of Goldstone, Rosman, Madrid, Canberra, and Fairbanks).

C. Option III—Three ground stations (Goldstone, Rosman, and MILA).

D. Option IV—DRSS (two satellites and one ground station).

The DRSS and ground network characteristics as defined in NASA letter PD-SS-M(71-28), dated 1 June 1971, were utilized. The DRSS system includes two synchronous relay satellites located at longitudes 15° West and 145° West. These two satellites will provide for VHF and wide bandwidth $K_u$-band communications between the Space Station and the ground greater than 90 percent of the time. The ground stations will have the capability to receive digital data at rates up to 1 Mbps and Apollo-quality television. The data rate from the remote stations to the continental United States is limited to only 72 kbps.

A computer program was utilized to determine the coverage gaps and the average daily coverage time for each of the options. The results are summarized in Table 4.9-12. It can be seen that Option I is the only option

Table 4.9-12

COVERAGE GAPS AND COVERAGE TIME

| Coverage Gaps | | | | |
|---|---|---|---|---|
| Option / Gap | I | II | III | IV |
| Longest | 1.5 HR | 7.2 HR | 11.8 HR | ≈9 to 10 MIN |
| Second longest | 1.45 HR | 5.65 HR | 10.0 HR | |
| Third longest | 1.4 HR | 5.65 HR | 10.0 HR | |

| Average Daily Coverage (MINIMUM) | | |
|---|---|---|
| Option | 2-Deg ELEVATION | 5-Deg ELEVATION |
| I | 309 | 232 |
| II | 239 | 177 |
| III | 102 | 78 |
| IV | ≈1,300 | |

of the three ground station options that is capable of satisfying the 5-hr maximum interruption requirement of Table 4.9-1.

4.9.4.3.2 Experiment Data Requirements

The RF video and digital data requirements were derived from the NASA-furnished "Blue Book" and the "Green Book" which was prepared by MMC. A summary of the ISS experiment data requirements and allocations is provided in Table 4.9-13. The experiment scheduling was performed by the MDAC WICK program, which takes into account the available resources, such as electrical power, crew time, program cost, etc. The RF video and digital data requirements for case 534G are plotted as a function of time in Figures 4.9-30 and 4.9-31.

The video data transmission requirements of Figure 4.9-30 are compared with the three, five, and seven ground station capability along with the two data relay satellite system capability. The initial video load is largely due to the LS-1A requirements. This can be accommodated by the ground station capabilities. However, the addition of the MS-3 video load, starting

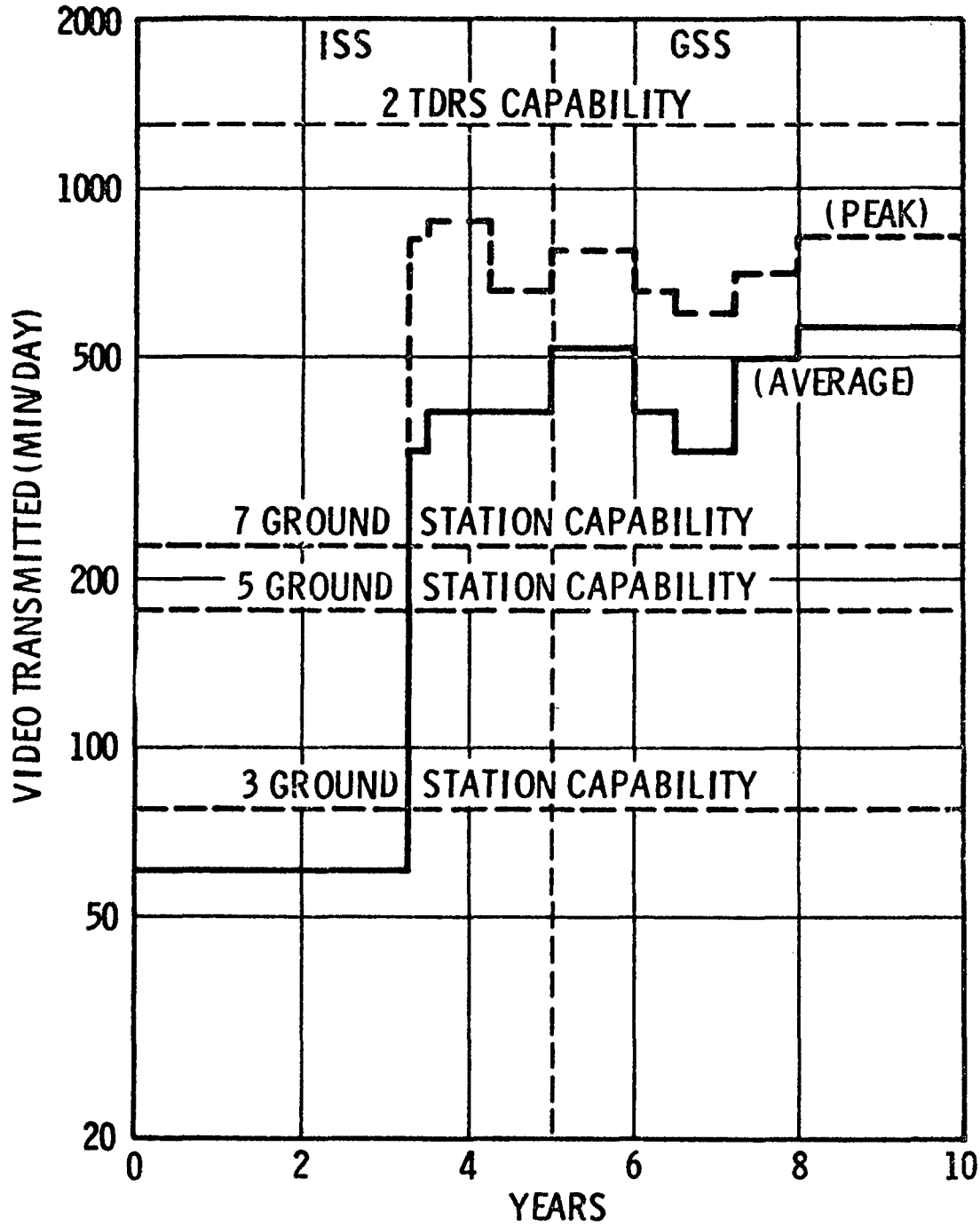


Figure 4.9-30. Video Data Requirements

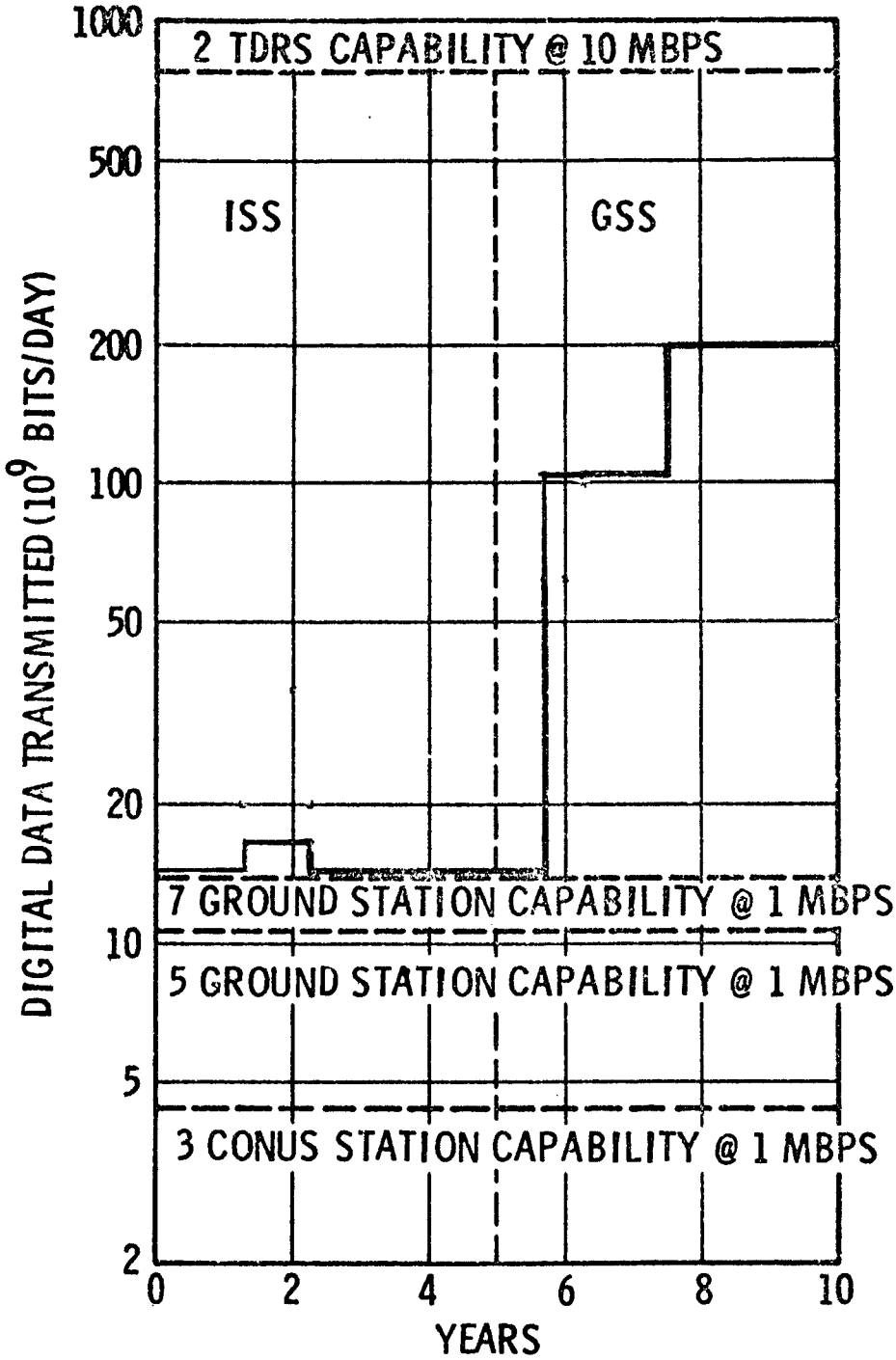


**Figure 4.9-31. Digital Data Requirements**

Table 4.9-13

EXPERIMENT DATA REQUIREMENTS AND ALLOCATIONS

| Experiment | Data Type | New Blue Book Requirements | MDAC/MMC/IBM Allocations |
|---|---|---|---|
| LS-1A | Video | 24 hr/day TV for full life science "core" | 60 min/day |
| A-4C | Video | 60 min/day | 64 min/day |
| MS-3 | Video | 212 min/day (MINIMUM)<br>920 min/day (MAXIMUM) | 280 min/day |
| ES-1G | Digital | $9 \times 10^{10}$ bpd gen (RF unspecified) | $9 \times 10^{10}$ bpd gen (16 percent RF) |
| P-4B | Digital | $2.2 \times 10^{10}$ bpd gen (RF unspecified) | $2.2 \times 10^{10}$ bpd gen (10 percent RF) |

in ISS quarter 13, extends the requirements considerably beyond the seven-station capability. The data presented are a composite of real-time and orbital-dump requirements. The GSS experiment program still exceeds the seven station capability, but does not require full-time utilization of the relay satellite system.

The ISS digital data transmission requirements are principally due to ES-1G. The capability of Space Station transmission direct to the ground is shown in Figure 4.9-31 for three, five, and seven ground stations, along with the two data relay satellite capabilities. This shows that even with the ground station capability of 1 Mbps, the ability to meet the ISS experiment program requirements is marginal. However, with a two relay satellite system configuration, the ISS and GSS experiment programs can be accommodated with a moderate load on the relay satellite system.

4.9.4.3.3 System Cost Impacts

An important consideration in the evaluation of the alternate candidates is the impact on overall system cost. The following system cost assumptions were utilized in the study.

A. The DRSS and wideband lines to the data processing center are institutional costs that are not chargeable to the Space Station Program.

B. The basic ground network consisting of five stations and the 72 kbps lines are also institutional costs.

C. The maintenance and operations (M&O) costs for additional ground stations are $7.5 million per station per year.

D. The Intelsat IV lease costs are $11 million per year per 36 MHz transponder channel. Two channels per year are required for the 5-year period.

E. Additional color video and 10 Mbps digital data recorders are $87,000 per station.

F. The ground station bandwidth modification costs are expected to be small and have not been included.

G. The commercial leased line costs for color video, monochrome video, and 1.34 Mbps are $70, $35, and $25 per mile per month respectively.

In addition to these costs, the additional cost of implementing the $K_u$-band capability on the ISS must also be calculated. These costs are broken down as follows:

A. The launch weight and power will cause the ISS cost to increase by $900,000.

B. By utilizing the cost discounting principle, it is estimated that $3.9 million can be saved by delaying implementation to the GSS. This is based on a Ku-band system cost of $15 million.

Based on these factors, the total delta cost to the program (ISS plus GSS) is $4.6 million and the total delta cost to the ISS is $15.9 million.

The costs for each of the four options are summarized in Table 4.9-14. This summary shows that the five- and seven-ground station options are not cost-effective due to the high costs associated with timely data return when the commercial satellites and leased lines are utilized. It can therefore be concluded that the three ground station and DRSS options are the only cost-effective options.

Table 4.9-14

NETWORK CONFIGURATION OPTIONS FACTORS

| Options | INTELSAT IV Lease Costs (millions) | Commercial Leased Line Costs (millions) | Ground Station M&O and MOD Costs ($1,000) | ISS Cost ($1,000) |
|---|---|---|---|---|
| Three ground stations | None | None | $261 | $261 |
| Five ground stations | $110 | $12.5 (wideband) | $435 | $122,900 |
| Seven ground stations | $110 | $12.5 (wideband) | $75,600 | $198,100 |
| DRSS (two satellites) | None | None | None | $15,900 |

Costs are totals for 5 years.

4.9.4.3.4 Qualitative Factors

In addition to the quantitative factors, there are other factors which influence the selection but are difficult to quantify. These include expanded experiment support, support of onboard personnel, public and scientific support, and system simplifications.

Expanded Experiment Support

Two aspects of experiment support which can be addressed are (1) research reference library and (2) interactive support. By research reference library, we mean providing the library capability, which is normal to any research facility, via a high-rate uplink capability coupled to library facilities on the ground. Providing the scientist with random access to large quantities of scientific information which involves more than voice contact will considerably enhance his value in performing onboard tasks. Interactive support via a full-time wideband information link allows consultation between the onboard scientist and his peers to handle unusual events or unexpected tasks, e.g. a pointing task or a dissection. Since the nature of the Space Station task is experimental, the occurrence of events which do not fall within the experience of the crew, and on which consultation is required, should be expected.

Support of Onboard Support

Three areas fall within this classification: (1) workload sharing, (2) safety, and (3) crew diversion.

The sharing of tasks to reduce the workload imposed on onboard personnel takes on greater significance when the value of onboard crew time is considered. A high-rate information transfer system with appropriate input and output devices will facilitate this workload sharing.

A full-time high-rate information transfer system allows monitoring of anomalies and trends at a ground central location. This reduces the need for complex sensing and prediction systems onboard and reduces the chance of an undetected failure during crew sleep periods or between station overflights. The uplink capability of the DRSS also allows ground personnel to demonstrate remedial actions required under emergency situations using demonstrations and simulations. Such a full-time uplink capability would have been of great value during the Apollo XIII mission in modification of the LEM $CO_2$ removal system.

Crew diversion involves providing a substitute for the normal input of information available on a day-to-day basis. During nonflight operations, this information is derived from newspapers, magazines, books, movies, television, and other sources. Since the majority of information received by individuals is far more than that available over the radio or by telephone and the scope of information is far more than just entertainment, it appears that this need can only be satisfied by a high-rate information system from the ground to the Space Station which is possible only with DRSS. The principle common complaint expressed by crews involved in the TEKTITE II experiments concerning lack of information from the outside world supports this need.

Public and Scientific Support

Public support of the space program requires public knowledge gained largely through the availability of quality information. The value of this being available in real time as opposed to recorded on film is arguable. Nevertheless, the popularity of real-time coverage of previous space

operations from Mercury through Apollo and from prelaunch to splashdown should be kept in mind as well as the public's desire for real-time pictorial coverage of daily news events when determining the desirability of the DRSS.

Scientific involvement presents a different picture in that (1) the Space Station is intended specifically to support the scientific community, and (2) the ground-based scientist must be able to operate in an interactive manner with the experiment in which he is involved rather than just viewing results. This is not possible with a voice-grade communication system or an intermittent system which would exist when the ground network is utilized.

System Simplification

Two ways in which potential system simplification is achieved with the DRSS are (1) data transfer and storage, and (2) operational reference availability.

The data transfer system simplification with a DRSS results from the direct communication capability rather than upon stored and retransmitted information. The direct system removes the requirement for keeping track of whether a station is due to be passed, what its capability for instantaneous data transfer is, what its capability for total data transfer is, and the delays which may accrue from transmission between the particular remote ground station and a central ground support facility. Other simplifications which result from the direct transfer system are reduction of record and playback hardware and a reduced requirement to keep track of recorded data to assure a first-in/first-out capability or satisfaction of priority requirements.

Operational references which must be available on a full-time basis include repair instructions, schematics, procedures and other material normally made available to crew members in written form. Also included is information which is generated (partially or wholly) by crew members. This includes operating and maintenance logs, inventory level and reorder information, etc. With a full time uplink and downlink capability, this information

does not have to be stored onboard but can be readily accessed and updated using state-of-the-art display and keyboard systems.

4.9.3.4.5 Summary and Recommendations

Based on the results of the study the following conclusions have been reached:

A. The DRSS and three ground station options are the only cost effective options.

B. The three ground station option provides only 6 to 7 percent coverage and has coverage gaps of up to 11.8 hr. This option does not satisfy the experiment data transmission requires and provides only a very limited uplink capability.

C. The DRSS option provides nearly continuous coverage, satisfies the experiment requirements, and provides a wideband uplink capability.

It has been concluded that the DRSS wideband capability is required during the ISS and therefore it is recommended that the $K_u$-band system be incorporated on the ISS.

4.9.3.5 Internal Communications

Based on Initial Space Station internal voice communications requirements defined in Section 4.9.2.2, a tradeoff study was performed to determine whether the internal voice communications system should be configured as a frequency division multiplex (FDM), time division multiplex (TDM), space division multiplex (SDM), or a hybrid system combining FDM, TDM, and SDM techniques. The results of the tradeoff study showed that the system should be configured as a FDM system. This is in agreement with the 33-ft Space Station baseline approach. Alternate systems are described in more detail in the following paragraphs.

4.9.3.5.1 FDM System

The FDM system shown in Figure 4.9-32 is the same basic system selected for the 33-ft Space Station. The system consists of an FDM bus routed through the Station. Interfacing terminals are connected to the bus throughout its length. All internal distribution of telephone, TV, emergency alert,

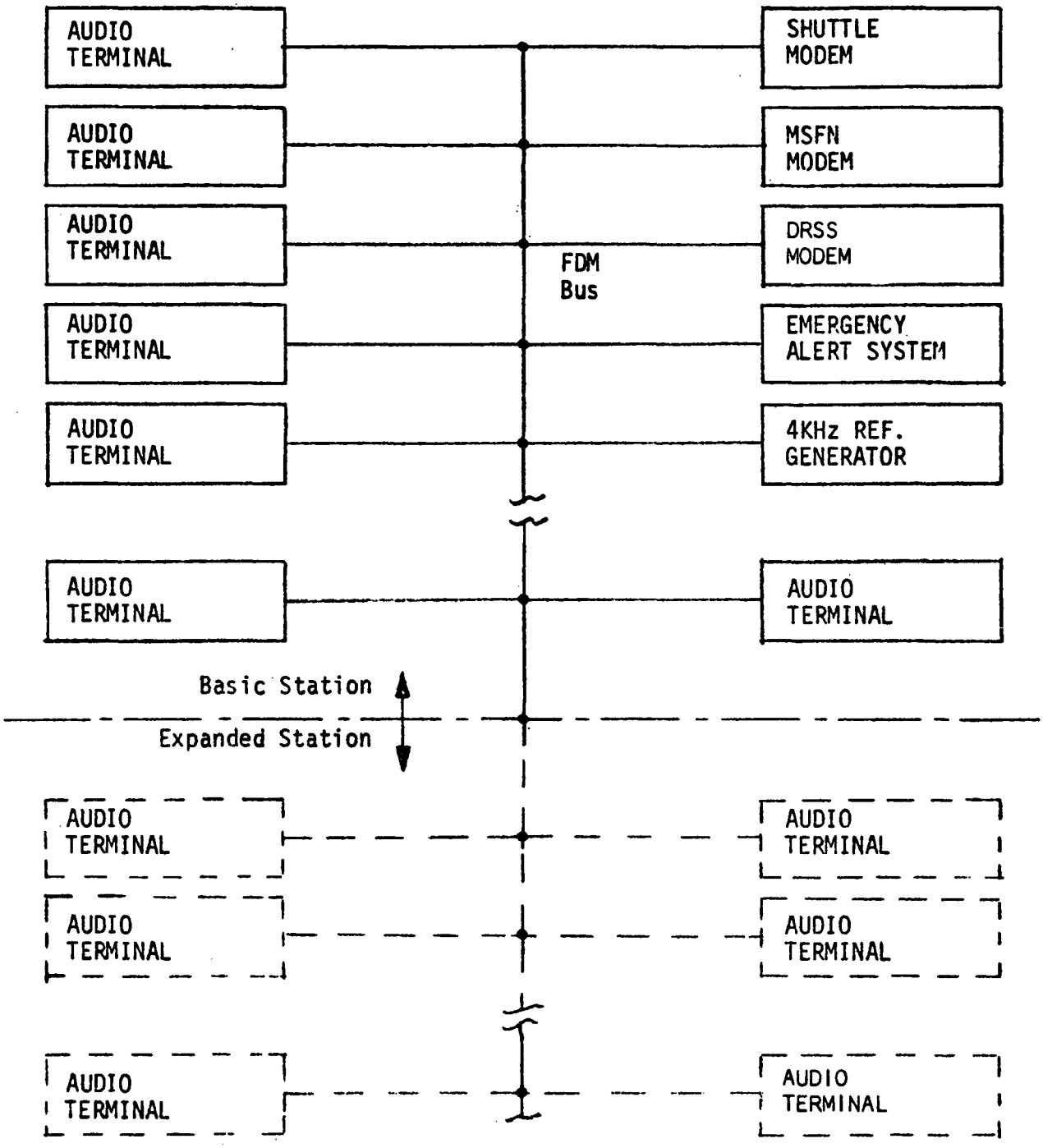


Figure 4.9-32. FDM System

public address, and entertainment channels is via this common bus with each system allotted a portion of the frequency spectrum.

A total of 64 channels is provided on the bus for the audio distribution system. This would provide for 48 audio terminals, RF mode interface, and spare channels for growth. The channels are spaced at 4 KHz intervals between 60 and 316 KHz, with each carrier phase-locked to a 4-KHz reference. Lower single sideband suppressed carrier amplitude modulation (LSB-SC-AM) are used to provide a minimum bandwidth system.

Each subscriber terminal is configured as a tunable transceiver with each subscriber assigned a "home" frequency on which to receive calls. This is his normal terminal frequency assignment whenever he is not originating a call. Communications with another subscriber is established by the originating terminal (#1) locally tuning his transceiver to the "home" frequency of the subscriber (#2) he wishes to call. He then would send an inband tone or pulse on subscriber #2 frequency to notify subscriber #2 that a call is on the line. Subscriber #2 then comes off-hook and both subscribers converse on subscriber #2 frequency.

Touch tone control is provided for compatibility with the earth Bell system. In-band signaling is used for supervisory functions and control.

The use of SS-SC-AM modulation provides a convenient means of conferencing. This modulation technique allows multiple terminals to transmit on the same channel without interference. In practice, it has been possible for any number of subscribers to conference on a single channel. To conference, one of the subscriber channels is selected as the conference channel. All other conference transceivers are tuned to the conference channel.

All single channel communication link modems are configured as a normal audio terminal with the RF equipment replacing the headset. Access to the RF links is established by the originating terminal "dialing" the "home" frequency of the RF modem. Uplink communication is established by the ground operator dialing the number of the onboard audio station he wishes.

Conference calls, with the ground operator as one of the participants, could be initiated either onboard or from the ground. The DRSS modem allows all telephone channels to be transmitted simultaneously to the ground where they may be interfaced with the Bell system. Emergency alert and total station public address are placed on the bus at baseband. Module public address is provided by assigning dedicated channels to each module. A dedicated receiver tuned to this channel is required at each audio terminal.

4.9.3.5.2 TDM System

The TDM system shown in Figure 4.9-33 consists of a TDM bus routed throughout the station. Interfacing terminals are connected to the bus throughout its length. Each audio system interfacing with the bus would be assigned a time interval (time slot) per each time period within which to transmit information.

Each subscriber terminal would be assigned a dedicated time slot to which to transmit calls. To establish a call with another subscriber, the calling terminal would dial the number of the called station. The calling terminal would then monitor the called terminals time slot to determine if the line is available. If the called terminals are available, a ring down supervisory word consisting of supervisory bits and the address of the called terminals will be transmitted. The called terminal would be monitoring all time slots when not in use. Upon receiving a ring down supervisory word containing its address, the called terminal would generate a ringing signal to the local operator and would transmit its time slot, a supervisory word telling the calling station that it has received the call and is ringing. When the called station comes "off-hook," the ring back supervisory word will be discontinued and voice circuit completed. The circuit would remain closed until either of the parties terminate the call by returning to the "on-hook" condition.

Supervisory and voice transmission would be time shared within the same time slot. Supervisory information would be transmitted until the circuit is completed. After the circuit is completed, only digital voice would be transmitted.

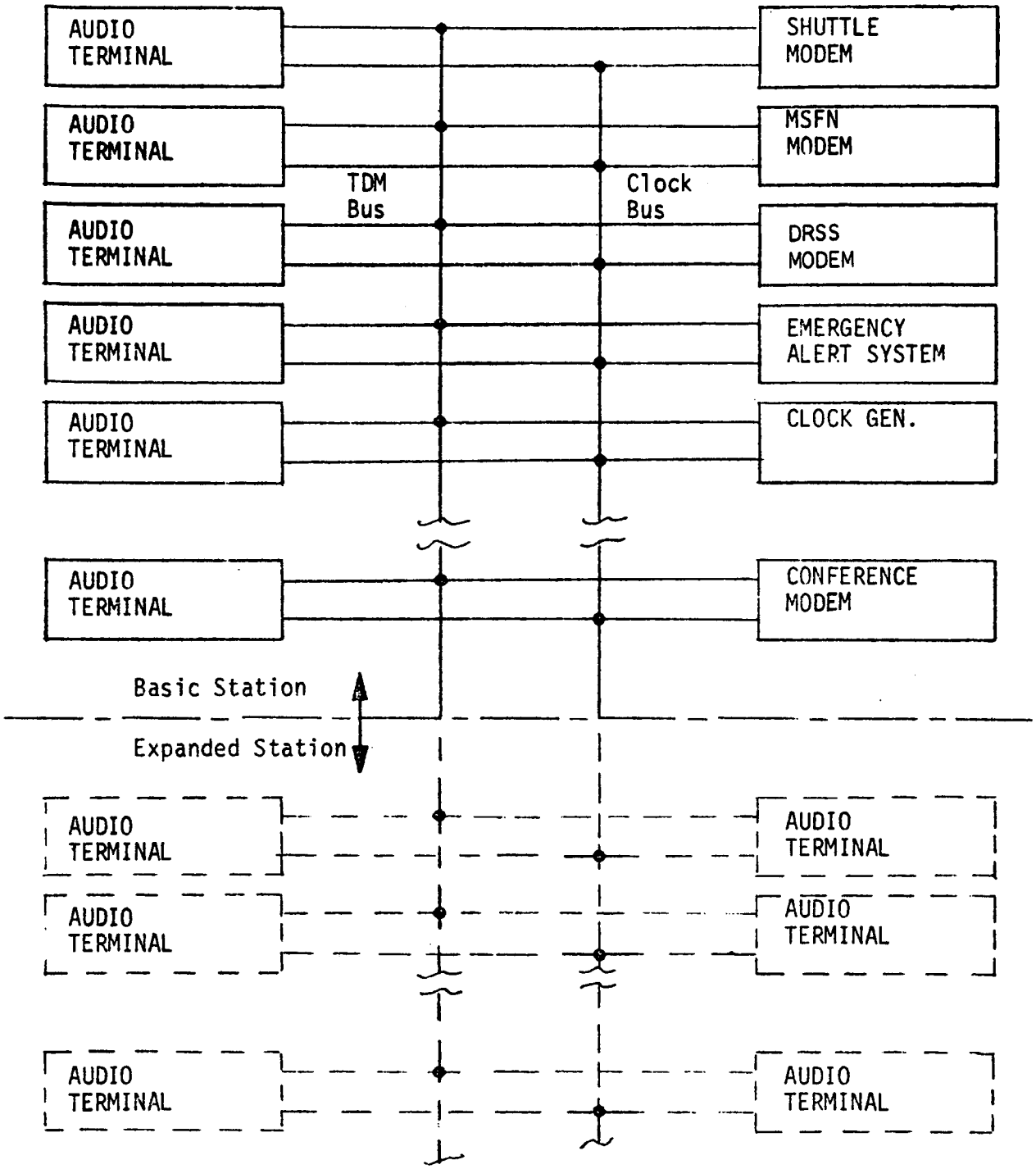


**Figure 4.9-33. TDM System**

Delta modulation techniques would be used for A to D and D to A conversion. This technique provided a digital signal of minimum sampling rate and very simple circuitry requirements. By using delta modulation and time sharing of supervisory and digital voice data, a 64 channel system with a bit rate of 512 Bit per second can be provided.

Conferencing would be provided by a special purpose modem. Conference terminals would transmit to the conference modem. The modem would convert the inputs from each conference to analog voice, combine the analog voice on to one channel, reconvert to digital voice, and transmit the combined digital voice over its assigned time slot. The conference terminals would transmit in their assigned time slot and receive on the conferencing modems time slot.

As in the FDM system, the single channel RF link modems would be accessed in the same manner as an audio terminal. The DRSS link would require a modem capable of demultiplexing the channels required for transmitting and converting the signal to a format compatible with the modulation technique used on the RF link.

Emergency alert, TV, and entertainment would require a separate distribution system such as an FDM bus.

Synchronization would be provided through the use of a separate clock bus. Both frame and bit synchronization would be provided by this bus.

4.9.3.5.3 SDM System

The SDM system shown in Figure 4.9-34 would consist of one or more central exchanges accessed by wired-in connections. A multiple central exchange system would seem to meet the need of a modular station concept. Central exchanges would be provided in each crew module. Each central exchange would service, as local terminals, all audio and RF voice links located in that module and provide the capability of servicing terminals located in an attached power module, general lab module, and two experiment modules. The central exchanges within the system would be interconnected by hard wired "long distance" lines.

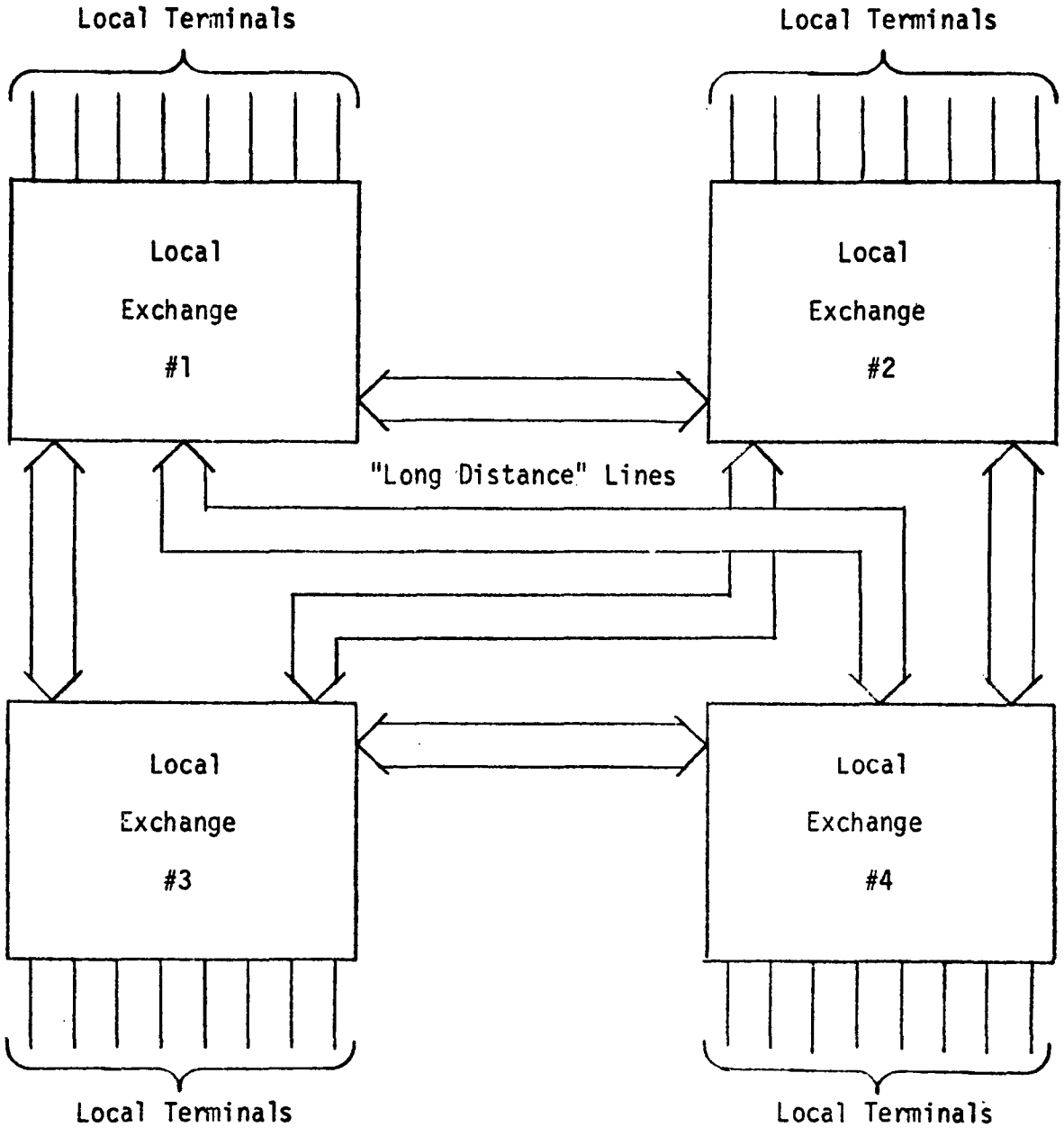


**Figure 4.9-34. SDM System**

In-band touch tone signaling would be used. Each exchange would be assigned an exchange number and each terminal service by an exchange would be assigned a terminal number. To access a local terminal only the terminal number would be dialed. To access a terminal on a different exchange, the exchange number and terminal number would be dialed.

Each telphone contains an audio transmitter and receiver plus certain supervisory signaling functions. Other supervisory signaling functions may be generated at the central switch. Supervisory signals are required for dial tone, busy tone, ring-down/back tone, and on-off hook indications.

The local exchanges would interface directly with the RF equipment and provide baseband voice. The modems would be required to configure the baseband voice to a form compatible with the RF Link modulation.

Emergency alert would be routed through the exchanges to all audio terminals. TV and entertainment would require a separate distribution system.

4.9.3.5.4 Evaluation of the Candidate Configurations

A summary of the characteristics of the three candidate configurations is provided in Table 4.9-15. Based on these characteristics, the candidate configurations were ranked as to their applicability to the requirements of the five options.

4.9.3.5.5 Selection and Recommendation of the Preferred Approach

The results of the trade-off study on the candidate systems show that the audio distribution system should be configured as a frequency division multiplexed (FDM) system.

The FDM system provides the best overall compatibility with the interfacing systems. The use of touch tone dialing and SS-SC-AM modulation techniques make the FDM system directly compatible with the Earth Bell Telephone System. The RF link modems would be simple and of straight forward design. For the single voice channel RF links, such as MSFN, the link

FOLDOUT FRAME

PRECEDING PAGE BLANK NOT FILMED

FOLDOUT FRAME

Table 4.9-15

CHARACTERISTICS SUMMARY AUDIO DISTRIBUTION SYSTEM TRADE-OFF

| Study Rating Factor | FDM | TDM | SDM |
|---|---|---|---|
| 1. Compatibility | | | |
| A. Earth Systems | A. Directly compatible with Bell System in signal format. | A. Not directly compatible. Would require reconfiguration to provide supervisory signals. | A. Directly compatible with Bell System in signal format. |
| B. RF Modems | B. Requires DRSS modem of minimum complexity if all channels are sent downlink. Single channel RF links would require modem of equivalent complexity to the audio terminals. | B. Requires DRSS modem of greater complexity than FDM in that TDM signal must be demultiplexed and reconfigured for transmission. Single channel RF links would require modems of equivalent complexity to the audio terminals. | B. Requires DRSS Modem of considerable complexity to provide multichannel usage. Would provide baseband voice to each single channel RF link modem. Modem required to reconfigure for compatibility with modulation technique. |
| C. TV and Entertainment Systems | C. Directly compatible. Would use same FDM bus for distribution. | C. Not compatible due to bandwidth limitations. Would require separate distribution system. | C. Not compatible due to bandwidth limitations. Would require separate distribution system. |
| 2. Expandability | A. Directly expandable by extending length of FDM bus and adding new terminals. New terminals may be added with minimum change to wiring and minimum disruption of system operation. | A. Not expandable without costly overbuild. System capacity limited by available time slots and bit rate. Maximum capacity must be designed into system. New terminals may be added with minimum change to wiring and minimum disruption of system operation. | A. Expandable by adding local exchanges as crew modules are added. Local exchanges are limited by design and would require overbuild to provide expandability. Would require addition of wiring and overbuild in design to provide expandability on a module level. |
| 3. Reliability | | | |
| A. Distribution Lines | A. Coax line retains a measure of reliability in that only a portion of the system is lost if cable separates. Redundant lines could be provided to increase reliability. | A. Same as FDM but requires two buses in nonredundant configuration. | A. Loss of wiring between terminal and local exchange would result in loss of only that terminal. Number of wires used would increase possibility of wire failure and would preclude redundancy. Failure of wire interconnecting exchanges would result in loss of channel capacity only. |
| B. Local Terminals | B. Moderately simple circuitry with good reliability. Failure would effect only terminal. | B. Moderately simple circuitry using high reliability digital integrated circuits to a large extent. | B. Simple terminal circuitry with high reliability. Failure would effect only terminal. |
| C. Central Exchange | C. Not required | C. Not required | C. Would require up to 4 local exchanges of moderate complexity. A failure could effect service to all terminals connected to it. |

FOLDOUT FRAME

PRECEDING PAGE BLANK NOT FILMED

FOLDOUT FRAME

Table 4.9-15

CHARACTERISTICS SUMMARY AUDIO DISTRIBUTION SYSTEM TRADE-OFF (Continued)

| Study Rating Factor | FDM | TDM | SDM |
|---|---|---|---|
| 3. Reliability (Cont) | | | |
| D. Special Purpose Modems | D. Loss of 4 KHz reference generator would effect total system. Can be made redundant to increase reliability. | D. Conferencing Modem of moderate complexity required. Failure could cause loss of conferencing capability. Loss of Clock Gen would cause loss of system. | D. None required. |
| 4. Maintainability | A. Self check is an inherent capability of the audio terminal. | A. Self check is an inherent capability of the audio terminals. | A. Self check is inherent for operating terminals. |
| | B. All terminals with the exception of the 4 KHz reference generator can be removed without affecting the system operation. | B. All terminals with the exception of the conferencing modem and the clock generator can be removed without affecting system operation. | B. Local terminals could be removed without affecting system operation. Removal of a local exchange would cause loss of service to all terminals serviced by it. |
| | C. Audio terminals are interchangeable simplifying sparing. | C. Audio terminals are interchangeable simplifying sparing. Conferencing modem and clock generator would require sparing. | C. Local terminals and exchanges would be interchangeable. Would require sparing for both. |
| | D. Check out could be performed simply with no additional hardware. | D. Check out could be performed simply with no additional hardware. | D. Check out could be performed simply with no additional hardware. |
| | E. Simplified wiring. | E. Simplified wiring. | E. Simplified wiring. |
| 5. Performance | | | |
| A. Conferencing | A. Can be performed without using special purpose modems or extra circuitry. Any number of terminals can be included on same conference, and any number of conferences can be conducted at the same time. | A. Would require conferencing modem. No. of terminals that can be included in a conference and the number of conference circuits is a function of modem design. | A. Conferencing capability a function of exchange design. Number of terminals and number of conferences limited by design. |
| B. Public Address and Emergency Alert | B. Would require public address receiver for baseband station public address and dedicated channel modular public address receiver. Receiver circuitry would be simple. | B. Would require public address receiver to monitor station and module public address time slots. Receiver circuitry would be simple. | B. Would require increased complexity in both the local terminals and in the local exchange. |
| C. TV and Entertainment Channel Routing | C. Can be routed via the same FDM bus. | C. Would require separate distribution system. | C. Would require separate distribution system. |

FOLDOUT FRAME
PRECEDING PA ANK NOT FILMED

PRECEDING PAGE BLANK NOT FILMED

FOLDOUT FRAME

Table 4.9-15

CHARACTERISTICS SUMMARY AUDIO DISTRIBUTION SYSTEM TRADE-OFF (Continued)

| Study Rating Factors | FDM | TDM | SDM |
|---|---|---|---|
| 6. Weight | | | |
| A. Wiring | A. Single light weight cable including TV and Entertainment distribution. | A. Two light weight cables. TV and Entertainment distribution system not included. | A. Dedicated channeling wiring would add system weight. |
| B. Local Terminals | B. Audio terminal weight of approximately 3 lb. per terminal. This weight includes the entertainment receiver system. | B. Audio terminal weight of approximately 2 lb. per terminal. This weight does not include entertainment receiver system. | B. Audio terminal weight of approximately 1 lb. per terminal. Does not include entertainment receiver system. |
| C. Special Purpose Equipment | C. Ref. Generator at 0.5 lb. required. | C. Ref. Generator at 0.5 lb. and conferencing modem at 5 lb. are required. | C. Local exchange(s) required at approximately 50 lb. per exchange. |
| 7. Size | A. Minimum size system requiring only one reference generator in addition to local terminals. | A. Would require audio terminals of smaller size than FDM system but requires conferencing modem. | A. Minimum audio terminal size but requires local exchange of considerable size. Dedicated wiring would require more space for routing. |
| 8. Power | A. Minimum bandwidth system results in minimum power. | A. Large bandwidth system increases power requirement. | A. Minimum power requirement at audio terminal. Would require power to operate exchange switching. |
| | B. Audio terminals could be designed to minimize power with system "On Hook". | B. Audio terminals could be designed to minimize power with system "On Hook". | B. Audio terminals could be designed to minimize power when "On Hook" but exchange would still require power. |
| | C. Simple 4 KHz Ref. Gen. and RF link modems would require little power. | C. Conferencing Modem, Clock Gen, and RF modems would require more power than FDM system. | |
| 9. Design Risk | A. Minimum Design Risk. Systems of this type in operation. | A. Moderate design risk due to possible synchronization problem with stations distributed over long cable. | A. Minimum Design Risk. Systems of this type in operation. |

modem would be configured as a normal audio terminal with the RF equipment replacing the headset. The modem would provide baseband voice to and receive baseband voice from the RF equipment. The multichannel DRSS link modem becomes very simple in that the portion of the frequency spectron in which the audio channels are located can be stripped from the common bus and transmitted down link directly. In addition, the FDM bus can be used to distribute the TV and entertainment channels.

The FDM system provides the greatest capability of growth of all systems evaluated. The FDM bus provides a simple distribution system which can be expanded simply by adding to its length. Terminals can be added to the system throughout its length with little, if any, disruption of system operation. The amount of overbuild required to provide growth potential is very small. The bus provides capacity well beyond the maximum assumed capacity of the modular station. The tunable transceiver within the audio terminal can easibly be designed to provide the required channel capacity. Terminals are now available with a 600 channel capacity.

The use of SS-SC-AM modulation provides a convenient means of conferencing. This modulation technique allows multiple terminals to transmit on the same channel without interference. In practice, it has been possible for any number of subscribers to conference on a single channel. No special purpose modem is required for conferencing.

Public address and emergency alert functions can be provided for in the same system. Station public address and emergency alert can be placed on the FDM bus at baseband. A simple receiver at each audio terminal can be provided to detect this baseband signal. Module level public address could be provided by assigning a telephone channel to each module or area that you wish to cover. A simple fixed frequency receiver would be required at each audio terminal for this function.

## 4.10 DATA MANAGEMENT SUBSYSTEM

### 4.10.1 Summary

The data management subsystem (DMS) provides data acquisition control, transfer, storage, and processing for Modular Space Station users, subsystems, and experiments. Control of ISS operation is provided through standard data bus terminals and appropriate digital and analog interface equipments under computer control. Crew access to computer operations is provided through keyboard and display equipment.

#### 4.10.1.1 Selected Design

Two computer complexes are provided, one in the Power/Subsystems Module for subsystems operations and the other in the GPL Module for experiment operations. Each of the computer complexes is a modular multiprocessor. A primary advantage of this configuration for the Modular Space Station is its ease of re-configuration or growth as Space Station modules and Research and Application Modules (RAM's) are added. A secondary advantage is the continuous computational support provided by graceful degradation failure modes. For additional computational backup the experiment multiprocessor can be rapidly reconfigured to perform the subsystem operation functions.

The computer's auxiliary memories provide the capability for reading a variety of stored programs into the computer main memory on an as-needed basis. The programs will have been prepared in advance and kept in storage in anticipation of the above, or new programs will be generated, as required, on the ground and transmitted (via RF links) or carried (via a logistics module flight) to the modular Space Station. The crew can also initiate program changes through the alpha-numeric keyboards.

Intermodule communications (data distribution) are accomplished under computer control of the data buses. Terminal-to-terminal transfer of data may also occur within a module. The data bus concept employs a hybrid time division multiplex (TDM) frequency division multiplex (FDM) technique for transfer and FDM techniques for analog data and digital data transfer.

Control is accomplished by a computer input output controller using standard control words which provide terminal addressing and instructions (a terminal is defined here as any device directly sending or receiving data from a data bus).

Data acquisition is implemented by analog and digital terminals which have the ability to handle eight standard interfaces. The number of channels of a digital terminal may be effectively expanded to 512 by connecting a remote data acquisition unit (RDAU) to each standard interface. Each RDAU will accept up to 48 (analog or discrete) inputs and output 16 discrete commands. Digital data acquisition is initiated by a computer instruction to an input output controller which enters a command word with an appropriate digital terminal address onto the digital data bus. The digital terminal which is addressed responds by placing its data on the data bus; the requesting input output controller then either stores the data in the computer main memory for processing or routes it to another terminal for subsystem/experiment use or storage. Analog terminals are used to multiplex non-sampled experiment data onto analog bus subcarriers. The analog bus also carries wideband video on individual subcarriers.

Bulk data storage utilizes ultra-high density magnetic tape recording techniques and is configured to meet high data volume storage and relatively slow access speed requirements. Storage is used primarily for digital data prior to onboard processing or return to Earth via logistics module/shuttle orbiter for ground processing.

Image processing equipment provides a capability for selected processing of high-resolution video data, for transforming film data into electronic signals, or both. Tape storage for experiment video is also provided. Timing annotations on the tape will allow a crewman to play back selected portions of the recording. Portable audio recorders are used for crew notes. A simplified DMS block diagram is shown in Figure 4.10-1.

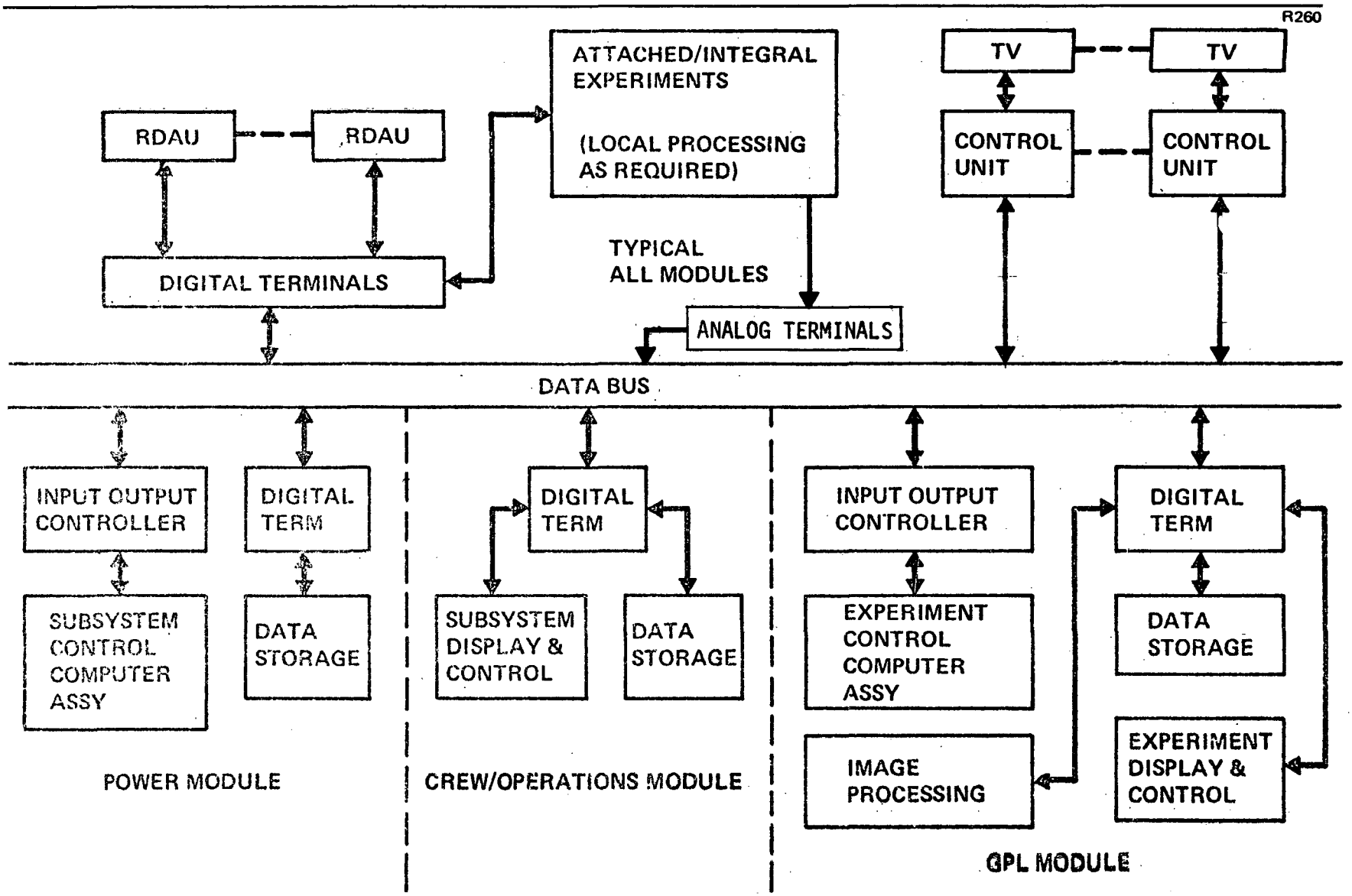


Figure 4.10-1. DMS Simplified Block Diagram

4.10.1.2 Key Issues

The key issues for the Modular Space Station DMS are as follows:

A. Computer configuration.

B. Data bus implementation.

C. Equipment allocation to modules.

4.10.1.3 Analysis and Trades

DMS trade studies performed on the Phase B study for the 33-ft diameter station and the first follow-on option for the Modular Station were reviewed for application to the subsystem selection performed in this study phase. A matrix chart showing these trades and the resulting conclusions is shown in Figure 4.10-2. Also shown in a summary of additional trade studies performed where further trade comparisons were felt necessary for the Modular Station. A trade study of electronic equipment packaging and installation approaches is also included in this section. The selected approach is applicable to electronic equipment in other subsystems in addition to data management. The program requirements for expansion and growth of the 33-ft diameter Space Station provided a base for trade studies which are directly applicable to the Modular Space Station. Overall Information Management analysis and trade studies, including onboard versus ground processing, are reported in MP-01. No significant changes in the conclusions of these trade studies were found. However, factors producing minor changes were:

A. Changes in onboard data processing requirements due to the modular buildup process.

B. Performance of most RAMS experiment data processing within the RAMS modules.

C. Changes in the MSS launch data and experiment schedules.

Consideration of these factors resulted in the consolitation of onboard data processing equipment into two multiprocessing computing facilities: one dedicated to subsystem support; the other primarily for supporting experiment operations but providing a capability to perform subsystem operations in the event that the subsystem computing facility is not operational. Both facilities will be capable of modular buildup to efficiently accommodate the

| SUBSYSTEM | TRADE AREAS | SELECTED APPROACH |
|---|---|---|
| COMPUTATION | CONFIGURATION OPTIONS | MULTIPROCESSORS |
| | CENTRALIZED MULTIPROCESSORS VERSUS DISPERSED SIMPLEX MACHINES | CENTRALIZED MULTIPROCESSORS (2) |
| | CENTRALIZED MULTIPROCESSORS VERSUS CENTRALIZED SIMPLEX MACHINES | CENTRALIZED MULTIPROCESSORS (2) |
| | EQUIPMENT LOCATION FOR MODULAR SPACE STATION | SUBSYSTEM MULTIPROCESSOR IN POWER/ SUBSYSTEM MODULE<br><br>EXPERIMENT MULTIPROCESSOR IN GENERAL PURPOSE LABORATORY |
| | MEMORY TECHNOLOGY SELECTION | MAIN MEMORY – MONOLITHIC<br>AUXILIARY MEMORY – BUBBLE |
| DATA ACQUISITION/ DISTRIBUTION | ANALOG VERSUS DIGITAL DATA ACQUISITION | CONVERT ANALOG SOURCES LESS THAN 10 kHz TO DIGITAL CLOSE TO SOURCE AND ACQUIRE IN DIGITAL FORM |
| | HARDWARE VERSUS SOFTWARE FORMATTING | SOFTWARE FORMATTING |
| | CENTRALIZED VERSUS DECENTRALIZED ACQUISITION | DECENTRALIZED CLOSE TO THE SOURCE USING REMOTE DATA ACQUISITION UNITS |
| | TRANSMISSION MEDIA | COAX FOR MAIN DISTRIBUTION BUS<br>TWISTED WIRE PAIR FOR INTERNAL SUBSYSTEM BUS |
| | BUS CONFIGURATION AND CHANNEL ALLOCATION | SEPARATE DIGITAL AND ANALOG BUSES<br>MULTIPLE ANALOG AND DIGITAL CHANNELS |
| | MULTIPLEXING TECHNIQUES TDM VERSUS FDM | COMBINATION TDM/FDM SYSTEM |
| | COMBINED DIGITAL ANALOG BUS VERSUS SEPARATE BUSES AND CHANNEL ALLOCATION | SEPARATE DIGITAL AND ANALOG BUSES (8) DIGITAL CHANNELS, 10 MB EACH. MULTIPLE ANALOG CHANNELS |
| | DESIGN STUDIES | THE FOLLOWING DESIGN LEVEL STUDIES HAVE BEEN PERFORMED AS PART OF THE SPECIAL EMPHASIS STUDY AND ARE REPORTED IN SE-02<br><br>● CONTROL CONCEPTS<br>● ERROR DETECTION TECHNIQUES<br>● DATA BUS COUPLING – BRANCH VERSUS LOOPING<br>● MODULATION, TIMING, SYNCHONIZATION AND WAVEFORM FORMAT SELECTION<br>● DATA BUS CONTROLLER CONFIGURATION TRADE STUDY |
| IMAGE PROCESSING | DEGREE OF ONBOARD IMAGING PROCESSING. EQUIPMENT/SOFTWARE COMPLEXITY | ONBOARD IMAGE PROCESSING FOR CALIBRATION AND CONTROL. HYBRID DIGITAL ANALOG |
| ELECTRONIC EQUIPMENT PACKAGING/ INSTALLATION | INTEGRATED ELECTRONIC PACKAGING AND INSTALLATION SELECTION | STANDARDIZED FAMILY OF REPLACEABLE MODULES WITH SINGLE PLANE INSTALLATION ACCESSIBILITY |

NOTES: NON-SHADED AREAS DENOTE THOSE STUDIES PERFORMED DURING THE EXTENSION PHASE. SHADED AREAS DENOTE PREVIOUS STUDIES REVIEWED FOR MSS APPLICATION DURING EXTENSION PHASE.

Figure 4.10-2. DMS Trade Study Summary

increase in subsystem and experiment computing requirements during the 10-year lifetime of the program. The modular buildup capability in the experiment data processing facility will permit the accommodation of significant variations in the experiment program as this program becomes better defined.

Postponement of the MSS launch date and changes in the experiment program schedules will allow the utilization of more capable onboard and ground-computing equipment than was considered in the 33-ft diameter Space Station study. Advances in the onboard computing system and MSS to ground communications capabilities will enable a more efficient and more timely experiment program. Improvements in ground data processing and ground communications capabilities will enable a more thorough reduction of data prior to its dissemination to users.

The International Business Machines Corporation provided funded support in the areas of experiment requirements analysis, review of 33-ft Space Station study DMS trade studies, and preliminary design of the computational assemblies and associated onboard software and the data bus concept included in this report.

### 4.10.2 Requirements

Data Management subsystem requirements were derived from analysis of Modular Space Station experiment and subsystem support requirements with efforts concentrated on those areas which were significantly different from the 33-ft Space Station. Data acquisition, distribution, and processing requirements were obtained primarily from the information management system analysis described in MP-01 and summarized in Section 4.10.4.1. The DMS requirements are summarized into three categories: (1) functional, (2) performance, and (3) operational. The key requirements which influenced the selected DMS design are shown in Table 4.10-1.

#### 4.10.2.1 Functional Requirements

Functions allocated to the DMS provide the capability to acquire, process, control, and transfer data from various subsystem and experiment sources,

Table 4.10-1

KEY SUBSYSTEM DESIGN REQUIREMENTS

| Requirements | DMS Design Features |
|---|---|
| • Project Specification No. RS02927, Para. 3.2.1.1.9 Space Station information management shall be compatible with all Station module derivatives, experiments, experiment modules, logistics vehicles, tugs, relay satellite, and ground communication systems. | • Processing capability is sized for the ISS and provides for modular growth to the GSS. A standardized data acquisition and distribution interface is implemented by data bus terminals and remote data acquisition units. |
| • Project Specification No. RS02927, Para. 3.2.6.2.1 and Program Specification No. RS02925, Para. 3.2.6.2.2 The Space Station shall be divided into at least two pressurized habitable volumes so that any damaged module can be isolated as required. Accessible modules will be equipped and provisioned so that the crew can safely continue a degraded mission and take corrective action to either repair or replace the damaged module. | • The computation complexes and the two display and control consoles are in separate modules enabling Station operations to be conducted from either the Crew/Operations or GPL module. |

as well as from ground control and other program and project elements. These functions enable the Modular Space Station crew to command and control all onboard resources and provide both the crew and user with information sorted and annotated so as to minimize distribution and analysis problems.

A breakout of the DMS functional requirements with definitions is listed in Table 4.10-2. The functions are essentially identical for the 33-ft Station and the Modular Station, but with some differing in degree due to a smaller crew and the more limited ISS experimental program. Also, the rendezvous and docking control function is required only at the GSS level for free-flying RAM's since other dockings are controlled from the Shuttle.

Table 4. 10-2

DMS FUNCTION REQUIREMENTS

SUBSYSTEM (COMPUTATION) SUPPORT

Subsystem Control and Scheduling — Master control of automated subsystem and experiment operations.

Display Generation and Control — Control of integrated subsystem displays and the generation of display routines.

Data Bus Control — Timing and control of data reception and transmission via the data bus.

TM Formatting — Selection and scheduling of downlink data transmittal.

Data Acquisition Formatting — Sequencing, encoding, and scheduling of subsystem data.

Decommutation — Retrieval and reconstitution of encoded subsystem data to its original, or to some other desired form.

Storage — Control of subsystem data accumulation and retrieval.

Command — Command validation, storage, and execution for subsystems.

Data Computation — Redundancy reduction, trend extrapolation, and general data manipulation in support of subsystems.

Antenna Control — Selection and pointing of antennas.

Navigation — Maintain continuous onboard orbital position fix with periodic update from the ground.

Stabilization/Control — Implementation of control laws, attitude reference transformations, and energy management.

Rendezvous and Docking — Computations supporting free-flying RAM rendezvous and docking operations (GSS only).

Reconfiguration — Modification of subsystem equipment and software configurations.

Subsystem Consumables Management — Consumables utilization and prediction of replenishment requirements; rescheduling of consumable expenditure to conform to available stores.

Table 4. 10-2

DMS FUNCTIONAL REQUIREMENTS (Continued)

Inventory Control — Subsystem spares status and replenishment requirements, recordkeeping.

Maintenance Information Control — Location and display of subsystem maintenance, setup, and operating procedures.

Habitability Status/Support of Other Vehicles — Status determination of habitability for docked Logistic Modules and RAM's.

Checkout — Status, diagnostics, fault isolation for all Station subsystems.

Self-Check — Self-diagnosis for error detection and recovery.

Training — Simulation of infrequently-performed Station operations, such as docking, to maintain crew proficiency.

EXPERIMENT COMPUTATION SUPPORT

Experiment Control and Scheduling — Scheduling and control of experiments.

Display Generation and Control — Control of experiment displays and generation of display routines.

Data Acquisition Formatting — Sequencing, encoding, and scheduling of experiment data.

Decommutation — Retrieval and reconstitution of experiment data to its original or a new form.

Storage — Control of experiment data accumulation and retrieval.

Experiment Data Correlation — Association of experiment data with operational data, such as position/velocity coordinates.

Experiment Calibration — Correlation of sensor calibration and usage data with sensor outputs accompanied by mechanical adjustment of equipment and software routine.

Data Compaction — Redundancy reduction and software data compaction operations.

Inventory Control — Generation of experiment spares status and replenishment lists.

Table 4-10.2

DMS FUNCTIONAL REQUIREMENTS (Continued)

Maintenance Information Control — Location and display of maintenance, repair, and operating procedure for experiments.

Checkout — Status, diagnostics, fault isolation for experiments.

Self-Check — Self-diagnosis for error detection and recovery.

Experiment Planning — Short-range (daily or bi-daily planning).

Crew Health and Proficiency Testing — Analysis of physiological and psychological data in conjunction with laboratory equipment.

DATA ACQUISITION AND DISTRIBUTION

Signal Conditioning — Conversion of sensor outputs to desired amplitude levels and frequency content; i.e., scaling, frequency to voltage conversion.

Multiplexing — Combining of multiple data channels into one channel using frequency or time division techniques.

Analog to Digital Conversion — Encoding of sampled data to a selected digital form.

Formatting — Collection of a prescribed amount of data, along with its associated synchronization words, control words, timing signals, and other required overhead information into proper order for onboard or downlink distribution and processing.

Limit Checking — Comparison of a measured parameter against prescribed limits.

Instruction Decoding — Recognition of instructions contained within a binary-coded control signal.

Programming — Synchronization and control of digital logic circuits and events by timing signals.

Addressing — Command selection of device, word or message, transfer, and acquisition.

Address Decoding — Deciphering of a device address, channel address, and instructions.

Error Detection — Determination of message validity.

Table 4-10.2

DMS FUNCTIONAL REQUIREMENTS (Continued)

Buffering – Temporary storage of analog or digital data after acquisition and prior to transfer.

DATA STORAGE

Recording – Transformation of electronic signals to a form or medium allowing their accumulation and retention.

Retrieval – Location and transformation of recorded data to its original form.

IMAGE PROCESSING

Image Transformation – Conversion of imagery to a form suitable for viewing and editing.

Image Storage – Storage of video, analog, and digital data in physical form.

Image Retrieval – Acquisition of records stored on film, microfilm, or tape.

4.10.2.2 Performance Requirements

Performance requirements consist of accuracy, timing, rates or other capability constraints imposed on DMS elements resulting from design analysis to implement the previously enumerated functions. The ISS CEI level Data Management performance requirements are in CM-03, ISS Part I CEI Specification. DMS subsystem level performance requirements for computation are summarized in terms of speed and word storage quantities in Table 4.10-3. Section 4.10.4.1 contains rationale supporting the derivation of these requirements. Performance requirements for the remaining functions are shown in Table 4.10-4. These requirements are a result of design analysis for the IMS Special Emphasis Tasks, reported in SE-02, and analysis of the Modular Space Station experiment and subsystem support requirements.

Table 4.10-3

COMPUTATION REQUIREMENTS SUMMARY

| Functions | Proc. Rate (K Operations/ second) | | Main Memory (K Words) | | Auxiliary Memory (K Words) | |
|---|---|---|---|---|---|---|
| | ISS | GSS | ISS | GSS | ISS | GSS |
| **Subsystems Operations** | | | | | | |
| DMS Executive | 80 | 100 | 16 | 20 | 19 | 24 |
| Flight Operations | 220 | 260 | 41 | 46 | 68 | 70 |
| Flight Support | 145 | 145 | 20 | 20 | 460 | 530 |
| Subsystem Checkout | 40 | 65 | 18 | 30 | 43 | 72 |
| Contingency/Growth | 242 | 285 | 10 | 12 | 295 | 348 |
| | 727 | 855 | 105 | 128 | 885 | 1,044 |
| **Experiment Operations** | | | | | | |
| Experiment Executive | 48 | 60 | 11 | 14 | 12 | 16 |
| Experiment Processing | 108 | 179 | 39 | 66 | 48 | 80 |
| Experiment Support | 120 | 200 | 12 | 20 | 210 | 340 |
| Experiment Checkout | 48 | 80 | 10 | 16 | 54 | 90 |
| Contingency/Growth | 162 | 260 | 8 | 12 | 162 | 263 |
| | 486 | 779 | 80 | 128 | 486 | 789 |

Table 4.10-4

DMS PERFORMANCE REQUIREMENTS

| Functions | Requirements |
|---|---|
| Data Acquisition and Distribution | |
| Signal Conditioning | Condition analog input signals ranging from 0 to 4.0 millivolts and 0 to 5 volts, 2 gains programmable by command. |
| Multiplexing | Sequential and random access of channel imputs |
| Formatting | Capable of operating under computer software control |
| Analog-to-Digital Conversion | 8-bit accuracy |
| Limit Checking | Capable of parallel bit-by-bit comparison of 7-bit digital words |
| | Capable of generating out-of-limit flag upon noncomparison of any given word |
| Address Decoding | Provisions for decoding terminal, acquisition unit, channel, and word addresses |
| Timing | Programmable clock rates |
| Buffering | Modularly expandable storage periods (capacity divided by input data rate) in excess of bus-polling periods |
| Addressing | Ability to address up to 1,024 unique devices. |
| Transfer Rate | Transfer digital data at composite rate of minimum of 30 megabits per sec. |
| Transfer Modes | Information transfer between data terminals under computer control |
| | Information transfer between data terminal and computer under computer control |

Table 4-10.4

DMS PERFORMANCE REQUIREMENTS (Continued)

| Functions | Requirements |
|---|---|
| Data Acquisition and Distribution | |
| Information Words | Control word to consist of 18 bits |
| | Data words to contain 16 bits for data |
| Error Detection | Elemental bit error rate less than $10^{-6}$ |
| | Probability of undetected error less than $1.2 \times 10^{-10}$ |
| | Message blocks to be rejected if the bit error rate is exceeded within the message period |
| Data Storage | Bit packing density at least $10^6$ bits per sq in. |
| | Recording rate at least $2.5 \times 10^7$ bits/sec |
| | Storage capacity of $10^{10}$ bits minimum per tape reel |
| Video Recording | Frequency response: 4.5 $MH_z$ at 3 db |
| | Record Time: 3 hr minimum |
| Digital Data Retrieval | Time to locate a given starting address label to average 10 sec maximum |

4.10.2.3 Operational Requirements

Operational requirements consist of those constraints imposed on the DMS in performing the functions allocated to it or arising from crew, shuttle launch interval, and the various program and project element interface considerations. Operational requirements are summarized in Table 4.10-5 by function

Table 4.10-5

DMS OPERATIONAL REQUIREMENTS

| Function | Requirements |
|---|---|
| **Subsystem (Computation) Support** | |
| Secondary Computation | Redundant computation equipment for subsystem control shall be provided in at least two separate modules at each stage of manned operation. |
| Program Revision | Capability for program updating and exchange by ground personnel in quick and delayed time shall be provided. |
| Program Reload | Provisions for replacement of programs in volatile program store by programs from auxiliary storage shall be available. |
| Manual Control and Display | Provisions shall be included for selection and control of equipment operating modes and data readouts by crewmen. Access is to be available to the DMS computer from both central control consoles and portable control units. |
| **Data Acquisition and Distribution** | |
| Experiment Data Acquisition | Experiment data acquisition requirements are described in Section 4.10.4.1. Table 4.10-6 summarizes these requirements. |
| Subsystem Data Acquisition | Table 4.10-7 summarizes these requirements. |
| Unmanned Monitoring | Capability shall be provided for monitoring the Space Station modules in an unmanned condition to confirm the functional capabilities of critical subsystems prior to committing the launch of modules or of the crew. |

Table 4. 10-5

DMS OPERATIONAL REQUIREMENTS (Continued)

| Function | Requirements |
|---|---|
| Data Acquisition and Distribution | |
| Manual Selection | Capability to manually select data bus channels shall be provided. |
| Image Processing | |
| Experiment Control | Sufficient equipment shall be provided to allow astronauts to control/calibrate the experiments. |
| Image Selection | A film viewer shall be available to allow the crew to select images for editing. |
| Filtering | Enhancement of experiment data for visual assessment of quality shall be provided. |
| Bulk Data Storage | |
| Storage Capacity | Capacity to store 30 days of digital and video data generated in the quantities shown in Table 4. 10-6 shall be provided. |

and requirement. The experiment data acquisition requirements are a result of information management system analysis described in MP-01 and summarized in Section 4. 10. 4. 1. An estimate is included for photographic film expended during station operations in the total quantity of photographic film required per quarter. The subsystem data acquisition requirements are a result of onboard checkout requirements analysis.

Table 4.10-6

EXPERIMENT DATA ACQUISITION SUMMARY

| | ISS | GSS |
|---|---|---|
| • Experiment Data Sources | 1070 | 3631 |
| • Generated | $1.3 \times 10^{11}$ bits/day | $1.2 \times 10^{12}$ bits/day |
| • Transmitted | $1.66 \times 10^{10}$ bits/day | $2 \times 10^{11}$ bits/day |
| Real Time | $2.2 \times 10^{9}$ bits/day | $3.7 \times 10^{10}$ bits/day |
| Orbital Dump | $1.4 \times 10^{10}$ bits/day | $1.63 \times 10^{11}$ bits/day |
| • Magnetic Tape | 628 Kg/quarter (1381 lb/quarter) | 4475 Kg/quarter (9870 lb/quarter) |
| • Video Data | | |
| • Transmitted (average/peak) | 404/880 min/day | 556/816 min/day |
| Real Time (average/peak) | 184/424 min/day | 336/516 min/day |
| Orbital Dump (average/peak) | 220/480 min/day | 220/480 min/day |
| • Video Tape | 106 Kg/quarter (233 lb/quarter) | 2150 Kg/quarter (4750 lb/quarter) |
| • Photographic Film (Experiments and Operations) | 200 Kg/quarter (440 lb/quarter) 4K frames/day | 780 Kg/quarter (1719 lb/quarter) 18K frames/day |

Table 4. 10-7

SUBSYSTEM DATA ACQUISITION SUMMARY

| Module | Number of Data Sources | Worst Case Data Rate |
|---|---|---|
| Power Module 1 | 1746 | 52 KBPS |
| Crew Module 1 | 1215 | 42 KBPS |
| GPL Module | 654 | 23 KBPS |
| ISS Totals | 3615 | 117 KBPS |
| Crew Module 2 | 1021 | 35 KBPS |
| Power Module 2 | 1585 | 48 KBPS |
| GSS Totals | 6221 | 200 KBPS |

4. 10. 3 Selected Subsystem Design

4. 10. 3. 1 Description

The following sections contain a subsystem level description of the DMS followed by assembly level descriptions of its constituent functional elements. These DMS functional elements consist of:

A. Data acquisition and distribution
B. Computation.
C. Data Storage.
D. Displays and controls.
E. Entertainment.
F. Image Processing
G. Software (not truly an assembly but included herein for a complete DMS description).

Assemblies composing the various functional elements are shown in Figure 4. 10-3. The subsystem is designed to provide a nearly autonomous facility for the support and control of other subsystems. Ground support is

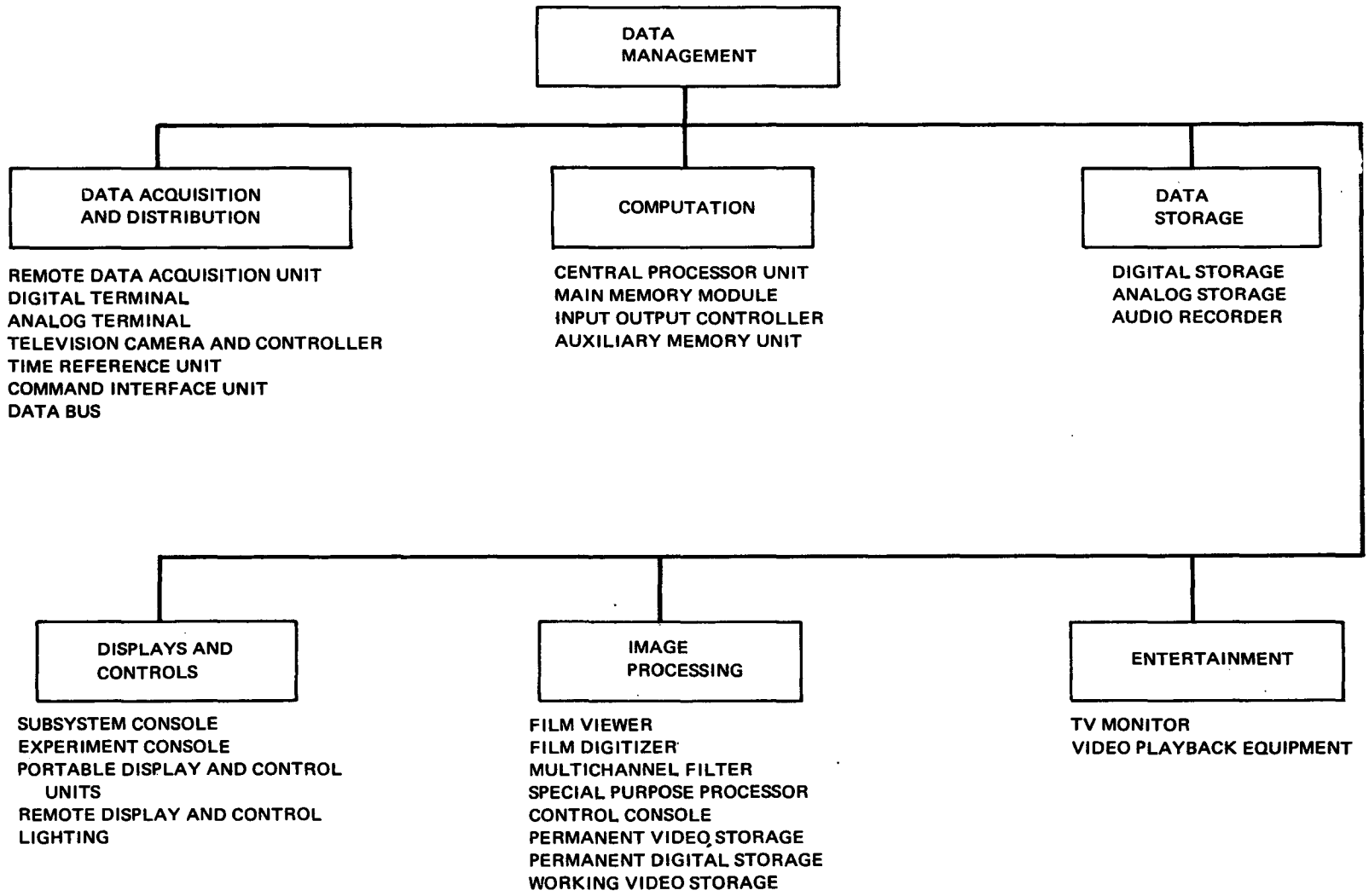


Figure 4.10-3. DMS Functional Elements

provided for periodic navigation updates. Experiment data handling is considered to be semiautonomous in that "quick-look" evaluation of data will be performed both on the Modular Space Station and on the ground. DMS operations are directed by physically separated multi-processors which also control access to the digital data bus.

Additional functions performed by the subsystem include short-term mission scheduling, subsystem and experiment consumables management, inventory control and maintenance information control. Table 4.10-8 presents a summary of subsystem equipment physical characteristics.

4.10.3.1.1 Subsystem Level Description

The data management subsystem accepts raw and preconditioned data from Modular Space Station subsystems, integral experiments, and experiments in attached RAMs via the data acquisition and distribution equipment. It outputs the data in processed and semi-processed form to the crew and/or to the ground via the communications subsystem and the Shuttle Orbiter/Logistics Modules (hard copy and physical specimens). The resulting overall DMS configuration is very similar to the 33-ft Space Station configuration. The Modular Space Station buildup sequence and the DMS support requirements during all stages of the buildup determine the equipment allocation to the first module launched; while the allocation to the other two modules is primarily determined by the major functions of each module. The integrated DMS configuration with the elements allocated to each Modular Space Station module is shown in block diagram form in Figure 4.10-4.

The first module launched (Power/Subsystems Module) contains DMS elements which provide the capability for automatic command/control, data acquisition, and data record/playback both for checkout to verify the module operational readiness before Shuttle Orbiter separation and for verification of operational status of unmanned module from the ground. It also provides the computational capability for attitude control and checkout. The first module DMS capacilities continue to support these functions throughout the ISS buildup and manned operations. The second module launched (Crew/Operations Module) contains the DMS elements for flight crew control of the

PRECEDING PAGE BLANK NOT FILMED

Table 4. 10-8

PRECEDING PAGE BLANK NOT FILMED

DMS EQUIPMENT LIST (Continued)

NOVEMBER 2, 1971 PROGRAM P1268 PAGE 12

MODULAR SPACE STATION

ISS CONFIGURATION

| ITEM CODE | ITEM NAME | UNIT WT | AVG PWR | UNIT VOL | ***** UNIT QUANTITIES **** MOD 1 | MOD 2 | MOD 3 | TOTAL |
|---|---|---|---|---|---|---|---|---|
| 2 0 | FILM DIGITIZER | 198 | 4 | 3.9 | 0 | 0 | 1 | 1 |
| 3 0 | MULTICHANNEL FILTR | 20 | 2 | 2.0 | 0 | 0 | 1 | 1 |
| 4 0 | PROCESSOR | 15 | 9 | .1 | 0 | 0 | 1 | 1 |
| 5 0 | CONSOLE | 65 | 0 | 5.0 | 0 | 0 | 1 | 1 |
| 6 0 | PER VIDEO STORAGE | 100 | 25 | 3.0 | 0 | 0 | 1 | 1 |
| 7 0 | PER DIGITAL STORAGE | 40 | 10 | 1.2 | 0 | 0 | 1 | 1 |
| 8 0 | WORK VIDEO STORAGE | 12 | 1 | 1.0 | 0 | 0 | 1 | 1 |
| E 0 0 | DATA STORAGE | 0 | 0 | 0.0 | 0 | 0 | 0 | 0 |
| 1 0 | DIGITAL STORAGE ASY | 0 | 0 | 0.0 | 0 | 0 | 0 | 0 |
| 1 | DIGITAL RECORDERS | 40 | 60 | 1.2 | 1 | 0 | 2 | 3 |
| 2 | BUFFER AND CONTROL | 5 | 3 | .1 | 1 | 0 | 2 | 3 |
| 2 0 | ANALOG STORAGE ASSY | 0 | 0 | 0.0 | 0 | 0 | 0 | 0 |
| 1 | ANALOG RECORDERS | 100 | 75 | 3.0 | 0 | 1 | 2 | 3 |
| 2 | AUDIO RECORDERS | 5 | 2 | .2 | 0 | 4 | 4 | 8 |
| F 0 0 | DISPLAY AND CONTROL | 0 | 0 | 0.0 | 0 | 0 | 0 | 0 |
| 1 0 | SUBSYSTEM CONSOLE | 0 | 0 | 26.6 | 0 | 0 | 0 | 0 |
| 1 | DISPLAY PROCESSOR | 60 | 84 | 2.0 | 0 | 2 | 0 | 2 |
| 2 | BUFFER MEMORY | 40 | 120 | 1.0 | 0 | 2 | 0 | 2 |
| 3 | CHARACTER GEN | 100 | 90 | 2.8 | 0 | 2 | 0 | 2 |
| 4 | D/A CONVERTER | 28 | 24 | 1.6 | 0 | 2 | 0 | 2 |
| 5 | CRT AND DEFCTE CKT | 50 | 120 | 4.5 | 0 | 2 | 0 | 2 |
| 6 | KEYBOARD | 25 | 15 | .8 | 0 | 2 | 0 | 2 |
| 7 | MICROFILM VIEWER | 60 | 40 | 6.0 | 0 | 1 | 0 | 1 |
| 8 | WARNING MATRIX | 20 | 0 | .2 | 0 | 1 | 0 | 1 |
| 9 | CAUTION ARRAY | 20 | 10 | 1.0 | 0 | 1 | 0 | 1 |
| 10 | HAND CONTROLLER | 20 | 5 | .5 | 0 | 1 | 0 | 1 |
| 11 | VIDEO MONITOR | 35 | 5 | 1.3 | 0 | 1 | 0 | 1 |
| 12 | DEDICATED D AND C | 75 | 5 | .8 | 0 | 1 | 0 | 1 |
| 13 | CONSOLE | 130 | 0 | 0.0 | 0 | 1 | 0 | 1 |
| 2 0 | EXPERIMENT CONSOLE | 0 | 0 | 0.0 | 0 | 0 | 0 | 0 |
| 1 | DISPLAY PROCESSOR | 60 | 35 | 2.0 | 0 | 0 | 2 | 2 |
| 2 | BUFFER MEMORY | 40 | 120 | 1.0 | 0 | 0 | 2 | 2 |
| 3 | CHARACTER GEN | 100 | 38 | 2.8 | 0 | 0 | 2 | 2 |

Table 4. 10-8

DMS EQUIPMENT LIST (Continued)

NOVEMBER 2, 1971 PROGRAM P1268 PAGE 13

MODULAR SPACE STATION

ISS CONFIGURATION

| ITEM CODE | ITEM NAME | UNIT WT | AVG PWR | UNIT VOL | ***** UNIT QUANTITIES **** MOD 1 | MOD 2 | MOD 3 | TOTAL |
|---|---|---|---|---|---|---|---|---|
| 4 | D/A CONVERTER | 28 | 10 | 1.6 | 0 | 0 | 2 | 2 |
| 5 | CRT AND DEFCTE CKT | 50 | 50 | 4.5 | 0 | 0 | 2 | 2 |
| 6 | KEYBOARD | 25 | 6 | .8 | 0 | 0 | 2 | 2 |
| 7 | MICROFILM VIEWER | 60 | 20 | 6.0 | 0 | 0 | 2 | 2 |
| 8 | WARNING MATRIX | 20 | 0 | .2 | 0 | 0 | 1 | 1 |
| 9 | CAUTION ARRAY | 20 | 10 | 1.0 | 0 | 0 | 1 | 1 |
| 10 | HAND CONTROLLER | 20 | 5 | .5 | 0 | 0 | 2 | 2 |
| 11 | VIDEO MONITOR | 35 | 13 | 1.3 | 0 | 0 | 4 | 4 |
| 12 | DEDICATED D AND C | 75 | 5 | .8 | 0 | 0 | 1 | 1 |
| 13 | CONSOLE | 130 | 0 | 0.0 | 0 | 0 | 1 | 1 |
| 3 0 | PORTABLE MON + CONT | 100 | 20 | 6.0 | 2 | 0 | 2 | 4 |
| 4 0 | CREW AUDIO/VISUAL | 20 | 5 | .5 | 0 | 8 | 0 | 8 |
| J 0 0 | UNIQUE CHECKOUT EQPT | 0 | 0 | 0.0 | 0 | 0 | 0 | 0 |
| 1 0 | STIMULI GEN UNIT | 12 | 1 | .5 | 7 | 3 | 2 | 12 |
| 2 0 | LOCAL C/W UNIT | 4 | 7 | .1 | 3 | 9 | 6 | 18 |
| LA 0 0 | LIGHTING | 0 | 0 | 0.0 | 0 | 0 | 0 | 0 |
| B 0 0 | LIGHTING | 0 | 0 | 0.0 | 0 | 0 | 0 | 0 |
| 1 0 | INTERIOR | 0 | 0 | 0.0 | 0 | 0 | 0 | 0 |
| 1 | AREA | 2 | 4 | 0.0 | 30 | 48 | 45 | 123 |
| 2 | HANDRAIL | 1 | 3 | 0.0 | 20 | 25 | 25 | 70 |
| 3 | SUPPLEMENTARY | 1 | 0 | 0.0 | 5 | 25 | 25 | 55 |
| 4 | PORTABLE | 2 | 0 | 0.0 | 1 | 2 | 2 | 5 |
| 5 | HIGH INTENSITY | 3 | 0 | 0.0 | 0 | 1 | 1 | 2 |
| 6 | AVG SUPP,PORT,HI | 0 | 5 | 0.0 | 22 | 53 | 50 | 125 |
| 2 0 | EXTERIOR | 0 | 0 | 0.0 | 0 | 0 | 0 | 0 |
| 1 | DOCKING | 2 | 0 | 0.0 | 20 | 16 | 4 | 40 |
| 2 | ORIENTATION | 5 | 0 | 0.0 | 4 | 4 | 4 | 12 |
| 3 | ACQUISITION | 10 | 0 | 0.0 | 4 | 4 | 4 | 12 |
| 4 | AVG EXTERIOR PWR | 0 | 1 | 0.0 | 2 | 2 | 2 | 6 |

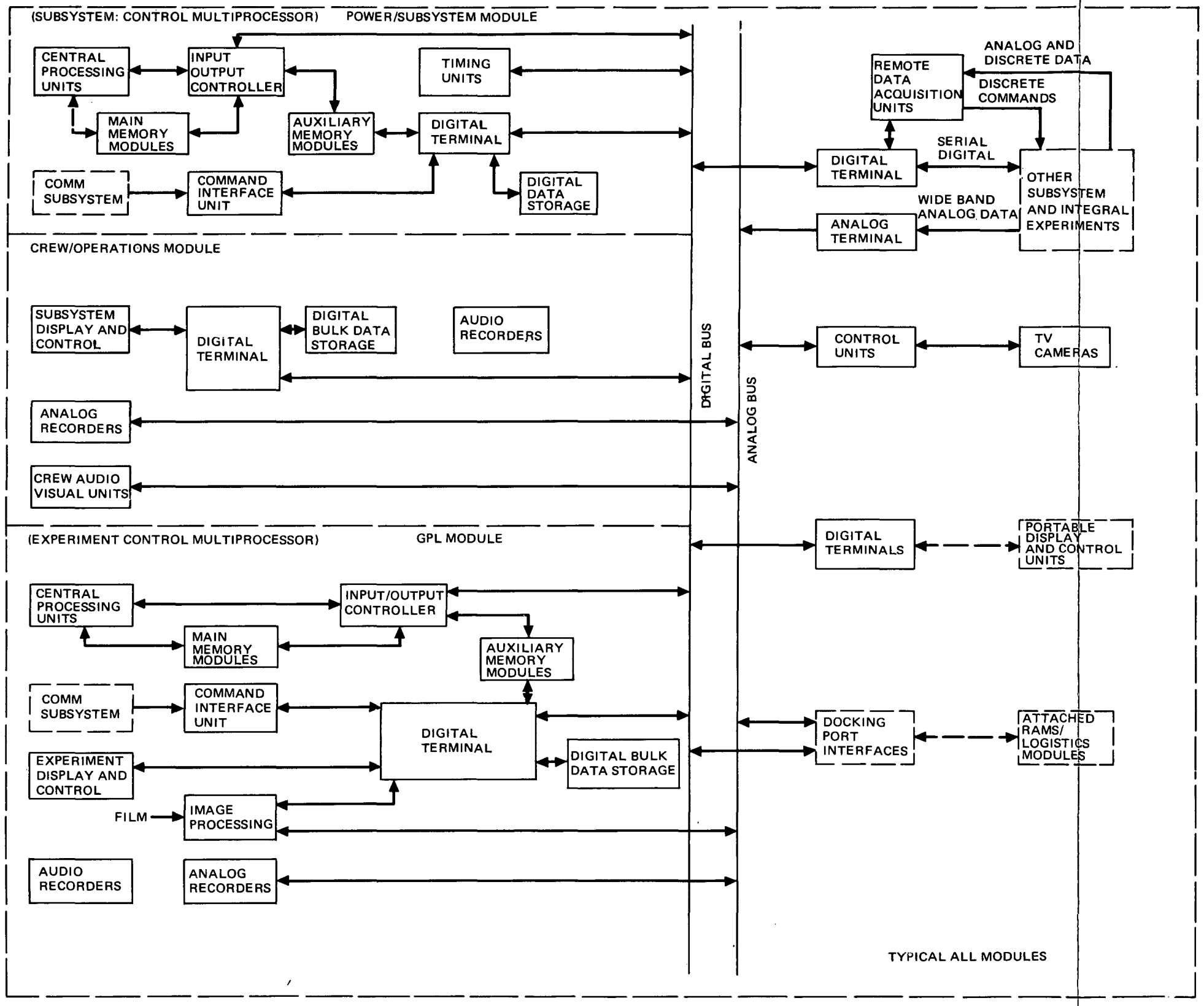


Figure 4.10-4. DMS Assembly Breakdown

Station operations and for flight crew entertainment. The third module launched (GPL) contains the DMS elements primarily associated with experiment operations. Some of these elements also serve as backup/redundant capabilities. The experiment control multiprocessor and the associated display and control capability also provide the backup station operations for the crew in a separately and independently habitable compartment during the manned phases of operation. Both digital and analog data buses interconnect the DMS elements within and between modules. The buses are also extended into RAMs, Log Modules, etc., when they are attached to a docking port.

Data Acquisition and Distribution

The data acquisition elements obtain raw or preconditioned data from sensors and circuits in all ISS modules. The elements consist of signal conditioning which serves to provide standardized signal forms, levels and output impedances, and remote data acquisition units (RDAUs) used for multiplexing, digitizing, and limit checking. Detachable television cameras provide internal and external Station surveillance. Camera control units mounted near cameras operate on internal synchronization with only a video signal being transferred to the analog data bus.

The data distribution elements include two buses, one analog and one digital. The analog bus contains audio and video data assigned directly to FDM channels. The digital bus contains asynchronous TDM/FDM digital data channels operating in a half duplex mode on a command response control basis. A digital channel connects a control processor to data bus terminals through modems. The data bus terminals provide the interface for control of remote data acquisition units (RDAUs), subsystem devices, or experiment equipment.

Control of the digital data bus is maintained by the executive program of the command and control multiprocessor. Each device is polled as required by data urgency. Each digital channel speed is 10 MBPS and is fast enough to prevent any data loss based on expected data rates and reasonable buffer storage sizes at each terminal device.

Device-to-device transfer is possible by special command of the data bus controller. Terminals which need to communicate with each other must necessarily be assigned to the same digital bus frequency. However, where required, a terminal may be switched from one frequency to another by the computer.

Two redundant data buses, one analog and one digital, are included in each module and are also routed to all docking port interfaces. A total of 93 RDAUs and 50 digital data terminals are distributed within the three ISS modules. Three analog data terminals are in the GPL module to support integral experiments. Three television cameras are mounted externally on the Crew/Operations Module for external Station Surveillance and a total of seven are provided for internal surveillance.

Computation

The computation equipment consists of two computer complexes located in separate modules; the processor for subsystem control and flight operations is in the Power/Subsystems Module and the processor for experiment control and scheduling is in the GPL module. The subsystem control and flight operations functions may be performed by the GPL computer complex if the need arises. When equipment is not operating, it will be placed in a standby condition to conserve power. Periodically, each processor will run self-test routines to detect internal failures. If a failure is detected, the failed unit will be switched out and replaced automatically with another unit. The crew will be notified via the OCS so maintenance can be initiated. Auxiliary memories provide the capability for reading a variety of stored programs into a computer on an as-needed basis for selected and/or intermittent computer operations. The programs will have been prepared in advance and kept in storage in anticipation of the above, or new programs will be generated as required either by transmission from the ground or onboard by means of a display and controls keyboard.

The central processing unit (CPU) is similar to the MSFC SUMC described in MSFC Report SP-232-0384, "MSFC Advanced Aerospace Computer, dated July 6, 1970. Each CPU operates at 500 KOPS (equivalent add instructions). Two operating CPUs in a multiprocessor configuration are installed in each computer complex. Two input output controllers, one operating and one redundant, are installed in each computer complex. Each main memory module's capacity is 16 K words. Six operating modules are installed in the subsystem computer complex and five in the experiment computer complex. Each auxiliary memory module has a capacity of 1 M words. Two auxiliary memory modules are installed in each computer complex. One module in each complex is redundant.

Data Storage

Digital bulk data storage utilizes ultra-high density magnetic tape recording techniques and is configured to meet high data rate and low volume storage requirements with relatively slow access speed requirements. The storage equipment will be used primarily for data recording prior to onboard processing or return to Earth via Logistics Module/Shuttle Orbiter for ground processing. Data acquired from the various subsystems or experiments is addressed by the source prior to transfer, time tagging and storage. This storage equipment also provides the highest level of memory in the computation memory hierarchy. Digital bulk data storage is provided in each ISS module.

Magentic tape recorders are also employed for storage of voice and video data. A conventional linear recording method is used for portable voice recorders while machines of the rotary head/wideband variety are required for video. Records and procedures will also be stored on microfilm. Voice and video data recorders are provided in the Crew/Operations and GPL Modules.

Displays and Controls

Displays and controls (D&C) provide the crew with mointoring and control capability over the ISS, its subsystems, and the related experiment programs.

Through the D&C a man-machine interface is achieved whereby the crew is presented information from which control action is taken for subsystem management, vehicle maneuver supervision, energy and consumable management, and experiment program direction. The D&C is capable of presenting information that reflects operational status and performance capability to the crew and provides the capability for achieving subsystem and vehicle control. The D&C is configured to accommodate scheduled as well as spontaneous mission operations. To achieve this in a manner that minimizes the crew-time required by an operator to "man" the D&C station for controlling and monitoring operations, the DMS multiprocessor provides a high degree of automatic subsystem management and control of most subsystem equipment operations. This management is routinely performed without crew intervention until such time as man's interpretive and decision-making capabilities are required for responding to changing requirements, real-time observations, moments of opportunity, emergency situations, and checkout/maintenance.

Display and control equipments consist of (1) primary command and control center in the Crew/Operations Module for ISS and subsystems control, (2) experiment command and control center in the GPL Module for experiment program management and backup to the primary command and control center, (3) portable display and control units, and (4) remote alert units and entertainment facilities.

Entertainment

Entertainment facilities are supplied to provide relaxation for off-duty crew members. These facilities include TV monitors in the crew quarters and wardrooms, as well as music piped through the speaker system. A video reproducer unit is supplied to provide a source for playing of stored program material.

Image Processing

Image processing equipment provides a capability in the GPL module to aid the onboard crew in calibration and control of experiments. An image processing display and control console is provided to select appropriate analog

and digital functions and display the results of such processing to enhance or improve images.

Software

Onboard software provides both executive and checkout functions for both computer complexes. Application programs for flight operations and subsystems support are normally executed in the primary computer complex and experiment related programs are executed in the experiment computer complex.

4.10.3.1.2 Data Acquisition and Distribution Assemblies

A detailed design of the data buses and selected interfacing assemblies for a GSS was accomplished as part of the IMS Special Emphasis Tasks and is documented in SE-02. The resulting design of these assemblies is summarized in this section along with descriptions of the rest of the data acquisition and distribution assemblies.

Analog Data Bus

The analog data bus contains audio and video data assigned directly to FDM channels. The channel assignments are shown in Figure 4.10-5. The analog data bus is shown in Figure 4.10-6 with typical interfacing assemblies.

The audio channels performance characteristics are shown in Table 4.10-9 for the GSS configuration. These parameters will result in a 95 percent worst case intelligibility (15 db signal to noise ratio) when a receiver in an attached module is energized by a transmission from a different attached module.

The video channels performance characteristics are shown in Table 4.10-10 for the GSS configuration. These parameters result in a worst case 39 db signal-to-noise ratio when receiving a transmission in a core module or the GPL module from an attached module separated by the full length of the GSS data bus. This S/N corresponds to a very fine picture quality (mid distance between the 34 db and 44 db defined by TASO for fine and excellent picture quality, respectively). Signals received by video monitors contained in

(1) Public Address, Emergency Call, 300 to 3,000 Hz

(2) Telephone Carrier Reference, 4,000 Hz Sine Wave

(3) Emergency Call Tone, 5,000 Hz Sine Wave

(4) Emergency Alert Tone, 6,000 Hz Sine Wave

(5) 36 Telephone Channels, 60 KHz to 252 KHz, SSB-Sc-AM, 300 to 3,000 Hz Audio

(6) 3 Entertainment Channels, 1.0 MHz ±75 KHz, 1.15 MHz ±75 KHz, 1.3 MHz ±75 KHz, Frequency Modulated

(7) Television Carrier Reference, 4 MHz Sine Wave

(8) to (15) Television and Video Channels, 4.75 MHz Baseband, 6 MHz Vestigial Sideband AM, Carrier Frequencies Spaced at 8 MHz Intervals Starting with 8 MHz, 2 MHz Guard Band.

(16) Onboard Generated Test Channel, 4.75 MHz Baseband, 6 MHz Vestigial Sideband AM, Located in the Inter of 70.75 to 76.75 MHz.

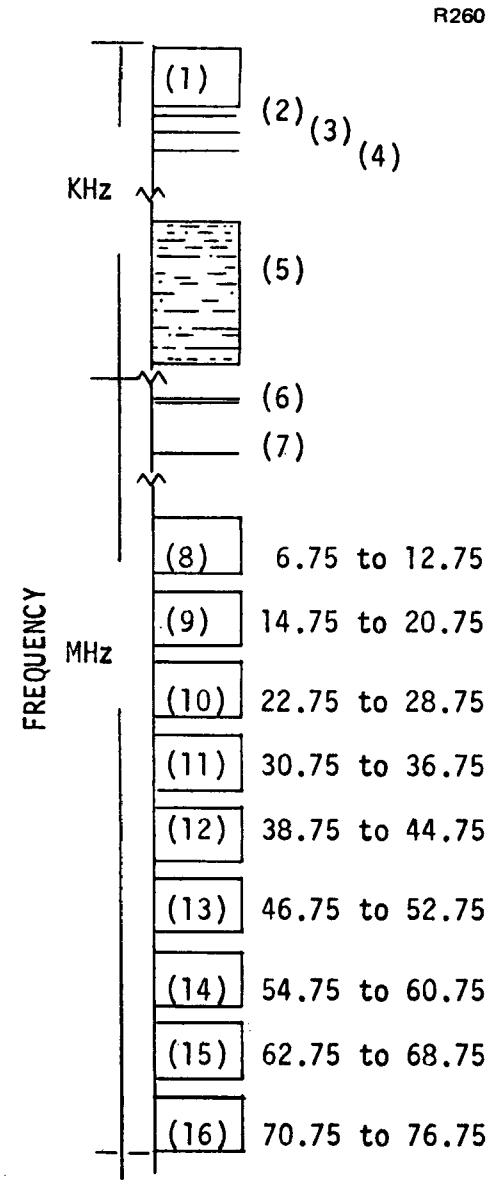


Figure 4.10-5. Analog Channel Allocation Chart

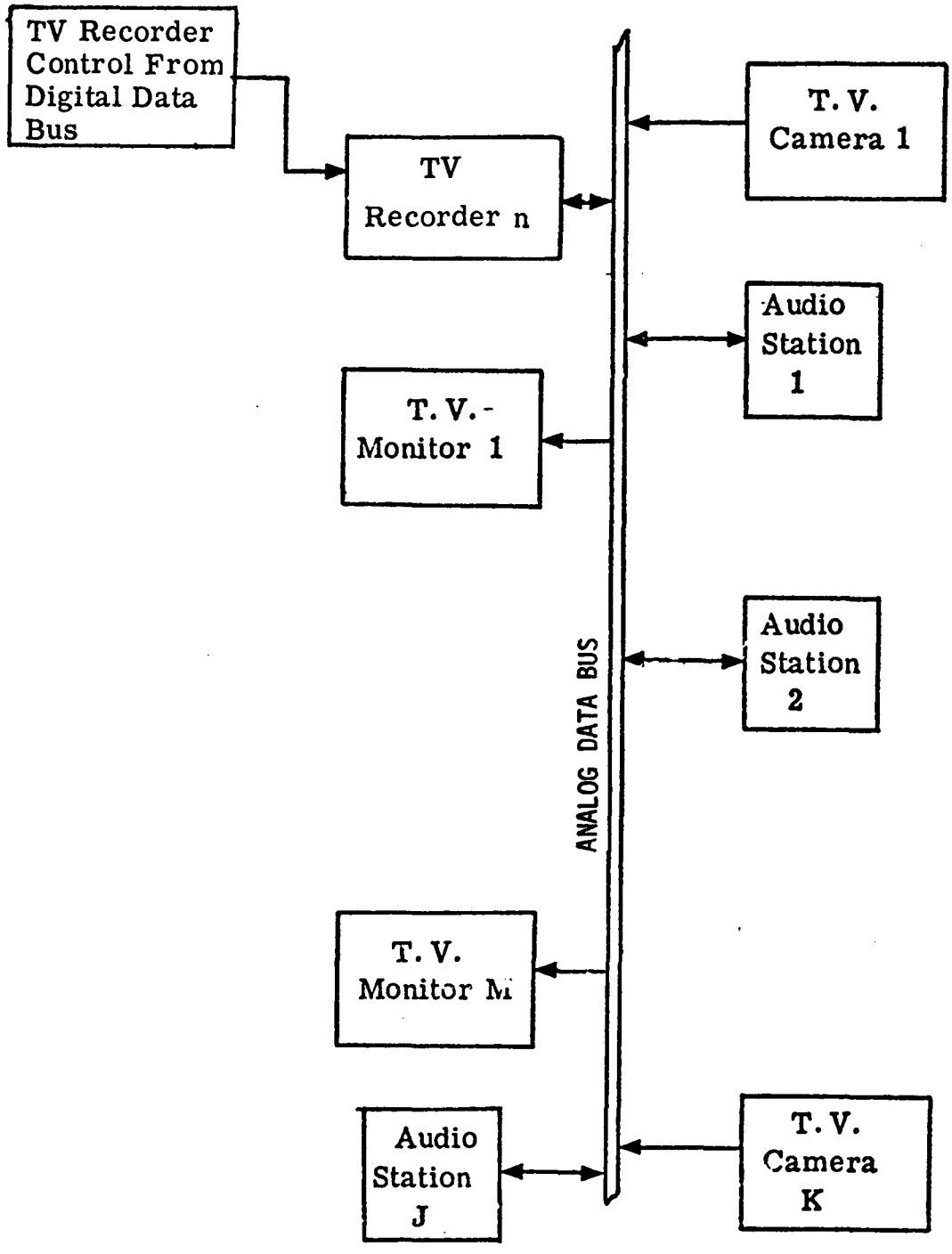


Figure 4.10-6. Analog Data Distribution

Table 4.10-9

AUDIO CHANNEL PERFORMANCE CHARACTERISTICS

Receiver

Bandwidth - 3 kHz

Noise Figure - 25 db

Center Frequency - as shown in Figure 4.10-5

Dynamic Range - 50db

Sensitivity - Minus 105 dbm with the specified bandwidth and noise figure at 20°C ambient temperature

Transmitter

Bandwidth - 3 kHz

Modulation - Single sideband suppressed carrier

Unmodulated Carrier

Power Output - 21 dbm

Table 4.10-10

VIDEO CHANNEL PERFORMANCE CHARACTERISTICS

Receiver

Bandwidth - 4.75 MHz (6 MHz vestigal)

Noise Figure - 10 db

Center Frequency - as shown in Figure 4.10-5

Dynamic Range - 45 db

Sensitivity - Minus 98 dbm with the specified bandwidth and noise figure at 20° C ambient temperature

Adjacent Channel Rejection - 75 db minimum

Transmitter

Unmodulated Carrier - 30 dbm

Power Output

Modulation - Vestigal sideband

Bandwidth - 4.75 MHz (6 MHz vestigal)

attached modules will not meet these standards, however. The minimum S/N received in an attached module from a transmission from a different attached module could be as low as 24 db. While not a fine quality picture, this S/N results in an acceptable picture, but fine details might be lost.

Digital Data Bus

The digital data bus is shown in Figure 4. 10-7 with typical interfacing assemblies. This bus consists of three 10 MBPS channel (expandable to eight) to accommodate approximately 80 digital data bus terminals (expandable to 128). The performance characteristics of these channels are shown in Table 4. 10-11 for the GSS configuration. This design results in a worst case S/N of 22 db and a $10^{-7}$ BER when all 128 terminals are accommodated. Interchannel interference is kept to a minimum with a worst case signal to interference power of 20 db.

The modems interface with the bus controller, transmission line, and data bus terminals to provide compatible input output characteristics. The modem block diagram is shown in Figure 4. 10-8. The modem accepts Manchester Type II Biphase coded data at 10 MBPS for transmission on the data bus and modulates this waveform on an RF carrier of either 140 MHz, 210 MHz, or 300 MHz. The total transmitted power is approximately 20 dbm.

The modulated RF carrier is accepted by the receiver portion of an in channel modem. (The receive section of a transmitting modem is turned off during the transmit cycle to prevent overloading and possible erroneous operation.) The 10 MBPS Manchester coded waveform is derived from the detector and transmitted to either a data bus terminal or the bus controller.

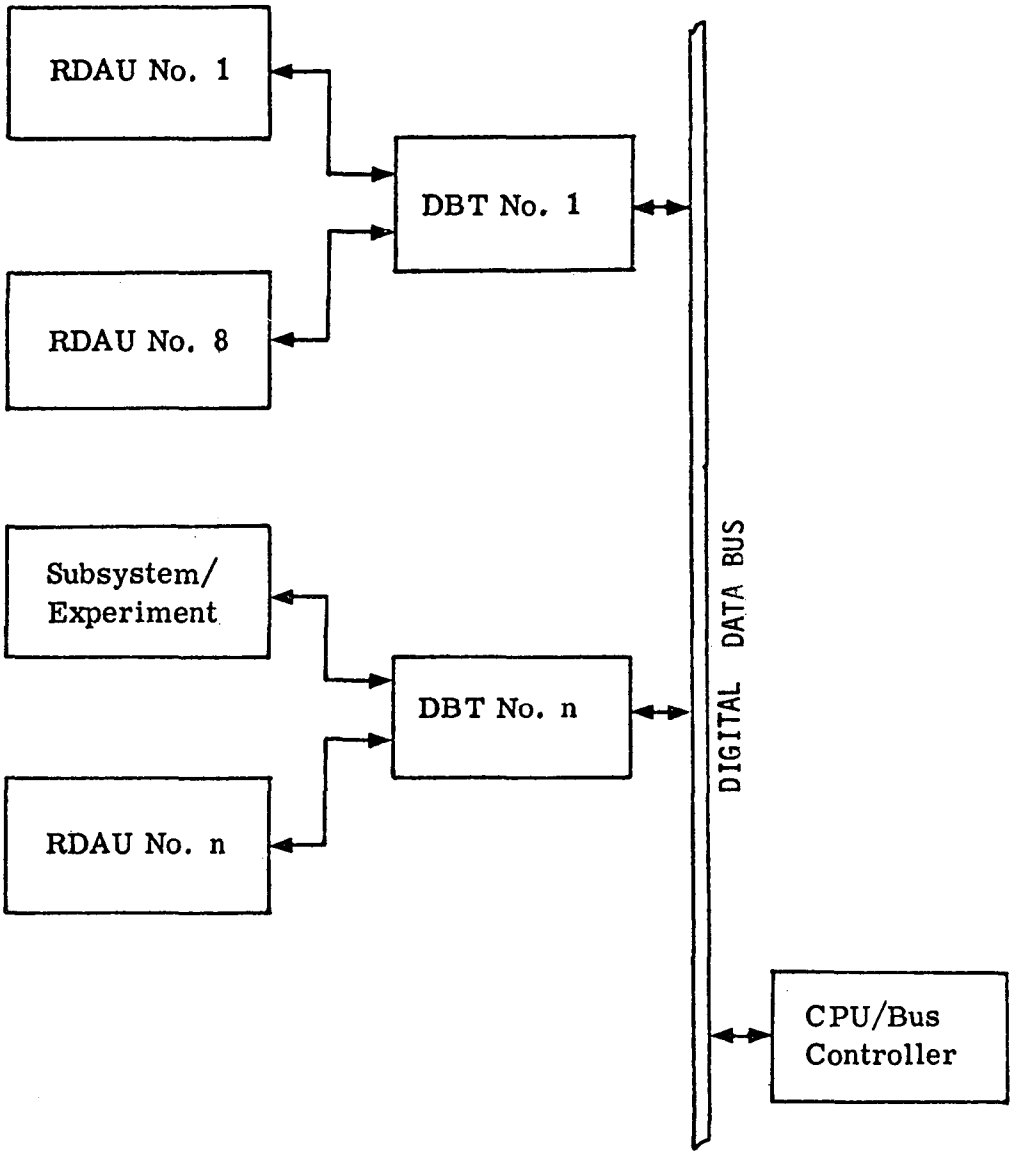


**Figure 4.10-7. Digital Data Distribution**

Table 4. 10-11

DIGITAL CHANNEL PERFORMANCE CHARACTERISTICS

Receiver

Data Rate - 10 MBPS per channel

Data Coding - Manchester Type II biphase code format

RF Bandwidth - 25 MHz ± 0. 5 MHz per channel

Modulation - Double sideband amplitude modulation

Noise Figure - 8 db

Sensitivity - Minus 92 dbm with the specified bandwidth and noise figure at 20° C ambient temperature

Response Delay - 2. 3 Microseconds maximum

Center Frequency - Channel 1 - 140 MHz
Channel 2 - 210 MHz
Channel 3 - 300 MHz

Signal-to-Noise Ratio - 22 db minimum

Bit Error Rate - $10^{-7}$ maximum

Transmitter

Data Rate - 10 MBPS per channel

Data Coding - Manchester Type II biphase coding format

RF Bandwidth - 25 MHz ± 0. 1 MHz

Modulation - Double sideband amplitude modulation

Unmodulated Carrier - 20 dbm

Power Output

Turn On Delay - 400 Nanoseconds maximum

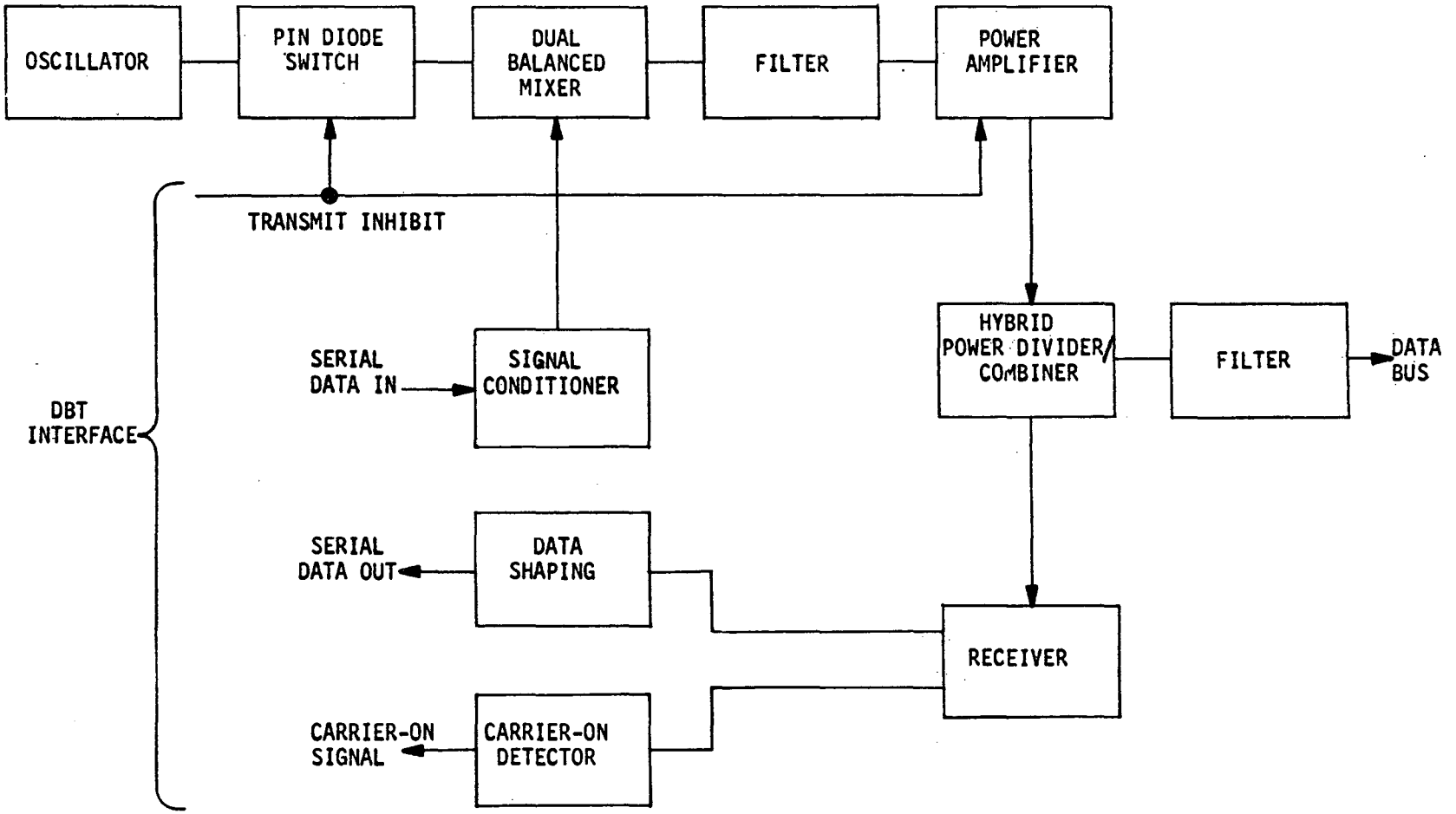


Figure 4.10-8. Modem Block Diagram

Digital Data Bus Terminal

The digital data bus terminal contains the necessary logic, buffering, and control to interconnect the digital data bus with other DMS digital units and subsystem and experiment digital interface units.

The data bus terminal interfaces are shown in Figure 4.10-9. The DBT accepts 10 MBPS Manchester Type II Biphase coded digital data from the modem, decodes the address and functional codes, and performs the necessary steps to execute the particular command. The DBT then interfaces with one of eight I/O channels at one MBPS with a bipolar NRZ code. The required logic is shown in the DBT Block Diagram, Figure 4.10-10. Each DBT responds only to a uniquely assigned hardwire programmable address.

Remote Data Acquisition Unit

Remote Data Acquisition Units (RDAUs) interface with digital data bus terminals and are capable of acquiring individual data channels, multiple data channels (frames), performing limit checking, and provide discrete commands to other devices. Figure 4.10-11 is a block diagram of the device. It contains input and output buffers for transferring data in and out of the unit, instruction logic for defining one of 16 possible operation modes, an output decoder for command address decoding, an address counter for sequencing through memory or data channels, analog and digital gates with an associated analog to digital converter, and circuitry associated with limit check functions.

The format for words input and output between digital data bus terminals and RDAUs is 18 bits in length including a lead one or zero and a parity check bit. Data is transferred most significant bit first and the parity check is odd. Input data to the RDAUs from the terminals consist of a single instruction ("B" Word) or an instruction followed by a message consisting of one or 32 data words. Typical instructions are shown below:

| | |
|---|---|
| No Operation (NOP) | Load Limit Channel (LLC) |
| Read Limit Channel (RLC) | Load Limit Memory (LLM) |
| Read Limit Memory (RLM) | Command (CMD) "ON" |
| Read Data Frame (RDF) | Command (CMD) "OFF" |

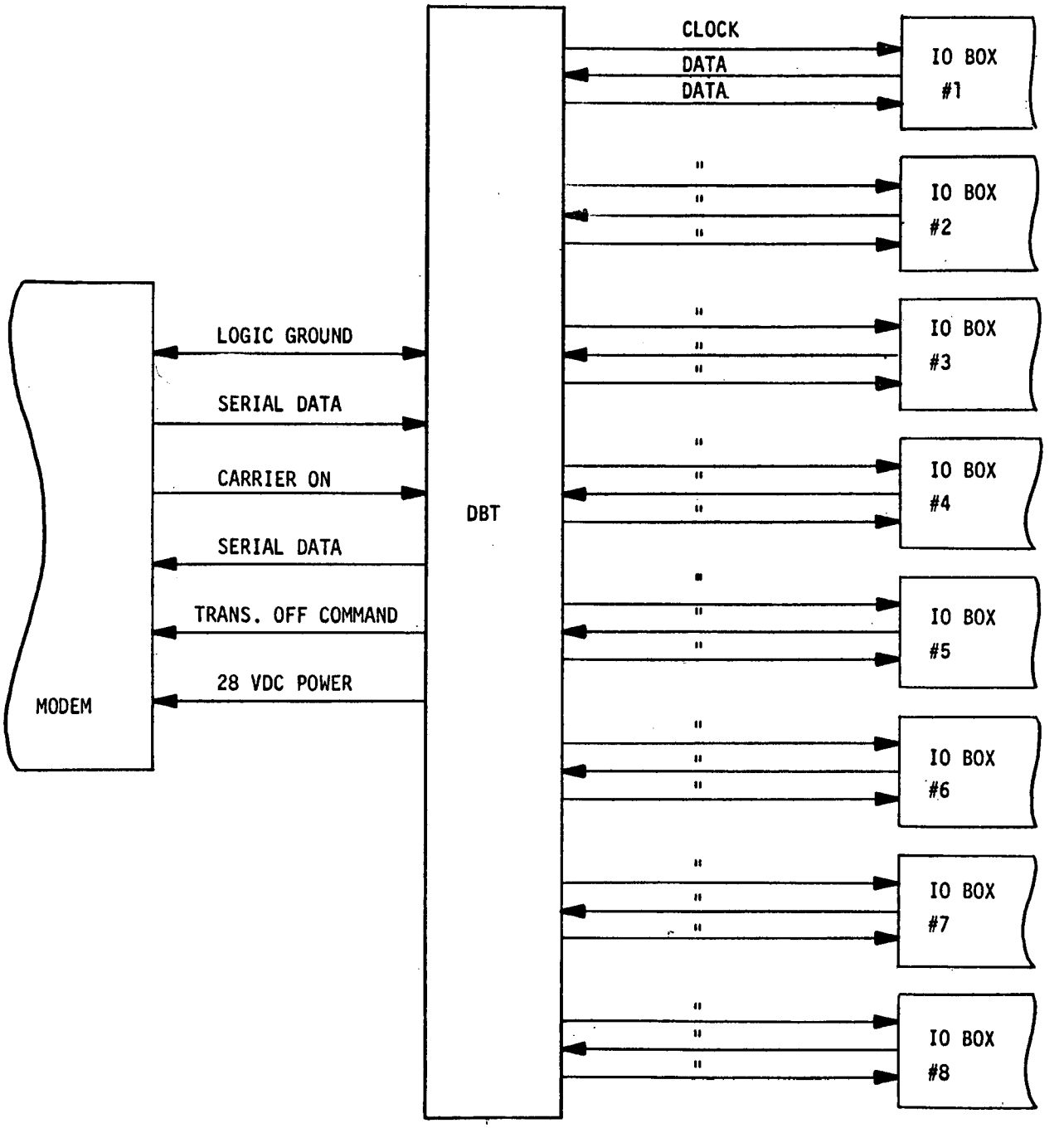


**Figure 4.10-9. Data Bus Terminal Interfaces**

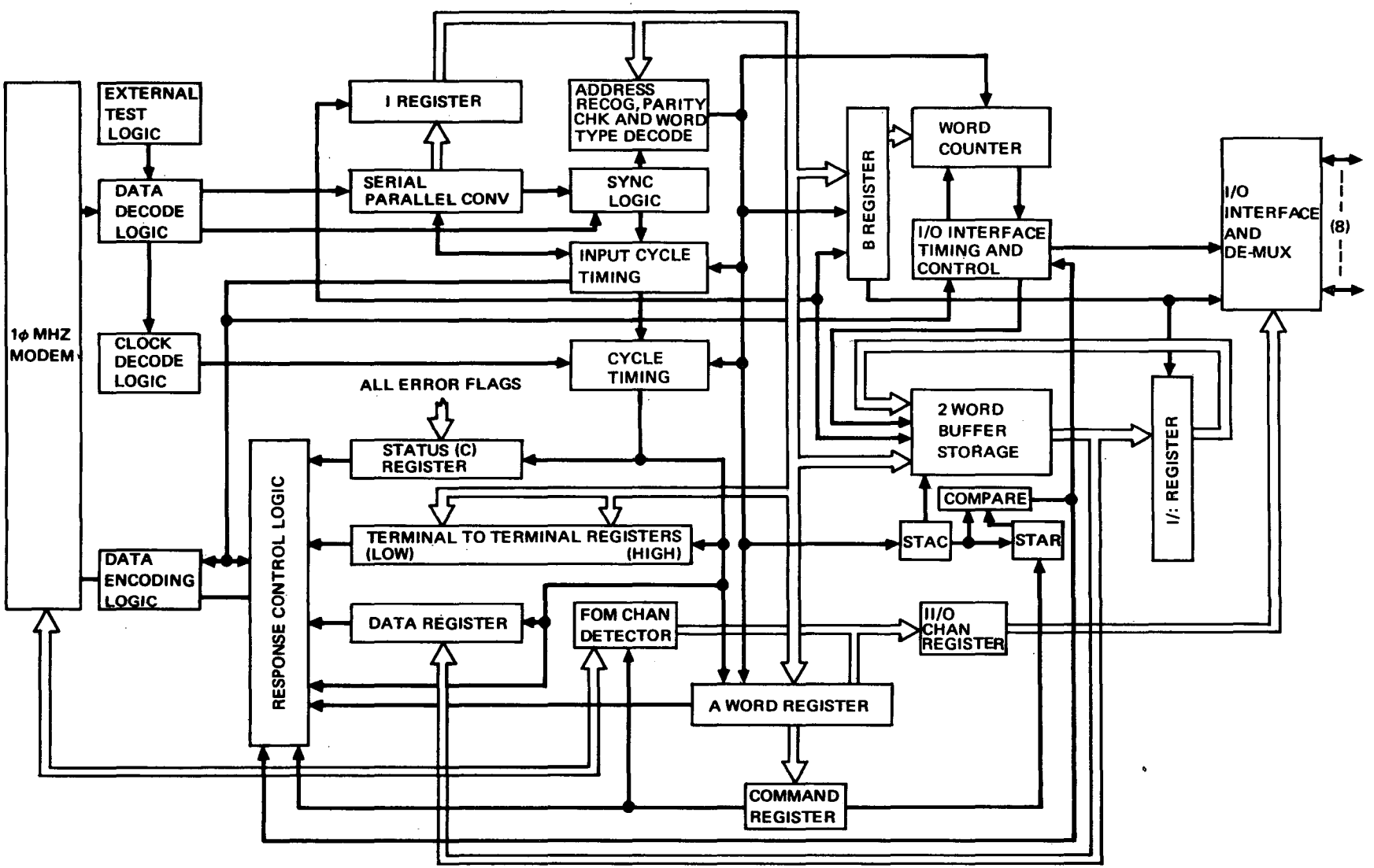


Figure 4.10-10. Data Bus Terminal Block Diagram

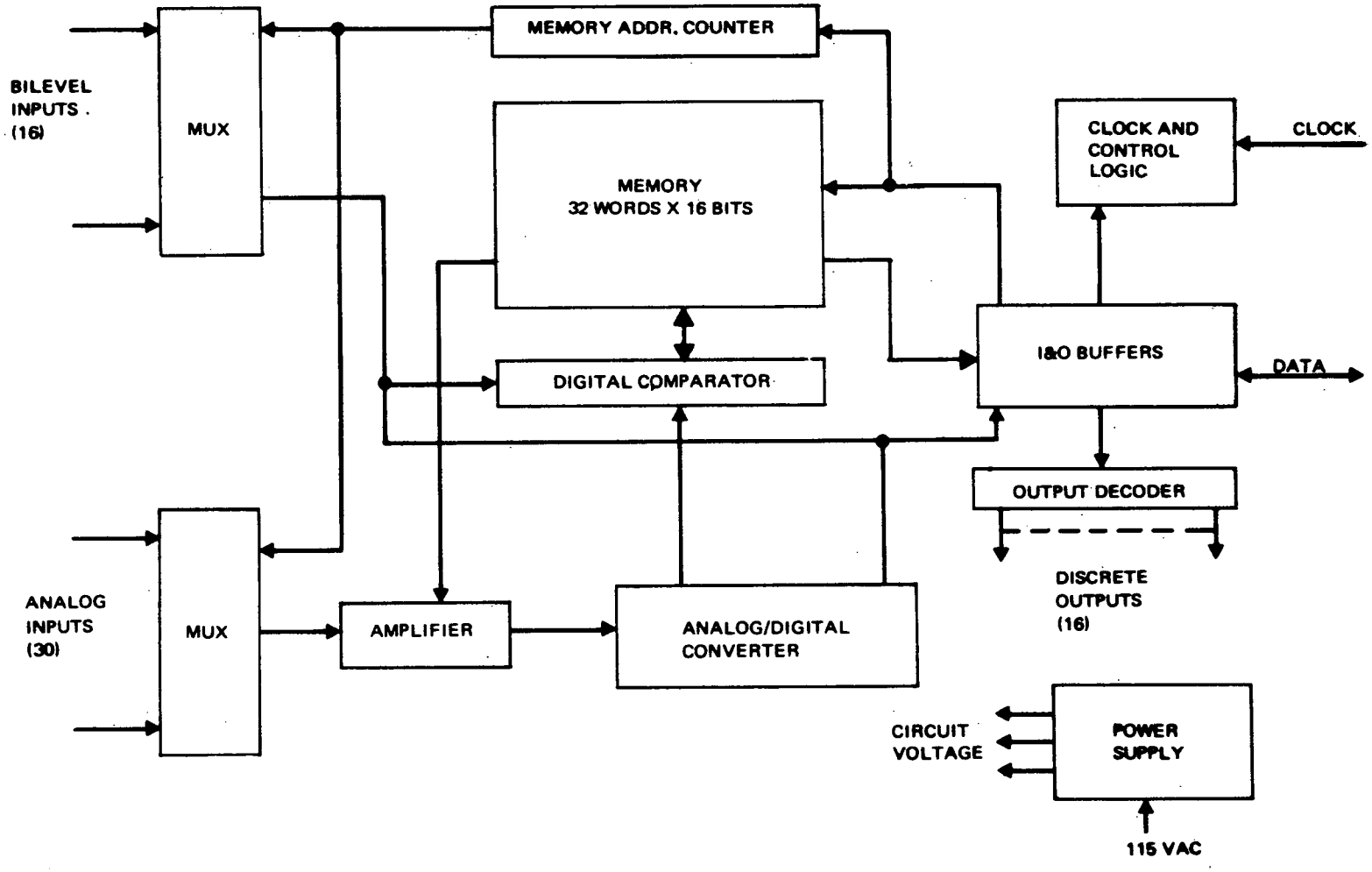


Figure 4.10-11. Remote Data Acquisition Unit

| | |
|---|---|
| Read Data Channel (RDC) | Command (CMD) "STANDBY" |
| Read Out-of-Limit Status (ROL) | Enable Limit Check (ELC) |

Analog and discrete signals are accepted by each unit, amplified and encoded. All inputs are double ended or differentially connected to improve noise immunity. Each unit provides gating for 30 externally connected analog signals and 16 discrete inputs. Each digital gate/address serializes data from eight individual discrete inputs into an 8 bit word and routes this data to a comparator or input/output buffer as appropriate. Analog signals with ranges of 0.0 to 40 millivolts or 0.0 to 5.0 volts are accommodated by an amplifier with programmed gains established by a bit in memory. Following amplification, the signals are encoded to an 8 bit accuracy.

The RDAUs include a limit check mode. Although the analog signals are encoded to an 8 bit accuracy, high and low limit checking of analog signals is only required to 7 bits. Discretes are checked against "ON" or "OFF" limits (one or the other but not both). Limit checking is performed by a comparator using limits stored in the RDAU memory. Upon detection of an out-of-limits channel, a limit check enable bit in the memory is set to "0" and a flag raised on the output data lines. The flag shall consist of a 1-microsecond pulse of either polarity (determined by the previous "1" output). Subsequent errors do not raise a flag until a transfer of the limit check enable status has been requested and completed.

The RDAUs are in a standby mode whenever they are not in one of the operating modes. The standby mode requires 10 percent of the total operating power for powering the input buffers and the logic necessary to recognize and accept a correctly addressed command from a digital data bus terminal. The RDAUs operating duty cycles are assumed to be 10 percent of the time in an operating mode and 90 percent of the time in the standby mode.

The interface between the RDAU and the digital data bus terminal consists of three twisted shielded cable double ended signal lines and shall be compatible with the Bipolar NRZ DBT I/O channel interface.

Time Reference Unit

Time reference information is provided for astronaut information in coordinating activities with the ground (arrival and departure of shuttle vehicles or information transmittals), for initiating experiments, for annotating experiment results and for initiating certain periodic computations.

Although the availability of this information is critical when needed, the accuracy requirements are not high and the availability of ground updating allows incorporation of a simple state-of-the-art concept.

The time reference unit employs a quartz crystal oscillator and micro logic countdown circuitry to furnish a time output with resolution of 1 microsecond and accuracy of one part in $10^{10}$.

Update is performed on a once-per-day basis using WWV information transmitted through the Data Relay Satellite and computer generated delay data. Delay data furnished by the computer compensates for retransmission and propogation delays based upon DRSS and Space Station position. Readjustment of the Time Reference is accomplished and the amount of readjustment is transmitted to the ground for correction of experiment annotations.

Time is furnished on the data bus on a once-per-millisecond basis which may be used by the onboard processors for performance of periodic tasks. Time is also available to the data bus at intermediate periods on an "as requested" basis.

Television Units

The television data acquisition assemblies are comprised of cameras and control units used for internal and external Station surveillance. Television monitors for Station operations are described in Section 4.10.3.1.5, Display and Control Assemblies.

The camera is a low-light level unit with which pictures may be obtained with less than 1 ft-candle of incident scene illumination. Focus may be adjusted by remote control of the lens assembly. Color response is

approximately that of the human eye. To prevent direct sunlight from damaging the vidicon, the unit will be mounted behind a window with variable polarization automatically controlled by a sensor. A standard 8-millimeter lens provides a 72-degree field of view.

The control unit includes a synchronizing pulse generator which generates a stable reference frequency for divider, pulse forming circuitry and for generation of the appropriate analog bus subcarrier frequency. The generator is locked to the bus reference frequency. Automatic gain control is slaved to the video level which controls the vidicon target voltage providing a constant video output. Other circuitry within the unit includes conventional horizontal and vertical drive deflection amplifiers, synchronization and beam blanking processors as well as the subcarrier modulator (see Figure 4.10-12). The data interface for the control units is an isolation pad on the analog data bus. Control is via RDAU discrete command outputs.

Command Interface Unit

An uplink command capability is used by ground personnel to initiate onboard events prior to manning the ISS, such as checkout, and to uplink digital information to the ISS during both manned and unmanned phases, such as computer program changes. Implementation of the uplink digital command is accomplished as depicted in the block diagram Figure 4.10-13. Command block bursts and a clock signal are received from the Communications Subsystem. A sync pattern detector establishes BCH word sync and initializes the BCH decoder and the detected error accumulator. The command block, which consists of a set of 77 (63, 39) BCH code words, sequences into the (63, 39) BCH error detector and message separation logic. The check bits are regenerated in the error detector and message separation logic. The check bits are regenerated in the error detector for each BCH word and a validity decision is made for each word. The message separation logic strips off the 39 message bits from the 63-bit word and forwards them to the command data handling logic. Detected error pulses are counted in the detected error accumulator and error words are flagged to the data handling logic. If a count of 19 detected errors is accumulated the threshold of excessive probability of undetected error is reached and the data handling logic rejects

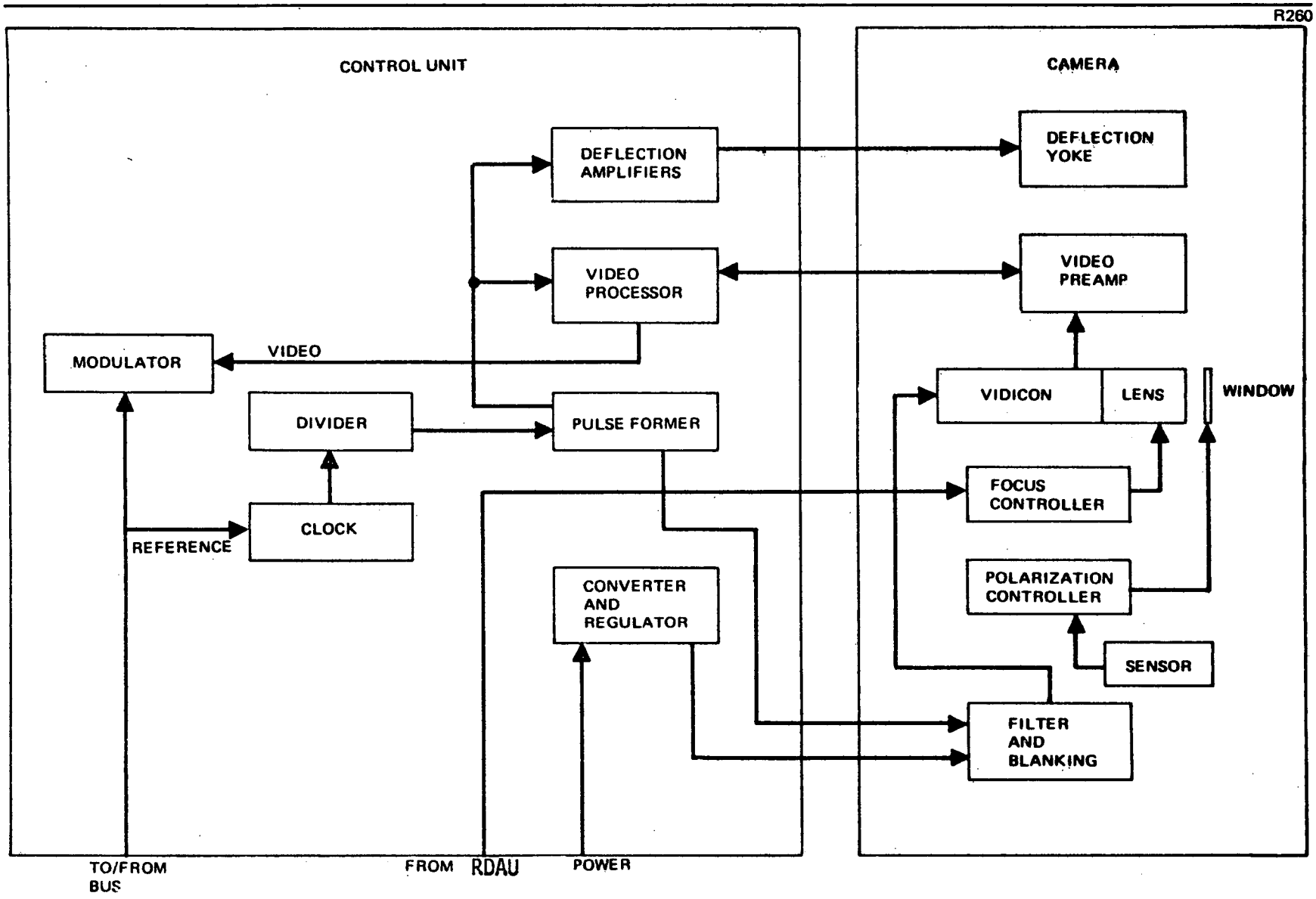


Figure 4.10-12. Camera and Control Unit

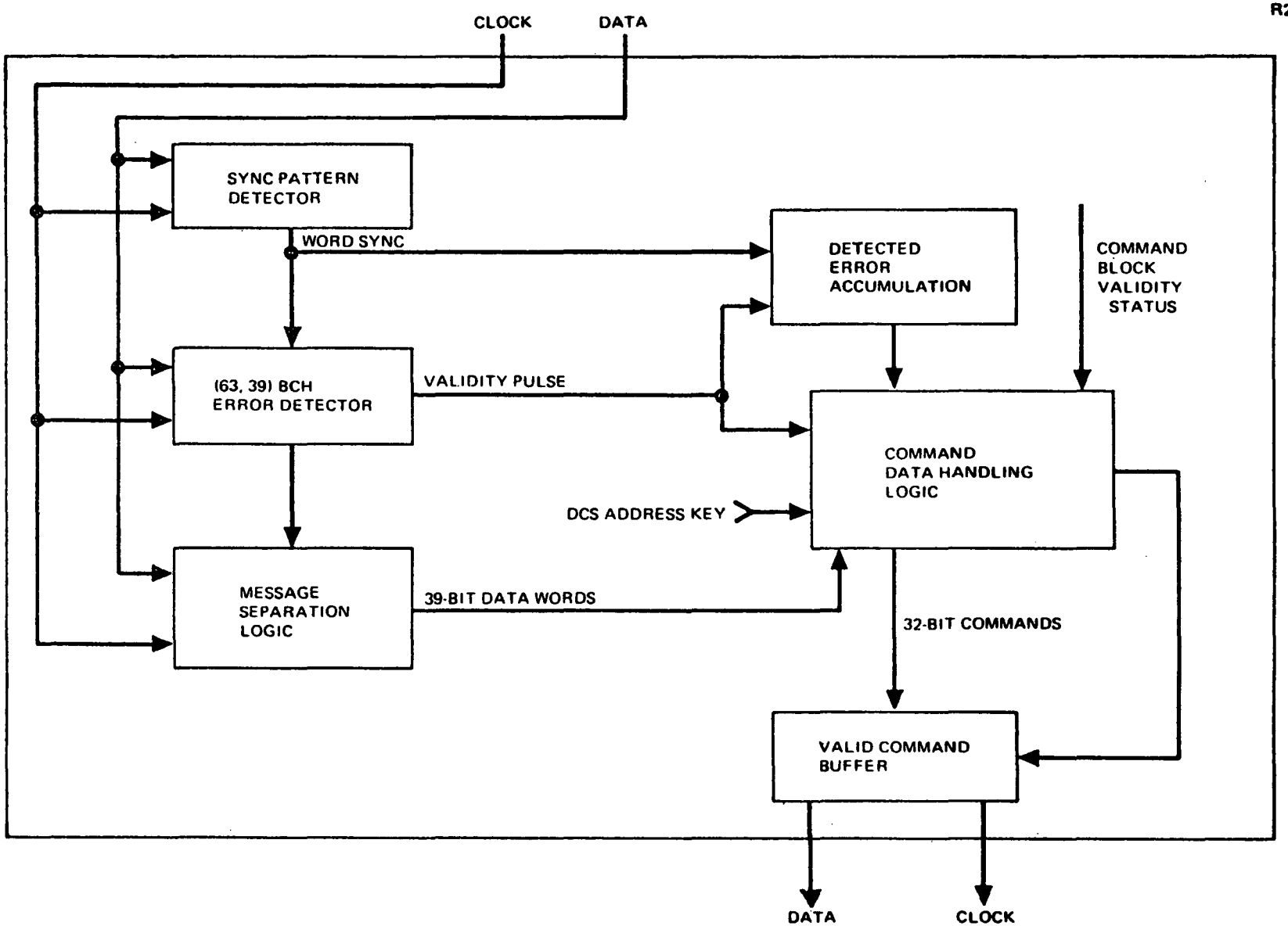


**Figure 4.10-13. Command Interface Unit**

the whole message. Each received word contains 39 message bits of which 32 are command word bits and the remaining 7 are either identity bits or spare. The first two messages contain identity bits which are correlated with a DCS address that is keyed into the data handling logic. If either word is valid and the address checks then the command block is processed. If the address does not correlate further command block processing is terminated. After the full command block is received and all words are valid there will be 77 commands of 32 bits each in the valid command buffer. Once all 77 words are validly received, a valid message response is issued even though the last retransmitted command block may have had detected errors. This operational sequence allows reception of 77 word commands even under conditions of multiple detected errors within a command block. Once a valid block has been received the 77 valid 32-bit commands stored in the buffer are transferred to the computer for execution.

Analog Data Bus Terminal

Handling of high-frequency (over 10 KHz) analog experiment data directly without digitizing is provided by analog terminals in the GPL module. Each terminal provides for multiplexing non-sampled high-frequency analog experiment data onto one of the analog data bus video channels. Control of an analog data bus terminal is by discrete commands from an RDAU. An analog data bus terminal consists of the transmitter portion of the modem, described in Section 4.10.3.1.2, plus control and switching logic to select the commanded input data channel. The terminals provide a flexible but uniform method of interfacing high-frequency analog experiment data with the analog data bus.

4.10.3.1.3 Computation Assemblies

An overview of a Modular Space Station Computing Facility is illustrated in Figure 4.10-14. The Modular Space Station has two such facilities; one for subsystem support and one primarily for experiment support with a backup capability to the subsystem support facility. The quantities of computing elements, auxiliary memory units and bulk memory units are variable to permit efficient accommodation of the Modular Space Station buildup and growth in the experiment program. A maximum capability of four CPUs, three IOCs, fifteen main memory modules, three auxiliary memory units

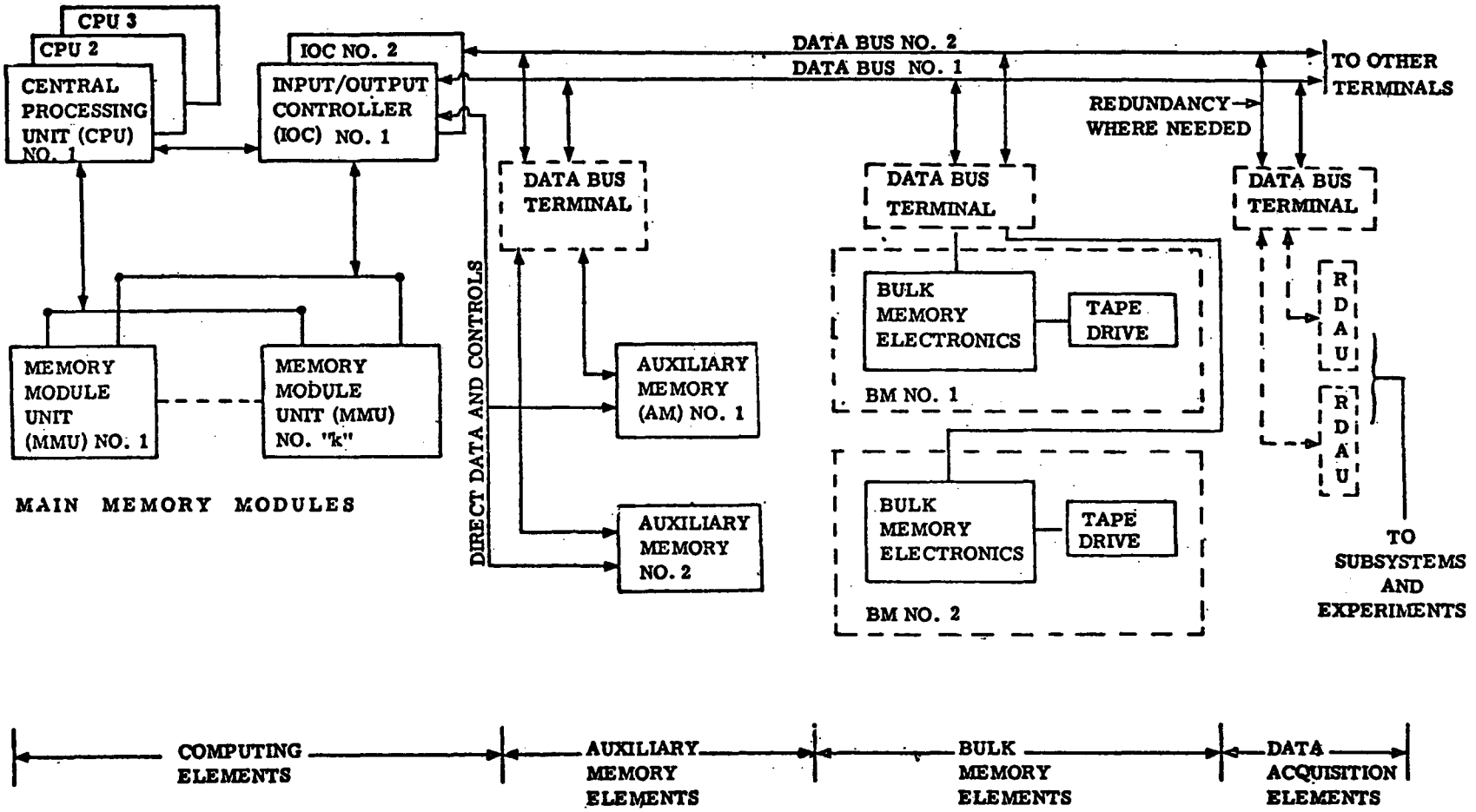


Figure 4.10-14. Modular Space Station Computing Facility Overview

and three bulk memory units in each facility will accommodate the foreseeable Modular Space Station computing requirements with adequate margin. The bulk memory units are described in Section 4.10.3.1.4.

Central Processor Units

The CPU (Figure 4.10-15) is similar to that of the MSFC SUMC described in MSFC Report SP-232-0384, "MSFC Advanced Aerospace Computer," dated July 6, 1970. The Floating Point Unit (FPU), Arithmetic Logic Unit (ALU), Scratch Pad Memory (SPM), Control Unit (CU), and Multiplexer Register Unit (MRU) are summarized in Section 2.0 of the referenced document.

Modifications and additions are required to accommodate multiprocessor and input/output operations. These are:

A. Incorporate provisions for system configuration control and interrupt operations.
B. Provide special instructions for multiprocessor and input/output control operations.
C. Restrict the execution of privileged instructions to executive control.

These modifications are discussed in SUMC Development Requirements, Section 2.1.4 of SE02, IMS Special Emphasis.

Main Memory Modules

The main memory consists of low-power, high-speed modules compatible with the CPU and IOC. The main memory contains the Executive Program and active data and applications programs. Auxiliary programs and data may be transferred into the main memory from the auxiliary or bulk memory units.

Each memory module has a unique address to identify the module. Random access addressing is used at the module level and within modules.

Each module contains logic for protected storage areas that cannot be written into without authorization.

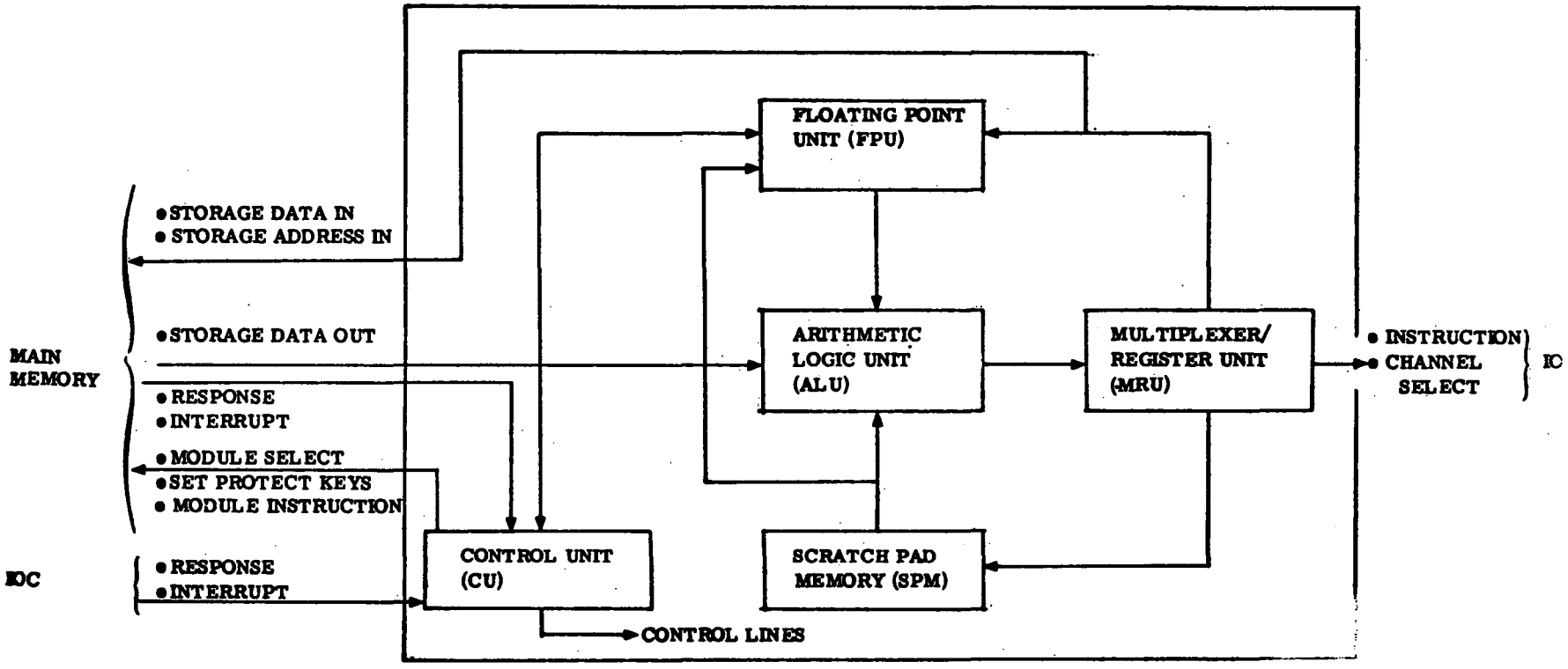


Figure 4.10-15. SUMC Central Processing Unit

Each module has up to four input/output ports to interface with the CPUs and up to three input/output ports to interface with the IOCs. Each module contains a configuration control unit to establish permissible communications paths with IOCs and CPUs and to control the status of the unit (power up, power down, operating, reconfigure, etc). The memory modules use hybrid Bipolar/Metal-Oxide-Semiconductor (MOS) technology because of low power, weight, potential high reliability, volume and cost considerations. The Main Memory Module is illustrated in Figure 4.10-16. Not shown is the configuration control unit consisting of communication and state control registers and associated control circuits as described in Section 2.1.4 of SE02.

Input/Output Controllers

Figure 4.10-17 is the IOC baseline for the computer system. The IOC is divided into two blocks: (1) Computer Interface Unit (CIU), and (2) Subsystem Interface Unit/Computer (SIU/C). Functions of each block in the CIU are summarized as follows:

A. Program Control contains the input/output multiplexers, channel status indicators, timing and controls and interface logic to the computer and the logic to recognize and initiate the action requested. Program Control includes a configuration control unit to establish permissible communications paths with memory modules and CPUs, perform address translation to facilitate changes in multiprocessor operating configurations, and control the status of the IOC. Program Control provides interrupt signals to the CPUs when an I/O channel states changes or service is required.

B. I/O Channel Control accomplishes the bi-directional data transfers between main memory and Bus Channel Control Units as well as between main memory and auxiliary memory. The IOCC controls the addressing and sequencing of information flow between the main memory module and the bus channel control or auxiliary memory units. The basic logic is duplicated for each channel and is made up of address and count registers, register increment logic, and associated control logic.

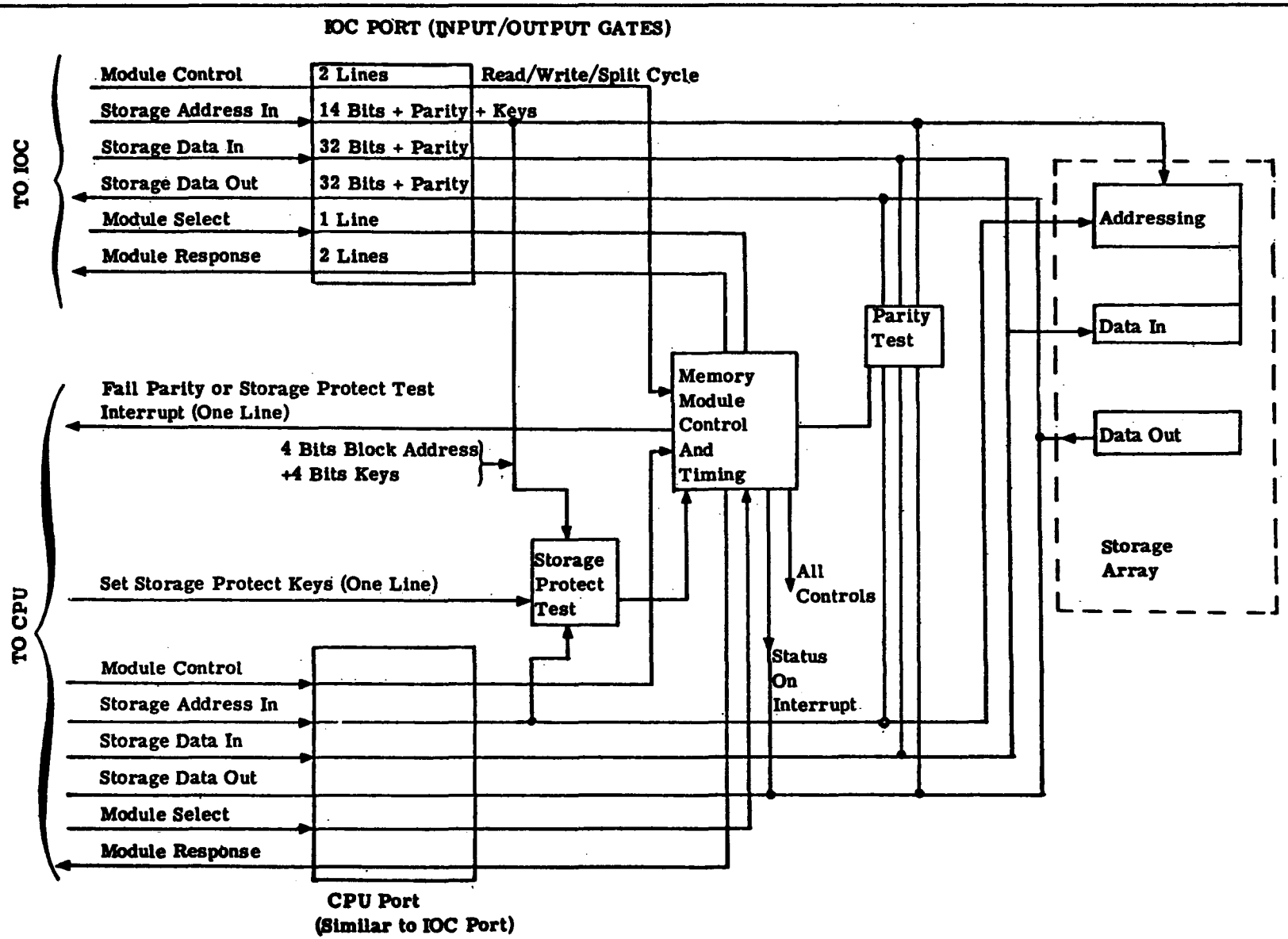


Figure 4.10-16. Main Memory Module

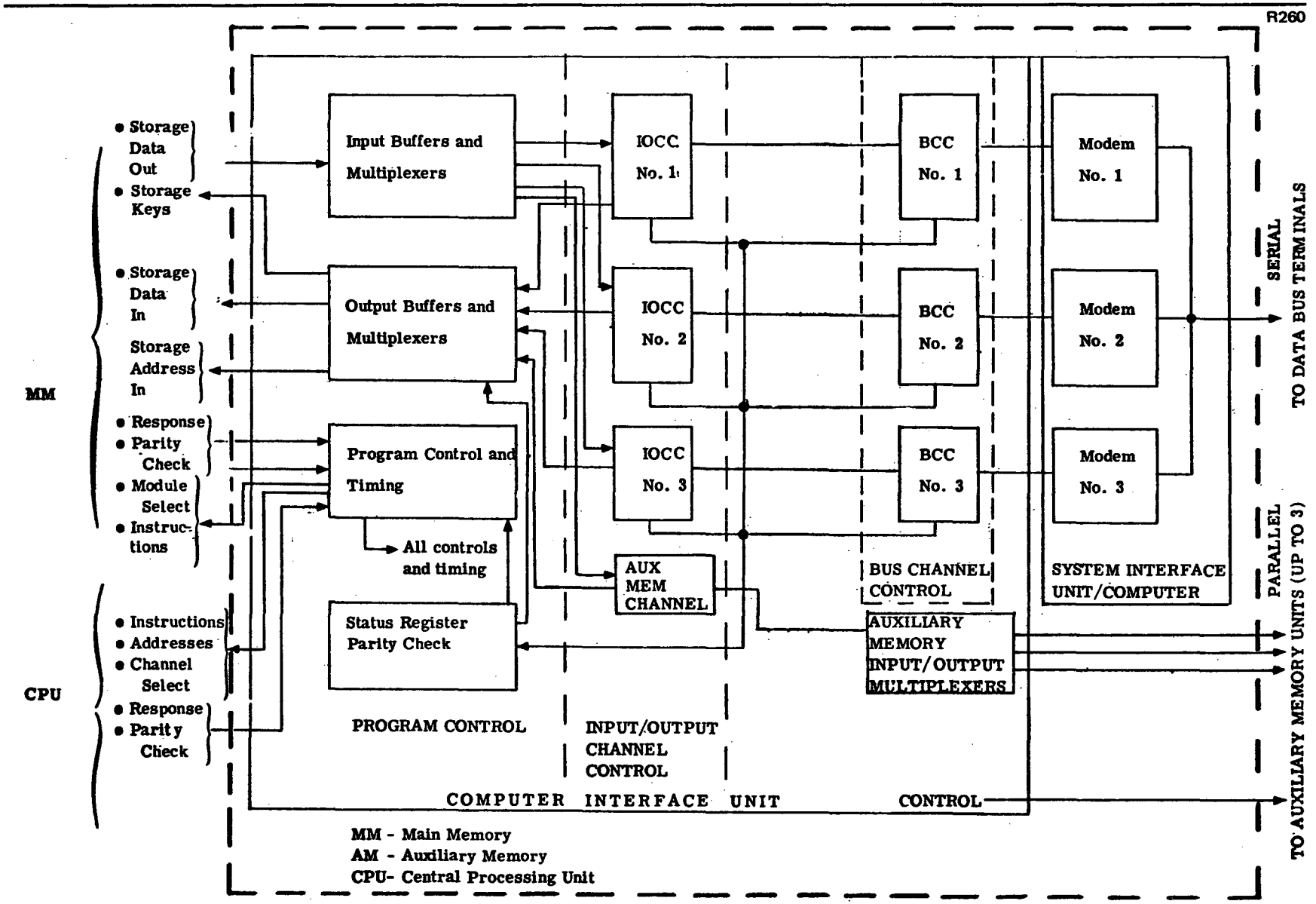


Figure 4.10-17. Input/Output Controller

C. Bus Channel Control includes data buffers, serialize or deserialize logic, and interface logic to control data flow between I/O channel and a modem unit.

D. A configuration control unit (not shown in Figure 4.10-17), consisting of communications and state registers, an address translation unit, and associated control circuitry is required for multiprocessor operations. This unit is described in Section 2.1.4 of SE02.

The CIU/C consists of three modems. Each modem operates on a carrier frequency separated from the other modems. Each modem uses the same frequency for both transmitting and receiving.

Auxiliary Memory Units

The auxiliary memory unit is a medium-capacity, medium-speed unit for temporary storate of data and instructions which may be utilized by the computing elements on demand. The auxiliary memory may also be used to buffer the transfer of data between elements on the data bus.

The auxiliary memory unit is organized into blocks which may be accessed randomly. Access within a block is sequential. Data transfers in and out of each block are via parallel words.

The auxiliary memory interfaces directly with the IOC to exchange data with the CPU and Main Memory. The auxiliary memory interfaces with the data bus through data bus terminal for the temporary storage and buffering of data exchanged with the data bus.

The auxiliary memory uses non-metallic magnetic domain (bubble) technology because of potential high reliability, low power, weight, volume, and cost considerations.

The auxiliary memory is illustrated in Figure 4.10-18.

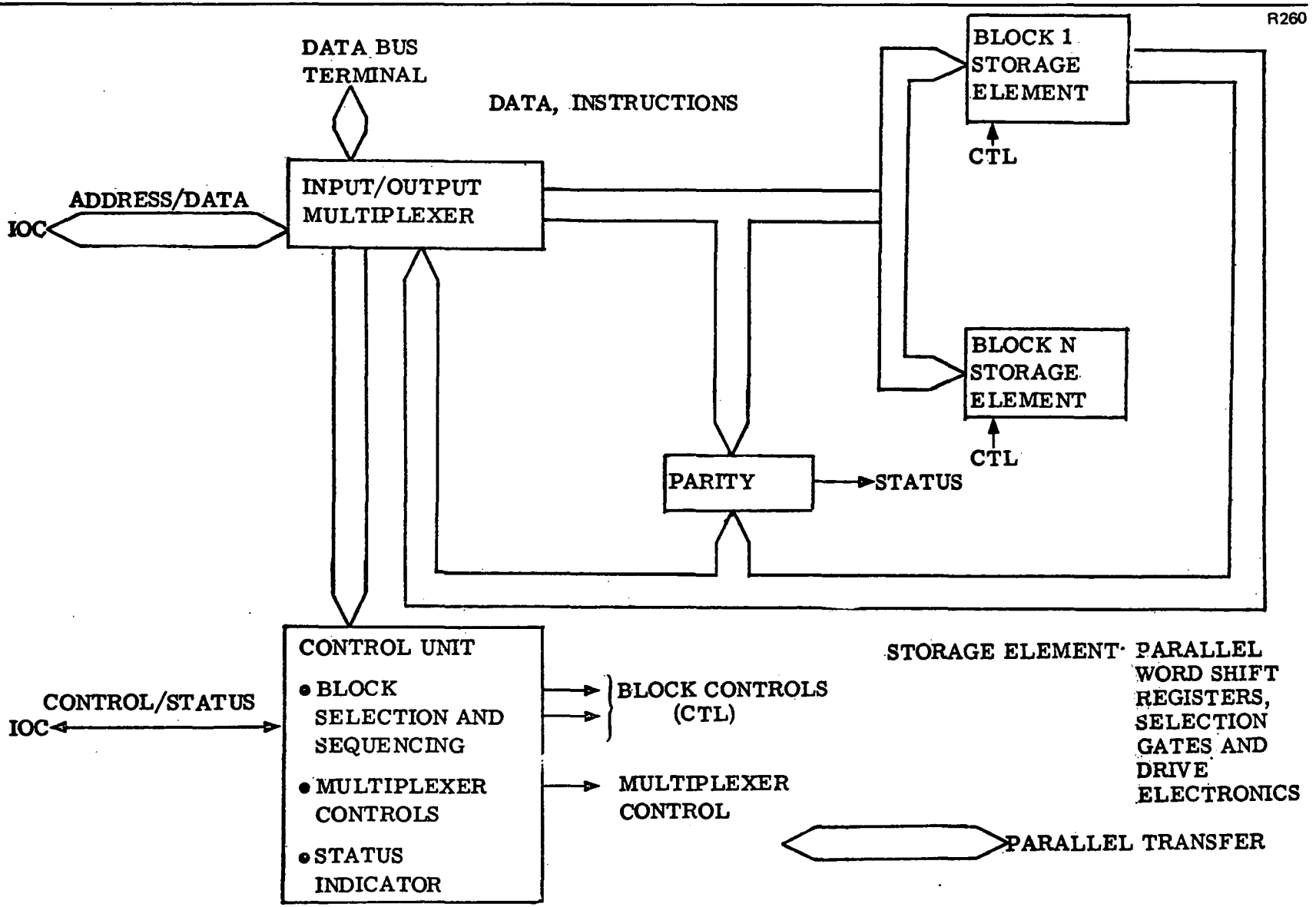


Figure 4.10-18. Auxiliary Memory

4.10.3.1.4 Data Storage Assemblies

Digital Bulk Data Storage

The digital bulk data storage assemblies utilize ultra-high-density magnetic tape recording techniques and are configured to meet the large data volume storage requirements of the experiment program with a relatively slow access speed. These storage assemblies are used primarily for recording subsystem and experiment digital data before onboard processing or before return to the Earth for ground processing. The assemblies have the capability for play back of recorded digital data when requested and for easy and rapid exchange of tape reels by a crewman in orbit. These assemblies are also the last level of memory in the computation memory hierarchy. The magnetic tape recorders may be used to store infrequently used information not requiring rapid access such as maintenance procedures, spare parts inventories or other information that may be stored off-line. The digital bulk data storage assemblies consist of drive electronics and tape drive units as shown in Figure 4.10-19.

The digital data storage assemblies are controlled by computer initiated commands via the data bus and a digital data terminal. Data from various subsystems or experiments is tagged as to its source and addressed to a recorder assembly. The tape drive control recognizes the command to accept data from the digital data bus terminal and initiates the required controls to store the data with the proper address. The record and reproduce electronics conditions the data signal for proper drive for the record/reproduce heads.

The tape drive units are high-speed (up to 120 in./sec) recorders driven by low-inertia servo motors. Lightweight tape reels hold 2,400 feet of 1-in.-wide, 1.5 mil thick, oxide coated magnetic tape capable of storing approximately $4.5 \times 10^5$ bits per square inch (28 tracks). The tape drive control contains the power supplies, power switching and control electronics to operate the tape drive units to store and access any given address.

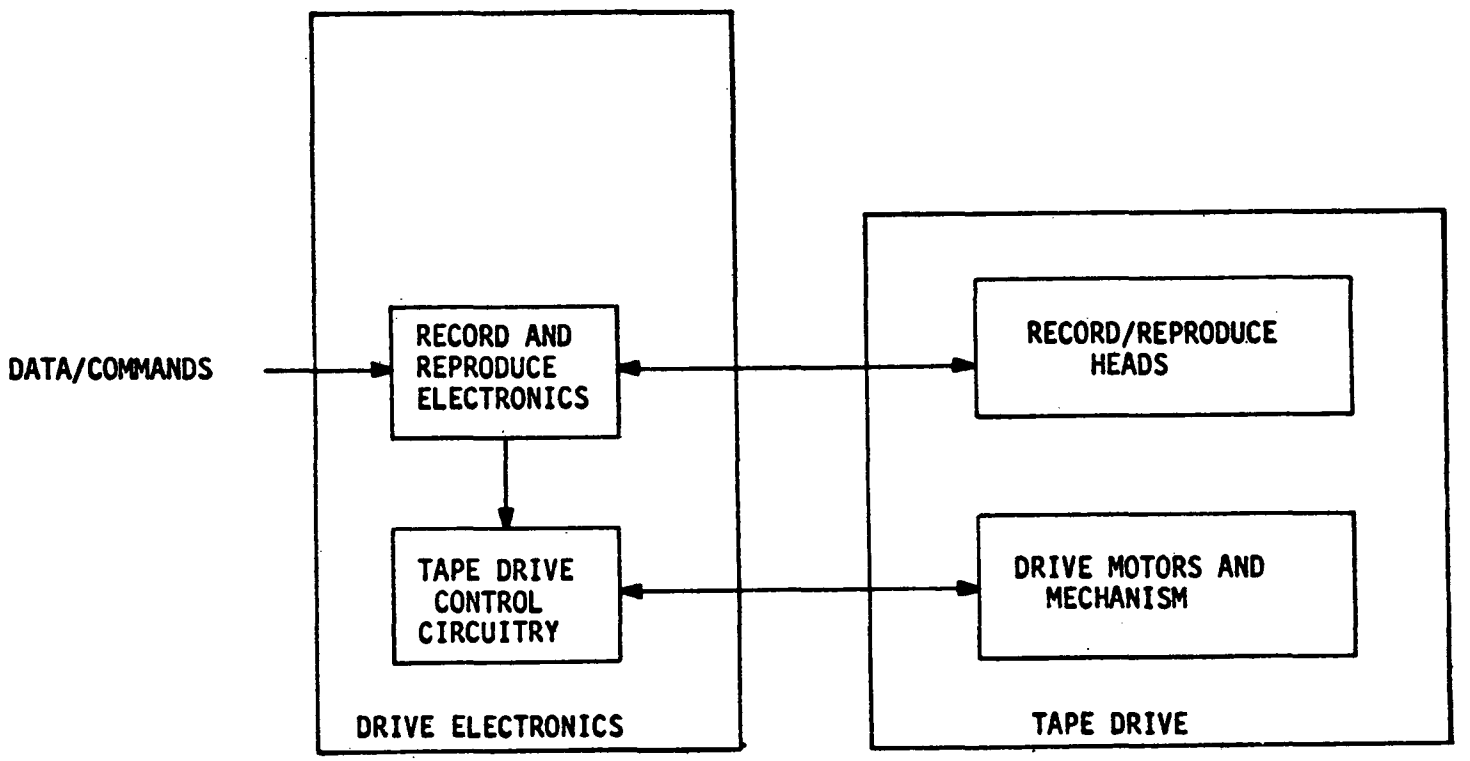


Figure 4.10-19. Digital Bulk Data Storage

To access data for processing or delayed transmission to the ground, a command is initiated by the controlling computer and routed to the tape drive control circuitry. The command is decoded and the proper controls are initiated to read data from the location addressed. The head signals are conditioned for routing to the digital bus terminal.

The digital bulk storage assemblies interface with the data bus through a digital data bus terminal. The terminal provides buffer storage to match the data bus rates to the tape drive record and reproduce capabilities.

Analog Storage

Storage of wideband experiment data and other wideband analog information is achieved by high-density magnetic tape recording techniques. These storage assemblies are used primarily for recording analog experiment data before onboard processing or before return to the Earth for ground processing. The assemblies have the capability for playback of recorded analog data when requested and for easy and rapid exchange of tape reels by a crewman in orbit.

Analog information having a frequency range less than 10 KHz is digitized by the data acquisition assemblies for distribution and is recorded in a digital fashion as discussed in Section 4.10.3.1.4.

Recording and playback of high frequency analog and video signals is accomplished by a rotating-head transport unit. Lower analog frequency (10 KHz to 1 MHz) recording is accomplished by conventional linear recorder techniques, or utilizing FM techniques. Rotating head record/reproduce techniques employ a transverse scanning approach whereby the tape is transported past a rotating multiple-head assembly in a direction perpendicular to the plane of rotation of the head assembly. This differs from the conventional longitudinal scan approach where the tape moves past fixed head(s). The rotary head approach permits high frequency (TV) signals to be reconstructed at a lower tape speed.

To properly reconstruct a recorded signal and to ensure an acceptable time base stability, the velocity and phase of both headwheel and tape motion are

accurately controlled. This is accomplished by using headwheel and capstan servos with capstan drive controlling the longitudinal tape velocity from a reference source. During the recording process, a control track which is a signal derived from this reference is recorded on the edge of the tape with a stationary head provided solely for this purpose. On playback, a closed-loop servo locks the reproduced control track pulse to a reference signal derived from the headwheel rotation resulting in the proper longitudinal tape velocity.

A crystal reference signal used to lock the headwheel servo in the record mode also serves as the absolute time reference for the reproduced signal. This signal is recorded in the tracks along with the analog information.

During the record mode (see Figure 4.10-20) the video signal is amplified, pre-emphasized, and converted to a double-sideband FM signal. The 500 KHz pilot tone is then added to this spectrum. The resultant signal is applied simultaneously to four individual recording amplifier channels and then, through transfer relay contacts and rotary transformers or slip rings, to the four video heads in the headwheel. Each of the four channels contains a level control. The level controls permit individual adjustment of the current supplies to each head so that the tape is just saturated.

Reproduction of the recorded information is basically the same as for video entertainment playback and is described in Section 4.10.3.1.6.

4.10.3.1.5 Displays and Controls Assemblies

Primary Command and Control Center

The Primary Command and Control Center is the central command post for the MSS and is the focus of all SS mission control activities. This station provides monitoring and control capability of all subsystem "housekeeping" activities, mission planning, personnel/activities scheduling, provides a central monitor role during all rendezvous and docking phases of other spacecraft and directs ground communication for command and data transfer. The Command Center contains two multipurpose display devices (which provide backup redundancy), a video monitor, a microfilm viewer, control

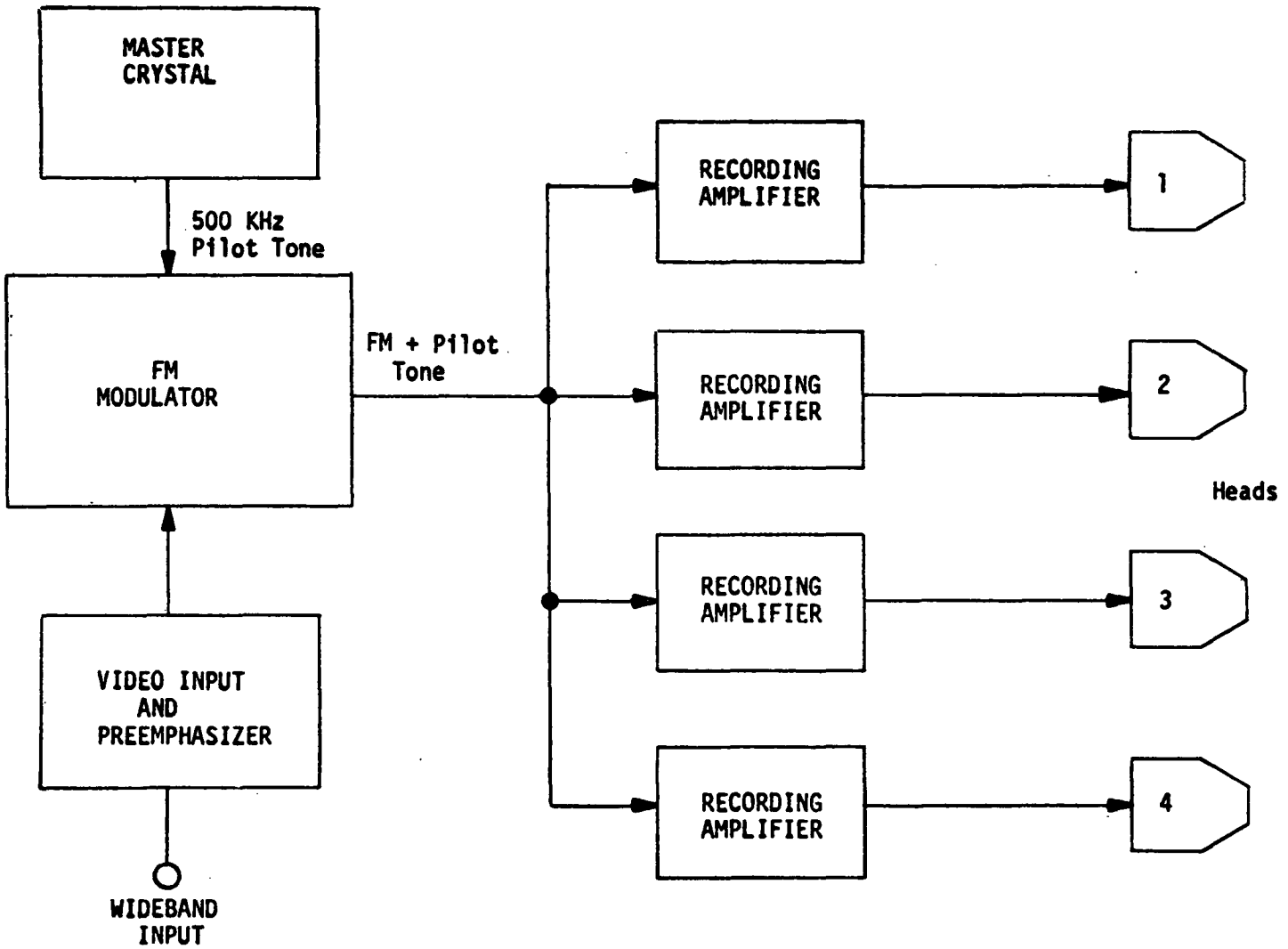


Figure 4.10-20. Simplified Block Diagram Video Recording Subsystem

keyboards, and additional dedicated displays. The design of this center allows onboard checkout to be accomplished by a second crew member on a limited basis by sharing common displays, readouts, status lights, etc., if necessary. To minimize the need for a full-time station operator the Control Center contains a caution and warning subsystem and a computer driven voice annunciator unit which provides alerting and operational information through the audio system. This permits complete monitoring safety and alerting capability without the operator being required to "man" the station. The Primary Command and Control Center is located in the Crew and Operations Module.

Experiment/Secondary Command and Control Center

The Experiment/Secondary Command and Control Center is a centralized operation center for monitoring and management of the experiment program. In addition, this station is capable of providing emergency/backup vehicle and subsystem control capability in the event the crew is forced to evacuate the Primary Command and Control Center because of a major contingency condition. The Experiment Command and Control Center is located in the GPL Module. Display and control hardware required at the Experiment/Secondary Command and Control Center are basically the same as those required at the Primary Command and Control Center with additional dedicated experiment displays and controls to permit monitoring and control capability over the experiment program. The configuration of the Experiment/Secondary Command and Control Center allows for fully independent two-man capability such that one operator can concentrate on one set of experiments without interference from the other operator. Figure 4.10-21 shows the general layout of this control center with its major assemblies.

The major D&C assemblies on the Primary and Experiment/Backup Command and Control Centers are described below:

A. Multipurpose Display and Input Devices – The primary display element is a computer driven cathode ray tube (CRT) device that interfaces with the computer facility via the data bus permitting information to be displayed upon a single time-shared device as requested or through cycling procedures. The CRT display is

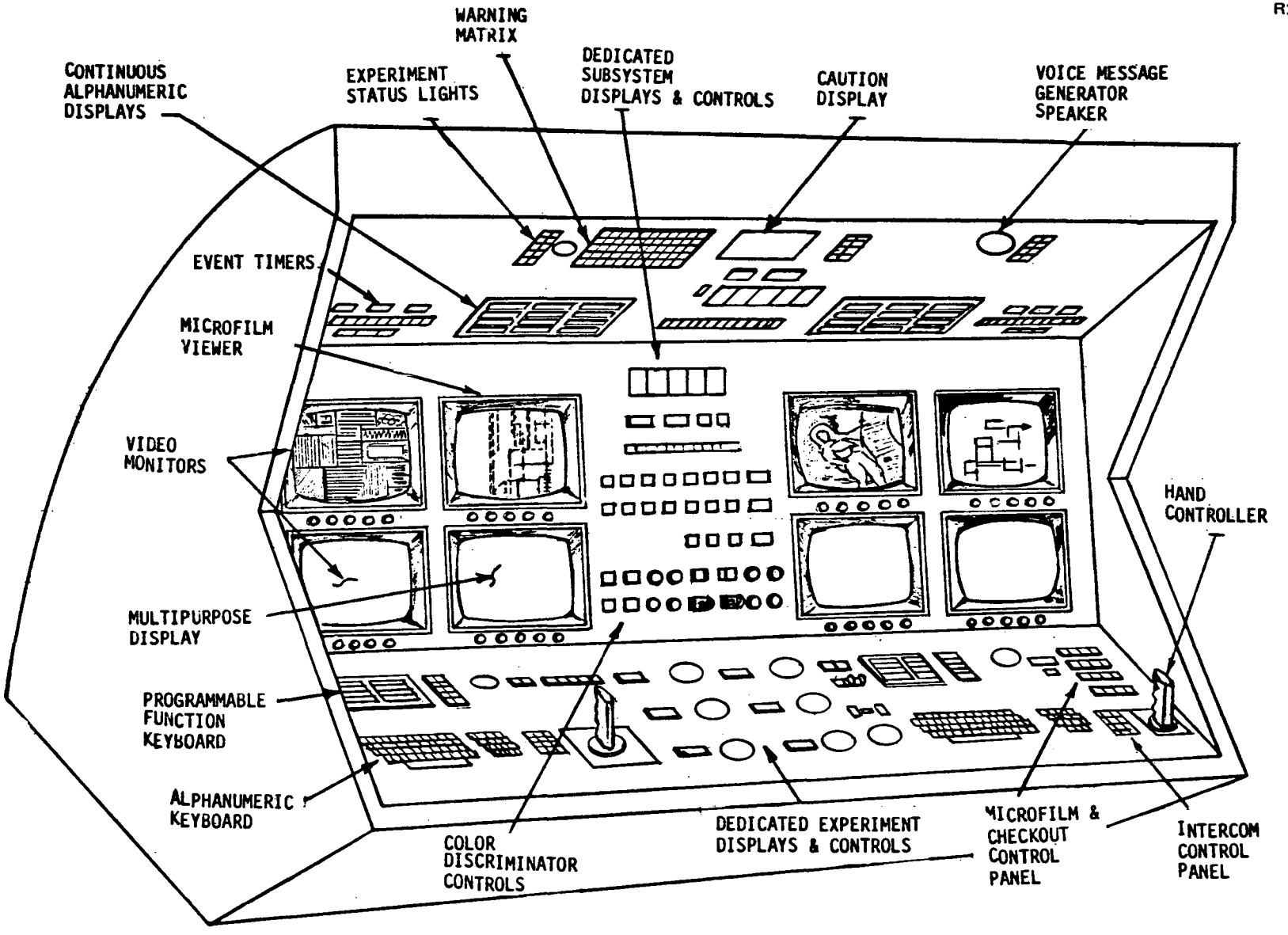


**Figure 4.10-21. Experiment/Secondary Command and Control Center**

capable of presenting computer-generated data such as characters, vectors and tabular data, as well as dynamic real-world TV imagery provided by Vidicon cameras and other analog sensors. These two sources of data can be shown independently, adjacent to each other, or superimposed to provide complete flexibility and visibility of computer processing and data control operations. The multipurpose display operates in one of the three following modes:

- Stroke-write technique for displaying computer-generated data including alphanumeric characters, vectors, lines, and graphic presentations.
- Raster scan technique for displaying TV imagery and other analog input data.
- Dual mode technique for mixing of alphanumeric data with a TV image. This is achieved by allowing the display to create the TV image in a normal raster scan mode with the display going into the stroke-write mode during the vertical retrace time period of the normal raster scan sweep.

The display has an attendant alphanumeric and function keyboard and a light pen device to provide input commands. This allows the man to be interactive with the computer. The display in conjunction with these input devices and the computer software is capable of providing special features such as variable blinking, vector flashing, split-screening, and progressive selection of display formats. The CRT, the deflection magnetics and the high voltage power supply are enclosed within a special container to assure safety to the crew. If a CRT fails, replacement is at the container level, not at the CRT level. This prevents the possible danger normally inherent in CRT replacement and eliminates adjustment and alignment problems normally associated with replacement of a CRT.

Other characteristics of the multiformat display unit include:

- 96 ASCII alphanumeric character set
  - Upper and lower case alphabet
  - 0-9 numerals
  - Special symbols

Graphical Designations

Function and mode keys

- 1250 Characters/Frame Display Formats

  25 lines with 50 characters/line

  2 character sizes

  0.45 x 0.30 cm (0.18" x 0.12") with 0.25 cm (0.10") spacing between characters.

  0.61 x 0.40 cm (0.24" x 0.16") with 0.40 cm (0.15") spacing between characters.

- 2030 linear cm (800 linear in.)/frame of graphics

  lines - vectors - circles - arcs - special symbols

- Local Refresh Memory

  40 Hz refresh rate

  Memory capacity $1.25 \times 10^6$ bits

- Display Screen Area

  Graphic presentations 20.3 x 25.4 cm (8 x 10 inches)

  Alphanumeric characters 22.8 x 28.0 cm (9 x 11 inches)

- Video Capability

  525 commercial standard TV lines

B. Video Surveillance Monitor – A surveillance monitor is included at the Command and Control Centers to provide internal and external surveillance capability over designated areas of the Space Station. This display can also be used to monitor incoming vehicles during docking phases. The television cameras for internal and external surveillance are described in Section 4.10.3.1.2, Television Units. These monitors may be used for monitoring of experiment data, programs, and parameters that are available within the system on a real-time basis or from stored memory as directed by the operator. These displays are compatible with 525 lines commercial color TV standards and are interchangeable with the recreational TV's within the crew quarters.

C. Color Discriminator – Color discriminator capability is provided at the experiment/secondary Command and Control Center to enhance data comparison operations, and/or highlight those parts

of the data in a particular spectral range. This feature may be used to highlight data that would otherwise be difficult or impossible to visualize.

D. Alphanumeric Displays – Alphanumeric readouts are used to continuously display selected parameters that are considered critical to Space Station integrity, important to certain mission phases, or to provide information of general interest in the form of computer generated digital data. These readouts are liquid crystal cell displays which incorporate the advantages of high reliability/lifetime, wide angle viewing having little or no parallex, continuous brightness independent of ambient lighting, microwatt power, low voltage and relative low cost.

Typical parameters displayed on these alphanumeric displays are:

| | | |
|---|---|---|
| Mission orbit number | vehicle longitude | attitude error - pitch |
| Ground contact time | vehicle latitude | attitude error - yaw |
| Active experiments | vehicle altitude | attitude error - roll |

E. Warning Matrix – Continuous monitoring of subsystem critical parameters is performed as part of the OCS subsystem with a matrix of annunciators at the command centers to display and alert the crew to failed or out-of-tolerance conditions. The warning functions consists of an array of dedicated light annunciators that are "hard-wired" to the OCS detection equipment.

Warning functions that have been identified at this time are shown in Table 4.10-12.

F. Caution Display – Display of caution level functions is by a liquid crystal cell display which indicates a message(s) determined by the multiprocessor. This display interfaces with the multiprocessor via the data bus and operates in a manner similar to the alphanumeric displays. The lower portion of the display will permit storage of past caution alerts and allow recall capability of functions that have not been corrected. In this manner, status of caution

FOLDOUT FRAME 1

FOLDOUT FRAME 2

Table 4.10-12

WARNING FUNCTIONS

| Subsystem | Parameter | Measurement No. (Typical) | MOD 1 | MOD 2 | MOD 3 | ISS Total | MOD 4 | MOD 5 | GSS Total |
|---|---|---|---|---|---|---|---|---|---|
| ECLS–Atmos. | $O_2$ Storage Tank Press. | BB010001 | 4 | 0 | 0 | 4 | 0 | 4 | 8 |
| Supply/Control | $N_2$ Storage Tank Press. | BB020001 | 4 | 0 | 0 | 4 | 0 | 4 | 8 |
| | Dump and Relief Valve Pos. | BB060002 | 2 | 2 | 2 | 6 | 2 | 2 | 8 |
| | Contamination Mon. – Inlet $CO_2$ Concentration | BC010002 | 0 | 1 | 1 | 2 | 1 | 0 | 3 |
| | Partial $O_2$ | BC040013 | 1 | 1 | 1 | 3 | 1 | 1 | 5 |
| | Cabin Press. | BC040012 | 1 | 1 | 1 | 3 | 1 | 1 | 5 |
| Thermal Cont. | Coolant $H_2O$ Circ. Accum Press. | BG010001 | 1 | 1 | 1 | 3 | 1 | 1 | 5 |
| | Radiator Control–Freon Fixed Temp. | BG020001 | 1 | 1 | 1 | 3 | 1 | 1 | 5 |
| | Radiator Recirculation Accum. Press. | BG030001 | 1 | 1 | 1 | 3 | 1 | 1 | 5 |
| Crew Systems | Fire | HH020001 | 1 | 1 | 1 | 3 | 1 | 1 | 5 |
| High Thrust | Pressurization SS | DB010071 | 2 | 0 | 0 | 2 | 0 | 2 | 4 |
| | Propellant SS | DC010031 | 4 | 0 | 0 | 4 | 0 | 4 | 8 |
| Low Thrust | - | - | 0 | 0 | 0 | 0 | 0 | 0 | 0 |
| G&N | - | - | 0 | 0 | 0 | 0 | 0 | 0 | 0 |
| Comm. | - | - | 0 | 0 | 0 | 0 | 0 | 0 | 0 |
| DMS | - | - | 0 | 0 | 0 | 0 | 0 | 0 | 0 |
| Electric Power | - | - | 0 | 0 | 0 | 0 | 0 | 0 | 0 |
| Structures | - | - | 0 | 0 | 0 | 0 | 0 | 0 | 0 |
| Docking | - | - | 0 | 0 | 0 | 0 | 0 | 0 | 0 |
| Crew Cargo Mod. | - | - | 0 | 0 | 0 | 0 | 0 | 0 | 0 |
| Total | | | 22 | 9 | 9 | 40 | 9 | 22 | 71 |

functions can be determined by activating a switch to call up the message for uncorrected caution conditions.

G. Voice Message Generation Unit – A voice message generator is provided which permits spoken voice messages to be generated by computer control. This unit supplements the caution and warning functions as well as provides operational and experiment information through its internal vocabulary. The unit is capable of composing phrases of up to four discrete words from code words supplied by the computer utilizing individual words stored within the internal vocabulary. Table 4.10-13 lists typical words contained in the vocabulary of the Voice Message Generator.

H. Status Lights – Status lights and monitors will be provided to show subsystem and experiment assemblies operating conditions. These monitors will be used to indicate active or passive conditions, depict normal or alternate modes, provide positive control feedback response, and in general indicate subsystems status and experiment conditions.

I. Microfilm Viewer – A microfilm viewer is provided as part of the Command and Control Centers to assist the crew member in trouble shooting procedures, maintenance techniques, control operation procedures, and other related information.

J. Dedicated Displays – Several dedicated meters and other display devices are required for unique and emergency/contingency conditions. It is expected these will be utilized in the event of emergency response, power failure conditions, and other contingency conditions as well as for subsystems and experiment support. Dedicated displays that have been identified at this time for subsystem backup usage are shown in Table 4.10-14. A series of illuminated push-button selection switches allows the operator to select the desired module of the MSS for display of these parameters.

K. Programmable Function Keyboard – A programmable function keyboard is supplied at each operator's station as an input device for access to the computer. This keyboard - display - computer loop allows the operator to sequentially select from a computer listed "menu" and progressively construct command code for computer initiation of the required operation. Through a series of

Table 4.10-13

TYPICAL SPEECH GENERATOR WORDS

| | | | | | |
|---|---|---|---|---|---|
| 1. | One | 26. | Power | 51. | Valve |
| 2. | Two | 27. | Secondary | 52. | Voltage |
| 3. | Three | 28. | System | 53. | Malfunction |
| 4. | Four | 29. | Warning | 54. | Stabilization |
| 5. | Five | 30. | Caution | 55. | Guidance |
| 6. | Six | 31. | Alignment | 56. | Life Support |
| 7. | Seven | 32. | Auto | 57. | Fire |
| 8. | Eight | 33. | Computer | 58. | Atmosphere |
| 9. | Niner | 34. | Crew | 59. | Error |
| 10. | Zero | 35. | Emergency | 60. | Experiment Event |
| 11. | AC | 36. | Go | 61. | Monitor |
| 12. | Battery | 37. | Hold | 62. | Interrupt |
| 13. | Bus | 38. | Leak | 63. | Ready |
| 14. | Cabin | 39. | Limit | 64. | Active |
| 15. | $CO_2$ | 40. | Mode | 65. | Channel |
| 16. | Communication | 41. | Overload | 66. | Request |
| 17. | DC | 42. | Override | 67. | Data |
| 18. | Display | 43. | Range | 68. | Return to Control Center |
| 19. | High | 44. | Rate | 69. | Enter Data |
| 20. | Low | 45. | Select | 70. | 10 Seconds (To Go) |
| 21. | Multiple | 46. | Sequence | 71. | DC Power Bus Failure |
| 22. | Oxygen | 47. | Tank | | |
| 23. | Pressure | 48. | Temperature | | |
| 24. | Primary | 49. | Under | | |
| 25. | Propulsion | 50. | Over | | |

Table 4.10-14

DEDICATED DISPLAYS

| System | Parameter | ISS Mod 1 | ISS Mod 2 | ISS Mod 3 | Growth for GSS Mod 4 | Growth for GSS Mod 5 |
|---|---|---|---|---|---|---|
| EC/LS | Cabin temperature | 1 | 1 | 1 | 1 | 1 |
| | $O_2$ Part. Pressure | 0 | 1 | 1 | 1 | 0 |
| | $CO_2$ Concentration | 0 | 1 | 1 | 1 | 0 |
| | Total Hydrocarbon | 0 | 1 | 1 | 1 | 0 |
| | Radiator outlet Temp. | 1 | 1 | 1 | 1 | 1 |
| | $H_2O$ Circul. Temp. | 2 | 0 | 0 | 0 | 2 |
| Elec. | Source Bus voltage | 2 | 0 | 0 | 0 | 2 |
| Power | Transmission Line Corr | 4 | 0 | 0 | 0 | 4 |
| and | Distributor Bus Volt. | 2 | 2 | 2 | 2 | 2 |
| Dist. | Distributor Bus Corr. | 2 | 2 | 2 | 2 | 2 |
| Syst. | DC Load Bus Voltage | 4 | 4 | 4 | 4 | 4 |
| | AC Load Bus Voltage | 2 | 2 | 2 | 2 | 2 |

fixed-programmed select keys and a series of function keys associated with a display of computer generator variable nomenclature listings, the operator can select the desired operation. This is shown pictorially in Figure 4.10-22. The fixed program keys are typically pushbutton switches while the display function keys are activated by the operator "touching" the nomenclature with his finger. The touch action of his finger will cause a series of X-Y axis gold-plated wires to temporarily contact and generate a location interrupt signal which the computer will recognize and select the appropriate next display presentation. This technique allows the operator to extract from computer storage operational control capability without requiring a dictionary of the computer command codes which is normally typed in on the alphanumeric keyboard.

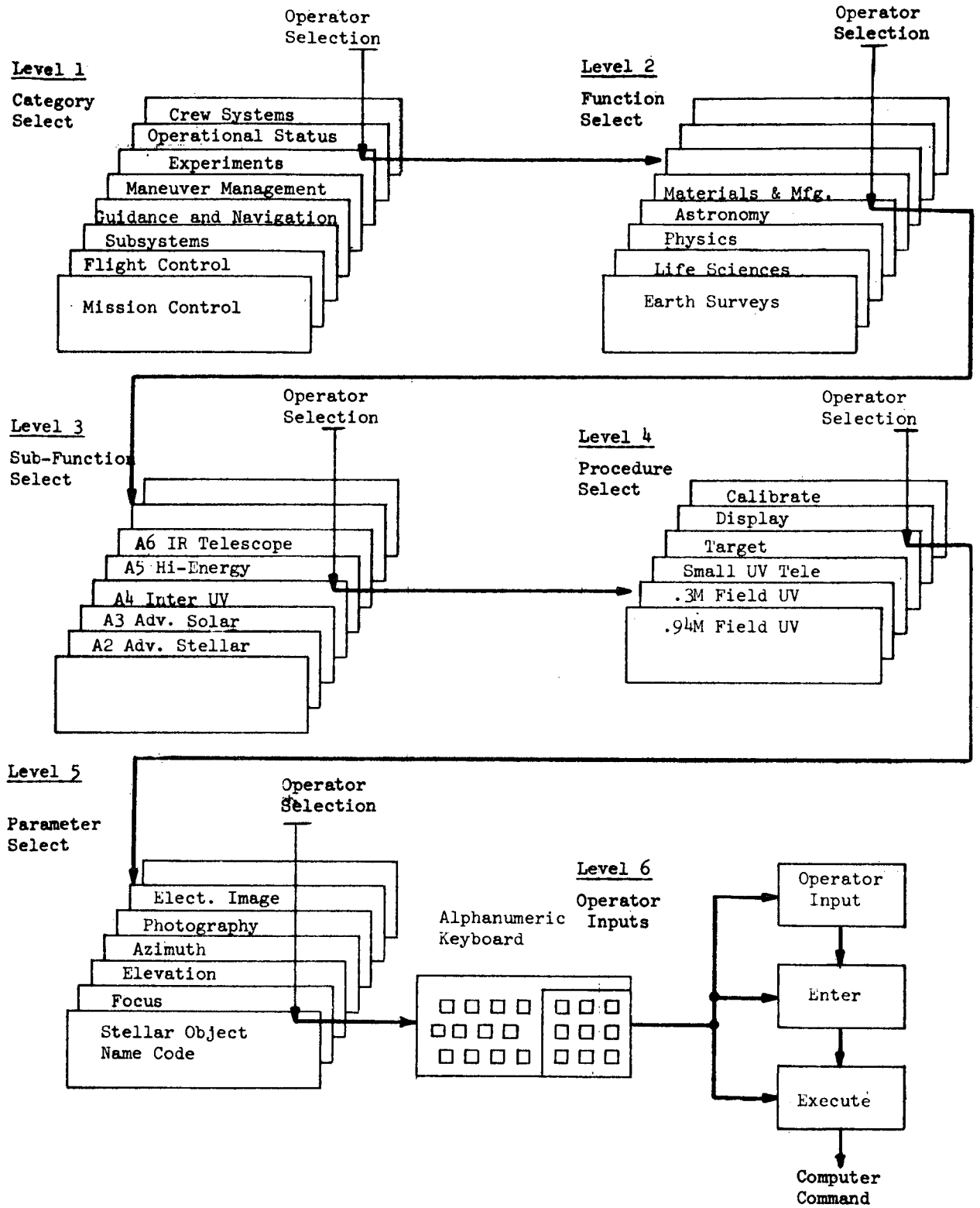


**Figure 4.10-22. Typical Programmable Function Keyboard Operation**

L. Dedicated Switches — Rotary and toggle switches are provided to supplement the previously described control devices. These controls may be utilized for specific subsystem and experiment functions as well as for emergency and contingency capability. Critical control functions and backup functions are "hard-wired" for maximum reliability. Control switches are provided for the following functions:

- High-thrust - Attitude Control Manual Direct
- CMG Spin Motor Power
- Battery - Regulator Emergency By-Pass
- Electrical Power Bus Configuration Backup Switching
- Master Caution/Warning Reset Switch
- Communication Selection Switches
- Cabin Temperature Control
- Display Select Switches
- Display Power and Mode Switches
- Lighting and Dimming Controls

M. Hand Controller — The hand controller, depending on mode selection, is used to perform manual steering operations, operate attitude and translation thrustors, and aim sensors/cameras to track landmarks and targets. The hand controller provides emergency direct attitude control capability through hard wired interfaces.

N. Printer — A printer is provided at the Command and Control consoles to provide a record of ground communications in the event that the console is not manned during a ground contact period. The printer can be used as a means of providing a hard-copy record of instructions, computer programming changes, and subsystem data.

## Portable Display and Control Units

Portable display and control units are provided for use at remote locations where control and display of specific data is required on a part-time basis. These units are capable of assisting in ISS and RAM onboard checkout and

fault isolation and experiment equipment calibration and adjustment. They will interface with the data bus through plug-in connections at terminal units located at strategic locations in each ISS module.

The portable D&C units contain a multipurpose CRT display, a computer addressable keyboard, and their associated electronics. This unit is used in a manner similar to those used as the Primary and Experiment Command Centers. Plug-in adapter units can be utilized to assist in specific functions. These adapter units contain special mode select pushbuttons (such as specific OCS program controls). Through use of the keyboard and multipurpose display, a large variety of display capability exists due to the extensive interplay of subsystems and experiment programs with the multiprocessor computer memory. The display screen can display 25 lines with 50 characters/line. Packaging techniques similar to that of the Command and Control Centers are used to provide maximum standardization and interchange of functional modules. Four of these portable units are onboard the ISS for space station and experiment support.

Experiment Support D&C

Displays and Controls will be required to assist in experiment setup, calibration, operation, monitoring and data retrieval. These D&C items will be at the work stations and consoles where the specific experiment is accomplished in the GPL and experiment areas of the attached modules and are described in Section 4.4.3.1.

Remote Displays and Controls

Display and control panels are located in each of the crew quarters, in the wardrooms, docking port and other locations to provide the crew with warning alarms, intercom control capability, and lighting control.

Each of the crew quarters contains a combination "alert" status display, intercom system, and recreation TV system. Recreation TV is described in Section 4.10.3.1.6. The alert status display provides each crew member with emergency and warning alarms. The intercom system consists

of a telephone and keyboard set which allows the crew member to communicate with others. A headset is supplied in the event the crew member wishes to listen while others are asleep. Lighting controls are located at various locations throughout the Space Station to allow on-off and dimming capability.

4.10.3.1.6 Entertainment Assemblies

TV Monitors

Located within each crew quarters is a 35.6 cm (14 in.) color TV monitor as part of the Alert and Intercom Panel. A 51.6 cm (21 in.) color TV monitor is located in the wardroom for group viewing. These monitors interface with the analog data bus. Each monitor has selection capability of each of the analog bus TV channels through its subcarrier demodulator. The color monitors are compatible with FCC commercial color TV standards having 525 lines resolution. As these units are used in areas where room lighting is controlled and not normally affected by sunlight, the brightness is not required to be high. A brightness of 68.0 candela per $m^2$ (20 ft lamberts) provides excellent viewing characteristics and greatly extend the CRT lifetime.

The TV monitor contains all integrated circuits except for the CRT. The CRT is a single gun, current-sensitive color CRT which overcomes the incompatibility of solid-state, high voltage switching that is required by the single gun, modulated acceleration voltage (for selective penetration of layers of phosphor) type.

Video Reproducer Unit

Playback of video tapes is used to supplement the real-time television for entertainment of the crew during off-duty periods. A collection of tapes are stored in the video tape library for selection by the crew member. Tapes consist of educational, training, and entertainment programs. Playback of these tapes is through the video reproducer unit.

Playback of pre-recorded video programs is handled through a rotating head transport unit and reproduce electronics to reconstruct the TV signal for

distribution on the analog data bus. Rotating head record/reproduce techniques employ a transverse scanning approach whereby the tape is transported past a rotating multiple-head assembly in a direction perpendicular to the plane of rotation of the head assembly. This differs from the normal longitudinal scan approach where the tape moves past a fixed location head. The rotating head approach permits high frequency (TV) signals to be reconstructed at a much lower tape speed. With a headspeed of 240 revolutions per second, and a tape speed of 19 cm (7.5 inches) per second, one hour of recording requires only 682 meters (2,250 feet) of tape.

FM modulated techniques are used during the recording of the video on the tape to provide optimum frequency response, noise characteristics, and phase compensation.

4.10.3.1.7 Image Processing Assemblies

The onboard image processing equipment located in the GPL provides the crew an aid in calibration/alignment and in control of image producing experiments. The assemblies to provide this basic capability are shown in Figure 4.10-23. This basic capability also provides the means for a limited amount of quick-look evaluation of some experiment results as an auxiliary benefit.

Film may be directly viewed using the film viewer. This device provides for both single and multiple frame analysis. It consists of a screen for viewing or scanning, controls, and frame counter. An optical shaft encoder may be used to convert image coordinates into digital outputs for recording on tape. Controls allow image magnification and rotation.

The film digitizer is employed to transform film images into an electrical signal. For this purpose, the unit employs a high resolution flying spot scanner, which may be programmed to vary the electronic sweeps and scans of the unit in order to reduce nonlinearities, or to obtain data only on particular areas of interest.

The analog processor is a multichannel filtering device that is used for enhancing analog data. It can perform contrast improvement, average

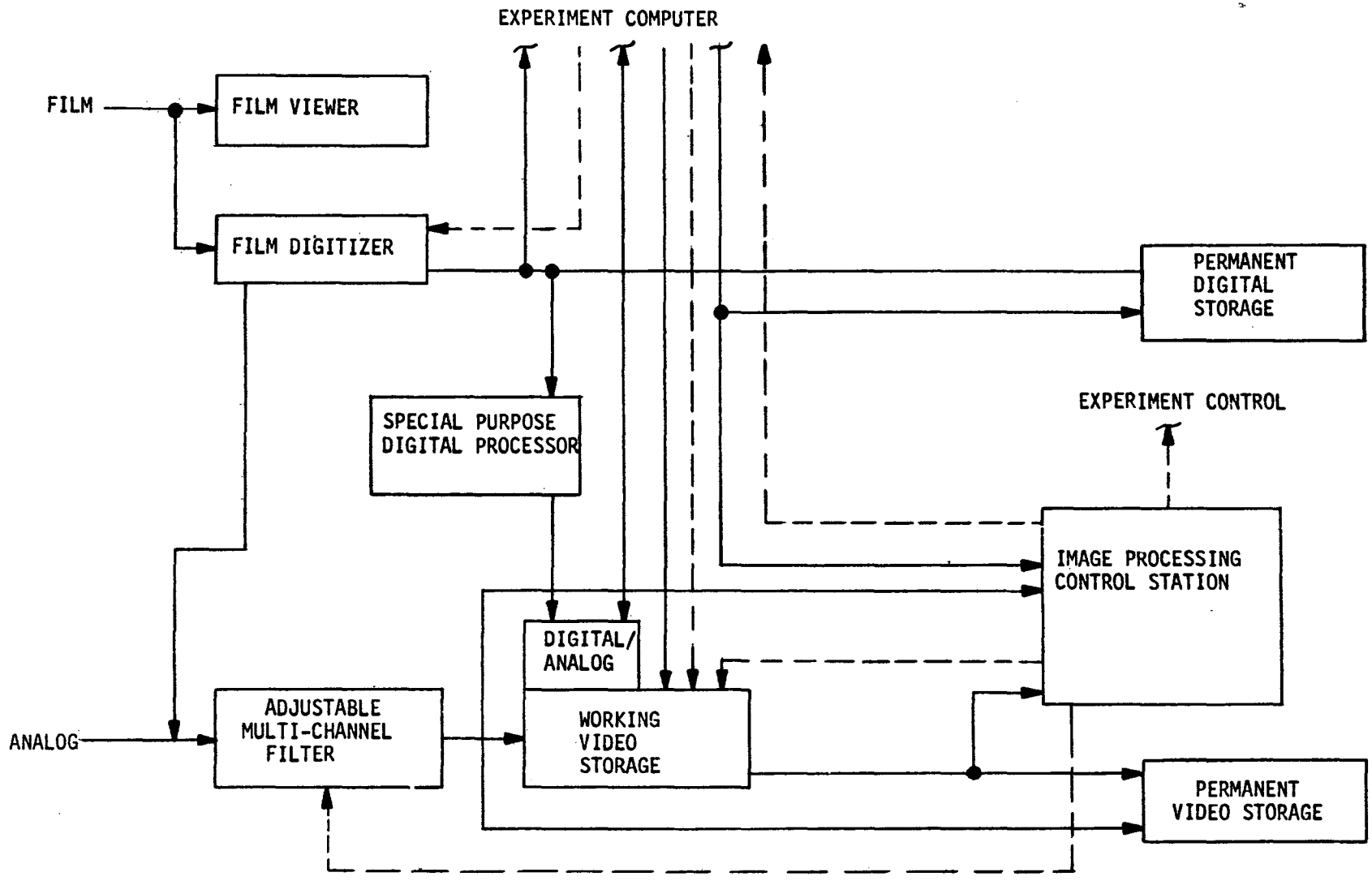


**Figure 4.10-23. Onboard Image Processing**

illumination corrections, thresholding and slicing, background removal, noise removal, and one dimensional filtering. The channels operate independently and any function can be selected for any channel.

The working video storage is a rotating memory disk device that stores data between passes through the analog processor. It can also provide the data for any two images for display or send data to or receive data from the experiment computer. It has one channel for each experimenter's station and multiple channels to the analog processor.

The permanent video storage is a tape recorder. The permanent video storage receives its input from working video storage and its output, magnetic tapes, are returned to Earth via logistics module/Shuttle.

The special purpose digital processor is used for those functions which can be performed more efficiently in a special purpose computer than a general purpose machine such as fast Fourier or Hadgmard transforms and digital pattern recognition.

The image processing control station in the GPL provides a real time control capability by means of CRT displays and controls for the image processing assemblies. Selected experiments may be controlled in real time from the console although normally they would be controlled from the experiment command and control center also in the GPL module. To improve the quality of the real time images viewed, they are generally passed through the analog processor before being displayed. The appropriate processor functions are selected from the console.

The permanent digital storage is also a tape recorder that stores digital data output by the experiment computer and the film digitizer. These magnetic tapes are also returned to Earth for further processing via logistics module/Shuttle.

The image processing assemblies interface with the experiment computer and experiment command and control center through digital data bus terminals and the digital data bus. The video/analog data interface is directly to the analog data bus. Film data is handled by physical transfer between experiment film processors, film storage, and the image processing assemblies.

4.10.3.1.8 Software

The DMS software consists of onboard software and ground support software.

The onboard software consists of executive programs and applications programs for the subsystem and experiment support computing facilities. Figure 4.10-24 shows the software breakdown by major items.

Executive Programs

Executive programs provide for: interrupt handling and input/output control, DMS resource monitoring and control, failure detection and reconfiguration, applications programs scheduling, clock and internal timer services, and DMS communications control. The executive is described with respect to the major functions of software system management, software program management, resource management and input/output management.

Software System Management—Software System Management is made up of functions that are not concerned with minutely defined programmed sequences or hardware control during normal operation but are included in the Executive to permit and insure effective utilization of the processing system. The subfunctions include any routine or shared processing sequence whose common definition tends to reduce system complexity and increase system flexibility, visibility, and reliability as well as providing the required top level DMS sequencing operations.

Software Program Management—The Software Program Management function will schedule, load, initiate, and terminate all application programs.

The algorithms utilized in software program management will insure adherence to resource limitation parameters contained in the System Control Tables. The resource limitation parameters include limits on memory space and processing time. The scheduling flexibility provides for immediate or queued requests for software program management services.

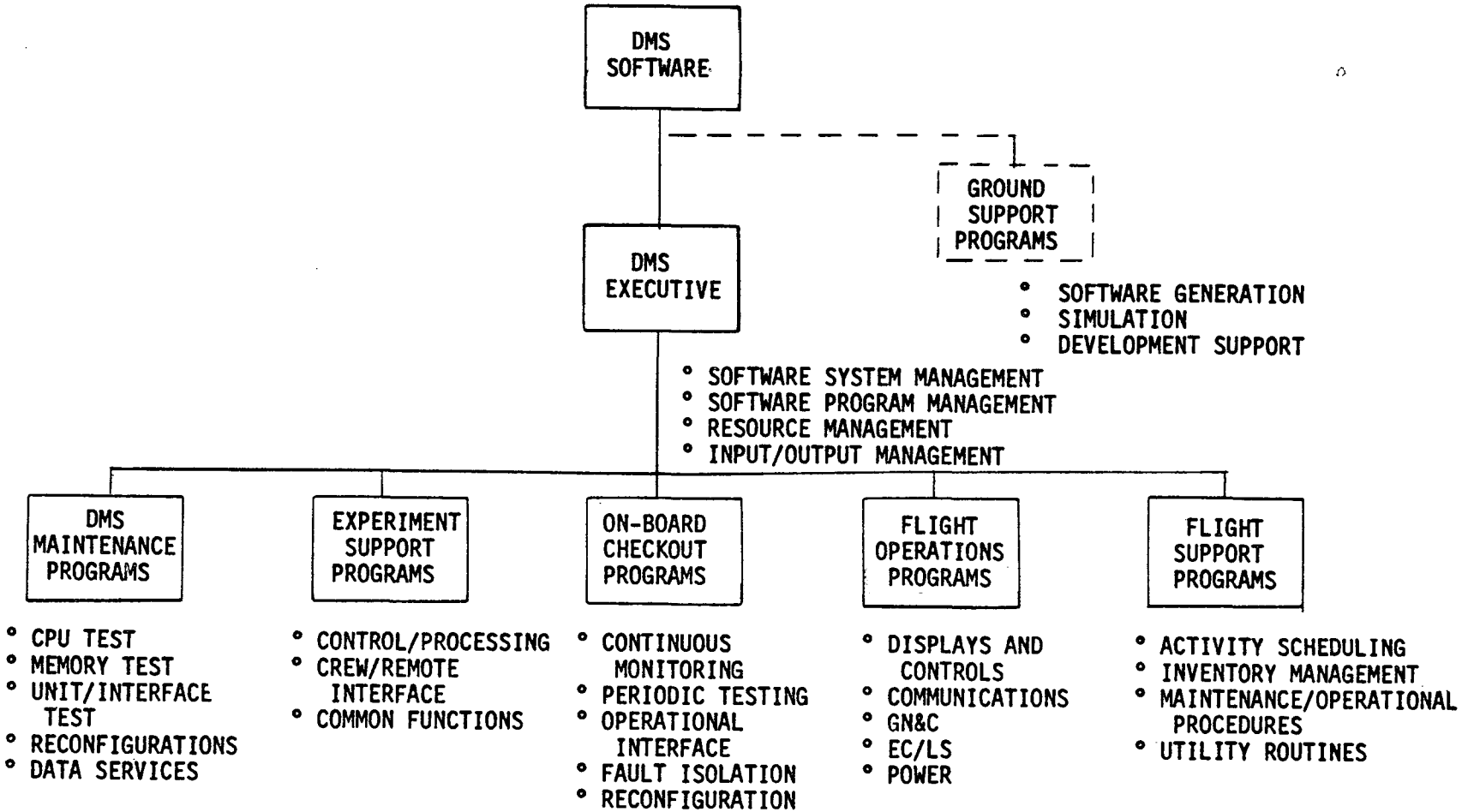


**Figure 4.10-24. DMS Software Items**

A request may involve loading a single or multiple program module that contains program instructions, constants, variables, or any combination. Termination involves insuring that resources assigned to the task are released or otherwise accounted for.

Resource Management—DMS resources include computation and input/output facilities, directly addressable main, auxiliary and bulk memory units, and any DMS unit or group of units that accomplish a specific processing function. The set of resources are monitored, controlled, or reassigned by the Executive Program manipulating resource description tables or data list structures describing the particular resource. Requests for resources are for immediate action or queued for a specific event, time or elapsed time period. Service is on a priority/precedent relationship among the requesting programs. The Resources Management Function provides allocation control for any shared DMS resources by updating a System Control Table and specific Resource Control Tables or system queues and thus provide a capability for application programs to coordinate usage of system resources.

Input/Output Management—An input/output interface program is included that provides a capability to permit concurrent development of many application programs and isolate software development from hardware development or changes to a significant extent. The interface at least permits support software to be utilized for program instruction generation without explicit knowledge of physical device addresses or intersubsystem data flow paths and while the program is executing, knowledge of current Input/Output activity or of other programs. Any exception or requirement of such knowledge is handled either by utilizing Executive queueing facilities or by taking advance of hardware characteristics.

The program requesting services provides its own buffer management mechanism which may be in the form of a shared support program function for one or more application programs. The request for service may involve a single poll operation or multiple operations in the form of chain of requests.

Flight Support Programs

Flight support programs include: activity scheduling, inventory management, maintenance/operational procedures, and utility routines.

Activity Scheduling—Activity scheduling is used to maintain maximum efficiency of the crew and Modular Space Station at all times. To do this, the Activity Scheduler assists the crew to plan activities, monitors progress and updates the Activity Schedule Table as changes occur. The activity scheduler is a set of programs that process crew inputs relating to the activity schedule. The impact of crew inputs is displayed to the crew.

Besides the work schedules for crew EVA and IVA, the Activity Scheduler also provides schedules for such things as entertainment and skills training. This is accomplished or supplemented by crew interface with DMS through the displays and controls. The activity scheduler is also responsible for the scheduling of planning sessions at milestones of the Modular Space Station mission. Support is provided to the crew for examining the history of the station and results obtained throughout the mission.

Inventory Management—An efficient Inventory Management System is a necessity for the Modular Space Station because of the time lapse to replace and unexpectedly depleted item. The Inventory Management Program is capable of tracking every item used onboard and also is able to predict when certain items will become depleted. Consumption rates and replacement rates are monitored periodically when requested or during maintenance operations. The Spares and Tools Inventory is monitored to insure that the supply of items are not too low, endangering the safety of the crew or mission success. If items are below recommended levels, the crew is notified to take corrective action to prevent any serious problems. Whenever supplies and equipment arrive at the Space Station, all items received are recorded by crew input to the Inventory Management program.

Maintenance/Operational Procedures—The function of the Maintenance/Operational Procedure program is to provide a means to access and display information, operational or maintenance procedures, and entertainment

games which are stored on bulk and auxiliary memory. The Maintenance/Operational program transfers the procedures into main memory when requested by the crew.

The program is tutorial or conversation oriented due to the high level of crew interface that is required during the execution of many procedures.

Utility Routines—The Flight Support Utility routines perform common functions for programs in the Operational and Flight Support areas. Functions include providing an interface between Flight Support and Operational Programs as well as logging, decoding, compressing, and any frequently used computations. Display interface and I/O control interface are also provided.

A control routine deciphers the interface input data, directs control to the proper utility, and queues the request if required. The Utility routines perform the requested function and return control to the requesting program.

Flight Operations

Flight operations programs support: displays and controls, communications, guidance, navigation and control, environmental control/life support, and electrical power, subsystems.

Displays and Controls—The Display and Control program functions as the main interface between the crew and DMS. The program provides the control of data to the CRT displays, the control indicators and all other flight operation and experiment control displays.

The Displays and Controls program selects and retrieves display data that is located on auxiliary and bulk memories. It formats the data into standard format upon retrieval if necessary. The on-line storing of display data is controlled by the Display and Control program.

Keyboard requests are serviced by the Display and Control program. All keyboard inputs are decoded by this program and the input is directed to the appropriate program to be processed. The Display and Control program

provides a variable data update capability. This capability extends to both alphanumeric and graphic data.

The Display and Control program also receives switch actuation signals from the display and control consoles. Together with the Executive program, action is taken to pass this data to the proper routines for processing and for correct switch response generation.

Communications Control—The Communication Control program has the function of maintaining Space Station communication parameters. These parameters include storing and updating the relative positions of the Data Relay Satellites and Ground Stations. Space Station altitudes, inertial coordinates and associated time references are other parameters that are maintained.

The Communication Control program selects and activates antennas, and controls Communications RF assemblies. This includes the activating of assemblies prior to their use to provide proper warm-up and deactivating the assemblies after use to conserve power. Minimizing antenna switching and maximizing RF visibility are performed by the Communication Control program.

The Communication Control program has a functional interface with the GN&C program for the pointing and control of the high gain antennas. The initial pointing of the antennas is provided by commands from the Communication Control program. However, the signal reception, transmission, and tracking is then accomplished automatically by the antenna hardware without further assistance from the Communication Control program.

All functions performed by the Communication Control program can be overridden by the crew. Although most checkout functions are performed by the Checkout Supervisor, the Communication Control program does perform some checkout functions that are uniquely related to the communication subsystem. Trend Analysis and Fault Isolation are also performed by the Communication Control program on these unique cases.

Experiment Support Programs

Experiment support programs are provided for the experiment computing facility. These programs include: experiment control/processing, crew/remote interfaces, and data handling and processing services.

Since experiments will be replaced by new ones as the Space Station progresses and since additional experiments will be added as the Space Station grows, the experiment data handling software will be expandable and flexible with allowance for ease of modification as the experiment processing needs change.

Experiment Control/Processing—Each experiment has its own software module, with a standard interface to the Executive Program, which contains the instructions necssary to perform any required calibration, initiate the experiment, sequence the experiment, and monitor certain performance test points. When all is ready for the initiation of the experiment, it is initiated, and any data formatting, and/or reduction is executed by the experimenter furnished software.

Experiment scheduling will be accomplished once per day on the average. The output of the experiment scheduler is a daily timeline with action defined and resource requirements. This timeline is used by an experiment executive controller to activate and run experiments.

In accordance with the timeline for action initiation and the resource allocation made by the experiment schedule and DMS Executive Program, the experiment scheduler issues messages to the crew, switches in power, and requests film and magnetic tape cartridge loadings. At the proper time the experiments power-up, checkout, and calibrate software module is called. When a go is received, any special experiment operating software is initiated. After the completion of the experiment and all data is processed as required, the experiment is disconnected.

In addition, specialized processing is provided for some experiments to permit non-real time onboard analysis or quick-look assessment to evaluate progress and data quality. Data tagging is provided for time, vehicle

position, maneuver rates, or other parameters that will place the experiment data in proper context.

Crew/Remote Interface—The Crew/Remote Interface Software provides crew control and monitoring capability over experiment progress. The programs are very similar to the Display and Control programs described in Section 4.10.3.1.8.3.

Common Functions—To minimize storage requirements for data acquisition and processing, a standard set of data processing routines, plotting routines, and calibration and scaling routines are furnished as part of DMS. Experimenters will be furnished with the calling sequence and linkage requirements for each utility routine and will be required to utilize these resident routines whenever possible.

DMS Maintenance Programs

DMS maintenance programs are provided for: central processor unit testing, main and auxiliary memory testing, DMS subsystem unit testing, reconfiguration, and data handling and processing services testing.

Central Processor Unit Test—The Central Processor Unit Test's main function is to check the CPUs to insure that each processor is functioning correctly. The Central Processor Unit Test checks the CPU for parity errors, timing errors and errors in execution of the instructions. Any malfunctions encountered are recorded by the CPU test program, displays are made to the crew, and appropriate action is taken to isolate the error.

The instruction test and timing check is compared with predefined constants. The parity error test relies upon the hardware giving a parity error check indication upon encountering an error.

Isolation data is passed to the Reconfiguration program of the Data Management System Maintenance Programs.

Memory Test—The Memory Test program's function is to verify that all main and auxiliary memory capability is addressable and does not contain any parity errors.

The Memory Test program checks all memories, but it only checks a limited number of locations at each initiation of the program. A different portion of memory is checked at each initiation until all memories are verified.

All malfunctions are recorded and isolation is attempted. The Reconfiguration program is notified of the malfunction and isolation data is passed to it.

Data Management Subsystem Unit Test—Each unit of the DMS other than the CPUs, main memories, and auxiliary memories are verified by the DMS Unit Test. This includes all the I/O interface units between auxiliary memory and the CPU, I/O interface between bulk memories and the CPU, and the bulk memories themselves.

The DMS Unit Test verifies that all on-line units are functioning correctly. The test checks I/O unit commands, data transfer commands, and I/O unit responses.

Unlike the other tests of the DMS maintenance programs, the DMS Unit Test is a manually initiated event. The crew periodically requests that the DMS Unit Test program execute. Manual intervention may be required throughout the execution of the test.

However, like the other tests in the DMS maintenance programs, isolation is attempted and isolation data is passed to the Reconfiguration program.

Reconfiguration—The Reconfiguration program of the DMS Maintenance Program has basically the same functions to perform as the Reconfiguration of any other subsystem. The Executive Program issues the actual reconfiguration commands for DMS.

Isolation of the failing unit is identified whether it be a hardware or software failure. Even though isolation may not be complete, the Reconfiguration

program still executes. Total isolation may be left up to the crew after reconfiguration has taken place.

Both hardware and software may initiate the Reconfiguration program. If initiation is by software, isolation data is passed to the Reconfiguration program. If hardware initiated, the Reconfiguration program is entered automatically and must record the hardware indicators as its isolation data.

The Reconfiguration program may be required to establish a new configuration by reinitializing main memory from auxiliary memory, command auxiliary and/or bulk memory units to a change, or completely reestablish the software in the affected Data Management Subsystem processing complex.

Data Services—The Data Service program provides an interface between the Data Management Executive and DMS Maintenance programs. The Data Service program also contains several utility routines such as Data Storage and Retrieval, Table Update, I/O Control, Display Interface, and Conversion Routines. Each routine is assigned with a specific input code. When the routine is required by a program, execution control is passed from the requesting program to the Data Service program with the specific code as input data.

Some of the Utility routines are stored in auxiliary memory, while others remain in main memory. The utilities on auxiliary memory are brought into main memory when they are requested.

Ground Support Software

Ground support software includes software generation programs for both ground and onboard computing systems, simulation of onboard systems and general system development support. Compatibility will be maintained between onboard and ground systems to minimize development and subsequent costs. The onboard system may be a compatible subset of the ground system from a programming language and processing capability standpoint.

Software Generation—At least a compiler and assembler will be developed for the SUMC that is a compatible subset of the ground support systems. Macro statement capabilities will be present in code generation programs to be able to centralize the definition of data or program sequence structures and to simplify logic modifications and code regeneration.

Linkage editors, program code editors, and specialized loaders will be developed to minimize the cost of supporting SUMC and support system programs by permitting the establishment of program linkage and program transfer standards across all Space Station development efforts.

A SUMC instruction set baseline will be maintained without regard to the instruction set implementation technique. The instructions will usually be one-for-one with operation codes referencing micro-programmed sequences. But individual instructions may be implemented as open or closed routines that reference more than one micro-program. Closed routines can be an Executive program responsibility but the standard routine linkage logic must be inserted by the code generator of either the compiler or assembler macro instruction capabilities.

All device or subsystem and experiment units will be referenced by symbol and not explicit unit and channel addresses. Explicit references are the responsibility of the Executive and onboard or ground system support programs.

Simulation of Onboard Systems—Two software model types will be used for concept selection and design verification. The first is a functional model that is developed utilizing a higher level language to study onboard processing concepts without the requirement of bit by bit and real-time simulation of the flight hardware. In key areas such as the Executive, DMS Maintenance, and Onboard Checkout, a more detailed model must be available to insure that time and memory space constraint objectives are met and that each unit specification can be adequately handled.

The programming language selected will permit the utilization of existing ground systems for development efforts. And, by code translation or

recompilation of source statements on compatible tools developed for the SUMC, provide for the transfer of software without duplicating each phase of software development.

Each model or ground system will have extensive tools built into the logic for debugging, performance monitoring, and testing aids such as fault simulations or various activity load controls. A system log will be provided along with integrated controls to initiate or cancel various recording functions and log post processing programs to search, summarize, and display or print selected results. Optional recording functions will include selective data or events based on time or a referenced parameter change. Selectable events include specific type requests to the Executive and any application defined function requesting a Program Management function.

System Development Support—The support software will include general purpose software development tools for the maintenance of any source and object programs as well as program documentation. Each configuration or installation will include sufficient on-line digital memory and terminal equipment to support concurrent development and testing of many software components by more than one responsible organization. The terminals may be used to monitor real-time operation or simulation and efficiently provide remote access for initiation, control, and post processing or examination of test results.

The support system and breadboard configuration will operate as a remotely accessed, time-share operating system with its own assemblers, compilers, and utility programs for simulation and general support functions. In addition, one interface control unit will be provided for each set of flight hardware equipment included in the breadboard. The breadboard mode of execution need not be a time-share approach but sets of flight hardware shall be assignable to a particular remote user for certain time periods from the centralized control terminals.

4.10.3.2 Interfaces

The DMS interfaces described in the following sections are grouped into DMS interfaces between ISS modules, between the DMS and other docked modules, between the DMS and other subsystems, and between the DMS and integral experiments. The DMS man machine interface with the crew is described in Section 4.10.3.1.5, Displays and Controls Assemblies. Other man machine interfaces include removal and replacement of magnetic tape recorder tape reels, physical handling of film for image processing and removal and replacement of failed DMS units.

4.10.3.2.1 ISS Modules Interface

The DMS interface between ISS modules is limited to the analog and digital data busses (primary and redundant) at the docking ports interconnecting any two ISS modules. The data bus interconnections also provide the inter-module electrical interface for other subsystems that use the data bus. Figure 4.10-25 shows the extension of the data buses as modules are docked together.

4.10.3.2.2 DMS to Docked Modules Interface

The DMS interface with docked modules (RAMS, Logistics Modules) shown by Figure 4.10-25 is identical to the interface between ISS modules described above. After mating, the docked module's data buses become an extension of the ISS data buses. The docked module's data bus terminals must be compatible with all of the operating characteristics of the ISS data buses and include local buffering for digital data rates in excess of the 10 MBPS.

4.10.3.2.3 DMS to ISS Subsystems Interface

The DMS interface with the ISS subsystems provides for acquisition of subsystem data, transmission of commands, status monitoring, and checkout of subsystem operation. In addition, the DMS interfaces with the Electrical Power Subsystem to obtain electrical power and with the Onboard Checkout Subsystem (OCS) for checkout of DMS assemblies. The interface with the OCS is primarily within the computer's software programs. However, the DMS data acquisition and distribution, display and control, and data storage assemblies are used by the OCS to perform its functions.

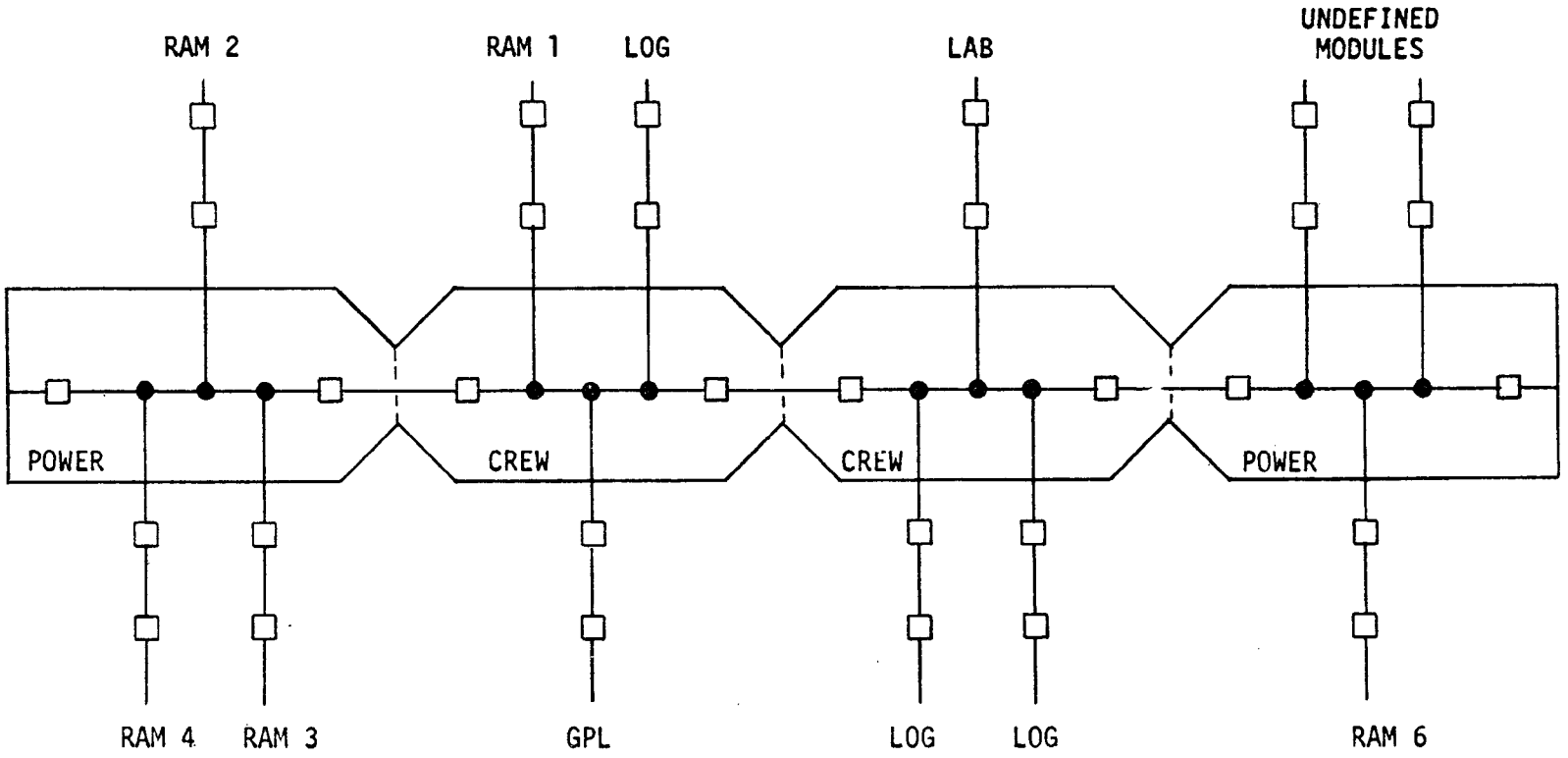


DATA BUS

BRANCH COUPLER

TERMINATION COUPLER

NOTE: Same connection concept for both Analog and Digital Buses.

**Figure 4.10-25. Data Buses Connection Diagram**

The acquisition of subsystem data and transmission of commands and data to subsystems is shown in Figure 4.10-4. Subsystem analog data (10 kHz or less bandwidth) and discrete signals interface with remote data acquisition units (RDAU). The analog data are converted to 8-bit digital words and each discrete signal is encoded as one bit of an 8-bit digital word. Subsystem data requiring greater than 8-bit resolution are converted within the subsystem assembly and then interface with a digital data bus terminal using a serial form of data transfer. The DMS interface for discrete commands, and digital data distributed over the data bus, interface with the subsystem assemblies through a digital data bus terminal. These DMS interfaces with other ISS subsystems play an active part in other subsystems' overall operation when the DMS data bus is used to transfer data between subsystem assemblies in two different modules. An example is in the Guidance, Navigation,and Control Subsystem where commands for thruster operation are generated in one module for actuation in another ISS module. Whereas most subsystems time-share digital data bus channels, the Communications Subsystem audio channels of the analog data bus are dedicated to the communications subsystem operation; the interface with these channels is described in Section 4.9.3.2.

4.10.3.2.4 DMS to Integral Experiment Interfaces

The DMS interface with integral experiments, primarily in the GPL module, is identical to the interface with the ISS subsystems described above for analog data with 10 kHz or less bandwidth, discrete data and digital data. Experiment analog data with a bandwidth greater than 10 kHz are transferred in analog form on one of the video channels. The DMS analog interface is shown in Figure 4.10-4.

4.10.3.2.5 DMS to Shuttle Interface

There is no direct interface between the ISS DMS and the Shuttle orbiter during module launch. However, the OCS Caution and Warning subsystem will use DMS data acquisition and distribution assemblies to monitor critical parameters in the Power/Subsystems and GPL Modules when these modules

are launched by the Shuttle orbiter. The monitoring will be limited to hazardous equipments and will be provided to the Shuttle through hardwired connections. No hazardous equipment is contained in the Crew/Operations Module; thus, the interface for this launch is inactive.

4.10.3.3 Operation

The DMS operation is automated and under the direction of the subsystem and the experiment control computers with their associated software. Crew access to the computer's operation is provided by the display and control assemblies. Keyboards, CRT displays and auxiliary control devices operate through digital data bus terminals and the digital data bus to permit a crewman to interrogate or command the computers, to request data readouts, to control operating modes, and to modify routines. Manual control is available to supplement the automated subsystem operation when it is so desired by a crewman.

4.10.3.3.1 Launch Operation

The DMS assemblies in the Power/Subsystems and GPL Modules required to support the OCS Caution and Warning function are operable and under computer control during launch. These assemblies include the computer, digital data bus, and the digital data bus terminals interfacing with the module's local caution and warning units. Critical parameters will be monitored for status display to the Shuttle orbiter crew. All DMS assemblies in the Crew/Operations Module are unpowered and inactive during launch. There is no computer in this module to control the automated DMS assembly operation.

4.10.3.3.2 Deployment Operation

The powered up and active DMS assemblies in the Power/Subsystems Module can initiate preprogrammed commands to deploy the solar array automatically. These assemblies include the computer, digital data bus, digital data bus terminals, and RDAU's interfacing with the deployment mechanism. A portable display and control unit can also be connected to the digital data bus to provide manual initiation and control of computer generated commands

to deploy the solar array. The portable unit will either be stowed in the module during launch or carried into the module from the Shuttle orbiter by a crewman. It will be connected to one of the plug-in terminals located in the module to interface with the digital data bus.

4.10.3.3.3 Activation Operation

The DMS operations for activation of the ISS modules on orbit are similar for each module. These operations are primarily to support OCS checkout of each module and to provide a means for the activation crew to initiate both planned and unplanned activation activities requiring DMS support. The specifics for each module are briefly described. The DMS assemblies in each ISS module are shown in Figure 4.10-4.

Power/Subsystems Module

The DMS assemblies in the Power/Subsystems Module are initially verified for correct operation through use of onboard DMS Maintenance Programs. The DMS will then support the OCS checkout of the remaining subsystems with the Subsystems Onboard Checkout and Fault Isolation Programs. The portable display and control unit will be used by the activation crew to initiate, monitor, and control the DMS and OCS activation operations. The activation crew will also use this portable unit to initiate other planned activities, and unplanned activities if necessary, which require DMS support. Prior to leaving the module in orbit, the DMS will support placing the module's subsystems in the required modes for unmanned operation.

Crew/Operations Module

The DMS operations for the Crew/Operations Module activation cannot begin until the data bus connections between the Power/Subsystems Module and the Crew/Operations Module have been mated and power has been applied to the DMS assemblies in the Crew/Operations Module. Checkout of the DMS assemblies and the remaining subsystems is then the same as for the Power/Subsystems Module. The subsystem operations Control and Display console in the Crew/Operations Module is used by the activation crew for all activities requiring DMS support. A portable Display and Control unit may also be used if necessary to supplement the fixed console.

GPL Module

The DMS operations for the GPL Module activation are essentially the same as for the Crew/Operations Module. The DMS assemblies are powered up and actively under control of the experiment control computer in this module. Control of subsystem related assemblies will be transferred to the subsystem control computer in the Power/Subsystems Module after the data bus connections between the Crew/Operations Module and the GPL Module have been mated. The subsystems operations console in the Crew/Operations Module will be used by the activation crew as before. The experiment operations control capability in the GPL may be verified by the activation crew if necessary. The DMS assemblies involved are the experiment control computer, experiment display and control console, and related data storage. The subsystems operations backup control capability for the DMS assemblies in the GPL Module will be verified.

4.10.3.3.4 Unmanned Operation

The DMS can be operated in an automatic mode and the assemblies providing this capability are located in the Power/Subsystems Module, the first module launched (see Figure 4.10-4). An uplink ground command capability is provided by the command interface unit interfacing with the Communications Subsystem. The DMS subsystem's operations support the Guidance, Navigation and Control Subsystems on a continuous basis and the OCS if checkout is commanded. Data storage is provided for onboard recording of subsystems data either for delayed playback to ground or for retrieval by the Shuttle crew.

The DMS assemblies in the second and third modules used for unmanned operations are those data acquisition and distribution units which monitor or control the subsystem unmanned operations in each of these modules. In addition, redundant and backup DMS capability provided by certain assemblies in the GPL Module for normal operation would provide the same capability for unmanned operation.

4.10.3.3.5 Normal Operation

The subsystem control operations are automatically executed under the direction of the subsystem control computer in the Power/Subsystems Module. The crew will normally interface with subsystems operations through the subsystems control console in the Crew/Operations Module. The experiments control operations are automatically executed under the direction of the experiments control computer in the GPL Module.

The crew will normally interface with experiment operations through the experiment control console. Portable display and control units will be used (by crew members) for both subsystem and experiment control and monitoring at locations in all modules. The ground uplink capability will also be used to modify preprogrammed or preplanned subsystem or experiment operations.

4.10.3.4 Growth Space Station (GSS) Considerations

The DMS configuration has two features which minimize the subsystem impact when the ISS evolves into a GSS by adding 2 additional modules. These are the data bus concept and subsystem modularity.

The data bus concept is designed to meet GSS requirements. Growth and flexibility of the data buses were major design considerations. As a result, the change from ISS to GSS is accomplished with a minimum effort by the use of branch port connectors in a manner identical to the modular ISS buildup.

The additional GSS modules are connected to the station data buses by removing bus characteristic impedance matching terminators and connecting the coax cables together at the docking port interface. Attached modules are connected to the data bus by a branch connection. These branch connections are also terminated with a matching impedance in the absence of the attached module. The module's data bus connectors are connected to the branch

connectors by first removing the terminating connector. This process will cause a slight, temporarily mismatched line. However, this will not affect system operating performance characteristics.

Data bus terminals and RDAU's within each module provide the interface between the common data bus and each Space Station module's subsystems and/or experiment equipment. The additional modules added for a GSS capability are accommodated by providing additional DMS acquisition and distribution assemblies similar to ones used in ISS modules. The baseline ISS design provides for a maximum of 128 digital data bus terminations and 64 analog data bus terminations.

The ISS computational capability is provided by two multiprocessor complexes, one for subsystems operation and one for experiments operation. Each multiprocessor contains identical central processing units (CPU's) and identical main memory modules. One of the desirable features of a multiprocessor is the relative ease of expanding capabilities. An increase in the total computing operations per second is accommodated by increasing the number of central processing units while an increase in memory requirements is accommodated by an increase in the number of memory modules. Both an increase in computing operations and main memory size is required to meet GSS computational requirements as shown in Table 4.10-3. The additional central processing units, main memory modules and auxiliary memory units required for GSS will be added to the ISS computational capability as carry-on items and installed when needed during the GSS buildup. Space for the additional items is provided in the ISS Power/Subsystems Module and GPL Module. The installation is similar to

removing and replacing one of these items for maintenance. The baseline ISS multiprocessor design provides for a maximum of 4 CPU's, 3 IOC's, 15 main memory modules, 3 auxiliary memory units and 3 bulk memory units for each multiprocessor complex.

Increased data storage requirements for GSS are accommodated by more frequent removal of filled magnetic tapes and their replacement with blank tapes. The biggest impact will be an increase in quantity of magnetic tapes supplied.

Experiments are apt to become more sophisticated. Increased sophistication implies faster operation, increased accuracy, and more detailed and automated procedures. Some experiments will make a transition to applications operations. The transition requires that results be produced in real time such that they may be of value to users. These trends could require a significantly larger onboard data processing capability. For example, image processing and analysis requiring extensive computational support may be required. The computation assemblies are designed such that advantage may be taken of advances in the state-of-the-art when they are needed. The modular approach permits older assemblies to be replaced with advanced capability assemblies.

Both the primary and experiment display and control consoles have space for adding undefined GSS functions. Certain dedicated display and control functions have been defined for GSS operations and are identified as spare capability for ISS operations.

### 4.10.4 Design Analysis and Trade Studies

#### 4.10.4.1 Requirements Analysis

The 33 foot Space Station DMS design concepts have been reviewed for compatibility with the MSS Program Requirements Document and found

compatible. The requirements definition task for the DMS addressed three major technical areas:

- Experiment/Subsystem data analysis
- Processing requirements
- Date acquisition/distribution requirements.

The following sections summarize the analysis studies for each of these areas.

4.10.4.1.1 Experiment/Subsystem Data Analysis

Green Book definitions of data outputs for those experiments scheduled in Case 534-G have been plotted to form a Space Station data profile shown in Figure 4.10-26. Data characteristics which represent worst case daily averages are summarized in Table 4.10-15. These quantities of data provide the initial analysis point for subsystem sizing.

4.10.4.1.2 Processing Requirements

To provide a means for further analysis, a sample time period representative of orbital experiment operation for ISS was chosen for detailed examination. This is shown as the shaded area in Figure 4.10-26. The thirteen experiments that were included in the time slice were reviewed and analyzed for processing requirements. The results of this time slice analysis serve as a verification test of previous processing estimates.

Analysis of the processing capability requires both identification of functions to be performed and the input characteristics of the data to be processed.

Data Processing Assumptions

The following system design assumptions were used to establish the processing and buffer requirements:

- Device control is always a multiple of a standard sample interval.
- Standard Interval Rate (SIR) of 50 per second was utilized.
- Scientific data is buffered at the source to match the standard interval.

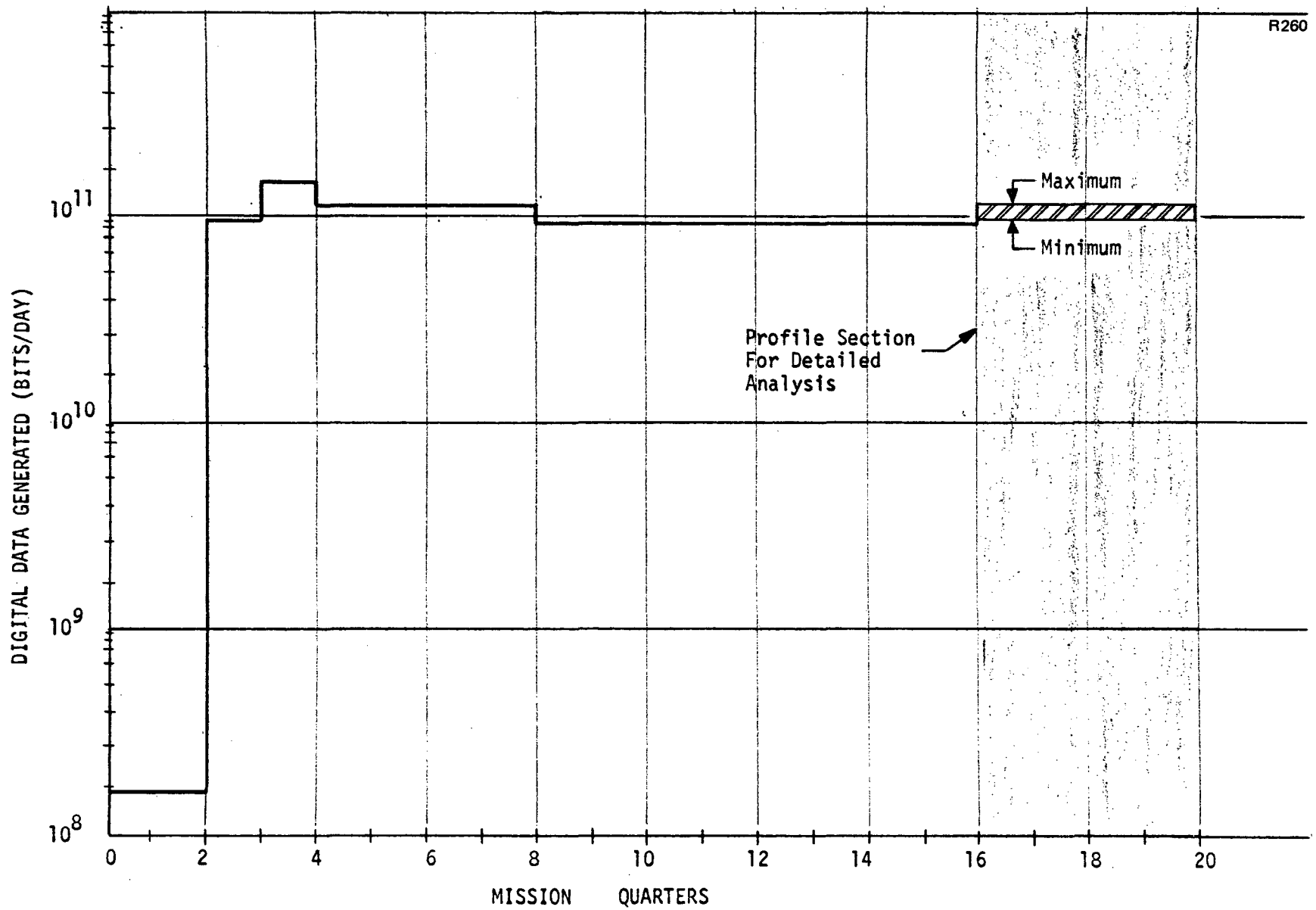


**Figure 4.10-26. Digital Data Profile Case 534-G (3 Month Average—Peak Day)**

Table 4.10-15

EXPERIMENTS DATA SUMMARY

| | ISS | GSS |
|---|---|---|
| • Experiment Data Sources | 1070 | 3631 |
| • Digital Data | | |
| • Generated | $1.3 \times 10^{11}$ bits/day | $1.2 \times 10^{12}$ bits/day |
| • Transmitted | $1.66 \times 10^{10}$ bits/day | $2 \times 10^{11}$ bits/day |
| Real Time | $2.2 \times 10^{9}$ bits/day | $3.7 \times 10^{10}$ bits/day |
| Orbital Dump | $1.4 \times 10^{10}$ bits/day | $1.63 \times 10^{11}$ bits/day |
| • Magnetic Tape | 628 kg/quarter (1,381 lb/quarter) | 4,475 kg/quarter (9,870 lb/quarter) |
| • Video Data | | |
| • Transmitted (average/peak) | 404/880 min/day | 556/816 min/day |
| Real Time (average/peak) | 184/424 min/day | 336/516 min/day |
| Orbital Dump (average/peak) | 220/480 min/day | 220/480 min/day |
| Video Tape | 106 kg/quarter (233 lb/quarter) | 2,150 kg/quarter (4,750 lb/quarter) |
| Photographic Film | 200 kg/quarter (440 lb/quarter) 4K frames/day | 780 kg/quarter (1,719 lb/quarter) 18K frames/day |

- Digital data rates greater than SIR x 256 are transferred direct to Bulk Memory
- All other scientific and monitoring data goes to the CPU memory.
- Monitor and scientific data are on single but separately addressable RDAU's.
- All data will be buffered on Auxiliary or Bulk Memory.

The level of concurrent data processing was determined by selecting any experiment that operated five or more days per week and twenty-four hours per day or the ratio of the hours based on operating with a sixteen hour day; the latter permitting simplified scheduling for a six man crew. Worst case experiments were selected from the remaining experiments. Table 4.10-16 lists the processing requirement parameters assuming a standard base sample or control rate of 50 per second with source buffers up to 512 bits.

The experiment processing requirements resulting from this analysis are shown in Table 4.10-17. A comparison with previous experiment analysis is shown in Table 4.10-18. Station operation requirements are shown in Table 4.10-19.

4.10.4.1.3 Data Acquisition/Distribution Requirements

The Data Acquisition/Data Distribution subsystem must service each of the data sources and provide data distribution internally to and between each of the station modules. The data acquisition/distribution requirements can be assessed from the following:

- Number of data points
- Worst case (peak) digital rates
- Analog sources and bandwidths.

A composite requirements summary is shown in Table 4.10-20. The quantity of data points is derived from a tabulation of subsystem devices and associated quantities with each of the space station modules. The experiment data rates represent peak rates, excluding certain high rate sources which will be handled as specific isolated cases, as defined in the green book.

Table 4.10-16

PROCESSING REQUIREMENT ESTIMATING PARAMETERS

| Experiment | Control Cycles/Sec | Weight | Average Cycles/ Second | Peak* Digital Words/ Sample |
|---|---|---|---|---|
| ES-1G | 218 | 1 | 218 | 50 |
| LS-1A | 41 | 1 | 41 | 50 |
| MS-3A-1 | 5 | 0.04 | 0.2 | 40 |
| MS-3A-2 | 42 | 0.12 | 5 | 40 |
| MS-3A-3 | 52 | 0.16 | 9 | 20 |
| MS-3A-4 | 52 | 0.16 | 9 | 20 |
| MS-3A-5 | 52 | 0.16 | 9 | 20 |
| MS-3B-1 | 52 | 0.08 | 5 | 20 |
| MS-3B-2 | 52 | 0.08 | 5 | 20 |
| MS-3C-1 | 1 | 0.08 | 0 | 36 |
| MS-3C-2 | 12 | 0.08 | 1 | 10 |
| MS-3C-3 | 62 | 0.08 | 5 | 20 |
| MS-3D-1 | 52 | 0.04 | 2 | 20 |
| MS-3D-2 | 63 | 0.04 | 3 | 20 |
| MS-3E | 62 | 0.08 | 5 | 20 |
| A-4C | 32 | 1 | 32 | ** |
| P-1A | 526 | 0.5 | 268 | 40 |
| P-1B | 51 | 0.03 | 2 | 40 |
| P-1C | 35 | 0 | 0 | 1 |
| P-1E | 101 | 1 | 101 | 40 |
| P-4C | 63 | 1 | 63 | 10 |

*Words of data routed to the CPU memory (assume 10 bits packed 3 or 4 per CPU memory word).

**Majority is video or film.

Table 4.10-17

PROCESSING REQUIREMENTS SUMMARY

| | Processing Function | Operations Second x $10^3$ | Main Memory Words x $10^3$ | Auxiliary or Bulk Words x $10^3$ *1 |
|---|---|---|---|---|
| 1. | Data Handling Packed 3:1) *3 | 118 | 60 | ($6.6 \times 10^{10}$) *2 |
| 2. | Display and Control | 10 | 6 | 60 |
| 3. | Temporal (0.2 per word) *4 | 115 | 12 | 60 |
| 4. | Stabilization | 20 | 4 | 20 |
| 5. | Evaluation (1 per minute) *5 | 18 | 12 | 60 |
| 6. | Support and Checkout | 50 | 10 | 280 |
| 7. | Supervisor | 60 | 14 | 20 |
| Totals | | 391 | 118 | 500 + (*6) |

*1 Words are assumed to be 32 bits of digital data.
*2 Average daily digital accumulation is given in parenthesis (see Figures 6 and 12).
*3 Three 10 bit experiment words are packed in one CPU word.
*4 A ratio of simple operations to data words.
*5 60 coefficients and 1200 data points.
*6 Buffer requirement determined by schedule restrictions and down link rates or tape weight restriction for the Shuttle.

Table 4.10-18

EXPERIMENT OPERATIONS PROCESSING ESTIMATES

| | Proc Rate (K OPS/Sec) | | | Main Memory (K Words) | | | Aux Memory (K Words) | | |
|---|---|---|---|---|---|---|---|---|---|
| Functions | ISS | GSS | VER | ISS | GSS | VER | ISS | GSS | VER |
| • Experiment Executive | 48 | 60 | | 11 | 14 | | 12 | 16 | |
| • Experiment Processing | 108 | 179 | | 39 | 66 | | 48 | 80 | |
| • Experiment Support | 120 | 200 | | 12 | 20 | | 210 | 340 | |
| • Experiment Checkout | 48 | 80 | | 10 | 16 | | 54 | 90 | |
| | 324 | 519 | 391 | 72 | 116 | 118 | 324 | 526 | 500 |
| Contingency/Growth | 162 | 260 | | 8 | 12 | | 162 | 263 | |
| Totals | 486 | 779 | 391 | 80 | 128 | 118 | 486 | 789 | 500 |

*Capability Available for Experiment Data Processing

VER—Verification

Table 4.10-19

STATION OPERATIONS PROCESSING ESTIMATES

| Functions | Proc Rate (K OPS/Sec) | | Main Memory (K Words) | | Aux Memory (K Words) | |
|---|---|---|---|---|---|---|
| | ISS | GSS | ISS | GSS | ISS | GSS |
| • DMS Executive | 80 | 100 | 16 | 20 | 19 | 24 |
| • Flight Operations | | | | | | |
| - Communications | 10 | 10 | 15 | 15 | 15 | 15 |
| - Displays and Controls | 40 | 50 | 10 | 10 | 15 | 15 |
| - GN&C | 170 | 200 | 16 | 21 | 38 | 40 |
| • Flight Support | 145 | 145 | 20 | 20 | 460 | 530 |
| • Subsystem Checkout | 40 | 65 | 18 | 30 | 43 | 72 |
| | 485 | 570 | 95 | 116 | 590 | 696 |
| Contingency/Growth | 242 | 285 | 10 | 12 | 295 | 348 |
| | 727 | 855 | 105 | 128 | 885 | 1,044 |

Table 4.10-20

DATA ACQUISTION AND DISTRIBUTION REQUIREMENTS SUMMARY

| | Power Module 1 1 | Crew Module 1 2 | GPL 3 | ISS Totals | Crew Module 2 4 | Power Module 2 5 | GSS Totals |
|---|---|---|---|---|---|---|---|
| Subsystem Data Sources | 1737 | 1314 | 869 | 3920 | 1021 | 1585 | 6526 |
| Worst Case Subsystem Data Rate | 52 KBPS | 42 KBPS | 23 KBPS | 117 KBPS | 35 KBPS | 48 KBPS | 200 KBPS |
| Experiment Data Rates | | | | 2.4 MBPS* | | | 8.6 MBPS |
| Total Data Rate | | | | 2.5 MBPS* | | | 8.8 MBPS** |

Analog Requirements

Audio: 36 Telephone Channels
1 Public Address
1 Emergency Call Tone
1 Emergency Alert Tone
3 Entertainment Channels

Video: 8 TV Channels, 4.75 MHz Baseband
1 Test Channel, 4.75 MHz Banseband
1 TV Carrier Reference, 4 MHz Sine Wave

*Excludes 50 MBPS from ES-16 Land Use Mapping
**Excludes 51.8 MBPS from ES-1AA and 9.5 MBPS from A-3CC (A Free Flyer)

4.10.4.2 Computing System Configuration Selection Rationale

During this study and previous studies a number of computing facility concepts were examined with respect to two basic questions:

- Where (in which modules) should computing facilities be located?
- What should the configuration of these facilities be?

The selection rationale indicates that two computing facilities are required as illustrated in Figure 4.10-27. The subsystem computing facility must be located in the Power/Subsystems No. 1 Module. The experiment computing facility should be located in the General Purpose Laboratory. The experiment computing facility must have the capability of performing the subsystems computing facility functions in the event that the subsystem computing facility is not operating for any reason.

The requirement for location of the subsystem computing facility in the Power/Subsystems No. 1 Module is based on the following:

- The Power/Subsystems No. 1 Module will be required to operate unmanned initially for a period of up to 120 days. The subsystem computing facility is necessary to support communications, onboard checkout, attitude control and for rendezvous and docking operations during the Modular Space Station build up.
- Most of the subsystem hardware is within the Power/Subsystem Module (control moment gyros, solar panels and batteries, attitude sensors, propulsion and low gain antenna communications). The subsystem computing facility is used to test and checkout these equipments in the Power/Subsystems Module during factory checkout and pre-launch operations.
- The experiment computing facility should be located in the General Purpose Laboratory for convenient access to experiments. The experiment computing facility could be located in the crew operations module if necessary. However, it could not be located in the Power/Subsystems Module because of the requirements to physically separate a backup subsystem computing capability (in this case, the experiment computing facility) from the main subsystem computing facility.

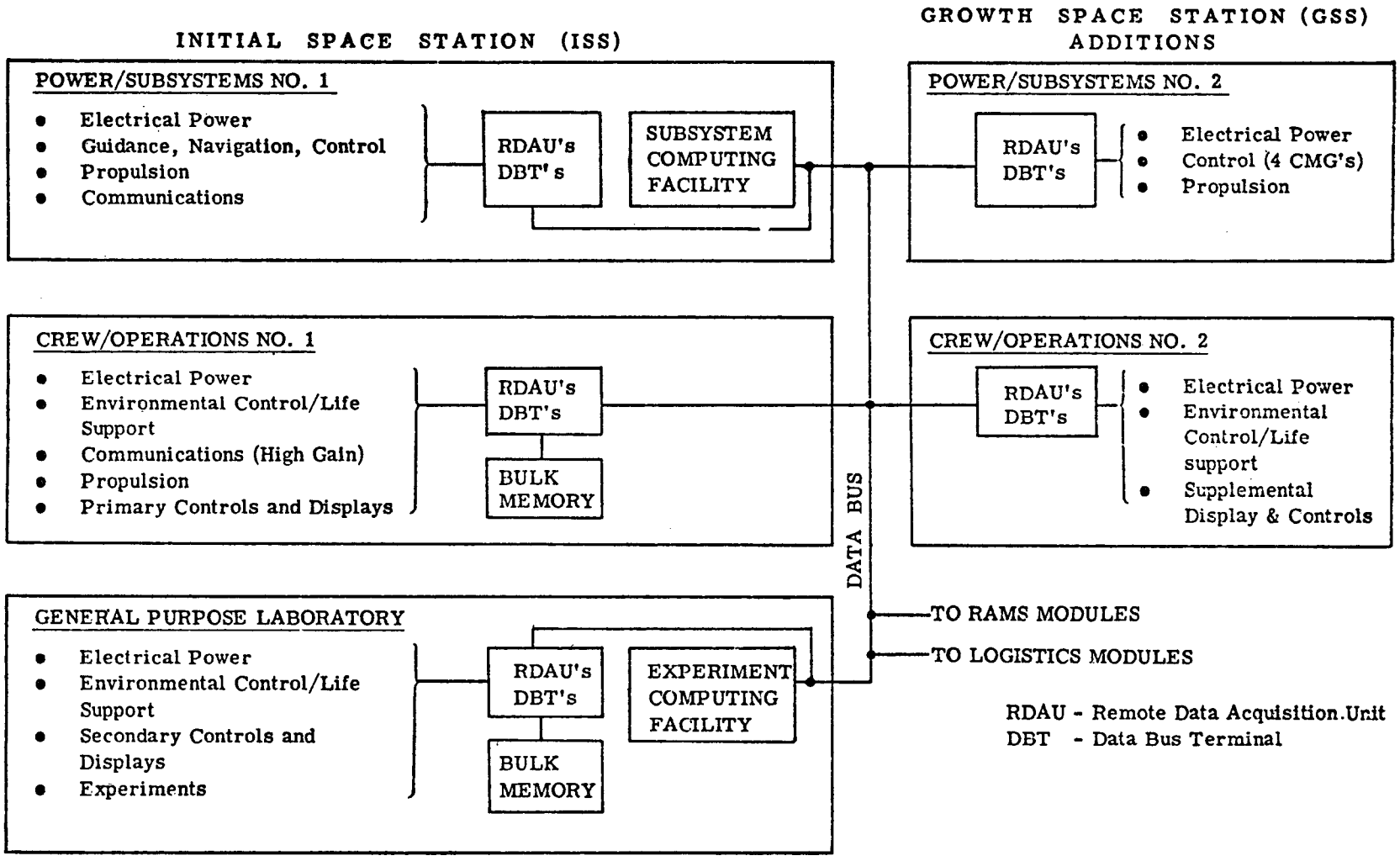


Figure 4.10-27. Modular Space Station Two Computing Facilities Concept

The reasons for separating the facilities according to subsystem and experiment computing functions are:

- Separation simplifies software development and verification. Subsystem software will remain relatively fixed throughout the Initial Space Station phase, and then require a significant modification to accommodate the additional two modules and subsystem equipment for the GSS phase. Experiment software will be continually varying during the life of the Space Station program to accommodate new experiments and experiment analysis. Isolating the experiment computing to the experiment computing facility permits such modifications and software experimentations without endangering or interfering with subsystem computing operations.

  Since both computing facilities have access to the data bus, the experiment computing facility can take over subsystem computing facility functions without much difficulty. Since the subsystems are allowed down times in the order of several minutes or more, automatic switchover from the subsystem computing facility to the experiment computing facility is not required. Typically, the changeover process involves the crew manually loading a subsystem program tape from space station files, and reading the program into the experiment computing facility memory. No additional computing hardware is required for this backup capability.

  Bulk memory units associated with the computing facilities are located near the primary and secondary controls and displays stations located in the Crew/Operations Module and the General Purpose Laboratory, respectively. These bulk memory units are magnetic tape drives which require manual loading by crew members located at the primary and secondary control stations. Each station should have at least two bulk memory units such that they can be used sequentially for continuous recording or playback of data.

The second question is answered by the following:

Subsystem Facility Configuration

Quantities of assemblies required for the subsystem facility are indicated in Table 4.10-21. These quantities were developed from an analysis of the subsystem support computing and storage requirements indicated in Section 4.10.4.1. The spare assemblies are either installed and powered down or on-board but not installed. They would be brought into use in event of failure of assemblies operating on line.

Two CPUs operating at 500 KOPS each can accommodate the 727 KOPS processing requirements for the ISS with a margin of 37.5 percent for multiprocessor overhead. The GSS will require three operating CPUs to accommodate the 855 KOPS processing requirements (allowing for processor overhead), although two CPUs may be able to perform the tasks if the 285 KOPS allocated for contingency/growth are not completely utilized.

One operating three-channel Input/Output Controller (IOC) is expected to be capable of controlling the subsystem data bus traffic for the ISS and GSS

Table 4.10-21

SUBSYSTEM COMPUTING ASSEMBLIES SUMMARY

| | ISS | | GSS | |
|---|---|---|---|---|
| Assembly | Operating | Spares | Operating | Spares |
| CPUs | 2 | 1 | 2-3 | 1 |
| IOCs | 1 | 1 | 1 | 1 |
| Main Memory (16 K Word Modules) | 6 | 2 | 8 | 2 |
| Auxiliary Memory (1 M Word Modules) | 1 | 1 | 2 | 1 |
| Bulk Memory | 2 | 1 | 2 | 1 |

Note: K = 1024
M = 1,048,576

phases of the program with substantial margin. Each channel can accommodate from 38,400 to 288,000 sixteen-bit words per second, depending on the degree of interleaving of data ordering requests. Real time control of subsystem functions will require only a few thousand data ordering requests per second, allowing substantial reserve for checkout, monitoring and recording/telemetry functions.

The main and auxiliary memory requirements are based directly on the requirements indicated in 4.10.4.1.

The bulk memory units will normally be paired to operate sequentially for continuous recording of data.

Experiment Facility Configuration

Quantities of assemblies required for the baseline experiment facility are indicated in Table 4.10-22. These quantities were developed from an analysis of the experiment support computing and storage requirements indicated in Section 4.10.4.1 and using the same sizing rationale used for the subsystem facility. The baseline experiment facility has the capability of growth to four operating CPUs, three operating IOCs, nine auxiliary memory units, fifteen main memory modules and as many bulk memory units as can be accommodated on the data bus. The growth capability will accommodate significant increases in experiment support requirements up to a total of 1.5 million OPS, 240 thousand main memory words, and 9 million auxiliary memory words.

Reasons for selection of this concept are:

- The subsystem and experiment computation requirements are similar in terms of speed, main and auxiliary memory capacities.
- The same kinds of hardware can be used in each facility. No special development efforts are required to account for differences in facility configurations.

Table 4.10-22

EXPERIMENT COMPUTING ASSEMBLIES SUMMARY

| Assembly | ISS | | GSS | |
|---|---|---|---|---|
| | Operating | Spares | Operating | Spares |
| CPUs | 2 | 1 | 2-3 | 1 |
| IOCs | 1 | 1 | 1 | 1 |
| Main Memory 16 K Word Modules | 5 | 2 | 8 | 2 |
| Auxiliary Memory (1 M Word Modules) | 1 | 1 | 1 | 1 |
| Bulk | 2 | 1 | 2 | 1 |

Note: K = 1024
M = 1,048,576

- The multiprocessor concept was selected for reasons usually attributed to multiprocessors such as:
  - Ability to process larger loads than that of a single CPU
  - Ability to reconfigure to process different kinds of problems, or to bypass malfunctioning elements, or to cease processing lower priority functions if the processor is unable to perform the total processing task because of malfunctions (graceful degradation)
- The unit modular CPU, main memory, input/output controller and auxiliary memory approach was selected so that the quantities of different units could be varied to accommodate changes in processing requirements during the life of the Modular Space Station. The modular approach also provides a safety margin to accommodate additional processing loads not currently forecasted.
- The reconfigurability feature allows powered-down spare units to be brought into use when needed. These could be used either for processing of high peak loads or to substitute for a malfunctioning unit while that unit is undergoing diagnostic or maintenance

operations. The use of powered-down spares allows maintenance to be utilized when needed or to be postponed until convenient. Section 4.10.4.3 addresses the probability of manual maintenance being required between 1,000 hour intervals is spares switching is incorporated.

4.10.4.3 Auxiliary Memory Unit Selection Trade Study

Delay in the launch date of the Modular Space Station from that considered during the 33-foot diameter Space Station required reconsideration of the technology selected for the Auxiliary Memory Units. Several advanced technologies memory were considered. Of these the Magnetic Domain (Bubble) technology was selected as the best replacement for the magnetic disk units selected for the 33-foot diameter Space Station.

The purpose of the Auxiliary Memory Unit is to store data and instructions too numerous to be economically contained within the main memory unit, and requiring more frequent access than can be accommodated by a magnetic tape recorder type of bulk storage. The data processing requirements analysis study indicated the following requirements for the auxiliary memory:

| | |
|---|---|
| Total capacity (one computing facility): | $10^8$ bits |
| Average access time: | A few milliseconds |
| Word Length: | 36 bits including parity and storage protection |
| Data Rates: | Up to one million parallel words per second |

Other desirable features are:

- Low Weight, Power, Volume
- High Reliability
- Capability to buffer data transferred between data bus elements
- Non-Volatile

Candidate technologies considered as replacements for the magnetic disk are:

- Moving Magnetic Domain—The non-metallic shift register (bubble memory) was selected as the best choice because of potentially lowest weight (13.6 kilograms [30 pounds]), power (20 watts), and volume (9,834 cubic cm [600 cubic inches]) and highest reliability (30K - 100K hours MTBF). Metallic shift registers are at a more advanced development state, but require more power, weight, and volume.
- Ferrite Core and Plated Wire - The ferrite core and plated wire technologies were considered inferior to the bubble technology for weight (over 45.4 kilograms [100 pounds]), power (several hundred watts), volume (32,780 to 163,900 cubic cm [2,000 to 10,000 cubic inches]) and reliability reasons.
- Optical and Electron Beam Memories - Optical and Electron beam memories were not selected because of higher weight, power, and volume requirements, lower reliability and requirements for precise deflection devices and/or lack of a suitable erasable recording medium. Opto-electronic memories using light emitting diodes as the storage media required considerable power (500 to 5,000 watts).
- A number of other technologies including semi compactor, thin magnetic film, cryogenic, acoustic and holographic techniques were not selected because of factors such as higher weight, power, volume, speed state-of-the-art or reliability reasons.

The bubble memory technology was compared with the magnetic disk technology in terms of weight, power, volume, and reliability as indicated in Table 4.10-23. The weight, power, and volume assessments assigned for trade study purposes indicated that these quantities would cost $7.5 million more for the magnetic disk than the magnetic domain memory.

The bubble memory technology potentially has all the desirable features of an auxiliary memory, such as low weight, power, volume, and high reliability. It can be block organized to achieve the required data rates, average

Table 4.10-23

AUXILIARY MEMORY COMPARISON (PROJECTIONS TO 1976–1978)

| | Magnetic Disk | | | Magnetic Domain (Bubble) | |
|---|---|---|---|---|---|
| | Per Unit | Per 3M Words | Assessment* | Per 3M Words | *Assessment |
| Weight | 9.8 kilograms (20 pounds) | 90.8 kilograms (200 pounds) | $50K | 13.6 kilograms (30 pounds) | $ 7.5K |
| Power | 100 watts | 1,000 watts | $7.65M | 20 watts | $153K |
| Volume | 0.0057 cu m (0.2 cu ft) | 0.057 cu m (2.0 cu ft) | $3K | 0.0085 cu m (0.3 cu ft) | $0.5K |
| Access Time | 16 ms | 16 ms | | ≈2 ms | |
| No. of Bits | $10^7$ | $10^8$ | | $10^8$ | |
| MTBF | 20K hours | -- | | 30K–100K hr | |

*Assessment Values:

| | |
|---|---|
| Weight | $250/pound |
| Power | $7,650/watts/10 years |
| Volume | $1,500/cu ft |

access times, and word-size. Its development state is progressing satisfactorily, with 10,000-bit shift registers currently being made in the laboratory. The memory capacity can be made large enough to replace both the magnetic disk and auxiliary memory tape unit which were previously recommended for the 33-foot diameter Space Station. Therefore, the use of bubble memory technology for the MSS auxiliary memory is recommended for the MSS application.

4.10.4.4 Main Memory Trade Considerations

At the time of this study a number of memory technologies appropriate for use in main memory applications are making significant improvements in power and cost reduction and in faster operating speeds. The most significant advances are being made in semiconductor memories, including bipolar, static MOS and dynamic MOS and hybrid combinations of these. A number of projections regarding main memory technologies in commercial applications have appeared in the literature. The general consensus is that manufacturing costs will drop to 1 or a few cents per bit by 1976 for all technologies, and that power may be reduced to a few microwatts per bit for MOS technologies. Complementary MOS (CMOS) devices may achieve standby powers of less than $10^{-7}$ watts per bit and cycle time of 50 to 100 nano 100 nanoseconds. The MSS trade-off power assessment of $7.650 per watt over the 10 year life of the Space Station is the most significant cost factor affecting the choice of main memory technology. Figure 4.10-28 illustrates the relationship between hardware cost, typical power per bit and power assessment cost for several main memory technologies.

Semiconductor memories can be made with access and cycle times significantly less than core or plated wire memories. However, cycle times less than 300 nanoseconds will not be of advantage unless the CPU is speeded up accordingly.

The current main memory technology preference is a hybrid bipolar-MOS memory where MOS devices are the basic storage elements for low power consumption reasons, and bipolar devices are used to provide the power

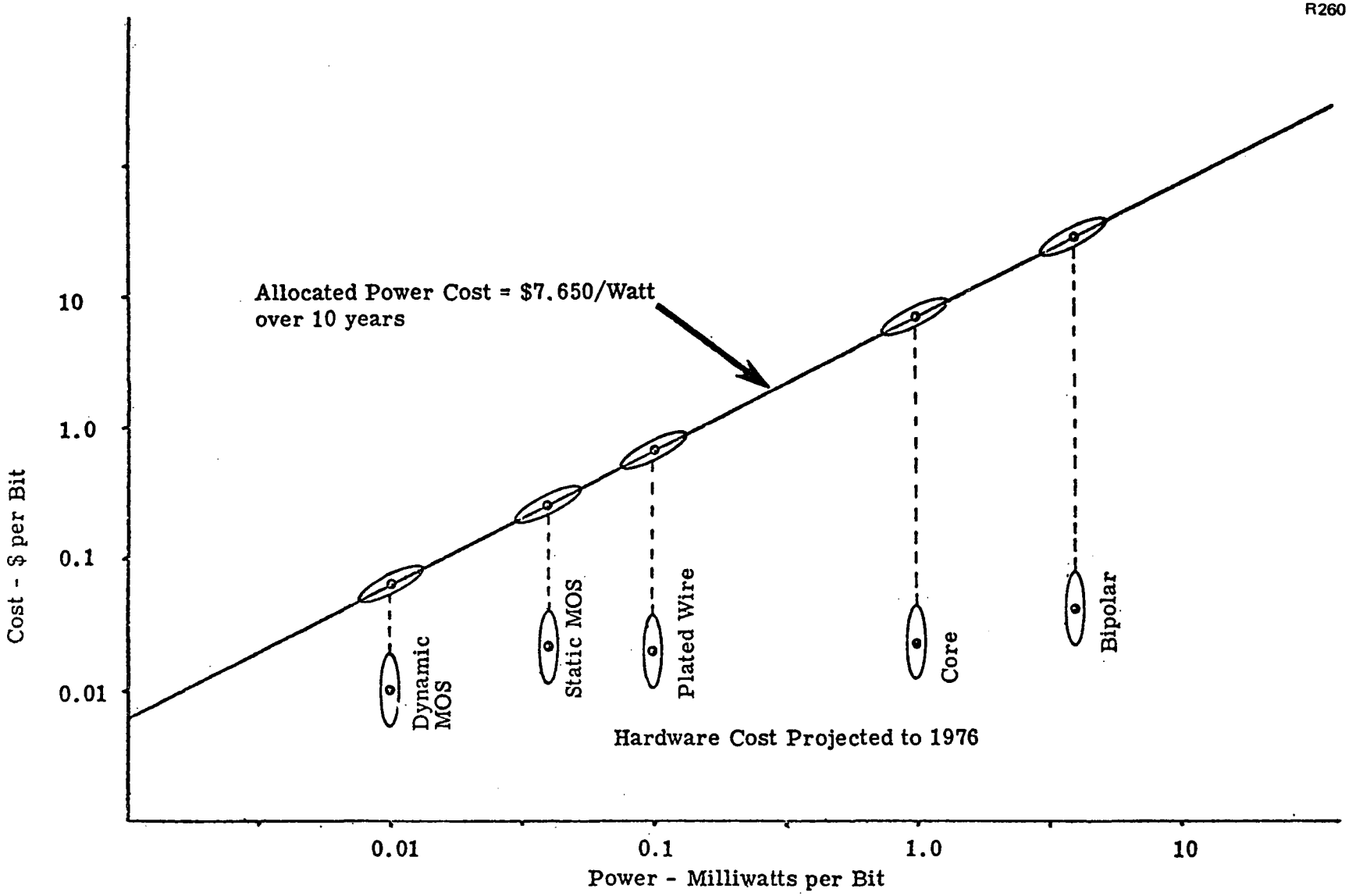


Figure 4.10-28. Main Memory Power and Hardware Cost Estimates

necessary to drive the MOS devices and to interface with the CPU and IOC assemblies. Due to rapid advances in several technologies, candidate technologies will require revaluation prior to commitment to hardware.

4.10.4.5 Onboard Image Processing Concept

The baseline onboard image processing design (hybrid analog-digital) is described in Section 4.10.3.1.7. An alternate hybrid optical-digital concept was investigated and is described in this section.

Two basic justifications for onboard image processing which have previously been addressed in the Space Station studies are:

A. Reduction of data onboard to reduce the requirements for transmission of data to earth via communications links and physical return by shuttle.

B. Aid the onboard experimenter in calibration and control of experiments.

Image processing may significantly reduce the image data storage and transmission by transmitting or recording only those images which contain new information. This is accomplished by correlating the observed image with the last recorded or transmitted image. If the correlation index drops below a specified threshold level, the observed image becomes the reference image and is stored or transmitted as required. This process should significantly reduce the amount of redundant data to be analyzed later.

Image processing is expected to be of value in supporting the calibration and control of experiments using imaging sensors. Image processing may be used to assist the experimenter to control experiments, such as when acquiring and tracking targets.

Basic techniques which may be used are:

A. Onboard image processing

B. Filtering out unwanted or enhancing desired image characteristics

C. Correlation of observed image characteristics with stored image characteristics.

Onboard image processing to reduce the amount of data recorded must be performed in real time (in the order of a fraction of a second to a few seconds). Attempts to implement image processing techniques in an all-digital fashion result in unusually large digital computer speed and storage loads. The current trend is toward hybrid analog-optical-digital implementations which result in a more practical digital data processing load. However, considerable research and development is required to define and obtain an operational system for space use. Digital computational requirements will be dependent on resulting hybrid system designs, as well as a further definition of experiment image processing requirements.

An approach to the integration of filtering and correlation types of optical image processing assemblies with other data management system elements is illustrated in Figure 4.10-29. The optical processor performs the transformations and retransformations between the real and transform image planes, while the digital computer performs the filtering operations and controls the flow of data throughout the system. The transform image is a representation of a one or two dimensional Fourier transformation of the input image. Typical operation is as follows:

- The electronic image from an experiment is converted to digital form, transmitted to the optical processor over the data bus and reconverted to an optical image in the first Image Forming Light Modulator (IFLM No. 1).
- Collimated coherent light is allowed to pass through the first IFLM to a transform lens where the image is transformed to a spatial frequency representation of the input image.
- The digital computer computes the filtering function (high, low, band pass, correlation, convolution, or other) and supplies this function to IFLM No. 2, to filter the transformed image.
- The retransformation optics converts the filtered transform image to either a filtered real image or an indication of the degree of correlation, depending upon the nature of the retransformation optics.

PRECEDING PAGE BLANK NOT FILMED

- The filtered real image is displayed, stored in bulk memory, or transmitted to earth via communications links as required. The correlation index may be used to control the recording or transmission of the image being observed.

Predicted characteristics of the optical processor shown in Figure 4.10-30 are:

- Size – 0.113 cubic meters (4 cubic feet)
- Weight – 45.4 kilograms (100 pounds)
- Power – 50 watts

The hybrid optical-digital image processing concept cannot be considered for MSS use at this time since considerable research and development is required to define an operational system for space applications.

4.10.4.6 Electronic Packaging and Installation

The ten year lifetime requirement on Modular Space Station places an extensive requirement on equipment operational longevity. In order to achieve this objective, on-board equipment checkout, fault isolation, and timely replacement of failed items are required to assure successful mission completion. In addition to on-orbit maintainability of equipment, a cost reduction of subsystem hardware can be achieved through use of a standardized electronic packaging and installation approach. This section summarizes a trade study on electronic equipment packaging and installation concepts and describes an approach which allows for fast replacement of failed items and cost reductions through use of a "family" of standardized modules. The complete study is documented in SE-02.

4.10.4.6.1 Requirements

Electronic equipments are located in all modules of the ISS and fall into two basic installation categories;

1. Equipment mounted into consoles and racks which are located next to the vehicle exterior surfaces and

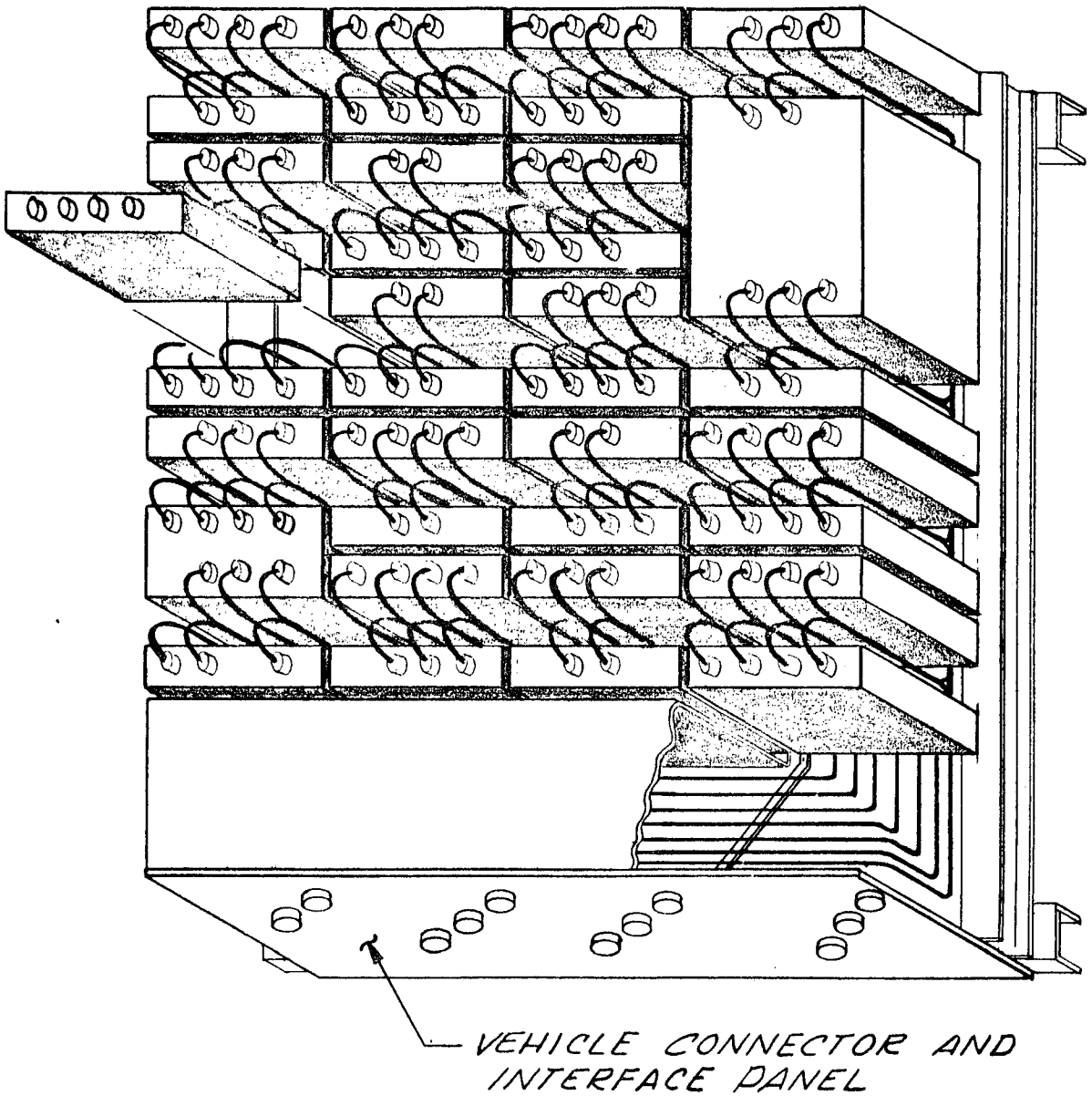


**Figure 4.10-30. Modular Installation Section**

2. Equipment mounted into consoles and racks located adjacent to walk ways or interior walls.

An example of category 1 installations is in the GPL where many of the experiment operating consoles are located against the exterior wall. An example of the second category is the electronic equipment enclosures in the center area of the GPL and the Primary Command and Control Center in the Crew/Operations module located adjacent to the interior wall of a crew quarters.

A design concept whereby access to electronic replaceable modules as well as console wiring from a single side (plane) satisfies both installation categories and also allows two single plane installation sections to be placed back-to-back. This approach was investigated in detail during the study as it can be implemented in most Modular Space Station situations except for the face of display panels at the individual work stations. Wiring to Display Panel components must be accessible from the rear of the panel and consequently cannot satisfy in all cases the single plane accessibility.

A modular installation section was selected as the basic installation unit for the study. A module installation section is defined as a structure support system capable of accommodating individual or groups of in-orbit replaceable electrical assemblies (modules), an interconnecting wiring system, and a heat transfer system consistent with minimum weight and volume usage goals. The replaceable electronic assemblies consist of modules in a standardized "family" of sizes which are inserted into the installation section.

In arriving at a standardized electronic modular packaging concept the following requirements and objectives were considered:

A. The module installation section shall have a structural, wiring and heat transfer system interface with the vehicle such that the section could be moved while in orbit to allow access for visual inspection of the interior surface of the outer vehicle wall without impairing critical systems operations.

B. The Installation Section shall be designed to permit the following:

1. Direct visual and physical access by the crew for replacement or removal of the Replaceable Electrical Assembly and for disconnecting or connecting related electrical connectors.

   Access to the wire harnesses for modifications or repair is to be provided. This access is to be from the same plane that removal of the Replaceable Assembly is achieved.
2. Keying techniques shall be provided to preclude inadvertent mislocation and improper connector mating of the Replaceable Assembly.
3. The design shall be compatible with the crew limitations relative to maximum torquing forces, connector extraction forces, adjustment access requirements, assembly form factors, guides and other constraints.
4. Refurbishable or replaceable captive fasteners shall be used for all equipment which has planned maintenance capability.
5. The order of precedence for in-orbit maintenance tasks shall be (1) shirtsleeve environment, (2) space suit (IVA), (3) space suit (EVA). EVA tasks shall be of an emergency nature only.

C. The design shall be standardized to the extent that it can accommodate various replaceable assembly groups and the modular support structure can be efficiently used in other vehicle areas. Cost effectiveness shall be a consideration in the design selection. "Commonality" is a primary consideration. As a goal, common module installation structures, standardized mounting means and the like shall be considered.

The packaging design of the Replaceable Assembly shall be capable of of accepting multi-technology techniques; i.e., printed circuit, thick film, hybrid designs, and discrete components. The equipment shall be designed for maximum flexibility that will insure ability to function with new subsystems and technologies.

D. The Section Support Structure shall be designed to accommodate the following interface requirements:

1. Provisions shall be provided for mounting electrical and coolant line connectors compatible with the vehicle interface.
2. Mounting features providing attachment to the vehicle structural interface which enable the Installation Section assembly to be moved while in orbit to allow for visual inspection of vehicle outer wall.
3. Provisions at the Replaceable Electrical Assembly interface for mounting, keying and interconnecting.
4. Installation of an electrical interconnecting wire harness.
5. Installation of a Heat Transfer System (i.e., cold plates, heat pipes, etc.) where applicable.
6. Provisions for partitioning the structural complex in order to inhibit flammability propagation.

E. The section shall have provisions for accommodating the following safety requirements:

1. Electrical Bonding (grounding) of the replaceable assembly, and support structure to vehicle ground.
2. Crew exposed surface maximum touch temperature of 105°F.
3. No exposed sharp edges, corners or protrusions.
4. Flammability propagation protection.
5. Compatibility with in-orbit maintenance tools for replaceable assembly removal and ease of handling.

   Each subsystem shall be designed such that major failures are repairable and shall be designed for maximum ease of maintenance under expected astronaut skill. Precision elements will be provided with suitable guides and locking as aids in replacement. Refurbishable or replaceable captive fasteners shall be used for all equipment which has planned maintenance capability.
6. Redundant equipment shall be physically separated, where possible, to minimize the probability of damage to one when the other is damaged.

4.10.4.6.2 Selected Design Concept

Cardboard mockups of various configurations were built to assist in trade evaluations and useability studies. The selected Integrated Packaging and Installation concept is described in this section.

Modular Installation Section

The Section (Figure 4.10-30) consists of a structure support capable of accommodating individual or groups of Replaceable Electrical Assemblies, an interconnecting wiring system, and a Heat Transfer System with access from a common plane for in-orbit maintainability of the asemblies and wiring.

The basic structural element (Figure 4.10-31) consists of a series of shaped (hat section) multi-functional structural members which can be fabricated from two types of extrusions. Varying lengths of these basic members can be fabricated for different sizes of the installation section as required. The basic structural element has provisions for mounting the following items:

A. Wire harnesses and related support brackets.
B. Coolant lines or heat pipes.
C. Replaceable Electrical Assemblies.

The integrated support structure consists of a series of the shaped elements mounted side by side and bolted to top and bottom cross members which in turn have provisions for mounting to the vehicle structural interface.

The wiring system consists of the integration of a series of wire harness runs installed in specific EMI category channels in the bottom of the basic "U" shaped structural member. The wires, grouped according to a specified EMI category, egress from these channels up to the respective connectors on top of the Replaceable Electrical Assembly (see Figure 4.10-32).

The vehicle wiring interface is established in a wire channel at one or both ends of the structural complex. The wires egress from the channels and are interconnected in the wiring cross channel in their respective EMI category.

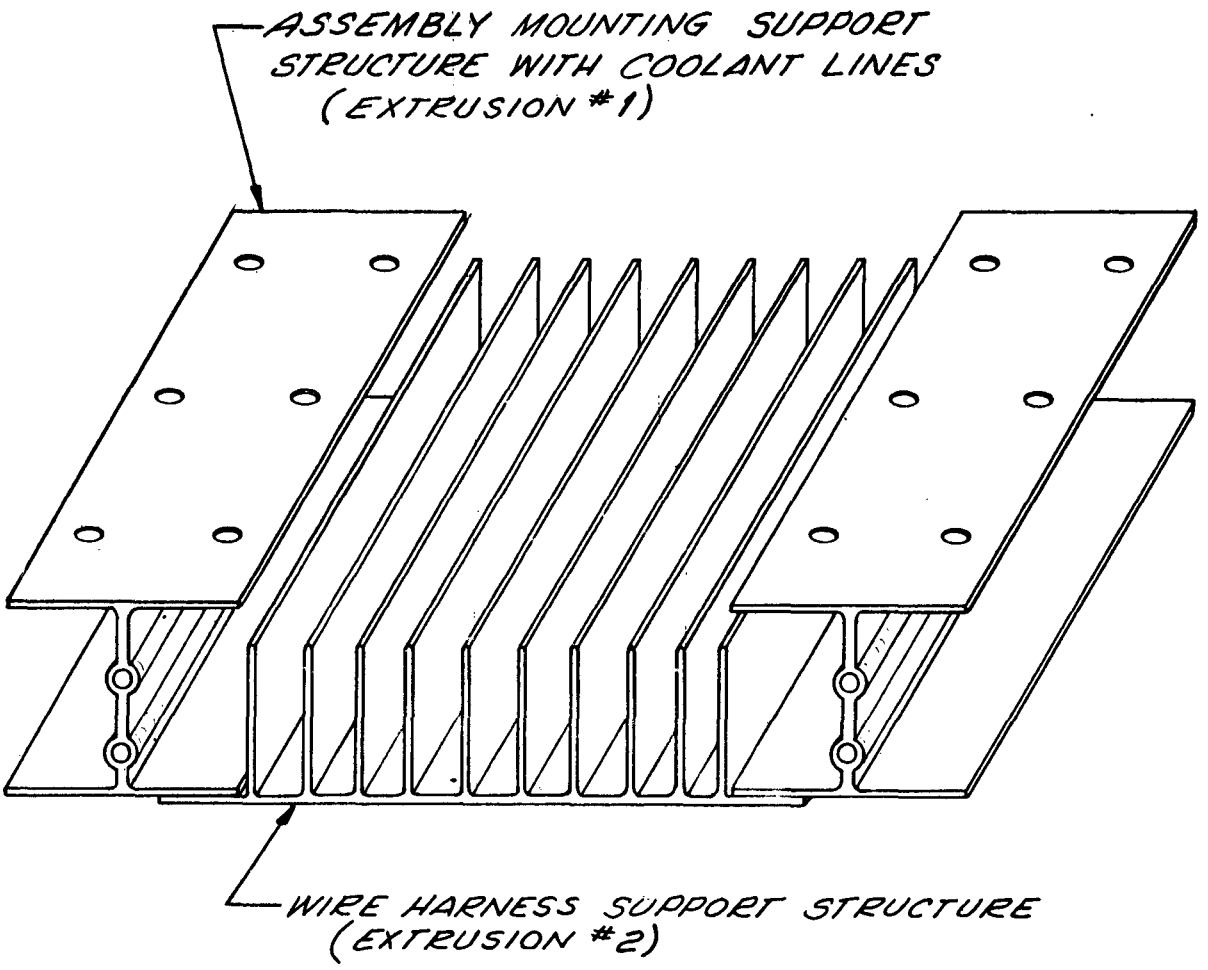


**Figure 4.10-31. Basic Structural Members**

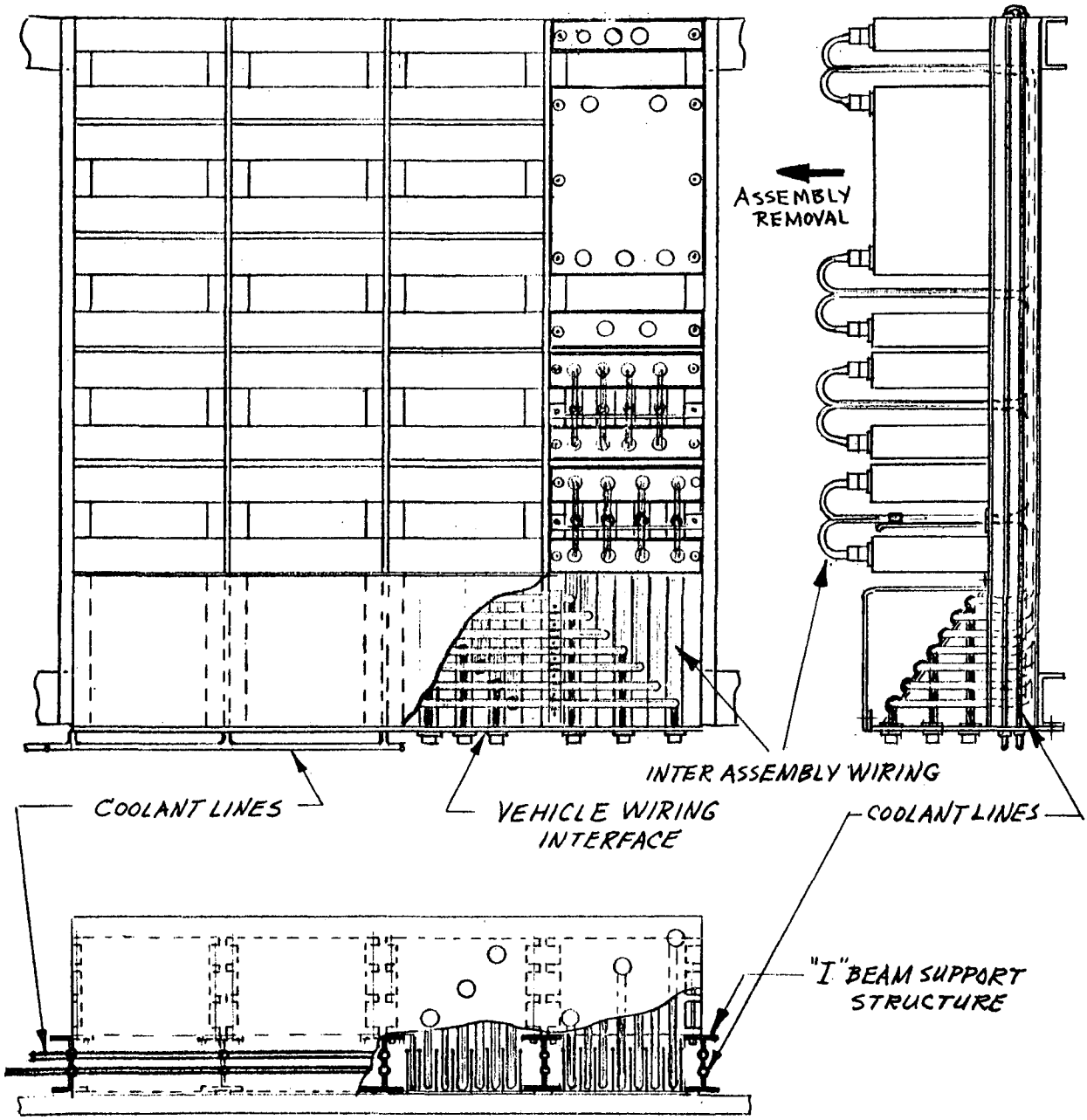


Figure 4.10-32. Installation Section—Wiring and Cooling Configuration

Vehicle interface connectors are mounted on the bottom surface of the cross channel and connected to the appropriate wire harness. Wire harnesses can be pre-fabricated with minimal jigs or fabricated in the structural complex.

Round connectors with crimp type pins and sealed rear inserts are contemplated at this time since they are well qualified. Rectangular connectors with some development would offer certain advantages.

The Heat Transfer System consists of coolant lines either attached to or integral to each side of the basic structural member (see Figure 4.10-32). This provides redundant coolant lines which are interconnected independently in the cross channels at either end of the structural complex. The vehicle interface connections are also located at convenient places in these channels. This arrangement creates a very short heat path between the coolant line and the mounting bolts of the Replaceable Electrical Assembly thereby minimizing the thermal gradient across the interface.

Heat pipes could be mounted to the sides of the "U" shaped structural member of this cooling technique proved to be more desirable.

A heat transfer capability of 10 watts per Replaceable Assembly mounting bolt is achieved with a coolant fluid temperature of 41 °C (105 °F) maximum.

In the event of damaged or leaky coolant lines, the respective side of the "I" shaped structural member can be easily removed and replaced without disrupting the entire installation complex.

4.10.4.6.2.2 Replaceable Electrical Assembly

The basic Replaceable Electrical Assembly has a form factor of 22.8 cm (9 in.) long by 17.8 cm (7 in.) high by 5.1 cm (2 in.) wide as shown in Figure 4.10-33. The Electrical Assembly "family" will consist of increments of the 5.1 cm (2 in.) width.

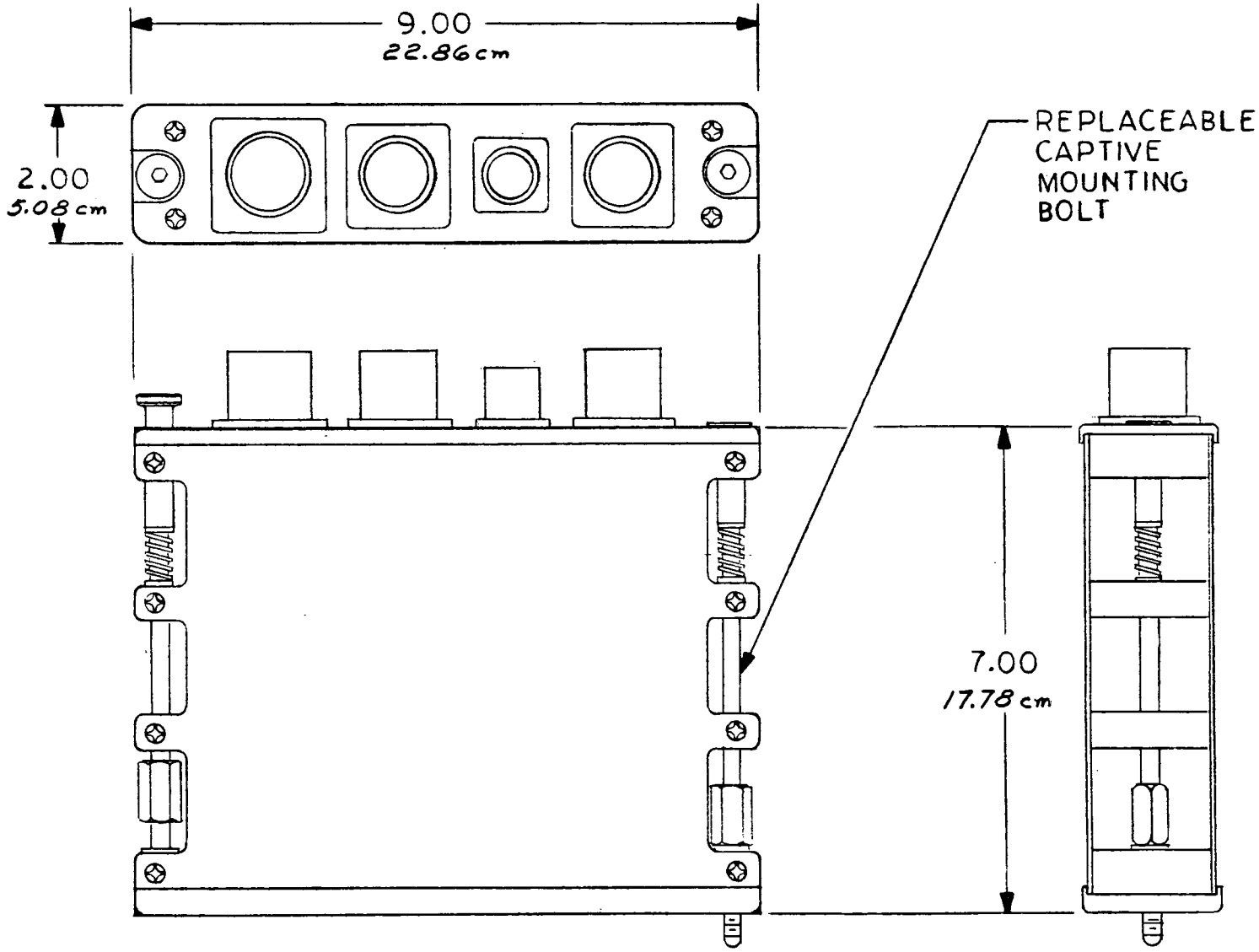


Figure 4.10-33. Basic Replaceable Electrical Assembly

The assembly has the following basic features:

A. The assembly consists of a top and bottom plate bolted to two extruded side plates. The top plate contains the wiring interface connectors and provisions for mounting two 12.7 cm (5 in.) by 17.8 cm (7 in.) printed circuit boards containing about 100 discrete components per board. These boards could also be used for mounting thick film substrates resulting in greater packaging densities. The bottom plate would be used for mounting any high heat dissipating devices as required. The open sides of the assembled Electrical Assembly have side covers to inhibit potential EMI or flammability problems.

B. The heat transfer interface area around each bolt is about 15.63 sq square cm (2.50 square in.) or about 3.13 square cm (5 square in.) for each basic Electrical Assembly. Each assembly, therefore, has the capability of dissipating 20 watts.

C. The assembly has two captivated 0.635 cm (0.25 inch) diameter mounting bolts which are visually and physically accessible and replaceable if damaged.

D. Keying of the Electrical Assembly is accomplished by providing a family of pins with different locations in the "U" shaped structural channel and mating holes in the Electrical Assembly.

E. Multiple sizes of the basic Electrical Assembly is easily achieved since the side supports of the assembly are made from an extrusion which can be readily cut to any length.

F. The estimated weight for the Electrical Assembly is 2.27 Kg (5 pounds).

## 4.11 ONBOARD CHECKOUT SYSTEM

### 4.11.1 Summary

The Onboard Checkout System (OCS) provides checkout and fault isolation support of ISS integral subsystems and experiments, as well as limited support of subsystems and experiments within docked modules. Included are capabilities for determining whether or not ISS subsystems and experiments are operating in an acceptable manner, supplying information for ISS repair and reconfiguration actions, and verifying subsystem and experiment operation following failure correction. The OCS is utilized as the primary checkout and fault isolation tool during post-manufacturing, prelaunch, on-orbit buildup, and on-orbit operational phases of the ISS program.

Key trade studies and issues addressed in the selection of the OCS design are summarized in Table 4.11-1 and discussed in Section 4.11.4. The conclusions reached in reviewing fundamental OCS trade areas are essentially identical to those previously drawn for the 33-ft Space Station.

The size of the ISS checkout support task, in terms of the quantity of checkout parameters involved, is approximately equivalent to that identified for the 33-ft diameter Space Station (MSFC-DRL-160, Line Item 8, Volume V, Book 4). Characteristics of ISS subsystems that result in changes to the checkout support requirements identified for the 33-ft diameter Space Station are indicated in Table 4.11-2. Also shown is a comparison of the estimated quantity of checkout data parameters required for the ISS, GSS, and 33-ft diameter Space Station. These parameters reflect those measurements and stimuli necessary to support onboard status monitoring, periodic testing, and fault isolation. Approximately 40 percent of the parameters are also required for normal ISS operations. Subsystem support requirements are discussed in Section 4.11.2.

The OCS design preferred for the ISS is an automatic, highly user-oriented system whose elements are largely integrated with, or have design commonality with, other onboard hardware and software. The system takes advantage of ISS data management capabilities in the areas of data acquisition and distribution, computation, data storage,

Table 4.11-1

SUMMARY OF KEY OCS DESIGN APPROACH TRADE STUDIES AND ISSUES

| Trade Studies/Issues | Options | Rationale |
|---|---|---|
| • Level of onboard fault isolation | • Module<br>• In-place LRU<br>• Bench | • Hardware/software complexity level<br>• Cost effectiveness<br>• Station availability |
| • Automation versus crew participation | • Automatic<br>• Manual<br>• Primarily automatic | • Crewtime<br>• One-third of data monitored nearly continuously<br>• Flexibility |
| • Onboard versus ground checkout | • Onboard<br>• Ground<br>• Primarily onboard | • All hardware and over half of check-out software required onboard for any option<br>• 85-90 percent average RF communications coverage<br>• Crew decision making |
| • Integration of OCS with other subsystems | • Independent<br>• Integrated<br>• Primarily integrated | • Commonality of OCS/DMS requirements<br>• Standardized interfaces<br>• Independent warning system |
| • Distribution of OCS elements | • Centralized<br>• Decentralized<br>• Combination | • OCS/DMS integration<br>• Subsystem interface requirements and location station buildup<br>• Station buildup |

Selected

Table 4.11-2

SUBSYSTEM ONBOARD CHECKOUT DATA POINTS

| Subsystem | ISS | GSS | 33 ft | Significant Modular Differences |
|---|---|---|---|---|
| Guidance, Navigation and Control | 440 | 556 | 589 | DMS integration |
| Propulsion | 686 | 1132 | 620 | Increased quantity of thrustors |
| Environmental Control/Life Support | 914 | 1790 | 1104 | Thermal control and other segmentation |
| Electrical Power | 2345 | 4061 | 1607 | Solar array/battery power source |
| Communications | 443 | 474 | 871 | Reduced number of replaceable units |
| Structures | 104 | 200 | 126 | Increased GSS docking capability |
| Data Management | 975 | 1580 | 750 | More distributed |
| Total | 5903 | 9793 | 5667 | |

displays and controls, command generation, and operating system software. Special processing and stimuli-generation capabilities that are integral to other subsystem and experiment equipment are also utilized. Capabilities unique to the OCS, however, are provided for stimuli generation, critical measurements, and checkout software. An OCS assembly group breakdown is shown in Figure 4.11-1. Table 4.11-3 provides a summary of weight, power, volume, and quantity requirements for unique OCS equipment.

The OCS design minimizes the need for crew participation in routine checkout functions, but does allow for crew intervention when special capabilities of the crew are needed or requested. It also operates largely autonomous of ground control, although a high degree of ground system interface is possible. This is because of the system's capability for random access, rapid distribution, and complete control of checkout data. Any or all checkout data points can be selected for transmission to the ground. It is anticipated, however, that ground checkout support will be limited to that required for consulting with the crew on checkout and fault isolation problems; supporting ISS quiescent (standby unmanned) modes of operation; performing large data processing tasks such as long-term trend analysis; and conducting detailed failure analyses through examination of engineering data and failed parts which have been returned from orbit.

Another important aspect of the selected design is that of minimizing the types of OCS interfaces. This is particularly important since the OCS must interface with all other subsystems, diversified integral experiments, and docked modules. The minimization of interface types, as well as a high degree of standardized modularity in design, assures responsiveness to Station reconfiguration and growth. Key OCS features are delineated in Table 4.11-4 and further described in Section 4.11.3.

### 4.11.2 Requirements

Key requirements influencing the selected OCS design are shown in Table 4.11-5. All system-level OCS requirements are specified in Section 3.2.1.11 of ISS CEI Specification CM-03. Detailed OCS functional and performance requirements are based on an identification and analysis of

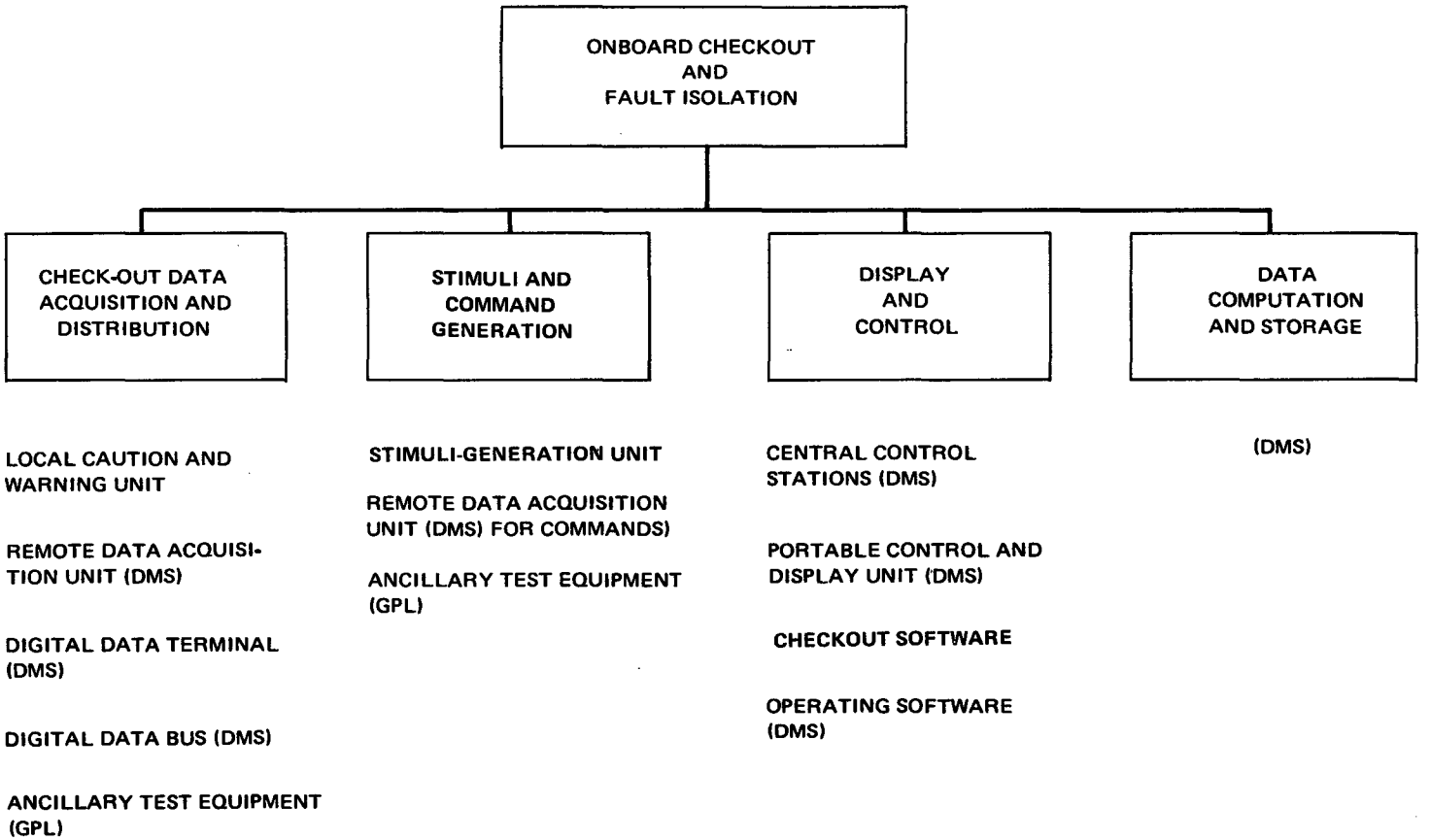


**Figure 4.11-1. OCS Assembly Group Breakdown**

Table 4.11-1

UNIQUE OCS EQUIPMENT COMPLEMENT

PROGRAM P1268

MODULAR SPACE STATION

ISS CONFIGURATION

| ITEM CODE | ITEM NAME | UNIT WT | AVG PWR | UNIT VOL | ***** UNIT QUANTITIES **** MOD 1 | MOD 2 | MOD 3 | TOTAL |
|---|---|---|---|---|---|---|---|---|
| J 0 0 | UNIQUE CHECKOUT EQPT | | | | | | | |
| 1 0 | STIMULI GEN UNIT | 12 | 2 | .5 | 7 | 3 | 2 | 12 |
| 2 0 | LOCAL C/W UNIT | 4 | 7 | .1 | 3 | 9 | 6 | 18 |

Table 4.11-4

OCS FEATURES

| Function | Characteristics |
|---|---|
| • Remote data acquisition | • Computer-controlled<br>• Random or sequential sampling<br>• Remotely programmable limits<br>• Digital inputs: 8 parallel bits or serial data $\leq 1 \times 10^6$ bps per channel<br>• Bilevel inputs: momentary or continuous 5 vdc signals<br>• Analog inputs: 0-40 mv , 0-5 vdc |
| • Stimuli generation | • Computer-controlled<br>• Analog outputs: 0-115 vdc<br>• Bilevel outputs: momentary or continuous 5 vdc signals<br>• Serial digital data |
| • Checkout and fault isolation control | • General-purpose displays and controls (portable and fixed)<br>• Automatic operation<br>• Restructurable application programs |
| • Critical measurements | • Independent warning system<br>• Local caution/warning units<br>• Centralized displays<br>• Audio and visual alarms |

Table 4.11-5

KEY OCS PROGRAM AND PROJECT REQUIREMENTS

| Program Specification PS02925 Paragraph No. | Project Specification RS02927 Paragraph No. | Requirements | OCS Design Features |
|---|---|---|---|
| 3.1.3.10 | 3.2.1.3.1 | The capability shall be provided for monitoring the Space Station in an unmanned condition to confirm the existence of a habitable environment and the functional capabilities of critical life sustaining subsystems. | • Capability for transmitting selected or complete checkout data to the ground.<br>• All OCS elements controllable from ground during unmanned operations. |
| --- | 3.1.3.3.10 | During buildup and sustaining operations, all unmanned orbital configurations shall provide those subsystem operations (including data, command, and control) necessary to provide successful manning and activation. | |
| 3.2.6.2.2 | --- | The Space Station shall be divided into at least two pressurized habitable volumes so that any damaged module can be isolated as required. Accessible modules will be equipped and provisioned so that the crew can safely continue a degraded mission and take corrective action to either repair or replace the damaged module. | • Capability for conducting OCS operations from fixed consoles in both Crew/Operations and GPL Modules or from portable display and control units. |

Table 4.11-5

KEY OCS PROGRAM AND PROJECT REQUIREMENTS (Continued)

| Program Specification PS02925 Paragraph No. | Project Specification RS02927 Paragraph No. | Requirements | OCS Design Features |
|---|---|---|---|
| 3.7.1.4.7 | 3.2.1.1.14 | Onboard systems will be provided for checkout, monitoring, warning, and fault isolation to a level consistent with safety and with the in-orbit maintenance and repair approach selected. | • Continuous monitoring of critical and non-critical functions.<br>• Periodic assessment of system performance.<br>• Trend analysis for specific performance parameters.<br>• In-place fault isolation to replaceable unit level. |
| 3.2.6.2.5 | --- | For those hazards that may result in time critical emergencies, provisions shall be made for automatic switching to a safe mode and to display caution and warning to personnel. | • Local caution and warning units in each habitable compartment.<br>• Independent warning system. |
| --- | 3.2.1.1.23 | Space Station systems which incorporate failure related automatic switch-over controls shall be designed to provide crew notification of the switch-over and confirm proper operation of the system on-line. For critical failures the crew shall be automatically notified of conditions requiring crew attention. | • Centralized and localized displays.<br>• Capability for automatic safing.<br>• Visual and audible alarms for conditions requiring crew attention. |

Table 4.11-5

KEY OCS PROGRAM AND PROJECT REQUIREMENTS (Continued)

| Program Specification PS02925 Paragraph No. | Program Specification RS02927 Paragraph No. | Requirements | OCS Design Features |
|---|---|---|---|
| --- | 3.2.6.2.3 | Visual and audible warning indications for functions presenting an immediate threat to life shall be provided in all manned compartments. | |
| --- | 3.2.1.1.4 | The crew shall be freed of routine operations to the greatest practical extent by use of automated systems. | • Automation techniques to the greatest practical extent. |
| --- | 3.2.1.1.15 | Automated critical IMS control functions shall have a manned or self-check override and interrupt capability. | • Capability for crew cognizance and control of all checkout operations. |
| --- | 3.7.1.3.5.1 | The Information Management System (IMS) shall provide automatic onboard fault isolation to the replaceable element and automatic onboard malfunction notification of the switchable or controllable element. | |
| --- | 3.1.3.3.12 | The Space Station shall not require extensive ground-based monitoring. | • Capability for conducting all normal checkout and fault isolation functions onboard. |
| --- | 3.2.1.1.10 | System, experiment, and mission status information shall be available onboard, on the ground, or both onboard and on the ground, as | • Capability of selecting and transmitting any or |

Table 4.11-5

KEY OCS PROGRAM AND PROJECT REQUIREMENTS (Continued)

| Program Specification PS02925 Paragraph No. | Project Specification RS02927 Paragraph No. | Requirements | OCS Design Features |
|---|---|---|---|
| | | required. This information may be processed or raw, and real-time or delayed. | all checkout data to the ground. |
| --- | 3.2.6.2.8 | All components associated with enabling the crew to recognize, isolate, and correct critical system malfunctions must be located onboard and be functionally independent of ground support and external interfaces. | |
| --- | 3.2.1.1.9 | Space Station information management shall be compatible with all station module derivatives, experiments, experiment modules, logistic vehicles, tugs, relay satellite, and ground communication systems. | • Modularity of hardware and software.<br>• Types of interfaces minimized.<br>• Capability for in-flight generation and restructuring of checkout procedures. |

ISS subsystem checkout support requirements. Major OCS functional, performance, and operational requirements are discussed in the following subparagraphs.

4.11.2.1 Functional Requirements

The most important function of the OCS is to monitor life- and mission-critical equipment and to provide warning indications for conditions requiring crew attention. Other OCS functions include non-critical status monitoring, periodic testing, trend analysis, and fault isolation. These functions are those necessary to determine whether or not onboard systems are operating in an acceptable manner, to provide a basis for repair and reconfiguration actions, and to verify proper operation following failure correction. Table 4.11-6 delineates the general requirements most influential in determining the degree of checkout support to be provided on the ISS and in selecting the OCS design itself.

4.11.2.2 Performance Requirements

Performance requirements for the OCS are based primarily upon a detailed analysis of ISS subsystems to determine the type and number of measurement and stimulus parameters required to implement onboard checkout and fault isolation functions. The results of this analysis are summarized in Table 4.11-7 and allocated by subsystem within each module in Tables 4.11-8, 4.11-9, and 4.11-10. The quantities of parameters required to perform each OCS function, as well as those required to conduct normal ISS operations, are indicated. These requirements reflect data at the source or at the point of application without any consideration of individual subsystem capabilities for preprocessing or stimuli generation. The data also include measurements and stimuli required within the data management subsystem for purposes of self-testing.

In general, OCS performance requirements are intended to assure crew safety and comfort, and to improve system availability and long-life assurance, thereby maximizing the return of useful scientific and engineering information. These requirements are further presented and discussed below.

Table 4.11-6

GENERAL MODULAR SPACE STATION OCS REQUIREMENTS

- Crew and Equipment Safety
  - Continuous monitoring of critical and non-critical functions
  - Notification of conditions requiring crew attention
  - Independent warning system
  - Automatic safing where required
- System Availability and Long-Life Assurance
  - Periodic assessment of system performance
  - In-place fault isolation to replaceable unit level
  - Automation techniques to the greatest practical extent
  - Trend analysis for specific performance parameters
  - OCS self-check capability
- Flexibility to Accommodate Changes and Growth in Hardware/Software
  - Standardized modularity
  - Standard OCS interfaces
  - Capability for in-flight generation and restructuring of checkout procedures
  - Capability for crew cognizance and control of all checkout operations
- Largely autonomous of ground control, but with capability for selecting and transmitting checkout data to the ground

| Onboard Functions | Ground Functions |
|---|---|
| • Checkout Data Acquisition | • Consulting |
| • Status monitoring | • Long-term trend analysis |
| • Periodic testing | • Failure analysis |
| • Fault isolation | • Quiescent mode support |
| • Checkout control | |

- Utilization of Other ISS Capabilities to Minimize Costs
- Comprehensive Ground Test Program to Minimize Development and Operational Risks

Table 4.11-7
CHECKOUT PARAMETER TYPE AND USAGE SUMMARY

| Data Parameter Type/Usage | Power 1 | Crew/OPS 2 | GPL 3 | Total | Percent of Total |
|---|---|---|---|---|---|
| **Stimuli** | | | | | |
| • Analog | 147 | 75 | 39 | 261 | 4.4% |
| • Bilevel (commands) | 622 | 484 | 259 | 1365 | 23.2 |
| • Digital | 132 | 96 | 65 | 293 | 4.9 |
| • RF | 18 | 40 | 0 | 58 | 1.0 |
| Total Stimuli | 919 | 695 | 363 | 1977 | 33.5% |
| **Measurements** | | | | | |
| • Analog | 1070 | 732 | 467 | 2269 | 38.5% |
| • Bilevel | 597 | 499 | 251 | 1347 | 22.8 |
| • Digital | 169 | 85 | 56 | 310 | 5.2 |
| • RF | 0 | 0 | 0 | 0 | --- |
| Total Measurements | 1836 | 1316 | 774 | 3926 | 66.5% |
| Total Parameters | 2755 | 2011 | 1137 | 5903 | 100.0% |
| **Status Monitoring** | | | | | |
| • Caution | 111 | 97 | 31 | 239 | 4.1% |
| • Warning | 21 | 8 | 8 | 37 | 0.6 |
| • Non-Critical | 746 | 542 | 308 | 1596 | 27.1 |
| Total | 878 | 647 | 347 | 1872 | 31.8% |
| **Other** | | | | | |
| • Operations | 1173 | 808 | 428 | 2409 | 40.8% |
| • Testing | 769 | 451 | 202 | 1422 | 24.1 |
| • Trend Analysis | 246 | 161 | 82 | 489 | 8.3 |
| • Fault Isolation | 2737 | 2003 | 1109 | 5849 | 99.0 |
| • Isolation Only | 398 | 356 | 188 | 942 | 16.0 |

Table 4.11-8

POWER/SUBSYSTEM MODULE CHECKOUT PARAMETER PROFILE

PROGRAM P1268

SPACE STATION CONFIGURATION

CHECKOUT PARAMETER PROFILE REPORT

CONFIGURATION ISS MODULE 1 3 MODULE STATION

| ITEM CODE | ITEM NAME | TOT PARAM | STIMULI AN | STIMULI BI | STIMULI DG | STIMULI RF | RESPONSE AN | RESPONSE BI | RESPONSE DG | RESPONSE RF | **STATUS MONITORING** CAUTION AN | CAUTION BI | CAUTION DG | WARNING AN | WARNING BI | WARNING DG | NON-CRIT AN | NON-CRIT BI | NON-CRIT DG | OTHER TST | OTHER TRN | OTHER ISOL | OTHER ISOL ONLY | OPS |
|---|---|---|---|---|---|---|---|---|---|---|---|---|---|---|---|---|---|---|---|---|---|---|---|---|
| AA 0 0 0 | GUID-NAV-CONTROL | 324 | 8 | 73 | 12 | 0 | 80 | 71 | 80 | 0 | 20 | 0 | 0 | 0 | 0 | 0 | 33 | 36 | 16 | 60 | 69 | 324 | 83 | 164 |
| BA 0 0 0 | ENV CONT LIFE SUP | 314 | 1 | 62 | 0 | 0 | 175 | 76 | 0 | 0 | 41 | 1 | 0 | 13 | 2 | 0 | 67 | 8 | 0 | 2 | 34 | 314 | 122 | 128 |
| CA 0 0 0 | COMMUNICATIONS | 190 | 5 | 42 | 9 | 18 | 44 | 69 | 3 | 0 | 0 | 0 | 0 | 0 | 0 | 0 | 0 | 0 | 0 | 51 | 17 | 183 | 27 | 95 |
| DA 0 0 0 | HIGH THRUST PROP | 230 | 0 | 83 | 0 | 0 | 70 | 77 | 0 | 0 | 2 | 8 | 0 | 6 | 0 | 0 | 54 | 26 | 0 | 148 | 18 | 224 | 0 | 134 |
| EA 0 0 0 | LO THRUS PROPULSION | 192 | 16 | 61 | 0 | 0 | 65 | 50 | 0 | 0 | 20 | 0 | 0 | 0 | 0 | 0 | 44 | 34 | 0 | 106 | 12 | 192 | 0 | 50 |
| FA 0 0 0 | DATA MANAGEMENT SYS | 334 | 0 | 107 | 111 | 0 | 0 | 38 | 78 | 0 | 0 | 0 | 0 | 0 | 0 | 0 | 0 | 0 | 27 | 102 | 0 | 329 | 13 | 196 |
| GA 0 0 0 | ELECTRICAL POWER | 1126 | 112 | 194 | 0 | 0 | 616 | 196 | 8 | 0 | 19 | 0 | 0 | 0 | 0 | 0 | 356 | 45 | 0 | 275 | 96 | 1126 | 153 | 376 |
| SA 0 0 0 | STRUCTURE | 10 | 0 | 0 | 0 | 0 | 0 | 10 | 0 | 0 | 0 | 0 | 0 | 0 | 0 | 0 | 0 | 0 | 0 | 10 | 0 | 10 | 0 | 10 |
| UA 0 0 0 | DOCKING PROVISIONS | 35 | 5 | 0 | 0 | 0 | 20 | 10 | 0 | 0 | 0 | 0 | 0 | 0 | 0 | 0 | 0 | 0 | 0 | 15 | 0 | 35 | 0 | 20 |
| | BASIC SUBSYSTEM TOT | 2755 | 147 | 622 | 132 | 18 | 1070 | 597 | 169 | 0 | 102 | 9 | 0 | 19 | 2 | 0 | 554 | 149 | 43 | 769 | 246 | 2737 | 398 | 1173 |
| | TOTALS | 2755 | 147 | 622 | 132 | 18 | 1070 | 597 | 169 | 0 | 102 | 9 | 0 | 19 | 2 | 0 | 554 | 149 | 43 | 769 | 246 | 2737 | 398 | |
| | STATION TOTALS | 2755 | 147 | 622 | 132 | 18 | 1070 | 597 | 169 | 0 | 102 | 9 | 0 | 19 | 2 | 0 | 554 | 149 | 43 | 769 | 246 | 2737 | 398 | 1173 |

Table 4.11.9

POWER/SUBSYSTEM MODULE CHECKOUT PARAMETER PROFILE

PROGRAM P1268

SPACE STATION CONFIGURATION

CHECKOUT PARAMETER PROFILE REPORT

CONFIGURATION ISS MODULE 2 3 MODULE STATION

| ITEM CODE | ITEM NAME | TOT PARAM | STIMULI AN | STIMULI BI | STIMULI DG | STIMULI RF | RESPONSE AN | RESPONSE BI | RESPONSE DG | RESPONSE RF | CAUTION AN | CAUTION BI | CAUTION DG | WARNING AN | WARNING BI | WARNING DG | CRIT AN | CRIT BI | CRIT DG | OTHER TST | OTHER TRN | OTHER ISOL | OTHER ISOL ONLY | OPS |
|---|---|---|---|---|---|---|---|---|---|---|---|---|---|---|---|---|---|---|---|---|---|---|---|---|
| | | | | | | | | | | | **STATUS MONITORING** | | | | | | | | | | | | | |
| AA 0 0 0 | GUID-NAV-CONTROL | 116 | 0 | 57 | 0 | 0 | 0 | 56 | 3 | 0 | 0 | 0 | 0 | 0 | 0 | 0 | 0 | 36 | 0 | 0 | 20 | 116 | 23 | 93 |
| BA 0 0 0 | ENV CONT LIFE SUP | 395 | 4 | 33 | 0 | 0 | 239 | 119 | 0 | 0 | 47 | 15 | 0 | 6 | 2 | 0 | 62 | 11 | 0 | 2 | 56 | 395 | 206 | 76 |
| CA 0 0 0 | COMMUNICATIONS | 253 | 10 | 47 | 7 | 40 | 56 | 80 | 13 | 0 | 0 | 0 | 0 | 0 | 0 | 0 | 32 | 0 | 0 | 80 | 40 | 253 | 97 | 116 |
| DA 0 0 0 | HIGH THRUST PROP | 120 | 0 | 46 | 0 | 0 | 48 | 26 | 0 | 0 | 0 | 0 | 0 | 0 | 0 | 0 | 48 | 20 | 0 | 92 | 0 | 120 | 0 | 52 |
| EA 0 0 0 | LO THRUS PROPULSION | 140 | 16 | 43 | 0 | 0 | 49 | 32 | 0 | 0 | 16 | 0 | 0 | 0 | 0 | 0 | 32 | 32 | 0 | 76 | 0 | 140 | 0 | 32 |
| FA 0 0 0 | DATA MANAGEMENT SYS | 330 | 1 | 138 | 89 | 0 | 1 | 39 | 62 | 0 | 0 | 0 | 0 | 0 | 0 | 0 | 0 | 0 | 34 | 74 | 0 | 322 | 30 | 198 |
| GA 0 0 0 | ELECTRICAL POWER | 614 | 40 | 120 | 0 | 0 | 320 | 127 | 7 | 0 | 19 | 0 | 0 | 0 | 0 | 0 | 193 | 42 | 0 | 142 | 45 | 614 | 40 | 213 |
| SA 0 0 0 | STRUCTURE | 10 | 0 | 0 | 0 | 0 | 0 | 10 | 0 | 0 | 0 | 0 | 0 | 0 | 0 | 0 | 0 | 0 | 0 | 10 | 0 | 10 | 0 | 10 |
| UA 0 0 0 | DOCKING PROVISIONS | 33 | 4 | 0 | 0 | 0 | 19 | 10 | 0 | 0 | 0 | 0 | 0 | 0 | 0 | 0 | 0 | 0 | 0 | 15 | 0 | 33 | 0 | 18 |
| | BASIC SUBSYSTEM TOT | 2011 | 75 | 484 | 96 | 40 | 732 | 499 | 85 | 0 | 82 | 15 | 0 | 6 | 2 | 0 | 367 | 141 | 34 | 451 | 161 | 2003 | 356 | 808 |
| | TOTALS | 2011 | 75 | 484 | 96 | 40 | 732 | 499 | 85 | 0 | 82 | 15 | 0 | 6 | 2 | 0 | 367 | 141 | 34 | 451 | 161 | 2003 | 356 | |
| | STATION TOTALS | 4766 | 222 | 1106 | 228 | 58 | 1802 | 1096 | 254 | 0 | 184 | 24 | 0 | 25 | 4 | 0 | 921 | 290 | 77 | 1220 | 407 | 4740 | 754 | 1981 |

Table 4.11-10

GPL SUBSYSTEM MODULE CHECKOUT PARAMETER PROFILE

PROGRAM P1268

SPACE STATION CONFIGURATION

CHECKOUT PARAMETER PROFILE REPORT

CONFIGURATION ISS MODULE 3 3 MODULE STATION

| ITEM CODE | ITEM NAME | TOT PARAM | *****STIMULI***** AN | BI | DG | RF | *****RESPONSE**** AN | BI | DG | RF | **STATUS MONITORING** **CAUTION** AN | BI | DG | **WARNING** AN | BI | DG | **NON-CRIT*** AN | BI | DG | *****OTHER******* TST | TRN | ISOL | ISOL ONLY | OPS |
|---|---|---|---|---|---|---|---|---|---|---|---|---|---|---|---|---|---|---|---|---|---|---|---|---|
| AA 0 0 0 | GUID-NAV-CONTROL | 0 | 0 | 0 | 0 | 0 | 0 | 0 | 0 | 0 | 0 | 0 | 0 | 0 | 0 | 0 | 0 | 0 | 0 | 0 | 0 | 0 | 0 | 0 |
| BA 0 0 0 | ENV CONT LIFE SUP | 205 | 1 | 25 | 0 | 0 | 129 | 50 | 0 | 0 | 11 | 1 | 0 | 6 | 2 | 0 | 41 | 6 | 0 | 2 | 35 | 205 | 114 | 17 |
| CA 0 0 0 | COMMUNICATIONS | 0 | 0 | 0 | 0 | 0 | 0 | 0 | 0 | 0 | 0 | 0 | 0 | 0 | 0 | 0 | 0 | 0 | 0 | 0 | 0 | 0 | 0 | 0 |
| DA 0 0 0 | HIGH THRUST PROP | 0 | 0 | 0 | 0 | 0 | 0 | 0 | 0 | 0 | 0 | 0 | 0 | 0 | 0 | 0 | 0 | 0 | 0 | 0 | 0 | 0 | 0 | 0 |
| EA 0 0 0 | LO THRUS PROPULSION | 0 | 0 | 0 | 0 | 0 | 0 | 0 | 0 | 0 | 0 | 0 | 0 | 0 | 0 | 0 | 0 | 0 | 0 | 0 | 0 | 0 | 0 | 0 |
| FA 0 0 0 | DATA MANAGEMENT SYS | 311 | 2 | 123 | 65 | 0 | 2 | 72 | 47 | 0 | 0 | 0 | 0 | 0 | 0 | 0 | 0 | 0 | 25 | 44 | 0 | 283 | 36 | 206 |
| GA 0 0 0 | ELECTRICAL POWER | 605 | 35 | 111 | 0 | 0 | 329 | 121 | 9 | 0 | 19 | 0 | 0 | 0 | 0 | 0 | 192 | 44 | 0 | 146 | 47 | 605 | 38 | 195 |
| SA 0 0 0 | STRUCTURE | 4 | 0 | 0 | 0 | 0 | 0 | 4 | 0 | 0 | 0 | 0 | 0 | 0 | 0 | 0 | 0 | 0 | 0 | 4 | 0 | 4 | 0 | 4 |
| UA 0 0 0 | DOCKING PROVISIONS | 12 | 1 | 0 | 0 | 0 | 7 | 4 | 0 | 0 | 0 | 0 | 0 | 0 | 0 | 0 | 0 | 0 | 0 | 6 | 0 | 12 | 0 | 6 |
| | BASIC SUBSYSTEM TOT | 1137 | 39 | 259 | 65 | 0 | 467 | 251 | 56 | 0 | 30 | 1 | 0 | 6 | 2 | 0 | 233 | 50 | 25 | 202 | 82 | 1109 | 188 | 428 |
| | TOTALS | 1137 | 39 | 259 | 65 | 0 | 467 | 251 | 56 | 0 | 30 | 1 | 0 | 6 | 2 | 0 | 233 | 50 | 25 | 202 | 82 | 1109 | 188 | |
| | STATION TOTALS | 5903 | 261 | 1365 | 293 | 58 | 2269 | 1347 | 310 | 0 | 214 | 25 | 0 | 31 | 6 | 0 | 1154 | 340 | 102 | 1422 | 489 | 5849 | 942 | 2409 |

4.11.2.2.1 Subsystem Support Requirements

Access to nearly 4,000 subsystem measurement points and application of nearly 2,000 stimuli are required to perform checkout and fault isolation of ISS sybsystems. As indicated in Table 4.11-7, about one-third of the parameters are monitored nearly continously for out-of-tolerance conditions. It is also interesting to note that over 40 percent of the parameters are used to support normal Station operations. The quantity of parameters indicated for testing reflects those necessary for tests conducted periodically to verify the availability or proper operation of on-line systems, redundant equipment, and alternate modes. The function of fault isolation requires nearly all of the parameters, but only 16 percent are required solely for this purpose. A brief discussion of the checkout and fault isolation support anticipated for each ISS subsystem, as well as a listing of typical subsystem line replaceable units (LRUs) are presented in Section 4.11.4.

Most of the stimuli required for checkout are of the nature of general-purpose signals, such as discrete commands, digital signals, or simple analog signals. The few special stimuli that are required are provided as part of the subsystem under test and controllable by the OCS. Stimuli required for RF communications equipment, for example, are relatively complex and unique to the communications subsystem. These stimuli are, therefore, generated by equipment internal to the subsystem.

The OCS-subsystem interface for measurements takes the form of the standard analog, discrete, and digital signals noted in Table 4.11.4. To retain checkout flexibility, however, the ISS must include capability for measuring unique responses or generating unique stimuli that may be identified in later phases of the program.

4.11.2.2.2 Experiment Support Requirements

The OCS is required to provide checkout and fault isolation support of integral experiments, as well as limited support of subsystems and experiments

within attached modules. Support of ISS integral experiments is estimated to require a capability for interfacing with 640 data points allocated as follows:

| | Measurements | Stimuli |
|---|---|---|
| Analog | 240 | 128 |
| Bilevel | 128 | 128 |
| Serial Digital | 8 | 8 |
| Total | 376 | 264 |

The limited checkout and fault isolation support of subsystems and experiments in attached modules involves providing an interface for the use of ISS computation, display and control, and critical parameter monitoring capabilities. Data acquisition, stimuli generation, and checkout software requirements associated with attached RAMs are provided separate from the ISS. As far as checkout and fault isolation activities are concerned, the attached modules are considered to be an extension of ISS experiment activities and it is highly desirable that RAM OCS-related equipment and software have design commonality with similar ISS equipment and software.

4.11.2.2.3 Critical Parameter Monitoring

The most important performance requirement of the OCS, from a safety standpoint, is to monitor life and mission critical functions continuously, and to provide distinguishable caution and warning indications for conditions requiring crew attention. Warning functions are those which, if out-of-tolerance, could present an immediate threat to crew life. Caution functions are those which, if out-of-tolerance, could result in major degradation of ISS performance unless specific crew action is taken. The status of non-critical functions is determined as part of normal checkout and other operational activities, and does not require an interface with the OCS caution and warning system.

For reliability and simplicity, elements of the caution and warning system associated with warning functions are hardwired and implemented completely separate from other OCS/DMS equipments and checkout sensors. All warning information, however, is made available to the data management

subsystem. Detection of out-of-tolerance conditions activates both visual and audible alarms in each ISS habitable compartment as required by safety guidelines. Overall caution and warning status is provided at both the primary and secondary ISS control centers.

In addition to generating alarms, certain types of failure may require immediate corrective action which cannot wait for crew intervention. For these cases, an automatic command capability is provided for initiating corrective action. Whether critical corrective action is automatically taken by the caution/warning system or by the subsystem itself, appropriate indications are provided at the ISS control centers.

A capability is also provided, consistent with safety guidelines, for changing stored critical parameter limits and for inhibiting the alarm of individual functions to accommodate changing operational conditions. Limits for warning parameters, however, may only be changed manually. Caution parameter limits, on the other hand, may be changed by remote control.

As indicated in Table 4.11-7, about 275 subsystem functions are monitored by the caution and warning system, with about one-sixth of these falling in the warning category. It is estimated that less than 15 warning parameters from each attached RAM will interface with the ISS caution and warning system. In addition, a capability for accommodating up to 10 caution or "experiment alert" functions are provided for ISS experiments. Subsystem warning functions are delineated in Table 4.10-12 in subsection 4.10.

4.11.2.2.4 Relationship to Other Onboard Equipment

Except for the overriding considerations that dictate independence of critical parameter monitoring as pointed out in 4.11.2.2.3, implementation of OCS functions takes advantage of checkout and fault isolation capabilities inherent in other ISS subsystems and experiments. This includes the use of data management subsystem capabilities in the areas of data acquisition and distribution, computation, data storage, displays and controls, command

generation, and operational software. Special processing and stimuli-generation capabilities that are integral to other subsystem and experiment equipments are also utilized.

The types of OCS interfaces with other onboard equipments must be minimized and standardized. This is particularly important for the OCS since it interfaces with all other subsystems and various experiments. By taking this approach, the management of hardware, software, program, and subcontractor interfaces is facilitated and subsequent ISS growth and change are accommodated.

The OCS functions are limited to those which can be accomplished through an electrical interface. Checkout operations involving calibrated fluid flow, etc., are accomplished with these equipment components in place and supported by the overall subsystem capability in conjunction with the OCS. Where this is not possible, the component being checked is removed to the GPL and the testing supported with ancillary test equipment. With the possible exception of certain valves in the propulsion subsystem, the need for ISS onboard bench-level checkout of subsystem LRU's for purposes of further fault isolation, pre-installation tests, or calibration is not anticipated.

4.11.2.3 Operational Requirements

The OCS is used as the primary checkout and fault isolation tool during post-manufacturing, prelaunch, on-orbit buildup, and on-orbit operational phases of the ISS program. It must also support ISS contingency modes to permit required checkout of subsystems during quiescent unmanned operations. The degree of crew participation in performing onboard checkout and fault isolation functions and the operation of the OCS with ground control are discussed in the following subparagraphs.

4.11.2.3.1 Degree of Crew Participation

To eliminate the assignment of routine checkout tasks to the crew, onboard checkout operations are primarily automatic. The role of the crew, however,

is extremely important in providing the necessary control and degree of flexibility to cope with unpredictable checkout situations and to accommodate changing requirements. The degree of automation can be selected on a test-by-test basis, where a test represents a sequence of actions to accomplish a particular objective. Provision must therefore be made for crew cognizance and control over all checkout operations, including those that are automated, and for crew intervention when their special capabilities are needed or requested. The normal mode of OCS operation, however, does not require crew participation on a full-time basis.

4.11.2.3.2 Operation with Ground Control

All normal checkout and fault isolation functions are conducted primarily onboard the ISS, but OCS capabilities are supplemented with a limited degree of ground support. This ground support takes the form of consulting with the crew on checkout and fault isolation problems; supporting ISS quiescent modes of operation; performing large data processing tasks, such as long-term trend analysis; and conducting detailed failure analyses through examination of engineering data and failed LRU's which have been returned from orbit. A high degree of ground interface is possible, however, through the system's capability to select and transmit any or all checkout data to the ground. It is expected that significant use of this capability will be made in the early stages of the ISS program. The onboard-ground allocation of OCS functions and the rationale for providing an extensive onboard checkout capability are further discussed in Section 4.11.4.

4.11.2.4 Checkout Software Requirements

Software used for onboard checkout and fault isolation is compatible with and utilizes the operating system software provided by the data management subsystem. It includes special application programs required to -

A. Monitor checkout data points to determine the existence of faults and trends toward faults;

B. Initiate and perform diagnostics to determine the malfunctioning LRU, automatically or on demand;

C. Provide information to guide ISS repair and reconfiguration actions; and

D. Certify that failures have been corrected after repair or reconfiguration.

Checkout software is normally pre-programmed on the ground, but a capability exists for real-time structuring of new or revised special application routines. A high-level language is utilized to facilitate the man-machine interface in all phases of ISS preparation and operation.

### 4.11.3 Selected Subsystem Design

#### 4.11.3.1 Description

The OCS is a hybrid of (1) utilizing checkout functions built into the subsystem or experiment under test; (2) sharing other onboard capabilities, especially those of the data management subystem for data acquisition and distribution, computation, data storage, displays and controls, command generation, and operating system software; and (3) implementing unique OCS design required for stimuli generation, critical measurements, and checkout software.

An overall block diagram depicting OCS elements is provided in Figure 4.11-2. Stimuli generation, command generation, and data acquisition capabilities are distributed throughout the ISS as dictated by checkout data point locations. Local caution and warning units are located in each habitable compartment with overall status provided at both the primary and secondary ISS control centers. Display, control and data processing functions, on the other hand are primarily centralized with separate capabilities provided for subsystem and experiment support. Distribution of information between various elements of the system is primarily by digital data bus.

Assemblies unique to the OCS include stimuli generation units, local caution/warning units, and checkout software. Elements of the data management subsystem that support OCS functions are described in Section 4.10.3 and

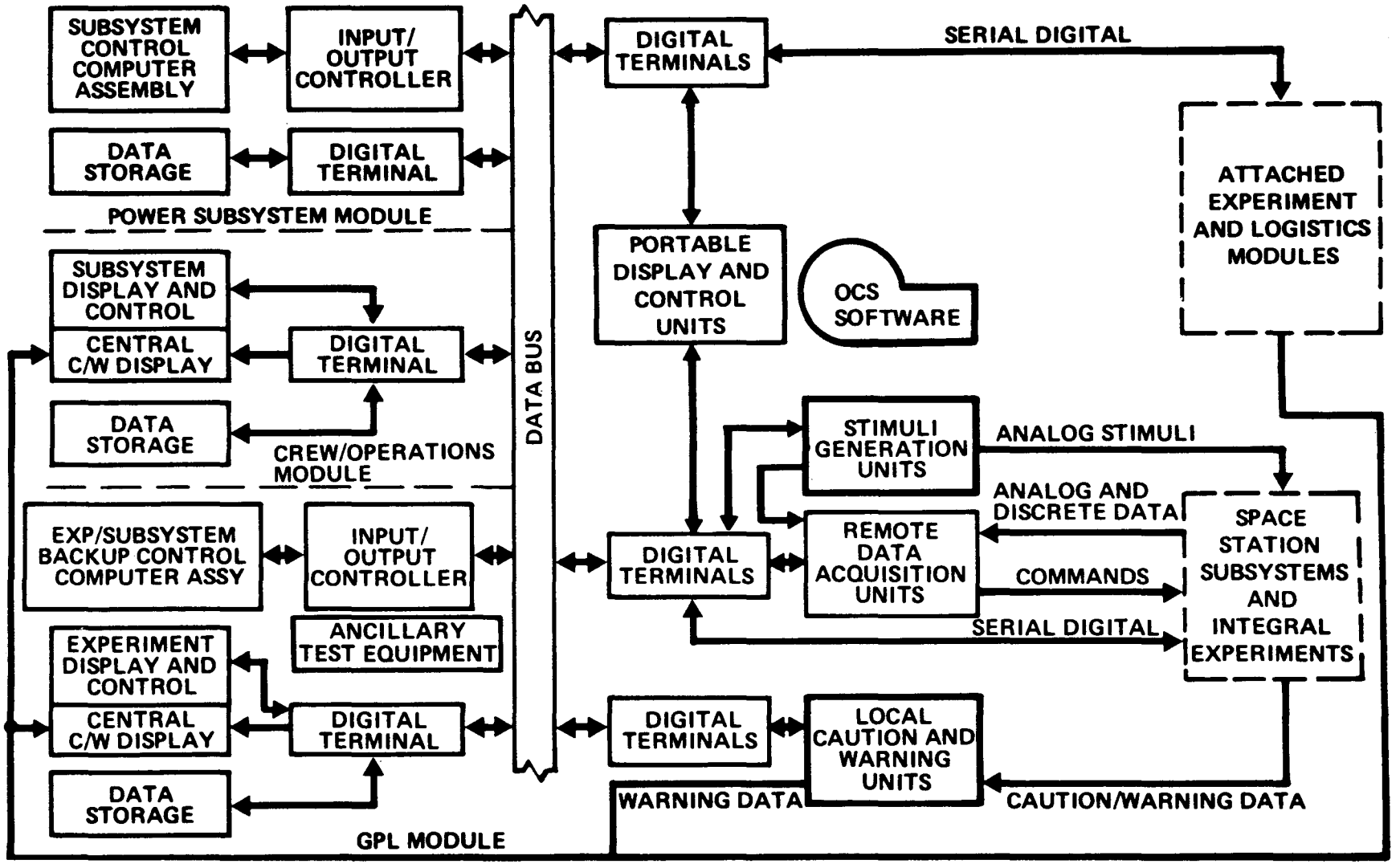


Figure 4.11-2. OCS Block Diagram

integrate requirements imposed by these functions. Since approximately 40 percent of the checkout data parameters are also required for normal ISS operations, it is reasonable to assume that 60 percent of the remote data acquisition units and digital data terminals called for by the data management subsystem are necessary only to satisfy OCS functions. The portions of data management subsystem's computation capabilities dedicated to OCS functions are specified Section 4.10.2. Display and control capabilities of the DMS used in OCS operations are described in 4.10.3.1.5.

The ancillary test equipment noted in Figure 4.11-2 is provided as part of the GPL experiment support capabilities described in Section 4.4.3. This equipment is necessary to support checkout and fault isolation which involves measurement requirements exceeding basic OCS capabilities. These requirements are due, for example, to the need for measurements of extreme accuracy or range, or to non-electrical interfaces not convertible to OCS compatible form. Limited use of the equipment is expected and it has no direct interface with other OCS elements.

Descriptions of the unique OCS equipment and software are provided in the following subparagraphs. These are followed by a brief description of OCS interfaces and operation, as well as a discussion of OCS-related considerations in evolving from an ISS to a GSS.

4.11.3.1.1 Stimuli Generation Unit

Stimuli generation units (SGU's) are provided for the application of analog signals to subsystem and integral experiment test points, as required for checkout and fault isolation.

Unit Description

The SGU, under computer control, generates general-purpose analog stimuli over the range of 0 to 115 vdc. The unit responds to computer-controlled instructions by generating specified stimuli and selecting one or more of 32 output channels for its application. The control information is transmitted in standard word format containing the SGU's address and appropriate instruction codes. The SGU receives the control word and formats a

response containing the instruction code. The response is transmitted on demand via a digital data terminal to the computer where a bit-by-bit verification of the stimuli program is performed. The SGU then responds to an enable command from the computer. A block diagram of the SGU is provided in Figure 4.11-3.

Each SGU is expected to weigh 12 lb, occupy one-half cu ft, and require 20W of 115 vdc power. A total of 12 SGU's are provided for subsystem checkout support with seven of these located in the Power/Subsystems Module, three in the Crew/Operations Module, and two in the GPL. An additional four SGU's are provided in the GPL for integral experiment checkout support. Quantities of SGU's are based upon an approximate 80 percent utilization of their stimuli generation capabilities.

Unit Interfaces

The SGU interfaces with the following:

A. Electrical Power Subsystem — The SGU interfaces the electrical power subsystem for power and associated circuit protection. Each SGU is expected to require 20W of 115 vdc power for its operation. Voltage levels necessary for internal SGU operation are generated within the unit.

B. Digital Data Terminal — The SGU interfaces a digital data terminal provided by the data management subsystem through a single connection for receipt of computer control information and transmittal of verification response information.

C. Remote Data Acquisition Unit — The SGU outputs, under computer control, are interfaced with a remote data acquisition unit of the data management subsystem for purposes of self-testing.

D. Subsystems and Experiments — The SGU interfaces subsystems and integral experiments for application of analog stimuli required for checkout and fault isolation. Output channels are wired directly to test points of the unit under test.

4.11.3.1.2 Local Caution and Warning Unit

The ISS caution and warning system is considered a part of the OCS, but is

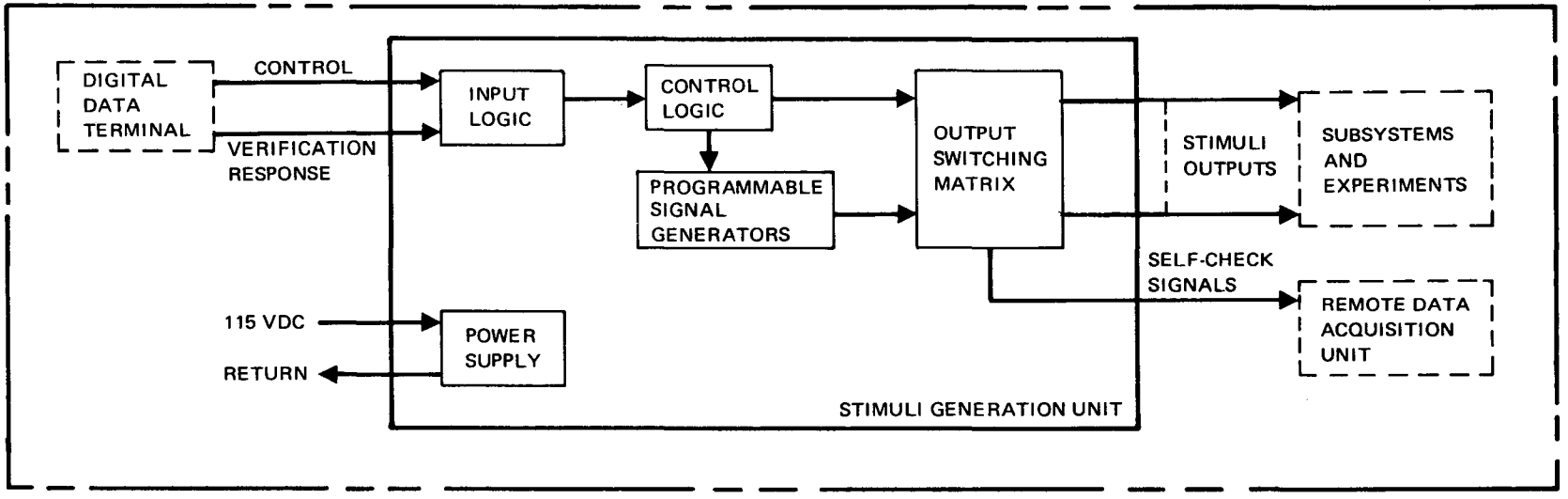


Figure 4.11-3. Stimuli Generation Unit

implemented as a separate and redundant system for reliability. Caution and warning functions are monitored and out-of-tolerance indications are provided primarily through the use of local caution and warning units. Warning functions are those which, if out-of-tolerance, could present an immediate threat to crew life. Caution functions are those which, if out-of-tolerance, could result in major degradation of ISS performance unless specific crew action is taken.

Unit Description

The local caution and warning unit, shown in Figure 4.11-4, accepts both caution and warning functions and contains the necessary circuitry to (1) monitor these critical functions continuously for out-of-tolerance conditions; (2) cause immediate activation of self-contained and external alarm indications; and (3) acquire caution and warning function data used in normal check-out operations. The unit also contains a speaker controllable from the ISS primary and secondary control centers and used both for emergency voice communications and for paging.

Limit-checking of caution function inputs is performed using the same methods and circuitry employed by the remote data acquisition unit described in Section 4.10.3. Unlike the RDAU, however, the local caution and warning unit activates local alarms which are directly wired to the monitor circuitry. Transmission of caution function data to the central caution and warning displays is on the DMS digital data bus.

Warning function inputs from independent redundant sensors within subsystems are wired directly to redundant comparator circuits containing stored limits for each parameter. In contrast to caution parameter limits which can be changed by remote control, the stored limits for warning parameters are adjustable only by local manual replacement of individual memory modules.

Detection of an out-of-limit warning function activates audio and visual alarms located within the unit, as well as those located external to the unit. These

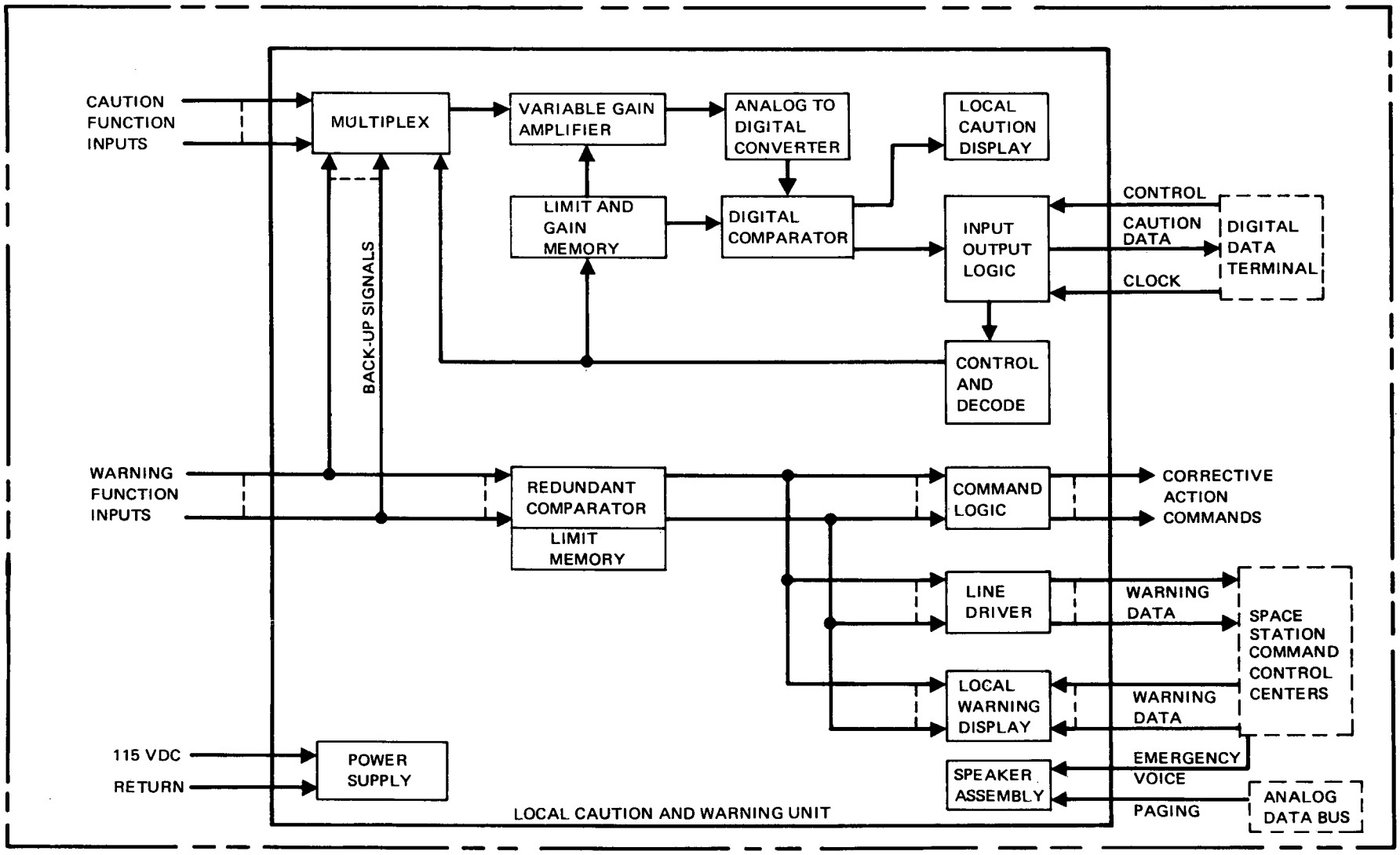


Figure 4.11-4. Local Caution and Warning Unit

include alarms in the ISS primary and secondary control centers and, as required, in other local caution and warning units. Once initiated, caution and warning alarms remain active until reset. A capability, however, is provided for selectively inhibiting individual functions to accommodate changing operational conditions.

Where failures require immediate corrective action which cannot wait for crew intervention, the local caution and warning unit provides a capability for automatically generating commands to initiate the necessary corrective action. These commands may be transmitted either on the DMS digital data bus or by direct hardline. Subsystems that require such immediate attention, however, usually have a self-contained correction capability, and little usage of the unit's command generation capability is expected. In any event, indications are provided to both ISS control centers whenever critical corrective action has been automatically taken.

Unit Interfaces

The local caution and warning unit interfaces with the following:

A. Electrical Power Subsystem – The local caution and warning unit interfaces the electrical power subsystem for power and associated circuit protection. This power is derived from the portion of the electrical power distribution subsystem designed to serve critical ISS loads. Each unit is expected to require 7W of 115 vdc power for its operation. Voltage levels necessary for internal local caution and warning unit operation are generated within the unit. A total of 18 units are provided on the ISS with three of these located in the Power/Subsystems Module, nine in the Crew/Operations Module, and six in the GPL.

B. Subsystem – The local caution and warning unit interfaces subsystems for direct acquisition of caution and warning function data, and for application of critical corrective-action commands. The warning function interface takes the form of independent redundant sensors incorporated within the subsystem and wired directly to the unit. Caution function sensors within subsystems are wired directly to the unit, but do not require full redundancy.

Critical corrective-action commands, where required in warning situations, are hardwired directly to subsystems and experiments.

C. Digital Data Terminal — The local caution and warning unit interfaces a digital data terminal of the data management subsystem through a single connection for receipt of computer control information and clock frequencies, and for transmission of caution data. The interface is identical to that described for the RDAU-terminal interface in Section 4.10.3. Although a requirement for automatic generation of corrective-action commands in caution situations is not anticipated, the local caution and warning unit-digital data terminal interface allows this capability to exist through transmission of commands on the data bus under computer control.

D. Control Center — The local caution and warning unit interfaces both the primary and secondary ISS control centers for transmission of warning function data. Warning functions are wired directly to each center. The interface serves (1) to provide warning data to the centers, (2) to receive signals for activating local unit warning alarms as a result of out-of-limit conditions detected by other local units, and (3) as a means for transmitting emergency voice between the centers and the local units. Caution function status is transmitted to the centers on the data management subsystem digital data bus. Warning function status is also transmitted to the centers in this manner for backup purposes. For normal checkout, the caution and warning function data available on the digital data bus are used.

E. Analog Data Bus — The local caution and warning unit interfaces the analog data bus of the data management subsystem for paging communications.

4.11.3.1.3 Checkout Software

Checkout software is provided as a part of the OCS. It includes an onboard checkout supervisor and the following applications programs:

A. Continuous monitoring (automatic)

B. Periodic testing (manual)

C. Operational interface
D. Fault isolation
E. Reconfiguration
F. Calibration

The onboard checkout supervisor is a part of the computer executive program. The applications programs are compiled by Earth-based computers from source programs written in user-oriented languages. They may be loaded into the DMS computer program either by bulk memory or via RF communication links using the auxiliary memory as a buffer. A brief description of these application programs, as well as a discussion of onboard checkout processing, is presented in the following subparagraphs.

Continuous Monitoring

The continuous monitoring program automatically tests the status of checkout data points by initiating any stimuli required, acquiring the test results, analyzing trends, and alerting the crew if necessary. Functions performed are:

A. Stimuli initiation
B. Data acquisition
C. Data storage
D. Engineering unit conversion
E. Limit comparison
F. Data extrapolation
G. Crew alert
H. Measurement display

Periodic Testing

The periodic testing programs utilize functions defined for continuous monitoring but permit the crew to accomplish the following operations on demand:

A. Operational equipment verification
B. Redundant equipment verification
C. Alternate mode verification

Operational Interface

The operational interface provides for crew, program, or remote initiation of inquiries, test sequences, and table updates. The subfunctions are:

A. Display/control servicing
B. Maintenance procedures or training
C. Spares/tools inventory
D. Data storage and retrieval
E. Table maintenance or retrieval

Fault Isolation

Fault isolation to the line replaceable unit level consists of the following:

A. Limit check data retrieval
B. Fault replaceable unit identification
C. Engineering unit conversion
D. Measurement display
E. Replaceable unit identification display

Reconfiguration

System reconfiguration consists of the following:

A. Reconfiguration request
B. LRU identity retrieval
C. Replacement identity retrieval
D. Reconfiguration
E. Configuration list update
F. Crew alert

Maintenance control and spares inventory associated with reconfiguration consists of the following:

A. Action identification
B. Data source identification
C. Information presentation
D. LRU spares data retrieval
E. LRU summary preparation
F. Inventory status display

Calibration

Calibration of LRU's consists of the following:

A. Calibration request, by crew or reconfiguration

B. Retrieve calibration table

C. Receive replacement data from reconfiguration

D. Crew interactive communications

E. Issue stimuli using operational references

F. Update data base.

Onboard Checkout Processing

The basic approach is to strore the checkout supervisor and portions of the operational interface programs in main memory. The remaining programs and associated data will be stored in either auxiliary or bulk memory, depending on their frequency of utilization. For example, programs and data used from a few times per second to several times per day would be stored in the auxiliary memory. Programs used once per day or less often (such as periodic calibration or maintenance) would be stored on a magnetic tape and loaded on bulk storage tape drives when needed. Applications programs and associated data would be brought into main memory from the auxiliary memory when needed under onboard checkout supervisor control. Periodically, perhaps on a daily basis, historical and trend data would be transferred to magnetic tape reels bulk memory for future reference or analysis.

4.11.3.2 Interfaces

The OCS interfaces with other ISS subsystems, integral experiments, attached experiment and Logistics Modules, prelaunch and mission ground support equipment, and the Shttle orbiter. These interfaces, as well as ISS inter-module interfaces, are briefly described in the following subparagraphs.

4.11.3.2.1 OCS to ISS Subsystems and Integral Experiments

The OCS interfaces electrically with ISS subsystems and integral experiments for acquisition of data and application of stimuli required for onboard checkout and fault isolation, and for monitoring parameters related to crew or equipment safety. This interface is via the stimuli generation units and

local caution and warning units described in 4.11.3.1, and the data management subsystem remote data acquisition units and digital terminals described in Section 4.10.3. The scope of this interface is addressed in Section 4.11.2. The OCS also interfaces with the electrical power subsystem for power and associated circuit protection; the structures subsystem for installation of OCS assemblies and interconnecting wiring; and the data management subsystem for utilization of its capabilities in the areas of data acquisition and distribution, computation, data storage, displays, and controls, command generation, and software.

4.11.3.2.2 OCS to Attached Experiment Modules

The OCS interfaces electrically with each attached experiment module via the data management subystem digital data bus for purposes of conducting checkout and fault isolation. This activity can be conducted from either the GPL control center or a portable display and control unit provided by the data management subsystem. Special application software required for attached experiment modules is provided separate from the ISS.

An additional redundant hardwire interface is provided between the local cautionand warning system within each experiment module and the ISS primary and secondary control centers for purposes of transferring warning functions. These warning functions are also transferred via the digital data bus interface. Less than 15 warning functions are anticipated from each attached module.

4.11.3.2.3 OCS to Attached Logistics Module

The OCS interfaces electrically with an attached logistics module in the same manner as described for the attached experiment module interface.

4.11.3.2.4 OCS to Prelaunch Ground Support Equipment

The OCS interfaces electrically with prelaunch GSE via the data management subsystem digital data bus for purposes of conducting ground support operations.

4.11.3.2.5 OCS to Mission Ground Support

The OCS interfaces electrically with mission ground support via an RF interface between the ground and the ISS communications subsystem for the purpose of selecting and transmitting any or all checkout data to the ground.

4.11.3.2.6 OCS to Shuttle Orbiter

The OCS interfaces electrically with the orbiter via the digital data bus of the data management subsystem for purposes of monitoring critical parameters related to crew or equipment safety, and for conducting any ISS subsystem checkout required prior to crew entry into each module. Special hardwire connections are provided to access the required data for monitoring and control of a limited number of Crew/Operations Module functions prior to mating this module with the Power/Subsystems Module.

4.11.3.2.7 ISS Inter-Module Interfaces

The OCS inter-module interfaces are accommodated through use of the digital data bus of the data management subsystem and separate hardwire connections for warning data between the local caution and warning units and the warning displays at the primary and secondary control centers.

4.11.3.3 Operation

The primary mode of OCS operation is automatic, but provision is made for crew cognizance and control over all checkout operations. The OCS is also designed to operate largely autonomous of ground support, although a high degree of ground system interface is possible. The caution and warning system is automatic and, for warning functions, is independent of data management subystem operation. Operation of the OCS in support of the various modes of ISS operation are briefly described in the following subparagraphs.

4.11.3.3.1 Launch Operations

Launch of individual ISS modules requires limited support from the OCS since the modules are unmanned and its subsystems are primarily quiescent. Monitoring and control of a few propulsion and EC/LS parameters, however, are required from the Shuttle orbiter. Appropriate data

management subsystem elements and the local caution and warning units of the OCS in the Power/Subsystems and GPL modules are powered up to provide the required monitor and control interface with the orbiter. A DMS portable control and display unit is utilized on the orbiter side of the interface. Monitoring and control from the orbiter of the few Crew/Operations Module parameters, on the other hand, are implemented by direct hardwire to the orbiter. These special provisions are needed prior to the electrical mating of the Crew/Operations Module with the Power/Subsystems Module.

4.11.3.3.2 Deployment and Activation Operations

Critical parameters continue to be monitored from the Shuttle orbiter during the deployment and activation operations associated with each ISS module. Following a verification of module habitability, the crew enters each module and uses the OCS to support its activation.

Following crew entry into the Power/Subsystems Module, a DMS portable display and control unit is used to initiate, monitor, and control OCS software routines used to verify proper operation of subsystems activated within the module. Fault isolation programs are also available to the operator and can be called up using the portable unit's keyboard. The three local caution and warning units located within the module are on continuously to monitor critical parameters for out-of-tolerance conditions and to notify the crew of any condition requiring immediate crew attention. Portions of the OCS required to support unmanned operations remain activated and function automatically following departure of the orbiter.

Support by the OCS of activation activities assocaited with the Crew/Operations Module is possible only after this module is electrically mated to the Power/Subsystems Module. Prior to this, monitoring and control of module functions is limited to that performed from the orbiter. Following the electrical mating, OCS operations are conducted from the primary ISS control station in the Crew/Operations Module. The portable display and control units, if required, can be used as additional operating stations. Critical parameters are again monitored by the local caution and warning units, but their status is also made available to the primary control center.

Support of GPL Module activation by the OCS involves essentially the same operations as required by the Crew/Operations Module. The OCS can be operated from the GPL's secondary control station, from the primary control station in the Crew/Operations Module, or from the portable display and control units. Following electrical mating, caution and warning information from all modules is made available to both control centers.

4.11.3.3.3 Unmanned Operation

Only those portions of the OCS which are necessary to acquire data needed for on-orbit monitoring via the downlink are normally active during unmanned ISS operations. The capability exists, however, for transmitting selected or complete test point data to the ground if this becomes necessary. In addition, the OCS stimuli generation units and DMS command generation, computation, and data storage capabilities can be controlled from the ground to facilitate any checkout operations that may be desired. These capabilities are available at all stages of ISS buildup, but are not expected to be utilized to any significant degree.

4.11.3.3.4 Normal Operation

Normal on-orbit operation of the OCS is automatic until a fault is detected either by the limit checking capability of the RDAU's or by a periodic monitoring routine executed by the DMS processor. Depending upon the response programmed for the particular fault, the OCS may then proceed automatically to isolate the fault to the replaceable unit, or to notify the crew of the malfunction and await further instructions. The programmed response may also include the selection of alternate modes of operation or activation of redundant systems if desired. If crew action is required to complete the isolation to the replaceable unit, the operator may call up additional programmed diagnostic routines, call up and examine selected test point measurements, or create special test routines "on line" using the operating system language. He may also call up supplementary documentation in the form of schematics, diagrams, or printed material stored in the data processor memory or on microfilm. Still another source of potential diagnostic data which may be called up from the processor memory is a continuously maintained record of the past hour's operation and test results,

analysis of which may reveal events leading up to the failure. When the faulty unit has been isolated and replaced, the system is reverified and the inventory status updated to reflect the parts used.

A typical checkout operation involving a failure of a pressure regulator within the high-thrust propulsion subsystem is shown in Figure 4.11-5. In addition to displaying the fact that a redundant regulator has switched on-line, related temperature and pressure data are automatically provided by the OCS on a multipurpose display at the command and control center. Following this particular failure, the crew must decide whether to continue operation of the subsystem using a redundant regulator, or to shut down the subsystem and initiate diagnostic routines to isolate the cause of the switch-over. This is done by observing the information acquired and presented by the OCS, and using the controls provided at the DMS command and control center. A detailed discussion of ISS displays and controls is presented in 4.10.3.1.5. Special annunciator switches are provided for OCS test control functions used frequently in checkout operations. These include such controls as run, reset, stop, hold, enable all holds, enable all stops, on-line modify, and single step.

The OCS interface with ground facilities during normal operations is generally limited to the downlink transfer of summary status information and selected data for long-term trend analysis. The capability exists, however, for transmitting selected or complete test point data to the ground if this becomes necessary for any reason.

4.11.3.4 Growth Space Station (GSS) Considerations

Additional OCS capabilities are required on the GSS to provide checkout and fault isolation support of subsystems in the second Crew/Operations and Power/Subsystems Modules, as well as limited support of subsystem and experiments within docked and free-flying modules.

Access to nearly 9800 subsystem checkout parameters is expected to be required in the performance of OCS functions on the five-module GSS. The allocation of these parameters by subsystem is shown in Table 4.11-2.

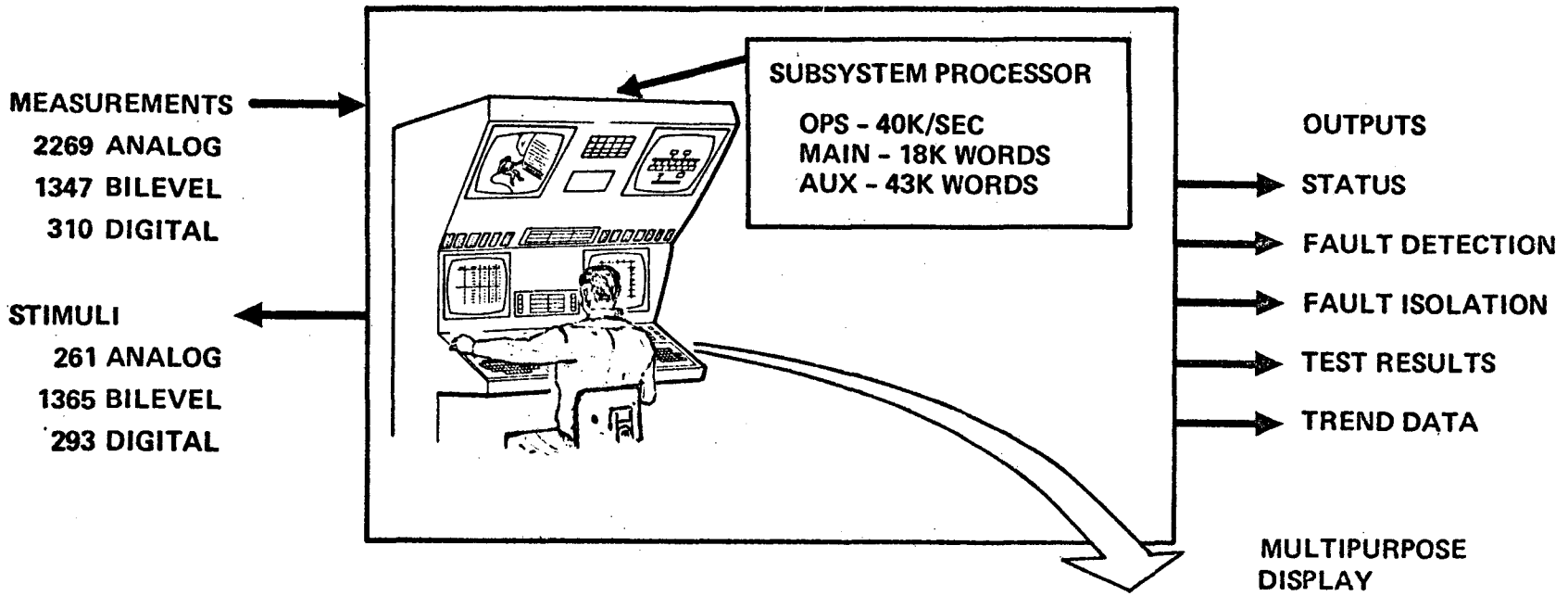


PROPULSION REGULATION
REDUNDANT REG SWITCHED ON-LINE

| | |
|---|---|
| PRESSURANT SYSTEM | |
| ON-LINE TANK NO 2 | 17300 N/M2 |
| RATE OF CHANGE | -34 N/M$^2$/SEC |
| PROPELLANT SYSTEM | |
| MANIFOLD NO 1 | 1500 N/M2 |
| ON-LINE TANK NO 5 | 1500 N/M2 |
| TANK TEMP | 294 DEG K |

MANIFOLD NO. 1 AT OVER-PRESSURE
(RED-LINE AT 1725 N/M2)

TYPICAL CREW INTERACTIONS

- SHUT DOWN
- INITIATE DIAGNOSTIC ACTIONS
- REPLACE FAULTY UNITS
- MODIFY PREPROGRAMMED SEQUENCES
- VERIFY RESTORED OPERATION

Figure 4.11-5. Checkout Data Processing Operations

The types of parameters involved and their usage are essentially the same as the percentage ratios indicated in Table 4.11-7 for the ISS.

The interface with additional docked experiment modules is the same as that described in 4.11.3.2.2. For free-flying experiment modules, a capability is provided for remote status monitoring from the GSS via a communications subsystem RF link. It is anticipated that module monitoring programs used in this mode of operation will be capable of being controlled from the GSS and all checkout data will be addressable from the GSS. Detailed checkout and fault isolation of these modules, however, is expected to be performed with the modules in a docked mode.

Since the OCS design is one of being responsive to Space Station reconfiguration and growth, it is easily modified to accommodate the checkout and fault isolation activities planned for the GSS. This growth capability is derived primarily from the DMS data bus concept and the modularity of OCS hardware and checkout software elements. These considerations have been previously discussed in 4.10.3.4.

### 4.11.4 Design Analyses and Trade Studies

Analyses conducted in support of the Modular Space Station OCS definition included identification of detailed subsystem checkout requirements for each module of the ISS and review of the fundamental OCS trade studies originally performed for the 33 ft diameter Space Station. The results of this review as well as a discussion of checkout support requirements for ISS subsystems are presented in the following subparagraphs. Appendix C of MSFC-DRL-160, Line Item 8, Volume V, Book 4 documents the requirements analyses and trade studies associated with the OCS defined for the 33 ft diameter Space Station.

#### 4.11.4.1 Review of Fundamental OCS Trade Studies

Review of the fundamental trade studies affecting the definition of the ISS OCS did not reveal any significant changes from the conclusions previously drawn for the 33 ft diameter Space Station. The automation vs crew participation, onboard vs ground checkout, and centralized vs decentralized

equipment distribution trade studies are discussed below.

4.11.4.1.1 Automation versus Crew Participation

As previously indicated in 4.11.2.3.1, the primary OCS operating mode is automatic, but with a capability for crew cognizance and participation. This approach recognizes the need for limiting the impact of checkout on crew time and for retaining flexibility for crew intervention in all operations. Table 4.11-7 shows that nearly one-third of ISS subsystem data is monitored nearly continuously. This requirement alone illustrates the importance of automating to the greatest practical extent. The various criteria for automation versus crew participation are thoroughly examined in DRL 8, Appendix C-5. The conclusions drawn in the study conducted for the 33 ft diameter Space Station remain valid for ISS applications. Results of the review and associated rationale are summarized in Table 4.11-11.

4.11.4.1.2 Onboard vs Ground Checkout

As previously indicated in 4.11.2.3.2, checkout and fault isolation activities are conducted primarily onboard the ISS with the ground role being that of consulting, performing detailed analyses, and supporting ISS quiescent modes of operation. The onboard-ground allocation of major checkout functions and the rationale for providing an extensive onboard checkout capability are summarized in Table 4.11-12. The conclusions reached in the onboard vs ground checkout trade study documented in Appendix C-6 of DRL 8 remain valid for ISS applications.

4.11.4.1.3 Centralized vs Decentralized Equipment Distribution

The OCS distribution is a combination of centralized and decentralized equipment as on the 33 ft diameter Space Station. The preferred distribution and associated rationale are summarized in Table 4.11-13. Detailed discussion related to this trade study is provided in Appendix C-5 of DRL 8.

4.11.4.2 Subsystem Checkout Support Requirements

Providing an effective onboard repair capability is essential in supporting a long duration Modular Space Station since complete reliance on redundancy to achieve long life is not feasible. The need for repair, in turn, requires

Table 4.11-11

OCS TRADE STUDY REVIEW: AUTOMATION VS CREW PARTICIPATION

- Automation techniques to the greatest practical extent
- Capability for crew cognizance and participation

Rationale for Automation and Crew Participation:

- Crew time
- One-third of subsystem data monitored nearly continuously
- Flexibility
- Support of ISS quiescent modes of operation

Table 4.11-12

OCS TRADE STUDY REVIEW: ONBOARD VERSUS GROUND CHECKOUT

| Onboard | Ground |
|---|---|
| • Checkout data acquisition | • Consulting |
| • Status monitoring | • Long-term trend analysis |
| • Periodic Testing | • Failure analysis |
| • Fault isolation | • Quiescent mode support |
| • Checkout control | |

Rationale for extensive onboard checkout capability:

- All hardware and over half of checkout software required onboard in any case.
- 85 - 90% Average RF communications coverage
- Crew decision-making
- Increased importance due to on-orbit assembly

Table 4.11-13

OCS TRADE STUDY REVIEW: CENTRALIZED VERSUS DECENTRALIZED EQUIPMENT DISTRIBUTION

| Centralized | Decentralized |
|---|---|
| • Data storage | • Data acquisition |
| • Data processing | • Data distribution |
| • Control and display | • Stimuli generation |
| • Caution and warning | • Caution and warning |

Rationale for combination of centralized and decentralized equipments:

- OCS/DMS integration (commonality of requirements)
- Subsystem interface requirements and location
- Interdependent subsystem relationships

that a malfunction be isolated to a least its in-place remove and replace level.

As on the 33 ft diameter Space Station, the ISS level of fault isolation is keyed to the line replaceable unit (LRU) which is the smallest unit within a subsystem that is suitable for onboard replacement. Entire modules are returned only when major refurbishment is required. A detailed discussion of ISS maintenance concepts can be found in Section 7 of MP-01. In general, the definition of subsystem LRU's is dependent upon ISS maintenance concepts, subsystem design, component-level failure rates, crew time and skills required for fault isolation and repair, and resultant checkout hardware and software complexity. Typical subsystem LRU's and the rationale for their selection are provided in Table 4.11-14.

The checkout and fault isolation support anticipated for each ISS subsystem is briefly described in the following subparagraphs. Subsystem support functions include non-critical and critical status monitoring, periodic testing, trend analysis, and isolation to the faulty LRU. The type and quantity of measurement and stimulus parameters required to implement these functions are summarized by ISS subsystem and module in Tables 4.11-8, 4.11-9, and 4.11-10.

4.11.4.2.1 Guidance, Navigation, and Control Subsystem

The GNC subsystem operates in a closed-loop mode with the data management and propulsion subsystems as elements of the loop. As a result, nearly 60 percent of the GNC parameters required for checkout and fault isolation are also used for normal GNC operations. This compares to an overall ISS average of approximately 40 percent.

Fault detection is accomplished primarily by monitoring selected performance parameters and comparing the resulting measured or computed values with predetermined limits and/or against parallel redundant parameters. Parameters to be monitored in this manner include interface electronics outputs, CMG encoder outputs, torquer currents, and gimbal rates. Twenty caution functions have been identified for the GNC subsystem for CMG bearing temperatures and vibration monitors.

Table 4.11-14

SUBSYSTEM LINE REPLACEABLE UNITS

| Subsystem | Typical LRU's | LRU Selection Rationale |
|---|---|---|
| Guidance, Navigation, and Control | Gyroscope Assembly<br>Horizon Sensor<br>Star Tracker<br>Star Sensor<br>CMG Electronis<br>Interface Electronics<br>CMG's (less spinmotor, torquers and bearings) | State-of-the-Art Design<br>Alignment<br>Modular Packaging<br>Noise |
| Environmental Control and Life Support | Heat Exchanger<br>Pump<br>Valve<br>Sensor<br>Fan | Failure Rates<br>Convenient Breakpoints<br>Parts Commonality<br>Crew Skill and Tool Requirements<br>Safety |
| Communications | Transmitter/Receiver<br>Low Gain Antenna Elements<br>Multiplexer and Switching Assembly<br>Power Amplifier<br>Audio Terminal Unit<br>S-Band PM Transponder<br>Reflector and Feed Assembly | Performance<br>Reliability<br>EMI<br>Physical Constraints<br>Interchangeability |
| Propulsion | Pump<br>Relief Assembly<br>Regulator<br>Filter<br>Thrustor Module<br>Valve | Component Packaging<br>Mechanical Joints and Connections<br>Crew Skill and Tool Requirements<br>Replacement Frequency<br>Parts Commonality |

Table 4.11-14

SUBSYSTEM LINE REPLACEABLE UNITS (Continued)

| Subsystem | Typical LRU's | LRU Selection Rationale |
|---|---|---|
| Electrical Power | Circuit Breaker<br>Protective Relay<br>Inverter<br>Regulator<br>4-Cell Battery Module | Multiple Usage Components<br>Spares Requirements<br>Load Circuit Downtime<br>Modular Packaging<br>Life and Reliability |
| Structure | Seal<br>Hatch | Crew Skill and Tool Requirements<br>Resupply Feasibility |
| Data Management and Onboard Checkout | Remote Data Acquisition Unit<br>Digital Data Terminal<br>TV Camera<br>Stimuli Generation Unit<br>Power Supply<br>Tape Transport<br>CRT Display Assembly<br>Keyboard Assembly<br>Film Viewer | Modular Packaging<br>Self-Check Capability |

Certain GNC performance parameters are also amenable to trend analysis for detecting degradation or pending failure. Approximately 20 percent of the checkout parameters identified for the GNC subsystem are utilized for trend analysis. This compares to an overall ISS average of about 8 percent. These parameters include gyro temperature, gyro heater voltage, and CMG spin rate, temperature, and vibration. Operational trend data on the frequency and duration of high thrust reaction jet firing are also required to determine actual versus scheduled energy requirements and fuel consumption.

Since most GNC faults are detectable by continuous status monitoring, periodic tests are performed primarily to ascertain performance degradation, to detect failures in inactive or standby equipment, and to verify functional performance prior to an event. Checkout intervals are nominally once per month based on predicted performance of GNC components.

Preprogrammed checkout routines are utilized and employ the techniques of introducing calibrated stimuli at the first practical point in the forward path of the GNC loop and monitoring subsequent downstream checkout data points. Most of the downstream monitoring points are operational data interfaces with the DMS and DMS-computed data such as attitude or attitude errors. The test sequence, therefore, normally begins with verification, through self-diagnostic routines, of the DMS software and DMS/GNC interfaces. This is then followed by verification of the various GNC equipment.

All measurement and stimulus parameters identified for the GNC subsystem are utilized for fault isolation with nearly one-fourth of these used solely for this purpose. The fault isolation function involves a systematic analysis of the fault detection indicators and associated functions using normal operating input-output relationships as well as special test stimuli where necessary. Applicable portions of periodic checkout routines are also used to support fault isolation.

4.11.4.2.2 Environmental Control and Life Support Subsystem

The EC/LS subsystem is perhaps the most critical of the onboard subsystems in that its proper operation is essential to the habitability of the ISS and to the lives of the crew. The subsystem therefore features a high degree of reliability which is achieved through redundancy and backup operating modes.

The subsystem performance parameters (pressure, temperature, flow, etc.) are predominantly analog in nature and are associated with continuous process operations rather than events. This is indicated by the fact that approximately 60 percent of the checkout parameters identified for the EC/LS subsystem are analog measurements, as compared to the less than 40 percent identified for all ISS subsystems. Such parameters lend themselves well to limit checking as a means of status monitoring and fault detection, and this technique is used extensively. The applicable limits include both absolute limits, such as those associated with safety, and operational limits which may vary in accordance with particular operating modes or conditions. This requires that an inventory of on-line assemblies be maintained to condition limit-checking and other fault detection procedures for prevention of false malfunction indications.

Nearly half of the critical monitoring to be performed on the ISS is associated with the EC/LS subsystem. A total of 31 warning parameters and 116 caution parameters have been identified for this subsystem alone. Included are such parameters as oxygen tank pressure, nitrogen tank pressure, dump and relief valve position, and cabin pressure. Of the 116 caution parameters, 81 are associated with the IVA/EVA assembly group.

Trend analysis techniques are utilized for EC/LS functions which are subject to performance degradation of known and measurable characteristics. By observing the change in the major performance parameters, component replacement can be scheduled at a convenient time for the crew. Hazardous conditions can also be avoided by trend analysis prediction of out-of-tolerance conditions. Examples of predetection include monitoring of trace contaminants in the atmosphere to detect buildup trends or using nitrogen repressurization history to detect abnormal cabin repressurization rates

which may be indicative of a leak in the vehicle pressure shell. Still another form of EC/LS subsystem trend analysis is utilized in monitoring and forecasting consumables usage as an aid to resource management and resupply planning.

Fault isolation within the EC/LS subsystem is accomplished primarily through comparison of operating performance parameters with predetermined limits and by combinatorial analysis of input-output measurements and related functions. Redundant element substitution can also be utilized to a high degree. The fault detection process generally narrows the failure location to a small portion of the EC/LS subsystem and extensive testing to isolate the faulty LRU is normally not required. An exception, of course, are fluid and gas lines where the exact location of a failure such as a blockage or leak cannot in some cases be performed by in-place instrumentation. Portable instrumentation and visual inspection procedures, however, adapt readily to this situation.

Although the amount of periodic checkout associated with the EC/LS subsystem is expected to be relatively small, test routines are required for verification of subsystem performance following failure corrective action. The checkout sequence to be followed in these tests follows a general procedure of checking the least dependent functional groups or least dependent assemblies first, depending upon the level of test employed. The thermal control equipment, for example, would be checked first since its operation does not depend on other functional groups. Many other assemblies, however, do depend upon proper operation of the thermal control equipment. By verifying this equipment first, deficiencies due to inadequate heating and cooling are eliminated as possible causes of failure.

4.11.4.2.3 Propulsion Subsystem

The propulsion subsystem consists of two major elements, one being the high-thrust monopropellant hydrazine system and the other the low-thrust resistojet thrustor system. Both systems interface with the GNC and DMS subsystems for control. The low-thrust system also interfaces with the EC/LS subsystem for biowaste propellants.

High-Thrust System

Although the high-thrust system is normally required only during scheduled events such as docking, the system is continuously maintained in a pressurized and ready-to-fire state. This concept is strongly influenced by fluid characteristics, resupply penalties and the need for the subsystem to be available for unscheduled events or emergencies. Safety parameters as well as certain other system status and readiness indicators are therefore monitored continuously even though the system may be inactive. The monitoring is performed to detect over-pressure conditions, out-of-tolerance regulation, major leakage, propellant quantities, and thrustor malfunctions. Nearly one-half of the checkout parameters identified for the high-thrust system are monitored continuously. Of these, 6 warning and 10 caution functions have been identified.

In addition to the high degree of status monitoring planned for the system, in-depth testing is scheduled to be performed prior to major events such as docking and resupply. This includes leak and functional tests performed both manually and automatically, pressure regulation and thrustor performance checks, instrumentation calibration, propellant sampling, and interface checks. The detailed periodic check first includes an evaluation of general system status and critical parameters followed by LRU-level checkout. The general test sequence checks the high-pressure storage assemblies first and then the subsequent downstream assemblies.

Fault isolation is accomplished by combinatorial analysis of operating conditions and by functional testing using portions of the detailed periodic checkout routines.

Low-Thrust System

Continuous monitoring of the low-thrust system is conducted to detect faults and to initiate switching to redundant LRU's when necessary. This switching is accomplished internal to the system for failures which demand immediate and direct action to relieve a potentially hazardous condition. An example is excessive pressure on the outlet side of a pressure regulator. As for the high-thrust system, approximately one-half of the

checkout parameters identified for the low-thrust system are monitored continuously and include temperatures, pressures, temperature and pressure regulation, and thrustor performance.

Trend analysis is expected to be of some benefit in predicting the end of life for wearout items in the low-thrust system. The most promising application is in association with the biowaste resistojet thrustors. These units operate at very high temperatures and must be replaced from time to time. Typical failure modes include corrosion of the electrical heating elements and errosion or blockage of the nozzles. Long-term analysis of thrustor power consumption, temperatures, and pressures is expected to yield information indicative of such failures.

Fault isolation within the low-thrust system typically involves an input/output relationship such as regulator inlet versus outlet pressure, valve command versus position, etc. The capability to substitute redundant elements is very useful in assisting the fault isolation process within the low-thrust system. This technique may be used, for example, in the case of the pressure regulator assemblies or compression pumps.

4.11.4.2.4 Communications Subsystem

On-orbit checkout activities required to insure the availability of the communications subsystem include monitoring of its normal operational outputs, performing periodic checks, conducting trend analysis and selecting fault isolation routines associated with the loss of a communications function.

During normal operation of the subsystem, two basic types of parameters are monitored on a nearly continuous basis. These are RF power and AGC output levels. Since the AGC level varies as a function of received signal strength, this parameter is compared on a sample-to-sample basis to detect large changes in output level. The RF power output, on the other hand, should stay fairly constant during a normal operating period unless a failure occurs. The relative degree of status monitoring associated with the communications subsystem is much less than anticipated for most other

ISS subsystems. None of the communications subsystem status monitoring is classified in a caution or warning category.

Trend analysis is performed to detect graceful degradation in communications subsystem receivers, power amplifiers, and transmitters. This is accomplished through periodic sampling of internally generated AGC and RF stimuli and associated AGC and power outputs. Since RF signals are relatively complex and are unique to the subsystem, they are generated by equipment internal to the subsystem and controlled by the OCS. The various analog signals required for modulation testing are likewise generated internally and controlled by the OCS.

Periodic checks of subsystem status and availability are performed prior to anticipated operational usage. This is especially important for that equipment required to support the Shuttle-Orbiter. The same checks are used as an aid to fault isolation in the event of a fault. Fault isolation is performed on a systematic basis on a group of LRU's associated with the loss of a particular function.

4.11.4.2.5 Electrical Power Subsystem

The EPS is the primary contributor to the quantity of parameters required for onboard checkout and fault isolation and approximately 40 percent of these parameters are monitored nearly continuously. Almost one-half of the EPS parameters are connected with batteries and associated battery chargers and load regulators.

Continuous monitoring is required to detect out-of-tolerance conditions for parameters such as inverter load-sharing, principal bus voltages, solar array panel substrate temperature, equipment temperatures, and battery module voltages. Status monitoring is also required to detect abnormal events such as relay trips, circuit breaker and contactor trips, and loss of inverter sync signal. No life-critical functions have been identified for the EPS, but 57 parameters have been placed in the caution category. These are all bus voltages which reflect the general health of various portions of the power distribution system.

Periodic tests of the EPS are conducted to supplement the continuous status monitoring by evaluating subsystem operating characteristics and verifying the operation of standby or inactive equipment. The complexity of this checkout varies from simple readouts of parameters such as voltage or temerature, to injection of test currents into current transformer loop circuits to simulate fault conditions seen by protection relays.

Parameters of the EPS that are trended include battery voltages, inverter temperatures, and solar array circuit current and voltage. Changes in the solar array circuit I-V characteristics with time are necessary to detect degradation trends. This involves periodically switching each array circuit off the unregulated bus for the determination of open-circuit voltage, short circuit current, and the current and voltage at several other intermediate points on the I-V characteristic. This circuit characteristics curve information is then transmitted to the ground to permit calculation and extrapolation of solar array damage.

4.11.4.2.6 Structure Subsystem

Checkout functions associated with the structure subsystem are relatively few and simple. These are primarily related to the verification of module integrity and the status of hatches and docking systems. Structure-related checkout parameters connected with antenna positioning are included in the parameter quantities noted for the communications subsystem. Similarly the approximately 50 parameters associated with the solar array tunnel and mast drive assemblies have been arbitrarily included in the checkout parameters for the electrical power subsystem. Most operational assessment of the structure subsystem is accomplished by visual inspection.

No caution, warning, or trend functions have been identified for the structure subsystem. Certain related functions such as module leakage are covered by EC/LS status monitoring functions. Periodic checks of the docking mechanism are required prior to a scheduled docking event.

4.11.4.2.7 Data Management Subsystem

From an onboard checkout standpoint, the DMS is nearly self-sufficient.

The data acquisition and transfer equipment lends itself to computer-run checks through introducing signals into remote data acquisition units (RDAUs) and checking the function performed by both the RDAUs and the transfer equipment. About two-thirds of all the parameters identified for the DMS are for the purposes of controlling and checking data acquisition and transfer equipments. The processing equipment is, in general, also self-sufficient by virtue of fault isolation/detection routines built into the equipment. Operational verifications also play a major role in checking the DMS as indicated by the fact that over 60 percent of all the parameters identified are used in normal DMS operations. DMS maintenance programs are discussed in subsection 4.10.3.1.

PRECEDING PAGE BLANK NOT FILMED

# Section 5
# SPACE STATION INTERFACES

The major interfaces between the Space Station and (1) the Space Shuttle; (2) Logistics Modules, and (3) Research and Application Modules (RAM's) are summarized in this section as a convenience to the reader of this report.

## 5.1 SPACE SHUTTLE

This section contains a description of the Space Shuttle features which are pertinent to the preliminary design of the Space Station. Also included is a description of the Shuttle operations as they impact the Space Station design. Finally, design requirements stemming from interfaces with the Shuttle are summarized. Certain of these requirements were provided by NASA. Supplemental information on the Space Shuttle was utilized in this study. This information is based on the MDAC Phase B Shuttle Design performed under Contract NAS8-26016.

### 5.1.1 Vehicle Description

Pertinent characteristics of the Shuttle Orbiter are the vehicle configuration, payload accommodation, on-orbit propulsion/reaction control system, crew accommodations, payload access, and the docking/erection mechanism.

The Space Shuttle Orbiter vehicle is a delta-wing configuration, as shown in Figure 5-1. This vehicle is designed to accommodate a crew of four (2 Orbiter crew and 2 Space Station crew). The cargo bay is sized to accommodate a payload of up to 4.6 m (15 ft) in diameter and 18.2 m (60 ft) in length (including protuberances beyond the payload cylinder). A large door provides access to the cargo bay. This door, the Delta wing, vertical stabilizer, and radiator are potential sources of interference with the Space Station and attached Research and Application Modules (RAM) during docking operations.

Structural accommodation of the payload in the Orbiter is provided by a series of attach points. These attach points are located at the forward end

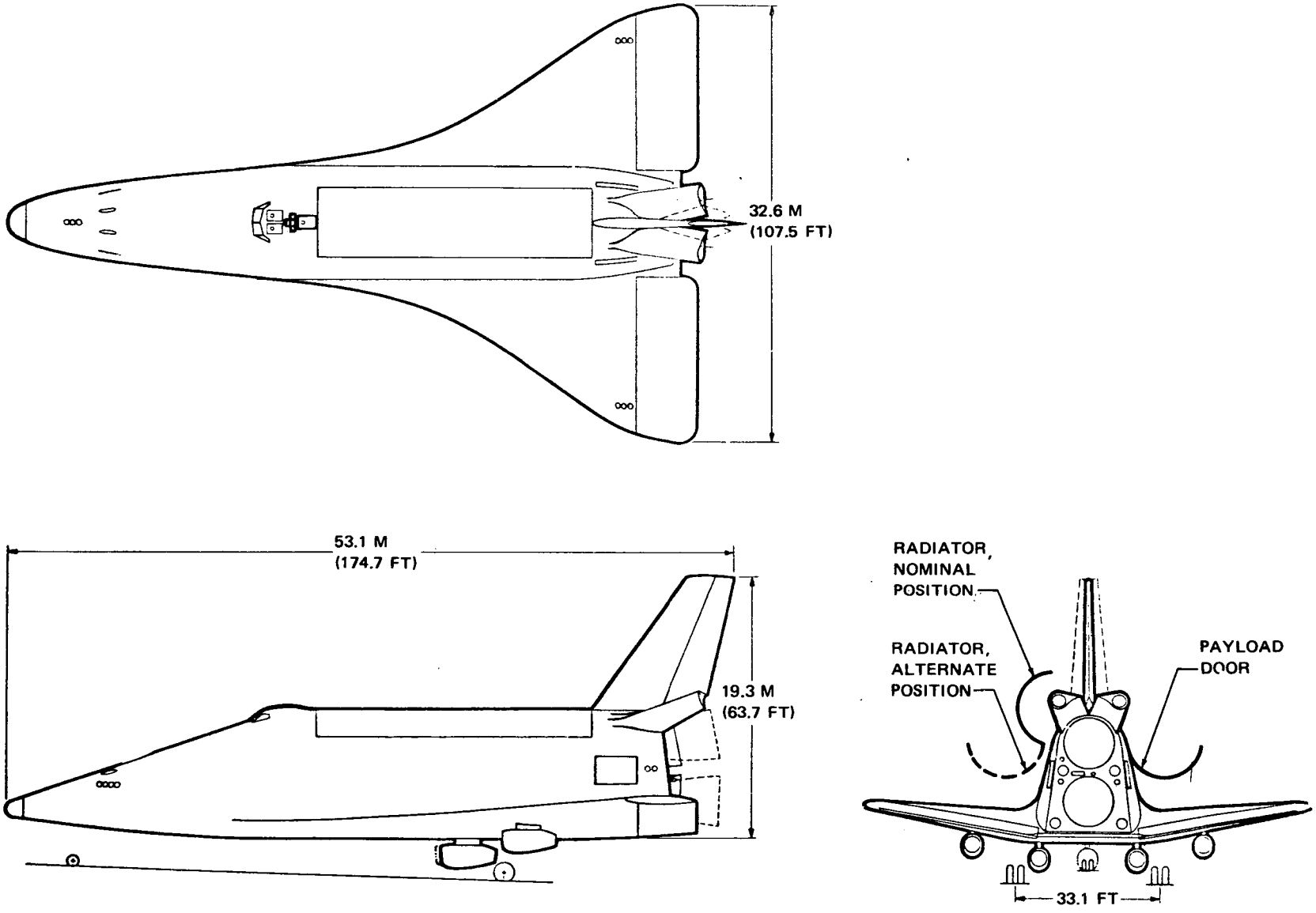


Figure 5–1. Baseline Orbiter Configuration

of the payload bay, on the cargo bay door sill and one on the bottom centerline. Alternate support point locations are possible at any of the upper body frames for payloads less than 17.6 m (58 ft) in length.

Figure 5-2 shows the Shuttle docking/deployment mechanism which interfaces with payload modules. The fittings about which this mechanism rotates are free during boost flight. This precludes loads being transferred to the module except through the payload attach points. An expandable tunnel with a hatch at the upper end is used for crew transfer.

On-orbit propulsion/reaction functions are performed by the Attitude Control Propulsion System (ACPS) and the Orbital Maneuvering System (OMS). The ACPS is used for attitude control and micro-translation maneuvers. Jets are located on the Orbiter vehicle as indicated in Figure 5-3. Thrust magnitude of each engine is 7,100 N (1,600 lb) (vacuum). The ACPS is a high-pressure $GO_2/GH_2$ bipropellant reaction control system. Propellants are stored in secondary tanks which also contain OMS propellant, fuel cell, and environmental control fluids.

A minimum number of thrusters are fired per axis to minimize angular accelerations; however, they are always fired in couples to minimize translational disturbances. The acceleration characteristics (Orbiter vehicle only) per axis are:

| | Angular Acceleration (deg/sec$^2$) |
|---|---|
| Pitch | 1.66 (up) |
| | 0.83 (down) |
| Yaw | 0.78 |
| Roll | 1.74 |

Minimum impulse per engine is 214 N-sec (48 lb-sec) (based on minimum thruster pulse duration of 0.03 sec).

The Orbital Maneuvering System (OMS) is required to perform all major translation maneuvers during the orbital phase of the mission. The OMS consists of two RL 10A-3 engines mounted in the upper-aft fuselage.

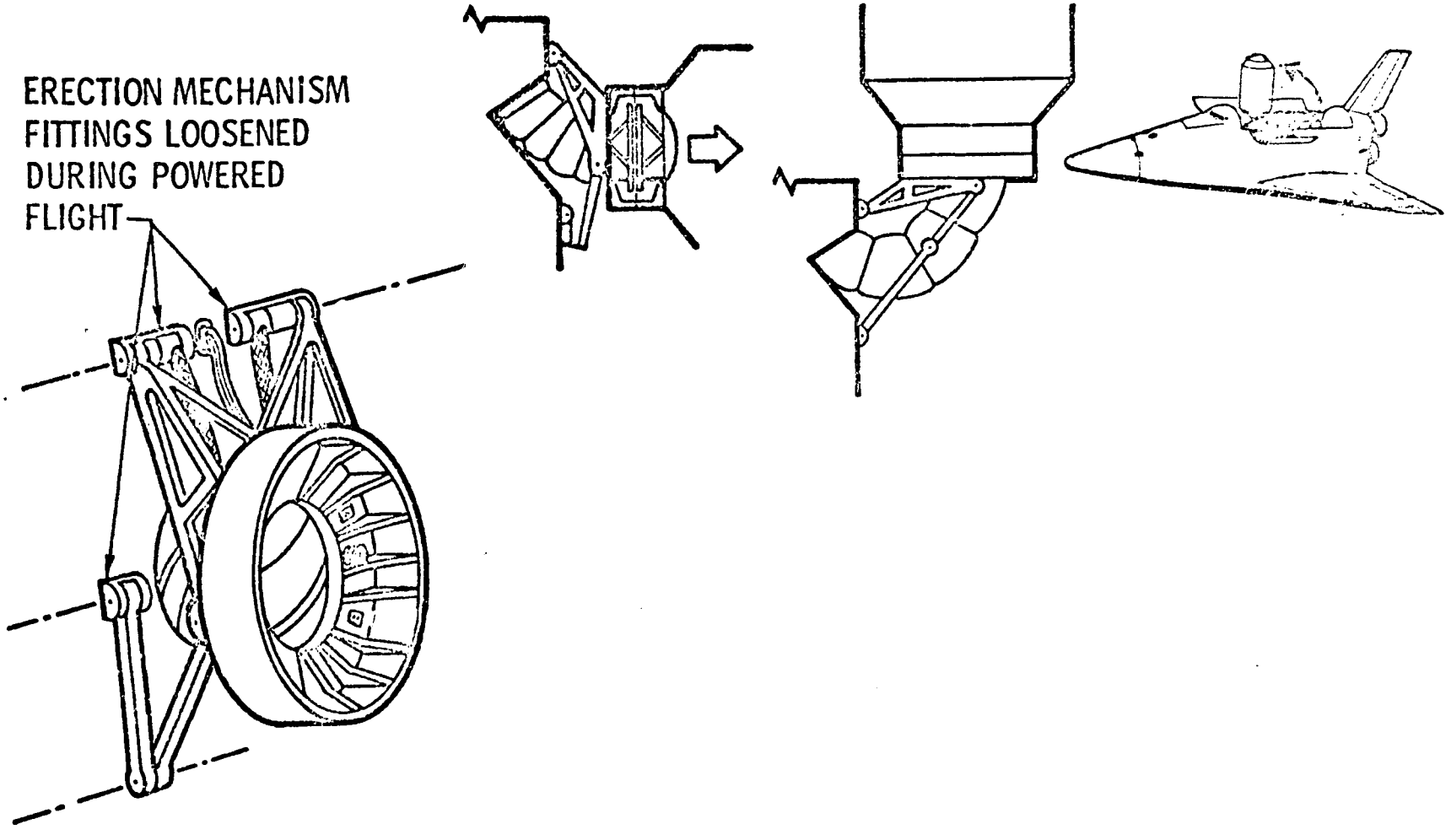


Figure 5–2. Shuttle/Module Interface

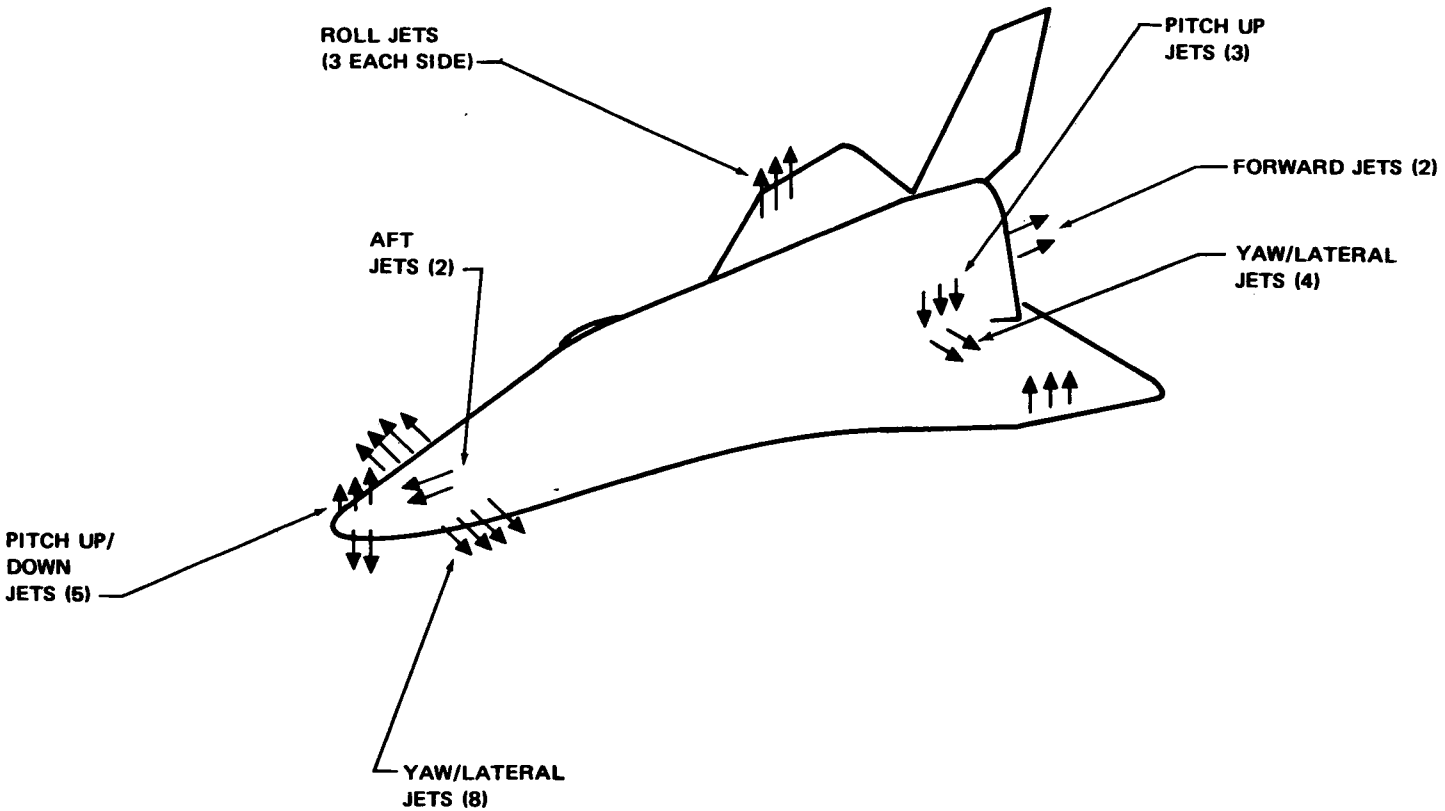


Figure 5–3. Orbiter Attitude Control Jets

Figure 5-4 shows the general arrangement and geometry of the crew accommodations. Illustrated are the docking station location, crew ingress/egress hatches, airlock, and payload access tunnel. It can be seen that manned-access to the payload from the crew compartment before launch with the Shuttle in the erected position would be difficult. Transfer of equipment or cargo to the Space Station or Logistics Modules through the tunnel would be even more difficult and should therefore be considered for contingency operations only.

Weight of the Orbiter vehicle at the time of docking is 131,000 kg (288,000 lb) including the 9,100 kg (20,000 lb) payload.

### 5.1.2 Operations

Shuttle operations which particularly impact the Space Station are those of prelaunch, docking, post-docking, and rescue. These are described in the following subsections.

#### 5.1.2.1 Ground Operations

Figure 5-5 shows the flow of Shuttle operations from t-6 days to launch. Normally, the payload is loaded in the Orbiter while it is in the horizontal position at approximately t-5 days. Access to the payload from the time of loading until launch is limited and dependent upon the type of Shuttle prelaunch operation in process. Figure 5-5 indicates the time periods wherein access is either (1) possible on a noninterference basis, (2) limited to connection of umbilicals, or (3) precluded. Due to the limited capability for access, as seen from Figure 5-5, the design of Space Station modules must result in minimal requirements for checkout, servicing, calibration, etc., during this time period (post-loading to launch).

#### 5.1.2.2 Docking Operations

Docking of all modules to other modules on-orbit is performed by the Orbiter vehicle. The operations of braking, docking, separation, attitude control, and station keeping are performed by the Attitude Control Propulsion System (ACPS).

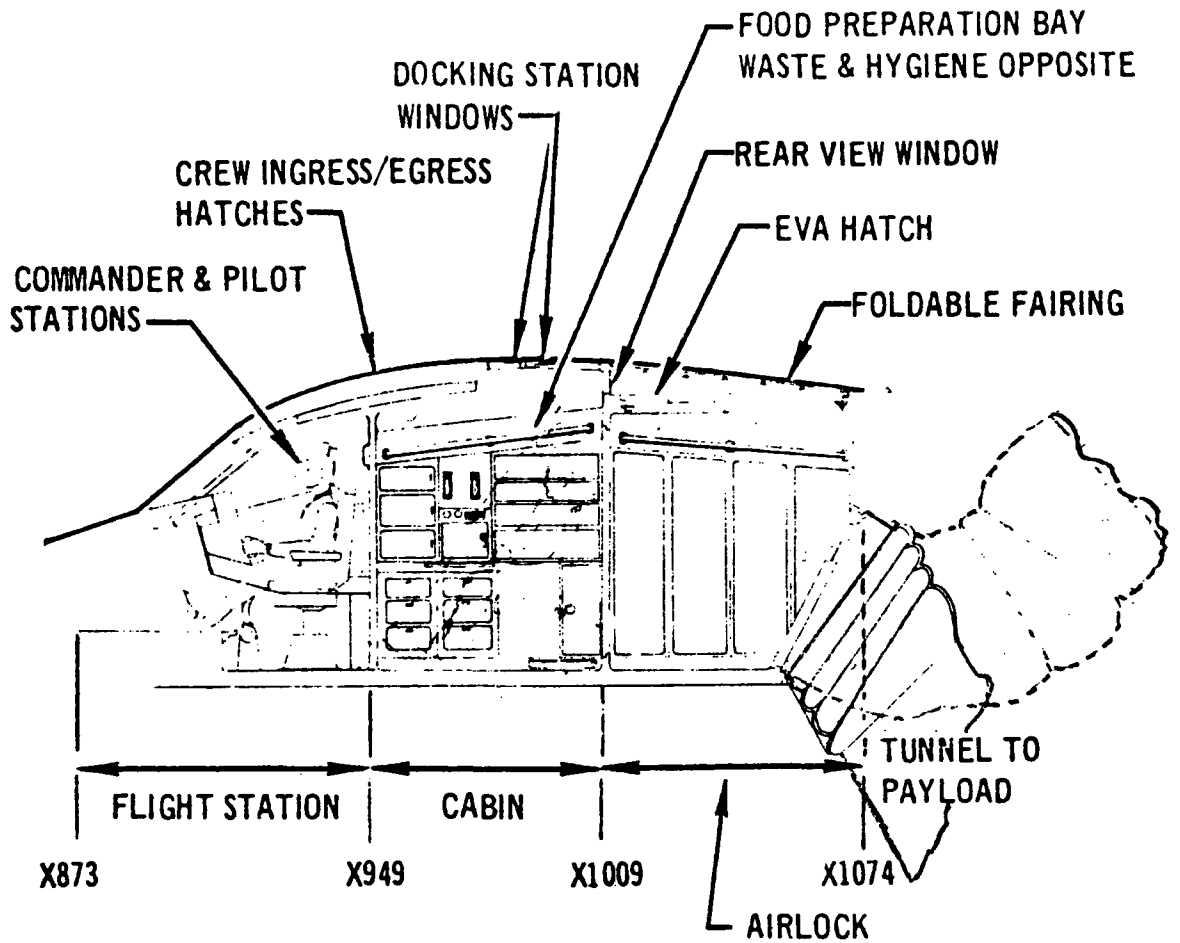


Figure 5–4. Orbiter Crew Accommodations

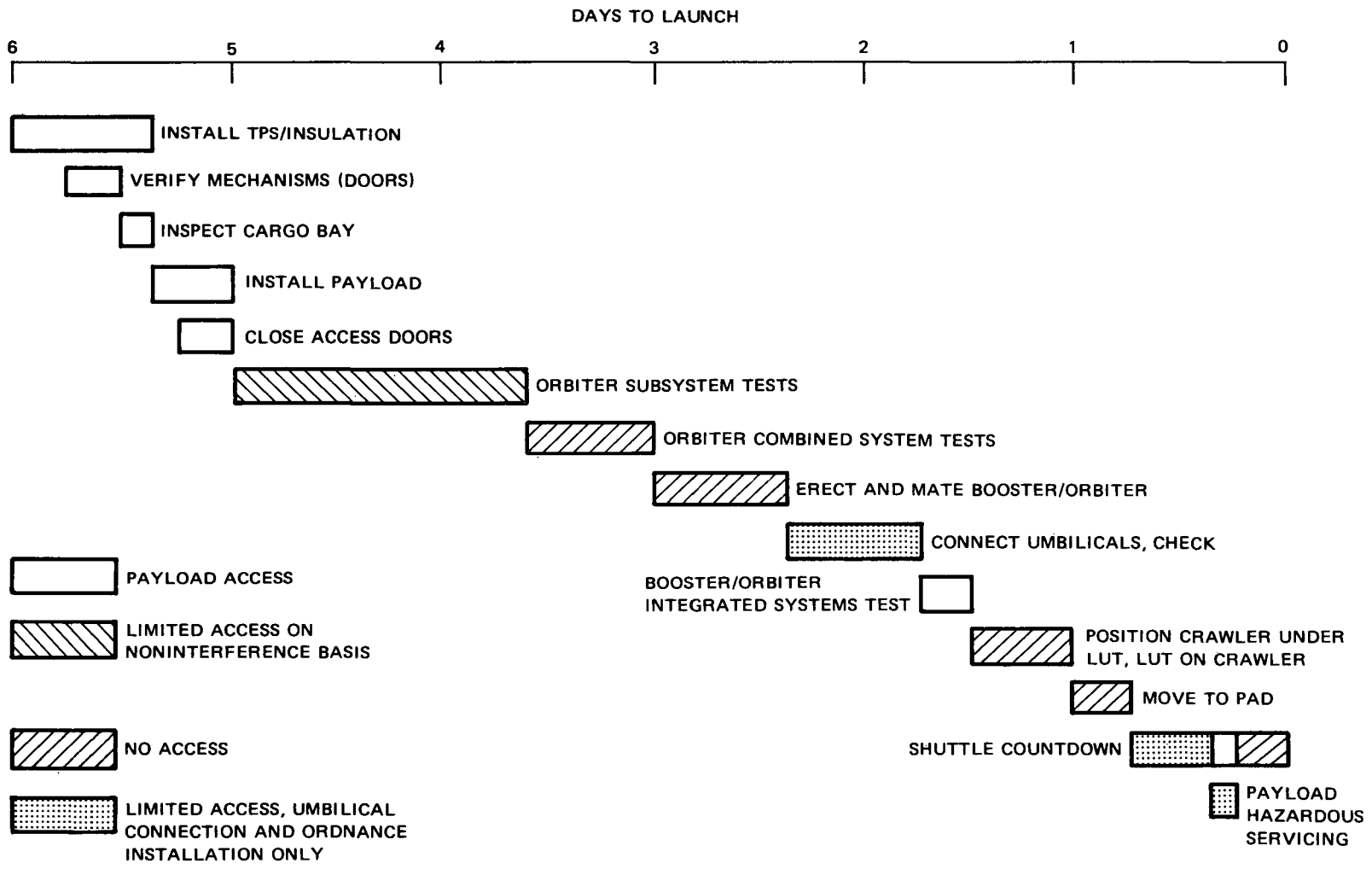


Figure 5–5. Payload Interface with Shuttle Operations

During docking operations, the Space Station is essentially passive, but retains command of the maneuver, i.e., the Station crew commands the initiation of the docking maneuver and visually monitors the operation while in voice communications with the docking pilot.

Figure 5-6 shows the clearances available between the Orbiter and Station for docking operations. Maximum clearance when docking a module is obtained with the Orbiter door and radiator in a partially-open position rather than a fully-open position. The partially-open door position provides adequate clearance when the Orbiter is docking to a module without an interspersed module (module retrieval operation). The Orbiter approach is constrained within a corridor which is well within these clearance limits. A positive cue is provided to the docking pilot when the vehicle approaches the limits of this corridor. The cue is provided by light sources on the Space Station; when the light source is visible to the pilot, corrective action is indicated.

The docking aid chosen to apprise the pilot of displacement errors is a T-Bar device (shown in Figure 5-7). The T-Bar is located above the docking hatch and, when viewed through the reticule in the orbiter, it gives relative information with respect to the lateral and vertical displacement of the Shuttle. The T and the target circul are both electro-luminescent.

The Shuttle-mounted docking aid consists of a reticle telescope arrangement (telescopic sight). The reticle within the Shuttle telescope, when used with the T-Bar, gives relative pitch, yaw, and roll information. The different circles of the reticle allow estimation of range, as noted in the diagram.

The direct docking mode, using manual control, was further assessed by an evaluation of data from a man-in-the-loop docking simulation (performed under the Space Shuttle Phase B-Study). This data verified the docking design criteria and the capability of Orbiter control within translational and attitude limits. The simulation employed six degrees of freedom. Target alignment aids were similar to those defined above. Onboard docking displays provided range-to-docking, relative range rate, and attitude rate.

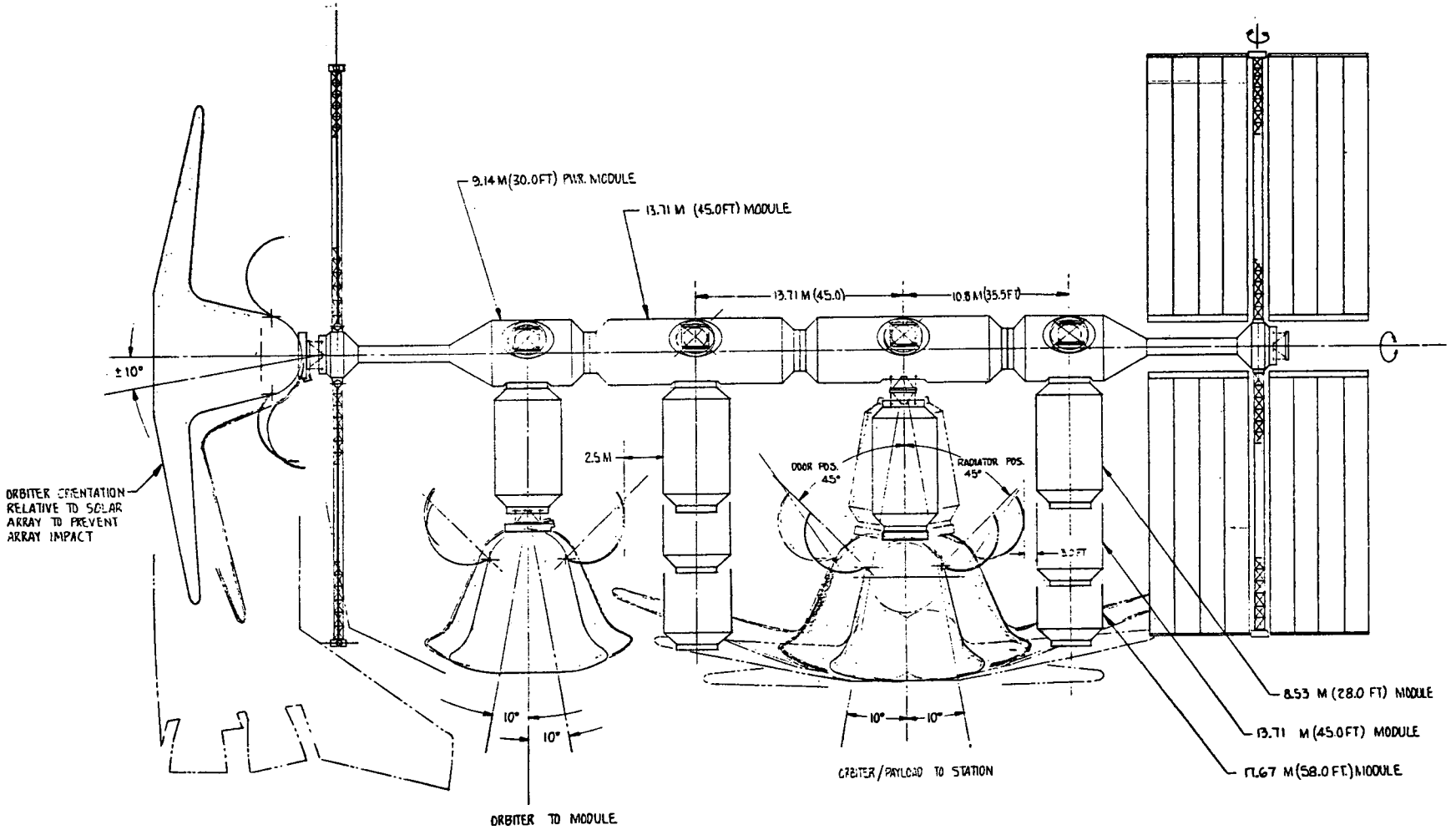


Figure 5–6. Docking Clearance

SECTION A-A

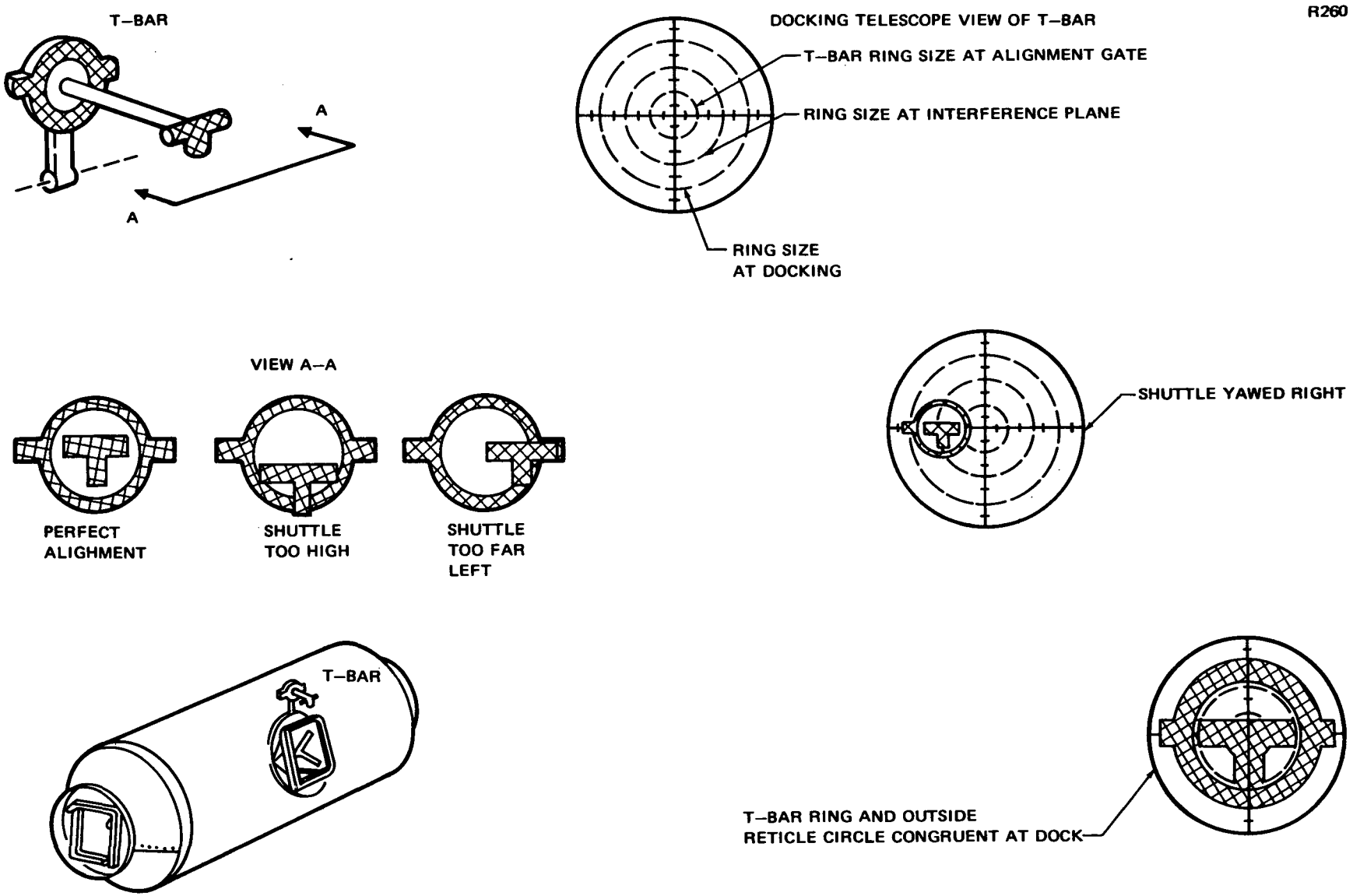


Figure 5–7. T–Bar Docking Aid

In the simulation, the payload module was mounted with the centerline parallel to the Orbiter centerline in contrast to the current design wherein the module centerline is perpendicular to the Orbiter centerline when erected. Results of the simulation are considered representative however; in both cases there is a large distance between the pilot and the docking interface and rotation about the Orbiter center-of-gravity results in significant translation of the pilot and the docking interface.

Figure 5-8 shows the docking precontact conditions (mean and worst case) in comparison with the values used for the Space Station design. The results shown include data from all 34 simulations and they are within the specified design criteria values.

Another objective of the simulation was to determine the accuracy of Shuttle position and attitude control relative to a target. The results are applicable to the determination of position and attitude control during approach to the Station in a docking operation. These results are shown in Figure 5-9. This figure shows the longitudinal, lateral, roll and yaw error distributions. The pilot's objective was to null these errors and maintain a fixed position and attitude relative to the target. As indicated, displacement errors are generally less than 0.305 to 0.456 m (1.0 to 1.5 ft) and angular errors less than 3 degrees.

5.1.2.3 Post-docking Operations

The sequence of events following docking in a nominal logistics/crew rotation mission is as follows: (1) the crew transfers from the Orbiter cabin through the tunnel and into the Logistics Module; (2) the Logistics Module hatch at the Logistics Module/Orbiter interface is secured, and (3) the crew transfers to the Station. Following crew transfer and verification of pressure integrity of the Logistics Module and Orbiter, the orbiter dedocks and orbit keeps in the vicinity of the Station for the duration of crew overlap (nominally 24 hours). The Orbiter then redocks to the returning Logistics Module, crew transfer is completed, followed by pressure integrity verification and separation of the Logistics Module from the Station by the Orbiter. Duration of Orbiter/Station docked operations is approximately 15 minutes. Attitude control of

SIMULATION GEOMETRY

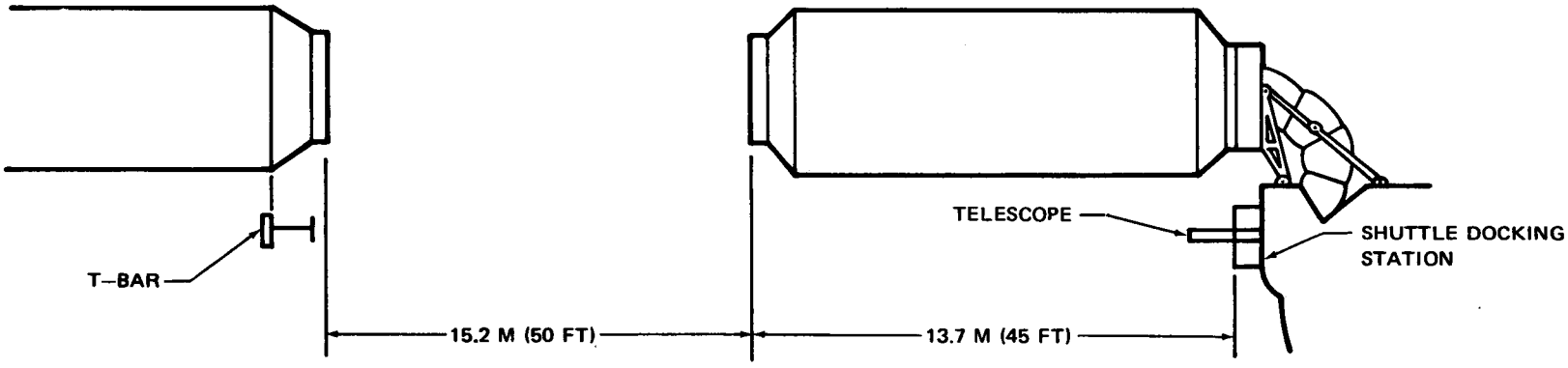


RESULTS (34 RUNS)

| | MEAN | WORST CASE | DESIGN CRITERIA |
|---|---|---|---|
| MISS DISTANCE, M (FT) | 0.152 (0.5) | 0.274 (0.9) | 0.305 (1.0) |
| LONGITUDINAL VELOCITY, MPS (FPS) | 0.037 (0.12) | 0.07 (0.23) | 0.305 (1.0) |
| LATERAL VELOCITY, MPS (FPS) | 0.021 (0.07) | 0.033 (0.11) | 0.076 (0.25) |
| MISS ANGLE (DEG) | 0.9 | 1.7 | 5.0 |
| ANGULAR RATE (DEG/SEC) | 0.1 | 0.15 | 0.5 |
| ROLL ANGLE (DEG) | 1.5 | 3.5 | 5.0 |
| ROLL ANGULAR VELOCITY (DEG/SEC) | 0.1 | 0.17 | 0.5 |

Figure 5–8. Docking Simulation

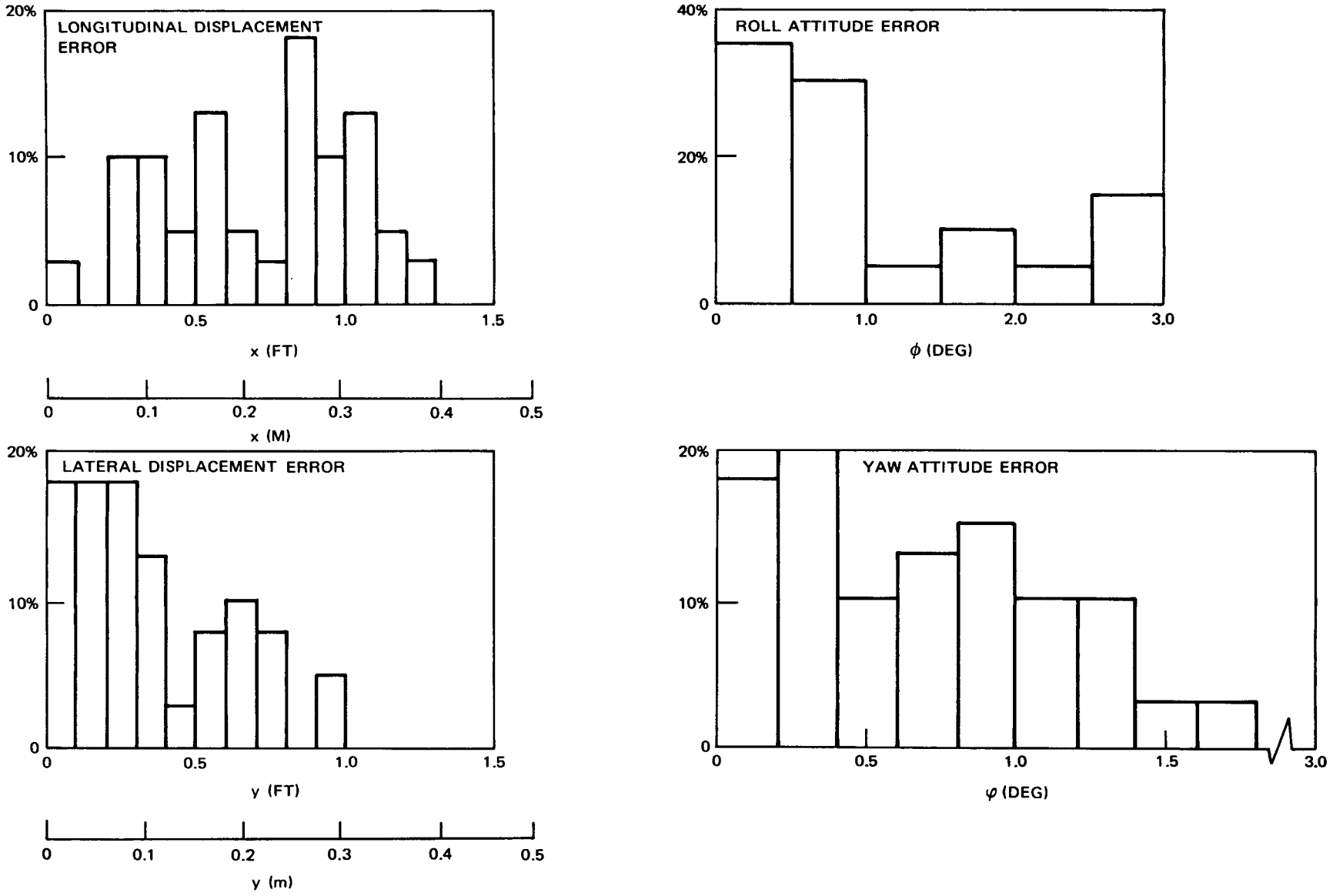


Figure 5–9. Distribution of Orbiter Control Errors

the docked ISS cluster, if required, is performed by the Orbiter ACPS. Figure 5-10 shows the operations (including crew transfer) of the initial manning with the first Logistics Module. For this initial manning operation, the Orbiter is docked to the Station for 32 hours.

5.1.2.4 Rescue Operations

Guidelines for the Space Station Program included a requirement that the Space Station design have provisions and habitable facilities adequate to sustain the entire crew for a minimum of 96 hours during an emergency situation requiring Shuttle rescue. An analysis was performed to determine the Shuttle reaction capability to verify the adequacy of 96 hours as a design requirement. Table 5-1 indicates the reaction time or time from emergency to rescue. The total reaction time shown is the maximum that would be required. This time is 58 hours during the period the Shuttle launch rate is less than 50 per year. In the high launch-rate phase of the Shuttle Program, the maximum reaction time is 90 hours (reaction time is less than 58 hours, 60 percent of the time). The reaction times shown do not require a Shuttle vehicle dedicated to a Space Station rescue mission, nor do the attainment of these reaction times create a significant impact on the Shuttle prelaunch operations.

5.1.3 Interface Requirements

This section contains a brief summary of Space Station design requirements which arise as a result of operations with the Space Shuttle.

5.1.3.1 Payload Launch Weight

Maximum weight of Space Station modules was directed by NASA as follows: "The design-to-weight of Shuttle-transported modules shall not exceed 20,000 lb." This guideline was interpreted by NASA to apply to descent missions as well as ascent missions.

5.1.3.2 Payload Size

Maximum size of Space Station modules was directed by NASA as follows: "The maximum external dimensions of the modules shall be 14 ft in diameter and 58 ft in length. Mechanisms that are external but attached to the module,

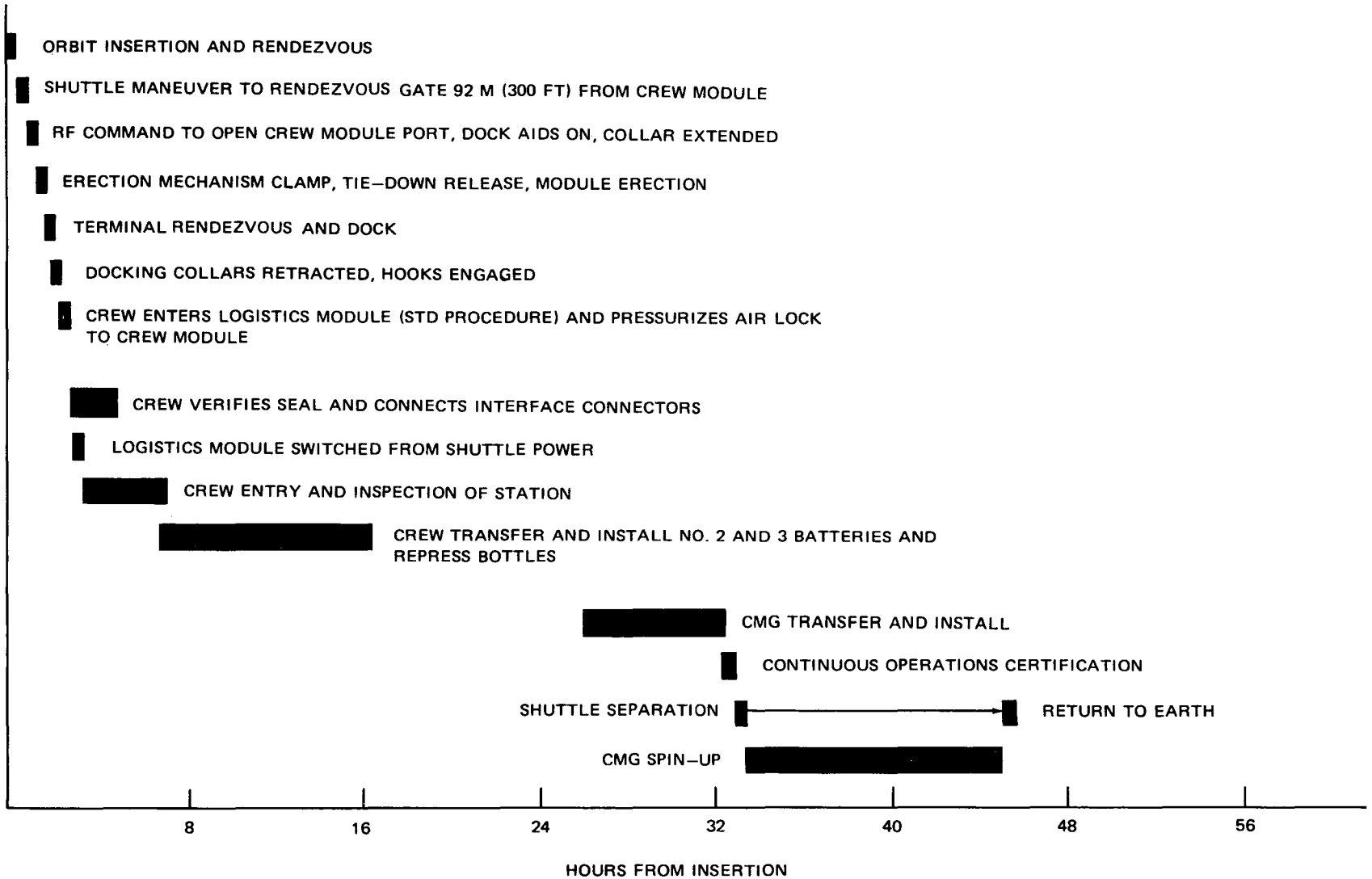


Figure 5–10. Final Manning Operations - - First Logistics Module

Table 5-1

SHUTTLE RESCUE CAPABILITY
(WORST CASE)

| | Low and Medium Launch Rate (<50/hr) (hr) | High Launch Rate (75/hr) (hr) |
|---|---|---|
| Launch preparation | 24 | 56 |
| Ground hold for window | 15 | 15 |
| Rendezvous | 16 | 16 |
| Rescue operations | 3 | 3 |
| Total | 58 | 90 |

NOTES:

(1) Four Orbiters and three Boosters available.

(2) Worst-case phasing.

(3) Maximum ground hold for launch opportunity.

(4) Vehicle maintained at T-24 Hrs status for low- and medium-rate case

such as handling rings, attachment for deployment, docking mechanisms, storage fittings, thrusters, etc., shall be contained at launch within an envelope 15 ft in diameter and 60 ft in length."

5.1.3.3 Center-of-Gravity Location

The allowable payload center-of-gravity envelope is based on the MDAC Phase B Shuttle Design. The allowable longitudinal center-of-gravity envelope is shown in figure 5-11. Lateral and vertical center-of-gravity axis limits are $\pm 0.30$ m (12 in.).

5.1.3.4 Load Factors

Design load factors are listed in Table 5-2.

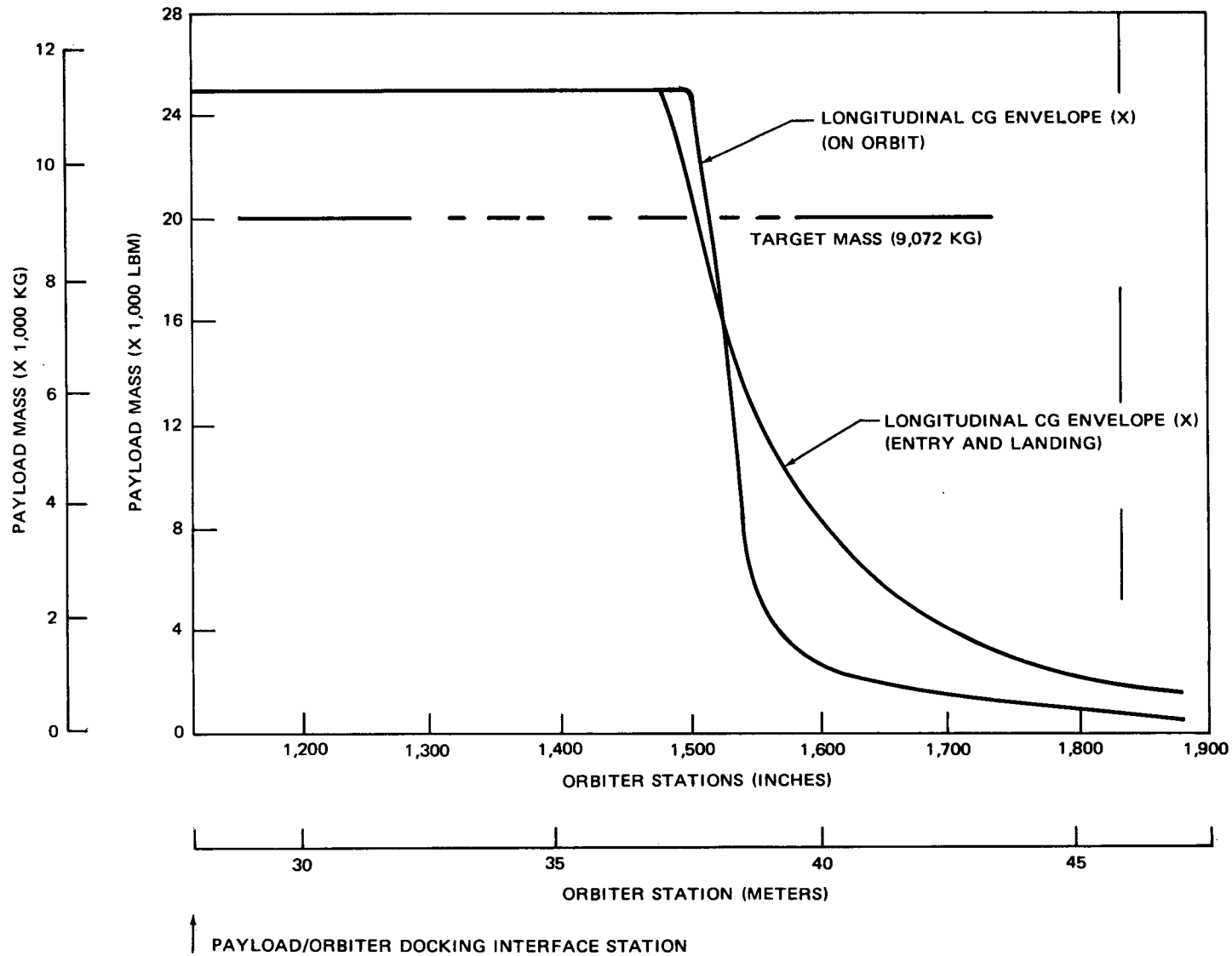


**Figure 5–11. Longitudinal cg Limitation**

Table 5-2

LOAD FACTORS*

| | Axial ($n_x$) | Lateral ($\pm n_y$) | Vertical ($n_z$) |
|---|---|---|---|
| Launch | 1.5 | 0.5 | 0.5 |
| High Q | 1.9 | 1.0 | ±1.0 |
| End Boost (Booster) | 3.3 | 0.6 | -0.6 |
| End Boost (Orbiter) | 3.3 | 0.5 | -0.5 |
| Entry | -0.5 | 1.0 | -2.0 |
| Flyback | -0.5 | 1.0 | +1.0 |
| | | | -2.5 |
| Landing | -1.3 | 0.5 | -2.7 |
| Emergency Landing | -8.0 | 1.5 | -4.5 |
| | +1.5 | | +2.0 |

*Load factors are in the direction of the acceleration ($n_x$ positive forward; $n_z$ positive down), the load factors for each condition can act simultaneously.

5.1.3.5 Orbiter Support Functions

The design of Space Station and Logistics Modules is based on using selected services from the Shuttle during buildup operations and logistics missions. These services include electrical power; limited use of the Orbiter caution, warning, and onboard checkout capability; limited use of Orbiter data management system for module command and control functions; and a supply of conditioned air.

5.1.4 GSS Considerations

The primary difference between ISS and GSS operations is that 6 crewmen are transported in a Crew/Cargo Module for GSS rathar than 2 crewmen in the Orbiter crew cabin for ISS. However, docking of the Crew/Cargo Module to the Station is performed in the same manner as docking of the Logistics

Module. Docked operations in the GSS phase differ from ISS in that attitude control of the Station/Orbiter cluster is performed by the Station rather than the Orbiter.

## 5.2 LOGISTICS MODULE

A summary of the Logistics Module concept, its operation, and interfaces with the Station is provided in this subsection. More complete description of the Logistics Module design and operation is presented in SE-06.

### 5.2.1 Vehicle Description

The Logistics Module is 4.3 m (14 ft) in diameter and 8.5 m (28-ft) long and incorporates a pressurized and unpressurized compartment as shown in Figure 5-12. The interior of the pressurized compartment is arranged into three basic areas: (1) special-cargo area, (2) palletized-cargo area, and (3) liquid/gas cargo area. The special-cargo area is sized to accept items such as CMG's, food freezer, trash compactor, and experiment items. The palletized area is configured to support 0.61 m × 0.61 m (2 by 2 ft) carry-on containers. The unpressurized compartment houses the propellant ($N_2H_4$) tankage and high-pressure gaseous nitrogen tanks. A two-man EVA airlock is provided from the pressurized compartment to the Orbiter interface. The airlock also provides for crew egress/ingress from Orbiter to Logistics Module.

No active subsystems are incorporated to support the Logistics Module activity; all active subsystem requirements are supplied by the Orbiter or Space Station.

Structural design of the Logistics Module is highly common with the design of Space Station modules. Common elements include the neuter docking mechanism, conical sections, and cylindrical pressure shell/insulation/meteoroid bumper assembly. Items peculiar to the design of this module are the end dome of the pressurized compartment and crew transfer tunnel. The present design of the Logistics Module does not incorporate a radiator assembly for supplemental heat rejection since adequate rejection capability is available from the radiators on the Station modules. The Logistics Module could provide additional heat rejection if required, however, with minimal impact on its design.

Page intentionally left blank

Table 5-3 is a weight summary for the Logistics Module. Fully loaded, the module may weigh up to 9,072 kg (20,000 lb). Empty weight is 3,011 kg (6,638 lb).

A Logistics Module outfitted for a rescue mission would include seats, interior lighting, communications, and status displays. Weight of these provisions is not critical since, including the weight of six men and their provisions, the total module weight is well within 9,072 kg (20,000 lb).

### 5.2.2 Vehicle Operation

The Logistics Module provides a major supplement to the Space Station on-orbit cluster. This added capability is provided because the Logistics Module remains attached to the Station during resupply intervals. It, therefore, provides for (1) storage of consumables (such as food, $N_2H_4$ and $GN_2$); (2) storage of return cargo (such as wastes and experiment hard copy data); and (3) storage of equipment (such as CMG's), which is carried onboard and installed to complete Space Station buildup. The storage volume provided in the Logistics Module minimizes the storage space required in Station modules. In addition, it provides the capability for contingency uses. For example, the Logistics Module provides an additional refuge compartment and extra crew accommodations space such as for isolation of a crewman. A further capability of the Logistics Module is support of EVA operations. The tunnel provided at the outboard end of the module for Shuttle/Station crew transfer serves as an airlock for use in EVA.

Figure 5-13 shows the Logistics Module in perspective and indicates the cargo storage concept and the transfer of a large item of cargo. Routine items of cargo are stored in standardized modules and submodules which are moved into the Station on demand or alternatively a crewman may retrieve a particular item from the module in-situ. Transfer of large items of cargo is accomplished by the crew with the assistance of a cable/brake device which is temporarily installed for that purpose. Cables are attached to eyebolts strategically located throughout the vehicle. The package is tethered to the guide cable by a spring-loaded trigger brake. When the operator releases the brake, the package is guided along the cable. By the operator releasing the brake handle, the brake engages automatically, and the package is restrained.

Table 5-3

LOGISTIC MODULE MASS SUMMARY

| Code | Description | Mass kg | Mass lb |
|---|---|---|---|
| 02.00 | Structure | 1,200 | 2,647 |
| 02.10 | Unpressurized Compartment | 0 | 0 |
| 02.11 | Pressurized Compartment | 1,183 | 2,609 |
| 02.15 | Finish, Seals, and Spares | 17 | 38 |
| 03.00 | Meteoroid and Thermal Protection | 501 | 1,104 |
| 03.02 | Passive Thermal Protection | 155 | 342 |
| 03.04 | Meteoroid Protection | 346 | 762 |
| 04.00 | Docking Provisions | 279 | 616 |
| 04.05 | Docking Structure | 279 | 616 |
| 06.00 | Propulsion | 72 | 158 |
| 06.07 | Fuel Container | 14 | 30 |
| 06.09 | Pressurization and Control | 23 | 50 |
| 06.10 | Fuel Distribution and Control | 6 | 13 |
| 06.14 | Umbilical | 14 | 30 |
| 06.15 | Support Structure | 15 | 35 |
| 08.00 | Power Conditioning and Distribution | 35 | 77 |
| 10.00 | Electronics | 207 | 456 |
| 10.01 | Guidance and Control | 3 | 7 |
| 10.02 | Onboard Checkout | 103 | 227 |
| 10.03 | Data Management | 28 | 61 |
| 10.06 | Communication | 29 | 64 |
| 10.15 | Displays and Controls | 44 | 97 |
| 11.00 | Wiring | 75 | 165 |
| 12.00 | Atmosphere and Thermal Control | 336 | 740 |
| 12.02 | Atmosphere Control and Supply | 336 | 740 |
| 14.00 | Crew Life Support and Interiors | 197 | 435 |
| 14.01 | Hand Rails and Restraints | 31 | 69 |
| 14.03 | Cargo Handling | 23 | 51 |
| 14.04 | Interior Furnishings | 143 | 315 |
| 21.00 | Residuals | 109 | 240 |
| 21.13 | Other Residuals | 109 | 240 |
| | Total | 3,011 | 6,638 |

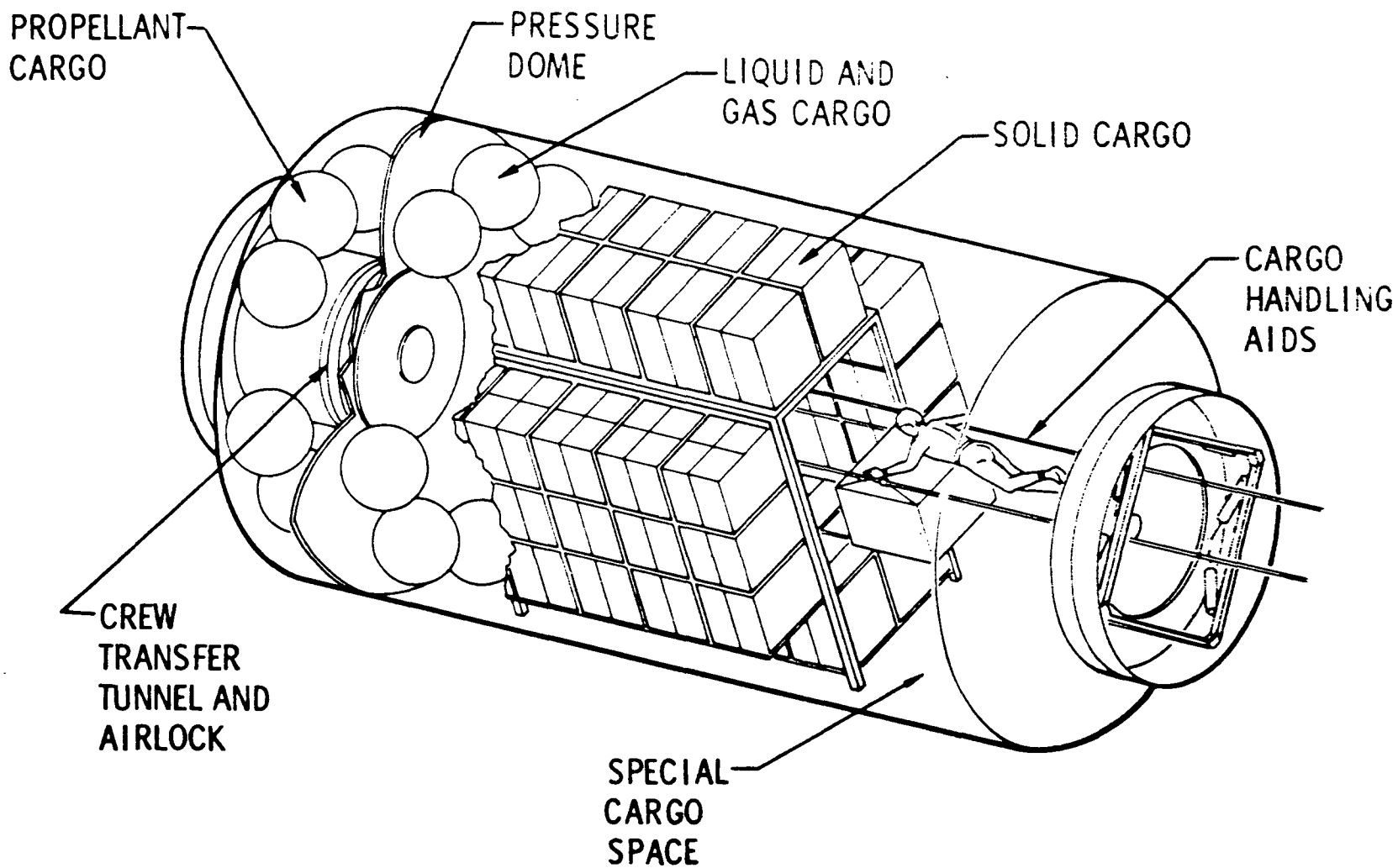


Figure 5–13. Logistics Module

Rescue of the 6-man ISS crew is performed using the Logistics Module. To affect a crew rescue, a Shuttle is launched with a Logistics Module which has been outfitted with the necessary systems and provisions to support six men for a descent mission. The maximum crew occupancy time of the Logistics Module in a descent mission is approximately 26 hours, not considering the reduction due to cross-ranging and for return to KSC. (One of 15 alternate sites could be reached within approximately four hours.)

### 5.2.3 Interface Requirements

Interfaces between the Space Station modules and the Logistics Module are of two types: (1) those required for support of the Logistics Module on-orbit and (2) those required to transfer consumables from the Logistics Module to the Station. These interfaces are summarized as follows: (1) 1/2-in. $O_2$ line, (2) 1/2-in. $N_2$ line, (3) 6-in. air supply/return lines, (4) 3/8-in. $GN_2$ line, (5) 3/8-in. $N_2H_4$ line, and interface connections for (6) caution and warning, (7) data bus, and (8) DC power.

### 5.2.4 GSS Considerations

The Growth Space Station is logistically supported with a Crew/Cargo Module (CCM). The physical and operational interfaces with the Space Station, however, are the same as with the Logistics Module; the CCM configuration is the same as the LM with the addition of crew provisions and the docking and on-orbit operations of this module are the same as for the Logistics Module.

## 5.3 RESEARCH AND APPLICATIONS MODULES

### 5.3.1 Introduction

The Modular Space Station study work statement, unlike the 33-ft-diameter Space Station Work Statement, did not provide for a conceptual definition of experiment modules or Research and Applications Modules (RAMS) as they are currently designated. However, to establish requirements adequately for study design, and operational and programmatic tasks, it was necessary to undertake a limited RAM definition effort. This work, done by Martin Marietta Corporation, satisfied the study need to insure credibility of derived Modular Space Station requirements and preliminary design conclusions. This section will describe the modules selected to accommodate those "Blue

Book" FPE's that have been assigned to RAM's as a result of the mode-of-accommodation analysis performed during the Modular Space Station study. A total of 23 experiment groups require modules. These modules form the base for the data in this section. Emphasis is placed on the interfaces between these modules and the Space Station.

The initial intent was to use module designs from the 33-ft. Space Station study with only minor modifications. Evaluation of new data in the 1971 Blue Book experiment descriptions, coupled with the decrease in Shuttle "design-to" launch weight of 9,072 kg (20,000 lb) made use of previous module designs unrealistic. Eight new module configurations were evolved to meet the range of requirements of the "Blue Book" experiment groups.

### 5.3.2 Vehicle Descriptions

A review of the factors that determine the types of module required for each experiment group is needed to understand the resulting designs. There are four primary determining factors as noted in Table 5-4. The 50 FPE/Subgroups designations for the total Space Station Program are shown in Table 5-5 for convenient reference. The large astronomy telescopes, A-2, A-2A, and A-3AA, have attitude stability requirements in excess of that feasible using gimballed mounting to the station. Although the A-1 telescope requires only 1-sec/obs stability, it is too large for wide-angle gimbals. The large astronomy telescopes are also highly susceptible to contamination and on-orbit cleaning procedures cannot be predicted with confidence. Even the smaller grazing incidence X-Ray telescope in the A-5A group has significant cleaning problems. Accommodation in a Free-Flying Module, operating remote from the Space Station environment, is recommended. This mode is also needed for the guidance and control experiment T-4C that flies piggyback on the A-2 Module and for the fluid physics experiments that require long periods of linear acceleration.

Where experiments can operate attached to the Space Station, size is the primary driver in accommodation, particularly the size of the vacuum-viewing aperture. For purposes of this analysis, the attached modules are subdivided into two types: (1) Those that are dedicated to an entire experiment group including the Cosmic-Ray Physics Laboratory, total complement

Table 5-4

MODE OF ACCOMMODATION SUMMARY

| FPE or Subgroup | Allowable MOA | Primary Determining Factors: Attitude Stability | G-Level | Contamination | Size | Remarks |
|---|---|---|---|---|---|---|
| A-1 | FF | X | | X | X | |
| A-2 | FF | X | | X | X | |
| A-2A | FF | X | | X | X | FF - Free flyer |
| A-3AA | FF | X | | X | X | DM - Attached module dedicated to one experiment group |
| A-3CC | FF | X | | X | X | |
| A-4A | AM | | | Clean | X | AM - Attached module with approximately 1/2 volume as airlock accommodates more than one experiment group or required support equipment. |
| A-4B | AM | | | Clean | X | |
| A-4C | AM | | | Clean | X | |
| A-5A | FF | | | X | X | I - Integral to Station |
| A-5B | AM | | | | X | |
| A-6 | AM | | | Clean | X | |
| P-1A, B, C, D, E | I | | | Clean | | |
| P-2BB | AM | | | | X | |
| P-2A | I | | | | | |
| P-3 | DM | | | | X | |
| P-3C | I | | | | | |

Table 5-4

MODE OF ACCOMMODATION SUMMARY (Continued)

| FPE or Subgroup | Allowable MOA | Primary Determining Factors | | | | |
|---|---|---|---|---|---|---|
| | | Attitude Stability | G-Level | Contamination | Size | Remarks |
| P-4A, B, C | I | | | | | |
| ES-1 | DM | | | Clean | X | |
| ES-1AA | AM | | | Clean | X | |
| ES-1G | AM | | | Clean | X | |
| C/N-1, 1A, B | AM | | | | X | |
| MS-3A, B, C, D, E | I | | | | X | |
| T-1A, B | I | | | | | |
| T-2A, B, C, D, E | FF | | X | | | |
| T-3A | I | | | | | |
| T-3B | AM | | | | X | |
| T-4C | I/FF | (Partial) | | | | |
| T-4A, B | I | | | | | |
| T-5 | I | | | | | |
| LS-1A | I | | | | | |
| LS-1B, C, D | DM | | | | X | |

Table 5-5

FINAL FPE/SUBGROUP DESIGNATIONS

| | |
|---|---|
| A-1 | X-ray Stellar Astronomy |
| A-2 | Advanced Stellar Astronomy |
| A-2A | Intermediate Stellar Telescope |
| A-3AA | Advanced Solar Astronomy |
| A-3CC | ATM Follow-on |
| A-4A | 0.9M Narrow Field UV Telescope |
| A-4B | 0.3M Wide Field UV Telescope |
| A-4C | Small UV Survey Telescope |
| A-5A | X-ray Telescope |
| A-5B | Gamma Ray Telescope |
| A-6 | IR Telescope |
| P-1A | Atmospheric and Magneto Science |
| P-1B | Cometary Physics |
| P-1C | Meteoroid Science |
| P-1D | Thick Material Meteoroid Penetration |
| P-1E | Small Astronomy Telescopes |
| P-2A | Wake Measurements from Station and Booms |
| P-2BB | Wake, Plasma, Wave Particle, Electron Beam |
| P-3 | Cosmic Ray Physics Laboratory |
| P-3C | Plastic/Nuclear Emulsions |
| P-4A | Airlock and Boom Experiments |
| P-4B | Flame Chemistry and Laser Experiments |
| P-4C | Test Chamber Experiments |
| ES-1 | Earth Observation Facility |
| ES-1AA | Earth Observation Sequential |

Table 5-5

FINAL FPE/SUBGROUP DESIGNATIONS (Continued)

| | |
|---|---|
| ES-1G | Minimum Payload (CORE) |
| CN-1 | Communications/Navigations Facility |
| CN-1A | Communications/Navigations Subgrcup A |
| CN-1B | Communications/Navigations Subgroup B |
| MS-3A | Crystal Growth, Biological and Physical Processes |
| MS-3B | Crystal Growth from Vapor |
| MS-3C | Controlled Density Materials |
| MS-3D | Liquid and Glass Processing |
| MS-3E | Supercooling and Homogeneous Nucleation |
| T-1A | Contamination Experimental Package |
| T-1B | Contamination Monitor Package |
| T-2A | Long Term Cryo Storage |
| T-2BB | Short Term Cryos |
| T-3A | Astronaut Maneuver Unit |
| T-3B | Manned Work Platform |
| T-4A | Long Duration System Tests |
| T-4B | Medium Duration Tests |
| T-4C | Short Duration Tests |
| T-5A | Initial Flight Teleoperator |
| T-5B | Functional Teleoperator |
| T-5C | Ground Control Teleoperator |
| LS-1A | Minimal Medical Research Facility |
| LS-1B | Minimal Life Science Research Facility |
| LS-1C | Intermediate Life Science Research Facility |
| LS-1D | Dedicated Life Science Research Facility |

of Earth surveys instruments, and the all-up biolab; and (2) all other attached modules that are only partially filled by experiments which require vacuum viewing capability. For purposes of clarity, these two module types are referred to as "attached" RAM's throughout the study documentation. A concept was evolved with approximately half of the module volume depressurizable to house this group of experiments. These "airlock-modules" have either inward or outward opening doors depending on the viewing aperture requirements.

Procedures for cleaning or replacing contaminated optics appears feasible for the intermediate and small diameter telescopes or cameras as noted in Table 5-4.

Eight structural types were conceived to satisfy the range of requirements as previously noted. The distinguishing characteristics of these types will be discussed with reference to the representative line drawings shown in Figure 5-14. The experiment groups accommodated in each type are also noted.

5.3.2.1 Type 1 Module

Due to launch weight limitations on X-Ray Stellar Astronomy and Advanced And ATM Follow-On Solar Astronomy, only the module volume containing subsystems is pressurized for shirtsleeve access. The primary optics and experiment sensors are supported in an unpressured structural framework.

5.3.2.2 Type 2 Module

The 6,300 kg (13,800 lb) mass of the 3-meter Advanced Stellar Astronomy Telescope (exclusive of module and subsystems) eliminates use of any pressurizable volumes. This conclusion is a result of conformance to the Shuttle payload "design-to" weight limit of 9,072 kg (20,000 lb). Only if the module is launched in two sections could the advantages of pressurization be retained. The trade studies and designs to resolve this choice exceeded the scope of the present effort. Therefore, the solutions most closely aligned to our previous studies have been used.

Page intentionally left blank

PRECEDING PAGE BLANK NOT FILMED

5.3.2.3 Type 3 Module

The 2-Meter Intermediate Stellar Telescope is flown in a three-sectioned module. As a result of decreased experiment weight, the subsystems chamber remains continuously pressurized. The experiment sensor chamber can be pressurized for changing sensors and performing maintenance and depressurized for operation. Weight limitations still require the primary optics volume to remain unpressurizable.

5.3.2.4 Type 4 Module

The airlock module configuration accommodates by far the most experiments with the 12 groups noted in Figure 5-14 in the airlock volume plus appropriate manned support equipment in the pressurized volume. Primary variations within the Type 4 Module class are choice of inward-versus-outward opening hatches, position of the interior pressure bulkhead, and use of various gimbal/platform mechanisms.

5.3.2.5 Type 5 Module

Weight of the small X-Ray Telescope package allows the use of a fully pressurizable free-flyer design.

5.3.2.6 Type 6 Module

The all-up Dedicated Life Science Research Facility, builtup in three steps, and the Cosmic Ray Physics Laboratory are located in continuously-pressurized dedicated modules.

5.3.2.7 Type 7 Module

When the entire Earth Surveys experiment complement is simultaneously mounted on a large gimbal platform, a dedicated module with a depressurizable volume is required.

5.3.2.8 Type 8 Module

This free-flyer provides the long-term linear acceleration required for cryostorage experiments. The volume containing the experiments can be depressured if required for proper environment simulation.

### 5.3.3 RAM/Space Station Interfaces

Since the RAM design effort has been deemphasized in the current study, interfaces between the RAM, the Space Station, and the Shuttle will be discussed with only a summary of the experiment/RAM interfaces.

#### 5.3.3.1 Size

Module envelope dimensions are included on the Figure 5-14 line drawings. Note that only the largest telescopes use the 17.7 m (58 ft) Shuttle-cargo-bay capability. Other experiments allow design of shorter modules with lengths down to approximately 11.6 m (38 ft). The maximum diameter is 4.3 m (14 ft) for all but module Types 1 and 3 which are 4.06 m (13.3 ft) 3.26 m (10.7 ft), respectively.

#### 5.3.3.2 Weight

The loaded-module launch weight varies within each structural type, and therefore, must be examined for each of the 23 modules. Table 5-6 shows that the 9,072 kg (20,000-lb) module "design-to" weight limit for modules is exceeded in two cases, even after off-loading of easily removable subsystems and initial logistics. Alternate solutions satisfying the "design-to" weight constraint may be available but were beyond the scope of this effort.

The 9,280 kg (20,420-lb) weight of the A-1 module could be reduced to almost 9,072 kg (20,000 lb) if the control moment gyros (CMGs) are installed in orbit. The 10,900 kg (24,000-lb) launch weight of the A-2 module cannot be substantially reduced without a radically different design approach as previously noted.

The eight modules weighing exactly 9,072 kg (20,000 lb) all have some carry-on logistics required to achieve their operational weight. The P-3, Cosmic Ray Physics Laboratory has a 12,200 kg (26,800 lb) excess weight composed primarily of a segmented total absorption device (CsI blocks) that can be easily assembled in orbit after delivery on several logistics flights. The T-2A and T-2BB cryogenic fluid experiments must be loaded in-orbit to achieve an acceptable launch weight. All other carry-on is below 1,135 kg (2,500 lb).

The cryogenic fluid experiments have the largest logistics resupply requirements since the working fluids must be replaced for subsequent runs. The other logistics resupply drivers include subsatellite fuel for the P-2BB subsatellite, ECLS expendables for the T-3B manned work platform, and photographic film for ES-1.

5.3.3.3 Depressurization/Pumpdown

Module sections that are pressurized for astronaut access to equipment will only be depressurized if required by the experiments. The sections that are depressurizable will be pumped down to 3.45 kn/$m^2$ (0.5 psia) prior to venting to vacuum to conserve the gas and limit contamination of other vacuum viewing experiments. Table 5-6 shows the applicable pumpdown volume requirements. The Space Station supplies the pumping system and 1.2 $m^3$ (42 $ft^3$), 2070 kn/$m^2$ (300 psi) storage tanks for up to 23.2 $m^3$ (820 $ft^3$) of gas. Additional storage volumes required for module Types 4, 5, and 7 are supplied by similar auxiliary tanks located on the modules. With this system, modules can be pumped down in 7 to 24 hours depending on the volume at a rate of approximately 4.8 $m^3$/hr (170 $ft^3$/hr).

5.3.3.4 Electrical Power

All electrical power is supplied from the Station when modules are docked. The Dedicated Life Sciences Module requires the most power with a 6.6 kw average load. Earth observations experiments also have large power requirements, partially due to the data processing equipment included as part of the experiment hardware even though located in the GPL. The driver for the baseline experiment program (534-G) is the sequentially-operated ES-1AA group with a 4.6 kw average power and a short-duration peak of 6.4 kw. Most of the modules require approximately 1 to 2 kw average including control and display and pumpdown power.

The power for Free-Flying Modules, when operating detached from the Station, is supplied by a common subsystem consisting of 56 $m^2$ (600 $ft^2$) roll-up solar array and eight modular charger/regulator/nickel cadmium battery units which are used for power conditioning. The array has a two-axis gimbal for sun orientation.

FOLDOUT FRAME 1

PRECEDING PAGE BLANK NOT FILMED

FOLDOUT FRAME 2

Table 5-6

EXPERIMENT MODULE EXPERIMENTS

| Module Type | Experiment Group | Launch, kg (lb) | Carry-on, kg (lb) | Logistics Resupply, kg (lb) | Depressurizable Pumpdown Volume, $m^3$ ($ft^3$) | Electrical Power: Station Power[1] (kw) | Electrical Power: Free-Flyer Power[2] (kw) |
|---|---|---|---|---|---|---|---|
| 1 | A-1 | 9,270 (20,420) | 518 (1,140) | 291 (640) | None | 0.10 | 1.42 |
| | A-3AA | 9,072 (20,000) | 14 (30) | 599 (1,320) | None | 0.11 | 1.49 |
| | A-3CC | 6,483 (14,280) | ---- | 163 (360) | None | 0.10 | 1.42 |
| 2 | A-2 | 10,896 (24,000) | 463 (1,020) | 359 (790) | None | 0.12 | 1.10 |
| 3 | A-2A | 8,077 (17,790) | ---- | 295 (650) | 33 (1,163) | 0.53 | 1.51 |
| 4 | A-4A | 7,105 (15,650) | ---- | 36 (80) | 68 (2,407) | 2.22 | NA |
| | A-4B | 6,846 (15,080) | ---- | 45 (100) | 68 (2,407) | 2.28 | |
| | A-4C | 6,687 (14,730) | ---- | 45 (100) | 68 (2,407) | 1.95 | |
| | A-5B | 8,303 (18,290) | ---- | 32 (70) | 68 (2,407) | 2.20 | |
| | A-6 | 8,762 (19,300) | ---- | 268 (590) | 68 (2,407) | 2.31 | |
| | P-2BB | 9,072 (20,000) | 586 (1,290) | 1,603 (3,530) | 68 (2,407) | 2.02 | |
| | ES-1AA | 8,917 (19,640) | ---- | 817 (1,800) | 68 (2,407) | 4.57 | |
| | ES-1G | 8,662 (19,080) | ---- | 790 (1,740) | 68 (2,407) | 3.90 | |
| | CN-1 | 6,805 (14,990) | ---- | 150 (330) | 68 (2,407) | 2.14 | |
| | CN-1A | 6,633 (14,610) | ---- | 91 (200) | 68 (2,407) | 2.05 | |
| | CN-1B | 6,678 (14,710) | ---- | 113 (250) | 68 (2,407) | 2.07 | |
| | T-3B | 9,072 (20,000) | 195 (430) | 1,462 (3,220) | 68 (2,407) | 1.79 | |
| 5 | A-5A | 8,930 (19,670) | ---- | 331 (730) | 115 (4,078) | 1.56 | 1.29 |
| 6 | P-3 | 9,072 (20,000) | 12,163 (26,790) | 781 (1,720)[3] | None | 1.62 | NA |
| | LS-1D | 9,072 (20,000) | 232 (510) | 545 (1,200) | None | 6.61 | |
| 7 | ES-1 | 9,072 (20,000) | 1,094 (2,410) | 1,375 (3,030) | 82 (3,102) | 5.79 | |
| 8 | T-2A | 9,072 (20,000) | 3,500 (7,710) | 4,354 (9,590) | None[4] | 0.10 | 1.33 |
| | T-2BB | 9,072 (20,000) | 4,372 (9,630) | 3,223 (7,100) | None | 0.15 | 1.41 |

Notes:

(1) Maximum daily average electrical power delivered to module from Station, plus control and display and pumpdown power supporting module operation. Power for docked or attached modes only.
(2) Maximum daily average power supplied by free-flying module power subsystem.
(3) Average includes yearly replacement of superconducting magnet/dewar.
(4) Assumes that experiments normally operate in pressurized chamber, but could be depressurized if required for some particular experiments.

PRECEDING PAGE BLANK NOT FILMED

5.3.3.5 Data Management

Data produced by experiments can be summarized in three categories: (1) digital, (2) analog, and (3) film. Table 5-7 shows daily average values for worst-case conditions. The solar astronomy experiments produce the greatest volume of digital data on "flare-days" as shown, but an order of magnitude reduction is appropriate for quiescent days. The Earth Surveys experiments show the most digital data in continuous day-by-day operation. The 1.35 to 1.85 by $10^{11}$ bpd rate is primarily generated by the IR-scanner. If these data are extracted from the scanner in analog form and multiplexed, the resulting signal could be adequately handled by one of the 2.9 mHz video channels used in several of the other experiments.

Most of the analog/video data is used for onboard monitoring and control of experiments as well as reference data for subsequent data analysis. Where two different bandwidths are shown, they are not additive since sequential operation is possible. Therefore, the maximum bandwidth required is 5.8 mHz.

A large variety of film formats are required. The T-3B and T-2BB film is for motion pictures for recording manned work platform operations and fluid motion.

The large number of frames per day for earth surveys is due primarily to the equivalent number of frames of film for the side-looking array radar (SLAR). The SLAR is operated in an R&D mode for a few days per 90-day period. A rate of 432 frames/day is appropriate when the SLAR doesn't operate.

During attached mode operation, module data is transferred to the Space Station data bus through bulkhead connectors in the docking interface. The number of cables is minimized, using both time and frequency division multiplexing techniques. The primary signal processing equipment on the modules include signal conditioners, remote acquisition units, data programmer, modulator/demodulator system, and duplex intercom system. All photographic film and other hard-copy processing is accomplished using specialized equipment in the GPL. Shielded vaults for long-term film storage are also located in the GPL.

Free-Flying Modules require additional equipment to allow data transmission to the Station at a range of up to 1850 km (1000 nmi). Redundant TWT transmitters operating at Ku-band are used with both omni and 1.22 m (4-ft) diameter directional antennas. Other major elements include redundant exciters, power amplifiers, command receivers, command/control/decoder/distributors, and multiplexers.

5.3.3.6 Control, Display, and Checkout

The primary control and display for attached modules will be within the respective modules with only caution, warning, and secondary control in the GPL at the experiment control console. The primary monitor and control console for the Free-Flying Modules is also located in the GPL. When docked, the local control and display for Free-Flying Modules is provided by a portable unit containing a computer addressable keyboard, CRT display, and associated controls and electronics. This unit interfaces with the data bus.

Onboard checkout is accomplished through the Data Management System. To a large extent, routine stimuli generators and response analysis will be computer controlled for automated monitoring. Many of the modules have as many as 2000 to 3000 checkout points to accomplish this. The crew will have capability to override these operations for flexible adaptation to specialized conditions.

5.3.3.7 Guidance and Control

Attitude reference data for gimbal/platform pointing on attached modules is supplied from the Space Station. After platform extension from the module, near hemispheric coverage is possible. Table 5-7 shows that the most accurate gimbal stability requirements for attached module operation is 0.5 to 1 sec/observation needed for the A-4, A-5 and A-6 instruments. The platform stability for Earth Surveys, Communication/Navigation, and Plasma Physics is much less stringent.

Optical contamination and attitude stability are the primary reasons for Free-Flying Modules as previously noted. The most severe stability requirement is 0.005 sec/observation for the 30 m UV telescope. Gimballed star trackers

Table 5-7

EXPERIMENT MODULE REQUIREMENTS

| Module Type | Experiment Group | Data Management | | | | Attitude | | Operating Temperature (° C) |
|---|---|---|---|---|---|---|---|---|
| | | Digital (Bits/Day) | Analog/Video | | Film (Frames/Day) | Source Direction | Attitude Stability (sec/obs) | |
| | | | Bandwidth (MHz) | Duty Cycle (%) | | | | |
| 1 | A-1 | $1.45 \times 10^{9}$ | | | | Zenith Hemisphere | 1 | -1 to 1 |
| | A-3AA | $1.63 \times 10^{11}$ | 3.9 and 2.9 | 1 and 19 | | Zenith Hemisphere | 0.01 | 17 to 21 |
| | A-3CC | $4.54 \times 10^{11}$ | 2.9 and 3.3 | 8 and 55 | | Zenith Hemisphere | 2.5 | 20 to 22 |
| 2 | A-2 | $4.74 \times 10^{8}$ | | | | Zenith Hemisphere | 0.005 | 20 to 22 |
| 3 | A-2A | $3.75 \times 10^{8}$ | | | | Zenith Hemisphere | 0.006 | 20 to 22 |
| 4 | A-4A | $6.7 \times 10^{8}$ | 0.4 | 7 | 96 | Zenith Hemisphere | 1 | 26 to 27 |
| | A-4B | $1.1 \times 10^{9}$ | 0.4 | 4 | 5 | Zenith Hemisphere | 0.5 | 26 to 27 |
| | A-4C | $4.3 \times 10^{7}$ | 2.9 | 4 | 96 | Zenith Hemisphere | 36 | 16 to 17 |
| | A-5B | $1.31 \times 10^{10}$ | | | | Zenith Hemisphere | 1 | 0 to 20 |
| | A-6 | $4.6 \times 10^{8}$ | 0.35 | 11 | | Zenith Hemisphere | 1 | 25 to 27 |
| | P-2BB | $2.1 \times 10^{9}$ | 1.6 | 33 | 48 | Nadir Hemisphere | 1800 | 10 to 40 |
| | ES-1AA | $1.85 \times 10^{11}$ | | | 4,000 | Nadir Hemisphere | 180 sec/min | 7 to 27 |
| | ES-1G | $1.35 \times 10^{11}$ | | | 3,000 | Nadir Hemisphere | 180 sec/min | 7 to 27 |
| | CN-1 | $3.6 \times 10^{9}$ | | | 30 | Nadir Hemisphere | 36 | 0 to 40 |
| | CN-1A | $3.3 \times 10^{6}$ | | | | Nadir Hemisphere | 36 | 0 to 40 |
| | CN-1B | $3.3 \times 10^{6}$ | | | | Nadir Hemisphere | 36 | 0 to 40 |
| | T-3B | $8.64 \times 10^{7}$ | 3 | 33 | 6,480 | NA | NA | -3 to 47 |
| 5 | A-5A | $1.33 \times 10^{10}$ | | | | Zenith Hemisphere | 1 | -1 to 1 |
| 6 | P-3 | $2.6 \times 10^{9}$ | | | 2 Emulsion sheets/mo | Maximize Zenith Hemisphere | NA | 10 to 25 |
| | LS-1D | $5.2 \times 10^{7}$ | 4 | 9 | | NA | NA | 23 to 27 |
| 7 | ES-1 | $1.85 \times 10^{11}$ | | | 4,000 | Nadir Hemisphere | 180 sec/min | 7 to 27 |
| 8 | T-2A | $8 \times 10^{7}$ | 5.8 | 8 | | NA | NA | Various |
| | T-2BB | $1.7 \times 10^{8}$ | 5.8 and 2.9 | 4 and 2 | 6,800 | NA | NA | Various |

provide an offset pointing reference and the fine reference is extracted from the telescope field-of-view. A coarse stability limit of one second is obtained using four 40 kg (87-lb) control moment gyros (CMGs) and the 0.005-sec fine control by articulating the secondary mirror. CMG desaturation is accomplished using electromagnetic torquers reacting against the geomagnetic field. Coarse inertial reference data is available from a three-axes strapdown rate-gyro system. A sun sensor is also available for a backup solar panel orientation reference.

The wide spread in attitude stability requirement, noted in Table 5-7 for the Advanced and ATM Follow-on Astronomy is due to difference in the point at which the stability is specified. The A-3AA photoheliograph stability is shown while the stability of the module/gimbal interface is indicated for A-3CC.

5.3.3.8 Propulsion

There is no propulsion system on attached modules since they are docked to the Station using the Shuttle. The propulsion system for free-flyers uses monopropellant hydrazine. Engines with 50-lb thrust are arranged in quads located at 90-degree intervals around the module periphery. Propellant is supplied from a nitrogen pressurized, blowdown-positive expulsion system using bellows-type tanks. These tanks are filled from the Station through a 0.95 cm (3/8-in.) coupling at the docking interface.

5.3.3.9 Atmosphere Control

Atmosphere for shirtsleeve operations in attached modules or docked free-flyers is supplied from the Space Station and returned through 20.3 cm (8-in.) ducts. Filters to increase the cleanliness to Class 10,000 are required for most of the astronomy telescopes located in pressurizable chambers. As previously noted, pumpdown during depressurization is accomplished using the Pump/Reservoir system on the Station with additional reservoir tanks on the modules as needed.

The atmosphere within the life sciences cages and glove boxes is isolated from the Space Station atmosphere using a separate ECLS System. The pressure differential between the spark chamber gas and the Cosmic Ray Physics Laboratory environment must be minimized due to the thin-wall spark-chamber

design. The nominal 101 kn/$m^2$ (14.7 psia) pressure falls within the spark chamber operating range.

5.3.3.10 Thermal Control

All of the high-resolution and some of the medium-resolution astronomy telescopes have stringent temperature stability requirements, typically restricted to $\pm 1^{\circ}K$ ($\pm 1^{\circ}C$) about a nominal value set somewhere between $273.15^{\circ}K$ ($0^{\circ}C$) and $298.15^{\circ}K$ ($25^{\circ}C$) depending on the specific instrument. None of the other experiments have thermal requirements approaching these narrow limits. Heat loads are not transmitted across the Station/Module interface. Therefore, attached modules and docked free-flyers independently reject their heat loads. The modules are thermally isolated using high-performance multilayer insulation.

The module Thermal Control Systems use two circulating fluid loops coupled by a heat exchanger. One loop flows through the space radiator in the module exterior skin and the other loop provides the temperature control of module and experiment subsystems. Fluid flow is regulated using modulating valves and control electronics. The radiator loop uses Freon as a working fluid with a $135.15^{\circ}K$ ($-138^{\circ}C$) freezing point. A bypass flow contingency heater is available if the temperature approaches this limit. Water is used in the cold-plate loop to ensure a nontoxic condition if there is a leak.

5.3.4 Module Operational Characteristics

This subsection describes the primary on-orbit operational characteristics of modules. Many of these characteristics have been covered in the previous section and are also summarized here.

5.3.4.1 Delivery

All RAM's are delivered to the Space Station by the Shuttle. Ten of the 23 modules must have expendables and/or subsystems off-loaded to meet Shuttle launch-weight restrictions. The off-loaded items are launched on a Shuttle logistics flight and installed on-orbit.

5.3.4.2 Docking

Hard docking of RAM's to the Space Station is accomplished by the Shuttle with the module erected from the cargo bay. Subsequent docking of Free-Flying Modules is accomplished using the module subsystems. Attached modules are removed only by the Shuttle.

5.3.4.3 Access

The design concepts for the level-of-module definition attempted results in a requirement for EVA/IVA operations to service the A-1 X-Ray Telescope and the A-3AA and A-3CC Solar Experiments, both the A-2 Telescope and associated subsystems, only the primary optics of the A-2A Telescope, and for installation of the superconducting magnet and its dewar in the side of the P-3 module. With these exceptions, shirtsleeve access is available to all experiment hardware and subsystems that are not external to the module.

5.3.4.4 Orientation

Attached modules containing experiments that point at targets must have airlocks or depressurizable compartments oriented in the hemispheres noted in Table 5-7. Experiments deployed through these airlocks have gimbal/platforms with near-hemispheric coverage.

5.3.4.5 Contamination

Realtime contamination monitors will be available to initiate countermeasures required to limit optical degradation of susceptable experiments. To the extent feasible, contaminant dumps will be eliminated. But, where a transient source still remains, such as RCS firings, electrical signals will be provided to allow actuation of covers, etc. Of the eight Free-Flying Modules required, contamination was a primary determining factor in six.

5.3.4.6 Depressurization

With the exception of small scientific airlocks, the air in all sections is pumped down to 3.45 kn/m$^2$ (0.5 psia) prior to venting and stored at 2,070 kn/m$^2$ (300 psia). The compressor and limited storage capability is located in the Space Station with auxiliary tanks on the modules as required. Periods of up to 24 hours are required to pumpdown within acceptable electrical power limits.

5.3.4.7 Free-Flyer Stationkeeping

A 1850 km (1000-nmi) stationkeeping loop is typical of that employed for astronomy free-flyers. The module is transferred to a point a mile above the Station and the orbit circularized. With this higher orbit and differential drag, the module travels slower than the Station and begins to lose altitude. When the module falls below the Station altitude it begins to catch up with the Station but still loses altitude. At a predetermined point, the experiment is shutdown, the solar arrays retracted and the module transferred back to a higher orbit. Nominally, at the end of 60 days the module is returned to the Station for maintenance, film change, and resupply.

5.3.4.8 Control

The free-flyer operations and data are controlled and monitored from the GPL. Primary control of the attached module experiments is within the respective modules with critical function, caution, and warning monitoring at the experiment control console in the GPL. Extensive use of computerized onboard checkout is anticipated.

5.3.4.9 Operational Timeline

A typical simplified operational timeline is shown in Figure 5-15 for the Cosmic Ray Physics Laboratory operation. The crew time and skill requirements are also indicated.

5.3.5 Growth Space Station Considerations.

The primary changes in the GSS over the ISS that affect the RAM program are: (1) a large increase in the number of modules, and (2) the control of Free-Flying Modules. Figure 5-16 shows the module types and schedule for the 534-G baseline experiment program. The maximum number of attached modules during the ISS phase is four, increasing up to eight in the GSS phase. No free-flyers are flown until well into the GSS phase and then only three. Free-flyers will share a single docking port. Sharing is considered FEASIBLE because the module operates on a cycle in which it is attached to the Station for 5 days and is free-flying for 60 days.

In terms of individual experiment requirements, the astronomy experiments that are the most susceptible to contamination by the near spacecraft

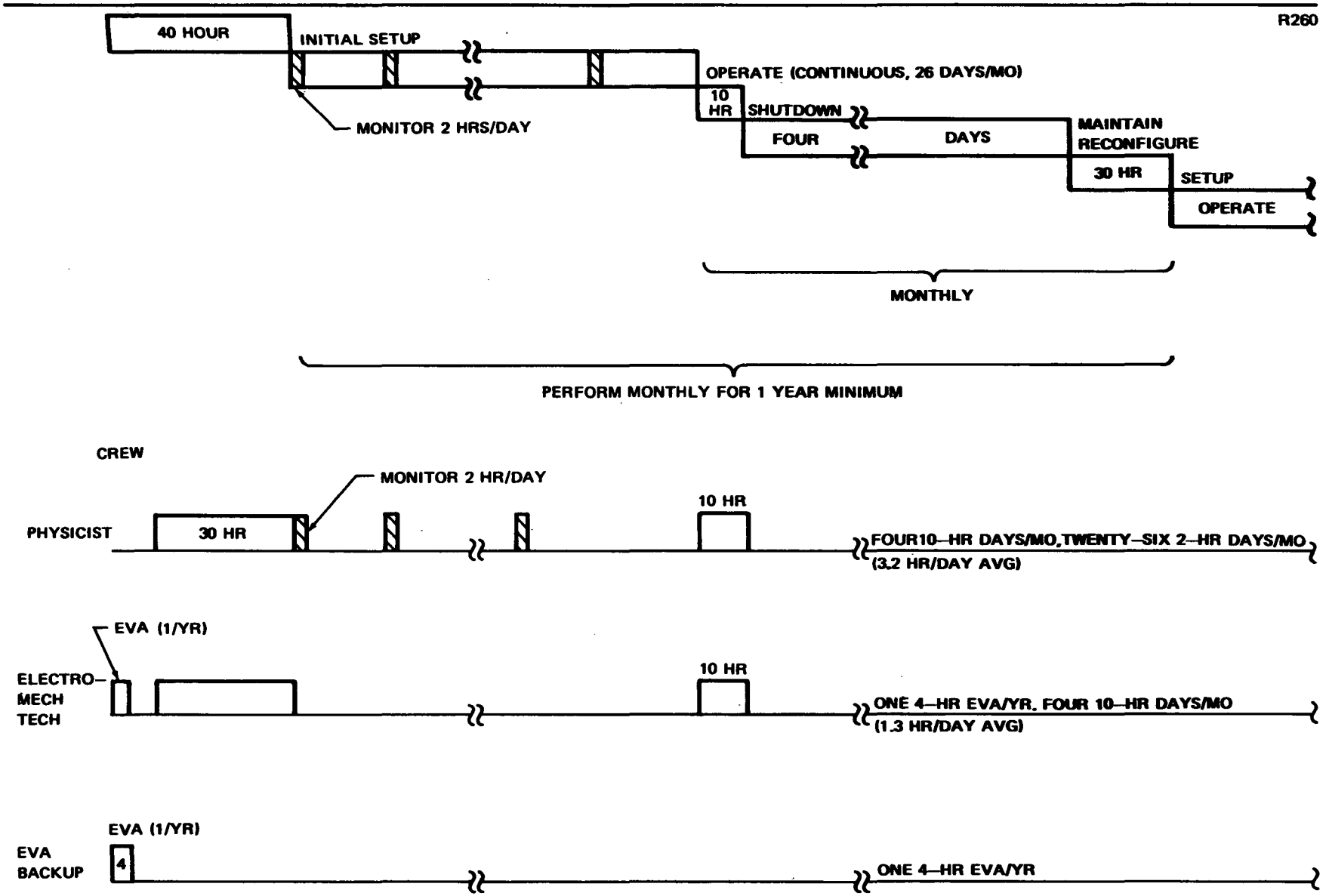


Figure 5–15. Operational Timeline for Cosmic Ray Physics Lab

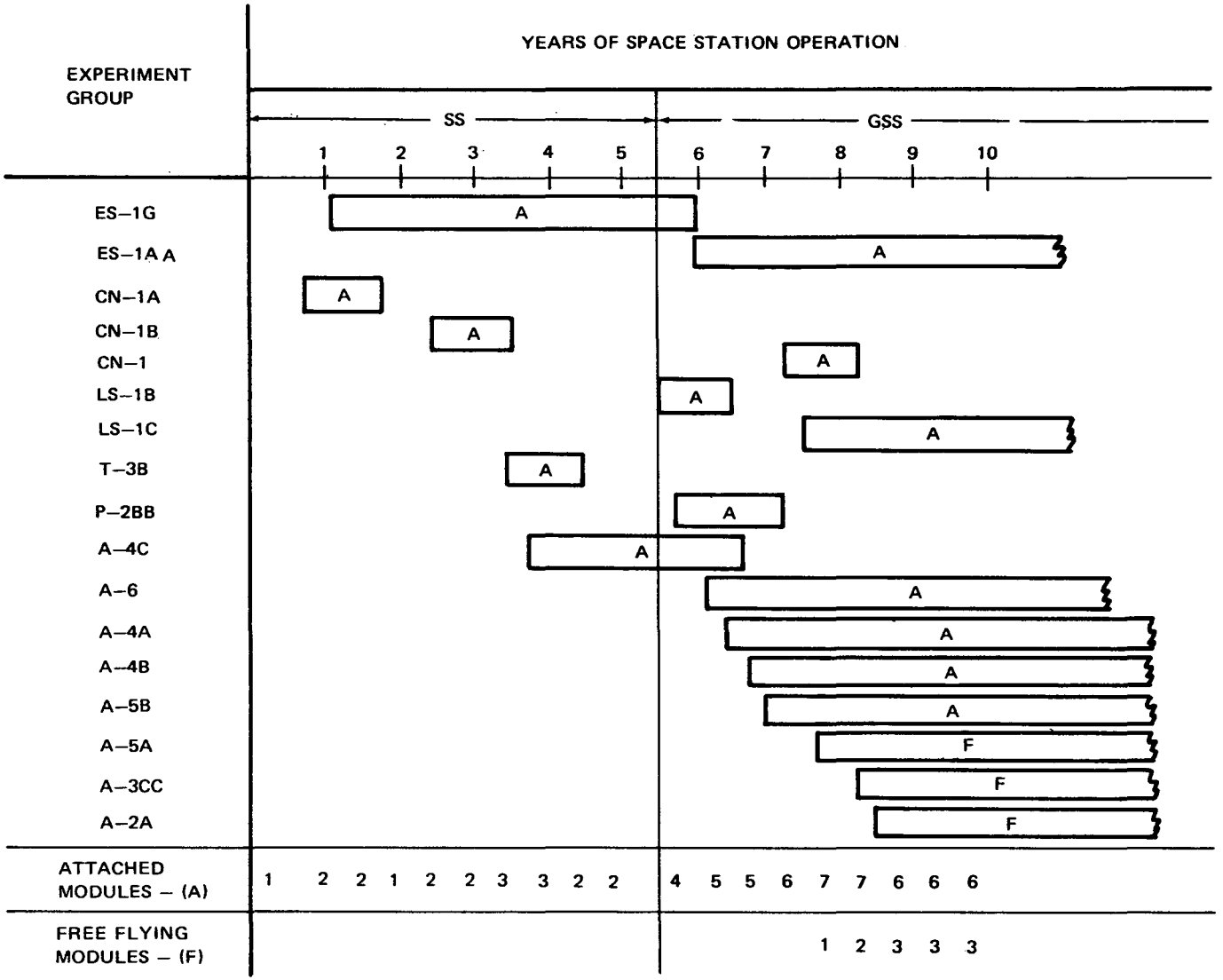


Figure 5–16. Module On–Orbit Schedule

environment fly during the GSS time frame. These experiments also have the most exacting gimbal stability requirements. The integrated effects of other requirements such as average power and data, logistics resupply, etc. increase significantly due to the greater number of modules flown concurrently.

PRECEDING PAGE BLANK NOT FILMED

# Section 6
# RATIONALE FOR A ZERO-GRAVITY MODULAR SPACE STATION

## 6.1 INTRODUCTION

The all Shuttle-delivered Modular Space Station Study incorporated a change in a major programmatic and design requirement — the deletion of the requirement for the capability to accomplish artificial-gravity experiments. The deletion of this requirement was based in part on the impact assessment performed on the 10m (33-ft) diameter Space Station Study and on increased emphasis on low initial and total program costs. Past studies also revealed that it was not economically feasible to design a station so that a meaningful comparison and evaluation between zero-gravity (g) and artificial-gravity (g) stations could be performed. Economically practical designs would permit only a partial evaluation of the two operating modes under different conditions and for dissimilar mission functions.

The discussion that follows presents a brief summary of the rationale substantiating the decision to design the Modular Space Station for an all zero-gravity capability. Information is presented regarding the programmatic and design impacts of adding artificial-g capability, the available knowledge and experience on the physiological effects on the flight crew for both zero- and artificial-g operations, and for potential remedial options available should the zero-g environment limit the performance and capability of the Space Station Program.

## 6.2 PROGRAM AND DESIGN CONSIDERATIONS

Of the various programmatic elements that are impacted by a requirement to provide an artificial-g capability, two are most heavily impacted: (1) the Experiment Program and (2) development and operational costs.

The Functional Program Elements (FPEs) contained in the NASA Blue Book were structured to be accomplished in a zero-g orbiting facility. The

rationale for experimentation in Earth orbit includes zero-g, the vacuum environment, location above the Earth's atmosphere, and a favorable position for observation of the Earth. None of these basic experiment requirements lead to an artificial-g facility; this desire is associated solely with the well-being of man in orbit. Therefore, it is not surprising to find that an assessment of FPEs reveals that the vast majority are not compatible with a rotating, artificial-g environment (see Table 6-1). In the 10m (33-ft) diameter Space Station Study, experimentation during artificial-g operations was confined to an assessment of man, his physiological well-being, and his performance of a limited number of basic physical and physiological functions and mission operations in a rotating environment. In addition, no experiment modules (RAMs) were permitted to be attached to the Station during artificial-g rotation. Therefore, the basic experiment program was delayed approximately one year because of the artificial-g test.

The added hardware, subsystem, and operational complexity required for the artificial-g test accounted for approximately $155 million of initial costs on the 10m (33-ft) diameter Space Station. Justification of these expenditures in the Modular Space Station Program, which has among its primary program objectives low initial and total program costs, is difficult because neither the firm basis for such a requirement or the potential benefits to be derived can be accurately assessed.

Space Station design for an artificial-g capability is impacted with additional hardware, complexity and subsystem compromise, and operational complexity. A counterweight, connecting devices, solar array restraints, and additional propulsion capability for the spin/despin functions are among the major hardware items which would be added to the program. Control Moment Gyro (CMG) sizing and communications antenna pointing and switching typify subsystems which are required to have additional capability not required for zero-g operations.

Operational complexity includes docking operations (stopping spinning operations and placement of the Cargo Module to an acceptable port location), crew movement restrictions and cargo handling (sizes and weights). The

Table 6-1

IMPACT OF ARTIFICIAL GRAVITY ON THE SPACE STATION EXPERIMENT PROGRAM

| | | FPE/Subgroup | Mode of Accommodation | Impact Assessment: Impractical to Spin | Impact Assessment: Any Gravity Level Not Tolerable | Impact Assessment: Possible Usage During Art-g |
|---|---|---|---|---|---|---|
| 1 | A-1 | X-ray Stellar Astronomy | FF | | | X |
| 2 | A-2 | Advanced Stellar Astronomy | FF | | | X |
| 3 | A-2A | Intermediate Stellar Telescope | FF | | | X |
| 4 | A-3AA | Advanced Solar Astronomy | FF | | | X |
| 5 | A-3CC | ATM Follow-on | FF | | | X |
| 6 | A-4A | 0.9M Narrow Field UV Telescope | AM | X | | |
| 7 | A-4B | 0.3M Wide Field UV Telescope | AM | X | | |
| 8 | A-4C | Small UV Survey Telescope | AM | X | | |
| 9 | A-5A | X-ray Telescope | FF | | | X |
| 10 | A-5B | Gamma Ray Telescope | AM | X | | |
| 11 | A-6 | IR Telescope | AM | X | | |
| 12 | P-1A | Atmospheric and Magneo Science | I | X | | |
| 13 | P-1B | Cometary Physics | I | X | | |
| 14 | P-1C | Meteoroid Science | I | | | X |
| 15 | P-1D | Thick Material Meteoroid Penetration | I | | | X |

I = Integral (GPL); AM = Attached Module; FF = Free Flyer

Table 6-1

IMPACT OF ARTIFICIAL GRAVITY ON THE SPACE STATION EXPERIMENT PROGRAM (Continued)

| | | FPE/Subgroup | Mode of Accommodation | Impact Assessment: Impractical to Spin | Impact Assessment: Any Gravity Level Not Tolerable | Impact Assessment: Possible Usage During Art-g |
|---|---|---|---|---|---|---|
| 16 | P-1E | Small Astronomy Telescopes | I | X | | |
| 17 | P-2A | Wake Measurements from Station and Booms | I | X | | |
| 18 | P-2BB | Wake, Plasma, Wave Particle, Elect. Beam | AM | X | | |
| 19 | P-3 | Cosmic Ray Physics Lab | AM | X | | |
| 20 | P-3C | Plastic/Nuclear Emulsions | I | | | X |
| 21 | P-4A | Airlock and Boom Experiments | I | X | | |
| 22 | P-4B | Flame Chemistry and Laser Exper. | I | X | X | |
| 23 | P-4C | Test Chamber Experiments | I | X | X | |
| 24 | ES-1 | Earth Observation Facility | AM | X | | |
| 25 | ES-1AA | Earth Observation Sequential | AM | X | | |
| 26 | ES-1G | Minimum Payload (Core) | AM | X | | |
| 27 | CN-1 | Communications/Navigations Fac. | AM | X | | |
| 28 | CN-1A | Communications/Navigations Subgrp. A | AM | X | | |

I = Integral (GPL); AM = Attached Module; FF = Free Flyer

Table 6-1

IMPACT OF ARTIFICIAL GRAVITY ON THE SPACE STATION EXPERIMENT PROGRAM (Continued)

| | | FPE/Subgroup | Mode of Accommodation | Impact Assessment: Impractical to Spin | Impact Assessment: Any Gravity Level Not Tolerable | Impact Assessment: Possible Usage During Art-g |
|---|---|---|---|---|---|---|
| 29 | CN-1B | Communications/Navigations Subgrp. B | AM | X | | |
| 30 | MS-3A | Crystal Growth, Biological and Physical Processes | I | X | X | |
| 31 | MS-3B | Crystal Growth from Vapor | I | X | X | |
| 32 | MS-3C | Controlled Density Materials | I | X | X | |
| 33 | MS-3D | Liquid and Glass Processing | I | X | X | |
| 34 | MS-3E | Supercooling and Homogeneous Nucleation | I | X | X | |
| 35 | T-1A | Contamination Experimental Pkg | I | | | X |
| 36 | T-1B | Contamination Monitor Package | I | | | X |
| 37 | T-2A | Long Term Cryo Storage | FF | | | X |
| 38 | T-2BB | Short Term Cryos | FF | | | X |
| 39 | T-3A | Astronaut Maneuver Unit | I | X | | |
| 40 | T-3B | Manned Work Platform | AM | X | | |
| 41 | T-4A | Long Duration System Tests | I | | X | |

I = Integral (GPL); AM = Attached Module; FF = Free Flyer

Table 6-1

IMPACT OF ARTIFICIAL GRAVITY ON THE SPACE STATION EXPERIMENT PROGRAM (Continued)

| | | FPE/Subgroup | Mode of Accommodation | Impact Assessment: Impractical to Spin | Impact Assessment: Any Gravity Level Not Tolerable | Impact Assessment: Possible Usage During Art-g |
|---|---|---|---|---|---|---|
| 42 | T-4B | Medium Duration Tests | I | | X | |
| 43 | T-4C | Short Duration Tests | I/(FF) | | X | X |
| 44 | T-5A | Initial Flight Teleoperator | I | X | | |
| 45 | T-5B | Functional Teleoperator | I | X | | |
| 46 | T-5C | Ground Control Teleoperator | I | X | | |
| 47 | LS-1A | Minimal Medical Research Facility | I | | | X |
| 48 | LS-1B | Minimal Life Science Research Fac. | AM | | X | |
| 49 | LS-1C | Intermediate Life Science Res. Fac. | AM | | X | |
| 50 | LS-1D | Dedicated Life Science Research Fac. | AM | | X | |

I = Integral (GPL); AM = Attached Module; FF = Free Flyer

spin-up and despin operations require additional logistics support for the orbiting configuration [the 10 m (33-ft) diameter Station required 907 kg (2, 000 lb) of propellant every 30 days - one spin/despin cycle]. In addition, operational readiness verification for both the zero-g and artificial-g modes will be required. The actual spin/despin operations will also impact the normal operations schedule, resulting in some loss of crew time normally allocated for experiments.

Substantial gains in volumetric efficiency for interior arrangements in zero-g are negated by the requirement for artificial-g which requires orientation of equipment, floors, etc. Approximately 30-percent additional volume would be required, equivalent to one additional module for ISS, if the artificial-g capability was included in the design.

In summary, an artificial-g capability requires subsystems, operations, and configuration characteristics to be designed at some penalty for the artificial-g mode and for an all-zero-g design, which will be the predominate operating mode during the mission.

## 6.3 PHYSIOLOGICAL CONSIDERATIONS

Manned spaceflight experience has definitely established that the absence of gravity does produce physiological effects on man while in the weightlessness environment. A certain amount of deconditioning in the cardiovascular system takes place. In fact, such deconditioning must take place for the crewman to adapt and function effectively in the weightless environment. Those physiological mechanisms, such as the vasoconstrictors, which are required on Earth for the cardiovascular system to counteract the pull of gravity, must stop or reduce their activities in space or the cardiovascular system could not properly distribute the body fluids in that environment. It is the variation between the crewmembers in the time required for this deconditioning to take place that undoubtedly accounts for the variation in their effective and emotional adjustment to the space environment. However, the majority of the data and experience would seem to indicate, and there is little physiological basis for assuming otherwise, that such effects are not permanent but readily reversible, and that once returned to a gravity environment

complete reconditioning of this mechanism will take place. This opinion is shared by a consensus of the informed medical community as well as by the astronauts who have participated in space operations.

That such is the case, is evidenced by the planning for the Skylab Program which will initially double the previous U.S. orbital duration exposure of 14 days to 28 days and then double it again to 56 days during the course of the three-visit mission. The U.S.S.R. has exceeded our 14-day duration on Salyut with no apparent physiological problems. Unfortunately, more conclusive data was negated by the untimely death of the flight crew.

However, even though artificial-g may not be required for crew survival on long-duration missions, it is still considered by some authorities as a requirement for the convenience of the crew during off-duty hours, and for the performance of certain mission requirements such as maintenance. It is not clear, however, that an artificial-g environment will not produce more problems for the crew than it solves. The only known method of producing an artificial-g environment requires rotation of the Station against some counterweight. For all practical systems, the radius of rotation must be relatively short, and hence the rate of rotation required to achieve the desired acceleration becomes of sufficient magnitude to have a significant effect on crew comfort and performance. Considerable research and simulation studies have been accomplished to establish limits on rotation rates, radii, etc., to insure crew comfort and effective performance. These data indicate that limitations on crew movement can be expected in a rotating environment. Furthermore, increased costs are anticipated for crew selection and training. Therefore, it is not entirely clear that an artificial-g environment is a cost effective approach.

Unless the artificial-g capability is limited to a short-duration experiment, the orbiting facility would require simultaneous zero- and artificial-g capability, using the Space Base concept. In this mode, operations associated with frequent crew transfer between the two environments may be one of the biggest problems of all. In such a situation, physiological processes would be under an almost constant state of change, being required to adapt continuously from gravity to non-gravity and back again.

In summary, while available physiological data is inconclusive to support the case for either zero- or artificial-g, at present most data would seem to support the zero-g position. This conclusion plus economic and design factors substantiate the selection of the zero-g mode for the Space Station.

## 6.4 REMEDIAL OPTIONS

If the present design concept of an all zero-g Station is implemented, consideration may still be given to programmatic options to be pursued should the zero-g environment limit the performance of the mission. Two options are available: (1) to continue in the zero-g mode or (2) to add artificial-g capability at a later date.

Since zero-g experimentation remains the primary mission objective, options are available to adjust crew rotation cycles to avoid exceeding comfortable stay times. With a flexible Shuttle logistics capability, this option is not only most attractive but is one which is always available to the program. For the Modular Space Station Program, orbital stay times for the crew are planned at 90 days, which is only about a 50-percent increase in the maximum stay times for Skylab (56 days).

Alternately, procedures and devices already planned for the Space Station, e. g., various forms of isotonic and isometric exercise and the lower-body, negative pressure device, may be supplemented with other promising therapeutic devices which vary in the degree of design impact on the Space Station. For example, a short-radius, internal-manned centrifuge which has been identified as a promising conditioning device, can provide intermittent artificial-g and could be installed in a module, e. g., a Cargo Module.

If these solutions are ineffective and/or should a requirement later be established for long-duration (non-crew-rotation) missions, e. g., a manned Mars mission, artificial-g capability may be added to the station cluster during the mission. A module containing a rotating hub could accommodate a cluster of modules configured for artificial-g. The orbiting cluster would functionally operate like the Space Base with simultaneous zero- and artificial-g capability.

## 6.5 SUMMARY

A firm requirement for adding an artificial-g capability to the Space Station has not been identified. The economic, design, and operational penalties for providing this capability, even as an experiment, are significant. Skylab will significantly illuminate this issue. Should the zero-g environment limit the performance and capability of the Station, remedial options are available. Hence, the present decision for an all zero-g Modular Space Station is commensurate with the optimum design approach pursued in this study.