2-P(MIX)

953097

FINAL REPORT

ADVANCED POWER CONDITIONING SYSTEM

JPL CONTRACT NO. 953097

EOS Report 4064-FR1 dated 11 November 1971

(NASA-CR-126641) ADVANCED POWER CONDITIONING SYSTEM N.L. Johnson (Electro-Optical Systems, Inc.) 11 Nov. 1971 138 p CSCL 09C G3/10

N72-24321

Unclas 28249

MAR 1972
RECEIVED
NASA STI FACILITY
INPUT BRANCH

Reproduced by
NATIONAL TECHNICAL INFORMATION SERVICE
U S Department of Commerce
Springfield VA 22151

Electro-Optical Systems

Special Products and Systems Division
Xerox Corporation
300 North Halstead Street
Pasadena, California 91107
213 351-2351

DOCUMENT TRANSMITTAL NOTICE

RECEIVED
NOV 16 1971
JPL TU OFFICE

DATE: 15 November 1971

IN REPLY REFER TO EOS FILE: 4064

TO: Jet Propulsion Laboratory
California Institute of Technology
4800 Oak Grove Drive
Pasadena, California 91103

ATTENTION: Mr. C. B. Sears, 190-236

ENCLOSED ARE THE REQUIRED COPIES OF THE DOCUMENT DESCRIBED BELOW. THIS DOCUMENT(S) IS SUBMITTED IN COMPLIANCE WITH CONTRACT REQUIREMENTS AND IS [ ] FOR YOUR APPROVAL [X] FOR YOUR RETENTION.

CONTRACT NO. 953097	CONTRACT ITEM NO. ARTICLE 2, Paragraphs (c)(8)
DOCUMENT TITLE FINAL REPORT - INCLUDING APPENDIX dated 4 November 1971 Advanced Power Conditioning System	
TOTAL COPIES 5	REPRODUCIBLES 0
EOS DOCUMENT NO. 4064-FR1	REPORTING PERIOD Duration of Contract
SECURITY CLASSIFICATION N/A	EOS CLASSIFIED DOCUMENT NO. N/A

SHOULD ADDITIONAL INFORMATION BE DESIRED, PLEASE DIRECT ALL INQUIRIES TO:

E. G. Evans 351-2923

VERY TRULY YOURS,

Electro-Optical Systems

J. M. JETT
ASSOCIATE MANAGER
CONTRACT ADMINISTRATION

cc: A. I. Schloss, 198-220
T. J. Williams, 198-220
L. D. Runkle, 198-220
Technology Utilization, UB-212
Contract File, 190-215

FINAL REPORT

ADVANCED POWER CONDITIONING SYSTEM

Contract No. 953097

Period Covered:
Duration of Contract

Prepared for
JET PROPULSION LABORATORY
CALIFORNIA INSTITUTE OF TECHNOLOGY
4800 Oak Grove Drive
Pasadena, California 91103

EOS Report 4064-FR1 dated 11 November 1971, including "Appendix" by Dr. Siegfried J. Lindena dated 4 November 1971

Prepared by

N. L. Johnson
Advanced Power Conditioning System Engineer

Approved by

W. F. Croft
Manager

300 No. Halstead St., PASADENA, CALIFORNIA 91107 · 213/351-2351 · TWX 910/588-3796 · TLX 67-5417

TABLE OF CONTENTS

TITLE COVER	i
TABLE OF CONTENTS	ii
1. SUMMARY	1-1
2. INTRODUCTION	2-1
3. TECHNICAL DISCUSSION	3-1 thru 3-22
3.1 Summary of Redundant System Configuration Determination	3-1
3.2 General System Circuit Description	3-3
3.3 Phase II Detailed Design Description	3-7
3.4 System Performance Results	3-16
3.4.1 Physical Results	3-16
3.4.2 Electrical Test Results	3-16
4. WORST-CASE CONSIDERATIONS	4-1 thru 4-45
4.1 Design and Performance Margins	4-1
4.2 Component Stresses	4-1
4.3 Stability Margin Analysis	4-1
4.4 Reliability Assessment	4-37
5. CONCLUSIONS	5-1 and 5-2
6. APPENDIX	6-1
APPENDIX TO "ADVANCED POWER CONDITIONING SYSTEM" By Dr. Siegfried Lindena	1 thru 20

1. SUMMARY

The Phase I portion of the Advanced Power Conditioning System development program was completed in May, 1971, with a Phase I Summary Report dated 17 May 1971 (EOS Report No. 4064-SR1). A Two-stage Boost Regulator was breadboarded and tested to the design goals of Article 1(a)3 of the Statement of Work. The unit met and exceeded the minimum performance criteria set forth in the Statement of Work.

The Phase II portion of the Advanced Power Conditioning System development program will have been completed when this report is published. Five 100-watt parallel power stages with majority-vote-logic feedback-regulator were breadboarded and tested to the design goals of the Statement of Work. The overall performance of this breadboard was comparable to the performance criteria set forth in the Statement of Work. The input voltage range was 22.1 to 57.4 volts at loads from zero to 500 watts. The maximum input ripple current was 200 mA pk-pk (not including spikes) at 511 watts load; the output voltage was 56V dc with a maximum change of 0.89 volts for all variations of line, load, and temperature; the maximum output ripple was 320 mV pk-pk at 512 watts load (dependent on filter capacitance value); the maximum efficiency was 93.9% at 212 watts and 50V dc input; the minimum efficiency was 87.2% at 80-watt load and 50V dc input; the efficiency was above 90% from 102 watts to 372 watts; the maximum excursion for an 80-watt load change was 2.1 volts with a recovery time of 7 milliseconds; and the unit performed within regulation limits from -20°C to +85°C.

During the test sequence, margin tests and failure mode tests were run with no resulting degradation in performance. The margin tests included loads from zero to 605 watts and input voltages from 7.48 volts to 57.55 volts respectively. The failure mode tests included major failures of the various functional blocks (see Figure 3.1-4).

2. INTRODUCTION

The purpose of this program was to develop an Advanced Power Conditioning System utilizing the inductor-transformer principle with Trapezoidal current waveshapes. The unit should have comparable performance to the MM'69/MM'71 4A9/4A10 Booster Regulators.

The program was limited to development of a 100-watt Two-stage Regulator breadboard and a parallel configuration of five 100-watt Two-stage Regulators in a breadboard.

The program was performed at Electro-Optical Systems for the Jet Propulsion Laboratory under JPL's Contract No. 953097, Prime Contract No. NAS7-100, dated 10 February 1971.

The JPL Technical Monitor was Mr. A. I. Schloss. The JPL Contract Negotiator was Mr. C. B. Sears.

3. TECHNICAL DISCUSSION

This section contains the technical considerations taken in the design of the Phase II Advanced Power Conditioning System utilizing the technology developed in Phase I.

A summary of the redundant system configuration determination is presented in this section, to establish the design approach taken in Phase II.

The general system circuit description provides an overall functional explanation of the electrical schematic for the Advanced Power Conditioning System.

The detailed design description subsection discusses the added electrical design required to implement the Redundant Phase II System from the Phase I Two-stage Boost Regulator.

The system performance results subsection presents the physical and electrical results obtained during the Phase II breadboard tests.

3.1 Summary of the Redundant System Configuration Determination

A preliminary analysis was performed on five candidate redundant system configurations at the start of Phase II design. This analysis included weight, component count and reliability. Figures 3.1-1 through 3.1-4 show four considered configurations. The fifth configuration considered was five totally independent 100-watt modules in parallel to achieve the redundancy.

Figure 3.1-1 shows a redundant configuration with five driver/power stages (reference Section 6.2, Pages 6-6 to 6-11, Phase I EOS Report No. 4064-SR1 for basic building block descriptions) in parallel; five feedback amplifiers operating the independent

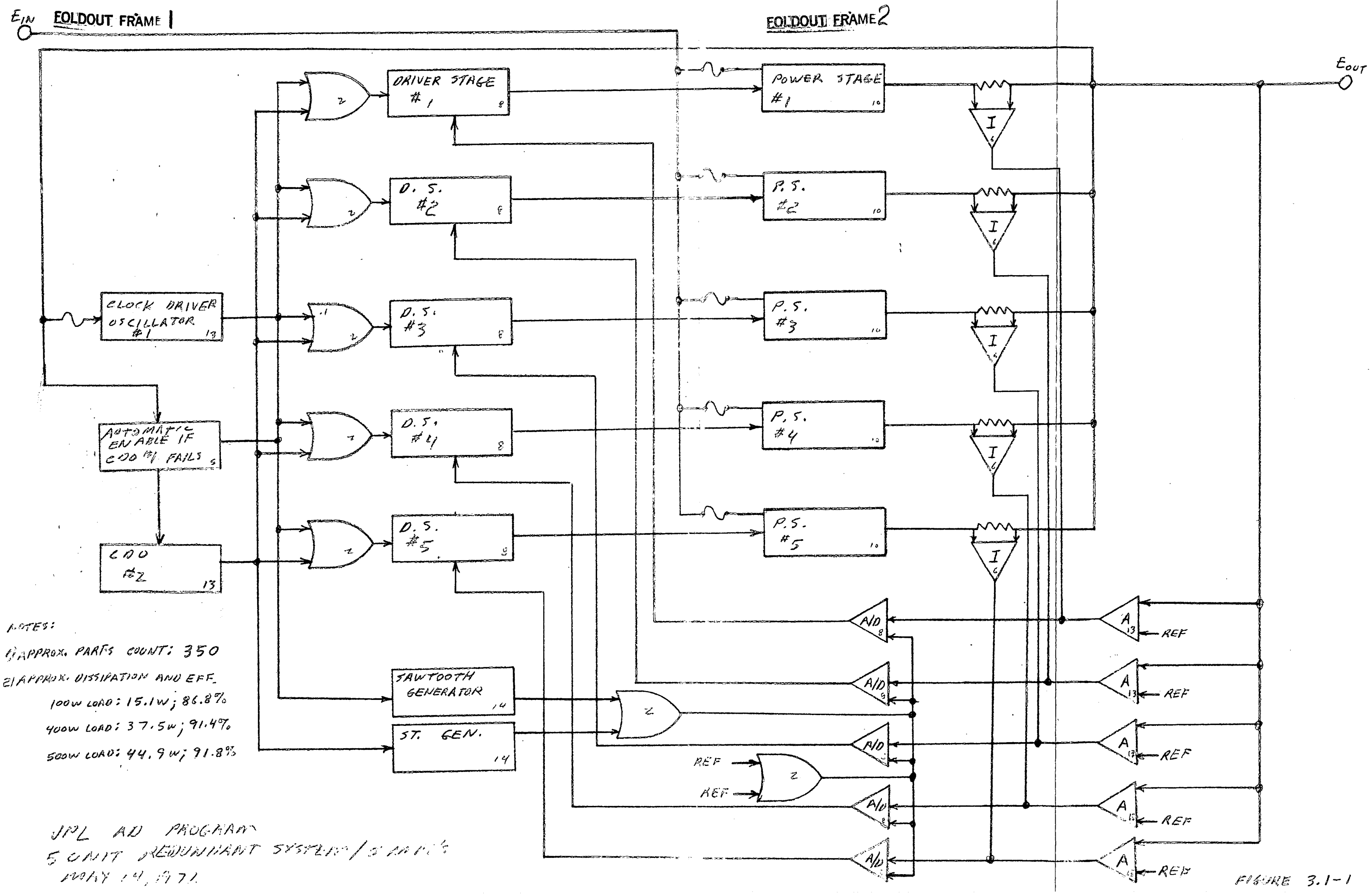

NOTES:

1) APPROX. PARTS COUNT: 350

2) APPROX. DISSIPATION AND EFF.

100W LOAD: 15.1W; 86.8%

400W LOAD: 37.5W; 91.4%

500W LOAD: 44.9W; 91.8%

JPL AD PROGRAM
5 UNIT REDUNDANT SYSTEM / 3 MAJ.
MAY 14, 1971

FIGURE 3.1-1

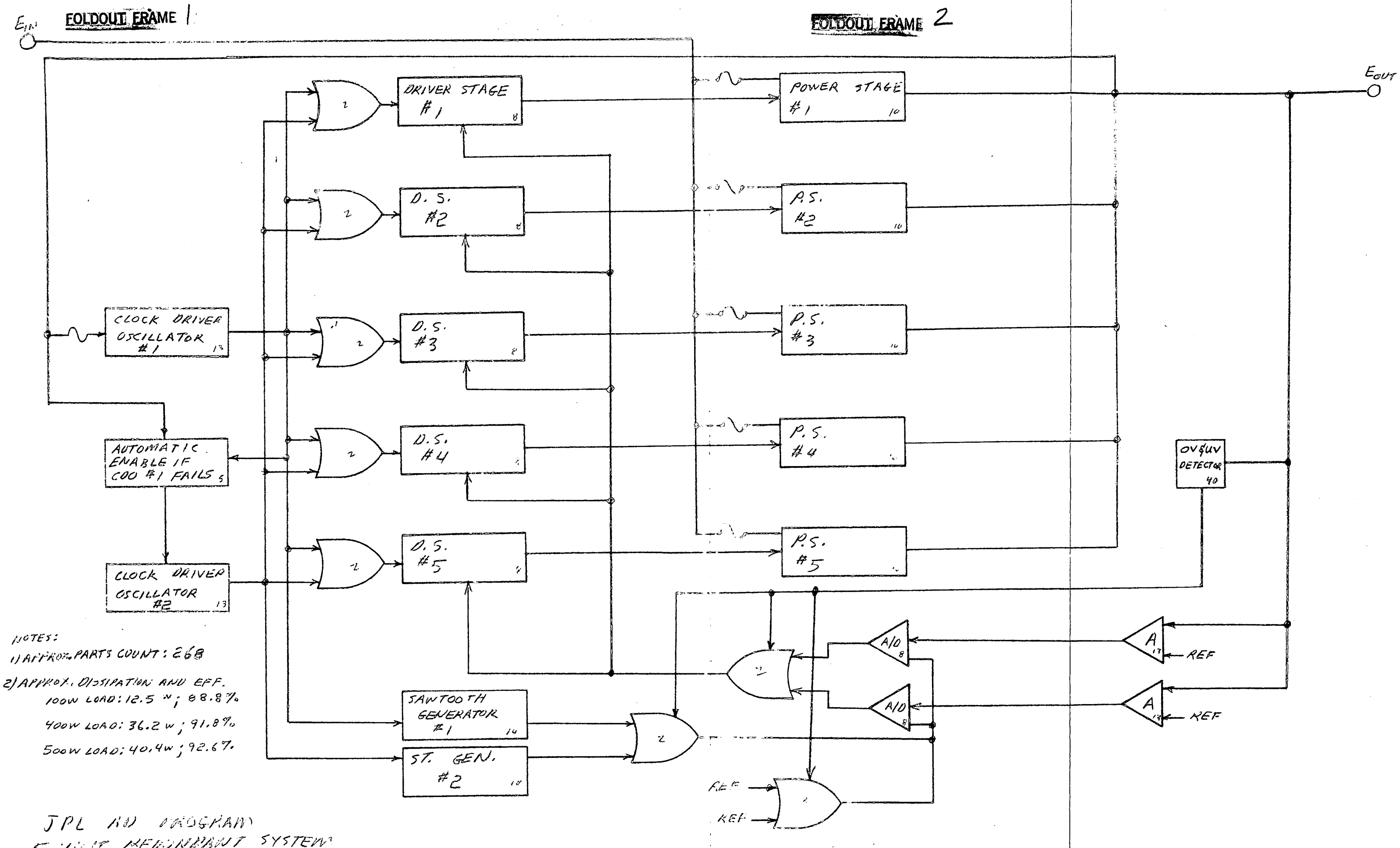

NOTES:

1) APPROX. PARTS COUNT: 268

2) APPROX. DISSIPATION AND EFF.

100W LOAD: 12.5 W; 88.8%

400W LOAD: 36.2 W; 91.8%

500W LOAD: 40.4W; 92.6%

JPL AD PROGRAM
5 UNIT REDUNDANT SYSTEM
USING MAIN/STANDBY APPROACH
MAY 17, 1971

FIGURE 3.1-2

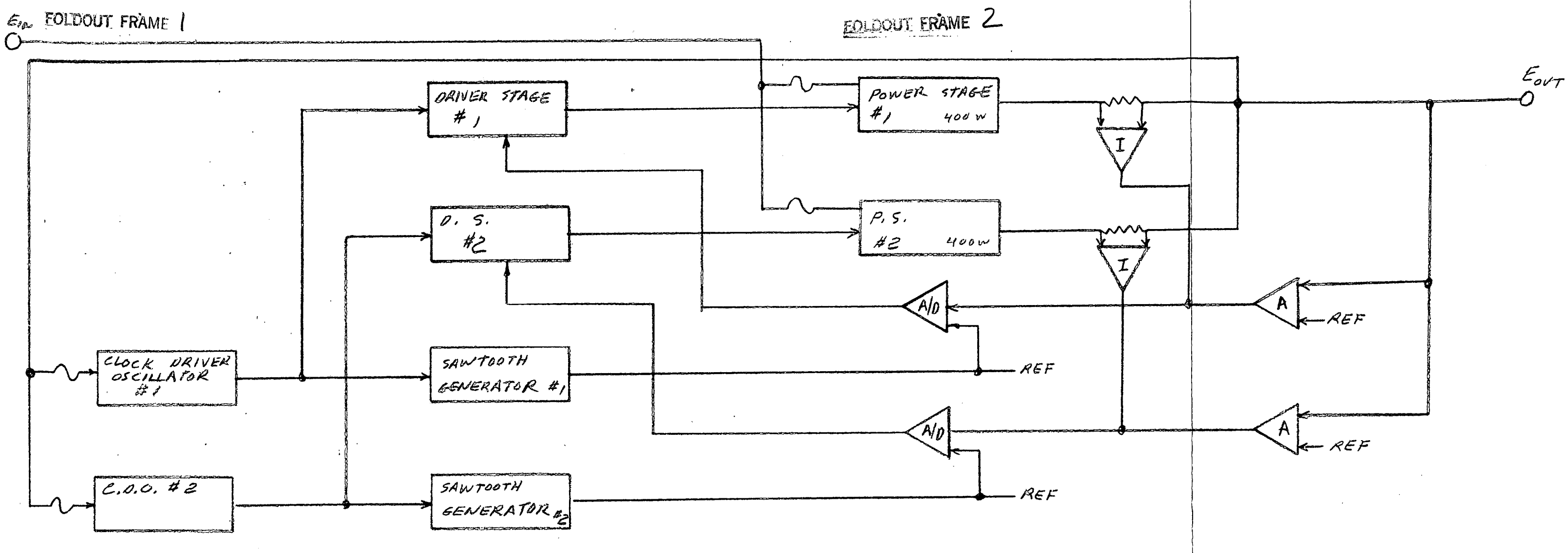

NOTES:

1) APPROX. PARTS COUNT: 154

2) APPROX. DISSIPATION AND EFF

100W LOAD: 11.6 W ; 89.5%

400W LOAD: 32.7 W ; 92.3%

FIGURE 3.1-3

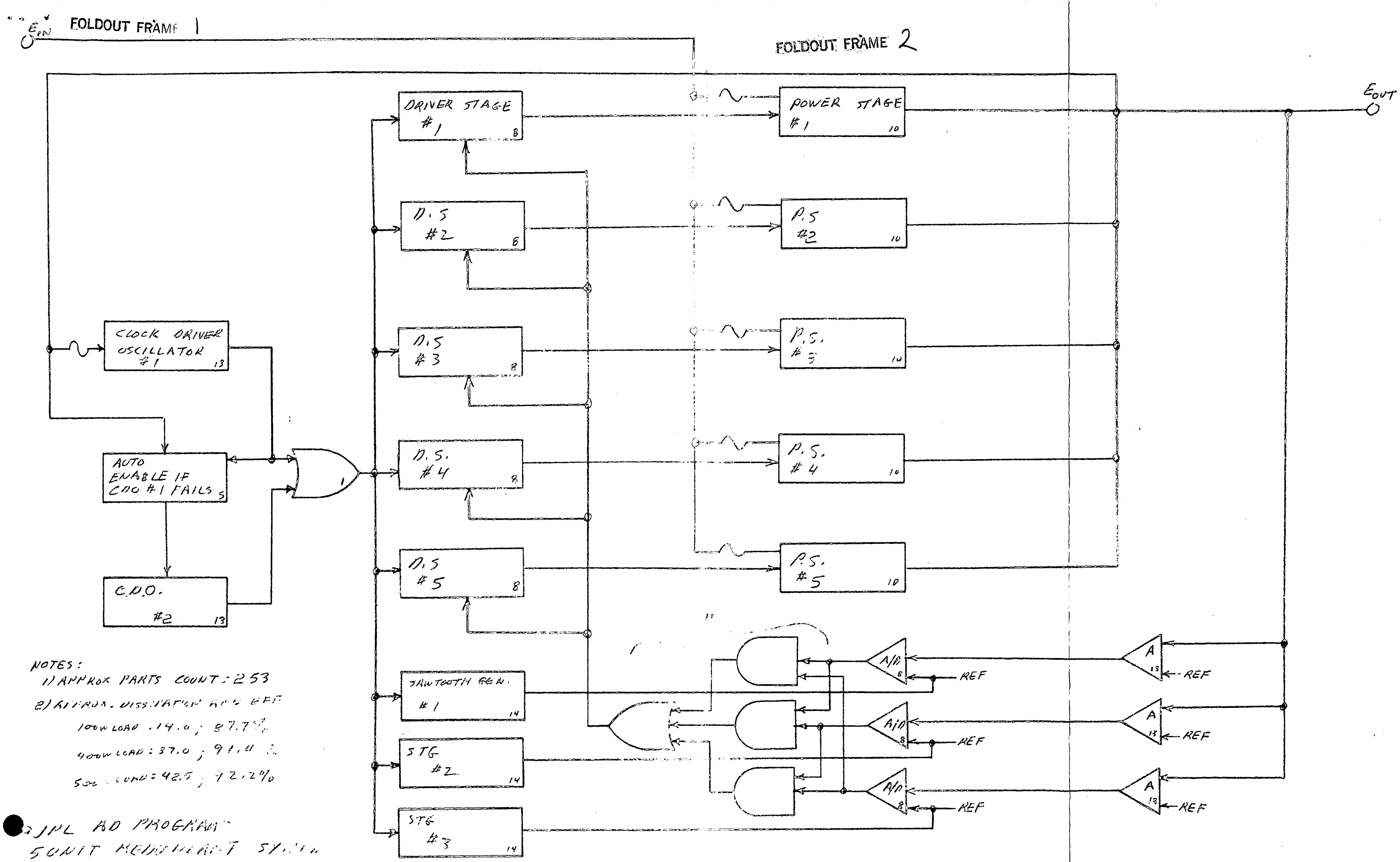

NOTES:
1) APPROX PARTS COUNT: 253
2) APPROX. DISSIPATION AND EFF
100W LOAD: 14.0; 87.7%
400W LOAD: 37.0; 91.4%
500W LOAD: 42.5; 92.2%

JPL AD PROGRAM
5 UNIT REDUNDANT SYSTEM
USING MAJORITY VOTE LOGIC
IN FEEDBACK
JUNE 4 [illegible]

FIGURE 3.1-4

driver/power stages; a main/standby clock drive oscillator and sawtooth generator; and five current limiting circuits.

Figure 3.1.2 shows a redundant configuration utilizing five driver/power stages in parallel with two feedback amplifiers, two sawtooth generators, and two clock drive oscillators in main/standby mode.

Figure 3.1.3 shows two 400-watt independent units operating in full main/standby redundancy.

Figure 3.1-4 shows a redundant configuration with five driver/power stages in parallel; a 2 of 3 majority vote logic feedback amplifier system; and a main/standby clock drive oscillator system.

Table 3.1-1 gives the approximate weights, parts count, minimum efficiency, relative reliability, and design severity for the five configurations compared to the MM'71 4A9/4A10 modules. From this table it can be seen that the highest reliability is achieved by a main/standby configuration (Item C or F) if the load profile is considered at a fixed 400 watts. Configuration B and C have relative reliability values which are very close to the main/standby configurations C and F except they can operate with multiple failures in the power chain at reduced loads (1 failure: power capability = 400W, 2 failures: pc = 300W, 3 failures: pc = 200W, 4 failures: pc = 100W). Configuration A presents the lowest relative reliability based on parts count and redundant configuration. Item E has a low relative reliability due to parts count although it presents a physical realization of 5 independent redundant 100-watt modules in parallel.

The configuration in Figure 3.1-4 was selected since it provided a significant improvement in performance, reliability, and weight under multiple power chain failure mode conditions over the main/standby system; represented a weight savings of 16% with a power output increase

of 2/3 compared to the Mariner type main/standby system, and required advanced design techniques of majority vote logic circuitry.

Item No.	Configuration	Weight lbs.	Parts Count	Minimum Efficiency %	Relative Relia-bility (at 400-W	Design Severity
A	Figure 3.1-1	11.2	350	86.8	.7	2
B	Figure 3.1-2	10.9	268	88.8	.99	4
C	Figure 3.1-3	10.0	154	89.5	1	2
D	Figure 3.1-4	10.5	253	87.7	.99	2
E	Five independent 100-W modules	11.4	360	86.0	.78	1
F	MM'71 4A9/4A10 + Fail Sense Ckt	12.5	230	86.0	.98	N/A

TABLE 3.1-1

3.2 General System Circuit Description

3.2.1 System Block Diagram Description (Figure 3.1-4)

Figure 3.1-4 shows the block diagram of the Advanced Power Conditioning System designed and breadboarded in Phase II.

The input voltage is fed to the five power stages through

fuses, where it is boosted and delivered to the output.

The output voltage is sensed by three differential amplifier circuits simultaneously. The output voltage is compared to stable reference voltages in each amplifier and the differences are amplified and fed to three analog to digital PWM converter/amplifiers.

The A/D PWM converter/amplifiers compare their respective analog input signals from the differential amplifiers to a sawtooth voltage wave riding on a stable reference voltage. When the sawtooth reference signals are equal to or greater than the respective analog inputs, the A/D amplifiers will switch states and thus generate output rectangular pulses. The output pulse times are directly proportional to the respective analog input signal levels. The three inphase A/D amplifier outputs are fed to the majority-vote-logic stage.

The majority-vote-logic stage passes the digital PWM signal only when two or more A/D amplifier signals are present. The majority-vote-logic circuit will give an inverted digital PWM output corresponding to the coincident input signal from at least two A/D amplifiers. The inverted output signal from the majority-vote-logic circuit is fed to the five driver stages of the regulator.

The five driver stages amplify the power capability of the digital PWM signal and furnishes a push-pull digital PWM output signal to each respective power stage. Since each power section is independent and the driver transformer is reset each 1/2 cycle, no core walking occurs.

The main/standby clock drive oscillator furnishes a basic square wave signal to the driver stages and the sawtooth generators. This square wave signal determines the

operating frequency of the power system and keeps the sawtooth generators in synchronism with the driver stages.

The sawtooth generators take the clock inputs and develop sawtooth outputs at twice the clock frequency. The sawtooth signals are superimposed on the DC reference voltages in the A/D digital PWM converter/amplifiers.

A small change in the output voltage is detected by the feedback amplifiers and controlled in such a way that the output voltage will remain within its regulation band for changes of input line voltage, output load current, and temperature.

The complete control system, clock drive oscillators, sawtooth generators, and driver stages are biased from the output voltage. There is no starting problem since sufficient output voltage is obtained through the boost inductor from the input.

3.2.2 Schematic Description (Figure 3.2-1)

Figure 3.2-1 shows the detailed schematic for the Advanced Power Conditioning System designed and breadboarded in Phase II.

The five power stages consist of: Inductors L1 thru L11; Capacitors C1-C4, C25-C29, and C32; Fuses F1-F4 and F6-F21; Rectifiers CR1-CR10; Transistors Q1-Q10; and the secondary windings of Transformer T1-T5. A detailed description of one power stage is presented in Section 6.2.2, Page 6-8, of the Phase I, EOS Report 4064-SR1.

The three differential amplifiers consist of: Capacitors C20, C22 and C24; Resistors R51-R58, R63-R7 and R75-R82;

Page intentionally left blank

Diodes CR26, CR27, CR30, CR31, CR34 and CR35; Voltage reference diodes VR2, VR4, and VR6; and Dual Transistors Q30, Q32, and Q34. A detailed description of one of the differential amplifiers is presented in Section 6.2.2, Pages 6-8 and 6-10 of the Phase I report.

The three analog to digital PWM converter/amplifiers consist of: Resistors R47-R50, R59-R62, and R71-R74; Capacitors C19, C21 and C23; Voltage reference diodes VR1, VR3 and VR5; Constant current sources IR4-IR6; and Dual Transistors Q29, Q31 and Q33. The detailed description of one A/D PWM converter/amplifier is presented in Section 6.2.2, Page 6-10, of the Phase I report.

The five driver stages consist of: Resistors R20-R39; Transistors Q11-Q25; Diodes CR11-CR20; the secondaries 7-8/8-9 through 19-20/20-21 of Transformer T6; and the primaries of Transformers T1-T5. A detailed description of one driver stage is presented in Section 6.2.2, Page 6-10, of the Phase I report.

The two clock-driver oscillators consist of: Resistors R1-R4, R83 and R84; Capacitors C5, C6, C30 and C31; Diodes CR37-CR42; Transistor Q36-Q39; Constant current sources IR8 and IR9; Transformers T7 and T8; and the secondaries 1-2/2-3 and 4-5/5-6 of Transformer T6. The detailed description of one clock-driver oscillator is presented in Section 6.2.2, Page 6-11, of the Phase I report.

The three sawtooth generators consist of: Resistors R5-R19; Capacitors C7-C8; Diodes CR43-CR54; Transistors Q40-A42; and the secondary windings 22-23/23-24 through 37-38/38-39 of T6. A detailed description of one sawtooth generator is presented in Section 6.2.2, Page 6-11, of the Phase I report.

The main/standby circuit for the clock driver oscillators consist of: Transistor Q35; Constant current source IR7; Diodes CR36 and CR55-CR57; and fuse F5. During normal operation transistor Q35 is biased "off" preventing the standby clock from receiving its positive supply voltage. If the fuse F5 to the main clock blows, Q35 is turned "on" and the standby clock takes over the operation.

The majority-vote-logic stage consists of: Resistors R40-R46; Diodes CR21-CR23; Constant current sources IR1-IR3; and Dual Transistors Q26-Q28. The three inputs from the A/D amplifiers are first "AND"ed in pairs, then the three outputs are "OR"ed together to give a 2 of 3 majority vote output.

3.3 Phase II Detailed Design Description

This section contains the step-by-step design calculations for the majority-vote-logic circuit, clock driver oscillators, and Transformer T6. All other circuit calculations are presented in Section 6.4, Page 6-20, of Phase I, EOS Report 4064-SR1.

3.3.1 Majority-Vote-Logic Stage

The following truth table shows the required input/output relationship needed to achieve a majority-vote mechanization.

Input			Output
A	B	C	z
0	0	0	0
0	0	1	0
0	1	1	1
0	1	0	0
1	1	0	1
1	1	1	1
1	0	1	1
1	0	0	0

From this table we can develop the Boolean expression:

$$Z = A \cdot B + B \cdot C + A \cdot C$$

which in block diagram form looks like:

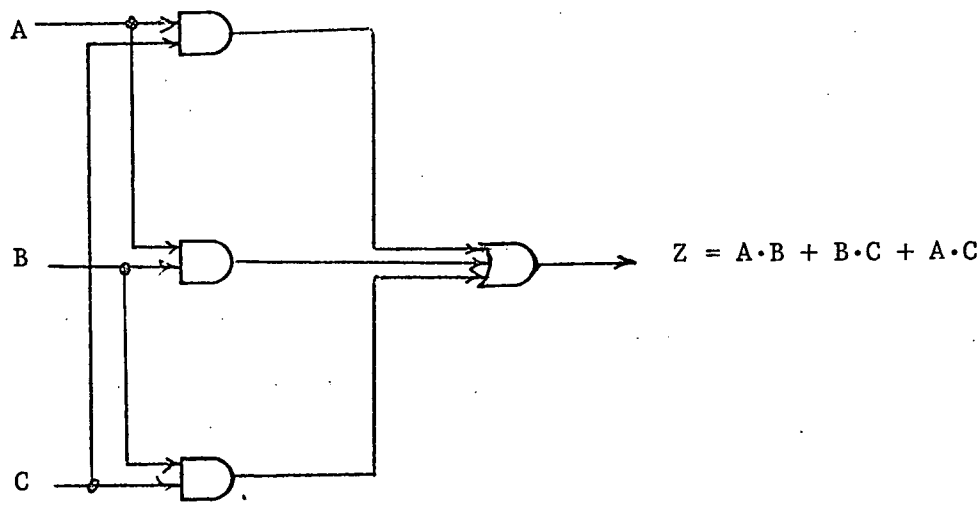

The actual circuit mechanization is shown in Figure 3.3-1 on Page 3-9.

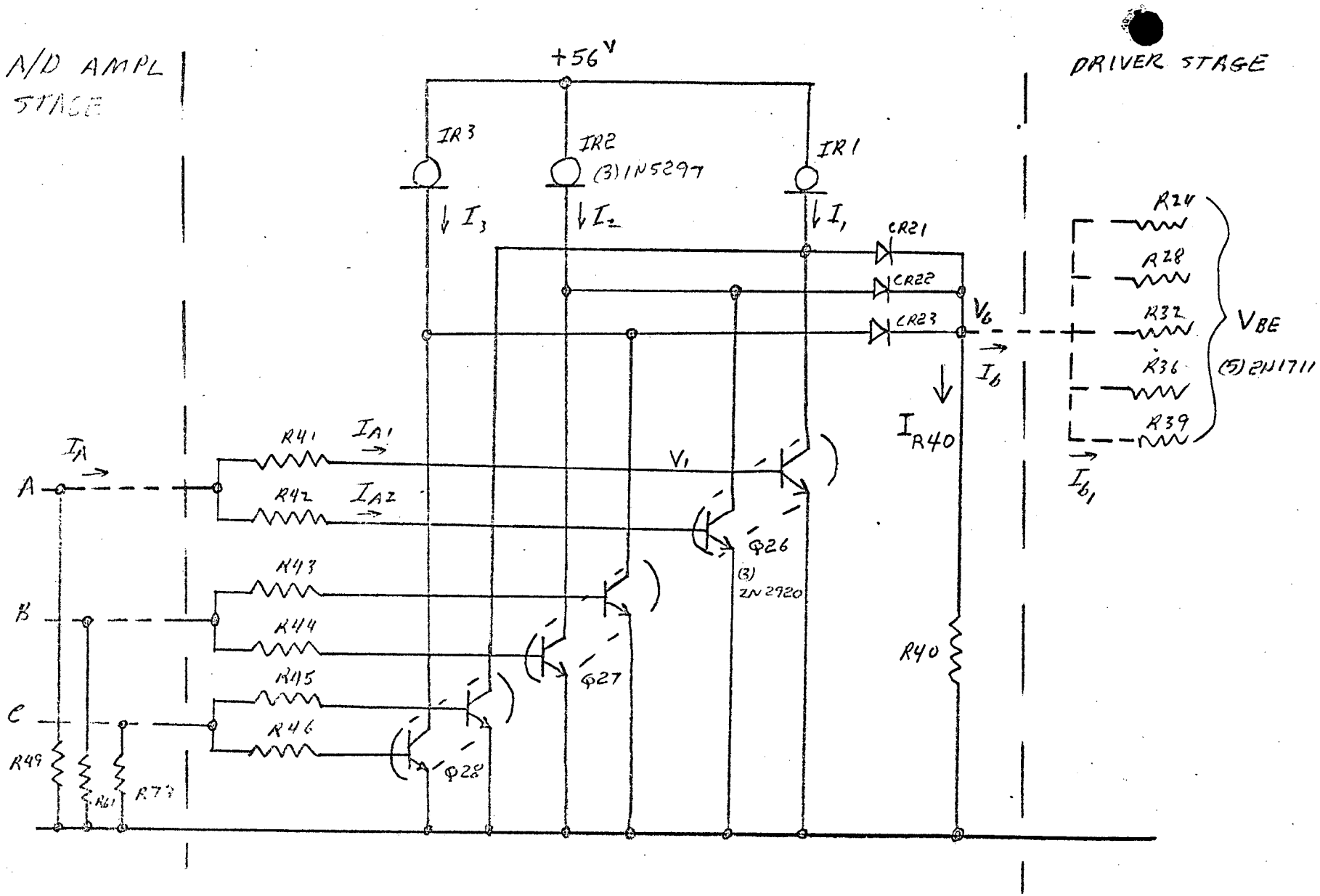
A/D AMPL STAGE
DRIVER STAGE
+56V
IR3
IR2
(3) 1N5297
IR1
I3
I2
I1
CR21
CR22
CR23
Vb
Ib
IR40
R24
R28
R32
R36
R39
VBE
(5) 2N1711
Ib1
R41
IA1
R42
IA2
IA
A
B
C
V1
Q26
(3) 2N2920
R43
R44
R45
R46
Q27
Q28
R40
R49
R61
R73

FIGURE 3.3-1

Now: $I_1 = I_2 = I_3 = .9$ to 1.1 ma

$V_{BE} = 1.3V$

$V_1 = 1.3V$

$I_{CBO} = 0.01\mu a$

For the five 2N1711:

$$I_{Leakage} = (5)\left(I_{CBO}\right) = 0.05\mu a$$

Let $V_b = 2\ V_{BE} = 2.6V$

$R_{40} = 20\ K$

$$\therefore\ I_{R40} = \frac{2.6V}{20K} = .13 \text{ ma}$$

$$I_b \doteq 1.1 \text{ ma} - .13 \text{ ma} \approx 1 \text{ ma}$$

$$R_{24} = R28 = R32 = R36 = R39 = \frac{V_{BE} - V_b}{I_b} \times 5 = 6.5K\Omega$$

Use 6.2K

$$\therefore\ P_{R24} = \frac{(3.97)^2}{6.2K} = 2.5 \text{ mW}$$

$$I_{b_1} = \frac{V_{BE} - V_b}{R_{39}} = \frac{1.3V}{6.2K} = .21 \text{ ma}$$

$$\therefore \; I_b \quad 5\, I_{b_1} = 5 \times .21 \text{ ma} = 1.05 \text{ ma}$$

$$V_{b_{max}} = \left(\frac{I_1 + I_2 + I_3}{5} \right) (R_{39}) + V_{BE} = 5.27V$$

$$P_{R40} = \frac{(5.27)^2}{20K} = \underline{\underline{1.4 \text{ mW}}}$$

$$R_{41} \text{ to } R_{46} = \frac{V_A - V_1}{I_{A1}} \qquad \text{Let } V_A = 2.6V$$

$$I_{A1} = .1 \text{ ma}$$

$$R_{41} - R_{46} = \frac{1.3V}{.1 \text{ ma}} = \underline{\underline{13K}}$$

$$P_{R41} = \frac{(1.3)^2}{13K} = .13 \text{ mW}$$

$$R_{49} = R_{61} = R_{73} = \frac{2.6V}{.7 \text{ ma}} = 3.7K$$

Use $\underline{\underline{3.3K}}$

$$P_{R49} = \frac{(2.6)^2}{3.3K} = \underline{\underline{2.1 \text{ mW}}}$$

3.3.2 Clock Driver Oscillators and Transformer T6 (Figure 3.3-2)

This Figure is shown on Page 3-12.

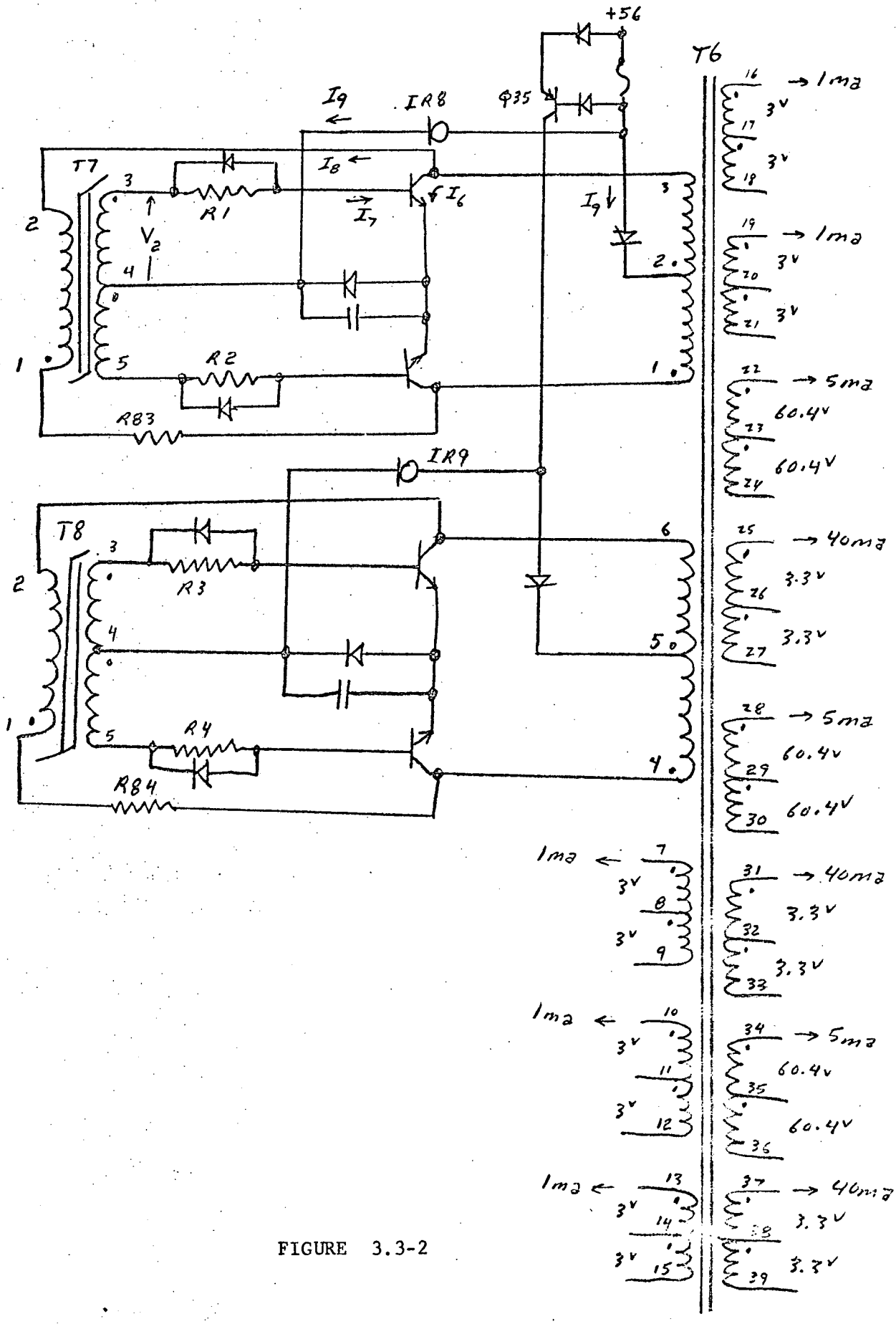
+56
T6
T7
T8
IR8
IR9
Q35
R1
R2
R3
R4
R83
R84
1ma
5ma
40ma
3v
60.4v
3.3v

FIGURE 3.3-2

Assuming T6 is 90% efficient

$$P_1 = \frac{5 \times 3 \text{ mW} + 3 \times 302 \text{ mW} + 3 \times 132 \text{ mW}}{.9} = 1470 \text{ mW}$$

$$E_e A_e = \Sigma P \times \frac{\text{Cir Mil/A}}{35 \text{ BF}}$$

$$= \frac{(1470 \text{ mW} + 1317 \text{ mW})(500)}{(35)(7.5)(10\text{K})} = .002 \text{ in}^4$$

Try 52011 - 0.5A

B_m = 15KG

$A_e = 0.050 \text{ cm}^2$

W_e = 865,000

ℓ_m = 8.97

ID = .915

OD = 1.335

Ht = .22

$$N_{1-2} = N_{2-3} = \frac{55.3 \times 10^8}{(4)(7.5\text{K})(10\text{K})(.050)} = 370 \text{ T}$$

$N_{7-8,\ 8-9,\ 10-11,\ 11-12,\ 13-14,\ 14-15,\ 16-17,\ 17-18,\ 19-20,\ 20-21}$ =

$$(370)\left(\frac{3}{55.3}\right) = 20 \text{ T}$$

$$N_{22\text{-}23,\ 23\text{-}24,\ 28\text{-}29,\ 29\text{-}30,\ 34\text{-}35,\ 35\text{-}36} = (370)\left(\frac{60.4}{55.3}\right) = 403\ T$$

$$N_{25\text{-}26,\ 26\text{-}27, 31\text{-}32,\ 32\text{-}33,\ 37\text{-}38,\ 38\text{-}39} = (370)\left(\frac{3.3}{55.3}\right) = 22\ T$$

$$N_{4\text{-}5} = N_{5\text{-}6} + (403)\left(\frac{56 - .7 - .8}{60.4}\right) = 364\ T$$

34 AWG: 39.69 cm Bore, 60.8 cm Coated, 261.3 Ω/1000', .1274 #/1000'

$$A_W\ N2\ (2 \times 370 + 10 \times 20 + 6 \times 403 + 6 \times 22 + 2 \times 364)(60.8) = 258{,}000$$

$$K = \frac{258{,}000}{865{,}000} = .3$$

$$I_m = \frac{(.794)(.165)(7.98)}{374} = 2.8\ \text{ma}$$

$$I_p = (5)(.001)\left(\frac{3}{56}\right) + (3)(.005)\left(\frac{60.4}{56}\right) + (3)(.05)\left(\frac{3.3}{56}\right) + .0028 = .0281$$

$$\text{Assumed}\quad I_p = \frac{1470\ \text{mW}}{56} = .0265$$

Let $I_6 \doteq I_p = 26.3$ ma

$$I_6 = \frac{I_6}{\beta} = \frac{26.3\ \text{ma}}{12.5} = 2.1\ \text{ma}$$

$$R_1 = R_2 = R_3 = R_4 = \frac{V_2 - V_{BE_{SAT}} - V_F}{I_7} \qquad \text{Let } V_2 = 4V$$

$$R_1 = R_2 = R_3 = R_4 = \frac{4 - 1.3 - .7}{2.1\ \text{ma}} = 952\ \Omega \quad \text{Make it } 1K\Omega$$

$$\therefore\ I_7 \doteq \frac{2V}{1K} = 2 \text{ ma}$$

$$P_{R1} = P_{R2} = P_{R3} = P_{R4} = \left(2 \times 10^{-3}\right) 1K = 4 \text{ mW}$$

$$\text{Let } I_9 = \frac{I_7}{5} = \frac{2 \text{ ma}}{5} = .4 \text{ ma}$$

Use 1N5291 .56 ma Nom

$$P_{IR7} = (.56 \text{ ma})(56V) = 31.4 \text{ mW}$$

Now for Q35 with

2N3637 $\quad I_c = 28.1$ ma

$I_b = 1$ ma

$$\beta = \frac{28.1 \text{ ma}}{.1 \text{ ma}} = 28.1$$

$$V_{CE} = .8V$$

$$A_W N = (60.8)(757) + 2 \times 54) = 52{,}600$$

$$K = \frac{52{,}600}{194{,}000} = .27$$

$$I_m = \frac{(.794)(.09)(4.49)}{757} = .000424 \text{ a}$$

$$I_8 = (2 \text{ ma})\left(\frac{4}{56}\right) + .424 \text{ ma} = .567 \text{ ma}$$

$$R_{83} = R_{84} = \frac{112 - 56}{.567\ m} = \underline{\underline{100\ K}}$$

$$P_{R83} = P_{R84} = (.567m)(56V) = 32\ mW$$

3.4 System Performance Results

This section contains the breadboard performance results for the Phase II Advanced Power Conditioning System (Figure 3.2-1).

3.4.1 Physical Results

A. Chassis Dimensions: 10"L x 8-5/8"W x 3"H
The layout is shown in the Appendix, Section 6, Pages 6-17 thru 6-21.

B. Module Weight : 10.5 lbs

3.4.2 Electrical Test Results

3.4.2.1 Phase II Test Plan/Procedure Used

A series of tests shall be performed on the Advanced Power Conditioning System to verify performance and provide a record of the operating characteristics.

A. REGULATION TESTS

Regulation tests will consist of input voltages of 25 to 50V dc and output loads varying from 80 to 400 watts.

Recorded data during regulation tests shall consist of the following:

1. Input voltage
2. Input current
3. Input current ripple
4. Output voltage
5. Output voltage ripple
6. Output voltage spikes
7. Output current
8. From measured data, Input/Output Power and efficiencies shall be calculated and recorded.

B. TRANSIENT RESPONSE TESTS

The Transient Response tests shall be performed with a nominal input voltage of 35V dc, output load shall be switched from 240 watts to 120 watts, and from 240 watts to 320 watts.

Photographs shall be taken of the output voltage excursion and duration.

C. TEMPERATURE TESTS

Temperature tests shall be performed from -20°C to +75°C. While at these temperatures, the Advanced Power Conditioning System shall be subjected to the Regulation tests defined in Paragraph A.

D. MARGIN TESTS

Margin tests shall be performed in all phases of testing. These tests shall establish limits beyond design goals at which the Advanced Power Conditioning System is still operational, specifically:

1. Input voltages below 25V dc.
2. Transient load response tests exceeding ±50% of output load.

3. Temperature tests exceeding design limits of $-20^{\circ}C$ to $+75^{\circ}C$.

4. Output load tests below 80 watts and above 400-watt levels.

E. FAILURE MODE TESTS

Results or effects of:

1. Loss of one clock.

2. Loss of one power stage.

3. Loss of one feedback amplifier.

4. Loss of one driver stage.

5. Loss of one output filter capacitor.

3.4.2.2 Test Performance Results

1. Regulation (line plus load)

Figure 3.4-1 shows the output voltage vs line and load changes. The maximum output voltage change was 0.60V for an input voltage swing from 25 to 50V dc and a load change from 400 to 80 watts respectively. Figure 3.4-1 also shows the regulation data of over loads up to 560 watts. For a 589 to 80-watt load change and a 25 to 50V dc input voltage change the maximum output voltage change was 0.66V. The test data is given on Pages 6-3 thru 6-5 of the Appendix.

2. Output Ripple Voltage and Spikes

The maximum output ripple voltage without spikes was 260 mV peak-to-peak at 25V dc input and 437 watts load. The maximum output voltage spikes was 13V peak-

TABLE 3-1

SUMMARY OF ELECTRICAL TEST RESULTS
VERSUS THE REQUIREMENTS

PARAMETER COMPARED	REQUIREMENTS FROM THE S.O.W.	BREADBOARD UNIT PERFORMANCE
Input voltage	25 to 50 Vdc minimum	
Input ripple current	400 ma peak-to-peak maximum	140 mV peak-to-peak max. (600 mV peak-to-peak spikes)
Output voltage	56 Vdc ±1% maximum (Includes: Line and Load)	56 Vdc with AV = 1.09% (±0.545%)
Output ripple voltage	100 mV peak-to-peak maximum	260 mV peak-to-peak max. (not including spikes)
Output power	80W minimum to 400W maximum	80W to 500W
Efficiency	90% minimum	87.2% minimun at 80W; >90% from 102W to 372W
Transient response	±5% maximum for ±50% Load change Recovery Time = 20 msec	-3.75% to +2.86% change Recovery time = 7 msec max.
Operating temperature range	-20°C to +75°C	-20°C to +75°C
UNIT WEIGHT	10 pounds maximum	10.5 pounds maximum

K+E 10 X 10 TO THE ½ INCH 359-11
KEUFFEL & ESSER CO. MADE IN U.S.A.

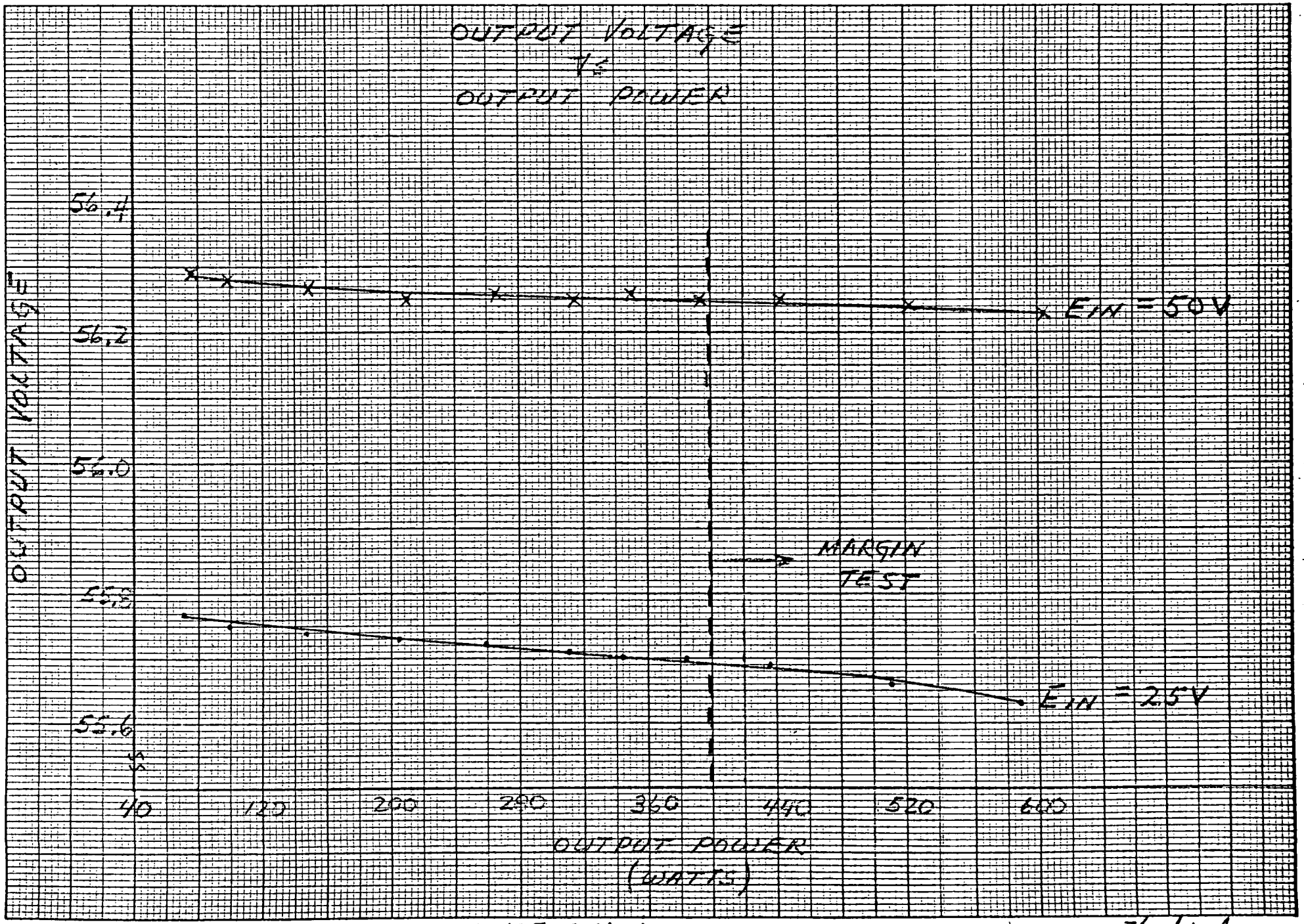

FIGURE 3.4-1

7/20/71 LK

K+E 10 X 10 TO THE ½ INCH 359-11
KEUFFEL & ESSER CO. MADE IN U.S.A.

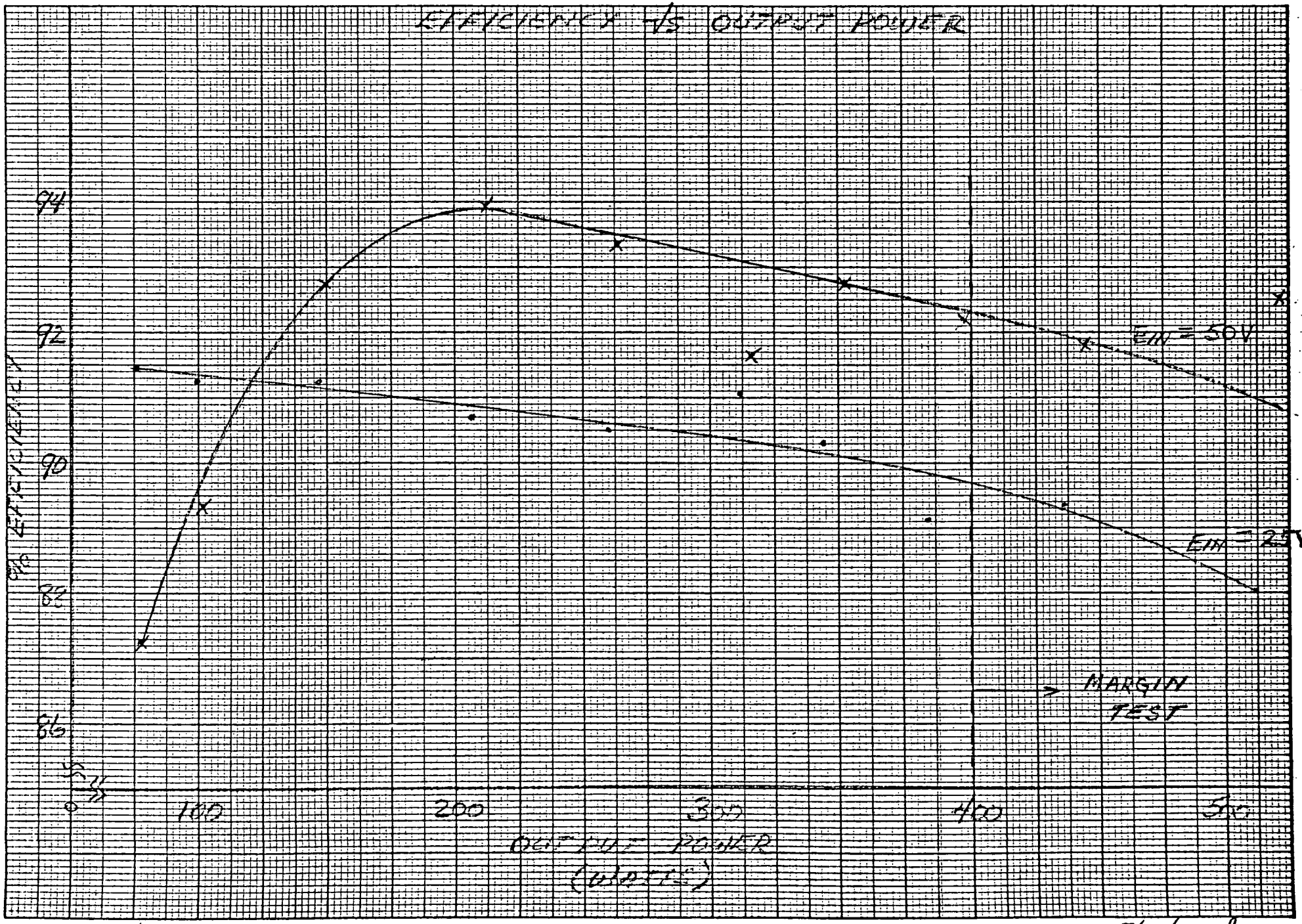

FIGURE 3.4-7

7/20/71 bk

K+E 10 X 10 TO THE ½ INCH 359-11
KEUFFEL & ESSER CO. MADE IN U.S.A.

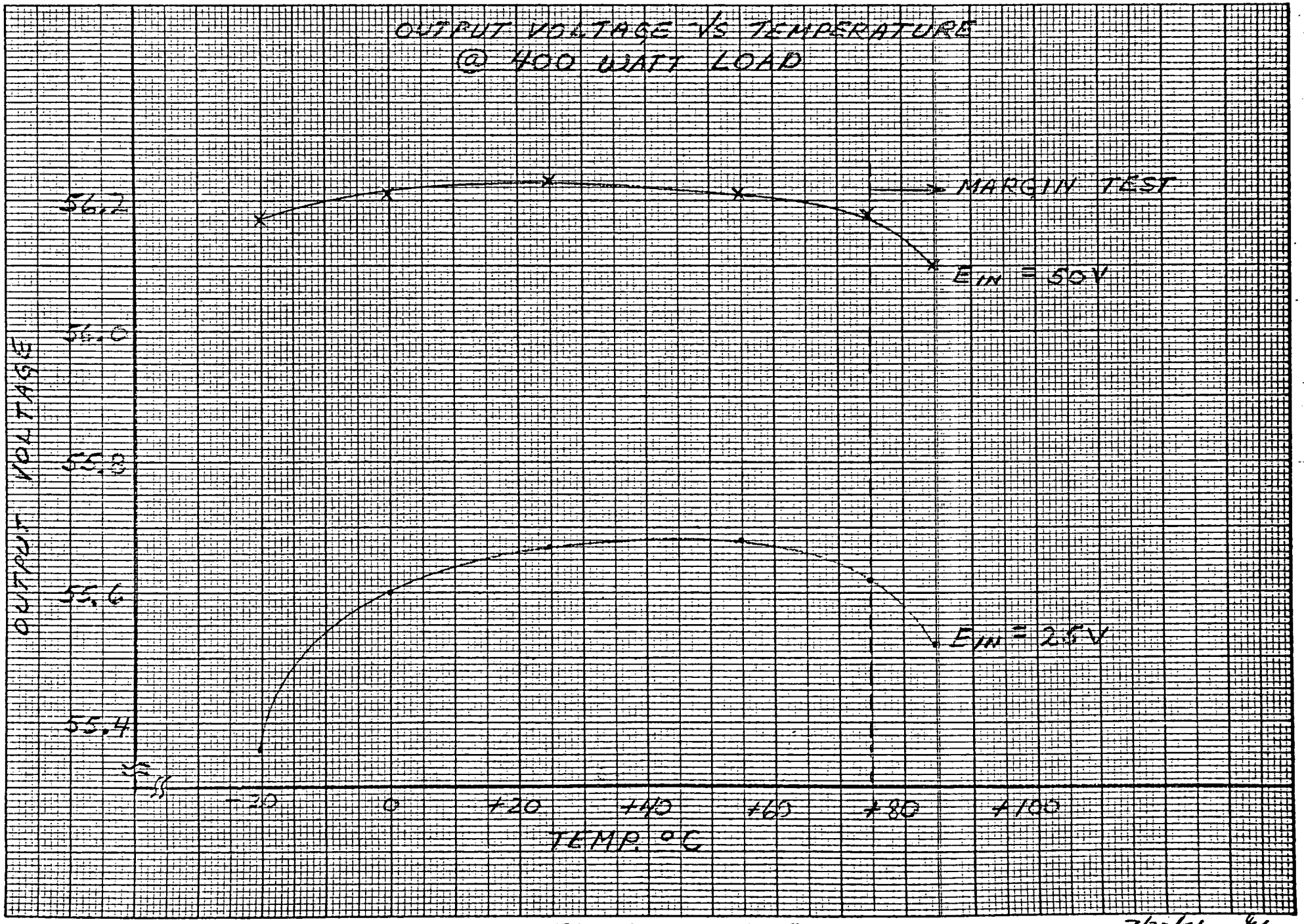

FIGURE 3.4-3

7/20/71 EK

to-peak at 30V dc input and 308 watts output. The spike level is due primarily to test hookup methods and varied with different hookups. See Pages 6-3 through 6-5 of the Appendix for other data points and the photograph on Page 6-13.

3. Input Ripple Current

The maximum input ripple current without spikes was 140 mV peak-to-peak at 25V dc input and 437-watts load. The maximum input current spikes was 600 mV peak-to-peak at 30V dc input and 435-watts load. Pages 6-3 through 6-5 of the Appendix contain other data points including extension up to 510-watts load.

4. Efficiency Calculations from Measured Data

Figure 3.4-2 shows a plot of the measured efficiency vs output power. The peak efficiency of 93.9% occurs at 212 watts and 50V dc input. The efficiency is above 90% from 102 watts to 372 watts at inputs of 25 and 50V dc. The minimum efficiency calculated was 87.2% at 50V dc input and 80-watt load. The raw data is presented in the Appendix, Pages 6-3 through 6-5.

5. Transient Response

The maximum excursion for a load from 240 to 320 watts was -2.1V to 0.8V with a recovery time of 7 milliseconds. The maximum excursion for a load change from 240 to 120 watts was -0.9V to +1.6V with a recovery time of 6 milliseconds. Page 6-6 in the Appendix shows photographs of the results.

6. Temperature Tests

Figure 3.4-3 shows the output voltage vs temperature curves for the Advanced Power Conditioning System. The output voltage change was 80 mV from $0^{\circ}C$ to $55^{\circ}C$. The maximum deviation was 300 mV from $-20^{\circ}C$ to $+75^{\circ}C$. The temperature test raw data is presented on Pages 6-7 and 6-8 of the Appendix.

7. Margin Tests

Figures 3.4-1 through 3.4-3 show the data for margin tests up to 604 watts output and temperatures up to $+85^{\circ}C$. In addition the following tests were made:

a. Transient Response Limits

The maximum excursion for a load change from 80 to 400 watts was -1.6V to +0.9V with a recovery time of 9 milliseconds. The maximum excursion for a load change from 400 to 80 watts was +1.3V to -0.2V with a recovery time of 5 milliseconds. The photographs are presented on Page 6-12 in the Appendix.

b. Regulation Range Limits

The Advanced Power Conditioning System remained within the regulation limits with overloads of 589 watts at 25 volts input and 604 watts at 50 volts input (see Page 6-10A in the Appendix for further data points). The efficiency at 589 watts, 25V dc input, was 90.6%, and at 604 watts 50V dc input it was 94.9%.

The system remained stable and within the regulation limits at zero output load and 7.48V to 56.16V dc input range.

c. Input Voltage Swing Limits

(See Page 6-10A in the Appendix for the raw power data).

With an 80-watt load, the output voltage remained within regulation limits with an input voltage of 19.58V to 57.23V. With a 400-watt load, the output voltage remained with regulation limits with an input voltage of 22.11V to 57.49V.

At zero load the output voltage was 56.168V at 56.34V input and 55.44V output at 7.48V input.

8. Failure Mode Tests

Various failure mode tests were run on the completed breadboard for the Advanced Power Conditioning System. The following failure mode tests were conducted with no resulting degradation in performance:

a. Loss of one clock: F5 opened

b. Loss of one-half of a power stage: F15 opened

c. Loss of a complete power stage: F14 and F15 opened

d. Loss of one feedback amplifier: R73 shorted - then Q28 C-E shorted.

e. Loss of one driver stage: Q25 B-E shorted

f. Loss of one output filter capacitor: F16 opened

It was found that the shorting of Q36-Q39 and Q21-Q25 (main/standby drive clock oscillator transistors and driver stage control transistors respectively)

- C-E and C7, C11 and C15 would cause total loss of performance. This can be prevented in an actual production run by:

  a. For Q36-Q39: Add diodes in series with each collector and in series with IR8 and IR9.

  b. For Q21-Q25: Add additional transistors in series collector to emitter and drive through added base resistors from the majority vote logic.

  c. For C7, C11 and C15: Add additional capacitors in series.

  These additions furnish series redundancy on the parts level since this failure mode would cause total unit failure without it.

4. WORST-CASE CONSIDERATIONS

This section contains the worst-case evaluations performed on the Phase II breadboard configuration. This section is divided into four sections:

1) Design and Performance Margins
2) Component Stresses
3) Stability Margin Analysis
4) Reliability Assessment

4.1 Design and Performance Margins

The Advanced Power Conditioning System for Phase II was designed for an input range of 22.5V to 52V dc and a load range from 80 to 500 watts. The required design goal was 25V to 50V dc input and a load range of 80 to 400 watts.

This gives us a power margin of 25% of the required full load which will allow one complete power stage failure without interrupted 400-watt service.

4.2 Component Stresses

The component parts shown on the schematic diagram were selected to comply with the JPL recommended derating factors. No parts stress problems were encountered during the performance and margin tests performed.

The following pages contain the parts usage and stress data for the Phase II breadboard.

JET PROPULSION LABORATORY
CALIFORNIA INSTITUTE OF TECHNOLOGY
PASADENA, CALIFORNIA

MARINER MARS
1971

PART USAGE AND APPLIED STRESS DATA
RESISTORS – FIXED

EQUIPMENT

SCHEMATIC TITLE A-PC NO. PHASE II REV.

NEXT ASSY TITLE NO.

CKT SYM NO.	CONSTRUCTION: RESISTIVE ELEMENT	CONSTRUCTION: TYPE ENCLOSURE	VENDOR OR MIL TYPE NUMBER	VENDOR	PROCUREMENT DOCUMENT	NOM RES (OHMS)	MFG TOL %	PART AMB TEMP °C	VOLTAGE: NOM RATED	VOLTAGE: ACT.	VOLTAGE: STRESS RATIO	POWER DISS.: RATED 25°C NOM	POWER DISS.: RATED MAX. AMB.	POWER DISS.: ACT.	POWER DISS.: STRESS RATIO	WAVEFORM (DC, SINE, PULSE, ETC)	REMARKS
R_1	CARBON	MOULDED	CB	A-B		1K	5	75	250	2	.008	1/4	1/4	.002	.008		
R_2	"	"	"	"		"	"	"	"	"	"	"	"	"	"		
R_3	"	"	"	"		"	"	"	"	"	"	"	"	"	"		
R_4	"	"	"	"		"	"	"	"	"	"	"	"	"	"		
R_5	"	"	"	"		16K	"	"	"	56	.224	"	"	.133	.532		
R_{10}	"	"	"	"		"	"	"	"	"	"	"	"	"	"		
R_{15}	"	"	"	"		"	"	"	"	"	"	"	"	"	"		
R_6	"	"	"	"		62	"	"	"	1.3	.005	"	"	.027	.108		
R_{11}	"	"	"	"		"	"	"	"	"	"	"	"	"	"		
R_{16}	"	"	"	"		"	"	"	"	"	"	"	"	"	"		
R_7	"	"	"	"		10K	"	"	"	3.3	.012	"	"	.0011	.004		
R_{12}	"	"	"	"		"	"	"	"	"	"	"	"	"	"		
R_{17}	"	"	"	"		"	"	"	"	"	"	"	"	"	"		
R_8	"	"	"	"		220	"	"	"	3.3	.012	"	"	.005	.020		

REPORT NO. | REV. | DATE | COG. ENGR. APPRD | DATE | JPL SEC. APPD. | DATE | CUST. REL. APPD. | DATE | SHEET 1 OF

JET PROPULSION LABORATORY
CALIFORNIA INSTITUTE OF TECHNOLOGY
PASADENA, CALIFORNIA

MARINER MARS
1971

PART USAGE AND APPLIED STRESS DATA
RESISTORS – FIXED

EQUIPMENT

SCHEMATIC TITLE: A-PC NO. PHASE II REV.

NEXT ASSY TITLE NO.

CKT SYM NO.	CONSTRUCTION: RESISTIVE ELEMENT	CONSTRUCTION: TYPE ENCLOSURE	VENDOR OR MIL TYPE NUMBER	VENDOR	PROCUREMENT DOCUMENT	NOM RES (OHMS)	MFG TOL %	PART AMB TEMP °C	VOLTAGE: NOM RATED	VOLTAGE: ACT.	VOLTAGE: STRESS RATIO	POWER DISS.: RATED 25°C NOM	POWER DISS.: RATED MAX. AMB.	POWER DISS.: ACT.	POWER DISS.: STRESS RATIO	WAVEFORM (DC, SINE, PULSE, ETC)	REMARKS
R9	CARBON	MOULDED	CB	A-B		220	5	75	250	3.3	.012	1/4	1/4	.005	.020		
R13	"	"	"	"		"	"	"	"	"	"	"	"	"	"		
R14	"	"	"	"		"	"	"	"	"	"	"	"	"	"		
R18	"	"	"	"		"	"	"	"	"	"	"	"	"	"		
R19	"	"	"	"		"	"	"	"	"	"	"	"	"	"		
R20	"	"	"	"		68K	"	"	"	55	.22	"	"	.027	.55		
R22	"	"	"	"		"	"	"	"	"	"	"	"	"	"		
R23	"	"	"	"		"	"	"	"	"	"	"	"	"	"		
R26	"	"	"	"		"	"	"	"	"	"	"	"	"	"		
R27	"	"	"	"		"	"	"	"	"	"	"	"	"	"		
R30	"	"	"	"		"	"	"	"	"	"	"	"	"	"		
R31	"	"	"	"		"	"	"	"	"	"	"	"	"	"		
R34	"	"	"	"		"	"	"	"	"	"	"	"	"	"		
R35	"	"	"	"		"	"	"	"	"	"	"	"	"	"		

REPORT NO. | REV. | DATE | COG. ENGR. APPRD | DATE | JPL SEC. APPD. | DATE | CUST. REL. APPD. | DATE | SHEET 2 OF

JET PROPULSION LABORATORY
CALIFORNIA INSTITUTE OF TECHNOLOGY
PASADENA, CALIFORNIA

MARINER MARS
1971

PART USAGE AND APPLIED STRESS DATA
RESISTORS – FIXED

EQUIPMENT:

SCHEMATIC TITLE: A - PC NO. PHASE II REV.

NEXT ASSY TITLE: NO.

CKT SYM NO.	CONSTRUCTION: RESISTIVE ELEMENT	CONSTRUCTION: TYPE ENCLOSURE	VENDOR OR MIL TYPE NUMBER	VENDOR	PROCUREMENT DOCUMENT	NOM RES (OHMS)	MFG TOL %	PART AMB TEMP °C	VOLTAGE: NOM RATED	VOLTAGE: ACT.	VOLTAGE: STRESS RATIO	POWER DISS.: RATED 25°C NOM	POWER DISS.: RATED MAX. AMB.	POWER DISS.: ACT.	POWER DISS.: STRESS RATIO	WAVEFORM (DC, SINE, PULSE, ETC)	REMARKS
R38	CORBIN	MOULDED	CB	A-B		68K	5	75	250	55	.22	1/4	1/4	.027	.55		
R21	"	"	GB	"		5.6K	"	"	"	55	.22	1	1	.55	.55		
R25	"	"	"	"		"	"	"	"	"	"	"	"	"	"		
R29	"	"	"	"		"	"	"	"	"	"	"	"	"	"		
R33	"	"	"	"		"	"	"	"	"	"	"	"	"	"		
R37	"	"	"	"		"	"	"	"	"	"	"	"	"	"		
R24	"	"	CB	"		6.2K	"	"	"	4	.016	1/4	1/4	.0026	.01		
R28	"	"	"	"		"	"	"	"	"	"	"	"	"	"		
R32	"	"	"	"		"	"	"	"	"	"	"	"	"	"		
R36	"	"	"	"		"	"	"	"	"	"	"	"	"	"		
R39	"	"	"	"		"	"	"	"	"	"	"	"	"	"		
R40	"	"	"	"		20K	"	"	"	4	.01k	"	"	.068	.037		
R41	"	"	"	"		13K	"	"	"	1.3	.005	"	"	.0013	.0005		
R42	"	"	"	"		"	"	"	"	"	"	"	"	"	"		

REPORT NO. | REV. | DATE | COG. ENGR. APPRD | DATE | JPL SEC. APPD. | DATE | CUST. REL. APPD. | DATE | SHEET 3 OF

JET PROPULSION LABORATORY
CALIFORNIA INSTITUTE OF TECHNOLOGY
PASADENA, CALIFORNIA

MARINER MARS
1971

PART USAGE AND APPLIED STRESS DATA
RESISTORS – FIXED

EQUIPMENT

SCHEMATIC TITLE A – PC NO. PHASE II REV.

NEXT ASSY TITLE NO.

CKT SYM NO.	CONSTRUCTION RESISTIVE ELEMENT	CONSTRUCTION TYPE ENCLOSURE	VENDOR OR MIL TYPE NUMBER	VENDOR	PROCUREMENT DOCUMENT	NOM RES (OHMS)	MFG TOL %	PART AMB TEMP °C	VOLTAGE NOM RATED	VOLTAGE ACT.	VOLTAGE STRESS RATIO	POWER DISS. RATED 25°C NOM	POWER DISS. RATED MAX. AMB.	POWER DISS. ACT.	POWER DISS. STRESS RATIO	WAVEFORM (DC, SINE, PULSE, ETC)	REMARKS
R43	CORBIN	MOULDED	CB	A-B		13K	5	75	250	1.3	.005	1/4	1/4	.00013	.0005		
R44	"	"	"	"		"	"	"	"		"	"	"	"	"		
R45	"	"	"	"		"	"	"	"		"	"	"	"	"		
R46	"	"	"	"		"	"	"	"		"	"	"	"	"		
R48	"	"	"	"		9.1K	"	"	"	6.7	.024	"	"	.0016	.006		
R60	"	"	"	"		"	"	"	"	"	"	"	"	"	"		
R72	"	"	"	"		"	"	"	"	"	"	"	"	"	"		
R49	"	"	"	"		3.3K	"	"	"	2.6	.01	"	"	.0027	.008		
R50	"	"	"	"		"	"	"	"	"	"	"	"	"	"		
R61	"	"	"	"		"	"	"	"	"	"	"	"	"	"		
R62	"	"	"	"		"	"	"	"	"	"	"	"	"	"		
R73	"	"	"	"		"	"	"	"	"	"	"	"	"	"		
R74	"	"	"	"		"	"	"	"	"	"	"	"	"	"		
R51	"	"	"	"		1K	"	"	"	0	0	"	"	<.01	<.04		

REPORT NO. | REV. | DATE | COG. ENGR. APPRD | DATE | JPL SEC. APPD. | DATE | CUST. REL. APPD. | DATE | SHEET 4 OF

JET PROPULSION LABORATORY
CALIFORNIA INSTITUTE OF TECHNOLOGY
PASADENA, CALIFORNIA

MARINER MARS
1971

PART USAGE AND APPLIED STRESS DATA
RESISTORS – FIXED

EQUIPMENT

SCHEMATIC TITLE A-PC NO. PHASE II REV.

NEXT ASSY TITLE NO.

CKT SYM NO.	CONSTRUCTION: RESISTIVE ELEMENT	CONSTRUCTION: TYPE ENCLOSURE	VENDOR OR MIL-TYPE NUMBER	VENDOR	PROCUREMENT DOCUMENT	NOM RES (OHMS)	MFG TOL %	PART AMB TEMP °C	VOLTAGE: NOM RATED	VOLTAGE: ACT.	VOLTAGE: STRESS RATIO	POWER DISS.: RATED 25°C NOM	POWER DISS.: RATED MAX. AMB.	POWER DISS.: ACT.	POWER DISS.: STRESS RATIO	WAVEFORM (DC, SINE, PULSE, ETC)	REMARKS
R63	CARBON	MOLDED	CB	A-B		1K	5	75	250	0	0	1/4	1/4	<.01	<.04		
R75	"	"	"	"		"	"	"	"	"	"	"	"	"	"		
R83	"	"	"	"		100K	"	"	"	56	.224	"	"	.031	.124		
R84	"	"	"	"		"	"	"	"	"	"	"	"	"	"		
R47	MF	"	RN55C	IRC		100K	1	75	250	50	.20	1/10	1/10	.025	.0025		
R59	"	"	"	"		"	"	"	"	"	"	"	"	"	"		
R71	"	"	"	"		"	"	"	"	"	"	"	"	"	"		
R52	"	"	"	"		93.1K	"	"	"	47	.188	"	"	.023	.0023		
R54	"	"	"	"		"	"	"	"	"	"	"	"	"	"		
R64	"	"	"	"		"	"	"	"	"	"	"	"	"	"		
R66	"	"	"	"		"	"	"	"	"	"	"	"	"	"		
R76	"	"	"	"		"	"	"	"	"	"	"	"	"	"		
R78	"	"	"	"		"	"	"	"	"	"	"	"	"	"		
R53	"	"	"	"		46.4K	"	"	"	46	.184	"	"	.046	.0046		

REPORT NO. | REV. | DATE | COG. ENGR. APPRD | DATE | JPL SEC. APPD. | DATE | CUST. REL. APPD. | DATE | SHEET 5 OF

JET PROPULSION LABORATORY
CALIFORNIA INSTITUTE OF TECHNOLOGY
PASADENA, CALIFORNIA

MARINER MARS
1971

PART USAGE AND APPLIED STRESS DATA
RESISTORS – FIXED

EQUIPMENT

SCHEMATIC TITLE A – PC NO. PHASE II REV.

NEXT ASSY TITLE NO.

CKT SYM NO.	CONSTRUCTION RESISTIVE ELEMENT	CONSTRUCTION TYPE ENCLOSURE	VENDOR OR MIL TYPE NUMBER	VENDOR	PROCUREMENT DOCUMENT	NOM RES (OHMS)	MFG TOL %	PART AMB TEMP °C	VOLTAGE NOM RATED	VOLTAGE ACT.	VOLTAGE STRESS RATIO	POWER DISS. RATED 25°C NOM	POWER DISS. RATED MAX. AMB.	POWER DISS. ACT.	POWER DISS. STRESS RATIO	WAVEFORM (DC, SINE, PULSE, ETC)	REMARKS
R65	MF	MOLDED	RN55C	IRC		46.4 K	1	75	250	46	.184	1/10	1/10	.046	.0046		
R77	"	"	"	"		"	"	"	"	"	"	"	"	"	"		
R56	"	"	"	"		7.15 K	"	"	"	6	.024	"	"	.005	.0005		
R57	"	"	"	"		"	"	"	"	"	"	"	"	"	"		
R68	"	"	"	"		"	"	"	"	"	"	"	"	"	"		
R69	"	"	"	"		"	"	"	"	"	"	"	"	"	"		
R80	"	"	"	"		"	"	"	"	"	"	"	"	"	"		
R81	"	"	"	"		"	"	"	"	"	"	"	"	"	"		
R55	"	"	"	"		15.8 K	"	"	"	8	.032	"	"	.001	.0001		
R67	"	"	"	"		"	"	"	"	"	"	"	"	"	"		
R79	"	"	"	"		"	"	"	"	"	"	"	"	"	"		
R58	WW	"	224-1-502	BOURNS		5K	"	"	"	2	.008	1	1	.004	.004		
R70	"	"	"	"		"	"	"	"	"	"	"	"	"	"		
R82	"	"	"	"		"	"	"	"	"	"	"	"	"	"		

REPORT NO.	REV.	DATE	COG. ENGR. APPRD	DATE	JPL SEC. APPD.	DATE	CUST. REL. APPD.	DATE	SHEET 6 OF

JET PROPULSION LABORATORY
CALIFORNIA INSTITUTE OF TECHNOLOGY
PASADENA, CALIFORNIA

MARINER M[illegible]
1971

PART USAGE AND APPLIED STRESS DATA
CAPACITORS – FIXED AND VARIABLE

EQUIPMENT

SCHEMATIC TITLE A-PC NO. PHASE II REV.

NEXT ASSY TITLE NO.

CKT SYM NO.	CONSTRUCTION DIELECTRIC	CONSTRUCTION TYPE CASE	VENDOR OR MIL TYPE NUMBER	VENDOR	PROCUREMENT DOCUMENT	PART AMB TEMP* °C	CAP. VALUE	MFG. TOL. %	VOLTAGE RATED 25°C NOM DC	RATED 25°C NOM RMS	RATED MAX AMB DC	RATED MAX AMB RMS	OPERATING DC	OPERATING AC PEAK	OPERATING AC RMS	OPERATING AC FREQ	OPERATING PULSE PEAK	OPERATING PULSE REP RATE	STRESS RATIO	WAVE FORM (DC, SINE, PULSE ETC)	REMARKS
C_1	TAN	HS	350D	SPRAGUE		75	1μ	10	75	–	75	–	50	–	–	–	–	–	.66		
C_2	"	"	"	"		"	"	"	"	–	"	–	"	–	–	–	–	–	"		
C_3	"	"	202D	"		"	260	"	100	–	100	–	50	–	–	–	–	–	.50		
C_4	"	"	"	"		"	"	"	"	–	"	–	"	–	–	–	–	–	"		
C_5	CERAMIC	EPOXY	C11A	USCC		"	3300 pf	5	100	–	100	–	4	–	–	–	–	–	.04		
C_6	"	"	"	"		"	"	"	"	–	"	–	"	–	–	–	–	–	"		
C_7	TAN	HS	29F	GE		"	7μ	10	100	–	100	–	59	–	–	–	–	–	.59		
C_{11}	"	"	"	"		"	"	"	"	–	"	–	"	–	–	–	–	–	"		
C_{15}	"	"	"	"		"	"	"	"	–	"	–	"	–	–	–	–	–	"		
C_9	CERAMIC	EPOXY	C11A	USCC		"	.01μ	5	100	–	100	–	6.6	–	–	–	–	–	.066		
C_{10}	"	"	"	"		"	"	"	"	–	"	–	"	–	–	–	–	–	"		
C_{13}	"	"	"	"		"	"	"	"	–	"	–	"	–	–	–	–	–	"		
C_{14}	"	"	"	"		"	"	"	"	–	"	–	"	–	–	–	–	–	"		
C_{17}	"	"	"	"		"	"	"	"	–	"	–	"	–	–	–	–	–	"		
C_{18}	"	"	"	"		"	"	"	"	–	"	–	"	–	–	–	–	–	"		

REPORT NO. REV. DATE COG. ENGR. APPD. DATE JPL SEC APPD DATE CUST. REL. APPD DATE SHEET 7 OF

*AMBIENT AIR TEMP. UNLESS OTHERWISE SPECIFIED

JET PROPULSION LABORATORY
CALIFORNIA INSTITUTE OF TECHNOLOGY
PASADENA, CALIFORNIA

MARINER MA
1971

PART USAGE AND APPLIED STRESS DATA
CAPACITORS – FIXED AND VARIABLE

EQUIPMENT

SCHEMATIC TITLE A - PC NO. PHASE II REV.

NEXT ASSY TITLE NO.

CKT SYM NO.	CONSTRUCTION DIELECTRIC	CONSTRUCTION TYPE CASE	VENDOR OR MIL TYPE NUMBER	VENDOR	PROCUREMENT DOCUMENT	PART AMB TEMP* °C	CAP. VALUE ~~PF~~	MFG. TOL. %	VOLTAGE RATED 25°C NOM DC	RATED 25°C NOM RMS	RATED MAX AMB DC	RATED MAX AMB RMS	OPERATING DC	OPERATING AC PEAK	OPERATING AC RMS	OPERATING AC FREQ	OPERATING PULSE PEAK	OPERATING PULSE REP RATE	STRESS RATIO	WAVE FORM (DC, SINE, PULSE ETC)	REMARKS
C8	CERAMIC	EPOXY	C11A	USCC		75	.033 μ	5	100	–	100	–	5.7	–	–	–	–	–	.057		
C12	"	"	"	"		"	"	"	"	–	"	–	"	–	–	–	–	–	"		
C16	"	"	"	"		"	"	"	"	–	"	–	"	–	–	–	–	–	"		
C19	TAN	HS	350D	SPRAGUE		"	6.8 μ	10	15	–	15	–	9.5	–	–	–	–	–	.63		
C21	"	"	"	"		"	"	"	"	–	"	–	"	–	–	–	–	–	"		
C23	"	"	"	"		"	"	"	"	–	"	–	"	–	–	–	–	–	"		
C20	"	"	"	"		"	"	"	"	–	"	–	"	–	–	–	–	–	"		
C22	"	"	"	"		"	"	"	"	–	"	–	"	–	–	–	–	–	"		
C24	"	"	"	"		"	"	"	"	–	"	–	"	–	–	–	–	–	"		
C25	"	"	29F	GE		"	350 μ	"	100	–	100	–	56	–	–	–	–	–	.56		
C26	"	"	"	"		"	"	"	"	–	"	–	"	–	–	–	–	–	"		
C27	"	"	"	"		"	"	"	"	–	"	–	"	–	–	–	–	–	"		
C28	"	"	"	"		"	"	"	"	–	"	–	"	–	–	–	–	–	"		
C29	"	"	"	"		"	"	"	"	–	"	–	"	–	–	–	–	–	"		
C32	"	"	"	"		"	"	"	"	–	"	–	"	–	–	–	–	–	"		

REPORT NO. | REV. | DATE | COG. ENGR. APPD. | DATE | JPL SEC | APPD | DATE | CUST. REL. APPD | DATE | SHEET 8 OF

*AMBIENT AIR TEMP. UNLESS OTHERWISE SPECIFIED

C.2

JET PROPULSION LABORATORY
CALIFORNIA INSTITUTE OF TECHNOLOGY
PASADENA, CALIFORNIA

MARINER MA
1971

PART USAGE AND APPLIED STRESS DATA
CAPACITORS – FIXED AND VARIABLE

EQUIPMENT

SCHEMATIC TITLE A - PC NO. PHASE II REV.

NEXT ASSY TITLE NO.

CKT. SYM NO.	CONSTRUCTION DIELECTRIC	CONSTRUCTION TYPE CASE	VENDOR OR MIL TYPE NUMBER	VENDOR	PROCUREMENT DOCUMENT	PART AMB. TEMP.* °C	CAP. VALUE ~~pF~~	MFG. TOL. %	VOLTAGE RATED 25°C NOM DC	VOLTAGE RATED 25°C NOM RMS	VOLTAGE RATED MAX AMB DC	VOLTAGE RATED MAX AMB RMS	VOLTAGE OPERATING DC	VOLTAGE OPERATING AC PEAK	VOLTAGE OPERATING AC RMS	VOLTAGE OPERATING AC FREQ	VOLTAGE OPERATING PULSE PEAK	VOLTAGE OPERATING PULSE REP RATE	STRESS RATIO	WAVE FORM (DC, SINE, PULSE ETC)	REMARKS
C30	CERAMIC	EPOXY	C11A	USCC		75	68 pf	5	100	–	100	–	56	–	–	–	–	–	.56		
C31	"	"	"	"		"	"	"	"	–	"	–	"	–	–	–	–	–	"		

REPORT NO. | REV. | DATE | COG. ENGR. APPD. | DATE | JPL SEC APPD | DATE | CUST. REL. APPD | DATE | SHEET 9 OF

*AMBIENT AIR TEMP. UNLESS OTHERWISE SPECIFIED

JET PROPULSION LABORATORY
CALIFORNIA INSTITUTE OF TECHNOLOGY
PASADENA, CALIFORNIA

MARINER MARS
1971

PART USAGE AND APPLIED STRESS DATA
TRANSISTORS

EQUIPMENT:

SCHEMATIC TITLE: A - PC NO. PHASE II REV.

NEXT ASSY. TITLE: NO.

CKT SYM NO.	EIA REGISTRATION OR VENDOR PART NO.	VENDOR	PROCUREMENT DOCUMENT	PART AMB TEMP*	POWER DISSIPATION RATED (25°C NOMINAL)	POWER DISSIPATION RATED MAX AMB	POWER DISSIPATION ACT	POWER DISSIPATION STRESS RATIO	VCE MAX. RATED	VCE ACT.	VCE STRESS RATIO	VCB MAX RATED	VCB ACT.	VCB STRESS RATIO	VEB MAX. RATED	VEB ACT.	VEB STRESS RATIO	REMARKS
Q1	1723-1605	WESTINGHOUSE		75	150	107	.59	.0055	160	58	.361	170	57	.335	7	1.3	.188	
Q2																		
Q3																		
Q4																		
Q5																		
Q6																		
Q7																		
Q8																		
Q9																		
Q10																		
Q11	2N3440	RCA		75	1	.8	.0013	.0016	250	56	.223	300	55	.183	7	3	.43	
Q12																		
Q13																		
Q14																		
Q15																		

REPORT NO.	REV.	DATE	COG. ENG. APPD.	DATE	JPL SEC.	APPD.	DATE	CUST. REL. APPD.	DATE	SHEET 10 OF

*AMBIENT AIR TEMP. UNLESS OTHERWISE SPECIFIED

JET PROPULSION LABORATORY
CALIFORNIA INSTITUTE OF TECHNOLOGY
PASADENA, CALIFORNIA

MARINER MARS
1971

PART USAGE AND APPLIED STRESS DATA
TRANSISTORS

EQUIPMENT:

SCHEMATIC TITLE: A-PC NO. PHASE II REV.

NEXT ASSY. TITLE: NO.

CKT SYM NO.	EIA REGISTRATION OR VENDOR PART NO.	VENDOR	PROCUREMENT DOCUMENT	PART AMB TEMP*	POWER DISSIPATION RATED +25°C (NOMINAL)	POWER DISSIPATION RATED MAX AMB	POWER DISSIPATION ACT	POWER DISSIPATION STRESS RATIO	VCE MAX. RATED	VCE ACT.	VCE STRESS RATIO	VCB MAX RATED	VCB ACT.	VCB STRESS RATIO	VEB MAX. RATED	VEB ACT.	VEB STRESS RATIO	REMARKS
Q16	2N3340	RCA		75	1	.8	.0013	.0016	250	56	.223	300	55	.183	7	3	.43	
Q17	↓	↓	↓	↓	↓	↓	↓	↓	↓	↓	↓	↓	↓	↓	↓	↓	↓	
Q18	↓	↓	↓	↓	↓	↓	↓	↓	↓	↓	↓	↓	↓	↓	↓	↓	↓	
Q19	↓	↓	↓	↓	↓	↓	↓	↓	↓	↓	↓	↓	↓	↓	↓	↓	↓	
Q20	↓	↓	↓	↓	↓	↓	↓	↓	↓	↓	↓	↓	↓	↓	↓	↓	↓	
Q36	↓	↓	↓	↓	↓	↓	.0047	↓	↓	112	.446	↓	111	.371	↓	4	.57	
Q37	↓	↓	↓	↓	↓	↓	↓	↓	↓	↓	↓	↓	↓	↓	↓	↓	↓	
Q38	↓	↓	↓	↓	↓	↓	↓	↓	↓	↓	↓	↓	↓	↓	↓	↓	↓	
Q39	↓	↓		↓	↓	↓	↓	↓	↓	↓	↓	↓	↓	↓	↓	↓	↓	
Q21	2N1711	MOTOROLA		75	.8	.6	.043 MAX	.00007	50	3	.06	75	3	.04	7	0	0	
Q22	↓	↓	↓	↓	↓	↓	↓	↓	↓	↓	↓	↓	↓	↓	↓	↓	↓	
Q23	↓	↓	↓	↓	↓	↓	↓	↓	↓	↓	↓	↓	↓	↓	↓	↓	↓	
Q24	↓	↓	↓	↓	↓	↓	↓	↓	↓	↓	↓	↓	↓	↓	↓	↓	↓	
Q25	↓	↓	↓	↓	↓	↓	↓	↓	↓	↓	↓	↓	↓	↓	↓	↓	↓	

REPORT NO. | REV. | DATE | COG. ENG. APPD. | DATE | JPL SEC. | APPD. | DATE | CUST. REL. APPD. | DATE | SHEET 11 OF

*AMBIENT AIR TEMP. UNLESS OTHERWISE SPECIFIED

JET PROPULSION LABORATORY
CALIFORNIA INSTITUTE OF TECHNOLOGY
PASADENA, CALIFORNIA

MARINER MARS 1971

PART USAGE AND APPLIED STRESS DATA TRANSISTORS

EQUIPMENT

SCHEMATIC TITLE A - PC NO. PHASE II REV.

NEXT ASSY. TITLE NO.

CKT SYM NO.	EIA REGISTRATION OR VENDOR PART NO.	VENDOR	PROCUREMENT DOCUMENT	PART AMB TEMP*	POWER DISSIPATION RATED +25°C (NOMINAL)	RATED MAX AMB	ACT	STRESS RATIO	VCE MAX. RATED	VCE ACT.	VCE STRESS RATIO	VCB MAX RATED	VCB ACT.	VCB STRESS RATIO	VEB MAX. RATED	VEB ACT.	VEB STRESS RATIO	REMARKS
Q40	2N1711	MOTOROLA		75	.8	.6	.004	.0067	50	5.8	.116	75	4.5	.06	7	3.3	.47	
Q41	"	"		"	"	"	"	"	"	"	"	"	"	"	"	"	"	
Q42	"	"		"	"	"	"	"	"	"	"	"	"	"	"	"	"	
Q26	2N2920	"		"	.6	.43	.001	.0023	60	5	.083	60	4	.067	6	0	0	
Q27	"	"		"	"	"	"	"	"	"	"	"	"	"	"	"	"	
Q28	"	"		"	"	"	"	"	"	"	"	"	"	"	"	"	"	
Q29	2N3810A	"		"	.6	.43	.0025	.0006	60	6	.10	60	6.7	.111	5	.7	.14	
Q31	"	"		"	"	"	"	"	"	"	"	"	"	"	"	"	"	
Q33	"	"		"	"	"	"	"	"	"	"	"	"	"	"	"	"	
Q30	"	"		"	"	"	.0043	.001	"	8.8	.146	"	9.5	.158	"	"	"	
Q32	"	"		"	"	"	"	"	"	"	"	"	"	"	"	"	"	
Q34	"	"		"	"	"	"	"	"	"	"	"	"	"	"	"	"	
Q35	2N3637	"		"	1	.715	.02	.028	175	56	.32	175	55	.315	5	0	0	

REPORT NO. REV. DATE COG. ENG. APPD. DATE JPL SEC. APPD. DATE CUST. REL. APPD. DATE SHEET 12 OF

*AMBIENT AIR TEMP. UNLESS OTHERWISE SPECIFIED

JET PROPULSION LABORATORY
CALIFORNIA INSTITUTE OF TECHNOLOGY
PASADENA, CALIFORNIA

PART USAGE AND APPLIED STRESS DATA
DIODES SIGNAL, GENERAL PURPOSE AND RECTIFIER

EQUIPMENT

SCHEMATIC TITLE: A-PC NO. PHASE II REV.

NEXT ASSY TITLE NO.

CKT SYM NO.	EIA REGISTRATION OR VENDOR PART NO.	PROCUREMENT DOCUMENT	MAX. RATED TEMP. VENDOR	MAX. RATED TEMP.	PART AMB TEMP	STRESS RATIO	POWER DISSIPATION RATED +25°C (NOMINAL)	POWER DISSIPATION RATED MAX. AMB.	POWER DISSIPATION ACTUAL	POWER DISSIPATION STRESS RATIO	PEAK INVERSE VOLTAGE MAX. RATED	PEAK INVERSE VOLTAGE ACTUAL	PEAK INVERSE VOLTAGE STRESS RATIO	FORWARD CURRENT MAX. RATED	FORWARD CURRENT ACTUAL	FORWARD CURRENT STRESS RATIO	REMARKS
CR1	1N3881		MOTOROLA	150	75	.5	8.4	8.4	0.4	.048	200	81	.403	6	.88	.147	
CR2																	
CR3																	
CR4																	
CR5																	
CR6																	
CR7																	
CR8																	
CR9																	
CR10																	
CR11	1N4935		MOTOROLA	150	75	.5	1.2	1.2	0.3	.25	200	2	.01	1.0	.85	.85	
CR12																	
CR13																	
CR14																	
CR15																	

REPORT NO. | REV. | DATE | COG. ENGR. APPD. | DATE | JPL SEC. ___ APPD. | DATE | CUST. REL. APPD. | DATE | SHEET 13 OF ___

JET PROPULSION LABORATORY
CALIFORNIA INSTITUTE OF TECHNOLOGY
PASADENA, CALIFORNIA

PART USAGE AND APPLIED STRESS DATA
DIODES SIGNAL, GENERAL PURPOSE AND RECTIFIER

EQUIPMENT

SCHEMATIC TITLE A-PC NO. PHASE II REV.

NEXT ASSY TITLE NO.

CKT SYM NO.	EIA REGISTRATION OR VENDOR PART NO.	PROCUREMENT DOCUMENT	MAX. RATED TEMP. VENDOR	MAX. RATED TEMP.	PART AMB TEMP	STRESS RATIO	POWER DISSIPATION RATED +25°C (NOMINAL)	POWER DISSIPATION RATED MAX. AMB.	POWER DISSIPATION ACTUAL	POWER DISSIPATION STRESS RATIO	PEAK INVERSE VOLTAGE MAX. RATED	PEAK INVERSE VOLTAGE ACTUAL	PEAK INVERSE VOLTAGE STRESS RATIO	FORWARD CURRENT MAX. RATED	FORWARD CURRENT ACTUAL	FORWARD CURRENT STRESS RATIO	REMARKS
CR16	1N4935		MOTOROLA	150	75	.5	1.2	1.2	0.3	.25	200	2	.01	1.0	.85	.85	
CR17	↓		↓	↓	↓	↓	↓	↓	↓	↓	↓	↓	↓	↓	↓	↓	
CR18	↓		↓	↓	↓	↓	↓	↓	↓	↓	↓	↓	↓	↓	↓	↓	
CR19	↓		↓	↓	↓	↓	↓	↓	↓	↓	↓	↓	↓	↓	↓	↓	
CR20	↓		↓	↓	↓	↓	↓	↓	↓	↓	↓	↓	↓	↓	↓	↓	
CR21	1N4935		MOTOROLA	150	75	.5	1.2	1.2	<.01	.008	200	0	0	1.0	.001	.001	
CR22	"		"	"	"	"	"	"	"	"	"	"	"	"	"	"	
CR23	"		"	"	"	"	"	"	"	"	"	"	"	"	"	"	
CR26	1N4935		MOTOROLA	150	75	.5	1.2	1.2	<.01	.008	200	.7	.0035	1.0	<.001	.001	
CR27	↓		↓	↓	↓	↓	↓	↓	↓	↓	↓	↓	↓	↓	↓	↓	
CR30	↓		↓	↓	↓	↓	↓	↓	↓	↓	↓	↓	↓	↓	↓	↓	

REPORT NO. REV. DATE COG. ENGR. APPD. DATE JPL SEC. ___ APPD. DATE CUST. REL. APPD. DATE

SHEET 14 OF ___

MARINER MARS

1971

JET PROPULSION LABORATORY
CALIFORNIA INSTITUTE OF TECHNOLOGY
PASADENA, CALIFORNIA

PART USAGE AND APPLIED STRESS DATA
DIODES SIGNAL, GENERAL PURPOSE AND RECTIFIER

EQUIPMENT

SCHEMATIC TITLE A-PC NO. PHASE II REV.

NEXT ASSY TITLE NO.

CKT SYM NO.	EIA REGISTRATION OR VENDOR PART NO.	PROCUREMENT DOCUMENT	MAX. RATED TEMP. VENDOR	MAX. RATED TEMP.	PART AMB TEMP	STRESS RATIO	POWER DISSIPATION RATED +25°C (NOMINAL)	POWER DISSIPATION RATED MAX. AMB.	POWER DISSIPATION ACTUAL	POWER DISSIPATION STRESS RATIO	PEAK INVERSE VOLTAGE MAX. RATED	PEAK INVERSE VOLTAGE ACTUAL	PEAK INVERSE VOLTAGE STRESS RATIO	FORWARD CURRENT MAX. RATED	FORWARD CURRENT ACTUAL	FORWARD CURRENT STRESS RATIO	REMARKS
CR31	1N4935		MOTOROLA	150	75	.5	1.2	1.2	<.01	.008	200	.7	.0035	1.0	<.001	.001	
CR34																	
CR35																	
CR36	1N4935		MOTOROLA	150	75	.5	1.2	1.2	<.01	.00	200	0	0	1.0	.001	.001	
CR37									<.01	.008	200	4	.02	1.0	<.001	.001	
CR39																	
CR40																	
CR42																	
CR38																	
CR41																	

REPORT NO. REV. DATE COG. ENGR. APPD. DATE JPL SEC. APPD. DATE CUST. REL. APPD. DATE

SHEET 15 OF

JET PROPULSION LABORATORY
CALIFORNIA INSTITUTE OF TECHNOLOGY
PASADENA, CALIFORNIA

PART USAGE AND APPLIED STRESS DATA
DIODES SIGNAL, GENERAL PURPOSE AND RECTIFIER

EQUIPMENT

SCHEMATIC TITLE 11 - PC NO. PHASE II REV.

NEXT ASSY TITLE NO.

CKT SYM NO.	EIA REGISTRATION OR VENDOR PART NO.	PROCUREMENT DOCUMENT	MAX. RATED TEMP.	VENDOR	PART AMB TEMP	STRESS RATIO	POWER DISSIPATION RATED +25°C (NOMINAL)	RATED MAX. AMB.	ACTUAL	STRESS RATIO	PEAK INVERSE VOLTAGE MAX. RATED	ACTUAL	STRESS RATIO	FORWARD CURRENT MAX. RATED	ACTUAL	STRESS RATIO	REMARKS
CR43	1N4935		MOTOROLA	150	75	.5	1.2	1.2	<.01	.008	200	120	.6	1.0	.010	.010	
CR44																	
CR47																	
CR48																	
CR51																	
CR52																	
CR45												3.3	.015		.05	.05	
CR46																	
CR49																	
CR50																	
CR53																	
CR54																	
CR55									<.01	.008	200	0	0	1.0	<.001	.001	
CR56									.018	.015	200	1	.005	1.0	.026	.026	
CR57									"	"	"	"	"	"	"	"	

REPORT NO. REV. DATE COG. ENGR. APPD. DATE JPL SEC. APPD. DATE CUST. REL. APPD. DATE SHEET 16 OF

JET PROPULSION LABORATORY
CALIFORNIA INSTITUTE OF TECHNOLOGY
PASADENA, CALIFORNIA

MARINER MARS
1971

PART USAGE AND APPLIED STRESS DATA
DIODE-ZENER

EQUIPMENT

SCHEMATIC TITLE A-PC NO. PHASE II REV.

NEXT ASSY. TITLE NO.

CKT SYM NO.	EIA REGISTRATION OR VENDOR PART NO.	VENDOR	PROCUREMENT DOCUMENT	PART AMB TEMP	POWER DISSIPATION RATED +25°C NOMINAL	POWER DISSIPATION RATED MAX. AMB.	POWER DISSIPATION ACTUAL	POWER DISSIPATION STRESS RATIO	ZENER VOLTAGE RATED NOM	ZENER VOLTAGE ACTUAL	ZENER VOLTAGE STRESS RATIO	ZENER CURRENT RATED NOM	ZENER CURRENT ACT.	ZENER CURRENT STRESS RATIO	REMARKS
VR 1	1N456A	MOTOROLA		75	.4	.32	.0032	.01	6.4	6.4	1	.062	.0005	.0081	CONSTANT VOLTAGE SOURCE
VR 3	"	"		"	"	"	"	"	"	"	"	"	"	"	"
VR 5	"	"		"	"	"	"	"	"	"	"	"	"	"	"
VR 2	1N476A	"		"	"	"	.0046	.014	9.1	9.1	1	.044	.0005	.0114	"
VR 4	"	"		"	"	"	"	"	"	"	"	"	"	"	"
VR 6	"	"		"	"	"	"	"	"	"	"	"	"	"	"
IR 1	IN 5297	"		"	.6	.6	.067	.1	100	56	.56	.0011	.0011	1	CONSTANT CURRENT SOURCE
IR 2	"	"		"	"	"	"	"	"	"	"	"	"	"	"
IR 3	"	"		"	"	"	"	"	"	"	"	"	"	"	"
IR 4	"	"		"	"	"	.055	<.1	"	50	.5	"	"	"	"
IR 5	"	"		"	"	"	"	"	"	"	"	"	"	"	"
IR 6	"	"	—	"	"	"	"	"	"	"	"	"	"	"	"
IR 7	"	"		"	"	"	.067	.1	"	56	.56	"	"	"	"
IR 8	1N5291	"		"	"	"	.031	.1	"	"	"	.00062	.00062	"	"
IR 9	"	"		"	"	"	"	"	"	"	"	"	"	"	"

REPORT NO. | REV. | DATE | COG. ENG. APPD | DATE | JPL SEC. APPD. | DATE | CUST. REL. APPD. | DATE | SHEET 17 OF

MARINER MARS
1971

JET PROPULSION LABORATORY
CALIFORNIA INSTITUTE OF TECHNOLOGY
PASADENA, CALIFORNIA

PART USAGE AND APPLIED STRESS DATA
INDUCTORS

EQUIPMENT

SCHEMATIC TITLE A-PC NO. PHASE II REV.

NEXT ASSY. TITLE NO.

CKT SYM NO.	VENDOR PART NO.	CLASS OF INSULATION: VENDOR	CLASS OF INSULATION: PROCUREMENT DOCUMENT	GRADE	INDUCTANCE AND TOLERANCE	DC CURRENT: MAX RATED	DC CURRENT: ACT.	DC CURRENT: STRESS RATIO	AC OPER VOLTAGE: MAX RATED RMS VOLTS	AC OPER VOLTAGE: ACT. VOLTS	AC OPER VOLTAGE: STRESS RATIO	VOLT FROM GROUND: MAX RATED VOLTS	VOLT FROM GROUND: ACT. VOLTS	VOLT FROM GROUND: STRESS RATIO	WINDING TEMPERATURE: RATED C	WINDING TEMPERATURE: ACT. C	WINDING TEMPERATURE: STRESS RATIO	REMARKS CURRENT DENSITY
L1	EOS				1.33 mh	—	3.08 RMS	—	—	50	—	500	56	.112	—	—	—	800 Cir. Mils/A
L2						—		—	—		—				—	—	—	
L3						—		—	—		—				—	—	—	
L4						—		—	—		—				—	—	—	
L5						—		—	—		—				—	—	—	
L6						—		—	—		—				—	—	—	
L7						—		—	—		—				—	—	—	
L8						—		—	—		—				—	—	—	
L9						—		—	—		—				—	—	—	
L10						—		—	—		—				—	—	—	
L11					36 uh	—	15.4 RMS	—	—	—	—		50	.1	—	—	—	425 Cir. Mils/A

REPORT NO.	REV.	DATE	COG. ENGR. APPD.	DATE	JPL SEC. APPD	DATE	CUST. REL. APPD.	DATE	SHEET 18 OF

73627609

JET PROPULSION LABORATORY
CALIFORNIA INSTITUTE OF TECHNOLOGY
PASADENA, CALIFORNIA

MARINER MARS 1971

PART USAGE AND APPLIED STRESS DATA TRANSFORMERS

EQUIPMENT

SCHEMATIC TITLE A-PC NO. PHASE II REV.

NEXT ASSY TITLE NO.

CKT SYM NO.	VENDOR PART NO.	VENDOR	PROCUREMENT DOCUMENT	TYPE (FIXED VARIABLE TOROID)	CORE MAT'L	NO. TURNS PRI	NO. TURNS SEC	WIRE SIZE AWG PRI	WIRE SIZE AWG SEC	DIELECTRIC BREAKDOWN VOLTAGE PRI NOM RATED	DIELECTRIC BREAKDOWN VOLTAGE PRI ACT.	DIELECTRIC BREAKDOWN VOLTAGE PRI STRESS RATIO	DIELECTRIC BREAKDOWN VOLTAGE SEC NOM RATED	DIELECTRIC BREAKDOWN VOLTAGE SEC ACT.	DIELECTRIC BREAKDOWN VOLTAGE SEC STRESS RATIO	CIRCULAR MILLS PER. AMP PRI	CIRCULAR MILLS PER. AMP SEC	CIRCULAR MILLS PER. AMP WAVE FORM AMP FREQ.	FLUX DENSITY FOR SATURATION K GAUSS NOM RATED	FLUX DENSITY FOR SATURATION K GAUSS ACT.	FLUX DENSITY FOR SATURATION K GAUSS STRESS RATIO
T1	SAME	EOS		TOROID	PERM	500	25	34	27	500	56	.112	500	1.3	.0026	14000	1200	SQ. WAVE 10KHZ	7.4	3.94	.54
T2						500	25	34	27	500	56	.112	500	1.3	.0026	14000	1200	"	—	—	—
T3							2	—	16	—	—	—	500	56	.112	—	1226	"	—	—	—
T4							2	—	16	—	—	—	500	56	.112	—	1226	"	—	—	—
T5																					
T7	SAME	EOS		TOROID	PERM	757	54	34	34	500	112	.225	500	2.6	.0052	200K	6000	SQ. WAVE 10KHZ	7.4	7.4	—
T8							54	—	34	—	—	—	500	2.6	.0052	—	6000		—	—	—

REPORT NO.	REV.	DATE	COG. ENGR. APPD.	DATE	JPL SEC. APPD.	DATE	CUST. REL. APPD.	DATE

D 73627609

JET PROPULSION LABORATORY
CALIFORNIA INSTITUTE OF TECHNOLOGY
PASADENA, CALIFORNIA

MARINER MARS 1971

PART USAGE AND APPLIED STRESS DATA TRANSFORMERS

EQUIPMENT

SCHEMATIC TITLE A-PC NO. PHASE II REV.

NEXT ASSY TITLE NO.

CKT SYM NO.	VENDOR PART NO.	VENDOR	PROCUREMENT DOCUMENT	TYPE (FIXED VARIABLE TOROID)	CORE MAT'L	NO. TURNS PRI	NO. TURNS SEC	WIRE SIZE AWG PRI	WIRE SIZE AWG SEC	DIELECTRIC BREAKDOWN VOLTAGE PRI NOM RATED	PRI ACT.	PRI STRESS RATIO	SEC NOM RATED	SEC ACT.	SEC STRESS RATIO	CIRCULAR MILLS PER AMP PRI	SEC	WAVE FORM AMP FREQ.	FLUX DENSITY FOR SATURATION K GAUSS NOM RATED	ACT.	STRESS RATIO
T6		EOS		TOROID	ORTHO	370	403	34	34	500	112	.225	500	60.4	.121	2500	7800	SQ. WAVE 10KHZ	15	7.5	.5
	-					370	403	34	"	500	112	.225	"	60.4	.121	2500	7800	"	—	—	—
						364	403	34	"	500	112	.225	"	60.4	.121	2500	7800	"	—	—	—
						364	403	34	"	500	112	.225	"	60.4	.121	2500	7800	"	—	—	—
							403	—	"	—	—	—	"	60.4	.121	—	7800	"	—	—	—
							403	—	"	—	—	—	"	60.4	.121	—	7800	"	—	—	—
							22	—	"	—	—	—	"	3.3	.0066	—	1600	"	—	—	—
							22	—	"	—	—	—	"	3.3	.0066	—	1600	"	—	—	—
							22	—	"	—	—	—	"	3.3	.0066	—	1600	"	—	—	—
							22	—	"	—	—	—	"	3.3	.0066	—	1600	"	—	—	—
							22	—	"	—	—	—	"	3.3	.0066	—	1600	"	—	—	—
							22	—	"	—	—	—	"	3.3	.0066	—	1600	"	—	—	—
							22	—	"	—	—	—	"	3.3	.0066	—	1600	"	—	—	—
							20	—	"	—	—	—	"	3	.006	—	16000	"	—	—	—
							20	—	"	—	—	—	"	3	.006	—	16000	"	—	—	—
							20	—	"	—	—	—	"	3	.006	—	1600	"	—	—	—

REPORT NO. REV. DATE COG. ENGR. APPD. DATE JPL SEC. APPD. DATE CUST. REL. APPD. DATE

JET PROPULSION LABORATORY
CALIFORNIA INSTITUTE OF TECHNOLOGY
PASADENA, CALIFORNIA

MARINER MARS 1971

PART USAGE AND APPLIED STRESS DATA TRANSFORMERS

EQUIPMENT

SCHEMATIC TITLE A-PC NO. PHASE II REV.

NEXT ASSY TITLE NO.

CKT SYM NO.	VENDOR PART NO.	VENDOR	PROCUREMENT DOCUMENT	TYPE (FIXED VARIABLE TOROID)	CORE MAT'L	NO. TURNS		WIRE SIZE AWG		DIELECTRIC BREAKDOWN VOLTAGE						CIRCULAR MILLS PER. AMP			FLUX DENSITY FOR SATURATION GAUSS		
										PRI			SEC								
						PRI	SEC	PRI	SEC	NOM RATED	ACT.	STRESS RATIO	NOM RATED	ACT.	STRESS RATIO	PRI	SEC	WAVE FORM AMP FREQ.	NOM RATED	ACT.	STRESS RATIO
T6	(CONTINUED)						20	–	34	–	–	–	500	3	.006	–	16000	SQ. WAVE 10KHZ	–	–	–
	–						20	–	"	–	–	–	"	3	.006	–	16000	"	–	–	–
							20	–	"	–	–	–	"	3	.006	–	16000	"	–	–	–
							20	–	"	–	–	–	"	3	.006	–	16000	"	–	–	–
							20	–	"	–	–	–	"	3	.006	–	16000	"	–	–	–
							20	–	"	–	–	–	"	3	.006	–	16000	"	–	–	–
							20	–	"	–	–	–	"	3	.006	–	16000	"	–	–	–

REPORT NO.	REV.	DATE	COG. ENGR. APPD.	DATE	JPL SEC. APPD.	DATE	CUST. REL. APPD.	DATE

4.3 Stability Margin Analysis

Stability margin analysis relies heavily upon mathematical methods. The use of the Laplace-transform method is a basic mode of analysis in designing continuous-data control systems. Correspondingly, the Z-transformation method is the basic mode of analysis used in designing sampled-data and digital control systems. It can be shown that the Z-transformation is closely analogous to the Laplace-transformation.

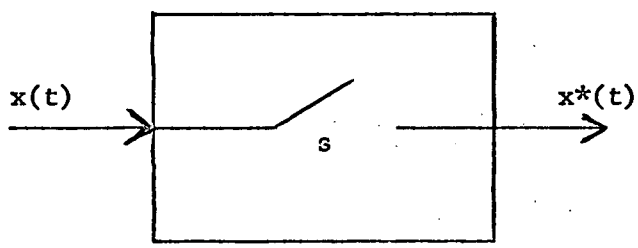

FIGURE 4.3-1 Sampler

Figure 4.3-1 shows the basic component of a sampled data control system, the sampler. The sampler converts the continuous signal applied to it into a train of pulses occurring at the sampling instants 0, T, 2T, 3T .....nT, where T is the sampling period. The Laplace-transformation of x*(t) is:

$$X^*(s) = \mathcal{L}\left\{x^*(t)\right\} = \sum_{n=o}^{\infty} x(nT)\, \epsilon^{-nTs}$$

This equation indicates that X*(s) is an infinite series in ϵ^{Ts}. Consequently, it is more convenient to make use of the substitution $Z = \epsilon^{Ts}$ and the abbreviated notation X(z) for the resulting function of Z; thus

$$X(z) \triangleq X^*\left(\frac{1}{T}\,\ell n\, Z\right) = \sum_{n=o}^{\infty} x(nT)\, Z^{-n}$$

This equation describes a mathematical operation known as the Z-transformation in the literature. X(z) is defined as the Z-transform of x*(t). It is also termed the sequence transform of x_n or x(nT). This equation is analogous to the Laplace transform

$$X(s) \triangleq \int_o^{\infty} x(t)\, \epsilon^{-st}\, dt$$

The Z-transformation is a summation process, because it deals with pulsed-data functions. Symbolically, it is common practice to write

$$X(z) = \mathcal{Z}\{x(t)\}$$

$$\mathcal{Z}\{x(t)\} = \mathcal{L}\{x^*(t)\}\Big|_{s = (1/T)\ell n\, z}$$

as the Z-transform of function x(t), where the symbol $\mathcal{Z}$ is used to denote the Z-transform operator.

It can be shown that the Laplace-transfer functions of a feedback control system can be directly converted to the Z-transfer functions. Likewise, the block-diagram approach to continuous control system analysis is applicable to the sampled data system analysis for determining the overall system characteristic equations; i.e.,

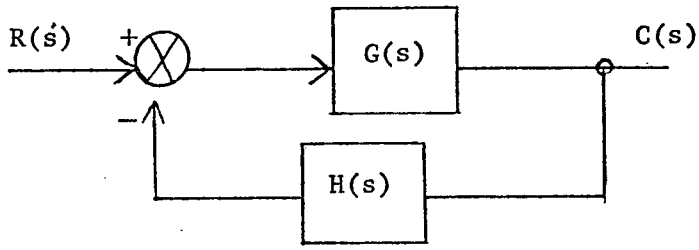

$$\frac{C(s)}{R(s)} = \frac{G(s)}{1 + H(s)G(s)}$$

Likewise:

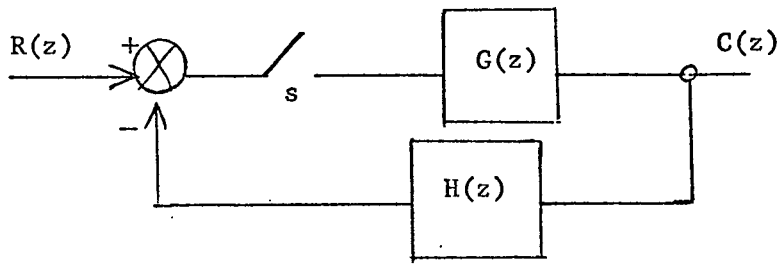

$$\frac{C(z)}{R(z)} = \frac{G(z)}{1 = HG(z)} \quad ; \text{ where: } \quad HG(z) = \mathcal{Z}\{H(s)\ G(s)\}$$

The stability of a linear continuous-data feedback control system is frequently determined by the location of the roots of the characteristic equation ($1 + H(s)G(s) = o$) of the system in the s-plane. A stable system requires that these roots be located in the left half of the s-plane.

The Nyquist Stability Criterion for Sampled-data Systems shows that the left half of the s-plane maps into the unit circle about the origin of the z-plane. Therefore, the roots of the sampled-data system characteristic equation ($1 + HG(z) = o$) lie inside the unit circle about the origin of the z-plane the system is stable (see Figure 4.3-2)

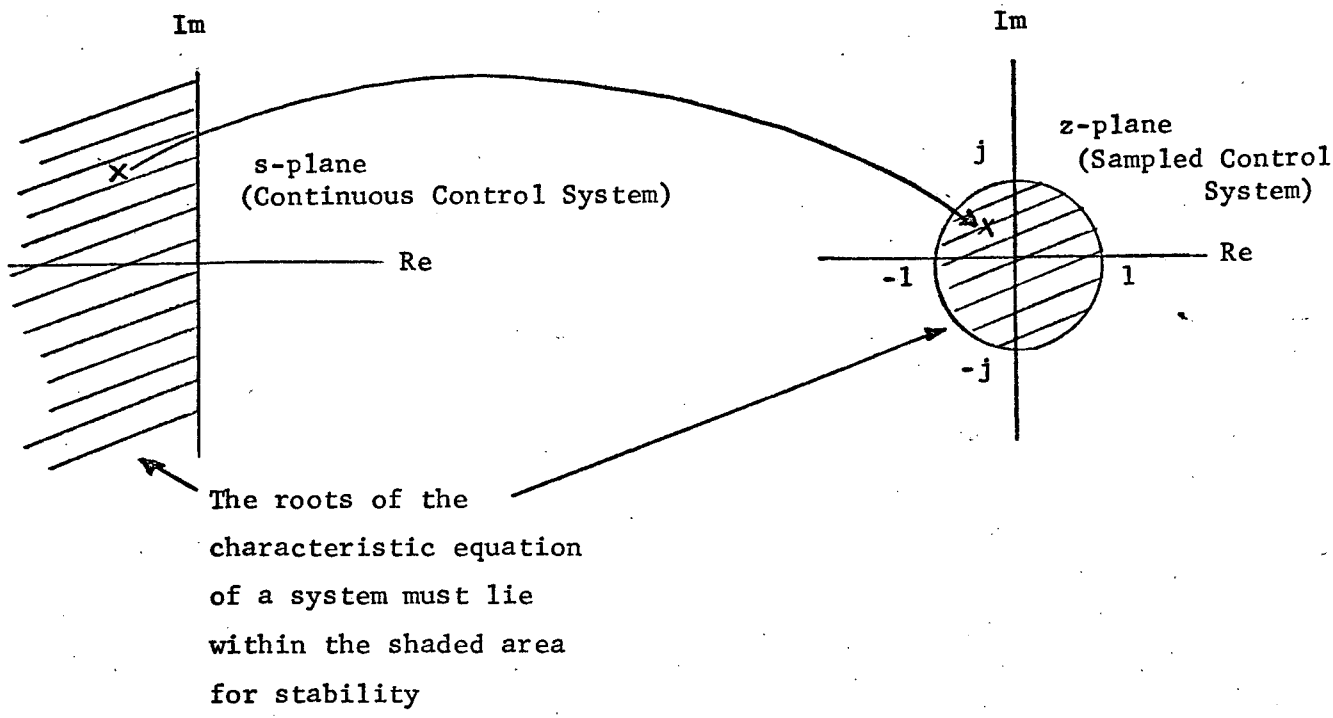

FIGURE 4.3-2 : s-plane / z-plane relationship for stability criterion

4.3.1 Application of the z-Transform Analysis to the Advanced Power Conditioning System

Figure 4.3-3 shows the system block-diagram of the Advanced Power Conditioning System utilizing Laplace notation. Applying standard block-diagram reduction techniques to Figure 4.3-3 yields the Laplace system block diagram in Figure 4.3-4

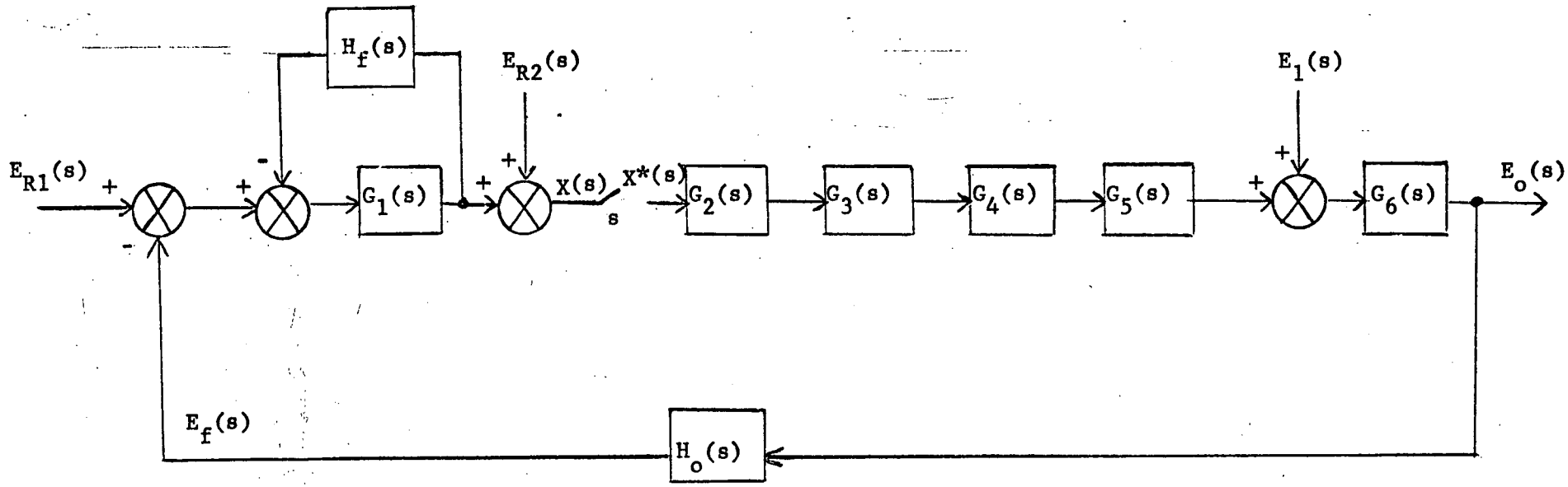

Where:

1) $G_1(s)$ - Transfer Function for Feedback Amplifier
2) $G_2(s)$ - Transfer Function for A/D Amplifier
3) $G_3(s)$ - Transfer Function for Majority Vote Logic
4) $G_4(s)$ - Transfer Function for Driver Control Transistor
5) $G_5(s)$ - Transfer Function for Driver Stage
6) $G_6(s)$ - Transfer Function for Output Stage
7) $H_o(s)$ - Transfer Function for Feedback Impedance
8) $H_f(s)$ - Transfer Function for Phase Shift Network
9) $E_{R1}(s)$ - Feedback Ampl. Reference Voltage
10) $E_{R2}(s)$ - A/D Ampl. Reference Voltage
11) $E_1(s)$ - Input Voltage
12) $E_o(s)$ - Output Voltage

FIGURE 4.3-3 : Laplace-System Block Diagram

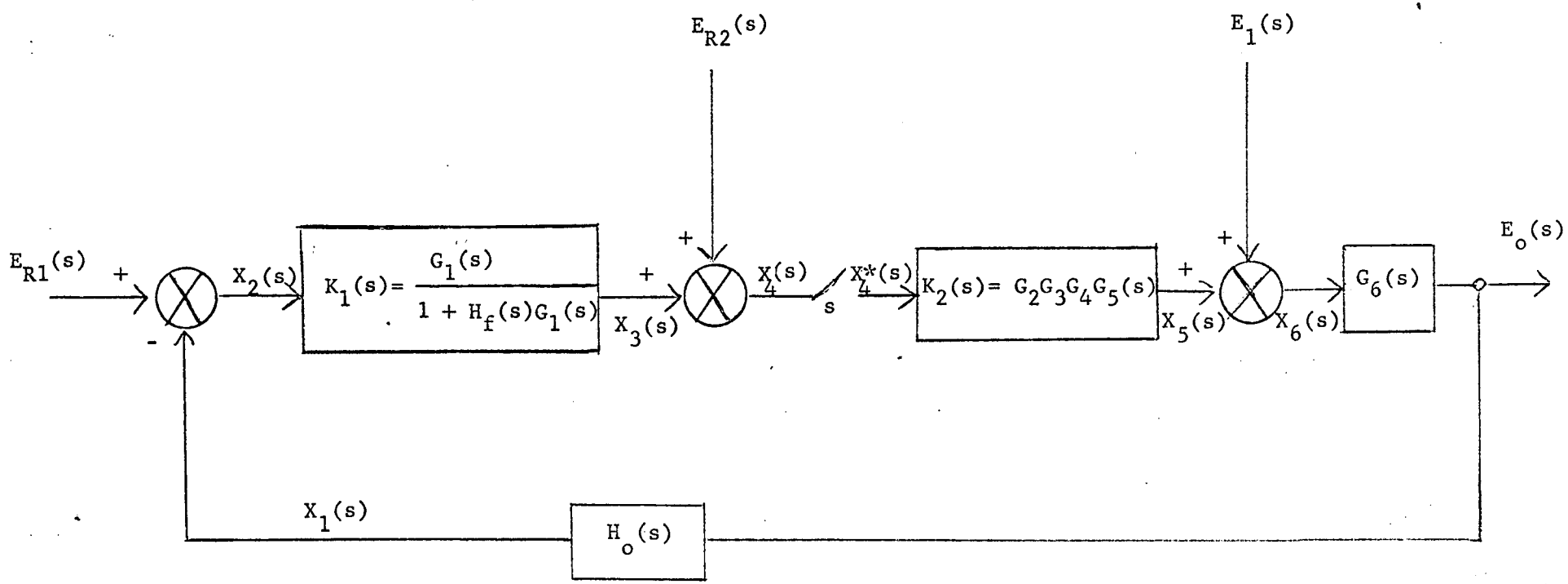

FIGURE 4.3-4 : Reduced Laplace - System Block Diagram

Using figure 4.3-4 we can generate the system transfer function:

$$X_1(s) = E_o(s)\ H_o(s)$$

$$X_2(s) = E_{R1}(s) - X_1(s) = E_{R1}(s) - E_o(s)\ H_o(s)$$

$$X_3(s) = X_2(s)\ K_1(s) = \left[E_{R1}(s) - E_o(s)\ H_o(s)\right] K_1(s)$$

$$(1)\ X_4(s) = E_{R2}(s) + X_3(s) = \left[E_{R1}(s) - E_o(s)\ H_o(s)\right] K_1(s) + E_{R2}(s)$$

$$X_5(s) = X_4^*(s)\ K_2(s)$$

$$X_6(s) = X_5(s) + E_1(s) = \left[X_4^*(s)\ K_2(s) + E_1(s)\right]$$

$$E_o(s) = X_6(s)\ G_6(s) = G_6(s)\left[X_4^*(s)\ K_2(s) + E_1(s)\right]$$

Therefore:

$$(2)\ E_o(s) = X_4^*(s)\ K_2(s)\ G_6(s) + E_1(s)\ G_6(s)$$

Substituting equation (2) into (1) we get:

$$X_4(s) = -X_4^*(s)\ K_1(s)\ K_2(s)\ G_6(s)\ H_o(s) - E_1(s)\ K_1(s)\ G_6(s)\ x$$

$$H_o(s) + E_{R1}(s)\ K_1(s) + E_{R2}(s)$$

Therefore:

$$X_4^*(s) = -X_4^*(s)\left[K_1(s)\ K_2(s)\ G_6(s)\ H_o(s)\right]^*$$

$$-\left[E_1(s)\ K_1(s)\ G_6(s)\ H_o(s)\right]^* + \left[E_{R1}(s)\ K_1(s)\right]^*$$

$$+\left[E_{R2}(s)\right]^*$$

Rearranging we get:

$$(3)\quad X_4^*(s) = \frac{-[E_1(s)\ K_1(s)\ G_6(s)\ H_o(s)]^* + [E_{R1}(s)\ K_1(s)]^* + [E_{R2}(s)]^*}{1 + \left[K_1(s)\ K_2(s)\ G_6(s)\ H_o(s)\right]^*}$$

Substituting equation (3) into (2) we get:

$$E_o(s) = \left[\frac{-[E_1(s)K_1(s)G_6(s)H_o(s)]^* + [E_{R1}(s)K_1(s)]^* + [E_{R2}(s)]^*}{1 + [K_1(s)K_2(s)G_6(s)H_o(s)]^*}\right] \times$$

$$\left[K_2(s)\ G_6(s)\right] + E_1(s)\ G_6(s)$$

$$(4)\quad E_o^*(s) = \frac{\left[\begin{array}{l} -[E_1(s)K_1(s)G_6(s)H_o(s)]^*[K_2(s)G_6(s)]^* + [E_{R1}(s)K_1(s)]^* \times \\ [K_2(s)G_6(s)]^* + [E_{R2}(s)]^*[K_2(s)G_6(s)]^* + [E_1(s)G_6(s)]^* + \\ [E_1(s)G_6(s)]^*[K_1(s)K_2(s)G_6(s)H_o(s)]^* \end{array}\right]}{1 + [K_1(s)K_2(s)G_6(s)H_o(s)]^*}$$

Equation (4) can be broken up into three independent output/input transfer functions by the rules of superposition, i.e., the affect of E_{R1}, E_{R2}, and E_1 on the output are linearly independent additive (explicity from the above equation and definitions).

Therefore we get:

For $E_1 = E_{R1} = 0$:

$$(5)\quad \frac{E_o^*(s)}{E_{R2}^*(s)} = \frac{[K_2(s)\ G_6(s)]^*}{1 + [K_1(s)\ K_2(s)\ G_6(s)\ H_o(s)]^*}$$

For $E_1 = E_{R2} = 0$:

$$(6)\quad E_o^*(s) = \frac{[E_{R1}(s)K_1(s)]^*\ [K_2(s)G_6(s)]^*}{1 + [K_1(s)K_2(s)G_6(s)H_o(s)]^*}$$

For $E_{R1} = E_{R2} = 0$:

$$(7)\quad E_o^*(s) = \frac{\left[\dfrac{[E_1(s)G_6(s)]^* + [E_1(s)G_6(s)]^*[K_1(s)K_2(s)G_6(s)H_o(s)]^*}{} - [E_1(s)K_1(s)G_6(s)H_o(s)]^*\ [K_2(s)G_6(s)]^*\right]}{1 + [K_1(s)K_2(s)G_6(s)H_o(s)]^*}$$

From equations 4 through 7 it is obvious that the system characteristic equation is:

$$(8) \quad 1 + [K_1(s)\ K_2(s)\ G_6(s)\ H_o(s)]^* = 0$$

In order to evaluate the system characteristic equation (8), we must substitute the circuit transfer functions represented by the above symbolism and take the Z-transformation:

a) Feedback Amplifier Gain:

$G_1 = G_1(s) = 75$ to 450

b) A/D Amplifier Gain:

$G_2 = G_2(s) = 10$ to 450

c) Majority Vote Logic Gain:

$G_3 = G_3(s) = 1$ to 2

d) Driver Control Transistor Gain:

$G_4 = G_4(s) = 1$ to 1.15

e) Driver Stage Gain:

$G_5 = G_5(s) = 0.166$ to 0.43

f) Output Stage Gain:

$G_6 = G_6(s) = 1.12$ to 2.24

g) Feedback Impedance:

$$H_o = H_o(s) = \frac{R_{55} + R_{58}}{R_{55} + R_{58} + R_{54}} = 0.146 \text{ to } 0.183$$

h) Phase Shift Network:

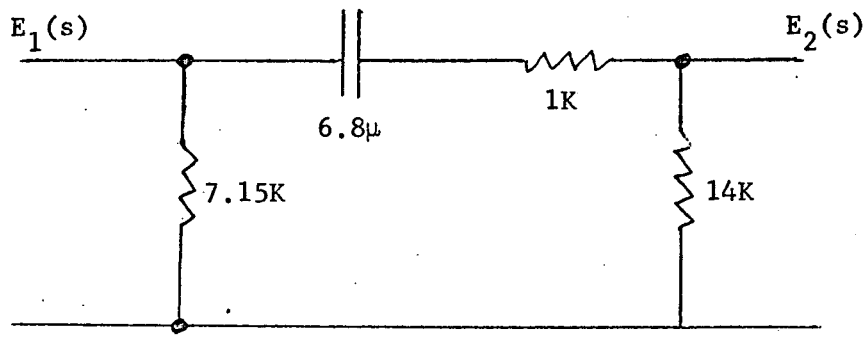

$$H_F(s) = \frac{E_2(s)}{E_1(s)} = \frac{14K}{14K + 1K + \frac{1}{6.8\mu s}} = \frac{0.933\ s}{s + 9.8}$$

From the above basic circuit information, we can now calculate the various transfer functions of Figure 4.3-4:

$$K_1(s) = \frac{G_1(s)}{1 + H_f(s)G_1(s)} = \frac{75}{1 + 75 \times \frac{.933\ s}{s + 9.8}} \text{ to } \frac{450}{1 + 450 \times \frac{.933\ s}{s + 9.8}}$$

$$K_1(s) = (1.056)\ \left(\frac{s + 9.8}{s + 0.138}\right) \text{ to } (1.07)\ \left(\frac{s + 9.8}{s + 0.0233}\right)$$

$$K_2(s) = G_2\ G_3\ G_4\ G_5 = (10)(1)(1)(.166) = 1.66$$

$$\text{to } (450)(2)(1.15)(.43) = 445$$

Let $H(s) = K_1(s)\ K_2(s)\ G_6(s)\ H_o(s)$

We can simplify $K_1(s)$ by the following:

$$K_1(s) \approx (1.056)\ (\frac{s + 9.8}{s + b})\ \text{to}\ (1.07)\ (\frac{s + 9.8}{s + b})$$

Where: $b = 0.0233$ to 0.138

(9) $$\therefore H(s) = (1.056)\ (\frac{s + 9.8}{s + b})\ (1.66)\ (1.12)\ (0.146)$$

$$\text{to}\ (1.07)\ (\frac{s + 9.8}{s + b})\ (445)\ (2.24)\ (0.183)$$

Due to a pole of the output capacitor, the above equation (9) requires a 1/s term multiplied times the product for the actual equation of H(s)

$$\therefore \quad H(s) = (\frac{a}{s})\ (\frac{s + 9.8}{s + b})$$

Where: $a = (1.056)\ (1.66)\ (1.12)\ (0.146) = 0.287$

$$\text{to}\ (1.07)\ (445)\ (2.24)\ (0.183) = 195$$

Expanding:

$$H(s) = \frac{a}{s} + \frac{a\ (9.8 - b)}{s\ (s + b)}$$

Looking into a table of Z transformations (Pages 585 to 592), Digital and Sampled Data Control Systems, by T. T. Ton, McGraw-Hill, 1959),
we get:

$$H^*(s) = [K_1(s)\ K_2(s)\ G_6(s)\ H_o(s)]^* =$$

$$Hz = \frac{a\ z}{z - 1} + [\frac{a\ (9.8 - b)}{b}]\ [\frac{(1 - e^{-bT})\ z}{(z - 1)(z - e^{-bT})}]$$

The characteristic equation (8) becomes:

$$(10)\quad 1 + \frac{a\,z}{z - 1} + \frac{a\,(9.8 - b)(1 - e^{-bT})\,z}{b\,(z - 1)\,(z - e^{-bT})} = 0$$

Where: $a = 0.287$ to 195

$b = 0.0233$ to 0.0695

Now $T \approx 50\mu$ sec

$$\therefore\ e^{-0.0695T} \doteq e^{-0.0233T} \doteq 1^{-}$$

$$\therefore\ (1 - e^{-bT}) \doteq 0$$

The simplified general system characteristic equation for the Advanced Power Conditioning System with a and b representing parameter variations of the physical parts reduces to:

$$(11)\quad (a + 1)\,z - 1 = 0$$

Rearranging equation (11) gives:

$$z = \frac{1}{a + 1}$$

The criterion for stability is that the roots of the system characteristic equation lie within the unit circle about the origin of the z - plane. This means that the magnitude of the roots $/\ z\ /$ must be less than <u>one</u> for stability.

Therefore:

$$/ z / = / \frac{1}{a + 1} \Big/_{a = 0.287 \text{ to } 195}$$

$$/ z / = \frac{1}{.287 + 1} \text{ to } \frac{1}{195 + 1}$$

$$/ z / = 0.777 \text{ to } 0.0051$$

Which is less than one for all values of $a > 0$. Q.E.D.

FOLDOUT FRAME 1

FOLDOUT FRAME 2

FOLDOUT FRAME 3

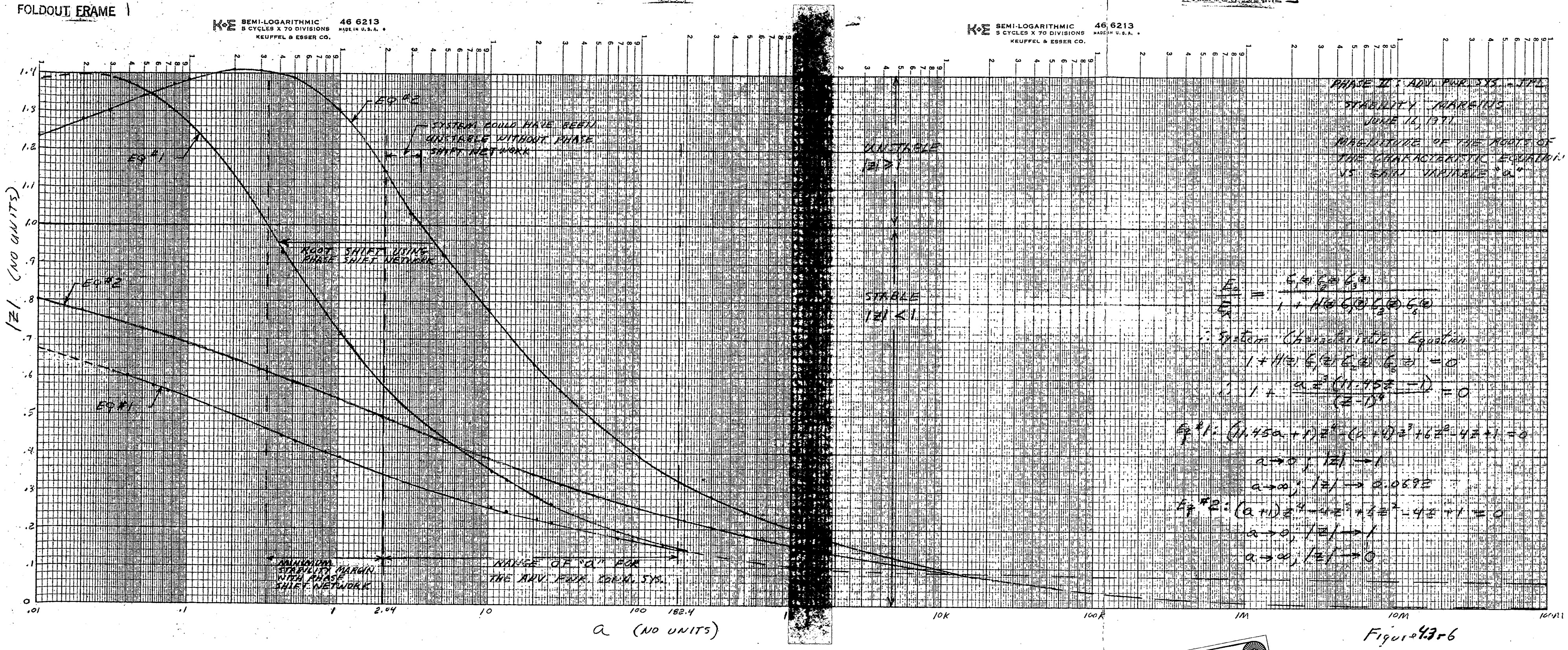

Figure 4.3-6

Reproduced from best available copy.

Reproduced from best available copy.

4.4 RELIABILITY ASSESSMENT

Reliability of the selected configuration has been assessed in accordance with MIL-STD-756A. Part failure rates have been determined from MIL-HDBK-217A and are based on the electrical and thermal stresses noted in the "part usage and applied stress data" sheets which form a part of this report. Reliability, of course, is a function of system operating time. Since a typical duration has not been specified in the guidelines for this study, assessed system reliability is expressed by the curve shown in Figure 4.4-1.

4.4.1 RELIABILITY LOGIC DIAGRAM

The functional block diagram shown in Figure 3.1-4 and the system schematic shown in Figure 3.2-1 were utilized to develop the Reliability Logic Diagram shown in Figure 4.4-2. As shown in the Reliability Logic Diagram, the selected system is a combined series and parallel reliability configuration. Series elements include the input and output filters, which are inherently redundant, and several critical parts whose failure would result in failure of the system. These single point failures, however, can be obviated through the utilization of additional parts as described elsewhere in this report.

The "Clock Driver Oscillators" are in a "main" and "standby" configuration; operation of the standby unit does not occur unless the "enable circuit" detects a malfunction of the main unit.

The Sawtooth Generator, Logic Circuitry, and Amplifier (including A/D converter) are shown as series elements with three (3) of these strings in parallel; as indicated in the Logic Diagram the strings are not totally redundant but are in a 2 of 3 majority vote configuration -- loss of any or all elements in a single string will not cause system failure.

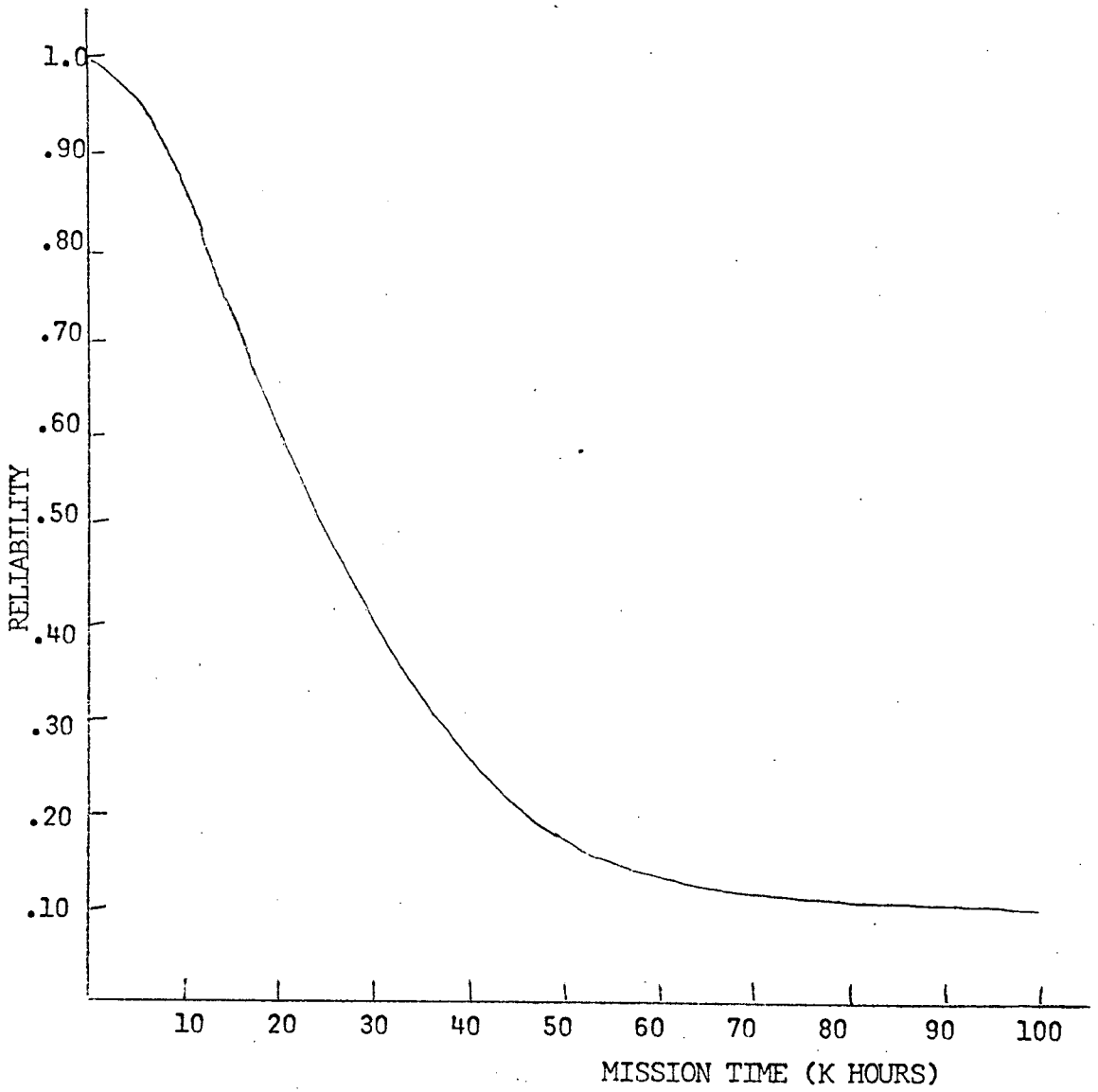

FIGURE 4.4-1

RELIABILITY PROFILE OF SELECTED POWER SYSTEM

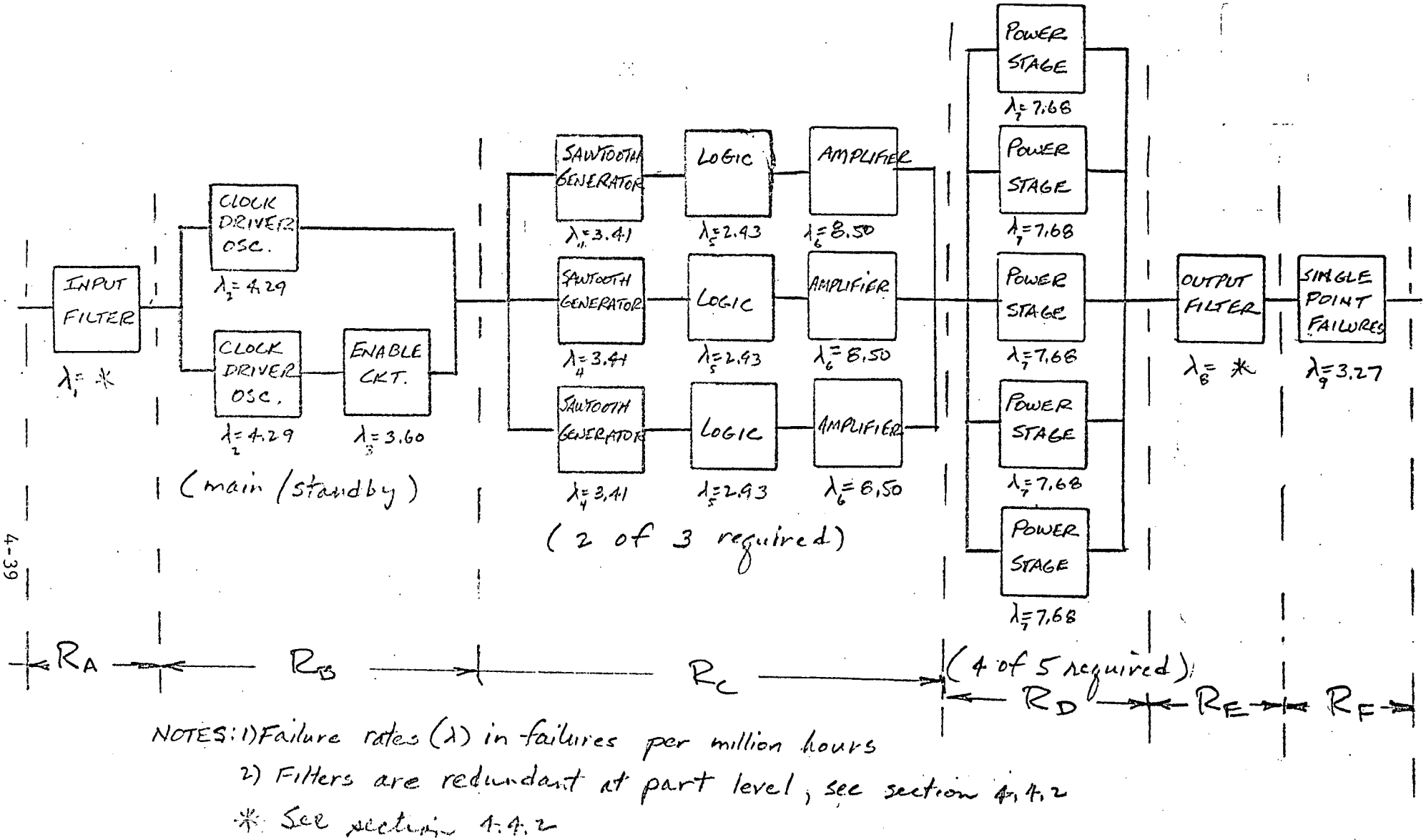

NOTES: 1) Failure rates (λ) in failures per million hours

2) Filters are redundant at part level, see section 4.4.2

* See section 4.4.2

Fig. 4.4-2 Reliability Logic Diagram

five (5) Power Stages are indicated each of which can supply 100 watts of power. Since only 400 watts are required for satisfactory system performance only 4 of the 5 are necessary; loss of one (1) power stage will not result in system failure and partial redundancy is thus provided in this area.

4.4.2 RELIABILITY MATHEMATICAL MODEL

Based on the Logic Diagram and functional description in 4.4.1, an expression for system reliability can be derived, as follows:

$$R_S = R_A \times R_B \times R_C \times R_D \times R_E \times R_F$$

where: R_S = system reliability

R_A = input filter reliability

R_B = Clock Driver configuration reliability

R_C = Sawtooth Generator/Logic/Amplifier configuration reliability

R_D = Power Stage configuration reliability

R_E = Output filter reliability

R_F = Reliability of parts whose failure would result in system failure

Each element of the above expression is developed below.

4.4.2.1 Input Filter

The input filter provides redundant capacitors in each leg of the pi network and each capacitor is fused to protect against short circuits. The resulting expression for input filter reliability is as follows:

$$R_A = (e^{-\lambda_L t})(2e^{-\lambda_{Cf} t} - e^{-2\lambda_{Cf} t})$$

where: R_A = reliability of the input filter

λ_L = inductor failure rate

λ_{Cf} = capacitor and fuse combined series failure rate

t = mission operating time

4.4.2.2 Clock Driver Oscillator (CDO)

Reliability of the main/standby CDO configuration is expressed as follows:

$$R_B = e^{-\lambda_2 t}(1 + e^{-\lambda_3 t} \lambda_2 t)$$

where: R_B = CDO configuration reliability

λ_2 = CDO failure rate

λ_3 = enable circuit failure rate

t = mission operating time

4.4.2.3 Sawtooth Generator/Logic/Amplifier

Reliability of this combination of elements in a 2 of 3 operating condition is expressed as follows:

$$R_C = e^{-3\lambda_c t} + 3\, e^{-2\lambda_c t}(1-e^{-\lambda_c t})$$

where: R_C = reliability of the configuration

λ_c = combined failure rate of the sawtooth generator (λ_4), logic circuitry (λ_5), and amplifier (λ_6).

4.4.2.4 Power Stage

Reliability of the Power Stage configuration, with 4 of 5 stages required for successful operation, is expressed as follows:

$$R_D = e^{-5\lambda_7 t} + 5e^{-4\lambda_7 t}(1-e^{-\lambda_7 t})$$

where: R_D = Power Stage configuration reliability

λ_7 = failure rate of a single power stage

t = mission operating time

4.4.2.5 Output Filter

The output filter consists of six (6) parallel capacitors and fuses as shown in Figure 3.2-1. Loss of up to two (2) capacitor/fuse combinations will not appreciably affect filtering capability and a "4 of 6" configuration results for the expression of output filter reliability:

$$R_E = e^{-6\lambda_E t} + 6e^{-5\lambda_E t}(1-e^{-\lambda_E t}) + 15e^{-4\lambda_E t}(1-e^{-\lambda_E t})^2$$

where: R_E = output filter reliability

λ_E = combined capacitor and filter failure rate

t = mission operating time

4.4.2.6 Single Point Failures

As described elsewhere in this report, the failure of any of several parts in the selected power system can result in system failure. The combination of these parts is therefore shown as a series element in the reliability logic diagram and the individual part failure rates are added together. The reliability of this system "element" is then simply:

FIGURE 4.4-3

RELIABILITY CALCULATIONS

TIME	R_A	R_B	R_C	R_D	R_E	R_F	R_S
1000	.999	.999	.998	.997	.999	.997	.991
5000	.997	.998	.991	.989	.994	.985	.955
10,000	.995	.996	.946	.962	.987	.970	.862
20,000	.990	.987	.834	.805	.974	.940	.600
40,000	.979	.968	.572	.604	.948	.887	.275
50,000	.970	.950	.458	.489	.934	.861	.164
100,000	.950	.845	.128	.145	.862	.741	.089

$$R_F = e^{-\lambda_F t}$$

where: R_F = "single point" configuration reliability

λ_F = combined (additive) failure rate of all "single point" failure parts

t = mission operating time

4.4.3 CALCULATIONS

Substitution of the element failure rates shown in Figure 4.4-2 into the various reliability expressions in subsections of 4.4.2 and the postulation of various mission times result in the calculated reliability values shown in Figure 4.4-3. These values define the reliability vs. mission time curve of Figure 4.4-1 which provides the analytical reliability assessment of the power system described by this report.

4.5 SUMMARY

As noted in Figure 4.4-1, system reliability drops relatively rapidly between mission times 10,000 and 30,000 hours. In this region it is noted (Figure 4.4-3) that reliability elements 'C' and 'D' contribute most to this degradation. Elements 'C' and 'D' are the 'majority vote logic' and the "4 of 5" power stages. It should further be noted that the calculations assume a mission failure unless 100% (400 watts) of the required power is available at all times. Considerably higher reliability would result if some power degradation could be tolerated; e.g., the maintenance of 300 watts would allow a "3 of 5" power stage reliability configuration and a resulting increased system reliability.

It is pointed out that this assessment was based on the utilization of piece-part failure rates derived from MIL-HDBK-217A. Considerably

improved (lowered) failure rates (and higher system reliability) should be attainable through rigorous parts screening.

5. CONCLUSIONS

The overall performance of the Phase II Advanced Power Conditioning System breadboard met the Phase II design goals. The weight was 0.5 lbs heavier than the design goals, but is dependent on the packaging materials. A reduction of weight below 10 lbs is realizable with use of MM'71 type packaging, which was beyond the scope of this project. The transient response, input ripple current, input voltage range, and load range capability exceeded the performance of the MM'69/MM'71 Booster Regulators.

The system redundancy features of the Advanced Power Conditioning System perform with no performance degradation. The output remains steady when a system failure is introduced.

The efficiency was above 90% from 102 watts to 372 watts at inputs from 25 to 50V dc. The peak efficiency was 93.9% at 212 watts and 50V dc input. The minimum efficiency was 87.2% at 50V dc input and 80-watt load.

The majority-vote-logic feedback approach utilized in Phase II gives reliability assessments approaching the Main/Standby approach of MM'69/MM'71 4A9/4A10 modules. During the failure modes testing it was found that certain part failures (see Section 3-4.2.1, Paragraph No. 8 for details) would cause total loss of performance. This can be prevented in actual production by adding redundant parts (see Section 3-4.2.1, Paragraph No. 8).

The collector currents between power stage transistors were unequal and had variations from 4.8A to 1A peak. The 4.8A value is close to the design value of 4.5A calculated for one stage (see Section 6.4, Page 6-24, Phase I report). This unbalance is due primarily to the unmatched inductance values of the power inductors. For actual production units the power inductors should be matched for inductance over their full DC

load values. The fully redundant type unit, i.e., five independent 100-watt modules with current limiting, does not exhibit current unbalance since each 100-watt power stage is activated in sequence as required by load demand.

6. APPENDIX

This section contains the raw test data as recorded in the laboratory test book for Phase II. The power in and efficiency calculations for the margin and failure mode tests are in error due to input current meter error. Sufficient correct power in and efficiency calculations are presented in the regulation and temperature test data, and, therefore, the margin and failure mode tests did not require repeating.

Also included in this section is the breadboard layout of components.

PHASE II

7/9/71

THE WEIGHT OF COMPLETED UNIT

5 POWER STAGES IN PARALLEL = 10.5 lb.

TEST SET-UP

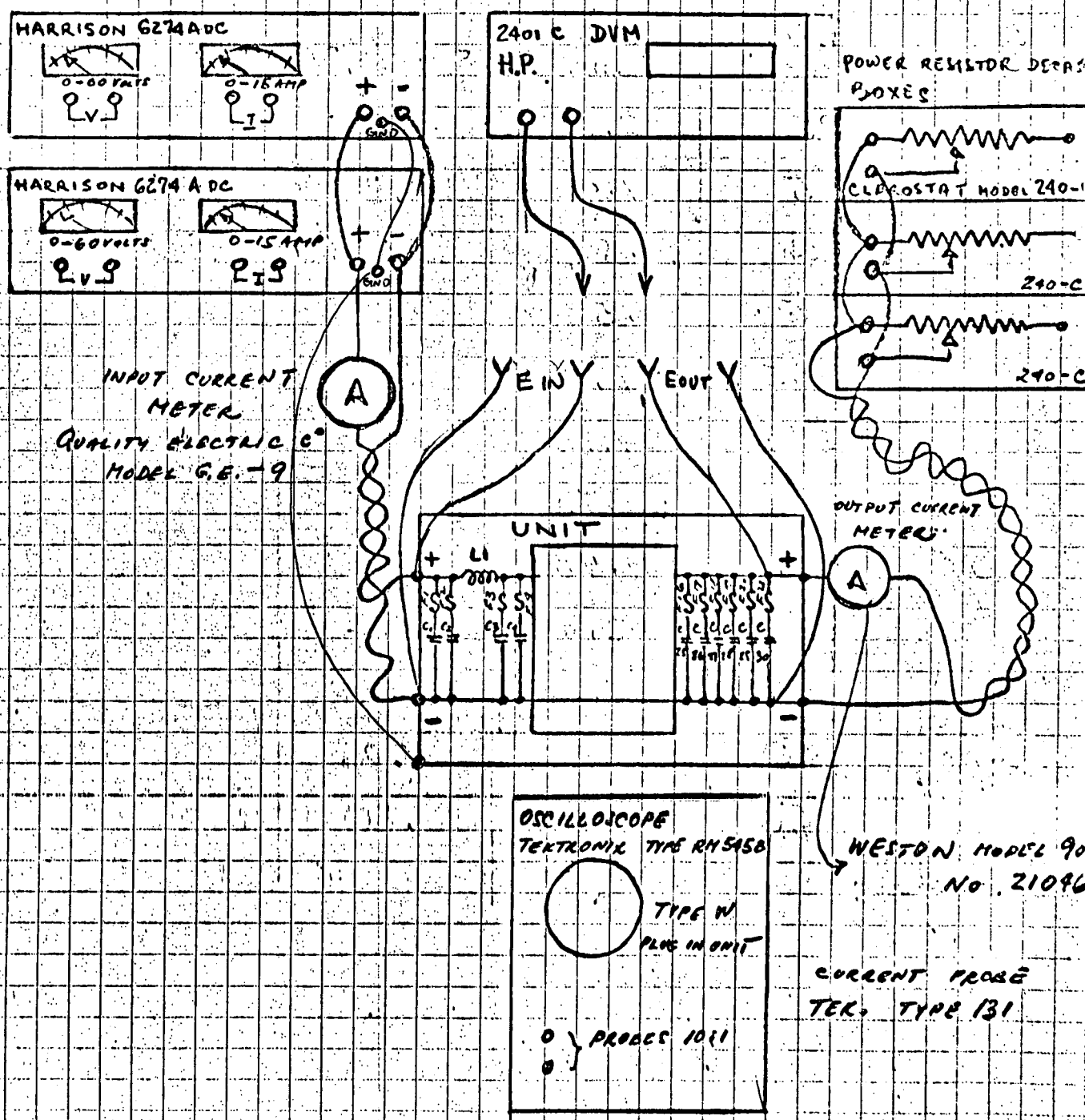

7/9/71

A. REGULATION TEST

R_L Ω	E_{IN} SET V_{DC}	I_{IN} AMPS.	I_{IN} RIPPLE SPIKES MA P-P	E_{OUT} V_{DC}	I_{OUT} AMPS	E_{OUT} RIPPLE MV P-P	E_{OUT} SPIKES VOLTS P-P	P_{IN} WATTS	P_{OUT} WATTS	Eff %	REMARK
41	25	3.34	R-50 S-220	55.77	1.37	80	4.8	83.5	76.4	91.49	
31		4.4	R-60 S-240	55.75	1.8	80	7.0	110	100.35	91.23	
21		6.5	R-70 S-440	55.74	2.66	100	8.0	162.5	148.27	91.24	
15		9.17	R-120 S-240	55.73	3.73	130	10	229.25	207.87	90.67	
12		11.5	R-120 S-200	55.72	4.67	200	8.0	287.5	260.21	90.51	
10		13.7	R-140 S-200	55.71	5.6	220	8.1	342.5	311.97	91.08	
9		15.3	R-140 S-220	55.70	6.2	230	9.0	382.5	345.34	90.28	
8		17.25	R-140 S-220	55.70	6.9	250	9.0	431.25	384.33	89.13	
7		19.6	R-140 S-220	55.69	7.86	260	9.2	490	437.72	89.33	
6		23.25	R-160 S-220	55.66	9.2	320	8.8	581.25	512.07	88.09	
41	30	2.8	R-40 S-120	55.88	1.37	80	6.0	84.0	76.55	91.13	
31		3.7	R-50 S-270	55.87	1.8	8.0	6.0	111.0	100.57	90.6	
21		5.4	R-60 S-240	55.86	2.65	80	8.4	162.0	148.03	91.38	
15		7.6	R-80 S-360	55.85	3.73	100	8.4	228.0	208.32	91.37	
12		9.5	R-100 S-350	55.86	4.67	120	10.4	285.0	260.87	91.53	
10		11.25	R-80 S-200	55.85	5.53	160	13.0	337.50	308.85	91.51	
9		12.6	R-80 S-200	55.84	6.2	180	11.6	378.0	346.21	91.57	
8		14.2	R-160 S-560	55.83	6.88	200	12	426.0	384.11	90.17	
7		16.4	R-170 S-600	55.83	7.8	180	9.2	492.0	435.47	88.51	
6		19.4	R-200 S-550	55.82	9.17	240	10	582.0	511.87	87.95	

7/12/71

A. REGULATION TEST

R_L Ω	E_{IN} SET VDC	I_{IN} AMPS	I_{IN} RIPPLE SPIKES MA P-P	E_{OUT} VDC	I_{OUT} AMPS	E_{OUT} RIPPLE MV P-P	E_{OUT} SPIKES VOLTS P-P	P_{IN} WATTS	P_{OUT} WATTS	Eff. %	REMARK
41	37.5	2.325	R-40 S-210	56.03	1.37	80	6.0	87.19	76.76	89.78	
31		2.9	R-60 S-170	56.03	1.805	80	5.2	108.75	101.13	92.99	
21		4.3	R-60 S-300	56.02	2.66	80	6.0	161.25	148.45	92.06	
15		6.08	R-80 S-360	56.01	3.74	70	8.1	228.0	209.48	91.88	
12		7.6	R-80 S-280	56.01	4.675	90	9.2	285.0	261.85	91.88	
10		9.1	R-90 S-280	56.00	5.53	100	11.0	341.25	309.68	90.75	
9		10.0	R-90 S-350	56.00	6.19	100	10.6	375.0	346.64	92.44	
8		11.25	R-100 S-480	56.00	6.9	100	9.0	421.87	386.4	91.59	
7		12.8	R-120 S-480	55.99	7.83	120	8.6	480.0	438.4	91.33	
6		15.3	R-120 S-460	55.99	9.2	160	12.0	573.75	515.11	89.78	
41	40	2.2	R-30 S-170	56.09	1.372	80	4.8	88.0	76.95	87.44	
31		2.71	R-40 S-160	56.08	1.807	80	5.2	108.40	101.34	93.48	
21		4.05	R-60 S-240	56.07	2.67	80	5.6	162.0	149.71	92.41	
15		5.64	R-70 S-400	56.06	3.75	80	7.2	225.6	210.22	93.18	
12		7.1	R-80 S-360	56.06	4.68	80	9.0	284.0	262.36	92.38	
10		8.57	R-80 S-260	56.05	5.6	100	11.6	342.8	313.88	91.56	
9		9.5	R-80 S-290	56.05	6.2	80	11.2	380.0	347.51	91.45	
8		10.5	R-90 S-440	56.05	6.92	90	10.8	420.0	387.87	92.35	
7		12.0	R-100 S-450	56.04	7.88	100	9.0	480.0	441.59	92.0	
6		14.25	R-110 S-320	56.04	9.21	130	9.2	570.0	516.13	90.55	

7/12/71

A. REGULATION TEST

RL Ω	EIN SET VDC	IIN AMPS	IIN RIPPLE SPIKES MA P-P	EOUT VDC	IOUT AMPS	EOUT RIPPLE MV P-P	EOUT SPIKES VOLTS P-P	PIN WATTS	POUT WATTS	Eff. %	REMARK
41	50	1.78	R-30 S-175	56.29	1.38	40	5.6	89.0	77.68	87.28	
31	↓	2.28	R-40 S-150	56.28	1.81	40	4.8	114.0	101.87	89.36	
21		3.24	R-40 S-300	56.27	2.67	40	6.0	162.0	150.24	92.74	
15		4.52	R-50 S-250	56.25	3.775	30	5.6	226.0	212.34	93.96	
12		5.7	R-50 S-220	56.26	4.73	30	7.0	285.0	266.11	93.37	
10		6.9	R-60 S-300	56.25	5.62	30	8.0	345.0	316.12	91.63	
9		7.63	R-60 S-260	56.26	6.29	30	9.0	381.5	353.87	92.76	
8		8.54	R-60 S-340	56.25	7.0	30	11.6	427.0	393.75	92.21	
7		9.7	R-70 S-330	56.25	7.92	30	9.0	485.0	445.5	91.86	
6	↓	11.3	R-70 S-330	56.24	9.3	30	7.2	565.0	523.03	92.57	

7/13/71

B. TRANSIENT RESPONSE TESTS

$E_{IN} = 35.00$ VDC

$I_{IN} = 7.48$ AMPS

$E_{OUT} = 55.97$ VDC

$I_{OUT} = 4.27$ AMPS

$I_{IN_1} = 3.8$ AMPS.

$I_{OUT_1} = 2.18$ AMPS.

FROM $P_{OUT} = 238.99$ WATTS
TO $P_{OUT_1} = 122.01$ WATTS

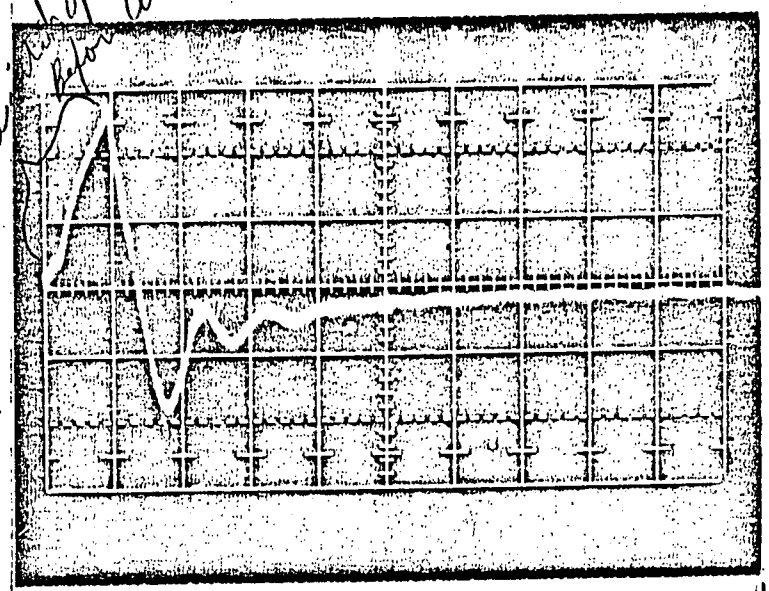

500 MV/CM

5 MSEC/CM

OUTPUT VOLTAGE TRANSIENT RESPONSE SWITCHING LOAD FROM 240 WATTS TO 120 WATTS

Reproduced from best available copy.

$E_{IN} = 35$ VDC

$I_{IN} = 7.48$ AMPS

$E_{OUT} = 55.97$ VDC

$I_{OUT} = 4.27$ AMPS

$I_{IN_1} = 10$ AMPS

$I_{OUT_1} = 5.83$ AMPS

FROM $P_{OUT} = 238.99$ WATTS
TO $P_{OUT_1} = 326.2$ WATTS

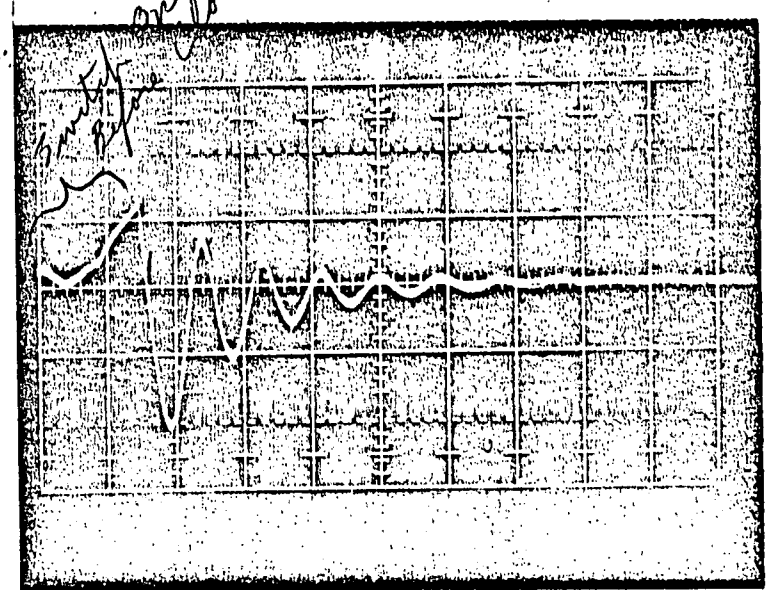

1V/CM

5 MSEC/

OUTPUT VOLTAGE TRANSIENT RESPONSE SWITCHING LOAD FROM 240 WATTS TO 320 WATTS

C. TEMPERATURE TEST

7/13/71

TEM. C°	R_L Ω	E_{IN} SET VDC	I_{IN} AMPS	I_{IN} RIPPLE SPIKES MA P-P	E_{OUT} VDC	I_{OUT} AMPS	E_{OUT} RIPPLE MV P-P	E_{OUT} SPIKES VOLTS P-P	P_{IN} WATTS	P_{OUT} WATTS	Eff. %	REMARKS
AMB.	41	25	3.44	R-40 S-100	55.76	1.372	100	7.2	86.0	76.50	88.95	
	15	25	9.1	R-100 S-300	55.73	3.75	120	12.0	227.5	209.0	91.87	
	8	25	17.3	R-140 S-240	55.68	7.0	240	9.6	432.5	389.76	90.12	
≈25°	41	50	1.78	R-30 S-100	56.27	1.373	20	6.8	89.0	77.26	86.81	
	15	50	4.58	R-50 S-300	56.25	3.77	20	8.0	229.0	212.06	92.60	
	8	50	8.6	R-70 S-180	56.25	7.0	30	11.0	430.0	393.75	91.57	
0°	41	25	3.38	R-80 S-140	55.68	1.37	30	10.0	84.50	76.28	90.27	
	15	25	9.08	R-140 S-250	55.62	3.72	100	8.0	227.0	206.9	91.14	
	8	25	17.2	R-180 S-340	55.58	6.92	200	15.1	430.0	384.61	89.44	
	41	50	1.78	R-30 S-160	56.24	1.387	30	8.0	89.0	78.00	87.64	
	15	50	4.53	R-50 S-200	56.22	3.77	30	8.0	226.5	211.95	93.58	
	8	50	8.48	R-100 S-230	56.21	7.06	30	11.0	424.0	396.84	93.59	
-20°	41	25	3.4	R-100 S-180	55.49	1.37	100	6.0	85.0	76.02	89.43	
	15	25	8.93	R-220 S-360	55.42	3.73	140	13.5	223.25	206.72	92.60	
	8	25	17.0	R-320 S-550	55.36	6.95	250	19.0	425.0	384.75	90.53	
	41	50	1.76	R-40 S-200	56.20	1.385	40	7.6	88.0	77.84	88.45	
	15	50	4.5	R-100 S-260	56.18	3.75	40	11.0	225.0	210.67	93.63	
	8	50	8.48	R-150 S-300	56.17	7.0	40	18.5	424.0	393.19	92.73	
TURN OFF FOR 1/2 HOUR TURN ON	41	25	3.4	R-100 S-180	55.54	1.37	100	3.6	85.0	76.09	89.52	TURNED AT 31VDC RL=8Ω 7/14 ON AN
	15	25	8.95	R-240 S-420	55.48	3.73	140	8.0	223.75	206.94	92.49	
	8	25	16.9	R-400 S-600	55.41	6.95	160	13.5	422.5	385.1	91.15	
	41	50	1.775	R-30 S-200	56.20	1.385	30	7.6	88.75	77.84	87.69	
	15	50	4.53	R-120 S-230	56.18	3.76	30	11.0	226.5	211.24	93.26	
	8	50	8.57	R-180 S-340	56.17	7.04	30	18.0	428.5	395.44	92.28	
0°	41	25	3.35	R-100 S-200	55.68	1.374	100	8.0	83.75	76.5	91.34	
	15	25	9.07	R-160 S-340	55.64	3.74	120	11.0	226.75	208.1	91.77	
	8	25	17.3	R-100 S-320	55.60	7.0	190	10.5	432.5	389.2	89.99	
	41	50	1.78	R-30 S-100	56.27	1.385	30	5.6	89.0	77.89	87.52	
	15	50	4.55	R-80 S-260	56.23	3.76	30	8.0	227.5	211.42	92.93	
	8	50	8.54	R-100 S-220	56.21	7.0	30	11.2	427.0	393.47	92.15	
+25°	41	25	3.45	R-60 S-120	55.75	1.373	80	5.6	86.25	76.54	88.74	
	15	25	9.15	R-110 S-240	55.72	3.73	120	10.4	228.75	207.84	90.86	
	8	25	17.2	R-140 S-260	55.67	6.95	140	9.0	430.0	386.91	89.98	
	41	50	1.775	R-30 S-130	56.27	1.39	30	7.6	88.75	78.21	88.12	
	15	50	4.57	R-70 S-340	56.25	3.77	30	6.8	228.5	212.06	92.81	
	8	50	8.55	R-20 S-100	56.23	7.05	30	8.8	427.5	396.92	92.73	

0MV/CM

4sec/CM

/CM

sec/CM

4D

TEMPERATURE MEASURED WITH TEMPERATURE POTENTIOMETER

LEEDS & NORTHRUP C° CAT. N° 8692

7/14/71

C. TEMPERATURE TEST

TEM C°	R_L Ω	E_{IN} SET VDC	I_{IN} AMPS	I_{IN} RIPPLE SPIKES MA P-P	E_{OUT} VDC	I_{OUT} AMPS	E_{OUT} RIPPLE MV P-P	E_{OUT} SPIKES V P-P	P_{IN} WATTS	P_{OUT} WATTS	Eff %	REMARK
+55°	41	25	3.44	R-40 S-100	55.73	1.375	60	5.6	86.0	76.63	89.1	
	15	25	9.2	R-100 S-200	55.71	3.74	100	8.4	230.0	208.35	90.59	
	8	25	17.25	R-70 S-200	55.68	7.0	140	9.0	431.25	389.76	90.38	
	41	50	1.78	R-20 S-60	56.25	1.39	30	5.2	89.0	78.19	87.85	
	15	50	4.55	R-40 S-200	56.22	3.78	30	7.6	227.5	212.51	93.41	
	8	50	8.6	R-80 S-200	56.21	7.1	30	11.2	430.0	399.09	92.81	
+75°	41	25	3.44	R-20 S-80	55.69	1.375	60	8.0	86.0	76.57	89.03	
	15	25	9.15	R-70 S-180	55.66	3.74	100	8.6	228.75	208.17	91.00	
	8	25	17.3	R-100 S-300	55.62	7.0	120	7.0	432.5	389.34	90.02	
	41	50	1.79	R-30 S-150	56.19	1.381	30	7.6	89.5	77.6	86.70	
	15	50	4.6	R-40 S-260	56.18	3.77	30	6.0	230.0	211.8	92.09	
	8	50	8.7	R-60 S-200	56.18	7.0	20	7.2	435.0	393.26	90.40	
+85°	41	25	3.46	R-50 S-160	55.59	1.37	60	6.0	86.5	76.16	88.04	
	15	25	9.2	R-100 S-300	55.56	3.72	130	8.0	230.0	206.68	89.86	
	8	25	17.25	R-100 S-250	55.52	6.9	130	8.4	431.25	383.09	88.81	
	41	50	1.78	R-30 S-150	56.14	1.385	30	7.2	89.0	77.75	87.36	
	15	50	4.56	R-40 S-240	56.12	3.77	30	5.2	228.0	211.57	92.79	
	8	50	8.6	R-60 S-200	56.10	7.03	30	7.2	430.0	394.38	91.72	
AMB. ≈25°	41	25	3.45	R-40 S-160	55.78	1.38	60	6.0	86.25	76.98	89.25	
	15	25	9.15	R-50 S-140	55.74	3.75	100	11.0	228.75	209.02	91.37	
	8	25	17.3	R-60 S-150	55.70	7.03	140	10.0	432.5	391.57	90.54	
	41	50	1.77	R-30 S-100	56.27	1.39	30	7.2	88.5	78.21	88.37	
	15	50	4.56	R-50 S-300	56.27	3.77	30	7.6	228.0	212.14	93.04	
	8	50	8.64	R-60 S-150	56.25	7.06	30	13.0	432.0	397.12	91.92	
-30°	41	25	3.4	R-100 S-170	55.22	1.362	80	6.4	85.0	75.21	88.48	* E_{OUT} varies
	15	25	8.8	R-200 S-300	54.87	3.675	120	10.0	220.0	201.65	91.66	from 53.44
	8	25	16.0	R-200 S-320	53.75	6.7	130	12.0	400.0	360.12	90.03	to 53.85
	41	50	1.75	R-40 S-120	56.18	1.39	30	6.0	87.5	78.09	89.25	E_{OUT} = 55.44
	15	50	4.5	R-100 S-300	56.16	3.775	30	13.0	225.0	212.00	94.22	AF = 20°C
	8	50	8.46	R-150 S-380	56.15	7.1	30	19.0	423.0	398.66	94.25	E_{IN} 25V R_L = 41
AMB. ≈25°C												AFTER RETURN TO ROOM TEMP FOUND FUSE FI BLOWN.
												Q10 FAILED SHORT

7/15/71

D. MARGIN TESTS

(1) $R_L = 41\,\Omega$	$E_{OUT} = 55.44$ VDC $E_{IN} = 19.48$ VDC $I_{IN} = 4.1$ AMPS $I_{OUT} = 1.37$ AMPS $P_{IN} = 79.87$ WATTS $P_{OUT} = 75.95$ WATTS Eff = 95.09 %	$E_{OUT} = 56.56$ VDC $E_{IN} = 57.26$ VDC $I_{IN} = 1.45$ AMPS $I_{OUT} = 1.40$ AMPS $P_{IN} = 83.03$ WATTS $P_{OUT} = 79.18$ WATTS Eff = 95.36 %
$R_L = 8\,\Omega$	$E_{OUT} = 55.44$ VDC $E_{IN} = 21.30$ VDC $I_{IN} = 19.3$ AMPS $I_{OUT} = 7.1$ AMPS $P_{IN} = 411.61$ WATTS $P_{OUT} = 393.62$ WATTS Eff = 95.75 %	$E_{OUT} = 56.36$ VDC $E_{IN} = 57.45$ VDC $I_{IN} = 7.0$ AMPS $I_{OUT} = 7.1$ AMPS $P_{IN} = 402.15$ WATTS $P_{OUT} = 400.16$ WATTS Eff = 99.51 %
$R_L = 6\,\Omega$	$E_{OUT} = 55.44$ VDC $E_{IN} = 22.13$ VDC $I_{IN} = 25.0$ AMPS $I_{OUT} = 9.2$ AMPS $P_{IN} = 553.25$ WATTS $P_{OUT} = 510.05$ WATTS Eff = 92.19 %	$E_{OUT} = 56.34$ VDC $E_{IN} = 57.073$ VDC $I_{IN} = 9.25$ AMPS $I_{OUT} = 9.35$ AMPS $P_{IN} = 527.92$ WATTS $P_{OUT} = 526.78$ WATTS Eff = 99.78 %
(4) $R_L = \infty$	$E_{OUT} = 56.34$ VDC $E_{IN} = 56.168$ VDC	$E_{OUT} = 56.34$ VDC $E_{IN} = 50.711$ VDC
TTS	$E_{OUT} = 56.158$ VDC $E_{IN} = 24.994$ VDC	$E_{OUT} = 55.44$ VDC $E_{IN} = 7.48$ VDC

The Efficiency Calculations are in error on this page due to input current meter error.

$R_L = 5.33\ \Omega$

$E_{IN} = 50.214$ VDC	$E_{IN} = 24.823$ VDC
$E_{OUT} = 56.232$ VDC	$E_{OUT} = 55.624$ VDC
$I_{IN} = 12.1$ AMPS	$I_{IN} = 25$ AMPS
$I_{OUT} = 10.5$ AMPS	$I_{OUT} = 10.35$ AMPS
$P_{IN} = 607.59$ WATTS	$P_{IN} = 620.57$ WATTS
$P_{OUT} = 590.44$ WATTS	$P_{OUT} = 575.71$ WATTS
$Eff = 97.18\ \%$	$Eff = 92.77\ \%$

The Efficiency Calculations are in error on this page due to input current meter error

$R_L = 5.33\ \Omega$		
	$E_{IN} = 50.214$ VDC	$E_{IN} = 24.823$ VDC
	$E_{OUT} = 56.232$ VDC	$E_{OUT} = 55.624$ VDC
	$I_{IN} = 12.1$ AMPS	$I_{IN} = 25$ AMPS
	$I_{OUT} = 10.5$ AMPS	$I_{OUT} = 10.35$ AMPS
	$P_{IN} = 607.59$ WATTS	$P_{IN} = 620.57$ WATTS
	$P_{OUT} = 590.44$ WATTS	$P_{OUT} = 575.71$ WATTS
	Eff = 97.18 %	Eff = 92.77 %

RERUN OF MARGIN TEST ① USING SHUNT (50MV, 30AMPS) FOR MEASUREMENT OF INPUT CURRENT

7/21/71	$E_{IN} = 25$ V DC	$E_{IN} = 50$ VDC	$E_{IN} = 19.58$ VDC	$E_{IN} = 57.23$ VDC
	$I_{IN} = 5.75$ MV = 3.46 A	$I_{IN} = 2.93$ MV = 1.76 AMP.	$I_{IN} = 7.3$ MV = 4.4 AMP	$I_{IN} = 2.53$ MV = 1.52 AMPS
	$E_{OUT} = 55.75$ VDC	$E_{OUT} = 56.25$ VDC	$E_{OUT} = 55.44$ VDC	$E_{OUT} = 56.56$ VDC
$R_L = 4\ \Omega$	$I_{OUT} = 1.372$ AMPS	$I_{OUT} = 1.385$ AMPS	$I_{OUT} = 1.367$ AMPS	$I_{OUT} = 1.39$ AMPS
	$P_{IN} = 86.5$ WATTS	$P_{IN} = 88.0$ WATTS	$P_{IN} = 86.15$ WATTS	$P_{IN} = 86.99$ WATTS
	$P_{OUT} = 76.49$ WATTS	$P_{OUT} = 77.91$ WATTS	$P_{OUT} = 75.79$ WATTS	$P_{OUT} = 78.62$ WATTS
	Eff = 88.43 %	Eff = 88.53 %	Eff = 87.97 %	Eff = 90.38 %
	$E_{IN} = 25$ VDC	$E_{IN} = 50$ VDC	$E_{IN} = 21.46$ VDC	$E_{IN} = 57.40$ VDC
	$I_{IN} = 28.56$ MV = 17.14 A	$I_{IN} = 14.24$ MV = 8.55 AMP	$I_{IN} = 33.15$ MV = 19.9 A.	$I_{IN} = 11.89$ MV = 7.14 AMP.
	$E_{OUT} = 55.68$ VDC	$E_{OUT} = 56.24$ VDC	$E_{OUT} = 55.44$ VDC	$E_{OUT} = 56.34$ VDC
$R_L = 8\ \Omega$	$I_{OUT} = 6.95$ AMPS	$I_{OUT} = 7.0$ AMPS	$I_{OUT} = 6.9$ AMPS	$I_{OUT} = 6.98$ AMPS
	$P_{IN} = 428.5$ WATTS	$P_{IN} = 427.5$ WATTS	$P_{IN} = 427.05$ WATTS	$P_{IN} = 409.84$ WATTS
	$P_{OUT} = 386.98$ WATTS	$P_{OUT} = 393.68$ WATTS	$P_{OUT} = 382.54$ WATTS	$P_{OUT} = 393.25$ WATTS
	Eff = 90.31 %	Eff = 92.09 %	Eff = 89.58 %	Eff = 95.95 %
	$E_{IN} = 25$ VDC	$E_{IN} = 50$ VDC	$E_{IN} = 22.11$ VDC	$E_{IN} = 57.49$ VDC
	$I_{IN} = 38.44$ MV = 23.07 A.	$I_{IN} = 18.91$ MV = 11.35	$I_{IN} = 43.44$ MV = 26.07 A.	$I_{IN} = 15.99$ MV = 9.6 AMPS.
	$E_{OUT} = 55.65$ VDC	$E_{OUT} = 56.23$ VDC	$E_{OUT} = 55.44$ VDC	$E_{OUT} = 56.34$ VDC
$R_L = 6\ \Omega$	$I_{OUT} = 9.2$ AMPS	$I_{OUT} = 9.22$ AMPS	$I_{OUT} = 9.1$ AMPS	$I_{OUT} = 9.2$ AMPS
	$P_{IN} = 576.75$ WATTS	$P_{IN} = 567.5$ WATTS	$P_{IN} = 576.41$ WATTS	$P_{IN} = 551.9$ WATTS
	$P_{OUT} = 511.98$ WATTS	$P_{OUT} = 518.44$ WATTS	$P_{OUT} = 504.5$ WATTS	$P_{OUT} = 518.33$ WATTS
	Eff = 88.77 %	Eff = 91.35 %	Eff = 87.52 %	Eff = 93.92 %
	$E_{IN} = 25$ VDC	$E_{IN} = 50$ VDC	$E_{IN} = 22.43$ VDC	$E_{IN} = 57.55$ VDC
	$I_{IN} = 43.36$ MV = 26.03 A.	$I_{IN} = 21.21$ MV = 12.73 A.	$I_{IN} = 48.25$ MV = 28.96 A	$I_{IN} = 17.74$ MV = 10.65 A.
	$E_{OUT} = 55.63$ VDC	$E_{OUT} = 56.23$ VDC	$E_{OUT} = 55.44$ VDC	$E_{OUT} = 56.34$ VDC
$R_L = 5.33\ \Omega$	$I_{OUT} = 10.6$ AMPS	$I_{OUT} = 10.75$ AMPS	$I_{OUT} = 10.4$ AMPS	$I_{OUT} = 10.75$ AMPS
	$P_{IN} = 650.75$ WATTS	$P_{IN} = 636.50$ WATTS	$P_{IN} = 649.57$ WATTS	$P_{IN} = 612.91$ WATTS
	$P_{OUT} = 589.68$ WATTS	$P_{OUT} = 604.47$ WATTS	$P_{OUT} = 576.58$ WATTS	$P_{OUT} = 605.65$ WATTS
	Eff = 90.61 %	Eff = 94.97 %	Eff = 88.76 %	Eff = 98.81 %

7/19/71

RE RUN INPUT CURRENT MEASURED WITH THE SHUNT (30 AMP., 50 MV)

$R_L = 6\Omega$	$E_{OUT} = 55.44$ VDC	$E_{OUT} = 56.34$ VDC
	$E_{IN} = 22.23$ VDC	$E_{IN} = 57.48$ VDC
METER	$I_{IN} = 25$ AMPS (+)	METER $I_{IN} = 9.7$ AMPS
SHUNT	$I_{IN} = 43.14$ MV =	SHUNT $I_{IN} = 16.1$ MV =
	$\cong 25.885$ AMPS	$= 9.66$ AMPS
	$I_{OUT} = 9.15$	$I_{OUT} = 9.25$ AMP
	$P_{IN} = 575.42$ WATTS	$P_{IN} = 555.2$ WA
	$P_{OUT} = 507.27$ WATTS	$P_{OUT} = 521.1$ WAT
	$Eff = 88.1\%$	$Eff = 93.8\%$

7/16/71

D.

(2.) E_{IN} = 35.00 DC

I_{IN} = 2.425 AMPS

E_{OUT} = 55.97

I_{OUT} = 1.41 AMPS

I_{IN_1} = 11.75 AMPS

I_{OUT_1} = 6.93 AMPS

FROM P_{OUT} = 78.92 WATT

TO P_{OUT_1} = 387.87 WATT

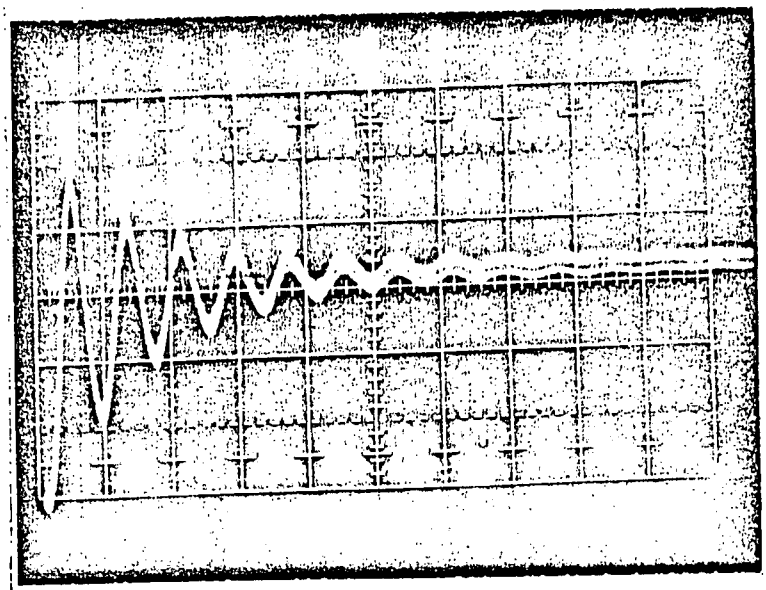

500 MV/CM

5 MSec/cm

OUTPUT VOLTAGE TRANSIENT RESPONSE SWITCHING LOAD

FROM 80 WATTS TO 400 WATTS

Reproduced from best available copy.

E_{IN} = 35.00 VDC

I_{IN} = 11.75 AMPS

E_{OUT} = 55.94 VDC

I_{OUT} = 6.9 AMPS

I_{IN_1} = 2.42 AMPS

I_{OUT_1} = 1.41 AMPS

P_{OUT} = 385.97 WATT

P_{OUT_1} = 78.87 WATTS

500 MV/cm

5 M sec/cm

OUTPUT VOLTAGE TRANSIENT RESPONSE SWITCHING LOAD

FROM 400 WATTS TO 80 WATTS

Reproduced from best available copy.

7/16/71

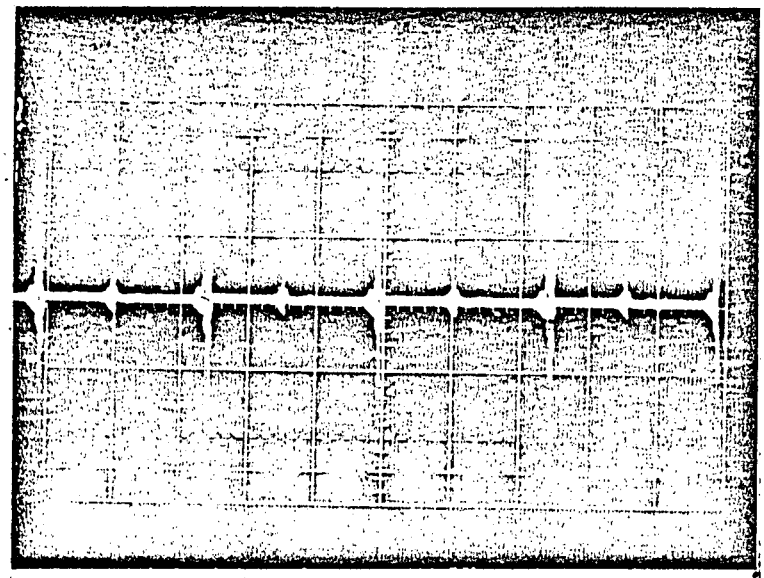

400 WATT LOAD

2V/CM

20 μsec/CM

OUTPUT VOLTAGE RIPPLE & SPIKES

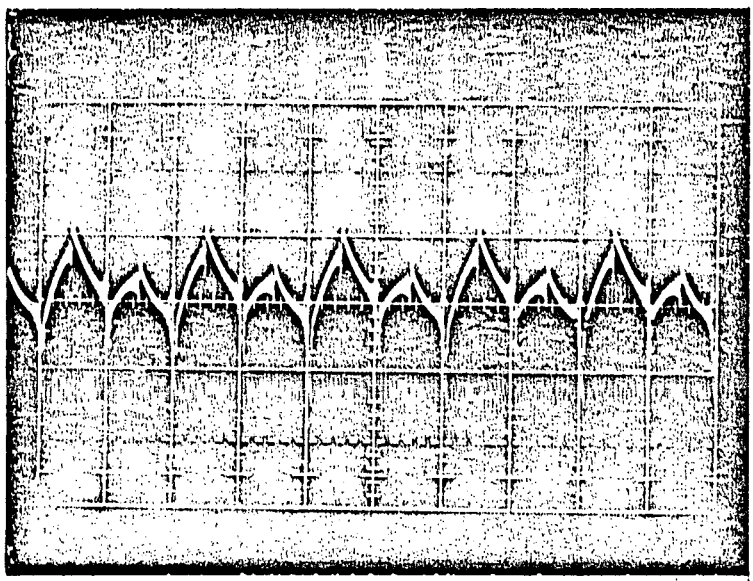

400 WATTS LOAD

100 MA/CM

50 μsec/CM

CURRENT PROBE

TEKTRONIX TYPE 131

INPUT CURRENT RIPPLE & SPIKES

E. FAILURE MODE TESTS

P_{IN}, & Eff data in error due to Input Meter ERROR

STEP	R_L Ω	E_{IN} VDC	I_{IN} AMPS	E_{OUT} VDC	I_{OUT} AMPS	E_{OUT} RIPPLE MV	E_{OUT} SPIKE VDC	P_{IN} WATTS	P_{OUT} WATTS	Eff %	REMARK
1.	31	25	4.15	55.71	1.804	40	11.6	103.75	100.5	96.87	
	15	↓	8.6	55.68	3.74	50	13.5	215.0	208.24	96.86	
	10	↓	13.0	55.65	5.6	60	14.0	325.0	311.64	95.89	
	8	↓	16.3	55.64	7.0	80	13.5	407.5	389.48	95.58	LOSS
	31	37.5	2.80	56.00	1.81	40	8.5	105.0	101.36	96.53	OF ONE
	15	↓	5.76	55.92	3.75	200	17.0	216.0	209.7	97.08	
	10	↓	8.7	55.98	5.6	200	16.0	326.25	313.49	96.09	CLOCK
	8	↓	10.7	55.98	7.0	200	16.0	401.25	391.86	97.66	
	31	50	2.176	56.24	1.82	60	12.0	108.8	102.36	94.08	F5 OPEN
	15	↓	4.3	56.23	3.77	20	9.6	215.0	211.99	98.6	
	10	↓	6.57	56.22	5.62	40	9.6	328.5	315.96	96.18	
	8	↓	8.1	56.22	7.0	40	11.0	405.0	393.54	97.17	
2.	31	25	4.2	55.74	1.8	40	9.0	105	100.33	95.55	
	15	↓	8.8	55.72	3.725	50	10.0	220.0	207.56	94.34	LOSS OF
	10	↓	13.2	55.69	5.54	70	13.5	330.0	308.52	93.49	
	8	↓	16.3	55.67	6.93	70	11.0	407.5	385.79	94.67	1/2 POWER
	31	37.5	2.9	56.01	1.81	50	13.5	108.75	101.38	93.22	STAGE —
	15	↓	5.8	56.00	3.75	60	13.0	217.5	210.0	96.77	
	10	↓	8.67	55.99	5.6	140	17.5	325.12	313.54	96.44	F15 OPEN
	8	↓	10.75	55.98	7.0	160	16.0	403.12	391.86	97.21	
	31	50	2.175	56.25	1.82	60	13.0	108.75	102.37	94.13	
	15	↓	4.3	56.24	3.77	30	12.0	215.0	212.02	98.61	
	10	↓	6.58	56.24	5.6	30	13.0	329.0	314.94	95.73	
	8	↓	8.25	56.23	7.0	30	20.0	412.5	393.61	95.42	
	31	25	4.2	55.74	1.8	40	8.0	105	100.33	95.52	LOSS OF
	15	↓	8.7	55.71	3.74	40	6.4	217.5	208.35	95.79	
	10	↓	13.25	55.68	5.6	60	15.5	331.25	311.8	94.13	1 WHOLE POWER
	8	↓	16.75	55.66	6.94	60	11.0	418.75	386.28	92.25	STAGE —
	31	37.5	2.8	56.01	1.816	80	10.4	105.0	101.71	96.87	F14 & F15
	15	↓	5.8	56.00	3.76	80	9.2	217.5	210.56	96.81	
	10	↓	8.68	55.99	5.6	130	13.6	325.5	313.54	96.33	OPEN
	8	↓	10.76	55.98	6.95	120	12.0	403.5	389.06	96.42	

PIN & Eff DATA IN ERROR DUE TO INPUT METER ERROR

STEP	RL Ω	EIN VDC	IIN AMPS	EOUT VDC	IOUT AMPS	EOUS RIPPLE MV	EOUS SPIKE VDC	PIN WATTS	POUT WATTS	Eff. %	REMARK
2	31	50	2.18	56.24	1.82	30	4.8	109.0	102.36	93.91	LOSS OF 1 POWER
	15	↓	4.3	56.24	3.78	30	9.0	215.0	212.59	98.88	STAGE
	10		6.6	56.23	5.68	30	7.2	330.0	319.39	96.78	F14 & F15
	8		8.15	56.23	7.08	30	9.2	407.5	398.11	97.69	OPEN
3	31	25	4.24	55.80	1.81	100	6.2	106	101.0	95.28	
	15	↓	8.85	55.77	3.74	100	5.4	221.25	208.58	94.27	
	10		13.2	55.76	5.6	120	9.6	330.0	312.26	94.62	LOSS OF
	8		16.35	55.73	6.95	130	6.4	408.75	387.32	94.76	
	31	37.5	2.84	56.04	1.82	100	6.6	106.5	101.99	95.76	ONE FEEDBACK
	15	↓	5.84	56.03	3.77	130	6.6	219.0	211.23	96.45	AMPLIFIER
	10		8.7	56.03	5.62	170	8.0	326.25	314.89	96.52	
	8		10.75	56.02	7.05	205	9.2	403.12	394.94	97.97	SHORT R73
	31	50	2.175	56.26	1.825	30	4.4	108.75	102.67	94.41	
	15	↓	4.35	56.26	3.78	30	7.2	217.5	212.66	97.77	
	10		6.65	56.26	5.7	30	6.2	332.5	320.68	96.44	
	8		8.3	56.26	7.1	30	7.0	415.0	399.45	96.25	
	31	25	4.2	55.75	1.8	100	6.6	105.0	100.35	95.57	
	15	↓	8.7	55.72	3.74	90	7.6	217.5	208.39	95.81	
	10		13.2	55.69	5.6	100	8.0	330.0	311.86	94.50	
	8		16.6	55.68	7.0	120	6.6	415.0	389.76	93.92	
	31	37.5	2.9	56.02	1.82	90	8.0	108.75	101.96	93.76	SHORT
	15	↓	5.85	56.00	3.76	120	5.6	219.37	210.56	95.98	Q28
	10		8.8	56.00	5.6	160	7.2	330.0	313.6	95.03	
	8		10.85	55.99	7.0	200	9.0	406.87	391.93	96.33	C-E
	31	50	2.2	56.25	1.825	30	4.0	110.0	102.66	93.33	ONE SIDE
	15	↓	4.34	56.25	3.78	30	10.0	217.0	212.62	97.98	
	10		6.58	56.24	5.63	30	6.8	329.0	316.63	96.24	
	8		8.2	56.24	7.03	30	7.6	410.0	395.37	96.43	
4.	31	25	4.25	55.71	1.805	100	5.6	106.25	100.56	94.64	LOSS OF 1 DRIVER
	15	↓	8.9	55.68	3.74	150	7.0	222.5	208.24	93.59	STAGE
	10		13.3	55.65	5.55	100	6.8	332.5	308.86	92.89	Q25
	8		16.75	55.62	6.93	100	7.0	418.75	385.45	92.05	SHORT B-E

PIN & EFF DATA W ERROR DUE TO INPUT METER ERROR

STEP	RL Ω	EIN VDC	IIN AMPS	EOUT VDC	IOUT AMPS	EOUT RIPPLE MV	EOUT SPIKE VDC	PIN WATTS	POUT WATTS	EFF. %	REMARK
4.	31	37.5	2.8	55.99	1.82	90	4.4	105.0	101.90	97.05	LOSS OF ONE
	15	↓	5.85	55.98	3.77	120	8.0	219.37	211.04	96.20	
	10		8.7	55.96	5.63	160	7.2	326.25	315.05	96.57	
	8		10.8	55.96	7.02	180	7.6	405.0	392.84	96.99	DRIVER STAGE
	31	50	2.18	56.22	1.82	30	4.0	109	102.32	93.87	Q25
	15	↓	4.34	56.21	3.78	30	5.2	217.0	212.47	97.91	
	10		6.65	56.20	5.63	30	8.6	332.5	316.41	95.16	SHORT B-E
	8		8.35	56.19	7.08	30	9.0	417.5	397.82	95.29	
5.	31	25	4.3	55.74	1.807	120	9.6	107.5	100.72	93.69	
	15	↓	8.9	55.72	3.75	170	9.8	222.5	208.95	93.91	LOSS OF ONE
	10		13.5	55.70	5.6	220	9.4	337.5	311.92	92.42	
	8		17.1	55.68	7.0	260	7.6	427.5	389.76	91.17	OUTPUT FILTER
	31	37.5	2.94	56.02	1.81	100	8.2	110.25	101.40	91.97	CAPACITOR
	15	↓	6.0	56.00	3.76	120	5.6	225.0	210.56	93.58	
	10		9.0	56.00	5.6	170	6.8	337.5	313.60	92.92	F16 OPEN
	8		11.25	55.99	7.0	200	10.8	421.87	391.93	92.90	
	31	50	2.225	56.24	1.82	30	4.8	111.25	102.36	92.01	
	15	↓	4.43	56.25	3.78	30	11.4	221.5	212.63	95.99	
	10		6.74	56.24	5.65	30	7.2	337.0	317.76	94.29	
	8		8.37	56.24	7.03	30	7.6	418.5	395.37	94.47	
	31	25									
	15	↓									
	10										
	8										
	31	37.5									
	15	↓									
	10										
	8										
	31	50									
	15	↓									
	10										
	8										

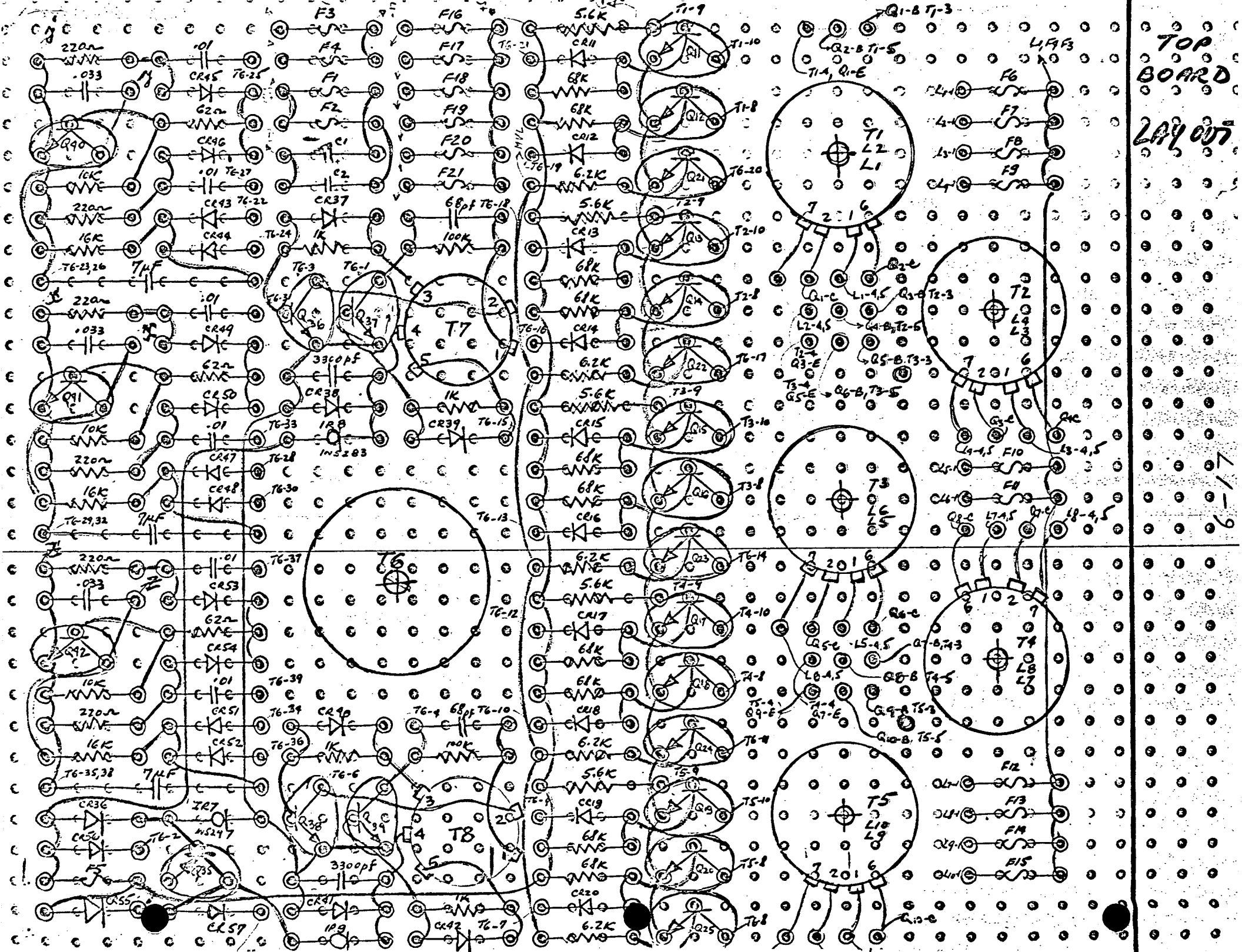
TOP BOARD LAY OUT
6-17
T1
T2
T3
T4
T5
T6
T7
T8
Q40
Q41
Q42
Q11
Q12
Q13
Q14
Q15
Q16
Q17
Q18
Q20
Q21
Q22
Q23
Q24
Q25
Q36
Q37
Q38
Q39
CR11
CR12
CR13
CR14
CR15
CR16
CR17
CR18
CR19
CR20
CR37
CR38
CR39
CR40
CR41
CR42
CR43
CR44
CR45
CR46
CR47
CR48
CR49
CR50
CR51
CR52
CR53
CR54
CR55
CR57
CR36
IR7
IR8
IR9
1N5247
1N5283
MVL
220Ω
.033
.01
62Ω
10K
16K
7μF
5.6K
6.2K
68K
1K
100K
3300pf
68pf
C1
C2
F1
F2
F3
F4
F5
F6
F7
F8
F9
F10
F11
F12
F13
F14
F15
F16
F17
F18
F19
F20
F21

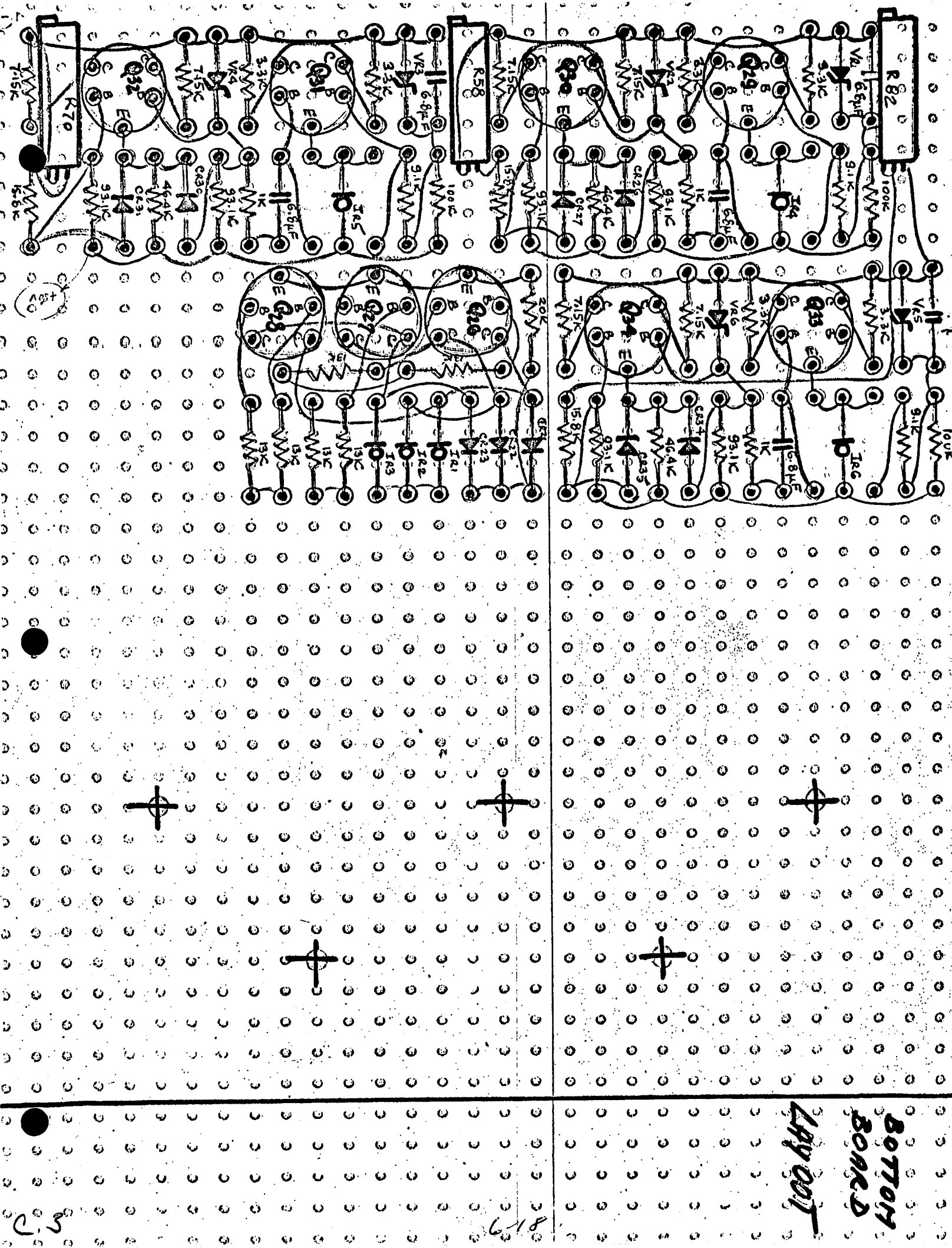
BOTTOM BOARD
LAY OUT
R70
R58
R82
Q32
Q31
Q30
Q29
Q28
Q27
Q26
Q34
Q33
IR1
IR2
IR3
IR4
IR5
IR6
CR23
CR22
CR27
CR26
CR31
CR30
CR34
CR35
VR1
VR2
VR3
VR4
VR5
VR6
+50V

C.3

6-18

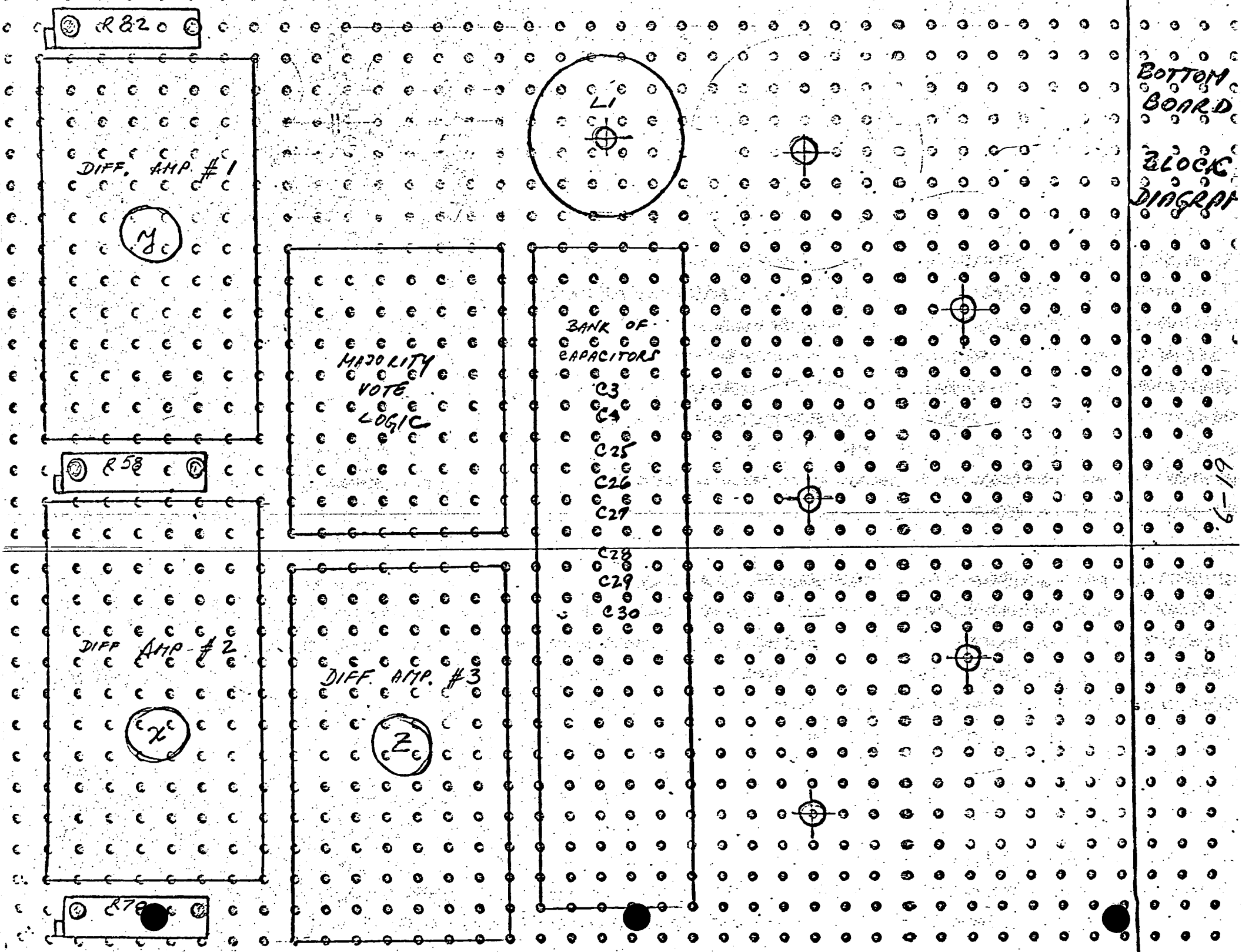
R82
DIFF. AMP. #1
Y
L1
BOTTOM BOARD
BLOCK DIAGRAM
MAJORITY VOTE LOGIC
BANK OF CAPACITORS
C3
C4
C25
C26
C27
C28
C29
C30
R58
DIFF AMP #2
X
DIFF. AMP. #3
Z
R78
6-19

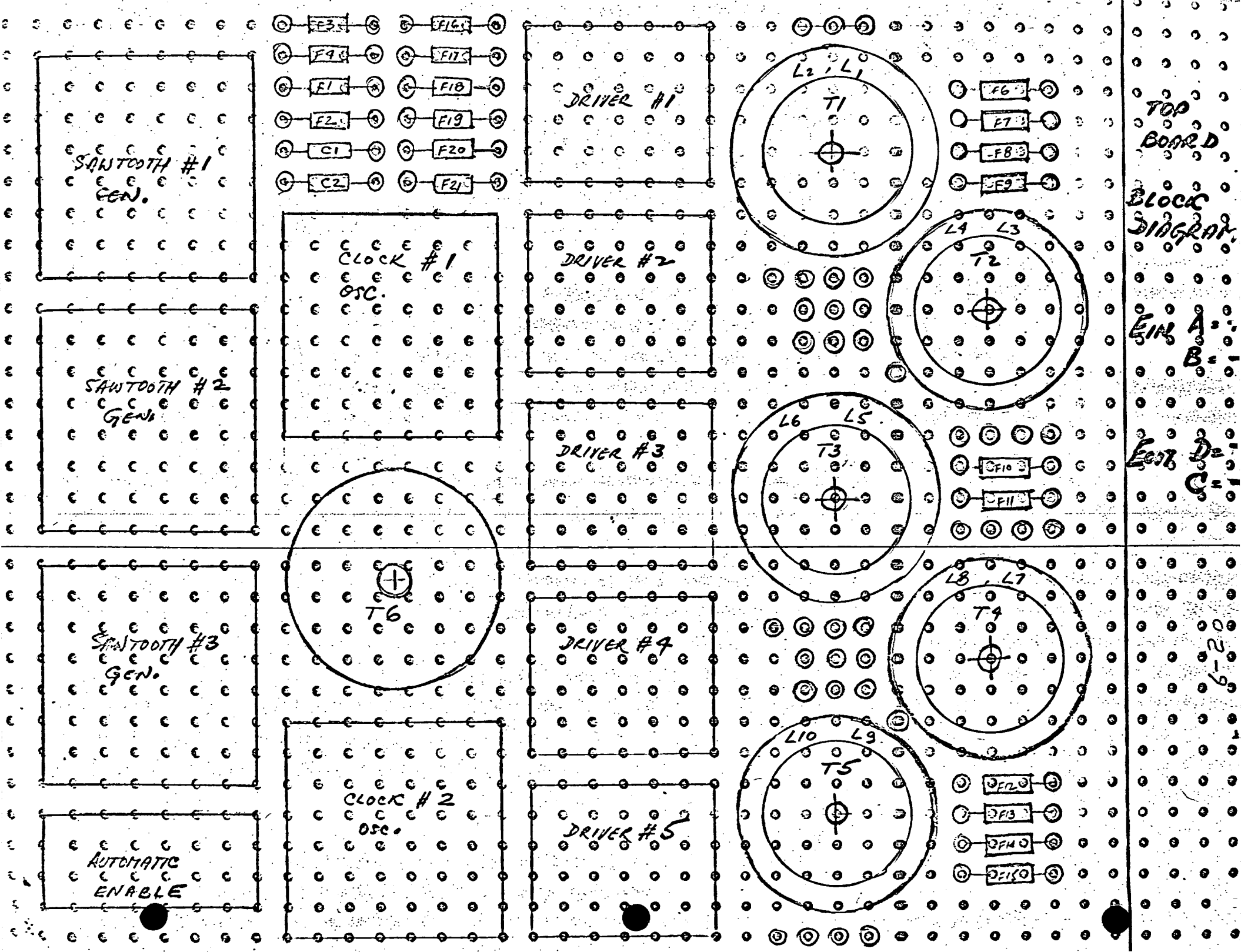
SAWTOOTH #1 GEN.
SAWTOOTH #2 GEN.
SAWTOOTH #3 GEN.
AUTOMATIC ENABLE
F3
F16
F4
F17
F1
F18
F2
F19
C1
F20
C2
F21
CLOCK #1 OSC.
T6
CLOCK #2 OSC.
DRIVER #1
DRIVER #2
DRIVER #3
DRIVER #4
DRIVER #5
L2, L1
T1
L4 L3
T2
L6 L5
T3
L8, L7
T4
L10 L9
T5
F6
F7
F8
F9
F10
F11
F12
F13
F14
F15
TOP BOARD
BLOCK DIAGRAM
EIN A=
B=
EOUT D=
C=

STEPS TO OPEN THE MODULE

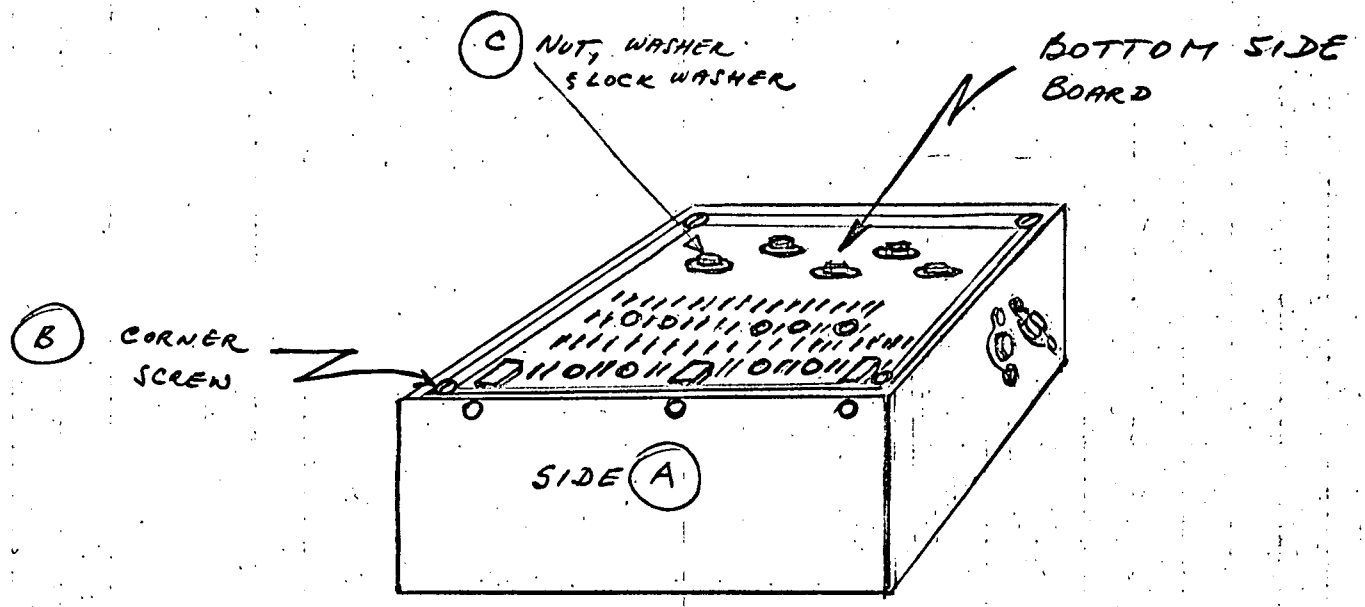

1. REMOVE B-4 CORNER SCREWS OF SIDE A

2. PULL OUT SIDE A FROM THE UNIT

3. REMOVE C - 5 NUTS, FLAT WASHERS AND LOCK WASHERS

4. PRESS IN 5 BOLTS ONLY DEEP ENOUGH SO THAT BOTTOM SIDE BOARD COULD BE PULLED FORWARD

5. PUSH BACK IN THE 5 BOLTS WHICH ARE GOING THROUGH THE CHOKES AND SCREW ON THE NUTS.
   THIS IS DONE, SO THE WASHER BETWEEN CHOKES DOES NOT GET MISSPLACED. — IT WOULD BE VERY HARD TO ALIGN THEM BETWEEN CHOKES AGAIN.

APPENDIX
TO
"ADVANCED POWER CONDITIONING SYSTEM"

Contract #953097
(20 pages)

Prepared for
Jet Propulsion Laboratory
California Institute of Technology
4800 Oak Grove Drive
Pasadena, California

Reference:

1) E.O.S. Report 4064-SR1, dated 17 May 1971
2) E.O.S. Report 4064-FR1, dated 30 July 1971
3) Design Magnetic Components? by Dr. S. Lindena
4) Failure Analysis of 4A20 Regulator, by Dr. S. Lindena, dated 27 June 1970 supplied to J.P.L. under contract No. NAS7-100, G.P.-520906

Prepared by | Date

S. Lindena | 4 November 1971
Dr. Siegfried Lindena (106)

Approved

Manager

Electro-Optical Systems
A Xerox Corporation
300 North Halstead
Pasadena, California 91107

1. INTRODUCTION AND PURPOSE OF REVIEW

The contract for an "Advanced Power Conditioning System" was the consequence of an in-house IR&D program, the concept and feasibility of which was developed and proven by myself and had resulted in a paper which I had authored and presented in May 1970 at the Power Sources Conference in Atlantic City under the title "Regulated Energy Transfer By Inductor-Transformer With Single and Multiple Stages."

The advantages of this approach over previous similar approaches are outlined in this paper and it was the purpose of this contract to prove the validity of these advantages.

During the performance of the contract, I was not involved in any way in its execution and because of this reason it was felt I might be in a position to offer unbiased and constructive criticism.

The following is an attempt to achieve this goal.

In order to keep this appendix short and to the point, minor deficiencies (as for instance the erroneous application of the equation for the required $INCH^4$ rating (ref. 3) on page 6-41 in ref. 1) are omitted as are checks of every minute detail and the derivation of mathematical equations. On the other hand areas which invite constructive criticism are discussed.

2. MAJOR MAGNETIC COMPONENTS

The chosen circuit diagram of one single power stage is shown in figure 6.4-1 on page 6-20, reference 1. The performance requirement for one single stage are:

1) Maintain trapezoidal current waveshape over a load range from $P_{min} = 10$ to $P_{max} = 50W$

2) Input voltage range $E_{in} = 25$ to 50 VDC

3) Output voltage: 56 VDC $\pm$ 1%

The major magnetic components are the inductor-transformers in the power stages.

In the following calculations performed with the use of a computer the losses are assumed to be equal to zero. In order, however to compensate for this deletion, the input voltage range has been extended from a range of 25 to 50 VDC to a range of 22 to 52 Volt DC. As can be seen later this assumption is justified by comparison with actual measured test-results: Theoretical calculations and test results are almost identical.

The first basic equation establishes the well-known rule that the magnetic component be reset properly, i.e., the applied $+\int edt$ has to be equal to the $-\int edt$.

(1) $$+\int edt = -\int edt$$

$$\frac{E_{in}\, t_{on}}{n_1} = \frac{(E_o - E_{in})}{n_1 + n_2}\, t_{off} \qquad ; \quad t_{off} = T - t_{on}$$

$$= \frac{E_o - E_{in}}{n_1 + n_2}\,(T - t_{on})$$

$$E_{in}\, t_{on}\, \frac{n_1 + n_2}{n_1} = (E_o - E_{in})\,(T - t_{on}) = (E_o - E_{in})\, T - (E_o - E_{in})\, t_{on}$$

$$E_{in}\, \frac{n_1 + n_2}{n_1}\, t_{on} + (E_o - E_{in})\, t_{on} = (E_o - E_{in})\, T$$

$$t_{on}\left(E_{in}\, \frac{n_1 + n_2}{n_1} + E_o - E_{in}\right) = (E_o - E_{in})\, T$$

$$t_{on} = \frac{(E_o - E_{in})\, T}{E_{in}\, \frac{n_1 + n_2}{n_1} + (E_o - E_{in})} = \frac{(E_o - E_{in})\, T}{E_{in}\left(\frac{n_1 + n_2}{n_1} - 1\right) + E_o}$$

$$\boxed{(2) \qquad t_{on} = \frac{\left(1 - \frac{E_{in}}{E_o}\right) T}{\frac{E_{in}}{E_o}\left(\frac{n_1+n_2}{n_1} - 1)\right) + 1}}$$

The second basic equation states:

(3) Input power P_{in} = Output power P_{out}

$$(4) \qquad P_{in} = \frac{1}{T}\left[\underbrace{E_{in}t_{on}\left(I_{1L} + \frac{\Delta I}{2}\right)}_{\text{on-time term}} + \underbrace{E_{in}t_{off}\left(I_{1L} + \frac{\Delta I}{2}\right)\frac{n_1}{n_1+n_2}}_{\text{off-time term}}\right]$$

The current waveshape transcends from the trapezoidal waveshape into a triangular waveshape when $I_{1L} \rightarrow 0$. At this point we still have full conduction time during the full period T. At any lighter load the current waveshape remains triangular but becomes interrupted.

In the above expression we can calculate the minimum required load by letting $I_{1L} = 0$ and substitute $\frac{\Delta I}{2} = \frac{E_{in}t_{on}}{2L}$

We arrive then at the important equation for $P_{in_{min}}$

$$P_{in_{min}} = \frac{E_{in}t_{on}}{2LT}\left(E_{in}t_{on} + E_{in}t_{off}\frac{n_1}{n_1 + n_2}\right)$$

As $t_{off} = T - t_{on}$ we can rewrite

$$\boxed{(5) \qquad P_{in_{min}} = \frac{E_{in}t_{on}}{2LT}\left[E_{in}t_{on} + E_{in}(T-t_{on})\frac{n_1}{n_1 + n_2}\right]_{I_{1L} = 0}}$$

In the following computer run the following values from the built units have been used for the evaluation of equations (2) and (5).

Input voltage range E_{in} = 22 to 52

Output voltage E_{out} = 56 Volt

Primary inductance L_1 = 1.33 mH

Primary number of turns n_1 = 128

Secondary number of turns n_2 = 153

Ratio $\frac{n_1 + n_2}{n_1} = \frac{281}{128} = 2.1953$

Ratio $\frac{n_1}{n_1 + n_2} = \frac{128}{281} = 0.4555$

Duration of one cycle T = 100 μsec.

In the computer print-out, however

T represents the on-time t_{on}

V ... the input voltage

I ... the input volt-seconds $E_{in} \times t_{on}$ and

P ... the minimum power P_{min} at which $I_{1L} \rightarrow 0$

The values of t_{on} and P_{min} as function of the input voltage are plotted in figure 1.

```
10 FOR V=22 TO 52 STEP 2
20 LET T= 100E-6*((1-(V/56))/((V/56)*1.1953+1))
30 LET I= V*T
40 LET P= (1/2.66E-7)*((0.4555*V*(100E-6-T)+1))
50 PRINT,"V="V;"T="T;"I="I;"P="P
60 NEXT V
70 END
>RUN
```

	E_{in}	t_{on} [sec]	$E_{in} \times t_{on}$	P_{min} [W]
09:58 11/05				
	V= 22	T= 4.13140E-05	I= 9.08908E-04	P= 5.11517
	V= 24	T= 3.77861E-05	I= 9.06867E-04	P= 5.41048
	V= 26	T= 3.44519E-05	I= 8.95751E-04	P= 5.63056
	V= 28	T= 3.12960E-05	I= 8.76287E-04	P= 5.77341
	V= 30	T= 2.83042E-05	I= 8.49127E-04	P= 5.83807
	V= 32	T= 2.54643E-05	I= 8.14858E-04	P= 5.82436
	V= 34	T= 2.27649E-05	I= 7.74005E-04	P= 5.73272
	V= 36	T= 2.01957E-05	I= 7.27047E-04	P= 5.56403
	V= 38	T= 1.77477E-05	I= 6.74414E-04	P= 5.31955
	V= 40	T= 1.54125E-05	I= 6.16499E-04	P= 5.00079
	V= 42	T= 1.31824E-05	I= 5.53659E-04	P= 4.60945
	V= 44	T= 1.10504E-05	I= 4.86218E-04	P= 4.14738
	V= 46	T= 9.01032E-06	I= 4.14475E-04	P= 3.61650
	V= 48	T= 7.05627E-06	I= 3.38701E-04	P= 3.01880
	V= 50	T= 5.18291E-06	I= 2.59146E-04	P= 2.35628
	V= 52	T= 3.38537E-06	I= 1.76039E-04	P= 1.63098

```
70 HALT
>
```

K+E 10 X 10 TO THE CENTIMETER 46 151
18 X 25 CM. • ALBANE MADE IN U.S.A.
KEUFFEL & ESSER CO.

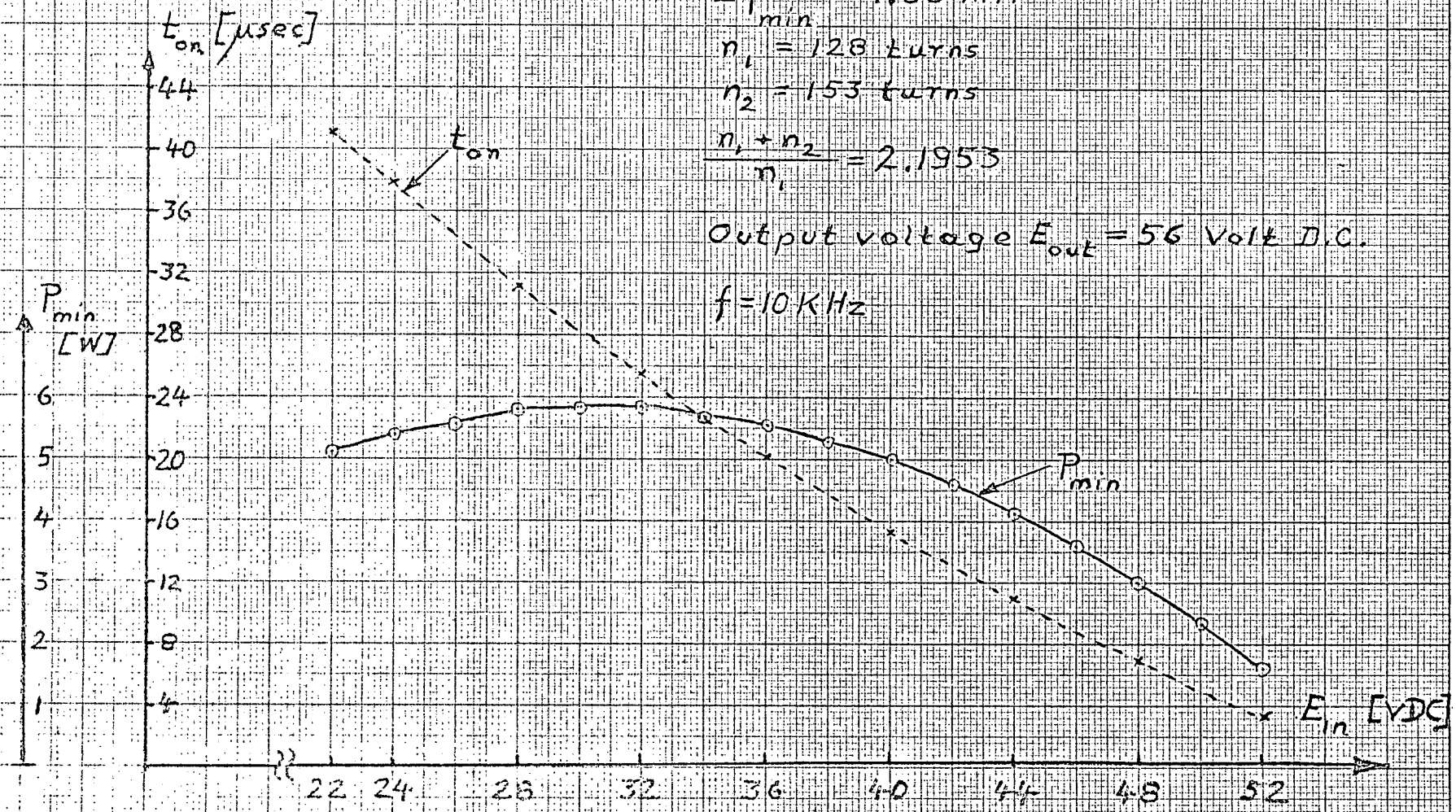

Theoretical values for on-time t_{on} and minimum output-power requirements to maintain trapezoidal current waveshape as function of input voltage E_{in} (Single stage) Fig. 1

A comparison of the calculated on-time t_{on} with measured on-times as plotted in figure 1 shows a discrepancy of no more than 2 to 3 microseconds. These can be accounted for easily by just considering the on-and off switching times of the switching transistor. A very close approximation of the calculated values (with no losses over an input voltage range of 22 to 52 volt) with the actually measured values (with losses over an input voltage range of 25 to 50 volt) has therefore been achieved and validate the assumptions.

The same can be said for the plotted minimum load requirement P_{min} as function of the input voltage below which transcendence from trapezoidal to triangular waveshape occurs.

Measured values show that at an input voltage of 25 VDC transcendence occurs at an output resistor load of 680 Ω which is equivalent to 4.61 Watts at an output voltage of 56 Volt DC. Actually the measured value lies about 1 Watt below the calculated value.

At an output voltage of 50 VDC transcendence occurs at a measured load resistance value of 750 which is equivalent to 4.18 Watts. This is almost twice the calculated value. But one has also to consider the calculated on-time is only t_{on} = 3.38 microseconds and it was already stated above that the measured on-times are larger by 2 to 3 microseconds. This would about double the conduction time (including switching times) and explain the difference between measured minimum power (4.18 Watts) and calculated minimum power (2.38 Watts).

I believe one can safely consider the "no-loss calculation over the extended range" is equivalent to the "actual loss inflicted narrower range."

In any event one can deduct from both measured values for the required minimum output power to maintain the trapezoidal waveshape

E_{in} = 25 V $\qquad$ P_{min} = 4.61 W

E_{in} = 50 V $\qquad$ P_{min} = 4.18 W

that the inductor L_1 is over-designed as the specification require trapezoidal waveshape at a minimum output power level of $P_{min} \lesseqgtr 10$ Watts.

Approximate indications are inductor L_1 is over-designed by a factor of almost 2 (see figure 1 at $E_{in} \approx 30$ VDC).

One notices also that the maximum on-time (including the additional 2 to 3 microseconds) does not exceed $t_{on} \approx 45$ microseconds. This would allow for a decrease in the turns-ratio as the maximum on-time could be equal to $\frac{T}{2}$ or equal to 50 microseconds. I feel, however, that this safety margin of 5 microseconds, even though it also represents an over-design, should remain and should be considered a good design practice.

The over-design of the inductance value however deserves a closer look.

A computer analysis was performed to calculate the minimum required inductance at a minimum output power of 10 Watt per single stage over the full input-voltage range of 22 to 52 Volts DC.

As the previous assumptions have been proven to be correct, the theoretically computed values for L_{min} can also be considered as being correct.

The calculated values for L_{min} as function of the input voltage are recorded on the next sheet and plotted in figure 2.

Figure 2 shows the highest value for the required minimum inductance L_1 at a minimum output power of 10 W occurs at an input voltage of $E_{in} \approx 30$ Volt DC and requires a value of $L_{1_{min}} = 0.78$ mH. The actual value in the finished and delivered breadboard is $L_1 = 1.33$ mH.

The primary inductance L_1 is therefore over-designed by a factor of

$$K_1 = \frac{L_1}{L_{1_{min}}} = \frac{1.33 \times 10^{-3}}{0.78 \times 10^{-3}}$$

```
10 READ V,T,I
20 LET L= (I/20E-4)*(I+(V*(100E-6-T)*0.455))
30 PRINT,"V="V;"T="T;"I="I;"L="L
35 GO TO 10
40 DATA 22, 4.13140E-5,9.08908E-4
50 DATA 24, 3.77861E-5,9.06867E-4
60 DATA 26, 3.44519E-5,8.95751E-4
70 DATA 28, 3.12960E-5,8.76287E-4
80 DATA 30, 2.83042E-5,8.49127E-4
90 DATA 32, 2.54643E-5,8.14858E-4
100 DATA 34,2.27649E-5,7.74005E-4
110 DATA 36,2.01957E-5,7.27047E-4
120 DATA 38,1.77477E-5,6.74414E-4
130 DATA 40,1.54125E-5,6.16499E-4
140 DATA 42,1.31824E-5,5.53659E-4
150 DATA 44,1.10504E-5,4.86218E-4
160 DATA 46,9.01032E-6,4.14475E-4
170 DATA 48,7.05627E-6,3.38701E-4
180 DATA 50,5.18291E-6,2.59146E-4
190 DATA 52,3.38537E-6,1.76039E-4
200 END
>RUN
```

	E_{in}	t_{on} [sec]	$E_{in} \times t_{on}$	L_{min} [H]
09:55 11/05				
	V= 22	T= 4.13140E-05	I= 9.08908E-04	L= 6.80024E-04
	V= 24	T= 3.77861E-05	I= 9.06867E-04	L= 7.19256E-04
	V= 26	T= 3.44519E-05	I= 8.95751E-04	L= 7.48483E-04
	V= 28	T= 3.12960E-05	I= 8.76287E-04	L= 7.67442E-04
	V= 30	T= 2.83042E-05	I= 8.49127E-04	L= 7.76006E-04
	V= 32	T= 2.54643E-05	I= 8.14858E-04	L= 7.74155E-04
	V= 34	T= 2.27649E-05	I= 7.74005E-04	L= 7.61943E-04
	V= 36	T= 2.01957E-05	I= 7.27047E-04	L= 7.39495E-04
	V= 38	T= 1.77477E-05	I= 6.74414E-04	L= 7.06973E-04
	V= 40	T= 1.54125E-05	I= 6.16499E-04	L= 6.64583E-04
	V= 42	T= 1.31824E-05	I= 5.53659E-04	L= 6.12553E-04
	V= 44	T= 1.10504E-05	I= 4.86218E-04	L= 5.51125E-04
	V= 46	T= 9.01032E-06	I= 4.14475E-04	L= 4.80561E-04
	V= 48	T= 7.05627E-06	I= 3.38701E-04	L= 4.01122E-04
	V= 50	T= 5.18291E-06	I= 2.59146E-04	L= 3.13079E-04
	V= 52	T= 3.38537E-06	I= 1.76039E-04	L= 2.16699E-04

```
10 OUT OF DATA
>
```

K+E 10 X 10 TO THE CENTIMETER 46 1516
10 X 25 CM. • ALBANE MADE IN U.S.A.
KEUFFEL & ESSER CO.

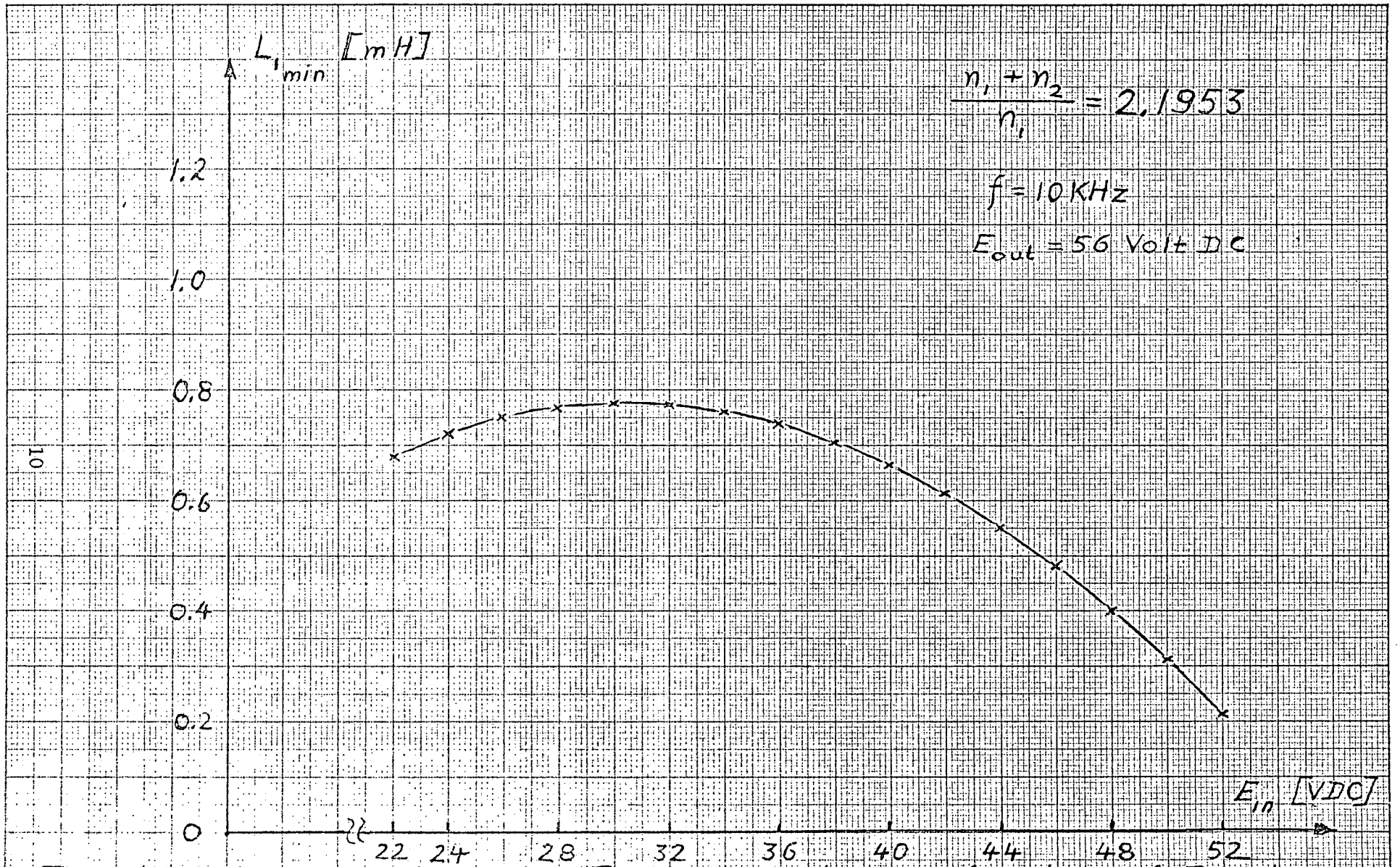

Theoretically required minimum Inductance L_{1min} as function of Input-voltage E_{in} to maintain trapezoidal current-waveshape at a minimum Output power of 10 W per single stage. (Turns ratio as above) Fig. 2

(6) $K_1 = 1.7$ over-design factor #1

The selected core for the inductor-transformer is per reference 1, page 6-25 a Magnetic Inc. Molybdenum Permalloy powder core with the following characteristics:

Core #55083-A2

Inch^4 rating W_eA_e ..... 0.11 INCH^4

Effective core cross-section A_e ..... 1.056 cm^2

Magnetic path length ℓ_m ..... 9.87 cm

Window area W_e = 860,000 circ mils, 4.357 cm^2

Window area/eff. core cross-section $\frac{W_e}{A_e} = 4.12$

Core weight Wt ..... 90 grams

Inductance L_{1000} ..... 81 mH per 1000 turns

Relative permeability μ_r 60

Average winding turn length ..... 0.188 ft.

The toroid is wound with n_1 = 128 turns of wire size #17 (2052 circ mils) and carries a maximum effective current according to table 6.4-2, in ref. 1 of i_{1e} = 3.08 Amp. This represents a wire loading value of $\frac{2052}{3.08} = 666 \frac{\text{circ mils}}{\text{Amp}}$.

The toroid furthermore is wound with $n_2 = 153$ turns of wire size #19 (1289 circ mils) and carries a maximum effective current according to table 6.4-2, in ref. 1 of $i_{oe} = 1.43$ Amp. This represents a wire loading value of $\frac{1289}{1.43} = 901 \frac{\text{circ mils}}{\text{Amp}}$.

According to figure 52 in ref. 3, 514 circ mils/Amp produce a temperature rise of 50°C at the given values of 0.11 INCH^4 and the ratio $\frac{W_e}{A_e} = 4.12$. Based on this information the temperature rises in n_1 would be $\Delta t_1 \approx 41^\circ C$ and the temperature rise in n_2 would be $\Delta t_2 \approx 38^\circ C$.

If I consider $\Delta t_1 \approx 41^\circ C$ as a safe and conservative temperature rise, then the wire size for winding n_2 could safely be reduced from #19 to #20 (1024 circ miles).

The old value Σ (wire cross-sections x number of turns) divided by the new value Σ (wire cross-section x number of turns) would then be

$$K_2 = \frac{2052 \times 128 + 1289 \times 152}{2052 \times 128 + 1024 \times 153} = \frac{459{,}873}{419{,}328}$$

(7) $K_2 = 1.1$ over-design factor #2

The maximum flux density in the M.P.P. core is determined by the maximum peak Ampere-turns.

Again, according to table 6.4-2 in ref. 1, the peak current through n_1 reaches a value of $I_{1p} = 4.52$ Ampere. With $n_1 = 128$ turns, $A_e = 1.056\ \text{cm}^2$ and $L_1 = 1.33$ mH the <u>peak</u> flux density reaches

(8) $$B_{max} = \frac{L_1 I_{1p}}{n_1 A_e} = \frac{1.33 \times 10^{-3} \times 4.52}{128 \times 1.056}$$

$$B_{max} = 44.5 \frac{\mu V\,\text{sec}}{\text{cm}^2} \cong 4.45 \text{ KG}$$

The DC bias applied during this period is given by the average value of I_{1p} and I_{1L} and is equal to $\frac{1}{2}(I_{1p} + I_{1L})$. From table 6.4-2 we find this DC bias current on the core to be equal to $\frac{1}{2}(4.52 + 3.813) = 4.17$ Ampere. This corresponds according to equation (8) to a DC-bias flux density of

(9) $B_{DC_{max}} = 4.1$ KG.

The core therefore operates practically in constant range of μ_r and its inductance can be considered constant.

For weight saving purposes it would have been possible (as has been done in quite a few cases in space vehicles) to operate the inductance more as a "swinging choke." In this case however, I like to consider this possibility as a built-in safety factor and count the previously mentioned over-design factors only. They were (6) K_1=1.7 and (7) K_2=1.1.

The total over-design factor is the product of both and is:

$$K_3 = K_1 \times K_2 = 1.87$$

Total over-design factor

(10) $K_3 = 1.87$

Based on this information the required inch^4 rating could have been reduced by this factor K_3=1.87 which would have resulted in a weight reduction factor for each of the inductor-transformer of $K_4 = K_3^{0.92} = 1.87^{0.92} = 1.78$

(11) <u>Possible</u> weight reduction factor of the inductor-transformers $K_4 = 1.78$

This possible weight reduction factor of K_4=1.78 for each of the inductor-transformers is realizable as there is left enough of a safety factor in the allowable temperature rise Δt and the used flux density.

In order, however, to allow for an extra margin in safety in the selection of the cores from those available, I want to consider a weight reduction factor of 1.5 only. It also gives a lot of additional

flexibility. The accepted weight reduction factor therefore is

(12) Accepted weight reduction factor for each inductor-transformer $K_5 = 1.5$

Based on the information on page 6-26 in reference 1 each inductor weighs 0.467 lbs. As the complete breadboard contains 10 inductor transformers, the total weight of all of them is 4.67 lbs.

Applying the accepted weight reduction factor $K_5 = 1.5$ the total weight of all ten inductor-transformers can be reduced to $\frac{4.67}{1.5} = 3.11$ lbs. This alone represents a weight saving of 1.56 lbs and would easily put the total weight of the breadboard well below the weight goal of 10 lbs. As the breadboard now weighs 10.5 lbs, the total weight would reduce to 9 lbs. There would be no sacrifice in any other performance characteristic but rather improvements.

If we consider using the possible weight reduction factor of $K_4 = 1.78$, the total weight of all ten inductor-transformers would decrease from 4.67 to $\frac{4.67}{1.78} = 2.62$ lbs. resulting in a possible weight saving of 2.05 lbs.

3. AUXILIARY MAGNETIC COMPONENTS

The driver transformer T1 as depicted on page 6-29 in figure 6.4-2 of reference 1 has a rather high turn ratio n_{9-10}/n_{3-4}. Some improvement in coupling and performance can be achieved by raising the number of turns on the secondary though maintaining n_{3-4}/n_{1-2} and lowering the number of turns on the primary.

Also some smaller component could have been used as the wire size for n_{8-9-10} is very much oversized. The weight saving however would not amount to any appreciable amount.

Based on the findings in reference 4 the use of toroids with square-loop material (as in this case: square permalloy 80) should have been avoided. E-E or E-I laminations at low flux densities would have avoided the referenced problem area.

The same comments with regards to over-design and avoidance of square-loop material applies for transformer T2 in figure 6.4-4 on page 6-41 in reference 1. Transformer T3 as described on page 6-44 in reference 1 is the frequency determining element and as such requires, as has been done, sharply saturating material.

It again is considerably over-designed. The weight savings however are not amounting to much.

The ratio between the voltage across resistor R8 and the voltage across the primary of T3 is not at its optimum and could be improved to more closely approaching current-transformer characteristics in T3.

4. THE CONTROL CIRCUIT

The control circuit consists of the Clock Drive Oscillator, the Sawtooth-Generator, the Analog-to-Digital Pulse-Width-Modulator and the Differential Amplifier. The latter two are also jointly labeled as Feedback Amplifier.

4.1 THE CLOCK-DRIVE OSCILLATOR

The Clock-Drive Oscillator uses a sharply saturating toroidal core as frequency determining element and has been discussed above under T3. It delivers a square wave voltage waveshape which controls the driver stage and the Sawtooth Generator (see figure 6.4-3 on page 6-36 in reference 1).

4.2 THE SAWTOOTH-GENERATOR AND THE PULSE-WIDTH-MODULATOR

The circuit diagram is shown in figure 6.4-3. The sawtooth is generated by charging every half-cycle the capacitor C7 through resistor R9 in such a manner that the charging ramp-voltage is practically linear with time ($R9 \times C7 \ll T$). At the end of each half-cycle capacitor C7 is abruptly discharged through the parallel connected transistor. This circuit arrangement assures that the "end" of the sawtooth always coincides and remains synchronous with the leading and lagging edges of the squarewave from the clock-drive oscillator. This is the important

aspect of this circuit as it synchronizes the end of the "on-time" and the beginning of the "off-time" of the main switching transistors with the leading and lagging edges of the square wave clock-drive and thus avoids phase-shifting of the power pulses within each half-cycle, a common trouble spot in P.W.U. applications with inductive energy transfer systems.

A further explanation of the operation of the sawtooth generator and the pulse-wdith-modulator appears unnecessary as its operation is explained in paragraph 6.2.2 in reference 1.

4.3 THE FEEDBACK-AMPLIFIER is shown in figure 6.4-5 in reference 1.

Advantageous aspects of this circuit are the use of field-effect current regulator diodes and the placing of the zener reference diodes on the collector side of the differential amplifier transistors. This yields voltage breakdown protection of these transistors at the expense of restricted voltage gain.

The utilization of two differential amplifier stages has obviously been able to supply sufficient gain to meet the regulation requirements. Inherent in the use of two stages is, however the potential danger of having a gain of greater than 1 at a phase-shift of 180° i.e., instability. A single wideband operational amplifier would provide much higher gain, simple stabilization characteristics and a maximum phase-shift of 90° and thus improve the overall stability. The author has been using a circuit diagram successfully in various but similar applications. It is shown in figure 3.

5. ALTERNATE CONTROL CIRCUIT (Figure 3)

Operation of the circuit is as follows.

The preregulator in area A delivers a coarsely regulated voltage of 14 VDC which powers all of the control circuit.

Area B shows a free running square wave oscillator which serves as a clock, drive source for transistor Q4 and as a square wave source between the terminals a-b.

Area C shows the triangular waveshape generator. Zener diode CR2, resistor R9 and transistor Q6 act as a constant current regulator which changes capacitor C1 with a linear ramp.

At the end of a half-cycle of the square wave, transistor Q4 is turned on and deflects the charging current through Q6 away from C1. Diode CR6 prevents discharge of capacitor C1 through Q4 (CR6 must be a fast diode). During the on-time of Q4 constant current regulator Q5, zener diode CR3 and resistor R10 discharge C1 with a linear ramp. At the beginning of the next half-cycle C1 is being charged again. The waveshape across C1 is therefore triangular but contains a DC component. This waveshape is boosted in power by emitter follower Q7.

Area D shows the trapezoidal AC waveshape-generator. Capacitor C2 blocks the DC component of the triangular waveshape. Between terminal a and b a square wave voltage is added to the triangular waveshape. This results in an AC-trapezoidal waveshape which powers transformer T2.

Area E shows the pulse width modulator. With transistor Q8 fully blocked, transistor Q9 and Q10 are both conducting and thus "short-circuit" self-regenerative current-transformer T3.

If Q8 is controlled into conduction, a DC voltage develops across R12 such that the trapezoidal voltage can overcome the voltage across R13 or R14. During these times Q9 and Q10 are alternately turned off.

This generates in the driver stage, area F, a pulse across T3 which kicks on either Q11 or Q12, the main switching transistor. The collector currents are fed through windings on T3 and generate in a regenerative mode the necessary drive, which adjusts itself according to the load current through the collector of Q11 and Q12.

Conduction of the main transistor is terminated instantaneously whenever Q9 and Q10 are again both "on". Due to this arrangement very little power is consumed in the total control circuit.

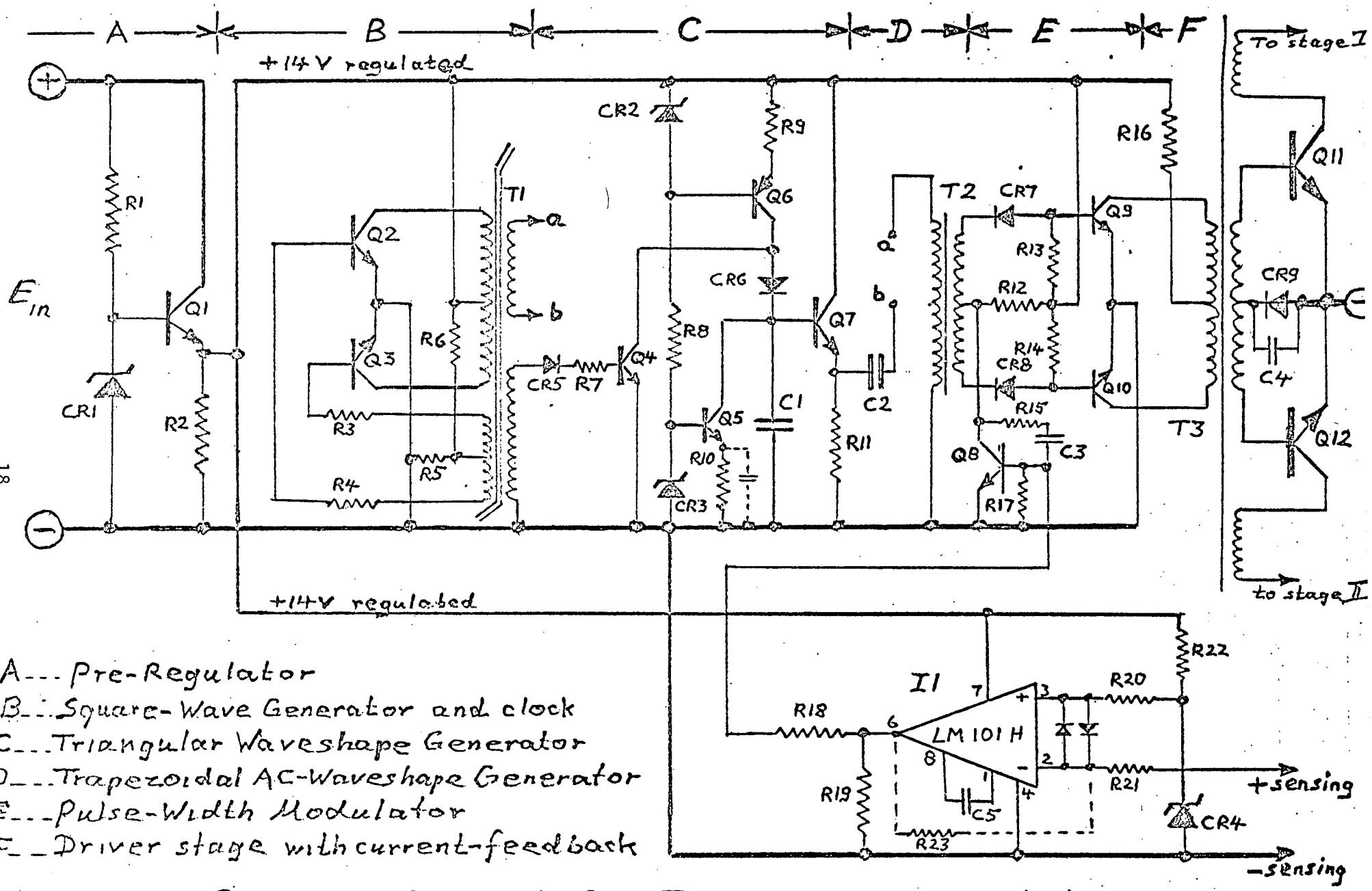

A---Pre-Regulator
B---Square-Wave Generator and clock
C---Triangular Waveshape Generator
D---Trapezoidal AC-Waveshape Generator
E---Pulse-Width Modulator
F---Driver stage with current-feedback

Control Circuit for Pulse-Width-Modulation

Q8....Control Transistor; I1....Error Amplifier.

Figure 3

Depending on the conduction status and the resulting DC voltage across R12, pulse-width-modulation can be controlled continuously between 0 and 180° in each half-cycle.

Operational amplifier I1 serves as error detector, senses the output voltage and compares it with zener diode CR4.

Q8 can be eliminated as I1 can also simultaneously perform the action of transistor Q8. This eliminates multiple transistor stages, decreases phase shift, yet yields high gain and enhances stability.

The driver stage is then connected to the individual inductor-transformers, which are not shown in figure 3.

6. OPERATION OF MULTIPLE STAGES IN PARALLEL

In reference 2 operation and performance of up to five power stages, each one of which consists of two inductor-transformer stages is discussed. The total output power capability is 500 Watt. Several different system combinations of the stages are compared on the basis of weight, parts count, efficiency, reliability, design severity, redundancy and control approach. As all of these subjects have been discussed, weighted and compared, I feel there is little that can be added. The final decision will always rest with the overall mission requirement and the assignment of priorities to individual characteristics of the single stages.

One point however should be emphasized and which was proven in this program, namely that no additional circuits are needed to operate multiple stages in parallel. Power sharing is an inherent characteristic of the inductive energy transfer system with inductor-transformers and the performance of the latter are considerably improved through the application of trapezoidal current waveshapes.

7. SUMMARY

The above discussions pointed out that the present breadboard system can be improved without any difficulty and that is generally overdesigned. In the inductor-transformers alone a total weight saving of

1.56 pounds can be accepted as fact though 2.05 pounds are possible. Some weight savings are possible in the auxiliary magnetic components which, however, do not amount to much.

Selection of magnetic materials should be changed in some areas and would avoid potential trouble spots.

If one considers, as mentioned in reference 2 page 5-1, an additional weight saving of 0.5 lbs due to more appropriate packaging techniques a total weight saving of 2 pounds should not be difficult.

The overall performance will not suffer but rather improve.

Utilization of a different control circuit might improve stability.

Operation of multiple stages in parallel or series presents no problems.

S. Lindena

Dr. Siegfried Lindena (106)