FINAL

ENVIRONMENTAL STATEMENT

FOR

NATIONAL AERONAUTICS AND SPACE ADMINISTRATION
OFFICE OF MANNED SPACE FLIGHT

APOLLO PROGRAM

RECEIVED
NASA STI FACILITY
INPUT BRANCH
JUL 7 2

March 16, 1972

(NASA-TM-X-68544) ENVIRONMENTAL STATEMENT FOR NATIONAL (NASA) 16 Mar. 1972 20 p CSCL 22B
N72-27903
Unclas
00/31 34216

Reproduced by
NATIONAL TECHNICAL
INFORMATION SERVICE
US Department of Commerce
Springfield, VA. 22151

20

SUMMARY STATEMENT

Final Environmental Statement
Apollo Program
Office of Manned Space Flight
National Aeronautics and Space Administration

1. Administrative Action.

2. The Apollo Program is an existing flight project of the National Aeronautics and Space Administration which has achieved manned landings on and exploration of the moon and safe return to Earth. The Apollo Space Vehicle is launched from NASA's John F. Kennedy Space Center in Brevard County, Florida.

3. Ten Apollo-Saturn V missions have demonstrated minimal environmental impact and no adverse environmental effects.

4. The Apollo Program was initiated prior to enactment of the National Environmental Policy Act. Alternatives were considered with respect to different technical ways of accomplishing the lunar landing objective. These alternatives represented insignificant differences in environmental impact.

5. Comments on the draft statement were received from the Environmental Protection Agency and were taken into account in preparing the final statement.

6. The draft statement was made available to the Council on Environmental Quality and the public on 12 March 1971 and 18 March 1971 respectively. The final statement was made available to the Council on Environmental Quality and the public in April 1972.

I

APOLLO ENVIRONMENTAL STATEMENT

1. DESCRIPTION OF THE PROGRAM

The initial objective of the Apollo Program was achieved in July 1969 with the Apollo 11 mission during which man first landed on the Moon and returned safely to Earth. This new capability is now being exploited in additional missions to explore the Moon. Continued flights to the Moon are designed to broaden and deepen our base of scientific knowledge, to evaluate potential utilization of the Moon, to increase our experience in space operations, and to maintain international leadership in space.

The program is managed by NASA's Manned Space Flight organization comprising the Office of Manned Space Flight and the Apollo Program Office in Washington, D.C., and three field centers: Marshall Space Flight Center in Huntsville, Alabama; Manned Spacecraft Center in Houston, Texas; and Kennedy Space Center in Florida. MSFC at Huntsville is responsible for the launch vehicles, MSC at Houston is responsible for the Apollo spacecraft, and KSC is responsible for the launch and checkout facilities and for launch operations. Mission operations are controlled through the Mission Control Center at MSC.

In the operational phase, the Apollo Program has used two primary launch vehicles - the two stage Saturn IB which can place a 40,000 pound payload in Earth orbit and the three stage Saturn V which can put 285,000 pounds into Earth orbit and over 100,000 pounds into a translunar trajectory. The Apollo spacecraft, which is designed to support three men in space for periods up to two weeks, consists of three modules - a Command Module in which the crew is launched, travels to and from lunar orbit and re-enters the Earth's atmosphere; a Service Module which provides the main spacecraft propulsion and which carries most of the spacecraft consumables; and the Lunar Module which is designed to transport two men from lunar orbit to the Moon's surface and return them to the orbiting Command Service Module.

To date, through Apollo 15, there have been five Saturn IB launches of which one was manned and ten Saturn V launches of which eight were manned.

Two more lunar landing missions are planned, Apollos 16 and 17 in 1972. While these last two Apollo missions will have increased capabilities for lunar exploration, their environmental impact will not be significantly different from that of previous lunar landing missions.

2. THE ENVIRONMENTAL IMPACT OF THE PROGRAM

Atmospheric Pollution

Source and Nature of the Pollution

During the launch of the Apollo Saturn V space vehicle from Launch Complex 39 at the Kennedy Space Center, Florida, a number of rocket exhaust products are introduced into the Earth's atmosphere. Listed below are the products from a normal Saturn V launch, the amount of each product and the altitude at which it is released.

Product	Weight in Pounds as Function of Altitude		
	0-20 KM 0-10.8 NM	20-67 KM 10.8-36.2 NM	Above 67 KM Above 36.2 NM
Carbon Dioxide	623,720	316,860	890
Carbon Monoxide	1,398,840	699,420	400
Water	734,420	367,210	643,560
Hydrogen (H_2)	36,200	18,100	37,800
Hydrogen (H)	4,000	2,000	-
Oxygen (O_2)	19,440	9,720	-
Oxygen (O)	9,200	4,600	-
Hydroxyle Radical (OH)	68,660	34,330	-
Carbonaceous Products	133,000	67,000	-
Carbonyl Sulfide	-	-	14
Hydrogen Sulfide	-	-	112
Nitrogen	-	-	427
Sulfur Dioxide	-	-	42
Sulfur (S_2)	-	-	85
Hydrogen Chloride	-	-	1,029
Aluminum Oxide	-	-	107
Metal Oxides	-	-	175

1 KM = 0.53961 NM

Impact on the Environment

The discharge of rocket products into the atmosphere can have two possible detrimental effects: (1) added toxicity and (2) a modification of the global environment with respect to:

(a) Heat balance (water, carbon dioxide, nitrogen oxides, particulates)

(b) Ionospheric electron density -- radio propagation (Carbon dioxide, water, hydrogen)

(c) Emissions from chemosphere -- airglow (Nitrogen oxides)

In regard to toxicity, the second and third stage main propulsion systems generate only water and a small amount of hydrogen. There are also 2500 pounds of products from the associated solid propellant ullage and retro-rockets, but these are released at altitudes above 70 KM and are attenuated by dispersal throughout the upper atmosphere. Consequently the second and third stages pose no toxicity hazard. Considering the first stage, if all the products of combustion released along its 75 mile trajectory were concentrated in a one mile high cylinder of 3.5 mile radius, which is the distance from the launch site to nearest spectator location (press box), the contamination levels attained would be for each:

Carbon Dioxide	2.2 ppm	(5000 ppm)
Carbon Monoxide	4.9 ppm	(50 ppm)
Hydrogen	0.13 ppm	(3000 ppm)
Nitrogen Oxides	5.4×10^{-5} ppm	(5 ppm)
Carbonaceous Products	0.46 ppm	(?)[2]

The figures in parentheses are the levels stated as maximum acceptable for extended human exposure.[3] It is clear that in all cases there is more than ample margin of safety. Note that at the lower altitudes where toxicity is of concern the carbon monoxide is oxidized to carbon dioxide upon exposure at its high temperature to the surrounding air.

In regard to significant modification of the environment, the quantities released are two or more orders of magnitude below the recognized levels for concern.[4] Considering the pacing contaminant in each area:

(a) Global heat balance: The amounts of carbon dioxide and water released are insignificant when compared to their natural abundances. For example, each launch increases the atmospheric carbon dioxide content by .00000003%.

---

[2]Specific threshold value not available, however, these products are considered inert.

[3]Compendium of Human Responses to the Aerospace Environment, Vol. III, Table 13-15, NASA CR 1205 (III), E. M. Roth (Ed.).

[4]"Man's Impact on the Global Environment," Report of the Study of Critical Environmental Problems, MIT Press (1970)

(b) Ionospheric electron density: It is estimated that a launch rate of 375 Saturn V's per year would be required to double the water concentration at the critical altitudes. Further, present understanding indicates that even such an increase would not necessarily significantly affect radio transmission.[5]

(c) Emissions from the chemosphere: The airglow effect occurs for nitrogen oxides only down to an altitude of 90 KM. The nitrogen oxides generated by the first stage is released below this altitude.

Water Pollution

Normal Launch

Water quality from a normal Apollo launch will not be affected except from three sources which will cause negligible pollution. First, residual RP-1 fuel, an amount not exceeding 5,000 gallons, will be dispersed in the ocean approximately 400 miles east of the Florida coastline. This dispersion is a normal event resulting from the SIC first stage separation. RP-1 is a highly refined kerosene which unlike crude oil, is not considered an environmental hazard because it rapidly disperses into a very thin film on the water surface from whence it volatilizes into the atmosphere.[6] It covers an area of approximately one square mile giving a saturation level of about one pound RP-1 to 1000 sq. ft. of ocean surface. Second, certain hardware will be dropped, the SIC and launch escape system 400 miles east and SII engines 2700 miles east of Florida. With pre-announced shipping and flight warnings, the chance of loss of life or property damage is infintesimal. Third, a minute amount of electrolyte from two 28 volt batteries, associated with the SIC separation, will place an insignificant amount of potassium hydroxide into the ocean.

Aborted Flight

Inter-agency and industrial experts assisted in the planning and design of the Apollo systems. Safety precautions were incorporated into the system, optimum flight profiles established and operating procedures and range safety features were developed to assure minimum effects from pollution. Should an abort after launch be necessary, system design assures maximum dispersal of propellants to minimize potential pollution. Depending on the altitude of the Apollo vehicle at the time of the abort signal, some or all of the propellant will have been used prior to stage contact with the ocean surface. A maximum of 65,000 gallons of RP-1 could reach the ocean. However, toxicity of RP-1 is slight

---

5. "Pollution of the Upper Atmosphere by Rockets" William W. Kellogg, NAS Draft 1963

6. It should be noted that similar petroleum products are commonly used to smother mosquito larvae because they characteristically spread very rapidly into a molecularly thin surface layer which then evaporates into the atmosphere before it can damage the fish or plant life of the pond.

and impact on marine life and waterfowl are considered negligible due to its dispersive characteristics.[7] Three propellants with high toxicity ratings are nitrogen tetroxide, aerozine-50, and monomethyl hydrazine. Their combined weight is less than 2% of the total propellant; their lethality to ocean life is considered negligible.

Re-Entry

After the command module enters the Earth's atmosphere, its velocity is reduced by aerodynamic friction. At approximately 10,000 feet altitude the three main parachutes open and support the module until water impact. Potential sources of water pollution are residual spacecraft propellants, and traces of lunar material carried from the lunar surface.

Approximately 170 pounds of toxic propellants (residuals) are consumed by the reaction control thrusters starting at an altitude of about 10,000 feet. This small quantity of propellants is combusted or evaporated and diluted to a non-toxic level in the atmosphere. The propellant systems are then sealed prior to impact with the water surface which prevents contact of the water with any remaining propellant.

The possibility of contamination of the Earth by contact with material from the Moon was extensively studied by both NASA and Interagency Committee on Back Contamination (ICBC). The studies resulted in the construction of the Lunar Receiving Laboratory at the Manned Spacecraft Center and the quarantine and decontamination procedures developed for the spacecraft, samples and flight crew. Extensive analysis of the samples has shown no evidence of any possible contaminants. Quarantine procedures have been deleted.

Noise

Noise is detrimental to Earth environment only. There are only two times during a normal Apollo mission when above normal overall sound pressure levels (OASPL) are encountered. These two times are during vehicle boost and spacecraft reentry. The only sound pressure level above normal during spacecraft reentry is the sonic boom experienced when the spacecraft enters the Earth's atmosphere. This is not considered to be of any significant nuisance since it usually occurs in the mid-Pacific ocean.

---

[7]Calculations of the dumping of 260,000 gals. of a similar petroleum product into the ocean showed spreading and evaporation in one to four hours. Ref: "Spreading and Evaporation of Petroleum Products on Water" 4th Water and Harbor Conf., Antwerp, Belgium Blocker

During a normal Apollo launch it has always been known that there would be considerable noise generated by the first stage of the Launch Vehicle Booster. In 1961 NASA and DoD made a comprehensive study of noise levels and other hazards to be encountered for launching vehicles of the Saturn V magnitude. This study was reported to the NASA Associate Administrator on July 13, 1961, in Report #MT61-109546. The study determined overall sound pressure levels for near field areas (Facilities) as well as far field areas (nearby communities). This data was used for facilities design, for launch site boundaries, and minimal impact to wildlife and vegetation. The acoustical boundary limits were set based on the information available in the "Hazards Analysis Report." This report states the recommended threshold of damage is set between 110 db and 135 db for acoustic energy in the 2-37 CPS frequency range. The report also reflects that unprotected personnel in the controlled area should not be subjected to overall sound pressure levels greater than 135 db because of possible hearing loss. During an Apollo launch the closest unprotected personnel are in the viewing stand. For uncontrolled areas the report states that overall sound pressure levels should not exceed 120 db as some minor glass breakage and plaster cracking occur when the overall sound pressure level reaches 125 db.

The Apollo Launch Site overall sound pressure levels have been measured during the first 8 Saturn V launches. A worst case matrix follows:

Launch	Dist.	Meas. Site	Max. db (OASPL)	Frequency	Area
AS-502	17,000 ft.	View Stand	128	16 Hz	Controlled
AS-504	53,000 ft.	Titusville	117	4-8 Hz	Uncontrolled
AS-506	111,000 ft.	Cocoa Beach	106	4 Hz	Uncontrolled

It should be noted that the peak overall sound pressure levels are of low frequencies and are of short duration.

A somewhat comparable overall sound pressure level is that of a jet airplane passing over at 500 ft. (115 db), or a rock band which is approximately 130 db. NASA also tested effects on wildlife by placing caged birds at 1800 ft. from the launch pad during a launch. There was no indication of hearing loss.

Nuclear Radiation: The Apollo spacecraft has small quantities of radioactive material used in switch tips and other locations but these do not constitute a significant hazard. The only source of a potential radiation hazard requiring discussion is the fuel capsule of the radioisotope thermoelectric generator (RTG) which provides electrical power for Apollo lunar surface experiments. The system for nuclear power for the Apollo Program is identified as SNAP-27. The SNAP-27 plutonium-238 fueled generator is required to provide at least 63 watts of continuous electrical power throughout the temperature extremes of lunar night and lunar day for one year.

The RTG is inoperative until activated on the lunar surface by an astronaut who transfers the fuel element from its storage cask, attached to the outside of the lunar module descent stage, to the generator (see Figures 1 and 2). The cask was designed to transport the fuel capsule safely to the lunar surface and contain the fuel material throughout the various possible mission abort phases.

The Interagency Safety Evaluation Panel and its technical advisors evaluated hazard potentials for a normal mission and for possible mission abort phases. The hazards will be discussed as they relate to the capability of the fuel cask to withstand the shock, temperature, and fragmentation environments. The environments may originate from launch pad or inflight explosions of the rockets and spacecraft or from the impact with land or water following aborts within the Earth's gravitational field.

Normal Launches: The fuel capsule assembly is fueled with $^{238}PuO_2$ microspheres, 50 to 250 microns in diameter. The microsphere size was chosen to minimize the inhalation and retention of the fuel particles. The total fuel weight is 3800 grams of $^{238}PuO_2$ which contains 44,500 curies of ^{238}Pu having a half life of 87.5 years. During normal operations, the primary radiation exposure hazard from the fuel capsule is from neutron emission and the secondary exposure hazard is from gamma rays, both of which are kept within permissible exposure limits for workers and the general public through the proper use of distance and shielding and minimized exposure time. The fuel cask is designed so that no fuel will be released during normal operations.

There is no possibility of a nuclear explosion during any condition because the available fuel is only 25 percent of a critical mass.

Aborted Mission Modes: The fuel cask has been designed and tested to prevent or minimize the release of radioactive fuel as a result of all environments produced by failures of the launch vehicle or spacecraft at any time during the flight. The types of environment for which the cask was designed and tested will be discussed below.

The results of tests in these extreme environments together with the probability of failures in various flight regimes showed that the probability of releasing any fuel from prelaunch conditions through early ascent was about one chance in a million. Dispersion effects reduce the probability of exposing anyone to the generally accepted continuous lung burden of .016 microcuries of radioactive respirable material to between one in 10 million and one in a billion.

Once the launch vehicle has passed the sensible atmosphere any failures for the remainder of the mission will either leave the cask on a trajectory which will never intersect the earth or will cause it to be returned to earth with entry velocities ranging from suborbital to superorbital. Both land or water impacts are possible and tests and analyses have been conducted for both situations.

Analyses have shown that there is a finite chance of release of fuel from the cask from that small number of failures which involve an explosion of the launch vehicle of sufficient magnitude to destroy the primary heat shield (see Shock Overpressure below) at a time which will cause near orbital reentry heating and impact on land. However, the majority of impacts will be into water, since a major class of abort situations will allow reentry trajectory to be targeted for water impact which adds significantly to the random probability of water impact of 75%. The water reentry of the Apollo 13 LM is an example of such a targeted reentry.

Possible Cask Conditions During Aborts: The extreme conditions for which the fuel cask was designed and tested are discussed in the following paragraphs:

Shock Overpressure: The Sandia Research Laboratory performed a test on the fuel cask for shock overpressure. The fuel cask was mounted in a 2' tube and subjected to a peak shock pressure of 680 psig, and a peak impulse of 2.7 psi seconds. This represents a 30% yield from available S-IVB fuels. This test was conducted to simulate shock from a Saturn V explosive abort, however, it was determined by analysis that the shock overpressure reaching the fuel cask will be less than 600 psi and 2.2 psi seconds in all conceivable type accidents.

The first layer of the fuel cask, the primary heat shield, was totally removed by the explosive overpressure. The second layer, the secondary heat shield, remained intact having only a crack on one side that did not compromise integrity. The secondary heat shield is a .565 inch thick beryllium annulus surrounding the fuel capsule and is responsible for protection against shock overpressure and fragment penetration. The fuel capsule was not exposed; furthermore, the fuel capsule is made of high strength alloy and in itself provides protection against release of PuO_2.

Based upon these results, the fuel cask can take considerably more punishment than it would see in predicted Apollo launch pad or in-flight explosions.

Extreme Temperature: - A Saturn V fireball may reach 5000°F at the time of ignition. In a launch pad explosion, the temperature at ground level will drop to about 4000°F within 10 seconds and by 12 seconds decline to the residual fire temperature of 2000°F (this is below the melting point of all capsule components and the PuO_2 microspheres). The primary heat shield may be removed by explosive shock. However, during the fire/explosion the fuel cask will either be projected away or it will fall to the ground. In either case, it will quickly be removed from the fireball. The secondary heat shield gives protection to approximately 2400°F before the fuel capsule will melt and release the PuO_2 microspheres. These microspheres can withstand 2000°F indefinitely.

These results give confidence that the probability of fuel release due to temperature is very remote.

Fragmentation Impact: Fragment tests were performed with .06 inch aluminum fragments at impact velocities of 975, 1815, 1900, 2800 and 3200 ft/sec. The fuel cask remained intact, and no simulated fuel was released except when the fragments impacted the bottom end of the fuel cask in an edge-on configuration at velocities near 2000 ft/sec. Some fuel could be released under these conditions, however, any fuel vaporized would be carried up in the fireball and would be dispersed to levels below permissible concentrations before reaching the ground during a launch pad explosion (This is the worst case for such a release).

Land Impact: Any explosion within the gravitational field of earth will lead to reentry and possible land impacts. Therefore, the fuel cask must survive land impact. At low altitudes the cask will not achieve sufficient velocity to rupture and release

PuO_2 fuel; capsule impact tests have been conducted at terminal and greater velocities on hard soil and granite. Three high altitude drop tests were performed with terminal velocities of 300, 330, and 370 ft/sec. In one drop a simulated fuel cask was preheated to 1900°F, with an internal pressure of 4 atmospheres and impacted on hard soil. Both end-caps flew off, and the cylinder showed delamination but no cracks. The beryllium secondary heat shield cracked but there was no simulated fuel released.

As an extreme test to determine the maximum quantity of respirable (less than 3.8 microns diameter) sized particles which would be generated, a small rigid fuel containing test capsule was impacted at 450 ft/sec on granite. About 19% of the total inventory degraded to respirable size particles. The low percentage of fuel fragmented into the respirable range gives added protection against human danger should a crack in the capsule be produced.

Fuel Cask Water Impact: As noted above, the most probable impact will be in the ocean. In the event impact occurs early in the flight, "pingers" (water actuated hydrobeacons) have been placed on the vehicle near the spacecraft to assist in locating the nuclear system to return them to radiological control if they are at recoverable depths.

As indicated in the following paragraphs, there is not a significant radiation problem even if the fuel is released in shallow water; however, from an economic point of view as well as the desire to avoid any potential nuclear exposure, recovery is planned for shallow water impact.

The consequence of a capsule impacting in the ocean where recovery is not possible have been analyzed. The capsule materials are insoluble as is the fuel form and it would be expected that dissolution would probably take place by diffusion of the water into the capsule and some dissolution followed by subsequent diffusion of the dissolved plutonium out of the capsule. Such a series of events would take hundreds of years by which time the activity would have substantially decayed away.

Analyses, however, have been conducted which assumed that the entire capsule fuel loading was exposed to the ocean environment. With an experimentally established dissolution rate of .03 ug ^{238}Pu/g of PMC/day, even if a man were to obtain his entire annual protein diet from fish (72 kg) grown in the contaminated area, the calculated maximum annual intake of ^{238}Pu would be .002 uci. This is to be compared to a maximum permissible intake of 4 uci/year recommended by the ICRP. In summary, using the most recent data on concentration factors, the conclusion drawn from the analyses is that the amount of Pu-238 which can possibly find its way into the marine biota on the human diet would be well within established limits.

The effects of radiation dosimetry on marine organisms have also been analyzed using the highest Pu concentration factor that has been observed. If we take the maximum seawater concentration of Pu-238 predicted by the Carter-Okubo shear diffusion model for an .012 ci/day dissolution rate and assume that plankton come to equilibrium with water having a Pu-238 concentration of 2.4×10^{-9} uci/cm^3, the concentration of Pu-238 in the plankton would be 6×10^{-6} uci/g or 6000 pci/kg. This activity concentration delivers approximately 600 mrads/yr of alpha radiation to the plankton, which is some 15 times the estimated dose rate derived by consideration of cosmic rays and 40_K in the seawater. The effects of such dose rates cannot be predicted accurately, but the biomass of plankton involved would be very small and no population effects would be expected.

The program has already had a practical demonstration of the fuel cask's capability to withstand the most extreme reentry into water possible in the return of the Apollo 13 cask assembly. Based on atmospheric sampling and tracking data, the Apollo 13 cask assembly survived entry and is underwater at a depth of 2000 to 3500 fathoms in the Pacific Ocean.

Based on the above, the possible rates of release of radioactivity in the marine environment do not constitute a health hazard.

Interagency Coordination and Planning: The Atomic Energy Commission, Public Health Service and Department of Defense staffs cooperate with NASA through the Interagency Safety

Evaluation Panel. They jointly assisted in the development of the SNAP-27 Radiological Control Plan (KSC Supplement II to Volume II of K-V-053, dated June 2, 1969) and Contingency/Emergency Plan of October 10, 1969. The Radiological Control Plan defines the radiological safety procedures and requirements for safety personnel, training, health physics services and records, custodianship, security, storage and transportation, contamination control, environmental monitoring, etc. Appendices of the Plan include data on plutonium-238 dioxide fuel, SNAP-27 system features and potential radiation hazards, guidelines for radiological decontamination and other allied subjects. NASA agreements with each of the other departments/agencies are defined in the Contingency/Emergency Plan--each actively participates in all Apollo launches and detailed responsibilities are reflected in the plan.

The evaluation panel concluded that the RTG is acceptable for use in its intended NASA Apollo application with respect to aerospace nuclear safety. The President has approved the use of the SNAP-27 for the Apollo missions.

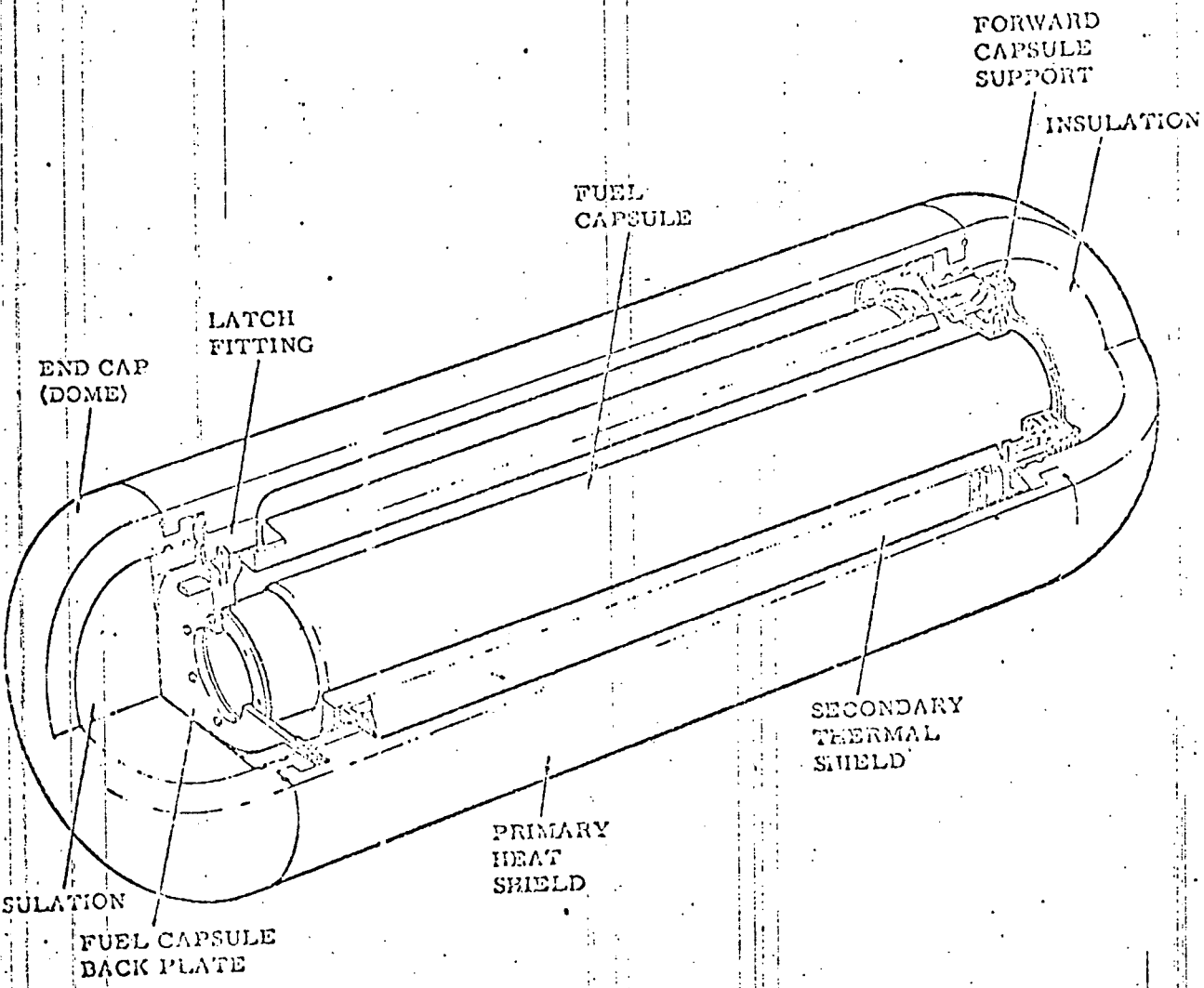

CUTAWAY OF GRAPHITE LUNAR MODULE FUEL CASK
WITH FUEL CAPSULE ASSEMBLY INSTALLED

FIGURE 1

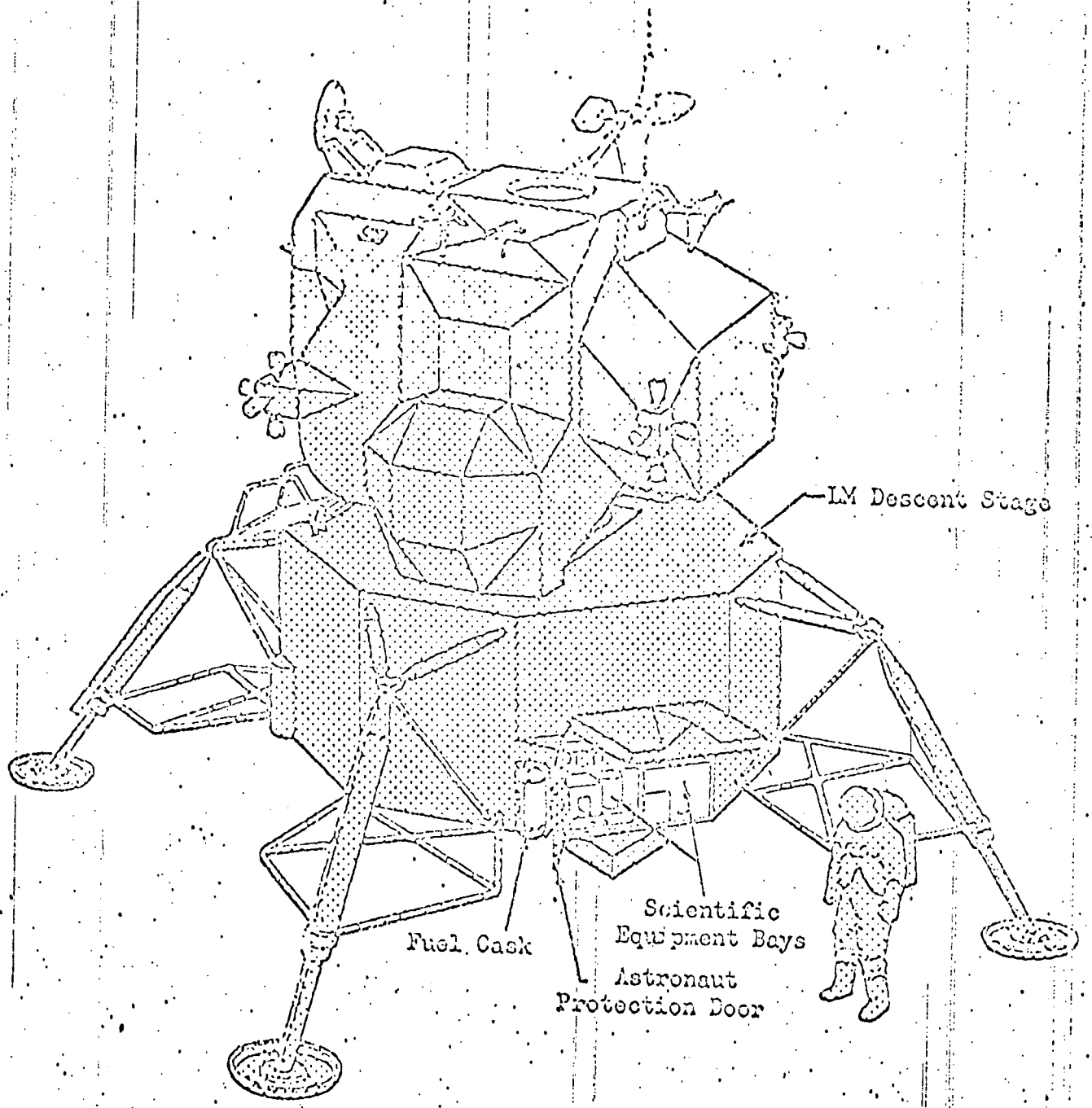

SNAP-27 Fuel Cask Installation

FIGURE 2

3. ADVERSE ENVIRONMENTAL EFFECTS WHICH CANNOT BE AVOIDED

None of the foregoing environmental impacts are considered to fall within this category.

4. ALTERNATIVES

The Apollo Program was initiated prior to enactment of the National Environmental Policy Act of 1969. During the planning phases of the program, different ways of technically achieving the manned lunar landing objective were considered, but not within the context of Section 102(2)(D) of the Act.

5. RELATIONSHIP BETWEEN SHORT-TERM USES OF THE ENVIRONMENT AND ENHANCEMENT OF LONG-TERM PRODUCTIVITY

It is expected that local short-term use of the environment in this program will contribute to the enhancement of long-term productivity because of the knowledge which will accrue from Apollo experiments and lunar exploration.

6. IRREVERSIBLE/IRRETRIEVABLE COMMITMENTS OF NATURAL RESOURCES

No depletion of natural resources will result from the Apollo Program.

7. COMMENTS BY OTHER AGENCIES

Comments on the draft statement were received from the Environmental Protection Agency on 20 October 1971. Two changes to the statement were recommended: i.e., a fuller discussion of Radiological Aspects; and under Water Pollution Aspects, a delineation of NASA responsibilities in the event of discharge of RP-1 to the coastal waters.

These EPA recommendations are being accommodated in the following way:

1. The section entitled "Nuclear Radiation" has been completely rewritten.

2. With respect to Water Pollution, NASA accepts the responsibility to notify EPA of any large discharge of hazardous material into the ocean or coastal waters. In addition, NASA will document the location and amount of such spills for further investigation by suitable scientists.

ENVIRONMENTAL PROTECTION AGENCY
Washington, D. C. 20460

OCT 20 1971

Mr. Ralph E. Cushman
Special Assistant
Office of Administration
National Aeronautics and
Space Administration
Washington, D. C. 20546

Dear Mr. Cushman:

The EPA has completed its review of your Draft Environmental Impact Statement on the NASA's Apollo Program. Our comments are presented below:

AIR POLLUTION ASPECTS

Toxicity: The largest contributor to the atmosphere among the exhaust products is carbon monoxide. The sink for CO is unknown. All the known reactions are slow and it has an estimated residence time of 1-3 years in the lower atmosphere. While the amount put into the atmosphere is large at the injection points along the rocket trajectory, it should disperse sufficiently rapidly to avoid becoming a toxic hazard.

Heat Balance: The local heat balance could be affected by the massive introduction of CO_2 and water vapor along the rocket trajectory. This concentration of CO_2 and H_2O should disperse rapidly so that any effect would be brief. On a global scale, the input from each launch is insignificant and will have no significant effect on the global climate. Locally, the input of H_2O into the stratosphere will result in local supersaturation and the formation of stratospheric clouds. Additionally, the input of exhaust gases, particularly H_2O, CO and some NO_x, will result in local thinning of the ozone layer. No potential global effect is apparent.

Electron Density: There will be an increase in the electron density in the ionosphere due to the large input of water vapor and a small amount of NO_x along the rocket trajectory. This will have no effect on the global climate and little, if any, on radio wave propagation.

Chemosphere Emissions: There may be an insignificant increase in airglow activity due to a small amount of N_2 released. This will be of no significance to the global or local climate.

RADIOLOGICAL ASPECTS

The Draft Environmental Impact Statement indicates that the only potential source of radiation is the radioisotope thermoelectric generator (RTG) which is carried aboard the Apollo spacecraft to provide electrical power for lunar surface experiments. Regarding the container in which the fuel material is carried, NASA states: "The fuel cask is designed so that no contamination can be released during normal operations, and tests indicate that contamination will not be released as a result of the maximum credible accident." No elaboration on the details of the analysis and evaluation which led to this conclusion are presented nor are test reports referenced. An evaluation of the credible accidents, including the maximum credible accident, which could involve radioactive material aboard an Apollo spacecraft or reasons why the probabilities for such accidents are negligible should be presented. Source terms should be presented for the maximum probable and the maximum credible accidents with emphasis on a pad abort with fireball, high altitude release, and an intact reentry with rupture occurring on impact. For each source strength, on and off-site dose estimates and ground contamination estimates should be made for average and "worst-case" meteorological conditions.

Radiological evaluation capability should be discussed for a potentially aborted mission with releases of radioactive material to areas surrounding the launch and/or impact sites. The off-site radiological safety plan should describe for all agencies concerned the operational responsibilities, organization, operations, and response capabilities for postulated accident situations. This discussion should include operational responsibilities of all involved health agencies. The safety plan should also include a discussion of radiological decontamination procedures that may become necessary following an aborted mission which results in a radioisotopic fuel source release.

The potential radiological effects of the proposed project cannot be evaluated due to a lack of information on : a) source terms which will be on board in the radioisotopic thermoelectric generators; b) potential accidents for the spacecrafts and the anticipated environmental and population effects; and c) the off-site radiological safety plan.

WATER POLLUTION ASPECTS

Because of the possibility of an aborted flight and the subsequent discharge of RP-1 (kerosene) to the coastal waters it is recommended that the following provisions be incorporated into the NASA Apollo Program Impact Statement.

1. EPA be immediately notified of any large discharge of kerosene or other hazardous material.

2. NASA document the exact location of the discharge and amount of each material.

3. NASA, in cooperation with EPA, immediately dispatch an investigation team consisting of an oceanographer, a marine biologist and a chemist to conduct a field investigation and document the impact upon the marine environment.

We appreciate the opportunity to comment on the draft statement. If any questions develop in regard to our review, please contact us at your earliest convenience.

Sincerely,

George Marienthal

George Marienthal
Acting Director
Office of Federal Activities