NASA CONTRACTOR REPORT

NASA CR-2076

NASA CR-

TECH LIBRARY KAFB, NM

0061200

LOAN COPY: RETURN TO
AFWL (DOUL)
KIRTLAND AFB, N. M.

DYNAMIC CHARACTERISTICS OF A TWO-STAGE VARIABLE-MASS FLEXIBLE MISSILE WITH INTERNAL FLOW

by Leonard Meirovitch and John Bankovskis

Prepared by
UNIVERSITY OF CINCINNATI
Cincinnati, Ohio
for Langley Research Center

NATIONAL AERONAUTICS AND SPACE ADMINISTRATION • WASHINGTON, D. C. • JUNE 1972

TECH LIBRARY KAFB, NM

0061200

1. Report No.	2. Government Accession No.	3. Recipient's Catalog No.
NASA CR-2076		

4. Title and Subtitle	5. Report Date
DYNAMIC CHARACTERISTICS OF A TWO-STAGE VARIABLE-MASS FLEXIBLE MISSILE WITH INTERNAL FLOW	June 1972
	6. Performing Organization Code
7. Author(s)	8. Performing Organization Report No.
Leonard Meirovitch* and John Bankovskis	
	10. Work Unit No.
9. Performing Organization Name and Address	
University of Cincinnati Cincinnati, Ohio	11. Contract or Grant No. NGR 36-004-030
	13. Type of Report and Period Covered Contractor Report
12. Sponsoring Agency Name and Address	
National Aeronautics and Space Administration Washington, D.C. 20546	14. Sponsoring Agency Code

15. Supplementary Notes

*Professor, Department of Engineering Mechanics
Virginia Polytechnic Institute and State University
Blacksburg, Virginia

16. Abstract

A general formulation of the dynamical problems associated with powered flight of a two-stage flexible, variable-mass missile with internal flow, discrete masses, and aerodynamic forces is presented. The formulation comprises six ordinary differential equations for the rigid body motion, 3n ordinary differential equations for the n discrete masses and three partial differential equations with the appropriate boundary conditions for the elastic motion. This set of equations is modified to represent a single stage flexible, variable-mass missile with internal flow and aerodynamic forces. The rigid-body motion consists then of three translations and three rotations, whereas the elastic motion is defined by one longitudinal and two flexural displacements, the latter about two orthogonal transverse axes. The differential equations are nonlinear and, in addition, they possess time-dependent coefficients due to the mass variation. The complete equations cannot be solved in closed form and any solution must be obtained numerically by means of a high-speed computer. Several cases are considered as examples.

17. Key Words (Suggested by Author(s))	18. Distribution Statement
Dynamic Characteristics Variable Mass Flexible Missile Ignition Transient	Unclassified-Unlimited

19. Security Classif. (of this report)	20. Security Classif. (of this page)	21. No. of Pages	22. Price*
Unclassified	Unclassified	137	$3.00

*For sale by the National Technical Information Service, Springfield, Virginia 22151

LIST OF CONTENTS

SUMMARY		1
1.	Introduction	2
2.	Equations of Motion for a General Variable-Mass System	4
3.	The Rigid-Body Equations of Motion	10
4.	The Equations of Motion of a Flexible Rocket	27
5.	The Equations for the Axial and Transverse Vibration of a Rocket	34
6.	Distributed Aerodynamic Forces	41
7.	Equations of Motion for a Flexible Two-Stage Missile with Discrete Masses and Aerodynamic Forces	46
8.	Axially Symmetric, Spinning Single-Stage Missile	56
9.	Results	74
10.	Summary and Conclusions	80
	Appendix A	83
	Appendix B	88
	References	118
	Illustrations	121

SUMMARY

A general formulation of the dynamical problems associated with powered flight of a two-stage flexible, variable-mass missile with internal flow, discrete masses, and aerodynamic forces is presented. The formulation comprises six ordinary differential equations for the rigid body motion, 3n ordinary differential equations for the n discrete masses and three partial differential equations with the appropriate boundary conditions for the elastic motion. This set of equations is modified to represent a single stage flexible, variable-mass missile with internal flow and aerodynamic forces. The rigid-body motion consists then of three translations and three rotations, whereas the elastic motion is defined by one longitudinal and two flexural displacements, the latter about two orthogonal transverse axes. The differential equations are nonlinear and, in addition, they possess time-dependent coefficients due to the mass variation. The complete equations cannot be solved in closed form and any solution must be obtained numerically by means of a high-speed computer. Several cases are considered as examples.

1. Introduction

Investigations of the behavior of a rocket in flight can be divided for the most part into two major classes according to the mathematical models: the first is concerned with rigid missile of variable mass and the second with a flexible missile of constant mass.

The treatment of the missile as a rigid-body of time-dependent mass has been adequately covered by many researchers, including Grubin[1*], Dryer[2], and Leitmann[3]. The ballistic trajectories of spin- and fin-stabilized rigid bodies are treated in the book by Davis, Follin and Blitzer[4].

A considerable amount of effort has been devoted to the analysis of an elastic body subjected to longitudinal acceleration. For example, Seide[5] has treated the effect of both a compressive and a tensile force on the frequencies and mode shapes of transverse vibration of a continuous slender body. Others, such as Beal[6], have been concerned with the problem of buckling instability of a uniform bar subjected to an end thrust as well as with the change in the body natural frequencies as a result of that thrust. These investigations regard the mass of the body as constant in time.

A series of reports by Miles, Young, and Fowler[7] offers a comprehensive treatment of a wide range of subjects associated with the dynamics of missiles, including fuel sloshing. The

---

* See References listed at end of this work.

report by Keith, et. al.[8] also covers a wide range of subjects associated with the dynamics of missiles. Again the mass variation is not accounted for.

Attempts have been made to consider simultaneously the mass variation and missile flexural elasticity by investigators such as Birnbaum[9] and Edelen[10]. Both were concerned with solid-fuel rockets and neither of them includes the axial elasticity of the missile. On the other hand, Price[11] investigated the internal flow in a solid-fuel rocket and ignored entirely the vehicle motion. An attempt to synthesize the problem of rocket dynamics has been made by Meirovitch and Wesley[12]. This latter work accounts for the mass variation, rigid-body translation and rotation, and axial and transverse deformation, but it assumes the motion to be planar, which excludes spinning rockets. A later work by Meirovitch[13,14] does away with the restriction of planar motion and considers the general motion of a variable-mass flexible missile in vacuum. A report by Meirovitch and Bankovskis[15] uses the developments of References 13 and 14 to include aerodynamic effects.

An extension by Meirovitch and Bankovskis[16] of the work reported in Reference 12 was done to include the planar motion of a two-stage missile in which the first stage was assumed to be the booster while the second was used to house packaged instruments. The missile was assumed to be flexible and the first stage had variable-mass.

The present work represents an extension of Reference 16 to include the general motion of a two-stage vehicle with aerodynamic forces. It also includes some of the work reported in Reference 14 with additional numerical examples.

2. Equations of Motion for a General Variable-Mass System

By a variable-mass system we understand a system of changing composition. To examine this concept more closely, we envision a control volume in space and assume that the amount of matter within the control volume may change with time. Since the system composition changes, it is not proper to equate the time-derivative of the sum of momenta associated with the particles to the sum of the time derivatives, because the summation involves different sets of particles at different times. In this case, the proper procedure for obtaining the equations of motion is to write the force equation in the form $\underset{\sim}{F} = \dot{\underset{\sim}{p}}$*, where the rate of change of the momentum, $\dot{\underset{\sim}{p}}$, is derived by a limiting process consisting of calculating $\underset{\sim}{p}$ at two different instants, a time interval Δt apart, dividing the difference of the two values by Δt, and letting $\Delta t \to 0$. In so doing, we ensure that the same total mass is involved, although at one time it is entirely inside the control volume and at the other time part of the mass is outside.

---

* A wavy line under the symbol denotes a vector quantity or operation.

We next seek the expression for the time rate of change of the linear momentum. To this end we note that the linear momentum associated with an element of fluid is $\rho \underset{\sim}{v} d\upsilon$, where ρ is the mass per unit volume, $\underset{\sim}{v}$ the velocity and $d\upsilon$ the element of volume. The linear momentum of the fluid contained by the control volume at any instant t is therefore

$$\underset{\sim}{p} = \int_{cv} \underset{\sim}{v} \rho \, d\upsilon \tag{1}$$

From Figure 1 we see that at time t the system occupies regions I and II while at time $t+\Delta t$ it occupies regions II and III. The time rate of change of linear momentum is then

$$\frac{d\underset{\sim}{p}}{dt} = \lim_{\Delta t \to 0} \frac{\left(\int_{II} \underset{\sim}{v}\rho \, d\upsilon + \int_{III} \underset{\sim}{v}\rho \, d\upsilon\right)_{t+\Delta t} - \left(\int_{I} \underset{\sim}{v}\rho \, d\upsilon + \int_{II} \underset{\sim}{v}\rho \, d\upsilon\right)_{t}}{\Delta t}$$

$$= \lim_{\Delta t \to 0} \frac{\left(\int_{II} \underset{\sim}{v}\rho \, d\upsilon\right)_{t+\Delta t} - \left(\int_{II} \underset{\sim}{v}\rho \, d\upsilon\right)_{t}}{\Delta t} + \lim_{\Delta t \to 0} \frac{\left(\int_{III} \underset{\sim}{v}\rho \, d\upsilon\right)_{t+\Delta t}}{\Delta t}$$

$$- \lim_{\Delta t \to 0} \frac{\left(\int_{I} \underset{\sim}{v} \rho \, d\upsilon\right)_{t}}{\Delta t} \tag{2}$$

As $\Delta t \to 0$, the volume II becomes that of the control volume so that

$$\lim_{\Delta t \to 0} \frac{\left(\int_{II} \underset{\sim}{v}\rho \, d\upsilon\right)_{t+\Delta t} - \left(\int_{II} \underset{\sim}{v}\rho \, d\upsilon\right)_{t}}{\Delta t} = \frac{\partial}{\partial t} \int_{cv} \underset{\sim}{v}\rho \, d\upsilon \tag{3}$$

As $\Delta t \to 0$, the last two limits can be seen to approach the rate of efflux of linear momentum along ARB and the rate of influx of linear momentum along ALB, respectively. Thus, the

last two limits account for the flow of linear momentum across the entire control surface at time t. With the convention of $d\underset{\sim}{A}$ pointing outward from the enclosed region, we see that $\rho \underset{\sim}{v} \cdot d\underset{\sim}{A}$ is the mass efflux through $d\underset{\sim}{A}$ per unit time and hence $\underset{\sim}{v}(\rho \underset{\sim}{v} \cdot d\underset{\sim}{A})$ is the efflux of the linear momentum per unit time through $d\underset{\sim}{A}$. On integration for the whole control surface we conclude that

$$\lim_{\Delta t \to 0} \frac{\left(\int_{III} \underset{\sim}{v} \rho \, d\upsilon\right)_{t+\Delta t}}{\Delta t} - \lim_{\Delta t \to 0} \frac{\left(\int_{I} \underset{\sim}{v} \rho \, d\upsilon\right)_{t}}{\Delta t} = \int_{cs} \underset{\sim}{v}(\rho \underset{\sim}{v} \cdot d\underset{\sim}{A}) \qquad (4)$$

Hence we are lead to the expression for time rate of change of linear momentum as (Reference 17, page 96)

$$\underset{\sim}{F} = \underset{\sim}{F}_B + \underset{\sim}{F}_S = \frac{d\underset{\sim}{p}}{dt} = \int_{cs} \underset{\sim}{v}(\rho \underset{\sim}{v} \cdot d\underset{\sim}{A}) + \frac{\partial}{\partial t} \int_{cv} \underset{\sim}{v} \rho \, d\upsilon \qquad (5)$$

in which $\underset{\sim}{F}_B$ and $\underset{\sim}{F}_S$ are the resultants of the surface and body forces, respectively, acting upon the system.

Equation (5), however, applies to a control volume at rest in an inertial reference frame. Under consideration here is a control volume which is translating and rotating relative to an inertial space. Further it will be convenient to assume that part of the matter is fixed in the control volume, while part of it moves relative to it. In order to find the expression for this case, consider an element of mass as in Figure 2 and write the force equation in the form

$$d\underset{\sim}{F} = d\underset{\sim}{F}_S + d\underset{\sim}{F}_B = \underset{\sim}{a}dM = \rho\left[\underset{\sim}{a}_0+\dot{\underset{\sim}{v}}+2\underset{\sim}{\omega}\times\underset{\sim}{v}+\dot{\underset{\sim}{\omega}}\times\underset{\sim}{r}+\underset{\sim}{\omega}\times(\underset{\sim}{\omega}\times\underset{\sim}{r})\right] d\upsilon \qquad (6)$$

in which $\underset{\sim}{a}$ is the absolute acceleration of the mass element dM, $\underset{\sim}{a}_0$ is the acceleration of the origin 0 of the system x,y,z, $\underset{\sim}{\omega}$ is the angular velocity vector of axes x,y,z, and $\underset{\sim}{r}$ is the position of dM relative to these axes. Upon integration Eq. (6) becomes

$$\underset{\sim}{F}_S + \underset{\sim}{F}_B = \int_M \underset{\sim}{a}\, dM = \int_M \left[\underset{\sim}{a}_0+\dot{\underset{\sim}{v}}+2\underset{\sim}{\omega}\times\underset{\sim}{v}+\dot{\underset{\sim}{\omega}}\times\underset{\sim}{r}+\underset{\sim}{\omega}\times(\underset{\sim}{\omega}\times\underset{\sim}{r})\right] dM \qquad (7)$$

If we assume that the axes x,y,z are fixed in inertial space, Eq. (7) becomes

$$\underset{\sim}{F}_S + \underset{\sim}{F}_B = \int_{M_f} \dot{\underset{\sim}{v}}\, dM \qquad (8)$$

where M_f is the mass moving relative to the control volume. Therefore, from Eqs. (5), (7), and (8) we conclude that

$$\underset{\sim}{F}_S + \underset{\sim}{F}_B = \frac{\partial}{\partial t}\int_{cv} \underset{\sim}{v}\rho\, d\upsilon + \int_{cs} \underset{\sim}{v}(\rho\, \underset{\sim}{v}\cdot d\underset{\sim}{A})$$

$$+ \int_M \left[\underset{\sim}{a}_0+2\underset{\sim}{\omega}\times\underset{\sim}{v}+\dot{\underset{\sim}{\omega}}\times\underset{\sim}{r}+\underset{\sim}{\omega}\times(\underset{\sim}{\omega}\times\underset{\sim}{r})\right] dM \qquad (9)$$

where the partial derivative $\partial/\partial t$ is to be calculated by regarding axes x,y,z as fixed. It is convenient to introduce the following equivalent forces

$$\underset{\sim}{F}_C = -2\,\underset{\sim}{\omega} \times \int_{M_f} \underset{\sim}{v}\, dM$$

$$\underset{\sim}{F}_U = -\frac{\partial}{\partial t}\int_{M_f} \underset{\sim}{v}\, dM \tag{10}$$

$$\underset{\sim}{F}_R = -\int_A \underset{\sim}{v}\,(\rho\, \underset{\sim}{v} \cdot d\underset{\sim}{A})$$

where $\underset{\sim}{F}_C$ is recognized as the <u>Coriolis force</u>, $\underset{\sim}{F}_U$ is a <u>force due to the unsteadiness of the relative motion</u>, and $\underset{\sim}{F}_R$ is referred to as a <u>reactive force</u>. With this notation, Eq. (9) becomes

$$\underset{\sim}{F}_S + \underset{\sim}{F}_B + \underset{\sim}{F}_C + \underset{\sim}{F}_U + \underset{\sim}{F}_R = \int_M \left[a_0 + \dot{\omega} \times r + \omega \times (\omega \times r)\right] dM \tag{11}$$

The terms on the right side of Eq. (11) may be regarded as pertaining to a rigid body of instantaneous mass M.

In a similar manner, the torque equation about the origin 0 can be written

$$\underset{\sim}{N}_S + \underset{\sim}{N}_B + \underset{\sim}{N}_C + \underset{\sim}{N}_U + \underset{\sim}{N}_R = \int_M \underset{\sim}{r} \times \left[\underset{\sim}{a}_0 + \dot{\underset{\sim}{\omega}} \times \underset{\sim}{r} + \underset{\sim}{\omega} \times (\underset{\sim}{\omega} \times \underset{\sim}{r})\right] dM \tag{12}$$

where

$$\underset{\sim}{N}_C = -2\int_{M_f} \underset{\sim}{r} \times (\underset{\sim}{\omega} \times \underset{\sim}{v})\, dM$$

$$\underset{\sim}{N}_U = -\frac{\partial}{\partial t}\int_{M_f} \underset{\sim}{r} \times \underset{\sim}{v}\, dM \tag{13}$$

$$\underset{\sim}{N}_R = -\int_A (\underset{\sim}{r} \times \underset{\sim}{v})\,(\rho\, \underset{\sim}{v} \cdot d\underset{\sim}{A})$$

The significance of the various torques is self-evident. Moreover, the expression for $\underset{\sim}{N}_U$ can be easily explained by recalling that $\partial/\partial t$ implies a time rate of change with axes x,y,z regarded as fixed.

The above equations must be supplemented by the continuity equation

$$\int_{cs} \rho \underset{\sim}{v} \cdot d\underset{\sim}{A} = - \frac{\partial}{\partial t} \int_{cv} dM \tag{14}$$

which expresses the fact that the net efflux rate of mass across the control surface must equal the rate of mass decrease inside the control volume.

Equations (11) and (12) can be given an interesting physical interpretation by recalling that the system comprises one part solid and another part of changing composition, and observing that the right sides of these equations represent the motion of the system as if it were rigid in its entirety. Equations (11) and (12) can be regarded as the equations of motion of a fictitious rigid body of instantaneous mass M, provided that the actual surface and body forces acting upon the system are supplemented by three equivalent forces, namely the Coriolis force, the force due to the unsteadiness of the relative motion, and the reactive force. This statement is sometimes referred to as the "principle of solidification for a system of changing composition" (Reference 18, p. 13).

3. The Rigid Body Equations of Motion

The formulation of the preceding section is ideally suited for treating problems associated with the motion of a rocket. We consider a two-stage missile, and of the two stages, only the first one possesses variable-mass, as it consists of a solid-fuel booster; the second stage contains no charge and is used for the purpose of housing certain measuring instruments. The mathematical model of the first stage is assumed to comprise a long cylindrical shell open at the aft end and closed at the fore end. The inner part of the missile consists of the propellant which surrounds a cylindrical cavity whose axis coincides with the missile's longitudinal axis, namely axis x in Figure 3. The cavity plays the role of the combustion chamber, as it contains the burned gas which flows relative to the shell until expelled through a nozzle at the aft end. The second stage consists of a flexible missile shell containing attachment points for instrument packages. The effect of these packages is felt by the case at the attachment points through springs and dash pots used to connect the packages to the missile shell. This mathematical model is more representative of a solid-fuel rather than a liquid-fuel missile. We consider first the case in which the missile shell is rigid.

It will prove convenient to work with a vehicle first-stage element of unit length comprising the missile casing,

the unburned fuel, and the hot gases flowing relative to the first two, and for the second-stage unit element comprising the missile casing and the discrete masses moving relative to it. If we denote the motion and mass associated with the case by the subscript c, the ones related to the burned fuel by the subscript f, and the ones related to the discrete masses by the subscript i, we write in analogy with Eq. (7) the force equation of motion for the rocket element in Figure 4 as

$$\underset{\sim}{f}_S + \underset{\sim}{f}_B = \int_{m_c} \left[\underset{\sim}{a}_0 + \dot{\underset{\sim}{\omega}} \times \underset{\sim}{r}_c + \underset{\sim}{\omega} \times (\underset{\sim}{\omega} \times \underset{\sim}{r}_c) \right] dm$$

$$+ \left[h(x+a) - h(x-b) \right] \int_{m_f} \left[\underset{\sim}{a}_0 + \dot{\underset{\sim}{v}}_f + 2\underset{\sim}{\omega} \times \underset{\sim}{v}_f + \dot{\underset{\sim}{\omega}} \times \underset{\sim}{r}_f + \underset{\sim}{\omega} \times (\underset{\sim}{\omega} \times \underset{\sim}{r}_f) \right] dm$$

$$+ \delta(x - x_i) \int_{M_i} \left[\underset{\sim}{a}_0 + \dot{\underset{\sim}{v}}_i + 2\underset{\sim}{\omega} \times \underset{\sim}{v}_i + \dot{\underset{\sim}{\omega}} \times \underset{\sim}{r}_i + \underset{\sim}{\omega} \times (\underset{\sim}{\omega} \times \underset{\sim}{r}_i) \right] dm \qquad (15)$$

where $\underset{\sim}{f}_S$ and $\underset{\sim}{f}_B$ are distributed surface and body forces respectively, $\underset{\sim}{v}_f$ is the fluid velocity relative to the body axes, $\underset{\sim}{v}_i$ is the velocity of mass M_i relative to the body axes, and $\underset{\sim}{a}_0$ is the acceleration of the origin 0. $h(x-x_0)$ is a spatial unit step function applied at $x = x_0$, $\delta(x - x_i)$ is a spatial Dirac delta function applied at $x = x_i$ while a and b are the distances from the origin to the aft end of the missile and to the forward end of the first stage, respectively.

Defining

$$m = m_c + m_f \left[h(x+a) - h(x-b)\right] + M_i \, \delta(x-x_i) \tag{16}$$

and considering the arguments presented in proceeding from Eq. (7) to Eq. (9), we may write Eq. (15) in the form

$$\underset{\sim}{f}_S + \underset{\sim}{f}_B + \left[\underset{\sim}{f}_C + \underset{\sim}{f}_U + \underset{\sim}{f}_R\right]\left[h(x+a)-h(x-b)\right] + \left[\underset{\sim}{f}_{Ci} + \underset{\sim}{f}_{Ui} + \underset{\sim}{f}_{Ri}\right]\delta(x-x_i)$$

$$= \underset{\sim}{a}_0 m + \dot{\underset{\sim}{\omega}} \times \int_m \underset{\sim}{r} \, dm + \underset{\sim}{\omega} \times (\underset{\sim}{\omega} \times \int_m \underset{\sim}{r} \, dm) \tag{17}$$

in which

$$\begin{aligned}
\underset{\sim}{f}_C &= -2\underset{\sim}{\omega} \times \int_{m_f} \underset{\sim}{v}_f \, dm \\
\underset{\sim}{f}_U + \underset{\sim}{f}_R &= -\int_{m_f} \dot{\underset{\sim}{v}}_f \, dm \\
\underset{\sim}{f}_{Ci} &= -M_i \, 2\underset{\sim}{\omega} \times \underset{\sim}{v}_i \\
\underset{\sim}{f}_{Ui} + \underset{\sim}{f}_{Ri} &= -M_i \, \dot{\underset{\sim}{v}}_i
\end{aligned} \tag{18}$$

are the corresponding equivalent distributed forces.

Upon integration along the entire missile, Eq. (17) becomes

$$\underset{\sim}{F}_S + \underset{\sim}{F}_B + \underset{\sim}{F}_C + \underset{\sim}{F}_U + \underset{\sim}{F}_R + \sum_i \left(\underset{\sim}{f}_{Ci} + \underset{\sim}{f}_{Ui} + \underset{\sim}{f}_{Ri}\right) =$$

$$M \, \underset{\sim}{a}_0 + \dot{\underset{\sim}{\omega}} \times \int_L \int_m \underset{\sim}{r} \, dm dx + \underset{\sim}{\omega} \times (\underset{\sim}{\omega} \times \int_L \int_m \underset{\sim}{r} dm dx) \tag{19}$$

where

$$M = \int_L m \, dx \tag{20}$$

With the definitions

$$\underset{\sim}{r} = x\,\underset{\sim}{i} + y\,\underset{\sim}{j} + z\,\underset{\sim}{k}\ ,\ \underset{\sim}{\omega} = \omega_x\underset{\sim}{i} + \omega_y\underset{\sim}{j} + \omega_z\underset{\sim}{k} \tag{21}$$

as well as the assumption that the missile possesses rotational symmetry which implies $\int_m y\,dm = \int_m z\,dm = 0$, we rewrite Eq. (19) as

$$\underset{\sim}{F}_S + \underset{\sim}{F}_B + \underset{\sim}{F}_C + \underset{\sim}{F}_U + \underset{\sim}{F}_R + \sum_i (\underset{\sim}{f}_{Ci} + \underset{\sim}{f}_{Ui} + \underset{\sim}{f}_{Ri}) =$$

$$M\underset{\sim}{a}_0 + \left[(\omega_y^2+\omega_z^2)\underset{\sim}{i} - (\dot{\omega}_z+\omega_x\omega_y)\underset{\sim}{j} + (\dot{\omega}_y-\omega_x\omega_z)\underset{\sim}{k}\right]\int_M x\,dM \tag{22}$$

In analogy with Eq. (12) we write the moment equation for the element of Figure 4 as

$$\underset{\sim}{n}_S + \underset{\sim}{n}_B + \left[\underset{\sim}{n}_C+\underset{\sim}{n}_U+\underset{\sim}{n}_R\right]\left[h(x+a)-h(x-b)\right] + \left[\underset{\sim}{n}_{Ci}+\underset{\sim}{n}_{Ui}+\underset{\sim}{n}_{Ri}\right]\delta(x-x_i)$$

$$= \int_m \underset{\sim}{r} \times \left[\underset{\sim}{a}_0 + \dot{\underset{\sim}{\omega}} \times \underset{\sim}{r} + \underset{\sim}{\omega} \times (\underset{\sim}{\omega} \times \underset{\sim}{r})\right] dm \tag{23}$$

where $\underset{\sim}{n}_S$ and $\underset{\sim}{n}_B$ are torques due to body and surface forces, respectively, and

$$\begin{aligned}
\underset{\sim}{n}_C &= -\,r \times \left[2\,\underset{\sim}{\omega} \times \int_{m_f} \underset{\sim}{v}_f\,dm\right] \\
\underset{\sim}{n}_U + \underset{\sim}{n}_R &= -\,\underset{\sim}{r} \times \int_{m_f} \dot{\underset{\sim}{v}}_f\,dm \\
\underset{\sim}{n}_{Ci} &= -\,\underset{\sim}{r} \times M_i\left[2\,\underset{\sim}{\omega} \times \underset{\sim}{v}_i\right] \\
\underset{\sim}{n}_{Ui} + \underset{\sim}{n}_{Ri} &= -\,\underset{\sim}{r} \times M_i\,\dot{\underset{\sim}{v}}_i
\end{aligned} \tag{24}$$

Upon integration along the length of the missile, Eq. (23) becomes

$$\underset{\sim}{N}_S + \underset{\sim}{N}_B + \underset{\sim}{N}_C + \underset{\sim}{N}_U + \underset{\sim}{N}_R + \sum_i (\underset{\sim}{n}_{Ci} + \underset{\sim}{n}_{Ui} + \underset{\sim}{n}_{Ri}) =$$

$$- \underset{\sim}{a}_0 \times \int_M \underset{\sim}{r}\, dm + \dot{\underset{\sim}{L}}' + \underset{\sim}{\omega} \times \underset{\sim}{L} \tag{25}$$

where

$$\underset{\sim}{L} = (I_{xx}\omega_x - I_{xy}\omega_y - I_{xz}\omega_z)\underset{\sim}{i} + (-I_{yx}\omega_x + I_{yy}\omega_y - I_{yz}\omega_z)\underset{\sim}{j}$$

$$+ (-I_{zx}\omega_x - I_{zy}\omega_y + I_{zz}\omega_z)\underset{\sim}{k} \tag{26}$$

is the angular momentum of the "vehicle" about the origin 0 and $\dot{\underset{\sim}{L}}'$ is the rate of change of $\underset{\sim}{L}$ due to the change in the body angular velocity relative to the body axes. It is obtained by replacing the components of $\underset{\sim}{\omega}$ by the components of $\dot{\underset{\sim}{\omega}}$ in Eq. (26). The quantities

$$I_{xx} = \int_M (y^2+z^2)\,dM \;,\; I_{yy} = \int_M (x^2+z^2)\,dM \;,\; I_{zz} = \int_M (x^2+y^2)\,dM$$

$$I_{xy} = \int_M x\, y\, dM \;,\; I_{xz} = \int_M x\, z\, dM \;,\; I_{yz} = \int_M y\, z\, dM \tag{27}$$

are the instantaneous moments and products of inertia of the "vehicle" about the body axes. It is to be noted that in the present case the moments of inertia are time-dependent.

There remains to obtain explicit expressions for the actual and equivalent forces and torques. The surface consists of the aerodynamic forces on the vehicle wetted area and the pressure forces across the exit area. Denoting by $\underset{\sim}{f}_A^*$ the aerodynamic force per unit of the wetted area, A_w, by p_e the pressure across the exit area A_e, by p_a the atmospheric pressure, the surface force takes the form

$$\underset{\sim}{F}_S = \int_{A_w} \underset{\sim}{f}_A^* \, dA_w + (p_e - p_a) A_e \, \underset{\sim}{i} \tag{28}$$

Assuming that the gravitational field is uniform, the body force is simply

$$\underset{\sim}{F}_B = \int_L m \, \underset{\sim}{g} \, dx = M \, \underset{\sim}{g} \tag{29}$$

where L is the length of the rocket, m the distributed mass, and $\underset{\sim}{g}$ the acceleration due to gravity. Assuming the internal flow everywhere is along the x-axis, with the possible exception of the exit point, we write

$$\underset{\sim}{v} = - v(x,y,z,t) \underset{\sim}{i} = - v(x,t) \underset{\sim}{i} \tag{30}$$

Moreover, assuming that the flow across the cross-sectional area is uniform, the Coriolis force per unit length can be written

$$\underset{\sim}{f}_C = -2\,\underset{\sim}{\omega} \times \underset{\sim}{v}\, m_f = 2(\omega_z \underset{\sim}{j} - \omega_y \underset{\sim}{k}) v\, m_f$$

$$= -2(\omega_z \underset{\sim}{j} - \omega_y \underset{\sim}{k}) \int_x^b \dot{m}\, d\,\xi \tag{31}$$

where use has been made of the continuity equation, namely

$$v\, m_f = -\int_x^b \dot{m}\, d\,\xi \tag{32}$$

Equation (32) results from the continuity equation, Eq. (14), by considering a control volume from a point x to the end of the first stage of the vehicle. In Eq. (32), m_f denotes fluid mass per unit length at point x, b is the distance from the origin of the body axis along the x-axis to the end of the first stage, $\dot{m}$ is the mass rate of change per unit length, and ξ is a dummy variable of integration. Upon integration, Eq. (31) becomes

$$\underset{\sim}{F}_C = -2(\omega_z\, \underset{\sim}{j} - \omega_y\, \underset{\sim}{k}) \int_{L_1} \left(\int_x^b \dot{m}\, d\,\xi\right) dx \tag{33}$$

Similarly, the force per unit length due to the flow unsteadiness takes the form

$$\underset{\sim}{f}_U = -\frac{\partial}{\partial t} \int_x^b \dot{m}\, d\xi\, \underset{\sim}{i} \tag{34}$$

which upon integration along the entire missile becomes

$$F_U = -\frac{\partial}{\partial t}\int_{L_1}\left(\int_x^b \dot{m}\, d\xi\right) dx\, \underset{\sim}{i} \tag{35}$$

Finally, the reactive force per unit length may be written as

$$\underset{\sim}{f}_R = -\left[\frac{\partial}{\partial x}(v\underset{\sim}{v}m_f) + \Delta(v\underset{\sim}{v}m_f)\,\delta(x+a)\right] \tag{36}$$

which upon integration along the missile length becomes

$$\underset{\sim}{F}_R = -\int_{L_1}\left[\frac{\partial}{\partial x}(v\underset{\sim}{v}m_f) + \Delta(v\underset{\sim}{v}m_f)\,\delta(x+a)\right] dx = v\underset{\sim}{v}m_f\Big|_{x_e} \tag{37}$$

where the symbol x_e indicates that the quantity $v\underset{\sim}{v}m_f$ is to be evaluated at the exit point. The integrand in Eq. (37) can be easily derived by assuming one-dimensional flow along the x-axis. It will be noticed that the expression makes allowance for possible abrupt changes in the flow pattern, as would occur if the rocket engine were to be gimbaled at a certain angle with respect to the x-direction. This is reflected by the second term in the integrand. Letting the flow direction at the exit be defined with respect to axes x,y,z by the direction cosines ℓ_{xR}, ℓ_{yR}, ℓ_{zR}, respectively, and using the continuity equation, Eq. (32), the reactive force becomes

$$\underset{\sim}{F}_R = -\dot{M}v(x_e,t)(\ell_{xR}\underset{\sim}{i} + \ell_{yR}\underset{\sim}{j} + \ell_{zR}\underset{\sim}{k}) \tag{38}$$

where $\dot{M}$ represents the total mass rate of change which is a negative quantity.

The forces $\underset{\sim}{F}_S$ and $\underset{\sim}{F}_R$ can be written in the form

$$\underset{\sim}{F}_S + \underset{\sim}{F}_R = \underset{\sim}{F}_A + \underset{\sim}{F}_T \tag{39}$$

where $\underset{\sim}{F}_A$ denotes the aerodynamic force

$$\underset{\sim}{F}_A = \int_{A_w} \underset{\sim}{f}_A^* \, d\, A_w \tag{40}$$

and $\underset{\sim}{F}_T$ is the "engine thrust"

$$\underset{\sim}{F}_T = (p_e - p_a) A_e \underset{\sim}{i} + |\dot{M}| v(x_e, t)(\ell_{xR}\underset{\sim}{i} + \ell_{yR}\underset{\sim}{j} + \ell_{zR}\underset{\sim}{k}) \tag{41}$$

In an analogous manner, the torques are obtained as

$$\begin{aligned}
\underset{\sim}{N}_A &= \int_{A_w} \underset{\sim}{r}_S \times \underset{\sim}{f}_A^* \, d\, A_w \\
\underset{\sim}{N}_T &= - a \, |\dot{M}| \, v(x_e, t)(\ell_{zR}\underset{\sim}{j} - \ell_{yR}\underset{\sim}{k}) \\
\underset{\sim}{N}_B &= - \underset{\sim}{g} \times \int_L \underset{\sim}{r} \, m \, dx \\
\underset{\sim}{N}_C &= - 2(\omega_y \underset{\sim}{j} + \omega_z \underset{\sim}{k}) \int_{L_1} x \left(\int_x^b \dot{m} d\xi \right) dx \\
\underset{\sim}{N}_U &= \underset{\sim}{0}.
\end{aligned} \tag{42}$$

in which $\underset{\sim}{r}_S$ is the radius vector to a point on the rocket surface.

Using the various forces and torques defined above, Eqs. (22) and (25) become

$$M\,\underset{\sim}{a}_0 - \left[(\omega_y^2+\omega_z^2)\underset{\sim}{i} - (\dot{\omega}_z+\omega_x\omega_y)\underset{\sim}{j} + (\dot{\omega}_y-\omega_x\omega_z)\underset{\sim}{k}\right]\int_M x\,dM$$

$$= \int_{A_w} \underset{\sim}{f}_A^*\, d\,A_w + (p_e-p_a)A_e\,\underset{\sim}{i} + M\,\underset{\sim}{g} - 2(\omega_z\underset{\sim}{j}$$

$$- \omega_y\underset{\sim}{k}) \int_{L_1} (\int_x^b \dot{m}\,d\xi)\,dx - \left[\frac{\partial}{\partial t}\int_{L_1} (\int_x^b \dot{m}\,d\xi)\,dx\right]\underset{\sim}{i}$$

$$+ |\dot{M}|\; v(x_e,t)(\ell_{xR}\underset{\sim}{i} + \ell_{yR}\underset{\sim}{j} + \ell_{zR}\underset{\sim}{k}) - \sum_i M_i(\ddot{\underset{\sim}{u}}_i$$

$$+ 2\,\underset{\sim}{\omega} \times \dot{\underset{\sim}{u}}_i) \tag{43}$$

and

$$\dot{\underset{\sim}{L}}' + \underset{\sim}{\omega} \times \underset{\sim}{L} - \underset{\sim}{a}_0 \times \int_M \underset{\sim}{r}\,dM = \int_{A_w} \underset{\sim}{r}_S \times \underset{\sim}{f}_A^*\,dA_w$$

$$- 2(\omega_y\underset{\sim}{j}+\omega_z\underset{\sim}{k}) \int_{L_1} x(\int_x^b \dot{m}\,d\xi)\,dx - a|\dot{M}|v(x_e,t)\ell_{zR}\underset{\sim}{j}$$

$$- \ell_{yR}\underset{\sim}{k}) - \underset{\sim}{g} \times \int_M x\,\underset{\sim}{i}\,dM - \sum_i M_i\,\underset{\sim}{r} \times (\ddot{\underset{\sim}{u}}_i +$$

$$2\,\underset{\sim}{\omega} \times \dot{\underset{\sim}{u}}_i) \tag{44}$$

Next let us introduce the notation

$$\dot{\underset{\sim}{R}}_0 = U\underset{\sim}{i} + V\underset{\sim}{j} + W\underset{\sim}{k} \tag{45}$$

for the velocity of the origin of the body axes and write Eqs. (43) and (44) in component from as

$$M\left[\dot{U} + W\omega_y - V\omega_z\right] - (\omega_y^2+\omega_z^2)\int_M x\, dM = F_{Ax}$$

$$+ (p_e-p_a)A_e + M\underset{\sim}{g}\cdot\underset{\sim}{i} - \frac{\partial}{\partial t}\int_{L_1}\left(\int_x^b \dot{m}\, d\xi\right)dx$$

$$+ |\dot{M}|v(x_e,t)\ell_{xR} - \sum_i M_i(\ddot{u}_{xi}+2\omega_y\dot{u}_{zi}-2\omega_z\dot{u}_{yi}) \tag{46a}$$

$$M\left[\dot{V} + U\omega_z - W\omega_x\right] + (\dot{\omega}_z + \omega_x\omega_y)\int_M x\, dM =$$

$$F_{Ay} + M\,\underset{\sim}{g}\cdot\underset{\sim}{j} - 2\omega_z\int_{L_1}\left(\int_x^b \dot{m}\, d\xi\right)dx + |\dot{M}|v(x_e,t)\ell_{yR}$$

$$- \sum_i M_i\,(\ddot{u}_{yi} + 2\omega_z\,\dot{u}_{xi} - 2\omega_x\,\dot{u}_{zi}) \tag{46b}$$

$$M\left[\dot{W} + V\omega_x - U\omega_y\right] - (\dot{\omega}_y-\omega_x\omega_z)\int_M x\, dM = F_{Az}$$

$$+ M\underset{\sim}{g}\cdot\underset{\sim}{k} + 2\,\omega_y\int_{L_1}\left(\int_x^b \dot{m}\, d\xi\right)dx + |\dot{M}|v(x_e,t)\ell_{zR}$$

$$- \sum_i M_i(\ddot{u}_{zi} + 2\omega_x\dot{u}_{yi} - 2\omega_y\dot{u}_{xi}) \tag{46c}$$

and

$$I_{xx}\dot{\omega}_x - I_{xy}\dot{\omega}_y - I_{xz}\dot{\omega}_z + I_{yz}(\omega_z^2 - \omega_y^2)$$

$$+ (I_{zz} - I_{yy})\omega_y\omega_z + \omega_x(\omega_z I_{xy} - \omega_y I_{xz})$$

$$= N_{Ax} \tag{47a}$$

$$- I_{xy}\dot{\omega}_x + I_{yy}\dot{\omega}_y - I_{yz}\dot{\omega}_z + I_{xz}(\omega_x^2 - \omega_z^2)$$

$$+ (I_{xx}-I_{zz})\omega_x\omega_z + \omega_y(\omega_x I_{yz} - \omega_z I_{xy}) = N_{Ay}$$

$$- 2\,\omega_y \int_{L_1} x\left(\int_x^b \dot{m}\, d\xi\right)dx - \left[\underset{\sim}{g} \times \underset{\sim}{} \int_M x\,\underset{\sim}{i}\; dM\right]\cdot \underset{\sim}{j}$$

$$- a|\dot{M}|v(x_e,t)\ell_{zR} + \sum_i M_i x_i(\ddot{u}_{zi}+2\omega_x\dot{u}_{yi}-2\omega_y\dot{u}_{xi}) \tag{47b}$$

$$- I_{xz}\dot{\omega}_x - I_{yz}\dot{\omega}_y + I_{zz}\dot{\omega}_z + I_{xy}(\omega_y^2 - \omega_x^2)$$

$$+ (I_{yy} - I_{xx})\omega_x\omega_y + \omega_z(\omega_y I_{xz} - \omega_x I_{yz}) = N_{Az}$$

$$- 2\,\omega_z \int_{L_1} x\left(\int_x^b \dot{m}\, d\xi\right)dx - \left[\underset{\sim}{g}\times \underset{\sim}{} \int_M x\underset{\sim}{i}\, dM\right]\cdot \underset{\sim}{k}$$

$$+ a|\dot{M}|v(x_e,t)\ell_{yR} - \sum_i M_i x_i(\ddot{u}_{yi}+2\omega_z\dot{u}_{xi}-2\omega_x\ddot{u}_{zi}) \tag{47c}$$

where we used the definitions

$$\underset{\sim}{i} \cdot \int_{A_w} \underset{\sim}{f}_A^* \, dA_w = F_{Ax} \quad , \quad \underset{\sim}{i} \cdot \int_{A_w} \underset{\sim}{r}_s \times \underset{\sim}{f}_A^* \, dA_w = N_{Ax}$$

$$\underset{\sim}{j} \cdot \int_{A_w} \underset{\sim}{f}_A^* \, dA_w = F_{Ay} \quad , \quad \underset{\sim}{j} \cdot \int_{A_w} \underset{\sim}{r}_s \times \underset{\sim}{f}_A^* \, dA_w = N_{Ay} \qquad (48)$$

$$\underset{\sim}{k} \cdot \int_{A_w} \underset{\sim}{f}_A^* \, dA_w = F_{Az} \quad , \quad \underset{\sim}{k} \cdot \int_{A_w} \underset{\sim}{r}_s \times \underset{\sim}{f}_A^* \, dA_w = N_{Az}$$

Introduce the set of conventional notation shown in Figure 5, where XYZ are a set of inertial axes with Z pointing downward. Next we consider a rotation ψ about axis Z to obtain the set $z_1 y_1 z_1$ (yaw), a rotation θ about the y_1 axis to obtain the set $x_2 y_2 z_2$ (pitch), and a rotation ϕ about the x_2 axis to obtain the set xyz (roll). Using the notation $\cos\phi = c\phi$, $\sin\phi = s\phi$, etc., the relationships between the inertial and the moving coordinate systems are

$$\underset{\sim}{i} = c\theta c\psi \, \underset{\sim}{i}' + c\theta s\psi \, \underset{\sim}{j}' - s\theta \underset{\sim}{k}'$$

$$\underset{\sim}{j} = (s\phi s\theta c\psi - c\phi s\psi)\underset{\sim}{i}' + (s\phi s\theta s\psi + c\phi c\psi)\underset{\sim}{j}' + s\phi c\theta \underset{\sim}{k}' \qquad (49)$$

$$\underset{\sim}{k} = (c\phi s\theta c\psi + s\phi s\psi)\underset{\sim}{i}' + (c\phi s\theta s\psi - s\phi c\psi)\underset{\sim}{j}' + c\phi c\theta \underset{\sim}{k}'$$

Moreover, the angular velocities, in terms of the rate of change of ϕ, θ, ψ are

$$\begin{aligned} \omega_x &= \dot{\phi} - \dot{\psi}\, s\theta \\ \omega_y &= \dot{\theta} c\phi + \dot{\psi} c\theta s\phi \\ \omega_z &= -\dot{\theta} s\phi + \dot{\psi} c\theta c\phi \end{aligned} \tag{50}$$

while the velocity of the origin 0 has the following components along the inertial axes

$$\begin{aligned} \dot{X} &= Uc\theta c\psi + V(s\phi s\theta c\psi - c\phi s\psi) + W(c\phi s\theta c\psi + s\phi s\psi) \\ \dot{Y} &= Uc\theta s\psi + V(s\phi s\theta s\psi + c\phi c\psi) + W(c\phi s\theta s\psi - s\phi c\psi) \\ \dot{Z} &= -Us\theta + Vs\phi c\theta + Wc\phi c\theta \end{aligned} \tag{51}$$

Equations (46), (47), (50) and (51) are sufficient to define the position and orientation of the missile as a function of time.

Under certain assumptions Eqs. (46) and (47) can be simplified appreciably. Let us assume that x, y, and z are principal axes and the missile is symmetric such that $I_{yy} = I_{zz}$. Also assume that the internal flow is steady and that the missile is not controlled, which implies that $\ell_{xR} = 1$, $\ell_{yR} = \ell_{zR} = 0$, then Eqs. (46) and (47) becomes

$$M\left[\dot{U} + W\omega_y - V\omega_z\right] - (\omega_y^2 + \omega_z^2)\int_M x\,dM = F_{Ax} + (p_e - p_a)A_e$$

$$-Mgs\theta + |\dot{M}|v(x_e,t) - \sum_i M_i(\ddot{u}_{xi} + 2\omega_y\dot{u}_{zi} - 2\omega_z\dot{u}_{yi}) \tag{52a}$$

$$M\left[\dot{V}+U\omega_z-W\omega_x\right] + (\dot{\omega}_z+\omega_x\omega_y)\int_M x dM = F_{Ay} + Mgs\phi c\theta$$

$$- 2\omega_z \int_{L_1} \left(\int_x^{L_1} \dot{m} d\xi\right) dx - \sum_i M_i (\ddot{u}_{yi}+2\omega_z\dot{u}_{xi}-2\omega_x\dot{u}_{zi}) \tag{52b}$$

$$M\left[\dot{W}+V\omega_x-U\omega_y\right] - (\dot{\omega}_y-\omega_x\omega_z)\int_M x dM = F_{Az} + Mgc\phi c\theta$$

$$+ 2\omega_y \int_{L_1} \left(\int_x^{L_1} \dot{m} d\xi\right) dx - \sum_i M_i (\ddot{u}_{zi}+2\omega_x\dot{u}_{yi}-2\omega_y\dot{u}_{xi}) \tag{52c}$$

and

$$I_{xx}\,\dot{\omega}_x = N_{Ax} \tag{53a}$$

$$I_{yy}\dot{\omega}_y + (I_{xx}-I_{yy})\omega_x\omega_z = N_{Ay}-2\omega_y\int_{L_1} x\left(\int_x^{L_1} \dot{m} d\xi\right) dx$$

$$+ gc\theta c\phi \int_M x dM + \sum_i M_i x_i (\ddot{u}_{zi}+2\omega_x\dot{u}_{yi}-2\omega_y\dot{u}_{xi}) \tag{53b}$$

$$I_{yy}\dot{\omega}_z + (I_{yy}-I_{xx})\omega_x\omega_y = N_{Az}-2\omega_z\int_{L_1} x\left(\int_x^{L_1} \dot{m} d\xi\right) dx$$

$$+ gc\theta s\phi \int_M x dM - \sum_i M_i x_i (\ddot{u}_{yi}+2\omega_z\dot{u}_{xi}-2\omega_x\dot{u}_{zi}) \tag{53c}$$

in which we used the fact that

$$\underset{\sim}{g} = g\,\underset{\sim}{k}' \tag{54}$$

The equations of motion for the discrete masses may be written as

$$\underset{\sim}{F}_{Si} + \underset{\sim}{F}_{Bi} = M_i \underset{\sim}{a}_i \qquad i = 1,2, ---, n \tag{55}$$

where $\underset{\sim}{F}_{Si}$ and $\underset{\sim}{F}_{Bi}$ are the surface and body forces acting upon the ith discrete mass, M_i, whose total number is n, and $\underset{\sim}{a}_i$ is the absolute acceleration of the ith mass. With the definitions

$$\underset{\sim}{r}_i = (x_i+u_{xi})\underset{\sim}{i} + (y_i+u_{yi})\underset{\sim}{j} + (z_i+u_{zi})\underset{\sim}{k} \tag{56}$$

as the position of the ith mass relative to the body axes, we obtain

$$\underset{\sim}{a}_i = \underset{\sim}{a}_0 + \ddot{\underset{\sim}{r}}_i + 2\underset{\sim}{\omega}\times\dot{\underset{\sim}{r}}_i + \dot{\underset{\sim}{\omega}}\times\underset{\sim}{r}_i + \underset{\sim}{\omega}\times(\underset{\sim}{\omega}\times\underset{\sim}{r}_i) \tag{57}$$

as the acceleration of the mass M_i. x_i, y_i, z_i are fixed coordinates defining the position of mass M_i while u_{xi}, u_{yi}, u_{zi} are displacements relative to this position. In subsequent use y_i and z_i will usually be assumed to be zero.

Denoting by k_{xi}, k_{yi}, k_{zi}, the stiffness of the springs used to attach the masses to the case, and by c_{xi}, c_{yi}, c_{zi}, the associated damping coefficient in the x,y,z directions respectively, the surface force on the ith discrete mass takes the form

$$\underset{\sim}{F}_{Si} = -\left[k_{xi}u_{xi}+c_{xi}\dot{u}_{xi}\right]\underset{\sim}{i} - \left[k_{yi}u_{yi}+c_{yi}\dot{u}_{yi}\right]\underset{\sim}{j}$$

$$- \left[k_{zi}u_{zi}+c_{zi}\dot{u}_{zi}\right]\underset{\sim}{k} \tag{58}$$

while the body force is simply

$$\underset{\sim}{F}_{Bi} = M_i \underset{\sim}{g} \tag{59}$$

Using the above definitions for the forces, the equations for the discrete mass motion become in component form

$$M_i\Big[\dot{U}+W\omega_y-V\omega_z+\ddot{u}_{xi}+2\omega_y\dot{u}_{zi}-2\omega_z\dot{u}_{yi}+\dot{\omega}_y u_{zi}$$

$$- \dot{\omega}_z u_{yi}+\omega_x\omega_y u_{yi} - (x_i+u_{xi})(\omega_y^2+\omega_z^2) + \omega_x\omega_z u_{zi}\Big] =$$

$$M_i \underset{\sim}{g}\cdot\underset{\sim}{i} - k_{xi}u_{xi} - c_{xi}\dot{u}_{xi} \tag{60a}$$

$$M_i\Big[\dot{V}+U\omega_z-W\omega_x+\ddot{u}_{yi}+2\omega_2\dot{u}_{xi}-2\omega_x\dot{u}_{zi}+\dot{\omega}_z(x_i+u_{xi})$$

$$- \dot{\omega}_x u_{zi}+u_{zi}\omega_y\omega_z - u_{yi}(\omega_z^2+\omega_x^2) + (x_i+u_{xi})\omega_x\omega_y\Big] =$$

$$M_i \underset{\sim}{g}\cdot\underset{\sim}{j} - k_{yi}u_{yi} - c_{yi}\dot{u}_{yi} \tag{60b}$$

$$M_i\Big[\dot{W}+V\omega_x-U\omega_y+\ddot{u}_{zi}+2\omega_x\dot{u}_{yi}-2\omega_y\dot{u}_{xi}+\dot{\omega}_x u_{yi}$$

$$-\dot{\omega}_y(x_i+u_{xi})+\omega_x\omega_z(x_i+u_{xi})-u_{zi}(\omega_x^2+\omega_y^2)+\omega_y\omega_z u_{yi}\Big]=$$

$$M_i\underset{\sim}{g}\cdot\underset{\sim}{k}-k_{zi}u_{zi}-c_{zi}\dot{u}_{zi} \qquad (60c)$$

Since the discrete masses are assumed to be point masses, there are no torque equations for them.

4. The Equations of Motion of a Flexible Rocket

When the rocket casing can undergo elastic deformations, the problem requires further attention. To this end, consider a rocket translating and rotating relative to the inertial space x,y,z, as shown in Figure 3. As the control volume, we consider the volume occupied by a rocket element of unit length when the vehicle is at rest relative to the body axes x,y,z. Figure 4 shows the corresponding element. Because the rocket shell is elastic, the entire mass associated with the control volume in question can move relative to that volume. In the first stage, the rocket case and unburned fuel are assumed to more together and their motion is different from the motion of the burned fuel, while for the second stage the motion of the shell is different from the motion of the discrete masses. Therefore, it will prove convenient to denote the motions and mass associated with the case element by

the subscript c, the ones related to the burned fuel element by the subscript f, and the ones related to the discrete masses by the subscript i. In analogy with Eq. (7) and Eq. (15), we write the force equation of motion in the form

$$\underset{\sim}{f}_S + \underset{\sim}{f}_B = \int_{m_c} \left[\underset{\sim}{a}_0 + \dot{\underset{\sim}{v}}_c + 2\underset{\sim}{\omega}\times\underset{\sim}{v}_c + \dot{\underset{\sim}{\omega}}\times\underset{\sim}{r}_c + \underset{\sim}{\omega}\times(\underset{\sim}{\omega}\times\underset{\sim}{r}_c) \right] dm$$

$$+ \left[h(x+a) - h(x-b) \right] \int_{m_f} \left[\underset{\sim}{a}_0 + \dot{\underset{\sim}{v}}_f + 2\underset{\sim}{\omega}\times\underset{\sim}{v}_f + \dot{\underset{\sim}{\omega}}\times\underset{\sim}{r}_f + \underset{\sim}{\omega}\times(\underset{\sim}{\omega}\times\underset{\sim}{r}_f) \right] dm$$

$$+ \delta(x-x_i) \int_{M_i} \left[\underset{\sim}{a}_0 + \dot{\underset{\sim}{v}}_i + 2\underset{\sim}{\omega}\times\underset{\sim}{v}_i + \dot{\underset{\sim}{\omega}}\times\underset{\sim}{r}_i + \underset{\sim}{\omega}\times(\underset{\sim}{\omega}\times\underset{\sim}{r}_i) \right] dm \qquad (61)$$

where $\underset{\sim}{v}_c$ is the elastic motion of a point inside the case element, $\underset{\sim}{v}_f$ is the fluid velocity relative to the body axes, and $\underset{\sim}{v}_i$ is the velocity of the ith discrete mass relative to the body axes. It will be assumed that the elastic motion is the same for the entire case element and a similar statement can be made concerning the velocity of the fluid element. Introducing the notation

$$\underset{\sim}{v}_c = \dot{\underset{\sim}{u}} \quad , \quad \underset{\sim}{v}_f = \dot{\underset{\sim}{u}} + \underset{\sim}{v} \quad , \quad \underset{\sim}{v}_i = \dot{\underset{\sim}{u}}(x_i) + \dot{\underset{\sim}{u}}_i \qquad (62)$$

where $\underset{\sim}{u}$ represents the elastic displacement vector, $\underset{\sim}{v}$ the velocity of the fluid relative to the case, and $\dot{\underset{\sim}{u}}_i$ the velocity of the ith discrete mass relative to the case, we can rewrite Eq. (61) as

$$\underset{\sim}{f}_S + \underset{\sim}{f}_B = \int_m \left[\underset{\sim}{a}_0 + \ddot{\underset{\sim}{u}} + 2\underset{\sim}{\omega}\times\dot{\underset{\sim}{u}} + \dot{\underset{\sim}{\omega}}\times\underset{\sim}{r} + \underset{\sim}{\omega}\times(\underset{\sim}{\omega}\times\underset{\sim}{r})\right] dm$$

$$+ \left[h(x+a)-h(x-b)\right]\int_{m_f} (\dot{\underset{\sim}{v}} + 2\underset{\sim}{\omega}\times\underset{\sim}{v})\ dm$$

$$+ \ \delta(x-x_i)\int_{M_i}\left[\ddot{\underset{\sim}{u}}_i + 2\underset{\sim}{\omega}\times\dot{\underset{\sim}{u}}_i\right] dm = (\underset{\sim}{a}_0 + \ddot{\underset{\sim}{u}}$$

$$+ 2\underset{\sim}{\omega}\times\dot{\underset{\sim}{u}})m + \dot{\underset{\sim}{\omega}}\times\int_m \underset{\sim}{r}\ dm + \underset{\sim}{\omega}\times(\underset{\sim}{\omega}\times\int_m \underset{\sim}{r}\ dm)$$

$$+ \left[h(x+a) - h(x-b)\right]\ (\dot{\underset{\sim}{v}} + 2\underset{\sim}{\omega}\times\underset{\sim}{v})\ m_f + (\ddot{\underset{\sim}{u}}_i$$

$$+ 2\underset{\sim}{\omega}\times\dot{\underset{\sim}{u}}_i)M_i\ \delta(x-x_i) \tag{63}$$

Moreover, the radius vector $\underset{\sim}{r}$ has the expression

$$\underset{\sim}{r} = x\underset{\sim}{i}+y\underset{\sim}{j} + z\underset{\sim}{k} + \underset{\sim}{u} = (x+u_x)\underset{\sim}{i}+(y+u_y)\underset{\sim}{j}+(z+u_z)\underset{\sim}{k} \tag{64}$$

in which u_x, u_y, u_z are the elastic displacements of the case element in the x, y, and z directions, respectively.

Invoking the analogy with Eq. (17), we can rewrite Eq. (63) to read

$$\underset{\sim}{f}_S + \underset{\sim}{f}_B + \left[\underset{\sim}{f}_C+\underset{\sim}{f}_U+\underset{\sim}{f}_R\right]\left[h(x+a)-h(x-b)\right] + (\underset{\sim}{f}_{Ci}+\underset{\sim}{f}_{Ui}+\underset{\sim}{f}_{Ri})\delta(x-x_i)$$

$$= (\underset{\sim}{a}_0+\ddot{\underset{\sim}{u}} + 2\underset{\sim}{\omega}\times\dot{\underset{\sim}{u}})m + \dot{\underset{\sim}{\omega}}\times\int_m \underset{\sim}{r}\ dm + \underset{\sim}{\omega}\times(\underset{\sim}{\omega}\times\int_m \underset{\sim}{r}\ dm) = \underset{\sim}{a}m \tag{65}$$

where $\underset{\sim}{a}$ is the absolute acceleration consisting of the acceleration $\underset{\sim}{a}_0$ of the origin and the acceleration of the case element relative to the body axes. Moreover

$$\underset{\sim}{f}_C = -2\underset{\sim}{\omega}\times \underset{\sim}{v}m_f$$

$$\underset{\sim}{f}_U = -\frac{\partial}{\partial t}(\underset{\sim}{v}m_f) \tag{66}$$

$$\underset{\sim}{f}_R = -\frac{\partial}{\partial x}(v\underset{\sim}{v}m_f) - \Delta(v\underset{\sim}{v}m_f)\ \delta(x+a)$$

are the Coriolis force, the force due to the unsteadiness of the fluid relative to the case, and the reactive force, respectively, all per unit length of the rocket. Similarly

$$\underset{\sim}{f}_{Ci} = -2M_i\ \underset{\sim}{\omega}\times\dot{\underset{\sim}{u}}_i$$

$$\underset{\sim}{f}_{Ui} + \underset{\sim}{f}_{Ri} = -M_i\ \ddot{\underset{\sim}{u}}_i \tag{67}$$

If we express $\underset{\sim}{R}_0$ in terms of components along axes x, y, z, then the position of the case element at any time is given by

$$\underset{\sim}{R} = \underset{\sim}{R}_0 + \underset{\sim}{r}$$

$$= (X + x + u_x)\underset{\sim}{i} + (Y + y + u_y)\underset{\sim}{j} + (Z + z + u_z)\underset{\sim}{k} \tag{68}$$

Recalling that the unit vectors $\underset{\sim}{i}$, $\underset{\sim}{j}$, and $\underset{\sim}{k}$ rotate with angular velocity $\underset{\sim}{\omega}$, the absolute acceleration of the case element

can be written in the form

$$\underset{\sim}{a} = a_x \underset{\sim}{i} + a_y \underset{\sim}{j} + a_z \underset{\sim}{k} \tag{69}$$

where

$$a_x = \dot{U} + \ddot{u}_x + \omega_y (W+2\dot{u}_z) - \omega_z (V+2\dot{u}_y)$$

$$+ (\dot{\omega}_y+\omega_x\omega_z)(z+u_z) - (\dot{\omega}_z-\omega_x\omega_y)(y+u_y)$$

$$- (\omega_y^2+\omega_z^2)(x+u_x) \tag{70a}$$

$$a_y = \dot{V} + \ddot{u}_y + \omega_z (U+2\dot{u}_x) - \omega_x (W+2\dot{u}_z)$$

$$+ (\dot{\omega}_z+\omega_x\omega_y)(x+u_x) - (\dot{\omega}_x-\omega_y\omega_z)(z+u_z)$$

$$- (\omega_x^2+\omega_z^2)(y+u_y) \tag{70b}$$

$$a_z = \dot{W} + \ddot{u}_z + \omega_x (V+2\dot{u}_y) - \omega_y (U+2\dot{u}_x)$$

$$+ (\dot{\omega}_x+\omega_y\omega_z)(y+u_y) - (\dot{\omega}_y-\omega_x\omega_z)(x+u_x)$$

$$- (\omega_x^2+\omega_y^2)(z+u_z) \tag{70c}$$

In the above expressions the y and z coordinates may be considered as offsets such as may result from the missile not being perfectly symmetrical about the x-axis. In subsequent use we will assume them to be zero. In addition, the assumption that a given cross-section is uniform is made.

Similarly, using Eq. (63), the torque equation about the point 0 for the rocket element in question takes the form

$$\underset{\sim}{n}_S + \underset{\sim}{n}_B = \int_m \underset{\sim}{r}\times\left[\underset{\sim}{a}_0+\ddot{\underset{\sim}{u}}+2\underset{\sim}{\omega}\times\dot{\underset{\sim}{u}}+\dot{\underset{\sim}{\omega}}\times\underset{\sim}{r}+\underset{\sim}{\omega}\times(\underset{\sim}{\omega}\times\underset{\sim}{r})\right] dm$$

$$+ \left[h(x+a)-h(x-b)\right]\int_{m_f} \underset{\sim}{r}\times(\dot{\underset{\sim}{v}}+2\underset{\sim}{\omega}\times\underset{\sim}{v}) \; dm$$

$$+ \delta(x-x_i)\int_{M_i} \underset{\sim}{r}\times(\ddot{\underset{\sim}{u}}_i+2\underset{\sim}{\omega}\times\dot{\underset{\sim}{u}}_i) \; dm =$$

$$\int_m \underset{\sim}{r}\times(\underset{\sim}{a}_0+\ddot{\underset{\sim}{u}}+2\underset{\sim}{\omega}\times\dot{\underset{\sim}{u}}) \; dm + \dot{\underset{\sim}{\ell}}' + \underset{\sim}{\omega}\times\underset{\sim}{\ell}$$

$$+ \left[h(x+a)-h(x-b)\right]\int_{m_f} \underset{\sim}{r}\times(\dot{\underset{\sim}{v}}+2\underset{\sim}{\omega}\times\underset{\sim}{v}) \; dm$$

$$+ \delta(x-x_i)\int_{M_i} \underset{\sim}{r}\times(\ddot{\underset{\sim}{u}}_i+2\underset{\sim}{\omega}\times\dot{\underset{\sim}{u}}_i) \; dm \qquad (71)$$

where

$$\underset{\sim}{\ell} = (i_{xx}\omega_x - i_{xy}\omega_y - i_{xz}\omega_z)\underset{\sim}{i} + (-i_{yx}\omega_x + i_{yy}\omega_y - i_{yz}\omega_z)\underset{\sim}{j}$$

$$+ (-i_{xz}\omega_x - i_{zy}\omega_y + i_{zz}\omega_z)\underset{\sim}{k} \tag{72}$$

is the angular momentum of the mass element m about the body axes x,y,z, in which

$$i_{xx} = \int_m \left[(y+u_y)^2 + (z+u_z)^2\right] dm \ , \ i_{yy} = \int_m \left[(x+u_x)^2 + (z+u_z)^2\right] dm$$

$$i_{zz} = \int_m \left[(x+u_x)^2 + (y+u_y)^2\right] dm \ , \ i_{xy} = \int_m (x+u_x)(y+u_y)\, dm \tag{73}$$

$$i_{xz} = \int_m (x+u_x)(z+u_z)\, dm \ , \ i_{yz} = \int_m (y+u_y)(z+u_z)\ dm$$

are recognized as the associated moments and products of inertia. Moreover, $\dot{\underset{\sim}{\ell}}'$ is obtained from Eq. (72) by replacing $\omega_x, \omega_y, \omega_z$, by $\dot{\omega}_x, \dot{\omega}_y, \dot{\omega}_z$, respectively. Eq.(71) can be rewritten as

$$\underset{\sim}{n}_S + \underset{\sim}{n}_B + \left[\underset{\sim}{n}_C + \underset{\sim}{n}_U + \underset{\sim}{n}_R\right]\left[h(x+a) - h(x-b)\right] + (\underset{\sim}{n}_{Ci} + \underset{\sim}{n}_{Ui} + \underset{\sim}{n}_{Ri})\,\delta(x-x_i)$$

$$= \int_m \underset{\sim}{r} \times (\underset{\sim}{a}_0 + \ddot{\underset{\sim}{u}} + 2\underset{\sim}{\omega} \times \dot{\underset{\sim}{u}})\, dm + \dot{\underset{\sim}{\ell}}' + \underset{\sim}{\omega} \times \underset{\sim}{\ell} \tag{74}$$

where the torques

$$\underset{\sim}{n}_C = -2 \int_{m_f} \underset{\sim}{r} \times (\underset{\sim}{\omega} \times \underset{\sim}{v})\, dm$$

$$\underset{\sim}{n}_U = - \int_{m_f} \underset{\sim}{r} \times \frac{\partial}{\partial t} (\underset{\sim}{v} m_f)\, dm \tag{75}$$

$$\underset{\sim}{n}_R = - \int_{m_f} \underset{\sim}{r} \times \left[\frac{\partial}{\partial x} (v \underset{\sim}{v} m_f) + \Delta (v \underset{\sim}{v} m_f)\, \delta (x+a) \right] dm$$

and

$$\underset{\sim}{n}_{Ci} = -2\, \underset{\sim}{r} \times (\underset{\sim}{\omega} \times \dot{\underset{\sim}{u}}_i) M_i$$

$$\underset{\sim}{n}_{Ui} + \underset{\sim}{n}_{Ri} = - \underset{\sim}{r} \times M_i\, \ddot{\underset{\sim}{u}}_i \tag{76}$$

follow directly from Eqs. (66) and (67) respectively.

Equations (65) and (74) must be supplemented by the continuity equation, Eq. (32).

5. The Equations for the Axial and Transverse Vibration of a Rocket

Let us consider the rocket of the preceding section in which u_x is the axial elastic displacement and u_y and u_z are the elastic transverse displacements in the y and z directions, respectively. Assuming axial symmetry and that the elastic displacements u_x, u_y, u_z and the angular velocity components

ω_y, ω_z, as well as their time derivatives are small quantities, we can integrate Eqs. (65) and (74) and obtain

$$\underset{\sim}{F}_S+\underset{\sim}{F}_B+\underset{\sim}{F}_C+\underset{\sim}{F}_U+\underset{\sim}{F}_R + \sum_i (\underset{\sim}{f}_{Ci}+\underset{\sim}{f}_{Ui}+\underset{\sim}{f}_{Ri}) = \int_L (\underset{\sim}{a}_0+\ddot{\underset{\sim}{u}}$$

$$+ 2\underset{\sim}{\omega}\times\dot{\underset{\sim}{u}})m dx + \dot{\underset{\sim}{\omega}}\times\int_L\int_m \underset{\sim}{r} dm dx + \underset{\sim}{\omega}\times(\underset{\sim}{\omega}\times\int_L\int_m \underset{\sim}{r} dm dx)$$

$$= M\,\underset{\sim}{a}_0 + \int_L (\ddot{\underset{\sim}{u}}+2\underset{\sim}{\omega}\times\dot{\underset{\sim}{u}})m dx + \dot{\underset{\sim}{\omega}}\times\int_L\int_m \underset{\sim}{r}_r\, dm\, dx$$

$$+ \dot{\underset{\sim}{\omega}}\times\int_L\int_m \underset{\sim}{u} dm dx + \underset{\sim}{\omega}\times(\underset{\sim}{\omega}\times\int_L\int_m \underset{\sim}{r}_r dm dx+\underset{\sim}{\omega}\times(\underset{\sim}{\omega}\times\int_L\int_m \underset{\sim}{u} dm dx) \qquad (77)$$

in which $\underset{\sim}{r}_r$ is the rigid body position relative to the body axes as defined by Eq. (21). Also

$$\underset{\sim}{N}_S + \underset{\sim}{N}_B + \underset{\sim}{N}_C + \underset{\sim}{N}_U + \underset{\sim}{N}_R + \sum_i (\underset{\sim}{n}_{Ci}+\underset{\sim}{n}_{Ui}+\underset{\sim}{n}_{Ri}) = \int_L\int_m \underset{\sim}{r}\times(\underset{\sim}{a}_0$$

$$+ \ddot{\underset{\sim}{u}} + 2\underset{\sim}{\omega}\times\dot{\underset{\sim}{u}})\, dm\, dx + \int_L (\dot{\underset{\sim}{\ell}}' + \underset{\sim}{\omega}\times\underset{\sim}{\ell})$$

$$\cong - \underset{\sim}{a}_0 \times\int_L\int_m \underset{\sim}{r}_r dm dx - \underset{\sim}{a}_0 \times\int_L\int_m \underset{\sim}{u}\, dm\, dx - \int_L x \Big[(\ddot{u}_z$$

$$+ 2\omega_x\dot{u}_y+\dot{\omega}_x u_y)\underset{\sim}{j} - (\ddot{u}_y-2\omega_x\dot{u}_z-\dot{\omega}_x u_z)\underset{\sim}{k}\Big] dx + \dot{\underset{\sim}{L}}'+\underset{\sim}{\omega}\times\underset{\sim}{L} \qquad (78)$$

Comparing Eqs. (19) and (77) on the one hand, and Eqs. (25) and (78) on the other hand, we conclude that the elastic motion does not affect the rigid-body motions provided the following relations are satisfied

$$\int_L \underset{\sim}{u}\, m\, dx = \int_L \dot{\underset{\sim}{u}}\, m\, dx = \int_L \ddot{\underset{\sim}{u}}\, m\, dx = \underset{\sim}{0}$$

$$\int_L x u_y m\, dx = \int_L x \dot{u}_y m\, dx = \int_L x \ddot{u}_y m\, dx = 0 \qquad (79)$$

$$\int_L x u_z m\, dx = \int_L x \dot{u}_z m\, dx = \int_L x \ddot{u}_z m\, dx = 0$$

We assume that this is the case, and indeed Eqs. (79) imply that the elastic modes of deformation are orthogonal, with respect to the modified mass, to the rigid-body modes of displacement, namely the translation and rotation of the vehicle as a whole. In view of the above arguments the problem can be solved in two stages. First, the rigid-body motion can be solved for using Eqs. (19) and (25), then considering these as known, Eqs. (65) and (74) may be used to obtain the elastic motion.

Equations (65), (66) and (67), representing the equations of motion for the three components u_x, u_y, u_z of the elastic displacement $\underset{\sim}{u}$, are of a general form and, before we can attempt their solution, we must specify the nature of the surface forces $\underset{\sim}{f}_S$ and the body force $\underset{\sim}{f}_B$. The surface force depends not only on the external aerodynamic forces, but also on internal stresses in the shell and fluid pressure. Moreover, the fluid flow characteristics must be known, as can be concluded from Eqs. (66), as well as the discrete mass motion, as can be seen from Eqs. (67).

As far as the elastic motion is concerned, the vehicle shell is assumed to behave like a bar in axial and flexural vibration. Under these circumstances, the distributed surface force can be written in the form

$$\underset{\sim}{f}_S = \left[\frac{\partial}{\partial x}(EA_c \frac{\partial u_x}{\partial x})\right]\underset{\sim}{i} + \left[-\frac{\partial^2}{\partial x^2}(EI_{cz} \frac{\partial^2 u_y}{\partial x^2}) + \frac{\partial}{\partial x}(P \frac{\partial u_y}{\partial x})\right]\underset{\sim}{j}$$

$$+ \left[-\frac{\partial^2}{\partial x^2}(EI_{cy} \frac{\partial^2 u_z}{\partial x^2}) + \frac{\partial}{\partial x}(P \frac{\partial u_z}{\partial x})\right]\underset{\sim}{k} - \left[\frac{\partial}{\partial x}(pA_f) + pA_f(b)\delta(x-b)\right.$$

$$\left. + pA_f(a)\delta(x+a)\right]\left[h(x+a) - h(x-b)\right]\underset{\sim}{i} + f_{Ax}\underset{\sim}{i} + f_{Ay}\underset{\sim}{j} + f_{Az}\underset{\sim}{k}$$

$$- (p_e - p_a)\, A_e\, \delta(x+a)\, \underset{\sim}{i} \tag{80}$$

where the first three terms represent the force components due to internal stresses caused by the axial and flexural vibrations (see, for example, Reference 19, Sections 5-7 and 10-3), the fourth term is due to internal fluid pressure differential, the next three terms are due to aerodynamic effects, while the last term is due to pressure difference at the aft end of the missile. The term P denotes the axial force on the vehicle due to internal stresses and has the expression

$$P = EA_c \frac{\partial u_x}{\partial x} \tag{81}$$

Finally, the differential equation for the flexural vibration in the xz-plane is

$$- \frac{\partial^2}{\partial x^2} \left(EI_{cy} \frac{\partial^2 u_z}{\partial x^2}\right) + \frac{\partial}{\partial x} \left(P \frac{\partial u_z}{\partial x}\right) + f_{Az} + m\underset{\sim}{g} \cdot \underset{\sim}{k} - 2\omega_y v m_f \Big[h(x+a)$$

$$- h(x-b) \Big] + |\dot{M}| v(x_e,t) \ell_{zR} \delta(x+a) - M_i \Big[\ddot{u}_{zi} + 2\omega_x \dot{u}_{yi} - 2\omega_y \dot{u}_{xi} \Big] \delta(x-x_i)$$

$$= m \Big[\dot{W} + \ddot{u}_z + \omega_x (V + 2\dot{u}_y) - \omega_y (U + 2\dot{u}_x) + (\dot{\omega}_x + \omega_y \omega_z) u_y$$

$$- (\dot{\omega}_y - \omega_x \omega_z)(x + u_x) - (\omega_x^2 + \omega_y^2) u_z \Big] \tag{87}$$

with the boundary conditions

$$EI_{cy} \frac{\partial^2 u_z}{\partial x^2} = 0 \qquad \text{at } x = -a, b+L_2$$

$$- \frac{\partial}{\partial x} \left(EI_{cy} \frac{\partial^2 u_z}{\partial x^2}\right) = 0 \text{ at } x = -a, b+L_2 \tag{88}$$

At this point a discussion of some additional assumptions implied by Eqs. (83) through (88) is in order. First we note that the aerodynamic forces are treated as distributed forces causing no torques on the case element. Such torques, if they exist, are assumed to affect only the rocket rigid-body rotation. Although the nozzle has finite length, it was assumed, for simplicity, to be of negligible length. In a more exact treatment of the gas flow, this assumption may have to

be relaxed by considering the pressure distribution along the finite-length nozzle (see Appendix A).

The flow has been treated as if it possessed no viscosity. As a result, any reactions between the gases and the unburned fuel are assumed to be normal to the flow. This is implied by the fact that the velocity is uniform over the entire cross-sectional area which implies, in turn, perfect burning in the sense that no gas-dynamic eccentricity is present. The lack of gas-dynamic eccentricity is ensured by any type of radially symmetric flow, of which the uniform flow is a special case. Any torques due to gas flow may result from engine thrust misalignment, if at all. Moreover, the velocity of the flow relative to the body is assumed to have only one component, namely along the x-axis. Although due to the transverse elastic displacements u_y and u_z, there are velocity components $v\partial u_y/\partial x$ and $v\partial u_z/\partial x$ in the y- and z-directions, respectively, the terms involved are assumed to be small and, therefore, ignored.

6. Distributed Aerodynamic Forces

Before a solution for the motion of the missile can be attempted, we must determine the distribution of the aerodynamic forces along the missile. To obtain the transverse forces, we use the method of virtual masses, whereas the axial forces are obtained by semi-empirical means. The latter forces are assumed to act at several discrete stations of the missile.

The method of virtual, or apparent mass can be traced to Lamb[20]. The method was extended by Munk[21] and Jones[22] and applied to missiles by Bryson[23]. The present derivation represents an extension of the method and reduces to the results of References 24, 25, and 26 if suitable simplifications and assumptions are made.

Consider a missile moving through an infinite expanse of fluid which is stationary at infinity. With the coordinate system shown in Figure 6, consider a set of axes $x_1y_1z_1$, displaced relative to xyz by

$$\underset{\sim}{r} = (x+u_x)\underset{\sim}{i} + u_y\underset{\sim}{j} + u_z\underset{\sim}{k} \tag{89}$$

where $\underset{\sim}{i},\underset{\sim}{j},\underset{\sim}{k}$ are unit vectors along axes xyz. The $x_1y_1z_1$ axes are such that the $x_1 = 0$ plane is a plane at rest with respect to the fluid far away from the body and such that the x_1-axis is parallel to the x-axis at the instant under consideration.

Next consider the element of unit length shown in Figure 6, and define the translational velocity of this element, expressed in terms of components along the coordinate system with origin at 0, by

$$\underset{\sim}{V}_1 = u_1\underset{\sim}{i} + v_1\underset{\sim}{j} + w_1\underset{\sim}{k} \tag{90}$$

Then the linear momentum of the element expressed in terms of the same set of axes can be written as

$$\underset{\sim}{p} = p_1\underset{\sim}{i} + p_2\underset{\sim}{j} + p_3\underset{\sim}{k}$$

$$= m_v(u_1\underset{\sim}{i} + v_1\underset{\sim}{j} + w_1\underset{\sim}{k}) \tag{91}$$

in which

$$u_1 = U + \dot{u}_x + \omega_y u_z - \omega_z u_y$$

$$v_1 = V + \dot{u}_y + \omega_z(x+u_x) - \omega_x u_z \tag{92}$$

$$w_1 = W + \dot{u}_z + \omega_x u_y - \omega_y(x+u_x)$$

and

$$m_v = \rho \; S(x) \tag{93}$$

where ρ is the free stream density and S is the cross-sectional area. The distributed force acting on the missile is then

$$\underset{\sim}{f}_A = f_{Ax}\underset{\sim}{i} + f_{Ay}\underset{\sim}{j} + f_{Az}\underset{\sim}{k} = -\frac{d\underset{\sim}{p}}{dt} \tag{94}$$

As the axial component for the distributed forces is derived by a different method, we only consider the derivation for the transverse components. Considering Eqs. (91) and (92), we can write the components for the linear momentum in the

functional form

$$p_i = p_i(x, y, z, U, V, W, u_x, u_y, u_z, \dot{u}_x, \dot{u}_y, \dot{u}_z,$$

$$\omega_x, \omega_y, \omega_z, m_v) \ , \quad i = 2, 3 \tag{95}$$

The total time derivative of Eq. (95) is then

$$\frac{dp_i}{dt} = \frac{\partial p_i}{\partial x}\frac{dx}{dt} + \frac{\partial p_i}{\partial y}\frac{dy}{dt} + --- + \frac{\partial p_i}{\partial m_v}\frac{dm_v}{dt}$$

$$i = 2, 3 \tag{96}$$

Introducing Eq. (92) into Eq. (91), using Eqs. (96), and recalling that the unit vectors i,j,k are rotating, the transverse components in Eq. (94) become

$$f_{Ay} = - m_v a_y - \dot{m}_v \left[V + \dot{u}_y + \omega_z(x+u_x) - \omega_x u_z\right] - m_v \left[U + \dot{u}_x + \omega_y u_z - \omega_z u_y\right]\left[\frac{\partial \dot{u}_y}{\partial x} + \omega_z + \omega_z \frac{\partial u_x}{\partial x} - \omega_x \frac{\partial u_z}{\partial x}\right] - \rho\left[U + \dot{u}_x + \omega_y u_z - \omega_z u_y\right]\left[V + \dot{u}_y + \omega_z(x+u_x) - \omega_x u_z\right]\frac{dS}{dx} \tag{97}$$

$$f_{Az} = - m_v a_z - \dot{m}_v \left[W + \dot{u}_z + \omega_x u_y - \omega_y(x+u_x)\right] - m_v \left[U + \dot{u}_x + \omega_y u_z - \omega_z u_y\right]\left[\frac{\partial \dot{u}_z}{\partial x} + \omega_x \frac{\partial u_y}{\partial x} - \omega_y - \omega_y \frac{\partial u_x}{\partial x}\right] - \rho\left[U\right.$$

$$+ \dot{u}_x + \omega_y u_z - \omega_z u_y \Big] \Big[W + \dot{u}_z + \omega_x u_y - \omega_y (x+u_x) \Big] \frac{dS}{dx} \qquad (98)$$

where a_y and a_z are given by Eqs. (70).

In the above expressions S(x) represents an area in a plane perpendicular to the elastic axis. For a circular segment this area is

$$S(x) = \pi r^2(x) \qquad (99)$$

in which r(x) is the radius. For a segment that has fins, the equivalent area is represented by the expression

$$S_{eq}(x) = \pi s^2 \left(1 - \frac{r^2}{s^2} + \frac{r^4}{s^4}\right) \qquad (100)$$

in which s is the distance from the elastic line of the missile to the tip of the fins in the cross-flow plane.

The axial aerodynamic force per unit length, f_{Ax}, is defined as

$$f_{Ax} = - q \, S_r \, c_x \qquad (101)$$

in which q is the free stream dynamic pressure

$$q = \frac{1}{2} \rho \, \dot{\underset{\sim}{R}}_0 \cdot \dot{\underset{\sim}{R}}_0 \qquad (102)$$

and c_x is the axial coefficient, which in general depends on the local angle of attack, local sideslip angle, and local Mach number. However, we shall assume that it is only a function of the Mach number and that it acts at discrete stations along the missile. These stations are generally located at points where there are changes in the cross-sectional area, such as at the forward end and the aft end of the missile, where the fins are located, as well as the stage intersection. Base pressure also acts at the aft end of the missile. Viscous forces due to friction are neglected. Hence, we can write Eq. (101) as

$$f_{Ax} = - q\ S_r\ c_x(M_a,\ x_i)\ \delta(x-x_i) \tag{103}$$

where $\delta(x-x_i)$ is a spatial Dirac delta function and M_a is the Mach number.

7. Equations of Motion for a Flexible Two-Stage Missile with Discrete Masses and Aerodynamic Forces

This section concludes the analysis of a two-stage missile with internal flow including discrete masses and aerodynamic forces. Subsequent sections will include simplified equations and computer solutions. The resulting equations in this section are such that no closed form solution appears possible and numerical methods are called for.

As indicated by Eqs. (52) for the rigid-body motion, we need expressions for the aerodynamic forces. These are found from Eqs. (97) and (98). For no elastic deformation they reduce to

$$f_{Ay} = - m_v(\dot{V} + x\dot{\omega}_z) - \dot{m}_v(V + x\omega_z) - m_v U\omega_z - m_v U\dot{\omega}_z$$

$$+ m_v \omega_x(W-x\omega_y) - U\rho(V+x\omega_z) \frac{dS}{dx} \tag{104}$$

$$f_{Az} = - m_v(\dot{W}-x\dot{\omega}_y) - \dot{m}_v(W-x\omega_y) + m_v U\omega_y$$

$$- m_v\omega_x(V+x\omega_z) + m_v\omega_y U - U\rho(W-x\omega_y) \frac{dS}{dx} \tag{105}$$

The body axes are taken to be at the end of the missile such that $a = 0$, $b = L_1$. Before integration can be performed, some description of the cross-sectional area is necessary. We assume that each stage has a constant cross-section and changes only occur at the intersection of the two stages. The fin area at the aft end is considered as a spatial impulse and the nose is assumed to be pointed such that $S(L) = 0$. Under these circumstances the cross-sectional area distribution becomes

$$S(x) = S(0)\delta(x) + S_1[h(x)-h(x-L_1)] + \Delta S\ \delta(x-L_1)$$

$$+ S_2[h(x-L_1) - h(x-L)] \tag{106}$$

where $S(0)$ is the fin cross-sectional area at the base, S_1 and S_2 are the cross-sectional areas (assumed constant), of the first and second stages, respectively, ΔS is the average cross-section at the intersection of the two stages. With this definition for the cross-sectional area, the integration of Eqs. (105) and (106) produces

$$F_{Ay} = \int_0^L f_{Ay}\, dx = -(\dot{V} + U\omega_z - \omega_x W)\rho A_1 - V\dot{\rho} A_1$$

$$- (\dot{\omega}_z + \omega_x\omega_y)\rho A_2 - \omega_z\dot{\rho} A_2 - \rho UV\, A_3 \tag{107}$$

$$F_{Az} = \int_0^L f_{Az}\, dx = -(\dot{W} + V\omega_x - U\omega_y)\rho A_1 - W\dot{\rho} A_1$$

$$- (\dot{\omega}_y - \omega_x\omega_z)\rho A_2 - \omega_y\, \dot{\rho}\, A_2 - \rho UV\, A_3 \tag{108}$$

in which

$$A_1 = S(0)h_0 + S_1L_1 + \Delta S\, h_2 + S_2L_2$$

$$A_2 = \frac{L_1^2 S_1}{2} + \Delta S\, L_1 h_2 + \frac{L_2^2 S_2}{2} \tag{109}$$

$$A_3 = S(0)$$

and h_0, h_2 are incremental distances along the x-axis on which the areas $S(0)$ and ΔS are assumed to be present. The axial force is simply found by integration of Eq. (103), which results in

$$F_{Ax} = - \sum_j c_x(M_a \ , \ x_j) \ q \ S_r \tag{110}$$

With the definition

$$\underset{\sim}{r}_s = x \ \underset{\sim}{i} \tag{111}$$

the aerodynamic torques are found to be

$$N_{Ax} = 0 \tag{112}$$

$$N_{Ay} = - \ (\dot{\omega}_y - \omega_x\omega_z)\rho A_5 - \omega_y A_5 \dot{\rho} + (\dot{W} + V\omega_x - U\omega_y)\rho A_2$$

$$+ W \dot{\rho} \ A_2 + U\omega_y \ \rho \ A_2 + UW\rho \ A_4 \tag{113}$$

$$N_{Az} = - \ (\dot{\omega}_z + \omega_x\omega_y)\rho A_5 - \omega_z A_5 \dot{\rho} - (\dot{V} + U\omega_z - W\omega_x)\rho A_2$$

$$+ V \dot{\rho} \ A_2 + U\omega_z \ \rho \ A_2 - UV\rho \ A_4 \tag{114}$$

in which

$$\begin{aligned} A_4 &= - A_1 \\ A_5 &= \frac{1}{3} S_1 L_1^3 + \Delta S L_1^2 h_2 + \frac{1}{3} S_2 L_2^3 \end{aligned} \tag{115}$$

It may be noted that there is no torque produced about the longitudinal axis of the missile by the aerodynamic forces, and this needs further clarification. Physically it may be assumed that there are control systems to maintain the missileunder a steady rolling velocity and therefore cancel any aerodynamic forces that are produced about the x-axis. Mathematically the torque vanishes because the missile was assumed to have negligible width.

With the above definitions for the rigid-body aerodynamic forces, Eqs. (52) for the rigid-body translation become

$$M\left[\dot{U} + W\omega_y - V\omega_z\right] - (\omega_y^2 + \omega_2^2) \int_M x dm = - \sum_j q\ S_r c_x(M_a, x_j)$$

$$+ (p_e - p_a)A_e - Mg\ s\theta + |\dot{M}|\ v(x_e, t) - \sum_i M_i\left[\ddot{u}_{xi}\right.$$

$$\left. + 2\omega_y \dot{u}_{zi} - 2\omega_z \dot{u}_{y_i}\right] \tag{116}$$

$$M^* \left[\dot{V} + U\omega_z - W\omega_x\right] + (\dot{\omega}_z + \omega_x\omega_y)\ M_1^* = - V\ \dot{\rho}\ A_1$$

$$- \omega_z\ \dot{\rho} A_2 - \rho UVA_3 + Mgs\phi c\theta - 2\omega_z \int_{L_1} \left(\int_x^{L_1} \dot{m} d\xi\right) dx$$

$$- \sum_i M_i (\ddot{u}_{yi} + 2\omega_z \dot{u}_{xi} - 2\omega_x \dot{u}_{zi}) \tag{117}$$

$$M^* \left[\dot{W} + V\omega_x - U\omega_y\right] - (\dot{\omega}_y - \omega_x\omega_z)M_1^* = - W\dot{\rho} A_1$$

$$- \omega_y\dot{\rho}A_2 - \rho UWA_3 + Mgc\phi c\theta + 2\omega_y \int_{L_1} (\int_x^{L_1} \dot{m}d\xi)dx$$

$$- \sum_i M_i(\ddot{u}_{zi} + 2\omega_x\dot{u}_{yi} - 2\omega_y\dot{u}_{xi}) \tag{118}$$

in which

$$M^* = \rho A_1 + M \quad , \quad M_1^* = \rho A_2 + \int_M xdM \tag{119}$$

Consistent with the assumption of negligible width, such that $I_{xx}/I_{yy} << 1$, and using the aerodynamic torques defined above, the torque equations become

$$I_{xx}\dot{\omega}_x = 0 \tag{120}$$

$$I_{yy}^*(\dot{\omega}_y - \omega_x\omega_z) = - \omega_y\dot{\rho}A_s + (\dot{W} + V\omega_x - U\omega_y) A_2$$

$$+ W\dot{\rho}A_2 + U\omega_y\rho A_2 + UW\rho A_5 - 2\omega_y \int_{L_1} x(\int_x^{L_1} \dot{m}d\xi) dx$$

$$+ gc\theta c\phi \int_M xdM + \sum_i M_i x_i(\ddot{u}_{zi} + 2\omega_x\dot{u}_{yi} - 2\omega_y\dot{u}_{xi}) \tag{121}$$

$$I^*_{yy}(\dot{\omega}_z + \omega_x\omega_y) = -\omega_z \dot{\rho} A_5 - (\dot{V} + U\omega_z - \omega_x W)\rho A_2$$

$$- V\dot{\rho} A_2 + U\omega_z \rho A_2 - UV\rho A_4 - 2\omega_z \int_{L_1} x\left(\int_x^{L_1} \dot{m} d\xi\right) dx$$

$$+ gc\theta s\phi \int_M x dM - \sum_i M_i\, x_i (\ddot{u}_{yi} + 2\omega_z \dot{u}_{xi} - 2\omega_x \dot{u}_{zi}) \tag{122}$$

where

$$I^*_{yy} = \rho A_5 + I_{yy} \tag{123}$$

The discrete mass motion is described by Eqs. (60) and repeated here as

$$M_i \Big[\dot{U} + W\omega_y - V\omega_z + \ddot{u}_{xi} + 2\omega_y \dot{u}_{zi} - 2\omega_z \dot{u}_{yi}$$

$$+ \dot{\omega}_y u_{zi} - \dot{\omega}_z u_{yi} + \omega_x\omega_y u_{yi} - (x_i + u_{xi})(\omega_y^2 + \omega_z^2)$$

$$+ \omega_x\omega_z u_{zi}\Big] = M_i\, \underset{\sim}{g} \cdot \underset{\sim}{i} - k_{xi}\, u_{xi}$$

$$- c_{xi}\, \dot{u}_{xi} \tag{124a}$$

$$M_i \Big[\dot{V} + U\omega_z - W\omega_x + \ddot{u}_{yi} + 2\omega_z \dot{u}_{xi} - 2\omega_x \dot{u}_{zi}$$

$$+ \dot{\omega}_z (x_i + u_{xi}) - \dot{\omega}_x u_{zi} + u_{zi}\omega_y\omega_z - u_{yi}(\omega_z^2 + \omega_x^2)$$

$$+ (x_i + u_{xi})\ \omega_x\omega_y \Big] = M_i\ \underset{\sim}{g} \cdot \underset{\sim}{j} - k_{yi}u_{yi}$$

$$- c_{yi}\ \dot{u}_{yi} \tag{124b}$$

$$M_i \Big[\dot{W} + V\omega_x - U\omega_y + \ddot{u}_{zi} + 2\omega_x \dot{u}_{yi} - 2\omega_y \dot{u}_{xi}$$

$$+ \dot{\omega}_x u_{yi} - \dot{\omega}_y\ (x_i + u_{xi}) + \omega_x\omega_z (x_i + u_{xi})$$

$$- (\omega_x^2 + \omega_y^2)\ u_{zi} + \omega_y\omega_z u_{yi} \Big] = M_i\ \underset{\sim}{g} \cdot \underset{\sim}{k}$$

$$- k_{zi}\ u_{zi} - c_{zi}\ \dot{u}_{zi} \tag{124c}$$

Finally, using the distributed aerodynamic forces from Eqs. (97), (98) and (103), the equation of motion for the axial elastic motion become

$$\frac{\partial}{\partial x}\left(EA_c \frac{\partial u_x}{\partial x}\right) - \left[pA_f(0)\,\delta(x) + pA_f(L_1)\,\delta(x-L_1) + \frac{\partial}{\partial x}(pA_f)\right] \cdot$$

$$\left[h(x)-h(x-L_1)\right] - (p_e-p_a)A_e\,\delta(x) - qS_r c_x(M_a,x_j)\,\delta(x-x_j)$$

$$- mg\, s\theta - \left[\frac{\partial}{\partial t}(vm_f) + \frac{\partial}{\partial x}(v^2 m_f)\right]\left[h(x)-h(x-L_1)\right]$$

$$- M_i\left[\ddot{u}_{xi} + 2\omega_y\dot{u}_{zi} - 2\omega_z\dot{u}_{yi}\right]\delta(x-x_i) = m\left[\dot{U}\right.$$

$$+ \ddot{u}_x + \omega_y(W + 2\dot{u}_z) - \omega_z(V + 2\dot{u}_y) + (\dot{\omega}_y + \omega_x\omega_z)u_z$$

$$\left. - (\dot{\omega}_z - \omega_x\omega_y)u_y - (\omega_y^2 + \omega_z^2)(x+u_x)\right] + |\dot{M}|\,v(x_e,t)\,\ell_{xR}\,\delta(x) \qquad (125)$$

subject to the boundary conditions

$$EA_c \frac{\partial u_x}{\partial x} = 0 \quad \text{at} \quad x = 0,L \qquad (126)$$

while those for the transverse motion take the form

$$- \frac{\partial^2}{\partial x^2}\left(EI_{cz}\frac{\partial^2 u_y}{\partial x^2}\right) + \frac{\partial}{\partial x}\left(P\frac{\partial u_y}{\partial x}\right) - m_v\left[U + \dot{u}_x + \omega_y u_z\right.$$

$$\left. - \omega_z u_y\right]\left[\frac{\partial \dot{u}_y}{\partial x} + \omega_z + \omega_z\frac{\partial u_x}{\partial x} - \omega_x\frac{\partial u_z}{\partial x}\right] - \rho\left[U + \dot{u}_x + \omega_y u_z\right.$$

$$\left. - \omega_z u_y\right]\left[V + \dot{u}_y + \omega_z(x+u_x) - \omega_x u_z\right]\frac{dS}{dx} - \dot{m}_v\left[V + \dot{u}_y\right.$$

$$\left. + \omega_z(x+u_x) - \omega_x u_z\right] + mg\, s\phi c\theta + 2\omega_z v m_f\left[h(x)-h(x-L_1)\right]$$

$$- |\dot{M}|\; V(x_e,t)\;\ell_{yR}\,\delta(x) - M_i\left[\ddot{u}_{yi} + 2\omega_z\dot{u}_{xi} - 2\omega_x\dot{u}_{zi}\right]\delta(x-x_i)$$

$$= m^*\left[\dot{V} + \ddot{u}_y + \omega_z(U+2\dot{u}_x) - \omega_x(W+2\dot{u}_z) + (\dot{\omega}_z +\right.$$

$$\left.\omega_x\omega_y)(x + u_x) - (\dot{\omega}_x - \omega_y\omega_z)u_z - (\omega_x^2 + \omega_z^2)u_y\right] \qquad (127)$$

subject to the boundary conditions

$$EI_{cz} \frac{\partial^2 u_y}{\partial x^2} = 0 \quad \text{at} \quad x = 0,L$$

$$- \frac{\partial}{\partial x} \left(EI_{cz} \frac{\partial^2 u_y}{\partial x^2}\right) = 0 \quad \text{at} \quad x = 0,L \tag{128}$$

and

$$- \frac{\partial^2}{\partial x^2}\left(EI_{cy} \frac{\partial^2 u_z}{\partial x^2}\right) + \frac{\partial}{\partial x}\left(P \frac{\partial u_z}{\partial x}\right) - m_v \left[U + \dot{u}_x + \omega_y u_z\right.$$

$$\left. - \omega_z u_y\right]\left[\frac{\partial \dot{u}_z}{\partial x} + \omega_x \frac{\partial u_y}{\partial x} - \omega_y - \omega_y \frac{\partial u_x}{\partial x}\right] - \rho\left[U + \dot{u}_x + \omega_y u_z\right.$$

$$\left. - \omega_z u_y\right]\left[W + \dot{u}_z + \omega_x u_y - \omega_y (x+u_x)\right] \frac{dS}{dx} - \dot{m}_v \left[W + \dot{u}_z\right.$$

$$\left. + \omega_x u_y - \omega_y (x+u_x)\right] + mg\, c\phi c\theta - 2\omega_y v m_f \left[h(x) - h(x-L_1)\right]$$

$$- |\dot{M}| v(x_e,t)\, \ell_{zR}\, \delta(x) - M_i \left[\ddot{u}_{zi} + 2\omega_x \dot{u}_{yi} - 2\omega_y \dot{u}_{xi}\right] \delta(x-x_i)$$

$$= m^* \left[\dot{W} + \ddot{u}_z + \omega_x (V + 2\dot{u}_y) - \omega_y (U + 2\dot{u}_x) + (\dot{\omega}_x + \omega_y \omega_z) u_y\right.$$

$$\left. - (\dot{\omega}_y - \omega_x \omega_z)(x + u_x) - (\omega_x^2 + \omega_y^2) u_z\right] \tag{129}$$

with the boundary conditions

$$EI_{cy} \frac{\partial^2 u_z}{\partial x^2} = 0 \quad \text{at} \quad x = 0,L$$

$$- \frac{\partial}{\partial x} \left(EI_{cy} \frac{\partial^2 u_z}{\partial x^2}\right) = 0 \quad \text{at } x = 0,L. \tag{130}$$

In Eqs. (127) and (129) we introduced the notation $m^* = m + m_v$.

Equations (116) through (130) must be solved in conjunction with the appropriate initial conditions to obtain the rigid-body motion, the motion of the discrete masses, and the elastic displacements. The equations are coupled and nonlinear, so that no closed form solution appears possible. Hence, numerical methods, such as used in Reference 16, are indicated.

8. Axially Symmetric, Spinning Single-Stage Missile

The previous section considered a two-stage missile whose characteristics were different in each stage. Not only are their stiffnesses and mass distributions different, but there is variable mass in the first stage, while it is constant in the second. As a result, the center of mass moves along the missile axis with time.

As a special case, we wish to consider a slender single stage uniform missile as shown in Figure 7, where the missile is subject to the following assumptions: (1) the nose and fins are short in comparison to the total length of the missile, so that the transverse aerodynamic forces associated with the nose and fins can be regarded as acting at the ends of the missile; (2) the axial aerodynamic forces act only on nose and fins, where the nose has the shape of a cone; (3) the missile is unguided and the thrust is directed along the x-axis at all times; and (4) the internal flow is steady.

As a result of the first two assumptions, the effect of aerodynamic forces on the nose and fins of the missile can be expressed in the form of boundary conditions. From the third assumption it follows that the direction cosines have the values $\ell_{xR} = 1$, $\ell_{yR} = \ell_{zR} = 0$. As a result of the fourth assumption, we conclude from Reference 13 that the internal flow satisfies the equation

$$- \frac{\partial}{\partial x} (pA_f) - \frac{\partial}{\partial x} (v^2 m_f) \cong 0 \tag{131}$$

Since the nose and fins are assumed to be short, the missile is regarded as being uniform, so that it proves convenient to choose the origin of the moving coordinates system xyz at the center of the missile, from which it follows that a = b = L/2. This leads to the expression for the pressure distribution as

$$pA_f(x) = pA_f(L/2) - v^2 m_f \tag{132}$$

For uniform burning, Eq. (32) yields the relation

$$vm_f = m_o\beta \ (L/2 - x) \tag{133}$$

where $m_o\beta = - \dot{m}$ = constant is the uniform rate of mass burning per unit length. Substituting Eq. (133) into (132) results in

$$pA_f(x) = pA_f(L/2) - vm_o\beta(L/2 - x) \tag{134}$$

We next rederive expressions for the rigid-body aerodynamic forces. From Eqs. (92) we obtain

$$u_1 = U,\ v_1 = V + x\omega_z,\ w_1 = W - x\omega_y \tag{135}$$

so that Eqs. (97) and (98) become

$$f_{Ay} = -\ m_v(\dot{V} + x\omega_z) \ - \dot{m}_v(V + x\omega_z) - m_v U\omega_z$$

$$- m_v U\omega_z + m_v\omega_x(W - x\omega_y) - U\rho\,(V + x\omega_z)\ \frac{dS}{dx} \tag{136}$$

$$f_{Az} = -\ m_v(\dot{W} - x\omega_y) - \dot{m}_v(W - x\omega_y) + m_v U\omega_y$$

$$- m_v\omega_x(V + x\omega_z) + m_v\omega_y U - U\rho\,(W - x\omega_y)\ \frac{dS}{dx} \tag{137}$$

Integrate Eqs. (103), (136), and (137) along the missile length use the fact that the forward end is pointed such that $S(L/2) = 0$, and obtain

$$F_{Ax} = \int_{-L/2}^{L/2} f_{Ax}dx = -\ qS_r \sum_{j=1}^{n} c_x(M_a, x_j) = -\ qS_r \left[c_x(M_a, L/2)\right.$$

$$\left. + c_x(M_a, -L/2)\right] \tag{138}$$

$$F_{Ay} = \int_{-L/2}^{L/2} f_{Ay} dx = - M_v \left[\dot{V} + U\omega_z - W\omega_x \right] - M_v \omega_z U - \dot{M}_v V$$

$$+ UV\rho S_{-L/2} - U\rho \omega_z L/2 \; S_1 \tag{139}$$

$$F_{Az} = \int_{-L/2}^{L/2} f_{Az} dx = - M_v \left[\dot{W} + V\omega_x - U\omega_y \right] + M_v \omega_y U - \dot{M}_o W$$

$$+ UW\rho S_{-L/2} + U\rho \omega_y L/2 \; S_1 \tag{140}$$

in which

$$M_v = m_v L \tag{141}$$

$$S_{-L/2} = S(-L/2) \tag{142}$$

$$S_1 = S(-L/2) - \frac{2}{L} \int_{-L/2}^{L/2} S(x) \; dx \tag{143}$$

and n is the number of stations at which axial forces are assumed to act.

The rigid-body aerodynamic torques are found from the first of Eqs. (42) where

$$\underset{\sim}{r}_s = x \; \underset{\sim}{i} \tag{144}$$

The resulting expressions are

$$N_{Ax} = 0$$

$$N_{Ay} = -\frac{m_v L^3}{12}(\dot{\omega}_y - \omega_x\omega_z) - \frac{\dot{m}_v L^3}{12}\,\omega_y + UW\,\frac{L}{2}\,S_1\rho + U\rho\,\omega_y\,\frac{L^2}{4}\,S_2 \tag{145}$$

$$N_{Az} = -\frac{m_v L^3}{12}(\dot{\omega}_z + \omega_x\omega_y) - \frac{\dot{m}_v L^3}{12}\,\omega_z - UV\rho\,\frac{L}{2}\,S_1 + U\rho\,\omega_z\,\frac{L^2}{4}\,S_2$$

in which

$$S_2 = S(-L/2) + \frac{8}{L^2}\int_{-L/2}^{L/2} x\,S(x)\,dx \tag{146}$$

With the above expressions for the aerodynamic forces and torques, the rigid-body equations of motion, Eqs. (52) and (53) become

$$M\left[\dot{U}+W\omega_y-V\omega_z\right] = -\,qS_r\left[c_x(M_a,L/2)+C_x(M_a,-L/2)\right]+(p_e-p_a)A_e$$

$$+\ |\dot{M}|\,v(x_e,t)-Mgs\theta$$

$$M^*\left[\dot{V}+U\omega_z-W\omega_x\right] = -\,M_v\omega_z U-\dot{M}_v V+UV\rho\,S_{-L/2} + Mgs\phi c\theta - U\omega_z\rho\,L/2\;S_1$$

$$M^*\left[\dot{W}+V\omega_x - U\omega_y\right] = M_v\omega_y U-\dot{M}_v W+UW\rho\,S_{-L/2} + Mgc\phi c\theta + U\omega_y\rho\,L/2\;S_1$$

(147)

and

$$I_{xx}\,\dot{\omega}_x = 0$$

$$I^*_{yy}(\dot{\omega}_y - \omega_x\omega_z) = -\frac{\dot{m}_v L^3}{12}\,\omega_y + UW\rho\,\frac{L}{2}\,S_1 - U\rho\,\omega_y\,\frac{L^2}{4}\,S_2$$

$$I^*_{yy}(\dot{\omega}_z + \omega_x\omega_y) = -\frac{\dot{m}_v L^3}{12}\,\omega_z - UV\rho\,\frac{L}{2}\,S_1 - U\rho\,\omega_z\,\frac{L^2}{4}\,S_2 \tag{148}$$

respectively, in which we introduced the notation

$$M^* = M + M_v$$

$$I^*_{yy} = I_{yy} + \frac{m_v L^3}{12} \tag{149}$$

The differential equations (147) and (148), together with Eqs. (50) and (51), must be solved simultaneously to obtain the position and orientation of the missile as a function of time.

Before turning to the elastic motion of the missile, some mathematical preliminaries are in order and these deal with the solution of the boundary value problems. The solution is possible by means of modal analysis, provided the mass m is constant. This, of course, is not the case but let us assume for the moment that it is. The modal analysis amounts to solving the eigenvalue problem associated with the constant mass system, obtaining the so-called normal modes, and expressing the system

response as a superposition of the normal modes multiplied by corresponding generalized coordinates; such a solution is referred to as normal-mode vibration. Because the actual boundary-value problem possesses time-dependent coefficients, however, no normal-mode vibration is possible. Nevertheless, by virtue of the uniform-burning assumption, it turns out that a procedure based on the normal-mode approach can be used here to obtain sets of ordinary differential equations which are far simpler to solve than partial differential equations. But, because the normal modes imply a physical behavior which the actual system does not possess, we shall regard the solution as a superposition of eigenfunctions associated with the constant-mass system, rather than superposition of normal modes. To this end we will assume that

$$
\begin{aligned}
u_x(x,t) &= \sum_{r=1}^{\infty} \mu_r(x)\ q_r(t) \\
u_y(x,t) &= \sum_{r=1}^{\infty} \nu_r(x)\ \eta_r(t) \qquad (150) \\
u_z(x,t) &= \sum_{r=1}^{\infty} \nu_r(x)\ \kappa_r(t)
\end{aligned}
$$

where q_r, η_r, κ_r are generalized coordinates and μ_r and ν_r are certain functions representing the normal modes. To obtain μ_r we consider the eigenvalue problem consisting of the differential equation

$$EA_c \mu'' + \Omega^2 m_0 \mu = 0 \tag{151}$$

over the domain $-L/2 < x < L/2$ and the boundary conditions

$$\mu'(L/2) = \mu'(-L/2) = 0 \tag{152}$$

where primes denote differentiation with respect to x. The eigenvalue problem, Eqs. (151) and (152), corresponds to the axial vibration of a uniform, constant mass bar with both ends unconstrained. The solution of the problem can be shown to consist of the denumberably infinite set of eigenfunctions (see, for example, Reference 19, pp. 151-154)

$$\mu_r = \sqrt{2/m_0 L} \cos r\pi(x/L-1/2) \quad r = 1,2,3,--- \tag{153}$$

and the eigenvalues

$$\Omega_r = r\pi \sqrt{EA_c/m_0 L^2} \tag{154}$$

The eigenfunctions are orthogonal and, in addition, they are normalized so as to satisfy the relation

$$\int_{-L/2}^{L/2} m_o \mu_r(x) \mu_s(x) dx = \delta_{rs}, \quad r,s = 1,2,3,--- \tag{155}$$

where δ_{rs} is the Kronecker delta. The eigenfunction correspond-

ing to r = 0 represents the rigid-body mode $\mu_0 = \sqrt{1/m_0 L}$ and the associated eigenvalue is zero, $\Omega_0 = 0$, as is to be expected for a semidefinite system. It is easy to see also that μ_0 is orthogonal to the eigenfunctions μ_s (s = 1,2,3, ---).

Similarly, to obtain ν_r we consider the eigenvalue problem for transverse vibration of a uniform beam comprising the differential equation

$$EI_c \, \nu'''' = \Lambda^2 m_0 \nu \tag{156}$$

and the boundary conditions

$$\nu'' = \nu''' = 0 \quad \text{at } x = -L/2, \; L/2 \tag{157}$$

The solution to this problem (also given in Reference 19, Sections 5-10 and 10-5) consists of the denumberably infinite set of eigenfunctions. They can be shown to have the expressions

$$\nu_r = \begin{cases} \dfrac{1}{\sqrt{m_0 L}} \left(\dfrac{\cos\beta_r x}{\cos \beta_r L/2} + \dfrac{\cosh\beta_r x}{\cosh\beta_r L/2} \right) & r = 1,3,5, --- \\[2ex] \dfrac{1}{\sqrt{m_0 L}} \left(\dfrac{\sin\beta_r x}{\sin\beta_r L/2} + \dfrac{\sinh\beta_r x}{\sinh\beta_r L/2} \right) & r = 2,4,6, --- \end{cases} \tag{158}$$

where the eigenvalues are found by solving the equation $\cos\beta_r L \cdot \cosh\beta_r L = 1$, or equivalently

$$\tan\frac{\beta_r L}{2} + \tanh\frac{\beta_r L}{2} = 0 \qquad r = 1,3,5, ---$$

$$\tan\frac{\beta_r L}{2} - \tanh\frac{\beta_r L}{2} = 0 \qquad r = 2,4,6, --- \tag{159}$$

in which

$$\beta_r^4 = \frac{\Lambda_r^2 m_0}{EI_c} \tag{160}$$

The eigenfunctions are orthogonal and they are normalized so as to satisfy

$$\int_{-L/2}^{L/2} m_0 \nu_r(x)\ \nu_s(x)dx = \delta_{rs} \qquad r,s = 1,2,3, --- \tag{161}$$

It may be noted that two rigid-body modes exist and it is not difficult to show that they are orthogonal to the remaining eigenfunctions.

(a) Axial Vibration of a Rocket.

Using the above assumptions, and the aerodynamic forces of Section 6, we may write Eq. (83) as

$$EA_c \frac{\partial^2 u_x}{\partial x^2} - qS_r c_x(M_a,L/2)\delta(x-L/2) - qS_r c_x(M_a,-L/2)\delta(x+L/2) + m\underset{\sim}{g}\cdot\underset{\sim}{i}$$

$$= m\Big[\dot{U}+\ddot{u}_x+\omega_y(W+2\dot{u}_z) - \omega_z(V+2\dot{u}_y)+(\dot{\omega}_y+\omega_x\omega_z)u_z$$

$$- (\dot{\omega}_z-\omega_x\omega_y)u_y - (x+u_x)(\omega_y^2 + \omega_z^2)\Big] - P_{x1}\delta(x+L/2)+P_{x2}\delta(x-L/2) \tag{162}$$

with the boundary conditions

$$EA_c \frac{\partial u_x}{\partial x} = 0 \quad \text{at} \quad x = -L/2 \ , \ L/2 \tag{163}$$

In Eq. (162) the forces P_{x1} and P_{x2} are given by the expression

$$\begin{aligned} P_{x1} &= p\ A_f(L/2) \\ P_{x2} &= p\ A_f(L/2) - (p_e - p_a)A_e - v_e\ M_0\beta \end{aligned} \tag{164}$$

and they represent forces due to internal fluid flow and thrust. In Eq. (164), M_0 is the total mass $M_0 = \int_{-L/2}^{L/2} m_0\ dx$ and β is the burning rate. We may now insert expressions (150) in Eq. (162) with the result

$$\begin{aligned} \sum_r &- EA_c\ \mu_r''\ q_r + m\mu_r\ \ddot{q}_r - m(\omega_y^2+\omega_z^2)\mu_r q_r = P_{x1}\ \delta(x-L/2) \\ &- P_{x2}\delta(x+L/2) - qS_r c_x(M_a,L/2)\delta(x-L/2) - qS_r c_x(M_a,-L/2)\delta(x+L/2) \\ &+ m\underset{\sim}{g}\cdot\underset{\sim}{i} - m\left[\dot{U}+\omega_y W-\omega_z V\right] - m\left\{2\omega_y \sum_r \nu_r\dot{\kappa}_r\right. \\ &- 2\omega_z \sum_r \nu_r\dot{\eta}_r + (\dot{\omega}_y+\omega_x\omega_z)\sum_r \nu_r\kappa_r - x(\omega_y^2+\omega_z^2) \\ &\left. - (\dot{\omega}_z - \omega_x\omega_y)\sum_r \nu_r\eta_r\right\} \end{aligned} \tag{165}$$

Using Eq. (151), multiplying Eq. (165) by μ_s, integrating along the missile, and using the orthogonality conditions, we obtain

$$\frac{m}{m_0}\left[\ddot{q}_r - (\omega_y^2 + \omega_z^2)q_r\right] + \Omega_r^2\, q_r = P_{x1}\, \mu_r(L/2)$$

$$- P_{x2}\, \mu_r(-L/2) - qS_r\left[c_x(M_a,L/2)\mu_r(L/2) + c_x(M_a,-L/2)\mu_r(-L/2)\right]$$

$$- \frac{m}{m_0}\sum_s \left[2\omega_y\dot{\kappa}_s - 2\omega_z\, \dot{\eta}_s + (\dot{\omega}_y - \omega_x\omega_z)\kappa_s - (\dot{\omega}_z\right.$$

$$\left. - \omega_x\omega_y)\eta_s\right]\int_{-L/2}^{L/2} m_0\nu_s(x)\mu_r(x)dx + \frac{m}{m_0}(\omega_y^2 + \omega_z^2)\int_{-L/2}^{L/2} m_0 x\mu_r(x)dx$$

$$r = 1,2,3, \text{---} \qquad (166)$$

which are subject to the initial conditions

$$q_r(0) = \int_{-L/2}^{L/2} m_0 u_x(x,0)\mu_r(x)dx, \quad \dot{q}_r(0) = \int_{-L/2}^{L/2} m_0 \frac{\partial u_x(x,0)}{\partial t}\mu_r(x)dx$$

$$\eta_r(0) = \int_{-L/2}^{L/2} m_0 u_y(x,0)\nu_r(x)dx, \quad \dot{\eta}_r(0) = \int_{-L/2}^{L/2} m_0 \frac{\partial u_y(x,0)}{\partial t}\nu_r(x)dx$$

$$\kappa_r(0) = \int_{-L/2}^{L/2} m_0 u_z(x,0)\nu_r(x)dx, \quad \dot{\kappa}_r(0) = \int_{-L/2}^{L/2} m_0 \frac{\partial u_z(x,0)}{\partial t}\nu_r(x)dx$$

(167)

(b) Transverse Vibration of a Rocket.

Consider the differential equation for vibration in the xy-plane. Assuming constant stiffness, $I_{cy} = I_{cz} = I_c$, neglecting Coriolis forces (see Reference 18, page 14), and using Eq. (97), we write Eq. (85) as

$$- EI_c \frac{\partial^4 u_y}{\partial x^4} - \frac{\partial}{\partial x}\left(P \frac{\partial u_y}{\partial x}\right) + m\underset{\sim}{g}\cdot\underset{\sim}{j} - m_v\left[U+\dot{u}_x+\omega_y u_z-\omega_z\omega_y\right]\left[\frac{\partial \dot{u}_y}{\partial x}\right.$$

$$\left. + \omega_z + \omega_z \frac{\partial u_x}{\partial x} - \omega_x \frac{\partial u_z}{\partial x}\right] - \dot{\rho} S\left[V + \dot{u}_y + \omega_z(x+u_x)\right.$$

$$\left. - \omega_x u_z\right] = m^*\left[\dot{V} + \ddot{u}_y + \omega_z(U+2\dot{u}_x) - \omega_x(W+2\dot{u}_z)\right.$$

$$\left. - \dot{\omega}_z(x+u_x) - \omega_x\omega_y(x+u_x) - \omega_y\omega_z u_z - (\omega_x^2 + \omega_z^2)u_y\right]$$

$$- P_{y1}\,\delta(x-L/2) - P_{y2}\,\delta(x+L/2) \tag{168}$$

in which we introduced the notation

$$m^* = m + m_v = m_c + m_f + m_v \tag{169}$$

and P_{y1} and P_{y2} are aerodynamic forces produced by the changes in the cross-sectional area at the forward and aft ends of the missile, respectively. Their form will be developed shortly.

Using expressions (150) as well as Eqs. (156) and (81), multiplying the resulting expression by ν_s, integrating along the missile, and using the orthogonality conditions, we obtain

$$\frac{m^*}{m_0}\ddot{\eta}_r + \dot{\rho}\,\frac{S}{m_0}\,\dot{\eta}_r + \left[\Lambda_r^2 - \frac{m_v}{m_0}\,\omega_z^2 - \frac{m^*}{m_0}\,(\omega_x^2 + \omega_z^2)\right]\eta_r$$

$$- \sum_s \sum_t \eta_s q_t EA_c \int_{-L/2}^{L/2} \mu_t' \nu_s' \nu_r' \, dx + \frac{m_v}{m_0} U\omega_z \sum_s q_s \int_{-L/2}^{L/2} m_0 \mu_s' \nu_r \, dx$$

$$+ \frac{m_v}{m_0} \sum_s \sum_t \dot{q}_s(\dot{\eta}_t - \omega_x \kappa_t) \int_{-L/2}^{L/2} m_0 \mu_s \nu_t' \nu_r dx + \sum_s \left[\frac{m^*}{m_0}(\dot{\omega}_z q_s\right.$$

$$\left. + \omega_x \omega_y q_s + 2\omega_z \dot{q}_s) + \frac{m_v}{m_0}\,\omega_z \dot{q}_s + \dot{\rho}\,\frac{S}{m_0}\,\omega_z q_s\right] \int_{-L/2}^{L/2} m_0 \mu_s \nu_r dx$$

$$+ \frac{m_v}{m_0} \sum_s \sum_t (\omega_y \kappa_s - \omega_z \eta_s)(\dot{\eta}_t - \omega_x \kappa_t) \int_{-L/2}^{L/2} m_0 \nu_s \nu_t' \nu_r \, dx$$

$$+ \frac{m_v}{m_0}\,\omega_z \sum_s \sum_t \dot{q}_s q_t \int_{-L/2}^{L/2} m_0 \mu_s \mu_t' \nu_r dx + \frac{m_v}{m_0} \sum_s \sum_t (\omega_y \kappa_s$$

$$- \omega_z \eta_s)\omega_z q_t \int_{-L/2}^{L/2} m_0 \nu_s \mu_t' \nu_r dx - 2\,\frac{m^*}{m_0}\,\omega_x \dot{\kappa}_r$$

$$- \left[\frac{m^*}{m_0}\,\omega_y \omega_z - \frac{m_v}{m_0}\,\omega_y \omega_z + \dot{\rho}\,\frac{S}{m_0}\,\omega_x\right]\kappa_r - P_{y1}\nu_r(L/2) - P_{y2}\nu_r(-L/2) = 0$$

$$r = 1,2,3, \text{---} \qquad (170)$$

which are subject to the initial conditions, Eqs. (167).

The transverse boundary forces P_{y1} and P_{y2} arise from aerodynamical effects and can be obtained from Eq. (97). They are simply the definite integrals of the last term in Eq. (97)

with proper integration limits. The forward portion of the missile is assumed to consist of a cone starting at $x = L/2$ and ending at $x = x_n$ at which point $r(x_n) = r^*$. Hence

$$S(x) = \pi r^2(x) = \pi \left[(L/2-x) \frac{r^*}{(L/2-x_n)} \right]^2 , \quad L/2 \leq x \leq x_n \tag{171}$$

from which

$$\frac{dS}{dx} = - \frac{2\pi\, r^{*2}}{(L/2-x_n)^2} (L/2 - x) \tag{172}$$

so that

$$P_{y1} = \int_{L/2-x_n}^{L/2} \frac{2\pi\, r^{*2}}{(L/2-x_n)^2} \rho \left[U + \dot{u}_x + \omega_y u_z - \omega_z u_y \right] \left[V + \dot{u}_y + \omega_z (x+u_x) - \omega_x u_z \right] (L/2 - x)\, dx$$

$$\cong \pi\rho\, r^{*2} \left\{ U + \sum_s \dot{q}_s \mu_s (L/2) + \sum_r \left[\omega_y \kappa_r - \omega_z \eta_s \right] \nu_r (L/2) \right\} \left\{ V + \frac{\omega_z L}{2} + \sum_s \omega_z q_s \mu_s (L/2) + \sum_r \left[\dot{\eta}_r - \omega_x \kappa_r \right] \nu_r (L/2) \right\} \tag{173}$$

The aft force, P_{y2}, is found in a similar manner. Because the equivalent area for the finned region is

$$S = \pi^2 \left(1 - \frac{r^2}{s^2} + \frac{r^4}{s^4}\right) , \quad x_r \leq x \leq -L/2 \tag{174}$$

and since $r = r^*$ is constant, whereas s is the variable, we obtain

$$\frac{dS}{dx} = 2\pi \left(s - \frac{r^4}{s^3}\right) \frac{ds}{dx} \tag{175}$$

Let s increase linearly from $s = r^*$ to $s = s^*$, where s^* is the distance from the center line of the missile to the tip of the fin at its aft end, so that

$$s = \left(\frac{s^* - r^*}{x_r - L/2}\right) x + \frac{x_r s^* - r^* L/2}{x_r - L/2} \tag{176}$$

in which x_r is the position from the origin along the missile axis to the point where the fin begins. Hence

$$\frac{ds}{dx} = \frac{s^* - r^*}{x_r - L/2} \tag{177}$$

and Eq. (175) becomes

$$\frac{dS}{dx} = 2\pi \left\{\left(\frac{s^*-r^*}{x_r-L/2}\right)x + \frac{x_r s^*-r^*L/2}{x_r-L/2} - r^{*4}\left[\left(\frac{s^*-r^*}{x_r-L/2}\right)x + \frac{x_r s^*-r^*L/2}{x_r-L/2}\right]^{-3}\right\}\left(\frac{s^*-r^*}{x_r-L/2}\right) \tag{178}$$

Using Eq. (97), we write

$$P_{y2} = -\rho \int_{-L/2}^{L/2} 2\pi \left(\frac{s^*-r^*}{x_r-L/2}\right)(U + \dot{u}_x + \omega_y u_z - \omega_z u_y)\left[V + \dot{u}_y + \omega_z (x + u_x)\right.$$

$$- \omega_x u_z \Big] \Big\{ \Big(\frac{s^*-r^*}{x_r-L/2}\Big) x + \frac{x_r s^*-r^* L/2}{x_r - L/2} - r^{*4} \Big[\Big(\frac{s^*-r^*}{x_r-L/2}\Big) x$$

$$+ \frac{x_r s^*-r^* L/2}{x_r-L/2} \Big]^{-3} dx \cong \rho \pi \Big[(s^*-r^*)(2s^*-r^*)$$

$$+ r^{*4} \Big[\frac{1}{(2s^*-r^*)^2} - \frac{1}{s^{*2}} \Big] \Big] \Big\} \Big\{ U + \sum_s \dot{q}_s \mu_s(-L/2)$$

$$+ \sum_r (\omega_y \kappa_r - \omega_z \eta_r) \nu_r(-L/2) \Big\} \Big\{ V + \frac{\omega_z L}{2} + \sum_s \omega_z q_s \mu_s(-L/2)$$

$$+ \sum_r (\dot{\eta}_r - \omega_x \kappa_r) \nu_r(-L/2) \Big\} \tag{179}$$

For vibration in the xz-plane, we use the same technique as above and obtain the equation for κ_r in the form

$$\frac{m^*}{m_0} \ddot{\kappa}_r + \dot{\rho} \frac{S}{m_0} \dot{\kappa}_r + \Big[\Lambda_r^2 - \frac{m_v}{m_0} \omega_y^2 - \frac{m^*}{m_0} (\omega_x^2 + \omega_y^2) \Big] \kappa_r$$

$$- \sum_s \sum_t \kappa_s q_t E A_c \int_{-L/2}^{L/2} \mu_t' \nu_s' \nu_r' \, dx - \frac{m_v}{m_0} U \omega_y \sum_s q_s \int_{-L/2}^{L/2} m_0 \mu_s' \nu_r \, dx$$

$$+ \frac{m_v}{m_0} \sum_s \sum_t \dot{q}_s (\dot{\kappa}_t + \omega_x \eta_t) \int_{-L/2}^{L/2} m_0 \mu_s \nu_t' \nu_r \, dx + \sum_s \Big[\frac{m^*}{m_0} (2\omega_y \dot{q}_s$$

$$+ \dot{\omega}_y q_s - \omega_x \omega_z q_s) - \frac{m_v}{m_0} \omega_y \dot{q}_s - \dot{\rho} \frac{S}{m_0} \omega_y q_s \Big] \int_{-L/2}^{L/2} m_0 \mu_s \nu_r \, dx$$

$$+ \frac{m_v}{m_0} \sum_s \sum_t (\omega_y \kappa_s - \omega_z \eta_s)(\dot{\kappa}_t + \omega_x \eta_t) \int_{-L/2}^{L/2} m_0 \nu_s \nu_t' \nu_r \, dx$$

$$- \frac{m_v}{m_0} \omega_y \sum_s \sum_t \dot{q}_s q_t \int_{-L/2}^{L/2} m_0 \mu_s \mu_t' \nu_r \, dx - \frac{m_v}{m_0} \sum_s \sum_t (\omega_y^2 \kappa_s$$

$$- \omega_y \omega_z \eta_s) q_t \int_{-L/2}^{L/2} m_0 \nu_s \mu_t' \nu_r \, dx + 2 \frac{m^*}{m_0} \omega_x \dot{\eta}_r$$

$$- \left[\frac{m^*}{m_0} \omega_y \omega_z - \frac{m_v}{m_0} \omega_y \omega_z - \dot{\rho} \frac{S}{m_0} \omega_x \right] \eta_r - P_{z1} \nu_r(L/2)$$

$$- P_{z2} \nu_r(-L/2) = 0 \qquad r = 1,2,3, --- \tag{180}$$

where the initial conditions, Eqs. (167), apply and

$$P_{z1} \cong \pi \rho r^{*2} \left[U + \sum_s \dot{q}_s \mu_s(L/2) + \sum_r (\omega_y \kappa_r - \omega_z \eta_r) \nu_r(L/2) \right] \left\{ W \right.$$

$$\left. - \frac{\omega_y L}{2} - \omega_y \sum_s q_s \mu_s(L/2) + \sum_r (\dot{\kappa}_r + \omega_x \eta_r) \nu_r(L/2) \right\} \tag{181}$$

$$P_{z2} \cong - \rho \pi \left\{ (s^* - r^*)(2s^* - r^*) + r^{*4} \left[\frac{1}{(2s^* - r^*)^2} - \frac{1}{s^{*2}} \right] \right\} \left\{ U + \sum_s \dot{q}_s \mu_s(-L/2) \right.$$

$$\left. + \sum_r (\omega_y \kappa_r - \omega_z \eta_r) \nu_r(-L/2) \right\} \left\{ W - \frac{\omega_y L}{2} - \omega_y \sum_s q_s \mu_s(-L/2) \right.$$

$$\left. + \sum_r (\dot{\kappa}_r + \omega_x \eta_r) \nu_r(-L/2) \right\} \tag{182}$$

9. Results

Since no closed form solution for the coupled nonlinear differential equations of the previous section seems possible, the equations for both the rigid and elastic motion were solved numerically on an IBM 360/65 computer. In seeking numerical solutions to differential equations, it is frequently more advantageous to work with first-order rather than second-order differential equations. Given the n second-order equations

$$\ddot{y}_i = f_i(y_1, y_2, ---, y_n, \dot{y}_1, \dot{y}_2, ---, \dot{y}_n, t) \quad i = 1,2,---,n \tag{183}$$

introduce the auxiliary variables

$$z_i = \dot{y}_i \qquad i = 1,2, ---, n \tag{184}$$

so that we can replace Eqs. (183) by the 2n first-order equations

$$\begin{aligned} \dot{y}_i &= z_i \\ \dot{z}_i &= f_i(y_1,y_2,---,y_n,z_1,z_2,---,z_n,t) \end{aligned} \qquad i = 1,2,---, n \tag{185}$$

We have now obtained a system of equations whose solution consists of n coordinates and n velocities. Of the 2n equations the first n are purely kinematical, whereas the remaining n equations result from the dynamical laws governing the motion, as reflected by Eq. (183). For a discussion of this type of

formulation, as well as ones involving coordinates and momenta instead of coordinates and velocities, see Reference 27, pages 91 through 97.

The technique described above is used on the differential equations of the previous section to obtain a set of first-order differential equations. These are then solved numerically by means of a fourth-order Runge-Kutta formulae with the modification due to Gill. This method is described in Reference 28. An IBM supplied SSP subroutine RKGS is then used for solving these equations. This subroutine as well as the rest of the computations necessary for solving the differential equations was written for the computer in the FORTRAN IV (G level) language (see Appendix B).

The constants which were used to describe the missile were

$E = 30 \times 10^6$ psi, $L = 100$ in., $A_c = 7.53$ in^2

$m_o g = 4.25$ lbs/in, $\dot{m}_c g = 0.5$ lbs/in/sec, $I_c = 93$ in^4

$v(x_e,t) = 1000$ ft/sec, $\omega_x = 0$ rad/sec, $S_r = 9\pi$ in^2

The initial conditions used were

$X(0) = Y(0) = Z(0) = 0$ ft, $U(0) = V(0) = W(0) = 0$ ft/sec

$\omega_Y(0) = \omega_Z(0) = 0$ rad/sec, $\psi(0) = \phi(0) = 0$ rad.

$\theta(0) = 90$ deg. $u_x(x,0) = u_z(x,0) = 0$, ft.

$$u_y(x,0) = 10^{-6}(\cos\pi x/L-2/\pi) + 0.5\times10^{-6}(\sin 2\pi x/L-6x/\pi L), \text{ft}$$

In computing the density we assume an exponential atmosphere of the form

$$\rho = \rho_0 \exp(-x/23{,}500)$$

$$= 2.7\times10^{-3} \exp(-x/23{,}500)$$

in which ρ_0 is the sea level density and x is the altitude above sea level.

The axial coefficient has the general shape shown schematically in Figure 8 (see for example References 29 and 30). We assume these curves to be approximated by polynomials of the form

$$c_x = \frac{1}{2}\left[9c_{x1} + 27\, c_{x1/3} - 27\, c_{x2/3}\right]M_a^3 - \frac{1}{2}\left[9c_{x1} + 45\, c_{x1/3} - 36\, c_{x2/3}\right]M_a^2 + \frac{1}{2}\left[2\, c_{x1} + 18\, c_{x1/3} - 9\, c_{x2/3}\right]M_a + c_{x0} \qquad 0 \le M_a \le 1$$

$$c_x = \frac{1}{60}\left[c_{x6} - 10c_{x3} + 15\, c_{x2} - 6\, c_{x1}\right]M_a^3 - \frac{1}{10}\left[c_{x6} - 15\, c_{x3} + 25\, c_{x2} - 11\, c_{x1}\right]M_a^2 + \frac{1}{60}\left[11\, c_{x6} - 200c_{x3} + 405c_{x2} - 216\, c_{x1}\right]M_a - \frac{1}{10}\, c_{x6} + 2\, c_{x3} - \frac{9}{2}\, c_{x2} + \frac{18}{5}\, c_{x1} \qquad 1 \le M_a \le 6$$

where c_{x1}, $c_{x1/3}$, etc. represent experimentally determined values for the coefficients at $M_a = 1$, $M_a = 1/3$, etc. The same type of curve is used for both the forward and the aft part of the missile, the difference being in the constatns used. For the nose we use (References 29 and 30)

$$c_{x0} = 0.2 \ , \quad c_{x1/3} = 0.2 \ , \quad c_{x2/3} = 0.2 \ , \quad c_{x1} = 0.55$$

$$c_{x2} = 0.4 \ , \quad c_{x3} = 0.24 \ , \quad c_{x6} = 0.2$$

While for the aft portion we use

$$c_{x0} = 0.05 \ , \quad c_{x1/3} = 0.1 \ , \quad c_{x2/3} = 0.15 \ , \quad c_{x1} = 0.4$$

$$c_{x2} = 0.2 \ , \quad c_{x3} = 0.15 \ , \quad c_{x6} = 0.1$$

Of current interest is the fluctuations of the chamber pressure and their effect on the elastic motion of the missile. Various types of pressure-time histories may be used such as, for example, a step function which was used in References 13 and 15. A schematic representation of an actual pressure-time history as well as a step function is shown in Figure 9a. We assure that this curve may be approximated by a curve which represents the response of a second-order system to a step applied at time t = 0. Hence, we write

$$P_L = P_{LSS}\left[1 + e^{-\zeta\omega t}\left(\frac{\zeta}{\sqrt{1-\zeta^2}}\sin\omega_d t - \cos\omega_d t\right)\right] \tag{186}$$

in which

$$\omega_d = \omega(1 - \zeta^2)^{1/2} \tag{187}$$

In Eq. (186), P_{LSS} is the steady state value of the pressure, ζ is the damping ratio, ω is the natural frequency of the system. We assume that the first two variables have the numerical values

$$P_{LSS} = 1000.\ \text{psi} \quad , \ \zeta = 0.4$$

We choose several values for ω and these correspond to

1: a period of 0.0001 seconds $\omega = 2\pi/0.0001$

2: the first axial frequency $\omega = \pi\sqrt{EA_c/m_o L^2}$

3: the first transverse frequency $\omega = (1.506\pi)^2\sqrt{EI/m_o L^4}$

The pressure-time history for the first two cases are shown in Figure 9b.

Using the above constants, variables, and inital conditions, Figure 10 shows the resulting graph for the rigid-body motion with and without aerodynamic forces. As expected, at a given period in time, the missile travels to a higher altitude without

aerodynamic forces than with aerodynamic forces.

Figure 11 shows two resulting elastic motions, one due to a pressure-time history assumed to be a step as in References 13 and 15 and the other case 1 listed above. Figure 12 shows the elastic motions for cases 2 and 3.

In comparing the curves in Figures 11 and 12, there are noticeable differences in the various cases considered, which indicates that internal pressure may be a significatn parameter influencing the elastic motion of the missile. Considered here is only one type of approximation to the pressure which approaches a constant fairly rapidly. Thereafter the pressure remains constant without any fluctuations. It is to be noticed that, although the steady state value for the pressure is of the same magnitude, the cycle times for the elastic motion are not the same for all cases considered. This may be attributed to the frequency associated with the pressure fluctuations. Hence, the pressure acts like a forcing function and, if the fluctuations are sufficiently violent, the missile structure may fail due to excessive loading.

Another interesting phenomenon appears due to the pressure fluctuation and this is the fact that, unlike previous analysis, axial compression also takes place. This may be accounted for by recalling that in the present case a finite time is necessary for the pressure to build up in the combustion chamber. During this time the thrust, assumed to attain its magnitude immediately, acts at the aft end so as to push the missile. Hence,

compression results there until the pressure inside the combustion chamber is sufficient to counteract this thrust force. As there is no damping in the axial direction, compression may appear again during the next cycle of its motion.

Although not obvious from the graphs, the transverse motion is affected by the pressure-time history. The reason that these effects are not obvious is that the differences between the different cases are too small to show on the graphs.

10. Summary and Conclusions

The present work, written in two parts, considers first the general formulation of a two-stage variable-mass flexible missile. This formulation, based on work done in References 13 and 14, which considers as its basis a single-stage missile, represents a logical extension and shows the versatility of its formulation. The mathematical formulation is reduced to six ordinary differential equations for the three rigid-body translations and three rigid-body rotations, 3n ordinary differential equations representing the motion of the n discrete masses as well as three partial differential equations with corresponding boundary conditions for one longitudinal and two transverse elastic displacements. The equations are nonlinear and possess time-dependent coefficients due to the mass variation. At present the resulting equations do not appear to lend themselves to a solution other than by numerical techniques, such as those presented in Reference 16.

Special interest lies in a single stage variable-mass flexible rocket with no discrete masses. A reasonable assumption is that the elastic displacements do not affect the rigid-body motion appreciably. Under this assumption, the rigid-body motion can be solved independently of the elastic motion. The equations for the rigid-body reduce to the familiar case of a six-degree-of-freedom rigid-body, possessing variable mass, and subjected to forces due to engine thrust as well as aerodynamic forces. If the mass distribution, as well as the rate of decrease of mass, is assumed to be uniform along the missile, then the mass center does not shift relative to the vehicle.

For zero viscosity, the equation for the internal gas flow can be separated from the equation for the longitudinal elastic displacement. The gas flow problem is one of a steady adiabatic flow in a channel of uniform cross-sectional area to which mass is added continuously at constant enthalpy and negligible kinetic energy. The solution to this problem leads us to forces applied at the boundaries, namely the closed end and the nozzle end. Due to the aerodynamic forces, coupling exists between the axial and transverse elastic motion. Hence, the problem consists of solving three nonhomogenous coupled partial differential equations with homogenous boundary conditions. A solution of this problem is obtained in the form of an infinite series of eigenfunctions, associated with a constant-mass missile free at both ends, multiplied by time-dependent generalized coordinates. A procedure resembling modal analysis then leads to a set of coupled ordinary

differential equations. This set of equations as well as the rigid-body equations of motion are then solved using a high-speed digital computer.

In conclusion, a general treatment for a two-stage flexible missile is treated under a new unifying formulation. Vehicle flexibility and mass-variation as well as aerodynamic force and discrete masses are included. This formulation is then used on a simplified single-stage missile and results illustrating the effects of pressure fluctuations on the elastic motion of a flexible missile are presented.

Appendix A - Calculations of the Engine Thrust

The purpose of a nozzle is to convert the enthalpy of the flowing gas into kinetic energy in an efficient manner while, at the same time, restricting the escape of the gas to a rate suitable for the propellant reaction inside the combustion chamber. We shall assume that the nozzle under consideration is convergent-divergent, designed to allow an isentropic expansion to an ambient pressure less than critical. In the convergent portion of the nozzle, before the throat, the flow is subsonic, reaching sonic level at the throat section, at which point the flow properties are referred to as critical, and becoming supersonic in the divergent portion after the throat. Although losses may occur in the nozzle, they are assumed to be small so that the analysis is based on the equations for one-dimensional isentropic steady flow of a compressible perfect gas.

Let us consider the one-dimensional isentropic flow of Figure A1 and assume that the stagnation conditions, denoted by the subscript 0, are known. Under these circumstances, we may write the equations governing the flow as follows:

First the flow must satisfy the first law of thermodynamics. Considering the control volume shown in Figure A1, and denoting the enthalpy per unit mass by h, this law can be stated

$$h_0 = h_1 + \frac{1}{2} v_1^2 = h_2 + \frac{1}{2} v_2^2 \qquad \text{(A1)}$$

Assuming that there is no friction or heat transfer present, the second law of thermodynamics becomes simply

$$s = s_0 = \text{constant} \tag{A2}$$

or the entropy s is constant, as implied by the name of the type of flow under consideration.

The flow must also satisfy the continuity equation. Since there is no mass addition within the nozzle, we must have

$$\rho_1 A_1 v_1 = \rho_2 A_2 v_2 = \text{constant} \tag{A3}$$

where the flow properties at stations 1 and 2 are denoted by the corresponding subscripts.

Similarly the flow must satisfy the momentum equation. Denoting the force exerted by the nozzle wall on the gas by F_T, this equation can be written

$$F_T = p_1 A_1 - p_2 A_2 = \rho_2 A_2 v_2^2 - \rho_1 A_1 v_1^2 \tag{A4}$$

Equations (A1) through (A4) must be supplemented by the equation of state which for a perfect gas has the form

$$p = \rho RT \tag{A5}$$

in which R is the universal gas constant and T the temperature.

The above relations can be used to derive expressions for the pressure, density, etc., at any point along the nozzle. For a perfect gas the speed of sound is given by

$$c = (kRT)^{1/2} \tag{A6}$$

where

$$k = c_p/c_v \tag{A7}$$

in which c_p and c_v are the specific heats. Then the following relations can be shown to hold true.*

$$\frac{T}{T_0} = \frac{1}{1 + \left[(k-1)/2\right]M^2} \tag{A8}$$

$$\frac{p}{p_0} = \frac{1}{\left\{1 + \left[(k-1)/2\right]M^2\right\}^{k/(k-1)}} \tag{A9}$$

$$\frac{\rho}{\rho_0} = \frac{1}{\left\{1 + \left[(k-1)/2\right]M^2\right\}^{1/(k-1)}} \tag{A10}$$

where $M = v/c$ is the Mach number. Moreover, the cross-sectional area A at any point is related to the cross-sectional area A_* at the throat by

---

* See Reference 17, Section 13-5.

$$\frac{A}{A_*} = \frac{G_*}{G} = \frac{1}{M}\left[\frac{2}{k+1}\left(1 + \frac{k-1}{2}M^2\right)\right]^{(k+1)/\left[2(k-1)\right]} \tag{A11}$$

where

$$G = \rho v \tag{A12}$$

is the mass flow per unit area at any point and

$$G_* = \left(\frac{kp_0^2}{RT_0}\right)^{1/2}\left(\frac{2}{k+1}\right)^{(k+1)/\left[2(k-1)\right]} \tag{A13}$$

is the mass flow per unit area at the throat.

Equations (A8) through (A13) are sufficient to determine the isentropic flow in the nozzle provided the stagnation conditions are known. We are interested primarily in the flow conditions at the nozzle exit. For a given rocket design the cross-sectional areas A_e and A_* may be regarded as known. Since k is also a known quantity, we can use Eq. (A11) and obtain the Mach number M_e at the exit. Introducing this value into Eq. (A9) we can determine the exit pressure p_e, which enables us to write the expression for rocket thrust

$$F_T = p_eA_e + \rho_eA_ev_e^2 = p_eA_e(1 + k\,M_e^2) \tag{A14}$$

for flight in vacuum. If the rocket operates in the lower fringes of the atmosphere, then the term p_aA_e, where p_a is the atmospheric pressure, must be subtracted from the right side of Eq. (A14).

In the above analysis, we have assumed that the stagnation conditions are known. This assumption necessitates further scrutiny. The stagnation conditions are determined by events occurring upstream of the nozzle. The flow in the combustion chamber may be regarded as a steady, adiabatic flow in a channel of uniform cross-sectional area with mass addition at constant enthalpy, and at negligible kinetic energy. The flow is not isentropic and the stagnation conditions are not constant but decreasing as the nozzle is approached. This problem is discussed in detail in Reference 11. The conclusion that can be reached is that for a Mach number less than 0.4 in the combustion chamber the drop in the stagnation pressure may not be significant. Hence, we shall assume that the stagnation pressure as well as the remaining stagnation conditions occurring at the fore end of the combustion chamber are equally applicable to the nozzle. In a more refined analysis of the gas flow this assumption may have to be revised.

Appendix B

```
      EXTERNAL FCT,OUTP
      EXTERNAL AINT
      DIMENSION PRMT(5),Y(75),DERY(75),AUX(8,75)
      COMMON/FLAST/NX,NY,OMG(10),OMG1(10),BETAL(10),H ,IPRNT,NOPRNT
      COMMON/AREA/S,SL2,AF,BET,BL,G,SF,PE,VF,OX,PI,EMO,PL,AF,RST,CA,E,ES
      COMMON/COEF/CF0,CF13,CF23,CF1,CF2,CF3,CF6,CB0,CB13,CB23,CB1,CB2,CB
     $3,CB6
      COMMON/INTEG/AIN(8,10,10,10)
      COMMON DELT,DELT1
      PI=3.1415927
    1 READ(5,1001,END=9999)NX,NY,IPRNT,ID
 1001 FORMAT(4I2)
      WRITE(6,1002)NX,NY
 1002 FORMAT('1          NX=',I3,'     NY=',I3 )
      WRITE(6,102)ID
  102 FORMAT(//'     CASE NUMBER - 'I5)
      READ(5,1003)DX,DELT,DELT1
 1003 FORMAT(3F10.3)
      READ(5,1006)E,CA,CI,AF,PL,BL,H,EMO
      READ(5,1006)BET,VF
      READ(5,1006)R,RST
      READ(5,1006)PRMT(1),PRMT(2),Y(9)
 1006 FORMAT(8F10.3)
      CF0=0.2
      CF13=0.25
      CF23=0.35
      CF1=0.55
      CF2=0.4
      CF3=0.24
      CF6=0.2
      CB0=0.05
      CB13=0.1
      CB23=0.15
      CB1=0.4
      CB2=0.2
      CB3=0.15
      CB6=0.1
C
C     READ(5,1000)CF0,CF13,CF23,CF1,CF2,CF3,CF6
C     READ(5,1000)CB0,CB13,CB23,CB1,CB2,CB3,CB6
C1000 FORMAT(7F10.4)
C
C
C                BASIC CONFIGURATION
C
      NN=11+2*NX+4*NY
      H= H /12.
      E = E*144.E+6
      CA=  CA/144.
      CI= CI/144./144.
      NDIM=NN
      AF=  AF/144.
      PL = PL*144.
```

```
      EL= EL/12.
      Y(9)=DBLE(Y(9))*DBLE(PI)/1.80D+2
      DO 5 I=1,NN
      DERY(I)=1./FLOAT(NN)
      IF(I.EQ.9) GO TO 5
      Y(I)=0.0
    5 CONTINUE
C       AREAS
      S=PI*R*R
      ES=S
      SL2=S*4.0
      G=32.2
      EMO= EMO*12./G
      AE=0.
      BET = BET*12./G
      BET=BET/EMO
      SR=S
      PRMT(3)=H*SQRT(EMO/E/CA)
      PRMT(4)=0.0001
      CALL RTS(NY,BETAL,50,1.E-6)
      IF(NX.EQ.0.AND.NY.EQ.0) GO TO 26
 1005 FORMAT(5E15.8)
      C=1.0E-6
      CC=0.0
      D=0.5E-6
      DD=0.0
      TEMP2=    SQRT(EMO*EL)
       PP=PI**2*TEMP2
      IF(NY.EQ.0) GO TO 26
      J=11+2*NX+NY
      JJ=J+2*NY
      DO 25 I=1,NY
      CO=BETAL(I) *BETAL(I)
      C1SQ=CO*CO
      BLP1=PI**4-C1SQ
      BLP2=16.*PI**4-C1SQ
      IF(I/2*2.NE.I) GO TO 28
      Y(I+J )=D *32.0*PP/BLP2
      Y(I+JJ)=DD*32.0*PP/BLP2
      GO TO 25
   28 Y(I+J )=C *4.0*PP/BLP1
      Y(I+JJ)=CC*4.0*PP/BLP1
   25 CONTINUE
   26 CONTINUE
      DO 6 I=1,NY
    6 OMG1(I)=BETAL(I)*BETAL(I)*SQRT(E*CI/EMO/EL**4)
      DO 7 I=1,NX
    7 OMG(I)=FLOAT(I)*PI*SQRT(E*CA/EMO/EL/EL)
      NXX=NX
      NYY=NY
      DO 27 M=1,NXX
      AIN(2,M,M,M)=AINT(2,M,0,0)
   27 CONTINUE
```

```
      DO 35 M=1,NXX
      DO 35 J=1,NYY
      AIN(1,M,J,M)=AINT(1,M,J,0)
      AIN(3,J,M,M)=AINT(3,J,M,0)
   35 CONTINUE
      DO 31 J=1,NYY
      DO 31 M=1,NXX
      DO 31 N=1,NXX
      AIN(6,J,M,N)=AINT(6,J,M,N)
   31 CONTINUE
      DO 32 J=1,NYY
      DO 32 K=1,NYY
      DO 32 L=1,NYY
      AIN(4,J,K,L)=AINT(4,J,K,L)
   32 CONTINUE
      DO 30 J=1,NYY
      DO 30 M=1,NXX
      DO 30 K=1,NYY
      AIN(5,J,K,M)=AINT(5,J,K,M)
      AIN(7,J,M,K)=AINT(7,J,M,K)
      AIN(8,J,M,K)=AINT(8,J,M,K)
   30 CONTINUE
      IF(IPRNT.NE.0)WRITE(6,101)
  101 FORMAT(/////15X,' NO AERO' )
      WRITE(6,100)
  100 FORMAT(1H1)
      NOPRNT=0
      CALL RKGS(PRMT,Y,DERY,NDIM,IHLF,FCT,OUTP,AUX)
      GO TO 1
 9999 CALL EXIT
      END
```

```
      SUBROUTINE RTS(N,RES,ITER,TOL)
      DIMENSION RES(1)
      J=1
      I=1
      PI=3.1415927
      X1=1.5*PI
    2 CX=COS(X1)
      CSX=COSH(X1)
      SX=SIN(X1)
      SSX=SINH(X1)
      F=CX*CSX-1.
      FD=CX*SSX-SX*CSX
      X2=X1-F/FD
      DIFF=X2-X1
      IF(ABS(DIFF)-TOL)20,20,10
   10 X1=X2
      J=J+1
      IF(J.GT.ITER) GO TO 15
      GO TO 2
   15 WRITE(6,100)
      RETURN
   20 RES(I)=X2
      I=I+1
      IF(I.GT.N)RETURN
      X1=X1+PI
      J=1
      GO TO 2
  100 FORMAT('     NO CONVERGENCE IN RTS ')
      END
```

```
      FUNCTION FMU(X,I)
      COMMON/AREA/S,SL2,AE,BET,EL,G,SR,PE,VE,UX,PI,EMO,PL,AF,RST,CA,E,ES
      T=SQRT(2./EMO/EL)
      IF(I/2*2.EQ.I) GO TO 10
      IP=(I+1)/2
      FMU=T*(-1.)**IP*SIN(FLOAT(I)*PI*X/EL)
      RETURN
10    IP=I/2
      FMU=T*(-1.)**IP*COS(FLOAT(I)*PI*X/EL)
      RETURN
      ENTRY FMUP(X,I)
      T=SQRT(2./EMO/EL)
      IF(I/2*2.EQ.I) GO TO 20
      IP=(I+1)/2
      FMUP=T*FLOAT(I)*PI/EL*(-1.)**IP*COS(FLOAT(I)*PI*X/EL)
      RETURN
20    IP=I/2
      FMUP=-T*FLOAT(I)*PI/EL*(-1.)**IP*SIN(FLOAT(I)*PI*X/EL)
      RETURN
      END
```

```
      FUNCTION ENU(X,I)
      COMMON/FLAST/NX,NY,OMG(10),OMG1(10),BETAL(10),H  ,IPRNT,NCPRNT
      COMMON/AREA/S,SL2,AE,BET,EL,G,SR,PE,VE,OX,PI,EMO,PL,AF,RST,CA,E,ES
      J=1
    1 CB=COS(BETAL(I)*0.5)
      SB=SIN(BETAL(I)*0.5)
      SHB=SINH(BETAL(I)*0.5)
      CHB=COSH(BETAL(I)*0.5)
      T=X/EL
      CBT=COS(BETAL(I)*T)
      SBT=SIN(BETAL(I)*T)
      SHBT=SINH(BETAL(I)*T)
      CHBT=COSH(BETAL(I)*T)
      GO TO (2,3,4),J
    2 IF(I/2*2.EQ.I) GO TO 21
      ENU=1./SQRT(EMO*EL)*(CBT/CB+CHBT/CHB)
      RETURN
   21 ENU=1./SQRT(EMO*EL)*(SBT/SB+SHBT/SHB)
      RETURN
      ENTRY ENUP(X,I)
      J=2
      GO TO 1
    3 IF(I/2*2.EQ.I) GO TO 31
      ENUP=BETAL(I)/EL/SQRT(EMO*EL)*(SHBT/CHB-SBT/CB)
      RETURN
   31 ENUP=BETAL(I)/EL/SQRT(EMO*EL)*(CBT/SB+CHBT/SHB)
      RETURN
      ENTRY ENUPP(X,I)
      J=3
      GO TO 1
    4 IF(I/2*2.EQ.I) GO TO 41
      ENUPP=BETAL(I)*BETAL(I)/EL/EL/SQRT(EMO*EL)*(CHBT/CHB-CBT/CB)
      RETURN
   41 ENUPP=BETAL(I)*BETAL(I)/EL/EL/SQRT(EMO*EL)*(SHBT/SHB-SBT/SB)
      RETURN
      END
```

```
      SUBROUTINE OUTP(X,Y,DERY,IHLF,NDIM,PRMT)
      DIMENSION UX(20),UY(20),UZ(20),STA(20)
      DIMENSION Y(1),DERY(1),PRMT(1)
      COMMON/ELAST/NX,NY,OMG(10),OMG1(10),BETAL(10),H ,IPRNT,NOPRNT
      COMMON/AREA/S,SL2,AE,BET,EL,G,SR,PE,VE,OX,PI,EMO,PL,AF,RST,CA,E,ES
      COMMON DELT,DELT1
      COMMON/PRESS/PLO
      IF(IHLF.GT.10)WRITE(6,100)IHLF
  100 FORMAT(' ERROR IN RKGS IS 'I5)
      NOPRNT=0
      DELT2=DELT+DELT1
      IT=X/DELT2
      IT1=(X-DELT)/DELT2
      IF(IT.NE.IT1)NOPRNT=1
      IF(X.LE.DELT)NOPRNT=1
      IF(NOPRNT.EQ.0)RETURN
      NOPRNT=0
      N1=11+NX
      N11=N1+NX
      N2=N1+NX+NY
      N22=N2+NY
      N3=N2+NY+NY
      N33=N3+NY
      WRITE(6,5555)PLO
 5555 FORMAT('  PRESSURE  ' E20.5)
      WRITE(6,101)X,(Y(I),I=1,6),OX,(Y(I),I=7,11)
      IF(NX.EQ.0.AND.NY.EQ.0)RETURN
      XX=-EL*0.5
      DO 10 I=1,20
      UX(I)=0.0
      UY(I)=0.0
      UZ(I)=0.0
      STA(I)=0.0
   10 CONTINUE
      J=1
   13 IF(NX.EQ.0) GO TO 17
      DO 11 I=1,NX
   11 UX(J)=UX(J)+Y(N1+I)*EMU(XX,I)
   17 IF(NY.EQ.0) GO TO 18
      DO 12 I=1,NY
      UY(J)=UY(J)+Y(N2+I)*ENU(XX,I)
   12 UZ(J)=UZ(J)+Y(N3+I)*ENU(XX,I)
   18 IF(XX.GT.EL*0.5) GO TO 15
      XX=XX+H
      J=J+1
      STA(J)=STA(J-1)+H*12.
      GO TO 13
   15 CONTINUE
      JJ=J
      DO 16 I=1,JJ,10
      KK=I+9
      IF(IABS(JJ-I).LT.10)KK=JJ
      WRITE(6,106)(STA(K),K=I,KK)
```

```
      WRITE(6,103)(UX(K),K=I,KK)
      WRITE(6,104)(UY(K),K=I,KK)
      WRITE(6,105)(UZ(K),K=I,KK)
   16 CONTINUE
  101 FORMAT(1H0,15X,'TIME= 'E15.4/
     $                          '   POSITION (FT):   X= 'E15.4,'   Y= 'E15.
     $4,'   Z= 'E15.4/'   VELOCITY (FT/SEC):   U= 'E15.4,'   V= 'E15.4,
     $'   W= 'E15.4/'   ANGULAR VELOCITY (RAD/SEC):   OMEGA-X= 'F15.4,
     $'   OMEGA-Y= 'E15.4,'   OMEGA-Z= 'E15.4/'   ANGULAR POSITIONS (RAD
     $):   THETA= 'E15.4,'   PSI= 'E15.4,'   PHI= 'E15.4 )
  102 FORMAT(6E20.7)
  103 FORMAT(2X,6HUX(FT),2X,10E12.4)
  104 FORMAT(2X,6HUY(FT),2X,10E12.4)
  105 FORMAT(2X,6HUZ(FT),2X,10E12.4)
  106 FORMAT(1H0,8H STA(IN),10E12.4)
      RETURN
      END
```

```
      SUBROUTINE CD(CXF,CXB,MACHNO)
      COMMON/ELAST/NX,NY,OMG(10),OMG1(10),BETAL(10),H  ,IPRNT,NCPRNT
      REAL MACHNO
      COMMON/COEF/CF0,CF13,CF23,CF1,CF2,CF3,CF6,CB0,CB13,CB23,CB1,CB2,CB
     $3,CB6
C
C             POLYNOMIAL APPROXIMATION
C
      IF(IPRNT.NE.0)GO TO 11
      IF(MACHNO.GT.1.0) GO TO 10
      CXF=0.5*(9.*CF1+27.*CF13-27.*CF23)*MACHNO**3-0.5*(9.*CF1+45.*CF13-
     $36.*CF23)*MACHNO*MACHNO+0.5*(2.*CF1+18.*CF13-9.*CF23)*MACHNO+CF0
      CXB=0.5*(9.*CB1+27.*CB13-27.*CB23)*MACHNO**3-0.5*(9.*CB1+45.*CB13-
     $36.*CB23)*MACHNO*MACHNO+0.5*(2.*CB1+18.*CB13-9.*CB23)*MACHNO+CB0
      RETURN
   10 CXF=(CF6-10.*CF3+15.*CF2-6.*CF1)*MACHNO/60.*MACHNO*MACHNO-
     $0.1*(CF6-15.*CF3+25.*CF2-11.*CF1)*MACHNO*MACHNO+(11.*CF6-200.*CF3
     $+405.*CF2-216.*CF1)*MACHNO/60.-0.1*CF6+2.*CF3-4.5*CF2+18.*CF1/5.
      CXB=(CB6-10.*CB3+15.*CB2-6.*CB1)*MACHNO/60.*MACHNO*MACHNO-
     $0.1*(CB6-15.*CB3+25.*CB2-11.*CB1)*MACHNO*MACHNO+(11.*CB6-200.*CB3+
     $405.*CB2-216.*CB1)*MACHNO/60.-0.1*CB6+2.*CB3-4.5*CB2+18.*CB1/5.
      RETURN
   11 CXB=0.0
      CXF=0.0
      RETURN
      END
```

```
SUBROUTINE ALT(HGT,RHO,PA,TEMP,RHOD,U,MACHNO)
COMMON/ELAST/NX,NY,OMG(10),OMG1(10),BETAL(10),H ,IPRNT,NOPRNT
REAL MACHNO
RHO=0.27E-2*EXP(-HGT/2.35E+4)
IF(HGT.LT.0.0)RHO=0.27E-2
IF(IPRNT.NE.0)RHO=1.0
RHOD=-2.7/2.35*1.E-7*EXP(-HGT/2.35E+4)
IF(HGT.LT.0.0)RHOD=0.0
IF(IPRNT.NE.0)RHOD=0.0
PA=2.1162E+3*EXP(-HGT/2.3E+4)
IF(HGT.LT.0.0)PA=2116.2
IF(IPRNT.NE.0)PA=0.0
TEMP=PA/32.2/RHO/53.3
IF(IPRNT.NE.0)TEMP=1.0
MACHNO=U/SQRT(1.4*32.2*53.3*TEMP)
IF(IPRNT.NE.0)MACHNO=0.0
IF(IPRNT.NE.0)RHO=0.0
RETURN
END
```

```
                                                                      RKGS  10
.......................................................................RKGS  20
                                                                      RKGS  30
SUBROUTINE RKGS                                                       RKGS  40
                                                                      RKGS  50
PURPOSE                                                               RKGS  60
   TO SOLVE A SYSTEM OF FIRST ORDER ORDINARY DIFFERENTIAL             RKGS  70
   EQUATIONS WITH GIVEN INITIAL VALUES.                               RKGS  80
                                                                      RKGS  90
USAGE                                                                 RKGS 100
   CALL RKGS (PRMT,Y,DERY,NDIM,IHLF,FCT,OUTP,AUX)                     RKGS 110
   PARAMETERS FCT AND OUTP REQUIRE AN EXTERNAL STATEMENT.             RKGS 120
                                                                      RKGS 130
DESCRIPTION OF PARAMETERS                                             RKGS 140
   PRMT    - AN INPUT AND OUTPUT VECTOR WITH DIMENSION GREATER        RKGS 150
             OR EQUAL TO 5, WHICH SPECIFIES THE PARAMETERS OF         RKGS 160
             THE INTERVAL AND OF ACCURACY AND WHICH SERVES FOR        RKGS 170
             COMMUNICATION BETWEEN OUTPUT SUBROUTINE (FURNISHED       RKGS 180
             BY THE USER) AND SUBROUTINE RKGS. EXCEPT PRMT(5)         RKGS 190
             THE COMPONENTS ARE NOT DESTROYED BY SUBROUTINE           RKGS 200
             RKGS AND THEY ARE                                        RKGS 210
   PRMT(1)- LOWER BOUND OF THE INTERVAL (INPUT),                      RKGS 220
   PRMT(2)- UPPER BOUND OF THE INTERVAL (INPUT),                      RKGS 230
   PRMT(3)- INITIAL INCREMENT OF THE INDEPENDENT VARIABLE             RKGS 240
             (INPUT),                                                 RKGS 250
   PRMT(4)- UPPER ERROR BOUND (INPUT). IF ABSOLUTE ERROR IS           RKGS 260
             GREATER THAN PRMT(4), INCREMENT GETS HALVED.             RKGS 270
             IF INCREMENT IS LESS THAN PRMT(3) AND ABSOLUTE           RKGS 280
             ERROR LESS THAN PRMT(4)/50, INCREMENT GETS DOUBLED.RKGS 290
             THE USER MAY CHANGE PRMT(4) BY MEANS OF HIS              RKGS 300
             OUTPUT SUBROUTINE.                                       RKGS 310
   PRMT(5)- NO INPUT PARAMETER. SUBROUTINE RKGS INITIALIZES           RKGS 320
             PRMT(5)=0. IF THE USER WANTS TO TERMINATE                RKGS 330
             SUBROUTINE RKGS AT ANY OUTPUT POINT, HE HAS TO           RKGS 340
             CHANGE PRMT(5) TO NON-ZERO BY MEANS OF SUBROUTINE        RKGS 350
             OUTP. FURTHER COMPONENTS OF VECTOR PRMT ARE              RKGS 360
             FEASIBLE IF ITS DIMENSION IS DEFINED GREATER             RKGS 370
             THAN 5. HOWEVER SUBROUTINE RKGS DOES NOT REQUIRE         RKGS 380
             AND CHANGE THEM. NEVERTHELESS THEY MAY BE USEFUL         RKGS 390
             FOR HANDING RESULT VALUES TO THE MAIN PROGRAM            RKGS 400
             (CALLING RKGS) WHICH ARE OBTAINED BY SPECIAL             RKGS 410
             MANIPULATIONS WITH OUTPUT DATA IN SUBROUTINE OUTP.       RKGS 420
   Y       - INPUT VECTOR OF INITIAL VALUES.  (DESTROYED)             RKGS 430
             LATERON Y IS THE RESULTING VECTOR OF DEPENDENT           RKGS 440
             VARIABLES COMPUTED AT INTERMEDIATE POINTS X.             RKGS 450
   DERY    - INPUT VECTOR OF ERROR WEIGHTS.  (DESTROYED)              RKGS 460
             THE SUM OF ITS COMPONENTS MUST BE EQUAL TO 1.            RKGS 470
             LATERON DERY IS THE VECTOR OF DERIVATIVES, WHICH         RKGS 480
             BELONG TO FUNCTION VALUES Y AT A POINT X.                RKGS 490
   NDIM    - AN INPUT VALUE, WHICH SPECIFIES THE NUMBER OF            RKGS 500
             EQUATIONS IN THE SYSTEM.                                 RKGS 510
   IHLF    - AN OUTPUT VALUE, WHICH SPECIFIES THE NUMBER OF           RKGS 520
             BISECTIONS OF THE INITIAL INCREMENT. IF IHLF GETS        RKGS 530
```

```
            GREATER THAN 10, SUBROUTINE RKGS RETURNS WITH        RKGS 540
            ERROR MESSAGE IHLF=11 INTO MAIN PROGRAM. ERROR       RKGS 550
            MESSAGE IHLF=12 OR IHLF=13 APPEARS IN CASE           RKGS 560
            PRMT(3)=0 OR IN CASE SIGN(PRMT(3)).NE.SIGN(PRMT(2)-RKGS 570
            PRMT(1)) RESPECTIVELY.                               RKGS 580
      FCT   - THE NAME OF AN EXTERNAL SUBROUTINE USED. THIS      RKGS 590
            SUBROUTINE COMPUTES THE RIGHT HAND SIDES DERY OF     RKGS 600
            THE SYSTEM TO GIVEN VALUES X AND Y. ITS PARAMETER    RKGS 610
            LIST MUST BE X,Y,DERY. SUBROUTINE FCT SHOULD         RKGS 620
            NOT DESTROY X AND Y.                                 RKGS 630
      OUTP  - THE NAME OF AN EXTERNAL OUTPUT SUBROUTINE USED.    RKGS 640
            ITS PARAMETER LIST MUST BE X,Y,DERY,IHLF,NDIM,PRMT.RKGS 650
            NONE OF THESE PARAMETERS (EXCEPT, IF NECESSARY,      RKGS 660
            PRMT(4),PRMT(5),...) SHOULD BE CHANGED BY            RKGS 670
            SUBROUTINE OUTP. IF PRMT(5) IS CHANGED TO NON-ZERO,RKGS 680
            SUBROUTINE RKGS IS TERMINATED.                       RKGS 690
      AUX   - AN AUXILIARY STORAGE ARRAY WITH 8 ROWS AND NDIM    RKGS 700
            COLUMNS.                                             RKGS 710
                                                                 RKGS 720
   REMARKS                                                       RKGS 730
      THE PROCEDURE TERMINATES AND RETURNS TO CALLING PROGRAM, IF RKGS 740
      (1) MORE THAN 10 BISECTIONS OF THE INITIAL INCREMENT ARE   RKGS 750
          NECESSARY TO GET SATISFACTORY ACCURACY (ERROR MESSAGE  RKGS 760
          IHLF=11),                                              RKGS 770
      (2) INITIAL INCREMENT IS EQUAL TO 0 OR HAS WRONG SIGN      RKGS 780
          (ERROR MESSAGES IHLF=12 OR IHLF=13),                   RKGS 790
      (3) THE WHOLE INTEGRATION INTERVAL IS WORKED THROUGH,      RKGS 800
      (4) SUBROUTINE OUTP HAS CHANGED PRMT(5) TO NON-ZERO.       RKGS 810
                                                                 RKGS 820
   SUBROUTINES AND FUNCTION SUBPROGRAMS REQUIRED                 RKGS 830
      THE EXTERNAL SUBROUTINES FCT(X,Y,DERY) AND                 RKGS 840
      OUTP(X,Y,DERY,IHLF,NDIM,PRMT) MUST BE FURNISHED BY THE USER.RKGS 850
                                                                 RKGS 860
   METHOD                                                        RKGS 870
      EVALUATION IS DONE BY MEANS OF FOURTH ORDER RUNGE-KUTTA    RKGS 880
      FORMULAE IN THE MODIFICATION DUE TO GILL. ACCURACY IS      RKGS 890
      TESTED COMPARING THE RESULTS OF THE PROCEDURE WITH SINGLE  RKGS 900
      AND DOUBLE INCREMENT.                                      RKGS 910
      SUBROUTINE RKGS AUTOMATICALLY ADJUSTS THE INCREMENT DURING RKGS 920
      THE WHOLE COMPUTATION BY HALVING OR DOUBLING. IF MORE THAN RKGS 930
      10 BISECTIONS OF THE INCREMENT ARE NECESSARY TO GET        RKGS 940
      SATISFACTORY ACCURACY, THE SUBROUTINE RETURNS WITH         RKGS 950
      ERROR MESSAGE IHLF=11 INTO MAIN PROGRAM.                   RKGS 960
      TO GET FULL FLEXIBILITY IN OUTPUT, AN OUTPUT SUBROUTINE    RKGS 970
      MUST BE FURNISHED BY THE USER.                             RKGS 980
      FOR REFERENCE, SEE                                         RKGS 990
      RALSTON/WILF, MATHEMATICAL METHODS FOR DIGITAL COMPUTERS,  RKGS1000
      WILEY, NEW YORK/LONDON, 1960, PP.110-120.                  RKGS1010
                                                                 RKGS1020
.......................................................................RKGS1030
                                                                 RKGS1040
SUBROUTINE RKGS(PRMT,Y,DERY,NDIM,IHLF,FCT,OUTP,AUX)              RKGS1050
                                                                 RKGS1060
```

```
      DIMENSION Y(1),DERY(1),AUX(8,1),A(4),B(4),C(4),PRMT(1)
      DO 1 I=1,NDIM
    1 AUX(8,I)=.06666667*DERY(I)
      X=PRMT(1)
      XEND=PRMT(2)
      H=PRMT(3)
      PRMT(5)=0.
      CALL FCT(X,Y,DERY)

      ERROR TEST
      IF(H*(XEND-X))38,37,2

      PREPARATIONS FOR RUNGE-KUTTA METHOD
    2 A(1)=.5
      A(2)=.2928932
      A(3)=1.707107
      A(4)=.1666667
      B(1)=2.
      B(2)=1.
      B(3)=1.
      B(4)=2.
      C(1)=.5
      C(2)=.2928932
      C(3)=1.707107
      C(4)=.5

      PREPARATIONS OF FIRST RUNGE-KUTTA STEP
      DO 3 I=1,NDIM
      AUX(1,I)=Y(I)
      AUX(2,I)=DERY(I)
      AUX(3,I)=0.
    3 AUX(6,I)=0.
      IREC=0
      H=H+H
      IHLF=-1
      ISTEP=0
      IEND=0


      START OF A RUNGE-KUTTA STEP
    4 IF((X+H-XEND)*H)7,6,5
    5 H=XEND-X
    6 IEND=1

      RECORDING OF INITIAL VALUES OF THIS STEP
    7 CALL OUTP(X,Y,DERY,IREC,NDIM,PRMT)
      IF(PRMT(5))40,8,40
    8 ITEST=0
    9 ISTEP=ISTEP+1


      START OF INNERMOST RUNGE-KUTTA LOOP
```

```
      J=1                                                               RKGS160
   10 AJ=A(J)                                                           RKGS161
      BJ=B(J)                                                           RKGS162
      CJ=C(J)                                                           RKGS163
      DO 11 I=1,NDIM                                                    RKGS164
      R1=H*DERY(I)                                                      RKGS165
      R2=AJ*(R1-BJ*AUX(6,I))                                            RKGS166
      Y(I)=Y(I)+R2                                                      RKGS167
      R2=R2+R2+R2                                                       RKGS168
   11 AUX(6,I)=AUX(6,I)+R2-CJ*R1                                        RKGS169
      IF(J-4)12,15,15                                                   RKGS170
   12 J=J+1                                                             RKGS171
      IF(J-3)13,14,13                                                   RKGS172
   13 X=X+.5*H                                                          RKGS173
   14 CALL FCT(X,Y,DERY)                                                RKGS174
      GOTO 10                                                           RKGS175
C     END OF INNERMOST RUNGE-KUTTA LOOP                                 RKGS176
C                                                                       RKGS177
C                                                                       RKGS178
C     TEST OF ACCURACY                                                  RKGS179
   15 IF(ITEST)16,16,20                                                 RKGS180
C                                                                       RKGS181
C     IN CASE ITEST=0 THERE IS NO POSSIBILITY FOR TESTING OF ACCURACY   RKGS182
   16 DO 17 I=1,NDIM                                                    RKGS183
   17 AUX(4,I)=Y(I)                                                     RKGS184
      ITEST=1                                                           RKGS185
      ISTEP=ISTEP+ISTEP-2                                               RKGS186
   18 IHLF=IHLF+1                                                       RKGS187
      X=X-H                                                             RKGS188
      H=.5*H                                                            RKGS189
      DO 19 I=1,NDIM                                                    RKGS190
      Y(I)=AUX(1,I)                                                     RKGS191
      DERY(I)=AUX(2,I)                                                  RKGS192
   19 AUX(6,I)=AUX(3,I)                                                 RKGS193
      GOTO 9                                                            RKGS194
C                                                                       RKGS195
C     IN CASE ITEST=1 TESTING OF ACCURACY IS POSSIBLE                   RKGS196
   20 IMOD=ISTEP/2                                                      RKGS197
      IF(ISTEP-IMOD-IMOD)21,23,21                                       RKGS198
   21 CALL FCT(X,Y,DERY)                                                RKGS199
      DO 22 I=1,NDIM                                                    RKGS200
      AUX(5,I)=Y(I)                                                     RKGS201
   22 AUX(7,I)=DERY(I)                                                  RKGS202
      GOTO 9                                                            RKGS203
C                                                                       RKGS204
C     COMPUTATION OF TEST VALUE DELT                                    RKGS205
   23 DELT=0.                                                           RKGS206
      DO 24 I=1,NDIM                                                    RKGS207
   24 DELT=DELT+AUX(8,I)*ABS(AUX(4,I)-Y(I))                             RKGS208
      IF(DELT-PRMT(4))28,28,25                                          RKGS209
C                                                                       RKGS210
C     ERROR IS TOO GREAT                                                RKGS211
   25 IF(IHLF-10)26,36,36                                               RKGS212
```

```
26 DO 27 I=1,NDIM                                                    RKGS2130
27 AUX(4,I)=AUX(5,I)                                                 RKGS2140
   ISTEP=ISTEP+ISTEP-4                                               RKGS2150
   X=X-H                                                             RKGS2160
   IEND=0                                                            RKGS2170
   GOTO 18                                                           RKGS2180
                                                                     RKGS2190
   RESULT VALUES ARE GOOD                                            RKGS2200
28 CALL FCT(X,Y,DERY)                                                RKGS2210
   DO 29 I=1,NDIM                                                    RKGS2220
   AUX(1,I)=Y(I)                                                     RKGS2230
   AUX(2,I)=DERY(I)                                                  RKGS2240
   AUX(3,I)=AUX(6,I)                                                 RKGS2250
   Y(I)=AUX(5,I)                                                     RKGS2260
29 DERY(I)=AUX(7,I)                                                  RKGS2270
   CALL OUTP(X-H,Y,DERY,IHLF,NDIM,PRMT)                              RKGS2280
   IF(PRMT(5))40,30,40                                               RKGS2290
30 DO 31 I=1,NDIM                                                    RKGS2300
   Y(I)=AUX(1,I)                                                     RKGS2310
31 DERY(I)=AUX(2,I)                                                  RKGS2320
   IREC=IHLF                                                         RKGS2330
   IF(IEND)32,32,39                                                  RKGS2340
                                                                     RKGS2350
   INCREMENT GETS DOUBLED                                            RKGS2360
32 IHLF=IHLF-1                                                       RKGS2370
   ISTEP=ISTEP/2                                                     RKGS2380
   H=H+H                                                             RKGS2390
   IF(IHLF)4,33,33                                                   RKGS2400
33 IMOD=ISTEP/2                                                      RKGS2410
   IF(ISTEP-IMOD-IMOD)4,34,4                                         RKGS2420
34 IF(DELT-.02*PRMT(4))35,35,4                                       RKGS2430
35 IHLF=IHLF-1                                                       RKGS2440
   ISTEP=ISTEP/2                                                     RKGS2450
   H=H+H                                                             RKGS2460
   GOTO 4                                                            RKGS2470
                                                                     RKGS2480
                                                                     RKGS2490
   RETURNS TO CALLING PROGRAM                                        RKGS2500
36 IHLF=11                                                           RKGS2510
   CALL FCT(X,Y,DERY)                                                RKGS2520
   GOTO 39                                                           RKGS2530
37 IHLF=12                                                           RKGS2540
   GOTO 39                                                           RKGS2550
38 IHLF=13                                                           RKGS2560
39 CALL OUTP(X,Y,DERY,IHLF,NDIM,PRMT)                                RKGS2570
40 RETURN                                                            RKGS2580
   END                                                               RKGS2590
```

```
      SUBROUTINE FCT(X,Y,DERY)
      REAL MACHNO
      COMMON/AREA/S,SL2,AE,BET,EL,G,SR,PE,VE,OX,PI,EMO,PLO,AF,RST,CA,E,E
     $S
      COMMON/ELAST/NX,NY,OMG(10),OMG1(10),BETAL(10),H ,IPRNT,NOPRNT
      COMMON/INTEG/AIN(8,10,10,10)
      COMMON/PRESS/PL
      DIMENSION Y(10),DERY(10)
      Z=0.4
      OM=6283.8
      T=SQRT(1.-Z*Z)
      OMGD=OM*T
      PL=PLO*(1.+EXP(-Z*OM*X)*(Z/T*SIN(OMGD*X)-COS(OMGD*X)))
      PL=PLO
      SST=SL2
      ST=SIN(Y(9))
      CT=COS(Y(9))
      IF(ABS(ABS(Y(9))-PI/2.).LT.7.*PI/180.)CT=SIN(PI/2.-Y(9))
      SPH=SIN(Y(10))
      CPH=COS(Y(10))
      SPS=SIN(Y(11))
      CPS=COS(Y(11))
      CALL ALT(-Y(3),RHO,PA,EEP,RHOD,Y(4),MACHNO)
      CALL CD(CXL,CXL1,MACHNO)
      EMT=EMO*EL
      EMB=EMT*(1.-BET*X)
      VEQ=VE+(PE-PA)*AE/BET/EMT
      EMV=RHO*S
      EMVT=EMV*EL
      EMMM=EMV/EMO
      EMS=EMMM-BET*X+1.
      EMST=EMS*EL
      DERY(1)=Y(4)*CT*CPS+Y(5)*(SPH*ST*CPS-CPH*SPS)+Y(6)*(CPH*ST*CPS+
     $SPH*SPS)
      DERY(2)=Y(4)*CT*SPS+Y(5)*(SPH*ST*SPS+CPH*CPS)+Y(6)*(CPH*ST*SPS-
     $SPH*CPS)
      DERY(3)=-Y(4)*ST+Y(5)*SPH*CT+Y(6)*CPH*CT
      EMD=RHOD*S
      EMDT=EMD*EL
      DERY(4)=Y(5)*Y(8)-Y(6)*Y(7)-G*ST-RHO*0.5*Y(4)*Y(4)*SR/EMB*(CXL+
     $CXL1)+VEQ*BET/(1.-BET*X)
      T=
     $ -EMVT*Y(8)*Y(4)-EMDT*Y(5)+Y(4)*Y(5)*RHO*SL2+EMB*G*SPH*CT-Y(4)*RHO
     $*Y(8)*0.5*EL*(SL2-S)
      DERY(5)=Y(6)*OX-Y(4)*Y(8)+T/EMST
      T=+EMVT*Y(7)*Y(4)-EMDT*Y(6)+Y(4)*Y(6)*RHO*SL2+EMB*G*CPH*CT+Y(4)*
     $RHO*Y(7)*0.5*EL*(SL2-S)
      DERY(6)=-Y(4)*Y(7)-Y(5)*OX+T/EMST
      T=
     $ -Y(4)*RHO*Y(7)*0.25*EL*EL*(SL2-4./EL*SL2          )+Y(4)*Y(6)*0.5*
     $EL*(SL2-S)*RHO
      DERY(7)=OX*Y(8)+12./EMST*T/EL/EL-EMD/EMS*Y(7)
      T=
```

```
     $  -Y(4)*Y(8)*RHO*0.25*EL*EL*(SL2-4./EL*SL2          )-Y(4)*Y(5)*0.5*
     $EL*(SL2-5)*RHO
      DERY(8)=-OX*Y(7)+12./EMST*T/EL/EL-*MO/EMS*Y(8)
      IF(ABS(ABS(Y(9))-PI/2.).LT.0.087) GO TO 10
      DERY(9)=Y(7)*CPH-Y(8)*SPH
C
      IF(ABS(DERY(9)).LT.1.E-10)DERY(9)=0.0
C
      DERY(10)=OX+Y(7)*SPH*ST/CT+Y(8)*CPH*ST/CT
      DERY(11)=(Y(7)*SPH+Y(8)*CPH)/CT
      GO TO 11
   10 DERY(9)=Y(7)*CPH-Y(8)*SPH
      DERY(10)=OX+Y(7)*SPH/Y(9)+Y(8)*CPH/Y(9)
      DERY(11)=(Y(7)*SPH+Y(8)*CPH)/Y(9)
C
C                NX - NUMBER OF AXIAL TERMS
C                NY - NUMBER OF TRANSVERSE TERMS
C
   11 CONTINUE
      NX2=2*NX
      NY2=2*NY
      NY3=NY2+NY
      NY4=NY3+NY
      NXY=NX2+NY+11
      NXY2=NX2+NY2+11
      NXY3=NX2+NY3+11
      NXY4=NX2+NY4+11
      EMU=SQRT(2./EMO/EL)
      PX1=PL*AF
      PX2=PX1-VEQ*BET*EMT
      Q=0.5*RHO*Y(4)*Y(4)
      IF(NX.EQ.0) GO TO 52
      DO 51 L=1,NX
      J=L
      SUM=0.0
      IF(NY.EQ.0) GO TO 49
      DO 50LL=1,NY
      I=LL
      T=2.*Y(7)*Y(I+NXY2)-2.*Y(8)*Y(I+NX2+11)+(DERY(7)-OX*Y(8))*Y(I+NXY3
     $)-(DERY(8)-OX*Y(7))*Y(I+NXY)
   50 SUM=SUM+T*AIN (  1,J,I,J)
   49 CONTINUE
      DERY(J+11)=                          -(PX2+Q*SR*CXL1)*EMU
     $-OMG(J)*OMG(J)*Y(J+11+NX)
      PP=(PX1-Q*SR*CXL)*EMU
      IF(J/2*2.EQ.J)DERY(J+11)=DERY(J+11)+PP
      IF(J/2*2.NE.J)DERY(J+11)=DERY(J+11)-PP
      DERY(J+11)=DERY(J+11)/(1.-BET *X)-SUM+(Y(8)*Y(8)+Y(7)*Y(7))*AIN (
     $ 2,J,J,J)+(Y(7)*Y(7)+Y(8)*Y(8))*Y(J+11+NX)
      DERY(J+NX+11)=Y(J+11)
   51 CONTINUE
   52 IF(NY.EQ.0) RETURN
      TX=2./SQRT(EMT)
```

```
      PY1= PI*RHO*RST*RST
      SUM1=Y(4)
      SUM2=Y(5)+Y(8)*EL/2.
      SUM3=Y(6)-Y(7)*EL*0.5
      IF(NX.EQ.0) GO TO 67
      DO 53 L=1,NX
      J=L
      IF(J/2*2.NE.J) GO TO 100
      SUM1=SUM1+Y(J+11)*EMU
      SUM2=SUM2+Y(8)*Y(J+NX+11)*EMU
      SUM3=SUM3-Y(7)*Y(J+NX+11)*EMU
      GO TO 53
100   CONTINUE
      SUM1=SUM1-Y(J+11)*EMU
      SUM2=SUM2-Y(8)*Y(J+NX+11)*EMU
      SUM3=SUM3+Y(7)*Y(J+NX+11)*EMU
 53   CONTINUE
 67   CONTINUE
      DO 54JJ=1,NY
      J=JJ
      SUM1=SUM1+(Y(7)*Y(J+NXY3)-Y(8)*Y(J+NXY))*TX
      SUM2=SUM2+(Y(J+NX2+11)-OX*Y(J+NXY3))*TX
 54   SUM3=SUM3+(Y(J+NXY2)+OX*Y(J+NXY))*TX
      PY1=PY1*SUM1*SUM2
      PZ1=PY1*SUM1*SUM3
      TS=2.*SST-RST
      PY2=PI*RHO*((SST-RST)*TS+RST***4*(1./TS/TS-1./SST/SST))*(-1.)
      SUM1=Y(4)
      SUM2=Y(5)+Y(8)*EL/2.
      SUM3=Y(6)-Y(7)*EL*0.5
      IF(NX.EQ.0) GO TO 66
      DO 55 L=1,NX
      J=L
      SUM1=SUM1+Y(J+11)*EMU
      SUM2=SUM2+Y(8)*Y(J+NX+11)*EMU
 55   SUM3=SUM3-Y(7)*Y(J+NX+11)*EMU
 66   CONTINUE
      DO 56 L=1,NY
      J=L
      IF(J/2*2.NE.J) GO TO 101
      SUM1=SUM1-(Y(7)*Y(J+NXY3)-Y(8)*Y(J+NXY))*TX
      SUM2=SUM2-(Y(J+NX2+11)-OX*Y(J+NXY3))*TX
      SUM3=SUM3+(Y(J+NXY2)+OX*Y(J+NXY))*TX
      GO TO 56
101   CONTINUE
      SUM1=SUM1+(Y(7)*Y(J+NXY3)-Y(8)*Y(J+NXY))*TX
      SUM2=SUM2+(Y(J+NX2+11)-OX*Y(J+NXY3))*TX
      SUM3=SUM3-(Y(J+NXY2)+OX*Y(J+NXY))*TX
 56   CONTINUE
      PY2=PY2*SUM1*SUM2
      PZ2=PY2*SUM1*SUM3
      EMM=EMS/EMO
      DO 57JI=1,NY
```

```
      I=JI
      DERY(I+NX2+11)=-RHOD*ES/EMO*Y(I+NX2+11)-(
     $                                        -EMMM*Y(8)*Y(8)+OMG1(I)*OM
     $G1(I)-EMM*(OX*OX+Y(8)*Y(8)))*Y(I+NXY)+2.*EMM*OX*Y(I+NXY2)+((EMM-EM
     $MM )*Y(7)*Y(8)+RHOD* ES/EMO*OX)*Y(I+NXY3)+PY1*TX
      IF(I/2*2.EQ.I)DERY(I+NX2+11)=DERY(I+NX2+11)-PY2*TX
      IF(I/2*2.NE.I)DERY(I+NX2+11)=DERY(I+NX2+11)+PY2*TX
      DERY(I+NXY2)=-RHOD*ES/EMO*Y(I+NXY2)-(
     $                                        -EMMM*Y(7)*Y(7)+OMG1(I)*OMG1(I
     $)-EMM*(OX*OX+Y(7)*Y(7)))
     $                                  *Y(I+NXY3)-2.*EMM*OX*Y(I+NX2+11)+((EMMM-EMM
     $)*Y(7)*Y(8)-RHOD*ES/EMO*OX)*Y(I+NXY)+PZ1*TX
      IF(I/2*2.EQ.I)DERY(I+NXY2)=DERY(I+NXY2)-PZ2*TX
      IF(I/2*2.NE.I)DERY(I+NXY2)=DERY(I+NXY2)+PZ2*TX
      SUM2=0.0
      SUM3=0.0
      SUM1=0.0
      IF(NX.EQ.0) GO TO 62
      DO 58 L=1,NX
      J=L
      T=EMM*((DERY(8)+OX*Y(7))*Y(J+NX+11)+2.*Y(8)*Y(J+11))+EMMM*Y(8)*Y(J
     $+11)+RHOD*ES/EMO*Y(8)*Y(J+NX+11)
      TT=EMM*((DERY(7)-OX*Y(8))*Y(J+NX+11)+2.*Y(7)*Y(J+11))+EMMM*Y(7)*Y(
     $J+11)-RHOD*ES/EMO*Y(7)*Y(J+NX+11)
      SUM1=SUM1+T*AIN (   1,J,I,J)
      SUM2=SUM2+Y(J+NX+11)*AIN (   3,I,J,J)
   58 SUM3=SUM3+TT*AIN (   1,J,I,J)
   62 CONTINUE
      DERY(I+NX2+11)=DERY(I+NX2+11)-SUM1-SUM2*EMMM    *Y(4)*Y(8)
      DERY(I+NXY2)=DERY(I+NXY2)-SUM3+SUM2*EMMM*Y(4)*Y(7)
      SUM1=0.0
      SUM3=0.0
      SUM5=0.0
      SUM6=0.0
      DO 59 L=1,NY
      J=L
      T=Y(J+NX2+11)-OX*Y(J+NXY3)
      TT=Y(J+NXY2)+OX*Y(J+NXY)
      DO 70 JJ=1,NY
      L=JJ
      SUM3=SUM3+T*(Y(7)*Y(L+NXY3)-Y(8)*Y(L+NXY))*AIN (   4,I,J,JJ)
   70 SUM6=SUM6+TT*(Y(7)*Y(L+NXY3)-Y(8)*Y(L+NXY))*AIN (   4,I,J,JJ)
      SUM2=0.0
      SUM7=0.0
      IF(NX.EQ.0) GO TO 63
      DO 60 LL=1,NX
      JJ=LL
      SUM2=SUM2+T*Y(JJ+    11)*AIN (   5,I,J,JJ)
   60 SUM7=SUM7+TT*Y(JJ+NX+11)*AIN (   5,I,J,JJ)
   63 CONTINUE
   59 CONTINUE
      SUM=0.0
      SUM4=0.0
```

```
      IF(NX.EQ.0) GO TO  64
      DO 71 L=1,NX
      J=L
      DO 71 LL=1,NX
      JJ=LL
      SUM=SUM-Y(JJ+11)*Y(JJ+NX+11)*AIN (   6,I,J,JJ)*Y(7)
71    SUM4=SUM4+Y(JJ+11)*Y(JJ+NX+11)*AIN (   6,I,J,JJ)*Y(8)
64    CONTINUE
      DERY(I+NX2+11)=DERY(I+NX2+11)-(       SUM2+SUM3+SUM4)*EMMM
      DERY(I+NXY2)=DERY(I+NXY2)-(SUM+       SUM6+SUM7)*EMMM
      SUM1=0.0
      SUM2=0.0
      SUM3=0.0
      SUM4=0.0
      IF(NX.EQ.0) GO TO 65
      DO 61 L=1,NY
      J=L
      DO 61 LL=1,NX
      JJ=LL
      SUM1=SUM1+(Y(7)*Y(J+NXY3)-Y(8)*Y(J+NXY))*Y(8)*Y(JJ+NX+11)*AIN (   7
     $,I,JJ,J)
      SUM2=SUM2+Y(JJ+NX+11)*Y(J+NXY)*AIN (   8,I,JJ,J)
      SUM3=SUM3+(Y(7)*Y(J+NXY3)-Y(8)*Y(J+NXY))*Y(7)*Y(JJ+NX+11)*AIN (   7
     $,I,JJ,J)
61    SUM4=SUM4+Y(J+NXY3)*Y(JJ+NX+11)*AIN (   8,I,JJ,J)
65    CONTINUE
      DERY(I+NX2+11)=DERY(I+NX2+11)-SUM1*EMMM+SUM2*E*CA/EMO
      DERY(I+NX2+11)=DERY(I+NX2+11)/EMM
      DERY(I+NXY2)=DERY(I+NXY2)-SUM3*EMMM+SUM4*E*CA/EMO
      DERY(I+NXY2)=DERY(I+NXY2)/EMM
      DERY(I+NXY)=Y(I+NX2+11)
      DERY(I+NXY3)=Y(I+NXY2)
67    CONTINUE
      RETURN
      END
```

```
      FUNCTION AINT(I,J,K,L)
      EXTERNAL FT
      COMMON/AREA/S,SL2,AE,BET,EL,G,SR,PE,VE,OX,PI,EMO,PL,AF,RST,CA,E,ES
      COMMON/ELAST/NX,NY,OMG(10),OMG1(10),BETAL(10),H ,IPRNT,NOPRNT
      COMMON/FUN/N,I1,I2,I3,IP(5)
      BL=-EL*0.5
      UL=-BL
      GO TO (10,20,30,    50,60,70,80,90),I
   10 CONTINUE
      FLK=FLOAT(K)
      FLJ=FLOAT(J)
      FLJ4=FLJ*FLJ*FLJ*FLJ
      BL4=BETAL(K)*BETAL(K)
      BL4=BL4*BETAL(K)*BETAL(K)
      PI2=PI*PI
      PI4=PI2*PI*PI
      AINT= 4.*SQRT(2.)*FLJ*FLJ*PI2*BETAL(K)                    /(BL4-FLJ
     $4*PI4)/SIN(BETAL(K))
      IF(J/2*2.EQ.J) GO TO 11
      IF(K/2*2.EQ.K) GO TO 12
      AINT=0.0
      RETURN
   12 AINT=AINT*(1.+COS(BETAL(K)))
      RETURN
   11 IF(K/2*2.EQ.K) GO TO 13
      AINT=AINT*(1.-COS(BETAL(K)))
      RETURN
   13 AINT=0.0
      RETURN
   20 IF(J/2*2.EQ.J) GO TO 21
      AINT=-2.*FL*EL/FLOAT(J)/FLOAT(J)/PI/PI*SQRT(2.*EMO/EL)
      RETURN
   21 AINT=0.0
      RETURN
   30 IF((J/2*2.EQ.J.AND.K/2*2.NE.K).OR.(J/2*2.NE.J.AND.K/2*2.EQ.K))
     $ GO TO 31
      FLK=FLOAT(K)
      FLJ=F LOAT(J)
      PI4=PI*PI*PI*PI
      FLK4=FLK*FLK*FLK*FLK
      BL4=BETAL(J)*BETAL(J)
      BL4=BL4*BETAL(J)*BETAL(J)
      AINT=-4.*SQRT(2.)*FLK4*PI4/EL/(BL4-FLK4*PI4)
      IF(J/2*2.NE.J.AND.K/2*2.NE.K) AINT=-AINT
      RETURN
   31 AINT=0.0
      RETURN
   50 N=3
      I2=J
      I1=K
      I3=L
      IP(1)=1
      IP(2)=2
```

```
      IP(3)=1
      GO TO 101
   60 FL=FLOAT(L)
      TA=TAN(BETAL(J)*0.5)
      TA1=TAN(BETAL(K)*0.5)
      TAH=TANH(BETAL(J)*0.5)
      TAH1=TANH(BETAL(K)*0.5)
      S1=FL*PI-BETAL(K)
      S2=FL*PI+BETAL(K)
      S3=FL*PI-BETAL(J)
      S4=FL*PI+BETAL(J)
      B1=BETAL(K)-BETAL(J)
      B2=BETAL(K)+BETAL(J)
      IF(J/2*2.EQ.J) GO TO 63
      IF(K/2*2.EQ.K) GO TO 62
      IF(L/2*2.EQ.L) GO TO 61
      AINT=BETAL(K)/(BETAL(K)**2+S4*S4)+BETAL(K)/(BETAL(K)**2+S3*S3)+
     $S1/(BETAL(J)**2+S1*S1)-S2/(BETAL(J)**2+S2*S2)+(S4/(BETAL(K)**2
     $+S4*S4)-S3/(BETAL(K)**2+S3*S3))*TA*TAH1+B2/(B2*B2+FL*FL*PI*PI)*
     $(1.+TAH*TAH1)+B1/(B1*B1+FL*FL*PI*PI)*(1.-TAH*TAH1)-B2/(FL*FL*PI*
     $PI-B2*B2)*(1.-TA*TA1)-B1/(FL*FL*PI*PI-B1*B1)*(1.+TA*TA1)+(BETAL(J)
     $/(BETAL(J)**2+S1*S1)+BETAL(J)/(BETAL(J)**2+S2*S2))*TA1*TAH
      AINT=AINT*(-SQRT(2./EMO/EL)*BETAL(K)/EL)
      RETURN
   61 AINT=0.0
      RETURN
   62 IF(L/2*2.EQ.L) GO TO 64
      AINT=0.0
      RETURN
   64 AINT=B1/(FL*FL*PI*PI-B1*B1)*(TA/TA1-1.)-B2/(FL*FL*PI*PI-B2*B2)*
     $(TA/TA1+1.)+S2/(BETAL(J)**2+S2*S2)-S1/(BETAL(J)**2+S1*S1)
     $+BETAL(J)*(1./(BETAL(J)**2+S2*S2)+1./(BETAL(J)**2+S1*S1))*TAH
     $/TA1+BETAL(K)*(1./(BETAL(K)**2+S4*S4)+ 1./(BETAL(K)**2+S3*S3))+
     $(S4/(BETAL(K)**2+S4*S4)-S3/(BETAL(K)**2+S3*S3))*TA/TAH1+B2/(B2*B2
     $+FL*FL*PI*PI)*(1.+TAH/TAH1)+B1/(B1*B1+FL*FL*PI*PI)*(1.-TAH/TAH1)
      AINT=AINT*SQRT(2./EMO/EL)*BETAL(K)/EL
      RETURN
   63 IF(K/2*2.EQ.K) GO TO 65
      IF(L/2*2.EQ.L) GO TO 66
      AINT=0.0
      RETURN
   66 AINT=BETAL(K)*(1./(BETAL(K)**2+S4*S4)+1./(BETAL(K)**2+S3*S3))-
     $(S4/(BETAL(K)**2+S4*S4)+S3/(BETAL(K)**2+S3*S3))*TAH1/TA-B2/(FL*FL
     $*PI*PI-B2*B2)*(1.+TA1/TA)+B1/(FL*FL*PI*PI-B1*B1)*(TA1/TA-1.)+
     $BETAL(J)*(1./(BETAL(J)**2+S2*S2)+1./(BETAL(J)**2+S1*S1))*TA1/TAH
     $+S1/(BETAL(J)**2+S1*S1)-S2/(BETAL(J)**2+S2*S2)
      AINT=AINT*SQRT(2./EMO/EL)/EL*BETAL(K)
      RETURN
   65 IF(L/2*2.EQ.L) GO TO 67
      AINT=B2/(FL*FL*PI*PI-B2*B2)*(1./TA/TA1-1.)+B1/(FL*FL*PI*PI-B1*B1)
     $*(1./TA/TA1+1.)+BETAL(J)*(1./(BETAL(J)**2+S2*S2)+1./(BETAL(J)**2
     $+S1*S1))/TA1/TAH+(S3/(BETAL(K)**2+S3*S3)-S4/(BETAL(K)**2+S4*S4))
     $/TA/TAH1+S2/(BETAL(J)**2+S2*S2)-S1/(BETAL(J)**2+S1*S1)+BETAL(K)*
```

```
  $(1./(BETAL(K)**2+S3*S3)+1./(BETAL(K)**2+S4*S4))
   AINT=AINT*SQRT(2./EMO/EL)/EL*BETAL(K)
   RETURN
67 AINT=0.0
   RETURN
70 IF(J/2*2.EQ.J) GO TO 73
   IF(K/2*2.EQ.K) GO TO 72
   IF(L/2*2.EQ.L) GO TO 71
   FK=FLOAT(K)
   FL=FLOAT(L)
   PISQ=PI*PI
   S1=FK*PI+BETAL(J)
   S2=FK*PI-BETAL(J)
   AINT=2.*FL*PI/EL/SQRT(EMO*EL)*(S1/(S1*S1-FL*FL*PISQ)-S2/(S2*S2
  $-FL*FL*PISQ))
   RETURN
71 FK=FLOAT(K)
   FL=FLOAT(L)
   PISQ=PI*PI
   S1=(FK-FL)*PI
   S2=(FK+FL)*PI
   AINT=2.*FL*PI/EL/SQRT(EMO*EL)*(S1/(BETAL(J)*BETAL(J)+S1*S1)-
  $S2/(BETAL(J)**2+S2*S2))
   RETURN
72 IF(L/2*2.EQ.L) GO TO 74
   FK=FLOAT(K)
   FL=FLOAT(L)
   S1=(FK+FL)*PI
   S2=(FK-FL)*PI
   AINT=-4.*FL*PI/EL/SQRT(EMO*EL)*(S1**3/(S1**4-BETAL(J)**4)-S2**3
  $/(S2**4-BETAL(J)**4))
   RETURN
74 AINT=0.0
   RETURN
73 IF(K/2*2.EQ.K) GO TO 75
   IF(L/2*2.EQ.L) GO TO 76
   AINT=0.0
   RETURN
76 AINT=0.0
   RETURN
75 IF(L/2*2.EQ.L) GO TO 77
   AINT=0.0
   RETURN
77 FL=FLOAT(L)
   FK=FLOAT(K)
   S1=(FK-FL)*PI
   S2=(FK+FL)*PI
   AINT=-4.*FL*PI/EL/SQRT(EMO*EL)*(S1**3/(S1**4-BETAL(J)**4)
  $-S2**3/(S2**4-BETAL(J)**4))
   RETURN
80 FK=FLOAT(K)
   TA=TAN(BETAL(J)*0.5)
   TAI=TAN(BETAL(L)*0.5)
```

```
      TAH=TANH(BETAL(J)*0.5)
      TAH1=TANH(BETAL(L)*0.5)
      S1=FK*PI-BETAL(J)
      S2=FK*PI+BETAL(J)
      S3=FK*PI-BETAL(L)
      S4=FK*PI+BETAL(L)
      B1=BETAL(L)-BETAL(J)
      B2=BETAL(L)+BETAL(J)
      IF(J/2*2.EQ.J) GO TO 83
      IF(K/2*2.EQ.K) GO TO 82
      IF(L/2*2.EQ.L) GO TO 81
      AINT=FK*PI/((FK*PI)**2-B2*B2)*(1.-TA*TA1)+FK*PI/((FK*PI)**2-
     $B1*B1)*(1.+TA*TA1)-BETAL(J)*(1./(BETAL(J)**2+S4*S4)+1./(BETAL(J)
     $**2+S3*S3))*TA1*TAH+S4/(BETAL(J)**2+S4*S4)+S3/(BETAL(J)**2+S3*S3)
     $-BETAL(L)*(1./(BETAL(L)**2+S2*S2)+1./(BETAL(L)**2+S1*S1))*TA*TAH1
     $+S2/(BETAL(L)**2+S2*S2)+S1/(BETAL(L)**2+S1*S1)+FK*PI*(1./(B2*B2
     $+(FK*PI)**2)+1./(B1*B1+(FK*PI)**2))*(1.-TAH*TAH1)
      AINT=AINT*(-FK*PI/EL*SQRT(2./EMO/EL))
      RETURN
81    AINT=0.0
      RETURN
82    IF(L/2*2.EQ.L) GO TO 84
      AINT=0.0
      RETURN
84    AINT=FK*PI/((FK*PI)**2-B2*B2)*(1.+TA/TA1)+FK*PI/((FK*PI)**2-B1*B1)
     $*(1.-TA/TA1)+BETAL(J)*(1./(BETAL(J)**2+S3*S3)-1./(BETAL(J)**2
     $+S4*S4))*TAH/TA1-FK*PI*(1./(BETAL(J)**2+S3*S3)+1./(BETAL(J)**2+
     $S4*S4))+BETAL(L)*(1./(BETAL(L)**2+S2*S2)-1./(BETAL(L)**2+S1*S1))
     $*TA/TAH1+S2/(BETAL(L)**2+S2*S2)+S1/(BETAL(L)**2+S1*S1)+FK*PI/(B2
     $*B2+(FK*PI)**2)*(1.+TAH/TAH1)+FK*PI/(B1*B1+(FK*PI)**2)*(1.-TAH/
     $TAH1)
      AINT=AINT*FK*PI*SQRT(2./EMO/EL)/EL
      RETURN
83    IF(K/2*2.EQ.K) GO TO 85
      IF(L/2*2.EQ.L) GO TO 86
      AINT=0.0
      RETURN
86    AINT=FK*PI/((FK*PI)**2+B2*B2)*(1./TA/TA1-1.)-FK*PI/((FK*PI)**2
     $+B1*B1)*(1./TA/TA1+1.)+BETAL(J)*(1./(BETAL(J)**2+S3*S3)-1./(BETAL
     $(J)**2+S4*S4))/TAH/TA1-S4/(BETAL(J)**2+S4*S4)-S3/(BETAL(J)**2+
     $S3*S3)+BETAL(L)*(1./(BETAL(L)**2+S1*S1) -1./(BETAL(L)**2+S2*S2))
     $/TAH1/TA-S2/(BETAL(L)**2+S2*S2)-S1/(BETAL(L)** 2+S1*S1)-FK*PI/(B2
     $*B2+(FK*PI)**2)*(1./TAH/TAH1+1.)+FK*PI/(B1*B1+(FK*PI)**2)*(1.
     $/TAH/TAH1-1.)
      AINT=AINT*FK*PI*SQRT(2./EMO/EL)/EL
      RETURN
85    IF(L/2*2.EQ.L) GO TO 87
      AINT=FK*PI*(1./((FK*PI)**2-B2*B2)-1./((FK*PI)**2-B1*B1))*(1.+
     $TA1/TA)+BETAL(J)*(1./(BETAL(J)**2+S3*S3)-1./(BETAL(J)**2+S4*S4))
     $*TA1/TAH+S4/(BETAL(J)**2+S4*S4)+S3/(BETAL(J)**2+S3*S3)-BETAL(L)*
     $(1./(BETAL(L)**2+S2*S2)+1./(BETAL(L)+S1*S1))*TAH1/TA-S2/(BETAL(L)
     $**2+S2*S2)+S1/(BETAL(L)**2+S1*S1)-FK*PI/(B1*B1+(FK*PI)**2)*(
     $TAH1/TAH-1.)+FK*PI/(B2*B2+(FK*PI)**2)*(TAH1/TAH+1.)
```

```
      AINT=AINT*FK*PI*SQRT(2./EMO/EL)/EL
      RETURN
   87 AINT=0.0
      RETURN
   90 N=3
      I2=K
      I1=J
      I3=L
      IP(1)=2
      IP(2)=5
      IP(3)=2
      DIMENSION AUX(200)
  101 CALL QATR(BL,UL,1.E-5,200,FT,Y,IER,AUX)
      IF(IER.NE.0)WRITE(6,1001) IER
 1001 FORMAT('  ERROR IN QATR IS ',I3)
      AINT=Y
      RETURN
      END
```

```
      FUNCTION FT(X)
      DIMENSION IPP(3)
      COMMON/AREA/S,SL2,AE,BET,EL,G,SR,PE,VE,DX,PI,EMO,PL,AF,RST,CA,E,ES
      COMMON/FUN/N,I1,I2,I3,IP(5)
      FCTT=1.
      IPP(1)=I1
      IPP(2)=I2
      IPP(3)=I3
      I=1
      T=X/EL+0.5
      TT=X/EL-0.5
    5 K=IP(I)
      M=IPP(I)
      GO TO (10,20,30,40,50,60,80),K
   10 FCTT=FCTT*ENU(X,M)
      I=I+1
      IF(I.GT.N) GO TO 70
      GO TO 5
   20 FCTT=FCTT*ENUP(X,M)
      I=I+1
      IF(I.GT.N) GO TO 70
      GO TO 5
   30 FCTT=FCTT*ENUPP(X,M)
      I=I+1
      IF(I.GT.N) GO TO 70
       GO TO 5
   40 P=EMU(X,M)
      FCTT=FCTT*P
      I=I+1
      IF(I.GT.N) GO TO 70
      GO T O5
   50 P=EMUP(X,M)
      FCTT=FCTT*P
      I=I+1
      IF(I.GT.N) GO TO 70
      GO TO 5
   60 P=1.
      FCTT=FCTT*P
      I=I+1
      IF(I.GT.N) GO TO 70
      GO TO 5
   80 P=X
      FCTT=FCTT*P
      I=I+1
      IF(I.GT.N) GO TO 70
      GO T O5
   70 FT=FCTT*EMO
      RETUR N
      END
```

```
                                                                        QATR  10
                                                                        QATR  10
.......................................................................QATR  20
                                                                        QATR  30
   SUBROUTINE QATR                                                      QATR  40
                                                                        QATR  50
   PURPOSE                                                              QATR  60
      TO COMPUTE AN APPROXIMATION FOR INTEGRAL(FCT(X), SUMMED           QATR  70
      OVER X FROM XL TO XU).                                            QATR  80
                                                                        QATR  90
   USAGE                                                                QATR 100
      CALL QATR (XL,XU,EPS,NDIM,F T,Y,IER,AUX)                          QATR 110
      PARAMETER FCT REQUIRES AN EXTERNAL STATEMENT.                     QATR 120
                                                                        QATR 130
   DESCRIPTION OF PARAMETERS                                            QATR 140
      XL      - THE LOWER BOUND OF THE INTERVAL.                        QATR 150
      XU      - THE UPPER BOUND OF THE INTERVAL.                        QATR 160
      EPS     - THE UPPER BOUND OF THE ABSOLUTE ERROR.                  QATR 170
      NDIM    - THE DIMENSION OF THE AUXILIARY STORAGE ARRAY AUX.       QATR 180
                NDIM-1 IS THE MAXIMAL NUMBER OF BISECTIONS OF           QATR 190
                THE INTERVAL (XL,XU).                                   QATR 200
      FCT     - THE NAME OF THE EXTERNAL FUNCTION SUBPROGRAM USED.      QATR 210
      Y       - THE RESULTING APPROXIMATION FOR THE INTEGRAL VALUE.     QATR 220
      IER     - A RESULTING ERROR PARAMETER.                            QATR 230
      AUX     - AN AUXILIARY STORAGE ARRAY WITH DIMENSION NDIM.         QATR 240
                                                                        QATR 250
   REMARKS                                                              QATR 260
      ERROR PARAMETER IER IS CODED IN THE FOLLOWING FORM                QATR 270
      IER=0   - IT WAS POSSIBLE TO REACH THE REQUIRED ACCURACY.         QATR 280
                NO ERROR.                                               QATR 290
      IER=1   - IT IS IMPOSSIBLE TO REACH THE REQUIRED ACCURACY         QATR 300
                BECAUSE OF ROUNDING ERRORS.                             QATR 310
      IER=2   - IT WAS IMPOSSIBLE TO CHECK ACCURACY BECAUSE NDIM        QATR 320
                IS LESS THAN 5, OR THE REQUIRED ACCURACY COULD NOT      QATR 330
                BE REACHED WITHIN NDIM-1 STEPS. NDIM SHOULD BE          QATR 340
                INCREASED.                                              QATR 350
                                                                        QATR 360
   SUBROUTINES AND FUNCTION SUBPROGRAMS REQUIRED                        QATR 370
      THE EXTERNAL FUNCTION SUBPROGRAM FCT(X) MUST BE CODED BY          QATR 380
      THE USER. ITS ARGUMENT X SHOULD NOT BE DESTROYED.                 QATR 390
                                                                        QATR 400
   METHOD                                                               QATR 410
      EVALUATION OF Y IS DONE BY MEANS OF TRAPEZOIDAL RULE IN           QATR 420
      CONNECTION WITH ROMBERGS PRINCIPLE. ON RETURN Y CONTAINS          QATR 430
      THE BEST POSSIBLE APPROXIMATION OF THE INTEGRAL VALUE AND         QATR 440
      VECTOR AUX THE UPWARD DIAGONAL OF ROMBERG SCHEME.                 QATR 450
      COMPONENTS AUX(I) (I=1,2,...,IEND, WITH IEND LESS THAN OR         QATR 460
      EQUAL TO NDIM) BECOME APPROXIMATIONS TO INTEGRAL VALUE WITH       QATR 470
      DECREASING ACCURACY BY MULTIPLICATION WITH (XU-XL).               QATR 480
      FOR REFERENCE, SEE                                                QATR 490
      (1) FILIPPI, DAS VERFAHREN VON ROMBERG-STIEFEL-BAUER ALS          QATR 500
          SPEZIALFALL DES ALLGEMEINEN PRINZIPS VON RICHARDSON,          QATR 510
          MATHEMATIK-TECHNIK-WIRTSCHAFT, VOL.11, ISS.2 (1964),          QATR 520
```

```
C              PP.49-54.                                                QATR 530
C          (2) BAUER, ALGORITHM 60, CACM, VOL.4, ISS.6 (1961), PP.255. QATR 540
C                                                                       QATR 550
C     ..................................................................QATR 560
C                                                                       QATR 570
      SUBROUTINE QATR(XL,XU,EPS,NDIM,F T,Y,IER,AUX)                     QATR 580
C                                                                       QATR 590
C                                                                       QATR 600
      DIMENSION AUX(1)                                                  QATR 610
C                                                                       QATR 620
C     PREPARATIONS OF ROMBERG-LOOP                                      QATR 630
      AUX(1)=.5*(F T(XL)+F T(XU))                                       QATR 640
      H=XU-XL                                                           QATR 650
      IF(NDIM-1)8,8,1                                                   QATR 660
    1 IF(H)2,10,2                                                       QATR 670
C                                                                       QATR 680
C     NDIM IS GREATER THAN 1 AND H IS NOT EQUAL TO 0.                   QATR 690
    2 HH=H                                                              QATR 700
      E=EPS/ABS(H)                                                      QATR 710
      DELT2=0.                                                          QATR 720
      P=1.                                                              QATR 730
      JJ=1                                                              QATR 740
      DO 7 I=2,NDIM                                                     QATR 750
      Y=AUX(1)                                                          QATR 760
      DELT1=DELT2                                                       QATR 770
      HD=HH                                                             QATR 780
      HH=.5*HH                                                          QATR 790
      P=.5*P                                                            QATR 800
      X=XL+HH                                                           QATR 810
      SM=0.                                                             QATR 820
      DO 3 J=1,JJ                                                       QATR 830
      SM=SM+F T(X)                                                      QATR 840
    3 X=X+HD                                                            QATR 850
      AUX(I)=.5*AUX(I-1)+P*SM                                           QATR 860
C     A NEW APPROXIMATION OF INTEGRAL VALUE IS COMPUTED BY MEANS OF     QATR 870
C     TRAPEZOIDAL RULE.                                                 QATR 880
C                                                                       QATR 890
C     START OF ROMBERGS EXTRAPOLATION METHOD.                           QATR 900
      Q=1.                                                              QATR 910
      JI=I-1                                                            QATR 920
      DO 4 J=1,JI                                                       QATR 930
      II=I-J                                                            QATR 940
      Q=Q+Q                                                             QATR 950
      Q=Q+Q                                                             QATR 960
    4 AUX(II)=AUX(II+1)+(AUX(II+1)-AUX(II))/(Q-1.)                      QATR 970
C     END OF ROMBERG-STEP                                               QATR 980
C                                                                       QATR 990
      DELT2=ABS(Y-AUX(1))                                               QATR1000
      IF(I-5)7,5,5                                                      QATR1010
    5 IF(DELT2-E)10,10,6                                                QATR1020
    6 IF(DELT2-DELT1)7,11,11                                            QATR1030
    7 JJ=JJ+JJ                                                          QATR1040
    8 IER=2                                                             QATR1050
```

```
 9 Y=H*AUX(1)                                                    QATR1060
   RETURN                                                        QATR1070
10 IER=0                                                         QATR1080
   GO TO 9                                                       QATR1090
11 IER=1                                                         QATR1100
   Y=H*Y                                                         QATR1110
   RETURN                                                        QATR1120
   END                                                           QATR1130
```

References

1. Grubin, C., "Mechanics of Variable Mass Systems," Jour. Franklin Inst., Vol. 276, 1963, pp. 305-312.

2. Dryer, M., "Equations of Motion for an Arbitrary Body of Variable Mass," Martin-Denver Res. Dept. R-61-18, 1961.

3. Leitmann, G., "On the Equation of Rocket Motion," Jour. Interplanetary Soc., Vol. 16, 1957, pp. 141-147.

4. Davis, L. Jr., Follin, J.W. Jr., and Blitzer, L., Exterior Ballistics of Rockets, Van Nostrand Co., Princeton, N.J., 1958.

5. Seide, P., "Effect of Constant Longitudinal Acceleration on the Transverse Vibration of Uniform Beams," Aerospace Corp., TDR-169 (3560-30) TN-6, 1963.

6. Beal, T. R., "Dynamic Stability of a Flexible Missile Under Constant and Pulsating Thrusts," AIAA Jour., Vol. 3, 1965, pp. 486-494.

7. Miles, J. W., Young, D., Fowler, J.R., et. al., "Generalized Missile Dynamics Series," Space Technology Labs., Vols. I-VII, GM-TR-0165, 1958.

8. Keith, J.S., et. al., "Methods in Structural Dynamics for Thin Shell Clustered Launch Vehicles," Air Force Flight Dynamics Laboratory Report Number FDL-TDR-64-105, April, 1965.

9. Birnbaum, J., "Bending Vibrations of a Perforated Grain Solid Propellant During Powered Flight," IAS Paper No. 61-30, 1961.

10. Edelen, D.G.B., "On the Dynamic Effect of Fuel Flow on the Motion of Boost Vehicles," Rand Corp., RM-3268-NASA, 1962.

11. Price, E.W., "One-Dimensional, Steady Flow with Mass Additions and the Effect of Combustion Chamber Flow on Rocket Thrust," ARS Jour., Vol. 5, No. 2, 1955, pp. 61-68, 78.

12. Meirovitch, L., and Wesley, D.A., "On the Dynamic Characteristics of a Variable-Mass Slender Elastic Body Under High Accelerations," AIAA Jour., Vol. 5, No. 8, 1967, pp. 1439-1447.

13. Meirovitch, L., "The General Motion of a Variable-Mass Flexible Rocket with Internal Flow," NASA CR-1528, February, 1970.

14. Meirovitch, L., "General Motion of a Variable-Mass Flexible Rocket with Internal Flow," J. Spacecraft and Rockets, Vol. 7, No. 2, Feb., 1970, pp. 186-195.

15. Meirovitch, L., and Bankovskis, J., "Dynamic Characteristics of a Variable-Mass Flexible Missile," Sixth Semi-Annual Technical Progress Report, NASA Research Grant NGR 36-004-030, December, 1970.

16. Meirovitch, L. and Bankovskis, J., "Dynamic Characteristics of a Two-Stage Variable-Mass Flexible Rocket," Fourth Semi-Annual Technical Progress Report, NASA Research Grant NGR 36-004-030, August, 1969.

17. Shames, I.H., Mechanics of Fluids, McGraw-Hill, 1962.

18. Gantmakher, F.R., and Levin, L.M., The Flight of Uncontrolled Rockets, Pergamon Press, New York, 1964.

19. Meirovitch, L., Analytical Methods in Vibrations, The Macmillan Company, New York, 1967.

20. Lamb, H., Hydrodynamics, Cambridge University Press, 6th ed., 1932.

21. Munk, M.M., "The Aerodynamic Forces on Airship Hulls," NACA Rept. 184, 1924.

22. Jones, R.T., "Properties of Low-Aspect-Ratio Pointed Wings at Speeds Below and Above the Speed of Sound," NACA Rept. 835, 1946.

23. Bryson, A.E. Jr., "Stability Derivatives for a Slender Missile with Application to a Wing-Body-Vertical Tail Configuration," J. Aeronautical Sci., Vol. 20, No. 5, pp. 297-308, 1953.

24. Nielsen, J.N., Missile Aerodynamics, McGraw-Hill Book Company, New York, 1960.

25. Bisplinghoff, R.L., Ashley, H., and Halfman, R.L., Aeroelasticity, Addison-Wesley, Cambridge, Massachusetts, 1955.

26. Kacprzynski, J. and Kaliski, S., "Flutter of a Deformable Rocket in Supersonic Flow," Advances in Aeronautical Sciences, Vol. 4, pp. 911-926, 1962.

27. Meirovitch, L., Methods of Analytical Dynamics, McGraw-Hill, New York, 1970.

28. Ralson, A. and Wilf, H., Mathematical Methods for Digital Computers, Wiley, New York/London, 1960, pp. 110-120.

29. Bustamante, A.C., and Walker, W.E., "Design of the Sandia High-Altitude Sampler Rocket System (HAS)," Sandia Corporation Research Report SC-4589(RR), August, 1961.

30. Early, L.J., "Development of a Small Animal Payload and Integration with a Sounding Rocket," NASA SP-109, 1966.

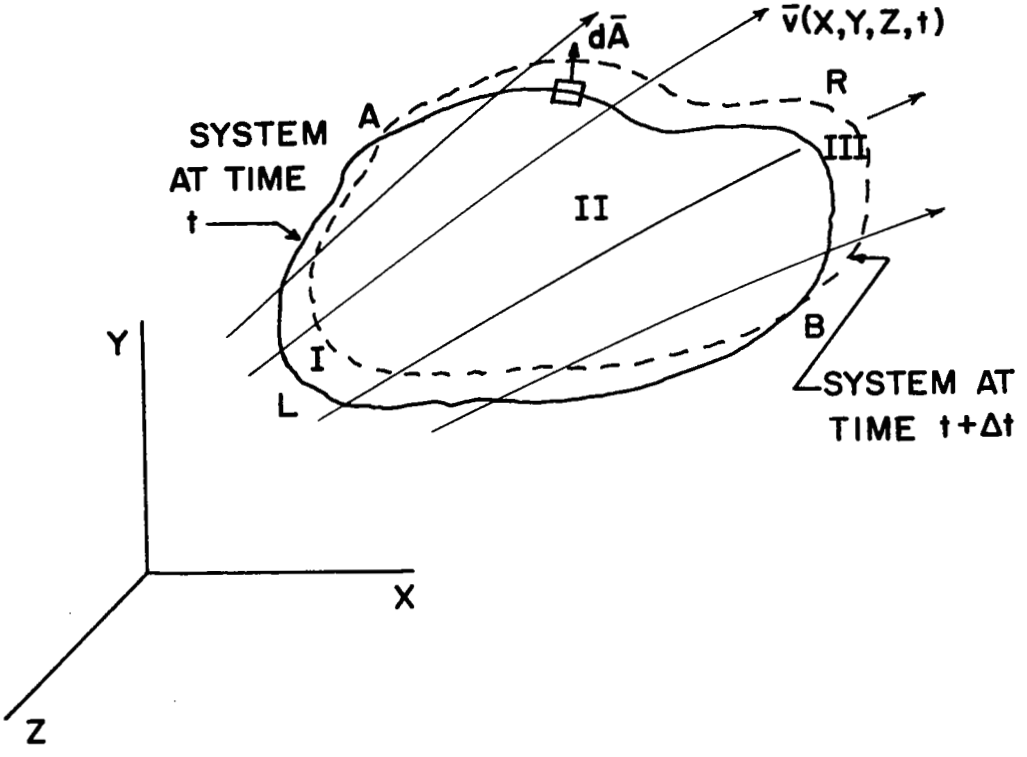

Figure I - The Control Volume

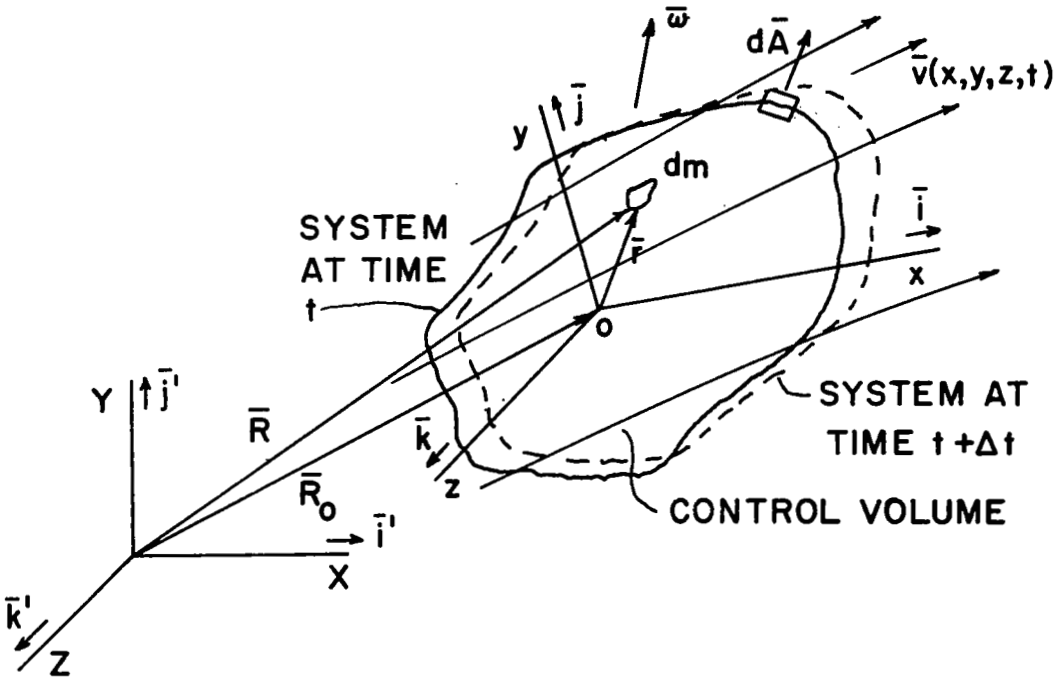

Figure 2 - Noninertial Control Volume

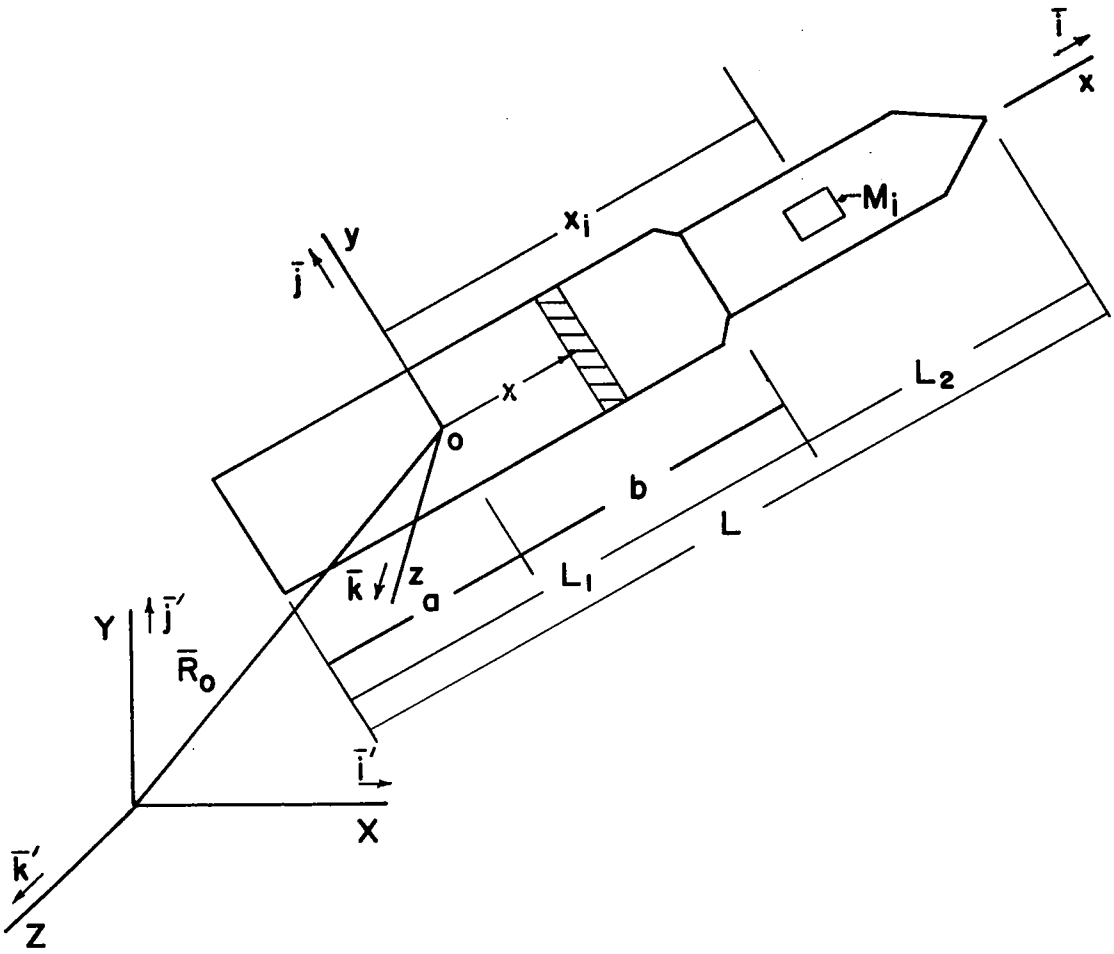

Figure 3 - Two-stage Missile

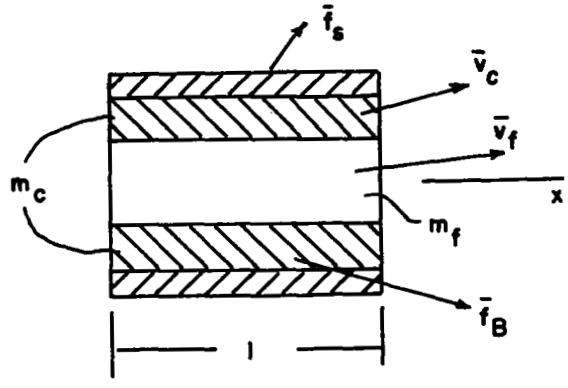

Figure 4 - The Rocket Element of Unit Length

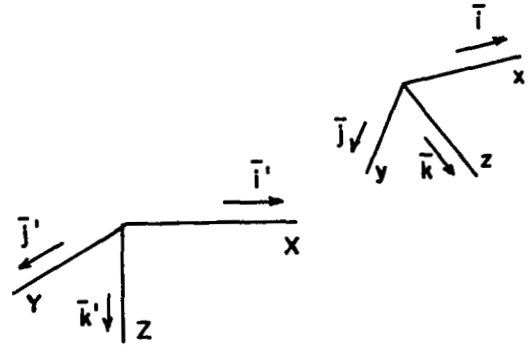

Figure 5 - Inertial and Moving Coordinate Systems

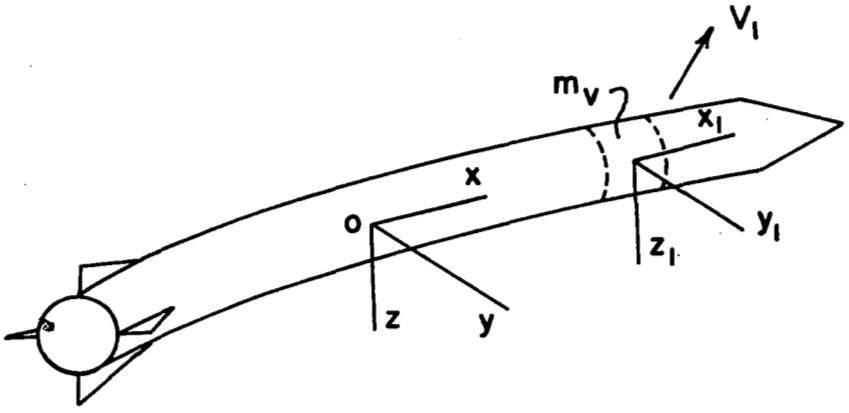

Figure 6 - Coordinate Systems for the Rocket

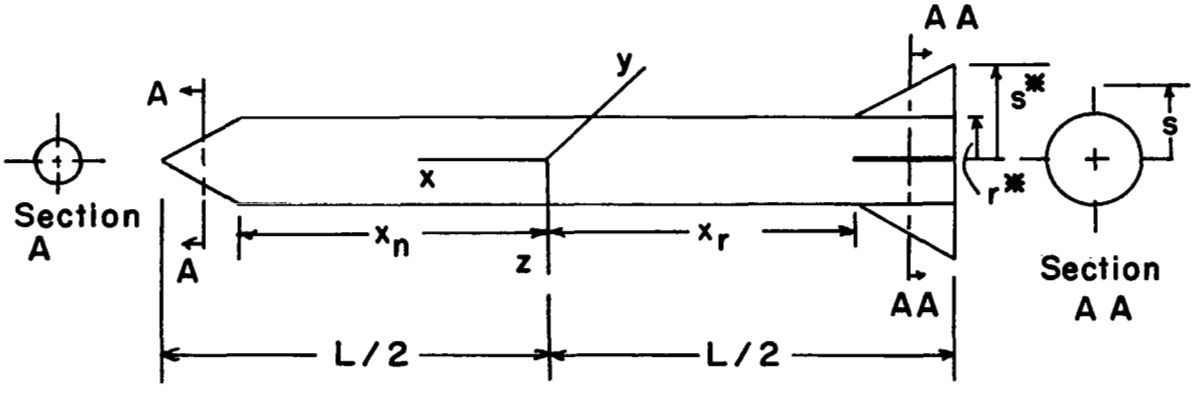

Figure 7 - Rocket Characteristics

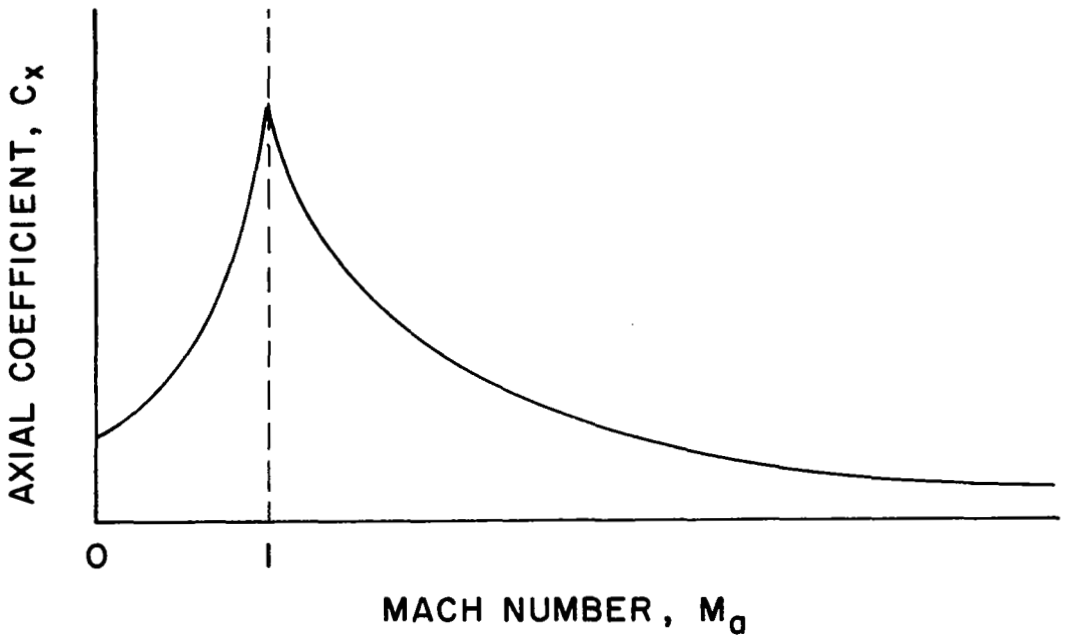

Figure 8 - Axial Coefficient vs. Mach Number

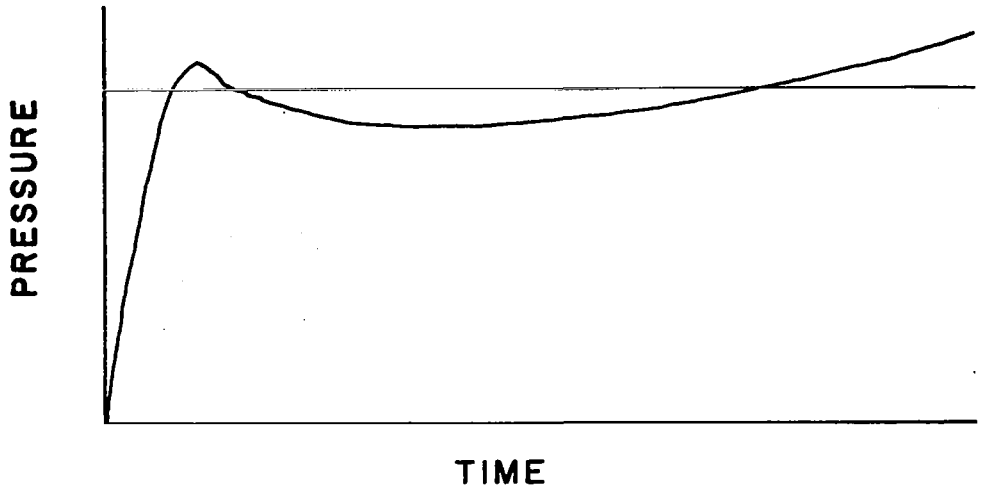

a.

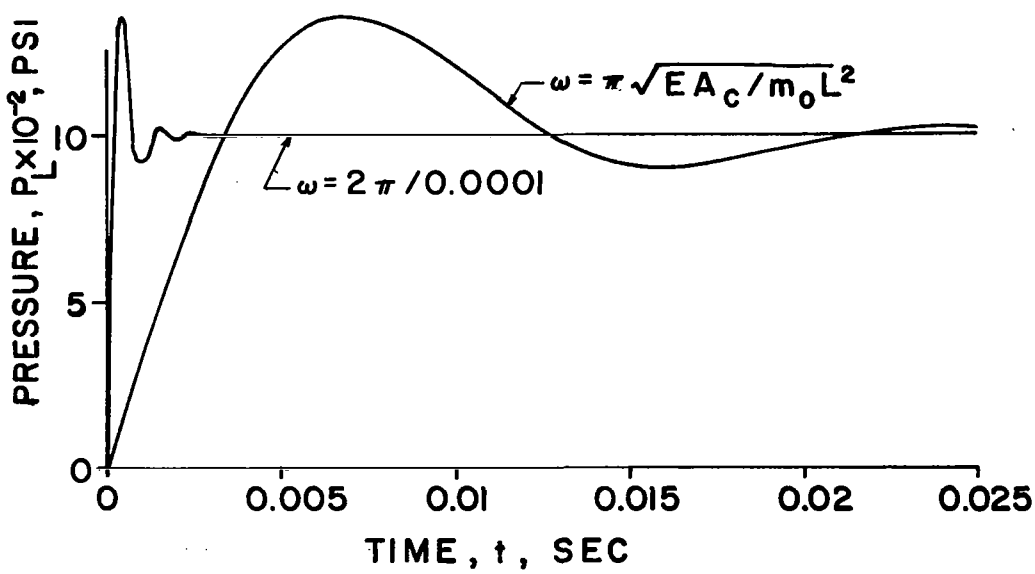

b.

Figure 9 - Pressure vs. Time

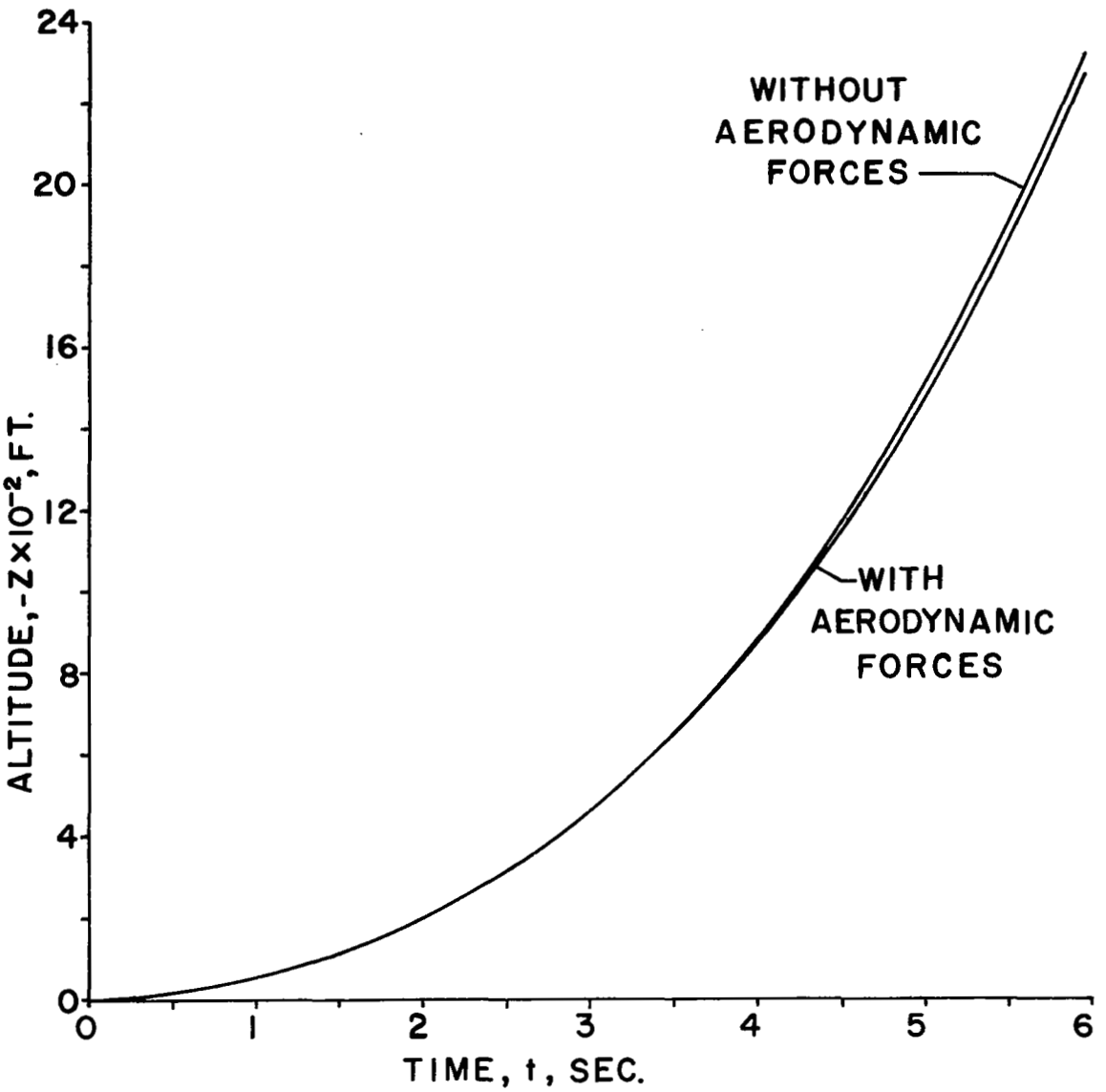

Figure 10 - Altitude vs. Time

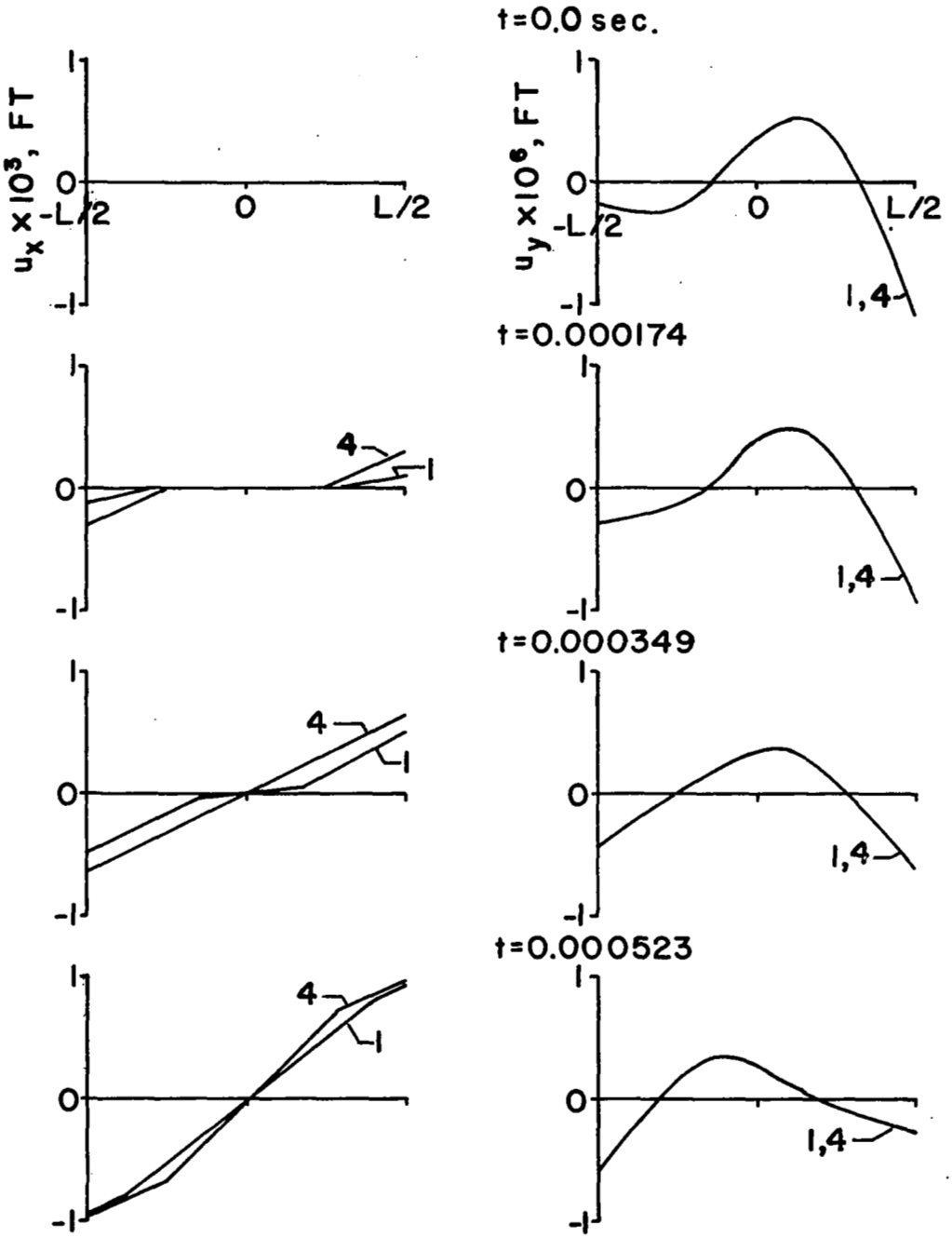

Figure 11a - Elastic Motions For Missile With Pressure As A Parameter (Case I And Reference 15(4))

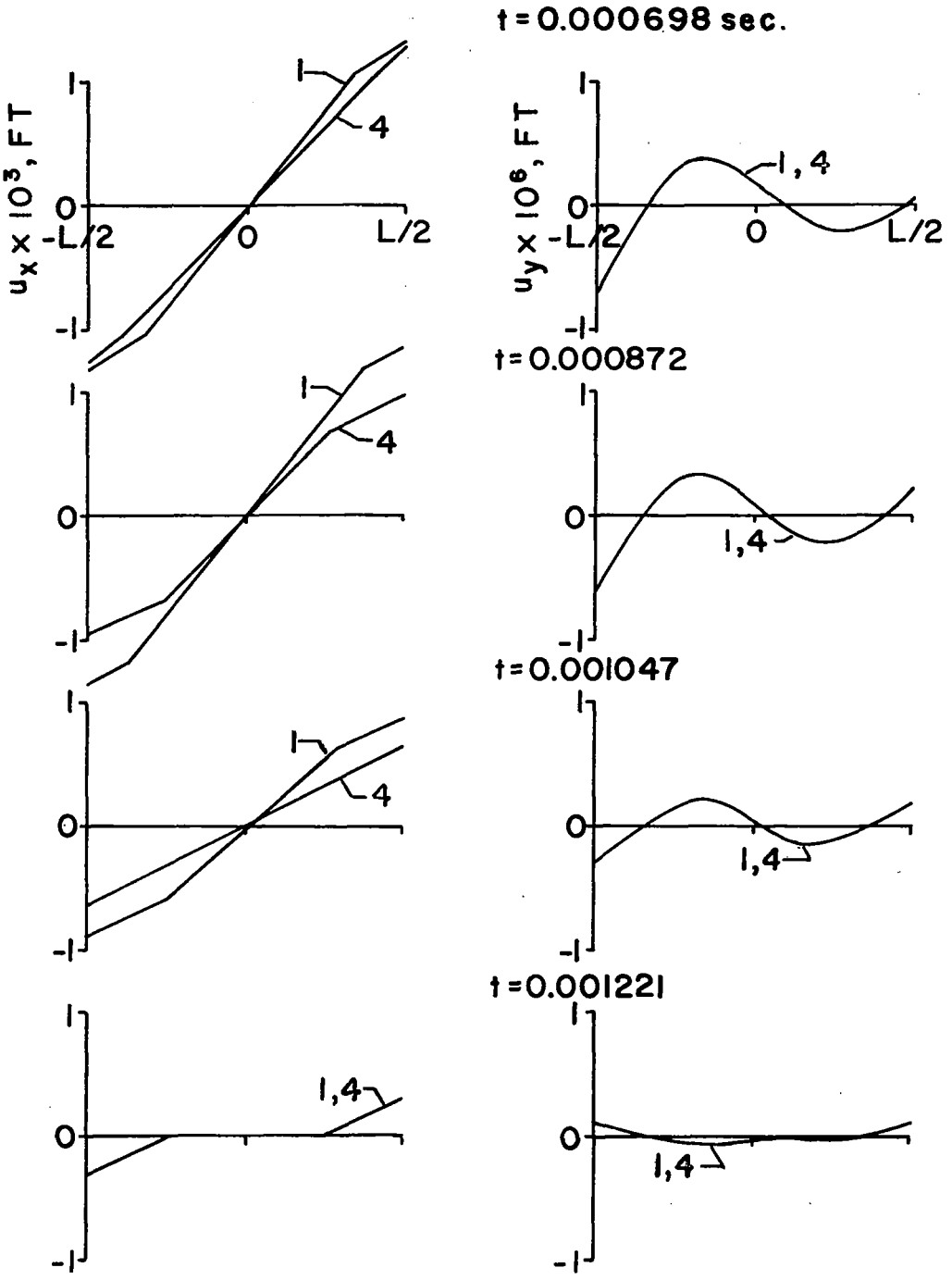

Figure 11b - Elastic Motions For Missile

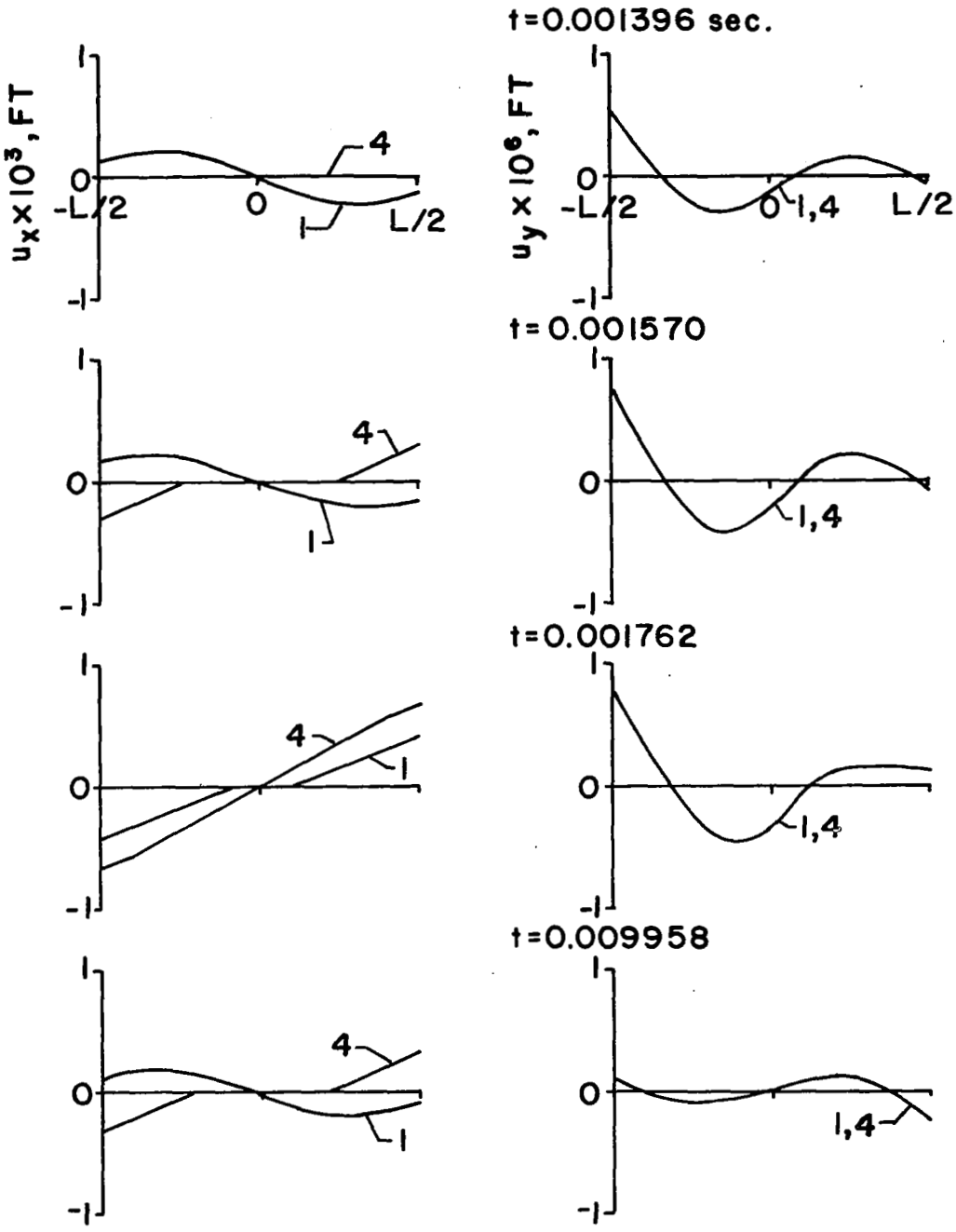

Figure IIc - Elastic Motions For Missile

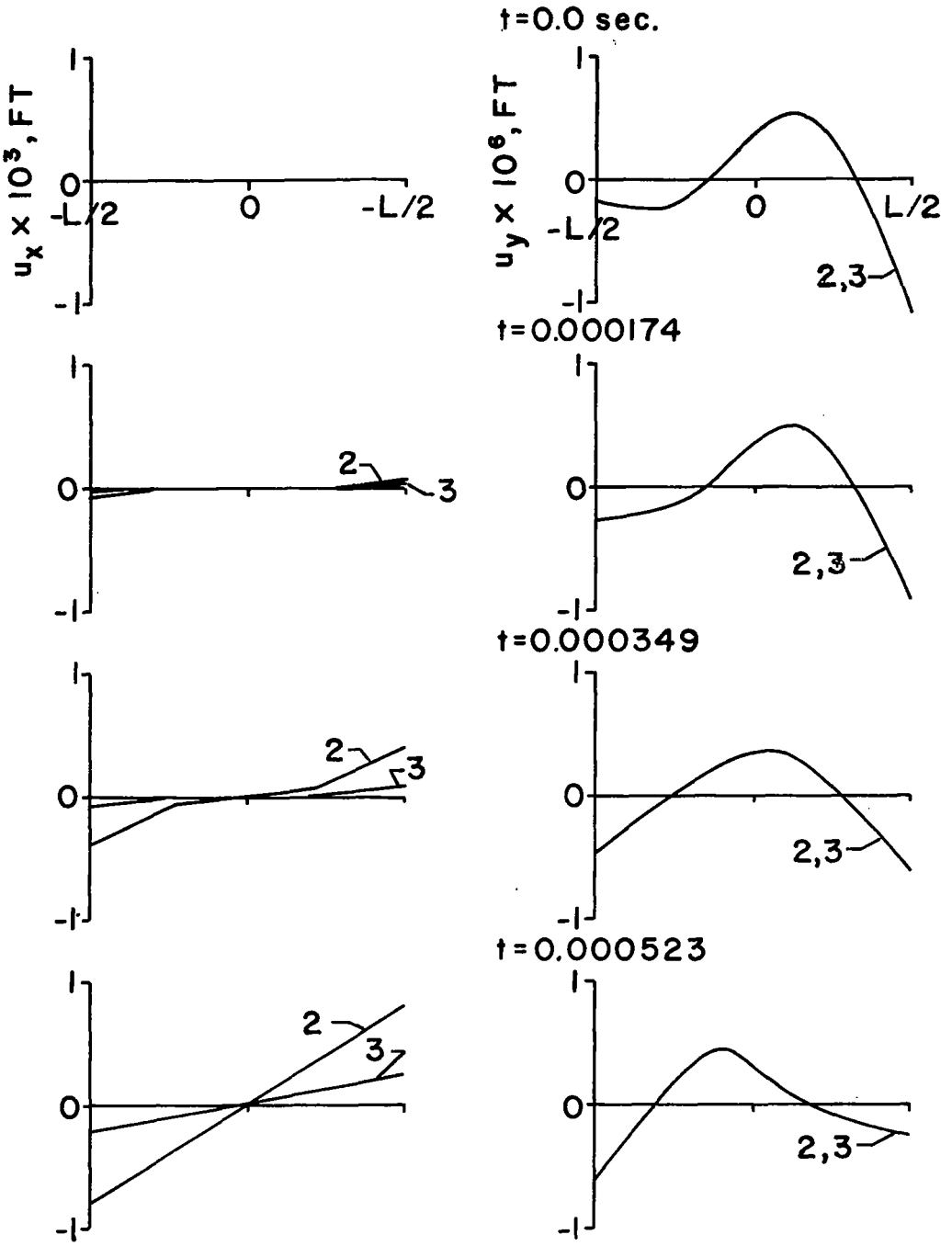

Figure 12a - Elastic Motions For Missile With Pressure As A Parameter (Cases 2 And 3)

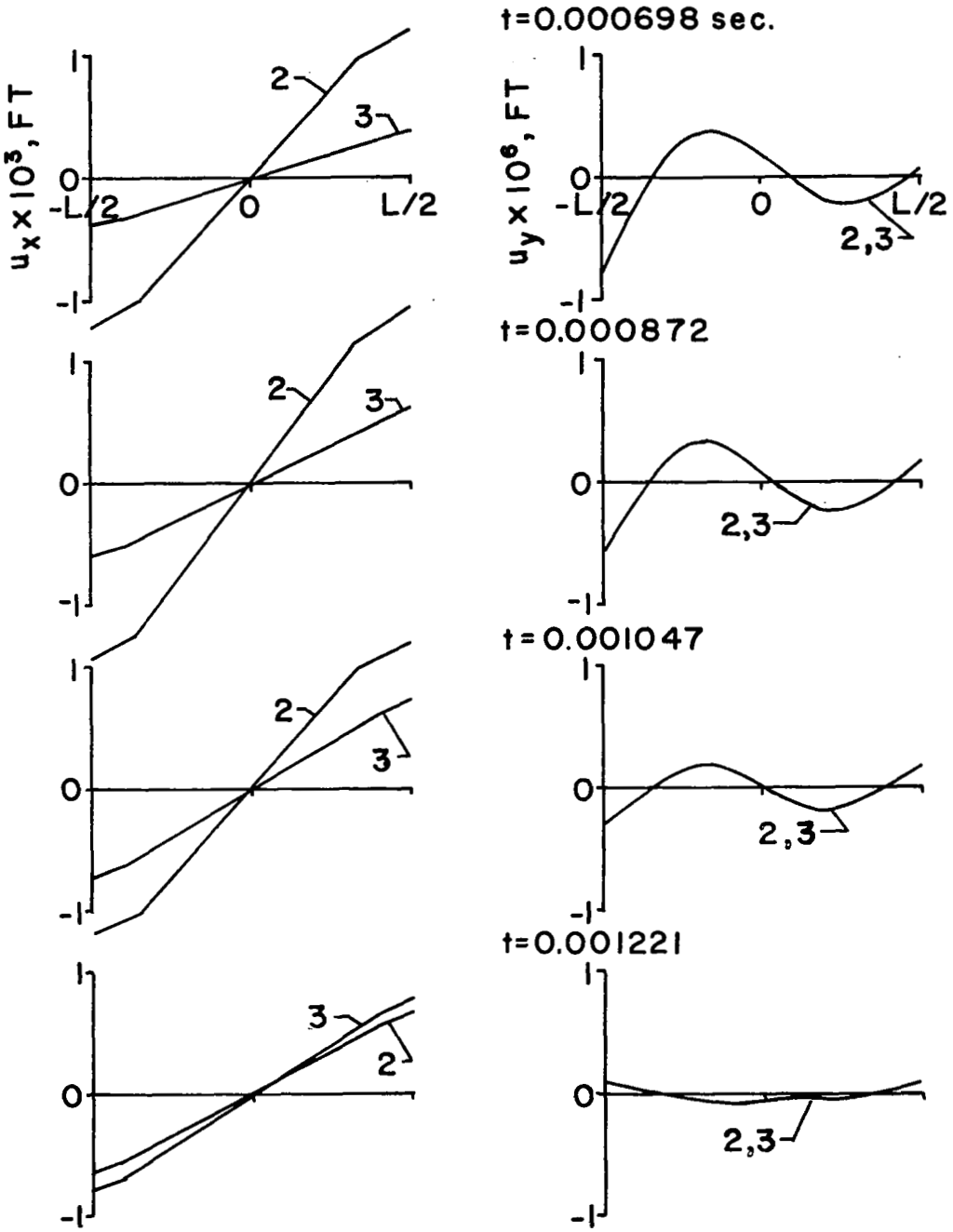

Figure 12b - Elastic Motions For Missile

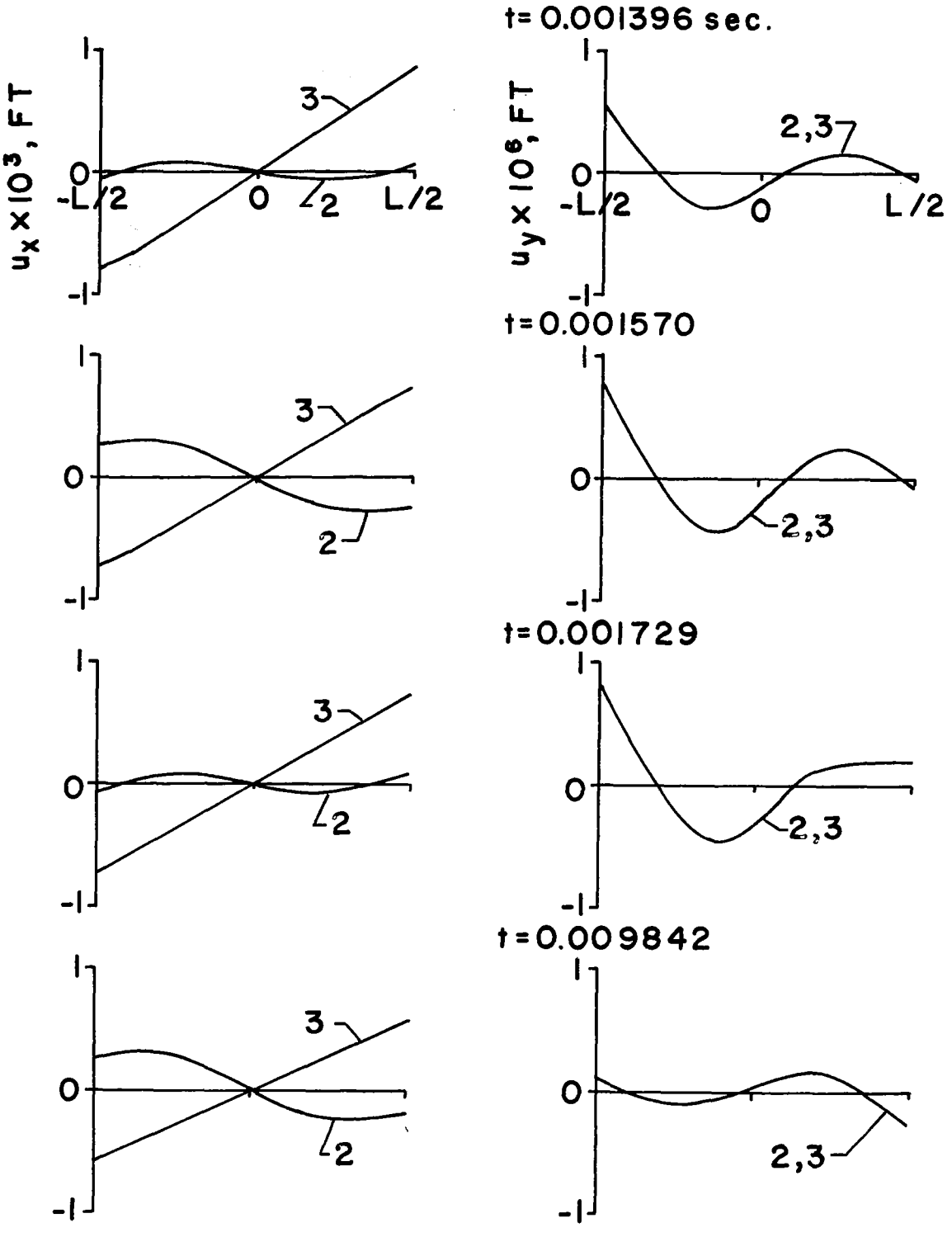

Figure 12c - Elastic Motions For Missile

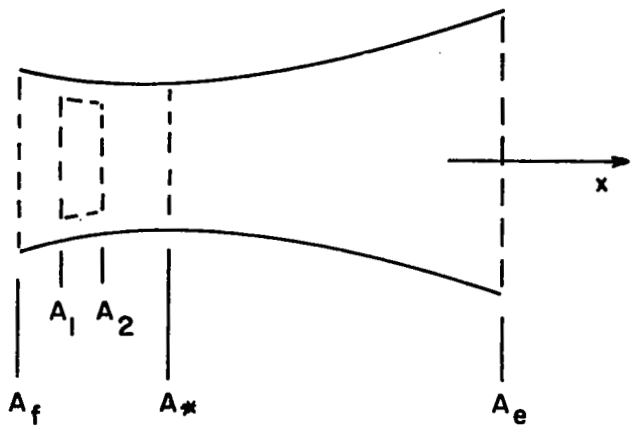

Figure A1- The Nozzle