Bellcomm Inc.

B - 8/5/63

(NASA-CR-129402) RELIABILITY MATHEMATICAL MODEL SATURN S-4B STAGE (Douglas Aircraft Co., Inc.) 15 Apr. 1963 352 p

N72-75[illegible]-3

Unclas

00/99 36426

JUL 1972
RECEIVED
NASA STI FACILITY
INPUT BRANCH

RELIABILITY MATHEMATICAL MODEL SATURN S-IVB STAGE

15 APRIL 1963

DOUGLAS REPORT SM 43610

NOV 1972
RECEIVED
NASA STI FACILITY
INPUT BRANCH

MISSILE & SPACE SYSTEMS DIVISION
DOUGLAS AIRCRAFT COMPANY, INC.
SANTA MONICA CALIFORNIA

DOUGLAS

Technical Library, Bellcomm, Inc.

from Roeser
8/5/63

JUN 22 1965

RELIABILITY MATHEMATICAL MODEL SATURN S-IVB STAGE

15 APRIL 1963
DOUGLAS REPORT SM 43610

Approved by: T. E. Abraham

T.E. Abraham, Chief
S-IVB Systems
Saturn Engineering

Prepared For
National Aeronautics and Space Administration
Under Contract No. NAS7-101

Technical Library, Bellcomm, Inc.

DOUGLAS MISSILE & SPACE SYSTEMS DIVISION

ABSTRACT

Douglas Aircraft Company Report Number SM-43610, Reliability Mathematical Model, Saturn S-IVB Stage, describes the reliability philosophy and includes the reliability block diagrams, failure effect analysis, and the mathematical model summary for the Saturn S-IVB stage. This report is prepared for the National Aeronautics and Space Administration under Contract Number NAS 7-101.

TABLE OF CONTENTS

INTRODUCTION

Reliability Philosophy

Reliability Mathematical

Reliability Failure Effect Analysis

Reliability Mathematical Summary

Definitions

SYSTEM AND SUBSYSTEM ANALYSIS

Saturn S-IVB System

Airframe Subsystem

Propulsion Subsystem

Propellant Utilization Subsystem

Flight Control Subsystem

Auxiliary Power Supply Subsystem

Separation Subsystem

Electrical Subsystem

Data Acquisition Subsystem

Environmental Control Subsystem

Range Safety Subsystem

APPENDIX

Flight Critical Items List

INTRODUCTION TO THE RELIABILITY MATHEMATICAL MODEL FOR THE SATURN S-IVB STAGE

General Reliability Philosophy

A chain is no stronger than its weakest link. Likewise, an equipment is no more reliable than its weakest component. This is expressed by the product law of reliability which states that in a series system, the resulting total reliability is the product of the reliabilities of the individual elements in that system. Hence, the total reliability in such a system can never be greater than that component which has the lowest reliability and will usually be much less.

Saturn S-IVB Stage Reliability Philosopy

Of prime importance here is the design philosophy that no single failure in a subsystem should abort the flight. Since strict adherence to this policy is not practical within the confines of a time and budget limited program, it is important to minimize stage loss probability. The above dictates an analysis which is based on component reliabilities and single failure effect analysis.* As noted in the failure effect analysis, the occurrence of a particular type or mode of failure does not always result in a loss of the system, and consequently, not all of the component unreliability contributes to a stage loss probability. Accordingly, these significant portions of the unreliabilities must be taken into account in the statistical analysis for prediction of the probability of NO STAGE LOSS. The expression thus derived will generally show a higher probability of NO STAGE LOSS than the simple product of the individual component reliabilities. This analytic approach - The Probability of NO STAGE LOSS, Based on Component Reliability - is shown in Figure 1.

* Multiple FEA will be included in the Math Model when the Engineering Drawing Completion (EDC) is available.

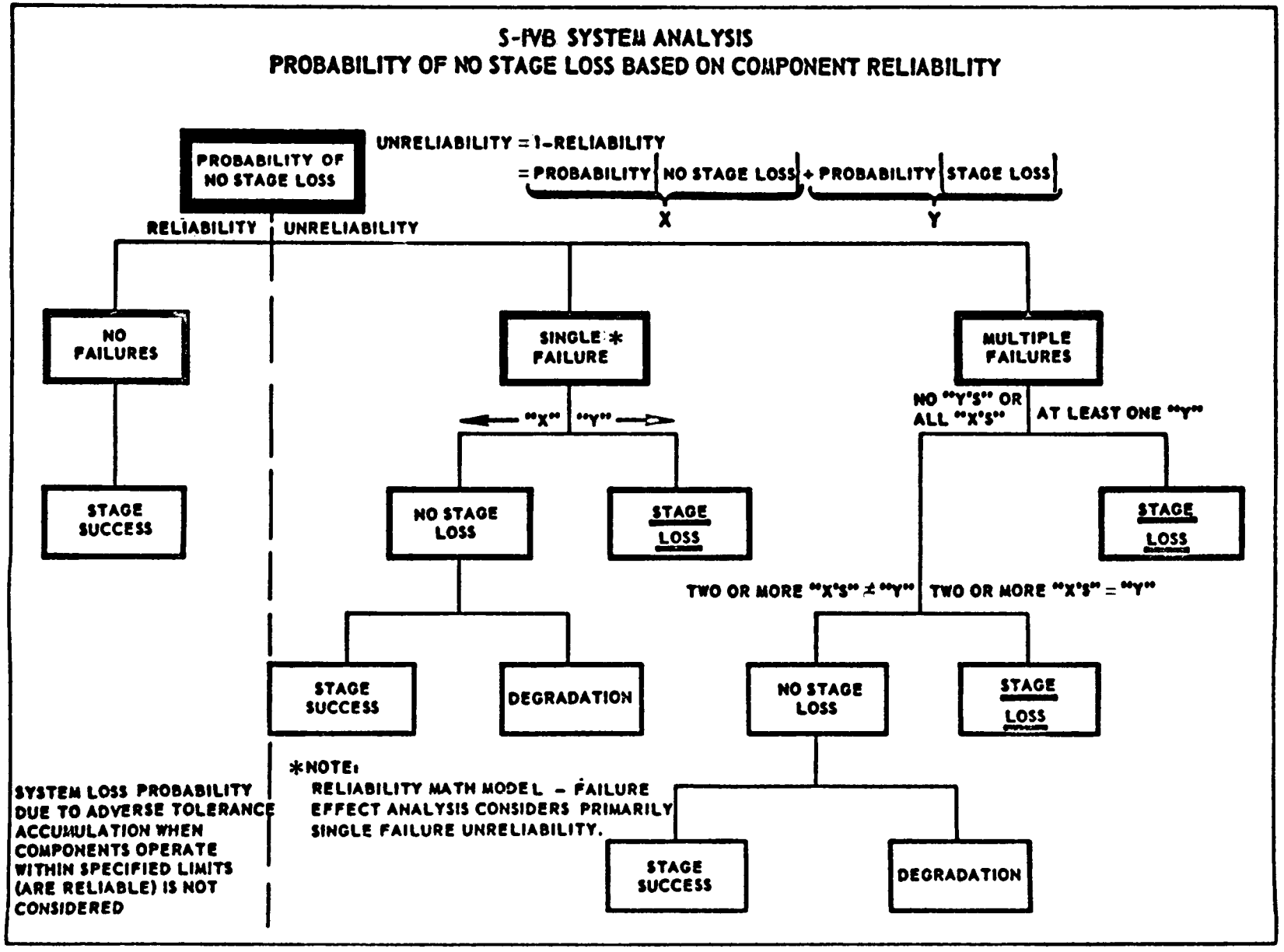
S-IVB SYSTEM ANALYSIS
PROBABILITY OF NO STAGE LOSS BASED ON COMPONENT RELIABILITY
PROBABILITY OF NO STAGE LOSS
UNRELIABILITY = 1-RELIABILITY
= PROBABILITY NO STAGE LOSS + PROBABILITY STAGE LOSS
X
Y
RELIABILITY
UNRELIABILITY
NO FAILURES
SINGLE * FAILURE
MULTIPLE FAILURES
"X"
"Y"
NO "Y'S" OR ALL "X'S"
AT LEAST ONE "Y"
STAGE SUCCESS
NO STAGE LOSS
STAGE LOSS
STAGE LOSS
TWO OR MORE "X'S" ≠ "Y"
TWO OR MORE "X'S" = "Y"
STAGE SUCCESS
DEGRADATION
NO STAGE LOSS
STAGE LOSS
STAGE SUCCESS
DEGRADATION
SYSTEM LOSS PROBABILITY DUE TO ADVERSE TOLERANCE ACCUMULATION WHEN COMPONENTS OPERATE WITHIN SPECIFIED LIMITS (ARE RELIABLE) IS NOT CONSIDERED
*NOTE:
RELIABILITY MATH MODEL - FAILURE EFFECT ANALYSIS CONSIDERS PRIMARILY SINGLE FAILURE UNRELIABILITY.

FIGURE 1

PURPOSE OF THE RELIABILITY MATHEMATICAL MODEL

A reliability mathematical model presents, in block diagram form, the reliability concept of the system functions and shows the reliability arrangement of components in a system. Its purpose is to provide early prediction analysis, to determine whether initial allocations can be met, and to point out weak links in the system. The mathematical model is revised periodically to reflect design changes and information feedback.

It is imperative that a well integrated reliability program be agressively pursued early in the design of a system to assure, with high confidence, that an acceptable "inherent reliability" is designed into the equipment. The mathematical model is a most useful reliability tool for this purpose, which among other uses allows the apportionment of the overall system reliability requirement contractually applicable down to the component or part level. This apportionment is the reliability allocation, and should not be confused with the reliability prediction. It is based primarily on physical and functional complexity of the equipment, state-of-the-art or degree of development, and operating time considerations. These reliability allocations, together with the component failure effect analysis, serve to indicate potential reliability problems of components in which the state-of-the-art is new, and of components whose known failure probabilities are higher than the allocated unreliability.

Reliability predictions are estimates of inherent reliability. Predictions are based, when data are available, on component and part failure rates, or in the absence of data, on such factors as complexity, environment, and the newness of the design. The initial reliability prediction is theoretical. Subsequent predictions at various stages in the development and production cycles, together with evaluation of associated test data, enables a more factual verification of the prediction. The purpose of reliability predictions is to indicate design

weaknesses so that corrections may be made before the design is fixed. Predictions also determine the feasibility of attaining the requirement, using present state-of-the-art equipment.

Generally, the allocated reliability requirements proceed downward from the top of the mathematical model through the complete systems, subsystems, modules, components, and parts. Predictions proceed upward from the bottom. Next, a comparison of the reliability allocations and predictions is made. This analysis will indicate the direction of the reliability effort that will contribute most economically in meeting the reliability requirements or objectives.

Note: If predictions fall short of the allocated requirements and no trade-off reliability is available, redesign, improvement of the state-of-the-art, redundancy, etc., must be accomplished to improve reliability and eliminate the "weak-link."

CODING SYSTEM

The coding system used in this mathematical model provides a means for direct reference of all reliability significant items to the model. This reference system may be used for test plans as well as for failure reporting. Further, identical items in different applications are referenced to the specific function, and statistical data or analyses can be properly identified by this coding system.

The mathematical model code or number consists of utilizing the letter "V" to denote the vehicle components and "G" to denote the ground components. After these letters, numbers are used to denote stages, systems, subsystems and components. An example of such numbers is "V-IV-B-42-01", which designates the first component (01) of the second subsystem of the fourth system (42) of the S-IVB stage or "the S-IVB stage fuel fill."

If new items are added to the mathematical model or existing items removed, new numbers are assigned to the additions and existing numbers discontinued for deleted items.

RELIABILITY FAILURE EFFECT ANALYSIS

A reliability failure effect analysis is a study of a system or subsystem from the standpoint that any single component may fail inopportunely. The failure effect analysis considers what happens after such an event occurs. The results of this analysis serve to direct design attention and test efforts in the eraly design and development stages of a program.

A failure effect analysis is prepared by utilizing system or subsystem functional schematics, logic diagrams, component and part drawings and specifications, failure data, test results, and other pertinent information. As a rule, the reliability block diagrams are prepared in advance of the detailed failure effects analysis. Figure 2, The S-IVB Stage Reliability Block Diagram Location Scheme, is used as a general guide for the preliminary reliability block diagrams and Figure 3 is used for the detail failure effects analysis. The failure effect analysis often requires necessary changes in the block diagram, which may not have been apparent earlier. The block diagram is intended to present a picture of the subsystem which will show operational/functional dependency for failure effect analysis, and series independency for system components whose failure probabilities are statistically independent. Obviously, it is difficult to satisfy both requirements all the time, therefore, there are exceptions to the general rules.

The Saturn S-IVB stage reliability failure effect analysis indicates the effect of component failure on subsystem performance. It also points out the effect on the S-IVB stage and the Saturn 1B and Saturn V vehicle should failure occur during the countdown/checkout, the automatic countdown sequence, the boost phase,

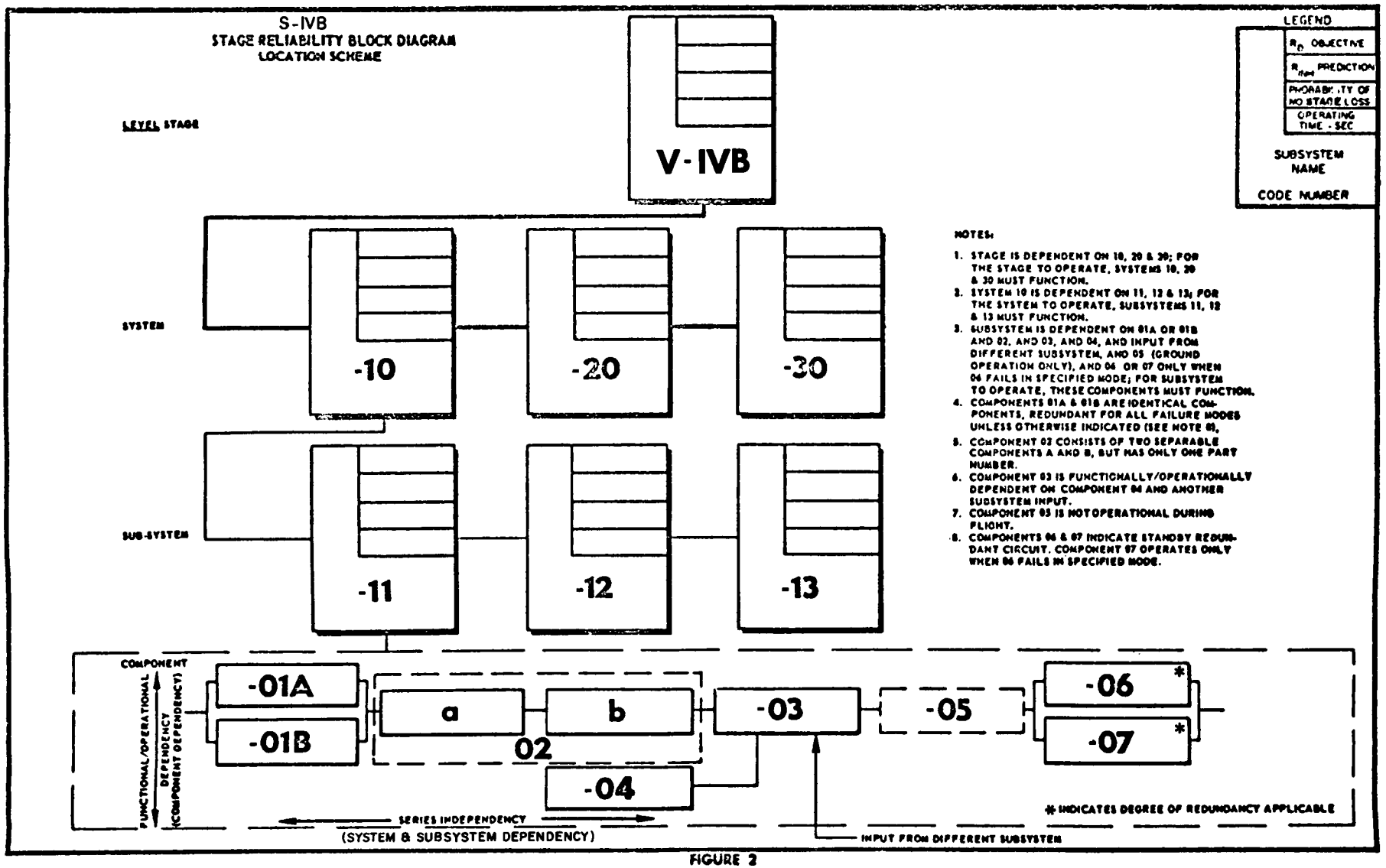
S-IVB
STAGE RELIABILITY BLOCK DIAGRAM
LOCATION SCHEME
LEVEL STAGE
SYSTEM
SUB-SYSTEM
COMPONENT
V-IVB
-10
-20
-30
-11
-12
-13
-01A
-01B
a
b
02
-03
-04
-05
-06 *
-07 *
FUNCTIONAL/OPERATIONAL DEPENDENCY (COMPONENT DEPENDENCY)
SERIES INDEPENDENCY
(SYSTEM & SUBSYSTEM DEPENDENCY)
INPUT FROM DIFFERENT SUBSYSTEM
* INDICATES DEGREE OF REDUNDANCY APPLICABLE
LEGEND
R_D OBJECTIVE
R_{Hist} PREDICTION
PROBABILITY OF NO STAGE LOSS
OPERATING TIME - SEC
SUBSYSTEM NAME
CODE NUMBER
NOTES:
1. STAGE IS DEPENDENT ON 10, 20 & 30; FOR THE STAGE TO OPERATE, SYSTEMS 10, 20 & 30 MUST FUNCTION.
2. SYSTEM 10 IS DEPENDENT ON 11, 12 & 13; FOR THE SYSTEM TO OPERATE, SUBSYSTEMS 11, 12 & 13 MUST FUNCTION.
3. SUBSYSTEM 11 IS DEPENDENT ON 01A OR 01B AND 02, AND 03, AND 04, AND INPUT FROM DIFFERENT SUBSYSTEM, AND 05 (GROUND OPERATION ONLY), AND 06 OR 07 ONLY WHEN 06 FAILS IN SPECIFIED MODE; FOR SUBSYSTEM TO OPERATE, THESE COMPONENTS MUST FUNCTION.
4. COMPONENTS 01A & 01B ARE IDENTICAL COMPONENTS, REDUNDANT FOR ALL FAILURE MODES UNLESS OTHERWISE INDICATED (SEE NOTE 8).
5. COMPONENT 02 CONSISTS OF TWO SEPARABLE COMPONENTS A AND B, BUT HAS ONLY ONE PART NUMBER.
6. COMPONENT 03 IS FUNCTIONALLY/OPERATIONALLY DEPENDENT ON COMPONENT 04 AND ANOTHER SUBSYSTEM INPUT.
7. COMPONENT 05 IS NOT OPERATIONAL DURING FLIGHT.
8. COMPONENTS 06 & 07 INDICATE STANDBY REDUNDANT CIRCUIT. COMPONENT 07 OPERATES ONLY WHEN 06 FAILS IN SPECIFIED MODE.

FIGURE 2

Δ ITEMS MARKED THUS (Δ) DO NOT OPERATE IN FLIGHT

RELIABILITY FAILURE EFFECT ANALYSIS

(NAME OF SUBSYSTEM) SUBSYSTEM

A) COUNTDOWN/CHECKOUT
B) COUNTDOWN - AUTOMATIC SEQUENCE
C) FLIGHT - BOOST PHASE
D) FLIGHT - POWERED PHASE, 1ST
E) FLIGHT - COAST PHASE, 1ST
F) FLIGHT - POWERED PHASE, 2ND
G) FLIGHT - COAST PHASE, 2ND

Δ	ITEM	FUNCTION	FAILURE TYPE	FAILURE EFFECT ON SUBSYSTEM PERFORMANCE	FAILURE EFFECT ON S-IVB STAGE	FAILURE EFFECT ON SATURN VEHICLE
	Item Name DAC Drawing No. Math Model No. EXAMPLE	Give a brief, but comprehensive description of item function and include time of operation if known. Tell the reader what it does and when it functions. Omit how and where for security reasons. If you must explain the "how and where", be general and not specific. EXAMPLE	Gives a concise statement of the applicable types of component failure. Examples of failure type are: Failure to open or close for a valve, external leakage at a plumbing connection, open circuit in a relay, etc. Since much of the electronic/electrical hardware is not applicable to such failure types at the black box level, the use of the failure mode is acceptable. All failures can be assigned to one of the following four basic modes: 1) "Premature Operation" Changing from the non-operated condition to the operated state sooner than required. 2) "Failure to Operate" Lack of complete transition from the non-operated to the operated state at the time required. 3) "Failure During Operation" Failure to maintain the operated condition during the entire time period such as required. 4) "Failure to Stop Operation" Failure to terminate the operated condition when required. Since a single failure type often covers the failure effect analysis of several failure modes, and is more readily applicable to the failure mode-type frequency analysis, the use of failure type is recommended. (Continued in next column)	Explain in detail the effect of each type of failure on the PERFORMANCE of the subsystem. Acceptable Phraseology: 1) None (Justify in detail) 2) POSSIBLE LOSS OF SUBSYSTEM (Explain in detail) 3) PROBABLE LOSS OF SUBSYSTEM (Explain in detail) 4) LOSS OF SUBSYSTEM (Explain in detail) (continued) Use the latest change of the math model as a guide for applicable failure types, however, re-analyze all items for the four basic failure modes. Any additions or deletions in this column should be discussed with the group engineer. The probability or cause of occurrence is not to be considered in this column, except for the question of whether or not the item can, of itself, have premature failure, and whether or not it is a one-shot item with no chance of having 3) or 4) above.	Explain the effect of item failure on S-IVB stage for each phase. Acceptable Phraseology for A), B), C), D), E), F), G), as applicable. None; redundancy provided. None; (explain in detail) None; premature failure mode is not applicable in this phase as the function starts in ___ phase (earlier phase). None; the resultant (effect of failure or actual function) is considered significant for only (effects on stage or vehicle) in ___ phase. POSSIBLE LOSS OF STAGE (Explain) PROBABLE LOSS OF STAGE (Explain) LOSS OF STAGE (Explain) For A) only: (Assume that all failures are discovered) 1) None; (Justify) 2) Delay in launching 3) Delay in launching or scrub 4) Scrub For B) only: 1) This failure holds automatic countdown sequence (explain why) 2) This failure does not hold automatic countdown sequence.	Explain the effect of item failure on Saturn 1B and Saturn V vehicles for each phase and provide FAILURE REACTION TIME (FRT) (Time of effect minus time of failure in seconds) for all vehicle losses. FRT ___ sec. Leave FRT notation blank if this information is not available. Acceptable Phraseology for A), B), C), D), E), F), & G) Use the word "same" if the effect is identical to stage effect, and no stage loss is noted. If stage effect is shown, indicate applicable effect on vehicle. If there is no effect, show "none" and explain. POSSIBLE LOSS OF MISSION PROBABLE LOSS OF MISSION LOSS OF MISSION FRT ___ sec. for "thrust loss" type failure or for failures which result in capsule or payload abort to safe zone prior to vehicle break-up or explosion. POSSIBLE LOSS OF VEHICLE PROBABLE LOSS OF VEHICLE LOSS OF VEHICLE FRT ___ sec. for all failure which result in a catastrophic loss of the vehicle. NOTE: Vehicle includes payload or capsule.
*	Pressure Switch, Cold Helium Supply V-IVB-22.2-02	Monitors cold helium low limit sphere pressure during countdown. Signals ground control if pressure drops below minimum required for lift-off. Picks up at 2940 ± 25 psia. Drops out at 2840 ± 25 psia.				
	Do not repeat functional name of subsystem when identifying item; use item functional name if necessary for proper identification.					

FIGURE 3

both powered phases, and both coast phases of S-IVB stage flight. For analytic purposes, the effects of a component failure on the subsystem, the stage, and the vehicle are classified as follows:

Effect of Failure	Probability of Loss
(Certain) loss of	100%
Probable loss of	50%
Possible loss of	10%
None	0%

Since failure of a component may or may not cause loss of the subsystem performance, the probability of loss can be determined from analysis of the function of the component in the subsystem, failure data, test results and past experience. Effect of a component failure on the performance of a subsystem is dependent on the time and type of failure, the degree of severity of the failure, and the amount of redundancy in the subsystem.

ADDITIONAL SATURN FAILURE EFFECT CONSIDERATIONS

The cause of a given failure type, or mode, is not emphasized in analyzing the effect of the failure. For example, the effect of a solenoid valve's failure to operate when required (failure to open or close as required) is considered and analyzed without any attempt to pinpoint whether the failure was caused by lack of command, defective solenoid wiring, jammed valve-stem, etc. Thus there can be multiple causes for the applicable failure type or mode appearing in the failure effect analysis.

Many of these causes of component failure are well known to the designer and the test engineer. During the R&D program every effort is taken to eliminate the critical component failure types by "designing out" the potential causes of failure. Since the "debugging" cannot be carried on forever, especially in a

time and budget limited program, the major effort is consumed on the obvious, better understood and more likely causes of failure. Obviously, the maximum gain towards mission success is realized when the component or system unreliability that contributes to stage loss is identified and the cause of failure eliminated.

For the convenience of the reader, the following is a partial list of some of the less often discussed causes of failure for failure effect considerations.

1) Corona discharge, or arcing over, may occur in pressurized electrical "black boxes" due to seal failure.

2) Rapid decomposition of teflon at high temperatures produces flourine gas which is an oxidizing agent and which may support visible flame.

3) Energy of the radar beam may be sufficient to initiate igniters at a considerable distance, due to the antenna effect of the connecting wires.

4) A component may fail to operate in flight, due to heater blanket failure on the component during countdown.

5) Low pneumatic pressure at the component, due to upstream leakage, may cause slow or no actuation.

6) Structural failure of internal parts in a "black box" may occur due to vibration amplification through the attaching brackets in the flight vehicle.

7) Vibration, shock, and temperature may cause premature operation of spring-loaded valves.

8) A pressure switch may not actuate due to a frozen or plugged pressure sensing line (not a failure of the switch).

9) Zero "g" may cause undesireable effects on components that contain liquids; for instance, battery fluid will be "floating" at stage separation or during orbital coast phase.

10) An open circuit may occur, due to a broken safety-wire on electrical connectors, in prestressed connections.

11) Solid propellant rocket motor ignition may occur after stage destruct, due to heat, which would cause the motor to become a projectile.

12) The engine chilldown valves and plumbing may cause "venturi" principle freezing due to flow restrictions; which could result in solid oxygen or hydrogen.

13) Delayed valve actuation may occur, due to sticking or binding parts, at low or high temperatures.

14) Check valves in the cold gas system may freeze shut due to moisture condensation and subsequent freezing (failure to open).

15) Outgasing of plastic materials may produce a troublesome chemical atmosphere due to sublimation and evaporation of materials in high vacuum.

16) Ionized gases may cause disruption of communications by reflecting radio waves.

17) In sealed units that are not vacuum-tight, more volatile materials may evaporate from hotter parts and condense on colder ones as thin films.

18) Relay and switch contact chatter or bounce may occur due to vibration.

19) Explosive decompression may occur in hermetically sealed units in high vacuum due to seal failure or leakage.

20) Vibration in high vacuum may be more severe due to absence of air damping.

21) Rigid lines may pull loose due to structural flexing.

22) Flexible lines routed unpressurized may break loose when assuming pressurized position (mock-up under pressure).

An analysis of the above conditions of failure reveals that most of them are the result of human error or embryonic design. The probability of these failures is unpredictable; however, the causes are eliminated during an extensive R&D program.

PROBABILITY OF NO STAGE LOSS BASED ON COMPONENT RELIABILITY

If one considers the many possible failures of components that may degrade a mission, yet will not cause a complete stage or vehicle loss, one then has the basis for a new and more sophisticated use of reliability analysis. The engineer, now, may look not simply for complete success but is prepared as well to evaluate the possibilities of avoiding complete system failure. Space technology has advanced to the point that abridged or degraded, as opposed to aborted, missions are possible. The mathematics have accordingly been developed to cope with this situation. There is a means of judging not only how likely an item is to perform successfully - i.e., its reliability, but also to judge how likely it is not to cause a complete system loss, i.e., render the stage or vehicle useless. When component failures are unavoidable, one would always prefer the abridged or degraded mission as opposed to an aborted mission. From this standpoint then, one is led to think in terms of no stage loss probability rather than in terms of stage success probability.

The derivation of the expression for the probability of no stage loss consistent with the statements made in the failure effect analysis for each of the S-IVB stage subsystems, is very important. Since the failure effect analysis considers primarily the effect or effects of single independent failures, no statement in general can be made with respect to the effect of multiple independent failures except those specifically considered. To keep the probability predictions on the conservative side, an assumption is made throughout the analysis; the effect of all independent multiple failures is a stage loss, unless otherwise indicated. On this basis, the probability of no stage loss for N components in series is expressed as:

$$P = R + \sum_{j=1}^{N} \frac{R}{r_j} Q \quad (1 - r_j)$$

where

P = The probability of no stage loss.

r_j = The inherent reliability of the J-th component

$R = \prod_{j=1}^{N} r_j$ = The inherent reliability of N components in series.

$Q_j = \sum_{k=1}^{N_j} \alpha_{jk} (1-\beta_{jk})$, where

N_j = A number of mutually exclusive failure types or modes associated with the unreliability of the J-th component.

α's and β's are as defined in Figure 4.

$Q_j (1-r_j)$ = The portion of the J-th component unreliability not contributing to stage loss.

The above expression is derived by expanding:

$$\prod_{j=1}^{N} \left[r_j + Q_j (1-r_j) \right]$$

and eliminating all terms involving the product of at least two unreliabilities. The expressions for other than series configurations are derived on a similar basis.

RELIABILITY MATHEMATICAL MODEL SUMMARY

SYSTEM Name of System

SUBSYSTEM Name of Subsystem

Math Model Number/Code

FOR C),D),E), & F) OPERATIONAL TIME PHASE(S)

F) Flight-Powered Phase 2nd.
G) Flight-Coast Phase 2nd.

OPERATIONAL TIME PHASES
A) COUNTDOWN/Checkout
B) COUNTDOWN- AUTOMATIC SEQUENCE
C) FLIGHT- BOOST PHASE
D) FLIGHT - POWERED PHASE, 1st.
E) FLIGHT- COAST PHASE, 1st.

RELIABILITY FAILURE EFFECT ANALYSIS SUMMARY - PHASE 1				SELECTION OF CRITICAL ITEMS -PHASE 2									
					TIME/CYCLE SIGNIFICANT			ATTRIBUTE					
ITEM	MATH MODEL NUMBER	FAILURE TYPE	(β) STAGE LOSS FREQUENCY	(α) FAILURE TYPE-MODE FREQUENCY	(t) OPERATING TIME (CYCLES OR HOURS)	(κ) OPERATIONAL MODE FACTOR	(λ) FAILURE RATE	(q) FAILURE PROBABILITY OR ($t \cdot k \cdot \lambda$)	(r) ITEM RELIABILITY ($e^{-tk\lambda}$) OR ($1-q$)	UNRELIABILITY NOT CONTRIBUTING TO STAGE LOSS $\alpha(1-r)(1-\beta)$	UNRELIABILITY CONTRIBUTING TO STAGE LOSS $\alpha\beta(1-r)$	CRITICALITY NUMBER ($\Sigma\alpha_n\beta_n$) $\times(1-r)10^6$	DATA SOURCE CODE
			is the conditional probability of stage loss associated with the indicated failure type.	α is the fraction of item unreliability associated with the indicated failure type.	is the expected number of cycles or time of operation in hours for an item during a mission (operational time phases specified).	is the adjustment factor for raw failure rate of an item to reflect realistic failure rate under mission environment.	λ is the failure rate determined from historical data of the item's operation collected under room ambient, specific, simulated, or actual environments.	is the probability that the item will not operate as required for a specific mission time and mission operating environment; the inherent item unreliability for the mission intended.	is the probability that the item will operate as required for a specified mission time and mission operating environment; the inherent item reliability for the mission intended.	The portion of inherent intem unreliability assignable to indicated failure type which does not contribute to stage loss.	The portion of inherent item unreliability assignable to the indicated failure type which does contribute to stage loss.	The portion of inherent item unreliability assignable to all of the indicated failure types of an item which contribute to stage loss, multiplied by 10^6.	The coded data source and page number used for α, , and λ or as applicable.

FIGURE 4

RELIABILITY MATHEMATICAL MODEL SUMMARY - PHASE 1 & PHASE 2

The customary concept of reliability is that of making each individual component as reliable as possible. Then, these individual reliabilities are multiplied together to obtain the overall system reliability.

In today's complex systems, such as the Saturn, this traditional reliability concept is not acceptable. Because of time and budget restrictions, and the eventual requirement to provide a "man rated" space vehicle, the Douglas Engineering Reliability Section has developed a new analytical approach; it is called "criticality ranking."

One cannot provide for every conceivable failure but one can provide for some. This necessitates the shift of design attention from simple reliability of a part to its criticality, i.e., to the degree of importance that it be highly reliable. The degree of importance is evaluated relative to the probability that the component failure will lead to stage loss. For example, a failure whose frequency of occurrence is determined to be high and whose effect on the stage is found to be critical would demand and receive immediate attention. Conversely, a failure of minor or insignificant consequence, which is seldom encountered, would be allocated a proportionately lower engineering priority or criticality number. If pursued, this approach will insure that the design and test effort is concentrated in areas where it is most needed. At the same time, it makes the most practical and economical use of technical manpower.

In judging the criticality of a component, it is clear that there are several factors to take into account:

1. The possible types or modes of failure for the component.
2. The frequency with which the component fails in each of the applicable failure types or modes.

3. The probability of component failure.

4. The stage loss frequency when the particular type or mode of failure occurs.

Specifically, the criticality number is the portion of the inherent component unreliability assignable to all of the applicable failure types or modes of a component which contribute to stage loss, multiplied by 10^6. The reliability mathematical model summary - figure 4 - outlines and defines the inputs required to determine the component criticality. This summary consists of two phases of effort. The first phase summarizes the reliability failure effect analysis, and the second phase selects the critical items and determines their degree of criticality.

APPLICATION OF THE RELIABILITY MATHEMATICAL MODEL RESULTS

Results of the failure effect analysis, the criticality of components and other mathematical model disclosures have many direct use applications. These results can be used by management to assign priorities or direct such activities as:

1. Design
2. Testing
3. Checkout
4. Procurement
5. Quality Control
6. Documentation
7. Supplier Surveillance
8. Human Engineering
9. Corrective Action
10. Emergency Detection

These items represent only a partial list of the activities that go into the overall effort to "man rate" a space vehicle. It becomes apparent then, that the reliability mathematical model is an essential tool for this purpose.

RELIABILITY ANALYSIS FOR EMERGENCY DETECTION

The present S-IVB stage reliability mathematical model and failure effect analysis approach can be applied to the design of an emergency detection and abort system that would provide maximum crew safety for a manned space vehicle of certain reliability. Since "man rating" may be defined as; the achievement of an acceptable level of crew survival probability for a specific mission; this analysis can be used to determine this probability for any mission and for any vehicle configuration.

Crew survival, in the event of a catastrophic or critical condition, (Marshall Space Flight Center definition) depends on the emergency sensing and abort capability of the vehicle. Since this analysis is only concerned with a single stage of the vehicle, it is important to categorize all S-IVB stage component failure results as catastrophic or non-catastrophic and provide failure reaction time for the overall emergency detection system effort. Figure 5 provides the DAC Reliability definition of the concept. Because the current analysis is concerned with a vehicle without an abort capability, all non-catastrophic results, such as thrust loss due to a component failure, are termed "Loss of Mission"; likewise, all catastrophic results, such as an explosion, are termed "Loss of Vehicle." The latter would be termed a "Loss of Mission" in the event of a catastrophic loss if the vehicle had an emergency sensing and abort capability and the capsule had sufficient time to abort to a safe zone prior to vehicle breakup or explosion.

DEFINITION OF FAILURE REACTION TIME, LOSS OF VEHICLE AND LOSS OF MISSION

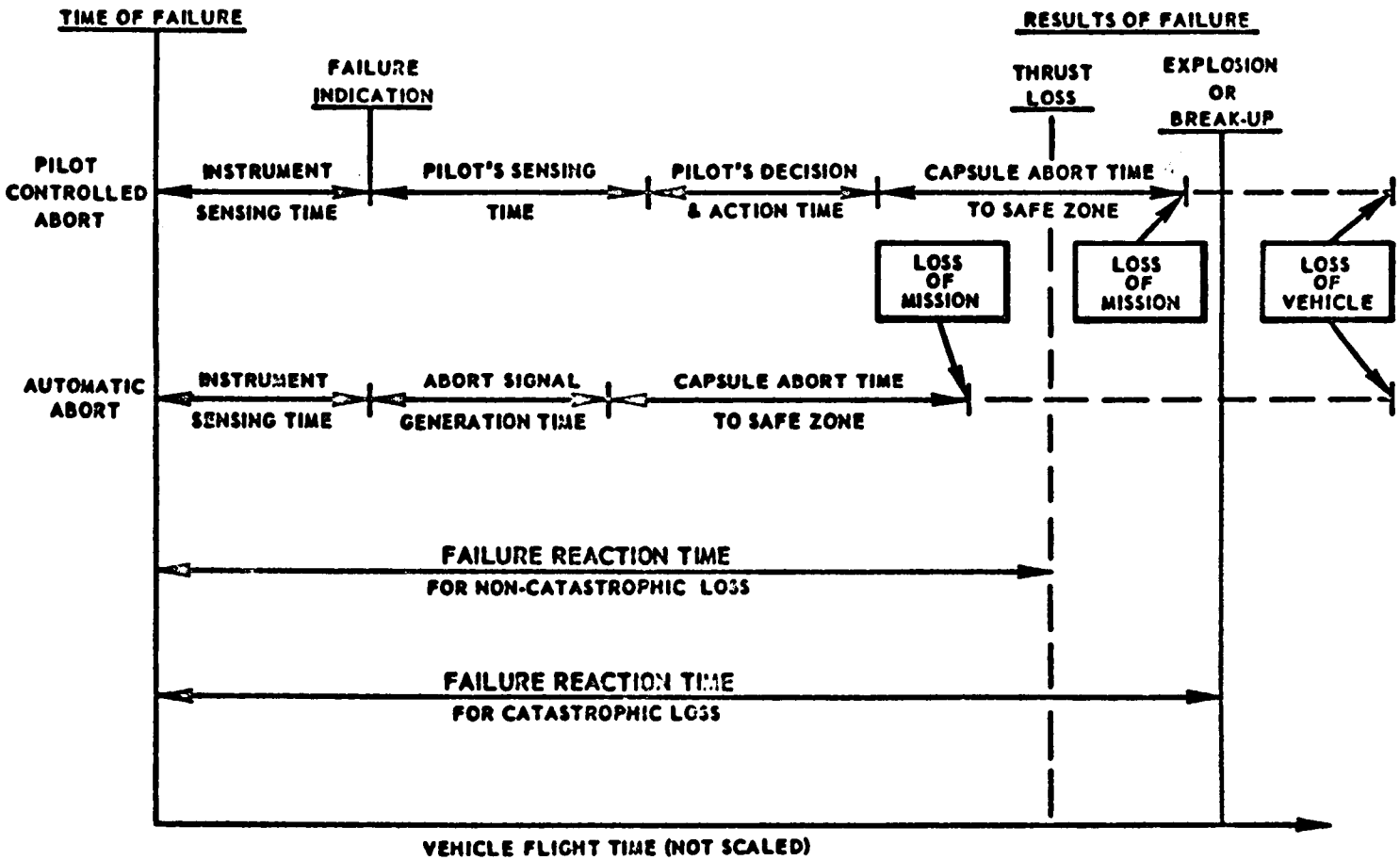

* LOSS OF VEHICLE - LOSS OF THE VEHICLE INCLUDING THE PAYLOAD OR CAPSULE
* LOSS OF MISSION - LOSS OF THE VEHICLE EXCLUDING THE PAYLOAD OR CAPSULE
* THIS DEFINITION APPLIES TO THE VEHICLE WITH A PAYLOAD ABORT CAPABILITY; REFER TO FIGURE 3 FOR CURRENT DEFINITION.

FIGURE 5

Specifically, to maximize crew survival probability through the use of emergency detection in a vehicle with an abort capability, it is first necessary to determine the minimum time associated with each system failure mode which will enable successful abort. Next, it becomes necessary to predict the mean failure reaction time and the standard deviation for each of the failure types included on the criticality ranking list that contribute to the particular system failure mode. These failure reaction times and the associated probabilities will indicate the potential improvement of crew survival probability obtainable when an emergency detection device is provided. Obviously, an abort system capability must be assumed and its reliability taken into account in the overall system or vehicle analysis.

Admittedly, the time interval required for the emergency sensors to sense a particular failure and for the astronaut to make an intelligent decision is variable in each emergency condition. Therefore, it is not possible at this time to classify the results of the failure effect analysis, per MSFC definitions, as catastrophic or critical.

Since it is possible to determine the various risk probabilities to which the crew of a manned space vehicle may be exposed during a mission, it is also possible to maximize crew survival probability. Within the confines of a time and budget limited program it is possible to pick out those systems, subsystems, components or functions which contribute most heavily toward the catastrophic or non-catastrophic losses. A properly designed emergency detection system is one that senses those failures which result in a catastrophic or non-catastrophic loss and provides sufficient time for the safe abort of the crew.

Reliable point estimate predictions related to this analysis depend on the data used, the amount of time available to reduce and apply the data when it is collected, the integrity of the personnel performing the analysis and the manpower available to do this analysis.

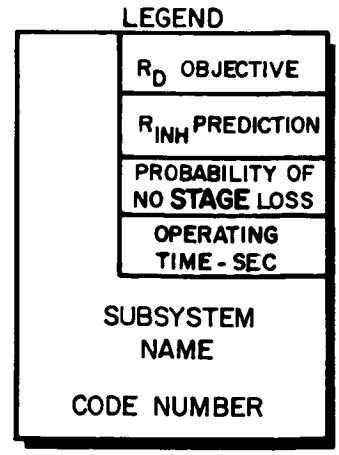

BLOCK DIAGRAM SYMBOL DEFINITIONS

R_D Objective -

The allocated inherent reliability objective for design of subsystem based on system reliability design objective.

R_{INH} Prediction -

The current inherent reliability prediction of subsystem based on individual component reliability predictions or estimates.

Probability of No Stage Loss -

The probability of no stage loss based on subsystem component reliability and unreliability not contributing to stage loss.

Operating Time - Sec. -

The mission time or operating period associated with reliability or probability statement.

COMPONENT RELIABILITY

The following relationships and definitions of component reliability shall be used for the sake of consistency:

COMPONENT RELIABILITY = $R_d \times R_m \times R_u$

Component Reliability - is the actual component reliability (the probability that the component, as delivered and used, will operate without failure for the time and operating conditions specified).

R_d - is the inherent reliability of the design (the probability that the component, when made and used exactly as intended, will operate without failure for the time and operating conditions specified.)

R_m - is the reliability of the manufacturing process (the probability of making the component exactly as required by its design).

R_u - is the reliability of operational use (the probability of using the component correctly as intended when designed).

Component Failure - the inability of a component to perform its function or functions satisfactorily when subjected to an environment within its design limitations.

R_d Inherent Reliability of the Design

The inherent reliability is that maximum potential reliability which is designed into the equipment. It is considered the objective or design goal of a completely mature design suitable for manufacture and use, with no degradation due to manufacturing fabrication and assembly. The reliability is measured by the failure rate of the equipment when operated under specified test conditions for sufficient time to obtain a failure rate that is approximately constant. Failures attributable to manufacturing quality are not included in the assessment of inherent reliability. The failure rate can be developed by overstressing in many cases rather than testing to failure for a sufficient period in the expected environment. Overstressing refers not only to the magnitude of physical environments such as temperature or vibration but also to out-of-tolerance inputs and operating overloads which are used to detect weak designs and types or modes of failure.

Usually there is an initially high failure rate period during which marginal parts are eliminated. Following this, there is an operating period during which the equipment exhibits a fairly constant failure rate. A final period occurs where wearout is encountered. The inherent reliability considers the period of time (where the failure rate can be assumed relatively constant) between the early failures of marginal parts and the wear-out failures.

R_m Reliability of the Manufacturing Process

Manufacturing Reliability is the probability of the equipment being manufactured exactly like the design by maintaining a tight control of manufacturing processes and quality assurance techniques. It encompasses the establishment and continuous evaluation of engineering processes and specifications and the analysis of inspection results and surveillance over quality control methods and systems. Malfunctions and failures wherein manufacturing is found to be at fault will give a direct indication of the weak areas that degrade the Manufacturing Reliability.

R_u Reliability of Operational Use

Use Reliability is the probability that each of the field maintenance and application factors (such as maintenance and operating ability of the using group, installation environment and deterioration in shipping, handling, and storage) will affect the performance of the equipment or system in the manner planned.

LIST OF DEFINITIONS

Attribute - A characteristic or property which is appraised only in terms of whether it does or does not exist. Attributes, as generally considered in reliability analysis, are time independent.

Catastrophic Loss - Any failure which results in an eventual explosion or break-up of the vehicle, excluding the disintegration of the vehicle upon re-entry into the atmosphere. (See also Figure 5)

Component - An item which is normally a combination of parts, or subassemblies, and is a self-contained element of a complete operating system, performing a function necessary to the operation of that system.

Confidence/Confidence Level - The proportion of time a satement should be correct that the estimated parameter lies within the given confidence interval.

Criticality Number - The portion of inherent item unreliability assignable to all of the indicated failure types or modes, of the item, which contribute to stage loss, multiplied by 10^6. (See also Figure 4)

Criticality Ranking - The ranking of items in decreasing order of the item criticality numbers.

Degradation - A deterioration in performance.

Failure - A cessation of ability to perform a specified function, or functions, within previously established limits on the area of interest. This requires that measurable limits be established to define satisfactory performance of the function.

Failure Analysis - The act of determining the cause of a non-conformance or unsatisfactory condition, using normal facilities and techniques.

Failure Mode - A description of the manner in which a failure occurs that can be categorized. (See also Figure 3)

Failure Probability - The probability that an item will not operate as required for a specified mission time and mission operating environment; the inherent item unreliability for the mission intended. (See also Figure 4)

Failure Rate - A numerical value expressing the frequency of failure occurrence over any specified time interval or cycles of operation.

Failure Reaction Time - The time elapsed from an item failure to loss of the vehicle. This time generally varies as a function of flight time; however, a minimum time can be specified. (See also Figure 5)

Failure Type - A physical description of the way in which an item can fail. (See also Figure 3)

Failure Type-Mode Frequency - The fraction of item unreliability associated with the indicated failure type or mode. (See also Figure 4)

Loss of Mission - The loss of the vehicle excluding the payload or capsule. (See also Figure 5)

Loss of Stage - The loss of the ability of the stage to perform its primary function; any failure which results in loss of the stage prior to stage mission completion.

Loss of Vehicle - The loss of the vehicle including the payload or capsule. (See also Figure 5)

Non-Catastrophic Loss - Any failure which results in an eventual loss of the vehicle and renders the vehicle useless, but does not cause an explosion or break-up. A non-catastrophic S-IVB stage loss, in the majority of cases, is due to a component failure which results in safe engine shut-down. (thrust loss) (See also Figure 5)

Operational/Functional Dependency - A block diagram concept to indicate that the operation or function of a particular component is dependent upon the reliable operation of the associated components in the subsystem or inputs from other subsystems with an assignable reliability. (See also Figure 2)

Probability - The likelihood of occurrence of a particular event expressed as a value 0 P 1, where 0 represents impossibility and 1 certainty.

Redundancy - The existence of more than one means of accomplishing a given task, where all of these means must fail before there is an overall failure of the system.

Reliability - The probability of an item performing its function for the time required and under the environment specified.

Reliability Allocation - The technique of apportioning system unreliability into its component unreliabilities.

Reliability Prediction - The technique of determining (estimating) the reliability of a given design, or proposed redesign, before sufficient testing has occurred to provide a statistical reliability measurement.

Series Independency - A block diagram concept to indicate the statistical independence of the subsystem component failures. (See also Figure 2)

Stage Loss Frequency - The conditional probability of stage loss associated with the indicated failure type or mode. (See also Figure 4)

Subsystem - The functional portions of the stage or vehicle system which are essential to operational completeness.

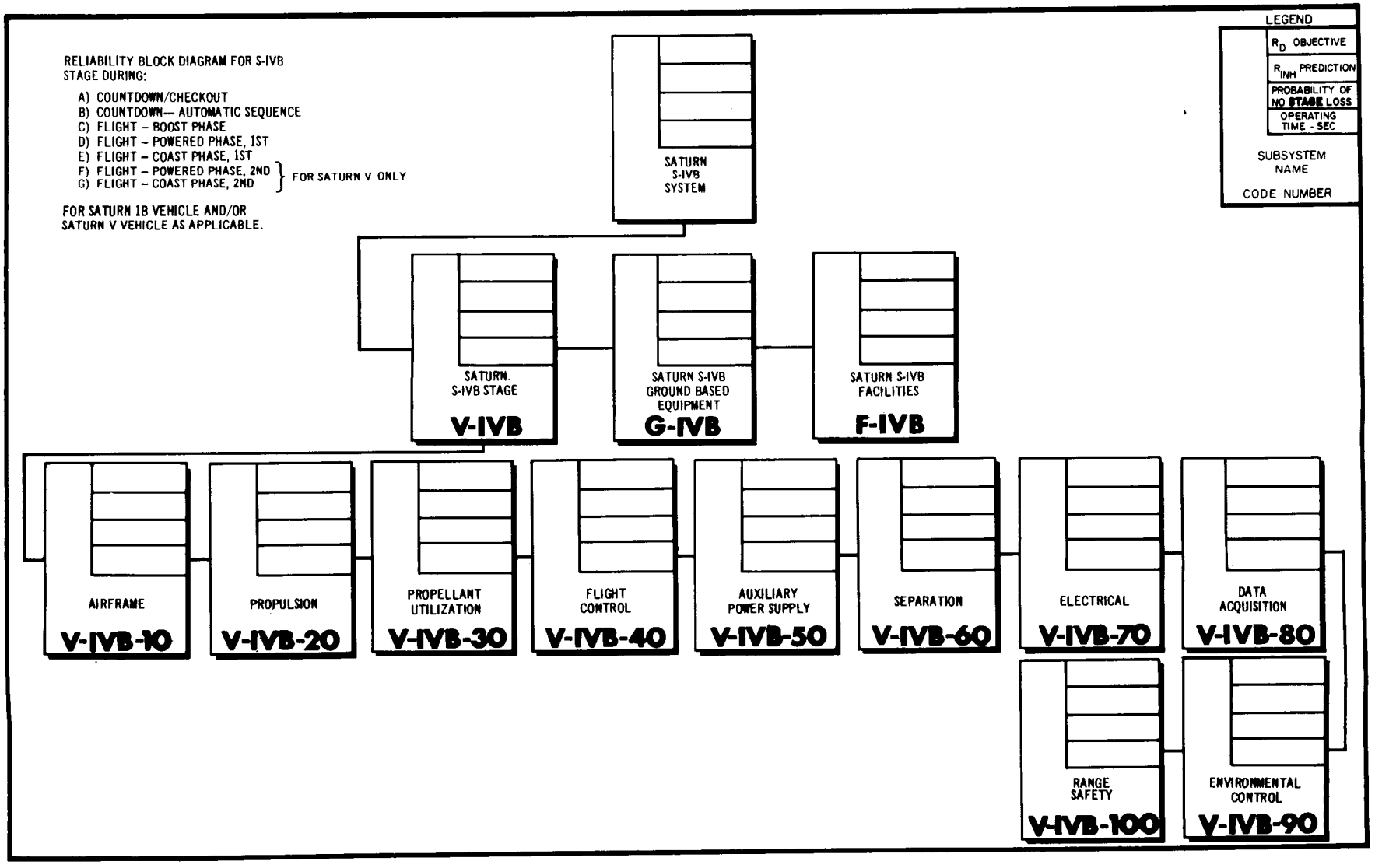
RELIABILITY BLOCK DIAGRAM FOR S-IVB STAGE DURING:
A) COUNTDOWN/CHECKOUT
B) COUNTDOWN— AUTOMATIC SEQUENCE
C) FLIGHT – BOOST PHASE
D) FLIGHT – POWERED PHASE, 1ST
E) FLIGHT – COAST PHASE, 1ST
F) FLIGHT – POWERED PHASE, 2ND
G) FLIGHT – COAST PHASE, 2ND
FOR SATURN V ONLY
FOR SATURN 1B VEHICLE AND/OR SATURN V VEHICLE AS APPLICABLE.
LEGEND
R_D OBJECTIVE
R_{INH} PREDICTION
PROBABILITY OF NO STAGE LOSS
OPERATING TIME - SEC
SUBSYSTEM NAME
CODE NUMBER
SATURN S-IVB SYSTEM
SATURN S-IVB STAGE
V-IVB
SATURN S-IVB GROUND BASED EQUIPMENT
G-IVB
SATURN S-IVB FACILITIES
F-IVB
AIRFRAME
V-IVB-10
PROPULSION
V-IVB-20
PROPELLANT UTILIZATION
V-IVB-30
FLIGHT CONTROL
V-IVB-40
AUXILIARY POWER SUPPLY
V-IVB-50
SEPARATION
V-IVB-60
ELECTRICAL
V-IVB-70
DATA ACQUISITION
V-IVB-80
RANGE SAFETY
V-IVB-100
ENVIRONMENTAL CONTROL
V-IVB-90

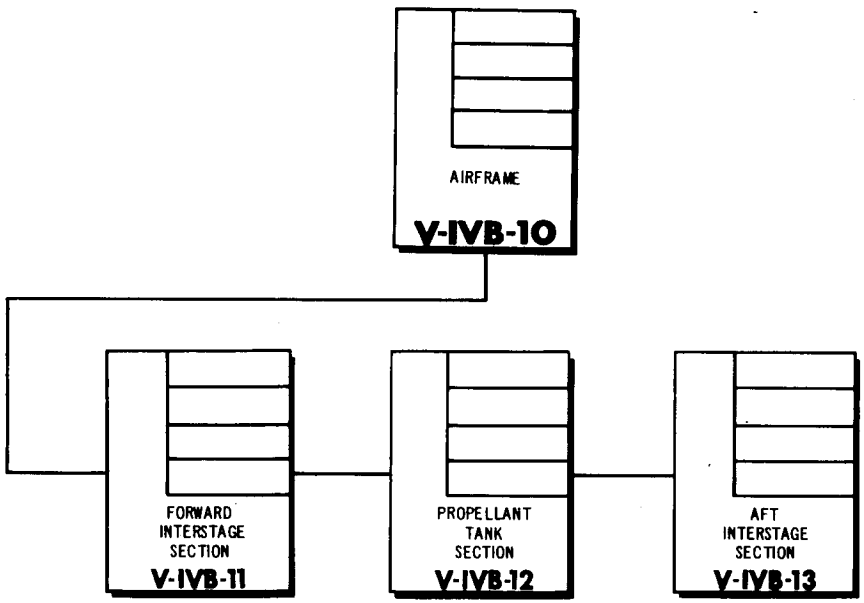

LEGEND

R_D	OBJECTIVE
R_{INH}	PREDICTION
PROBABILITY OF NO STAGE LOSS	
OPERATING TIME - SEC	

SUBSYSTEM NAME

CODE NUMBER

1A49630	FORWARD SKIRT (SATURN 1B)
1A39264	FORWARD SKIRT (SATURN V)

1A39304	FORWARD BULKHEAD
1A39306	FUEL TANK SKIN
1A39314	FUEL TANK INSULATION
1A39309	COMMON BULKHEAD
1A39308	AFT BULKHEAD
1A39313	TUNNEL
1A39146	OXIDIZER TANK SUMP
1A39267	ANTI-SLOSH BAFFLES
1A39633	ANTI-VORTEX DEVICE, FUEL
5851779	ANTI-VORTEX DEVICE, OXIDIZER

1A39312	ENGINE THRUST STRUCTURE
1A58682	AFT INTERSTAGE STRUCTURE (SATURN 1B)
1A39311	AFT INTERSTAGE STRUCTURE (SATURN V)
1A58638	AFT SKIRT (SATURN 1B)
1A39295	AFT SKIRT (SATURN V)

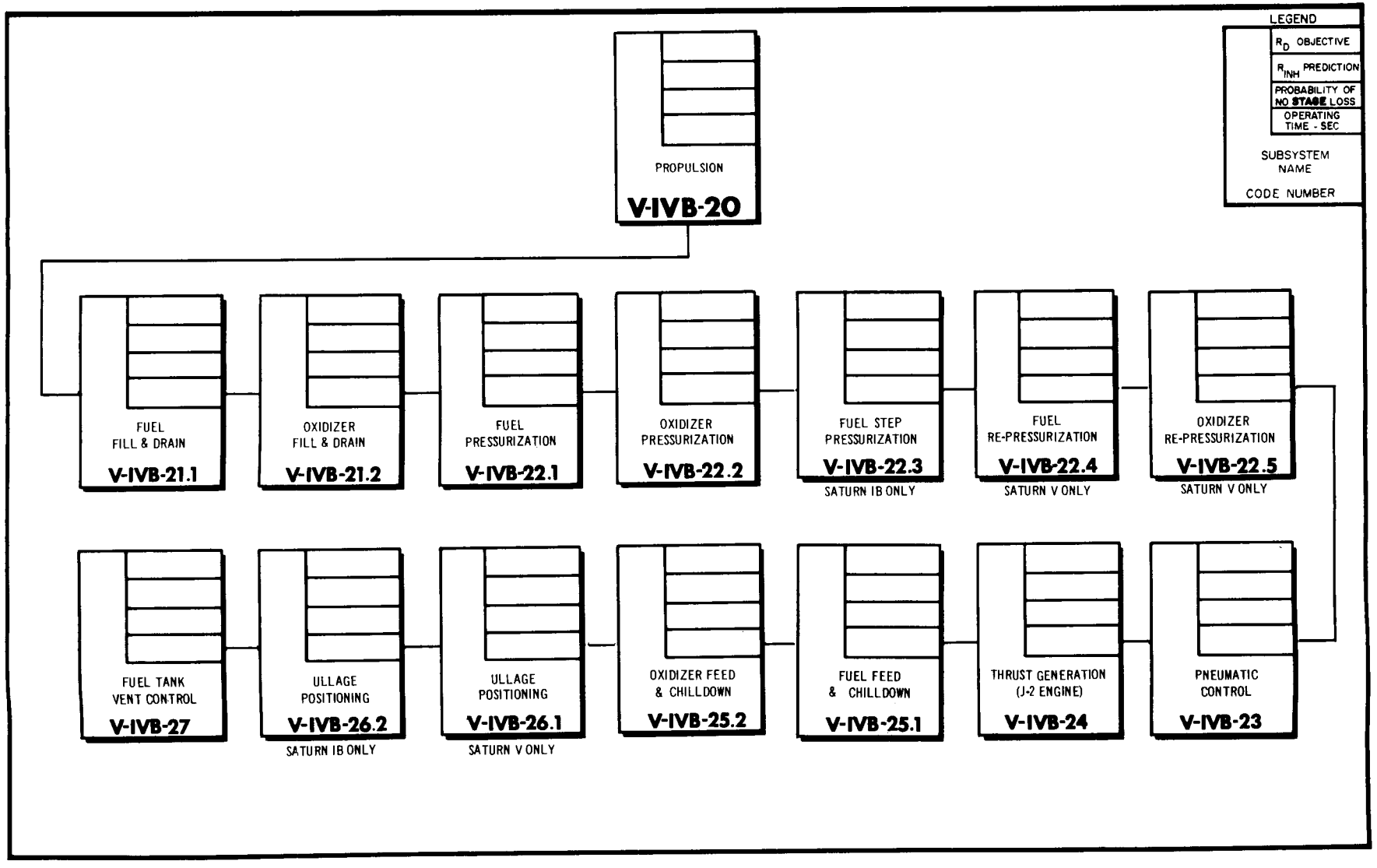
LEGEND
R_D OBJECTIVE
R_{INH} PREDICTION
PROBABILITY OF NO STAGE LOSS
OPERATING TIME - SEC
SUBSYSTEM NAME
CODE NUMBER
PROPULSION
V-IVB-20
FUEL FILL & DRAIN
V-IVB-21.1
OXIDIZER FILL & DRAIN
V-IVB-21.2
FUEL PRESSURIZATION
V-IVB-22.1
OXIDIZER PRESSURIZATION
V-IVB-22.2
FUEL STEP PRESSURIZATION
V-IVB-22.3
SATURN IB ONLY
FUEL RE-PRESSURIZATION
V-IVB-22.4
SATURN V ONLY
OXIDIZER RE-PRESSURIZATION
V-IVB-22.5
SATURN V ONLY
FUEL TANK VENT CONTROL
V-IVB-27
ULLAGE POSITIONING
V-IVB-26.2
SATURN IB ONLY
ULLAGE POSITIONING
V-IVB-26.1
SATURN V ONLY
OXIDIZER FEED & CHILLDOWN
V-IVB-25.2
FUEL FEED & CHILLDOWN
V-IVB-25.1
THRUST GENERATION (J-2 ENGINE)
V-IVB-24
PNEUMATIC CONTROL
V-IVB-23

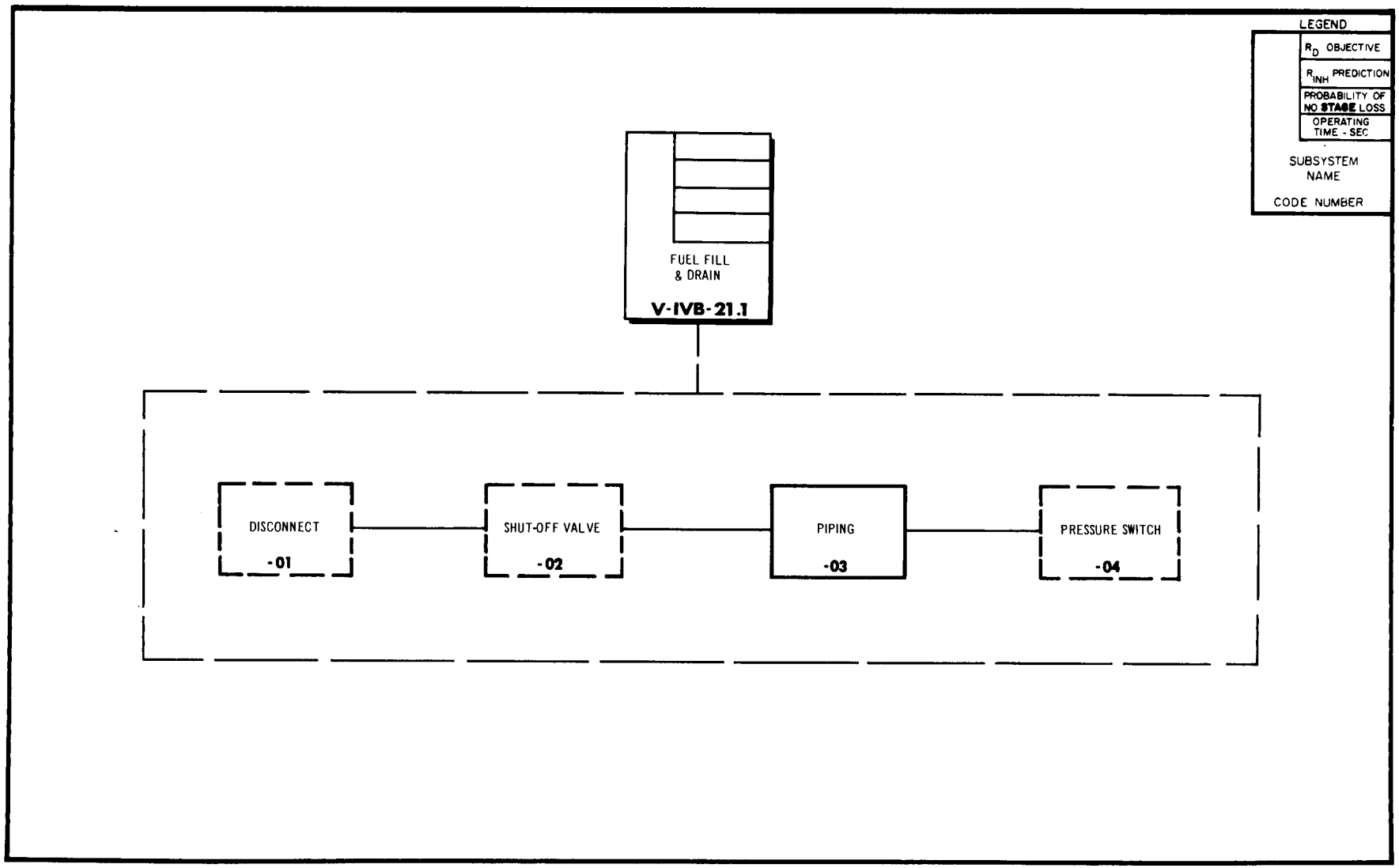
LEGEND
R_D OBJECTIVE
R_{INH} PREDICTION
PROBABILITY OF NO STAGE LOSS
OPERATING TIME - SEC
SUBSYSTEM NAME
CODE NUMBER
FUEL FILL & DRAIN
V-IVB-21.1
DISCONNECT
-01
SHUT-OFF VALVE
-02
PIPING
-03
PRESSURE SWITCH
-04

Δ ITEMS MARKED THUS (*) DO NOT OPERATE IN FLIGHT

RELIABILITY FAILURE EFFECT ANALYSIS

A) COUNTDOWN/CHECKOUT
B) COUNTDOWN-AUTOMATIC SEQUENCE
C) FLIGHT-BOOST PHASE
D) FLIGHT-POWERED PHASE, 1ST
E) FLIGHT-COAST PHASE, 1ST
F) FLIGHT-POWERED PHASE, 2ND
G) FLIGHT-COAST PHASE, 2ND

FUEL FILL AND DRAIN SUBSYSTEM

Δ	ITEM	FUNCTION	FAILURE TYPE	FAILURE EFFECT ON SUBSYSTEM PERFORMANCE	FAILURE EFFECT ON S-IVB STAGE	FAILURE EFFECT ON SATURN VEHICLE
*	Disconnect (Open Type) 1A49978 V-IVB-21.1-01	Connects with umbilical disconnect (GSE) to fill or drain fuel tank. Separation occurs at launch.	1) Failure to engage (with umbilical disconnect).	LOSS OF SUBSYSTEM Impossible to fill fuel tank.	A) Delay in launch or scrub. B),C),D),E),F),G) None; not applicable because failure could occur in A) phase only.	Same Same
			2) Leak.	None; this leak is not significant relative to performance of subsystem.	A),B) Possible delay in launch or scrub. C),D),E),F),G) None; not applicable because failure could occur in A) phase only.	Same Same
			3) Failure to disengage (from umbilical disconnect).	None; this failure would result in rupture of umbilical disconnect during launch, but subsystem would not be affected.	A),B) None; not applicable because engagement of disconnect is required during this phase. C),D),E),F),G) None; stage is not affected because subsystem is not affected.	Same Same
*	Shut-off Valve (Normally Closed) 1A48240 V-IVB-21.1-02	Commanded to open by ground control in A) phase to allow fill of fuel tank. Commanded to close near end of B) phase after topping operation.	1) Failure to open.	LOSS OF SUBSYSTEM Impossible to fill fuel tank.	A),B) Delay in launch or scrub. C),D),E),F),G) None; not applicable because valve is closed during these phases.	Same Same
			2) Close prematurely.	LOSS OF SUBSYSTEM Impossible to fill fuel tank.	A),B) Delay in launch or scrub. C),D),E),F),G) None; not applicable because valve is closed during these phases.	Same Same
			3) Failure to close.	LOSS OF SUBSYSTEM Impossible to retain fuel in tank.	A) None; not applicable because valve is open during this phase. B) If this failure is not detected when valve is commanded to close near end of this phase, vehicle could be launched with depletion of fuel in progress.	Same Same

Δ ITEMS MARKED THUS (*) DO NOT OPERATE IN FLIGHT

RELIABILITY FAILURE EFFECT ANALYSIS

A) COUNTDOWN/CHECKOUT
B) COUNTDOWN-AUTOMATIC SEQUENCE
C) FLIGHT-BOOST PHASE
D) FLIGHT-POWERED PHASE, 1ST
E) FLIGHT-COAST PHASE, 1ST
F) FLIGHT-POWERED PHASE, 2ND
G) FLIGHT-COAST PHASE, 2ND

FUEL FILL AND DRAIN SUBSYSTEM

Δ	ITEM	FUNCTION	FAILURE TYPE	FAILURE EFFECT ON SUBSYSTEM PERFORMANCE	FAILURE EFFECT ON S-IVB STAGE	FAILURE EFFECT ON SATURN VEHICLE
*	Shut-off Valve (Normally Closed) 1A48240 V-IVB-21.1-02 (continued)		3) Failure to close. (continued)		C) None; not applicable because propulsion unit of this stage is not employed during this phase. D) LOSS OF STAGE Loss of propulsion because fuel has drained overboard. E),F),G) None; not applicable because effect of failure occurs in D) phase.	Same LOSS OF MISSION FRT _____ sec. Same
			4) Leak.	POSSIBLE LOSS OF SUBSYSTEM This failure degrades ability of subsystem to retain fuel.	A) Possible delay in launch or scrub if leak is external. B) If this failure is not detected when valve is commanded to close near end of this phase, vehicle could be launched with depletion of fuel in progress. C),E),G) None; not applicable because propulsion unit of this stage is not employed during this phase. D),F) POSSIBLE LOSS OF STAGE Significant leak could result in loss of propulsion in either of these phases because of loss of fuel.	Same Same Same POSSIBLE LOSS OF MISSION FRT _____ sec.
	Piping V-IVB-21.1-03	Conveys fuel between umbilical and tank.	1) Leak.	POSSIBLE LOSS OF SUBSYSTEM This failure degrades ability of subsystem to retain fuel.	A),B) Possible delay in launch or scrub. C),E),G) None; not applicable because propulsion unit of this stage is not employed during this phase. D),F) POSSIBLE LOSS OF STAGE Significant leak could result in loss of propulsion in either of these phases because of loss of fuel.	Same Same POSSIBLE LOSS OF MISSION FRT _____ sec.

Δ ITEMS MARKED THUS (*) DO NOT OPERATE IN FLIGHT

RELIABILITY FAILURE EFFECT ANALYSIS

A) COUNTDOWN/CHECKOUT
B) COUNTDOWN - AUTOMATIC SEQUENCE
C) FLIGHT - BOOST PHASE
D) FLIGHT - POWERED PHASE, 1ST
E) FLIGHT - COAST PHASE, 1ST
F) FLIGHT - POWERED PHASE, 2ND
G) FLIGHT - COAST PHASE, 2ND

FUEL FILL AND DRAIN SUBSYSTEM

Δ	ITEM	FUNCTION	FAILURE TYPE	FAILURE EFFECT ON SUBSYSTEM PERFORMANCE	FAILURE EFFECT ON S-IVB STAGE	FAILURE EFFECT ON SATURN VEHICLE
*	Pressure Switch (Normally Open) 1A67003 V-IVB-21.1-04	Closes at 33 ± 1 psia and opens at 31 ± 1 psia. Provides signal to fuel fill complex (GSE) to stop fill if ullage pressure of tank becomes excessive during fill operation (because of loss of vent or abnormal fill rate). Function of switch ceases at launch.	1) Close prematurely.	None; performance of subsystem is not affected by failure of this switch.	A),B) Delay in launch or scrub. C),D),E),F),G) None; not applicable because switch does not function during these phases.	Same Same
			2) Failure to close. 3) Open prematurely. 4) Failure to open.	None; performance of subsystem is not affected by failure of this switch.	A),B) None; not applicable to single failure analysis because other failures must occur before this switch is required to function. C),D),E),F),G) None; not applicable because switch does not function during these phases.	Same Same

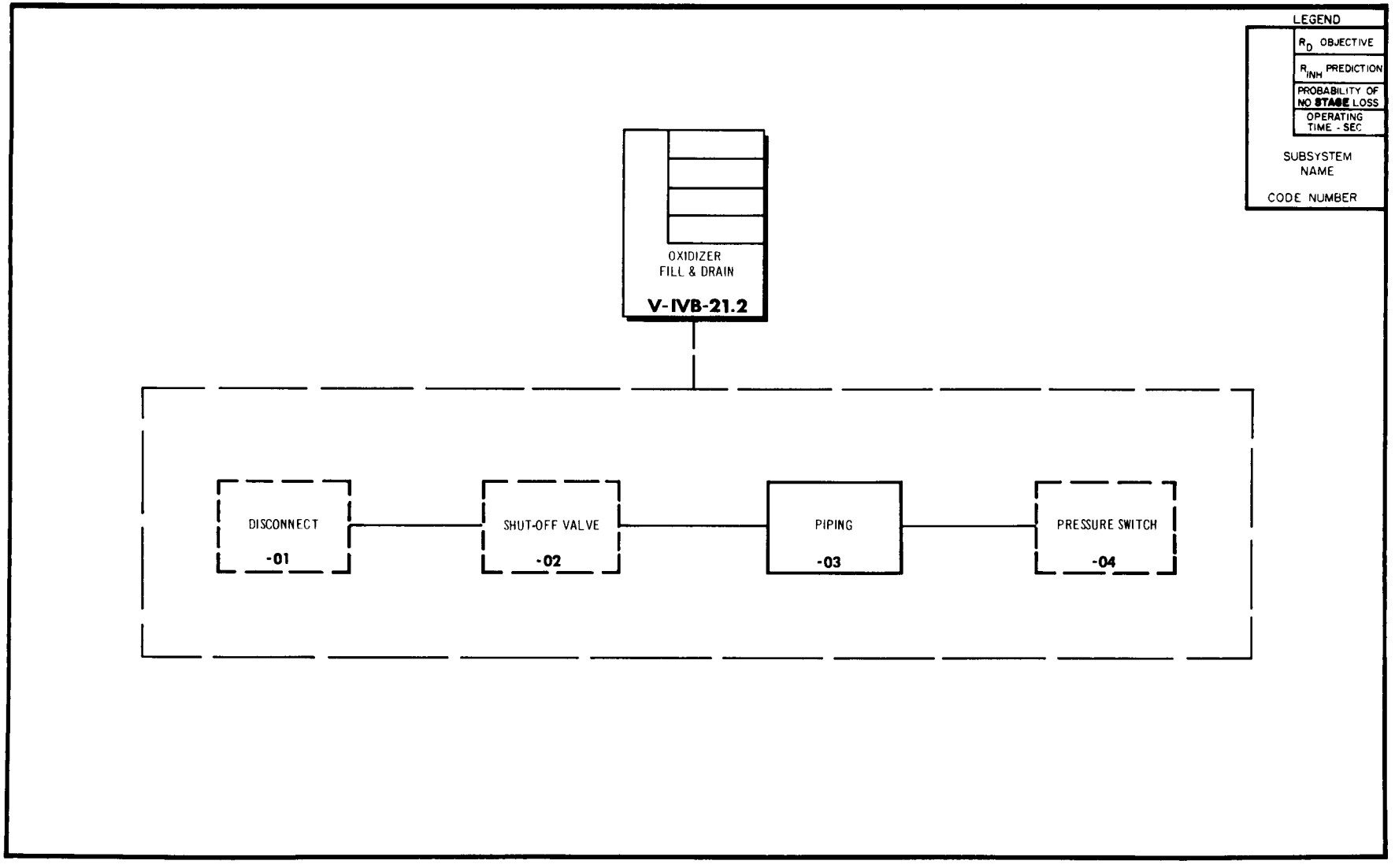
LEGEND
R_D OBJECTIVE
R_{INH} PREDICTION
PROBABILITY OF NO STAGE LOSS
OPERATING TIME - SEC
SUBSYSTEM NAME
CODE NUMBER
OXIDIZER FILL & DRAIN
V-IVB-21.2
DISCONNECT
-01
SHUT-OFF VALVE
-02
PIPING
-03
PRESSURE SWITCH
-04

Δ ITEMS MARKED THUS (*) DO NOT OPERATE IN FLIGHT

RELIABILITY FAILURE EFFECT ANALYSIS

A) COUNTDOWN/CHECKOUT
B) COUNTDOWN - AUTOMATIC SEQUENCE
C) FLIGHT - BOOST PHASE
D) FLIGHT - POWERED PHASE, 1ST
E) FLIGHT - COAST PHASE, 1ST
F) FLIGHT - POWERED PHASE, 2ND
G) FLIGHT - COAST PHASE, 2ND

OXIDIZER FILL AND DRAIN SUBSYSTEM

Δ	ITEM	FUNCTION	FAILURE TYPE	FAILURE EFFECT ON SUBSYSTEM PERFORMANCE	FAILURE EFFECT ON S-IVB STAGE	FAILURE EFFECT ON SATURN VEHICLE
*	Disconnect (Open Type) 1A49970 V-IVB-21.2-01	Connects with umbilical disconnect (GSE) to fill or drain oxidizer tank. Separation occurs at launch.	1) Failure to engage (with umbilical disconnect).	LOSS OF SUBSYSTEM Impossible to fill oxidizer tank.	A) Delay in launch or scrub. B),C),D),E),F),G) None; not applicable because failure could occur in A) phase only.	Same Same
			2) Leak.	None; this leak is not significant relative to performance of subsystem.	A),B) Possible delay in launch or scrub. C),D),E),F),G) None; not applicable because failure could occur in A) phase only.	Same Same
			3) Failure to disengage (from umbilical disconnect).	None; this failure would result in rupture of umbilical disconnect during launch, but subsystem would not be affected.	A),B) None; not applicable because engagement of disconnects is required during these phases. C),D),E),F),G) None; stage is not affected because subsystem is not affected.	Same Same
*	Shut-off Valve (Normally Closed) 1A48240 V-IVB-21.2-02	Commanded to open by ground control in A) phase to allow fill of oxidizer tank. Commanded to close near end of B) phase after topping operation.	1) Failure to open.	LOSS OF SUBSYSTEM Impossible to fill oxidizer tank.	A) Delay in launch or scrub. B),C),D),E),F),G) None; not applicable because valve is closed during these phases.	Same Same
			2) Close prematurely.	LOSS OF SUBSYSTEM Impossible to fill oxidizer tank.	A),B) Delay in launch or scrub. C),D),E),F),G) None; not applicable because valve is closed during these phases.	Same Same
			3) Failure to close.	LOSS OF SUBSYSTEM Impossible to retain oxidizer in tank.	A) None; not applicable because valve is open during this phase. B) If this failure is not detected when valve is commanded to close near end of this phase, vehicle could be launched with depletion of oxidizer in progress.	Same Same

Δ ITEMS MARKED THUS (*) DO NOT OPERATE IN FLIGHT

RELIABILITY FAILURE EFFECT ANALYSIS

OXIDIZER FILL AND DRAIN SUBSYSTEM

A) COUNTDOWN/CHECKOUT
B) COUNTDOWN - AUTOMATIC SEQUENCE
C) FLIGHT - BOOST PHASE
D) FLIGHT - POWERED PHASE, 1ST
E) FLIGHT - COAST PHASE, 1ST
F) FLIGHT - POWERED PHASE, 2ND
G) FLIGHT - COAST PHASE, 2ND

Δ	ITEM	FUNCTION	FAILURE TYPE	FAILURE EFFECT ON SUBSYSTEM PERFORMANCE	FAILURE EFFECT ON S-IVB STAGE	FAILURE EFFECT ON SATURN VEHICLE
*	Shut-Off Valve (Normally Closed) 1A48240 V-IVB-21.2-02 (continued)		3) Failure to close. (continued)		C) None; not applicable because propulsion unit of this stage is not employed during this phase. D) LOSS OF STAGE Loss of propulsion because oxidizer has drained overboard. E),F),G) None; not applicable because effect of failure occurs in D) phase.	Same LOSS OF MISSION FRT _____ sec.
			4) Leak.	POSSIBLE LOSS OF SUBSYSTEM This failure degrades ability of subsystem to retain oxidizer.	A) Possible delay in launch or scrub if leak is external. B) If this failure is not detected when valve is commanded to close near end of this phase, vehicle could be launched with depletion of oxidizer in progress. C),E),G) None; not applicable because propulsion unit of this stage is not employed during this phase. D),F) POSSIBLE LOSS OF STAGE Significant leak could result in loss of propulsion in either of these phases because of loss of oxidizer.	Same Same Same POSSIBLE LOSS OF MISSION FRT _____ sec.
	Piping V-IVB-21.2-03	Conveys oxidizer between umbilical and tank.	1) Leak.	POSSIBLE LOSS OF SUBSYSTEM This failure degrades ability of subsystem to retain oxidizer.	A),B) Possible delay in launch or scrub. C),E),G) None; not applicable because propulsion unit of this stage is not employed during this phase. D),F) POSSIBLE LOSS OF STAGE Significant leak could result in loss of propulsion in either of these phases because of loss of oxidizer.	Same Same POSSIBLE LOSS OF MISSION FRT _____ sec.

Δ ITEMS MARKED THUS (*) DO NOT OPERATE IN FLIGHT

RELIABILITY FAILURE EFFECT ANALYSIS

A) COUNTDOWN/CHECKOUT
B) COUNTDOWN - AUTOMATIC SEQUENCE
C) FLIGHT - BOOST PHASE
D) FLIGHT - POWERED PHASE, 1ST
E) FLIGHT - COAST PHASE, 1ST
F) FLIGHT - POWERED PHASE, 2ND
G) FLIGHT - COAST PHASE, 2ND

OXIDIZER FILL AND DRAIN SUBSYSTEM

Δ	ITEM	FUNCTION	FAILURE TYPE	FAILURE EFFECT ON SUBSYSTEM PERFORMANCE	FAILURE EFFECT ON S-IVB STAGE	FAILURE EFFECT ON SATURN VEHICLE
*	Pressure Switch (Normally Open) 1A67011 V-IVB-21.2-04	Closes at 40 ± 1 psia and opens at 38 ± 1 psia. Provides signal to oxidizer fill compex (GSE) to stop fill if ullage pressure of tank becomes excessive during fill operation (because of loss of vent or abnormal fill rate). Function of switch ceases at launch.	1) Close prematurely.	None; performance of subsystem is not affected by failure of this switch.	A),B) Delay in launch or scrub. C),D),E),F),G) None; not applicable because switch does not function during these phases.	Same. Same
			2) Failure to close. 3) Open prematurely. 4) Failure to open.	None; performance of subsystem is not affected by failure of this switch.	A),B) None; not applicable to single failure analysis because other failures must occur before this switch is required to function. C),D),E),F),G) None; not applicable because switch does not function during these phases.	Same Same

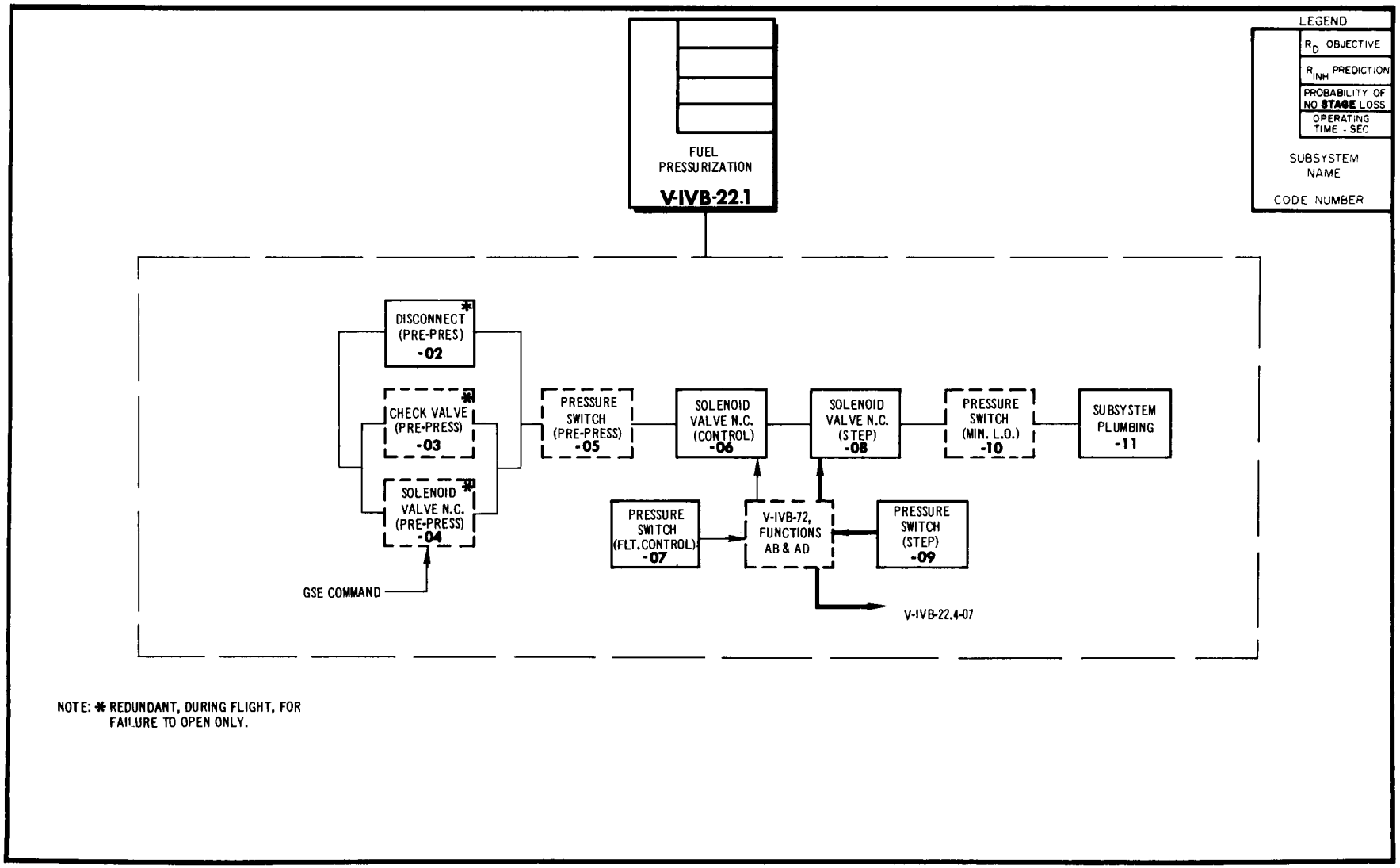

NOTE: * REDUNDANT, DURING FLIGHT, FOR FAILURE TO OPEN ONLY.

Δ ITEMS MARKED THUS (*) DO NOT OPERATE IN FLIGHT

RELIABILITY FAILURE EFFECT ANALYSIS

A) COUNTDOWN/CHECKOUT
B) COUNTDOWN - AUTOMATIC SEQUENCE
C) FLIGHT - BOOST PHASE
D) FLIGHT - POWERED PHASE, 1ST
E) FLIGHT - COAST PHASE, 1ST
F) FLIGHT - POWERED PHASE, 2ND
G) FLIGHT - COAST PHASE, 2ND

FUEL PRESSURIZATION SUBSYSTEM

Δ	ITEM	FUNCTION	FAILURE TYPE	FAILURE EFFECT ON SUBSYSTEM PERFORMANCE	FAILURE EFFECT ON S-IVB STAGE	FAILURE EFFECT ON SATURN VEHICLE
	Disconnect, Sealing (Pre-pressure) V-IVB-22.1-02	Engages with ground half to permit gaseous helium (600 psia and 100°R) to pre-pressurize LH_2 fuel tank. Disconnect closes upon separation of umbilical at first motion of vehicle.	Failure to close or remain closed.	None; redundancy provides. Downstream check valve (22.1-03) and solenoid pre-pressurization shut-off valve (22.1-04) prevents loss of fuel tank pressure.	A),B) None; system is being pressurized from ground helium source that remains connected until lift-off. C) None; fuel tank does not require pressurization during this phase. D) None; redundancy provided. E) None; same as C) phase. F) None; redundancy provided. G) None; same as C) phase.	Same Same Same Same Same Same
*	Check Valve (Pre-pressure) V-IVB-22.1-03	Opens to permit pressurization of fuel tank pressurization subsystem components during checkout phase. System is pressurized for the purpose of pressure checking of the subsystem. Check valve closes to prevent reverse flow of pressurizing gas if solenoid valve (22.1-04) or disconnect (22.1-02) should fail to close.	1) Failure to open.	None; no effect on subsystem performance; however, subsystem components cannot be pressure checked.	A),B),C),D),E),F),G) None; failure does not effect subsystem performance	Same
			2) Failure to close or remain closed.	None; redundancy is provided by disconnect (22.1-02) and solenoid valve (22.1-04).	A),B),C),D),E),F),G) None; redundancy is provided.	Same
*	Solenoid Valve, N.C. (Pre-pressure) V-IVB-22.1-04	This valve is closed to permit helium to flow from ground pressure source through check valve (22.1-03), thus allowing subsystem to be pressure checked. This valve is opened to allow helium gas from ground source to bypass the fuel tank pressure control module and flow directly to the fuel tank, thus pre-pressurizing the tank prior to lift-off. Valve is closed by GSE ground command prior to lift-off and is not operable in flight. Closed valve prevents gaseous hydrogen from bypassing pressure control valves (22.1-06 + 08) if check valve (22.1-03) should fail to open during engine burn operation.	1) Failure to open.	POSSIBLE LOSS OF SUBSYSTEM This failure may prevent fuel tank from being pressurized within the alloted time during countdown. Helium gas will flow through check valve (22.1-03) and the sustaining orifice bypassing the pre-pressurization solenoid valve; however, the flow rate will be reduced considerably below normal.	A) Delay in launching or scrub. B) This failure may cause a hold in automatic countdown sequence. Fuel tank minimum lift-off pressure signal must be obtained prior to continuation of countdown. C),D),E),F),G) None; this valve is not required to open after lift-off.	Same Same Same

Δ ITEMS MARKED THUS (Δ) DO NOT OPERATE IN FLIGHT

RELIABILITY FAILURE EFFECT ANALYSIS

A) COUNTDOWN/CHECKOUT
B) COUNTDOWN - AUTOMATIC SEQUENCE
C) FLIGHT - BOOST PHASE
D) FLIGHT - POWERED PHASE, 1ST
E) FLIGHT - COAST PHASE, 1ST
F) FLIGHT - POWERED PHASE, 2ND
G) FLIGHT - COAST PHASE, 2ND

FUEL PRESSURIZATION SUBSYSTEM

Δ	ITEM	FUNCTION	FAILURE TYPE	FAILURE EFFECT ON SUBSYSTEM PERFORMANCE	FAILURE EFFECT ON S-IVB STAGE	FAILURE EFFECT ON SATURN VEHICLE
*	Solenoid Valve, N.C. (Pre-pressure) V-IVB-22.1-04 (continued)		2) Failure to close or remain closed.	None; redundancy is provided by disconnect (22.1-02) and check valve (22.1-03).	A),B) None; no effect on subsystem performance; however, subsystem cannot be pressure checked prior to tank pre-pressurization. C),D),E),F) None; redundancy is provided. G) None; fuel tank does not require pressurization during this phase.	Same Same
*	Pressure Switch, N.C. (Pre-pressure) V-IVB-22.1-05	This switch controls the flow of GSE supplied helium gas for fuel tank pre-pressurization. The switch being deactuated due to low tank pressure, initiates the pre-pressurization cycle. The switch picks up when the desired pressure is reached, closing the GSE supply control valve. Picks up at 28.5 ±0.5 psia; Drops out at 27.5 ±0.5 psia.	1) Failure to actuate (does not stop helium flow when desired fuel tank pressure is reached). 2) Premature deactuation (flow of helium is allowed to continue even though desired pressure has been attained).	None; these failures will allow continuous flow of helium gas into the fuel tank. Excess pressure will be vented from tank by vent-relief valves.	A),B) None; fuel tank pressure monitoring capability will allow manual control of pre-pressurization. C),D),E),F),G) None; this switch is not functional after lift-off.	Same Same
			3) Failure to deactuate (does not drop out when pressure decays).	PROBABLE LOSS OF SUBSYSTEM - SECOND FAILURE OF SUBSYSTEM This failure will not have a chance to occur unless a second failure has caused a loss of fuel tank pressure (assuming tank had been previously pressurized).	A) Delay in launching or scrub. B) Delay in pressure below minimum lift-off valve will hold automatic countdown sequence. C),D),E),F),G) None; this switch is not functional after lift-off.	Same Same Same
			4) Premature actuation (stops flow of helium pressurizing gas prior to fuel tank reaching desired pressure).	PROBABLE LOSS OF SUBSYSTEM Failure would not permit pressurization of fuel tank to the required value.	A) Delay in launching or scrub. B) Fuel tank pressure below the minimum required required for lift-off will hold automatic sequence. C),D),E),F),G) None; this switch is not functional after lift-off.	Same Same Same

Δ ITEMS MARKED THUS (H) DO NOT OPERATE IN FLIGHT

RELIABILITY FAILURE EFFECT ANALYSIS

FUEL PRESSURIZATION SYSTEM

A) COUNTDOWN/CHECKOUT
B) COUNTDOWN - AUTOMATIC SEQUENCE
C) FLIGHT - BOOST PHASE
D) FLIGHT - POWERED PHASE, 1ST
E) FLIGHT - COAST PHASE, 1ST
F) FLIGHT - POWERED PHASE, 2ND
G) FLIGHT - COAST PHASE, 2ND

Δ	ITEM	FUNCTION	FAILURE TYPE	FAILURE EFFECT ON SUBSYSTEM PERFORMANCE	FAILURE EFFECT ON S-IVB STAGE	FAILURE EFFECT ON SATURN VEHICLE
	Solenoid Valve, N.C. (Control) V-IVB-22.1-06	Opens on command of pressure switch (22.1-07) responding to a low fuel tank pressure, to admit additional hydrogen bleed gas from the engine. Closes upon command of pressure switch (22.1-07) sensing adequate tank pressure. This valve provides an intermediate flow-rate adding to a sustained flow-rate, replenishes fuel tank pressure as required during the first burn engine operation. (Sustaining flow-rate is provided by an orifice in parallel with this valve.) Flow-rates: Sustaining - 0.375 lbs/sec Control Valve Open - 0.533 lbs/sec	1) Failure to open. 2) Premature closure.	POSSIBLE LOSS OF SUBSYSTEM The required total flow of hydrogen gas is not provided to maintain nominal fuel tank pressure; however, tank pressure will stabilize at some lower value.	A),B),C) None; this valve does not function during these phases. Hydrogen gas is used for pressurization only during engine burn. D) POSSIBLE LOSS OF STAGE The decreased tank pressure may not be adequate to sustain engine operation throughout the first burn, due to reduction of NPSH. A sufficient reduction will cause engine pump cavitation. E),F),G) None; same as A), B), and C) phases. (Hydrogen bleed gas is controlled by step solenoid valve, 22.1-08 during F) phase.)	Same POSSIBLE LOSS OF MISSION Sufficient reduction of tank pressure will cause a loss of thrust. FRT _____ sec Same
			3) Failure to close when required.	None; pressurization of fuel tank is continuous and pressure will stabilize at tank relief valve setting.	A),B),C) None; this valve is functional during first powered phase only. D) None; this failure does not adversely affect engine operation. E),F),G) None; same as A), B), and C) phases.	Same Same Same
	Pressure Switch, N.C. (Flight Control) V-IVB-22.1-07	Monitors fuel tank pressure and controls solenoid control valve (22.1-06) during phase D) (First powered phase). Switch will pick up at desired fuel tank pressure allowing the solenoid control valve to close, thereby reducing the flow of engine bled gaseous hydrogen to the sustaining flow rate. Picks-up - $27.5^{+0.5}_{-0}$ psia Drops-out - $25.0^{+0.5}_{-0}$ psia	1) Failure to actuate (does not close valve when fuel tank pressure is high).	None; this failure causes solenoid control valve (22.1-06) to remain open. Pressurization of fuel tank is continuous and pressure will stabilize at tank relief valve setting.	A),B),C) None; this switch is functional during first powered phase only. D) None; this failure does not adversely affect engine operation. E),F),G) None; same as A), B), and C) phases.	Same Same Same

Δ ITEMS MARKED THUS (Δ) DO NOT OPERATE IN FLIGHT

RELIABILITY FAILURE EFFECT ANALYSIS

FUEL PRESSURIZATION SUBSYSTEM

A) COUNTDOWN/CHECKOUT
B) COUNTDOWN-AUTOMATIC SEQUENCE
C) FLIGHT-BOOST PHASE
D) FLIGHT-POWERED PHASE, 1ST
E) FLIGHT-COAST PHASE, 1ST
F) FLIGHT-POWERED PHASE, 2ND
G) FLIGHT-COAST PHASE, 2ND

Δ	ITEM	FUNCTION	FAILURE TYPE	FAILURE EFFECT ON SUBSYSTEM PERFORMANCE	FAILURE EFFECT ON S-IVB STAGE	FAILURE EFFECT ON SATURN VEHICLE
	Pressure Switch, N.C. (Flight Control) V-IVB-22.1-07 (continued)		2) Failure to deactuate. 3) Premature actuation (control valve remains closed even though tank pressure is less than desired).	POSSIBLE LOSS OF SUBSYSTEM The required total flow of bled hydrogen gas is not provided to maintain nominal fuel tank pressure; however, tank pressure will stabilize at some lower value.	A),B),C) None; this switch is not functional, except during first powered phase. D) POSSIBLE LOSS OF STAGE The reduced tank pressure caused by this failure may not be adequate to sustain engine operation during the first powered phase. A reduction to less than the minimum NPSH will cause engine pump cavitation. E),F),G) None; same as A), B), and C) phases.	Same POSSIBLE LOSS OF MISSION Sufficient reduction of tank pressure will cause a loss of thrust. FRT _____ sec Same
	Solenoid Valve, N.C. (Step) V-IVB-22.1-08	Provides increased engine bled hydrogen gas flow required to maintain additional fuel tank pressure required during the second powered phase. Provides 0.467 lbs/sec flow in addition to sustaining flow of 0.375 lbs/sec. Valve is commanded open and close by step pressure switch (22.1-09) that senses tank pressure.	1) Failure to open. 2) Premature closure.	PROBABLE LOSS OF SUBSYSTEM The increased pressurization required during second engine burn is lost. The sustained flow-rate may not be sufficient to maintain minimum NPSH throughout the second powered phase.	A),B),C),D),E) None; this valve is functional during second powered phase only. F) PROBABLE LOSS OF STAGE Sufficient reduction of fuel tank pressure below minimum NPSH will cause engine pump cavitation. G) None; same as A) - E) phases.	Same PROBABLE LOSS OF MISSION Decrease in pressure below minimum NPSH will result in a loss of thrust. FRT _____ sec Same
			3) Failure to close when required.	None; this failure will allow maximum flow of engine bled hydrogen gas. Fuel tank pressure will stabilize at the vent-relief valve setting; pressurizing gas in excess will be vented overboard.	A),B),C),D),E) None; this valve is functional during second powered phase only. F) None; excess tank pressure is not significant and will not degrade engine performance. G) None; same as A) - E) phases.	Same Same Same

Δ ITEMS MARKED THUS (Δ) DO NOT OPERATE IN FLIGHT

RELIABILITY FAILURE EFFECT ANALYSIS

A) COUNTDOWN/CHECKOUT
B) COUNTDOWN - AUTOMATIC SEQUENCE
C) FLIGHT - BOOST PHASE
D) FLIGHT - POWERED PHASE, 1ST
E) FLIGHT - COAST PHASE, 1ST
F) FLIGHT - POWERED PHASE, 2ND
G) FLIGHT - COAST PHASE, 2ND

FUEL PRESSURIZATION SUBSYSTEM

Δ ITEM	FUNCTION	FAILURE TYPE	FAILURE EFFECT ON SUBSYSTEM PERFORMANCE	FAILURE EFFECT ON S-IVB STAGE	FAILURE EFFECT ON SATURN VEHICLE
Pressure Switch (Step) V-IVB-22.1-09	Function A: Monitors fuel tank pressure during first coast phase. Activated by the fuel coast step pressurization command (20.1 sec prior to engine restart). Opens fuel tank re-pressurization control valve (22.1-06), allowing ambient helium to flow, increasing tank pressure to required value for second engine burn operation. Switch picks up at desired pressure, closing repressurization control valve. Function B: Monitor fuel tank pressure during the second powered phase Commands the step pressure solenoid valve (22.1-08) open and close; thereby controlling the flow of bled hydrogen gas to the fuel tank. Picks-up - 32.5 ±0.5 psia Drops-out - 31.5 ±0.5 psia	1) Failure to actuate	Function A: None; this failure will not degrade subsystem performance; however, it will permit ambient helium to flow continuously, excess pressure will be vented overboard and pressure will stabilize at the vent relief setting. Function B: None; this failure will not degrade subsystem performance; however, it will permit engine bled gaseous hydrogen to flow continuously, excess pressure will be vented overboard and pressure will stabilize at the vent relief setting.	A),B),C),D) None; this switch is not functional during these phases. E) None; excess tank pressure is not significant and will not degrade engine performance. F) None; same as E) phase. G) None; same as A) phase.	Same Same Same Same
		2) Failure to deactuate.	Function A: None; this failure will not affect the re-pressurization function. There is no requirement to recycle the re-pressurization control valve once the fuel tank pressure is built up to the desired value. Function B: PROBABLE LOSS OF SUBSYSTEM The increased pressurization required during second engine burn is lost. The sustained flow-rate of gaseous hydrogen may not be sufficient to maintain the minimum NPSH required throughout the second powered phase.	A),B),C),D) None; this switch is not functional in these phases. E) None; no effect on stage performance. Normal operation of this switch for this function is a single cycle. F) PROBABLE LOSS OF STAGE Sufficient reduction of fuel tank pressure below the minimum NPSH will cause engine fuel pump cavitation. G) None; same as A) phase.	Same Same PROBABLE LOSS OF MISSION A decrease in pressure below minimum NPSH will result in a loss of thrust. FRT _____ sec Same

Δ ITEMS MARKED THUS (*) DO NOT OPERATE IN FLIGHT

RELIABILITY FAILURE EFFECT ANALYSIS

A) COUNTDOWN/CHECKOUT
B) COUNTDOWN - AUTOMATIC SEQUENCE
C) FLIGHT - BOOST PHASE
D) FLIGHT - POWERED PHASE, 1ST
E) FLIGHT - COAST PHASE, 1ST
F) FLIGHT - POWERED PHASE, 2ND
G) FLIGHT - COAST PHASE, 2ND

FUEL PRESSURIZATION SUBSYSTEM

Δ	ITEM	FUNCTION	FAILURE TYPE	FAILURE EFFECT ON SUBSYSTEM PERFORMANCE	FAILURE EFFECT ON S-IVB STAGE	FAILURE EFFECT ON SATURN VEHICLE
*	Pressure Switch (Minimum Lift-off) V-IVB-22.1-10	Monitors fuel tank pressure during countdown. Switch picks up when tank pressure reaches minimum lift-off requirements. Drops out and stops automatic countdown sequencer if tank pressure decays below minimum required for lift-off. Picks-up - 27.0 $^{+1}_{-0}$ psia Drops-out - 26 $^{+1}_{-0}$ psia	1) Failure to actuate (does not indicate minimum lift-off pressure has been reached). 2) Premature deactuation (false indication that minimum lift-off pressure has been lost).	None; loss of monitoring capability only. This failure would give a false indication that the fuel tank pressure is adequate for lift-off.	A) Delay in launching or scrub. B) This failure holds automatic countdown sequence. Acquisition of signal is required for continuation of countdown sequence. C),D),E),F),G) None; this switch is not functional after lift-off.	Same Same Same
			3) Failure to deactuate (second failure of subsystem	LOSS OF SUBSYSTEM SECOND FAILURE ANALYSIS This failure would not have a chance to occur unless a second failure of subsystem caused a loss of tank pressurization. This failure would give the false indication that fuel tank pressure is adequate for lift-off.		
			4) Premature actuation (falsely indicates that minimum lift-off pressure has been reached).	None; no apparent effect, normal pressurization functions would continue.	A),B) None; no significant effect. C),D),E),F),G) None; this switch is not functional after lift-off.	Same Same
	Subsystem Plumbing V-IVB-22.1-11	Connect all fuel tank pressurization and re-pressurization subsystems components	1) Leakage at connection	POSSIBLE LOSS OF SUBSYSTEM This failure could cause: (1) loss of pre-pressurization during prelaunch or coast phases; (2) loss of engine bled hydrogen gas during powered phases; (3) loss of ambient helium pressure supply required for re-pressurization during first coast phase; or (4) loss of a combination of more than one of the above losses.	A) Delay in launching or scrub B) This failure may hold automatic countdown sequence if sensed by leak detection system. C) None; fuel tank pressurization is not required during this phase; however, loss of tank pressure could be significant in D) or F) phases. (continued)	Same Same Same

Δ ITEMS MARKED THUS (Δ) DO NOT OPERATE IN FLIGHT

RELIABILITY FAILURE EFFECT ANALYSIS

A) COUNTDOWN/CHECKOUT
B) COUNTDOWN - AUTOMATIC SEQUENCE
C) FLIGHT - BOOST PHASE
D) FLIGHT - POWERED PHASE, 1ST
E) FLIGHT - COAST PHASE, 1ST
F) FLIGHT - POWERED PHASE, 2ND
G) FLIGHT - COAST PHASE, 2ND

FUEL PRESSURIZATION SUBSYSTEM

Δ	ITEM	FUNCTION	FAILURE TYPE	FAILURE EFFECT ON SUBSYSTEM PERFORMANCE	FAILURE EFFECT ON S-IVB STAGE	FAILURE EFFECT ON SATURN VEHICLE
	Subsystem Plumbing V-IVB-22.1-11		1) Leakage at connection (continued)		(continued) D) POSSIBLE LOSS OF STAGE A decrease of fuel tank pressure could cause fuel pump cavitation due to loss of minimum NPSH. E) None; same as C) phase. F) POSSIBLE LOSS OF STAGE Same as D) phase. G) None; pressurization is not required during this phase.	POSSIBLE LOSS OF MISSION Loss of fuel tank pressurization would result in a loss of thrust. FRT _____ sec Same POSSIBLE LOSS OF MISSION Same as D) phase. FRT _____ sec Same
			2) Rupture of pressure supply line (fails to withstand normal operating pressures).	LOSS OF SUBSYSTEM Fuel tank supply pressure from any one or more than one source is lost (flow is stopped).	A) Delay in launching or scrub. B) This failure would hold automatic countdown sequence due to loss of fuel tank or ambient helium pressures reduction below minimum required for lift-off. C) None; fuel tank pressurization is not required during this phase; however, failure during this phase would be significant during D) or F) phase. D) LOSS OF STAGE Loss of fuel tank pressure would cause engine pump cavitation due to loss of minimum NPSH. E) None; same as C) phase. F) LOSS OF STAGE Same as D) phase. G) None; pressurization is not required during this phase.	Same Same LOSS OF MISSION Loss of fuel tank pressure would cause thrust loss. FRT _____ sec Same LOSS OF MISSION Same as D) phase FRT _____ sec Same

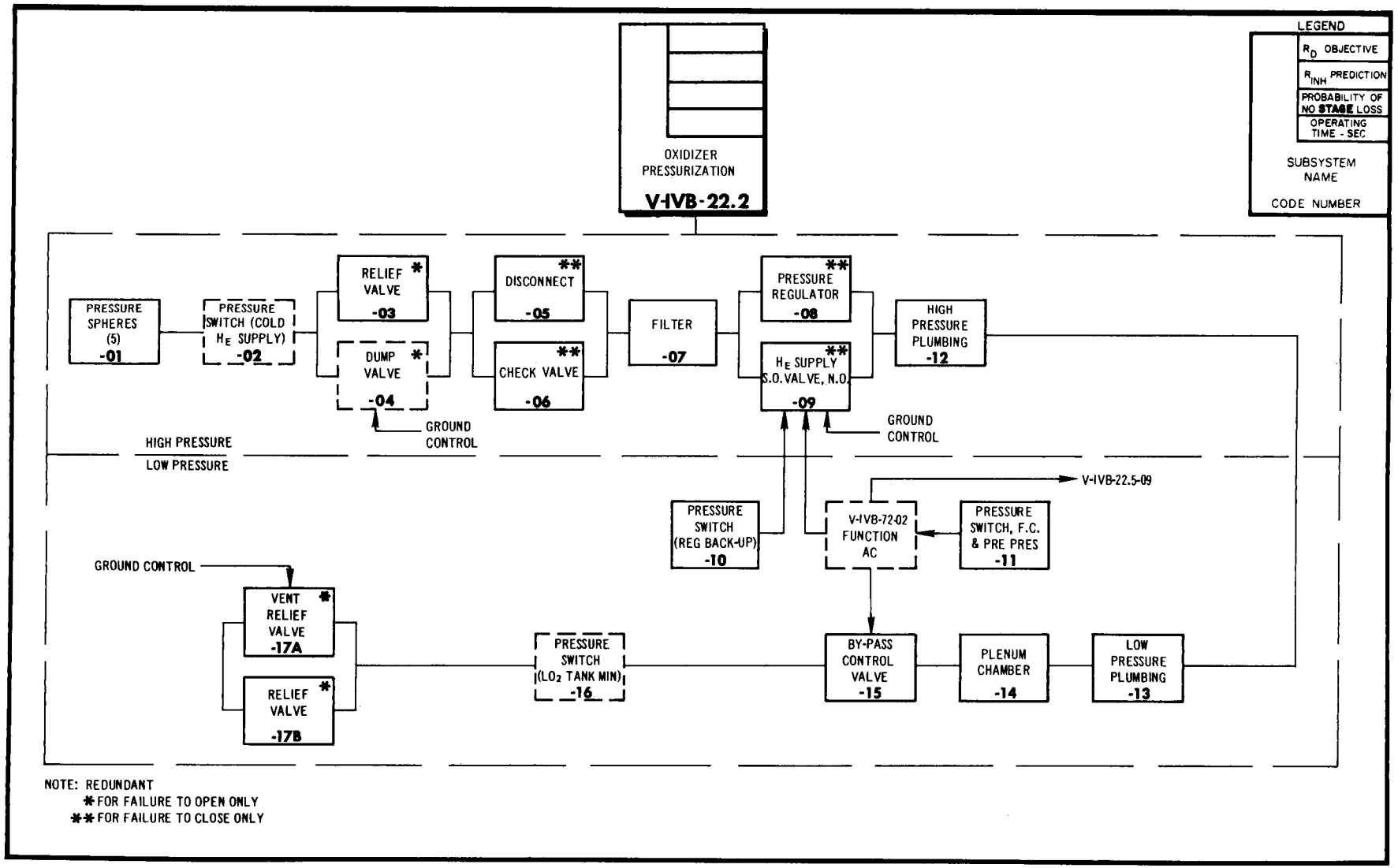

NOTE: REDUNDANT
* FOR FAILURE TO OPEN ONLY
** FOR FAILURE TO CLOSE ONLY

Δ ITEMS MARKED THUS (Δ) DO NOT OPERATE IN FLIGHT

RELIABILITY FAILURE EFFECT ANALYSIS

OXIDIZER PRESSURIZATION SUBSYSTEM

A) COUNTDOWN/CHECKOUT
B) COUNTDOWN - AUTOMATIC SEQUENCE
C) FLIGHT - BOOST PHASE
D) FLIGHT - POWERED PHASE, 1ST
E) FLIGHT - COAST PHASE, 1ST
F) FLIGHT - POWERED PHASE, 2ND
G) FLIGHT - COAST PHASE, 2ND

Δ	ITEM	FUNCTION	FAILURE TYPE	FAILURE EFFECT ON SUBSYSTEM PERFORMANCE	FAILURE EFFECT ON S-IVB STAGE	FAILURE EFFECT ON SATURN VEHICLE
	Pressure Spheres(5) V-IV B 22.2-01	Provides storage for 17.5 cubic feet of gaseous cold helium (100°R) under high pressure. The helium is used to pressurize the oxidizer (LO_2) tank. 3100 ± 100 psia	1) External leak at connection.	POSSIBLE LOSS OF SUBSYSTEM Continuous loss of pressurizing gas may deplete supply.	A) Delay in launching or scrub. B) Possible automatic hold of countdown timer. A decrease in pressure to below 2840 psia holds automatic sequencer; however, ground supply maintains pressure until lift-off. C) None; The resultant failure is considered significant during D) or F) phases only. D) POSSIBLE LOSS OF STAGE Premature depletion of cold helium supply may result in loss of oxidizer pressurization causing pump cavitation due to loss of NPSH. E) None; same as C) phase. F) POSSIBLE LOSS OF STAGE Same as D) phase. G) None; Same as C) phase.	Same Same Same POSSIBLE LOSS OF MISSION Loss of NPSH may result in thrust loss. FRT ____ sec. Same POSSIBLE LOSS OF MISSION Same as D) phase Same
			2) Burst	LOSS OF SUBSYSTEM Complete loss of pressurizing gas supply.	A) Scrub, prior to propellant fill. B)C)D)E)F) LOSS OF STAGE	Same LOSS OF MISSION FRT ____ sec.
*	Pressure switch, cold helium supply V-IV B-22.2-02	Monitors cold helium low limit sphere pressure during countdown. Singals ground control if pressure drops below minimum required for lift-off. Picks up at 2940 ± 25 psia. Drops out at 2840 ± 25 psia.	1) Failure to actuate 2) Premature de-actuation	None; Loss of monitoring capability only. This failure will cause a false indication that supply pressure is not adequate for flight.	A) Delay in launch or scrub. B) This failure will hold automatic countdown sequence. Acquisition of a signal is required for continuation of countdown.	Same Same

Δ ITEMS MARKED THUS (Δ) DO NOT OPERATE IN FLIGHT

RELIABILITY FAILURE EFFECT ANALYSIS

OXIDIZER PRESSURIZATION SUBSYSTEM

A) COUNTDOWN/CHECKOUT
B) COUNTDOWN - AUTOMATIC SEQUENCE
C) FLIGHT - BOOST PHASE
D) FLIGHT - POWERED PHASE, 1ST
E) FLIGHT - COAST PHASE, 1ST
F) FLIGHT - POWERED PHASE, 2ND
G) FLIGHT - COAST PHASE, 2ND

Δ	ITEM	FUNCTION	FAILURE TYPE	FAILURE EFFECT ON SUBSYSTEM PERFORMANCE	FAILURE EFFECT ON S-IVB STAGE	FAILURE EFFECT ON SATURN VEHICLE
*	Pressure switch, cold helium supply V-IV B-22.2-02 (Cont'd)		1) Failure to actuate. 2) Premature de-actuation (Cont'd)		(Cont'd) C)D)E)F)G) None; not applicable, this function not used in flight.	Same
			3) Failure to de-actuate (Second failure of subsystem)	This failure will not have a chance to occur unless a second failure has caused a loss of cold helium supply pressure. This failure would give a false indication that supply pressure is adequate for lift-off.		
	Relief Valve V-IV B-22.2-03	Relieves excess cold helium supply pressure. Maximum cracking pressure 3500 psia, minimum reseat pressure 3200 psia.	1) Failure to open (Does not relieve)	None; Loss of automatic relief of pressure; However, redundancy is provided for ground operation by dump valve (22.2-04). (This failure first requires that ground supply system fails to limit high pressure.)	A) Possible delay in launch or scrub. However, visual monitoring enables redundancy to be provided through ground control dump valve (22.2-04). B) This failure does not hold automatic countdown sequence. Redundancy is provided as in A) phase and enables decisions to be made. C) None; Gas volume does not increase significantly during this phase. D) None; pressure is reduced below relief setting through consumption. E) None; Same as C) phase. F) None; Same as D) phase. G) None; LO_2 tank pressurization is not required during this phase.	Same Same Same Same Same Same
			2) Failure to close (Excessive internal leakage)	PROBABLE LOSS OF SUBSYSTEM Failure to close would result in loss of cold helium supply	A) Delay in launching or scrub.	Same

Δ ITEMS MARKED THUS (Δ) DO NOT OPERATE IN FLIGHT

RELIABILITY FAILURE EFFECT ANALYSIS

OXIDIZER PRESSURIZATION SUBSYSTEM

A) COUNTDOWN/CHECKOUT
B) COUNTDOWN - AUTOMATIC SEQUENCE
C) FLIGHT - BOOST PHASE
D) FLIGHT - POWERED PHASE, 1ST
E) FLIGHT - COAST PHASE, 1ST
F) FLIGHT - POWERED PHASE, 2ND
G) FLIGHT - COAST PHASE, 2ND

Δ	ITEM	FUNCTION	FAILURE TYPE	FAILURE EFFECT ON SUBSYSTEM PERFORMANCE	FAILURE EFFECT ON S-IVB STAGE	FAILURE EFFECT ON SATURN VEHICLE
	Relief Valve V-IV B-22.2-03 (Cont'd)		2) Failure to close (Excessive internal leakage) (Cont'd)		(Cont'd) B) This failure holds automatic countdown sequence by signal indicating less than minimum helium supply pressure required for lift-off. C) None; the resultant is considered significant for D) and F) phase only. D) PROBABLE LOSS OF STAGE Loss of H_e pressure supply would result in engine pump cavitation due to loss of minimum NPSH. E) None; same as C) phase. F) PROBABLE LOSS OF STAGE Same as D) phase; assuming engine did not cavitate in D) phase. G) None; Same as C) phase.	Same PROBABLE LOSS OF MISSION Loss of pressurization would result in thrust loss. FRT_____sec. Same PROBABLE LOSS OF MISSION Same as D) phase assuming thrust loss did not occur in D) phase. FRT_____sec.
			3) Premature Opening (Relieving at pressure less than required)	POSSIBLE LOSS OF SUBSYSTEM System pressure may be less than minimum required for lift off.	A) Delay in launching or scrub. B) Possible hold of automatic sequencer. A pressure drop to below 2840 ± 25 psia holds sequencer. C) None; the resulant failure is not considered significant until D) or F) phase. D) POSSIBLE LOSS OF STAGE Appreciable loss of pressurizing gas may cause engine pump cavitation due to loss of minimum NPSH.	Same Same Same POSSIBLE LOSS OF MISSION Loss of pressurization could result in loss of thrust. FRT_____sec.

Δ ITEMS MARKED THUS (*) DO NOT OPERATE IN FLIGHT

RELIABILITY FAILURE EFFECT ANALYSIS

OXIDIZER PRESSURIZATION SUBSYSTEM

A) COUNTDOWN/CHECKOUT
B) COUNTDOWN-AUTOMATIC SEQUENCE
C) FLIGHT-BOOST PHASE
D) FLIGHT-POWERED PHASE, 1ST
E) FLIGHT-COAST PHASE, 1ST
F) FLIGHT-POWERED PHASE, 2ND
G) FLIGHT-COAST PHASE, 2ND

Δ	ITEM	FUNCTION	FAILURE TYPE	FAILURE EFFECT ON SUBSYSTEM PERFORMANCE	FAILURE EFFECT ON S-IVB STAGE	FAILURE EFFECT ON SATURN VEHICLE
	Relief Valve V-IV B-22.2-03 (Cont'd)		3) Premature Opening (Relieving at pressure less than required) (Cont'd)		(Cont'd) E) None; same as C) phase. F) POSSIBLE LOSS OF STAGE Same as D) phase, providing failure did not occur in that phase. G) Same as C) phase.	Same POSSIBLE LOSS OF MISSION Same as D) phase, providing thrust loss did not occur in that phase. FRT____sec.
*	Dump Valve, Solenoid, N.C. V-IV B-22.2-04	Opens on ground (GSE) command, to dump cold helium after checkout, purges and launch cancellations.	1) Failure to open.	None; Cold helium cannot be drained from system, utilizing this valve. However, helium supply can be drained through LO_2 tank by opening tank vent valve. (22.2-17 A)	A) None; no requirement to operate during countdown. B) None; no requirement to operate unless another failure occurs. C) D)E)F)G) None; not applicable, because valve is not operable after lift-off.	Same Same Same
			2) Failure to close or remain closed.	LOSS OF SUBSYSTEM Cold helium supply is lost overboard.	A) Delay in launching or scrub. B) This failure would hold automatic countdown sequence due to loss of pressure below minimum required for lift-off. C) None; the resultant is considered significant for D) and F) phases only. D) POSSIBLE LOSS OF STAGE Appreciable loss of pressurizing gas may cause engine pump cavitation due to loss of minimum NPSH. E) None; Same as C) phase. F) POSSIBLE LOSS OF STAGE Same as D) phase, providing failure did not occur at that time. G) None; same as C) phase.	Same Same POSSIBLE LOSS OF MISSION Loss of pressurization could result in loss of thrust. FRT____sec. Same POSSIBLE LOSS OF MISSION Same as D) phase, providing thrust loss did not occur at that time. FRT____sec.

Δ ITEMS MARKED THUS (Δ) DO NOT OPERATE IN FLIGHT

RELIABILITY FAILURE EFFECT ANALYSIS

OXIDIZER PRESSURIZATION SUBSYSTEM

A) COUNTDOWN/CHECKOUT
B) COUNTDOWN - AUTOMATIC SEQUENCE
C) FLIGHT - BOOST PHASE
D) FLIGHT - POWERED PHASE, 1ST
E) FLIGHT - COAST PHASE, 1ST
F) FLIGHT - POWERED PHASE, 2ND
G) FLIGHT - COAST PHASE, 2ND

Δ	ITEM	FUNCTION	FAILURE TYPE	FAILURE EFFECT ON SUBSYSTEM PERFORMANCE	FAILURE EFFECT ON S-IVB STAGE	FAILURE EFFECT ON SATURN VEHICLE
	Disconnect, Sealing, Pre-Pressure V-IV B-22.2-05	Engages with ground half to permit cold gaseous helium (100°R) to flow from growing supply to fill stage storage spheres (22.2-01) and pre-pressurize LO_2 tank. Closes at disconnect of umbilical at first motion of vehicle.	1) Internal leakage 2) Failure to close following separation from ground half at lift-off.	None; redundancy provided. Dowstream check valve (22.2-06) prevents loss of pressurizing gas.	A) None; not applicable during fill operation. B) None; not applicable. Connection to ground supply is maintained until lift-off. C)D)E)F)G) None; redundancy provided by closed check valve (22.2-06).	Same Same Same
	Check Valve V-IV B-22.2-06	Opens to permit pressurization (filling) helium storage spheres and pre-pressurization of LO_2 tank. Closes to prevent reverse flow overboard in event of failure of disconnect (22.2-05).	1) Internal leakage (Failure to close or remain closed)	None; redundancy provided by upstream sealing disconnect (22.2-06) Prevents loss of pressurizing gas.	A)B) None; not applicable; during filling and prepressurizing process as ground helium supply remains connected until lift-off. D)E)F)G) None; redundancy provided by sealing disconnect (22.2-05) .	Same Same
			2) Failure to open (Frozen shut)	LOSS OF SUBSYSTEM This failure prevents filling of cold helium supply spheres and prepressurization of LO_2 tank. This failure does not adversely effect subsystem in flight.	A) Delay in launching or scrub. B) Possible hold of automatic countdown sequence due to loss of prepressurization. Function accompanied by loss of pressure below minimum required for lift-off. C)D)E)F)G)None; not applicable, as valve is not required to open after lift-off.	Same Same Same
	Filter, Cold Helium Supply V-IV B-22,2-07	Filters cold helium gas prior to entering pressure regulator(22.2-08).	1) Implosion or deformation of filter element.	POSSIBLE LOSS OF STAGE Filter particles may damage or affect the operation of downstream components.	A) Possible delay in launching or scrub. B) Possible hold of automatic countdown sequencer. This failure may not be detected immediatly unless it causes a second failure downstream which effects input to timer. Vehicle possibly can lift-off with this failure undetected.	Same Same

Δ ITEMS MARKED THUS (Δ) DO NOT OPERATE IN FLIGHT

RELIABILITY FAILURE EFFECT ANALYSIS

OXIDIZER PRESSURIZATION SUBSYSTEM

A) COUNTDOWN/CHECKOUT
B) COUNTDOWN-AUTOMATIC SEQUENCE
C) FLIGHT-BOOST PHASE
D) FLIGHT-POWERED PHASE, 1ST
E) FLIGHT-COAST PHASE, 1ST
F) FLIGHT-POWERED PHASE, 2ND
G) FLIGHT-COAST PHASE, 2ND

Δ ITEM	FUNCTION	FAILURE TYPE	FAILURE EFFECT ON SUBSYSTEM PERFORMANCE	FAILURE EFFECT ON S-IVB STAGE	FAILURE EFFECT ON SATURN VEHICLE
Filter, Cold Helium Supply. V-IV B-22.2-07 (Continued)		1) Implosion or deformation of filter element. (Continued)		(Continued) C) None; a second failure may be caused that would be significant in D) and F) phases. D) POSSIBLE LOSS OF STAGE Due to a secondary failure downstream, resulting in pump cavitation due to a loss of minimum NPSH. E) None; same as C) phase. F) POSSIBLE LOSS OF STAGE Same as D) phase. G) None; LO_2 tank pressurization is not required during this phase.	Same POSSIBLE LOSS OF MISSION Due to loss of thrust after secondary failure. FRT____sec. Same POSSIBLE LOSS OF MISSION Same as D) phase. FRT____sec. Same
Pressure Regulator V-IV B-22.2-08	Regulates cold helium from 3100 to 600 psia inlet pressure to 365 ± 15 psia outlet pressure. Valve is full open at 600 psia.	1) Failure to open. (Down stream pressure is less than required).	LOSS OF SUBSYSTEM Failure to open cuts off cold helium supply, preventing pressurization of LO_2 tank.	A) Delay in launching or scrub. B) This failure holds automatic countdown sequence through LO_2 tank pressure switch indicating insufficient pressure for for lift-off. C) None; the resultant effect is considered significant in D) and F) phases only. D) PROBABLE LOSS OF STAGE Loss of LO_2 tank pressurization could result in engine pump cavitation due to loss of minimum NPSH. E) None; Same as C) phase.	Same Same Same PROBABLE LOSS OF MISSION Loss of pressurization may result in loss of thrust. FRT____sec. Same

Δ ITEMS MARKED THUS (Δ) DO NOT OPERATE IN FLIGHT

RELIABILITY FAILURE EFFECT ANALYSIS

OXIDIZER PRESSURIZATION SUBSYSTEM

A) COUNTDOWN/CHECKOUT
B) COUNTDOWN - AUTOMATIC SEQUENCE
C) FLIGHT - BOOST PHASE
D) FLIGHT - POWERED PHASE, 1ST
E) FLIGHT - COAST PHASE, 1ST
F) FLIGHT - POWERED PHASE, 2ND
G) FLIGHT - COAST PHASE, 2ND

Δ	ITEM	FUNCTION	FAILURE TYPE	FAILURE EFFECT ON SUBSYSTEM PERFORMANCE	FAILURE EFFECT ON S-IVB STAGE	FAILURE EFFECT ON SATURN VEHICLE
	Pressure Regulator V-IV B-22.2-08 (Continued)		1) Failure to open. (Downstream pressure is less than required). (Continued)		(Continued) F) PROBABLE LOSS OF STAGE Same as D) phase. G) None; same as C) phase.	PROBABLE LOSS OF MISSION Same as D) phase FRT_____sec. Same
			2) Failure to close (Downstream pressure is higher than required).	None; redundancy provided by regulator back-up pressure switch (22.2-10) which cycles the helium shutoff valve (22.2-09).	A)B)C)D)E)F)G) None; redundancy provided.	Same
	Helium Supply Shut-off Valve, N.O. V-IV B-22.2-09	Function A: Opened by ground control (GSE) during cold helium fill operation. Closed upon completion of fill. Function B: Opened and closed by LO_2 tank pressure switch (22.2-11). Controls flow of cold helium to LO_2 tank for pre-pressurization prior to lift-off and during boost phase. Function C: Opened and closed by pressure regulator back-up switch (22.2-10) during powered phases in the event of pressure regulator (22.2-08) failure. This valve is held closed from end of first powered phase until 180.1 sec. prior to second engine start.	1) Failure to open when de-energized.	LOSS OF SUBSYSTEM Cold helium supply is not permitted to replenish LO_2 tank pressure.	A) Delay in launching or scrub. B) This failure does not hold automatic countdown sequence; however if LO_2 tank pressure is reduced to below minimum required for lift-off an automatic hold would result. Vehicle may lift-off with this failure undetected. C) None; not applicable, this failure is considered significant for D) and F) phases only. D) PROBABLE LOSS OF STAGE Loss of tank pressure would result in engine pump cavitation due to loss of minimum NPSH. E) None; Same as C) phase. F) PROBABLE LOSS OF STAGE Same as D) phase providing failure did not occur in that phase.	Same Same Same PROBABLE LOSS OF MISSION Loss of pressurization would result in thrust loss. FRT_____sec Same PROBABLE LOSS OF MISSION Same as D) phase FRT_____sec.

Δ ITEMS MARKED THUS (#) DO NOT OPERATE IN FLIGHT

RELIABILITY FAILURE EFFECT ANALYSIS

OXIDIZER PRESSURIZATION SUBSYSTEM

A) COUNTDOWN/CHECKOUT
B) COUNTDOWN - AUTOMATIC SEQUENCE
C) FLIGHT - BOOST PHASE
D) FLIGHT - POWERED PHASE, 1ST
E) FLIGHT - COAST PHASE, 1ST
F) FLIGHT - POWERED PHASE, 2ND
G) FLIGHT - COAST PHASE, 2ND

Δ ITEM	FUNCTION	FAILURE TYPE	FAILURE EFFECT ON SUBSYSTEM PERFORMANCE	FAILURE EFFECT ON S-IVB STAGE	FAILURE EFFECT ON SATURN VEHICLE
Helium Supply Shut-off Valve, N.O. V-IV B-22.2-09 (Continued)		1) Failure to open when de-energized. (Continued)		(Continued) G)None; same as C) phase	Same
		2) Failure to close and stay closed when energized.	PROBABLE LOSS OF SUBSYSTEM Failure to close would permit uncontrolled flow of cold helium with resultant loss through LO_2 tank vent valves.	A)B) None; during these phases system supply is maintained from ground source. Vehicle may lift off with this failure undetected. C) None; not applicable This failure is considered significant for D) and F) phases only. D) POSSIBLE LOSS OF STAGE Depletion of helium supply would cause loss of LO_2 tank pressurization resulting in engine pump cavitation due to loss of mimimum NPSH. E) None; same as C) phase. F) PROBABLE LOSS OF STAGE Same as D) phase, providing loss did not occur during that phase. G) None; same as C) phase.	Same POSSIBLE LOSS OF MISSION Loss of pressurization would result in thrust loss. FRT_____sec. Same PROBABLE LOSS OF MISSION Same as D) phase. FRT_____sec. Same
Pressure Switch, Regulator back-up V-IV B-22.2-10	Monitors helium plenum pressure and in the event of pressure regulator failure cycles the helium supply shut-off valve (22.2-09) in this way acting as a regulator. Picks up at 420 ± 10 psia and drops out at 300 ± 10 psia.	1) Failure to actuate when required. (Second failure of subsystem.) 2) Failure to deactuate when required.	POSSIBLE LOSS OF SUBSYSTEM AS A SECOND FAILURE ONLY This failure is not significant unless pressure regulator valve (22.2-08) fails to close.		

Δ ITEMS MARKED THUS (Δ) DO NOT OPERATE IN FLIGHT

RELIABILITY FAILURE EFFECT ANALYSIS

OXIDIZER PRESSURIZATION SUBSYSTEM

A) COUNTDOWN/CHECKOUT
B) COUNTDOWN-AUTOMATIC SEQUENCE
C) FLIGHT-BOOST PHASE
D) FLIGHT-POWERED PHASE, 1ST
E) FLIGHT-COAST PHASE, 1ST
F) FLIGHT-POWERED PHASE, 2ND
G) FLIGHT-COAST PHASE, 2ND

Δ	ITEM	FUNCTION	FAILURE TYPE	FAILURE EFFECT ON SUBSYSTEM PERFORMANCE	FAILURE EFFECT ON S-IVB STAGE	FAILURE EFFECT ON SATURN VEHICLE
	Pressure Switch, Regulator back-up V-IV B-22.2-10 (Continued)		2) Failure to deactuate when required. (Continued)		(Continued)	
			3) Premature actuation (Picks up at a pressure lower than desired) .	POSSIBLE LOSS OF SUBSYSTEM Failure to deactuate would cause cold helium shut off valve to remain open resulting in uncontrolled flow of cold helium with resultant loss of pressurent through th LO_2 tank vent valves. Premature actuation would have the same resultant effect as failure to deactuate.	A)B) None; during these phases system supply is maintained from ground supply source. Vehicle may lift-off with this failure undetected. C) None; not applicable, This failure is considered significant for D) and F) phases only. D) POSSIBLE LOSS OF STAGE Depletion of cold helium supply would cause loss of pressurization resulting in engine pump cavitation due to loss of NPSH. E) None; Same as C) phase. F) PROBABLE LOSS OF STAGE Same as D) phase providing loss did not occur during that phase. G) None; same as C) phase.	Same Same POSSIBLE LOSS OF MISSION Loss of pressurization would result in loss of thrust. FRT____ sec. Same POSSIBLE LOSS OF MISSION Same as D) phase FRT____ sec. Same
	Pressure Switch, Flight Control and Pre-pressure V-IV B-22.2-11	FUNCTION A: During countdown and boost phases this switch senses LO_2 tank pressure and cycles the cold helium shut-off valve (22.2-09) thus maintaining proper LO_2 tank pressurization. Picks up at $35 \pm {}^{0}_{-1}$ psia Drops out at $32.0 \pm {}^{1}_{-.05}$ psia FUNCTION B: During powered phases this switch senses LO_2 tank pressure and cycles the by-pass control valve (22.2-15) allowing cold (Continued)	1) Failure to actuate when required	Function A: POSSIBLE LOSS OF SUBSYSTEM Failure to actuate would cause the cold helium shut-off valve to remain open resulting in uncontrolled flow of cold helium with resultant loss of pressurant through LO_2 tank vent valves.	A)B) None; during these phases system supply is maintained from ground supply source. Vehicle may lift-off with this failure undetected. C) None; this failure is not considered significant during this phase; however, the loss of cold helium supply could be significant during D) and F) phases. (continued)	Same Same

Δ ITEMS MARKED THUS (Δ) DO NOT OPERATE IN FLIGHT

RELIABILITY FAILURE EFFECT ANALYSIS

OXIDIZER PRESSURIZATION SUBSYSTEM

A) COUNTDOWN/CHECKOUT
B) COUNTDOWN - AUTOMATIC SEQUENCE
C) FLIGHT - BOOST PHASE
D) FLIGHT - POWERED PHASE, 1ST
E) FLIGHT - COAST PHASE, 1ST
F) FLIGHT - POWERED PHASE, 2ND
G) FLIGHT - COAST PHASE, 2ND

Δ	ITEM	FUNCTION	FAILURE TYPE	FAILURE EFFECT ON SUBSYSTEM PERFORMANCE	FAILURE EFFECT ON S-IVB STAGE	FAILURE EFFECT ON SATURN VEHICLE
	Pressure Switch, Flight Control and Pre-pressure V-IV B-22.2-11 (Continued)	(Continued) helium to by-pass the heat exchanger thus preventing overpressurization. FUNCTION C: Commands re-pressurization control valve (22.5-09) open 20 sec. prior to second engine start. This allows LO_2 tank to be pressurized prior to restart Switch picks up (opens) when LO_2 tank pressure reaches desired valve, thus stopping flow of ambient helium to tank.	1) Failure to actuate when required. (Continued)	Function B: **Degradation of subsystem performance.** Failure to actuate would cause the by-pass control valve to remain closed thus preventing cold helium from by-passing the heat exchanger during conditions of over pressurization. Function C: None; This failure would allow repressurization (22.5-09) control valve to remain open after desired pressure is reached. Excess pressure is exhausted overboard thru vent valve. (This function ceases at engine restart)	(Continued) D) None; **over** pressurization is prevented by LO_2 tank vent valves (22.2-19A + B). E) None; **failure** would not affect engine performance. F) POSSIBLE LOSS OF STAGE Depletion of cold helium supply due to uncontrolled flow during C) phase could cause pump cavitation due to loss of minimum **NPSH.** G) None; **same** as C) phase.	Same Same POSSIBLE LOSS OF MISSION Same; However, loss of pressurization due to early depletion of helium supply during C) phase could cause thrust loss. FRT____ sec. Same
			2) Failure to deactuate.	Function A: POSSIBLE LOSS OF SUBSYSTEM Failure to deactuate or premature actuation would cause cold helium shut-off valve to close or remain closed at a pressure less than desired in the LO_2 tank. Function B: POSSIBLE LOSS OF SUBSYSTEM These failures will cause the by-pass valve to open with LO_2 tank pressure less than desired, this causes cold helium to by-pass the heat exchanger resulting in further reduction in pressurization.	A) Delay in launching or scrub. B) This failure would cause an automatic hold of the countdown sequence due to LO_2 tank pressurization remaining **below** minimum required for lift-off. C) None; Not applicable. No significant effect during this phase. D) PROBABLE LOSS OF STAGE Loss of pressurization would result in engin pump cavitation due to loss of minimum **NPSH.** E) **None; same** as C) phase.	Same Same Same PROBABLE LOSS OF MISSION Loss of pressurization would result in a loss of thrust. FRT____ sec. Same

Δ ITEMS MARKED THUS (Δ) DO NOT OPERATE IN FLIGHT

RELIABILITY FAILURE EFFECT ANALYSIS

OXIDIZER PRESSURIZATION SUBSYSTEM

A) COUNTDOWN/CHECKOUT
B) COUNTDOWN-AUTOMATIC SEQUENCE
C) FLIGHT-BOOST PHASE
D) FLIGHT-POWERED PHASE, 1ST
E) FLIGHT-COAST PHASE, 1ST
F) FLIGHT-POWERED PHASE, 2ND
G) FLIGHT-COAST PHASE, 2ND

Δ	ITEM	FUNCTION	FAILURE TYPE	FAILURE EFFECT ON SUBSYSTEM PERFORMANCE	FAILURE EFFECT ON S-IVB STAGE	FAILURE EFFECT ON SATURN VEHICLE
	Pressure Switch, Flight Control and Pre-pressure V-IV B-22.2-11 (Continued)		2) Failure to deactuate. (Continued)	(Continued) Function C: None; this failure is unlikely to have an opportunity to occur, due to the short time period of this function. This failure would not be significant unless a second failure of the subsystem caused a loss of LO_2 tank pressurization.	(Continued) F) PROBABLE LOSS OF STAGE Same as D) phase, providing failure did not occur during that phase. G) None; same as C) phase.	PROBABLE LOSS OF MISSION Same as D) phase. FRT_____sec.
	High Pressure Plumbing V-IV B-22.2-12	Connects all components of subsystem from fill disconnect (22.2-05) and pressure spheres (22.2-01) to the LO_2 pressurization control module.	1) Leakage at connection.	POSSIBLE LOSS OF SUBSYSTEM Continuous loss of pressurant may cause depletion of supply prior to mission completion.	A) Delay in launching or scrub. B) This failure may hold automatic sequence if sensed by leak detection system. C) None; not applicable. This failure effect is considered significant during D) and F) phases only.	Same Same
	Low Pressure Plumbing V-IV B-22.2-13	Connects all components of subsystem from LO_2 pressurization control module to the LO_2 tank.			D) POSSIBLE LOSS OF STAGE Depletion of pressurant will cause engine pump cavitation due to loss of NPSH. E) None; same as C) phase. F) PROBABLE LOSS OF STAGE Same as D) phase, providing loss did not occur during that phase. G) None; same as C) phase.	POSSIBLE LOSS OF MISSION Loss of tank pressurization could cause loss of thrust. FRT_____sec. Same PROBABLE LOSS OF MISSION Same as D) phase FRT_____sec. Same
			2) Rupture of supply plumbing line.	LOSS OF SUBSYSTEM Flow of helium pressurant to LO_2 tank is stopped.	A) Delay in launching or scrub. B) This failure would hold automatic sequence due to LO_2 tank or sphere pressures reduction below minimum requirement for lift-off.	Same Same

Δ ITEMS MARKED THUS (Δ) DO NOT OPERATE IN FLIGHT

RELIABILITY FAILURE EFFECT ANALYSIS

OXIDIZER PRESSURIZATION SUBSYSTEM

A) COUNTDOWN/CHECKOUT
B) COUNTDOWN-AUTOMATIC SEQUENCE
C) FLIGHT-BOOST PHASE
D) FLIGHT-POWERED PHASE, 1ST
E) FLIGHT-COAST PHASE, 1ST
F) FLIGHT-POWERED PHASE, 2ND
G) FLIGHT-COAST PHASE, 2ND

Δ ITEM	FUNCTION	FAILURE TYPE	FAILURE EFFECT ON SUBSYSTEM PERFORMANCE	FAILURE EFFECT ON S-IVB STAGE	FAILURE EFFECT ON SATURN VEHICLE
Low Pressure Plumbing V-IV B-22.2-13 (Continued)		2) Rupture of supply plumbing line. (Continued)		(Continued) C) None; not applicable. This failure is considered significant during D) and F) only. D) LOSS OF STAGE Loss of LO_2 tank pressureization would cause engine pump cavitation due to loss of minimum NPSH. E) None; same as C) phase. F) LOSS OF STAGE Same as D) phase, assuming failure did not occur during that phase. G) None; same as C) phase.	Same LOSS OF MISSION Loss of pressurization would result in thrust loss FRT____ sec. Same LOSS OF MISSION Same as D) phase FRT____ sec. Same
Plenum Chamber V-IV B-22.2-14	Absorbs and stabilizes pressure downstream of cold helium shut-off valve (22.2-09) functions primarily in the event pressure regulator (22.2-08) fails to open. 187 psia. 250 cubic inches.	1) Burst (Fails to withstand normal operating pressure.	LOSS OF SUBSYSTEM This failure would cause total loss of pressurization.	A) Delay in launching or scrub. B) This failure would hold automatic sequence due to loss of LO_2 tank minimum lift-off pressure. C) None; not applicable. This failure is considered significant during D) and F) phases only. D) LOSS OF STAGE Loss of pressurization will cause engine pump cavitation due to loss of minimum NPSH. E) None; Same as C) phase. F) LOSS OF STAGE Same as D) phase. (Continued)	Same Same Same LOSS OF MISSION Loss of pressurization will result in thrust loss. FRT____ sec. Same LOSS OF MISSION Same as D) phase. FRT sec.

Δ ITEMS MARKED THUS (##) DO NOT OPERATE IN FLIGHT

RELIABILITY FAILURE EFFECT ANALYSIS

OXIDIZER PRESSURIZATION SUBSYSTEM

A) COUNTDOWN/CHECKOUT
B) COUNTDOWN - AUTOMATIC SEQUENCE
C) FLIGHT - BOOST PHASE
D) FLIGHT - POWERED PHASE, 1ST
E) FLIGHT - COAST PHASE, 1ST
F) FLIGHT - POWERED PHASE, 2ND
G) FLIGHT - COAST PHASE, 2ND

Δ	ITEM	FUNCTION	FAILURE TYPE	FAILURE EFFECT ON SUBSYSTEM PERFORMANCE	FAILURE EFFECT ON S-IVB STAGE	FAILURE EFFECT ON SATURN VEHICLE
	Plenum Chamber V-IV B-22.2-14 (Continued)		1) Burst (Fails to withstand normal operating pressure. (Continued)		(Continued) providing loss did not occur during that phase. G) None; Same as C) phase.	Same
	By-pass Control Valve, N. C. V-IV B-22.2-15	Controls amount of cold helium by-passing the heat exchanger (Rocketdyne item) and is controlled by the flight control and pre-pressure switch (22.2-11). If LO_2 tank pressure builds up this valve is opened allowing additional cold helium to enter tank lowering the pressure.	1) Failure to open and stay open when energized.	Degradation of subsystem performance. Failure to open would prevent cold helium from by-passing heat exchanger during conditions of LO_2 tank over-pressurization	A)B)C) None; not applicable This failure is considered significant only during D) and F) phases. No requirement for this function except during powered phases. D) None; over pressurization is prevented by LO_2 tank vent valves (22.2-19A+B). E) None; same as A) B) and C) phases. F) None; same as D) phase. G) None; same as A) B) and C) phases.	Same Same Same Same Same
			2) Failure to close when de-energized	POSSIBLE LOSS OF SUBSYSTEM This failure will permit cold helium to by-pass the heat exchanger at all times, reducing the LO_2 tank pressure below that desired.	A)B)C) None; not applicable. No requirement for this function except during powered phases. Therefore, this failure is significant only during D) and F) phases. D) POSSIBLE LOSS OF STAGE This failure could cause engine pump cavitation due to loss of minimum NPSH. E) None; not applicable. During this phase tank pressurization is controled by re-pressurization module, utilizing ambient helium (22.5).	POSSIBLE LOSS OF MISSION Reduced tank pressure could cause loss of thrust. FRT____sec. Same

Δ ITEMS MARKED THUS (#) DO NOT OPERATE IN FLIGHT

RELIABILITY FAILURE EFFECT ANALYSIS

OXIDIZER PRESSURIZATION SUBSYSTEM

A) COUNTDOWN/CHECKOUT
B) COUNTDOWN-AUTOMATIC SEQUENCE
C) FLIGHT-BOOST PHASE
D) FLIGHT-POWERED PHASE, 1ST
E) FLIGHT-COAST PHASE, 1ST
F) FLIGHT-POWERED PHASE, 2ND
G) FLIGHT-COAST PHASE, 2ND

Δ	ITEM	FUNCTION	FAILURE TYPE	FAILURE EFFECT ON SUBSYSTEM PERFORMANCE	FAILURE EFFECT ON S-IVB STAGE	FAILURE EFFECT ON SATURN VEHICLE
	By-pass Control Valve V-IV B-22.2-15 (Continued)		2) Failure to close when de-energized. (Continued)		(Continued) F) POSSIBLE LOSS OF STAGE Same as D) phase, providing loss did not occur at that time. G) None; Same as A) B) and C) phases.	(Continued) POSSIBLE LOSS OF MISSION Same as D) phase FRT____sec. Same
#	Pressure Switch, LO_2 Tank minimum lift-off V-IV B-22.2-16	Pressure switch picks up when LO_2 tank pressure reaches minimum lift-off requirements. Signals countdown sequencer when minimum pressure is reached or if pressure should decay below minimum required for lift-off. Picks up at 31 ± 1 psia. Drops out at 29 ± psia.	1) Failure to actuate (Does not indicate minimum lift-off pressure has been obtained. 2) Premature deactuation (False indication that minimum lift-off pressure has been lost.)	None: Loss of monitoring capability only. This failure would give a false indication that LO_2 tank pressure is not adequate for lift-off.	A) Delay in launching or scrub. B) This failure holds automatic countdown sequence. Acquisition of signal is required for continuation of countdown sequence. C)D)E)F)G) None: not applicable, this function is not used after lift-off.	Same Same Same
			3) Failure to deactuate. (Second failure of subsystem.)	LOSS OF SUBSYSTEM SECOND FAILURE ANALYSIS This failure would not have a chance to occur unless a second failure of subsystem caused a loss of tank pressurization. This failure would give the false indication that pressure is adaquate for lift-off.		
			4) Premature actuation falsely indicates that minimum lift-off pressure has been reached.	None; No apparent effect. Normal pressurization functions would continue.	A)B) None; no significant effect. C)D)E)F)G) None; Not applicable, this function is not used after lift-off.	Same Same
	Vent Valve, Pneumatic V-IV B-22.2-17A	RELIEF FUNCTION: Maximum pressure 38 psia, minimum reset pressure 35 psia. Relieves excess pressure build-up in LO_2 tank. (Continued)	1) Fails to open on command (Vent function).	None; Redundancy provided. Relief valve function would prevent excess pressure build up during fill. (Continued)	A) None; redundancy provided. B)C)D)F)G) None; not applicable. Vent function not re- (Continued)	Same Same

Δ ITEMS MARKED THUS (Δ) DO NOT OPERATE IN FLIGHT

RELIABILITY FAILURE EFFECT ANALYSIS

OXIDIZER PRESSURIZATION SUBSYSTEM

A) COUNTDOWN/CHECKOUT
B) COUNTDOWN-AUTOMATIC SEQUENCE
C) FLIGHT-BOOST PHASE
D) FLIGHT-POWERED PHASE, 1ST
E) FLIGHT-COAST PHASE, 1ST
F) FLIGHT-POWERED PHASE, 2ND
G) FLIGHT-COAST PHASE, 2ND

Δ	ITEM	FUNCTION	FAILURE TYPE	FAILURE EFFECT ON SUBSYSTEM PERFORMANCE	FAILURE EFFECT ON S-IVB STAGE	FAILURE EFFECT ON SATURN VEHICLE
	Vent Valve, Pneumatic V-IV B-22.2-17A (Continued)	(Continued) VENT FUNCTION: Vent valve is opened pneumatically during tank fill and is closed prior to pre-pressurization. The vent portion remains inoperable thereafter.	1) Fails to open on command (Vent function). (Continued)	(Continued) Relief valve (22.-17B allows additional (back-up) relief.	(Continued) quired after fill operation is complete.	
			2) Fails to close on command (Vent function).	PROBABLE LOSS OF SUBSYSTEM This failure would prevent pressurization of LO_2 tank following fill.	A) Delay in launching or scrub. B)C)D)E)F)G) None; **not** applicable. Vent function not required after fill completion.	Same Same
			3) Fails to open . (Does not relieve)	None; **redundancy** is provided by relief valve. (22.2-17B)	A)B)C)D)E)F)G) None; **redundancy** provided.	Same
			4) Fails to close. (Relief function) 5) Premature opening. (Relieves at a significantly lower pressure than desired.)	LOSS OF SUBSYSTEM LO_2 tank pressure would be lower than required.	A) Delay in launch or scrub. **B) This failure would cause an automatic hold of the countdown sequence. LO_2 tank pressure would be less than minimum required for lift-off.** **C) None; this failure is considered significant during D) and F) phases only.** D) LOSS OF STAGE Loss of tank pressurization will cause engine pump to cavitate due to loss of minimum **NPSH.** E) **None; not** applicable Same as C) **phase .**	Same **Same** Same **Same** Same LOSS OF MISSION Loss of pressure will cause loss of thrust. FRT_____sec. Same

Δ ITEMS MARKED THUS (Δ) DO NOT OPERATE IN FLIGHT

RELIABILITY FAILURE EFFECT ANALYSIS

OXIDIZER PRESSURIZATION SUBSYSTEM

A) COUNTDOWN/CHECKOUT
B) COUNTDOWN - AUTOMATIC SEQUENCE
C) FLIGHT - BOOST PHASE
D) FLIGHT - POWERED PHASE, 1ST
E) FLIGHT - COAST PHASE, 1ST
F) FLIGHT - POWERED PHASE, 2ND
G) FLIGHT - COAST PHASE, 2ND

Δ	ITEM	FUNCTION	FAILURE TYPE	FAILURE EFFECT ON SUBSYSTEM PERFORMANCE	FAILURE EFFECT ON S-IVB STAGE	FAILURE EFFECT ON SATURN VEHICLE
	Vent Valve, Pneumatic V-IV B-22.2-17A		(continued) 5) Premature opening (Relieves at a singificantly lower pressure than desired.)		(COntinued) F) LOSS OF STAGE Same as D) phase, providing failure did not occur during that phase. G) None; not applicable. Same as C) phase.	(Continued) LOSS OF MISSION Same as D) phase FRT_____sec. Same
	Relief Valve V-IV B-22.2-17B	Relieves excess pressure build-up in LO_2 tank Provides back up relief for vent-relief valve. (22.2-17A) Maximum cracking pressure 39 psia. Minimum reset pressure 37 psia.	1) Fails to open. (Does not relieve)	None; Redundancy provided by vent-relief valve. (22.2-17A)	A), B), C), D), E), F), G), None; redundancy provided.	Same
			2) Fails to close.	LOSS OF SUBSYSTEM LO_2 tank pressure would become lower than required .	A) Delay in launch or scrub.	Same
			3) Premature opening (Relieves at a significantly lower pressure than desired)		B) This failure will hold automatic countdown sequence LO_2 tank pressure would be lower than minimum required for lift-off. C)None: not applicable. This failure is considered significant during D) and F) phases only. D) LOSS OF STAGE Loss of tank pressurization will cause engine cavitation due to loss of NPSH. E) None; Same as C) phase . F) LOSS OF STAGE Same as D) phase, providing loss did not occur during that phase. G) None; Same as C) phase .	Same Same LOSS OF MISSION Loss of pressurization will result in loss of thrust FRT_____sec. Same LOSS OF MISSION Same as D) phase FRT_____sec. Same

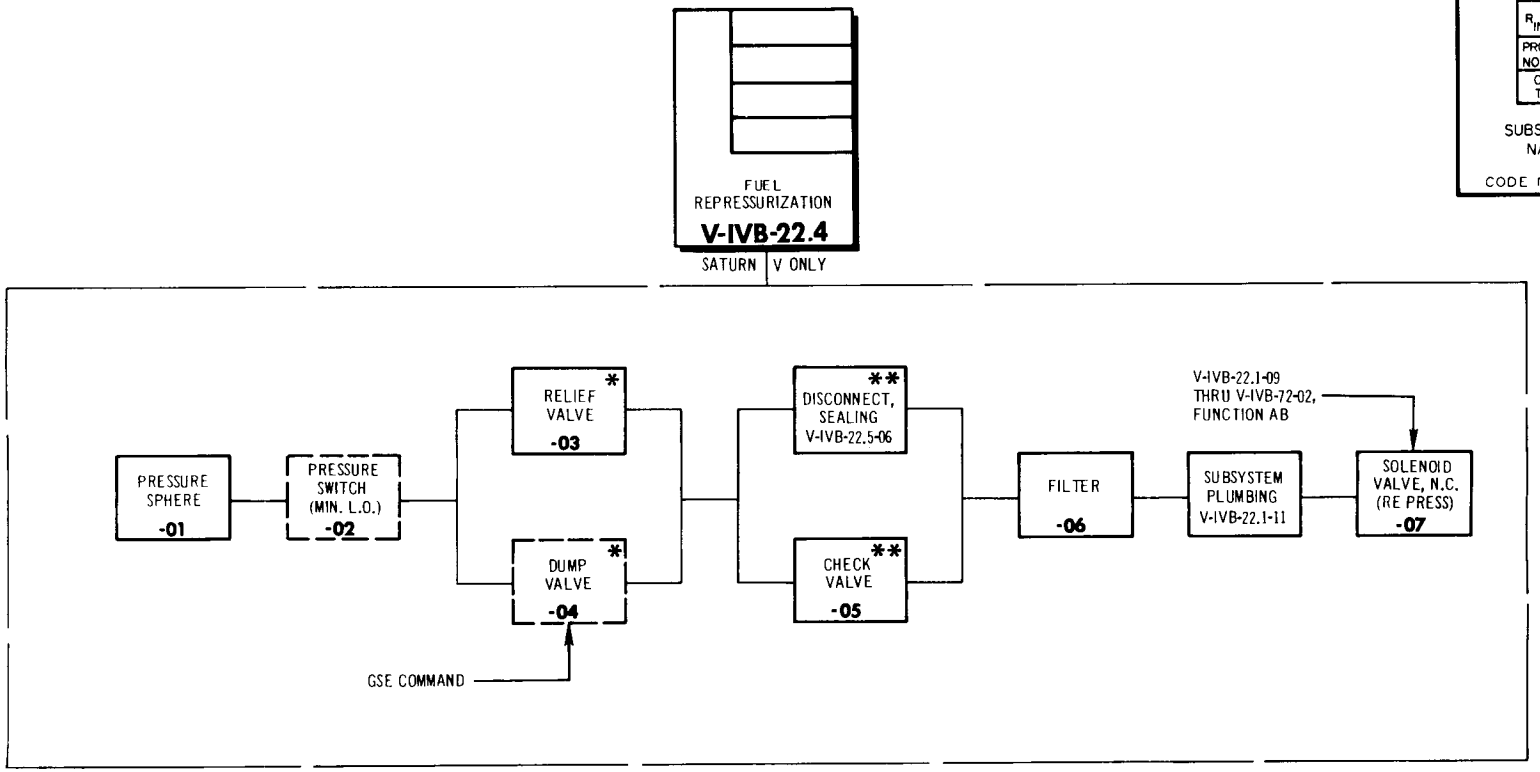

NOTE: REDUNDANT
* FOR FAILURE TO OPEN ONLY
** FOR FAILURE TO CLOSE ONLY

Δ ITEMS MARKED THUS (Δ) DO NOT OPERATE IN FLIGHT

RELIABILITY FAILURE EFFECT ANALYSIS

FUEL REPRESSURIZATION SUBSYSTEM

A) COUNTDOWN/CHECKOUT
B) COUNTDOWN - AUTOMATIC SEQUENCE
C) FLIGHT - BOOST PHASE
D) FLIGHT - POWERED PHASE, 1ST
E) FLIGHT - COAST PHASE, 1ST
F) FLIGHT - POWERED PHASE, 2ND
G) FLIGHT - COAST PHASE, 2ND

Δ	ITEM	FUNCTION	FAILURE TYPE	FAILURE EFFECT ON SUBSYSTEM PERFORMANCE	FAILURE EFFECT ON S-IVB STAGE	FAILURE EFFECT ON SATURN VEHICLE
	Pressure Spheres (5) V-IVB-22.4-01	Serves as storage for 22.5 cubic feet of ambient helium. This pressure supply source is used to re-pressurize the fuel tank prior to the second powered phase and serves as a pressure source for use by the pneumatic control subsystem. Spheres are serviced to 3100 ±100 psia from a ground source prior to lift-off.	External leakage at connection.	POSSIBLE LOSS OF SUBSYSTEM Continuous loss of pressurizing gas may deplete supply.	A) Delay in launching or scrub. B) Possible automatic hold of countdown sequencer. A decrease of sphere pressure below minimum lift-off requirements will hold sequencer; however, ground supply maintains pressure until lift-off. C),D),E) None; loss of supply pressure is not significant during these phases; however, re-pressurization occurs in E) phase (20.1 sec prior to engine restart) and would be significant in F) phase. F) POSSIBLE LOSS OF STAGE A significant loss of pressure supply would cause engine pump cavitation due to loss of minimum NPSH. G) None; fuel tank pressurization is not required during this phase.	Same Same Same POSSIBLE LOSS OF MISSION Loss of fuel tank pressure will cause a loss of thrust. FRT _____ sec Same
*	Pressure Switch (Minimum Lift-off) V-IVB-22.4-02	Monitors ambient helium storage sphere pressure. Holds automatic countdown sequencer if pressure falls below minimum lift-off desired pressure. Picks-up - 2940 ±25 psia Drops-out - 2840 ±25 psia	1) Failure to actuate.	None; loss of monitoring capability only. This failure will give a false indication that supply pressure is not adequate for lift-off.	A) Delay in launching or scrub. B) This failure will hold automatic countdown sequence. Acquisition of signal is required for continuation of countdown. C),D),E),F),G) None; this switch is not functional after lift-off.	Same Same Same
			2) Failure to deactuate (second failure of subsystem)	This failure will not have a chance to occur unless a second failure of subsystem has caused a loss of ambient helium supply pressure. This failure will give a false indication that supply pressure is adequate for lift-off.		

Δ ITEMS MARKED THUS (##) DO NOT OPERATE IN FLIGHT

RELIABILITY FAILURE EFFECT ANALYSIS

A) COUNTDOWN/CHECKOUT
B) COUNTDOWN-AUTOMATIC SEQUENCE
C) FLIGHT-BOOST PHASE
D) FLIGHT-POWERED PHASE, 1ST
E) FLIGHT-COAST PHASE, 1ST
F) FLIGHT-POWERED PHASE, 2ND
G) FLIGHT-COAST PHASE, 2ND

FUEL REPRESSURIZATION SUBSYSTEM

Δ	ITEM	FUNCTION	FAILURE TYPE	FAILURE EFFECT ON SUBSYSTEM PERFORMANCE	FAILURE EFFECT ON S-IVB STAGE	FAILURE EFFECT ON SATURN VEHICLE
	Relief Valve V-IVB-22.4-03	Exhausts overboard excess ambient helium storage pressure. Maximum cracking pressure - 3500 psia Minimum re-seat pressure - 3200 psia	1) Failure to open (does not relieve)	None; loss of automatic relief function only; however, redundancy is provided by GSE controlled dump valve (22.4-04). This failure first requires that ground supply system fails to limit high pressure.	A) None; visual monitoring enables redundancy to be provided by ground controlled dump valve (22.4-04).	Same
					B) This failure does not hold automatic countdown sequence; however, supply pressure is visually monitored which enables decision to be made.	Same
					C),D) None; gas volume does not increase significantly during this phase.	Same
					E),F),G) None; pressure is reduced below relief function through consumption during these phases.	Same
			2) Failure to close.	LOSS OF SUBSYSTEM Ambient helium supply would be lost overboard.	A) Delay in launching or scrub	Same
					B) This failure will hold automatic countdown sequence due to a decrease in pressure below minimum required for lift-off.	Same
					C),D),E) None; no effect during these phases as fuel re-pressurization is not required; however, failure during these phases will be significant during F) phase.	Same
					F) LOSS OF STAGE Loss of ambient helium prior to tank re-pressurization (restart minus 20.1 sec) would cause engine pump cavitation due to loss of minimum NPSH.	LOSS OF MISSION Loss of fuel tank re-pressurization will cause a loss of thrust. FRT _____ sec
					G) None; fuel tank pressurization is not required during this phase.	Same

Δ ITEMS MARKED THUS (Δ) DO NOT OPERATE IN FLIGHT

RELIABILITY FAILURE EFFECT ANALYSIS

FUEL REPRESSURIZATION SUBSYSTEM

A) COUNTDOWN/CHECKOUT
B) COUNTDOWN-AUTOMATIC SEQUENCE
C) FLIGHT-BOOST PHASE
D) FLIGHT-POWERED PHASE, 1ST
E) FLIGHT-COAST PHASE, 1ST
F) FLIGHT-POWERED PHASE, 2ND
G) FLIGHT-COAST PHASE, 2ND

Δ	ITEM	FUNCTION	FAILURE TYPE	FAILURE EFFECT ON SUBSYSTEM PERFORMANCE	FAILURE EFFECT ON S-IVB STAGE	FAILURE EFFECT ON SATURN VEHICLE
	Relief Valve V-IVB-22.4-03 (continued)		3) Premature opening (relieves at a lower pressure than desired)	POSSIBLE LOSS OF SUBSYSTEM Subsystem supply pressure may be less than required.	A) Delay in launching or scrub. B) A significant loss of pressure, below minimum required for lift-off will hold automatic countdown sequence. C),D),E) None; loss of pressure is not significant during these phases; however re-pressurization occurs in E) phase and would be significant in F) phase. F) POSSIBLE LOSS OF STAGE A large drop in pressure would cause engine pump cavitation due to loss of minimum NPSH. G) None; fuel tank pressurization is not required during this phase.	Same Same Same POSSIBLE LOSS OF MISSION Loss of fuel tank pressure will cause a loss of thrust. FRT ___ sec Same
*	Dump Valve, Solenoid V-IVB-22.4-04	Opened by GSE ground command to dump ambient helium after checkouts, purges, or launch cancellations.	1) Failure to close or remain closed.	PROBABLE LOSS OF SUBSYSTEM This failure could deplete ambient helium supply, thus preventing re-pressurization of fuel tank.	A) Delay in launching or scrub B) This failure will hold automatic countdown sequence if supply pressure is reduced below minimum lift-off requirements. C),D),E) None; loss of pressure supply is not significant during these phases; however, loss prior to tank re-pressurization in E) phase would be significant in F) phase. (continued)	Same Same Same

Δ ITEMS MARKED THUS (*) DO NOT OPERATE IN FLIGHT

RELIABILITY FAILURE EFFECT ANALYSIS

A) COUNTDOWN/CHECKOUT
B) COUNTDOWN - AUTOMATIC SEQUENCE
C) FLIGHT - BOOST PHASE
D) FLIGHT - POWERED PHASE, 1ST
E) FLIGHT - COAST PHASE, 1ST
F) FLIGHT - POWERED PHASE, 2ND
G) FLIGHT - COAST PHASE, 2ND

FUEL REPRESSURIZATION SUBSYSTEM

Δ	ITEM	FUNCTION	FAILURE TYPE	FAILURE EFFECT ON SUBSYSTEM PERFORMANCE	FAILURE EFFECT ON S-IVB STAGE	FAILURE EFFECT ON SATURN VEHICLE
*	Dump Valve, Solenoid V-IVB-22.4-04 (continued)		1) Failure to close or remain closed. (continued)		(continued) F) PROBABLE LOSS OF STAGE A significant loss of pressure supply would cause engine pump cavitation due to loss of minimum NPSH. G) None; fuel tank pressurization is not required during this phase.	PROBABLE LOSS OF MISSION Loss of fuel tank pressure will cause a loss of thrust. FRT _____ sec Same
			2) Failure to open.	None; no effect on subsystem performance. Ambient helium cannot be drained from the system utilizing this valve; however, supply may be dumped through fuel tank vent system.	A),B) None; no requirement to operate this valve during countdown unless another failure occurs. C),D),E),F),G) None; this valve is not operable after lift-off.	Same Same
	Check Valve V-IVB-22.4-05	Opens to permit flow of helium gas from ground source to storage spheres (22.4-01). Closes to prevent reverse flow upon completion of fill operation.	1) Failure to close.	None; redundancy is provided by disconnect (V-IVB-22.5-06) thus preventing loss of pressure supply overboard	A),B) None; system remains connected to ground source until lift-off. C),D),E),F),G) None; redundancy is provided.	Same Same
			2) Failure to open.	LOSS OF SUBSYSTEM If failure occurs prior to filling of spheres, this failure will prevent flow to supply spheres.	A) Delay in launching or scrub. B) This failure will hold automatic countdown sequence. Lack of signal from minimum lift-off pressure switch will hold sequencer. C),D),E),F),G) None; this check valve is not required to open after lift-off.	Same Same Same

Δ ITEMS MARKED THUS (Δ) DO NOT OPERATE IN FLIGHT

RELIABILITY FAILURE EFFECT ANALYSIS

FUEL REPRESSURIZATION SUBSYSTEM

A) COUNTDOWN/CHECKOUT
B) COUNTDOWN-AUTOMATIC SEQUENCE
C) FLIGHT-BOOST PHASE
D) FLIGHT-POWERED PHASE, 1ST
E) FLIGHT-COAST PHASE, 1ST
F) FLIGHT-POWERED PHASE, 2ND
G) FLIGHT-COAST PHASE, 2ND

Δ	ITEM	FUNCTION	FAILURE TYPE	FAILURE EFFECT ON SUBSYSTEM PERFORMANCE	FAILURE EFFECT ON S-IVB STAGE	FAILURE EFFECT ON SATURN VEHICLE
	Filter V-IVB-22.4-06	Filters ambient helium prior to entering re-pressurization control valve (22.4-07).	1) Implosion or deformation of filter element.	POSSIBLE LOSS OF SUBSYSTEM Filter particles may damage or impair the operation of downstream components.	A),B),C),D),E) None; the resultant effect is considered significant only in F) phase. F) POSSIBLE LOSS OF STAGE Impaired operation of downstream components could cause loss of re-pressurization, resulting in engine pump cavitation due to loss of minimum NPSH. G) None; same as A) phase.	Same POSSIBLE LOSS OF MISSION Loss of re-pressurization would prevent engine restart. FRT _____ sec Same
			2) Clogging of filter (filtered particles impairing flow of ambient helium).	POSSIBLE LOSS OF SUBSYSTEM Significant reduction in flow of ambient helium could prevent re-pressurization of fuel tank.	A),B),C),D),E) None; the resultant effect of this failure is considered significant only in F) phase. F) POSSIBLE LOSS OF STAGE Loss of re-pressurization function could cause engine pump cavitation due to loss of minimum NPSH. G) None; same as A) phase.	Same POSSIBLE LOSS OF MISSION Loss of re-pressurization could prevent engine restart. FRT _____ sec Same
	Solenoid Valve, N.C. (Re-pressurization) V-IVB-22.4-07)	This valve opens on sequencer command (20.1 sec prior to engine restart), allows helium to flow from supply spheres pressurizing fuel tank. Valve closes on command from pressure switch (22.1-09) when tank reaches desired pressure for second powered phase.	1) Failure to open.	LOSS OF SUBSYSTEM Fuel tank would not be pressurized to full requirements prior to engine restart.	A),B),C),D) None; this valve is not required to operate during these phases. E) None; failure effect would not be significant during this phase; however, this failure occuring during this phase will have a significant effect during F) phase. F) LOSS OF STAGE Loss of re-pressurization function will cause engine pump cavitation due to loss of minimum NPSH. G) None; same as A) phase.	Same Same LOSS OF MISSION Loss of fuel tank pressure will cause a thrust loss. FRT _____ sec Same

Δ ITEMS MARKED THUS (Δ) DO NOT OPERATE IN FLIGHT

RELIABILITY FAILURE EFFECT ANALYSIS

FUEL REPRESSURIZATION SUBSYSTEM

A) COUNTDOWN/CHECKOUT
B) COUNTDOWN - AUTOMATIC SEQUENCE
C) FLIGHT - BOOST PHASE
D) FLIGHT - POWERED PHASE, 1ST
E) FLIGHT - COAST PHASE, 1ST
F) FLIGHT - POWERED PHASE, 2ND
G) FLIGHT - COAST PHASE, 2ND

Δ	ITEM	FUNCTION	FAILURE TYPE	FAILURE EFFECT ON SUBSYSTEM PERFORMANCE	FAILURE EFFECT ON S-IVB STAGE	FAILURE EFFECT ON SATURN VEHICLE
	Solenoid Valve, N.C. (Re-pressurization) V-IVB-22.4-07 (continued)		2) Failure to close.	None; ambient helium would continue to flow to fuel tank. Pressure would stabilize at the vent relief setting.	A),B),C),D) None; this valve is not functional during these phases. E),F) None; excess tank pressure is not significant and will not degrade engine performance. G) None; same as A) phase.	Same Same Same
			3) Premature opening (out of sequence)	POSSIBLE LOSS OF SUBSYSTEM Premature opening of this valve could cause early depletion of helium supply pressure.	A),B),C),D) None; this valve is not required to operate during these phases. E) None; failure effect would not be significant during this phase; however, depletion of helium pressure supply prior to tank re-pressurization will be significant in F) phase. F) POSSIBLE LOSS OF STAGE Loss of fuel tank pressure would cause engine pump cavitation due to loss of minimum NPSH. G) None; same as A) phase.	Same POSSIBLE LOSS OF MISSION Loss of tank pressure will cause a loss of thrust. FRT _____ sec Same

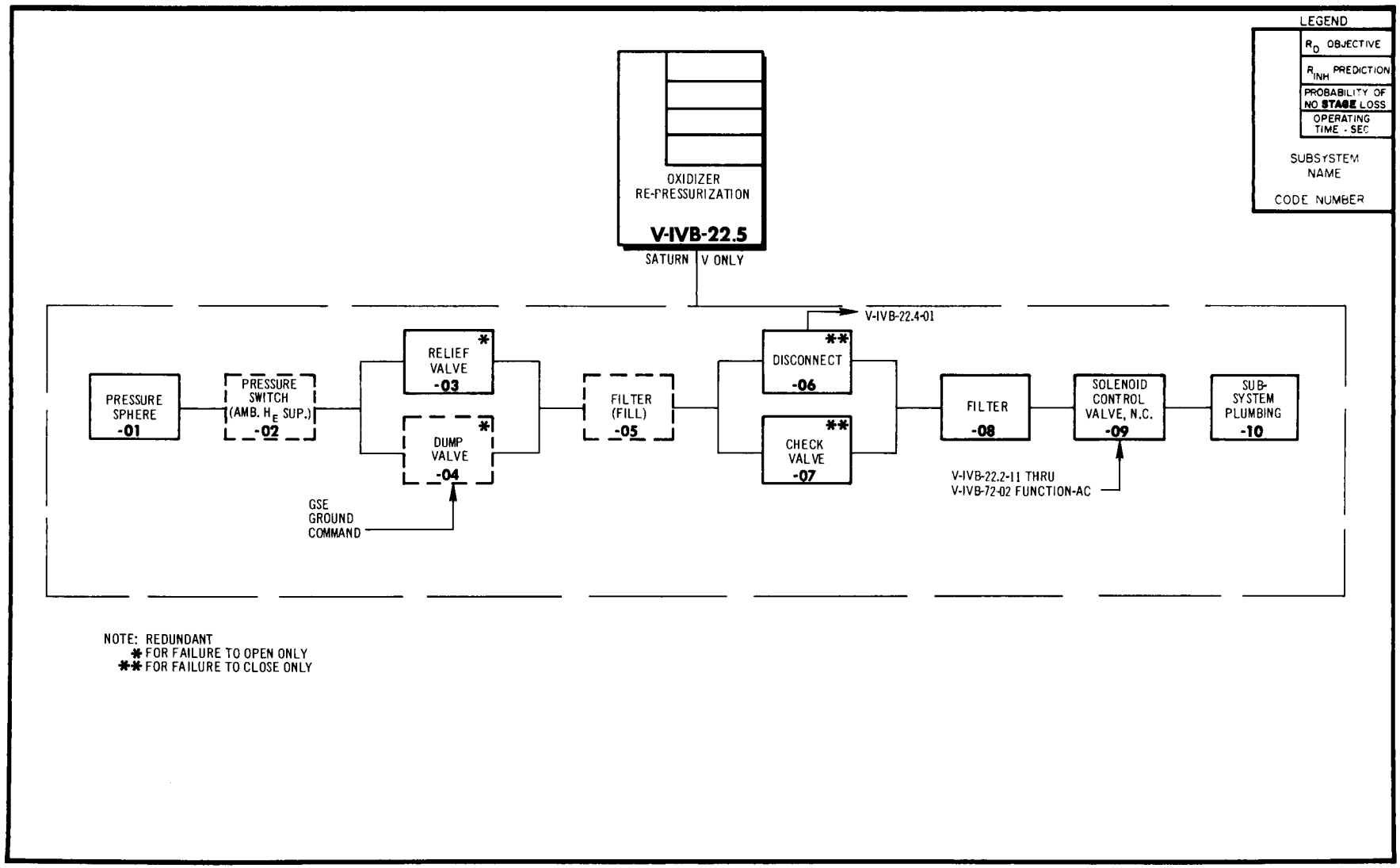
LEGEND
R_D OBJECTIVE
R_{INH} PREDICTION
PROBABILITY OF NO STAGE LOSS
OPERATING TIME - SEC
SUBSYSTEM NAME
CODE NUMBER
OXIDIZER RE-PRESSURIZATION
V-IVB-22.5
SATURN V ONLY
V-IVB-22.4-01
PRESSURE SPHERE -01
PRESSURE SWITCH (AMB. H_E SUP.) -02
RELIEF VALVE -03 *
DUMP VALVE -04 *
GSE GROUND COMMAND
FILTER (FILL) -05
DISCONNECT -06 **
CHECK VALVE -07 **
FILTER -08
SOLENOID CONTROL VALVE, N.C. -09
V-IVB-22.2-11 THRU V-IVB-72-02 FUNCTION-AC
SUB-SYSTEM PLUMBING -10
NOTE: REDUNDANT
* FOR FAILURE TO OPEN ONLY
** FOR FAILURE TO CLOSE ONLY

Δ ITEMS MARKED THUS (Δ) DO NOT OPERATE IN FLIGHT

RELIABILITY FAILURE EFFECT ANALYSIS

OXIDIZER RE-PRESSURIZATION SUBSYSTEM

A) COUNTDOWN/CHECKOUT
B) COUNTDOWN-AUTOMATIC SEQUENCE
C) FLIGHT-BOOST PHASE
D) FLIGHT-POWERED PHASE, 1ST
E) FLIGHT-COAST PHASE, 1ST
F) FLIGHT-POWERED PHASE, 2ND
G) FLIGHT-COAST PHASE, 2ND

Δ	ITEM	FUNCTION	FAILURE TYPE	FAILURE EFFECT ON SUBSYSTEM PERFORMANCE	FAILURE EFFECT ON S-IVB STAGE	FAILURE EFFECT ON SATURN VEHICLE
	Pressure Sphere V-IVB-22.5-01	3100 ± 100 psia, 3.5 cubic feet. Provides storage for ambient helium under high pressure. Ambient helium is used to re-pressurize LO_2 tank 20 seconds prior to second engine start.	1) External leak at connection.	POSSIBLE LOSS OF SUBSYSTEM Continuous loss of pressurizing gas may deplete supply.	A) Delay in launching or scrub.	Same
					B) Possible hold of automatic countdown sequence. A decrease in pressure below 2840 psia will hold timer. However, ground supply maintains supply pressure until lift off. Leak may be detected by leak detection system.	Same
					C),D),E) None; not applicable The resultant failure is significant during "F" phase only.	Same
					F) POSSIBLE LOSS OF STAGE Loss of ambient helium pressure supply during prior phases may prevent re-pressurization of LO_2 tank, thus causing engine pump cavitation due to loss of minimum NPSH.	POSSIBLE LOSS OF MISSION Loss of re-pressurization capability will prevent engine re-start. FRT _____ sec.
					G) None; same as C) phase.	Same
			2) Burst (Structural failure; sphere fails to withstand normal internal pressure.)	PROBABLE LOSS OF SUBSYSTEM Supply of ambient helium pressurant would be lost.	A) Scrub.	Same
					B) This failure would hold automatic countdown sequence. The loss of pressure will cause loss of the minimum pressure for lift-off signal.	Same
					C),D),E) None; not applicable, the resultant failure effect is significant during F) phase only.	Same
					F) PROBABLE LOSS OF STAGE Loss of ambient helium supply during prior phase would prevent re-pressurization of the LO_2 tank, causing engine pump cavitation due to loss of minimum NPSH.	PROBABLE LOSS OF MISSION Loss of LO_2 tank re-pressurization capability will prevent engine re-start. FRT _____ sec.

Δ ITEMS MARKED THUS (*) DO NOT OPERATE IN FLIGHT

RELIABILITY FAILURE EFFECT ANALYSIS

OXIDIZER RE-PRESSURIZATION SUBSYSTEM

A) COUNTDOWN/CHECKOUT
B) COUNTDOWN-AUTOMATIC SEQUENCE
C) FLIGHT-BOOST PHASE
D) FLIGHT-POWERED PHASE, 1ST
E) FLIGHT-COAST PHASE, 1ST
F) FLIGHT-POWERED PHASE, 2ND
G) FLIGHT-COAST PHASE, 2ND

Δ	ITEM	FUNCTION	FAILURE TYPE	FAILURE EFFECT ON SUBSYSTEM PERFORMANCE	FAILURE EFFECT ON S-IVB STAGE	FAILURE EFFECT ON SATURN VEHICLE
	Pressure Sphere V-IVB-22.5-01 (continued)		2) Burst (Structural failure; sphere fails to withstand normal internal pressure.) (continued)		(continued) G) None; same as C) phase.	Same
*	Pressure Switch, N.O. (Ambient Helium Supply) V-IVB-22.5-02	Picks up at 2940 ± 25 psia, drops out at 2840 ± 25 psia. Monitors ambient helium low limit sphere pressure. If pressure drops below minimum required for lift-off "a Go-No-Go" command is sent to the automatic sequencer.	1) Failure to actuate. 2) Premature deactuation.	None; loss of monitoring capability only. These failures will give a false indication that ambient helium supply is not adequate for flight.	A) Delay in launch of scrub. B) These failures will hold automatic countdown sequence. Acquisition of a signal is required for continuation of countdown. C),D),E),F),G) None; this function not used after lift-off.	Same Same Same
			3) Premature actuation.	None; no apparent effect. Normal fill operation would continue. This failure would indicate minimum lift-off pressure has been prematurely reached; however, a second failure that prevented proper fill of ambient helium supply would not be detected.	A),B) None; no significant effect (single failure only). C),D),E),F),G) None; this function not used after lift-off.	Same Same
			4) Failure to deactuate. (second failure of subsystem)	LOSS OF SUBSYSTEM (Caused by second failure). Failure to deactuate could not occur unless a second failure had caused a loss of ambient helium supply pressure. Failure to deactuate would give the false indication that supply pressure is adequate for lift-off.		

Δ ITEMS MARKED THUS (Δ) DO NOT OPERATE IN FLIGHT

RELIABILITY FAILURE EFFECT ANALYSIS

A) COUNTDOWN/CHECKOUT
B) COUNTDOWN-AUTOMATIC SEQUENCE
C) FLIGHT-BOOST PHASE
D) FLIGHT-POWERED PHASE, 1ST
E) FLIGHT-COAST PHASE, 1ST
F) FLIGHT-POWERED PHASE, 2ND
G) FLIGHT-COAST PHASE, 2ND

OXIDIZER RE-PRESSURIZATION SUBSYSTEM

Δ	ITEM	FUNCTION	FAILURE TYPE	FAILURE EFFECT ON SUBSYSTEM PERFORMANCE	FAILURE EFFECT ON S-IVB STAGE	FAILURE EFFECT ON SATURN VEHICLE
	Relief Valve V-IVB-22.5-03	Cracking pressure 3500 psia. Re-seat pressure 3200 psia. Exhausts overboard ambient helium excess pressure.	1) Failure to open. (Does not relieve)	None; loss of automatic relief of pressure; however, redundancy is provided for ground operation, by dump valve (22.5-04). This failure first requires that ground supply system fail to limit high pressure.	A) None; visual monitoring enables redundancy to be provided by ground controlled dump valve (22.5-04).	Same
					B) This failure does not hold automatic countdown timer; however, supply pressure is visually monitored to enable decisions to be made.	Same
					C),D) None; gas volume does not increase significantly during these phases.	Same
					E),F),G) None; pressure is reduced below relief function through consumption during phase E).	Same
			2) Failure to close.	PROBABLE LOSS OF SUBSYSTEM Pressurizing gas leaks overboard continuously.	A) Delay in launching or scrub.	Same
					B) This failure will hold automatic countdown sequence. A decrease in pressure below minimum lift-off requirement will hold timer.	Same
					C),D),E) None; not applicable Failure effect is significant during F) phase only, however, repressurization occurs during E) phase.	Same
					F) PROBABLE LOSS OF STAGE Continuous loss of ambient helium may prevent re-pressurization of LO_2 tank, thus causing engine pump cavitation due to loss of minimum NPSH.	PROBABLE LOSS OF MISSION Loss of re-pressurization function could prevent engine re-start. FRT _____ sec.
					G) None; same as C) phase.	Same

Δ ITEMS MARKED THUS (#) DO NOT OPERATE IN FLIGHT

RELIABILITY FAILURE EFFECT ANALYSIS

OXIDIZER RE-PRESSURIZATION SUBSYSTEM

A) COUNTDOWN/CHECKOUT
B) COUNTDOWN-AUTOMATIC SEQUENCE
C) FLIGHT-BOOST PHASE
D) FLIGHT-POWERED PHASE, 1ST
E) FLIGHT-COAST PHASE, 1ST
F) FLIGHT-POWERED PHASE, 2ND
G) FLIGHT-COAST PHASE, 2ND

Δ ITEM	FUNCTION	FAILURE TYPE	FAILURE EFFECT ON SUBSYSTEM PERFORMANCE	FAILURE EFFECT ON S-IVB STAGE	FAILURE EFFECT ON SATURN VEHICLE
Relief Valve V-IVB-22.5-03 (continued)		3) Premature opening (relieves at a lower pressure than desired).	POSSIBLE LOSS OF SUBSYSTEM System pressure may be less than desired.	A) Delay in launching or scrub. B) Possible hold of automatic sequence. A pressure drop below minimum required for lift-off will stop automatic timer. C),D),E) None; not applicable, failure effect is significant during F) phase only. F) POSSIBLE LOSS OF STAGE Loss of ambient helium supply would prevent re-pressurization of LO_2 tank, thus causing engine pump cavitation due to loss of minimum NPSH. G) None; same as C) phase.	Same Same Same POSSIBLE LOSS OF MISSION Loss of re-pressurization function could prevent engine re-start. FRT ____ sec. Same
Dump Valve, Solenoid V-IVB-22.5-04	Activates open to dump ambient helium after checkouts, purges, and launch cancellations. Controlled by ground (GSE) command.	1) Failure to close. 2) Failure to remain fully closed.	POSSIBLE LOSS OF SUBSYSTEM These failures could deplete supply of ambient helium pressurant, thus preventing re-pressurization of LO_2 tank.	A) Delay in launching or scrub. B) Possible hold of automatic countdown sequence. A loss of pressure below minimum required for lift-off wil stop timer. C),D),E) None; not applicable Failure effect is significant during F) phase only. F) POSSIBLE LOSS OF STAGE Loss of ambient helium supply would prevent re-pressurization of LO_2 tank, thus causing engine pump cavitation due to loss of NPSH. G) None; same as C) phase.	Same Same Same POSSIBLE LOSS OF MISSION Loss of re-pressurization function would prevent engine re-start. FRT ____ sec. Same

Δ ITEMS MARKED THUS (Δ) DO NOT OPERATE IN FLIGHT

RELIABILITY FAILURE EFFECT ANALYSIS

A) COUNTDOWN/CHECKOUT
B) COUNTDOWN-AUTOMATIC SEQUENCE
C) FLIGHT-BOOST PHASE
D) FLIGHT-POWERED PHASE, 1ST
E) FLIGHT-COAST PHASE, 1ST
F) FLIGHT-POWERED PHASE, 2ND
G) FLIGHT-COAST PHASE, 2ND

OXIDIZER RE-PRESSURIZATION SUBSYSTEM

Δ	ITEM	FUNCTION	FAILURE TYPE	FAILURE EFFECT ON SUBSYSTEM PERFORMANCE	FAILURE EFFECT ON S-IVB STAGE	FAILURE EFFECT ON SATURN VEHICLE
	Dump Valve, Solenoid V-IVB-22.5-04 (continued)		3) Failure to open.	None; ambient helium cannot be drained from system utilizing this valve; however, ambient helium may be vented overboard through tank vent valve. (22.2-18A)	A),B) None; no requirement to operate during countdown unless another failure occurs (loss of redundancy for relief valve)(22.5-03). C),D),E),F),G) None; valve is not operable after lift-off.	Same Same
*	Filter (Fill) V-IVB-22.5-05	Filters ambient helium entering pressure sphere (22.5-01) from ground supply source.	1) Implosion or deformation of element. 2) Clogging of element.	PROBABLE LOSS OF SUBSYSTEM These failures could prevent proper filling of pressure sphere. Filter particles may enter down stream components thus damaging or affecting their operation. Vehicle may lift-off with failure undetected.	A) Delay in launch or scrub. B) Possible hold of automatic sequence. Failure may prevent acquisition of minimum pressure for lift-off signal, thus holding timer. C),D),E) None; not applicable Failure effect is significant during F) phase only. F) POSSIBLE LOSS OF STAGE Degradation of subsystem performance may prevent proper re-pressurization of LO_2 tank causing engine pump cavitation due to loss of minimum NPSH. G) None; same as C) phase.	Same Same Same POSSIBLE LOSS OF MISSION Loss of re-pressurization could prevent engine re-start. FRT _____ sec. Same
	Disconnect, Sealing V-IVB-22.5-06	Engages with ground half to permit ambient helium gas to flow from ground supply to fill vehicle storage spheres (22.5-01) and (22.4-01). Closes at disconnect of umbilical at first motion of vehicle.	1) Internal leakage. 2) Failure to close at disconnect.	None; redundancy provided. Downstream check valve (22.5-07) prevents loss of pressurant.	A) None; not applicable during fill operation. B) None; not applicable, connection to ground supply is maintained until lift-off. C),D),E),F),G) None; redundancy provided by closed check valve (22.5-07).	Same Same Same

Δ ITEMS MARKED THUS (Δ) DO NOT OPERATE IN FLIGHT

RELIABILITY FAILURE EFFECT ANALYSIS

OXIDIZER RE-PRESSURIZATION SUBSYSTEM

A) COUNTDOWN/CHECKOUT
B) COUNTDOWN - AUTOMATIC SEQUENCE
C) FLIGHT - BOOST PHASE
D) FLIGHT - POWERED PHASE, 1ST
E) FLIGHT - COAST PHASE, 1ST
F) FLIGHT - POWERED PHASE, 2ND
G) FLIGHT - COAST PHASE, 2ND

Δ	ITEM	FUNCTION	FAILURE TYPE	FAILURE EFFECT ON SUBSYSTEM PERFORMANCE	FAILURE EFFECT ON S-IVB STAGE	FAILURE EFFECT ON SATURN VEHICLE
	Check Valve V-IVB-22.5-07	Opens to permit fill of ambient helium storage sphere. Closes to prevent reverse flow in the event of ailure to close of disconnect (22.5-06).	1) Internal leakage.	None; redundancy provided upstream disconnect (22.5-06) prevents loss of pressurant.	A),B) None; not applicable. Ground supply remains connected until lift-off. C),D),E),F),G) None; redundancy provided by closed disconnect.	Same Same
			2) Failure to open. (Frozen shut)	LOSS OF SUBSYSTEM This failure prevents filling of ambient helium supply sphere. This failure will not adversely effect subsystem in flight.	A) Delay in launching or scrub. B) None; no requirement to open upon completion of fill operation. C),D),E),F),G) None; no requirement to open after lift-off.	Same Same Same
	Filter V-IVB-22.5-08	Filters ambient helium gas prior to entering re-pressurization control valve (22.5-09).	1) Implosion or deformation of filter element.	POSSIBLE LOSS OF SUBSYSTEM Filter particles may damage or impair the operation of downstream components.	A),B),C),D),E) None; the resultant effect of this failure is considered significant only in F) phase. F) POSSIBLE LOSS OF STAGE Due to possible loss of downstream components. Loss of downstream components could cause loss of re-pressurization, resulting in engine pump cavitation due to loss of minimum NPSH. G) None; same as A) phase.	Same POSSIBLE LOSS OF MISSION Loss of re-pressurization would prevent engine re-start. FRT _____ sec. Same
			2) Clogging of filter. (Filtered particles impairing flow of ambient helium.)	POSSIBLE LOSS OF SUBSYSTEM Significant reduction in flow of ambient helium could prevent re-pressurization of LO_2 tank.	A),B),C),D),E) None; the resultant effect of this failure is considered significant only in F) phase. F) POSSIBLE LOSS OF STAGE Loss of re-pressurization function could cause engine pump cavitation due to loss of minimum NPSH. G) None; same as A) phase.	POSSIBLE LOSS OF MISSION Loss of re-pressurization could prevent engine re-start. FRT _____ sec. Same

Δ ITEMS MARKED THUS (Δ) DO NOT OPERATE IN FLIGHT

RELIABILITY FAILURE EFFECT ANALYSIS

A) COUNTDOWN/CHECKOUT
B) COUNTDOWN-AUTOMATIC SEQUENCE
C) FLIGHT-BOOST PHASE
D) FLIGHT-POWERED PHASE, 1ST
E) FLIGHT-COAST PHASE, 1ST
F) FLIGHT-POWERED PHASE, 2ND
G) FLIGHT-COAST PHASE, 2ND

OXIDIZER RE-PRESSURIZATION SUBSYSTEM

Δ ITEM	FUNCTION	FAILURE TYPE	FAILURE EFFECT ON SUBSYSTEM PERFORMANCE	FAILURE EFFECT ON S-IVB STAGE	FAILURE EFFECT ON SATURN VEHICLE
Solenoid Control Valve, N.C. V-IVB-22.5-09	Commanded open and closed by pressure switch (22.5-10) to control flow of pressurized ambient helium to LO_2 tank during E) phase. Function is activated by sequencer command which occurs at engine re-start minus 20 seconds.	1) Failure to open.	LOSS OF SUBSYSTEM This failure would stop flow of ambient helium to LO_2 tank thus preventing re-pressurization.	A),B),C),D),E) None; this failure effect is considered significant only in F) phase. F) LOSS OF STAGE Loss of re-pressurization will cause engine pump cavitation due to loss of NPSH. G) None; same as A) phase.	Same LOSS OF MISSION Loss of re-pressurization would prevent engine re-start FRT _____ sec. Same
		2) Failure to close.	None; this failure would permit uncontrolled flow of ambient helium to the LO_2 tank. Ullage pressure in excess of vent relief valve would exhaust overboard. However, pressure decay prior to engine re-start would not be sufficient to prevent engine re-start.	A),B),C),D) None; subsystem function not required. E),F) None; failure effect would not degradate subsystem function. G) None; same as A) phase.	Same Same Same
Subsystem Plumbing V-IVB-22.5-10	Connect all components of subsystem from fill disconnect to pressure sphere and from sphere to LO_2 tank pressurizing inlet.	1) Leakage at connection.	POSSIBLE LOSS OF SUBSYSTEM Continuous loss of pressurant may prevent proper fill of storage sphere or allow depletion of ambient helium supply prior to mission completion.	A) Delay in launching or scrub. B) This failure effect could hold automatic sequence if detected by leak detection subsystem or if leak prevented system from reaching minimum pressure required for lift-off. C),D),E) None; this failure effect is considered significant only in F) phase. F) POSSIBLE LOSS OF STAGE Loss of re-pressurization function could cause engine pump cavitation due to loss of NPSH. G) None; same as C) phase.	Same Same Same POSSIBLE LOSS OF MISSION Loss of re-pressurization could prevent engine re-start. FRT _____ sec. Same

Δ ITEMS MARKED THUS (Δ) DO NOT OPERATE IN FLIGHT

RELIABILITY FAILURE EFFECT ANALYSIS

OXIDIZER RE-PRESSURIZATION SUBSYSTEM

A) COUNTDOWN/CHECKOUT
B) COUNTDOWN-AUTOMATIC SEQUENCE
C) FLIGHT-BOOST PHASE
D) FLIGHT-POWERED PHASE, 1ST
E) FLIGHT-COAST PHASE, 1ST
F) FLIGHT-POWERED PHASE, 2ND
G) FLIGHT-COAST PHASE, 2ND

Δ	ITEM	FUNCTION	FAILURE TYPE	FAILURE EFFECT ON SUBSYSTEM PERFORMANCE	FAILURE EFFECT ON S-IVB STAGE	FAILURE EFFECT ON SATURN VEHICLE
	Subsystem Plumbing V-IVB-22.5-10 (continued)		2) Rupture of supply plumbing line. (Fails to withstand normal operating pressures.)	LOSS OF SUBSYSTEM Flow of ambient helium pressurant would be stopped.	A) Delay in launching or scrub.	Same
					B) This failure effect would hold automatic countdown sequence. Minimum supply pressure required for lift-off. Signal is required for continuation of sequence.	Same
					C),D),E) None; this failure effect is considered significant only in F) phase.	Same
					F) LOSS OF STAGE Loss of this function will cause engine pump cavitation due to loss of minimum NPSH.	LOSS OF MISSION Loss of re-pressurization would prevent engine re-start. FRT _____ sec.
					G) None; same as C) phase.	Same

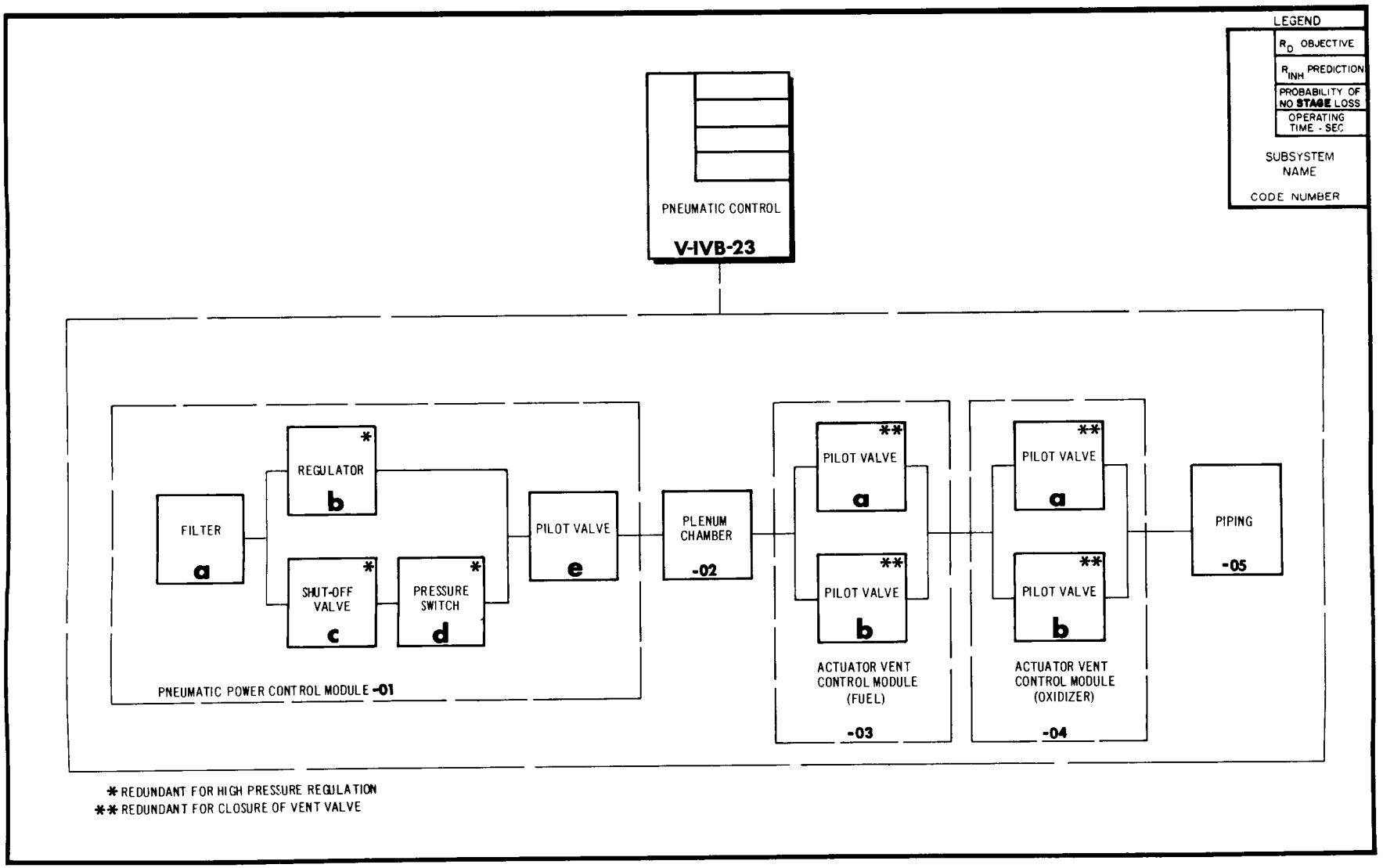
LEGEND
R_D OBJECTIVE
R_{INH} PREDICTION
PROBABILITY OF NO STAGE LOSS
OPERATING TIME - SEC
SUBSYSTEM NAME
CODE NUMBER
PNEUMATIC CONTROL
V-IVB-23
FILTER
a
REGULATOR
b
SHUT-OFF VALVE
c
PRESSURE SWITCH
d
PILOT VALVE
e
PNEUMATIC POWER CONTROL MODULE -01
PLENUM CHAMBER
-02
PILOT VALVE
a
PILOT VALVE
b
ACTUATOR VENT CONTROL MODULE (FUEL)
-03
PILOT VALVE
a
PILOT VALVE
b
ACTUATOR VENT CONTROL MODULE (OXIDIZER)
-04
PIPING
-05
* REDUNDANT FOR HIGH PRESSURE REGULATION
** REDUNDANT FOR CLOSURE OF VENT VALVE

Δ ITEMS MARKED THUS (Δ) DO NOT OPERATE IN FLIGHT

RELIABILITY FAILURE EFFECT ANALYSIS

PNEUMATIC CONTROL SUBSYSTEM

A) COUNTDOWN/CHECKOUT
B) COUNTDOWN - AUTOMATIC SEQUENCE
C) FLIGHT - BOOST PHASE
D) FLIGHT - POWERED PHASE, 1ST
E) FLIGHT - COAST PHASE, 1ST
F) FLIGHT - POWERED PHASE, 2ND
G) FLIGHT - COAST PHASE, 2ND

Δ	ITEM	FUNCTION	FAILURE TYPE	FAILURE EFFECT ON SUBSYSTEM PERFORMANCE	FAILURE EFFECT ON S-IVB STAGE	FAILURE EFFECT ON SATURN VEHICLE
	Pneumatic Power Control Module 1A58345 V-IVB-23-01	1) Filtrates helium gas entering subsystem through filter (a) and regulates pressure of subsystem through regulator (b) or combination of shut-off valve (c) and pressure switch (d). 2) Controls operation of start tank vent control valve through pilot valve (e).	1) No pressure in subsystem - because filter is clogged or regulator is closed. 2) **Inadequate** pressure in subsystem - because of failure of regulator.	LOSS OF SUBSYSTEM Lack of pressure to power pneumatically operated valves.	A), and B) Delay in launch or scrub. C), D),E)and G) None; Not applicable because stage is not affected by these failures during these phases F) LOSS OF STAGE No propulsion because fuel not conditioned for start of engine because tank not vented during E) phase due to either of these failures.	Same LOSS OF MISSION FRT_____sec.
		NOTES: Regulator regulates from 3100 ± 100 psi to 475 ± 25 psi. Pressure switch picks up at 520 ± 10 psi and drops out at 450 ± 10 psi. Shut-off valve is open when de-energized. Pilot valve is three way device which closes start tank vent control valve when de-energized by venting.	3) Excess pressure in subsystem - because of multiple failure of regulator and shut-off valve or pressure switch.	None; Not applicable to single failure analysis.	Same	Same
			4) No pressure to open start tank vent control valve - because of failure of pilot valve to de-energize. 5) No vent to close start tank vent control valve - because of failure of pilot valve to de-energize.	PARTIAL LOSS OF SUBSYSTEM Pneumatic power control module is unable to control operation of start tank vent control valve.	A), and B) Delay in launch or scrub. C) through G) None; Not applicable because function of pilot valve ceases prior to launch, and launch is not possible before valve is de-energized inasmuch as there is start tank pressure switch interlock in launch control complex. (GSE)	Same Same
	Plenum Chamber V-IVB-23-02	Suppresses pressure pulses in subsystem .	1) Rupture.	LOSS OF SUBSYSTEM Lack of pressure to power pneumatically operated valve	A), and B) Delay in launch or scrub. C), D), E) and G) None; Not applicable because stage is not affected by this failure during these phases.	Same Same

Δ ITEMS MARKED THUS (Δ) DO NOT OPERATE IN FLIGHT

RELIABILITY FAILURE EFFECT ANALYSIS

PNEUMATIC CONTROL SUBSYSTEM

A) COUNTDOWN/CHECKOUT
B) COUNTDOWN-AUTOMATIC SEQUENCE
C) FLIGHT-BOOST PHASE
D) FLIGHT-POWERED PHASE, 1ST
E) FLIGHT-COAST PHASE, 1ST
F) FLIGHT-POWERED PHASE, 2ND
G) FLIGHT-COAST PHASE, 2ND

Δ	ITEM	FUNCTION	FAILURE TYPE	FAILURE EFFECT ON SUBSYSTEM PERFORMANCE	FAILURE EFFECT ON S-IVB STAGE	FAILURE EFFECT ON SATURN VEHICLE
	Plenum Chamber V-IVB-23-02 (Continued)		1) Rupture (Continued)		(Continued) F) LOSS OF STAGE No propulsion because fuel not conditioned for start of engine because tank not vented during E) phase due to this failure.	(Continued) LOSS OF MISSION FRT____sec.
	Actuator Vent Control Module (For Fuel Tank Vent) 1A49982 V-IVB-23-03	Controls operation of vent valve of fuel tank through three-way pilot valves (a) and (b). Vent valve is open when pilot valve (a) is de-energized and pilot valve (b) is energized, but is closed for all other combinations.	1) Failure to close vent valve- because of multiple failure of pilot valves.	None; Not applicable to single failure analysis.	Same	Same
			2) Failure to open vent valve - because of failure of pilot valve (A) to de-energize or pilot valve (B) to energize.	PARTIAL LOSS OF SUBSYSTEM Actuator vent control module is unable to control operation of vent valve.	A), and B), Delay in launch or scrub. C), D), E), and G), None; Not applicable because stage is not affected by this failure during these phases. F) LOSS OF STAGE No propulsion because fuel not conditioned for start of engine because tank not vented during E) phase due to this failure.	Same Same LOSS OF MISSION FRT____sec.
	Actuator Vent Control Module (For Oxidizer Tank Vent) 1A49982 V-IVB-23-04	Controls operation of vent valve of oxidizer tank through three-way pilot valve (a) and (b). Vent valve is open when pilot valve (a) is de-energized and pilot valve (b is energized, but is closed for all other combinations.	1) Failure to close vent valve - because of multiple failure of pilot valves.	None; Not applicable to single failure analysis.	Same	Same

Δ ITEMS MARKED THUS (Δ) DO NOT OPERATE IN FLIGHT

RELIABILITY FAILURE EFFECT ANALYSIS

PNEUMATIC CONTROL SUBSYSTEM

A) COUNTDOWN/CHECKOUT
B) COUNTDOWN-AUTOMATIC SEQUENCE
C) FLIGHT-BOOST PHASE
D) FLIGHT-POWERED PHASE, 1ST
E) FLIGHT-COAST PHASE, 1ST
F) FLIGHT-POWERED PHASE, 2ND
G) FLIGHT-COAST PHASE, 2ND

Δ	ITEM	FUNCTION	FAILURE TYPE	FAILURE EFFECT ON SUBSYSTEM PERFORMANCE	FAILURE EFFECT ON S-IVB STAGE	FAILURE EFFECT ON SATURN VEHICLE
			(Continued)	(Continued)	(Continued)	
	Actuation Vent Control Module (For Oxidizer Tank Vent) 1A49982 V-IVB-23-04 (Continued)		2) Failure to open vent valve - because of failure of pilot valve (A to de-energize or pilot valve (B) to energize.	PARTIAL LOSS OF SUBSYSTEM Actuation vent control module is unable to control operation of vent valve.	A), and B) Delay in launch or scrub. C), through G) None; Not applicable because stage is not affected by this failure during these phases.	Same
	Piping V-IVB-23-05	Interconnects components of subsystem and connects subsystem to fuel re-pressurization subsystem and to pneumatically operated valves.	1) Leak	POSSIBLE LOSS OF SUBSYSTEM This failure degrades ability of subsystem to retain gas pressure	A), and B) Delay in launch or scrub. C), D), E) and G) None; Not applicable because stage is not affected by this failure during these phases. F) POSSIBLE LOSS OF STAGE Significant leak could result in inadequate pressure which would prevent venting of fuel tank during E) phase. This would result in no propulsion because fuel not conditioned for start of engine.	Same Same POSSIBLE LOSS OF MISCION FRT_____sec.

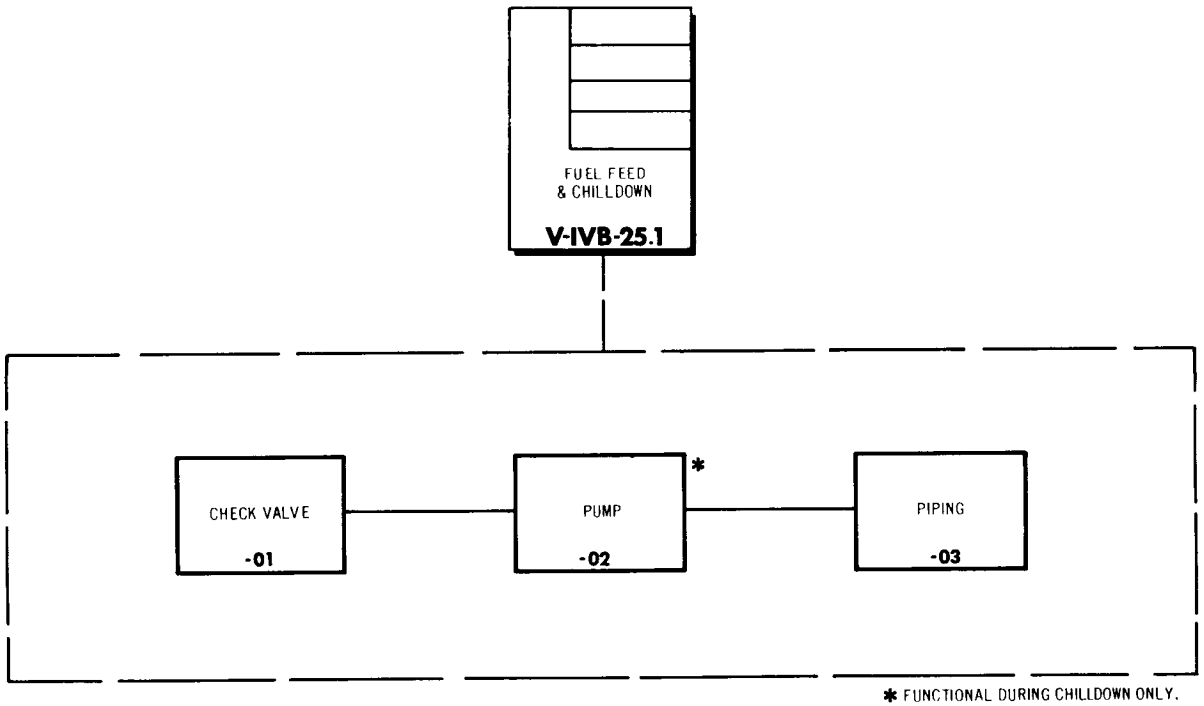
FUEL FEED
& CHILLDOWN
V-IVB-25.1
CHECK VALVE
-01
PUMP
-02
*
PIPING
-03
* FUNCTIONAL DURING CHILLDOWN ONLY.
LEGEND
R_D OBJECTIVE
R_{INH} PREDICTION
PROBABILITY OF NO STAGE LOSS
OPERATING TIME - SEC
SUBSYSTEM NAME
CODE NUMBER

Δ ITEMS MARKED THUS (Δ) DO NOT OPERATE IN FLIGHT

RELIABILITY FAILURE EFFECT ANALYSIS

A) COUNTDOWN/CHECKOUT
B) COUNTDOWN-AUTOMATIC SEQUENCE
C) FLIGHT-BOOST PHASE
D) FLIGHT-POWERED PHASE, 1ST
E) FLIGHT-COAST PHASE, 1ST
F) FLIGHT-POWERED PHASE, 2ND
G) FLIGHT-COAST PHASE, 2ND

FUEL FEED AND CHILLDOWN SUBSYSTEM

Δ ITEM	FUNCTION	FAILURE TYPE	FAILURE EFFECT ON SUBSYSTEM PERFORMANCE	FAILURE EFFECT ON S-IVB STAGE	FAILURE EFFECT ON SATURN VEHICLE
Check Valve 1A49964 V-IVB-25.1-01	Closes during chilldown operation to prevent back flow of output of chilldown pump to fuel tank. Opens during engine operation to feed fuel from tank to engine.	1) Failure to open.	LOSS OF SUBSYSTEM Impossible to feed fuel to engine.	A),B),C),E),G), None; not applicable because feed is required in D) and F) phases only. D),F) LOSS OF STAGE No propulsion because fuel can not be supplied to engine.	Same LOSS OF MISSION FRT _____ sec.
		2) Failure to close.	LOSS OF SUBSYSTEM Impossible to accomplish chilldown because of back-flow of output of chilldown pump to tank.	A),B),C),E),G) None; not applicable because consequence of lack of chilldown occurs in D) and F) phases only. D),F) LOSS OF STAGE No propulsion because fuel at engine is not conditioned for start.	Same LOSS OF MISSION FRT _____ sec.
Chilldown Pump (Motor Driven) 1A49421 V-IVB-25.1-02	Circulates fuel prior to start of engine (from tank through feed piping to engine, and through pump and piping of engine to gas generator - return flow to tank is through gas generator bleed valve) to remove heat to insure having liquid fuel at inlets of pump and gas generator at start, and to chill properly the fuel components of engine upstream of main fuel valve.	1) Failure to operate. 2) Failure during operation.	LOSS OF SUBSYSTEM Impossible to accomplish chilldown because of loss of circulation.	A),B),C),E),G) None; not applicable because consequence of lack of chilldown occurs in D) and F) phases only. D),F) LOSS OF STAGE No propulsion because fuel at engine is not conditioned for start.	Same LOSS OF MISSION FRT _____ sec.
Piping V-IVB-25.1-03	Transmits fuel between tank and engine.	1) Leak	POSSIBLE LOSS OF SUBSYSTEM This failure degrades ability of subsystem to retain fuel.	A),B) Possible delay in launch or scrub. C),E),G) None; not applicable because consequence of leak occurs in D) and F) phases only. D),F) POSSIBLE LOSS OF STAGE Significant leak could result in loss of propulsion in either of these phases because of loss of fuel.	Same Same POSSIBLE LOSS OF MISSION FRT _____ sec.

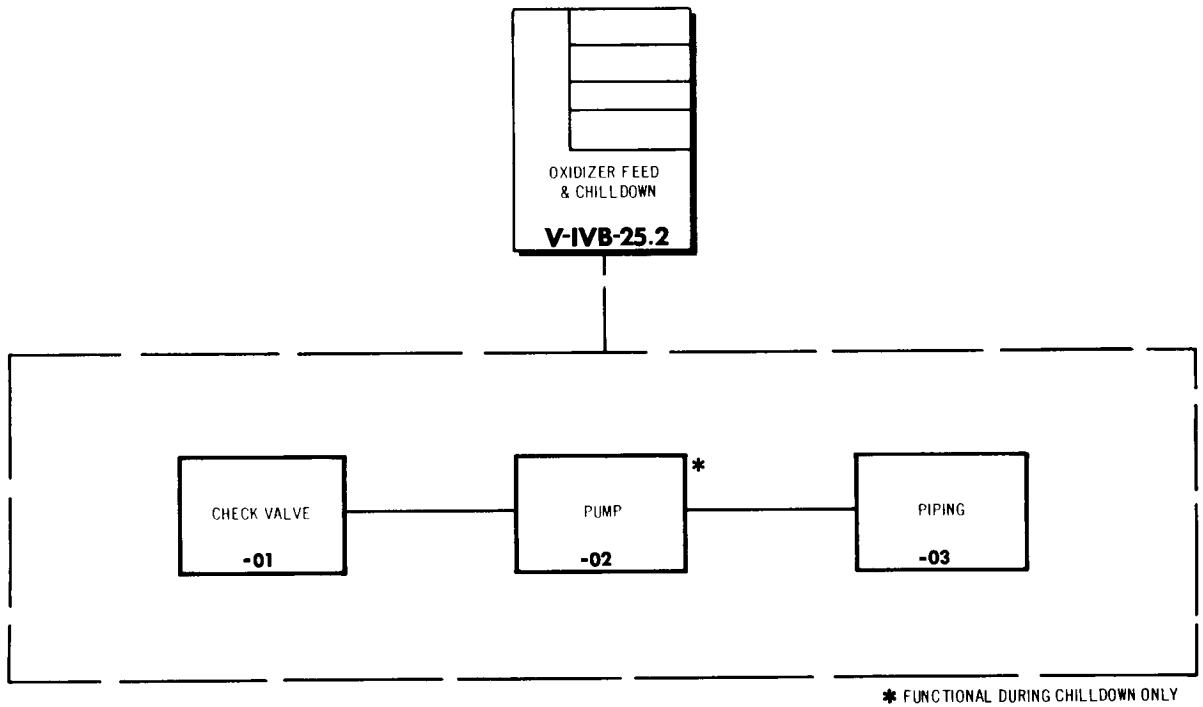

LEGEND

R_D	OBJECTIVE
R_{INH}	PREDICTION
PROBABILITY OF NO STAGE LOSS	
OPERATING TIME - SEC	

SUBSYSTEM NAME

CODE NUMBER

Δ ITEMS MARKED THUS (Δ) DO NOT OPERATE IN FLIGHT

RELIABILITY FAILURE EFFECT ANALYSIS

OXIDIZER FEED AND CHILLDOWN SUBSYSTEM

A) COUNTDOWN/CHECKOUT
B) COUNTDOWN-AUTOMATIC SEQUENCE
C) FLIGHT-BOOST PHASE
D) FLIGHT-POWERED PHASE, 1ST
E) FLIGHT-COAST PHASE, 1ST
F) FLIGHT-POWERED PHASE, 2ND
G) FLIGHT-COAST PHASE, 2ND

Δ	ITEM	FUNCTION	FAILURE TYPE	FAILURE EFFECT ON SUBSYSTEM PERFORMANCE	FAILURE EFFECT ON S-IVB STAGE	FAILURE EFFECT ON SATURN VEHICLE
	Check Valve 1A49965 V-IVB-25.2-01	Closes during chilldown operation to prevent back flow of output of chilldown pump to oxidizer tank. Opens during engine operation to feed oxidizer from tank to engine.	1) Failure to open.	LOSS OF SUBSYSTEM Impossible to feed oxidizer to engine.	A),B),C),E),G) None; not applicable because feed is required in D) and F) phases only. D), F) LOSS OF STAGE No propulsion because oxidizer cannot be supplied to engine.	Same LOSS OF MISSION FRT _____ sec.
			2) Failure to close.	LOSS OF SUBSYSTEM Impossible to accomplish chilldown because of back flow of output of chilldown pump to tank.	A),B),C),E),G) None; not applicable because consequence of lack of chilldown occurs in D) and F) phases only. D),F) LOSS OF STAGE No propulsion because oxidizer is not conditioned for start.	Same LOSS OF MISSION FRT _____ sec.
	Chilldown Pump (Motor Driven) 1A4923 V-IVB-25.2-02	Circulates oxidizer prior to start of engine (from tank through feed piping to engine, and through pump and piping of engine to gas generator-return flow to tank is through gas generator bleed valve) to remove heat to insure having liquid oxidizer at inlets of pump and gas generator at start, and to chill properly the oxidizer components of engine upstream of main oxidizer valve.	1) Failure to operate. 2) Failure during operation.	LOSS OF SUBSYSTEM Impossible to accomplish chilldown because of loss of circulation.	A),B),C),E),G) None; not applicable because consequence of lack of chilldown occurs in D) and F) phases only. D),F) LOSS OF STAGE No propulsion because oxidizer at engine is not conditioned for start.	Same LOSS OF MISSION FRT _____ sec.
	Piping V-IVB-25.2-03	Transmits oxidizer between tank and engine.	1) Leak.	POSSIBLE LOSS OF SUBSYSTEM This failure degrades ability of subsystem to retain oxidizer.	A),B) Possible delay in launch or scrub. C),E),G) None; not applicable because consequence of leak occurs in D) and F) phases only. D),F) POSSIBLE LOSS OF STAGE Significant leak could result in loss of propulsion in either of these phases because of loss of fuel.	Same POSSIBLE LOSS OF MISSION FRT _____ sec.

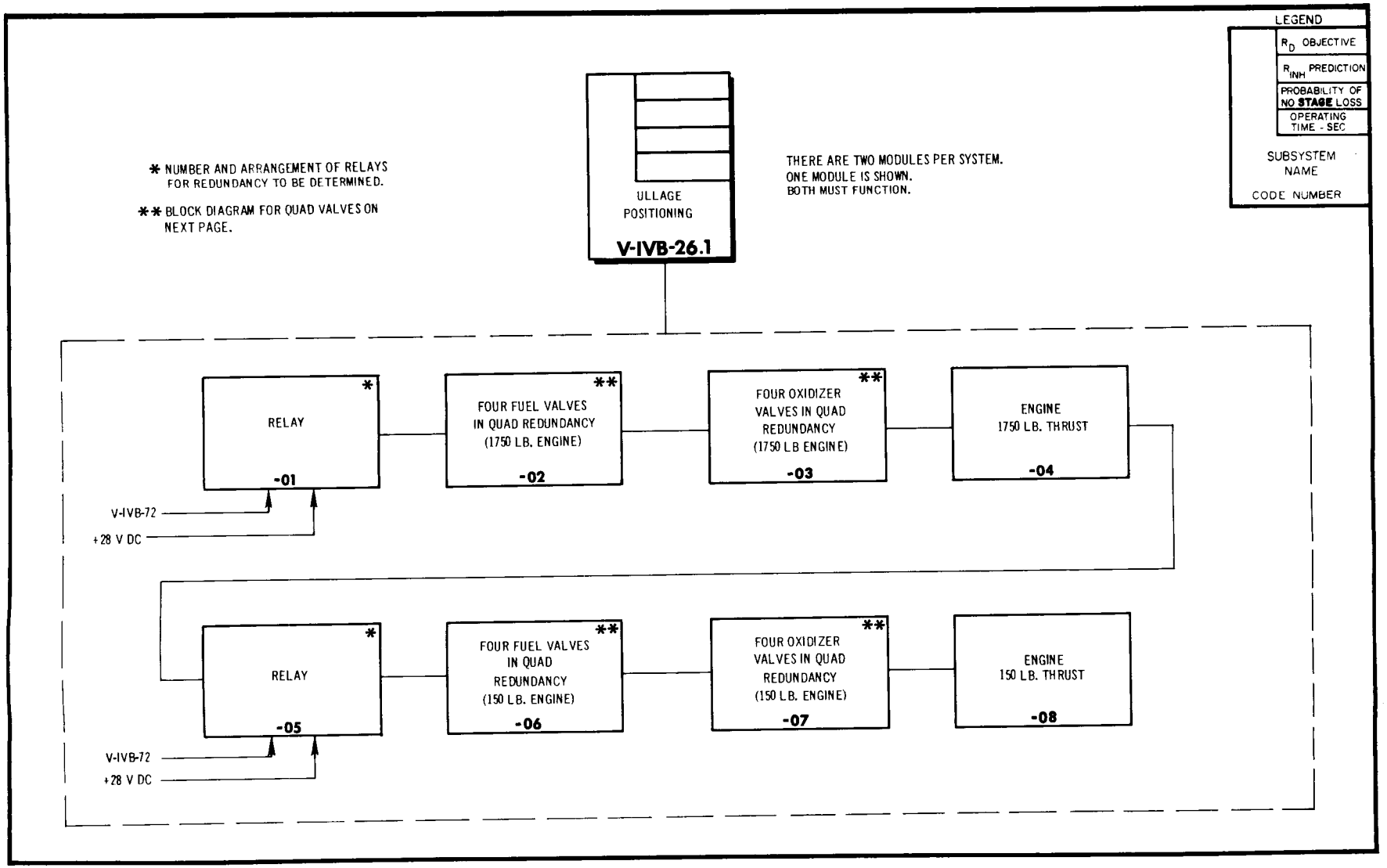
LEGEND
R_D OBJECTIVE
R_{INH} PREDICTION
PROBABILITY OF NO STAGE LOSS
OPERATING TIME - SEC
SUBSYSTEM NAME
CODE NUMBER
* NUMBER AND ARRANGEMENT OF RELAYS FOR REDUNDANCY TO BE DETERMINED.
** BLOCK DIAGRAM FOR QUAD VALVES ON NEXT PAGE.
ULLAGE POSITIONING
V-IVB-26.1
THERE ARE TWO MODULES PER SYSTEM. ONE MODULE IS SHOWN. BOTH MUST FUNCTION.
RELAY
-01
FOUR FUEL VALVES IN QUAD REDUNDANCY (1750 LB. ENGINE)
-02
FOUR OXIDIZER VALVES IN QUAD REDUNDANCY (1750 LB ENGINE)
-03
ENGINE 1750 LB. THRUST
-04
V-IVB-72
+28 V DC
RELAY
-05
FOUR FUEL VALVES IN QUAD REDUNDANCY (150 LB. ENGINE)
-06
FOUR OXIDIZER VALVES IN QUAD REDUNDANCY (150 LB. ENGINE)
-07
ENGINE 150 LB. THRUST
-08
V-IVB-72
+28 V DC

LEGEND

R_D OBJECTIVE
R_{INH} PREDICTION
PROBABILITY OF NO **STAGE** LOSS
OPERATING TIME - SEC

SUBSYSTEM NAME

CODE NUMBER

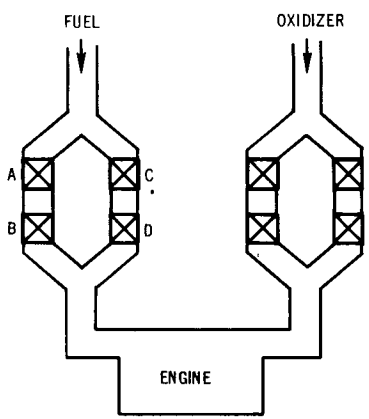

FUNCTIONAL DIAGRAM FOR ENGINE QUAD VALVES

A, B, C, & D ARE INDIVIDUAL VALVES. (LETTERS ARE FOR REFERENCE ONLY)

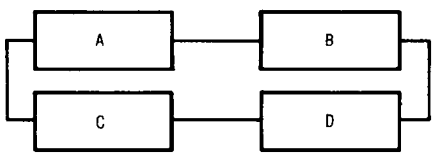

RELIABILITY DIAGRAM FOR VALVES OPENING

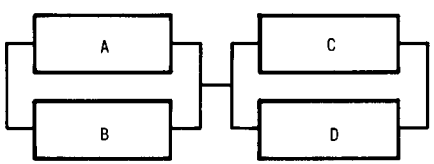

RELIABILITY DIAGRAM FOR VALVES CLOSING

Δ ITEMS MARKED THUS (Δ) DO NOT OPERATE IN FLIGHT

RELIABILITY FAILURE EFFECT ANALYSIS

ULLAGE POSITIONING (SATURN V ONLY)

A) COUNTDOWN/CHECKOUT
B) COUNTDOWN - AUTOMATIC SEQUENCE
C) FLIGHT - BOOST PHASE
D) FLIGHT - POWERED PHASE, 1ST
E) FLIGHT - COAST PHASE, 1ST
F) FLIGHT - POWERED PHASE, 2ND
G) FLIGHT - COAST PHASE, 2ND

Δ	ITEM	FUNCTION	FAILURE TYPE	FAILURE EFFECT ON SUBSYSTEM PERFORMANCE	FAILURE EFFECT ON S-IVB STAGE	FAILURE EFFECT ON SATURN VEHICLE
	Relay, Single Pole, normally open. (Quantity to be determined.) V-IVB-26.1-01	Closes when energized by a signal from the sequencer, to open the associated solenoid operated fuel or oxidizer valve. Opens when de-energized.	1) Failure to close. (Electrical or mechanical failure.)	None. Relay arrangement will be such that no single failure will result in loss of the subsystem.	A),B),C),D),E),F),G) None for single failure. Redundancy provided.	Same
			2) Failure to open.	None. Redundancy will be provided. (Method to be determined.)		
	Fuel Valve, Solenoid Operated (4) in quad redundancy. V-IVB-26.1-02	Opens upon receipt of 28V from the relay. Permits fuel to flow to the engine. Closes when de-energized.	1) Failure to open. (Electrical or mechanical failure)	None. Valves are arranged in quad redundancy, so that no single failure can cause loss of the subsystem.	A),B),C),D),E),F),G) None for single failure. Redundancy provided.	Same
			2) Failure to close.			
	Oxidizer Valve, Solenoid Operated (4) in quad redundancy. V-IVB-26.1-03	Opens upon receipt of 28V from the relay. Permits oxidizer to flow to the engine. Closes when de-energized.	1) Failure to open. (Electrical or mechanical failure.)	None. Valves are arranged in quad redundancy so that no single failure can cause the loss of the subsystem.	A),B),C),D),E),F),G) None for single failure. Redundancy provided.	Same
			2) Failure to close.			
	Engine, 1750# thrust. (Dual propellant, liquid hypergolic.) V-IVB-26.1-04	Provides thrust for ullage positioning in the hydrogen and oxgen tanks immediately prior to and during main engine start.	1) Failure to start. (Injector clogged, or failure of upstream components.)	LOSS OF SUBSYSTEM If only one of the two engines burns, thrust will be unsymmetrical and possibly insufficient.	A),B) None. Failure can not occur before end of C) phase. C) LOSS OF STAGE Main engine fails to start because of pump cavitation D),F) None. Ullage engine not needed during powered flight. E) LOSS OF STAGE Main engine fails to restart. G) None. Not needed during second coast phase.	Same LOSS OF MISSION Same LOSS OF MISSION

Δ ITEMS MARKED THUS (Δ) DO NOT OPERATE IN FLIGHT

RELIABILITY FAILURE EFFECT ANALYSIS

ULLAGE POSITIONING (SATURN V ONLY)

A) COUNTDOWN/CHECKOUT
B) COUNTDOWN - AUTOMATIC SEQUENCE
C) FLIGHT - BOOST PHASE
D) FLIGHT - POWERED PHASE, 1ST
E) FLIGHT - COAST PHASE, 1ST
F) FLIGHT - POWERED PHASE, 2ND
G) FLIGHT - COAST PHASE, 2ND

Δ	ITEM	FUNCTION	FAILURE TYPE	FAILURE EFFECT ON SUBSYSTEM PERFORMANCE	FAILURE EFFECT ON S-IVB STAGE	FAILURE EFFECT ON SATURN VEHICLE
*	Engine, 1750# Thrust (Dual propellant, liquid hypergolic) V-IVB-26 1-04 (Continued)		2) Leak of propellants. (Leak around connections; tubes break or separate from injector.)	POSSIBLE LOSS OF SUBSYSTEM Due to fire.	A),B) None C),D) POSSIBLE LOSS OF STAGE At end of C) phase or beginning of D) phase due to fire. E),F) POSSIBLE LOSS OF STAGE At end of E) or start of F) phase due to fire. G) None Ullage engine not used	Same POSSIBLE LOSS OF VEHICLE POSSIBLE LOSS OF VEHICLE Same
			3) Throat failure, (Cracks, erosion, burn through.)	Degraded performance due to reduced thrust. POSSIBLE LOSS OF SUBSYSTEM	A),B) None Failure can not occur until the end of C) phase. C),E) POSSIBLE LOSS OF STAGE D),F) None. Thrust is not required during powered phases. G) None.	Same POSSIBLE LOSS OF MISSION Same Same
	Relay, Single Pole, normally open. (Quantity to be determined.) V-IVB-26.1-05	Closes when energized by a signal from the sequencer, to open the associated solenoid operated fuel or oxidizer valve. Opens when de-energized.	1) Failure to close. (Electrical or mechanical failure.)	None. Relay arrangement will be such that no single failure will result in loss of the subsystem.	A),B),C),D),E),F),G) None for single failure. Redundancy provided.	Same
			2) Failure to open.	None. Redundancy will be provided. (Method to be determined.)		
	Fuel Valve, Solenoid operated (4) in quad redundancy V-IVB-26.1-06	Opens upon receipt of 28V from the relay. Permits fuel to flow to the engine. Closes when de-energized.	1) Failure to open. (Electrical or mechanical failure)	None. Valves are arranged in quad redundancy, so that no single failure can cause loss of the subsystem.	A),B),C),D),E),F) G) None for single failure. Redundancy provided.	Same
			2) Failure to close.			

Δ ITEMS MARKED THUS (Δ) DO NOT OPERATE IN FLIGHT

RELIABILITY FAILURE EFFECT ANALYSIS

A) COUNTDOWN/CHECKOUT
B) COUNTDOWN - AUTOMATIC SEQUENCE
C) FLIGHT - BOOST PHASE
D) FLIGHT - POWERED PHASE, 1ST
E) FLIGHT - COAST PHASE, 1ST
F) FLIGHT - POWERED PHASE, 2ND
G) FLIGHT - COAST PHASE, 2ND

ULLAGE POSITIONING (SATURN V ONLY)

Δ	ITEM	FUNCTION	FAILURE TYPE	FAILURE EFFECT ON SUBSYSTEM PERFORMANCE	FAILURE EFFECT ON S-IVB STAGE	FAILURE EFFECT ON SATURN VEHICLE
	Oxidizer Valve, Solenoid operated (4) in quad redundancy. V-IVB-26.1-07	Opens upon receipt of 28V from the relay. Permits oxidizer to flow to the engine. Closes when de-energized.	1) Failure to open. (Electrical or mechanical failure.)	None. Valves are arranged in quad redundancy so that no single failure can cause the loss of the subsystem.	A),B),C),D),E),F),G) None for single failure. Redundancy provided.	Same
			2) Failure to close.			
	Engine, 150# Thrust (Dual propellant, liquid hypergolic.) V-IVB-26.1-08	1) Provides thrust for ullage positioning in the hydrogen and oxygen tanks for the purpose of venting prior to engine start and restart. 2) Provides for ullage positioning for venting intermittently during first coast phase.	1) Failure to start. (Injector clogged, or failure of upstream components.)	POSSIBLE LOSS OF SUBSYSTEM One of the two engines may not supply sufficient thrust for the venting operation. However, when vent valves open, some liquid oxygen and hydrogen escape. This immediately provideds the thrust necessary to complete the venting cycle. Relatively little propellant is lost.	A),B) None. Failure can not occur until end of phase C) C),E) Some loss of liquid oxygen and hydrogen. Probably not significant. D),F),G) None. Not required to operate.	Same Same Same
			2) Leakage of propellants. Leak around connections; tubes break or separate from injector.	POSSIBLE LOSS OF SUBSYSTEM Due to fire, when propellants combine.	A),B) None. C),D),E),F) POSSIBLE LOSS OF STAGE Due to fire. G) None. Engine not used.	Same POSSIBLE LOSS OF VEHICLE Due to fire. Same
			3) Throat failure. (Cracks, erosion, burn through)	Some loss of thrust. (However, venting of oxygen and hydrogen provides sufficient thrust.	A),B) None. Engine not used before C) phase. C),D),E),F) None. Propulsive venting furnishes thrust. G) None. Not required to operate.	Same Same Same

NOTE:
PROPER OPERATION OF ANY TWO OF THE THREE ROCKETS CAN PROVIDE SUFFICIENT THRUST TO MAINTAIN THE CORRECT POSITION OF THE S-IVB STAGE ULLAGE AT THE TIME OF S-I/S-IVB STAGE SEPARATION.

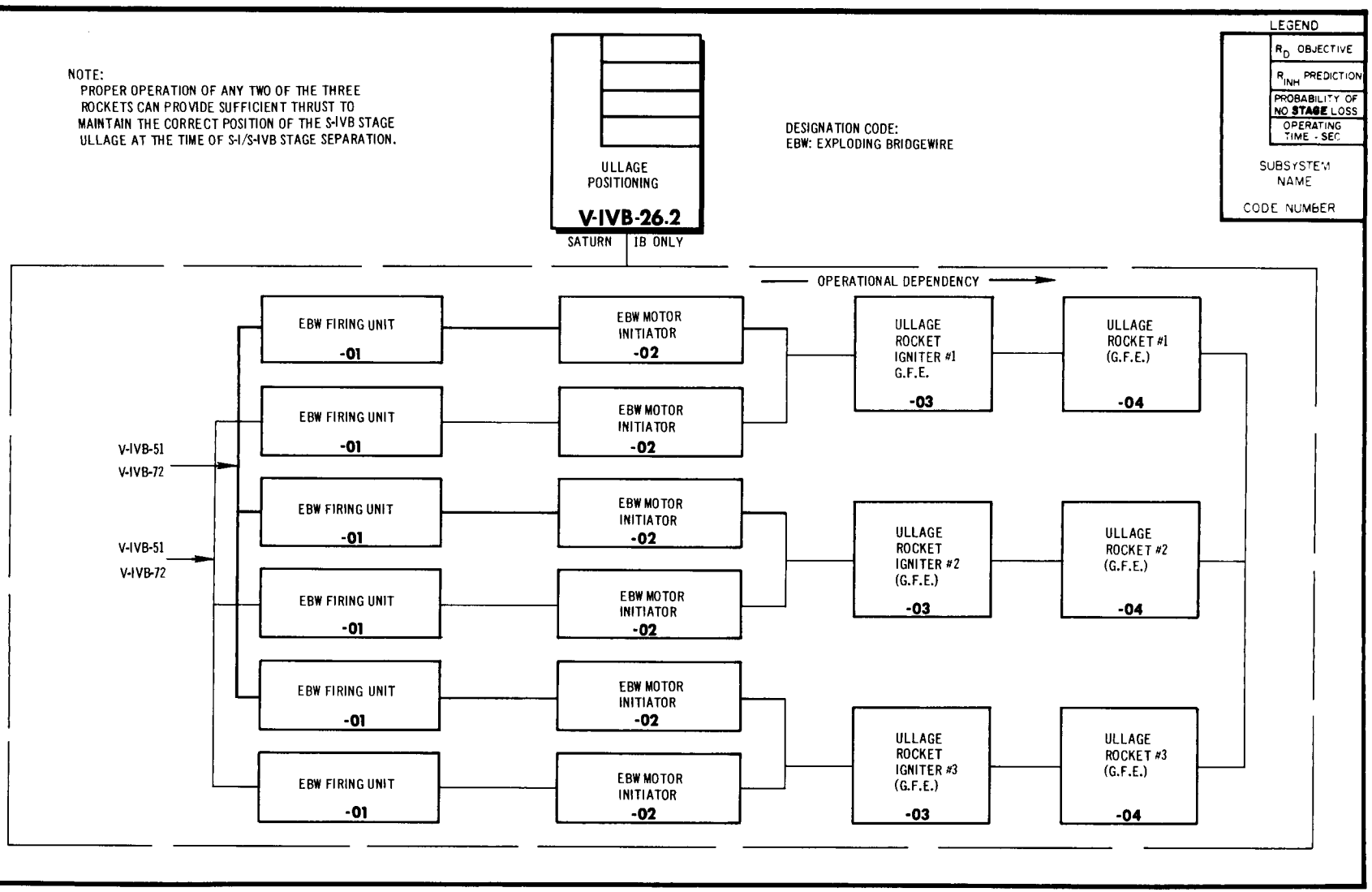

Δ ITEMS MARKED THUS (Δ) DO NOT OPERATE IN FLIGHT

RELIABILITY FAILURE EFFECT ANALYSIS

ULLAGE POSITIONING (SATURN 1B ONLY)

A) COUNTDOWN/CHECKOUT
B) COUNTDOWN - AUTOMATIC SEQUENCE
C) FLIGHT - BOOST PHASE
D) FLIGHT - POWERED PHASE, 1ST
E) FLIGHT - COAST PHASE, 1ST
F) FLIGHT - POWERED PHASE, 2ND
G) FLIGHT - COAST PHASE, 2ND

Δ	ITEM	FUNCTION	FAILURE TYPE	FAILURE EFFECT ON SUBSYSTEM PERFORMANCE	FAILURE EFFECT ON S-IVB STAGE	FAILURE EFFECT ON SATURN VEHICLE
	Exploding Bridgewire (EBW) Firing Unit (6) V-IVB-26.2-01	Explodes bridgewire in the motor initiator upon receipt of an electrical trigger signal. Unit must be charged prior to triggering.	1) Premature explosion of bridgewire. (Subsequent ignition of associated explosive train is assumed to occur.)	None for single failure. Proper operation of two (and possible of one) out of three rockets gives sufficient thrust to maintain correct ullage position.	A), B) None; Premature triggering is not considered possible since units are not charged until C) phase. C) None; Redundancy is provided. D), E) None; Failure occurs near end of C) phase.	None None None
			2) Failure to explode bridgewire when required.	None: Redundancy is provided	A), B) None; Not required until C) phase. C) None; Redundancy provided D), E) Not applicable. Function occurs in phase C)	Same Same Same
	EBW Motor Initiator (6) V-IVB-26.2-02	Activates ullage rocket igniter	1) Failure to start igniter when required.	None. Two initiators are provided for each igniter, and either one can start the igniter.	A), B) None; Function not reguired until phase C) C) None: Redundancy provided D), E) Not applicable. Function occurs in phase C) only	Same Same Same
	Ullage Rocket Igniter (3) (G. F. E.) V-IVB-26.2-03	Starts Rocket Motor	1) Failure to start motor when required.	None for single failure. Proper operation of two (and possibly one) out of three ullage rockets provides sufficient thrust.	A), B) None C) None; Redundancy provided D), E) Not applicable	Same Same Same
	Ullage Rocket Motor (3) (G. F. E.)Thiokil Model TX280 V-IVB-26.2-04	Gives forward thrust to S-IVB stage at time of S-1/ S-IVB separation. Rockets are ignited before boost thrust completely decays and burn for approximately 4 seconds during which time S-IVB engine starts. Purpose is to avoid any period of zero g which would permit unseating of the propellants from the bottom of their respective tanks.	1) Failure to provide thrust when required.	None for single failure Proper operation of two out of three rockets provides adequate thrust.	A), B) None C), D) None Redundancy provided E) Not applicable	Same Same Same

Δ ITEMS MARKED THUS (Δ) DO NOT OPERATE IN FLIGHT

RELIABILITY FAILURE EFFECT ANALYSIS

ULLAGE POSITIONING (SATURN 1B ONLY)

A) COUNTDOWN/CHECKOUT
B) COUNTDOWN-AUTOMATIC SEQUENCE
C) FLIGHT-BOOST PHASE
D) FLIGHT-POWERED PHASE, 1ST
E) FLIGHT-COAST PHASE, 1ST
F) FLIGHT-POWERED PHASE, 2ND
G) FLIGHT-COAST PHASE, 2ND

Δ	ITEM	FUNCTION	FAILURE TYPE	FAILURE EFFECT ON SUBSYSTEM PERFORMANCE	FAILURE EFFECT ON S-IVB STAGE	FAILURE EFFECT ON SATURN VEHICLE
			(Continued)	(Continued)	(Continued)	
	Ullage Rocket Motor (3) (G.F.E) Thiokol Model TX280 V-IVB-26.2-04		2) Rocket burst	None; Operation of any two out of three ullage rockets provide suffient thrust.	A),B) Not applicable C),D) PROBABLE LOSS OF STAGE Due to structural damage E) Not applicable	Same PROBABLE LOSS OF VEHICLE FRT .01 sec. Same
			3) Rocket burn through		A),B) Not applicable C),D) PROBABLE LOSS OF STAGE Due to structural damage E) Not applicable	Same PROBABLE LOSS OF VEHICLE FRT. .01 sec. Same
			4) Failure to stop operation in form of "chuff" from residual fuel after jettison.		A),B),C) Not applicable Rocket jettisoned in phase D D) POSSIBLE LOSS OF STAGE Rocket could strike and damage stage E) Not applicable	Same POSSIBLE LOSS OF VEHICLE FRT. 1.0 sec. Same

PREFACE TO FAILURE EFFECT ANALYSIS OF FUEL TANK VENT CONTROL - SUBSYSTEM S-IVB-27-01

During operational phases A),B),C),D),F), and G), venting of the hydrogen tank is provided by a relief valve (V-IVB-27-01-A) set to approximately 33 psia and a vent-relief valve (V-IVB-27-01-B) set to approximately 34 psia for backup.

Prior to lift-off (phases A and B), the venting system is connected to the GSE plumbing for conveyance of vented propellant to a safe area - about 20 seconds before lift-off, a directional control valve (V-IVB-27-01-E) is operated to connect the venting system to the vehicle plumbing for discharge of propellant gases through a propulsive vent.

During operational phase E) (first coast phase), the auto-venting sequencer is activated and LH_2 tank pressure is controlled by two pressure sensing switches that provide signals to a sequencer. The sequencer operates solenoid type pneumatic valves which, in turn, control the pneumatic power that operates the vent portion of the vent-relief valve.

During the auto-venting mode, the following functions are provided by an automatic sequencer which is part of the vehicle electrical system:

a) Fire .001-g (150 lb) hypergolic ullage engine for 20 seconds to settle liquid.

b) Turn off ullage engine and open vent valve to reduce tank pressure - the propulsive venting will provide ullage for the remainder of the venting cycle.

c) Close vent by signal from low pressure sensing switch when tank pressure reaches approximately 23 psia.

Prior to repressurization and (about 12 minutes before) engine restart, the LH_2 tank is vented by command signal (during phase E) and a standard venting sequence is employed, except that the ullage cycle is lengthened to 32 instead of 20 seconds as with auto-venting.

During auto-venting operations, the tank pressures are controlled within the range of 32 to 23 psia approximately.

Operation of either relief valve will result in abrupt overboard venting without use of automatic sequencer to provide ullage (20 seconds) cycle before valve opens.

An accessory part of the LH_2 venting system is the vapor-driven turbine separator positioned in the vent line to prevent or greatly reduce loss of liquid during venting operations where the liquid is not properly settled, due to disturbances such as loss or degradation of ullage control or vehicular change of attitude.

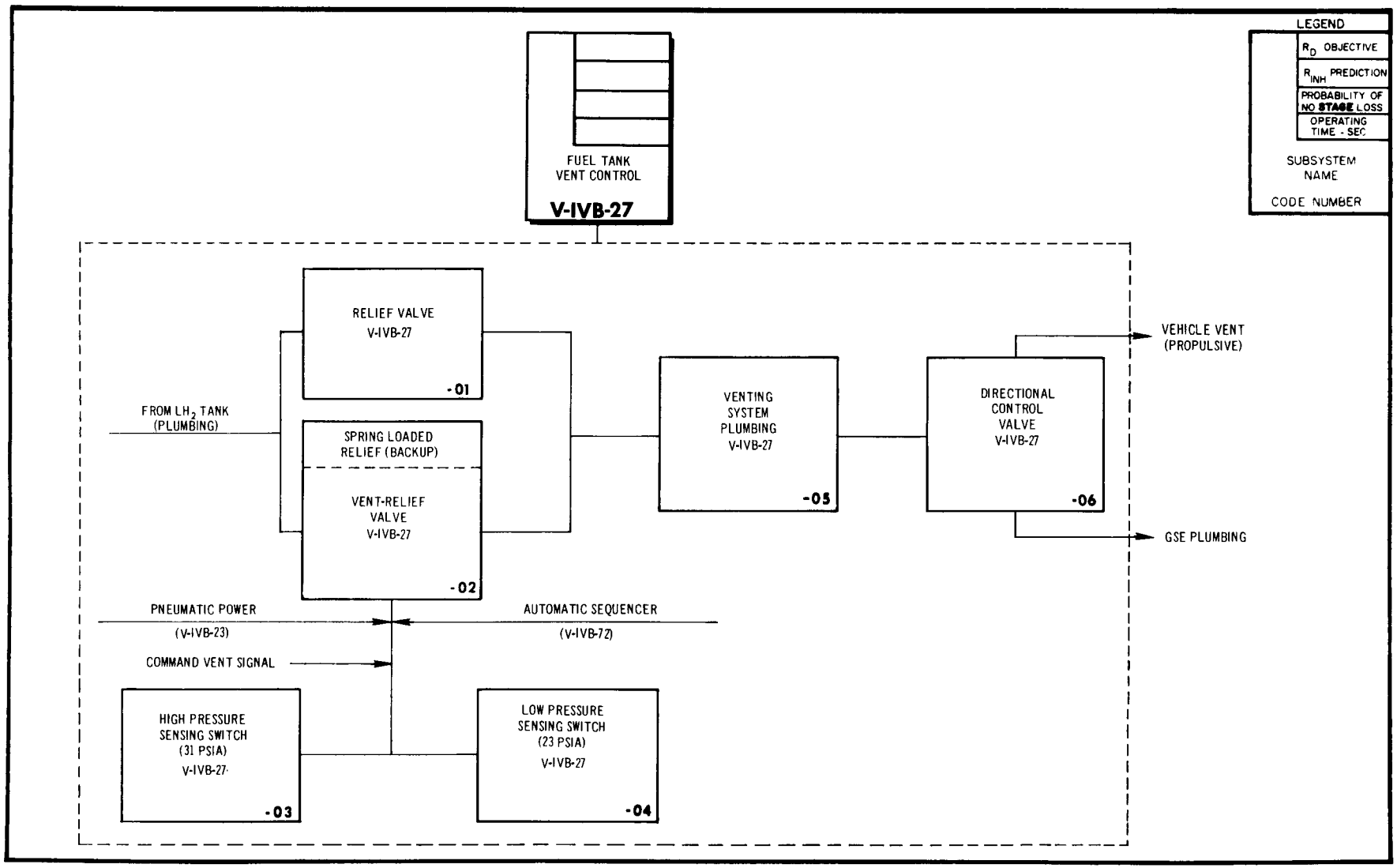
LEGEND
R_D OBJECTIVE
R_{INH} PREDICTION
PROBABILITY OF NO STAGE LOSS
OPERATING TIME - SEC
SUBSYSTEM NAME
CODE NUMBER
FUEL TANK VENT CONTROL
V-IVB-27
RELIEF VALVE V-IVB-27
-01
SPRING LOADED RELIEF (BACKUP)
VENT-RELIEF VALVE V-IVB-27
-02
FROM LH_2 TANK (PLUMBING)
VENTING SYSTEM PLUMBING V-IVB-27
-05
DIRECTIONAL CONTROL VALVE V-IVB-27
-06
VEHICLE VENT (PROPULSIVE)
GSE PLUMBING
PNEUMATIC POWER
(V-IVB-23)
AUTOMATIC SEQUENCER
(V-IVB-72)
COMMAND VENT SIGNAL
HIGH PRESSURE SENSING SWITCH (31 PSIA) V-IVB-27
-03
LOW PRESSURE SENSING SWITCH (23 PSIA) V-IVB-27
-04

Δ ITEMS MARKED THUS (Δ) DO NOT OPERATE IN FLIGHT

RELIABILITY FAILURE EFFECT ANALYSIS

A) COUNTDOWN/CHECKOUT
B) COUNTDOWN-AUTOMATIC SEQUENCE
C) FLIGHT-BOOST PHASE
D) FLIGHT-POWERED PHASE, 1ST
E) FLIGHT-COAST PHASE, 1ST
F) FLIGHT-POWERED PHASE, 2ND
G) FLIGHT-COAST PHASE, 2ND

FUEL TANK VENT CONTROL - SUBSYSTEM

Δ	ITEM	FUNCTION	FAILURE TYPE	FAILURE EFFECT ON SUBSYSTEM PERFORMANCE	FAILURE EFFECT ON S-IVB STAGE	FAILURE EFFECT ON SATURN VEHICLE
	Relief Valve V-IVB-27-01	Provide tank pressure relief in case of failure of regular pressure control system - this is a spring loaded device and operates without electrical or pneumatic assist.	1) Failure to open.	None; excess pressure would be vented by refief (backup) portion of vent-relief valve, ref. V-IVB-27-02.	A),B) Delay in launch or scrub - provided checkout for relief valve is included in GSE operational procedure. C),D),E),F) None; backup function would be provided by relief (backup) portion of vent-relief valve, V-IVB-27-02.	Same Same
			2) Failure to close.	LOSS OF SUBSYSTEM At any time the relief function was required, the subsystem would fail and allow tank pressure to fall too low for minimum NPSH requirement at pump inlet.	A),B) Delay in launch or scrub - provided checkout for relief valve is included in GSE operational procedure. C) None; tank pressure not significant until next phase. D) LOSS OF STAGE Loss of tank pressure would make engine performance extremely sub-marginal and probably cause cutoff. E) Repressurization operation could not be performed prior to engine restart. F) Same as D) phase.	Same Same LOSS OF MISSION Same LOSS OF MISSION
			3) Premature operation.	LOSS OF SUBSYSTEM Premature operation may cause tank pressure to remain too low for minimum NPSH requirement at pump inlet.	A),B) Delay in launch or scrub - provided checkout for relief valve is included in GSE operational procedure. C) None; tank pressure not significant until next phase. D) POSSIBLE LOSS OF STAGE Loss of tank pressure would make engine performance extremely submarginal and probably cause cutoff. E) Repressurization operation could not be properly performed prior to engine restart. F) Same as D) phase.	Same Same POSSIBLE LOSS OF MISSION Same POSSIBLE LOSS OF MISSION

Δ ITEMS MARKED THUS (Δ) DO NOT OPERATE IN FLIGHT

RELIABILITY FAILURE EFFECT ANALYSIS

FUEL TANK VENT CONTROL - SUBSYSTEM

A) COUNTDOWN/CHECKOUT
B) COUNTDOWN-AUTOMATIC SEQUENCE
C) FLIGHT-BOOST PHASE
D) FLIGHT-POWERED PHASE, 1ST
E) FLIGHT-COAST PHASE, 1ST
F) FLIGHT-POWERED PHASE, 2ND
G) FLIGHT-COAST PHASE, 2ND

Δ	ITEM	FUNCTION	FAILURE TYPE	FAILURE EFFECT ON SUBSYSTEM PERFORMANCE	FAILURE EFFECT ON S-IVB STAGE	FAILURE EFFECT ON SATURN VEHICLE
	Vent-Relief Valve V-IVB-27-02	This is a dual purpose device with the venting function (open & close) pneumatically powered through a pneumatic control valve that is solenoid operated and receives control signals from the sequencer which is controlled by signals from pressure sensing switches or command sources. The relief function is performed by a spring loaded mechanism adjusted to operate at an absolute pressure safely higher (approximately 1 psi) than the regular relief valve in the venting system and thus providing a backup relief function.	1) Failure to open (vent function only). NOTE: Venting operation before phase E) should not be possible except by command signal as auto-venting sequence is not initiated until approximately 15 min. of first coast (phase E) have elapsed.	LOSS OF SUBSYSTEM Normal venting operation (electro-pneumatic control) of valve due to signal from pressure sensor would not occur but relief valve would control maximum tank pressure within preset safety limits.	A),B) Delay in launch or scrub - provided checkout for vent valve is included in GSE operational procedure. C) None; venting (if required) during this phase would be provided by relief valve at approximately 2 psi higher than by normal venting or by command. D) Same as C). E) Degraded performance - relief valve would provide excess pressure control as in C) and D), but without ullage (32 sec.) cycle to settle liquid. Venting prior to repressurization operation could not be performed. F) POSSIBLE LOSS OF STAGE Provided failure occurred in phase E). None; provided failure occurred in phase F).	Same Same Same POSSIBLE LOSS OF MISSION Effect is dependent on tank ullage condition preceding engine restart.
			2) Premature operation (vent function only). NOTE: Premature operation before phase E) should not be possible except by command signal as auto-venting sequence is not initiated until approximately 15 min. of first coast (phase E) have elapsed.	LOSS OF SUBSYSTEM Premature operation of valve will seriously degrade subsystem performance. The time period of particular phase in which failure occurs is vital in determining the effect on stage and/or mission. Auto-vent system cannot operate as pressure would not activate high pressure sensor switch.	A),B) Delay in launch or scrub - provided checkout for vent valve is included in GSE operational procedure. C) None; propellant tank pressures not significant during this phase. D) POSSIBLE LOSS OF STAGE 1) premature operation before engine start may cause failure to start. 2) premature operation after engine start would cause degradation of performance due to low net positive suction head (NPSH) in pump inlet and this may cause engine cutoff. (continued)	Same Same POSSIBLE LOSS OF MISSION

Δ ITEMS MARKED THUS (Δ) DO NOT OPERATE IN FLIGHT

RELIABILITY FAILURE EFFECT ANALYSIS

FUEL TANK VENT CONTROL - SUBSYSTEM

A) COUNTDOWN/CHECKOUT
B) COUNTDOWN - AUTOMATIC SEQUENCE
C) FLIGHT - BOOST PHASE
D) FLIGHT - POWERED PHASE, 1ST
E) FLIGHT - COAST PHASE, 1ST
F) FLIGHT - POWERED PHASE, 2ND
G) FLIGHT - COAST PHASE, 2ND

Δ ITEM	FUNCTION	FAILURE TYPE	FAILURE EFFECT ON SUBSYSTEM PERFORMANCE	FAILURE EFFECT ON S-IVB STAGE	FAILURE EFFECT ON SATURN VEHICLE
Vent-Relief Valve V-IVB-27-02 (continued)		2) Premature operation (vent function only). (continued)		(continued) E) POSSIBLE LOSS OF STAGE Premature operation may cause loss of tank pressure and prevent repressurization. F) Same as D).	POSSIBLE LOSS OF MISSION Drop of pressure during repressurization may cause engine start failure in following phase F).
	Vent function only.	3) Failure to close (vent function only).	LOSS OF SUBSYSTEM Failure to close will seriously degrade subsystem performance after that portion of venting operation where valve would normally close. The time period of particular phase in which failure occurs is vital in determining the effect on stage and/or mission.	A),B) Delay in launch or scrub - provided checkout for vent valve is included in GSE operational procedure. C) None; propellant tank pressures not significant during this phase. D) None; venting function during this phase should not be possible except by command so valve should not open to permit this malfunction. E) LOSS OF STAGE Failure to close will cause loss of tank pressure and prevent repressurization. F) Same as D).	Same Same Same LOSS OF MISSION Loss of pressure during repressurization operation would cause engine start failure in following phase F).
	Relief function only.	4) Failure to open (relief function only). NOTE: This would be part of a multiple failure as this relief function is required only in case of prior failure of regular relief valve (V-IVB-27-01-A).	POSSIBLE LOSS OF SUBSYSTEM Failure to open at any time required after lift-off could cause tank rupture provided pressures became sufficiently high.	A),B) None; backup relief function not required during countdown - would require failure of regular relief valve. C) POSSIBLE LOSS OF STAGE Venting or relief of pressure not normally required during this phase, but if excess pressure developed, it would not be relieved. (continued)	Same POSSIBLE LOSS OF VEHICLE

Δ ITEMS MARKED THUS (##) DO NOT OPERATE IN FLIGHT

RELIABILITY FAILURE EFFECT ANALYSIS

FUEL TANK VENT CONTROL - SUBSYSTEM

A) COUNTDOWN/CHECKOUT
B) COUNTDOWN-AUTOMATIC SEQUENCE
C) FLIGHT-BOOST PHASE
D) FLIGHT-POWERED PHASE, 1ST
E) FLIGHT-COAST PHASE, 1ST
F) FLIGHT-POWERED PHASE, 2ND
G) FLIGHT-COAST PHASE, 2ND

Δ ITEM	FUNCTION	FAILURE TYPE	FAILURE EFFECT ON SUBSYSTEM PERFORMANCE	FAILURE EFFECT ON S-IVB STAGE	FAILURE EFFECT ON SATURN VEHICLE
Vent-Relief Valve V-IVB-27-02 (continued)		4) Failure to open (relief function only). (continued)		(continued) D) POSSIBLE LOSS OF STAGE Excess tank pressure (if it occurred) would not be relieved. E) None; auto-venting used during this phase. F) Same as D).	POSSIBLE LOSS OF VEHICLE POSSIBLE LOSS OF VEHICLE
	Relief function only.	5) Failure to close (relief function only). NOTE: This would be the second portion of a multiple failure as this relief function (valve open) is not required unless the regular relief valve has already failed to operate.	LOSS OF SUBSYSTEM Failure of relief valve to close after operation will drop NPSH to an unsafe value for pump operation during power phases.	A),B) None; backup relief function not required during countdown - would require failure of regular relief valve. C) None; tank pressure not significant during this phase. D) PROBABLE LOSS OF STAGE 1) Failure to close before engine start would cause failure to start. 2) Failure to close after engine start would cause severe degradation of performance due to low NPSH in pump inlet and this may cause engine cutoff. E) None; auto-venting used during this phase - valve should not open. F) Same as D).	Same Same PROBABLE LOSS OF MISSION Same PROBABLE LOSS OF MISSION

Δ ITEMS MARKED THUS (Δ) DO NOT OPERATE IN FLIGHT

RELIABILITY FAILURE EFFECT ANALYSIS

FUEL TANK VENT CONTROL - SUBSYSTEM

A) COUNTDOWN/CHECKOUT
B) COUNTDOWN - AUTOMATIC SEQUENCE
C) FLIGHT - BOOST PHASE
D) FLIGHT - POWERED PHASE, 1ST
E) FLIGHT - COAST PHASE, 1ST
F) FLIGHT - POWERED PHASE, 2ND
G) FLIGHT - COAST PHASE, 2ND

Δ	ITEM	FUNCTION	FAILURE TYPE	FAILURE EFFECT ON SUBSYSTEM PERFORMANCE	FAILURE EFFECT ON S-IVB STAGE	FAILURE EFFECT ON SATURN VEHICLE
	Vent-Relief Valve V-IVB-27-02 (continued)	Relief function only.	6) Premature operation.	POSSIBLE LOSS OF SUBSYSTEM Premature operation may drop NPSH to an unsafe value for pump operation during power phases.	A),B) Delay in launch or scrub - provided checkout for relief valve is included in GSE operational procedure C) None; tank pressure not significant during this phase. D) POSSIBLE LOSS OF STAGE Premature operation will cause some degradation of engine performance, but the severity will depend on how low the valve operating pressure range (open-close) is. E) Repressurization operation will be affected. F) Same as D).	Same Same POSSIBLE LOSS OF MISSION Same POSSIBLE LOSS OF MISSION
	High Pressure Sensing Switch V-IVB-27-03	To sense tank pressure and provide signal to sequencer to provide 20-second ullage cycle and open vent valve.	1) Failure to make contact.	LOSS OF SUBSYSTEM Normal venting operation (electro-pneumatic control) of valve would not occur, but relief valve would control maximum tank pressure within preset safety limits.	A),B) Delay in launch or scrub - provided checkout for pressure sensor is included in GSE operational procedure. C) None; pressure sensing switch inactivated during this phase. D) Same as C). E) Degraded performance - high pressure venting would be provided by relief valve, but ullage (20 sec.) cycle to settle liquid would not occur - liquid may escape each venting cycle. F) Same as C).	Same Same Same Same

Δ ITEMS MARKED THUS (Δ) DO NOT OPERATE IN FLIGHT

RELIABILITY FAILURE EFFECT ANALYSIS

FUEL TANK VENT CONTROL - SUBSYSTEM

A) COUNTDOWN/CHECKOUT
B) COUNTDOWN - AUTOMATIC SEQUENCE
C) FLIGHT - BOOST PHASE
D) FLIGHT - POWERED PHASE, 1ST
E) FLIGHT - COAST PHASE, 1ST
F) FLIGHT - POWERED PHASE, 2ND
G) FLIGHT - COAST PHASE, 2ND

Δ ITEM	FUNCTION	FAILURE TYPE	FAILURE EFFECT ON SUBSYSTEM PERFORMANCE	FAILURE EFFECT ON S-IVB STAGE	FAILURE EFFECT ON SATURN VEHICLE
High Pressure Sensing Switch V-IVB-27-03 (continued)		2) Premature operation.	Degraded Performance Premature operation of pressure sensing switch will cause vent valve to open and reduce tank pressure at some pressure point below the correct value.	A),B) Delay in launch or scrub - provided checkout for pressure sensor is included in GSE operational procedure. C) None; pressure sensing switch inactivated during this phase. D) Same as C). E) Degraded performance - auto-vent cycle would be shorter than normal and thus wasteful of the ullage propellant. F) Same as C).	Same Same Same Same Same
		3) Failure to break contact.	LOSS OF SUBSYSTEM After the first (auto-vent) valve open signal from the high pressure sensor, a normal auto-venting cycle would occur, but the computer section that feeds this signal into the sequencer would become disabled until the signal from the high pressure sensor is removed at least momentarily. Failure to break this circuit after make will render the auto-vent system inoperative for the remainder of the auto-vent operation or until the auto-vent sequence is recycled by (off-on) command signals.	A),B) Delay in launch or scrub - provided checkout for pressure sensor is included in GSE operational procedure. C) None; pressure sensing switch inactivated during this phase. D) Same as C). E) Degraded performance (see subsystem effect). F) Same as C).	Same Same Same Same Same

Δ ITEMS MARKED THUS (Δ) DO NOT OPERATE IN FLIGHT

RELIABILITY FAILURE EFFECT ANALYSIS

A) COUNTDOWN/CHECKOUT
B) COUNTDOWN-AUTOMATIC SEQUENCE
C) FLIGHT-BOOST PHASE
D) FLIGHT-POWERED PHASE, 1ST
E) FLIGHT-COAST PHASE, 1ST
F) FLIGHT-POWERED PHASE, 2ND
G) FLIGHT-COAST PHASE, 2ND

FUEL TANK VENT CONTROL - SUBSYSTEM

Δ	ITEM	FUNCTION	FAILURE TYPE	FAILURE EFFECT ON SUBSYSTEM PERFORMANCE	FAILURE EFFECT ON S-IVB STAGE	FAILURE EFFECT ON SATURN VEHICLE
	Low Pressure Sensing Switch V-IVB-27-04	To sense tank pressure during auto-venting operation and provide signal to close vent valve when tank pressure reaches 23 psia.	1) Failure to make contact.	LOSS OF SUBSYSTEM Failure to make contact would cause release of tank pressure below the value (23 psia) desired during venting operations and would prevent successful completion of the repressurization operation.	A),B) Delay in launch or scrub - provided checkout for pressure sensor is included in GSE operational procedure. C) None; pressure sensing switch inactivated during this phase. D) Same as C). E) LOSS OF STAGE Vent valve would open on command at start of repressurization operation and would not close. Repressurization operation could not be completed. F) Same as C).	Same Same Same LOSS OF MISSION Same
			2) Failure to break contact.	LOSS OF SUBSYSTEM Failure to break contact would keep vent valve in closed position after a venting operation and disable auto-venting function.	A),B) Delay in launch or scrub - provided checkout for pressure sensor is included in GSE operational procedure. C) None; pressure sensing switch inactivated during this phase. D) Same as C). E) Degraded performance - high pressure venting would be provided by relief valve, but ullage (20 sec.) cycle to settle liquid would not occur. Liquid may escape during part of each venting cycle. Pressure could not be reduced to 23 psia prior to repressurization. F) POSSIBLE LOSS OF STAGE Provided failure occurred in phase E). None; provided failure occurred in phase F).	Same Same Same POSSIBLE LOSS OF MISSION Effect is dependent on tank ullage condition before engine restart.

Δ ITEMS MARKED THUS (Δ) DO NOT OPERATE IN FLIGHT

RELIABILITY FAILURE EFFECT ANALYSIS

FUEL TANK VENT CONTROL - SUBSYSTEM

A) COUNTDOWN/CHECKOUT
B) COUNTDOWN - AUTOMATIC SEQUENCE
C) FLIGHT - BOOST PHASE
D) FLIGHT - POWERED PHASE, 1ST
E) FLIGHT - COAST PHASE, 1ST
F) FLIGHT - POWERED PHASE, 2ND
G) FLIGHT - COAST PHASE, 2ND

Δ	ITEM	FUNCTION	FAILURE TYPE	FAILURE EFFECT ON SUBSYSTEM PERFORMANCE	FAILURE EFFECT ON S-IVB STAGE	FAILURE EFFECT ON SATURN VEHICLE
	Low Pressure Sensing Switch V-IVB-27-04		3) Premature operation.	Premature operation will shorten the auto-venting cycle by closing the vent valve before tank pressure is reduced to correct value.	A),B) Delay in launch or scrub - provided checkout for pressure sensor is included in GSE operational procedure. C) None; pressure sensing switch inactivated during this phase. D) Same as C). E) Degraded performance - auto-vent cycle would be shorter than normal and hypergolic ullage fuel would be wasted due to increased number of auto-vent cycles. Pressure could not be reduced to correct value (23 psia) prior to repressurization. F) POSSIBLE LOSS OF STAGE Provided failure occurred in phase E) and seriously affected repressurization operation.	Same Same Same Same POSSIBLE LOSS OF MISSION Effect is dependent on tank ullage condition before engine restart.
	Venting System Plumbing V-IVB-27-05	1) To connect ullage portion of LH_2 tank to pressure sensors. 2) To connect ullage portion of LH_2 tank to relief (V-IVB-27-01) and vent-relief (V-IVB-27-02) and to input of directional control (V-IVB-27-06) valve. 3) To connect directional control valve to GSE discharge vent. 4) To connect directional control valve to the vehicle discharge nozzles.	1) Excessive leakage between tank and pressure sensors.	Degraded Performance Accuracy of the pressure sensors will be reduced.	A),B) Delay in launch or scrub - provided checkout for pressure sensors is included in GSE operational procedure. C),D) None; pressure sensor signals not used until next phase. E) Degraded auto-vent performance - depending on amount of leakage. Proper venting prior to repressurization may not be possible. F) Same as C).	Same POSSIBLE LOSS OF VEHICLE Propellant gases within vehicle may cause explosion during C),D),E), and F) phases.

Δ ITEMS MARKED THUS (Δ) DO NOT OPERATE IN FLIGHT

RELIABILITY FAILURE EFFECT ANALYSIS

FUEL TANK VENT CONTROL - SUBSYSTEM

A) COUNTDOWN/CHECKOUT
B) COUNTDOWN - AUTOMATIC SEQUENCE
C) FLIGHT - BOOST PHASE
D) FLIGHT - POWERED PHASE, 1ST
E) FLIGHT - COAST PHASE, 1ST
F) FLIGHT - POWERED PHASE, 2ND
G) FLIGHT - COAST PHASE, 2ND

Δ	ITEM	FUNCTION	FAILURE TYPE	FAILURE EFFECT ON SUBSYSTEM PERFORMANCE	FAILURE EFFECT ON S-IVB STAGE	FAILURE EFFECT ON SATURN VEHICLE
	Venting System Plumbing V-IVB-27-05 (continued)		2) Excessive leakage in plumbing and/or valves between tank and directional control (V-IVB-27-06) valve.	Degraded Performance Excessive leakage causes a partial bypass on all control valve functions and may produce an explosion hazard when propellant gas is mixed with atmosphere.	A),B),C) POSSIBLE LOSS OF STAGE Danger of explosion at lower altitudes. D) POSSIBLE LOSS OF STAGE Degradation of performance will depend on leakage effect on tank pressure. Explosion unlikely in rarified atmosphere. E) Degradation of performance will depend on leakage effect on tank pressure. Repressurization may not be possible. F) Same as C).	POSSIBLE LOSS OF MISSION POSSIBLE LOSS OF MISSION POSSIBLE LOSS OF MISSION POSSIBLE LOSS OF MISSION
			3) Excessive leakage in plumbing between directional control (V-IVB-27-06) valve and GSE discharge vent.	Venting function will not be affected, but explosion and/or fire hazard will result from excessive leakage.	A),B) POSSIBLE LOSS OF STAGE Danger of explosion and/or fire. C),D),E),F) None; GSE plumbing disconnected about 20 seconds before lift-off.	POSSIBLE LOSS OF MISSION POSSIBLE LOSS OF VEHICLE Same
			4) Excessive leakage in plumbing between directional control (V-IVB-27-06) valve and vehicle discharge nozzles.	Venting functions pertaining to tank pressure will not be affected, but the propulsive effect may become unbalanced or lost.	A),B) None; vehicle vent discharge plumbing not connected until about 20 sec. before lift-off. C) POSSIBLE LOSS OF STAGE Explosion and/or fire hazard will result from excessive leakage if relief valve operates. D),E),F) Relief and vent valve operations coud disturb vehicle attitude control system due to unbalance in propulsive vents.	Same POSSIBLE LOSS OF MISSION POSSIBLE LOSS OF VEHICLE POSSIBLE LOSS OF MISSION Premature depletion of hypergolic propellants may result from vehicle attitude correction to compensate for unbalance of the propulsive vents due to excessive leakage in plumbing.

Δ ITEMS MARKED THUS (Δ) DO NOT OPERATE IN FLIGHT

RELIABILITY FAILURE EFFECT ANALYSIS

FUEL TANK VENT CONTROL - SUBSYSTEM

A) COUNTDOWN/CHECKOUT
B) COUNTDOWN - AUTOMATIC SEQUENCE
C) FLIGHT - BOOST PHASE
D) FLIGHT - POWERED PHASE, 1ST
E) FLIGHT - COAST PHASE, 1ST
F) FLIGHT - POWERED PHASE, 2ND
G) FLIGHT - COAST PHASE, 2ND

Δ	ITEM	FUNCTION	FAILURE TYPE	FAILURE EFFECT ON SUBSYSTEM PERFORMANCE	FAILURE EFFECT ON S-IVB STAGE	FAILURE EFFECT ON SATURN VEHICLE
	Directional Control Valve V-IVB-27-06	To direct vented hydrogen to GSE plumbing for all operations prior to lift-off and to vehicle (propulsive) discharge nozzles for all flight operations.	Failure to operate.	Vented hydrogen would be directed to inside of vehicle after lift-off if failure was not detected during countdown.	A) POSSIBLE LOSS OF STAGE Explosion and/or fire could result from incorrect valve position. B) Delay in launching or scrub. This function holds automatic countdown sequence. C),D),E),F) None; control power is removed from valve actuator prior to lift-off.	POSSIBLE LOSS OF MISSION POSSIBLE LOSS OF VEHICLE Same Same

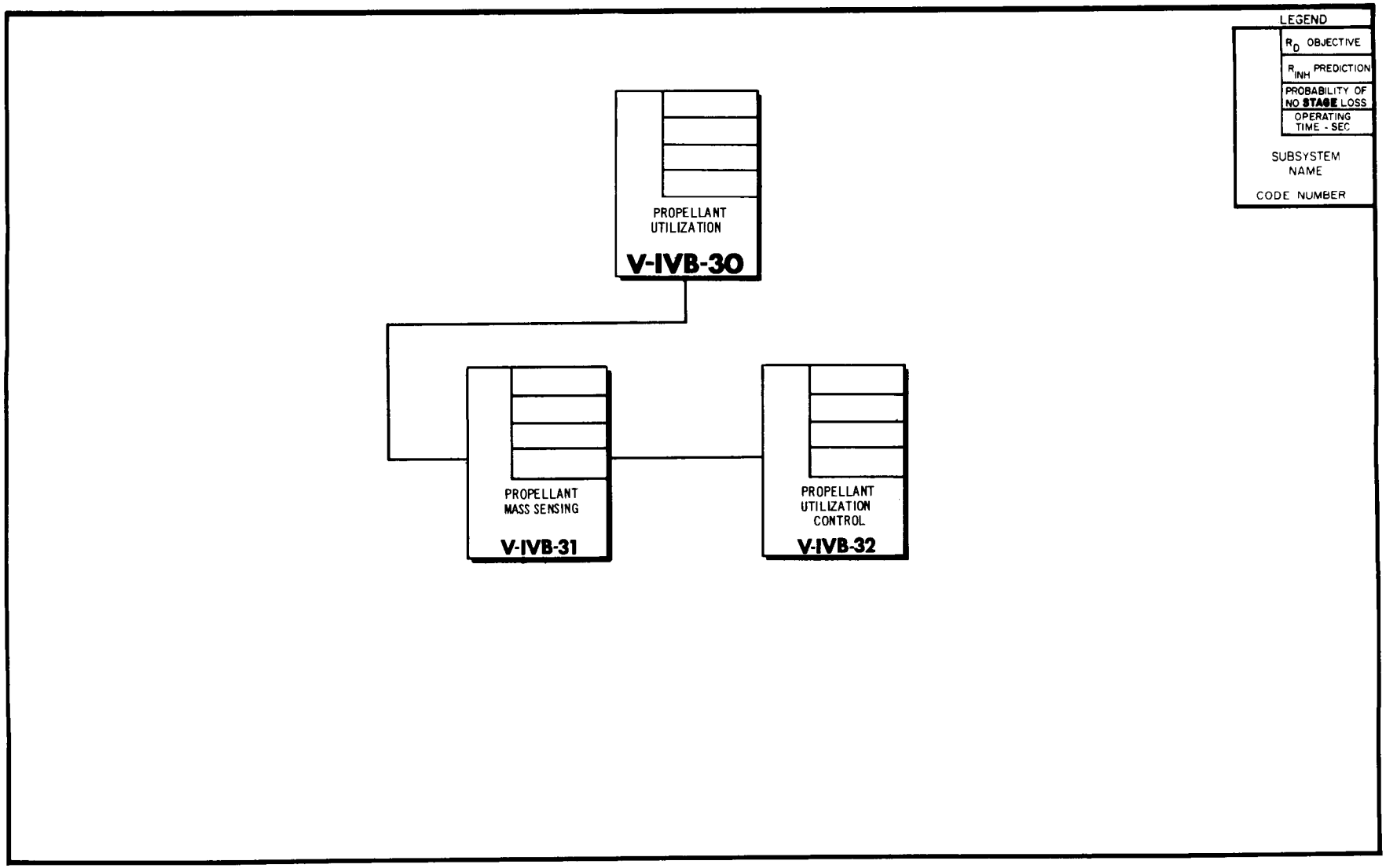
LEGEND
R_D OBJECTIVE
R_{INH} PREDICTION
PROBABILITY OF NO STAGE LOSS
OPERATING TIME - SEC
SUBSYSTEM NAME
CODE NUMBER
PROPELLANT UTILIZATION
V-IVB-30
PROPELLANT MASS SENSING
V-IVB-31
PROPELLANT UTILIZATION CONTROL
V-IVB-32

S-IVB PROPELLANT UTILIZATION SYSTEM

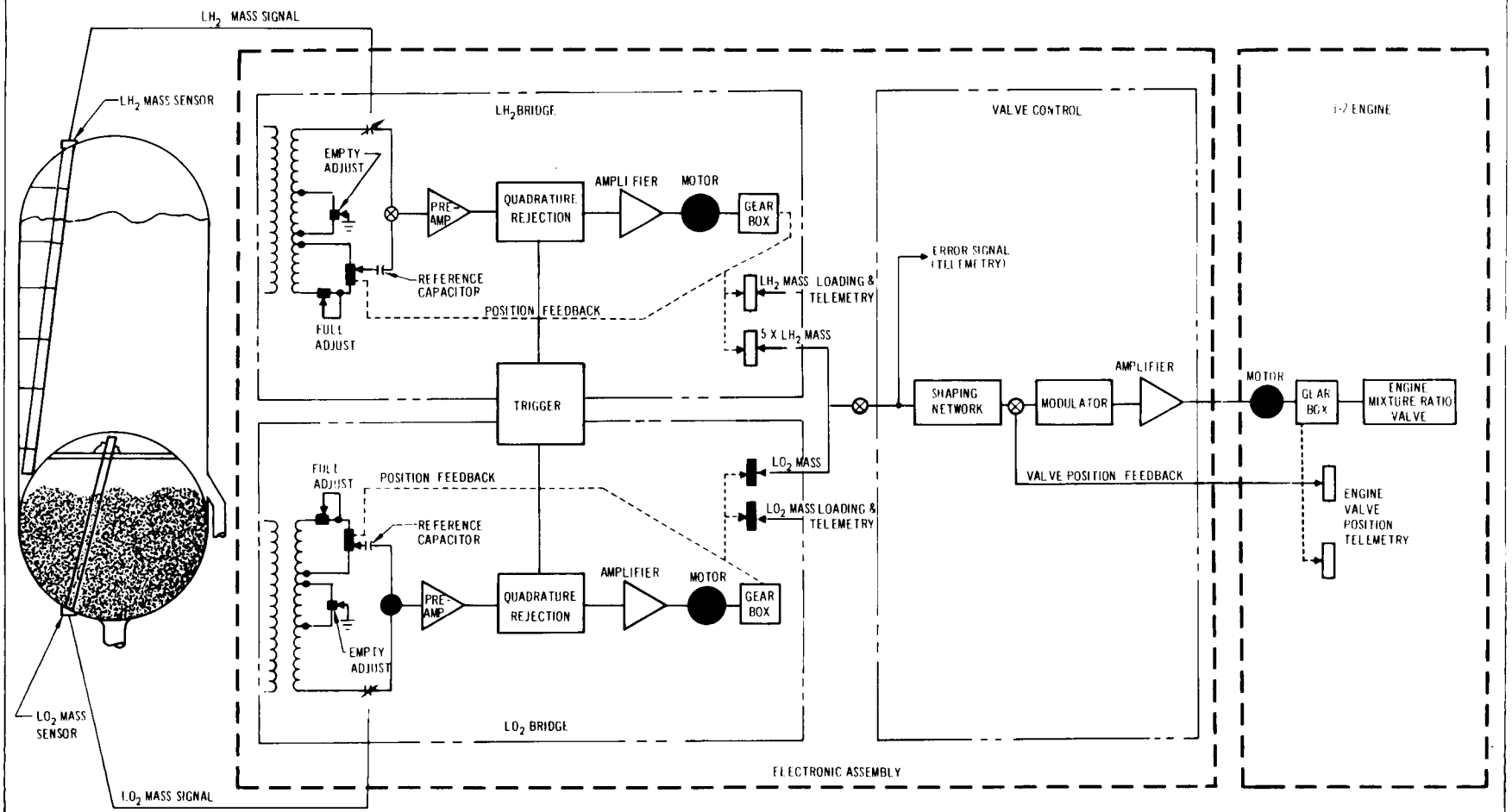

NOTE: THIS DIAGRAM INCLUDED IN REPORT FOR INFORMATION ONLY

Δ ITEMS MARKED THUS (Δ) DO NOT OPERATE IN FLIGHT

RELIABILITY FAILURE EFFECT ANALYSIS

A) COUNTDOWN/CHECKOUT
B) COUNTDOWN - AUTOMATIC SEQUENCE
C) FLIGHT - BOOST PHASE
D) FLIGHT - POWERED PHASE, 1ST
E) FLIGHT - COAST PHASE, 1ST
F) FLIGHT - POWERED PHASE, 2ND
G) FLIGHT - COAST PHASE, 2ND

PROPELLANT UTILIZATION SUBSYSTEM

Δ	ITEM	FUNCTION	FAILURE TYPE	FAILURE EFFECT ON SUBSYSTEM PERFORMANCE	FAILURE EFFECT ON S-IVB STAGE	FAILURE EFFECT ON SATURN VEHICLE
	Subsystem Wiring V-IVB-30-01 NOTE: Subsystem wiring block shown on page 31.0.	Connect electrically between all components of the propellant mass sensing subsystem (V-IVB-31) and propellant utilization control subsystem (V-IVB-32) and distributes electrical power from the following sources as required 28 V DC (V-IVB-51-E) 115 V AC (V-IVB 51-D) 21 V DC (V-IVB-51-D) 22.1 V DC (V-IVB-51-D) 115 V DC (V-IVB-51-D) 5 V DC (V-IVB-51-D) 2 V P-P SQ. WV.(V-IVB-51-D)	1) Open in circuit wiring - other than subsystem internal wiring.	PROBABLE LOSS OF SUBSYSTEM The significance of any failure depends upon nature, location, and vehicle operational phase in which failure occurs.	A),B) Delay in launching or scrub. C),D),E),F) Identical to that described in failure analysis for the component as follows. a) Identical with failure to operate mode if failure occurs before required time of operation b) Identical with failure during operation mode if failure occurs after time of operation G) Not applicable	Same Same Same
			2) Loss of 28V DC from (V-IVB-51-E)	LOSS OF SUBSYSTEM Loss of 28V DC power causes loss of all subsystem functions.	A),B) Delay in launching or scrub. C) None-functions are not required until D) phase. D) POSSIBLE LOSS OF STAGE 1) All data acquisition information is lost. 2) P U Valve will remain in last controlled position and engine mixture ratio will be uncontrolled. E) Same as C) F) Same as D) G) Not applicable	Same Same POSSIBLE LOSS OF MISSION Same

Δ ITEMS MARKED THUS (Δ) DO NOT OPERATE IN FLIGHT

RELIABILITY FAILURE EFFECT ANALYSIS

PROPELLANT UTILIZATION SUBSYSTEM

A) COUNTDOWN/CHECKOUT
B) COUNTDOWN-AUTOMATIC SEQUENCE
C) FLIGHT-BOOST PHASE
D) FLIGHT-POWERED PHASE, 1ST
E) FLIGHT-COAST PHASE, 1ST
F) FLIGHT-POWERED PHASE, 2ND
G) FLIGHT-COAST PHASE, 2ND

Δ	ITEM	FUNCTION	FAILURE TYPE	FAILURE EFFECT ON SUBSYSTEM PERFORMANCE	FAILURE EFFECT ON S-IVB STAGE	FAILURE EFFECT ON SATURN VEHICLE
	Subsystem Wiring (Continued) V-IVB-30-01		(continued) Loss of 2V P-P sq. wave, 21V DC or 115V AC from (V-IVB-51-D).	(Continued) LOSS OF SUBSYSTEM	(Continued) A),B) Delay in launching or scrub. C) None-functions are not required until next phase. D) POSSIBLE LOSS OF STAGE 1) All data acquisition information is lost 2) P U valve will remain in last controlled position and engine mixture ratio will be uncontrolled. E) Same as C) F) Same as D) G) Not applicable	 Same Same POSSIBLE LOSS OF MISSION Same Same Same
			Loss of 5V DC from (V-IVB-51-D)	Loss of 5V DC Power causes loss of all data acquisiton information.	A),B) Delay in launch or scrub. C) None. Functions not required until next phase. D) All data acquisition information is lost. E) Same as C) F) Same as D) G) Not applicable	Same Same Same Same Same Same

Δ ITEMS MARKED THUS (Δ) DO NOT OPERATE IN FLIGHT

RELIABILITY FAILURE EFFECT ANALYSIS

A) COUNTDOWN/CHECKOUT
B) COUNTDOWN-AUTOMATIC SEQUENCE
C) FLIGHT-BOOST PHASE
D) FLIGHT-POWERED PHASE, 1ST
E) FLIGHT-COAST PHASE, 1ST
F) FLIGHT-POWERED PHASE, 2ND
G) FLIGHT-COAST PHASE, 2ND

PROPELLANT UTILIZATION-ELECTRONIC ASSEMBLY SUBSYSTEM

Δ ITEM	FUNCTION	FAILURE TYPE	FAILURE EFFECT ON SUBSYSTEM PERFORMANCE	FAILURE EFFECT ON S-IVB STAGE	FAILURE EFFECT ON SATURN VEHICLE
Subsystem Wiring (Continued) V-IVB-30-01		Loss of 115V DC from (V-IVB-51-D)	LOSS OF SUBSYSTEM Loss of 115V DC causes loss of error signal to valve positioning circuits and disables valve control subsystem.	A),B) Delay in launch or scrub. C) None. Function not required until next phase. D) POSSIBLE LOSS OF STAGE P. U. Valve will remain in midposition and engine mixture will be uncontrolled. E) Same as C) F) Same as D) G) Not applicable	Same Same POSSIBLE LOSS OF MISSION Same POSSIBLE LOSS OF MISSION Same
		Loss of 22.1 V DC from (V-IVB-51-D)	LOSS OF SUBSYSTEM Loss of 22.1 V DC causes loss of valve control subsystem and valve position control will be lost.	A),B) Delay in launch or scrub. C) None. Function not required until next phase. D) POSSIBLE LOSS OF STAGE Valve position will not be controlled. E) Same as C) F) Same as D) G) Not applicable.	Same Same POSSIBLE LOSS OF MISSION Same POSSIBLE LOSS OF MISSION Same

Δ ITEMS MARKED THUS (Δ) DO NOT OPERATE IN FLIGHT

RELIABILITY FAILURE EFFECT ANALYSIS

PROPELLANT UTILIZATION-ELECTRONIC ASSEMBLY SUBSYSTEM

A) COUNTDOWN/CHECKOUT
B) COUNTDOWN-AUTOMATIC SEQUENCE
C) FLIGHT-BOOST PHASE
D) FLIGHT-POWERED PHASE, 1ST
E) FLIGHT-COAST PHASE, 1ST
F) FLIGHT-POWERED PHASE, 2ND
G) FLIGHT-COAST PHASE, 2ND

Δ	ITEM	FUNCTION	FAILURE TYPE	FAILURE EFFECT ON SUBSYSTEM PERFORMANCE	FAILURE EFFECT ON S-IVB STAGE	FAILURE EFFECT ON SATURN VEHICLE
	Electronic Assembly V-IVB-30-02	The electronics assembly (30-02) is an integral part of V-IVB-30 but is shown as part of subsystems 31 and 32 for facilitation of failure analysis Part of the electronics assembly functions during the loading phase to provide information for control of propellant loading. During powered flight phases the entire electronics assembly functions to control the P U valve and provide propellant depletion information. During S-IVB propellant and powered flight phases electronic assembly (30-02) receives signals from propellant mass sensore to provide the following functions				
*		FUNCTION A Provides a loading (LO_2) signal to GSE propellant loading computer which converts signal to mass pounds reading.	Failure during operation. Propellant loading signal either shorted to ground or open circuited.	PARTIAL LOSS OF SUBSYSTEM (LO_2) Mass information not available during loading operation	A),B) Delay in launching or scrub C),D),E),F),G) None; Function is not required during these phases.	Same C),D),E) Same
*		FUNCTION B Provides a loading (LH_2) signal to GSE propellant loading computer which converts signal to mass pounds reading.	Failure during operation. Propellant loading signal either shorted to ground or open circuited.	PARTIAL LOSS OF SUBSYSTEM Fuel (LH_2) mass information not available during loading operation.	A),B) Delay in launching or scrub. C),D),E),F),G) None; Function is not required during these phases.	Same Same
		FUNCTION C Provides a signal directly proportional to mass of (LO_2) propellant in tank during powered flight phases.	Failure during operation. Propellant (LO_2) summing circuit either shorted to ground or open.	LOSS OF SUBSYSTEM Loss of (LO_2) mass summing signal causes errors in P U valve control position and data acquisition information	A),B),C) None; Function is not required during these phases. D) POSSIBLE LOSS OF STAGE P U valve will move to extreme position (closed or open) repending on whether failure is short or open circuit type.	Same POSSIBLE LOSS OF MISSION

Δ ITEMS MARKED THUS (Δ) DO NOT OPERATE IN FLIGHT

RELIABILITY FAILURE EFFECT ANALYSIS

A) COUNTDOWN/CHECKOUT
B) COUNTDOWN-AUTOMATIC SEQUENCE
C) FLIGHT-BOOST PHASE
D) FLIGHT-POWERED PHASE, 1ST
E) FLIGHT-COAST PHASE, 1ST
F) FLIGHT-POWERED PHASE, 2ND
G) FLIGHT-COAST PHASE, 2ND

PROPELLANT UTILIZATION-ELECTRONIC ASSEMBLY SUBSYSTEM

Δ ITEM	FUNCTION	FAILURE TYPE	FAILURE EFFECT ON SUBSYSTEM PERFORMANCE	FAILURE EFFECT ON S-IVB STAGE (Continued)	FAILURE EFFECT ON SATURN VEHICLE
Electronics Assembly V-IVB-30-02 (Continued)	FUNCTION C. (Continued)	Failure during operation propellant (LO_2) summing circuit either shorted to ground or open. (Continued)		E) Same as A) F) Same as D) G) Not applicable	POSSIBLE LOSS OF MISSION
	FUNCTION D Provides a signal directly proportional to mass of (LH_2) propellant in tank during powered flight phases.	Failure during operation. Propellant (LH_2) summing circuit either shorted to ground or open.	LOSS OF SUBSYSTEM Loss of mass (LH_2) summing signal causes errors in PU valve control position and data acquisition information	A),B),C) None; Function is not required during these phases. D) POSSIBLE LOSS OF STAGE P U valve will move to extreme position (closed or open) depending on whether failure is short or open circuit type E) Same as A) F) Same as D) G) Not applicable	Same POSSIBLE LOSS OF MISSION Same POSSIBLE LOSS OF MISSION Same
	FUNCTION E. Provides the following data acquisition signals Oxygen mass Hydrogen mass Propellant depletion P U valve position	Failure during operation	PARTIAL LOSS OF SUBSYSTEM Propellant depletion and PU valve position information not available during powered flight.	A),B), Delay in launching or scrub. C) None; Function not required until next phase. D) None; Loss of information only. E) Same as C) F) Same as D) G) Not applicable	Same Same Same Same Same Same

Δ ITEMS MARKED THUS (Δ) DO NOT OPERATE IN FLIGHT

RELIABILITY FAILURE EFFECT ANALYSIS

A) COUNTDOWN/CHECKOUT
B) COUNTDOWN-AUTOMATIC SEQUENCE
C) FLIGHT-BOOST PHASE
D) FLIGHT-POWERED PHASE, 1ST
E) FLIGHT-COAST PHASE, 1ST
F) FLIGHT-POWERED PHASE, 2ND
G) FLIGHT-COAST PHASE, 2ND

PROPELLANT UTILIZATION-ELECTRONIC ASSEMBLY

Δ	ITEM	FUNCTION	FAILURE TYPE	FAILURE EFFECT ON SUBSYSTEM PERFORMANCE	FAILURE EFFECT ON S-IVB STAGE	FAILURE EFFECT ON SATURN VEHICLE
	Electronics Assembly V-IVB-30-02 (Continued)	FUNCTION F. Provides a signal to activate the P.U. control subsystem upon command from flight sequencer after (mainstage ok) signal is received from J-2 engine.	Failure during operation.	Propellant flow rates not controlled for simultaneous depletion.	A),B),C) None. Function required for powered phases only. D) None. Engine will operate with uncontrolled propellant mixture. E) Same as A) F) POSSIBLE LOSS OF STAGE Possible premature propellant depletion causing engine cutoff and inadequate escape velocity. G) Not applicable.	Same Same POSSIBLE LOSS OF MISSION Same
			Premature operation.	None. Premature operation would not harm subsystem.	A),B),C) None. Propellant pumps are inoperative during these phases. D) POSSIBLE LOSS OF STAGE P.U. valve operation during engine start may cause perturbations resulting in failure to start. E) Same as A) F) Same as D) G) Not applicable.	Same POSSIBLE LOSS OF MISSION Same POSSIBLE LOSS OF MISSION Same

Δ ITEMS MARKED THUS (Δ) DO NOT OPERATE IN FLIGHT

RELIABILITY FAILURE EFFECT ANALYSIS

A) COUNTDOWN/CHECKOUT
B) COUNTDOWN - AUTOMATIC SEQUENCE
C) FLIGHT - BOOST PHASE
D) FLIGHT - POWERED PHASE, 1ST
E) FLIGHT - COAST PHASE, 1ST
F) FLIGHT - POWERED PHASE, 2ND
G) FLIGHT - COAST PHASE, 2ND

PROPELLANT UTILIZATION-ELECTRONIC ASSEMBLY

Δ	ITEM	FUNCTION	FAILURE TYPE	FAILURE EFFECT ON SUBSYSTEM PERFORMANCE	FAILURE EFFECT ON S-IVB STAGE	FAILURE EFFECT ON SATURN VEHICLE
	Electronics Assembly V-IVB-30-02 (Continued)	During all operational phases (A-G) the modulator and servo amplifier (V-IVB-30-02-b) is part of a closed loop servo system which keeps P.U. valve in mid-position until (P.U. activate) signal is received from flight control sequencer. After P.U. activate signal the P.U. valve position is controlled by the sensed signal from the mass sensing bridges and the feedback signal from the valve position indicator to control the mixture ratio of fuel and oxidizer after receiving (mainstage ok) signal from J2 engine	Failure to operate	LOSS OF SUBSYSTEM Failure of modulator and servoamplifier results in loss of control of P.U. valve. Data acquisition signal would indicate valve position in a normal manner.	A),B) Delay in launching or scrub-Provided subsystem checkout is included in GSE operational procedure. C) None. Function not required until next phase. D) Degradation-Engine will operate with less than optimum propellant mixture ratio. E) Same as C) F) POSSIBLE LOSS OF STAGE Uncontrolled propellant mixture may cause premature engine cutoff due to propellant depletion and fail to provide adequate escape velocity. G) Not applicable.	Same Same Same Same POSSIBLE LOSS OF MISSION Same

Δ ITEMS MARKED THUS (Δ) DO NOT OPERATE IN FLIGHT

RELIABILITY FAILURE EFFECT ANALYSIS

A) COUNTDOWN/CHECKOUT
B) COUNTDOWN-AUTOMATIC SEQUENCE
C) FLIGHT-BOOST PHASE
D) FLIGHT-POWERED PHASE, 1ST
E) FLIGHT-COAST PHASE, 1ST
F) FLIGHT-POWERED PHASE, 2ND
G) FLIGHT-COAST PHASE, 2ND

PROPELLANT UTILIZATION-ELECTRONIC ASSEMBLY

Δ ITEM	FUNCTION	FAILURE TYPE	FAILURE EFFECT ON SUBSYSTEM PERFORMANCE	FAILURE EFFECT ON S-IVB STAGE	FAILURE EFFECT ON SATURN VEHICLE
Electronics Assembly V-IVB-30-02 (Continued)	FUNCTION I (continued)	Excessive servo amplifier gain.	None. Subsystem would operate in unstable manner and with degrades performance.	A),B) Delay in launching or scrub. C) None. Function not required until D) phase. D) POSSIBLE LOSS OF STAGE Instability in P.U. control system may cause engine failure. E) Same as C) F) Same as D) G) Not applicable.	Same Same POSSIBLE LOSS OF MISSION Same POSSIBLE LOSS OF MISSION Same
	Power Amplifier (Servo Amplifier)	Low servo amplifier gain.	None. Subsystem would operate in subnormal manner and with degradation of performance commensurate with loss of gain.	A),B) Delay in launching or scrub-provided checkout for servo amplifier is included in GSE operational procedure. C) None. Function not required until D) phase. D) Degradation-engine will operate with less than optimum propellant mixture ratio. E) Same as C) F) POSSIBLE LOSS OF STAGE Severe reduction of servo amplifier gain with consequent loss of propellant mixture control may cause premature engine cutoff due to propellant depletion and provide inadequate velocity for escape. G) Not applicable.	Same Same Same Same POSSIBLE LOSS OF MISSION Same

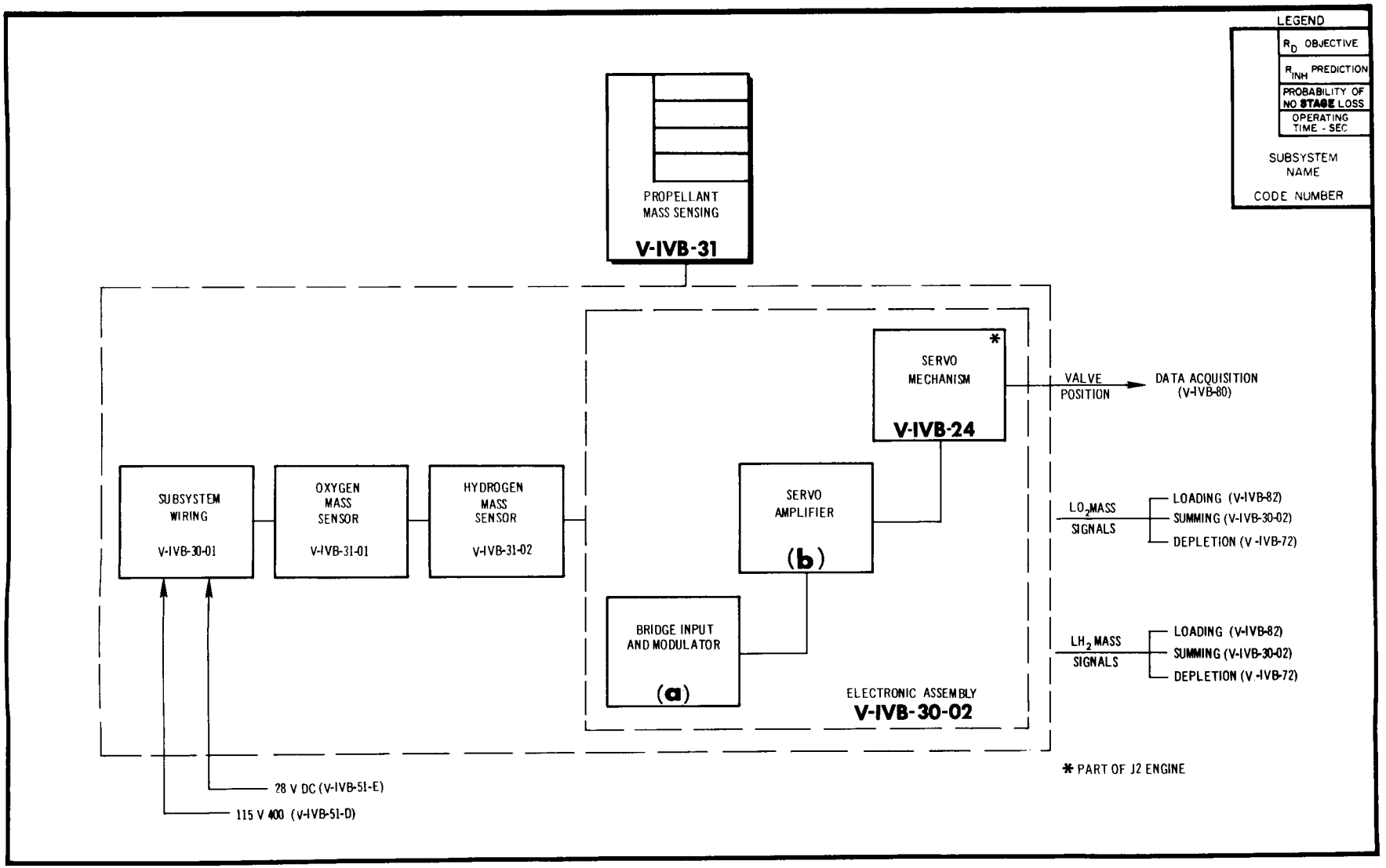
LEGEND
R_D OBJECTIVE
R_{INH} PREDICTION
PROBABILITY OF NO STAGE LOSS
OPERATING TIME - SEC
SUBSYSTEM NAME
CODE NUMBER
PROPELLANT MASS SENSING
V-IVB-31
SUBSYSTEM WIRING
V-IVB-30-01
OXYGEN MASS SENSOR
V-IVB-31-01
HYDROGEN MASS SENSOR
V-IVB-31-02
SERVO MECHANISM
V-IVB-24
*
SERVO AMPLIFIER
(b)
BRIDGE INPUT AND MODULATOR
(a)
ELECTRONIC ASSEMBLY
V-IVB-30-02
VALVE POSITION
DATA ACQUISITION (V-IVB-80)
LO_2 MASS SIGNALS
LOADING (V-IVB-82)
SUMMING (V-IVB-30-02)
DEPLETION (V-IVB-72)
LH_2 MASS SIGNALS
LOADING (V-IVB-82)
SUMMING (V-IVB-30-02)
DEPLETION (V-IVB-72)
28 V DC (V-IVB-51-E)
115 V 400 (V-IVB-51-D)
* PART OF J2 ENGINE

Δ ITEMS MARKED THUS (Δ) DO NOT OPERATE IN FLIGHT

RELIABILITY FAILURE EFFECT ANALYSIS

A) COUNTDOWN/CHECKOUT
B) COUNTDOWN-AUTOMATIC SEQUENCE
C) FLIGHT-BOOST PHASE
D) FLIGHT-POWERED PHASE, 1ST
E) FLIGHT-COAST PHASE, 1ST
F) FLIGHT-POWERED PHASE, 2ND
G) FLIGHT-COAST PHASE, 2ND

PROPELLANT UTILIZATION-PROPELLANT MASS SENSING SUBSYSTEM

Δ ITEM	FUNCTION	FAILURE TYPE	FAILURE EFFECT ON SUBSYSTEM PERFORMANCE	FAILURE EFFECT ON S-IVB STAGE	FAILURE EFFECT ON SATURN VEHICLE
Oxidizer Mass Sensor V-IVB-31-01	During loading and S-IVB powered flight the oxidizer mass sensor is part of a capacitor bridge which provides a signal to the electronic assembly (30-02) proportional to propellant mass in (LO_2) tank.	1) Electrical open.	LOSS OF SUBSYSTEM Loading, data acquisition, and mass sensing functions indicate an empty tank regardless of actual propellant mass in (LO_2) tank.	A),B) Delay in launching or scrub.	Same
				C) None. Functions are not required until next phase.	Same
				D) LOSS OF STAGE 1) Activation of P.U. subsystem would move bypass valve on (LO_2) propellant pump to open position and cause (LH_2) rich mixture in engine and leave large (LO_2) mass at end of second powered phase. 2) P.U. valve position and data acquisition information is lost.	LOSS OF MISSION
				E) Same as C)	Same
				F) POSSIBLE LOSS OF STAGE Uncontrolled propellant mixture may cause premature engine cutoff due to propellant depletion and fail to provide adequate escape velocity.	POSSIBLE LOSS OF MISSION
				G) Not applicable.	Same

Δ ITEMS MARKED THUS (Δ) DO NOT OPERATE IN FLIGHT

RELIABILITY FAILURE EFFECT ANALYSIS

A) COUNTDOWN/CHECKOUT
B) COUNTDOWN-AUTOMATIC SEQUENCE
C) FLIGHT-BOOST PHASE
D) FLIGHT-POWERED PHASE, 1ST
E) FLIGHT-COAST PHASE, 1ST
F) FLIGHT-POWERED PHASE, 2ND
G) FLIGHT-COAST PHASE, 2ND

PROPELLANT UTILIZATION-PROPELLANT MASS SENSING SUBSYSTEM

Δ ITEM	FUNCTION	FAILURE TYPE	FAILURE EFFECT ON SUBSYSTEM PERFORMANCE	FAILURE EFFECT ON S-IVB STAGE	FAILURE EFFECT ON SATURN VEHICLE
Oxidizer Mass Sensor V-IVB-31-01 (Continued)		2) Electrical short.	LOSS OF SUBSYSTEM Loading, data acquisition, and mass sensing functions indicate a full tank regardless of actual propellant mass in (LO_2) tank.	A),B) Delay in launching or scrub. C) None. Functions are not required until next phase. D) POSSIBLE LOSS OF STAGE 1) Activation of P.U. subsystem would move bypass valve on (LO_2) propellant pump to closed position and cause lox-rich propellant mixture in engine, and leave large (LH_2) mass at end of second powered phase. 2) P.U. valve position information is lost. E) Same as C) F) POSSIBLE LOSS OF STAGE Uncontrolled propellant mixture may cause premature engine cutoff due to propellant depletion and fail to provide adequate escape velocity. G) Not applicable.	Same Same POSSIBLE LOSS OF MISSION Same POSSIBLE LOSS OF MISSION Same

Δ ITEMS MARKED THUS (Δ) DO NOT OPERATE IN FLIGHT

RELIABILITY FAILURE EFFECT ANALYSIS

A) COUNTDOWN/CHECKOUT
B) COUNTDOWN-AUTOMATIC SEQUENCE
C) FLIGHT-BOOST PHASE
D) FLIGHT-POWERED PHASE, 1ST
E) FLIGHT-COAST PHASE, 1ST
F) FLIGHT-POWERED PHASE, 2ND
G) FLIGHT-COAST PHASE, 2ND

PROPELLANT UTILIZATION-PROPELLANT MASS SENSING SUBSYSTEM

Δ	ITEM	FUNCTION	FAILURE TYPE	FAILURE EFFECT ON SUBSYSTEM PERFORMANCE	FAILURE EFFECT ON S-IVB STAGE	FAILURE EFFECT ON SATURN VEHICLE
	Fuel Mass Sensor V-IVB-31-02	During loading and S-IVB powered flight the fuel mass sensor is part of a capacitor bridge which provides a signal to electronic assembly (30-02) proportional to propellant mass in (LH_2) tank.	1) Electrical open.	LOSS OF SUBSYSTEM Loading, data acquisition, and mass sensing functions indicate an empty tank regardless of actual propellant mass in (LH_2) tank.	A),B) Delay in launching or scrub. C) None. Functions are not required until next phase. D) POSSIBLE LOSS OF STAGE 1) Activation of P.U. system would move bypass vlave on (LO_2) propellant pump to closed position and cause (LO_2) rich mixture in engine and leave a large (LH_2) mass at end of second powered phase. 2) P.U. valve position and data acquisition information is lost. E) Same as C) F) POSSIBLE LOSS OF STAGE Uncontrolled propellant mixture may cause premature engine cutoff due to propellant depletion and cause inadequate escape velocity. G) Not applicable.	Same Same POSSIBLE LOSS OF MISSION Same POSSIBLE LOSS OF MISSION Same

Δ ITEMS MARKED THUS (Δ) DO NOT OPERATE IN FLIGHT

RELIABILITY FAILURE EFFECT ANALYSIS

A) COUNTDOWN/CHECKOUT
B) COUNTDOWN-AUTOMATIC SEQUENCE
C) FLIGHT-BOOST PHASE
D) FLIGHT-POWERED PHASE, 1ST
E) FLIGHT-COAST PHASE, 1ST
F) FLIGHT-POWERED PHASE, 2ND
G) FLIGHT-COAST PHASE, 2ND

PROPELLANT UTILIZATION-PROPELLANT MASS SENSING SUBSYSTEM

Δ ITEM	FUNCTION	FAILURE TYPE	FAILURE EFFECT ON SUBSYSTEM PERFORMANCE	FAILURE EFFECT ON S-IVB STAGE	FAILURE EFFECT ON C-1B SATURN VEHICLE
Fuel Mass Sensor V-IVB-31-02 (Continued)		2) Electrical Short	LOSS OF SUBSYSTEM Loading, data acquisition and mass sensing functions indicate a full tank regardless of actual propellant mass in (LH_2) tank.	A),B) Delay in launching or scrub. C) None. Functions are not required until next phase. D) POSSIBLE LOSS OF STAGE 1) Activation of P.U. subsystem would move bypass valve on (LO_2) propellant pump to open position and cause fuel (LH_2) rich propellant mixture in engine and leave a large (LO_2) mass at end of second powered phase. 2) P.U. valve position and data acquisition information is lost. E) Same as C) F) POSSIBLE LOSS OF STAGE Uncontrolled propellant mixture may cause premature engine cutoff due to propellant depletion and cause inadequate escape velocity. G) Not applicable.	Same Same POSSIBLE LOSS OF MISSION Same POSSIBLE LOSS OF MISSION Same

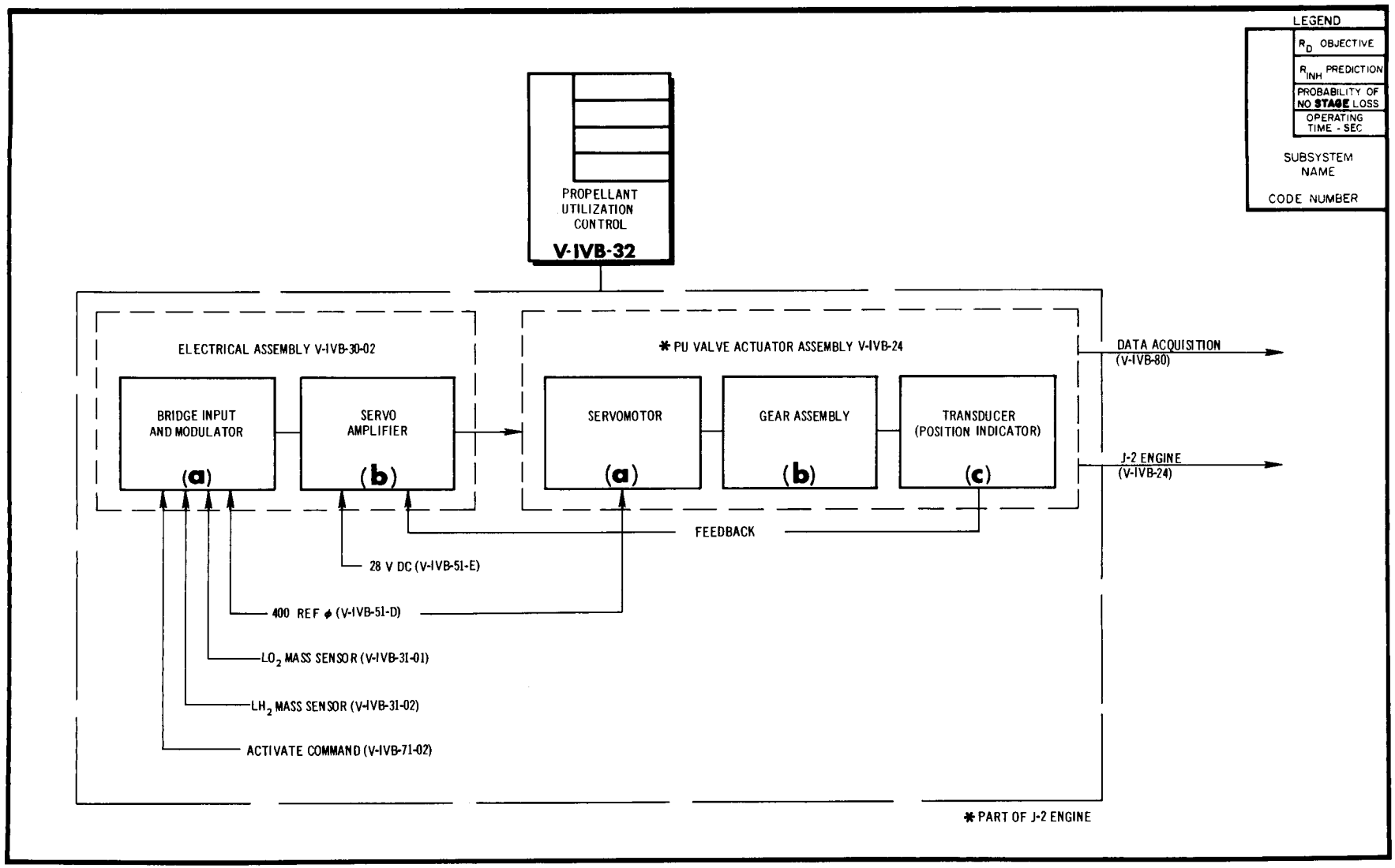
LEGEND
R_D OBJECTIVE
R_{INH} PREDICTION
PROBABILITY OF NO STAGE LOSS
OPERATING TIME - SEC
SUBSYSTEM NAME
CODE NUMBER
PROPELLANT UTILIZATION CONTROL
V-IVB-32
ELECTRICAL ASSEMBLY V-IVB-30-02
BRIDGE INPUT AND MODULATOR
(a)
SERVO AMPLIFIER
(b)
* PU VALVE ACTUATOR ASSEMBLY V-IVB-24
SERVOMOTOR
(a)
GEAR ASSEMBLY
(b)
TRANSDUCER (POSITION INDICATOR)
(c)
DATA ACQUISITION (V-IVB-80)
J-2 ENGINE (V-IVB-24)
FEEDBACK
28 V DC (V-IVB-51-E)
400 REF ϕ (V-IVB-51-D)
LO_2 MASS SENSOR (V-IVB-31-01)
LH_2 MASS SENSOR (V-IVB-31-02)
ACTIVATE COMMAND (V-IVB-71-02)
* PART OF J-2 ENGINE

Δ ITEMS MARKED THUS (Δ) DO NOT OPERATE IN FLIGHT

RELIABILITY FAILURE EFFECT ANALYSIS

A) COUNTDOWN/CHECKOUT
B) COUNTDOWN-AUTOMATIC SEQUENCE
C) FLIGHT-BOOST PHASE
D) FLIGHT-POWERED PHASE, 1ST
E) FLIGHT-COAST PHASE, 1ST
F) FLIGHT-POWERED PHASE, 2ND
G) FLIGHT-COAST PHASE, 2ND

PROPELLANT UTILIZATION-P.U. VALVE ACTUATOR ASSEMBLY
SUB ASSEMBLY

Δ	ITEM	FUNCTION	FAILURE TYPE	FAILURE EFFECT ON SUBSYSTEM PERFORMANCE	FAILURE EFFECT ON S-IVB STAGE	FAILURE EFFECT ON SATURN VEHICLE
	P.U. Valve Actuator Assembly V-IVB-32-01	P.U. Valve Control	Open or ground in feedback loop between valve position indicator pot and servo-amplifier input.	ERRATIC SUBSYSTEM PERFORMANCE Open loop servoamp operation will cause P.U. valve to assume full open or closed position depending on sense of signal into servoamplifier. This will lead to an oscillation in the P.U. system during powered flight phases. The frequency and amplitude of oscillation is not known at this time but may be determined by the design group after subsystem design is essentially complete.	A),B) Delay in launching or scrub-providing checkout for P.U. valve actuator is included in GSE operational procedure. C) None. Function not required until D) phase. D) POSSIBLE LOSS OF STAGE Unstable control of P.U. valve may cause premature engine cutoff. E) Same as C) F) POSSIBLE LOSS OF STAGE Unstable control of P.U. valve may cause premature engine cutoff. G) Not applicable.	Same Same POSSIBLE LOSS OF MISSION Same POSSIBLE LOSS OF MISSION Same

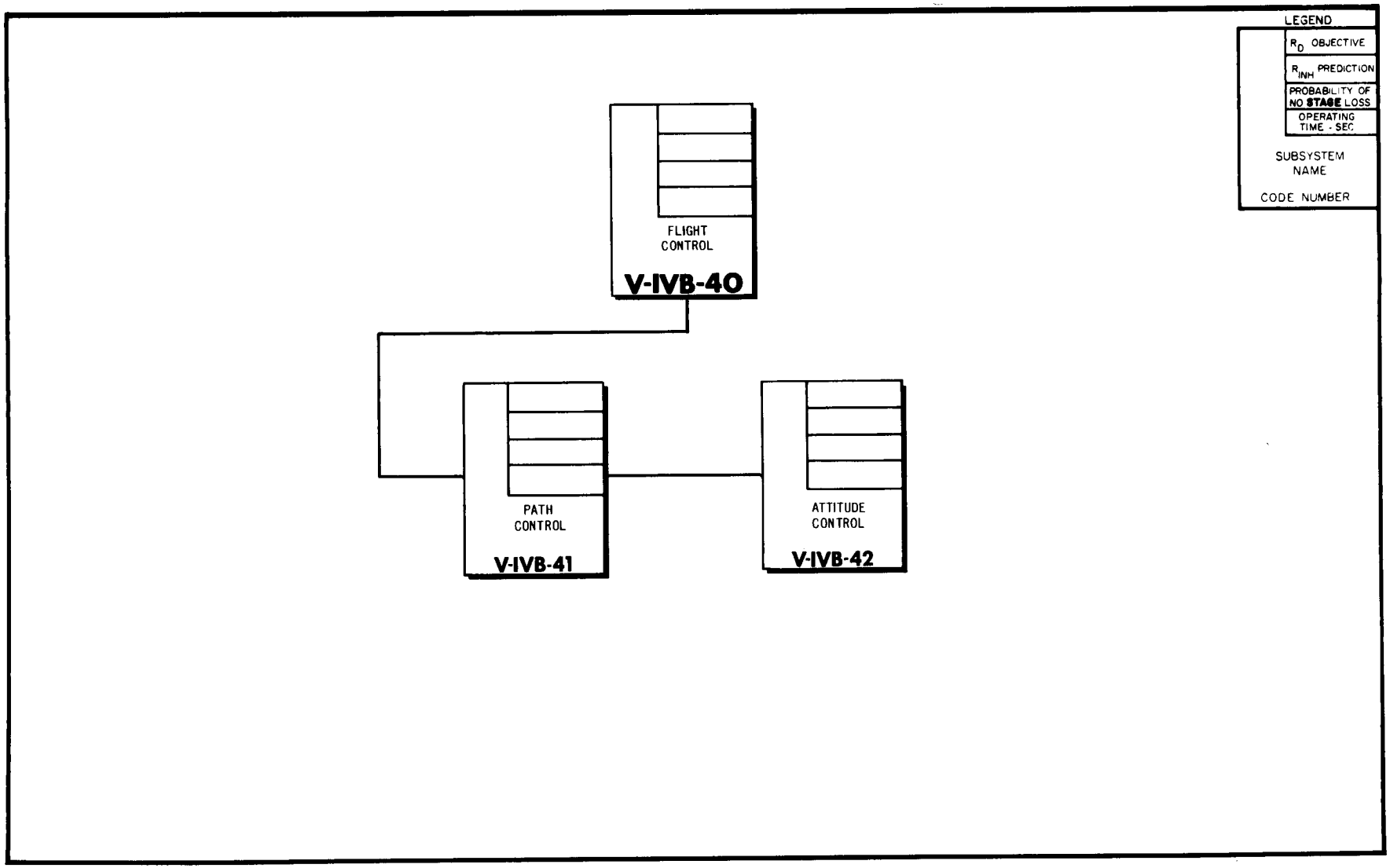
LEGEND
R_D OBJECTIVE
R_{INH} PREDICTION
PROBABILITY OF NO STAGE LOSS
OPERATING TIME - SEC
SUBSYSTEM NAME
CODE NUMBER
FLIGHT CONTROL
V-IVB-40
PATH CONTROL
V-IVB-41
ATTITUDE CONTROL
V-IVB-42

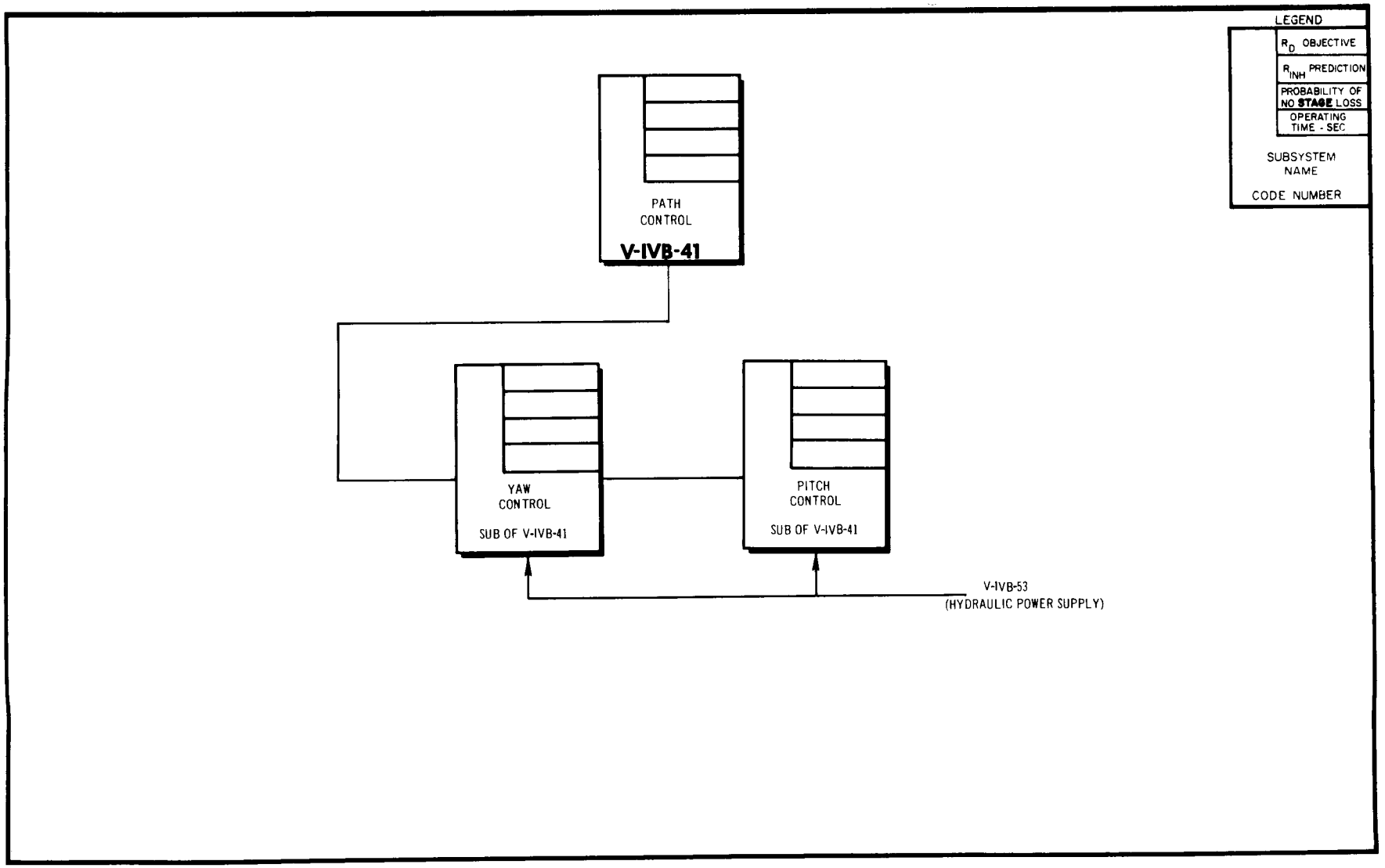
LEGEND
R_D OBJECTIVE
R_{INH} PREDICTION
PROBABILITY OF NO STAGE LOSS
OPERATING TIME - SEC
SUBSYSTEM NAME
CODE NUMBER
PATH CONTROL
V-IVB-41
YAW CONTROL
SUB OF V-IVB-41
PITCH CONTROL
SUB OF V-IVB-41
V-IVB-53
(HYDRAULIC POWER SUPPLY)

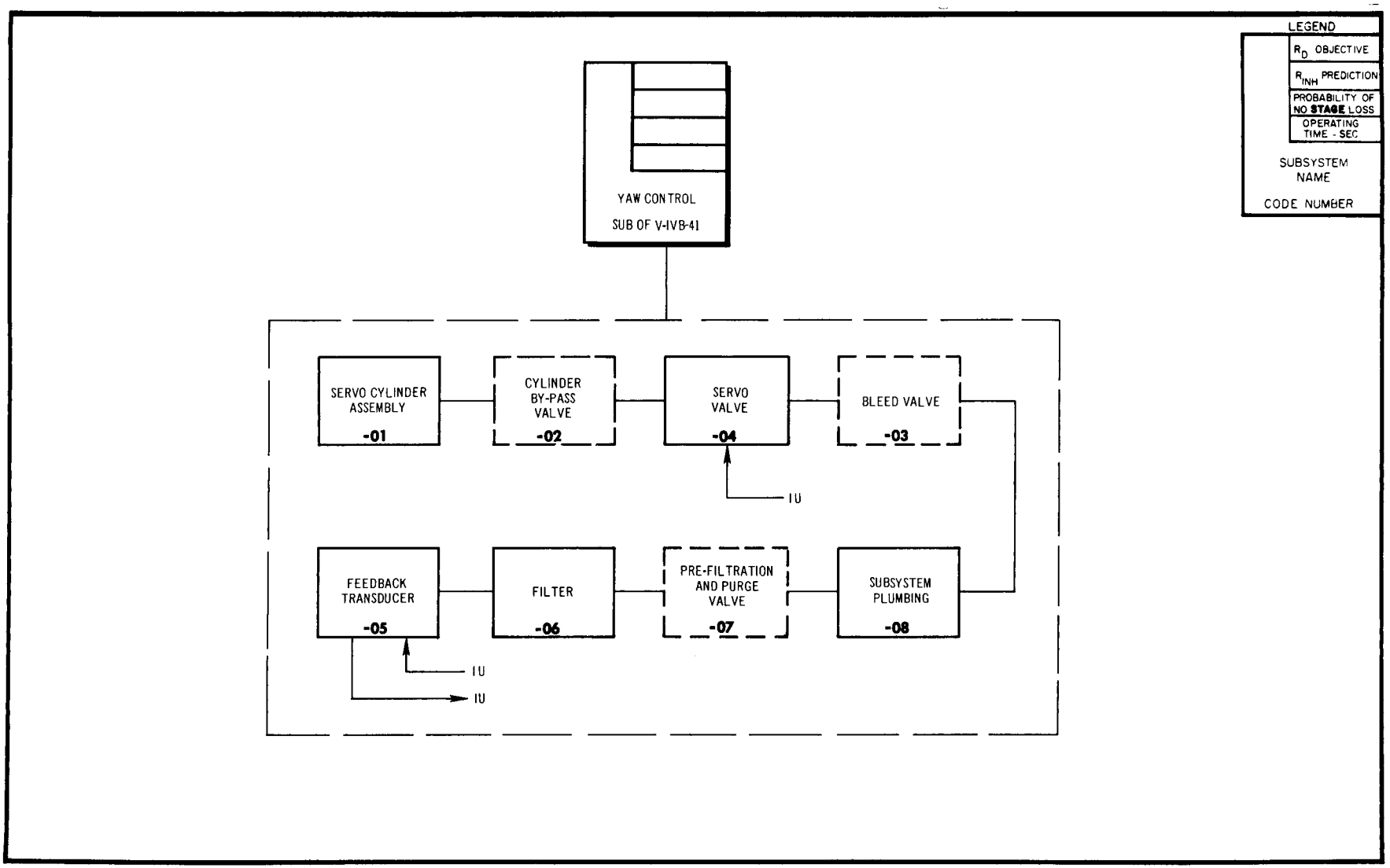
LEGEND
R_D OBJECTIVE
R_{INH} PREDICTION
PROBABILITY OF NO STAGE LOSS
OPERATING TIME - SEC
SUBSYSTEM NAME
CODE NUMBER
YAW CONTROL
SUB OF V-IVB-41
SERVO CYLINDER ASSEMBLY
-01
CYLINDER BY-PASS VALVE
-02
SERVO VALVE
-04
BLEED VALVE
-03
IU
FEEDBACK TRANSDUCER
-05
FILTER
-06
PRE-FILTRATION AND PURGE VALVE
-07
SUBSYSTEM PLUMBING
-08
IU
IU

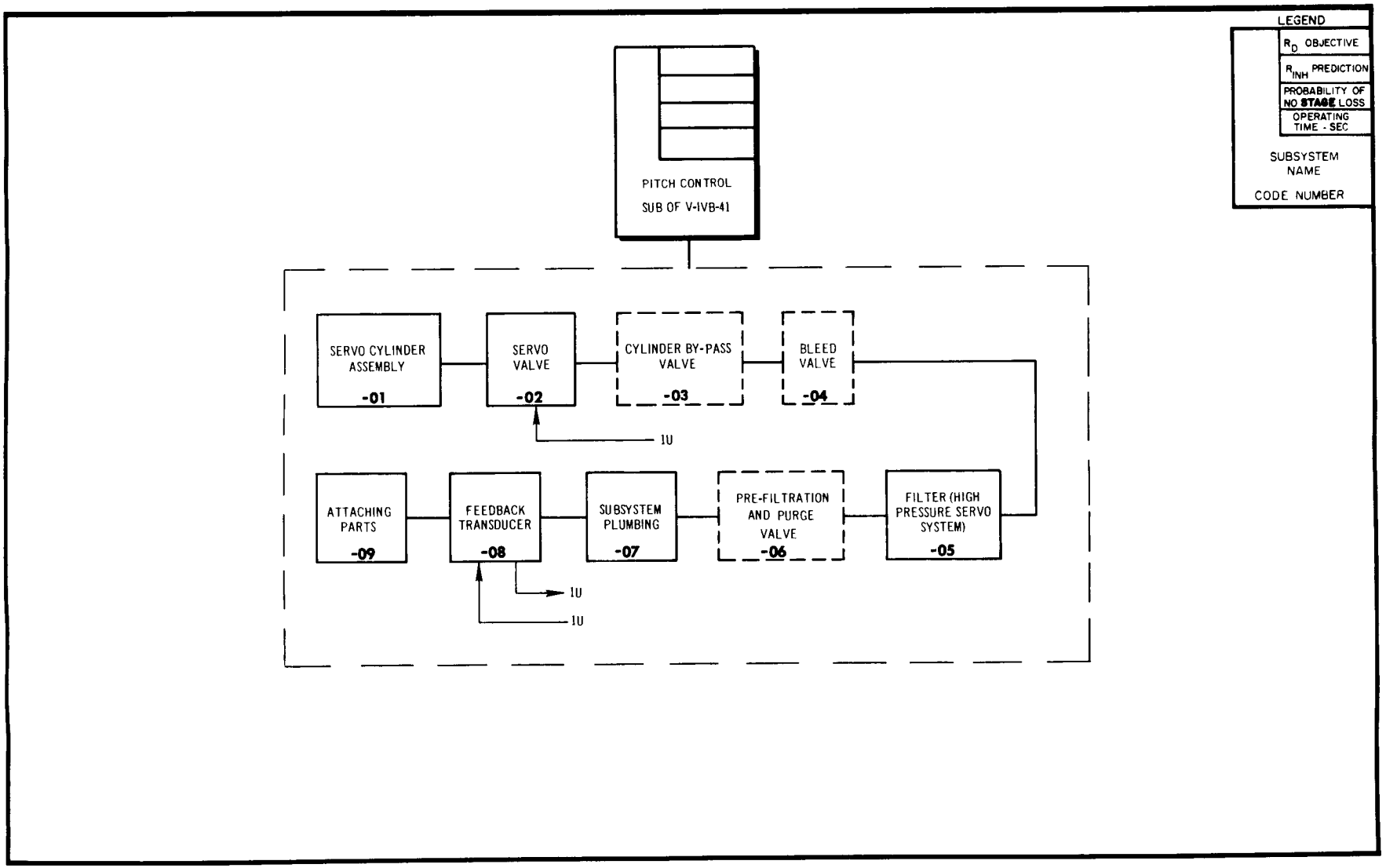
LEGEND
R_D OBJECTIVE
R_{INH} PREDICTION
PROBABILITY OF NO STAGE LOSS
OPERATING TIME - SEC
SUBSYSTEM NAME
CODE NUMBER
PITCH CONTROL
SUB OF V-IVB-41
SERVO CYLINDER ASSEMBLY -01
SERVO VALVE -02
CYLINDER BY-PASS VALVE -03
BLEED VALVE -04
1U
ATTACHING PARTS -09
FEEDBACK TRANSDUCER -08
SUBSYSTEM PLUMBING -07
PRE-FILTRATION AND PURGE VALVE -06
FILTER (HIGH PRESSURE SERVO SYSTEM) -05
1U
1U

Δ ITEMS MARKED THUS (Δ) DO NOT OPERATE IN FLIGHT

RELIABILITY FAILURE EFFECT ANALYSIS

PATH CONTROL SUBSYSTEM

A) COUNTDOWN/CHECKOUT
B) COUNTDOWN-AUTOMATIC SEQUENCE
C) FLIGHT-BOOST PHASE
D) FLIGHT-POWERED PHASE, 1ST
E) FLIGHT-COAST PHASE, 1ST
F) FLIGHT-POWERED PHASE, 2ND
G) FLIGHT-COAST PHASE, 2ND

Δ ITEM	FUNCTION	FAILURE TYPE	FAILURE EFFECT ON SUBSYSTEM PERFORMANCE	FAILURE EFFECT ON S-IVB STAGE	FAILURE EFFECT ON SATURN VEHICLE
Servo Cylinder Assembly (2) V-IVB-41-01	Positions engine to compensate for errors in flight path about the yaw or pitch axis. Mechanically actuates feedback transducer.	1) Internal leakage past piston.	POSSIBLE LOSS OF SUBSYSTEM (Depending upon severity of leak, performance is degraded.)	A),B) Delay in launch or scrub. C) None. D),F) POSSIBLE LOSS OF STAGE E),G) None.	Same Same POSSIBLE LOSS OF MISSION None
		2) Jamming of piston in any position.	LOSS OF SUBSYSTEM	A),B) Delay in launch or scrub. C) None. Engine is normally held firmly in C) phase. D),F) LOSS OF STAGE E)G) None	Same Same LOSS OF MISSION POSSIBLE LOSS OF VEHICLE Same
		3) External leakage past seals.	Same as for subsystem plumbing below. POSSIBLE LOSS OF SUBSYSTEM	D),F) POSSIBLE LOSS OF STAGE	D)F) POSSIBLE LOSS OF MISSION
		4) Structural failure	LOSS OF SUBSYSTEM Control of thrust vector is lost.	A),B) Delay in launch or scrub. C),E),G) Not applicable. There is little stress on the actuator during these phases. D),F) LOSS OF STAGE Thrust vector is uncontrolled.	Same Same LOSS OF MISSION PROBABLE LOSS OF VEHICLE

Δ ITEMS MARKED THUS (Δ) DO NOT OPERATE IN FLIGHT

RELIABILITY FAILURE EFFECT ANALYSIS

A) COUNTDOWN/CHECKOUT
B) COUNTDOWN - AUTOMATIC SEQUENCE
C) FLIGHT - BOOST PHASE
D) FLIGHT - POWERED PHASE, 1ST
E) FLIGHT - COAST PHASE, 1ST
F) FLIGHT - POWERED PHASE, 2ND
G) FLIGHT - COAST PHASE, 2ND

PATH CONTROL SUBSYSTEM

Δ	ITEM	FUNCTION	FAILURE TYPE	FAILURE EFFECT ON SUBSYSTEM PERFORMANCE	FAILURE EFFECT ON S-IVB STAGE	FAILURE EFFECT ON SATURN VEHICLE
	Servo Valve (2) V-IVB-41-02	Controls the flow of hydraulic fluid to the actuator, in proportion to a voltage from the guidance system.	1) Electrical failure (open circuit)	LOSS OF SUBSYSTEM Spool valve remains in no-flow position.	A),B) Delay in launch or scrub. C),E),G) None. D),F) LOSS OF STAGE	Same Same LOSS OF MISSION PROBABLE LOSS OF VEHICLE
			2) Electrical failure (short circuit)	LOSS OF SUBSYSTEM.	A),B) Delay in launch or scrub. C),E),G) None D),F) LOSS OF STAGE	Same Same LOSS OF MISSION PROBABLE LOSS OF VEHICLE
			3) Mechanical failure. Valve spool jammed in no flow position.	(Redundancy of valve to be determined.) LOSS OF SUBSYSTEM Engine remains fixed in one axis.	A),B) Delay in launch or scrub. C),E),G) None. D),F) LOSS OF STAGE	Same Same LOSS OF MISSION POSSIBLE LOSS OF VEHICLE
			4) Mechanical failure. Valve spool jammed in other than no flow position	LOSS OF SUBSYSTEM Engine moves to a hard-over position.	A),B) Delay in launch or scrub. C),E),G) None; D),F) LOSS OF STAGE Hard-over engine causes vehicle to tumble.	Same Same LOSS OF VEHICLE

Δ ITEMS MARKED THUS (*) DO NOT OPERATE IN FLIGHT

RELIABILITY FAILURE EFFECT ANALYSIS

PATH CONTROL SUBSYSTEM

A) COUNTDOWN/CHECKOUT
B) COUNTDOWN-AUTOMATIC SEQUENCE
C) FLIGHT-BOOST PHASE
D) FLIGHT-POWERED PHASE, 1ST
E) FLIGHT-COAST PHASE, 1ST
F) FLIGHT-POWERED PHASE, 2ND
G) FLIGHT-COAST PHASE, 2ND

Δ	ITEM	FUNCTION	FAILURE TYPE	FAILURE EFFECT ON SUBSYSTEM PERFORMANCE	FAILURE EFFECT ON S-IVB STAGE	FAILURE EFFECT ON SATURN VEHICLE
*	Cylinder By-pass valve (2) V-IVB-41-03	Manually operated to permit engine movement, without hydraulic power, during ground checkout.	1) Leakage (external)	Same as for subsystem plumbing, below.	Same	Same
			2) Jammed open.	LOSS OF SUBSYSTEM (Probably would be detected during check out. This depends upon checkout procedure, not yet determined)	A),B) Delay in launch or scrub. C) None. D),F) LOSS OF STAGE Engine would be uncontrolled E),G) None.	Same Same LOSS OF VEHICLE Same
			3) Jammed closed.	LOSS OF SUBSYSTEM Interferes with ground checkout	A), Delay in launch or scrub. B),C),D),E),F),G) None. This failure can affect manual checkout only.	Same Same
*	Bleed Valve (2) V-IVB-41-04	Manually operated to bleed vapor from hydraulic lines and to sample the fluid.	1) Fail to open	LOSS OF SUBSYSTEM Vapor and air pockets can not be completely eliminated.	A) Delay in launch or scrub. B) None. Does not stop countdown. C),D),E),F),G) None. Failure occurs in A) phase only.	Same Same Same
			2) External leak	Same as for subsystem plumbing, below.	Same	Same

Δ ITEMS MARKED THUS (Δ) DO NOT OPERATE IN FLIGHT

RELIABILITY FAILURE EFFECT ANALYSIS

PATH CONTROL SUBSYSTEM

A) COUNTDOWN/CHECKOUT
B) COUNTDOWN - AUTOMATIC SEQUENCE
C) FLIGHT - BOOST PHASE
D) FLIGHT - POWERED PHASE, 1ST
E) FLIGHT - COAST PHASE, 1ST
F) FLIGHT - POWERED PHASE, 2ND
G) FLIGHT - COAST PHASE, 2ND

Δ	ITEM	FUNCTION	FAILURE TYPE	FAILURE EFFECT ON SUBSYSTEM PERFORMANCE	FAILURE EFFECT ON S-IVB STAGE	FAILURE EFFECT ON SATURN VEHICLE
	Filter (High Pressure Servo System Filter) (2) V-IVB-41-05	Filters hydraulic fluid immediately before it enters the servo valve.	1) Implosion or deformation of element.	POSSIBLE LOSS OF SUBSYSTEM Particles from filter may jam the spool valves.	A),B) Delay in launch or scrub. C) None. D),F) POSSIBLE LOSS OF STAGE If servo valve is affected. E),G) None.	Same POSSIBLE LOSS OF MISSION None
*	Prefiltration and Purge Valve (2) V-IVB-41-06	Manually operated to permit fluid to circulate without signal from instrument section and without moving the actuator. This permits checking of the filter differential pressure (ΔP) during ground check out.	1) Jammed in flight position	Loss of ability to check main system filter.	A),B) Delay for decision. Filter ΔP can not be checked C),D),E),F),G) None. Valve must operate on ground only	Same Same
			2) Jammed in test position.	LOSS OF SUBSYSTEM Fluid is cut off from servo actuator and servo valve.	A)B) Delay in launch or scrub. C),D),E),F),G) None. This failure can occur on ground check only.	Same Same
	Subsystem Plumbing V-IVB-41-07	Connects all components of the Servo actuator assembly.	1) Leakage at connections.	POSSIBLE LOSS OF SUBSYSTEM Supply of fluid may be depleted before completion of mission.	A),B) Delay in launch or scrub. C) None. D),F) POSSIBLE LOSS OF STAGE E),G) None.	Same Same POSSIBLE LOSS OF MISSION Same

Δ ITEMS MARKED THUS (Δ) DO NOT OPERATE IN FLIGHT

RELIABILITY FAILURE EFFECT ANALYSIS

PATH CONTROL SUBSYSTEM

A) COUNTDOWN/CHECKOUT
B) COUNTDOWN-AUTOMATIC SEQUENCE
C) FLIGHT-BOOST PHASE
D) FLIGHT-POWERED PHASE, 1ST
E) FLIGHT-COAST PHASE, 1ST
F) FLIGHT-POWERED PHASE, 2ND
G) FLIGHT-COAST PHASE, 2ND

Δ	ITEM	FUNCTION	FAILURE TYPE	FAILURE EFFECT ON SUBSYSTEM PERFORMANCE	FAILURE EFFECT ON S-IVB STAGE	FAILURE EFFECT ON SATURN VEHICLE
	Feedback Transducer (2) V-IVB-41-08	Provides electrical signal through wiper circuit peculiar to actuator position. Signal is transmitted to the guidance system.	1) Open circuit before powered phase.	LOSS OF SUBSYSTEM Yaw actuator unable to find center. Will go hard-over before powered flight.	A),B) Delay in launch or scrub. C),E),G) None. D),F) LOSS OF STAGE Vehicle tumbles.	Same Same LOSS OF VEHICLE
			2) Open circuit during powered phase.	System operates "open loop" mode. (Provided displacement signal from guidance is not also lost). Possible instability.	A),B),C),E),G) Not applicable D),F) POSSIBLE LOSS OF STAGE	Same POSSIBLE LOSS OF MISSION
			3) Failure to position. (Mechanical failure of potentiometer drive)	LOSS OF SUBSYSTEM Erroneous position signal causes engine to seek a false null, thereby producing a sustained error.	A),B),C),E),G) None. D),F) PROBABLE LOSS OF STAGE	Same PROBABLE LOSS OF MISSION
	Attaching Parts V-IVB-41-09	Attach all subsystem components to engine and/or vehicle structure	1) Structural failure.	LOSS OF SUBSYSTEM Failure results in loss of control over engine thrust vector.	A),B) Delay in launch or scrub. C) None. D),F) LOSS OF STAGE E),G) None.	Same Same LOSS OF MISSION PROBABLE LOSS OF VEHICLE Same

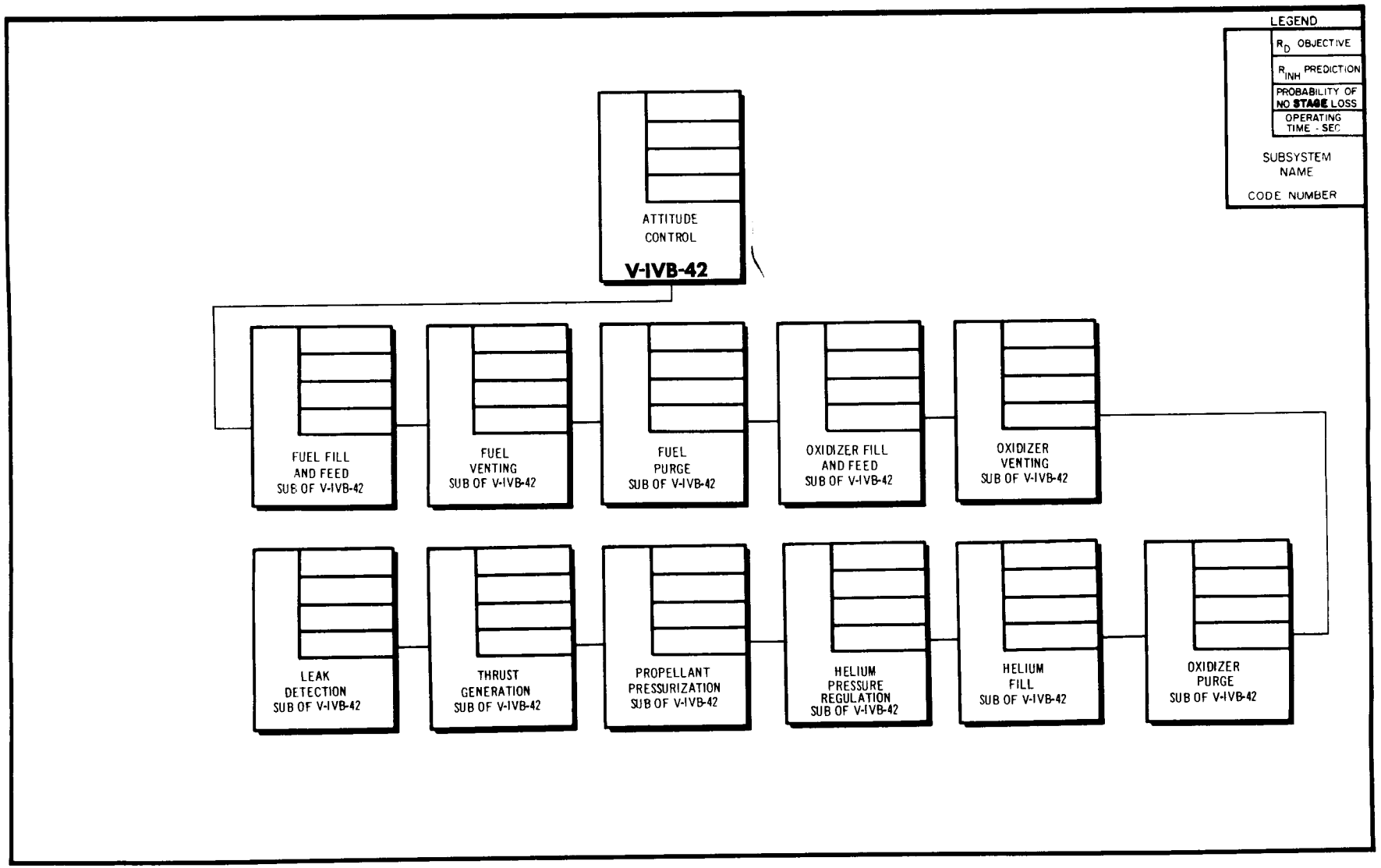
LEGEND
R_D OBJECTIVE
R_{INH} PREDICTION
PROBABILITY OF NO STAGE LOSS
OPERATING TIME - SEC
SUBSYSTEM NAME
CODE NUMBER
ATTITUDE CONTROL
V-IVB-42
FUEL FILL AND FEED SUB OF V-IVB-42
FUEL VENTING SUB OF V-IVB-42
FUEL PURGE SUB OF V-IVB-42
OXIDIZER FILL AND FEED SUB OF V-IVB-42
OXIDIZER VENTING SUB OF V-IVB-42
LEAK DETECTION SUB OF V-IVB-42
THRUST GENERATION SUB OF V-IVB-42
PROPELLANT PRESSURIZATION SUB OF V-IVB-42
HELIUM PRESSURE REGULATION SUB OF V-IVB-42
HELIUM FILL SUB OF V-IVB-42
OXIDIZER PURGE SUB OF V-IVB-42

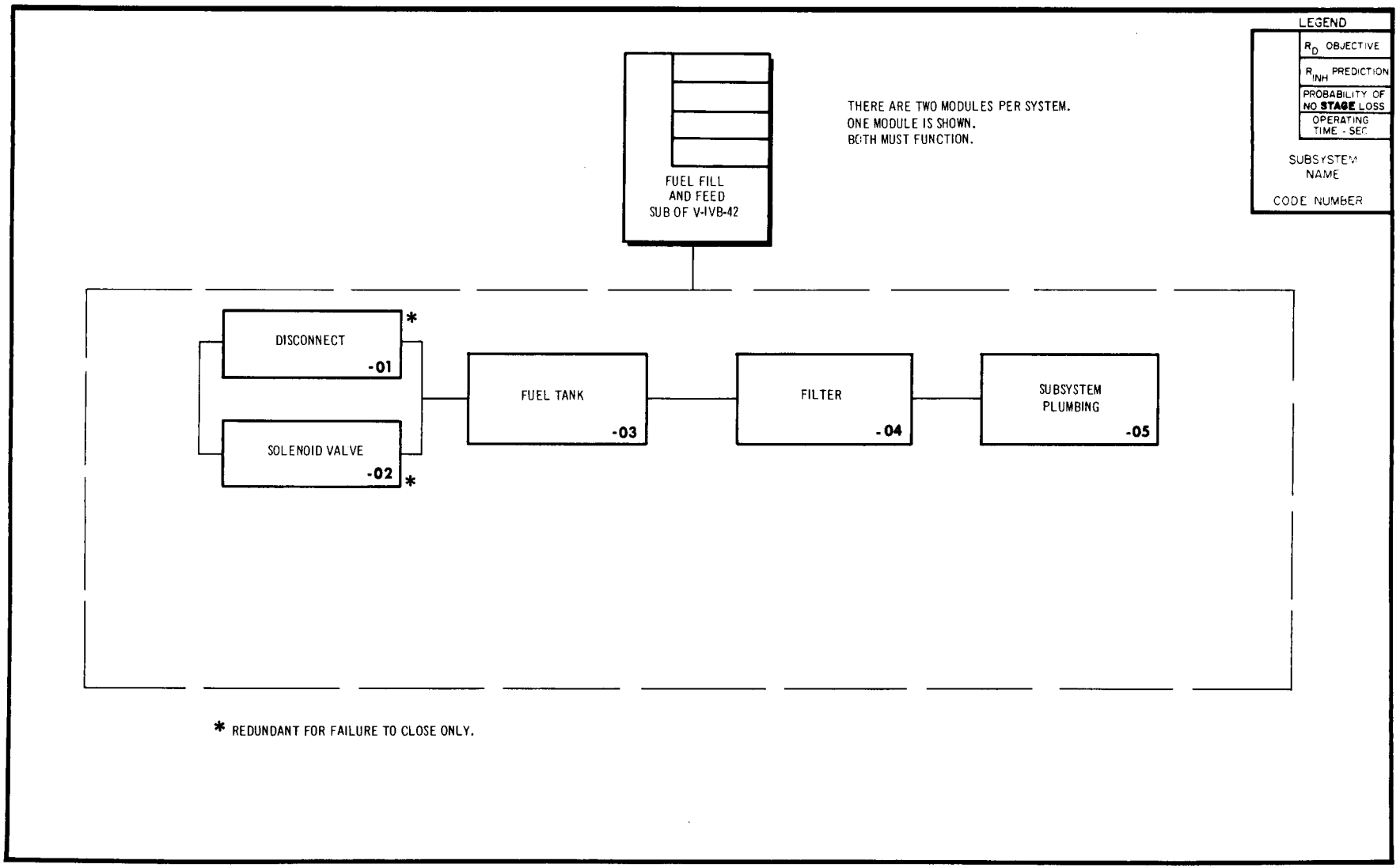
LEGEND
R_D OBJECTIVE
R_{INH} PREDICTION
PROBABILITY OF NO STAGE LOSS
OPERATING TIME - SEC
SUBSYSTEM NAME
CODE NUMBER
FUEL FILL AND FEED SUB OF V-IVB-42
THERE ARE TWO MODULES PER SYSTEM.
ONE MODULE IS SHOWN.
BOTH MUST FUNCTION.
DISCONNECT -01 *
SOLENOID VALVE -02 *
FUEL TANK -03
FILTER -04
SUBSYSTEM PLUMBING -05
* REDUNDANT FOR FAILURE TO CLOSE ONLY.

Δ ITEMS MARKED THUS (Δ) DO NOT OPERATE IN FLIGHT

RELIABILITY FAILURE EFFECT ANALYSIS

A) COUNTDOWN/CHECKOUT
B) COUNTDOWN - AUTOMATIC SEQUENCE
C) FLIGHT - BOOST PHASE
D) FLIGHT - POWERED PHASE, 1ST
E) FLIGHT - COAST PHASE, 1ST
F) FLIGHT - POWERED PHASE, 2ND
G) FLIGHT - COAST PHASE, 2ND

FUEL FILL AND FEED (ATTITUDE CONTROL SUBSYSTEM)

Δ	ITEM	FUNCTION	FAILURE TYPE	FAILURE EFFECT ON SUBSYSTEM PERFORMANCE	FAILURE EFFECT ON S-IVB STAGE	FAILURE EFFECT ON SATURN VEHICLE
	Fuel Fill Disconnect 1A48855-501 (Vehicle Half) V-IVB-42-01	Engages and locks with GSE half for filling and drainging the fuel tank. Closes when disconnected from GSE prior to lift-off.	1) Failure to engage with GSE half.	LOSS OF SUBSYSTEM Fuel fill is not possible.	A) Delay in launch or scrub. B),C),D),E),F),G) None; failure can occur in A) phase only.	Same Same
			2) External leak past seal.	POSSIBLE LOSS OF SUBSYSTEM because of fire hazard.	A) Delay in launch or scrub. B) None; fueling is completed before automatic countdown. C),D),E),F),G) None; this failure cannot occur after fueling is complete.	Same Same Same
			3) Difficult disconnect.	POSSIBLE LOSS OF SUBSYSTEM Fuel line must be disengaged prior to launch.	A) Delay in launch or scrub. B) None; fueling is completed before automatic countdown. C),D),E),F),G) None; fuel line is disengaged prior to launch.	Same Same Same
			4) Failure to close when disconnected from GSE.	None; solenoid valve prevents fuel from escaping from tank.	A),B),C),D),E),F),G) None; solenoid valve provides redundancy.	Same
	Solenoid Valve, N.C. V-IVB-42-02	Opens on ground command to permit filling and emptying fuel tank. Closes to retain fuel.	1) Failure to open or premature closing.	LOSS OF SUBSYSTEM Fuel fill is not possible.	A) Delay in launch or scrub. B),C),D),E),F),G) None; this valve opens in A) phase only.	Same Same
			2) Failure to close or internal leak.	None; disconnect is self-sealing and prevents loss of fuel when disengaged.	A) None; disconnect prevents loss of fuel. B) Does not stop countdown. C),D),E),F),G) None; disconnect is redundant for failure to close.	Same Same Same

Δ ITEMS MARKED THUS (Δ) DO NOT OPERATE IN FLIGHT

RELIABILITY FAILURE EFFECT ANALYSIS

A) COUNTDOWN/CHECKOUT
B) COUNTDOWN-AUTOMATIC SEQUENCE
C) FLIGHT-BOOST PHASE
D) FLIGHT-POWERED PHASE, 1ST
E) FLIGHT-COAST PHASE, 1ST
F) FLIGHT-POWERED PHASE, 2ND
G) FLIGHT-COAST PHASE, 2ND

FUEL FILL AND FEED (ATTITUDE CONTROL SUBSYSTEM)

Δ	ITEM	FUNCTION	FAILURE TYPE	FAILURE EFFECT ON SUBSYSTEM PERFORMANCE	FAILURE EFFECT ON S-IVB STAGE	FAILURE EFFECT ON SATURN VEHICLE
	Fuel Tank V-IVB-42-03	Stores fuel at 250 psi	Burst.	LOSS OF SUBSYSTEM Extreme fire hazard.	A),B) Scrub. POSSIBLE LOSS OF STAGE Due to fire. C) LOSS OF STAGE Due to fire. D),E),F),G) LOSS OF STAGE	POSSIBLE LOSS OF VEHICLE Due to fire. FRT .1 sec LOSS OF MISSION, POSSIBLE LOSS OF VEHICLE FRT .1 sec LOSS OF MISSION, POSSIBLE LOSS OF VEHICLE FRT .1 sec
	Filter V-IVB-42-04	Filters fuel from tank before it passes through engine quad valves.	Implosion or deformation of element.	POSSIBLE LOSS Due to particles affecting engine quad valves.	A),B),C) None; this failure cannot occur before D) phase. D),F) POSSIBLE LOSS OF STAGE Due to loss of quad valves. E),G) POSSIBLE LOSS OF ATTITUDE CONTROL Due to loss of quad valves.	Same POSSIBLE LOSS OF MISSION POSSIBLE LOSS OF MISSION
	Subsystem Plumbing V-IVB-42-05	Connects all components subjected to fuel pressure.	Leak at connections.	POSSIBLE LOSS OF SUBSYSTEM Depending on severity of leak. Possible fire.	A),B) Delay or scrub. C) POSSIBLE LOSS OF STAGE Due to fire D),F) POSSIBLE LOSS OF STAGE Due to depletion of fuel or by fire. E),G) POSSIBLE LOSS OF STAGE Due to premature depletion of fuel, or by fire.	Same POSSIBLE LOSS OF VEHICLE Due to fire. FRT .1 sec POSSIBLE LOSS OF MISSION, POSSIBLE LOSS OF VEHICLE FRT .1 sec POSSIBLE LOSS OF MISSION FRT .1 sec

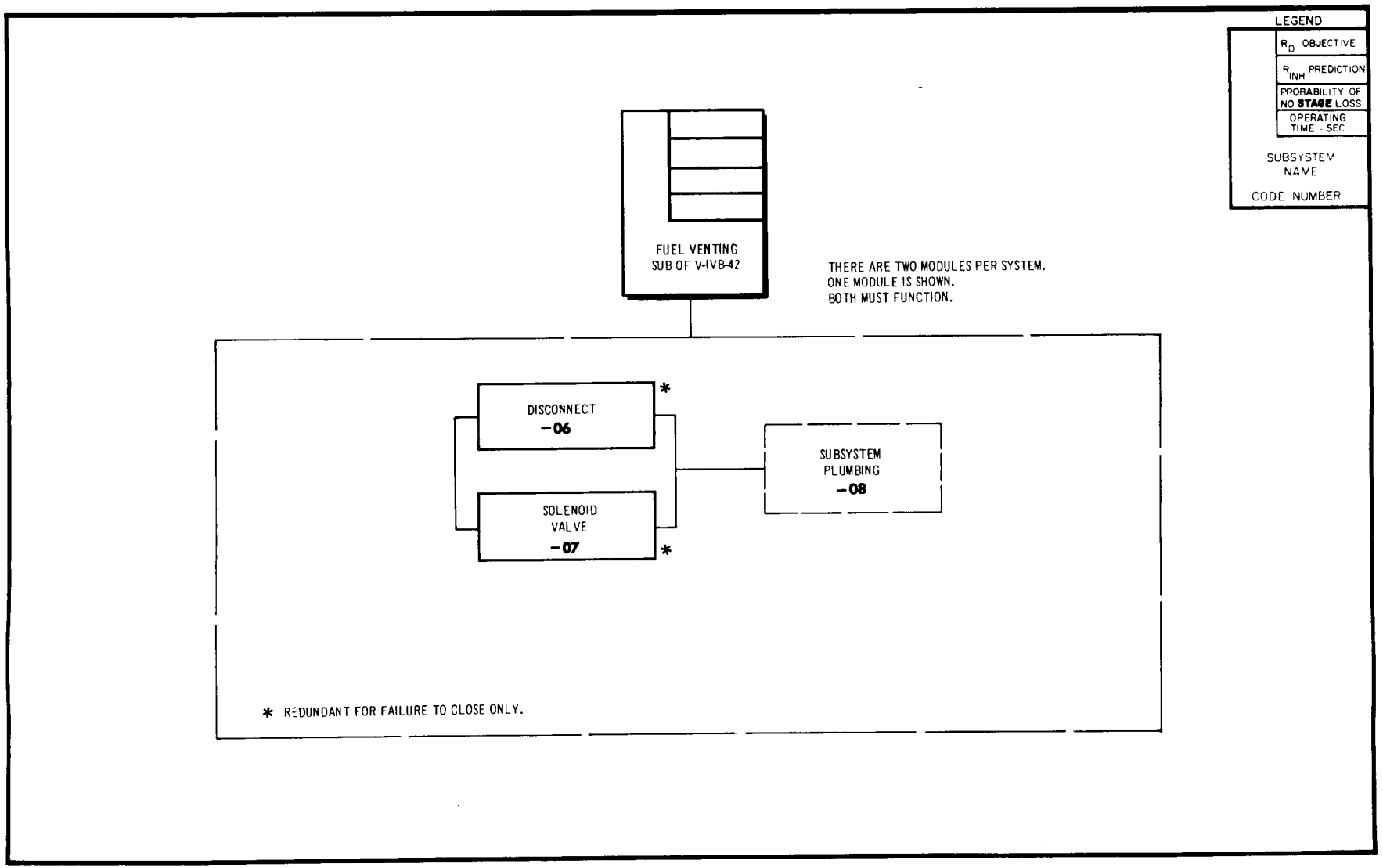
LEGEND
R_D OBJECTIVE
R_{INH} PREDICTION
PROBABILITY OF NO STAGE LOSS
OPERATING TIME - SEC
SUBSYSTEM NAME
CODE NUMBER
FUEL VENTING
SUB OF V-IVB-42
THERE ARE TWO MODULES PER SYSTEM.
ONE MODULE IS SHOWN.
BOTH MUST FUNCTION.
DISCONNECT
-06
*
SOLENOID VALVE
-07
*
SUBSYSTEM PLUMBING
-08
* REDUNDANT FOR FAILURE TO CLOSE ONLY.

Δ ITEMS MARKED THUS (Δ) DO NOT OPERATE IN FLIGHT

RELIABILITY FAILURE EFFECT ANALYSIS

A) COUNTDOWN/CHECKOUT
B) COUNTDOWN-AUTOMATIC SEQUENCE
C) FLIGHT-BOOST PHASE
D) FLIGHT-POWERED PHASE, 1ST
E) FLIGHT-COAST PHASE, 1ST
F) FLIGHT-POWERED PHASE, 2ND
G) FLIGHT-COAST PHASE, 2ND

FUEL VENTING (ATTITUDE CONTROL SUBSYSTEM)

Δ	ITEM	FUNCTION	FAILURE TYPE	FAILURE EFFECT ON SUBSYSTEM PERFORMANCE	FAILURE EFFECT ON S-IVB STAGE	FAILURE EFFECT ON SATURN VEHICLE
	Fuel Vent Disconnect (Vehicle Half) 1A49321-501 V-IVB-42-06	Engages and locks with GSE half for venting the fuel system. Closes when disengaged prior to lift-off.	1) Fail to engage.	LOSS OF SUBSYSTEM Without venting of the tank, it cannot be filled with fuel.	A) Delay in launch or scrub. B),C),D),E),F),G) None; failure can occur in A) phase only.	Same Same
			2) Fail to close when disengaged.	None; the solenoid valve prevents loss of fuel.	A),B),C),D),E),F),G) None; solenoid valve provides redundancy in failure to close.	Same
			3) Difficult disconnect.	LOSS OF SUBSYSTEM Vent line must be disengaged before launching.	A) Delay in launch B),C),D),E),F),G) Not applicable. This disconnect is separate before lift-off.	Same Same
	Solenoid Valve, N.C. V-IVB-42-07	Opens to vent fuel tank while filling. Closes to retain fuel.	1) Failure to open or premature closing.	LOSS OF SUBSYSTEM Fuel fill is not possible without venting.	A) Delay in launch or scrub. B) to be determined. C),D),E),F),G) None; valve does not operate after lift-off.	Same Same
			2) Failure to close or internal leak.	None; disconnect is self-sealing and prevents loss of fuel after being disengaged.	None	None
*	Subsystem Plumbing V-IVB-42-08	Connects solenoid valve with vent disconnect. Does not include pipe from solenoid valve to tank; this being considered under Fuel Fill and Feed.	Leak at connections.	POSSIBLE LOSS OF SUBSYSTEM Excessive leak creates a fire hazard.	A),B) Delay in launch or scrub. C),D),E),F),G) None; this portion of plumbing is not normally pressurized after lift-off.	Same Same

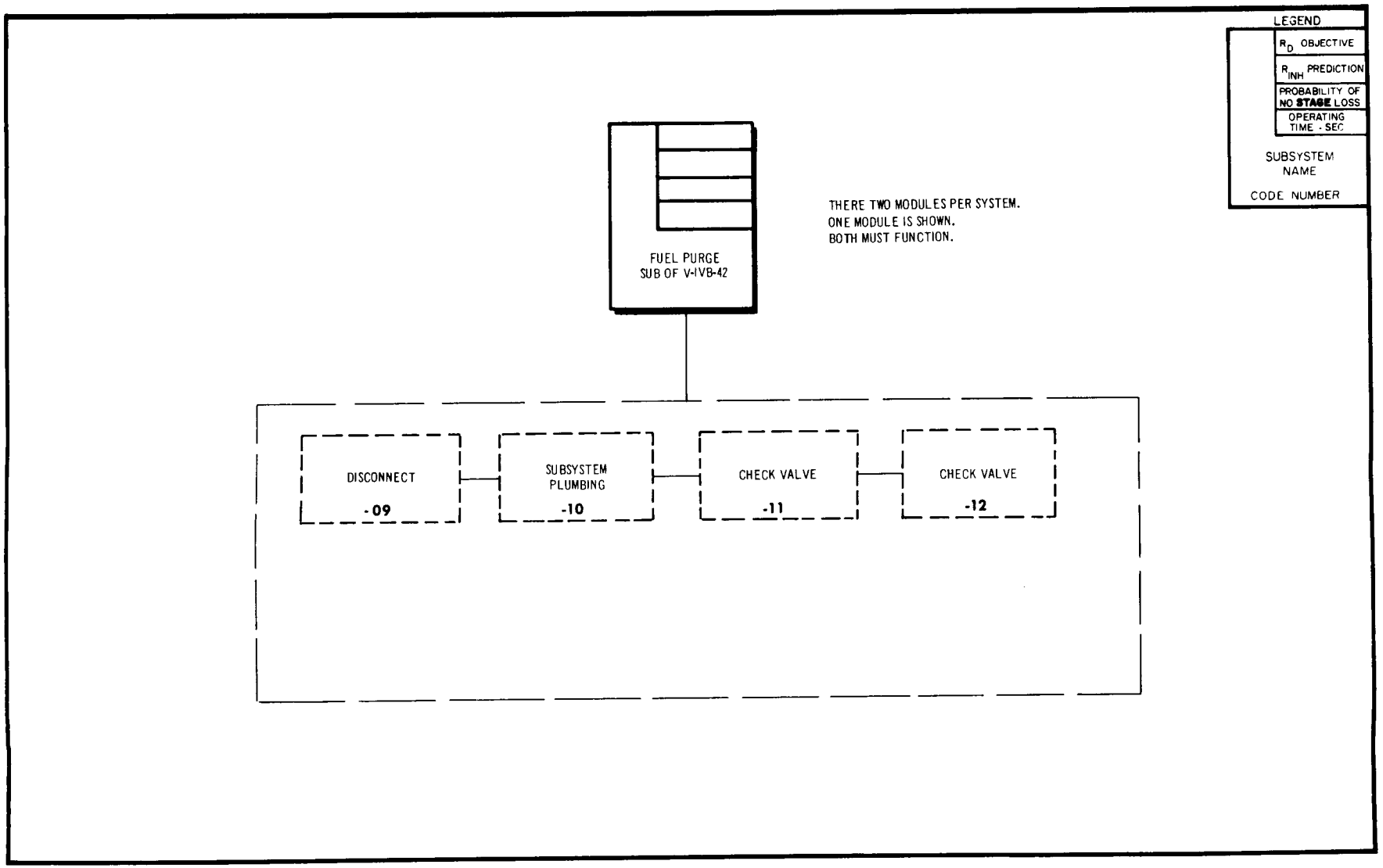
LEGEND
R_D OBJECTIVE
R_{INH} PREDICTION
PROBABILITY OF NO STAGE LOSS
OPERATING TIME - SEC
SUBSYSTEM NAME
CODE NUMBER
FUEL PURGE
SUB OF V-IVB-42
THERE TWO MODULES PER SYSTEM.
ONE MODULE IS SHOWN.
BOTH MUST FUNCTION.
DISCONNECT
-09
SUBSYSTEM PLUMBING
-10
CHECK VALVE
-11
CHECK VALVE
-12

Δ ITEMS MARKED THUS (*) DO NOT OPERATE IN FLIGHT

RELIABILITY FAILURE EFFECT ANALYSIS

FUEL PURGE (ATTITUDE CONTROL SUBSYSTEM)

A) COUNTDOWN/CHECKOUT
B) COUNTDOWN-AUTOMATIC SEQUENCE
C) FLIGHT-BOOST PHASE
D) FLIGHT-POWERED PHASE, 1ST
E) FLIGHT-COAST PHASE, 1ST
F) FLIGHT-POWERED PHASE, 2ND
G) FLIGHT-COAST PHASE, 2ND

Δ	ITEM	FUNCTION	FAILURE TYPE	FAILURE EFFECT ON SUBSYSTEM PERFORMANCE	FAILURE EFFECT ON S-IVB STAGE	FAILURE EFFECT ON SATURN VEHICLE
*	Purge Line Disconnect (Vehicle Half) 1A49323-501 V-IVB-42-09	Engages and locks with GSE half to permit purging fuel lines and tank. Closes when disconnected prior to lift-off.	1) Failure to engage.	LOSS OF SUBSYSTEM Fuel system cannot be purged.	A) Delay or scrub. B),C),D),E),F),G) None; failure can occur in phase A) only.	Same Same
			2) Failure to close when disconnected.	None; check valves and solenoid valves prevent loss of fuel.	A) None B) Does not stop countdown timer. C),D),E),F),G) None; failure can occur only prior to lift-off.	Same Same Same
			3) Difficult disconnect.	LOSS OF SUBSYSTEM Purge line must be removed before lift-off.	A) Delay or scrub. B) Does not hold countdown. C),D),E),F),G) None; function takes place before lift-off.	Same Same Same
*	Subsystem Plumbing V-IVB-42-10	Connects all components used in purging the fuel system.	Leakage at connections.	POSSIBLE LOSS OF SUBSYSTEM Excessive leakage causes a fire hazard.	A),B) Delay or scrub. C),D),E),F),G) None; this portion of plumbing is not pressurized after lift-off.	Same Same
*	Check Valve (Between Purge and Fill Lines) V-IVB-42-11	Opens to permit purging of fuel fill line. Closes to prevent fuel from rising into vent line during fuel filling operation.	1) Failure to open.	LOSS OF SUBSYSTEM Fuel line cannot be purged.	A) Delay in launch or scrub. B),C),D),E),F),G) None; valve opens in phase A) only.	Same Same
			2) Failure to close or internal leak.	LOSS OF SUBSYSTEM Fuel fill cannot be completed since fuel rising into the vent line prevents venting of the fuel tank.	A) Delay in launch or scrub. B) None C),D),E),F),G) None; valve does not function. Solenoid valve prevents loss of fuel.	Same Same Same

Δ ITEMS MARKED THUS (Δ) DO NOT OPERATE IN FLIGHT

RELIABILITY FAILURE EFFECT ANALYSIS

A) COUNTDOWN/CHECKOUT
B) COUNTDOWN - AUTOMATIC SEQUENCE
C) FLIGHT - BOOST PHASE
D) FLIGHT - POWERED PHASE, 1ST
E) FLIGHT - COAST PHASE, 1ST
F) FLIGHT - POWERED PHASE, 2ND
G) FLIGHT - COAST PHASE, 2ND

FUEL PURGE (ATTITUDE CONTROL SUBSYSTEM)

Δ	ITEM	FUNCTION	FAILURE TYPE	FAILURE EFFECT ON SUBSYSTEM PERFORMANCE	FAILURE EFFECT ON S-IVB STAGE	FAILURE EFFECT ON SATURN VEHICLE
*	Check Valve (Between Purge and Vent Lines) V-IVB-42-12	Opens to permit purging of the fuel vent line. Closes to prevent back flow of fuel into purge line.	1) Failure to open.	LOSS OF SUBSYSTEM Fuel system can not be purged.	A) Delay or scrub B) None C),D),E),F),G) None; valve does not function after lift-off.	Same Same Same
			2) Failure to close or internal leak.	Fuel vapor may be forced into purge line before purge disconnect is separated; this does not affect operation of subsystem.	A) Possible delay in launch B) None C),D),E),F),G) None; valve does not function after lift-off. Solenoid valve prevents loss of fuel.	Same Same Same

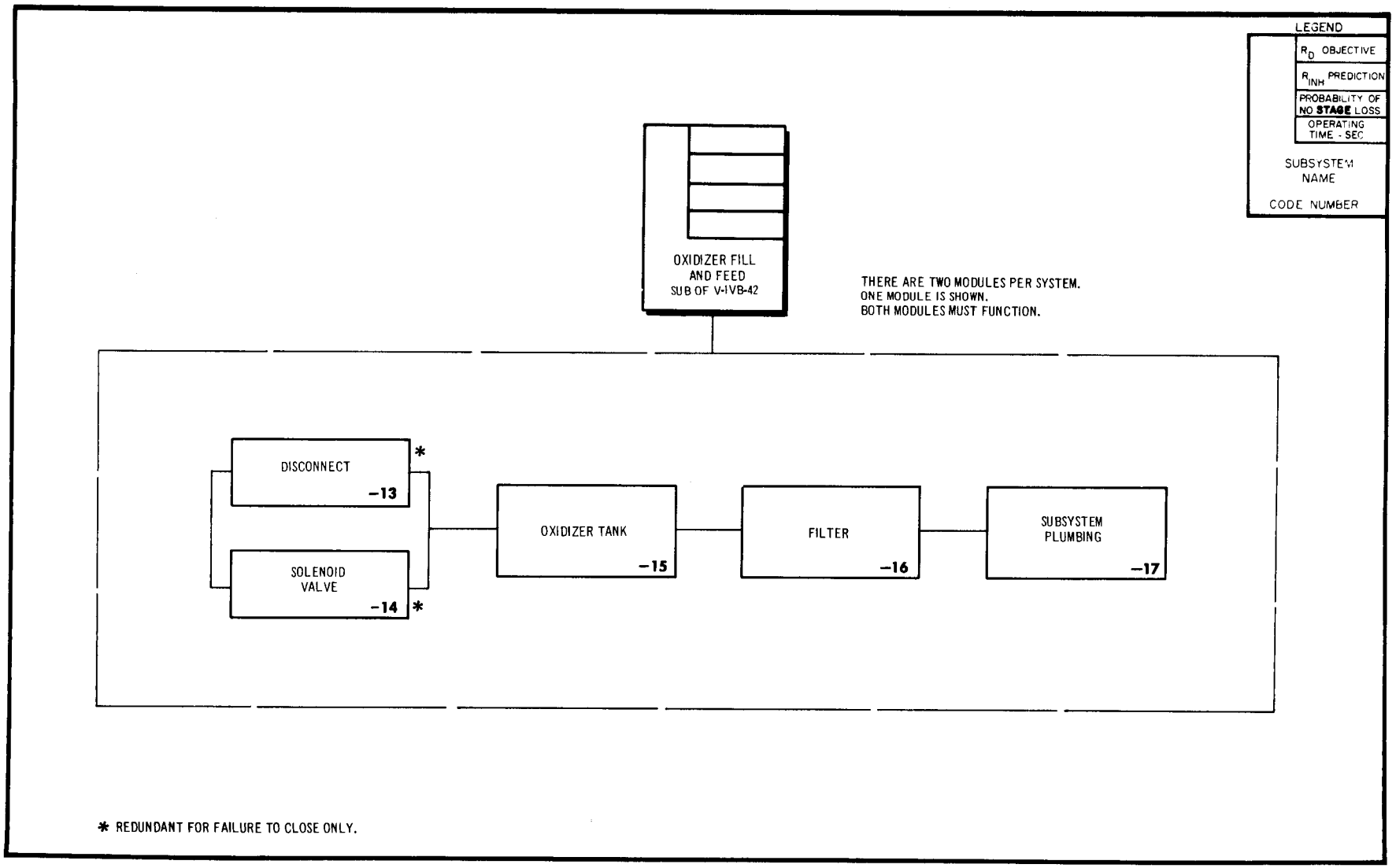
LEGEND
R_D OBJECTIVE
R_{INH} PREDICTION
PROBABILITY OF NO STAGE LOSS
OPERATING TIME - SEC
SUBSYSTEM NAME
CODE NUMBER
OXIDIZER FILL AND FEED
SUB OF V-IVB-42
THERE ARE TWO MODULES PER SYSTEM.
ONE MODULE IS SHOWN.
BOTH MODULES MUST FUNCTION.
DISCONNECT
-13
*
SOLENOID VALVE
-14
*
OXIDIZER TANK
-15
FILTER
-16
SUBSYSTEM PLUMBING
-17
* REDUNDANT FOR FAILURE TO CLOSE ONLY.

Δ ITEMS MARKED THUS (Δ) DO NOT OPERATE IN FLIGHT

RELIABILITY FAILURE EFFECT ANALYSIS

A) COUNTDOWN/CHECKOUT
B) COUNTDOWN - AUTOMATIC SEQUENCE
C) FLIGHT - BOOST PHASE
D) FLIGHT - POWERED PHASE, 1ST
E) FLIGHT - COAST PHASE, 1ST
F) FLIGHT - POWERED PHASE, 2ND
G) FLIGHT - COAST PHASE, 2ND

OXIDIZER FILL AND FEED (ATTITUDE CONTROL SUBSYSTEM)

Δ	ITEM	FUNCTION	FAILURE TYPE	FAILURE EFFECT ON SUBSYSTEM PERFORMANCE	FAILURE EFFECT ON S-IVB STAGE	FAILURE EFFECT ON SATURN VEHICLE
	Oxidizer Fill Disconnect (Vehicle half) 1A48855-1 V-IVB-42-13	Engages and locks with GSE half for filling and draining the oxidizer tank. Closes when disconnected from GSE prior to lift-off.	1) Failure to engage with GSE half.	LOSS OF SUBSYSTEM Oxidizer filling is not possible.	A) Delay in launch or scrub. B),C),D),E),F),G) None. Failure can occur in A) phase only.	Same Same
			2) External leak past seal.	POSSIBLE LOSS OF SUBSYSTEM	A) Delay in launch or scrub. B) None. Filling is completed and solenoid valve is closed before automatic countdown. C),D),E),F),G) None. Leak can not occur after disconnect is parted from GSE	Same Same Same
			3) Difficult disconnect.	POSSIBLE LOSS OF SUBSYSTEM Oxidizer line must be disconnected before launching.	A) Delay in launch or scrub. B) None. Oxidizer fill is completed, and disconnect uncoupled before automatic countdown. C),D),E),F),G) None. Failure can occur only before lift-off.	Same Same Same
			4) Failure to close when disconnected from GSE.	None. Solenoid valve prevents loss of oxidizer.	A),B),C),D),E),F),G) None. Solenoid valve provides redundancy.	Same
	Solenoid Valve V-IVB-42-14	Opens on ground command to permit filling and emptying oxidizer tank Closes to retain oxidizer.	1) Failure to open, or premature closing.	LOSS OF SUBSYSTEM Oxidizer fill is not possible.	A) Delay in launch or scrub. B),C),D),E),F),G) None. This valve opens in A) phase only.	Same Same

Δ ITEMS MARKED THUS (Δ) DO NOT OPERATE IN FLIGHT

RELIABILITY FAILURE EFFECT ANALYSIS

A) COUNTDOWN/CHECKOUT
B) COUNTDOWN - AUTOMATIC SEQUENCE
C) FLIGHT - BOOST PHASE
D) FLIGHT - POWERED PHASE, 1ST
E) FLIGHT - COAST PHASE, 1ST
F) FLIGHT - POWERED PHASE, 2ND
G) FLIGHT - COAST PHASE, 2ND

OXIDIZER FILL AND FEED (ATTITUDE CONTROL SUBSYSTEM)

Δ ITEM	FUNCTION	FAILURE TYPE	FAILURE EFFECT ON SUBSYSTEM PERFORMANCE	FAILURE EFFECT ON S-IVB STAGE	FAILURE EFFECT ON SATURN VEHICLE
Solenoid Valve V-IVB-42-14 (Continued)		2) Failure to close or internal leak.	None. Disconnect is self sealing, and prevents loss of oxidizer when disengaged.	A) None. Disconnect prevents loss of oxidizer. B) Does not stop countdown. C),D),E),F),G) None. Disconnect is redundant for failure to close.	Same Same Same
Oxidizer Tank V-IVB-42-15	Stores oxidizer at 250 psi.	1) Burst.	LOSS OF SUBSYSTEM	A),B) Scrub. C) None. System not used prior to D) phase. D),E),F),G) LOSS OF STAGE Due to loss of attitude control.	Same Same LOSS OF MISSION FRT 540 sec.
Filter V-IVB-42-16	Filters oxidizer from tanks before it enters engine quad valves.	1) Implosion or deformation of element.	POSSIBLE LOSS OF SUBSYSTEM Due to particles affecting engine quad valves.	A),B),C) None. This failure can not occur before phase D) D),F) POSSIBLE LOSS OF STAGE Due to loss of quad valves. E),G) POSSIBLE LOSS OF STAGE	Same POSSIBLE LOSS OF MISSION POSSIBLE LOSS OF MISSION
Subsystem Plumbing V-IVB-42-17	Connects all components subjected to oxidizer pressure.	1) Leak at connections.	POSSIBLE LOSS OF SUBSYSTEM	A),B) Delay in launch or scrub. C) None. D),F) POSSIBLE LOSS OF STAGE Due to premature depletion of oxidizer. E),G) POSSIBLE LOSS OF STAGE Due to premature depletion of oxidizer.	Same Same POSSIBLE LOSS OF MISSION POSSIBLE LOSS OF MISSION

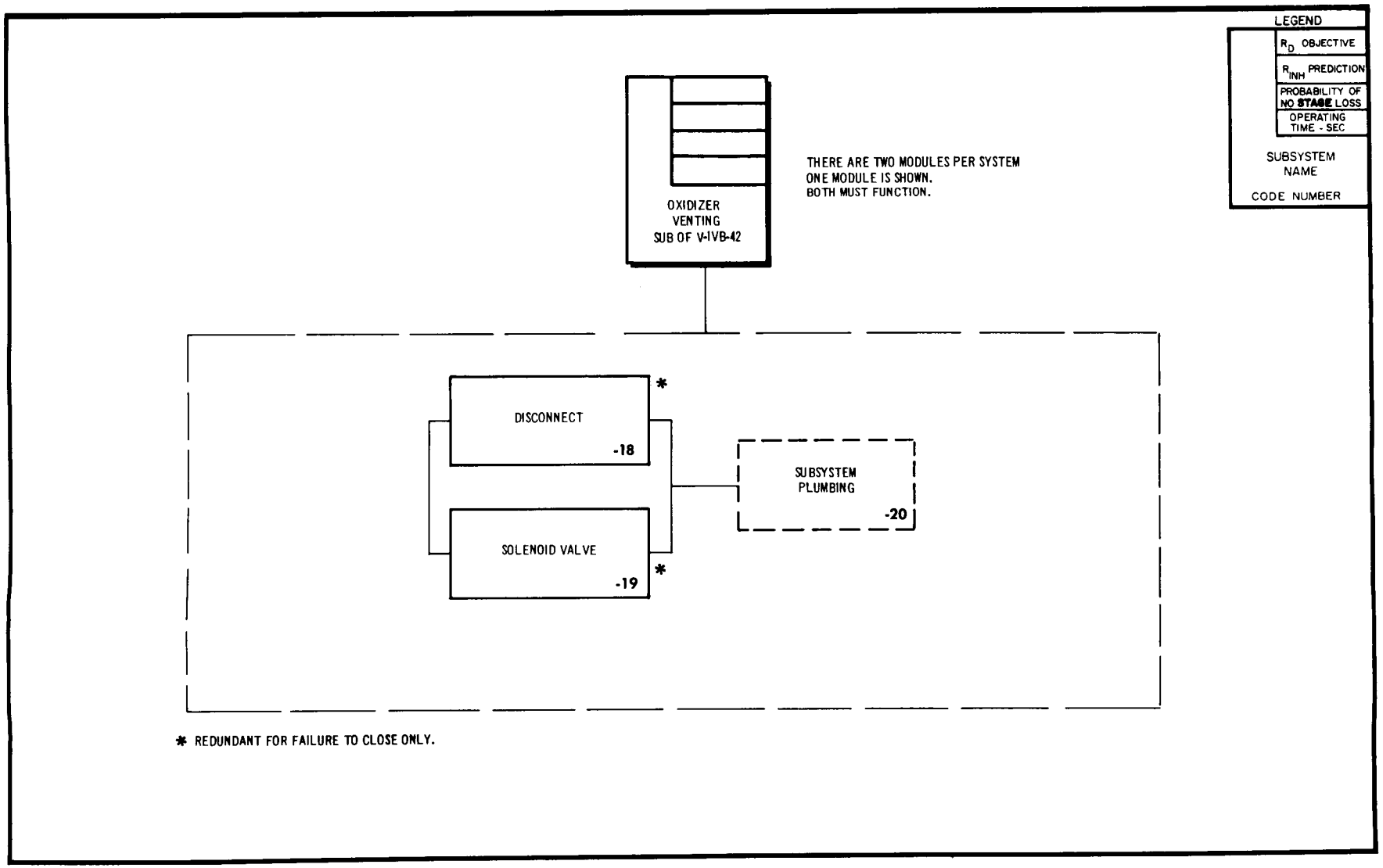
LEGEND
R_D OBJECTIVE
R_{INH} PREDICTION
PROBABILITY OF NO STAGE LOSS
OPERATING TIME - SEC
SUBSYSTEM NAME
CODE NUMBER
OXIDIZER VENTING SUB OF V-IVB-42
THERE ARE TWO MODULES PER SYSTEM
ONE MODULE IS SHOWN.
BOTH MUST FUNCTION.
DISCONNECT
-18
*
SOLENOID VALVE
-19
*
SUBSYSTEM PLUMBING
-20
* REDUNDANT FOR FAILURE TO CLOSE ONLY.

Δ ITEMS MARKED THUS (*) DO NOT OPERATE IN FLIGHT

RELIABILITY FAILURE EFFECT ANALYSIS

OXIDIZER VENTING (ATTITUDE CONTROL SUBSYSTEM)

A) COUNTDOWN/CHECKOUT
B) COUNTDOWN-AUTOMATIC SEQUENCE
C) FLIGHT-BOOST PHASE
D) FLIGHT-POWERED PHASE, 1ST
E) FLIGHT-COAST PHASE, 1ST
F) FLIGHT-POWERED PHASE, 2ND
G) FLIGHT-COAST PHASE, 2ND

Δ	ITEM	FUNCTION	FAILURE TYPE	FAILURE EFFECT ON SUBSYSTEM PERFORMANCE	FAILURE EFFECT ON S-IVB STAGE	FAILURE EFFECT ON SATURN VEHICLE
	Oxidizer Vent Disconnect (Vehicle half) 1A49321-1 V-IVB-42-18	Engages and locks with GSE half for venting the oxidizer system. Closes when disengaged prior to launching.	1) Failure to engage with GSE half.	LOSS OF SUBSYSTEM Oxidizer tank can not be filled unless vented.	A) Delay in launch or scrub. B),C),D),E),F),G) None. Failure can occur in A) phase only.	Same Same
			2) Failure to close when disengaged.	None. The solenoid valve prevents loss of oxidizer.	A),B),C),D),E),F),G) None. The solenoid valve provides redundancy in failure to close.	Same
			3) Difficult disconnect.	LOSS OF SUBSYSTEM Vent line must be disengaged before lift-off.	A) Delay in launch B),C),D),E),F),G) Not applicable This disconnect is separated before automatic countdown.	Same Same
	Solenoid Valve N.C. V-IVB-42-19	Opens to vent oxidizer tank while filling. Closes to retain oxidizer.	1) Failure to open or premature closing.	LOSS OF SUBSYSTEM Oxidizer fill is not possible without venting.	A),B) Delay in launch or scrub. C),D),E),F),G) None. Valve does not operate after lift-off.	Same Same
			2) Failure to close or internal leak.	None. Disconnect is self sealing and prevents loss of oxidizer after being disengaged.	A) None. B) None C),D),E),F),G) None	Same Same Same
*	Subsystem Plumbing V-IVB-42-20	Connects solenoid valve with vent disconnect. Does not include pipe from solenoid valve to tank, this being considered under oxidizer feed.	1) Leak at connections.	POSSIBLE LOSS OF SUBSYSTEM	A),B) Delay in launch or scrub. C),D),E),F),G) None. This portion of the plumbing is not pressurized after lift-off.	Same Same

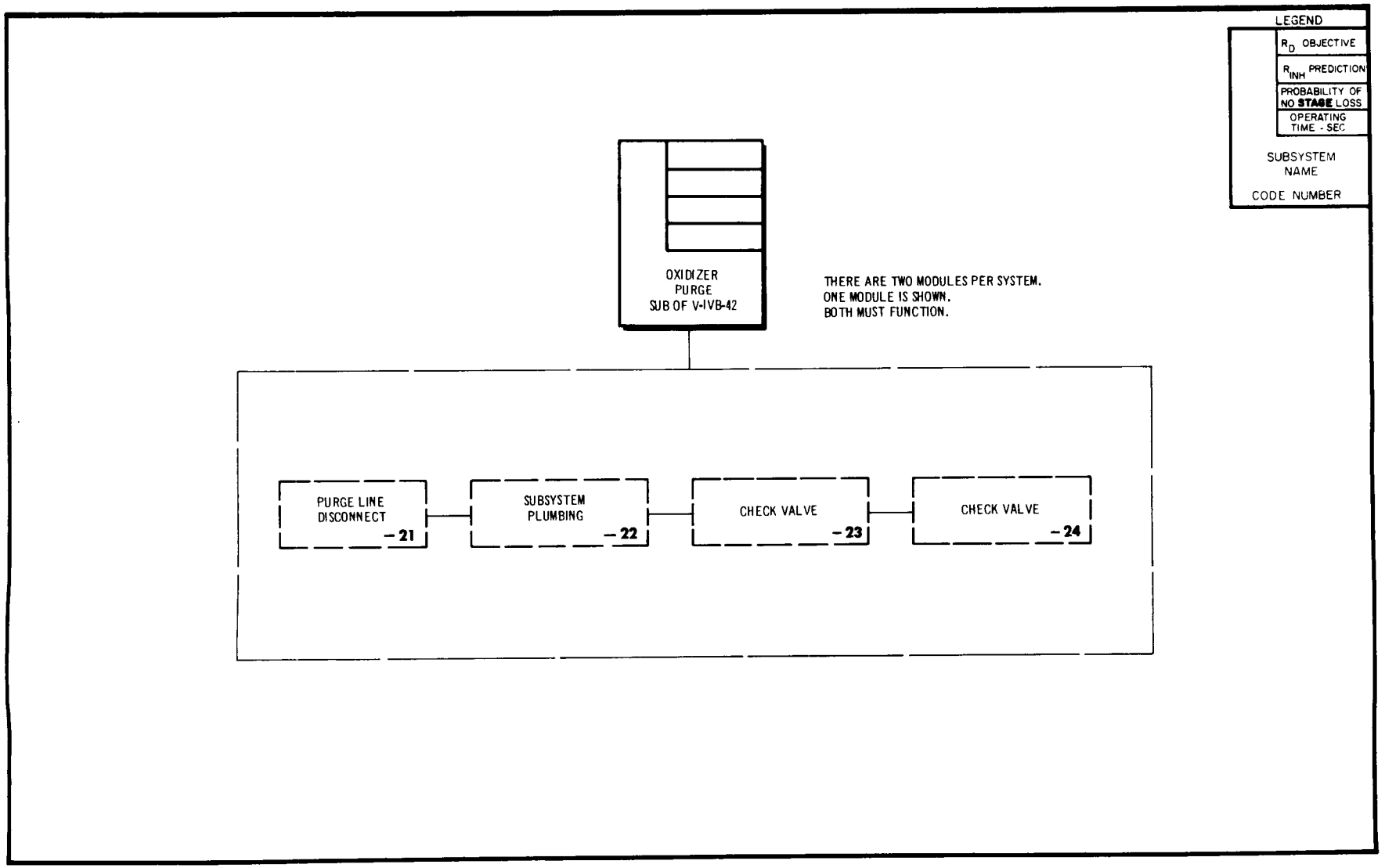
LEGEND
R_D OBJECTIVE
R_{INH} PREDICTION
PROBABILITY OF NO STAGE LOSS
OPERATING TIME - SEC
SUBSYSTEM NAME
CODE NUMBER
OXIDIZER PURGE SUB OF V-IVB-42
THERE ARE TWO MODULES PER SYSTEM.
ONE MODULE IS SHOWN.
BOTH MUST FUNCTION.
PURGE LINE DISCONNECT -21
SUBSYSTEM PLUMBING -22
CHECK VALVE -23
CHECK VALVE -24

Δ ITEMS MARKED THUS (*) DO NOT OPERATE IN FLIGHT

RELIABILITY FAILURE EFFECT ANALYSIS

OXIDIZER PURGE (ATTITUDE CONTROL SUBSYSTEM)

A) COUNTDOWN/CHECKOUT
B) COUNTDOWN - AUTOMATIC SEQUENCE
C) FLIGHT - BOOST PHASE
D) FLIGHT - POWERED PHASE, 1ST
E) FLIGHT - COAST PHASE, 1ST
F) FLIGHT - POWERED PHASE, 2ND
G) FLIGHT - COAST PHASE, 2ND

Δ	ITEM	FUNCTION	FAILURE TYPE	FAILURE EFFECT ON SUBSYSTEM PERFORMANCE	FAILURE EFFECT ON S-IVB STAGE	FAILURE EFFECT ON SATURN VEHICLE
*	Purge Line Disconnect (Vehicle Half) 1A49323-1 V-IVB-42-21	Engages and locks with GSE half to permit purging oxidizer lines and tank. Closes when disengaged prior to lift-off.	1) Failure to engage with GSE half.	LOSS OF SUBSYSTEM Oxidizer system can not be purged.	A) Delay in launch or scrub. B),C),D),E),F),G) None. Failure can occur in phase A) only.	Same Same
			2) Failure to close when disconnected.	None. Check valves and solenoid valves prevent loss of oxidizer.	A) None. B) Does not stop countdown. C),D),E),F),G) None. Failure can occur only prior to lift-off.	Same Same Same
			3) Difficult disconnect	LOSS OF SUBSYSTEM Purge line must be disconnect before lift-off.	A) Delay in launch or scrub. B) Does not hold countdown C),D),E),F),G) None. Function takes place before lift-off.	Same Same Same
*	Subsystem Plumbing V-IVB-42-22	Connects all components used in purging the oxidizer system.	Leakage at connections.	POSSIBLE LOSS OF SUBSYSTEM	A),B) Delay in launch or scrub. C),D),E),F),G) None. Not pressurized after lift-off	Same Same
*	Check Valve (Between purge and fill lines) V-IVB-42-23	Opens to permit purging of oxidizer fill line. Closes to prevent oxidizer from rising into vent line during oxidizer filling operation.	1) Failure to open.	LOSS OF SUBSYSTEM Oxidizer lines can not be purged.	A) Delay in launch or scrub. B),C),D),E),F),G) None. Valve opens in phase A) only.	Same Same
			2) Failure to close or internal leak.	LOSS OF SUBSYSTEM Oxidizer fill can not be completed since venting is prevented by oxidizer rising into vent line.	A) Delay in launch or scrub. B) None. C),D),E),F),G) None. Valve does not operate. Solenoid valve prevents loss of oxidizer.	Same Same Same

Δ ITEMS MARKED THUS (Δ) DO NOT OPERATE IN FLIGHT

RELIABILITY FAILURE EFFECT ANALYSIS

A) COUNTDOWN/CHECKOUT
B) COUNTDOWN - AUTOMATIC SEQUENCE
C) FLIGHT - BOOST PHASE
D) FLIGHT - POWERED PHASE, 1ST
E) FLIGHT - COAST PHASE, 1ST
F) FLIGHT - POWERED PHASE, 2ND
G) FLIGHT - COAST PHASE, 2ND

OXIDIZER PURGE (ATTITUDE CONTROL SUBSYSTEM)

Δ	ITEM	FUNCTION	FAILURE TYPE	FAILURE EFFECT ON SUBSYSTEM PERFORMANCE	FAILURE EFFECT ON S-IVB STAGE	FAILURE EFFECT ON SATURN VEHICLE
*	Check Valve (Between purge and vent lines) V-IVB-42-24	Opens to permit purging of the oxidizer vent line. Closes to prevent back flow of oxidizer into purge line.	1) Failure to open	LOSS OF SUBSYSTEM Oxidizer system can not be purged.	A) Delay in launch or scrub. B) None. C),D),E),F),G) None. Valve does not function after lift-off.	Same Same Same
			2) Failure to close or internal leak.	Oxidizer can be forced into purge line, but this does not affect operation of the subsystem.	A) Possible delay in launch. B) None. C),D),E),F),G) None. Valve does not function after lift-off. Solenoid valve prevents loss of oxidizer.	Same Same Same

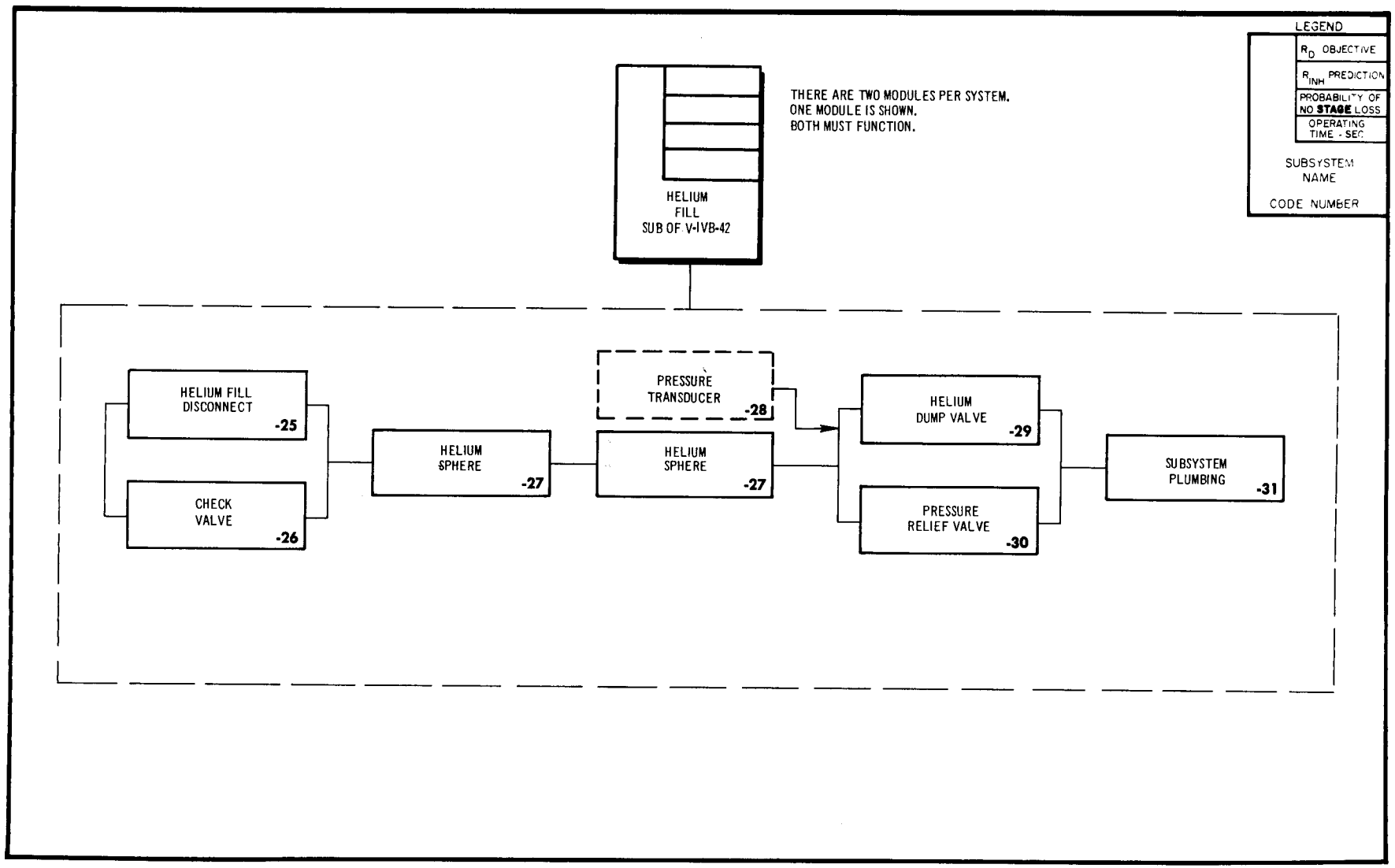
LEGEND
R_D OBJECTIVE
R_{INH} PREDICTION
PROBABILITY OF NO STAGE LOSS
OPERATING TIME - SEC
SUBSYSTEM NAME
CODE NUMBER
HELIUM FILL SUB OF V-IVB-42
THERE ARE TWO MODULES PER SYSTEM.
ONE MODULE IS SHOWN.
BOTH MUST FUNCTION.
HELIUM FILL DISCONNECT -25
CHECK VALVE -26
HELIUM SPHERE -27
PRESSURE TRANSDUCER -28
HELIUM SPHERE -27
HELIUM DUMP VALVE -29
PRESSURE RELIEF VALVE -30
SUBSYSTEM PLUMBING -31

Δ ITEMS MARKED THUS (Δ) DO NOT OPERATE IN FLIGHT

RELIABILITY FAILURE EFFECT ANALYSIS

HELIUM FILL (ATTITUDE CONTROL SUBSYSTEM)

A) COUNTDOWN/CHECKOUT
B) COUNTDOWN - AUTOMATIC SEQUENCE
C) FLIGHT - BOOST PHASE
D) FLIGHT - POWERED PHASE, 1ST
E) FLIGHT - COAST PHASE, 1ST
F) FLIGHT - POWERED PHASE, 2ND
G) FLIGHT - COAST PHASE, 2ND

Δ	ITEM	FUNCTION	FAILURE TYPE	FAILURE EFFECT ON SUBSYSTEM PERFORMANCE	FAILURE EFFECT ON S-IVB STAGE	FAILURE EFFECT ON SATURN VEHICLE
	Helium Fill Disconnect Vehicle half 1A48630 V-IVB-42-25	Seals and locks with GSE half for filling helium spheres. Closes on separation, at lift-off. Helium is used to pressurize both fuel and oxidizer through identical systems.	1) Fail to engage	LOSS OF SUBSYSTEM Helium spheres can not be filled.	A) Delay in launch or scrub. B),C),D),E),F),G) None. Failure can occur in A) phase only.	Same Same
			2) Fail to close on separation.	None. Check valve provides redundancy.	A),B) Not applicable. Failure occurs at lift-off. C),D),E),F),G) None. Check valve provides redundancy.	Same Same
			3) Difficult disconnect.	POSSIBLE LOSS OF SUBSYSTEM Due to damage at lift-off.	A),B) Not applicable; separation occurs at lift-off. C) None. Helium not needed before D) phase. D),E),F),G) POSSIBLE LOSS OF STAGE Due to loss of helium.	Same Same POSSIBLE LOSS OF MISSION
	Check Valve, Helium Fill Module V-IVB-42-26	Opens for filling helium sphere, closes to prevent back flow.	1) Fail to open.	LOSS OF SUBSYSTEM Helium sphere can not be filled.	A) Delay in launch or scrub. B),C),D),E),F),G) None. Failure can occur in A) phase only.	Same Same
			2) Fail to close or internal leak.	None. Disconnect prevents loss of helium.	A),B) None. Valve closes at lift-off. C),D),E),F),G) None. Disconnect provided redundancy.	Same Same

Δ ITEMS MARKED THUS (Δ) DO NOT OPERATE IN FLIGHT

RELIABILITY FAILURE EFFECT ANALYSIS

HELIUM FILL (ATTITUDE CONTROL SUBSYSTEM)

A) COUNTDOWN/CHECKOUT
B) COUNTDOWN-AUTOMATIC SEQUENCE
C) FLIGHT-BOOST PHASE
D) FLIGHT-POWERED PHASE, 1ST
E) FLIGHT-COAST PHASE, 1ST
F) FLIGHT-POWERED PHASE, 2ND
G) FLIGHT-COAST PHASE, 2ND

Δ	ITEM	FUNCTION	FAILURE TYPE	FAILURE EFFECT ON SUBSYSTEM PERFORMANCE	FAILURE EFFECT ON S-IVB STAGE	FAILURE EFFECT ON SATURN VEHICLE
	Helium spheres (2) 1A49994 V-IVB-42-27	Contains helium supply for propellant pressurization.	1) Leak.	POSSIBLE LOSS OF SUBSYSTEM (If helium is depleted before mission is completed.)	A),B) Possible delay in launch or scrub. C) None. Helium is not needed before D) phase. D),E),F),G) POSSIBLE LOSS OF STAGE	Same Same POSSIBLE LOSS OF MISSION
			2) Burst.	LOSS OF SUBSYSTEM Probable fire due to bursting of propellant tanks.	A),B) LOSS OF STAGE Due to exploding propellant tank. C),D),E),F),G) LOSS OF STAGE Failure not likely after D) phase since pressure is greatly reduced.	POSSIBLE LOSS OF VEHICLE FRT .1 sec. LOSS OF MISSION Probable loss of vehicle. FRT .1 sec.
*	Pressure Transducer V-IVB-42-28	Provides a signal to the automatic sequencer as a go/no-go command when the minimum sphere lift-off pressure has reached 2940 ± 25 psi.	1) Open circuit	Helium can safely be pumped into spheres until pressure relief valve opens, indicating sufficient pressure.	A) None. Relief valve will indicate full tank. B) Holds automatic sequencer C),D),E),F),G) None. Not used after lift-off.	Same Same Same
			2) Reads high.	Supply of helium may not be sufficient for the mission. However, a gage in GSE can be compared, and decision made.	A) Delay in launching for comparision with GSE, and decision. B) None. Does not stop automatic sequencer. C),D),E),F),G) None. Not used after lift-off.	Same Same Same
			3) Reads low.	Relief valve will prevent overfilling. A gage in GSE provides assurance that the fault is not in the relief valve.	A) None. Filling continues until relief valve opens. B) Holds automatic sequencer. C),D),E),F),G) None. Not used after lift-off.	Same Same Same

Δ ITEMS MARKED THUS (Δ) DO NOT OPERATE IN FLIGHT

RELIABILITY FAILURE EFFECT ANALYSIS

A) COUNTDOWN/CHECKOUT
B) COUNTDOWN - AUTOMATIC SEQUENCE
C) FLIGHT - BOOST PHASE
D) FLIGHT - POWERED PHASE, 1ST
E) FLIGHT - COAST PHASE, 1ST
F) FLIGHT - POWERED PHASE, 2ND
G) FLIGHT - COAST PHASE, 2ND

HELIUM FILL (ATTITUDE CONTROL SUBSYSTEM)

Δ	ITEM	FUNCTION	FAILURE TYPE	FAILURE EFFECT ON SUBSYSTEM PERFORMANCE	FAILURE EFFECT ON S-IVB STAGE	FAILURE EFFECT ON SATURN VEHICLE
*	Helium dump valve, solenoid operated. N.C. V-IVB-42-29	Opens on ground command to dump helium. Used only when countdown and launch are not to be completed. Serves to relieve pressure on command if relief valve fails.	1) Internal leak or fail to remain closed.	PROBABLE LOSS OF SUBSYSTEM Due to loss of helium supply overboard.	A),B) Delay in launch or scrub. C) None. D),E),F),G) PROBABLE LOSS OF STAGE Due to loss of helium.	Same Same PROBABLE LOSS OF MISSION
			2) Fail to open.	None. This valve not needed unless countdown is to be stopped, or relief valve fails on ground.	A),B) None. C) None. Not used. D),E),F),G) None. Valve can be opened by ground command only.	Same Same Same
			3) Fail to close.	LOSS OF SUBSYSTEM Helium spheres can not be filled.	A),B) Delay in launch or scrub. C),D),E) None. Valve operates prior to lift-off only. F),G) None.	Same Same Same
	Pressure Relief Valve. N.C. Helium Fill Module V-IVB-42-30	Opens at predetermined pressure, protects system from excessive helium pressure.	1) Internal leak	Excessive leak can cause POSSIBLE LOSS OF SUBSYSTEM (If helium supply is depleted prematurely)	A),B) Delay in launch or scrub. C) None. D),E),F),G) POSSIBLE LOSS OF STAGE	Same Same POSSIBLE LOSS OF MISSION
			2) Fail to open	None. Pressure is monitored during loading, and can be relieved by dump valve.	A),B) None. Pressure relieved by solenoid dump valve. C),D),E),F),G) None. Helium pressure does not build up after lift-off.	Same Same
			3) Fail to close or remain closed.	Excessive helium loss will cause (Continued)	A),B) Probable delay in launch C) None. (Continued)	Same Same

Δ ITEMS MARKED THUS (Δ) DO NOT OPERATE IN FLIGHT

RELIABILITY FAILURE EFFECT ANALYSIS

HELIUM FILL (ATTITUDE CONTROL SUBSYSTEM)

A) COUNTDOWN/CHECKOUT
B) COUNTDOWN-AUTOMATIC SEQUENCE
C) FLIGHT-BOOST PHASE
D) FLIGHT-POWERED PHASE, 1ST
E) FLIGHT-COAST PHASE, 1ST
F) FLIGHT-POWERED PHASE, 2ND
G) FLIGHT-COAST PHASE, 2ND

Δ	ITEM	FUNCTION	FAILURE TYPE	FAILURE EFFECT ON SUBSYSTEM PERFORMANCE	FAILURE EFFECT ON S-IVB STAGE	FAILURE EFFECT ON SATURN VEHICLE
	Pressure Relief Valve. N.C. Helium Fill Module V-IVB-42-30 (Continued)		3) Fail to close or remain closed. (Continued)	POSSIBLE LOSS OF SUBSYSTEM (Continued)	D),E),F),G) PROBABLE LOSS OF SUBSYSTEM	PROBABLE LOSS OF MISSION
	Subsystem Plumbing V-IVB-42-31	Connects all components in the helium fill subsystem.	1) Leakage at connections.	POSSIBLE LOSS OF SUBSYSTEM Helium supply may be depleted before completion of mission.	A),B) Delay in launch or scrub. C) None. Helium is not used until phase D) D),E),F),G) POSSIBLE LOSS OF STAGE	Same Same POSSIBLE LOSS OF MISSION

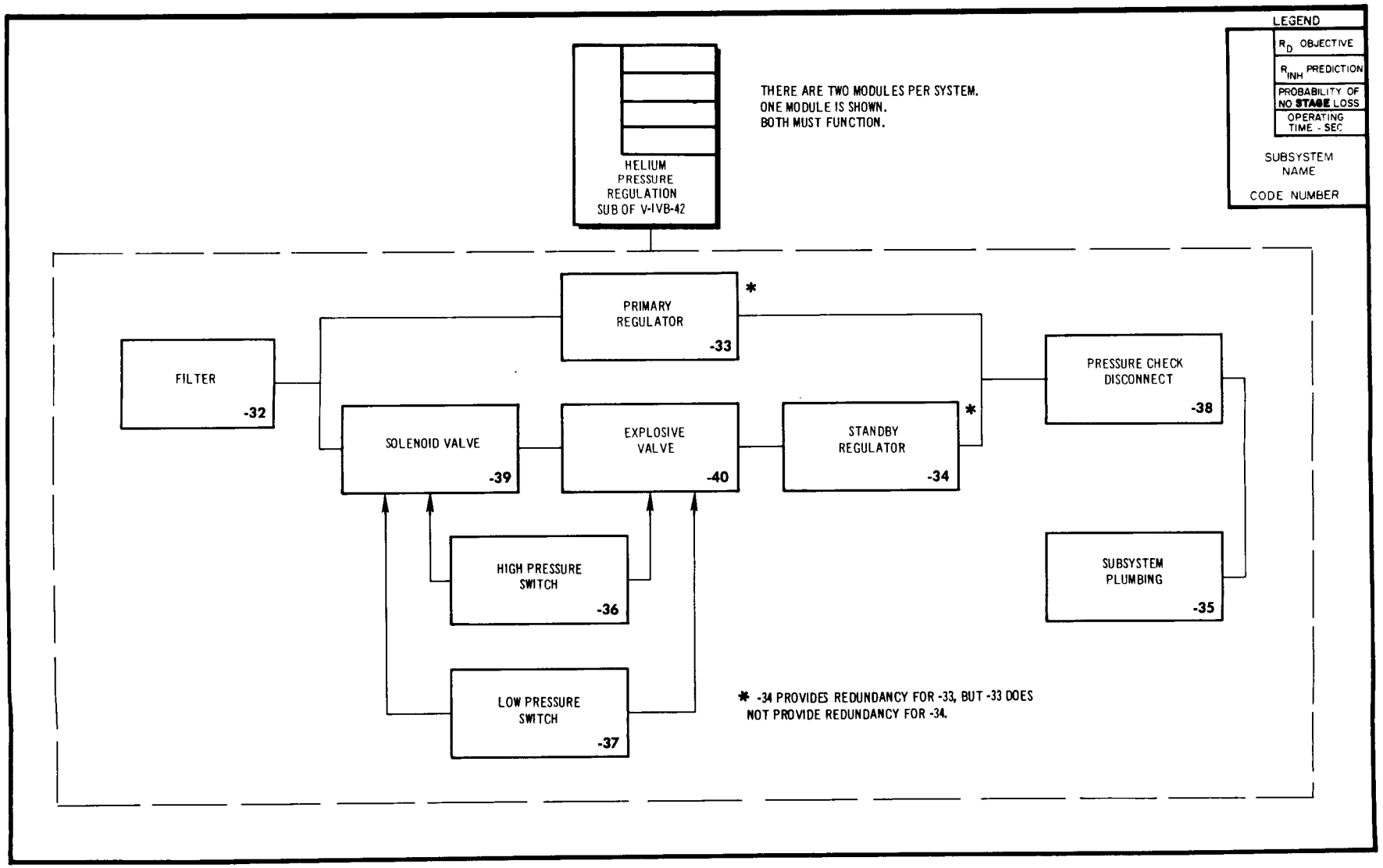
LEGEND
R_D OBJECTIVE
R_{INH} PREDICTION
PROBABILITY OF NO STAGE LOSS
OPERATING TIME - SEC
SUBSYSTEM NAME
CODE NUMBER
HELIUM PRESSURE REGULATION SUB OF V-IVB-42
THERE ARE TWO MODULES PER SYSTEM.
ONE MODULE IS SHOWN.
BOTH MUST FUNCTION.
FILTER -32
PRIMARY REGULATOR -33
*
SOLENOID VALVE -39
EXPLOSIVE VALVE -40
STANDBY REGULATOR -34
*
PRESSURE CHECK DISCONNECT -38
SUBSYSTEM PLUMBING -35
HIGH PRESSURE SWITCH -36
LOW PRESSURE SWITCH -37
* -34 PROVIDES REDUNDANCY FOR -33, BUT -33 DOES NOT PROVIDE REDUNDANCY FOR -34.

Δ ITEMS MARKED THUS (Δ) DO NOT OPERATE IN FLIGHT

RELIABILITY FAILURE EFFECT ANALYSIS

A) COUNTDOWN/CHECKOUT
B) COUNTDOWN-AUTOMATIC SEQUENCE
C) FLIGHT-BOOST PHASE
D) FLIGHT-POWERED PHASE, 1ST
E) FLIGHT-COAST PHASE, 1ST
F) FLIGHT-POWERED PHASE, 2ND
G) FLIGHT-COAST PHASE, 2ND

HELIUM PRESSURE REGULATION (ATTITUDE CONTROL SUBSYSTEM)

Δ ITEM	FUNCTION	FAILURE TYPE	FAILURE EFFECT ON SUBSYSTEM PERFORMANCE	FAILURE EFFECT ON S-IVB STAGE	FAILURE EFFECT ON SATURN VEHICLE
Filter, Helium Control Module V-IVB-42-32	Filters high pressure helium before it enters pressure regulator.	1) Implosion	POSSIBLE LOSS OF SUBSYSTEM Filter particles may obstruct downstream valves and regulator.	A) Possible delay in launch or scrub B) May hold automatic countdown sequence (if downstream components fail) C) None. D),E),F),G) POSSIBLE LOSS OF STAGE Due to loss of downstream components.	Same Same Same POSSIBLE LOSS OF MISSION
Pressure Regulator, Primary V-IVB-42-33	Regulates helium pressure from 3000 psi to 250 psi for propellant pressurization.	1) Failure to open. (Downstream pressure too low)	None. Low pressure switch initiates change to stand-by regulator.	A),B),C),D),E),F),G) None. Redundancy is provided by stand-by regulator.	None
		2) Failure to close. (Downstream pressure too high).	None. High pressure switch initiates change to stand-by regulator.	A),B),C),D),E),F),G) None. Redundancy is provided by stand-by regulator.	None
Pressure Regulator, (Stand-by) V-IVB-42-34	Regulates helium pressure if primary regulator fails. Either high pressure switch (-36) or low pressure switch (-37) will initiate the change over from primary regulator to stand-by regulator. Restoration of normal pressure does not reverse this change over.	1) Failure to open sufficiently.	SECOND FAILURE ANALYSIS Helium regulated pressure is lower than required to pressurize the propellants.	A) Delay in launch or scrub. B) Hold or possible scrub. C) None. Helium not needed. D),E),F),G) SECOND FAILURE ANALYSIS Possible loss of stage due to insufficient pressure on the propellants.	Same Same Same SECOND FAILURE ANALYSIS Possible loss of mission
		2) Failure to close sufficiently.	SECOND FAILURE ANALYSIS Excessive pressure downstream is relieved overboard, depleting helium supply.	A) Delay in launch or scrub. B) Hold or scrub. C) None. Helium not needed.	Same Same Same

(Continued)

(Continued)

Δ ITEMS MARKED THUS (Δ) DO NOT OPERATE IN FLIGHT

RELIABILITY FAILURE EFFECT ANALYSIS

A) COUNTDOWN/CHECKOUT
B) COUNTDOWN - AUTOMATIC SEQUENCE
C) FLIGHT - BOOST PHASE
D) FLIGHT - POWERED PHASE, 1ST
E) FLIGHT - COAST PHASE, 1ST
F) FLIGHT - POWERED PHASE, 2ND
G) FLIGHT - COAST PHASE, 2ND

HELIUM PRESSURE REGULATION (ATTITUDE CONTROL SUBSYSTEM)

Δ	ITEM	FUNCTION	FAILURE TYPE	FAILURE EFFECT ON SUBSYSTEM PERFORMANCE	FAILURE EFFECT ON S-IVB STAGE	FAILURE EFFECT ON SATURN VEHICLE
	Pressure Regulator, (Stand-by) V-IVB-42-34 (Continued)		2) Failure to close sufficiently. (Continued)		D),E),F),G) SECOND FAILURE ANALYSIS Possible loss of stage due to premature depletion of helium.	SECOND FAILURE ANALYSIS Possible loss of mission.
	Subsystem Plumbing V-IVB-42-35	Interconnects all components of the helium pressure regulation subsystem.	1) Leak at connections.	POSSIBLE LOSS OF SUBSYSTEM Due to depletion of helium supply before completion of mission.	A) Possible delay in launch or scrub. D) Delay in launch or scrub. C) Not applicable. D),F) POSSIBLE LOSS OF STAGE E),G) Possible loss of attitude control.	D),F) POSSIBLE LOSS OF MISSION E),G) POSSIBLE LOSS OF MISSION
	High Pressure Switch V-IVB-42-36	Senses excessive regulated helium pressure, and switches to stand-by regulator by closing the solenoid valve and opening the explosive valve. Makes contact at 320 ± 10 psi. Drops out at 300 ± 10 psi.	1) Failure to actuate.	SECOND FAILURE ANALYSIS If regulated pressure is too high, it will be depleted through relief valve and vent.	A) Delay in launch or scrub. B) Stops countdown . C) None. D),E),F),G) SECOND FAILURE ANALYSIS Possible loss of stage due to loss of helium.	Same Same Same SECOND FAILURE ANALYSIS Possible loss of mission
			2) Premature actuation	None. Stand-by regulator goes into action.	A),B) Delay in launch for decision since redundancy is lost. C) None. D),E),F),G) None.	Same Same Same

Δ ITEMS MARKED THUS (Δ) DO NOT OPERATE IN FLIGHT

** REFERENCE TO ULLAGE APPLIES TO SATURN V ONLY

RELIABILITY FAILURE EFFECT ANALYSIS

HELIUM PRESSURE REGULATION (ATTITUDE CONTROL SUBSYSTEM)

A) COUNTDOWN/CHECKOUT
B) COUNTDOWN - AUTOMATIC SEQUENCE
C) FLIGHT - BOOST PHASE
D) FLIGHT - POWERED PHASE, 1ST
E) FLIGHT - COAST PHASE, 1ST
F) FLIGHT - POWERED PHASE, 2ND
G) FLIGHT - COAST PHASE, 2ND

Δ	ITEM	FUNCTION	FAILURE TYPE	FAILURE EFFECT ON SUBSYSTEM PERFORMANCE	FAILURE EFFECT ON S-IVB STAGE	FAILURE EFFECT ON SATURN VEHICLE
	Low Pressure Switch V-IVB-42-37	Senses insufficient helium downstream from the regulator, and switches to stand-by regulator by closing the solenoid valve and firing the explosive valve. Makes contact at 180 ± 10 psi. Drops out at 200 ± 10 psi.	1) Failure to actuate.	SECOND FAILURE ANALYSIS If regulated pressure is too low attitude and ullage** control deteriorate.	A) Delay in launch or scrub. B) Stops countdown. C) None. D),E),F),G) SECOND FAILURE ANALYSIS Possible loss of stage due to loss of attitude and ullage** control.	Same Same Same SECOND FAILURE ANALYSIS Possible loss of mission
			2) Failure to deactuate.	None. Switch to stand-by regulator is not a reversible function.	Not applicable	Not applicable
			3) Premature actuation	None. Stand-by regulator goes into operation.	A),B) Delay in launch for decision because redundancy is lost. C) None. D),E),F),G) None.	Same Same Same
*	Pressure Check disconnect (Vehicle half) V-IVB-42-38	Seals and locks with GSE half to verify operation of helium pressure regulator. Closes on seperation at lift-off.	1) Failure to engage GSE half.	None. This is for check-out only.	A) Possible delay for decision. High and low pressure transducers can not be checked. B) None. Failure can occur in phase A) only. C),D),E),F),G) None. Failure can occur in A) phase only.	Same Same Same
			2) Failure to close upon separation.	None. Helium supply cannot escape through this line. High and low pressure switches have dual diaphrams and are checked by gas pressure from GSE through this disconnect.	A),B) None. Failure occurs at lift-off. C),D),E),F),G) None. Primary function ceases at lift-off.	Same Same

Δ ITEMS MARKED THUS (Δ) DO NOT OPERATE IN FLIGHT

RELIABILITY FAILURE EFFECT ANALYSIS

A) COUNTDOWN/CHECKOUT
B) COUNTDOWN-AUTOMATIC SEQUENCE
C) FLIGHT-BOOST PHASE
D) FLIGHT-POWERED PHASE, 1ST
E) FLIGHT-COAST PHASE, 1ST
F) FLIGHT-POWERED PHASE, 2ND
G) FLIGHT-COAST PHASE, 2ND

HELIUM PRESSURE REGULATION (ATTITUDE CONTROL SUBSYSTEM)

Δ	ITEM	FUNCTION	FAILURE TYPE	FAILURE EFFECT ON SUBSYSTEM PERFORMANCE	FAILURE EFFECT ON S-IVB STAGE	FAILURE EFFECT ON SATURN VEHICLE
	Solenoid Valve N.O. (Downstream from Primary regulator.) V-IVB-42-39	Normally open to permit regulated helium to flow to fuel and oxidizer tanks. Closes in event primary regulator fails. This occurs automatically by means of either the high or low pressure switch.	1) Failure to remain open.	None. Stoppage of helium is detected by low pressure transducer, and switch to stand-by regulator is automatic.	A),B) Delay in launch for decision, since redundancy of regulator is lost. C) None. D),E),F),G) None. Redundancy is provided.	Same Same Same
			2) Failure to close or internal leak.	SECOND FAILURE ANALYSIS If primary regulator opened excessively, it would permit excessive helium to pressurize propellants. This is relieved through relief valves, depleting helium supply.	A),B) Delay in launch or scrub. C) None. D),E),F),G) SECOND FAILURE ANALYSIS Possible loss of stage due to premature depletion of helium.	Same Same SECOND FAILURE ANALYSIS Possible loss of mission
	Explosive Valve normally closed. V-IVB-42-40	Closes stand-by regulator line. Opens if primary regulator or adjacent solenoid valve fails. This occurs automatically by means of either the high or low pressure switch.	1) Failure to open.	SECOND FAILURE ANALYSIS Helium for porpellant pressurization is cut off, since it is assumed that valve -39 closed.	A),B) Delay in launch or scrub. C) None. D),E),F),G) SECOND FAILURE ANALYSIS Probable loss of stage due to lack of pressure on propellants.	Same Same SECOND FAILURE ANALYSIS Probable loss of mission
			2) Premature open.	None. Two regulators in parallel function satisfactorily.	A),B) Possible delay in launch for decision, since some redundancy is lost. C) None. D),E),F),G) None.	Same None None

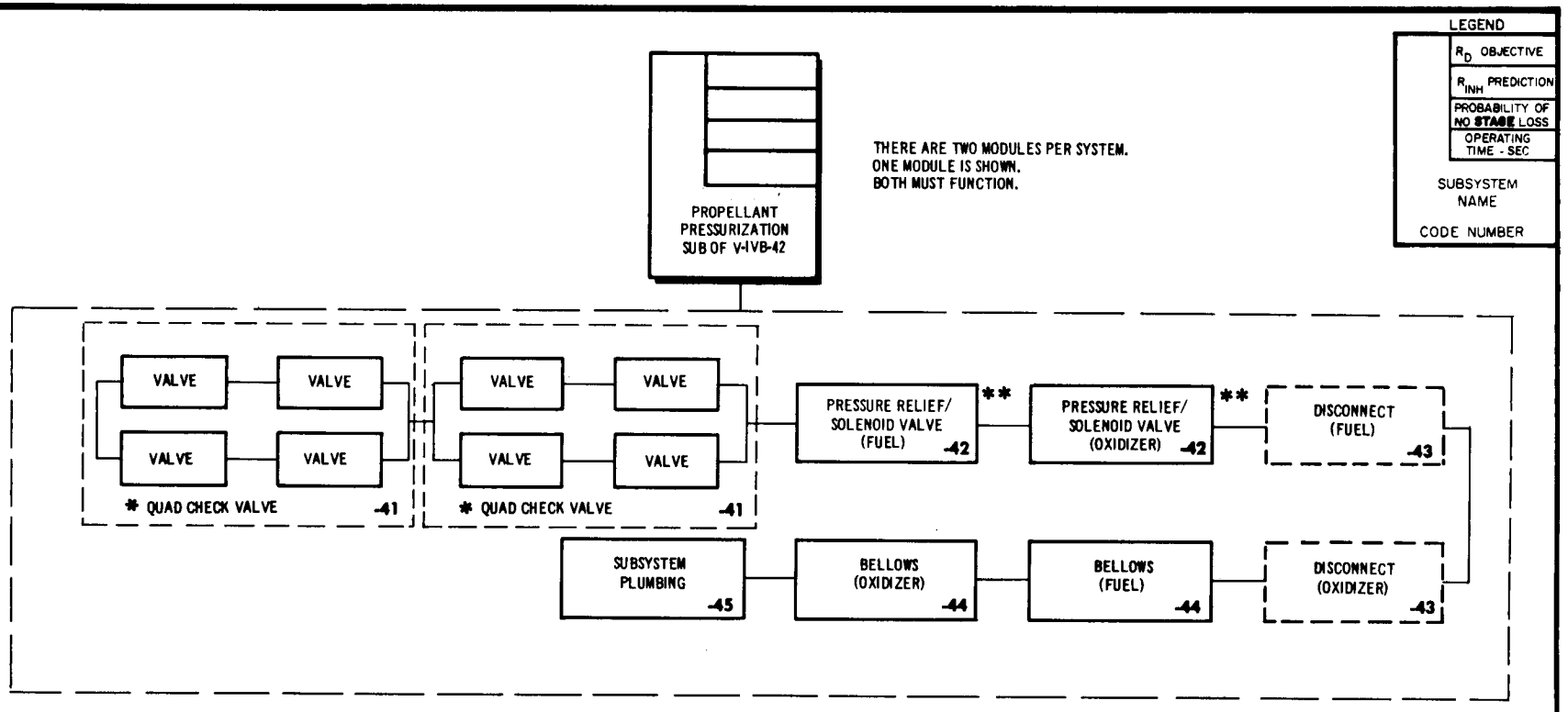

* DIAGRAM SHOWN IS FOR REDUNDANCY IN FAILURE TO OPEN.
** REDUNDANT FOR FAILURE TO OPEN FROM EXCESSIVE PRESSURE.

Δ ITEMS MARKED THUS (Δ) DO NOT OPERATE IN FLIGHT

** Reference to ullage applies to Saturn V only.

RELIABILITY FAILURE EFFECT ANALYSIS

A) COUNTDOWN/CHECKOUT
B) COUNTDOWN-AUTOMATIC SEQUENCE
C) FLIGHT-BOOST PHASE
D) FLIGHT-POWERED PHASE, 1ST
E) FLIGHT-COAST PHASE, 1ST
F) FLIGHT-POWERED PHASE, 2ND
G) FLIGHT-COAST PHASE, 2ND

PROPELLANT PRESSURIZATION (ATTITUDE CONTROL SUBSYSTEM)

Δ	ITEM	FUNCTION	FAILURE TYPE	FAILURE EFFECT ON SUBSYSTEM PERFORMANCE	FAILURE EFFECT ON S-IVB STAGE	FAILURE EFFECT ON SATURN VEHICLE
	Quad Check Valve (2) V-IVB-42-41	Opens to permit low pressure helium to propellant plenum. Closes to prevent back flow in event that bellows leaks or bursts. Prevents flow of helium into helium control module during propellant tank purge.	1) Failure to open.	SECOND FAILURE ANALYSIS Valves are arranged in quad redundancy so that failure of any single valve does not affect the operation of the subsystem.	A),B) None. Redundancy is provided. C) None. Helium not needed. D),E),F),G) None for failure of a single valve.	Same Same Same
			2) Failure to close or remain closed.	SECOND FAILURE ANALYSIS Prevents normal purging of propellant tanks. However, alternate method is available.	A),B) None. Redundancy is provided. C),D),E),F),G) None. Bellows prevent mixing of propellants.	Same Same
	Solenoid/Pressure Relief Valve (2) V-IVB-42-42	1) Opens on ground command after checkout and launch cancellation. Opens automatically if plenum pressure exceeds predetermined limit. Normally closed to retain regulated helium pressure.	1) Failure to open on command	1) None. Not used unless countdown is discontinued. 2) Loss of subsystem. Propellant tank can not be purged.	A) (Function 2) Scrub. B) Not applicable. C),D),E),F),G) None. This valve is not opened in flight.	Same Same Same
			2) Failure to open by pressure.	None. If regulated pressure is too high, either of the two relief valves will open. Failure of both would mean at least three failures.	A),B),C),D),E),F),G) None.	Same
		2) Opens on ground command for purging propellant tanks.	3) Internal leak.	POSSIBLE LOSS OF SUBSYSTEM (If helium supply is lost before completion of mission)	A),B) Delay in launch or scrub. C) None. D),F) POSSIBLE LOSS OF STAGE Due to lack of ullage ** control E),G) Possible loss of attitude control.	Same POSSIBLE LOSS OF MISSION POSSIBLE LOSS OF MISSION

Δ ITEMS MARKED THUS (Δ) DO NOT OPERATE IN FLIGHT

** Reference to ullage applies to Saturn V only.

RELIABILITY FAILURE EFFECT ANALYSIS

A) COUNTDOWN/CHECKOUT
B) COUNTDOWN - AUTOMATIC SEQUENCE
C) FLIGHT - BOOST PHASE
D) FLIGHT - POWERED PHASE, 1ST
E) FLIGHT - COAST PHASE, 1ST
F) FLIGHT - POWERED PHASE, 2ND
G) FLIGHT - COAST PHASE, 2ND

PROPELLANT PRESSURIZATION (ATTITUDE CONTROL SUBSYSTEM)

Δ	ITEM	FUNCTION	FAILURE TYPE	FAILURE EFFECT ON SUBSYSTEM PERFORMANCE	FAILURE EFFECT ON S-IVB STAGE	FAILURE EFFECT ON SATURN VEHICLE
*	Vent line Disconnect 1A49999-501,-1 (2) V-IVB-42-43	Connects to GSE half to permit recovery of vented helium, permits ground check for leak in relief valve, permits entry of helium for purging propellant tanks.	1) Fail to engage.	LOSS OF SUBSYSTEM Propellant tanks can not be purged.	A) Delay in launch. B) Not applicable. C).D),E),F),G) Engaged at phase A) only.	Same Same Same
			2) Difficult disconnect.	POSSIBLE LOSS OF SUBSYSTEM Depending on extent of damage caused at lift-off.	A),B) Not applicable. C) None. D),F) POSSIBLE LOSS OF STAGE Due to loss of attitude and ullage ** control. E),G) POSSIBLE LOSS OF STAGE	 POSSIBLE LOSS OF MISSION POSSIBLE LOSS OF MISSION
	Bellows (Separating helium from propellant) (2) V-IVB-42-44	Provides a flexible separater between helium and propellant.	1) Leak.	None. Quad check valves prevent fuel flow back into oxidizer or vice-versa.	A),B) This failure can not be detected unless plenum helium is sampled during checkout C) None. Helium not needed. D),E),F),G) None.	Same Same
			2) Burst.	LOSS OF SYBSYSTEM Bellows can collapse and and subsequently prevent flow of propellant to the engines	A),B) Scrub. This failure can be detected if plenium helium is sampled during checkout C) None D),E),F),G) POSSIBLE LOSS OF STAGE Due to loss of attitude and ullage ** control.	Same Same POSSIBLE LOSS OF MISSION

Δ ITEMS MARKED THUS (Δ) DO NOT OPERATE IN FLIGHT

RELIABILITY FAILURE EFFECT ANALYSIS

A) COUNTDOWN/CHECKOUT
B) COUNTDOWN-AUTOMATIC SEQUENCE
C) FLIGHT-BOOST PHASE
D) FLIGHT-POWERED PHASE, 1ST
E) FLIGHT-COAST PHASE, 1ST
F) FLIGHT-POWERED PHASE, 2ND
G) FLIGHT-COAST PHASE, 2ND

PROPELLANT PRESSURIZATION (ATTITUDE CONTROL SUBSYSTEM)

Δ	ITEM	FUNCTION	FAILURE TYPE	FAILURE EFFECT ON SUBSYSTEM PERFORMANCE	FAILURE EFFECT ON S-IVB STAGE	FAILURE EFFECT ON SATURN VEHICLE
	Subsystem Plumbing V-IVB-42-45	Connects all components of the propellant pressurization subsystem.	1) Leakage at connections.	POSSIBLE LOSS OF SUBSYSTEM Helium supply may be depleted prematurely.	A),B) Delay in launch or scrub. C) None. Subsystem not needed in this phase. D),E),F),G) POSSIBLE LOSS OF STAGE	Same Same POSSIBLE LOSS OF MISSION

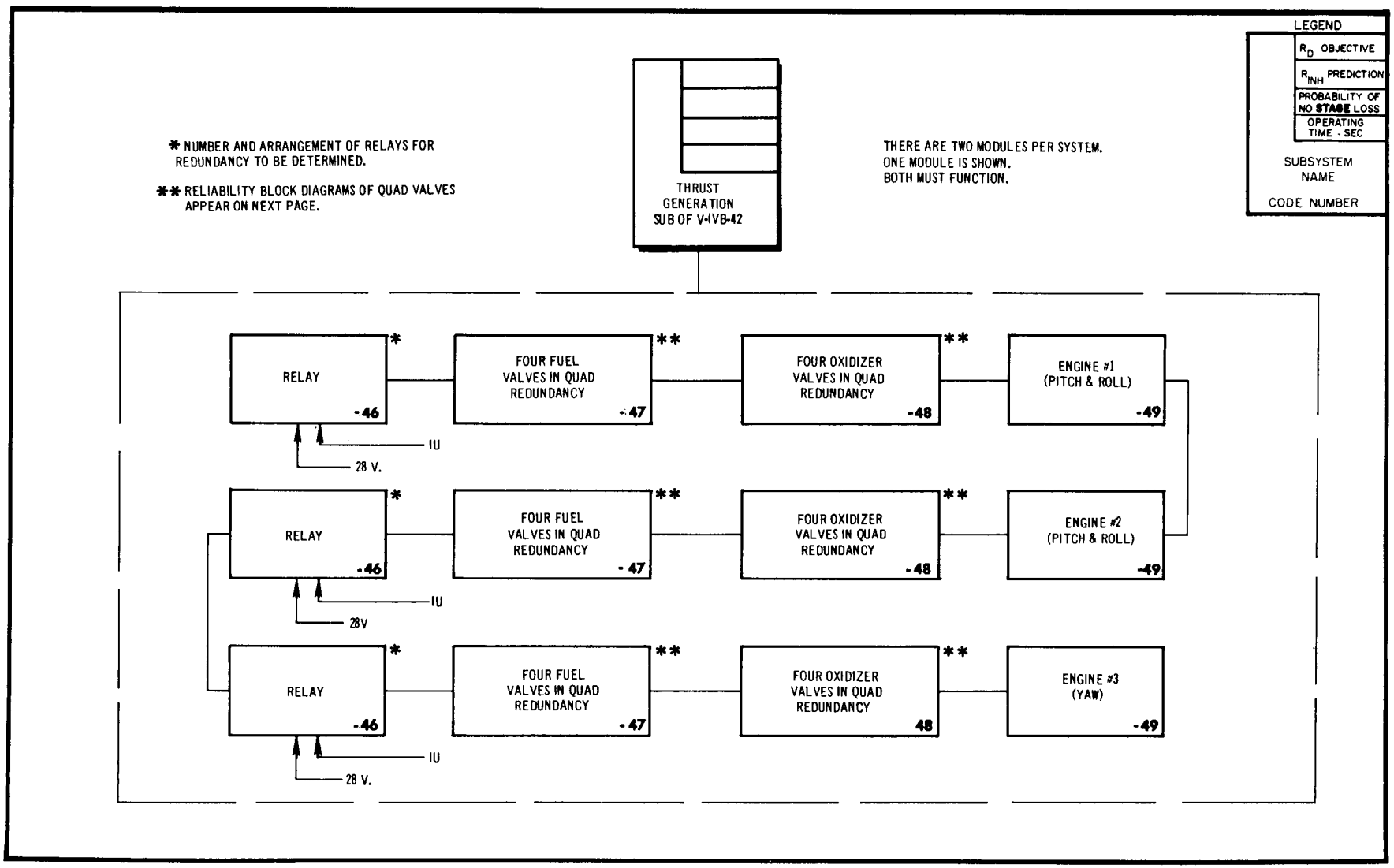
LEGEND
R_D OBJECTIVE
R_{INH} PREDICTION
PROBABILITY OF NO STAGE LOSS
OPERATING TIME - SEC
SUBSYSTEM NAME
CODE NUMBER
* NUMBER AND ARRANGEMENT OF RELAYS FOR REDUNDANCY TO BE DETERMINED.
** RELIABILITY BLOCK DIAGRAMS OF QUAD VALVES APPEAR ON NEXT PAGE.
THRUST GENERATION SUB OF V-IVB-42
THERE ARE TWO MODULES PER SYSTEM. ONE MODULE IS SHOWN. BOTH MUST FUNCTION.
RELAY -46
FOUR FUEL VALVES IN QUAD REDUNDANCY -47
FOUR OXIDIZER VALVES IN QUAD REDUNDANCY -48
ENGINE #1 (PITCH & ROLL) -49
IU
28 V.
RELAY -46
FOUR FUEL VALVES IN QUAD REDUNDANCY -47
FOUR OXIDIZER VALVES IN QUAD REDUNDANCY -48
ENGINE #2 (PITCH & ROLL) -49
IU
28V
RELAY -46
FOUR FUEL VALVES IN QUAD REDUNDANCY -47
FOUR OXIDIZER VALVES IN QUAD REDUNDANCY 48
ENGINE #3 (YAW) -49
IU
28 V.

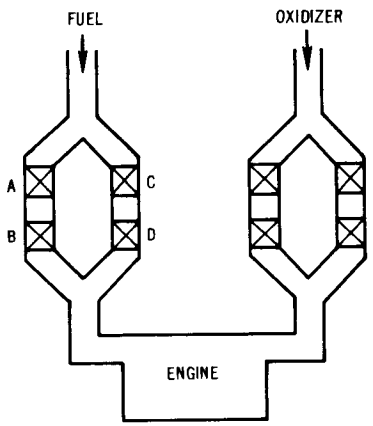

FUNCTIONAL DIAGRAM FOR ENGINE
QUAD VALVES

A, B, C, & D ARE INDIVIDUAL VALVES.
(LETTERS ARE FOR REFERENCE ONLY)

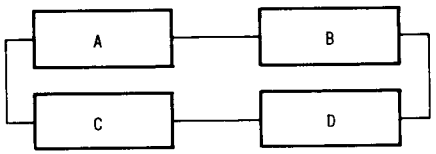

RELIABILITY DIAGRAM FOR VALVES OPENING

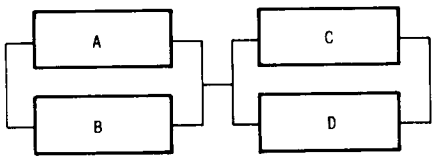

RELIABILITY DIAGRAM FOR VALVES CLOSING

LEGEND

R_D OBJECTIVE
R_{INH} PREDICTION
PROBABILITY OF NO STAGE LOSS
OPERATING TIME - SEC

SUBSYSTEM NAME

CODE NUMBER

Δ ITEMS MARKED THUS (Δ) DO NOT OPERATE IN FLIGHT

RELIABILITY FAILURE EFFECT ANALYSIS

A) COUNTDOWN/CHECKOUT
B) COUNTDOWN-AUTOMATIC SEQUENCE
C) FLIGHT-BOOST PHASE
D) FLIGHT-POWERED PHASE, 1ST
E) FLIGHT-COAST PHASE, 1ST
F) FLIGHT-POWERED PHASE, 2ND
G) FLIGHT-COAST PHASE, 2ND

THRUST GENERATION (ATTITUDE CONTROL SUBSYSTEM)

Δ ITEM	FUNCTION	FAILURE TYPE	FAILURE EFFECT ON SUBSYSTEM PERFORMANCE	FAILURE EFFECT ON S-IVB STAGE	FAILURE EFFECT ON SATURN VEHICLE
Relay, single pole, normally open. (Quantity to be determined) V-IVB-42-46	Closes when energized by a signal from the sequencer to open the associated solenoid operated fuel and/or oxidizer valve. Opens when de-energized.	1) Failure to close. (Electrical or mechanical fault.) 2) Failure to open.	None. Relay arrangement will be such that no single failure can cause the loss of the subsystem.	A),B),C) None. Relay is not needed before D) phase. D),E),F),G) None for single failure. Redundancy is provided.	Same Same
Fuel Valve, Solenoid Operated (Four in quad redundancy) (12) V-IVB-42-47	Opens upon receipt of D.C. from the relay. Permits fuel to flow to the attitude control engine. Closes when de-energized.	1) Failure to open. 2) Failure to close.	None. Valves are arranged in quad redundancy so that no single failure can cause the loss of the subsystem.	A),B),C) None. Not needed before D) phase. D),E),F),G) None for single failure. Redundancy is provided.	Same Same
Oxidizer Valve Solenoid Operated (Four in quad redundancy) (12) V-IVB-42-48	Opens when energized by D.C. from the relay. Permits oxidizer to flow to the attitude control engine. Closes when de-energized.	1) Failure to open. 2) Failure to close.	None. Valves are arranged in quad redundancy so that no single failure can cause the loss of the subsystem.	A),B),C) None. Valves are not needed before D) phase. D),E),F),G) None for single failure. Redundancy is provided.	Same Same
Engine, 150 lb. thrust. (3) V-IVB-42-49	Fires on command from the instrument unit to provide thrust which correct pitch, roll, or yaw errors during **coast** flight, and roll only during powered flight. Firing is spontaneous when ozidizer and fuel meet in the combustion chamber.	1) Failure to start.	LOSS OF SUBSYSTEM These engines must work in pairs to produce symmetrical forces about the three major axes of the stage. A single failure causes the loss of the subsystem.	A),B),C) None. Not required before D) phase. D),F) LOSS OF STAGE Vehicle is permitted to rotate uncontrolled about its longitudinal **axis** and will not enter orbit at the correct angle. E) LOSS OF STAGE Loss of attitude control results in incorrect heading in subsequent powered phase. G) LOSS OF STAGE	Same LOSS OF MISSION LOSS OF MISSION LOSS OF MISSION
		2) Leakage of propellants (Leakage around connections, tubes break or separate from injector.)	POSSIBLE LOSS OF SUBSYSTEM Due to fire.	A),B),C) None. D),E),F),G) POSSIBLE LOSS OF STAGE Due to fire.	Same POSSIBLE LOSS OF VEHICLE

Δ ITEMS MARKED THUS (Δ) DO NOT OPERATE IN FLIGHT

RELIABILITY FAILURE EFFECT ANALYSIS

THRUST GENERATION (ATTITUDE CONTROL SUBSYSTEM)

A) COUNTDOWN/CHECKOUT
B) COUNTDOWN - AUTOMATIC SEQUENCE
C) FLIGHT - BOOST PHASE
D) FLIGHT - POWERED PHASE, 1ST
E) FLIGHT - COAST PHASE, 1ST
F) FLIGHT - POWERED PHASE, 2ND
G) FLIGHT - COAST PHASE, 2ND

Δ	ITEM	FUNCTION	FAILURE TYPE	FAILURE EFFECT ON SUBSYSTEM PERFORMANCE	FAILURE EFFECT ON S-IVB STAGE	FAILURE EFFECT ON SATURN VEHICLE
	Engine, 150 lb. thrust. (3) V-IVB-42-49 (Continued)		3) Throat failure. (Cracks, erosion, or burn through.)	Some loss of thrust. POSSIBLE LOSS OF SUBSYSTEM	A),B),C) None. Not used. D),E),F),G) POSSIBLE LOSS OF STAGE	Same POSSIBLE LOSS OF MISSION

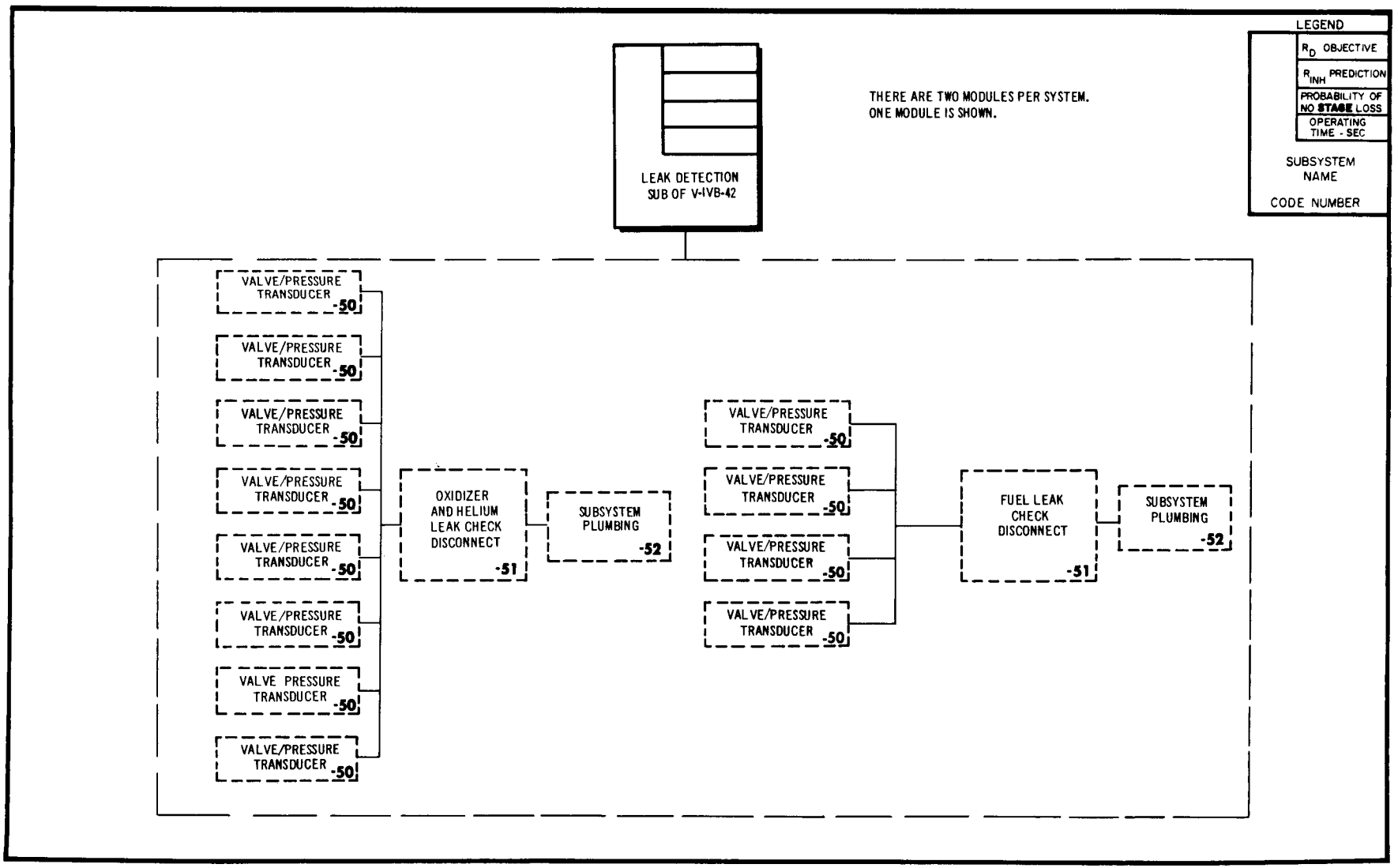
LEGEND
R_D OBJECTIVE
R_{INH} PREDICTION
PROBABILITY OF NO STAGE LOSS
OPERATING TIME - SEC
SUBSYSTEM NAME
CODE NUMBER
THERE ARE TWO MODULES PER SYSTEM.
ONE MODULE IS SHOWN.
LEAK DETECTION SUB OF V-IVB-42
VALVE/PRESSURE TRANSDUCER -50
VALVE/PRESSURE TRANSDUCER -50
VALVE/PRESSURE TRANSDUCER -50
VALVE/PRESSURE TRANSDUCER -50
VALVE/PRESSURE TRANSDUCER -50
VALVE/PRESSURE TRANSDUCER -50
VALVE PRESSURE TRANSDUCER -50
VALVE/PRESSURE TRANSDUCER -50
OXIDIZER AND HELIUM LEAK CHECK DISCONNECT -51
SUBSYSTEM PLUMBING -52
VALVE/PRESSURE TRANSDUCER -50
VALVE/PRESSURE TRANSDUCER -50
VALVE/PRESSURE TRANSDUCER -50
VALVE/PRESSURE TRANSDUCER -50
FUEL LEAK CHECK DISCONNECT -51
SUBSYSTEM PLUMBING -52

Δ ITEMS MARKED THUS (*) DO NOT OPERATE IN FLIGHT

RELIABILITY FAILURE EFFECT ANALYSIS

A) COUNTDOWN/CHECKOUT
B) COUNTDOWN-AUTOMATIC SEQUENCE
C) FLIGHT-BOOST PHASE
D) FLIGHT-POWERED PHASE, 1ST
E) FLIGHT-COAST PHASE, 1ST
F) FLIGHT-POWERED PHASE, 2ND
G) FLIGHT-COAST PHASE, 2ND

LEAK DETECTION (ATTITUDE CONTROL SUBSYSTEM)

Δ	ITEM	FUNCTION	FAILURE TYPE	FAILURE EFFECT ON SUBSYSTEM PERFORMANCE	FAILURE EFFECT ON S-IVB STAGE	FAILURE EFFECT ON SATURN VEHICLE
*	Valve/Transducer (12) V-IVB-42-50	Leak detection subsystem is used in ground checkout only. The procedure is: 1. Open one valve at a time and pressurize the line from GSE. 2. Close valve and observe the change in pressure detected by the transducer. (Valves are solenoid operated and normally closed.)	1) Open circuit in any single transducer.	Leak in this particular area is not detected. However, any serious leak would be detected later when the valves are opened for a leak rate check.	A),B) None. Leak detection system is for monitoring purposes only, and has no affect on the operation of the stage. C),D),E),F),G) Not applicable.	Same Same
			2) Valve failure to open.	None. Any serious leak would be detected by the transducer.	A),B) None. Leak detection is a monitoring function only. C),D),E),F),G) Not applicable.	Same Same
			3) Valve failure to close.	None. All other areas can be checked for leaks. Then the area controlled by the faulty valve can be checked by elimination through the use of the GSE gage.	A),B) None. Leak detection is a monitoring function only. C),D),E),F),G) Not applicable.	Same Same
*	Leak Check disconnect. (Vehicle half) (2) V-IVB-42-51	Engages and locks with GSE half, for pressurizing the leak detection subsystem. Disengages at lift-off.	1) Failure to engage.	LOSS OF SUBSYSTEM Subsystem can not be pressurized.	A) None. Leak detection subsystem is for monitoring only. B),C),D),E),F),G) None. This failure can occur in phase A) only.	Same Same
			2) Difficult disconnect.	None. Function of subsystem is completed before lift-off.	A),B) None. C),D),E),F),G) None. Function is not required in flight.	Same Same
*	Subsystem Plumbing V-IVB-42-52	Connects all components of this subsystem in two sets; the helium and oxidizer set, and the fuel set.	1) Leakage at connections.	This failure can cause a false leak signal or prevent leak detection in either the helium/oxidizer set or the fuel set or both.	A),B) Delay in launch. C),D),E),F),G) None. This subsystem is used only during ground checkout.	Same Same

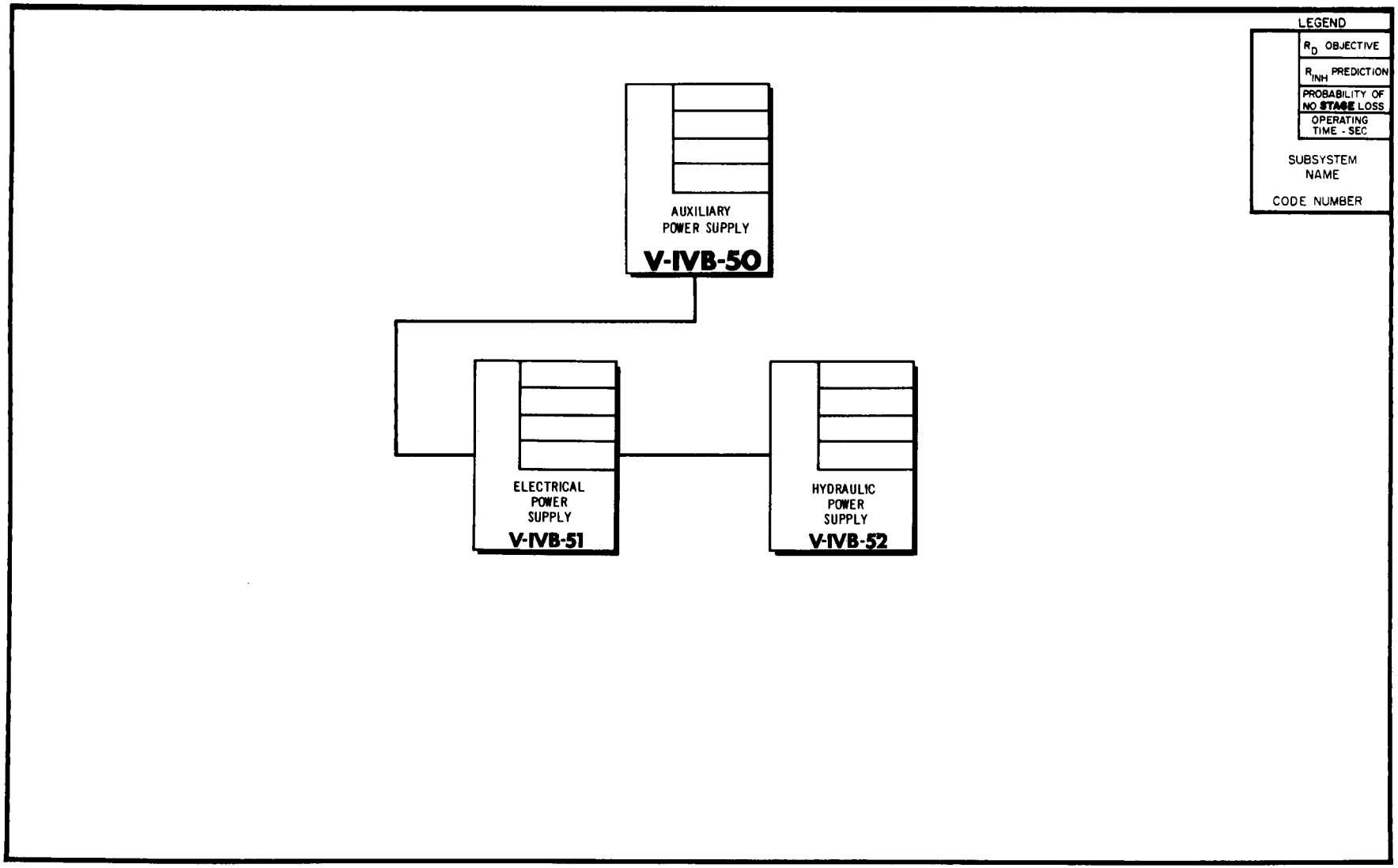
LEGEND
R_D OBJECTIVE
R_{INH} PREDICTION
PROBABILITY OF NO STAGE LOSS
OPERATING TIME - SEC
SUBSYSTEM NAME
CODE NUMBER
AUXILIARY POWER SUPPLY
V-IVB-50
ELECTRICAL POWER SUPPLY
V-IVB-51
HYDRAULIC POWER SUPPLY
V-IVB-52

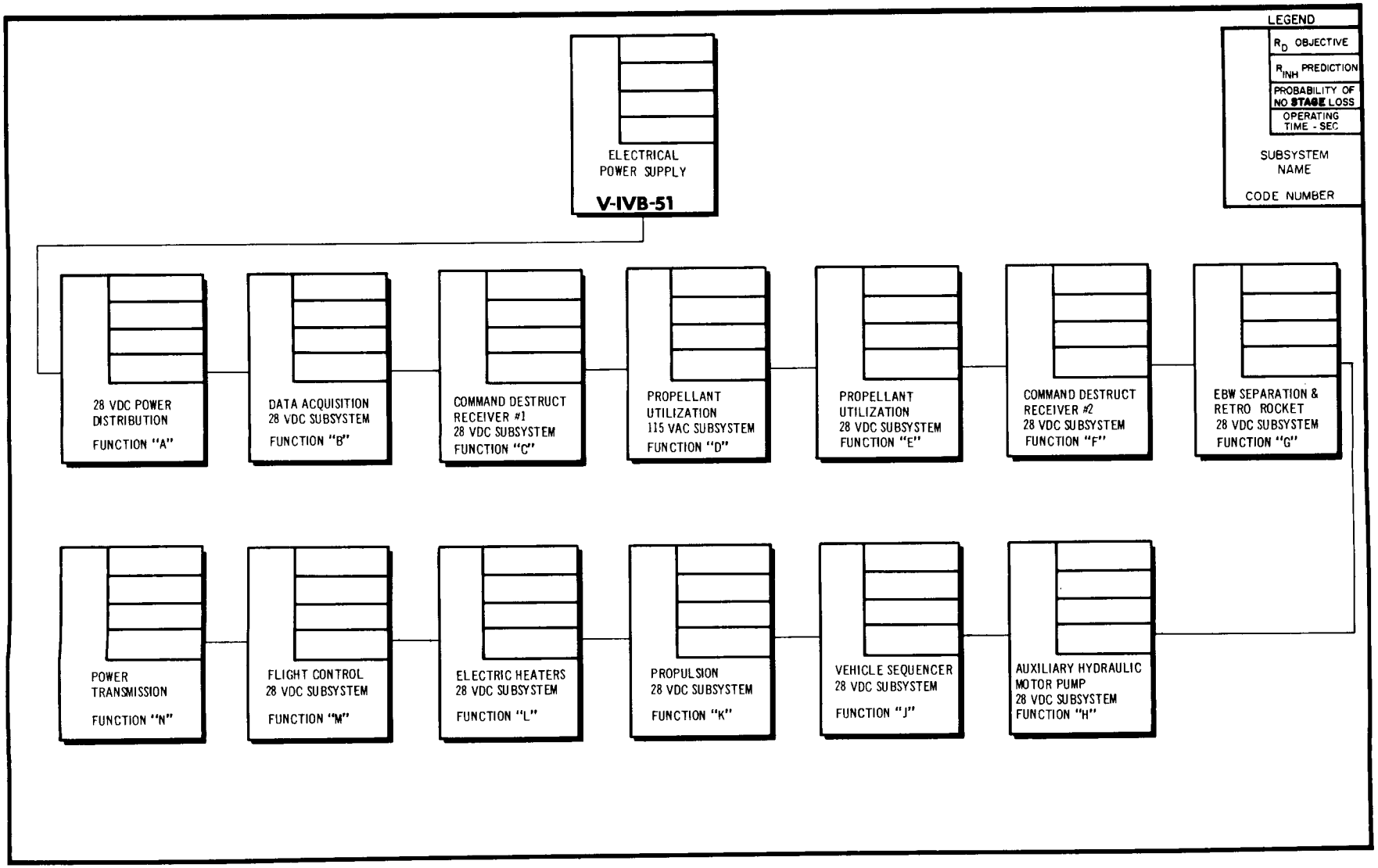
LEGEND
R_D OBJECTIVE
R_{INH} PREDICTION
PROBABILITY OF NO STAGE LOSS
OPERATING TIME - SEC
SUBSYSTEM NAME
CODE NUMBER
ELECTRICAL POWER SUPPLY
V-IVB-51
28 VDC POWER DISTRIBUTION
FUNCTION "A"
DATA ACQUISITION 28 VDC SUBSYSTEM
FUNCTION "B"
COMMAND DESTRUCT RECEIVER #1 28 VDC SUBSYSTEM
FUNCTION "C"
PROPELLANT UTILIZATION 115 VAC SUBSYSTEM
FUNCTION "D"
PROPELLANT UTILIZATION 28 VDC SUBSYSTEM
FUNCTION "E"
COMMAND DESTRUCT RECEIVER #2 28 VDC SUBSYSTEM
FUNCTION "F"
EBW SEPARATION & RETRO ROCKET 28 VDC SUBSYSTEM
FUNCTION "G"
POWER TRANSMISSION
FUNCTION "N"
FLIGHT CONTROL 28 VDC SUBSYSTEM
FUNCTION "M"
ELECTRIC HEATERS 28 VDC SUBSYSTEM
FUNCTION "L"
PROPULSION 28 VDC SUBSYSTEM
FUNCTION "K"
VEHICLE SEQUENCER 28 VDC SUBSYSTEM
FUNCTION "J"
AUXILIARY HYDRAULIC MOTOR PUMP 28 VDC SUBSYSTEM
FUNCTION "H"

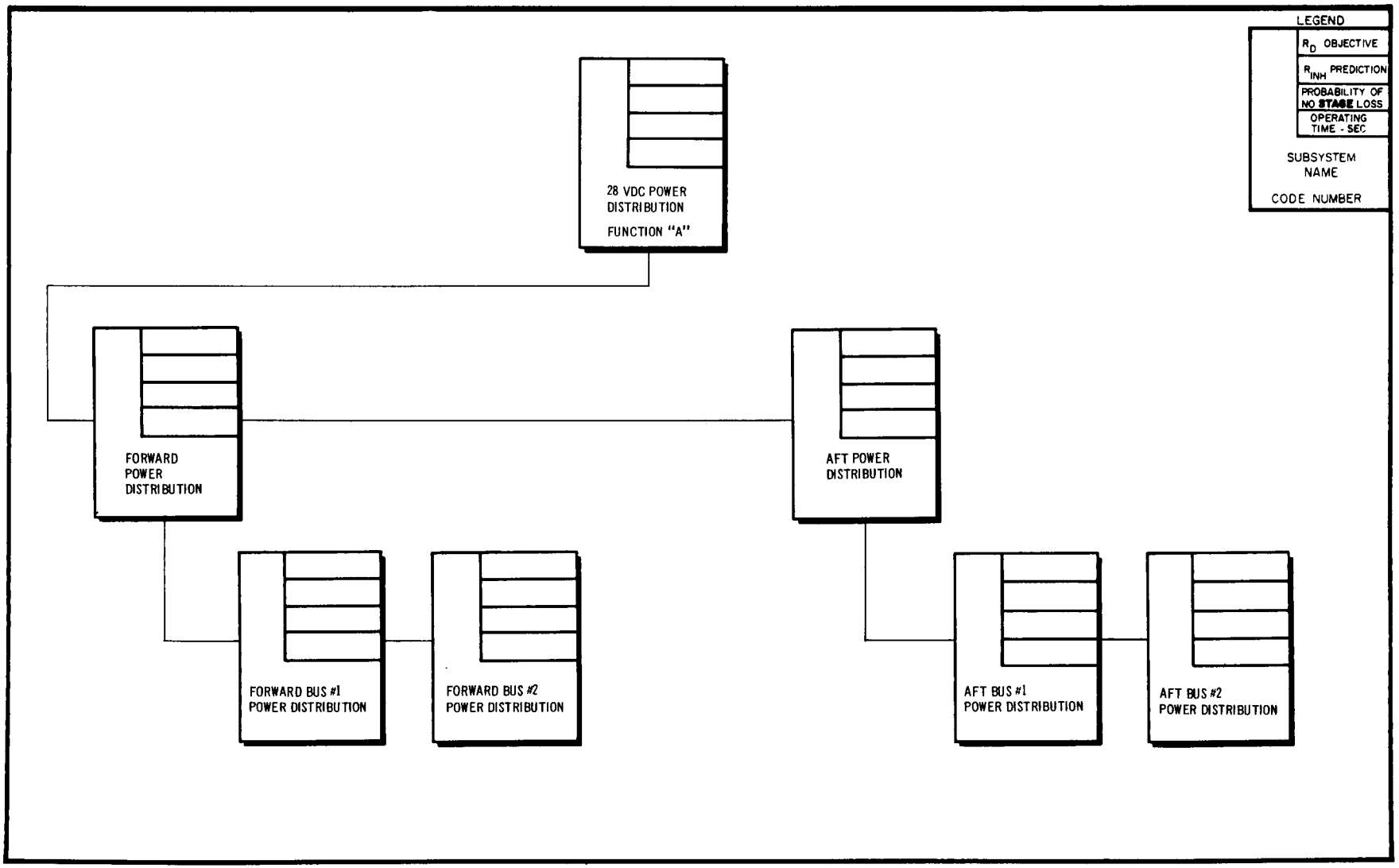
LEGEND
R_D OBJECTIVE
R_{INH} PREDICTION
PROBABILITY OF NO STAGE LOSS
OPERATING TIME - SEC
SUBSYSTEM NAME
CODE NUMBER
28 VDC POWER DISTRIBUTION
FUNCTION "A"
FORWARD POWER DISTRIBUTION
AFT POWER DISTRIBUTION
FORWARD BUS #1 POWER DISTRIBUTION
FORWARD BUS #2 POWER DISTRIBUTION
AFT BUS #1 POWER DISTRIBUTION
AFT BUS #2 POWER DISTRIBUTION

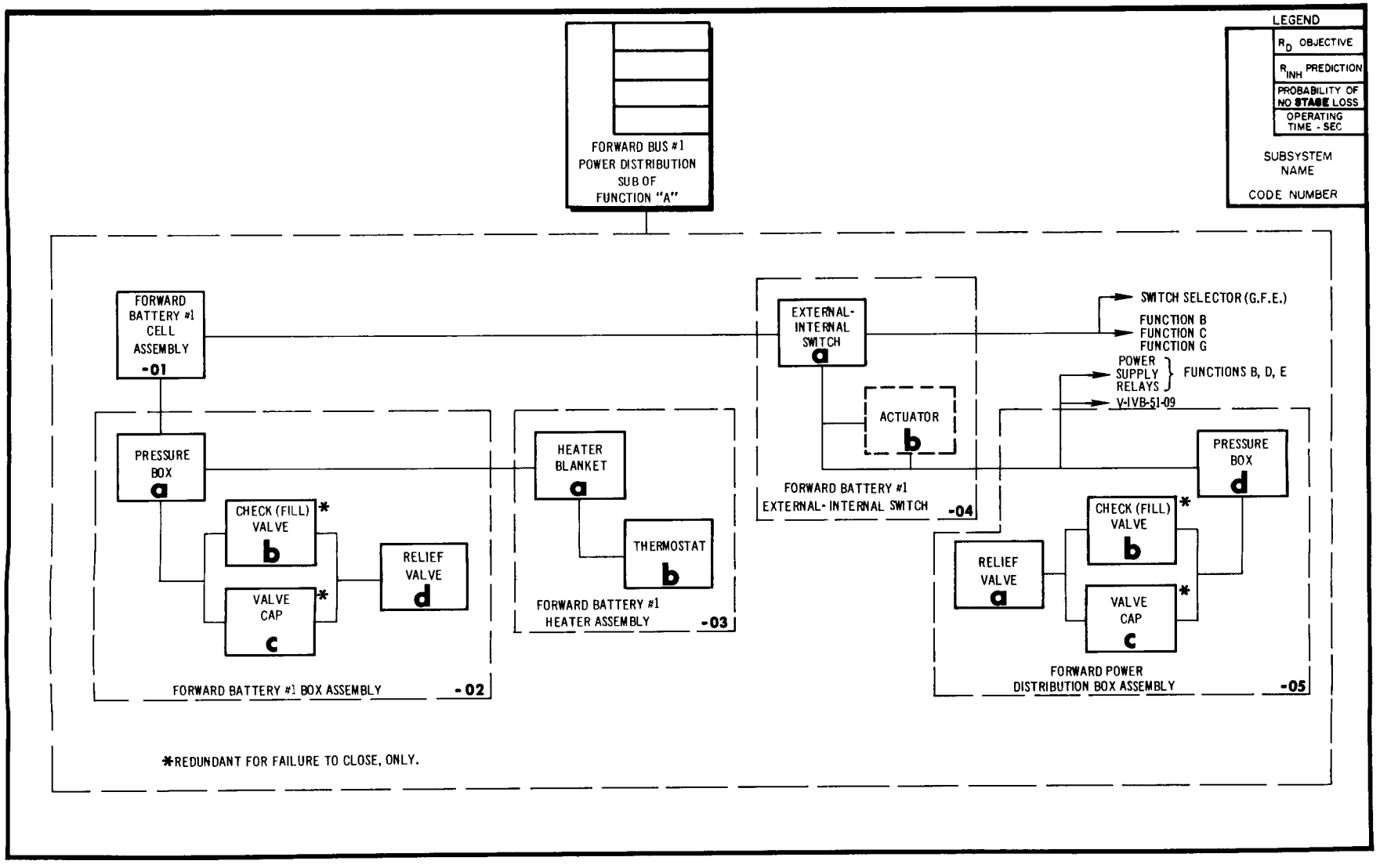
LEGEND
R_D OBJECTIVE
R_{INH} PREDICTION
PROBABILITY OF NO STAGE LOSS
OPERATING TIME - SEC
SUBSYSTEM NAME
CODE NUMBER
FORWARD BUS #1 POWER DISTRIBUTION SUB OF FUNCTION "A"
FORWARD BATTERY #1 CELL ASSEMBLY -01
PRESSURE BOX a
CHECK (FILL) VALVE b *
VALVE CAP c *
RELIEF VALVE d
FORWARD BATTERY #1 BOX ASSEMBLY -02
HEATER BLANKET a
THERMOSTAT b
FORWARD BATTERY #1 HEATER ASSEMBLY -03
EXTERNAL-INTERNAL SWITCH a
ACTUATOR b
FORWARD BATTERY #1 EXTERNAL-INTERNAL SWITCH -04
SWITCH SELECTOR (G.F.E.)
FUNCTION B
FUNCTION C
FUNCTION G
POWER SUPPLY RELAYS
FUNCTIONS B, D, E
V-IVB-51-09
PRESSURE BOX d
CHECK (FILL) VALVE b *
RELIEF VALVE a
VALVE CAP c *
FORWARD POWER DISTRIBUTION BOX ASSEMBLY -05
*REDUNDANT FOR FAILURE TO CLOSE, ONLY.

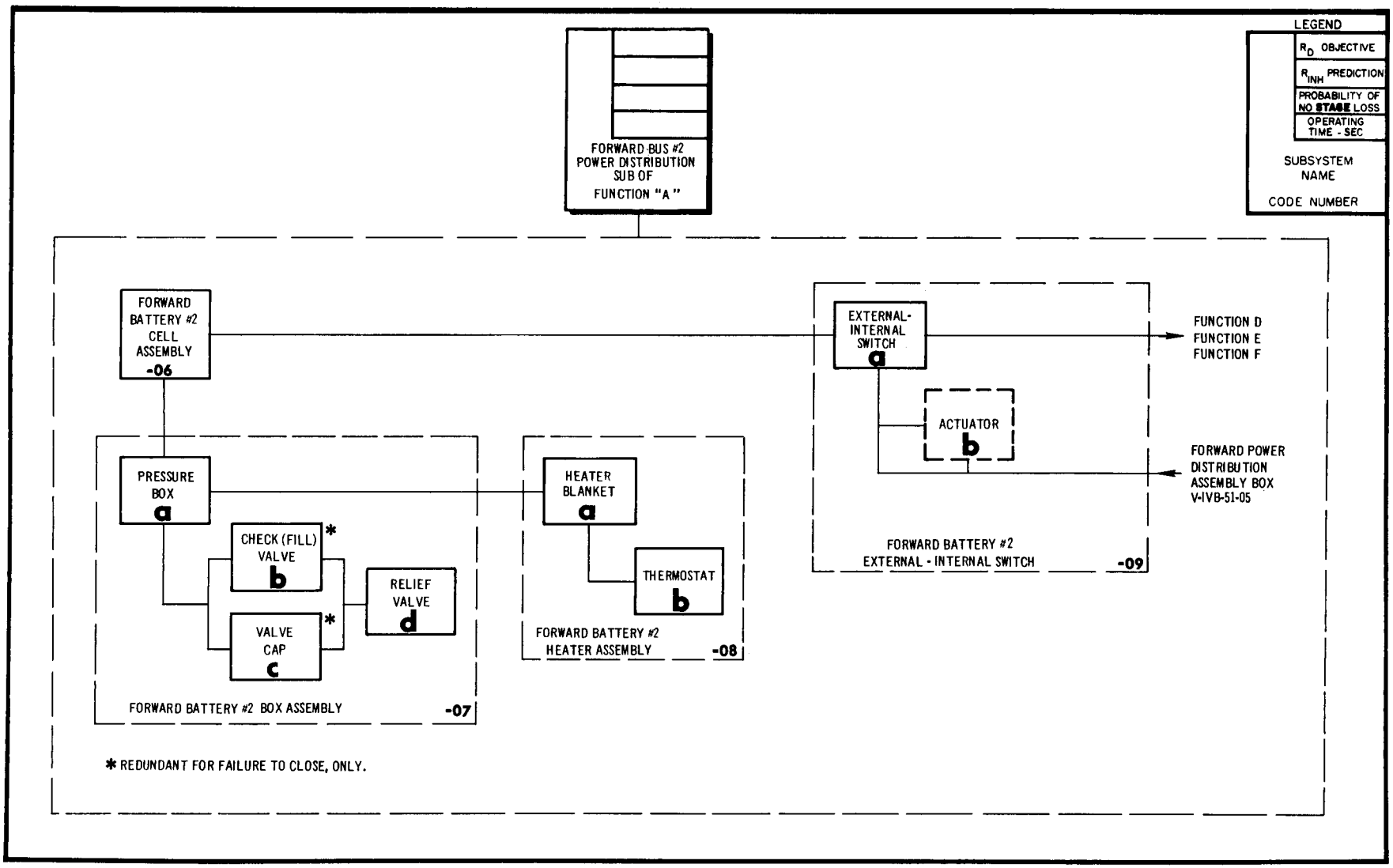
LEGEND
R_D OBJECTIVE
R_{INH} PREDICTION
PROBABILITY OF NO STAGE LOSS
OPERATING TIME - SEC
SUBSYSTEM NAME
CODE NUMBER
FORWARD BUS #2 POWER DISTRIBUTION SUB OF FUNCTION "A"
FORWARD BATTERY #2 CELL ASSEMBLY -06
EXTERNAL-INTERNAL SWITCH a
FUNCTION D
FUNCTION E
FUNCTION F
ACTUATOR b
FORWARD POWER DISTRIBUTION ASSEMBLY BOX V-IVB-51-05
FORWARD BATTERY #2 EXTERNAL - INTERNAL SWITCH -09
PRESSURE BOX a
CHECK (FILL) VALVE b *
VALVE CAP c *
RELIEF VALVE d
FORWARD BATTERY #2 BOX ASSEMBLY -07
HEATER BLANKET a
THERMOSTAT b
FORWARD BATTERY #2 HEATER ASSEMBLY -08
* REDUNDANT FOR FAILURE TO CLOSE, ONLY.

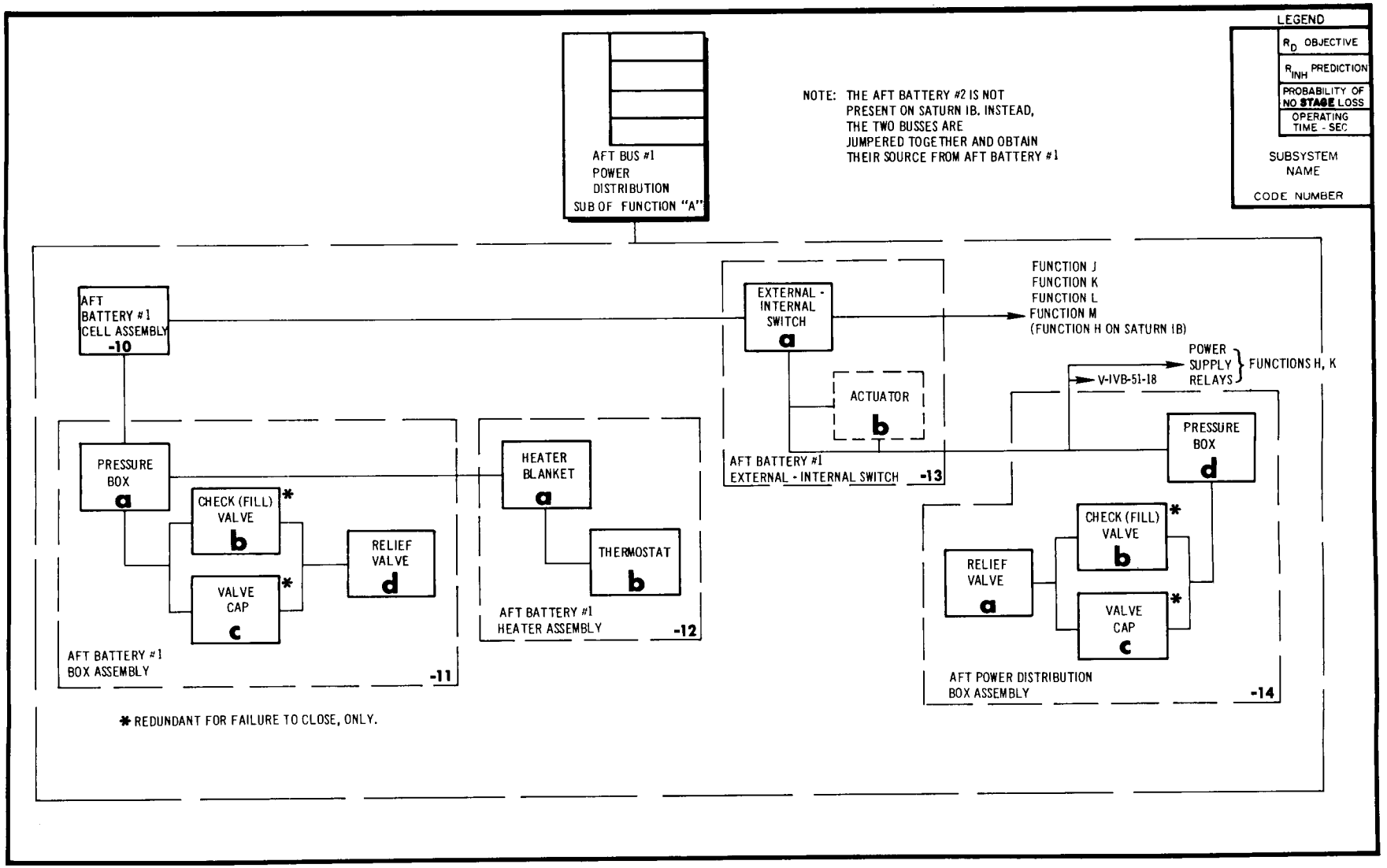
LEGEND
R_D OBJECTIVE
R_{INH} PREDICTION
PROBABILITY OF NO STAGE LOSS
OPERATING TIME - SEC
SUBSYSTEM NAME
CODE NUMBER
NOTE: THE AFT BATTERY #2 IS NOT PRESENT ON SATURN IB. INSTEAD, THE TWO BUSSES ARE JUMPERED TOGETHER AND OBTAIN THEIR SOURCE FROM AFT BATTERY #1
AFT BUS #1 POWER DISTRIBUTION SUB OF FUNCTION "A"
AFT BATTERY #1 CELL ASSEMBLY -10
EXTERNAL - INTERNAL SWITCH a
FUNCTION J
FUNCTION K
FUNCTION L
FUNCTION M
(FUNCTION H ON SATURN IB)
POWER SUPPLY RELAYS
FUNCTIONS H, K
V-IVB-51-18
ACTUATOR b
AFT BATTERY #1 EXTERNAL - INTERNAL SWITCH -13
PRESSURE BOX a
CHECK (FILL) VALVE b *
VALVE CAP c *
RELIEF VALVE d
AFT BATTERY #1 BOX ASSEMBLY -11
HEATER BLANKET a
THERMOSTAT b
AFT BATTERY #1 HEATER ASSEMBLY -12
PRESSURE BOX d
RELIEF VALVE a
CHECK (FILL) VALVE b *
VALVE CAP c *
AFT POWER DISTRIBUTION BOX ASSEMBLY -14
* REDUNDANT FOR FAILURE TO CLOSE, ONLY.

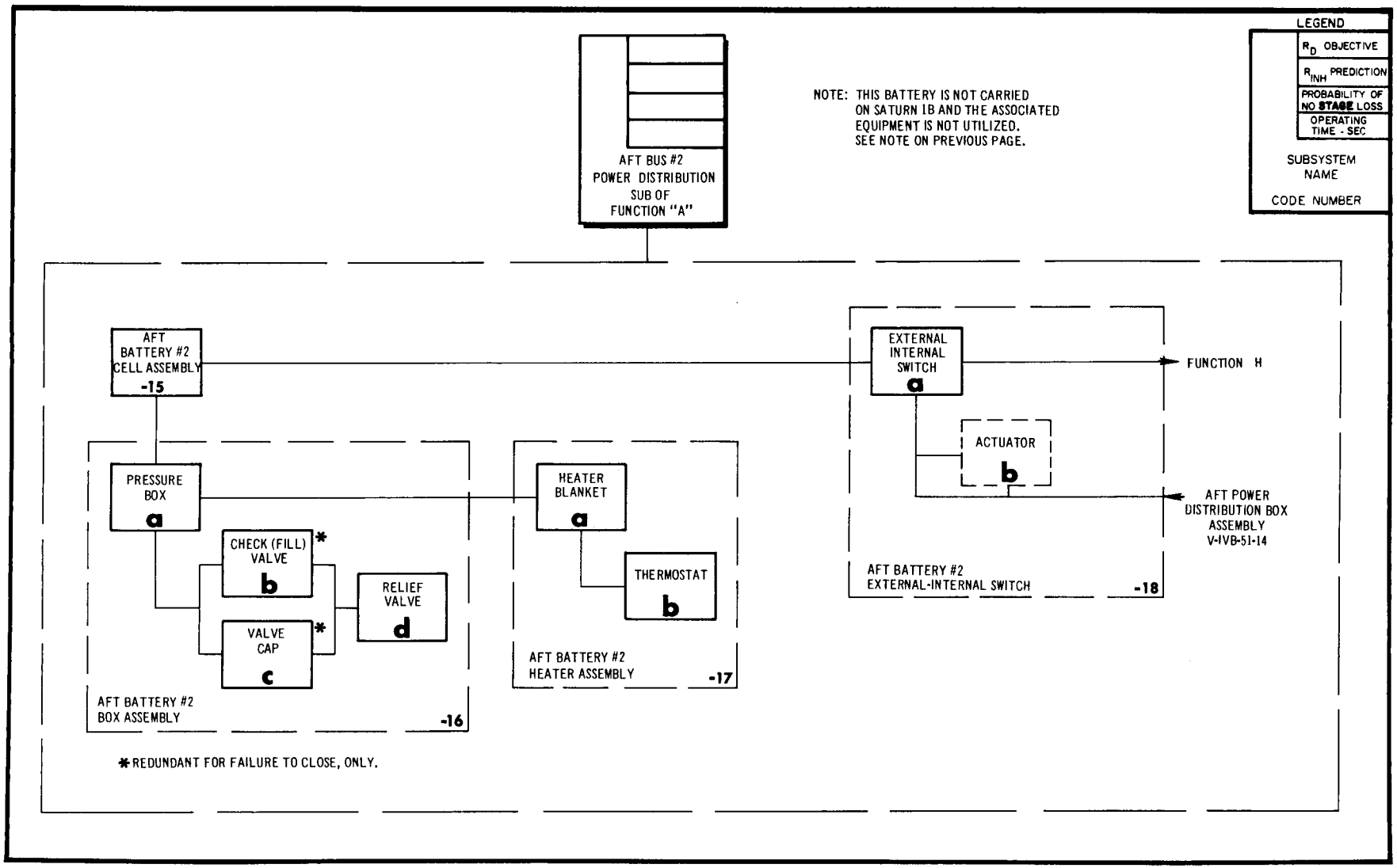
LEGEND
R_D OBJECTIVE
R_{INH} PREDICTION
PROBABILITY OF NO STAGE LOSS
OPERATING TIME - SEC
SUBSYSTEM NAME
CODE NUMBER
AFT BUS #2 POWER DISTRIBUTION SUB OF FUNCTION "A"
NOTE: THIS BATTERY IS NOT CARRIED ON SATURN 1B AND THE ASSOCIATED EQUIPMENT IS NOT UTILIZED. SEE NOTE ON PREVIOUS PAGE.
AFT BATTERY #2 CELL ASSEMBLY -15
PRESSURE BOX a
CHECK (FILL) VALVE b *
VALVE CAP c *
RELIEF VALVE d
AFT BATTERY #2 BOX ASSEMBLY -16
HEATER BLANKET a
THERMOSTAT b
AFT BATTERY #2 HEATER ASSEMBLY -17
EXTERNAL INTERNAL SWITCH a
ACTUATOR b
AFT BATTERY #2 EXTERNAL-INTERNAL SWITCH -18
FUNCTION H
AFT POWER DISTRIBUTION BOX ASSEMBLY V-IVB-51-14
* REDUNDANT FOR FAILURE TO CLOSE, ONLY.

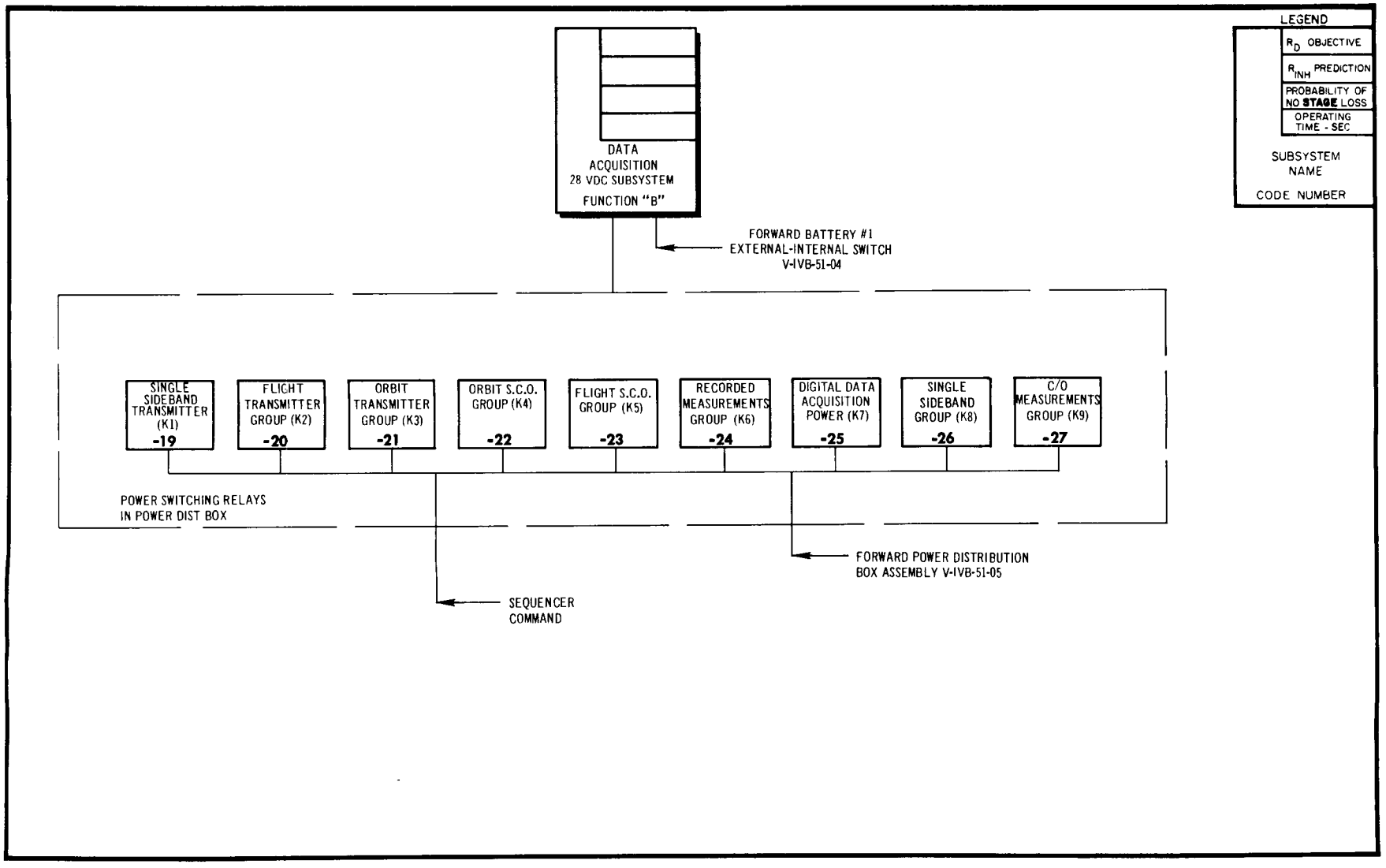
LEGEND
R_D OBJECTIVE
R_{INH} PREDICTION
PROBABILITY OF NO STAGE LOSS
OPERATING TIME - SEC
SUBSYSTEM NAME
CODE NUMBER
DATA ACQUISITION 28 VDC SUBSYSTEM
FUNCTION "B"
FORWARD BATTERY #1 EXTERNAL-INTERNAL SWITCH V-IVB-51-04
SINGLE SIDEBAND TRANSMITTER (K1) -19
FLIGHT TRANSMITTER GROUP (K2) -20
ORBIT TRANSMITTER GROUP (K3) -21
ORBIT S.C.O. GROUP (K4) -22
FLIGHT S.C.O. GROUP (K5) -23
RECORDED MEASUREMENTS GROUP (K6) -24
DIGITAL DATA ACQUISITION POWER (K7) -25
SINGLE SIDEBAND GROUP (K8) -26
C/O MEASUREMENTS GROUP (K9) -27
POWER SWITCHING RELAYS IN POWER DIST BOX
FORWARD POWER DISTRIBUTION BOX ASSEMBLY V-IVB-51-05
SEQUENCER COMMAND

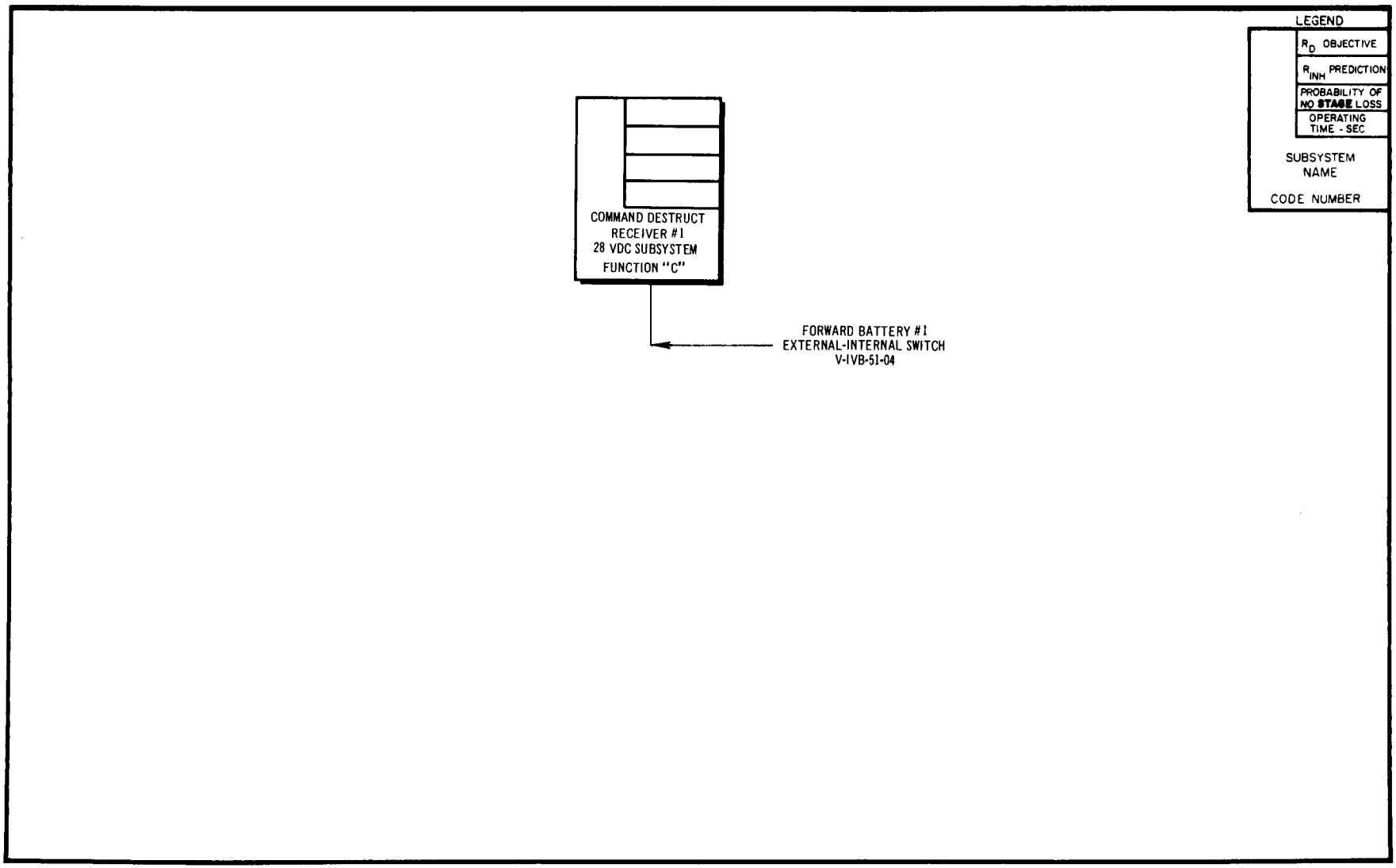
LEGEND
R_D OBJECTIVE
R_{INH} PREDICTION
PROBABILITY OF NO STAGE LOSS
OPERATING TIME - SEC
SUBSYSTEM NAME
CODE NUMBER
COMMAND DESTRUCT RECEIVER #1 28 VDC SUBSYSTEM FUNCTION "C"
FORWARD BATTERY #1 EXTERNAL-INTERNAL SWITCH V-IVB-51-04

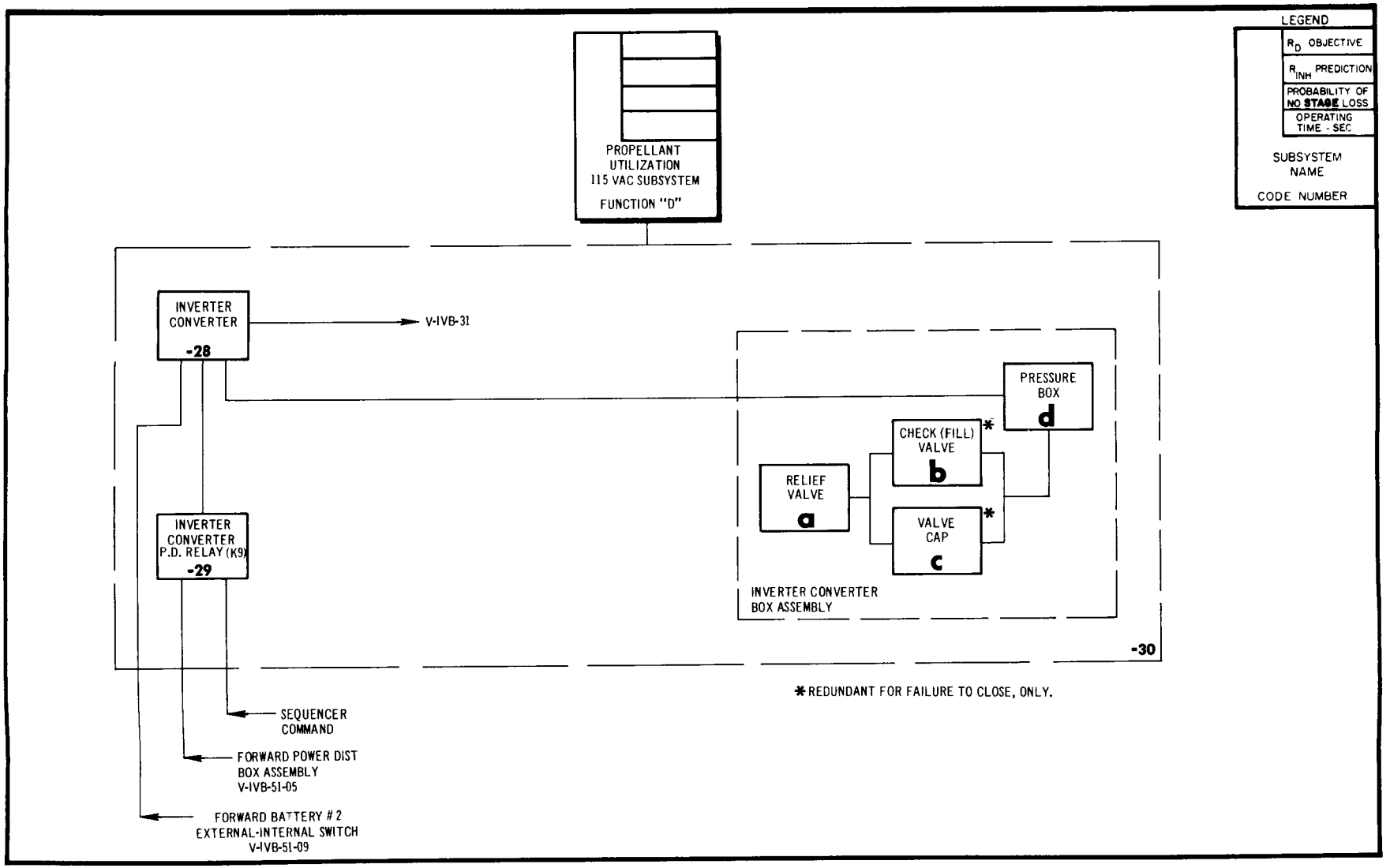
LEGEND
R_D OBJECTIVE
R_{INH} PREDICTION
PROBABILITY OF NO STAGE LOSS
OPERATING TIME - SEC
SUBSYSTEM NAME
CODE NUMBER
PROPELLANT UTILIZATION 115 VAC SUBSYSTEM
FUNCTION "D"
INVERTER CONVERTER -28
V-IVB-31
INVERTER CONVERTER P.D. RELAY (K9) -29
PRESSURE BOX d
CHECK (FILL) VALVE b *
RELIEF VALVE a
VALVE CAP c *
INVERTER CONVERTER BOX ASSEMBLY
-30
* REDUNDANT FOR FAILURE TO CLOSE, ONLY.
SEQUENCER COMMAND
FORWARD POWER DIST BOX ASSEMBLY V-IVB-51-05
FORWARD BATTERY # 2 EXTERNAL-INTERNAL SWITCH V-IVB-51-09

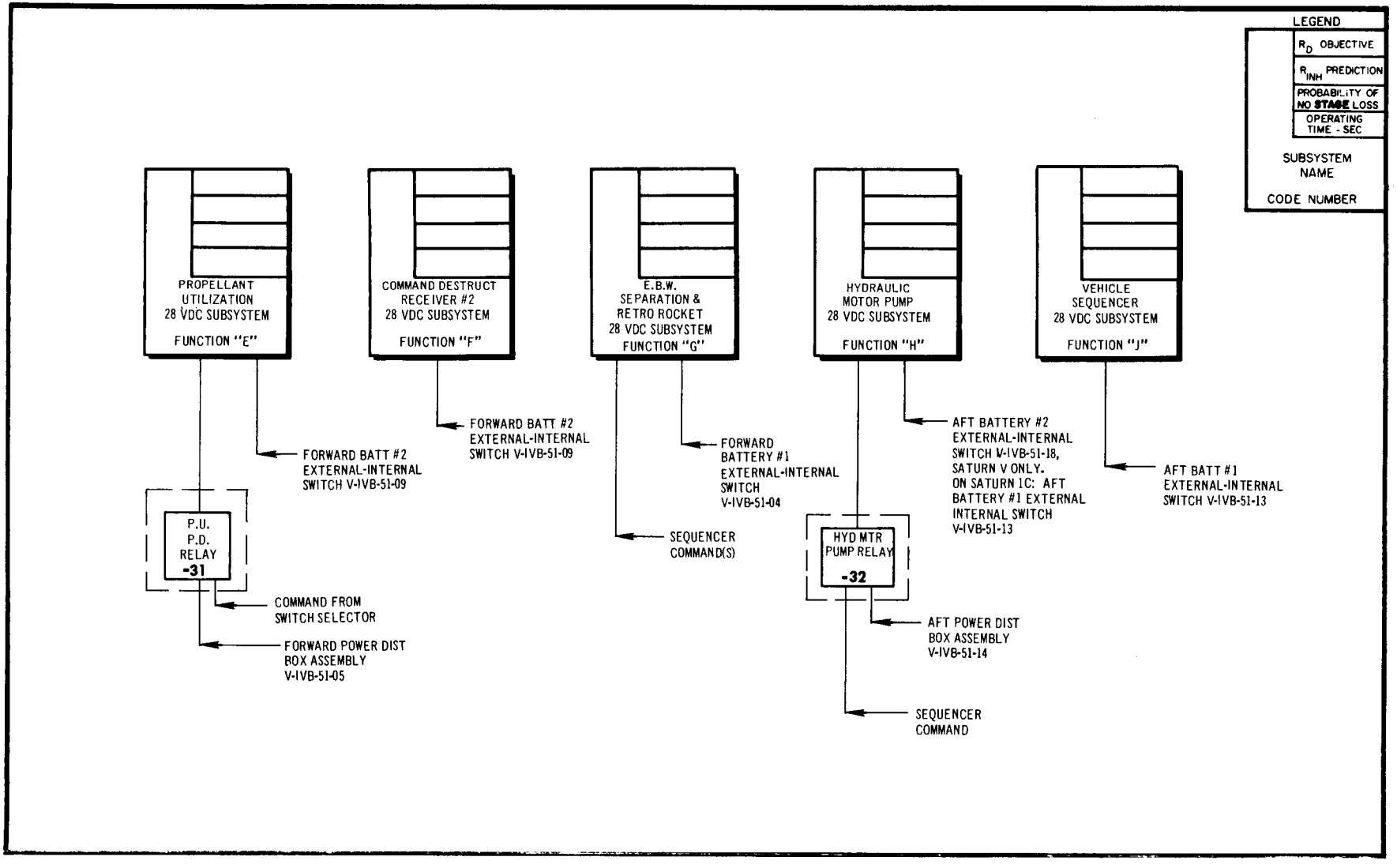
LEGEND
R_D OBJECTIVE
R_{INH} PREDICTION
PROBABILITY OF NO STAGE LOSS
OPERATING TIME - SEC
SUBSYSTEM NAME
CODE NUMBER
PROPELLANT UTILIZATION 28 VDC SUBSYSTEM
FUNCTION "E"
COMMAND DESTRUCT RECEIVER #2 28 VDC SUBSYSTEM
FUNCTION "F"
E.B.W. SEPARATION & RETRO ROCKET 28 VDC SUBSYSTEM
FUNCTION "G"
HYDRAULIC MOTOR PUMP 28 VDC SUBSYSTEM
FUNCTION "H"
VEHICLE SEQUENCER 28 VDC SUBSYSTEM
FUNCTION "J"
FORWARD BATT #2 EXTERNAL-INTERNAL SWITCH V-IVB-51-09
FORWARD BATT #2 EXTERNAL-INTERNAL SWITCH V-IVB-51-09
FORWARD BATTERY #1 EXTERNAL-INTERNAL SWITCH V-IVB-51-04
SEQUENCER COMMAND(S)
AFT BATTERY #2 EXTERNAL-INTERNAL SWITCH V-IVB-51-18, SATURN V ONLY. ON SATURN 1C: AFT BATTERY #1 EXTERNAL INTERNAL SWITCH V-IVB-51-13
AFT BATT #1 EXTERNAL-INTERNAL SWITCH V-IVB-51-13
P.U. P.D. RELAY -31
COMMAND FROM SWITCH SELECTOR
FORWARD POWER DIST BOX ASSEMBLY V-IVB-51-05
HYD MTR PUMP RELAY -32
AFT POWER DIST BOX ASSEMBLY V-IVB-51-14
SEQUENCER COMMAND

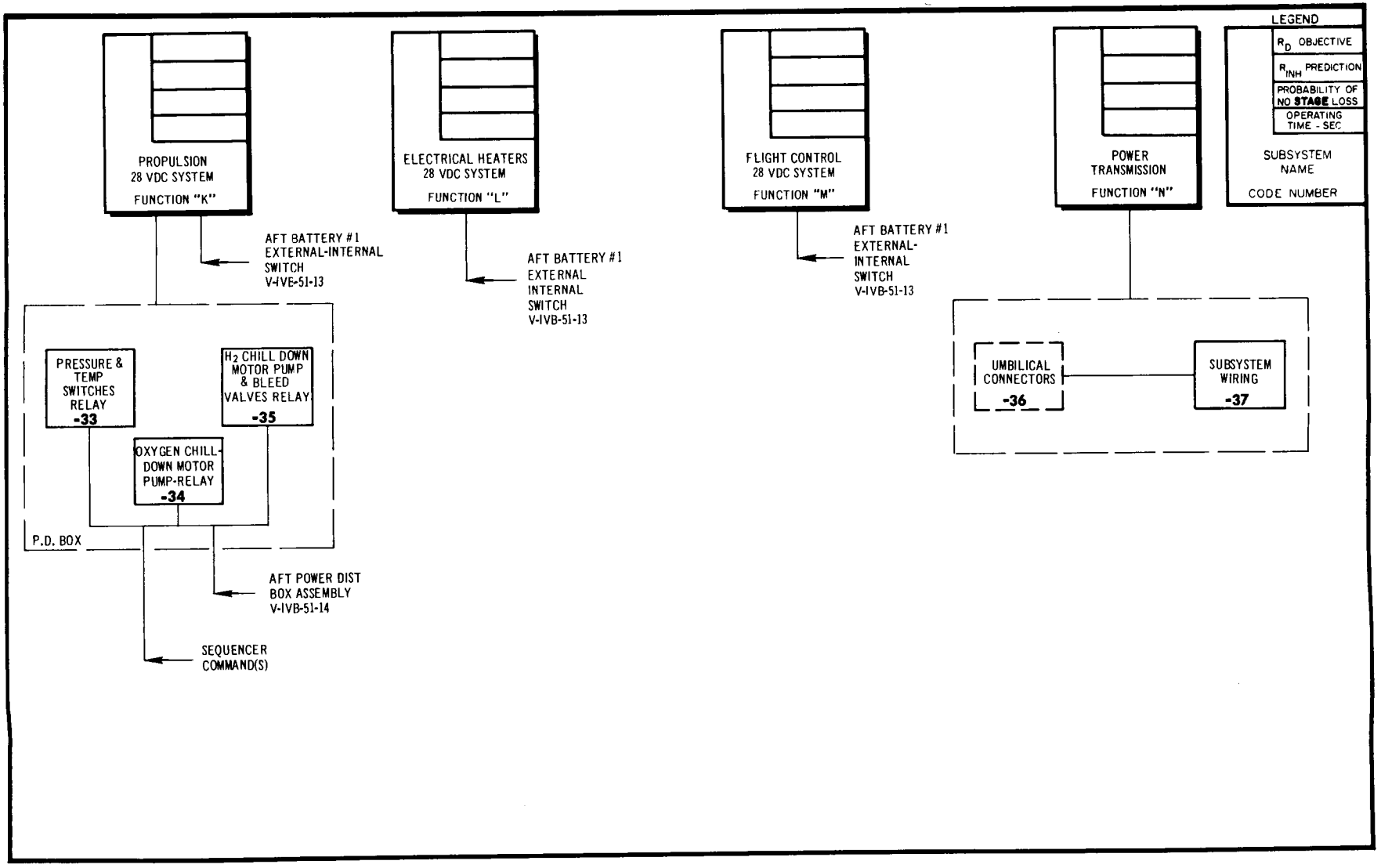
PROPULSION
28 VDC SYSTEM
FUNCTION "K"
ELECTRICAL HEATERS
28 VDC SYSTEM
FUNCTION "L"
FLIGHT CONTROL
28 VDC SYSTEM
FUNCTION "M"
POWER
TRANSMISSION
FUNCTION "N"
LEGEND
R_D OBJECTIVE
R_{INH} PREDICTION
PROBABILITY OF NO STAGE LOSS
OPERATING TIME - SEC
SUBSYSTEM NAME
CODE NUMBER
AFT BATTERY #1
EXTERNAL-INTERNAL
SWITCH
V-IVE-51-13
AFT BATTERY #1
EXTERNAL
INTERNAL
SWITCH
V-IVB-51-13
AFT BATTERY #1
EXTERNAL-
INTERNAL
SWITCH
V-IVB-51-13
PRESSURE & TEMP SWITCHES RELAY -33
H_2 CHILL DOWN MOTOR PUMP & BLEED VALVES RELAY -35
OXYGEN CHILL-DOWN MOTOR PUMP-RELAY -34
P.D. BOX
AFT POWER DIST BOX ASSEMBLY V-IVB-51-14
SEQUENCER COMMAND(S)
UMBILICAL CONNECTORS -36
SUBSYSTEM WIRING -37

Δ ITEMS MARKED THUS (⊕) DO NOT OPERATE IN FLIGHT

RELIABILITY FAILURE EFFECT ANALYSIS

ELECTRICAL POWER SUBSYSTEM

A) COUNTDOWN/CHECKOUT
B) COUNTDOWN-AUTOMATIC SEQUENCE
C) FLIGHT-BOOST PHASE
D) FLIGHT-POWERED PHASE, 1ST
E) FLIGHT-COAST PHASE, 1ST
F) FLIGHT-POWERED PHASE, 2ND
G) FLIGHT-COAST PHASE, 2ND

Δ ITEM	FUNCTION	FAILURE TYPE	FAILURE EFFECT ON SUBSYSTEM PERFORMANCE	FAILURE EFFECT ON S-IVB STAGE	FAILURE EFFECT ON SATURN VEHICLE
Forward Battery #1 Cell Assembly V-IVB-51-01	Provides the actual storage unit and supply source for all S-IVB battery power required for data acquisition, command destruct #1, and the GFE switch selector, and the separation and retro rocket functions.	Failure to provide power as required due to: a) internal cell failure b) open or short circuit in intercell connections.	PARTIAL LOSS OF SUBSYSTEM Loss of forward battery #1 results in loss of power to telemetry, command destruct receiver #1, the switch selector, and the separation and retro rocket functions.	A),B) Delay or scrub. C) None; loss of power considered insignificant in this phase. D),E),F),G) POSSIBLE LOSS OF STAGE Due to a loss of computer to sequencer command path as a result of loss of power to the switch selector.	Same Same POSSIBLE LOSS OF MISSION
Forward Battery #1 Box Assembly V-IVB-51-02 NOTE: Item includes: box shell, gasket, cover, valves, and the box half of the external connectors.	1) Provides a rigid frame for proper mounting of hardware parts, and for the mounting of assembled component onto stage structure.	Failure to retain parts or component in required location and position.	POSSIBLE PARTIAL LOSS OF SUBSYSTEM "Loose" parts can cause open circuit in battery output or short circuit the battery. Loss of battery power to telemetry, command destruct receiver #1, the switch selector, and the separation and retro rocket functions.	A),B) Delay or scrub. C) None; loss of power is significant to subsequent phases only. D),E),F),G) POSSIBLE LOSS OF STAGE Due to loss of power to the switch selector resulting in loss of computer to sequencer command paths.	Same Same POSSIBLE LOSS OF MISSION
	2) Retains an inert gas which is limited by a relief valve to a pressure of approximately 2 psi above the pressure of the gas surrounding the box assembly. This prevents the possibility of the box drawing in an explosive mixture which could be spark ignited.	1) Violent rupture of pressure retaining envelope due to relief valve failing to open, causing possible parts displacement.	POSSIBLE PARTIAL LOSS OF SUBSYSTEM Due to "loose" parts which can cause open or shorted circuitry.	A),B) None; not applicable, since differential pressure is approximately 2 psi until launch. C) None; loss of power is significant to subsequent phases only. D),E),F),G) POSSIBLE LOSS OF STAGE Due to loss of switch selector causing a loss of computer to sequencer command paths.	Same Same POSSIBLE LOSS OF MISSION

Δ ITEMS MARKED THUS (Δ) DO NOT OPERATE IN FLIGHT

RELIABILITY FAILURE EFFECT ANALYSIS

ELECTRICAL POWER SUBSYSTEM

A) COUNTDOWN/CHECKOUT
B) COUNTDOWN-AUTOMATIC SEQUENCE
C) FLIGHT-BOOST PHASE
D) FLIGHT-POWERED PHASE, 1ST
E) FLIGHT-COAST PHASE, 1ST
F) FLIGHT-POWERED PHASE, 2ND
G) FLIGHT-COAST PHASE, 2ND

Δ ITEM	FUNCTION	FAILURE TYPE	FAILURE EFFECT ON SUBSYSTEM PERFORMANCE	FAILURE EFFECT ON S-IVB STAGE	FAILURE EFFECT ON SATURN VEHICLE
Forward Battery #1 Box Assembly V-IVB-51-02 (continued)		2) Failure to retain required differential pressure due to a leaky valve or box assembly.	None; subsystem operation is not dependent on gas retention properties of the box assembly.	A),B) None; a short circuit within the box assembly plus considerable breathing would be required to have any effect. C) None; inert gas escapes as stage altitude increases. D),E),F),G) None; same as A).	Same Same Same
Forward Battery #1 Heater Assembly V-IVB-51-03	Provides required internal temperature environment within the battery box assembly. A thermostatically controlled electric heating blanket is powered from the forward bus #1.	Failure to maintain the required temperature environment due to: a) thermostat failure b) blanket failure.	None; battery sits on "cold plate" which is maintained at 60-65°F by the I.U. Battery will sufficiently operate at this temperature. A second failure, in the I.U. is necessary to have any serious effect.	A) Delay or scrub. B) Holds automatic sequencing: "all battery temp. norm" signal not present. C),D),E),F),G) None; "cold plate" would maintain battery temperature at a sufficient level.	Same Same
Forward Battery #1 External-Internal Switch V-IVB-51-04 NOTE: Item includes switch actuator.	Transfers the S-IVB stage electric loads indicated below from ground supply to the Forward Battery #1. Transfer occurs at approximately 30 seconds before lift-off. Forward Battery #1 loads transferred: Data Acquisition Command Destruct Receiver #1 Switch Selector (GFE) Forward Battery #1 Heater System EBW Separation and Retro Rockets,	1) Open circuit or short circuit failure of switch contacts while switch is in external position.	PARTIAL LOSS OF SUBSYSTEM Loss of ground power for one or more of the loads connected at the switch.	A) Delay in launching. B) Hold in automatic sequencing causing delay in launching. C),D),E),F),G) None; not applicable.	Same Same Same
		2) Failure to transfer when required.	PARTIAL LOSS OF SUBSYSTEM Loss of all power to loads connected by the switch.	A) Delay. B) Delay due to hold in automatic sequencing. C),D),E),F),G) None; not applicable.	Same Same Same
		3) Open circuit or short circuit failure of switch after switch attains internal position.	POSSIBLE PARTIAL LOSS OF SUBSYSTEM Loss of stage power for one or more of the loads supplied by Forward Battery #1. Loss of power to the switch selector would mean a loss of computer to sequencer command paths.	A) None; not applicable. B) Delay or scrub - hold by the automatic sequencer. C) None; loss of power considered significant in subsequent phases only. D),E),F),G) POSSIBLE LOSS OF STAGE	Same Same Same POSSIBLE LOSS OF MISSION

Δ ITEMS MARKED THUS (Δ) DO NOT OPERATE IN FLIGHT

RELIABILITY FAILURE EFFECT ANALYSIS

ELECTRICAL POWER SUBSYSTEM

A) COUNTDOWN/CHECKOUT
B) COUNTDOWN-AUTOMATIC SEQUENCE
C) FLIGHT-BOOST PHASE
D) FLIGHT-POWERED PHASE, 1ST
E) FLIGHT-COAST PHASE, 1ST
F) FLIGHT-POWERED PHASE, 2ND
G) FLIGHT-COAST PHASE, 2ND

Δ	ITEM	FUNCTION	FAILURE TYPE	FAILURE EFFECT ON SUBSYSTEM PERFORMANCE	FAILURE EFFECT ON S-IVB STAGE	FAILURE EFFECT ON SATURN VEHICLE
	Forward Power Distribution Box Assembly V-IVB-51-05 NOTE: Includes box shell gasket, cover, valves, the box half of the external connectors, and both forward bus #1 and forward bus #2.	1) Provides rigid frame for proper mounting of hardware parts and the mounting of assembled component onto stage structure.	Failure to retain parts or component in proper location due to mechanical failure.	POSSIBLE PARTIAL LOSS OF SUBSYSTEM Random dislocation of parts could cause open circuit conditions affecting various downstream functions. Also, a short circuit condition could arise resulting in one or both of the forward batteries becoming dead from too rapid discharge. A loss of power to one or more of the following could result: Data Acquisition Command Destruct #1 Command Destruct #2 Propellant Utilization Switch Selector (GFE) Separation.	A) Delay B) Possible delay. Automatic sequencer may hold countdown depending on circuit affected. C) None; loss of power significant only to subsequent phases. D),E),F),G) POSSIBLE LOSS OF STAGE Due to possible loss of power to the switch selector resulting in loss of computer to sequencer command paths.	Same Same POSSIBLE LOSS OF MISSION
		2) Retains an inert gas which is limited by a relief valve to a pressure of approximately 2 psi above the gas surrounding the box assembly. This prevents the possibility of the box drawing in an explosive mixture which could be spark ignited.	1) Violent rupture of the pressure retaining envelope due to relief valve failing to open, causing possible parts displacement.	POSSIBLE PARTIAL LOSS OF SUBSYSTEM Random dislocation of parts could cause open circuit conditions affecting various downstream functions. Also, a short circuit condition could arise resulting in one or both of the forward batteries becoming dead from too rapid discharge. A loss of power to one or more of the following could result: Data Acquisition Command Destruct #1 Command Destruct #2 Propellant Utilization Switch Selector (GFE) Separation.	A),B) None; not applicable since differential pressure is approximately 2 psi until launch. C) None; loss of power is significant to subsequent phases only. D),E),F),G) POSSIBLE LOSS OF STAGE Due to loss of power to switch selector resulting in loss of computer to sequencer command paths.	Same Same POSSIBLE LOSS OF MISSION

Δ ITEMS MARKED THUS (Δ) DO NOT OPERATE IN FLIGHT

RELIABILITY FAILURE EFFECT ANALYSIS

A) COUNTDOWN/CHECKOUT
B) COUNTDOWN-AUTOMATIC SEQUENCE
C) FLIGHT-BOOST PHASE
D) FLIGHT-POWERED PHASE, 1ST
E) FLIGHT-COAST PHASE, 1ST
F) FLIGHT-POWERED PHASE, 2ND
G) FLIGHT-COAST PHASE, 2ND

ELECTRICAL POWER SUBSYSTEM

Δ ITEM	FUNCTION	FAILURE TYPE	FAILURE EFFECT ON SUBSYSTEM PERFORMANCE	FAILURE EFFECT ON S-IVB STAGE	FAILURE EFFECT ON SATURN VEHICLE
Forward Power Distribution Box Assembly V-IVB-51-05 (continued)		2) Failure to retain required differential pressure due to a leaky valve assembly or box assembly.	None; system operation is not dependent on gas retention properties of the box assembly.	A),B) None; a short circuit within the box assembly plus considerable breathing would be required to have any effect. C) None; inert gas escapes as stage altitude increases. D),E),F),G) None; same as A).	Same Same Same
Forward Battery #2 Cell Assembly V-IVB-51-06	Provides the actual storage unit and supply source for all S-IVB battery power required for propellant utilization (28 vdc and 115 vac), and the command destruct receiver #2 systems.	Failure to provide power as required due to: a) internal cell failure b) open or short circuit in intercell connections.	PARTIAL LOSS OF SUBSYSTEM Loss of Forward Battery #2 results in loss of power to the propellant utilization and the command destruct receiver #2 systems.	A),B) Delay or scrub. C) None; P.U. not used in this phase and command destruct #1 is redundant with #2. D) POSSIBLE LOSS OF STAGE Due to mismanaged mixture resulting from possible loss of P.U. E) None; same as C). F) POSSIBLE LOSS OF STAGE Same as D). G) None; same as C).	Same Same POSSIBLE LOSS OF MISSION Same Saturn IB: None; not applicable Saturn V: POSSIBLE LOSS OF MISSION Same
Forward Battery #2 Box Assembly V-IVB-51-07 NOTE: Item includes box shell, gasket, cover, valves, and the box half of the external connectors.	1) Provides a rigid frame for proper mounting of hardware parts, and for the mounting of assembled component onto stage structure.	Failure to retain parts or component in required location and position.	POSSIBLE PARTIAL LOSS OF SUBSYSTEM "Loose" parts can cause open circuit in battery output or short circuit the battery. Loss of power to the propellant utilization, and the command destruct receiver #2 could result.	A),B) Delay or scrub. C) None; P.U. is not necessary and command destruct receiver is redundant. D) POSSIBLE LOSS OF STAGE Due to mismanged mixture. E) None; same as C). F) POSSIBLE LOSS OF STAGE Same as D). G) None; same as C).	Same Same POSSIBLE LOSS OF MISSION Same POSSIBLE LOSS OF MISSION Same

Δ ITEMS MARKED THUS (Δ) DO NOT OPERATE IN FLIGHT

RELIABILITY FAILURE EFFECT ANALYSIS

ELECTRICAL POWER SUBSYSTEM

A) COUNTDOWN/CHECKOUT
B) COUNTDOWN-AUTOMATIC SEQUENCE
C) FLIGHT-BOOST PHASE
D) FLIGHT-POWERED PHASE, 1ST
E) FLIGHT-COAST PHASE, 1ST
F) FLIGHT-POWERED PHASE, 2ND
G) FLIGHT-COAST PHASE, 2ND

Δ ITEM	FUNCTION	FAILURE TYPE	FAILURE EFFECT ON SUBSYSTEM PERFORMANCE	FAILURE EFFECT ON S-IVB STAGE	FAILURE EFFECT ON SATURN VEHICLE
Forward Battery #2 Box Assembly V-IVB-51-07 (continued)	2) Retains an inert gas which is limited by a relief valve to a pressure of approximately 2 psi above the pressure of the gas surrounding the box assembly. This prevents the possibility of the box drawing in an explosive mixture which could be spark ignited.	1) Violent rupture of pressure retaining envelope due to relief valve failing to open, causing possible parts displacement.	POSSIBLE PARTIAL LOSS OF SUBSYSTEM Due to loose parts which can cause open or short circuits.	A),B) None; not applicable, since differential pressure is approximately 2 psi until launch. C) None; P.U. is not necessary and the command destruct receiver is redundant. D) POSSIBLE LOSS OF STAGE Due to a mismanaged mixture. E) None; same as C). F) POSSIBLE LOSS OF STAGE Same as D). G) None; same as C).	Same Same POSSIBLE LOSS OF MISSION Same POSSIBLE LOSS OF MISSION Same
		2) Failure to retain required differential pressure due to a leaky valve or box assembly.	None; subsystem operation is not dependent on gas retention properties of the box assembly.	A),B) None; a short circuit within the box assembly plus considerably breathing would be required to have any effect. C) None; inert gas escapes as stage altitude increases. D),E),F),G) None; same as A).	Same Same Same
Forward Battery #2 Heater Assembly V-IVB-51-08	Provides required internal temperature environment within the battery box assembly. A thermostatically controlled electric heating blanket is powered from the forward bus #2.	Failure to maintain the required temperature environment due to: a) thermostat failure b) blanket failure.	None; battery sits on "cold plate" which is maintained at 60-65°F by the I.U. Battery will sufficiently operate at this temperature. A second failure in the I.U. is necessary to have any serious effect.	A) Delay or scrub. B) Holds automatic sequencing "All batt. temp. norm" signal not present. C),D),E),F),G) None; "cold plate" would maintain battery temperature at a sufficient level.	Same Same Same

Δ ITEMS MARKED THUS (Ⓗ) DO NOT OPERATE IN FLIGHT

RELIABILITY FAILURE EFFECT ANALYSIS

ELECTRICAL POWER SUBSYSTEM

A) COUNTDOWN/CHECKOUT
B) COUNTDOWN-AUTOMATIC SEQUENCE
C) FLIGHT-BOOST PHASE
D) FLIGHT-POWERED PHASE, 1ST
E) FLIGHT-COAST PHASE, 1ST
F) FLIGHT-POWERED PHASE, 2ND
G) FLIGHT-COAST PHASE, 2ND

Δ ITEM	FUNCTION	FAILURE TYPE	FAILURE EFFECT ON SUBSYSTEM PERFORMANCE	FAILURE EFFECT ON S-IVB STAGE	FAILURE EFFECT ON SATURN VEHICLE
Forward Battery #2 External-Internal Switch V-IVB-51-09 NOTE: Item includes switch actuator.	Transfers the S-IVB stage electric loads from ground supply to the forward battery #2. Transfer occurs at approximately 30 seconds before lift-off. Forward Battery #2 loads transferred:	1) Open circuit or short circuit failure of switch contacts while switch is in external position.	PARTIAL LOSS OF SUBSYSTEM Loss of ground power for one or more of the loads connected by the switch.	A) Delay in launching. B) Hold in automatic sequencing causing delay in launching. C),D),E),F),G) None; not applicable.	Same Same Same
	Propellant Utilization (28 vdc and 115 vac systems), and the command destruct receiver #2, and forward batter #2 heater system.	2) Failure to transfer when required.	PARTIAL LOSS OF SUBSYSTEM Loss of all power to loads connected by switch.	A) Delay in launch. B) Delay due to hold in automatic sequencing. C),D),E),F),G) None; not applicable.	Same Same Same
		3) Open circuit or short circuit failure of switch contacts after switch attains internal position.	POSSIBLE PARTIAL LOSS OF SUBSYSTEM Loss of stage power to one or more of the loads supplied by the Forward Battery #2.	A) None; not applicable. B) Delay or scrub - hold by automatic sequencer. C) None; loss of power considered significant in subsequent phases only. D) POSSIBLE LOSS OF STAGE Due to mismanagement of mixture as a result of possible loss of power to P.U. system. E) None; loss of power not significant. F) POSSIBLE LOSS OF STAGE Same as D). G) None; same as E).	Same Same Same POSSIBLE LOSS OF MISSION Same POSSIBLE LOSS OF MISSION

Δ ITEMS MARKED THUS (Δ) DO NOT OPERATE IN FLIGHT

RELIABILITY FAILURE EFFECT ANALYSIS

ELECTRICAL POWER SUBSYSTEM

A) COUNTDOWN/CHECKOUT
B) COUNTDOWN-AUTOMATIC SEQUENCE
C) FLIGHT-BOOST PHASE
D) FLIGHT-POWERED PHASE, 1ST
E) FLIGHT-COAST PHASE, 1ST
F) FLIGHT-POWERED PHASE, 2ND
G) FLIGHT-COAST PHASE, 2ND

Δ ITEM	FUNCTION	FAILURE TYPE	FAILURE EFFECT ON SUBSYSTEM PERFORMANCE	FAILURE EFFECT ON S-IVB STAGE	FAILURE EFFECT ON SATURN VEHICLE
Aft Battery #1 Cell Assembly V-IVB-51-10	Provides the actual storage unit and supply source for all S-IVB battery power required for: Vehicle Sequencer Propulsion System Electric Heater Flight Control Aft Battery #1 Heater.	Failure to provide power as required due to: a) internal cell failure b) open or short circuit in intercell connections.	PARTIAL LOSS OF SUBSYSTEM Loss of aft battery #1 results in loss of power to the vehicle sequencer, propulsion, heaters, and flight control.	A),B) Delay or scrub. C) None; loss of power insignificant in this phase. D),E),F),G) POSSIBLE LOSS OF STAGE Due to loss of power to flight control.	Same Same POSSIBLE LOSS OF MISSION
Aft Battery #1 Box Assembly V-IVB-51-11 NOTE: Item includes box shell, gasket, cover, valves, and the box half of the external connectors.	1) Provides a rigid frame for proper mounting of hardware parts, and for the mounting of assembled component onto stage structure.	Failure to retain parts or component in required location and position.	POSSIBLE PARTIAL LOSS OF SUBSYSTEM "Loose" parts can cause open circuit in battery output or short circuit the battery. Loss of battery power to one or more of the aft battery #1 loads.	A),B) Delay or scrub. C) Probable degradation of equipment located in the aft skirt affecting subsequent phases. D),E),F),G) POSSIBLE LOSS OF STAGE Due to loss of power to heaters in aft skirt resulting in equipment degradation.	Same Same POSSIBLE LOSS OF MISSION
	2) Retains an inert gas which is limited by a relief valve to a pressure of approximately 2 psi above the pressure of the gas surrounding the box assembly. This prevents the possibility of the box drawing in an explosive mixture which could be spark ignited.	1) Violent rupture of pressure retaining envelope due to relief valve failing to open, causing possible parts displacement.	POSSIBLE PARTIAL LOSS OF SUBSYSTEM Due to loose parts which can cause open or shorted circuitry.	A),B) None; not applicable since differential pressure is approximately 2 psi until launch. C) None; loss of power is significant to subsequent phases only. D),E),F),G) POSSIBLE LOSS OF STAGE Due to loss of power to heaters in aft skirt resulting in equipment degradation.	Same Same POSSIBLE LOSS OF MISSION

Δ ITEMS MARKED THUS (Δ) DO NOT OPERATE IN FLIGHT

RELIABILITY FAILURE EFFECT ANALYSIS

A) COUNTDOWN/CHECKOUT
B) COUNTDOWN-AUTOMATIC SEQUENCE
C) FLIGHT-BOOST PHASE
D) FLIGHT-POWERED PHASE, 1ST
E) FLIGHT-COAST PHASE, 1ST
F) FLIGHT-POWERED PHASE, 2ND
G) FLIGHT-COAST PHASE, 2ND

ELECTRICAL POWER SUBSYSTEM

Δ	ITEM	FUNCTION	FAILURE TYPE	FAILURE EFFECT ON SUBSYSTEM PERFORMANCE	FAILURE EFFECT ON S-IVB STAGE	FAILURE EFFECT ON SATURN VEHICLE
	Aft Battery #1 Box Assembly V-IVB-51-11 (continued)		2) Failure to retain required differential pressure due to a leaky valve or box assembly.	None; subsystem operation is not dependent on gas retention properties of the box assembly.	A),B) None; a short circuit within the box assembly plus considerable breathing would be required to have any effect. C) None; inert gas escapes as stage altitude increases. D),E),F),G) None; same as A).	Same Same Same
	Aft Battery #1 Heater Assembly V-IVB-51-12	Provides required internal temperature environment within the battery box assembly. A thermostatically controlled electric heating blanket is powered from the aft bus #1.	Failure to maintain the required temperature environment due to: a) thermostat failure b) blanket failure.	Possible partial subsystem degradation battery will still perform adequately to approximately 0°F. Below that, excessive degradation is probable.	A) Delay or scrub. B) Holds automatic sequencer "All batt. temp. norm." signal not present. C) None; loss of power significant to subsequent phases only. D),E),F),G) POSSIBLE LOSS OF STAGE If battery degradation is sufficient to cause system degradation to loads connected to it. This could occur if battery temperature drops below 0°F.	Same Same Same POSSIBLE LOSS OF MISSION
	Aft Battery #1 External-Internal Switch V-IVB-51-13 NOTE: Item includes switch actuator. NOTE: Saturn IB only: The aft busses are tied together and the entirety is supplied by this switch.	Transfers the S-IVB stage electric loads indicated below from ground supply to the Aft Battery #1. Transfer occurs at approximately 30 seconds before lift-off. Aft Battery #1 loads transferred: Vehicle Sequencer Propulsion Subsystem Aft Skirt Heaters Flight Control Aft Battery #1 Heater (Auxiliary Hydraulic Motor Pump - Saturn IB only).	1) Open circuit or short circuit failure of switch contacts while switch is in external position. 2) Failure to transfer when required.	PARTIAL LOSS OF SUBSYSTEM Loss of ground power for one or more of the loads connected by the switch. PARTIAL LOSS OF SUBSYSTEM Loss of all power to loads connected by the switch.	A) Delay in launch. B) Hold in automatic sequencing cuasing delay in launching. C),D),E),F),G) None; not applicable. A) Delay. B) Delay due to hold in automatic sequencing C),D),E),F),G) None; not applicable.	Same Same Same Same Same Same

Δ ITEMS MARKED THUS (Δ) DO NOT OPERATE IN FLIGHT

RELIABILITY FAILURE EFFECT ANALYSIS

ELECTRICAL POWER SUBSYSTEM

A) COUNTDOWN/CHECKOUT
B) COUNTDOWN-AUTOMATIC SEQUENCE
C) FLIGHT-BOOST PHASE
D) FLIGHT-POWERED PHASE, 1ST
E) FLIGHT-COAST PHASE, 1ST
F) FLIGHT-POWERED PHASE, 2ND
G) FLIGHT-COAST PHASE, 2ND

Δ	ITEM	FUNCTION	FAILURE TYPE	FAILURE EFFECT ON SUBSYSTEM PERFORMANCE	FAILURE EFFECT ON S-IVB STAGE	FAILURE EFFECT ON SATURN VEHICLE
	Aft Battery #1 External-Internal Switch V-IVB-51-13 (continued)		3) Open circuit or short circuit failure of switch contacts after switch attains internal position.	POSSIBLE PARTIAL LOSS OF SUBSYSTEM Loss of stage power for one or more of the loads supplied by Aft Battery #1.	A) None; not applicable. B) Delay or scrub - hold by the automatic sequencer. C) None; loss of power considered significant to subsequent phases only. D),E),F),G) POSSIBLE LOSS OF STAGE Loss of heaters could cause system degradation and loss of sequencer could cause loss of control.	Same Same Same POSSIBLE LOSS OF MISSION
	Aft Power Distribution Box Assembly V-IVB-51-14 NOTE: Includes box shell, gasket, cover, valves, the box half of the external connectors, and both aft bus #1 and aft bus #2.	1) Provides rigid frame for proper mounting of hardware parts and the mounting of assembled component onto stage structure.	Failure to retain parts or component in proper location due to mechanical failure.	POSSIBLE PARTIAL LOSS OF SUBSYSTEM Random dislocation of parts could cause open circuit conditions affecting various downstream functions. Also, a short circuit condition could arise resulting in one or both of the aft batteries becoming dead drom too rapid discharge. A loss of power to one or more of the following could result: Vehicle Sequencer Propulsion System Aft Skirt Heaters Flight Control Aft Battery #1 Heater Auxiliary Hydraulic Motor Pump.	A) Delay. B) Possible delay automatic sequencer may hold countdown depending on circuit affected. C) None; loss of power significant to subsequent phases only. D),E),F),G) POSSIBLE LOSS OF STAGE Depending on criticality of circuit affected and time of condition occuring.	Same Same Same POSSIBLE LOSS OF MISSION

Δ ITEMS MARKED THUS (##) DO NOT OPERATE IN FLIGHT

RELIABILITY FAILURE EFFECT ANALYSIS

ELECTRICAL POWER SUBSYSTEM

A) COUNTDOWN/CHECKOUT
B) COUNTDOWN-AUTOMATIC SEQUENCE
C) FLIGHT-BOOST PHASE
D) FLIGHT-POWERED PHASE, 1ST
E) FLIGHT-COAST PHASE, 1ST
F) FLIGHT-POWERED PHASE, 2ND
G) FLIGHT-COAST PHASE, 2ND

Δ ITEM	FUNCTION	FAILURE TYPE	FAILURE EFFECT ON SUBSYSTEM PERFORMANCE	FAILURE EFFECT ON S-IVB STAGE	FAILURE EFFECT ON SATURN VEHICLE
Aft Power Distribution Box Assembly V-IVB-51-14 (continued)	2) Retains an inert gas which is limited by a relief valve to a pressure of approximately 2 psi above the gas surrounding the box assembly. This prevents the possibility of the box drawing in an explosive mixture which could be spark ignited.	1) Violent rupture of the pressure retaining envelope due to relief valve failing to open, causing possible parts displacement.	POSSIBLE PARTIAL LOSS OF SUBSYSTEM Random dislocation of parts could cause open circuit conditions affecting various downstream functions. Also, a short circuit condition could arise resulting in one or both of the aft batteries becoming dead from too rapid discharge. A loss of one or more of the following could result: Vehicle Sequencer Propulsion System Aft Skirt Heaters Flight Control Auxiliary Hydraulic Motor Pump.	A),B) None; not applicable since differential pressure is approximately 2 psi until launch. C) None; loss of power is significant to subsequent phases only. D),E),F),G) POSSIBLE LOSS OF STAGE Resulting from loss of power to a downstream system.	Same Same POSSIBLE LOSS OF MISSION
		2) Failure to retain required differential pressure due to a leaky valve assembly or box assembly.	None; subsystem operation is not dependent on gas retention properties of the box assemblies.	A),B) None; a short circuit within the box assembly plus considerable breathing would be required to have any effect. C) None; inert gas escapes as stage altitude increases. D),E),F),G) None; same as A)	Same Same Same

Δ ITEMS MARKED THUS (Δ) DO NOT OPERATE IN FLIGHT

RELIABILITY FAILURE EFFECT ANALYSIS

A) COUNTDOWN/CHECKOUT
B) COUNTDOWN - AUTOMATIC SEQUENCE
C) FLIGHT - BOOST PHASE
D) FLIGHT - POWERED PHASE, 1ST
E) FLIGHT - COAST PHASE, 1ST
F) FLIGHT - POWERED PHASE, 2ND
G) FLIGHT - COAST PHASE, 2ND

ELECTRICAL POWER SUBSYSTEM

Δ	ITEM	FUNCTION	FAILURE TYPE	FAILURE EFFECT ON SUBSYSTEM PERFORMANCE	FAILURE EFFECT ON S-IVB STAGE	FAILURE EFFECT ON SATURN VEHICLE
	Aft Battery #2 Cell Assembly V-IVB-51-15 (Utilized on Saturn V only - see "NOTE" on M/M)	Provides the actual storage unit and supply source for all S-IVB battery power required for the auxiliary hydraulic motor pump.	Failure to provide power as required due to: a) internal cell failure b) open or short circuit in intercell connections.	PARTIAL LOSS OF SUBSYSTEM Loss of Aft Battery #2 results in loss of power to the auxiliary hydraulic motor pump.	A),B) Delay or scrub. C) None; loss of power to the auxiliary hydraulic pump in this phase could affect subsequent phases, however. D) POSSIBLE LOSS OF STAGE Should the hydraulic fluid become frozen during the boost phase due to a non-operating auxiliary hydraulic pump, the result would be no hydraulic pressure, and there would be no ability for flight control. Refer to V-IVB-41. E) None; same as C). F) POSSIBLE LOSS OF STAGE Same as D), except change "boost" to "coast." G) None; not applicable.	Same Same POSSIBLE LOSS OF MISSION Same POSSIBLE LOSS OF MISSION Same
	Aft Battery #2 Box Assembly V-IVB-51-16 NOTE: Includes box shell, gasket, cover, valves, and the box half of the external connectors.	1) Provides a rigid frame for proper mounting of hardware parts and for the mounting of assembled component onto stage structure.	Failure to retain parts or component in required location and position.	POSSIBLE PARTIAL LOSS OF SUBSYSTEM Loose parts can cause open circuit in battery output or short circuit the battery resulting in loss of power to the loads connected to the battery.		
	NOTE: Utilized on Saturn V only since Saturn IB carries only #1 battery in the aft section. See "NOTE" on M/M.	2) Retains an inert gas which is limited by a relief valve to a pressure of approximately 2 psi above the pressure of the gas surrounding the box assembly. This prevents the possibility of the box drawing in an explosive mixture which could be spark ignited.	1) Violent rupture of pressure retaining envelope due to relief valve failing to open, causing possible parts displacement.	POSSIBLE PARTIAL LOSS OF SUBSYSTEM Due to loose parts which can cause open or shorted circuitry.	A),B) None; not applicable, since differential pressure is approximately 2 psi until launch. C) None; loss of power in this phase is insignificant; however, subsequent phases could be affected. (continued)	Same Same

Δ ITEMS MARKED THUS (Δ) DO NOT OPERATE IN FLIGHT

RELIABILITY FAILURE EFFECT ANALYSIS

ELECTRICAL POWER SUBSYSTEM

A) COUNTDOWN/CHECKOUT
B) COUNTDOWN - AUTOMATIC SEQUENCE
C) FLIGHT - BOOST PHASE
D) FLIGHT - POWERED PHASE, 1ST
E) FLIGHT - COAST PHASE, 1ST
F) FLIGHT - POWERED PHASE, 2ND
G) FLIGHT - COAST PHASE, 2ND

Δ ITEM	FUNCTION	FAILURE TYPE	FAILURE EFFECT ON SUBSYSTEM PERFORMANCE	FAILURE EFFECT ON S-IVB STAGE	FAILURE EFFECT ON SATURN VEHICLE
Aft Battery #2 Box Assembly V-IVB-51-16 (continued)		1) Violent rupture of pressure retaining envelope due to relief valve failing to open, causing possible parts displacement. (continued)		(continued) D) POSSIBLE LOSS OF STAGE Should the hydraulic fluid become frozen during the boost phase due to a non-operating auxiliary hydraulic pump, the result would be no hydraulic pressure, and there would be no ability for flight control. E) None; same as C). F) POSSIBLE LOSS OF STAGE Same as D), except change "boost" to "coast." G) None; not applicable	 POSSIBLE LOSS OF MISSION Same POSSIBLE LOSS OF MISSION Same
		2) Failure to retain required differential pressure due to a leaky valve assembly or box assembly.	None; subsystem operation is not dependent on gas retention properties of the box assembly.	A),B) None; a short circuit within the box assembly plus considerable breathing would be required to have any effect. C) None; inert gas escapes as stage altitude increases. D),E),F),G) None; same as A).	Same Same Same
Aft Battery #2 Heater Assembly V-IVB_51-17 NOTE: Utilized on Saturn V only. See "NOTE" on M/M.	Provides required internal temperature environment within the battery box assembly. A thermostatically controlled electric heating blanket is powered from the aft bus #2.	Failure to maintain the required temperature environment due to: a) thermostat failure b) blanket failure.	POSSIBLE PARTIAL LOSS OF SUBSYSTEM Battery degradation may occur if temperature drops below 0°F.	A) Delay or scrub. B) Holds automatic sequencing "All batt. temp. norm" signal not present. C) None; however, subsequent phases could be affected. D) POSSIBLE LOSS OF STAGE Should the battery degradation be sufficient, due to low temperature, to be unable to power the auxiliary hydraulic pump during the boost phase, the hydraulic fluid could freeze resulting in loss of flight control in the powered phase. (continued)	Same Same Same POSSIBLE LOSS OF MISSION

Δ ITEMS MARKED THUS (##) DO NOT OPERATE IN FLIGHT

RELIABILITY FAILURE EFFECT ANALYSIS

ELECTRICAL POWER SUBSYSTEM

A) COUNTDOWN/CHECKOUT
B) COUNTDOWN-AUTOMATIC SEQUENCE
C) FLIGHT-BOOST PHASE
D) FLIGHT-POWERED PHASE, 1ST
E) FLIGHT-COAST PHASE, 1ST
F) FLIGHT-POWERED PHASE, 2ND
G) FLIGHT-COAST PHASE, 2ND

Δ ITEM	FUNCTION	FAILURE TYPE	FAILURE EFFECT ON SUBSYSTEM PERFORMANCE	FAILURE EFFECT ON S-IVB STAGE	FAILURE EFFECT ON SATURN VEHICLE
Aft Battery #2 Heater Assembly V-IVB-51-17 (continued)		Failure to maintain the required temperature environment due to: a) thermostat failure b) blanket failure. (continued)		(continued) E) None; same as C). F) POSSIBLE LOSS OF STAGE Same as D), except change "boost" to "coast." G) None; not applicable	Same POSSIBLE LOSS OF MISSION Same
Aft Battery #2 External-Internal Switch V-IVB-51-18 NOTE: Item includes switch actuator. NOTE: Utilized on Saturn V only. See "NOTE" on M/M.	Transfers the S-IVB stage electric loads indicated below from ground supply to the Aft Battery #2. Transfer occurs at approximately 30 seconds before lift-off. Aft Battery #2 loads transferred: Auxiliary Hydraulic Motor Pump Aft Battery #2 Heater.	1) Open circuit or short circuit failure of switch contacts while switch is in external position.	PARTIAL LOSS OF SUBSYSTEM Loss of ground power for one or both of the loads connected by the switch.	A) Delay in launching. B) Hold in automatic sequencing causing delay in launching. C),D),E),F),G) None; not applicable.	Same Same Same
		2) Failure to transfer when required.	PARTIAL LOSS OF SUBSYSTEM Loss of all power to loads connected by the switch.	A) Delay or scrub. B) Delay or scrub; holds automatic sequencing. C),D),E),F),G) Not applicable, will not lift-off - see B) phase.	Same Same Same
		3) Open circuit or short circuit failure of switch contacts after switch attains internal position.	PARTIAL LOSS OF SUBSYSTEM Loss of power to one or more of the loads connected by the switch.	A) None; not applicable. B) Delay; holds automatic sequencing. C) None; loss of hydraulic pump motor in this phase could adversely affect subsequent phases, however. D) POSSIBLE LOSS OF STAGE Hydraulic fluid if frozen during boost due to no hydraulic pump would result in no hydraulic pressure, thus, no ability for flight control. (continued)	Same Same Same POSSIBLE LOSS OF MISSION

Δ ITEMS MARKED THUS (Δ) DO NOT OPERATE IN FLIGHT

RELIABILITY FAILURE EFFECT ANALYSIS

ELECTRICAL POWER SUBSYSTEM

A) COUNTDOWN/CHECKOUT
B) COUNTDOWN - AUTOMATIC SEQUENCE
C) FLIGHT - BOOST PHASE
D) FLIGHT - POWERED PHASE, 1ST
E) FLIGHT - COAST PHASE, 1ST
F) FLIGHT - POWERED PHASE, 2ND
G) FLIGHT - COAST PHASE, 2ND

Δ	ITEM	FUNCTION	FAILURE TYPE	FAILURE EFFECT ON SUBSYSTEM PERFORMANCE	FAILURE EFFECT ON S-IVB STAGE	FAILURE EFFECT ON SATURN VEHICLE
	Aft Battery #2 External-Internal Switch V-IVB-51-18 (continued)		3) Open circuit or short circuit failure of switch contacts after switch attains internal position. (continued)		(continued) E) None; same as C). F) POSSIBLE LOSS OF STAGE Same as D), except change "boost" to "coast." G) None; not applicable.	 Same POSSIBLE LOSS OF MISSION Same
	Relay, Power Switching (Input) Single Sideband Transmitter (K1) V-IVB-51-19	Provides 28 vdc power path from the forward bus #1 to the S/S transmitter as required. Controlled by the sequencer. on: during countdown off: after end of first powered flight	1) Contacts close prior to a closing command to relay.	None; relay is normally actuated early during countdown.	A),B) None; relay normally actuates. C),D),E),F),G) Not applicable, closed previously.	Same Same
			2) Contacts fail to close when required.	None; power is not supplied to another subsystem, but this one is not affected.	A) Delay in launch. B) None; does not stop automatic sequencer. C),D) Loss of single sideband transmitter. E),F),G) None; contacts normally open.	Same Same Loss of information sent via S/S transmitter. Same
			3) Contacts fail to remain closed as required.	None; power would be interrupted to another subsystem but this one would not be affected.	A) Delay in launch. B) None; does not stop automatic sequencer. C),D) Loss of the single sideband transmitter. E),F),G) None; contacts normally open.	Same Loss of information normally sent via S/S transmitter. Same
			4) Contacts fail to open when required.	POSSIBLE PARTIAL LOSS OF SUBSYSTEM Due to excessive drain on battery (applicable only to Saturn V, phases E, F, G).	A),B),C),D) Not applicable; contacts normally closed. E),F),G) POSSIBLE LOSS OF STAGE Loss of battery would cause loss of switch selector.	Same POSSIBLE LOSS OF MISSION

Δ ITEMS MARKED THUS (Δ) DO NOT OPERATE IN FLIGHT

RELIABILITY FAILURE EFFECT ANALYSIS

ELECTRICAL POWER SUBSYSTEM

A) COUNTDOWN/CHECKOUT
B) COUNTDOWN-AUTOMATIC SEQUENCE
C) FLIGHT-BOOST PHASE
D) FLIGHT-POWERED PHASE, 1ST
E) FLIGHT-COAST PHASE, 1ST
F) FLIGHT-POWERED PHASE, 2ND
G) FLIGHT-COAST PHASE, 2ND

Δ ITEM	FUNCTION	FAILURE TYPE	FAILURE EFFECT ON SUBSYSTEM PERFORMANCE	FAILURE EFFECT ON S-IVB STAGE	FAILURE EFFECT ON SATURN VEHICLE
Relay, Power Switching (Input) Flight Transmitter Group (K2) V-IVB-51-20	Provides 28 vdc power path from the forward bus #1 to the flight transmitter group when required. Controlled by the sequencer. on: during countdown off: end of first powered flight on: approximately 120 seconds prior to engine restart off: after engine cut-off.	1) Contacts close prior to a closing command to relay.	POSSIBLE PARTIAL LOSS OF SUBSYSTEM Due to excessive drain on battery (applicable to phase E only).	A),B) None; normally closed early in countdown. C),D) Not applicable, contacts normally closed. E) POSSIBLE LOSS OF STAGE Due to excessively degraded battery not adequately supplying switch selector. F) Not applicable, contacts normally closed. G) Not applicable, relay actuates in a previous phase	Same Same POSSIBLE LOSS OF MISSION Same Same
		2) Contacts fail to close when required.	None; power would not be supplied to another subsystem, but this one would not be affected.	A) Delay of launch. B) None; does not stop automatic sequencer. C),D) Loss of flight transmitter group. E) Not applicable, normally open. F) Loss of flight transmitter group. G) None; group not utilized.	Same Same Loss of some information. Same Loss of some information.
		3) Contacts fail to remain closed as required.	None; power would be interrupted to another subsystem, but this one would not be affected.	A) Delay of launch. B) None; does not stop automatic sequencing. C),D) Loss of flight transmitter group. E) Not applicable, contacts normally open. F) Loss of flight transmitter group. G) None; group not utilized.	Same Same Loss of some information. Same Loss of some information. Same

Δ ITEMS MARKED THUS (##) DO NOT OPERATE IN FLIGHT

RELIABILITY FAILURE EFFECT ANALYSIS

ELECTRICAL POWER SUBSYSTEM

A) COUNTDOWN/CHECKOUT
B) COUNTDOWN-AUTOMATIC SEQUENCE
C) FLIGHT-BOOST PHASE
D) FLIGHT-POWERED PHASE, 1ST
E) FLIGHT-COAST PHASE, 1ST
F) FLIGHT-POWERED PHASE, 2ND
G) FLIGHT-COAST PHASE, 2ND

Δ ITEM	FUNCTION	FAILURE TYPE	FAILURE EFFECT ON SUBSYSTEM PERFORMANCE	FAILURE EFFECT ON S-IVB STAGE	FAILURE EFFECT ON SATURN VEHICLE
Relay, Power Switching (Input) Flight Transmitter Group (K2) V-IVB-51-20 (continued)		4) Contacts fail to open when required.	POSSIBLE PARTIAL LOSS OF SUBSYSTEM Resulting from excessive battery drain causing a "dead" battery.	A),B),C),D) Not applicable, contacts normally closed. E) POSSIBLE LOSS OF STAGE Resulting from excessive drain on battery causing insufficient power for switch selector. F) Not applicable, contacts normally closed. G) POSSIBLE LOSS OF STAGE Same as E).	Same POSSIBLE LOSS OF MISSION Same POSSIBLE LOSS OF MISSION
Relay, Power Switching (Input) Orbit Transmitter Group (K3) V-IVB-51-21	Provides 28 vdc power path from forward bus #1 to the Orbit Transmitter Group when required. Controlled by sequencer. on: during countdown. off: after end of first powered flight Cycles during orbit in range on, out of range off. on: approximately 120 seconds prior to engine restart off: approximately 60 seconds after payload separation	1) Contacts close prior to a closing command to relay.	POSSIBLE PARTIAL LOSS OF SUBSYSTEM Due to excessive battery drain (applicable only to phase E).	A),B) None; relay is normally actuated early in countdown. C),D) Not applicable; contacts normally closed. E) Excessive current drain on battery could cause over degradation leading to POSSIBLE LOSS OF STAGE Due to insufficient power for switch selector. F),G) Not applicable, contacts normally closed.	Same POSSIBLE LOSS OF MISSION Same
		2) Contacts fail to close when required.	None; power would not be supplied to another subsystem but this one would not be affected.	A) Delay in launch. B) None; does not stop automatic sequencing. C),D),E),F),G) Loss of orbit transmittter group.	Same Same Partial loss of information.

Δ ITEMS MARKED THUS (Δ) DO NOT OPERATE IN FLIGHT

RELIABILITY FAILURE EFFECT ANALYSIS

ELECTRICAL POWER SUBSYSTEM

A) COUNTDOWN/CHECKOUT
B) COUNTDOWN - AUTOMATIC SEQUENCE
C) FLIGHT - BOOST PHASE
D) FLIGHT - POWERED PHASE, 1ST
E) FLIGHT - COAST PHASE, 1ST
F) FLIGHT - POWERED PHASE, 2ND
G) FLIGHT - COAST PHASE, 2ND

Δ ITEM	FUNCTION	FAILURE TYPE	FAILURE EFFECT ON SUBSYSTEM PERFORMANCE	FAILURE EFFECT ON S-IVB STAGE	FAILURE EFFECT ON SATURN VEHICLE
Relay, Power Switching (Input) Orbit Transmitter Group (K3) V-IVB-51-21 (continued)		3) Contacts fail to remain closed as required.	None; power would be interrupted to another subsystem, but this one would not be affected.	A) Delay in launch. B) None; does not stop automatic sequencing. C),D),E),F),G) Loss of Orbit Transmitter Group.	Same Same Partial loss of information.
		4) Failure of contacts to open when required.	POSSIBLE PARTIAL LOSS OF SUBSYSTEM Due to excessive current drain on Forward Battery #1 in coast phase.	A),B),C),D) None; contacts normally closed. E) POSSIBLE LOSS OF STAGE Due to excessive battery drain causing loss of the switch selector, thus losing computer to sequencer command ability. F) None; same as B). G) POSSIBLE LOSS OF STAGE Same as E).	Same POSSIBLE LOSS OF MISSION Same POSSIBLE LOSS OF MISSION (Saturn V only)
Relay, Power Switching (Input) Orbit S.C.O. Group (K4) V-IVB-51-22	Provides 28 vdc power path from forward bus #1 to the Orbit S.C.O. Group as required. Controlled by the sequencer. on: during countdown off: after end of first powered flight on: approximately 180 seconds prior to engine restart off: after payload separation	1) Contacts close prior to a closing command to the relay	POSSIBLE PARTIAL LOSS OF SUBSYSTEM Due to excessive drain on the Forward Battery #1 (applicability pertains only subsequently to phase D).	A),B),C),D) None; relay normally is actuated in early part of countdown. E) POSSIBLE LOSS OF STAGE Due to excessive battery drain resulting in loss of switch selector. F) None; relay normally closed. G) None; same as F).	Same POSSIBLE LOSS OF MISSION Same Same
		2) Contacts fail to close when required.	None; failure would not allow current flow to another subsystem, but no ill effects to this one would occur.	A) Delay. B) None; does not hold automatic sequencer. C),D) Orbital S.C.O. group and the central calibration unit would not operate. (continued)	Same Same Partial loss of information.

Δ ITEMS MARKED THUS (Δ) DO NOT OPERATE IN FLIGHT

RELIABILITY FAILURE EFFECT ANALYSIS

ELECTRICAL POWER SUBSYSTEM

A) COUNTDOWN/CHECKOUT
B) COUNTDOWN-AUTOMATIC SEQUENCE
C) FLIGHT-BOOST PHASE
D) FLIGHT-POWERED PHASE, 1ST
E) FLIGHT-COAST PHASE, 1ST
F) FLIGHT-POWERED PHASE, 2ND
G) FLIGHT-COAST PHASE, 2ND

Δ ITEM	FUNCTION	FAILURE TYPE	FAILURE EFFECT ON SUBSYSTEM PERFORMANCE	FAILURE EFFECT ON S-IVB STAGE	FAILURE EFFECT ON SATURN VEHICLE
Relay, Power Switching (Input) Orbit S.C.O. Group (K4) V-IVB-51-22 (continued)		2) Contacts fail to close when required. (continued)		(continued) E) Not applicable, contacts normally open. F),G) Information from the Orbital S.C.O. Group would not be obtained. Also, the central calibration would not operate.	Same Partial loss of information. (Saturn V only)
		3) Contacts fail to remain closed.	None; failure would interrupt current flow to another subsystem, but not affect this one.	A) Delay. B) None; does not hold automatic sequencer. C),D) Loss of Orbit S.C.O. Group. E) Not applicable, contacts normally open F),G) Same as C).	Same Partial loss of information. Same Partial loss of information. (Saturn V only)
		4) Failure of contacts to open when required.	POSSIBLE PARTIAL LOSS OF SUBSYSTEM During coast and subsequent phases due to excessive battery drain.	A),B),C),D) None; contacts normally closed. E) POSSIBLE LOSS OF STAGE Due to excessive battery drain resulting in loss of switch selector causing loss of command ability. F),G) Not applicable, contacts normally closed.	Same POSSIBLE LOSS OF MISSION Same (Saturn V only)

Δ ITEMS MARKED THUS (H) DO NOT OPERATE IN FLIGHT

RELIABILITY FAILURE EFFECT ANALYSIS

ELECTRICAL POWER SUBSYSTEM

A) COUNTDOWN/CHECKOUT
B) COUNTDOWN-AUTOMATIC SEQUENCE
C) FLIGHT-BOOST PHASE
D) FLIGHT-POWERED PHASE, 1ST
E) FLIGHT-COAST PHASE, 1ST
F) FLIGHT-POWERED PHASE, 2ND
G) FLIGHT-COAST PHASE, 2ND

Δ ITEM	FUNCTION	FAILURE TYPE	FAILURE EFFECT ON SUBSYSTEM PERFORMANCE	FAILURE EFFECT ON S-IVB STAGE	FAILURE EFFECT ON SATURN VEHICLE
Relay, Power Switching (Input) Flight S.C.O. group (K5) V-IVB-51-23	Provides 28 vdc power path from forward bus #1 to the flight S.C.O. group as required. Controlled by the sequencer. on: during countdown off: end of first powered flight Cycles: in range on, out of range off. (During orbit) on: approximately 180 seconds prior to engine restart off: end of engine cut-off	1) Contacts close prior to a closing command to the relay	POSSIBLE PARTIAL LOSS OF SUBSYSTEM Due to excessive battery current drain (applicability is subsequent to first powered phase).	A),B) None; relay is normally actuated in early part of countdown. C) None; not applicable, relay normally closed. D) None; same as C). E) POSSIBLE LOSS OF STAGE Due to excessive current drain on battery causing loss of switch selector. F) None; not applicable, relay is normally in the closed position this phase. G) POSSIBLE LOSS OF STAGE Due to loss of power to switch selector caused by excessive battery drain.	Same Same Same POSSIBLE LOSS OF MISSION Same POSSIBLE LOSS OF MISSION (Saturn V only)
		2) Contacts fail to close when required.	None; failure would not allow current flow to another subsystem but not affect this one.	A) Delay. B) None; does not hold automatic sequencer. C),D) Flight S.C.O. group would not operate. E) Loss of information transmission from the flight S.C.O. group as required in coast phase. F) Same as C). G) None; not used.	Same Same Partial loss of information. Same Same (Saturn V only) Same (Saturn V only)

Δ ITEMS MARKED THUS (Δ) DO NOT OPERATE IN FLIGHT

RELIABILITY FAILURE EFFECT ANALYSIS

ELECTRICAL POWER SUBSYSTEM

A) COUNTDOWN/CHECKOUT
B) COUNTDOWN - AUTOMATIC SEQUENCE
C) FLIGHT - BOOST PHASE
D) FLIGHT - POWERED PHASE, 1ST
E) FLIGHT - COAST PHASE, 1ST
F) FLIGHT - POWERED PHASE, 2ND
G) FLIGHT - COAST PHASE, 2ND

Δ	ITEM	FUNCTION	FAILURE TYPE	FAILURE EFFECT ON SUBSYSTEM PERFORMANCE	FAILURE EFFECT ON S-IVB STAGE	FAILURE EFFECT ON SATURN VEHICLE
	Relay, Power Switching (Input) Flight S.C.O. Group (K5) V-IVB-51-23 (continued)		3) Contacts fail to remain closed.	None; failure would interrupt current flow to another subsystem, but not affect this one.	A) Delay. B) None; does not hold automatic sequencer. C) Part of information from the flight S.C.O. group would not be transmitted. D) Same as C). E) Loss of information transmission from the flight S.C.O. group as required in coast phase. F) Same as C). G) None; not used.	Same Same Same Same Same Same (Saturn V only) Same
			4) Failure of contacts to open when required.	POSSIBLE PARTIAL LOSS OF SUBSYSTEM Due to excessive current drain on Forward Battery #1 in coast phases.	A),B),C),D) None; contacts normally closed. E) POSSIBLE LOSS OF STAGE Due to excessive drain on the battery causing loss of the switch selector. F) None; same as B). G) POSSIBLE LOSS OF STAGE Same as E).	Same POSSIBLE LOSS OF MISSION Same POSSIBLE LOSS OF MISSION (Saturn V only)
	Relay, Power Switching (Input) Recorded Measurements Group (K6) V-IVB-51-24	Provides 28 vdc power path from forward bus #1 to the recorded measurements group as required. Controlled by the sequencer. on: during countdown off: approximately 120 seconds prior to end of first coast	1) Contacts close prior to a closing command to the relay.	POSSIBLE LOSS OF SUBSYSTEM (Saturn V only)-applicable to phases F, G only.	A) Delay. B) None; normally closed early in countdown phase. C),D),E) Not applicable, contacts normally closed. F),G) POSSIBLE LOSS OF STAGE (Contacts normally open)-may cause excessive battery drain resulting in a loss of the switch selector.	Same Same Same POSSIBLE LOSS OF MISSION (Saturn V only)

Δ ITEMS MARKED THUS (Δ) DO NOT OPERATE IN FLIGHT

RELIABILITY FAILURE EFFECT ANALYSIS

ELECTRICAL POWER SUBSYSTEM

A) COUNTDOWN/CHECKOUT
B) COUNTDOWN-AUTOMATIC SEQUENCE
C) FLIGHT-BOOST PHASE
D) FLIGHT-POWERED PHASE, 1ST
E) FLIGHT-COAST PHASE, 1ST
F) FLIGHT-POWERED PHASE, 2ND
G) FLIGHT-COAST PHASE, 2ND

Δ ITEM	FUNCTION	FAILURE TYPE	FAILURE EFFECT ON SUBSYSTEM PERFORMANCE	FAILURE EFFECT ON S-IVB STAGE	FAILURE EFFECT ON SATURN VEHICLE
Relay Power Switching (Input) Recorded Measurements Group (K6) V-IVB-51-24 (continued)		2) Contacts fail to close when required.	None; failure would keep power from another subsystem, but not affect this one.	A) Delay. B) None; does not hold automatic sequencer. C),D),E) Loss of recorded measurements group. F),G) Not applicable, contacts normally open.	Same Same Partial loss of information. Same
		3) Contacts fail to remain closed.	None; failure would interrupt current flow to another subsystem, but not affect this one.	A) Delay. B) None; does not hold automatic sequencer. C),D),E) Loss of recorded measurements group. F),G) Not applicable, contacts normally open.	Same Partial loss of information. Same
		4) Contacts fail to open when required.	POSSIBLE PARTIAL LOSS OF SUBSYSTEM (Saturn V only)-due to excessive battery drain.	A),B) Not applicable, relay is actuated early in countdown. C),D),E) Not applicable, contacts normally closed. F),G) POSSIBLE LOSS OF STAGE Due to excessive battery drain resulting in loss of switch selector.	Same Same POSSIBLE LOSS OF MISSION (Saturn V only)
Relay, Power Switching (Input) DDA Power (K7) V-IVB-51-25	Provides 28 vdc power path from forward bus #1 for DDA power input. Controlled by ground control. on: during countdown off: liftoff	1) Contacts close prior to a closing command to relay.	None; power is supplied by ground supply.	A),B) None; contacts closed during countdown, normally. C),D),E),F),G) Not applicable, relay not actuated in flight.	Same Same
		2) Contacts fail to close when required.	None; power would not be supplied to another subsystem, but this one would not be affected.	A) Delay in launch. B) None; does not stop automatic sequencing. C),D),E),F),G) None; not used during flight.	Same Same Same

Δ ITEMS MARKED THUS (Δ) DO NOT OPERATE IN FLIGHT

RELIABILITY FAILURE EFFECT ANALYSIS

ELECTRICAL POWER SUBSYSTEM

A) COUNTDOWN/CHECKOUT
B) COUNTDOWN-AUTOMATIC SEQUENCE
C) FLIGHT-BOOST PHASE
D) FLIGHT-POWERED PHASE, 1ST
E) FLIGHT-COAST PHASE, 1ST
F) FLIGHT-POWERED PHASE, 2ND
G) FLIGHT-COAST PHASE, 2ND

Δ ITEM	FUNCTION	FAILURE TYPE	FAILURE EFFECT ON SUBSYSTEM PERFORMANCE	FAILURE EFFECT ON S-IVB STAGE	FAILURE EFFECT ON SATURN VEHICLE
Relay, Power Switching (Input) DDA Power (K7) V-IVB-51-25 (continued)		3) Contacts fail to remain closed as required.	None; power would be interrupted to another subsystem, but this one would not be affected.	A) Delay in launch. B) None; does not stop automatic sequencer. C),D),E),F),G) Not applicable, contacts normally open.	Same Same Same
		4) Contacts fail to open when required.	POSSIBLE PARTIAL LOSS OF SUBSYSTEM Due to excessive drain on battery (applicable only to phases F, G).	A),B) Not applicable, contacts normally closed. C),D),E) None; DDA power is normally supplied by the recorded measurements group relay until approximately 120 seconds prior to end of first coast. F),G) POSSIBLE LOSS OF STAGE Due to possible loss of switch selector resulting from excessive degradation of battery.	Same Same POSSIBLE LOSS OF MISSION
Relay, Power Switching (Input) Single Sideband Group (K8) V-IVB-51-26 NOTE: Present planning requires S/S group to be used on only the first few vehicles to enable transmission of vibration and acoustic information during boost and first S-IVB engine burn.	Provides 28 vdc power path from forward bus #1 to the single sideband group as required. Controlled by sequencer. on: during countdown off: end of first powered flight	1) Contacts close prior to a closing command to the relay.	None; transmitter is normally turned on in the early portion of countdown.	A) None B) None C),D),E),F),G) None; not applicable.	Same Same Same
		2) Contacts fail to close when required.	None; failure keeps power from reaching another subsystem, but has no ill effects on this subsystem.	A) Delay or scrub. B) None; does not hold automatic sequencer. C),D) Loss of information as to high frequency and acoustic conditions. E),F),G) None; contacts normally open.	Same Same Same Same

Δ ITEMS MARKED THUS (##) DO NOT OPERATE IN FLIGHT

RELIABILITY FAILURE EFFECT ANALYSIS

ELECTRICAL POWER SUBSYSTEM

A) COUNTDOWN/CHECKOUT
B) COUNTDOWN-AUTOMATIC SEQUENCE
C) FLIGHT-BOOST PHASE
D) FLIGHT-POWERED PHASE, 1ST
E) FLIGHT-COAST PHASE, 1ST
F) FLIGHT-POWERED PHASE, 2ND
G) FLIGHT-COAST PHASE, 2ND

Δ ITEM	FUNCTION	FAILURE TYPE	FAILURE EFFECT ON SUBSYSTEM PERFORMANCE	FAILURE EFFECT ON S-IVB STAGE	FAILURE EFFECT ON SATURN VEHICLE
Relay, Power Switching (Input) Single Sideband Group (K8) V-IVB-51-26 (continued)		3) Contacts fail to remain closed.	None; failure would intertupt current flow to another subsystem, but not affect this one.	A) Delay or scrub. B) None; does not hold automatic sequencing. C) Loss of information as to high frequency vibration and acoustic conditions. D) Same as C). E),F),G) None; item not utilized.	Same Same Same Same Same
		4) Failure of contacts to open when required.	POSSIBLE PARTIAL LOSS OF SUBSYSTEM Due to a possible degradation of the Forward Battery #1 as a result of excessive current drain.	A),B),C),D) None; not applicable, contacts normally closed. E),F),G) POSSIBLE LOSS OF STAGE As a result of loss of computer to sequencer command paths due to loss of power to the switch selector resulting from a degraded battery.	Same POSSIBLE LOSS OF MISSION
Relay, Power Supply (Input) Checkout Measurements Group (K9) V-IVB-51-27	Provides 28 vdc power path from forward bus #1 to the checkout measurements group when required. Controlled by ground control. on: during countdown. off: approximately 30 seconds prior to lift-off.	1) Contacts close prior to a closing command to relay.	None; power is not supplied by subsystem.	A) Delay in launch. B) None; does not stop automatic sequencing. C),D),E),F),G) Not applicable, relay normally actuated on ground.	Same Same Same
		2) Contacts fail to close when required.	None; controlled by ground control.	A) Delay in launch. B) None; does not stop automatic sequencing. C),D),E),F),G) Not applicable, contacts normally open.	Same Same Same

Δ ITEMS MARKED THUS (Δ) DO NOT OPERATE IN FLIGHT

RELIABILITY FAILURE EFFECT ANALYSIS

ELECTRICAL POWER SUBSYSTEM

A) COUNTDOWN/CHECKOUT
B) COUNTDOWN - AUTOMATIC SEQUENCE
C) FLIGHT - BOOST PHASE
D) FLIGHT - POWERED PHASE, 1ST
E) FLIGHT - COAST PHASE, 1ST
F) FLIGHT - POWERED PHASE, 2ND
G) FLIGHT - COAST PHASE, 2ND

Δ	ITEM	FUNCTION	FAILURE TYPE	FAILURE EFFECT ON SUBSYSTEM PERFORMANCE	FAILURE EFFECT ON S-IVB STAGE	FAILURE EFFECT ON SATURN VEHICLE
	Relay, Power Supply (Input) Checkout Measurements Group (K9) V-IVB-51-27 (continued)		3) Contacts fail to remain closed as required.	None; supplied and controlled by ground control.	A) Delay in launch. B) None; does not stop automatic sequencing. C),D),E),F),G) Not applicable, contacts normally open.	Same Same Same
			4) Contacts fail to open when required.	POSSIBLE PARTIAL LOSS OF SUBSYSTEM Failure would cause excessive current drain on the battery and could cause it to become "dead."	A) Not applicable, contacts normally closed. B) None; does not stop automatic sequencing. C),D),E),F),G) POSSIBLE LOSS OF STAGE Degraded battery may not retain sufficient power for switch selector.	Same Same POSSIBLE LOSS OF MISSION
	Inverter-Converter Assembly (115 vac, 400 cps power out from 28 vdc power in) V-IVB-51-28 NOTE: Item includes all parts and connecting hardware assembled within the inverter-converter box assembly.	Provides the converting of 28 vdc power from Forward Battery #2 into 115 vac, 400 cps power required by the propellant utilization system.	Failure to provide the required output due to: a) internal open circuit b) internal short circuit	PARTIAL LOSS OF SUBSYSTEM An open circuit could cause an interruption of power output and a short circuit could cause a dead battery from too rapid discharge.	A) Delay in launch. B) Delay, holds automatic sequencing "400 cps norm" signal not present. C) None; power loss significant in subsequent phases only. D) POSSIBLE LOSS OF STAGE Due to a mismanaged mixture resulting from power loss to propellant utilization. E) None; same as C). F) POSSIBLE LOSS OF STAGE Same as D). G) None; power loss insignificant.	Same Same Same POSSIBLE LOSS OF MISSION Same POSSIBLE LOSS OF MISSION Same

Δ ITEMS MARKED THUS (Δ) DO NOT OPERATE IN FLIGHT

RELIABILITY FAILURE EFFECT ANALYSIS

ELECTRICAL POWER SUBSYSTEM

A) COUNTDOWN/CHECKOUT
B) COUNTDOWN-AUTOMATIC SEQUENCE
C) FLIGHT-BOOST PHASE
D) FLIGHT-POWERED PHASE, 1ST
E) FLIGHT-COAST PHASE, 1ST
F) FLIGHT-POWERED PHASE, 2ND
G) FLIGHT-COAST PHASE, 2ND

Δ ITEM	FUNCTION	FAILURE TYPE	FAILURE EFFECT ON SUBSYSTEM PERFORMANCE	FAILURE EFFECT ON S-IVB STAGE	FAILURE EFFECT ON SATURN VEHICLE
Inverter-Converter Power Distribution Relay (Input) V-IVB-51-29	Provides power path for the 28 vdc from Forward Battery #2 to the inverter-converter upon command from the vehicle sequencer. NOTE: In both Saturn IB and V, inverter starts prior to lift-off and runs through phase D). For Saturn V, it is again operated during phase F).	1) Premature closure of contacts.	POSSIBLE PARTIAL LOSS OF SUBSYSTEM Resulting from possible degradation of Forward Battery #2, thus causing insufficient battery output in latter phases of mission.	A) None B) None C) None D) None E) None F) POSSIBLE LOSS OF STAGE Due to a mismanaged mixture resulting from a degraded battery providing insufficient power to maintain propellant utilization. G) None	Same Same Same Same Same POSSIBLE LOSS OF MISSION Saturn V Same
		2) Contacts fail to close upon command.	PARTIAL LOSS OF SUBSYSTEM The 28 vdc input required by the inverter-converter would not be present, thus, there would be no output from the inverter-converter.	A) Delay in launch. B) Delay, holds automatic sequencing "400 cps norm" signal not present. C) None; power significant to subsequent phases only. D) POSSIBLE LOSS OF STAGE Due to a mismanaged mixture resulting from power loss to propellant utilization. E) None; same as C). F) POSSIBLE LOSS OF STAGE Same as D). G) None; power loss insignificant.	Same Same Same POSSIBLE LOSS OF MISSION Same POSSIBLE LOSS OF MISSION Same

Δ ITEMS MARKED THUS (Δ) DO NOT OPERATE IN FLIGHT

RELIABILITY FAILURE EFFECT ANALYSIS

ELECTRICAL POWER SUBSYSTEM

A) COUNTDOWN/CHECKOUT
B) COUNTDOWN-AUTOMATIC SEQUENCE
C) FLIGHT-BOOST PHASE
D) FLIGHT-POWERED PHASE, 1ST
E) FLIGHT-COAST PHASE, 1ST
F) FLIGHT-POWERED PHASE, 2ND
G) FLIGHT-COAST PHASE, 2ND

Δ	ITEM	FUNCTION	FAILURE TYPE	FAILURE EFFECT ON SUBSYSTEM PERFORMANCE	FAILURE EFFECT ON S-IVB STAGE	FAILURE EFFECT ON SATURN VEHICLE
	Inverter-Converter Power Distribution Relay (Input) V-IVB-51-29 (continued)		3) Contacts fail to remain closed.	PARTIAL LOSS OF SUBSYSTEM The 28 vdc input required by the inverter-converter would be interrupted, thus interrupting the output.	A) None; delay in launch. B) Delay - "400 cps norm" signal would not be present to sequencer. C) None; loss of power insignificant. D) POSSIBLE LOSS OF STAGE No output from the inverter-converter to the propellant utilization could result in a mismanaged mixture. E) None; same as C). F) POSSIBLE LOSS OF STAGE Same as D). G) None; insignificant.	Same Same Same POSSIBLE LOSS OF MISSION Same POSSIBLE LOSS OF MISSION Same
			4) Failure of contacts to open when commanded.	Possible excess degradation of Forward Battery #2 in phase E), thus degrading or even halting operation of propellant utilization in phase F).	A),B),C),D) None; not applicable since inverter-converter runs continuous through phase D). E) None directly; see F). F) Saturn V: POSSIBLE LOSS OF STAGE Due to excess battery degradation caused by inverter-converter continuing to run throughout phase E) resulting in insufficient power to P.U. thus causing a mismanaged mixture. G) None; not applicable.	Same Same POSSIBLE LOSS OF MISSION (Saturn V only) Same

Δ ITEMS MARKED THUS (Δ) DO NOT OPERATE IN FLIGHT

RELIABILITY FAILURE EFFECT ANALYSIS

A) COUNTDOWN/CHECKOUT
B) COUNTDOWN-AUTOMATIC SEQUENCE
C) FLIGHT-BOOST PHASE
D) FLIGHT-POWERED PHASE, 1ST
E) FLIGHT-COAST PHASE, 1ST
F) FLIGHT-POWERED PHASE, 2ND
G) FLIGHT-COAST PHASE, 2ND

ELECTRICAL POWER SUBSYSTEM

Δ ITEM	FUNCTION	FAILURE TYPE	FAILURE EFFECT ON SUBSYSTEM PERFORMANCE	FAILURE EFFECT ON S-IVB STAGE	FAILURE EFFECT ON SATURN VEHICLE
Inverter-Converter Box Assembly V-IVB-51-30 NOTE: Item includes box shell, gasket, cover, valves, and the box half of external connections.	1) Provides a rigid frame for proper mounting of hardware parts, and for mounting assembled component onto stage structure.	Failure to hold parts or component in required location or position.	POSSIBLE PARTIAL LOSS OF SUBSYSTEM Loose parts can cause open or shorted circuitry in the inverter-converter output or input resulting in loss of either of both input requirements to the propellant utilization.	A) Delay in launch.	Same
				B) Delay, holds automatic sequencing, "400 cps norm" signal not present.	Same
				C) None; power significant to subsequent phases only.	Same
				D) POSSIBLE LOSS OF STAGE Due to mismanaged mixture resulting from power loss to propellant utilization.	POSSIBLE LOSS OF MISSION
				E) None; same as C).	Same
				F) POSSIBLE LOSS OF STAGE Same as D).	POSSIBLE LOSS OF MISSION
				G) None; power loss insignificant.	Same
	2) Retains an inert gas which is limited by a relief valve to a pressure of approximately 2 psi above the pressure of the gas surrounding the box assembly. This prevents the possibility of the box drawing in an explosive mixture which could be spark ignited.	1) Violent rupture of the pressure retaining envelope due to relief valve failing to open, causing possible parts displacement.	POSSIBLE PARTIAL LOSS OF SUBSYSTEM Loose parts can cause open or shorter circuitry in the inverter-converter output or input resulting in loss of either or both input requirements to the propellant utilization.	A) Delay in launch.	Same
				B) Delay, holds automatic sequencing, "400 cps norm" signal not present.	Same
				C) None; power significant to subsequent phases only.	Same
				D) POSSIBLE LOSS OF STAGE Due to mismanaged mixture resulting from power loss to propellant utilization.	POSSIBLE LOSS OF MISSION
				E) None; same as C).	Same
				F) POSSIBLE LOSS OF STAGE Same as D).	POSSIBLE LOSS OF MISSION
				G) None; power loss insignificant.	Same

Δ ITEMS MARKED THUS (Δ) DO NOT OPERATE IN FLIGHT

RELIABILITY FAILURE EFFECT ANALYSIS

ELECTRICAL POWER SUBSYSTEM

A) COUNTDOWN/CHECKOUT
B) COUNTDOWN-AUTOMATIC SEQUENCE
C) FLIGHT-BOOST PHASE
D) FLIGHT-POWERED PHASE, 1ST
E) FLIGHT-COAST PHASE, 1ST
F) FLIGHT-POWERED PHASE, 2ND
G) FLIGHT-COAST PHASE, 2ND

Δ	ITEM	FUNCTION	FAILURE TYPE	FAILURE EFFECT ON SUBSYSTEM PERFORMANCE	FAILURE EFFECT ON S-IVB STAGE	FAILURE EFFECT ON SATURN VEHICLE
	Inverter-Converter Box Assembly V-IVB-51-30 (continued)		2) Failure to retain required differential pressure due to a leaky valve or box assembly.	None; subsystem operation is not dependent on gas retention properties of the box assembly.	A),B) None; a short circuit within the box assembly plus considerable breathing would be required to have any effect. C) None; inert gas escapes as stage altitude increases. D),E),F),G) None; same as A)	Same Same Same
	Relay, 28 vdc Power Supply (Input) Propellant Utilization and P.U. Oven V-IVB-51-31	Provides 28 vdc power path from the forward bus #2 to the propellant utilization subsystem upon command by the switch selector: picks up: during countdown drops out: approximately 15 min. after S-IVB engine cut-off picks up: approximately 60 min. prior to S-IVB engine restart drops out: after S-IVB engine cut-off	1) Contacts close prior to a closing command to the relay.	POSSIBLE PARTIAL LOSS OF SUBSYSTEM Resulting from possible degradation of Forward Battery #2, thus causing insufficient battery output in latter phases of mission.	A),B),C),D) none; not applicable, relay normally actuated. E) None; failure could have adverse effect on subsequent phases, however. F) POSSIBLE LOSS OF STAGE Due to a mismanaged mixture resulting from a degraded battery providing insufficient power to maintain propellant utilization. G) None NOTE: In both Saturn IB and V vehicles, P.U. starts prior to lift-off and runs through phase D). In Saturn V, it is again turned on for phase F).	Same Same POSSIBLE LOSS OF MISSION Saturn V only Same
			2) Contacts fail to close when required.	None; power would not be supplied to another subsystem, but not affect this one.	A) Delay in launch. B) Delay, holds automatic sequencer. C) None; power is significant to subsequent phases only. (continued)	Same Same Same

Δ ITEMS MARKED THUS (Δ) DO NOT OPERATE IN FLIGHT

RELIABILITY FAILURE EFFECT ANALYSIS

ELECTRICAL POWER SUBSYSTEM

A) COUNTDOWN/CHECKOUT
B) COUNTDOWN-AUTOMATIC SEQUENCE
C) FLIGHT-BOOST PHASE
D) FLIGHT-POWERED PHASE, 1ST
E) FLIGHT-COAST PHASE, 1ST
F) FLIGHT-POWERED PHASE, 2ND
G) FLIGHT-COAST PHASE, 2ND

Δ ITEM	FUNCTION	FAILURE TYPE	FAILURE EFFECT ON SUBSYSTEM PERFORMANCE	FAILURE EFFECT ON S-IVB STAGE	FAILURE EFFECT ON SATURN VEHICLE
Relay, 28 vdc Power Supply (Input) Propellant Utilization and P.U. Oven V-IVB-51-31 (continued)		2) Contacts fail to close when required. (continued)		(continued) D) POSSIBLE LOSS OF STAGE Due to a mismanaged mixture resulting from power loss to propellant utilization. E) None; same as C). F) POSSIBLE LOSS OF STAGE Same as D). G) None; power not required.	 POSSIBLE LOSS OF MISSION Same POSSIBLE LOSS OF MISSION Same
		3) Contacts fail to remain closed.	None; power would be interrupted to another subsystem, but not affect this one.	A) Delay in launch. B) Delay, holds automatic sequencer. C) None; loss of power insignificant. D) POSSIBLE LOSS OF STAGE Due to a resultant mismanaged mixture. E) None; same as C). F) POSSIBLE LOSS OF STAGE Same as D). G) None; power not required.	Same Same Same POSSIBLE LOSS OF MISSION Same POSSIBLE LOSS OF MISSION Same
		4) Failure of contacts to open when required.	Possible excess degradation of Forward Battery #2 in phase E), thus degrading or even halting operation of propellant utilization in phase F).	A),B),C),D) None; not applicable since P.U. operates through phase D). E) None directly; see F). F) POSSIBLE LOSS OF STAGE Due to excess battery degradation caused by the P.U. system running throughout phase E) resulting in a mismanaged mixture. G) None; not applicable. Power insignificant.	Same Same POSSIBLE LOSS OF MISSION Same

Δ ITEMS MARKED THUS (Δ) DO NOT OPERATE IN FLIGHT

RELIABILITY FAILURE EFFECT ANALYSIS

ELECTRICAL POWER SUBSYSTEM

A) COUNTDOWN/CHECKOUT
B) COUNTDOWN - AUTOMATIC SEQUENCE
C) FLIGHT - BOOST PHASE
D) FLIGHT - POWERED PHASE, 1ST
E) FLIGHT - COAST PHASE, 1ST
F) FLIGHT - POWERED PHASE, 2ND
G) FLIGHT - COAST PHASE, 2ND

Δ	ITEM	FUNCTION	FAILURE TYPE	FAILURE EFFECT ON SUBSYSTEM PERFORMANCE	FAILURE EFFECT ON S-IVB STAGE	FAILURE EFFECT ON SATURN VEHICLE
	Relay, Power Supply (Input) Hydraulic Motor Pump V-IVB-51-32	Provides 28 vdc power path from the aft bus #2 to the hydraulic motor pump as required. picks up: approximately 3.5 min. prior to lift-off drops out: after S-IVB engine take-off Cycles: during first coast phase picks up: approximately 3 min. prior to S-IVB engine restart drops out: after S-IVB engine cut-off	1) Contacts close prior to a closing command to relay.	None; subsystem is connected via the E/I switch, to external ground power prior to and including, the time of the relay actuation.	A) Possible delay. B) None; pump is normally turned on during countdown phase prior to E/I switch changeover. C),D),E),F),G) Not applicable, contacts normally close during countdown and remain so through phase F).	Same Same
			2) Contacts fail to close when required.	None; power would not be supplied to another subsystem, but this one would not be affected.	A) Not applicable. B) Possible delay; may hold automatic sequencing. C) None; hydraulic motor pump significant only to subsequent phases. D) None; hydraulic motor pump not required for stage operation. E) None; however, failure in this phase could have adverse effects in subsequent phase. F) POSSIBLE LOSS OF STAGE Due to possible frozen hydraulic fluid or inadequate accumulator pressure for restart. G) None; pump not used.	Same Same Same Same Same POSSIBLE LOSS OF MISSION Same
			3) Contacts fail to remain closed as required.	None; power would be interrupted to another subsystem, but this one would not be affected.	A) None; not applicable, contacts normally open. B) Delay, holds automatic sequencer. C) None; hydraulic motor pump significant only to subsequent phases. (continued)	Same Same

Δ ITEMS MARKED THUS (#) DO NOT OPERATE IN FLIGHT

RELIABILITY FAILURE EFFECT ANALYSIS

ELECTRICAL POWER SUBSYSTEM

A) COUNTDOWN/CHECKOUT
B) COUNTDOWN-AUTOMATIC SEQUENCE
C) FLIGHT-BOOST PHASE
D) FLIGHT-POWERED PHASE, 1ST
E) FLIGHT-COAST PHASE, 1ST
F) FLIGHT-POWERED PHASE, 2ND
G) FLIGHT-COAST PHASE, 2ND

Δ ITEM	FUNCTION	FAILURE TYPE	FAILURE EFFECT ON SUBSYSTEM PERFORMANCE	FAILURE EFFECT ON S-IVB STAGE	FAILURE EFFECT ON SATURN VEHICLE
Relay, Power Supply (Input) Hydraulic Motor Pump V-IVB-51-32 (continued)		3) Contacts fail to remain closed as required. (continued)		(continued) D) None; regular hydraulic pump supplies pressure to the stage. E) None; however, loss of hydraulic pump in this phase could have adverse effects in the following phase. F) POSSIBLE LOSS OF STAGE Due to loss of hydraulic motor pump in the previous phase resulting in frozen hydraulic fluid. Also, should the accumulator fail to maintain sufficient pressure for second engine start this could also result in POSSIBLE LOSS OF STAGE G) None; pump not used.	Same Same POSSIBLE LOSS OF MISSION Same
		4) Contacts fail to open when required.	POSSIBLE PARTIAL LOSS OF SUBSYSTEM Due to power drain on Aft Battery #2 for an excessive time period.	A) Not applicable, relay actuated phase B). B),C),D) Not applicable, contacts normally closed. E) POSSIBLE LOSS OF STAGE During subsequent phase. Due to hydraulic fluid freezing as a result of a possible dead Aft Battery #1. F) None; auxiliary hydraulic pump not actually needed. G) None; requirement for hydraulic power has ceased.	Same Same POSSIBLE LOSS OF MISSION Same Same

Δ ITEMS MARKED THUS (Δ) DO NOT OPERATE IN FLIGHT

RELIABILITY FAILURE EFFECT ANALYSIS

ELECTRICAL POWER SUBSYSTEM

A) COUNTDOWN/CHECKOUT
B) COUNTDOWN - AUTOMATIC SEQUENCE
C) FLIGHT - BOOST PHASE
D) FLIGHT - POWERED PHASE, 1ST
E) FLIGHT - COAST PHASE, 1ST
F) FLIGHT - POWERED PHASE, 2ND
G) FLIGHT - COAST PHASE, 2ND

Δ	ITEM	FUNCTION	FAILURE TYPE	FAILURE EFFECT ON SUBSYSTEM PERFORMANCE	FAILURE EFFECT ON S-IVB STAGE	FAILURE EFFECT ON SATURN VEHICLE
	Relay, Power Supply (Input) Pressure and Temperature Switches V-IVB-51-33	Provides 28 vdc power path from aft bus #1 to the pressure and temperature switches as required.	1) Contacts close prior to relay receiving a closing command.	to be determined	to be determined	to be determined
			2) Contacts fail to close when required.	None; remainder of subsystem would not be affected.	A),B) Possible delay. C),D),E),F),G) POSSIBLE LOSS OF STAGE Criticality would depend on switches affected and time affected.	Same POSSIBLE LOSS OF MISSION
			3) Contacts fail to remain closed.			
			4) Contacts fail to open when required.	to be determined	to be determined	to be determined
	Relay, Power Supply (Input) Oxygen Chilldown Motor Pump V-IVB-51-34	Provides 28 vdc power path from aft bus #1 to the oxygen chilldown motor pump as required.	1) Contacts close prior to a closing command to the relay.	POSSIBLE PARTIAL LOSS OF SUBSYSTEM Resulting from an excessive drain on the Aft Battery #1.	A) Delay. B) None; relay is normally actuated during this phase. C) Not applicable, contacts normally closed. D) Saturn IB: not applicable. Saturn V: POSSIBLE LOSS OF STAGE Due to a possible dead Aft Battery #1. E),F),G) Not applicable, relay is deactuated in a previous phase.	Same Same Same Saturn IB: Same Saturn V: POSSIBLE LOSS OF MISSION Same
			2) Contacts fail to close when required.	None; power would not be applied to another subsystem, but this one would not be affected.	A) Not applicable. B) Power would not be applied to the oxygen chilldown motor pump. C),D) Not applicable, relay is not actuated during this phase.	Same to be determined Same

(continued)

Δ ITEMS MARKED THUS (Δ) DO NOT OPERATE IN FLIGHT

RELIABILITY FAILURE EFFECT ANALYSIS

ELECTRICAL POWER SUBSYSTEM

A) COUNTDOWN/CHECKOUT
B) COUNTDOWN-AUTOMATIC SEQUENCE
C) FLIGHT-BOOST PHASE
D) FLIGHT-POWERED PHASE, 1ST
E) FLIGHT-COAST PHASE, 1ST
F) FLIGHT-POWERED PHASE, 2ND
G) FLIGHT-COAST PHASE, 2ND

Δ ITEM	FUNCTION	FAILURE TYPE	FAILURE EFFECT ON SUBSYSTEM PERFORMANCE	FAILURE EFFECT ON S-IVB STAGE	FAILURE EFFECT ON SATURN VEHICLE
Relay, Power Supply (Input) Oxygen Chilldown Motor Pump V-IVB-51-34 (continued)		2) Contacts fail to close when required. (continued)		(continued) E) Saturn V only: same as B). To be determined F),G) Not applicable, same as C).	Saturn V only: to be determined Same
		3) Contacts fail to remain closed.	None; power would be interrupted to another subsystem, but this one would not be affected.	A) Not applicable, contacts normally open. B),C) Power would be interrupted to the oxygen chilldown motor pump. D) Not applicable; contacts normally open. E) Saturn IB: same as D). Saturn V: Power would be interrupted to the oxygen chilldown motor pump. F),G) Not applicable, same as D).	Same To be determined Same Saturn IB: Same Saturn V: to be determined Same
		4) Contacts fail to open as required.	POSSIBLE PARTIAL LOSS OF SUBSYSTEM Due to excessive drain on Aft Battery #1.	A) Not applicable, relay deactuated in a subsequent phase. B) Not applicable, same as A). C) POSSIBLE LOSS OF STAGE Due to effects caused by a possible dead Aft Battery #1. D) Not applicable, relay deactuated in a previous phase. E) Saturn IB: None, same as D). Saturn V: POSSIBLE LOSS OF STAGE Same as C). F),G) Not applicable, same as D).	Same Same POSSIBLE LOSS OF MISSION Same Saturn IB: Same Saturn V: POSSIBLE LOSS OF MISSION Same

Δ ITEMS MARKED THUS (Δ) DO NOT OPERATE IN FLIGHT

RELIABILITY FAILURE EFFECT ANALYSIS

ELECTRICAL POWER SUBSYSTEM

A) COUNTDOWN/CHECKOUT
B) COUNTDOWN-AUTOMATIC SEQUENCE
C) FLIGHT-BOOST PHASE
D) FLIGHT-POWERED PHASE, 1ST
E) FLIGHT-COAST PHASE, 1ST
F) FLIGHT-POWERED PHASE, 2ND
G) FLIGHT-COAST PHASE, 2ND

Δ	ITEM	FUNCTION	FAILURE TYPE	FAILURE EFFECT ON SUBSYSTEM PERFORMANCE	FAILURE EFFECT ON S-IVB STAGE	FAILURE EFFECT ON SATURN VEHICLE
	Relay, Power Supply (Input) H_2 (Fuel) Chill-down Motor Pump and Bleed Valves V-IVB-51-35	Provides 28 vdc power path from aft bus #1 to the hydrogen chill-down motor pump and bleed valves as required. NOTE: The hydrogen chilldown motor pump and bleed valves start functioning during countdown and continue through boost phase in both the Saturn IB and Saturn V. In the Saturn V they also function for approximately the last 5 minutes of the first coast phase.	1) Contacts close prior to a closing command to relay.	POSSIBLE PARTIAL LOSS OF SUBSYSTEM Due to excessive drain on Aft Battery #1.	A) Delay. B) None; relay is normally actuated during this phase. C) Not applicable, contacts normally closed. D) Saturn IB: not applicable Saturn V: POSSIBLE LOSS OF STAGE Due to a possible dead Aft Battery #1. E),F),G) Not applicable, relay is deactuated in a previous phase.	Same Same Same Saturn IB: Same Saturn V: POSSIBLE LOSS OF MISSION Same
			2) Contacts fail to close when required.	None; power would not be applicable to another subsystem, but this one would not be affected.	A) Not applicable. B) Power would not be applied to the hydrogen (fuel) chill-down motor pump and the bleed valves. C),D) Not applicable, relay is not actuated during this phase. E) Saturn V only: same as B). (To be determined) F),G) Not applicable, same as C).	Same to be determined Same Saturn V only: to be determined Same
			3) Contacts fail to remain closed.	None; power would be interrupted to another subsystem, but this one would not be affected.	A) Not applicable, contacts normally open. B),C) Power would be interrupted to the hydrogen (fuel) chilldown motor pump and the bleed valves. D) Not applicable, contacts normally open. (continued)	Same to be determined Same

Δ ITEMS MARKED THUS (Δ) DO NOT OPERATE IN FLIGHT

RELIABILITY FAILURE EFFECT ANALYSIS

ELECTRIC POWER SUBSYSTEM

A) COUNTDOWN/CHECKOUT
B) COUNTDOWN-AUTOMATIC SEQUENCE
C) FLIGHT-BOOST PHASE
D) FLIGHT-POWERED PHASE, 1ST
E) FLIGHT-COAST PHASE, 1ST
F) FLIGHT-POWERED PHASE, 2ND
G) FLIGHT-COAST PHASE, 2ND

Δ	ITEM	FUNCTION	FAILURE TYPE	FAILURE EFFECT ON SUBSYSTEM PERFORMANCE	FAILURE EFFECT ON S-IVB STAGE	FAILURE EFFECT ON SATURN VEHICLE
	Relay, Power Supply (Input) H_2 (Fuel) Chill-down Motor Pump and Bleed Valves V-IVB-51-35 (continued)		3) Contacts fail to remain closed. (continued)		(continued) E) Saturn IB: same as D). Saturn V: Power would be interrupted to the hydrogen chilldown motor pump and the bleed valves. F),G) Not applicable, same as D).	Saturn IB: Same Saturn V: to be determined Same
			4) Contacts fail to open as required.	POSSIBLE PARTIAL LOSS OF SUBSYSTEM Due to excessive drain on Aft Battery #1.	A),B) Not applicable, relay deactuated subsequently. C) POSSIBLE LOSS OF STAGE Due to effects caused by a possible dead Aft Battery #1. D) Not applicable, relay is deactuated previously. E) Saturn IB: None; same as D). Saturn V: POSSIBLE LOSS OF STAGE Same as C). F),G) Not applicable, same as D).	Same POSSIBLE LOSS OF MISSION Same Saturn IB: Same Saturn V: POSSIBLE LOSS OF MISSION Same
*	Umbilical Connectors V-IVB-51-36	Provide connection of 28 vdc ground power for all stage usage prior to the time of switchover to stage batteries.	Failure to supply power as required due to open or short circuitry in connections.	PARTIAL OR COMPLETE LOSS OF SUBSYSTEM Due to loss of ground power to one or more, and possibly all, components.	A) Delay in launch. B) Probable hold. Failure probably would cause a halt in automatic sequencing depending on circuits affected. C),D),E),F),G) None; not applicable.	Same Same Same

Δ ITEMS MARKED THUS (Δ) DO NOT OPERATE IN FLIGHT

RELIABILITY FAILURE EFFECT ANALYSIS

ELECTRICAL POWER SUBSYSTEM

A) COUNTDOWN/CHECKOUT
B) COUNTDOWN - AUTOMATIC SEQUENCE
C) FLIGHT - BOOST PHASE
D) FLIGHT - POWERED PHASE, 1ST
E) FLIGHT - COAST PHASE, 1ST
F) FLIGHT - POWERED PHASE, 2ND
G) FLIGHT - COAST PHASE, 2ND

Δ	ITEM	FUNCTION	FAILURE TYPE	FAILURE EFFECT ON SUBSYSTEM PERFORMANCE	FAILURE EFFECT ON S-IVB STAGE	FAILURE EFFECT ON SATURN VEHICLE
	Subsystem Wiring V-IVB-51-37	Provides electrical connection between all subsystem components as required.	1) Failure to provide continuous electrical paths for required connections (open circuitry).	PARTIAL LOSS OF SUBSYSTEM Loss of power to component(s) normally supplied by failed circuitry.	A) Delay in launch. B) Possible delay in launch depending on circuit and/or component affected. C) Possible loss of some telemetry data. D) POSSIBLE LOSS OF STAGE Depending on circuit and/or component affected. E),F),G) POSSIBLE LOSS OF STAGE Due to possible loss of control.	Same Same Same POSSIBLE LOSS OF MISSION POSSIBLE LOSS OF MISSION
			2) Failure to maintain required circuit isolation (shorted circuitry).	PARTIAL LOSS OF SUBSYSTEM Loss of power to component(s) normally supplied via the failed circuitry. Too rapid battery discharge is also possible.	A),B) POSSIBLE LOSS OF STAGE Resulting from a fire initiated by short circuitry. C) POSSIBLE LOSS OF STAGE Due to fire D),E),F),G) POSSIBLE LOSS OF STAGE From fire or due to a dead battery.	POSSIBLE LOSS OF VEHICLE POSSIBLE LOSS OF VEHICLE POSSIBLE LOSS OF MISSION

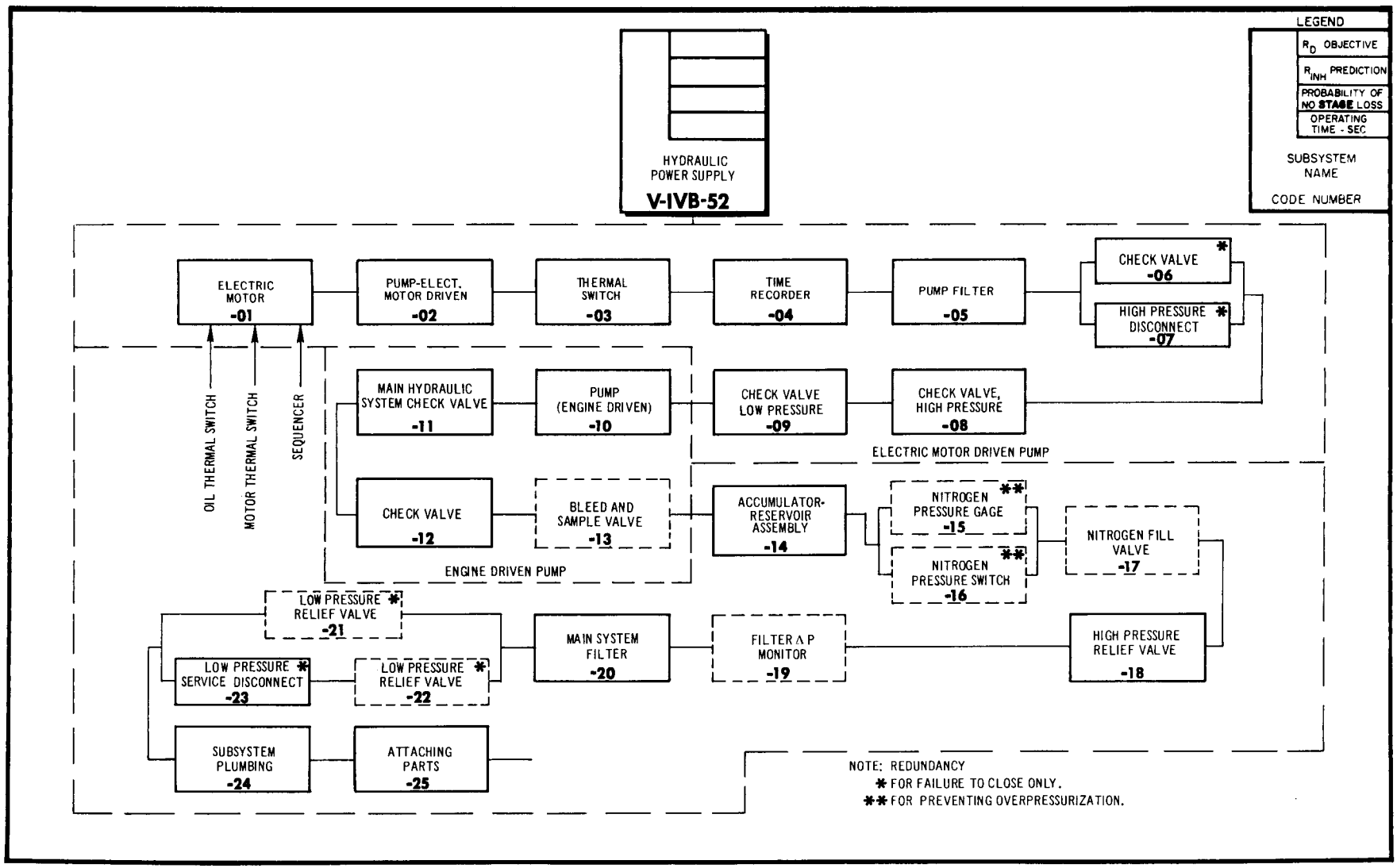
LEGEND
R_D OBJECTIVE
R_{INH} PREDICTION
PROBABILITY OF NO STAGE LOSS
OPERATING TIME - SEC
SUBSYSTEM NAME
CODE NUMBER
HYDRAULIC POWER SUPPLY
V-IVB-52
ELECTRIC MOTOR -01
PUMP-ELECT. MOTOR DRIVEN -02
THERMAL SWITCH -03
TIME RECORDER -04
PUMP FILTER -05
CHECK VALVE -06 *
HIGH PRESSURE DISCONNECT -07 *
OIL THERMAL SWITCH
MOTOR THERMAL SWITCH
SEQUENCER
MAIN HYDRAULIC SYSTEM CHECK VALVE -11
PUMP (ENGINE DRIVEN) -10
CHECK VALVE LOW PRESSURE -09
CHECK VALVE, HIGH PRESSURE -08
ELECTRIC MOTOR DRIVEN PUMP
CHECK VALVE -12
BLEED AND SAMPLE VALVE -13
ENGINE DRIVEN PUMP
ACCUMULATOR-RESERVOIR ASSEMBLY -14
NITROGEN PRESSURE GAGE -15 **
NITROGEN PRESSURE SWITCH -16 **
NITROGEN FILL VALVE -17
LOW PRESSURE RELIEF VALVE -21 *
LOW PRESSURE SERVICE DISCONNECT -23 *
LOW PRESSURE RELIEF VALVE -22 *
MAIN SYSTEM FILTER -20
FILTER Δ P MONITOR -19
HIGH PRESSURE RELIEF VALVE -18
SUBSYSTEM PLUMBING -24
ATTACHING PARTS -25
NOTE: REDUNDANCY
* FOR FAILURE TO CLOSE ONLY.
** FOR PREVENTING OVERPRESSURIZATION.

Δ ITEMS MARKED THUS (Δ) DO NOT OPERATE IN FLIGHT

RELIABILITY FAILURE EFFECT ANALYSIS

A) COUNTDOWN/CHECKOUT
B) COUNTDOWN-AUTOMATIC SEQUENCE
C) FLIGHT-BOOST PHASE
D) FLIGHT-POWERED PHASE, 1ST
E) FLIGHT-COAST PHASE, 1ST
F) FLIGHT-POWERED PHASE, 2ND
G) FLIGHT-COAST PHASE, 2ND

HYDRAULIC POWER SUPPLY

Δ ITEM	FUNCTION	FAILURE TYPE	FAILURE EFFECT ON SUBSYSTEM PERFORMANCE	FAILURE EFFECT ON S-IVB STAGE	FAILURE EFFECT ON SATURN VEHICLE
Electric Motor (3 Horsepower) V-IVB-52-01	Drives the auxiliary hydraulic pump.	1) Burn out, open circuit or mechanical failure.	LOSS OF SUBSYSTEM Loss of circulation permits lines to freeze. Even if not frozen, control of engine is lost. Failure prior to engine start results in loss of pitch and yaw control during first few seconds of powered phase. Failure during powered phase has no affect on that phase since the main engine driven pump performs the function.	A),B) Delay in launch or scrub. C) None. Hydraulic lines may freeze, but do not affect boost phase. D),F) LOSS OF STAGE Frozen lines prevent functioning of hydraulic system in controlling the engine for yaw and pitch. E) Hydraulic lines freeze resulting in failure in F) phase. G) None. Hyraulic system no longer needed.	Same Same LOSS OF VEHICLE Same Same
Pump V-IVB-52-02	Driven by electric motor to provide hydraulic power during ground check, to position the engine prior to and during powered flight (until engine driven pump reaches operating speed). Circulates hydraulic fluid to prevent freezing in the lines during coast phases.	1) Internal leakage	POSSIBLE LOSS OF HYDRAULIC SUBSYSTEM Fluid leaks past pistons to low pressure side of system. Only a severe leak can cause loss, since the pump is self-adjusting variable displacement type.	A),B) Delay in launch or scrub. C) None. Hydraulic power not required. D),F) POSSIBLE LOSS OF STAGE Engine may not be centered before starting. E) Lines possibly freeze, causing failure in F) phase. G) None.	Same Same POSSIBLE LOSS OF VEHICLE Same Same
		2) Mechanical failure.	Loss of subsystem. Pitch and yaw control is lost. Lines freeze, preventing main pump from performing this function.	A),B) Delay in launch or scrub. C) Not affected. However lines may freeze. D),F) LOSS OF STAGE E),G) None. Hydraulic power not needed	Same Same LOSS OF VEHICLE Same

Δ ITEMS MARKED THUS (Δ) DO NOT OPERATE IN FLIGHT

RELIABILITY FAILURE EFFECT ANALYSIS

HYDRAULIC POWER SUPPLY

A) COUNTDOWN/CHECKOUT
B) COUNTDOWN-AUTOMATIC SEQUENCE
C) FLIGHT-BOOST PHASE
D) FLIGHT-POWERED PHASE, 1ST
E) FLIGHT-COAST PHASE, 1ST
F) FLIGHT-POWERED PHASE, 2ND
G) FLIGHT-COAST PHASE, 2ND

Δ	ITEM	FUNCTION	FAILURE TYPE	FAILURE EFFECT ON SUBSYSTEM PERFORMANCE	FAILURE EFFECT ON S-IVB STAGE	FAILURE EFFECT ON SATURN VEHICLE
	Pump V-IVB-52-02 (Continued)		3) Failure of flow compensator to permit sufficient flow	Loss of subsystem. Pitch and yaw control is lost Lines freeze, preventing main pump from performing this function.	A),B) Delay in launch or scrub. C) Not affected. However lines may freeze. D),F) LOSS OF STAGE E),G) None. Hydraulic power not needed.	Same Same LOSS OF VEHICLE Same
			4) Flow compensator fails to stop flow.	None. Pressure is relieved through valve to reservoir. Temperature rise during 12 minutes continuous running is not excessive, since main pump valves and lines act as heat sink.	A),B) Delay in launch or scrub. C) None. D),E),F),G) None. After engine start, thermal switch turns off electric pump, preventing excessive temperature rise.	Same Same Same
	Thermal Switch V-IVB-52-03	Opens when fluid temperature reaches point above which damage may result. This stops the electric motor This switch is by-passed during pre-launch and boost phases and immediately before start and restart of S-IVB stage.	1) Failure of thermal switch to turn on.	LOSS OF SUBSYSTEM Motor does not operate because of open switch.	A),B) Delay in launch or scrub. C) None. Switch is by-passed. D) None Engine driven pump operates. E) Hydraulic lines freeze. F) LOSS OF STAGE Due to frozen hydraulic system. G) None Not needed	Same Same Same Same LOSS OF VEHICLE None

Δ ITEMS MARKED THUS (Δ) DO NOT OPERATE IN FLIGHT

RELIABILITY FAILURE EFFECT ANALYSIS

A) COUNTDOWN/CHECKOUT
B) COUNTDOWN - AUTOMATIC SEQUENCE
C) FLIGHT - BOOST PHASE
D) FLIGHT - POWERED PHASE, 1ST
E) FLIGHT - COAST PHASE, 1ST
F) FLIGHT - POWERED PHASE, 2ND
G) FLIGHT - COAST PHASE, 2ND

HYDRAULIC POWER SUPPLY

Δ	ITEM	FUNCTION	FAILURE TYPE	FAILURE EFFECT ON SUBSYSTEM PERFORMANCE	FAILURE EFFECT ON S-IVB STAGE	FAILURE EFFECT ON SATURN VEHICLE
	Thermal Switch V-IVB-52-03 (Continued)		2) Failure of thermal switch to turn off.	POSSIBLE LOSS OF SUBSYSTEM Fluid temperature may rise sufficiently to damage heat sensitive items in the area. Battery may be drained before completion of mission.	A),B) Delay in launch or scrub. C) None. D) None. E) Possible heat damage F) POSSIBLE LOSS OF STAGE Due to exhausted battery, heat damage. G) None.	Same Same Same Same POSSIBLE LOSS OF VEHICLE None.
	Time Recorder V-IVB-52-04	Records running time of electric motor driven pump.	1) Failure to operate.	None. Timer is a monitor only.	A),B),C),D),E),F),G) None.	Same
	Pump Filter V-IVB-52-05	Filters fluid entering the auxiliary pump.	1) Implosion of element.	POSSIBLE LOSS OF SUBSYSTEM Particles may damage the pump.	A),B) Delay in launch or scrub. C) None. D),F) POSSIBLE LOSS OF STAGE Due to loss of auxiliary pump. E) Possible freezing of lines causing failure in F) phase. G) None.	Same Same POSSIBLE LOSS OF VEHICLE Same Same
	Check Valve V-IVB-52-06	Opens to permit filling of system with fluid. Closes to prevent back flow.	Failure to open.	LOSS OF SUBSYSTEM System can not be charged with fluid.	A),B) Delay in launch or scrub. C),D),E),F),G) Not applicable. Valve operates on ground only.	Same Same
			Failure to close.	None. Disconnect is self sealing and prevents loss of fluid.	A),B),C),D),E),F),G) None.	Same

Δ ITEMS MARKED THUS (Δ) DO NOT OPERATE IN FLIGHT

RELIABILITY FAILURE EFFECT ANALYSIS

A) COUNTDOWN/CHECKOUT
B) COUNTDOWN-AUTOMATIC SEQUENCE
C) FLIGHT-BOOST PHASE
D) FLIGHT-POWERED PHASE, 1ST
E) FLIGHT-COAST PHASE, 1ST
F) FLIGHT-POWERED PHASE, 2ND
G) FLIGHT-COAST PHASE, 2ND

HYDRAULIC POWER SUPPLY

Δ ITEM	FUNCTION	FAILURE TYPE	FAILURE EFFECT ON SUBSYSTEM PERFORMANCE	FAILURE EFFECT ON S-IVB STAGE	FAILURE EFFECT ON SATURN VEHICLE
High Pressure Disconnect (Vehicle half) V-IVB-52-07	Engages and locks with GSE half to permit charging the system with hydraulic fluid. Closes when separated.	1) Internal leak or failure to close when disconnected.	None. Check valve prevents loss of fluid.	A),B),C),D),E),F),G) None.	Same
Check Valve (high Pressure) V-IVB-52-08	Prevents back flow of high pressure fluid through the auxiliary pump during filling and purging of the system. Also prevents back flow in event of failure of electric driven pump. (second failure).	1) Fail to open	LOSS OF SUBSYSTEM Motor driven pump can not function	A),B) Delay in launch or scrub. C) None. D),F) LOSS OF STAGE E),G) None.	Same Same LOSS OF VEHICLE Same
		2) Fail to close	LOSS OF SUBSYSTEM System can not be charged to working pressure and tested by use of GSE.	A) Delay in launch or scrub. B),C),D),F) None. Electric pump is operating and valve is normally open. E) None. Main pump not operating, therfore there is no back flow. G) None. Hydraulic subsystem not needed.	Same Same Same Same
Check Valve (Low pressure) V-IVB-52-09	Prevents electric pump from drawing fluid directly from reservoir without first circulating through the casing of the engine driven pump. (Consideration is being given to eliminate this line and the need for this valve).	1) Failure to open	None.	None.	None.
		2) Failure to close	LOSS OF HYDRAULIC SUBSYSTEM Fluid is not forced to circulate through engine driven pump. Lines will freeze.	A),B) Delay in launch or scrub. C) None. D),F) LOSS OF STAGE E),G) None. Hydraulic power not needed.	Same Same LOSS OF VEHICLE Same

Δ ITEMS MARKED THUS (Δ) DO NOT OPERATE IN FLIGHT

RELIABILITY FAILURE EFFECT ANALYSIS

HYDRAULIC POWER SUPPLY

A) COUNTDOWN/CHECKOUT
B) COUNTDOWN-AUTOMATIC SEQUENCE
C) FLIGHT-BOOST PHASE
D) FLIGHT-POWERED PHASE, 1ST
E) FLIGHT-COAST PHASE, 1ST
F) FLIGHT-POWERED PHASE, 2ND
G) FLIGHT-COAST PHASE, 2ND

Δ	ITEM	FUNCTION	FAILURE TYPE	FAILURE EFFECT ON SUBSYSTEM PERFORMANCE	FAILURE EFFECT ON S-IVB STAGE	FAILURE EFFECT ON SATURN VEHICLE
	Pump (Engine driven) V-IVB-52-10	Provides hydraulic power to operate hydraulic cylinders which position the main engine for path control during powered flight.	1) Internal leakage past pistons.	POSSIBLE LOSS OF SUBSYSTEM Working pressure may not be maintained.	A),B) None. Failure can not occur before D) phase. C),E),G) None. Engine not running. D),F) POSSIBLE LOSS OF STAGE (If pressure is too low to control engine.)	Same Same POSSIBLE LOSS OF VEHICLE
			2) Mechanical failure	LOSS OF SUBSYSTEM Pump does not operate. Auxiliary pump is inadequate.	A),B) None. Failure can not occur before D) phase. C) None. Not operating. D),F) LOSS OF STAGE E),G) None.	Same Same LOSS OF VEHICLE Same
	Check Valve V-IVB-52-11	Prevents flow of high pressure fluid through the pump when engine is not running.	1) Failure to open	LOSS OF SUBSYSTEM Pump output is cut off.	A),Delay in launch or scrub. B),C),E),G) None. Pump does not operate. D),F) LOSS OF STAGE	Same Same LOSS OF VEHICLE
			2) Failure to close	LOSS OF SUBSYSTEM Pump "motors", dissipating the power of the electric pump.	A),B) Delay in launch or scrub. C) None. D),F) PROBABLE LOSS OF STAGE E),G) None	Same Same PROBABLE LOSS OF MISSION Same

Δ ITEMS MARKED THUS (*) DO NOT OPERATE IN FLIGHT

RELIABILITY FAILURE EFFECT ANALYSIS

A) COUNTDOWN/CHECKOUT
B) COUNTDOWN-AUTOMATIC SEQUENCE
C) FLIGHT-BOOST PHASE
D) FLIGHT-POWERED PHASE, 1ST
E) FLIGHT-COAST PHASE, 1ST
F) FLIGHT-POWERED PHASE, 2ND
G) FLIGHT-COAST PHASE, 2ND

HYDRAULIC POWER SUPPLY

Δ	ITEM	FUNCTION	FAILURE TYPE	FAILURE EFFECT ON SUBSYSTEM PERFORMANCE	FAILURE EFFECT ON S-IVB STAGE	FAILURE EFFECT ON SATURN VEHICLE
	Check Valve V-IVB-52-12	Permits fluid to pass thru pump casing or jacket rather than through the pump itself during coast phase. (Electric pump circulates this fluid to prevent pump and lines from freezing.) Also prevents engine from drawing fluid from the wrong side of the filter in electric pump unit.	1) Failure to open.	LOSS OF SUBSYSTEM Suction side of electric pump is blocked.	A),B) Delay in launch or scrub. C) None. D),F) LOSS OF STAGE Pump can not maintain pressure before engine starts. E),G) None.	Same Same LOSS OF VEHICLE Same
			2) Failure to close	POSSIBLE LOSS OF SUBSYSTEM Sludge from electric pump filter can be drawn into main pump causing damage.	A),B) Delay in launch or scrub. C) None. D),F) POSSIBLE LOSS OF STAGE E),G) None. Pump not operating.	Same Same POSSIBLE LOSS OF MISSION Same
*	Bleed and Sample Valve V-IVB-52-13	Opens to bleed off gas or air from system during ground check out. Closes to retain fluid.	1) Failure to open	LOSS OF SUBSYSTEM Air can not be bled from lines. Pumps cavitate and actuator action is erratic.	A) Delay in launch. B),C),D),E),F),G) Not applicable. Valve is used in phase A) only.	Same Same
			2) Failure to close or leakage.	POSSIBLE LOSS OF SUBSYSTEM Fluid is lost overboard.	A),B) Delay in launch or scrub. C),E),G) None D),F) POSSIBLE LOSS OF STAGE	Same Same POSSIBLE LOSS OF VEHICLE

Δ ITEMS MARKED THUS (*) DO NOT OPERATE IN FLIGHT

RELIABILITY FAILURE EFFECT ANALYSIS

A) COUNTDOWN/CHECKOUT
B) COUNTDOWN-AUTOMATIC SEQUENCE
C) FLIGHT-BOOST PHASE
D) FLIGHT-POWERED PHASE, 1ST
E) FLIGHT-COAST PHASE, 1ST
F) FLIGHT-POWERED PHASE, 2ND
G) FLIGHT-COAST PHASE, 2ND

HYDRAULIC POWER SUPPLY

Δ	ITEM	FUNCTION	FAILURE TYPE	FAILURE EFFECT ON SUBSYSTEM PERFORMANCE	FAILURE EFFECT ON S-IVB STAGE	FAILURE EFFECT ON SATURN VEHICLE
	Accumulator Reservoir Assembly V-IVB-52-14	As an accumulator, stores fluid at high pressure against a head of gaseous nitrogen. Stores reserve of fluid at 60-100 psi.	1) Leakage of nitrogen.	POSSIBLE LOSS OF SUBSYSTEM Actuator response becomes sluggish.	A),B) Delay in launch or scrub. C),E),G) None. D),F) POSSIBLE LOSS OF STAGE Servo response becomes sluggish.	Same Same POSSIBLE LOSS OF MISSION
			2) Jamming of piston separting nitrogen from fluid.	Loss of gaseous "spring" in accumulator means loss of reserve of hydraulic energy, and loss of pulse "smoothing"		
			3) Jamming of low pressure piston.	PROBABLE LOSS OF SUBSYSTEM Loss of pressure on reservoir causes pumps to cavitate.	A),B) Delay in launch or scrub. C),E),G) None. D),F) PROBABLE LOSS OF STAGE	Same Same PROBABLE LOSS OF VEHICLE
*	Nitrogen Pressure Gage V-IVB-52-15	Displays pressure of nitrogen gas in the accumulator.	1) Gage stuck at any reading	None. Gage in GSE determines pressure of charge. Pressure switch prevents excessive pressure.	A) Delay for decision B) Does not affect countdown C),D),E),F),G) None. Not used in flight.	Same Same Same
*	Nitrogen Pressure Switch V-IVB-52-16	Closes when nitrogen charge reaches working pressure.	1) Fail to close	None. Gage in GSE gives visual indication of pressure.	A),B) Delay for decision C),D),E),F),G) None. Not used in flight.	Same Same
*	Nitrogen Fill Valve V-IVB-52-17	Permits charging the accumulator with gaseous nitrogen during ground servicing.	1) Leakage.	POSSIBLE LOSS OF SUBSYSTEM Ability to smooth out pulses from pumps is lost. However, hydraulic pressure is not lost, but response of the actuator becomes sluggish because there is no reserve of energy.	A),B) Delay in launch or scrub. C),E),G) None. D),F) POSSIBLE LOSS OF STAGE	Same Same POSSIBLE LOSS OF MISSION

Δ ITEMS MARKED THUS (Δ) DO NOT OPERATE IN FLIGHT

RELIABILITY FAILURE EFFECT ANALYSIS

A) COUNTDOWN/CHECKOUT
B) COUNTDOWN-AUTOMATIC SEQUENCE
C) FLIGHT-BOOST PHASE
D) FLIGHT-POWERED PHASE, 1ST
E) FLIGHT-COAST PHASE, 1ST
F) FLIGHT-POWERED PHASE, 2ND
G) FLIGHT-COAST PHASE, 2ND

HYDRAULIC POWER SUPPLY

Δ	ITEM	FUNCTION	FAILURE TYPE	FAILURE EFFECT ON SUBSYSTEM PERFORMANCE	FAILURE EFFECT ON S-IVB STAGE	FAILURE EFFECT ON SATURN VEHICLE
	High Pressure Relief Valve V-IVB-52-18	Relieves excessive pressure by permitting fluid to flow into the reservoir.	1) Failure to open. This is a second failure, since this valve never opens unless flow compensators in pumps fail.	None. Some heating results, but can be sufficiently dissipated during 12 min. of pre-launch and boost phases. Thereafter, thermal switch prevents excessive heating.	A),B) Delay for decision. C) None. (Some heating, but not excessive.) D),E),F),G) None. Thermal switch stops motor when temperature is too high.	Same Same Same
			2) Failure to close.	PROBABLE LOSS OF SUBSYSTEM This failure is partially compensated by electric pump operating at full displacement, however, working pressure is far below normal.	A),B) Delay in launch or scrub. C) None. D),F) PROBABLE LOSS OF STAGE Actuators are sluggish and weak. E),G) None.	Same Same PROBABLE LOSS OF MISSION Same
*	Filter ΔP Monitor V-IVB-52-19	Monitors pressure drop through filter during ground check out. (Clogging of filter or implosion of filter are indicated by high and low ΔP respectively.) Visual indication, a flag for high ΔP	1) No reading.	None. No reading means condition of filter satisfactory. If this is an incorrect indication, it is a second failure.	None	None
			2) Flag shows even though ΔP is within desired limits.	This is an indicator only and does not effect functioning of the system.	A) Delay for decision. B),C),D),E),F),G) None. Not used.	Same Same
	Main System Filter V-IVB-52-20	Filters incoming and recirculated fluid before it enters the accumulator.	Implosion of element.	POSSIBLE LOSS OF SUBSYSTEM Particles may cause malfunction of relief valve, check valves, or pumps. Other filters protect servo valves.	A),B) Delay in launch or scrub. C) None. D),F) POSSIBLE LOSS OF STAGE E),G) None.	Same Same POSSIBLE LOSS OF MISSION Same

Δ ITEMS MARKED THUS (Δ) DO NOT OPERATE IN FLIGHT

RELIABILITY FAILURE EFFECT ANALYSIS

A) COUNTDOWN/CHECKOUT
B) COUNTDOWN - AUTOMATIC SEQUENCE
C) FLIGHT - BOOST PHASE
D) FLIGHT - POWERED PHASE, 1ST
E) FLIGHT - COAST PHASE, 1ST
F) FLIGHT - POWERED PHASE, 2ND
G) FLIGHT - COAST PHASE, 2ND

HYDRAULIC POWER SUPPLY

Δ	ITEM	FUNCTION	FAILURE TYPE	FAILURE EFFECT ON SUBSYSTEM PERFORMANCE	FAILURE EFFECT ON S-IVB STAGE	FAILURE EFFECT ON SATURN VEHICLE
*	Low Pressure Relief Valve V-IVB-52-21	Opens if reservoir pressure becomes excessive relieving overboard (Fluid must pass through second relief valve V-IVB-53-22 also, except during purging and filling, in which case, flow is through the disconnect.) Closes to retain pressure of 60 to 100 psi in reservoir.	1) Failure to open. Except during filling, this is a second failure. Since this is a closed system , volume increases only by way of temperature rise. Accumulator normally takes care of this.	LOSS OF SUBSYSTEM System can not be purged and filled by GSE.	A),B) Delay in launch or scrub. C),D),E),F),G) None. This valve normally does not operate after filling is complete	Same Same
			2) Failure to close.	None. A second relief valve, and the service disconnect prevent loss of fluid.	A),B),C),D),E),F),G) None.	None
*	Low Pressure Relief Valve V-IVB-52-22	Opens to relieve excessive reservoir pressure. Relief valve V-IVB-53-21 must also open.	1) Failure to open	None. This does not normally open in flight. Disconnect handles outflow during filling. The accumulator takes care of expansion due to temperature rise.	A),B),C),D),E),F),G) None.	None
			2) Failure to close	None. Relief valve V-IVB-53-21 prevents loss of fluid.	A),B),C),D),E),F),G) None.	None
	Low Pressure Service Disconnect Vehicle half V-IVB-52-23	Engages and seals with GSE half for purging and filling the system. Closes and seals when separated from GSE half.	1) Failure to engage GSE half.	LOSS OF SUBSYSTEM Subsystem can not be purged and filled.	A) Delay in launch or scrub. B),C),D),E),F),G) Not applicable Failure can occur in A) phase only.	Same Same
			2) Failure to close when separated from GSE half.	None. Relief valve V-IVB-53-21 prevents loss of fluid.	None	None.

Δ ITEMS MARKED THUS (Δ) DO NOT OPERATE IN FLIGHT

RELIABILITY FAILURE EFFECT ANALYSIS

A) COUNTDOWN/CHECKOUT
B) COUNTDOWN - AUTOMATIC SEQUENCE
C) FLIGHT - BOOST PHASE
D) FLIGHT - POWERED PHASE, 1ST
E) FLIGHT - COAST PHASE, 1ST
F) FLIGHT - POWERED PHASE, 2ND
G) FLIGHT - COAST PHASE, 2ND

HYDRAULIC POWER SUPPLY

Δ	ITEM	FUNCTION	FAILURE TYPE	FAILURE EFFECT ON SUBSYSTEM PERFORMANCE	FAILURE EFFECT ON S-IVB STAGE	FAILURE EFFECT ON SATURN VEHICLE
	Subsystem Plumbing V-IVB-52-24	Connects all components of the hydraulic power supply.	1) Leak at connections.	POSSIBLE LOSS OF SUBSYSTEM External leakage permits quantity of fluid to fall below minimum required to operate system.	A),B) Delay in launch or scrub. C) None. D),F) POSSIBLE LOSS OF STAGE E),G) None.	Same Same POSSIBLE LOSS OF MISSION Same
			2) Burst	LOSS OF SUBSYSTEM Control of engine position is lost.	A),B) Delay in launch or scrub. C),E),G) None. D),F) LOSS OF STAGE	Same Same LOSS OF MISSION POSSIBLE LOSS OF VEHICLE
	Attaching Parts V-IVB-52-25	Connects all parts to the engine and/or structure.	Structural failure.	LOSS OF SUBSYSTEM Failure of attaching parts results in broken lines and loss of fluid.	A),B) Delay in launch or scrub C) None. D),F) LOSS OF STAGE E),G) None.	Same Same LOSS OF MISSION Same

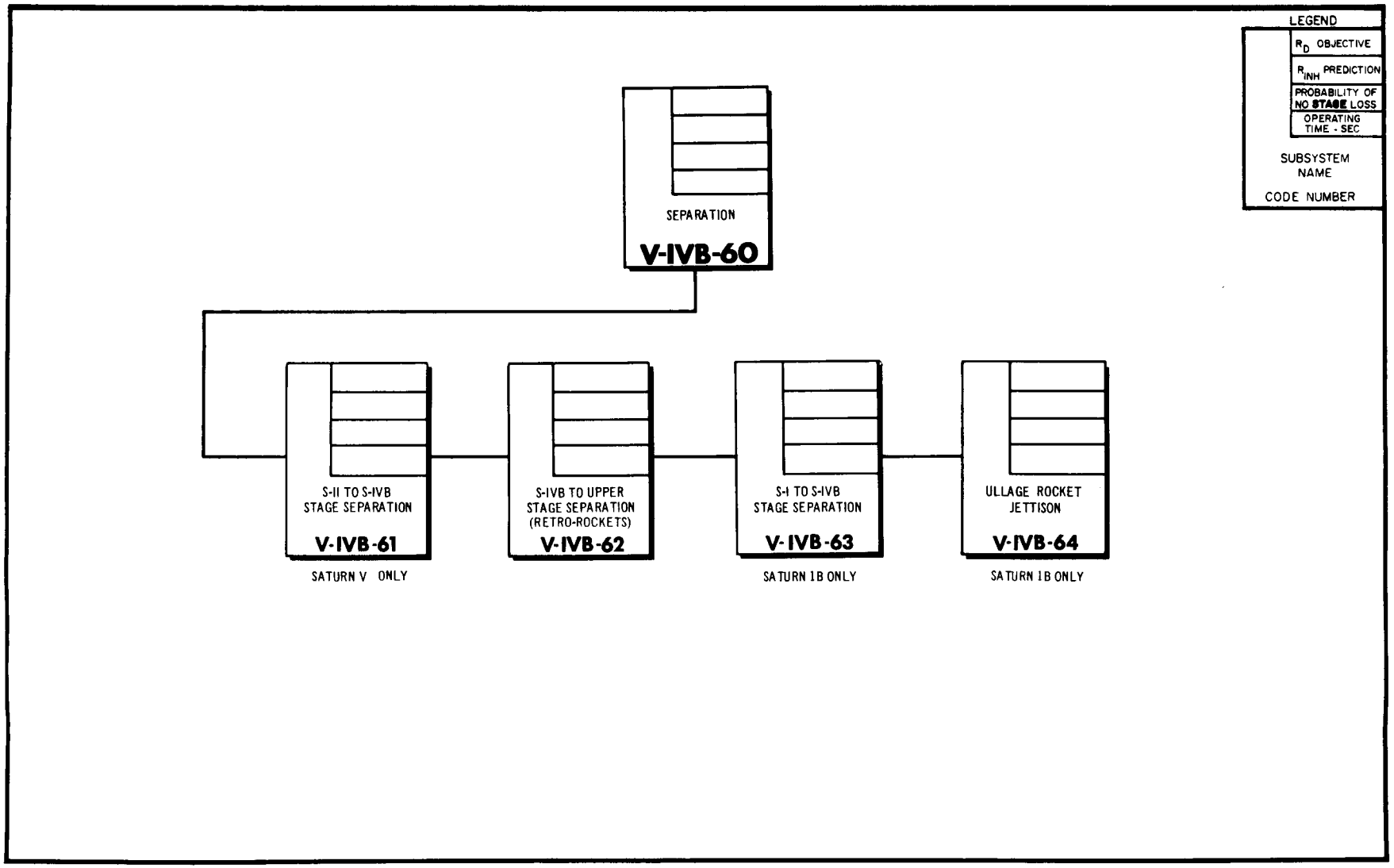
LEGEND
R_D OBJECTIVE
R_{INH} PREDICTION
PROBABILITY OF NO STAGE LOSS
OPERATING TIME - SEC
SUBSYSTEM NAME
CODE NUMBER
SEPARATION
V-IVB-60
S-II TO S-IVB STAGE SEPARATION
V-IVB-61
SATURN V ONLY
S-IVB TO UPPER STAGE SEPARATION (RETRO-ROCKETS)
V-IVB-62
S-I TO S-IVB STAGE SEPARATION
V-IVB-63
SATURN 1B ONLY
ULLAGE ROCKET JETTISON
V-IVB-64
SATURN 1B ONLY

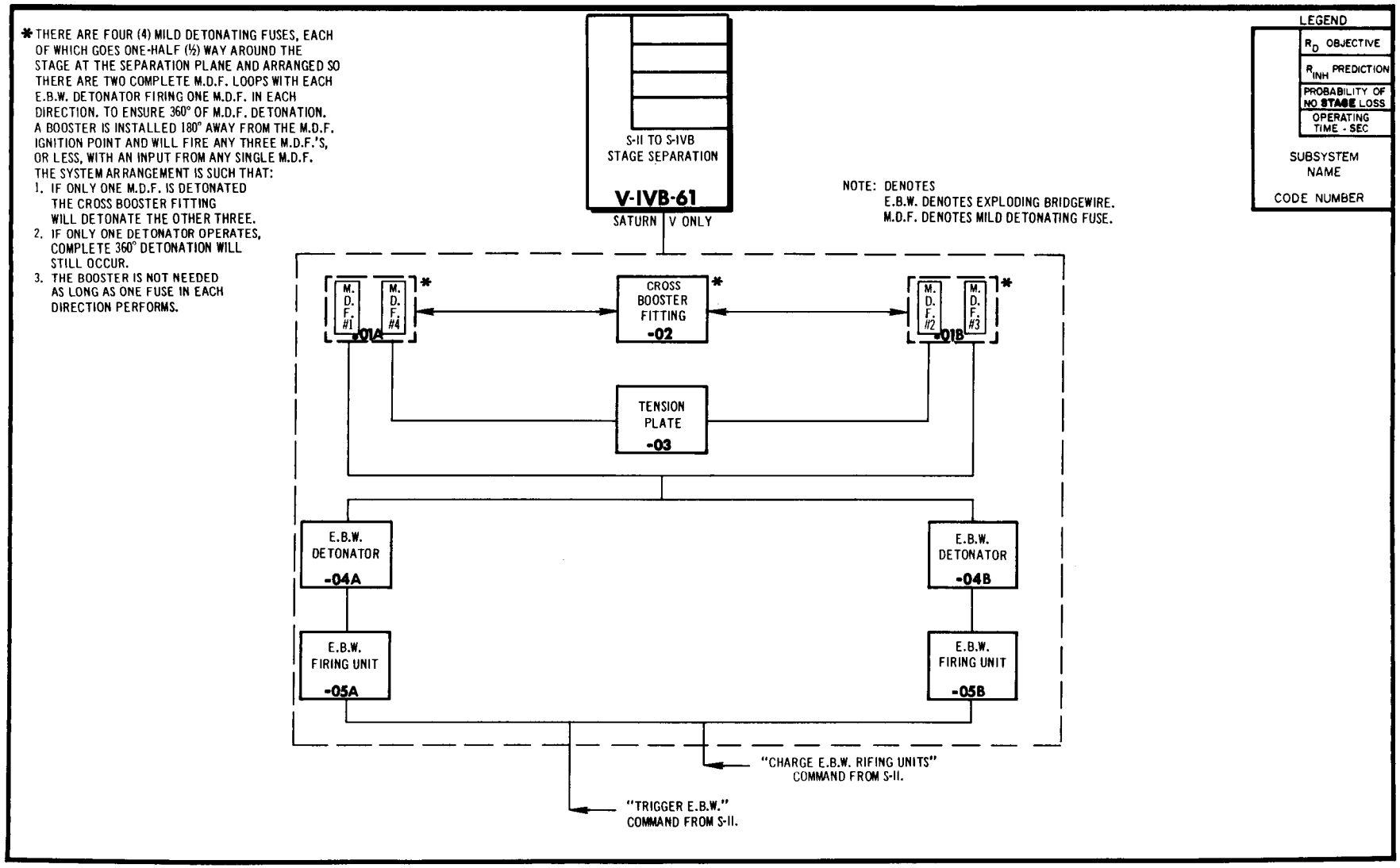
* THERE ARE FOUR (4) MILD DETONATING FUSES, EACH OF WHICH GOES ONE-HALF (½) WAY AROUND THE STAGE AT THE SEPARATION PLANE AND ARRANGED SO THERE ARE TWO COMPLETE M.D.F. LOOPS WITH EACH E.B.W. DETONATOR FIRING ONE M.D.F. IN EACH DIRECTION. TO ENSURE 360° OF M.D.F. DETONATION. A BOOSTER IS INSTALLED 180° AWAY FROM THE M.D.F. IGNITION POINT AND WILL FIRE ANY THREE M.D.F.'S, OR LESS, WITH AN INPUT FROM ANY SINGLE M.D.F. THE SYSTEM ARRANGEMENT IS SUCH THAT:
1. IF ONLY ONE M.D.F. IS DETONATED THE CROSS BOOSTER FITTING WILL DETONATE THE OTHER THREE.
2. IF ONLY ONE DETONATOR OPERATES, COMPLETE 360° DETONATION WILL STILL OCCUR.
3. THE BOOSTER IS NOT NEEDED AS LONG AS ONE FUSE IN EACH DIRECTION PERFORMS.
S-II TO S-IVB STAGE SEPARATION
V-IVB-61
SATURN V ONLY
NOTE: DENOTES
E.B.W. DENOTES EXPLODING BRIDGEWIRE.
M.D.F. DENOTES MILD DETONATING FUSE.
LEGEND
R_D OBJECTIVE
R_{INH} PREDICTION
PROBABILITY OF NO STAGE LOSS
OPERATING TIME - SEC
SUBSYSTEM NAME
CODE NUMBER
M. D. F. #1
M. D. F. #4
-01A
CROSS BOOSTER FITTING -02
M. D. F. #2
M. D. F. #3
-01B
TENSION PLATE -03
E.B.W. DETONATOR -04A
E.B.W. DETONATOR -04B
E.B.W. FIRING UNIT -05A
E.B.W. FIRING UNIT -05B
"CHARGE E.B.W. RIFING UNITS" COMMAND FROM S-II.
"TRIGGER E.B.W." COMMAND FROM S-II.

Δ ITEMS MARKED THUS (Δ) DO NOT OPERATE IN FLIGHT

RELIABILITY FAILURE EFFECT ANALYSIS

A) COUNTDOWN/CHECKOUT
B) COUNTDOWN-AUTOMATIC SEQUENCE
C) FLIGHT-BOOST PHASE
D) FLIGHT-POWERED PHASE, 1ST
E) FLIGHT-COAST PHASE, 1ST
F) FLIGHT-POWERED PHASE, 2ND
G) FLIGHT-COAST PHASE, 2ND

S-II TO S-IVB STAGE SEPARATION SUBSYSTEM

Δ ITEM	FUNCTION	FAILURE TYPE	FAILURE EFFECT ON SUBSYSTEM PERFORMANCE	FAILURE EFFECT ON S-IVB STAGE	FAILURE EFFECT ON SATURN VEHICLE
Mild Detonating Fuse (MDF) Assembly V-IVB-61-01A V-IVB-61-01B	Upon detonation, MDF propagates along its housing groove and severs the tension plate thus effecting physical stage separation. NOTE: There are four MDF cords arranged in sets of two each, with one MDF of each set reaching 180° around the separation perimeter in opposite direction to its mate. Separation can occur if only one set functions properly. Two detonators are provided, each of which will ignite one MDF set. For further redundancy, a cross booster fitting is installed 180° away from the MDF ignition point so that as long as one MDF detonates, separation will be accomplished. (Refer to * on block diagram V-IVB-61)	1) Failure to ignite when required.	None; redundancy provided.	A),B) Not applicable. Function occurs in subsequent phase. C) None; redundancy provided. D),E),F),G) Not applicable. Function occurs in a previous phase.	Same Same Same
		2) Failure to propagate entire MDF.	None; redundancy provided.		NOTE: Not applicable to Saturn 1B.
		3) Failure to sever tension plate.	SUBSYSTEM FAILURE The prime function of this subsystem is to sever the tension plate.	A),B) Not applicable. Function occurs in subsequent phase. C),D) LOSS OF STAGE S-IVB engine would not start or, if it did, it would do so with the two stages attached. E),F),G) Not applicable. Function occurs in previous phase.	Same LOSS OF MISSION NOTE: Separation occurs at end of phase C) and S-IVB engine start occurs at start of phase D). Same NOTE: Not applicable to Saturn 1B.
Cross Booster Fitting V-IVB-61-02	Insures complete MDF ignition should any not be ignited by the EBW detonators, or not propagate completely. Located 180° away from the mild detonating fuse ignition point.	Failure to ignite MDF as required with an input from one or more of the other MDF cords.	None; redundancy provided. Detonation of one MDF in each direction will result in separation.	A),B) Not applicable. Function occurs at end of phase G). C) None; redundancy provided. D),E),F),G) Not applicable. Function occurs in a previous phase.	Same Same NOTE: Not applicable to Saturn 1B.
Tension Plate V-IVB-61-03	1) Supports mild detonating fuses and provides surface for separation process. 2) Provides tension tie between aft skirt and aft interstage assembly of S-IVB stage.	Failure to withstand tension and/or shear stresses between the S-II and the S-IVB stages, thus causing premature separation.	None; subsystem operation does not depend on the tension or shear characteristics of the plate.	A) Scrub. B) Scrub. C) LOSS OF STAGE Premature separation would result in destruction.	Same Same LOSS OF MISSION

(continued)

Δ ITEMS MARKED THUS (Δ) DO NOT OPERATE IN FLIGHT

RELIABILITY FAILURE EFFECT ANALYSIS

A) COUNTDOWN/CHECKOUT
B) COUNTDOWN-AUTOMATIC SEQUENCE
C) FLIGHT-BOOST PHASE
D) FLIGHT-POWERED PHASE, 1ST
E) FLIGHT-COAST PHASE, 1ST
F) FLIGHT-POWERED PHASE, 2ND
G) FLIGHT-COAST PHASE, 2ND

S-II TO S-IVB STAGE SEPARATION SUBSYSTEM

Δ ITEM	FUNCTION	FAILURE TYPE	FAILURE EFFECT ON SUBSYSTEM PERFORMANCE	FAILURE EFFECT ON S-IVB STAGE	FAILURE EFFECT ON SATURN VEHICLE
Tension Plate V-IVB-61-03 (continued)		Failure to withstand tension and/or shear stressses between the S-II and the S-IVB stages, thus causing premature separation. (continued)		(continued) D) Not applicable. Separation occurs at end of phase C). E),F),G) Not applicable. Function has already occurred	Same Same NOTE: Not applicable to Saturn 1B.
EBW Detonator (2) V-IVB-61-04A V-IVB-61-04B	Ignites mild detonating fuses to sever tension plate, thus allowing S-II to S-IVB stage separation. Either detonator ignites one MDF set which is sufficient for separation.	Failure to ignite MDF cords when required.	None; the two detonators in the subsystem are redundant. Each detonator ignites one MDF set which is capable of effecting separation.	A),B) Not applicable. Function occurs in a subsequent phase. C) None; redundancy provided. D),E),F),G) Not applicable. Function occurs in a previous phase.	Same Same Same NOTE: Not applicable to Saturn 1B.
EBW Firing Unit (2) V-IVB-61-05A V-IVB-61-05B	Explodes EBW detonator upon receipt of an electrical trigger signal. Each firing unit explodes one detonator and each detonator in turn ignites one MDF set, which is capable of effecting separation.	1) Premature detonation of bridgewire in detonator. (Subsequent explosion of the explosive train is assumed to occur.)	None; premature performance cuts tension plate early; performance not affected.	A),B) None; not applicable since units are not charged until late in phase C). C) None; failure must occur in the short period (approx. 50 seconds) from the unit becoming charged and the receipt of the trigger signal, stage functions would not be affected. D),E),F),G) None; not applicable since function occurs in latter part of C) phase.	Same Same Same NOTE: Not applicable to Saturn 1B.
		2) Failure to explode bridgewire in detonator when required.	None; redundancy provided. Either detonator ignites one MDF set.	A),B) Not applicable. Function occurs in subsequent phase. C) None; redundancy provided. D),E),F),G) Not applicable.	Same Same Same

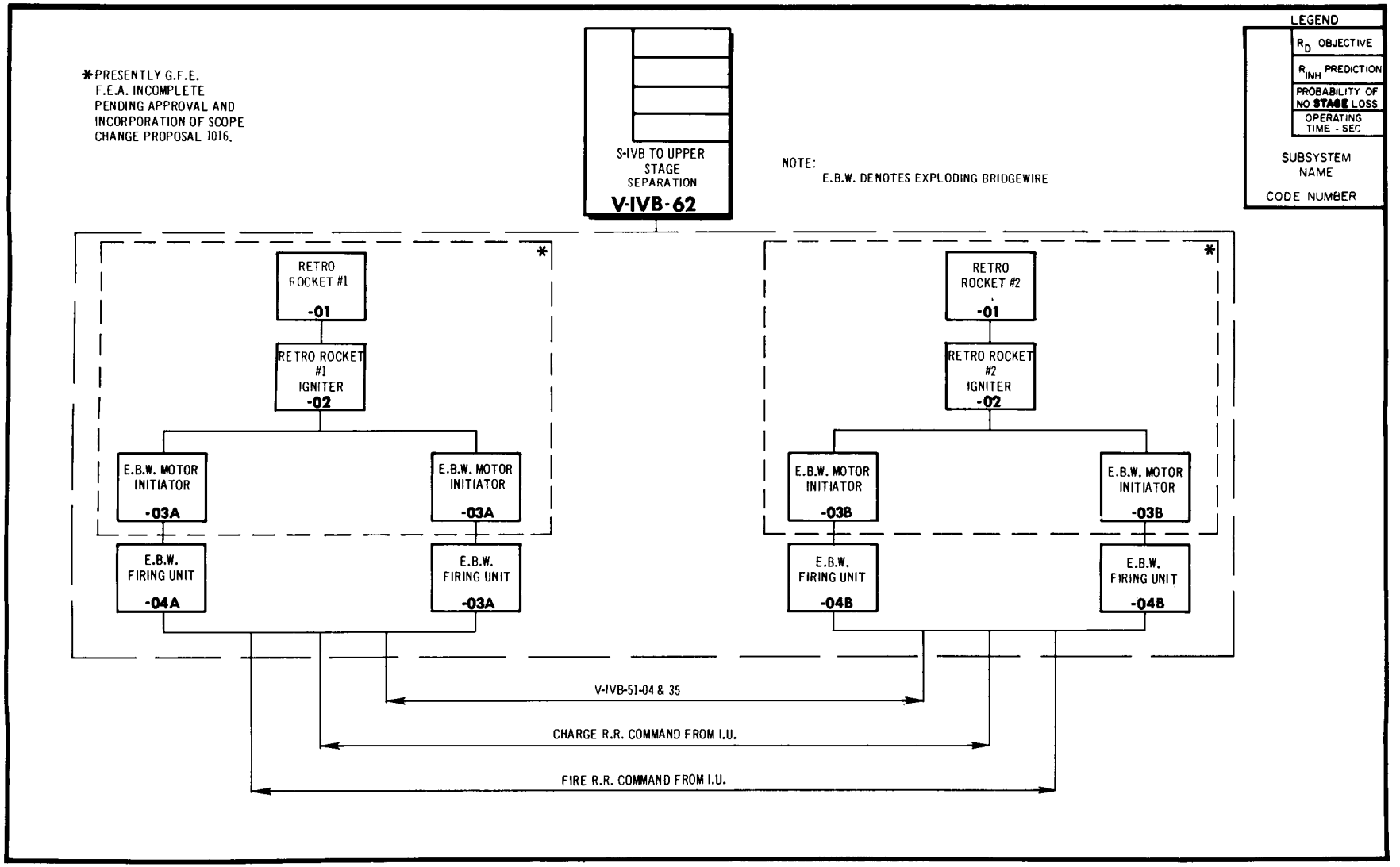
*PRESENTLY G.F.E.
F.E.A. INCOMPLETE
PENDING APPROVAL AND
INCORPORATION OF SCOPE
CHANGE PROPOSAL 1016.
S-IVB TO UPPER STAGE SEPARATION
V-IVB-62
NOTE:
E.B.W. DENOTES EXPLODING BRIDGEWIRE
LEGEND
R_D OBJECTIVE
R_{INH} PREDICTION
PROBABILITY OF NO STAGE LOSS
OPERATING TIME - SEC
SUBSYSTEM NAME
CODE NUMBER
RETRO ROCKET #1
-01
RETRO ROCKET #1 IGNITER
-02
E.B.W. MOTOR INITIATOR
-03A
E.B.W. MOTOR INITIATOR
-03A
E.B.W. FIRING UNIT
-04A
E.B.W. FIRING UNIT
-03A
RETRO ROCKET #2
-01
RETRO ROCKET #2 IGNITER
-02
E.B.W. MOTOR INITIATOR
-03B
E.B.W. MOTOR INITIATOR
-03B
E.B.W. FIRING UNIT
-04B
E.B.W. FIRING UNIT
-04B
V-IVB-51-04 & 35
CHARGE R.R. COMMAND FROM I.U.
FIRE R.R. COMMAND FROM I.U.

Δ ITEMS MARKED THUS (Δ) DO NOT OPERATE IN FLIGHT

RELIABILITY FAILURE EFFECT ANALYSIS

S-IVB TO UPPER STAGE SEPARATION SUBSYSTEM

A) COUNTDOWN/CHECKOUT
B) COUNTDOWN-AUTOMATIC SEQUENCE
C) FLIGHT-BOOST PHASE
D) FLIGHT-POWERED PHASE, 1ST
E) FLIGHT-COAST PHASE, 1ST
F) FLIGHT-POWERED PHASE, 2ND
G) FLIGHT-COAST PHASE, 2ND

Δ ITEM	FUNCTION	FAILURE TYPE	FAILURE EFFECT ON SUBSYSTEM PERFORMANCE	FAILURE EFFECT ON S-IVB STAGE	FAILURE EFFECT ON SATURN VEHICLE
Retro Rocket (2 Each) V-IVB-62-01 NOTE: GFE Item	Provides reverse thrust to the S-IVB stage during separation from upper stage, (payload).	1) Failure to provide thrust when required.	FAILURE OF SUBSYSTEM The purpose of the subsystem is the ultimate firing of the retro rockets.	A),B),C),D) Not applicable. Function not required prior to E) phase in Saturn 1B vehicle and phase G) in Saturn V vehicle. E) None; however, failure would have adverse effects on mission. F) Not applicable - see A) phase. G) Saturn V: None; same as phase E).	Same SATURN 1B: PROBABLE LOSS OF MISSION Failure of one R/R would cause the S-IVB stage to rotate in backing off and failure of both would result in no separation. Same SATURN V: PROBABLE LOSS OF MISSION Same as phase E).
		2) Failure during operation in form of rocket burst.	PARTIAL FAILURE OF SUBSYSTEM Burst of rocket would be a failure of the ultimate reason for the subsystem.	A),B),C),D) Not applicable. Function not required. E) Saturn 1B: None; all other functions have ceased. Saturn V: Not applicable. Same as A). F) Saturn V: Not applicable. Same as A). G) Saturn V: None; all other functions have ceased.	Same SATURN 1B: POSSIBLE LOSS OF VEHICLE Due to structural damage. Saturn V: Same Same SATURN V: POSSIBLE LOSS OF VEHICLE Due to structural damage.

Δ ITEMS MARKED THUS (Δ) DO NOT OPERATE IN FLIGHT

RELIABILITY FAILURE EFFECT ANALYSIS

A) COUNTDOWN/CHECKOUT
B) COUNTDOWN - AUTOMATIC SEQUENCE
C) FLIGHT - BOOST PHASE
D) FLIGHT - POWERED PHASE, 1ST
E) FLIGHT - COAST PHASE, 1ST
F) FLIGHT - POWERED PHASE, 2ND
G) FLIGHT - COAST PHASE, 2ND

S-IVB TO UPPER STAGE SEPARATION SUBSYSTEM

Δ	ITEM	FUNCTION	FAILURE TYPE	FAILURE EFFECT ON SUBSYSTEM PERFORMANCE	FAILURE EFFECT ON S-IVB STAGE	FAILURE EFFECT ON SATURN VEHICLE
	Retro Rocket (2) V-IVB-62-01 (continued)		3) Failure to cease operation in form of "chuff" from residual unburned fuel.	None; subsystem has normally ceased to function.	A),B),C),D) None; not applicable since operation does not occur prior to phase E) for Saturn 1B vehicle and phase G) for Saturn V vehicle. E) Saturn 1B: None; all stage functions have ceased. Saturn V: Not applicable. Same as A). F) Saturn V: Not applicable. Same as A). G) Saturn V: None; same as Saturn 1B of E).	Same SATURN 1B: None; "Chuff" reaction will provide thrust on already separated stage in direction of increasing separation. Saturn V: Not applicable. Same None; same as Saturn 1B above.
	Retro Rocket Igniter #1 and #2 V-IVB-62-02 NOTE: GFE Item	Starts retro rocket motor.	Failure to start motor when required.	PARTIAL FAILURE OF SUBSYSTEM Separation can still occur with only one rocket; however, failure of both would result in no separation.	A),B),C),D) Not applicable. Function not required. E) Saturn 1B: None; stage functions have ceased. Saturn V: Not applicable. Function not required. F) Not applicable. Same as A). G) Saturn V: None; same as phase E) for Saturn 1B.	Same SATURN 1B: POSSIBLE LOSS OF MISSION Failure of one R/R would cause the S-IVB to rotate in backing off. Failure of both would result in no separation. Saturn V: Same Same POSSIBLE LOSS OF MISSION
	EBW Motor Initiator (4) V-IVB-62-03A (2) V-IVB-62-03B (2) NOTE: GFE Item	Activates retro rocket igniter.	Failure to start igniter when required.	None; redundancy provided.	A),B),C),D) Not applicable. Function not required. E) Saturn 1B: None; redundancy provided. Saturn V: Function not required. (continued)	Same Same

Δ ITEMS MARKED THUS (#) DO NOT OPERATE IN FLIGHT

RELIABILITY FAILURE EFFECT ANALYSIS

A) COUNTDOWN/CHECKOUT
B) COUNTDOWN-AUTOMATIC SEQUENCE
C) FLIGHT-BOOST PHASE
D) FLIGHT-POWERED PHASE, 1ST
E) FLIGHT-COAST PHASE, 1ST
F) FLIGHT-POWERED PHASE, 2ND
G) FLIGHT-COAST PHASE, 2ND

S-IVB TO UPPER STAGE SEPARATION SUBSYSTEM

Δ ITEM	FUNCTION	FAILURE TYPE	FAILURE EFFECT ON SUBSYSTEM PERFORMANCE	FAILURE EFFECT ON S-IVB STAGE	FAILURE EFFECT ON SATURN VEHICLE
EBW Motor Initiator (4) V-IVB-62-03A (2) V-IVB-62-03B (2) NOTE: GFE Item (continued)		Failure to start igniter when required. (continued)		(continued) F) Function not required. G) Saturn V only: None; redundancy provided.	 Same Same
EBW Firing Unit (4) V-IVB-62-04A (2) V-IVB-62-04B (2)	Explodes bridgewire in associated EBW motor initiator on receipt of an electrical triggering signal. The four units are charged approximately one minute prior to triggering.	1) Premature explosion of bridgewire with subsequent ignition of explosive train.	None; redundancy provided.	A),B),C) None; not applicable since units are not charged until a subsequent phase. D) Saturn 1B: None; stage functions have ceased. Saturn V: Not applicable; same as A). E),F) None; same as A). G) Saturn V: None; stage functions have ceased.	Same SATURN 1B: POSSIBLE LOSS OF MISSION Premature firing of one R/R could result in an improper separation. Premature firing of both would result in no separation when required. Saturn V: None; same as A). Same POSSIBLE LOSS OF MISSION Same as phase D) for Saturn 1B.
		2) Failure to explode bridgewire when required.	None; redundancy provided.	A),B),C),D) Not applicable; function not required. E) Saturn 1B: None; redundancy provided. Saturn V: Same as A). F) None; same as A). G) None; redundancy provided.	Same Same Same Same

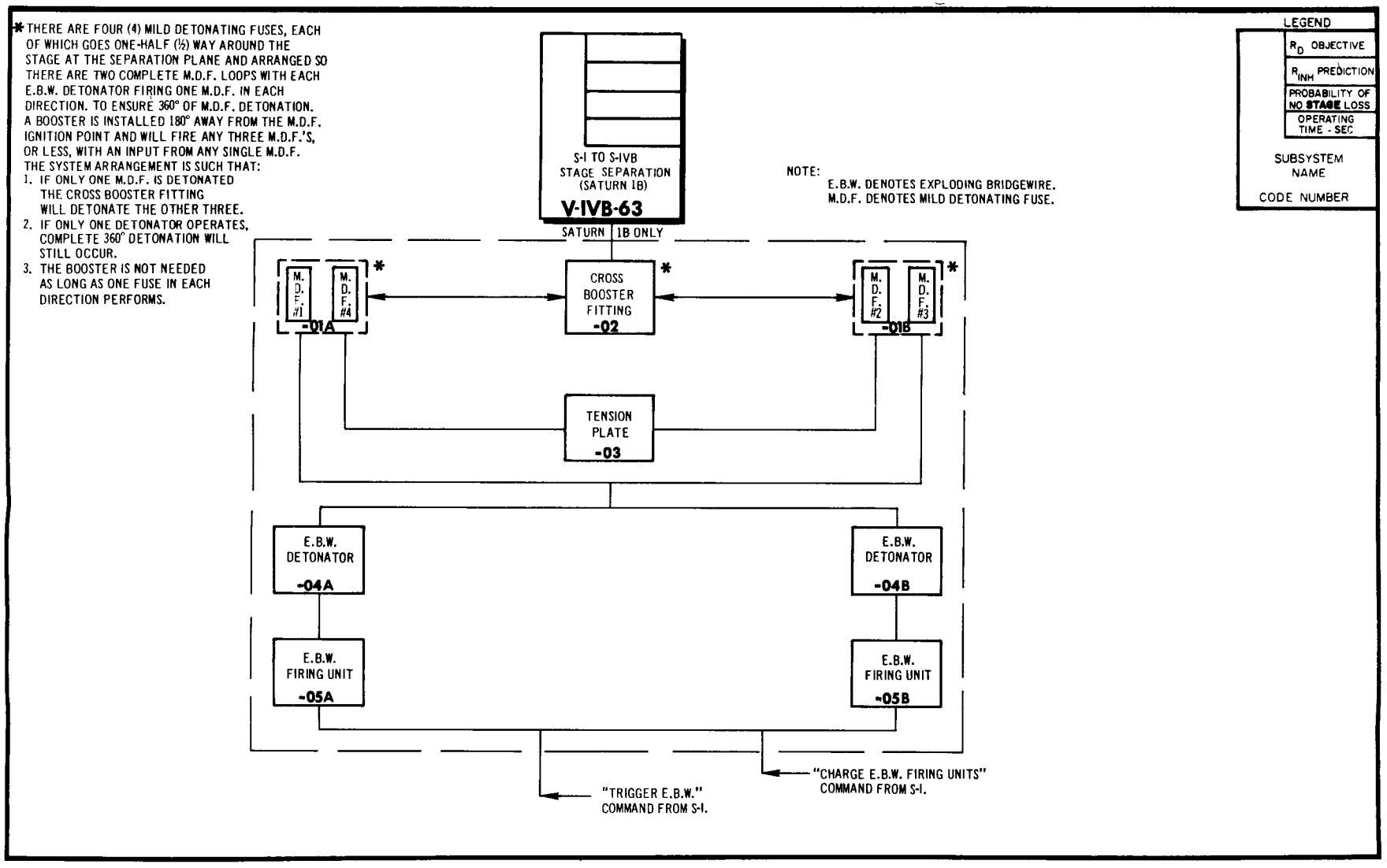
* THERE ARE FOUR (4) MILD DETONATING FUSES, EACH OF WHICH GOES ONE-HALF (½) WAY AROUND THE STAGE AT THE SEPARATION PLANE AND ARRANGED SO THERE ARE TWO COMPLETE M.D.F. LOOPS WITH EACH E.B.W. DETONATOR FIRING ONE M.D.F. IN EACH DIRECTION. TO ENSURE 360° OF M.D.F. DETONATION. A BOOSTER IS INSTALLED 180° AWAY FROM THE M.D.F. IGNITION POINT AND WILL FIRE ANY THREE M.D.F.'S, OR LESS, WITH AN INPUT FROM ANY SINGLE M.D.F. THE SYSTEM ARRANGEMENT IS SUCH THAT:
1. IF ONLY ONE M.D.F. IS DETONATED THE CROSS BOOSTER FITTING WILL DETONATE THE OTHER THREE.
2. IF ONLY ONE DETONATOR OPERATES, COMPLETE 360° DETONATION WILL STILL OCCUR.
3. THE BOOSTER IS NOT NEEDED AS LONG AS ONE FUSE IN EACH DIRECTION PERFORMS.
S-I TO S-IVB STAGE SEPARATION (SATURN 1B)
V-IVB-63
SATURN 1B ONLY
NOTE:
E.B.W. DENOTES EXPLODING BRIDGEWIRE.
M.D.F. DENOTES MILD DETONATING FUSE.
LEGEND
R_D OBJECTIVE
R_{INH} PREDICTION
PROBABILITY OF NO STAGE LOSS
OPERATING TIME - SEC
SUBSYSTEM NAME
CODE NUMBER
M.D.F. #1
M.D.F. #4
-01A
CROSS BOOSTER FITTING
-02
M.D.F. #2
M.D.F. #3
-01B
TENSION PLATE
-03
E.B.W. DETONATOR
-04A
E.B.W. DETONATOR
-04B
E.B.W. FIRING UNIT
-05A
E.B.W. FIRING UNIT
-05B
"TRIGGER E.B.W." COMMAND FROM S-I.
"CHARGE E.B.W. FIRING UNITS" COMMAND FROM S-I.

Δ ITEMS MARKED THUS (Δ) DO NOT OPERATE IN FLIGHT

RELIABILITY FAILURE EFFECT ANALYSIS

A) COUNTDOWN/CHECKOUT
B) COUNTDOWN-AUTOMATIC SEQUENCE
C) FLIGHT-BOOST PHASE
D) FLIGHT-POWERED PHASE, 1ST
E) FLIGHT-COAST PHASE, 1ST
F) FLIGHT-POWERED PHASE, 2ND
G) FLIGHT-COAST PHASE, 2ND

S-I to S-IVB STAGE SEPARATION SUBSYSTEM

Δ	ITEM	FUNCTION	FAILURE TYPE	FAILURE EFFECT ON SUBSYSTEM PERFORMANCE	FAILURE EFFECT ON S-IVB STAGE	FAILURE EFFECT ON SATURN VEHICLE
	Mild Detonating Fuse (MDF) Assembly V-IVB-63-01A V-IVB-63-01B	Upon detonation, MDF propagates along its housing groove and serves the tension plate thus effecting physical stage separation. NOTE: There are four MDF cords arranged in sets of two each, with one MDF of each set reaching 180° around the separation perimeter in opposite direction to its mate. Separation can occur if only one set functions properly. Two detonators are provided, each of which will ignite one MDF set. For further redundancy, a cross booster fitting is installed 180° away from the MDF ignition point so that as long as one MDF detonates, separation will be accomplished. (Refer to * on block diagram V-IVB-63)	1) Failure to ignite when required.	None; redundancy provided.	A),B) Not applicable; function occurs in subsequent phase. C) None; redundancy provided. D),E) Not applicable; function occurs in a previous phase.	Same Same Same
			2) Failure to propagate entire MDF.	None; redundancy provided.		NOTE: Not applicable to Saturn V.
			3) Failure to sever tension plate.	SUBSYSTEM FAILURE This is the prime function of this subsystem.	A),B) Not applicable; function occurs in a subsequent phase. C),D) LOSS OF STAGE S-IVB engine would not start or, if it did, it would do so with the two stages attached. E) Not applicable; function occurs in a previous phase.	Same LOSS OF MISSION NOTE: Separation occurs at end of phase C) and S-IVB engine start occurs at start of phase D). Same NOTE: Not applicable to Saturn V.
	Cross Booster Fitting V-IVB-63-02	Insures complete MDF ignition should any not be ignited by the EBW detonators, or not propagate completely. Located 180° away from the mild detonating fuse ignition point.	Failure to ignite MDF as required with an input from one or more of the other MDF cords.	None; redundancy provided. Detonation of one MDF in each direction will result in detonation.	A),B) Not applicable. Function occurs in phase C). C) None; redundancy provided. D),E) Not applicable. Function occurs in a previous phase.	Same Same Same NOTE: Not applicable to Saturn V.
	Tension Plate V-IVB-63-03	1) Supports mild detonating fuses and provides surface for separation process. 2) Provides tension tie between aft skirt and aft interstage assembly of S-IVB stage.	Failure to withstand tension and/or shear stresses between the S-I and the S-IVB stages, thus causing premature separation.	None; subsystem operation does not depend on the tension or shear characteristics of the plate.	A) Scrub. B) Scrub. C) LOSS OF STAGE Premature separation would result in destruction by range safety officer. D),E) Not applicable; separation occurs at end of phase C).	Same Same LOSS OF MISSION Same NOTE: Not applicable to Saturn V.

Δ ITEMS MARKED THUS (Δ) DO NOT OPERATE IN FLIGHT

RELIABILITY FAILURE EFFECT ANALYSIS

S-I TO S-IVB STAGE SEPARATION SUBSYSTEM

A) COUNTDOWN/CHECKOUT
B) COUNTDOWN - AUTOMATIC SEQUENCE
C) FLIGHT - BOOST PHASE
D) FLIGHT - POWERED PHASE, 1ST
E) FLIGHT - COAST PHASE, 1ST
F) FLIGHT - POWERED PHASE, 2ND
G) FLIGHT - COAST PHASE, 2ND

Δ	ITEM	FUNCTION	FAILURE TYPE	FAILURE EFFECT ON SUBSYSTEM PERFORMANCE	FAILURE EFFECT ON S-IVB STAGE	FAILURE EFFECT ON SATURN VEHICLE
	EBW Detonator (2) V-IVB-63-04A V-IVB-63-04B	Ignites mild detonating fuses to sever tension plate, thus allowing S-I to S-IVB stage separation. Either detonator ignites one MDF set which is sufficient for separation.	Failure to ignite MDF cord when required.	None; the two detonators in the subsystem are redundant. Each detonator ignites one MDF set which is capable of effecting separation.	A),B) Not applicable; function occurs in a subsequent phase. C) None; redundancy provided. D),E) Not applicable; function occurs in a previous phase.	Same Same Same NOTE: Not applicable to Saturn V.
	EBW Firing Unit (2) V-IVB-63-05A V-IVB-63-05B	Explodes EBW detonator upon receipt of an electrical trigger signal. Each firing unit explodes one detonator and each detonator in turn ignites one MDF set which is capable of effecting separation.	1) Premature explosion of bridgewire in detonator. (Subsequent explosion of the explosion train is assumed to occur.)	None; premature performance severs tension plate early; performance of subsystem not affected.	A),B) None; not applicable since units are not charged until late in phase C). C) None; failure must occur in the short period (approx. 50 seconds) from the unit becoming charged and the receipt of the trigger signal. Stage functions would not be affected. D),E) Not applicable; function occurs in latter part of phase C).	Same Same Same NOTE: Not applicable to Saturn V.
			2) Failure to explode bridgewire in detonator when required.	None; redundancy provided. Either detonator ignites one MDF set.	A),B) Not applicable; function occurs in subsequent phase. C) None; redundancy provided. D),E) Not applicable; Function occurs in a previous phase.	Same Same Same NOTE: Not applicable to Saturn V.

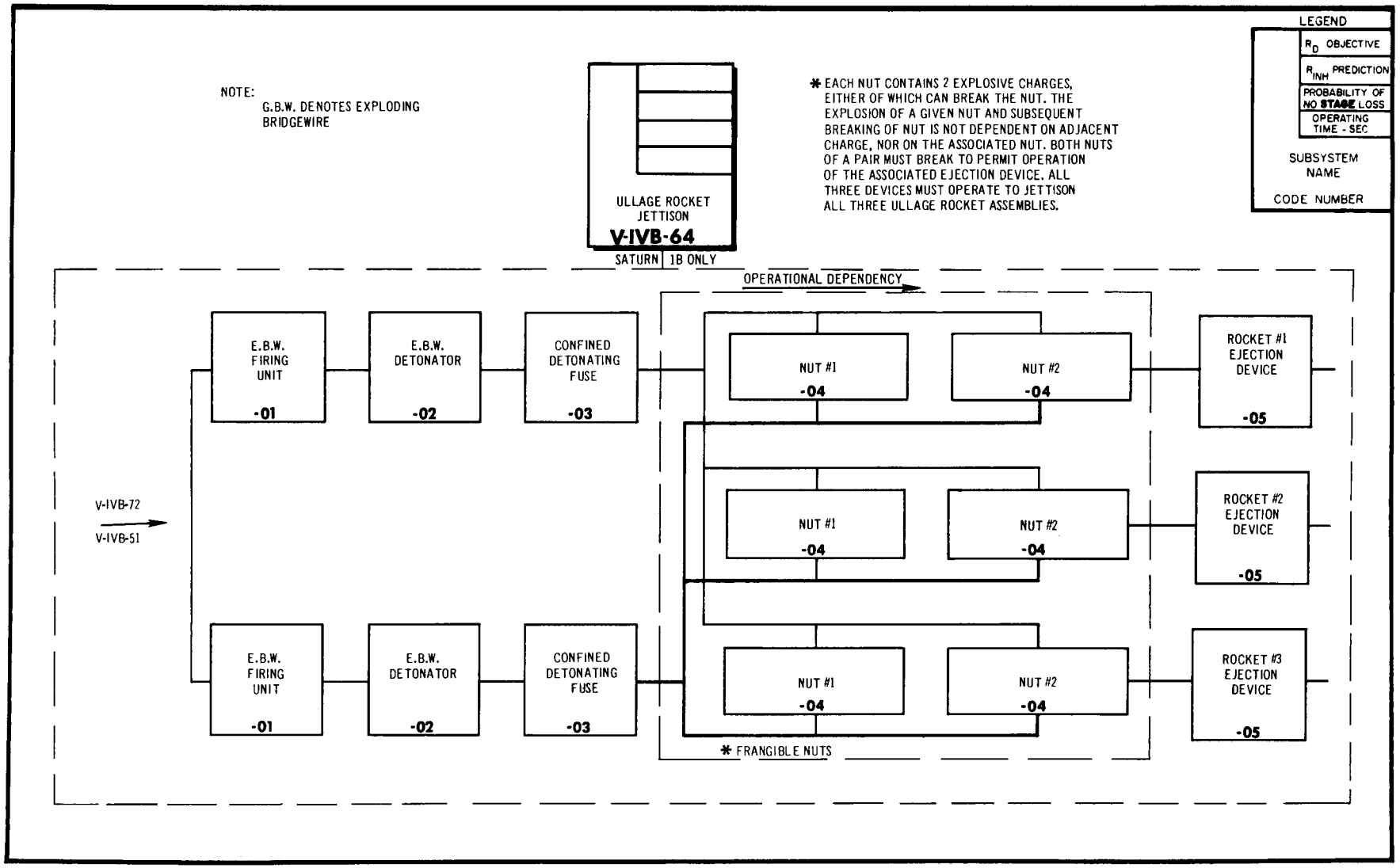
NOTE:
G.B.W. DENOTES EXPLODING BRIDGEWIRE
ULLAGE ROCKET JETTISON
V-IVB-64
SATURN 1B ONLY
* EACH NUT CONTAINS 2 EXPLOSIVE CHARGES, EITHER OF WHICH CAN BREAK THE NUT. THE EXPLOSION OF A GIVEN NUT AND SUBSEQUENT BREAKING OF NUT IS NOT DEPENDENT ON ADJACENT CHARGE, NOR ON THE ASSOCIATED NUT. BOTH NUTS OF A PAIR MUST BREAK TO PERMIT OPERATION OF THE ASSOCIATED EJECTION DEVICE. ALL THREE DEVICES MUST OPERATE TO JETTISON ALL THREE ULLAGE ROCKET ASSEMBLIES.
LEGEND
R_D OBJECTIVE
R_{INH} PREDICTION
PROBABILITY OF NO STAGE LOSS
OPERATING TIME - SEC
SUBSYSTEM NAME
CODE NUMBER
OPERATIONAL DEPENDENCY
V-IVB-72
V-IVB-51
E.B.W. FIRING UNIT -01
E.B.W. DETONATOR -02
CONFINED DETONATING FUSE -03
NUT #1 -04
NUT #2 -04
ROCKET #1 EJECTION DEVICE -05
ROCKET #2 EJECTION DEVICE -05
ROCKET #3 EJECTION DEVICE -05
* FRANGIBLE NUTS

Δ ITEMS MARKED THUS (Δ) DO NOT OPERATE IN FLIGHT

RELIABILITY FAILURE EFFECT ANALYSIS

A) COUNTDOWN/CHECKOUT
B) COUNTDOWN-AUTOMATIC SEQUENCE
C) FLIGHT-BOOST PHASE
D) FLIGHT-POWERED PHASE, 1ST
E) FLIGHT-COAST PHASE, 1ST
F) FLIGHT-POWERED PHASE, 2ND
G) FLIGHT-COAST PHASE, 2ND

ULLAGE ROCKET JETTISON (SATURN 1B ONLY)

Δ	ITEM	FUNCTION	FAILURE TYPE	FAILURE EFFECT ON SUBSYSTEM PERFORMANCE	FAILURE EFFECT ON S-IVB STAGE	FAILURE EFFECT ON SATURN VEHICLE
	Exploding Bridgewire (EBW) Firing Unit for Ullage Rocket Jettison (2) V-IVB-64-01	Explodes bridgewire in an associated detonator upon receipt of an electrical trigger signal. Unit must be charged prior to triggering.	1) Premature explosion of bridgewire. (Subsequent ignition of associated explosive train and ejection of all three ullage rockets is assumed to occur.)	None; premature ignition of explosive train causes premature jettison. This can not occur until after rocket burn therefore, has no effect on performance	A),B),C) None; firing units are not charged until D) phase. D) None; rockets function before charging of jettison firing units. E) Not applicable.	Same Same Same
			2) Failure to explode bridgewire when required.	None; two units are redundant	A),B),C) None; function is not required before D) phase. D) None; redundancy is provided. E) Not applicable.	Same Same Same
	EBW Detonator for Ullage Rocket Jettison (2) V-IVB-64-02	Ignites detonating fuses which lead to frangible nuts on ullage rocket attach bolts.	1) Failure to ignite fuses when required.	None; redundancy provided.	A),B),C) None; function not required before phase D). D) None; redundancy is provided. E) Not applicable.	Same Same Same
	Confined Detonating Fuse Assembly (2) V-IVB-64-03	Transmits detonating shock wave to ignite charge in frangible nut. For failure probability analysis this item includes the detonator block common to both detonators. This block acts as a holding fixture for the two detonators and two fuses.	1) Failure to ignite charge when required.	None; redundancy is provided. Either of two fuses can ignite all six frangible nuts.	A),B),C) None; function is not required before D) phase. D) None; redundancy provided. E) Not applicable.	Same Same Same
	Frangible Nut (6) V-IVB-64-04	Releases tension bolt, by explosive breaking of nut, in rocket-to-vehicle fastening.	1) Failure to explode and break. There are two nuts on each of three rockets. All must break to permit jettison of all rockets.	None; each nut is considered redundant since it contains two charges, either of which can break the nut.	A),B),C) None; function not required before phase D). D) None; redundancy provided. E) Not applicable.	Same Same Same

Δ ITEMS MARKED THUS (Δ) DO NOT OPERATE IN FLIGHT

RELIABILITY FAILURE EFFECT ANALYSIS

A) COUNTDOWN/CHECKOUT
B) COUNTDOWN-AUTOMATIC SEQUENCE
C) FLIGHT-BOOST PHASE
D) FLIGHT-POWERED PHASE, 1ST
E) FLIGHT-COAST PHASE, 1ST
F) FLIGHT-POWERED PHASE, 2ND
G) FLIGHT-COAST PHASE, 2ND

ULLAGE ROCKET JETTISON (SATURN 1B ONLY)

Δ	ITEM	FUNCTION	FAILURE TYPE	FAILURE EFFECT ON SUBSYSTEM PERFORMANCE	FAILURE EFFECT ON S-IVB STAGE	FAILURE EFFECT ON SATURN VEHICLE
	Ullage Rocket Ejection Device (3) (Fastener bolts are considered as a part of this device for failure analysis.) V-IVB-64-05	Thrusts rocket assembly away from stage, laterally, when required. Thrust of a compressed coil spring is allowed to move the rocket assembly upon release of two fastener bolts holding the assembly to the stage.	1) Failure of one of the fastener bolts.	POSSIBLE LOSS OF SUBSYSTEM Upon failure of forward bolt, the resultant stresses on the aft bolt could cause failure to jettison when required.	A),B) Delay in launching or scrub. C),D) POSSIBLE LOSS OF STAGE When a rocket is fired after having swung out of position, it may slam back into position with excessive shock to the propellant grain, causing an explosion. E) Not applicable.	Same POSSIBLE LOSS OF VEHICLE FRT .01 sec.
			2) Failure to eject rocket assembly when required.	PARTIAL LOSS OF SUBSYSTEM By definition, subsystem performance is incomplete since one of the three rockets is not jettisoned as required.	A),B),C) None; function is not required until D) phase. D) PARTIAL LOSS OF STAGE PERFORMANCE Extra weight of a burned-out rocket degrades stage performance. E) None	Same POSSIBLE LOSS OF MISSION Extra load of burned rocket may be significant in vehicle performance. None
			3) Failure to provide the required amount of thrust to the rocket assembly. (Malfunction of mechanical parts.)	PARTIAL LOSS OF SUBSYSTEM Due to degradation of performance.	A),B),C) None; function is not required before D) phase. D) POSSIBLE LOSS OF STAGE A "soft ejected" rocket could strike and damage the stage engine. E) None	None POSSIBLE LOSS OF VEHICLE FRT 1.0 sec. None

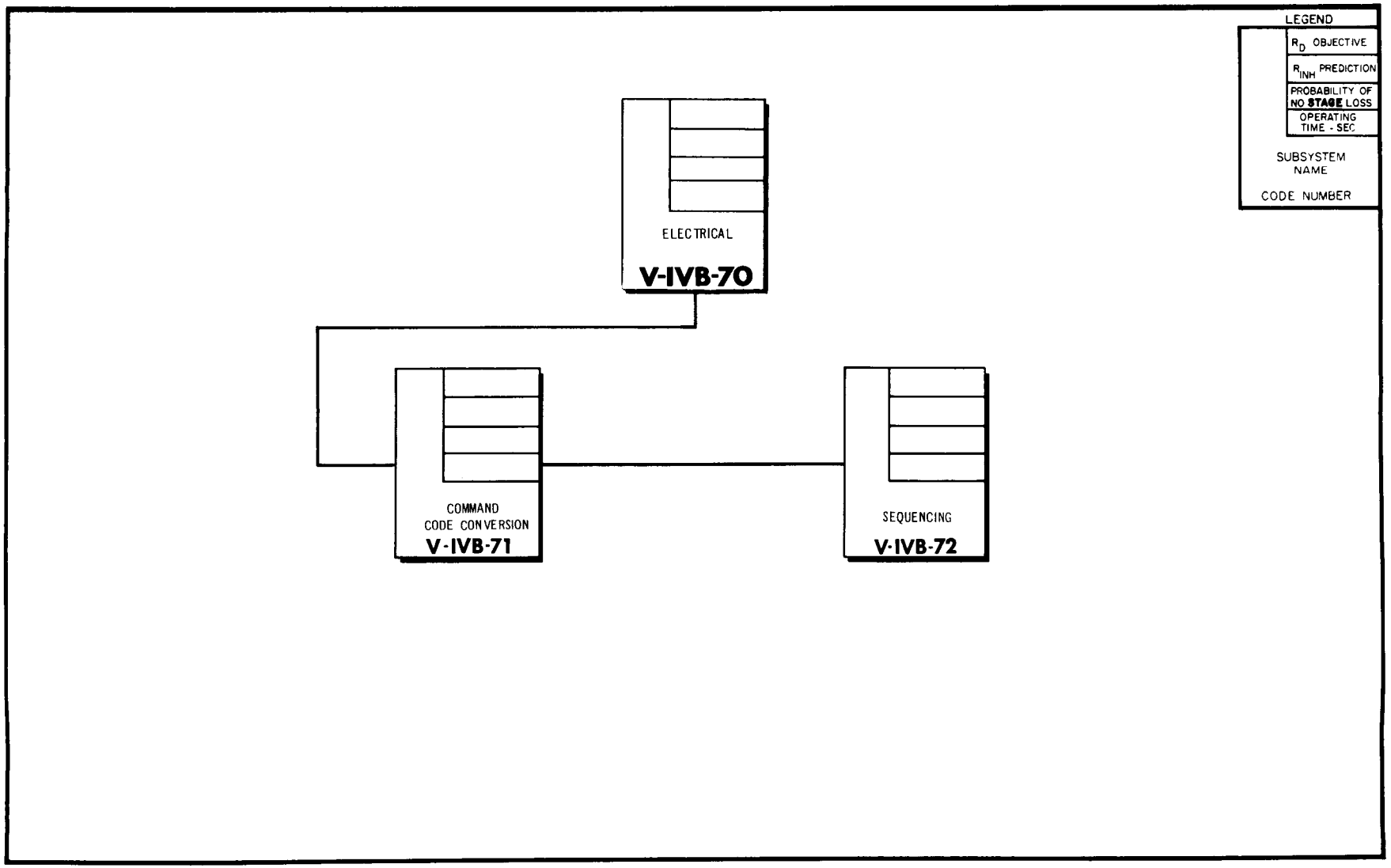
LEGEND
R_D OBJECTIVE
R_{INH} PREDICTION
PROBABILITY OF NO STAGE LOSS
OPERATING TIME - SEC
SUBSYSTEM NAME
CODE NUMBER
ELECTRICAL
V-IVB-70
COMMAND CODE CONVERSION
V-IVB-71
SEQUENCING
V-IVB-72

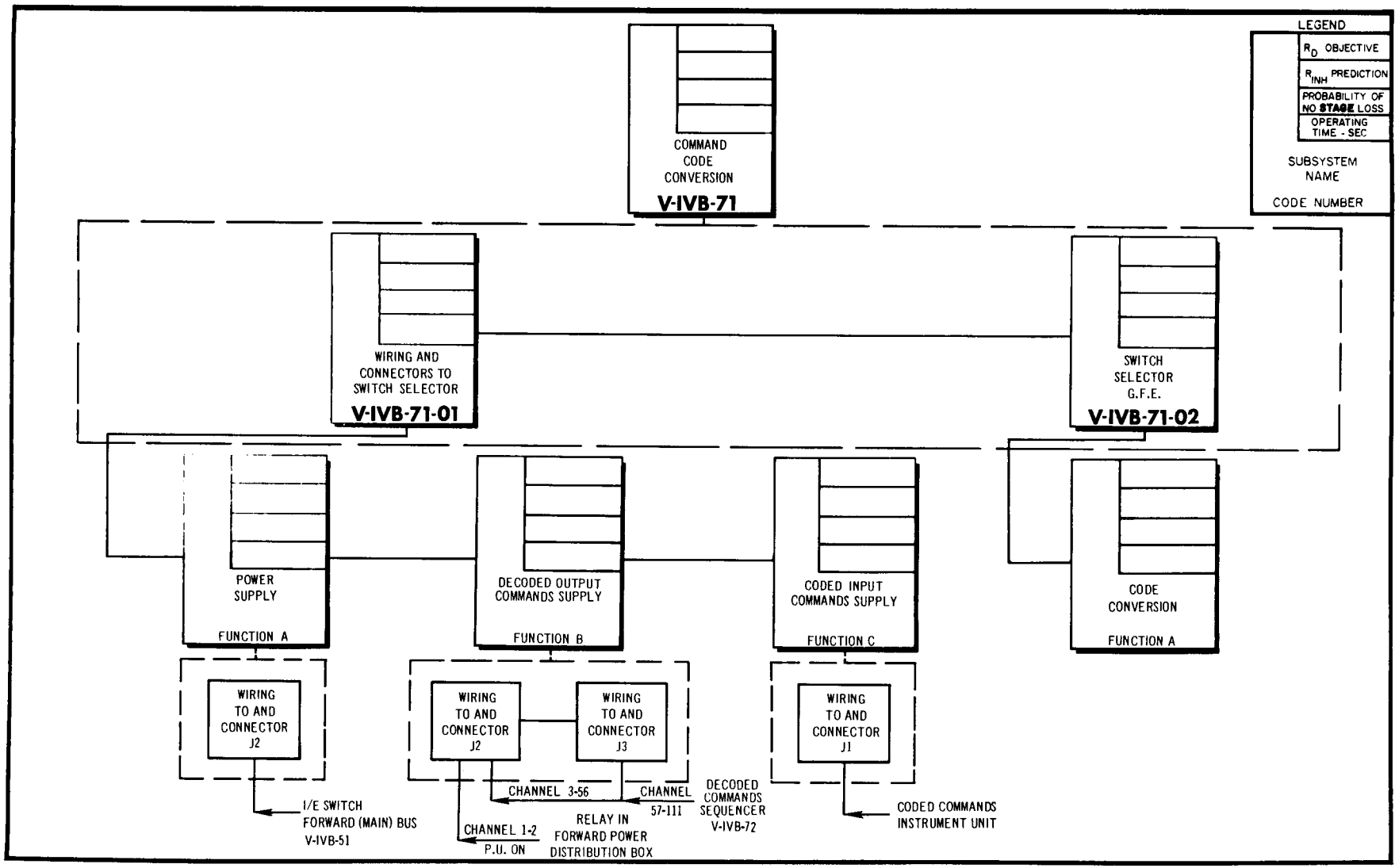
LEGEND
R_D OBJECTIVE
R_{INH} PREDICTION
PROBABILITY OF NO STAGE LOSS
OPERATING TIME - SEC
SUBSYSTEM NAME
CODE NUMBER
COMMAND CODE CONVERSION
V-IVB-71
WIRING AND CONNECTORS TO SWITCH SELECTOR
V-IVB-71-01
SWITCH SELECTOR G.F.E.
V-IVB-71-02
POWER SUPPLY
FUNCTION A
DECODED OUTPUT COMMANDS SUPPLY
FUNCTION B
CODED INPUT COMMANDS SUPPLY
FUNCTION C
CODE CONVERSION
FUNCTION A
WIRING TO AND CONNECTOR J2
WIRING TO AND CONNECTOR J2
WIRING TO AND CONNECTOR J3
WIRING TO AND CONNECTOR J1
I/E SWITCH FORWARD (MAIN) BUS V-IVB-51
CHANNEL 1-2 P.U. ON
CHANNEL 3-56
CHANNEL 57-111
RELAY IN FORWARD POWER DISTRIBUTION BOX
DECODED COMMANDS SEQUENCER V-IVB-72
CODED COMMANDS INSTRUMENT UNIT

Δ ITEMS MARKED THUS (Δ) DO NOT OPERATE IN FLIGHT

RELIABILITY FAILURE EFFECT ANALYSIS

S-IVB COMMAND CODE CONVERSION SUBSYSTEM

A) COUNTDOWN/CHECKOUT
B) COUNTDOWN-AUTOMATIC SEQUENCE
C) FLIGHT-BOOST PHASE
D) FLIGHT-POWERED PHASE, 1ST
E) FLIGHT-COAST PHASE, 1ST
F) FLIGHT-POWERED PHASE, 2ND
G) FLIGHT-COAST PHASE, 2ND

Δ	ITEM	FUNCTION	FAILURE TYPE	FAILURE EFFECT ON SUBSYSTEM PERFORMANCE	FAILURE EFFECT ON S-IVB STAGE	FAILURE EFFECT ON SATURN VEHICLE
	S-IVB Wiring and Connectors to S-IVB Switch Selector V-IVB-71-01	Function A: Power supply function. Supplies voltage from forward (main) bus to J2 of the switch selector. This voltage is used as the load supply for the output transistors in the switch selector.	Opens, shorts, and intermittents.	PARTIAL LOSS OF SUBSYSTEM Lack of command outputs from switch selector.	A) Not applicable. B) Delay in launch. C),D),E),F),G) PROBABLE LOSS OF STAGE Depending on when failure occurred and which commands were affected. The effect of this on an individual sequencing function and complete analysis may be found under the sequencer (V-IVB-72-02).	Same PROBABLE LOSS OF VEHICLE
		Function B: Decoded output commands supply function. Supplier 28 volt decoded commands on appropriate wire from J2 and J3 of the switch selector. Function C: Coded input commands supply function. Supplies coded commands from I.U. to J1 of the switch selector.	Opens, shorts, and intermittents.	PARTIAL LOSS OF SUBSYSTEM Lack of, or wrong commands from code conversion subsystem.	A) Not applicable. B) Delay in launch. C),D),E),F),G) PROBABLE LOSS OF STAGE Depending on when failure occurred and which command was affected. The effect of wrong commands is analyzed under the sequencer (V-IVB-72-02).	Same PROBABLE LOSS OF VEHICLE
	S-IVB Switch Selector V-IVB-71-02 NOTE: GFE	Function A: Code conversion function converts seven bit binary coded commands from IU to approximately decoded commands on the correct input for sequencing (V-IVB-72).	Wrong output as in the case of failure to supply command when required or supplying a command when none is required.	PARTIAL LOSS OF SUBSYSTEM Due to no output or wrong output of switch selector.	A) Not applicable. B) Delay in launch. C),D),E),F),G) PROBABLE LOSS OF STAGE Depending on when failure occurred and which commands were affected. The wrong command output would effect the appropriate sequencing function which is analyzed under sequencer (V-IVB-72-02).	Same PROBABLE LOSS OF VEHICLE

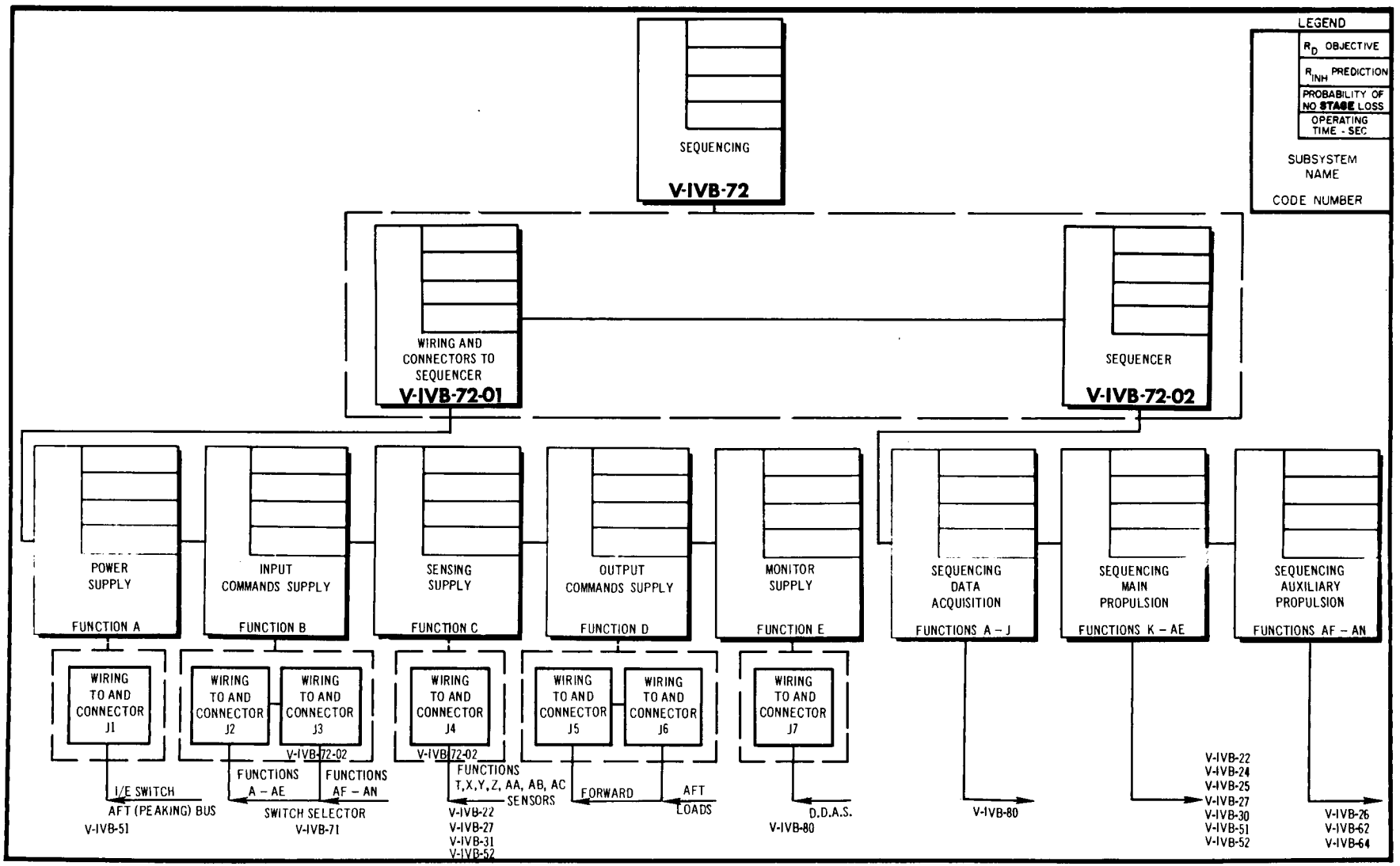
LEGEND
R_D OBJECTIVE
R_{INH} PREDICTION
PROBABILITY OF NO STAGE LOSS
OPERATING TIME - SEC
SUBSYSTEM NAME
CODE NUMBER
SEQUENCING
V-IVB-72
WIRING AND CONNECTORS TO SEQUENCER
V-IVB-72-01
SEQUENCER
V-IVB-72-02
POWER SUPPLY
FUNCTION A
INPUT COMMANDS SUPPLY
FUNCTION B
SENSING SUPPLY
FUNCTION C
OUTPUT COMMANDS SUPPLY
FUNCTION D
MONITOR SUPPLY
FUNCTION E
SEQUENCING DATA ACQUISITION
FUNCTIONS A – J
SEQUENCING MAIN PROPULSION
FUNCTIONS K – AE
SEQUENCING AUXILIARY PROPULSION
FUNCTIONS AF – AN
WIRING TO AND CONNECTOR J1
WIRING TO AND CONNECTOR J2
WIRING TO AND CONNECTOR J3
WIRING TO AND CONNECTOR J4
WIRING TO AND CONNECTOR J5
WIRING TO AND CONNECTOR J6
WIRING TO AND CONNECTOR J7
I/E SWITCH
AFT (PEAKING) BUS
V-IVB-51
FUNCTIONS A – AE
FUNCTIONS AF – AN
V-IVB-72-02
SWITCH SELECTOR
V-IVB-71
V-IVB-72-02
FUNCTIONS T,X,Y,Z, AA, AB, AC
SENSORS
V-IVB-22
V-IVB-27
V-IVB-31
V-IVB-52
FORWARD
AFT
LOADS
D.D.A.S.
V-IVB-80
V-IVB-80
V-IVB-22
V-IVB-24
V-IVB-25
V-IVB-27
V-IVB-30
V-IVB-51
V-IVB-52
V-IVB-26
V-IVB-62
V-IVB-64

PREFACE TO FAILURE EFFECT ANALYSIS OF S-IVB SEQUENCER

Generally speaking, the S-IVB sequence component functions to receive commands or signals and to generate, as a result of electric relay operation, an output which causes various stage components to start or stop. It also generates monitor-type indications to the instrument unit (IU) and to the data acquisition subsystem, as a reflection of circuit status within the sequencer. The additional provision for ground support equipment operation of the unit is not included in this analysis. To separate the failure effects, and to provide a framework for failure probability analysis, this failure effect analysis has been broken down into parts; arranged as follows:

Subsequent block diagrams show the sequencer unit at the stage level. At system level, the sequencer functions are divided into three groupings reflecting data acquisition, main propulsion, and auxiliary propulsion functions. In the subsystem level blocks, the individual functional output, or group of outputs, controlled by a single sequencer input are indicated. Below each of these last blocks there is a representation of the sequencer parts upon which the block is functionally/operationally dependent. As an additional aid in failure probability analysis, the time period, in seconds, during which the parts must operate as required, is shown in the subsystem level blocks.

Sequencer failures can be of such nature that a single failure affects multiple "downstream" components, or it may affect only one such component. The analysis of this latter failure (affecting a single component) will generally be found in the failure effect analysis for that component; however, for each single component which cannot, of itself, fail in the premature operation mode, the analysis will be shown herein.

All sequencer failures in the premature-operation mode are caused by one of the following:

a) Sequencer wiring becoming disconnected (open circuit) or becoming short-circuited to a 28 VDC power source.

b) Active relay contacts departing from non-operated status, i.e., NC contacts becoming open, or NO contacts becoming closed.

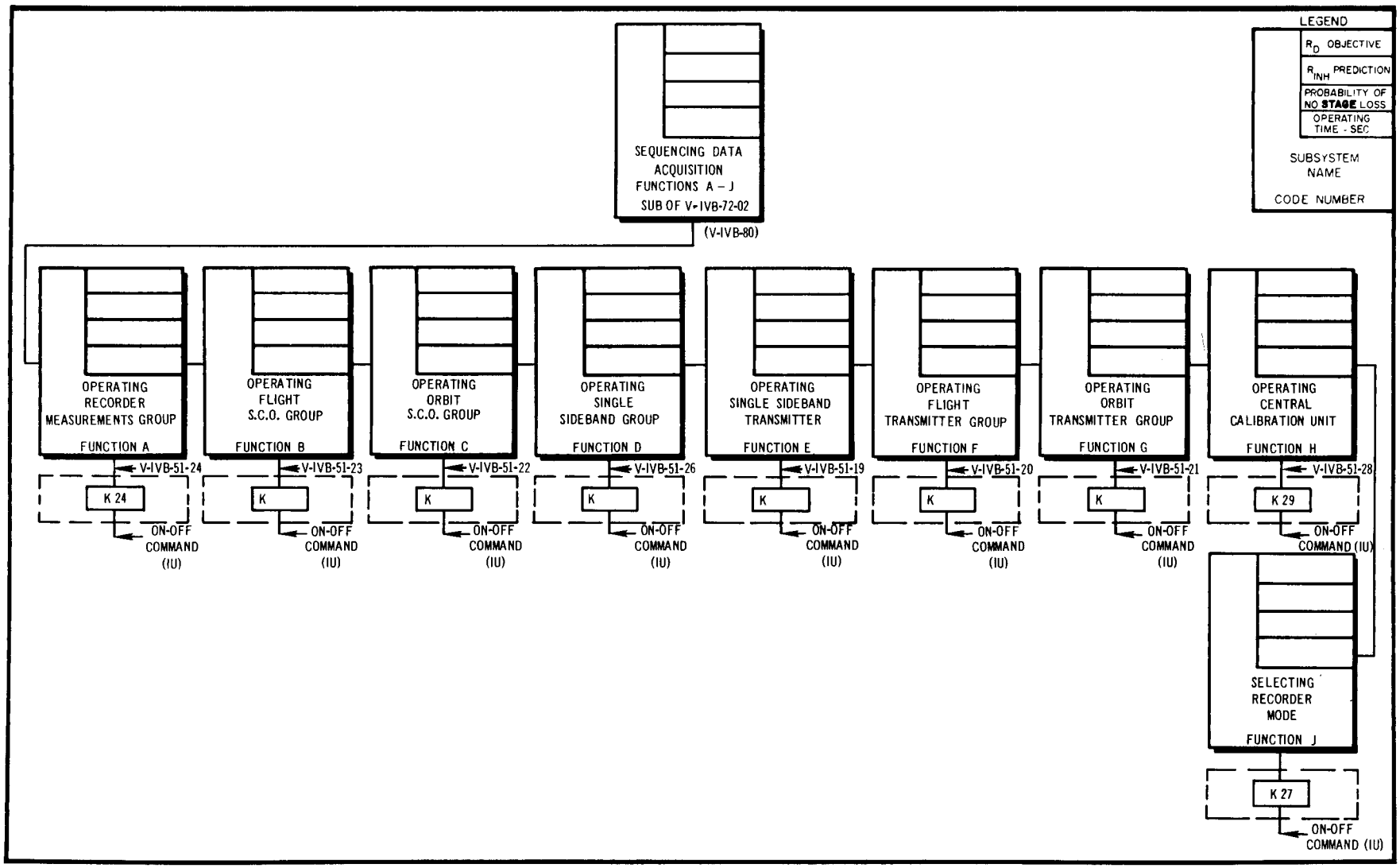
LEGEND
R_D OBJECTIVE
R_{INH} PREDICTION
PROBABILITY OF NO STAGE LOSS
OPERATING TIME - SEC
SUBSYSTEM NAME
CODE NUMBER
SEQUENCING DATA ACQUISITION FUNCTIONS A – J
SUB OF V-IVB-72-02
(V-IVB-80)
OPERATING RECORDER MEASUREMENTS GROUP
FUNCTION A
OPERATING FLIGHT S.C.O. GROUP
FUNCTION B
OPERATING ORBIT S.C.O. GROUP
FUNCTION C
OPERATING SINGLE SIDEBAND GROUP
FUNCTION D
OPERATING SINGLE SIDEBAND TRANSMITTER
FUNCTION E
OPERATING FLIGHT TRANSMITTER GROUP
FUNCTION F
OPERATING ORBIT TRANSMITTER GROUP
FUNCTION G
OPERATING CENTRAL CALIBRATION UNIT
FUNCTION H
V-IVB-51-24
V-IVB-51-23
V-IVB-51-22
V-IVB-51-26
V-IVB-51-19
V-IVB-51-20
V-IVB-51-21
V-IVB-51-28
K 24
K
K 29
ON-OFF COMMAND (IU)
SELECTING RECORDER MODE
FUNCTION J
K 27

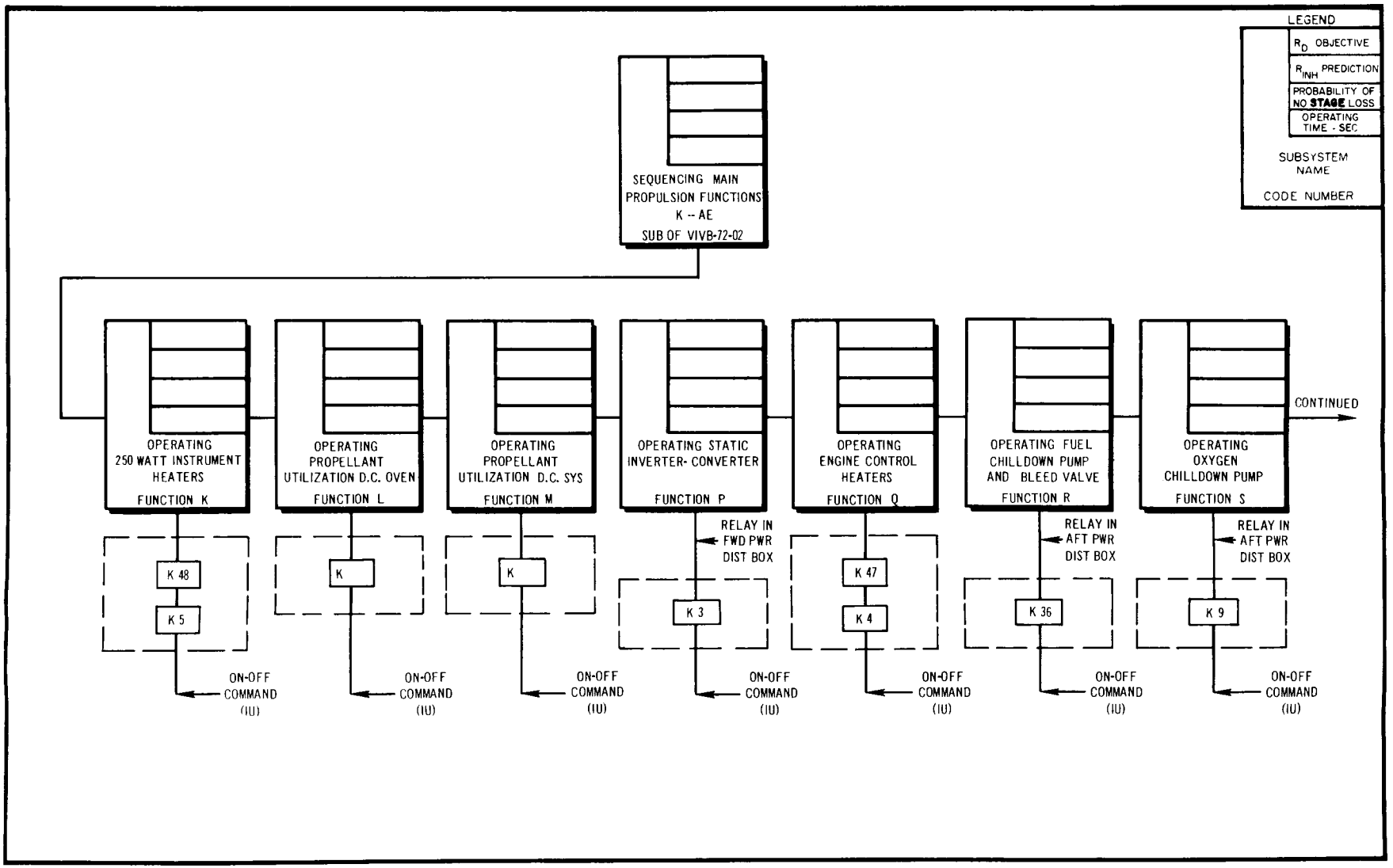
LEGEND
R_D OBJECTIVE
R_{INH} PREDICTION
PROBABILITY OF NO STAGE LOSS
OPERATING TIME - SEC
SUBSYSTEM NAME
CODE NUMBER
SEQUENCING MAIN PROPULSION FUNCTIONS K -- AE
SUB OF VIVB-72-02
OPERATING 250 WATT INSTRUMENT HEATERS
FUNCTION K
OPERATING PROPELLANT UTILIZATION D.C. OVEN
FUNCTION L
OPERATING PROPELLANT UTILIZATION D.C. SYS
FUNCTION M
OPERATING STATIC INVERTER- CONVERTER
FUNCTION P
OPERATING ENGINE CONTROL HEATERS
FUNCTION Q
OPERATING FUEL CHILLDOWN PUMP AND BLEED VALVE
FUNCTION R
OPERATING OXYGEN CHILLDOWN PUMP
FUNCTION S
CONTINUED
RELAY IN FWD PWR DIST BOX
RELAY IN AFT PWR DIST BOX
RELAY IN AFT PWR DIST BOX
K 48
K 5
K
K
K 3
K 47
K 4
K 36
K 9
ON-OFF COMMAND (IU)
ON-OFF COMMAND (IU)
ON-OFF COMMAND (IU)
ON-OFF COMMAND (IU)
ON-OFF COMMAND (IU)
ON-OFF COMMAND (IU)
ON-OFF COMMAND (IU)

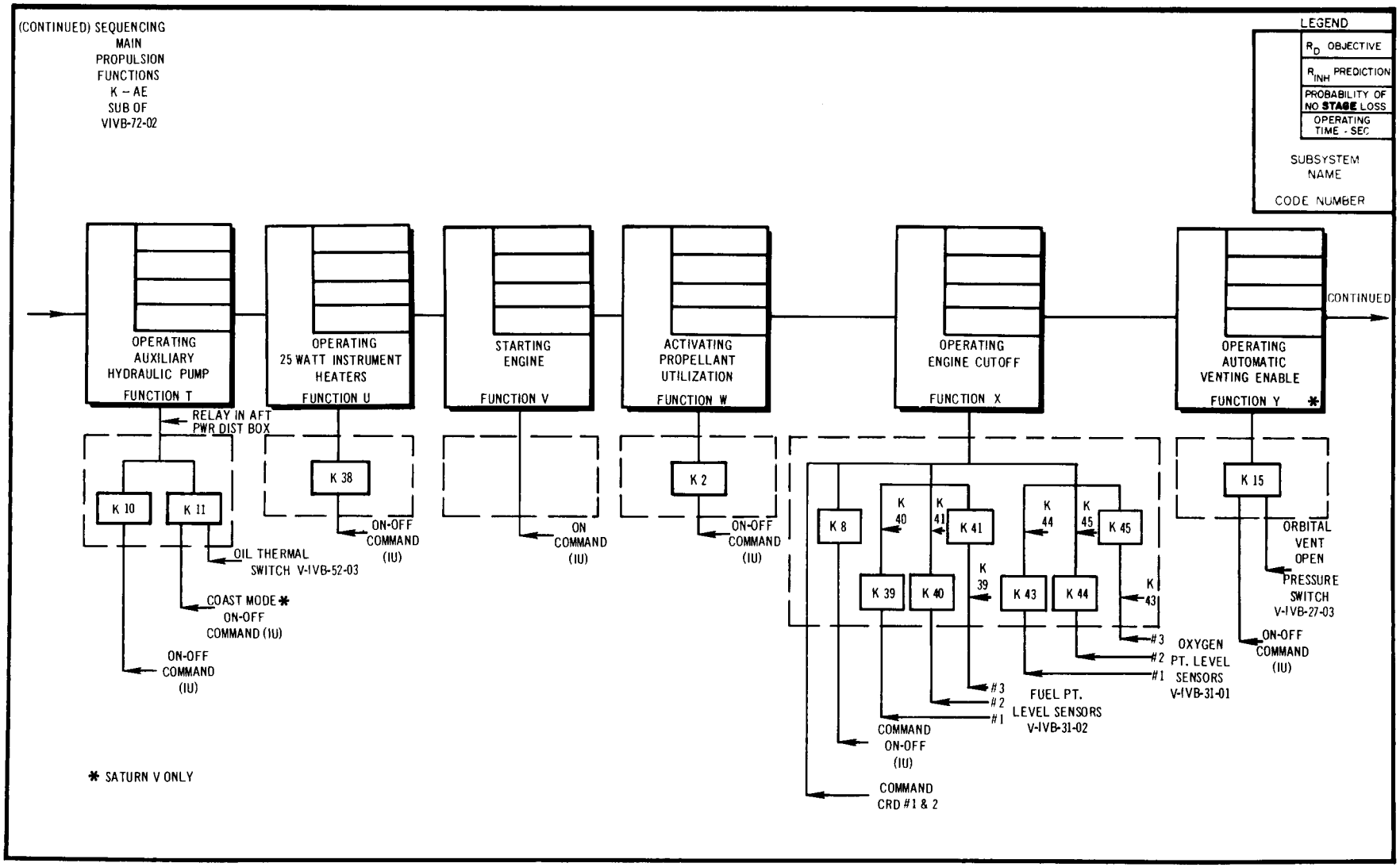
(CONTINUED) SEQUENCING
MAIN
PROPULSION
FUNCTIONS
K – AE
SUB OF
VIVB-72-02
LEGEND
R_D OBJECTIVE
R_{INH} PREDICTION
PROBABILITY OF NO STAGE LOSS
OPERATING TIME - SEC
SUBSYSTEM NAME
CODE NUMBER
OPERATING AUXILIARY HYDRAULIC PUMP
FUNCTION T
OPERATING 25 WATT INSTRUMENT HEATERS
FUNCTION U
STARTING ENGINE
FUNCTION V
ACTIVATING PROPELLANT UTILIZATION
FUNCTION W
OPERATING ENGINE CUTOFF
FUNCTION X
OPERATING AUTOMATIC VENTING ENABLE
FUNCTION Y *
CONTINUED
RELAY IN AFT PWR DIST BOX
K 10
K 11
K 38
K 2
K 8
K 40
K 41
K 39
K 43
K 44
K 45
K 15
OIL THERMAL SWITCH V-IVB-52-03
COAST MODE * ON-OFF COMMAND (IU)
ON-OFF COMMAND (IU)
ON-OFF COMMAND (IU)
ON COMMAND (IU)
ON-OFF COMMAND (IU)
COMMAND ON-OFF (IU)
COMMAND CRD #1 & 2
#3
#2
#1
FUEL PT. LEVEL SENSORS V-IVB-31-02
OXYGEN PT. LEVEL SENSORS V-IVB-31-01
ORBITAL VENT OPEN
PRESSURE SWITCH V-IVB-27-03
ON-OFF COMMAND (IU)
* SATURN V ONLY

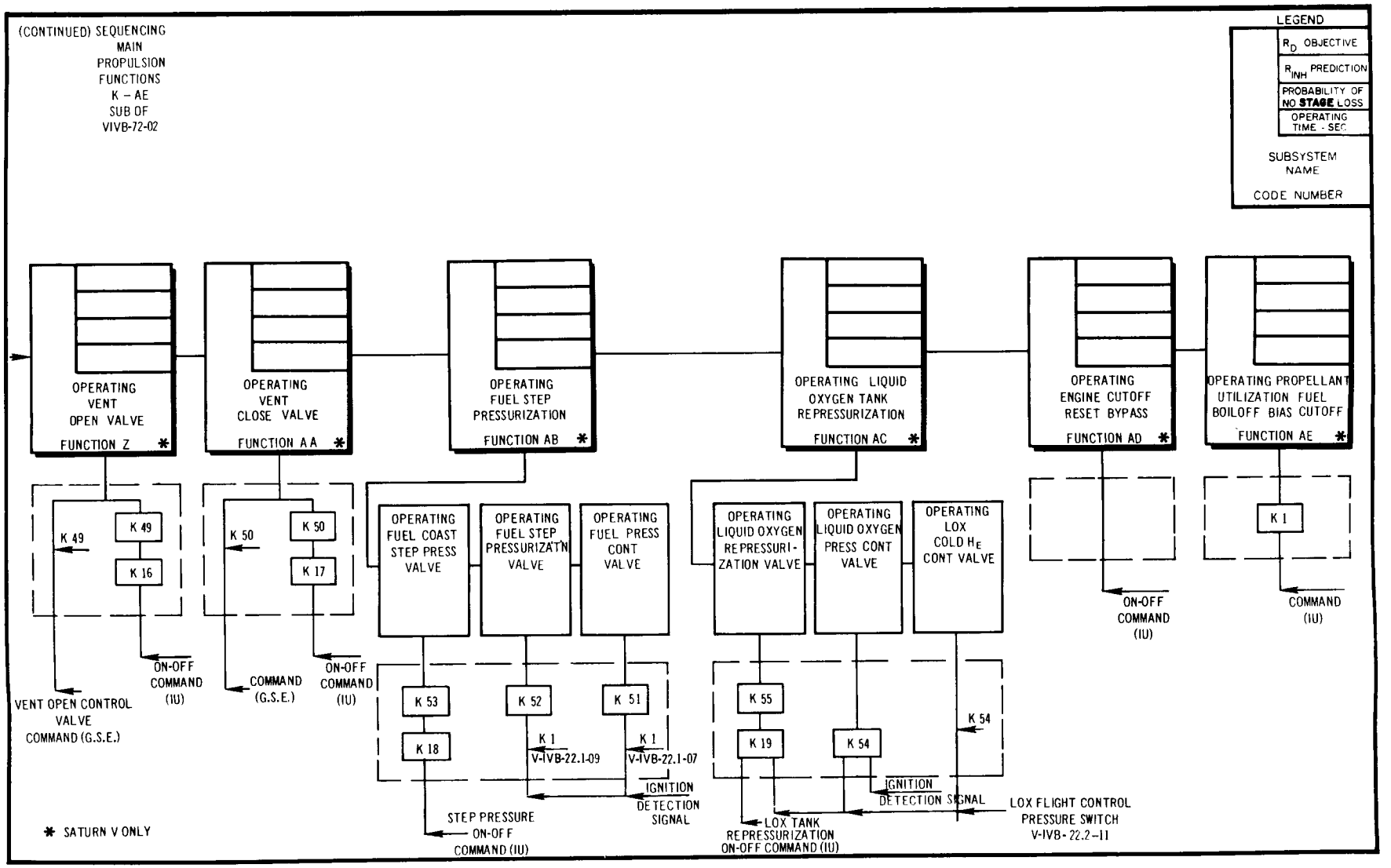
(CONTINUED) SEQUENCING
MAIN
PROPULSION
FUNCTIONS
K – AE
SUB OF
VIVB-72-02
LEGEND
R_D OBJECTIVE
R_{INH} PREDICTION
PROBABILITY OF NO STAGE LOSS
OPERATING TIME - SEC
SUBSYSTEM NAME
CODE NUMBER
OPERATING VENT OPEN VALVE
FUNCTION Z *
OPERATING VENT CLOSE VALVE
FUNCTION AA *
OPERATING FUEL STEP PRESSURIZATION
FUNCTION AB *
OPERATING LIQUID OXYGEN TANK REPRESSURIZATION
FUNCTION AC *
OPERATING ENGINE CUTOFF RESET BYPASS
FUNCTION AD *
OPERATING PROPELLANT UTILIZATION FUEL BOILOFF BIAS CUTOFF
FUNCTION AE *
K 49
K 49
K 16
K 50
K 50
K 17
OPERATING FUEL COAST STEP PRESS VALVE
OPERATING FUEL STEP PRESSURIZATN VALVE
OPERATING FUEL PRESS CONT VALVE
OPERATING LIQUID OXYGEN REPRESSURI-ZATION VALVE
OPERATING LIQUID OXYGEN PRESS CONT VALVE
OPERATING LOX COLD H_E CONT VALVE
K 1
VENT OPEN CONTROL VALVE COMMAND (G.S.E.)
ON-OFF COMMAND (IU)
COMMAND (G.S.E.)
ON-OFF COMMAND (IU)
K 53
K 18
K 52
K 1
V-IVB-22.1-09
K 51
K 1
V-IVB-22.1-07
IGNITION DETECTION SIGNAL
STEP PRESSURE ON-OFF COMMAND (IU)
K 55
K 19
K 54
K 54
IGNITION DETECTION SIGNAL
LOX TANK REPRESSURIZATION ON-OFF COMMAND (IU)
LOX FLIGHT CONTROL PRESSURE SWITCH V-IVB-22.2-11
ON-OFF COMMAND (IU)
COMMAND (IU)
* SATURN V ONLY

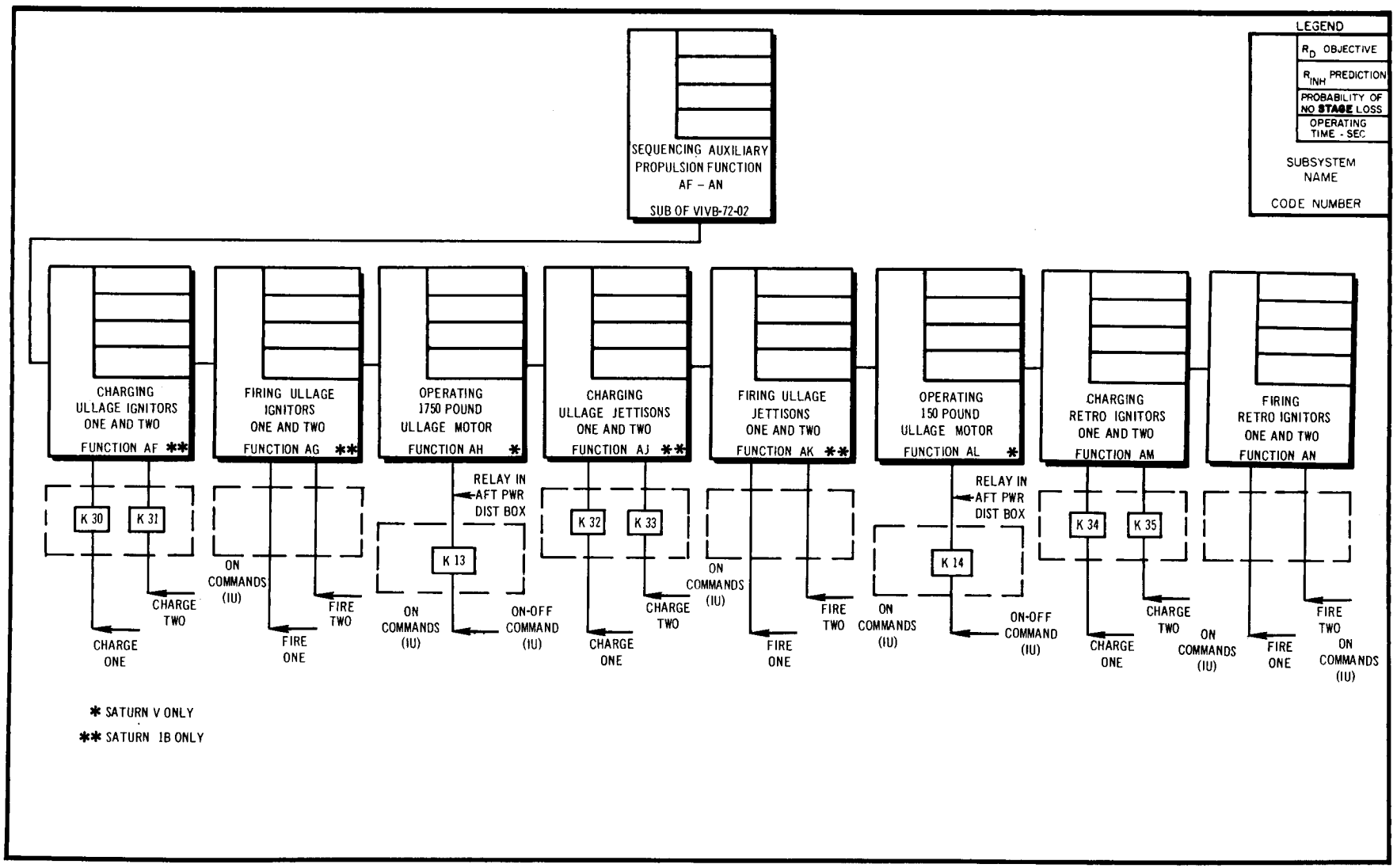
LEGEND
R_D OBJECTIVE
R_{INH} PREDICTION
PROBABILITY OF NO STAGE LOSS
OPERATING TIME - SEC
SUBSYSTEM NAME
CODE NUMBER
SEQUENCING AUXILIARY PROPULSION FUNCTION AF – AN
SUB OF VIVB-72-02
CHARGING ULLAGE IGNITORS ONE AND TWO
FUNCTION AF **
FIRING ULLAGE IGNITORS ONE AND TWO
FUNCTION AG **
OPERATING 1750 POUND ULLAGE MOTOR
FUNCTION AH *
CHARGING ULLAGE JETTISONS ONE AND TWO
FUNCTION AJ **
FIRING ULLAGE JETTISONS ONE AND TWO
FUNCTION AK **
OPERATING 150 POUND ULLAGE MOTOR
FUNCTION AL *
CHARGING RETRO IGNITORS ONE AND TWO
FUNCTION AM
FIRING RETRO IGNITORS ONE AND TWO
FUNCTION AN
K 30
K 31
K 13
K 32
K 33
K 14
K 34
K 35
RELAY IN AFT PWR DIST BOX
RELAY IN AFT PWR DIST BOX
CHARGE ONE
CHARGE TWO
ON COMMANDS (IU)
FIRE ONE
FIRE TWO
ON COMMANDS (IU)
ON-OFF COMMAND (IU)
CHARGE ONE
CHARGE TWO
ON COMMANDS (IU)
FIRE ONE
FIRE TWO
ON COMMANDS (IU)
ON-OFF COMMAND (IU)
CHARGE ONE
CHARGE TWO
ON COMMANDS (IU)
FIRE ONE
FIRE TWO
ON COMMANDS (IU)
* SATURN V ONLY
** SATURN IB ONLY

Δ ITEMS MARKED THUS (Δ) DO NOT OPERATE IN FLIGHT

RELIABILITY FAILURE EFFECT ANALYSIS

A) COUNTDOWN/CHECKOUT
B) COUNTDOWN - AUTOMATIC SEQUENCE
C) FLIGHT - BOOST PHASE
D) FLIGHT - POWERED PHASE, 1ST
E) FLIGHT - COAST PHASE, 1ST
F) FLIGHT - POWERED PHASE, 2ND
G) FLIGHT - COAST PHASE, 2ND

S-IVB SEQUENCING SUBSYSTEM

Δ ITEM	FUNCTION	FAILURE TYPE	FAILURE EFFECT ON SUBSYSTEM PERFORMANCE	FAILURE EFFECT ON S-IVB STAGE	FAILURE EFFECT ON SATURN VEHICLE
S-IVB Wiring and Connectors to S-IVB Sequencer V-IVB-72-01	Power Supply Function Function A: Supply 28 volts power from aft (peaking) bus through J1 to the sequencer 28 volt bus. This voltage is used as the load supply for the relay outputs in the sequencer.	Opens, shorts, and intermittents.	PARTIAL LOSS OF SUBSYSTEM Lack of required voltage when required to perform sequencing operations.	A) Not applicable. B) Delay in launching. Countdown stopped. C),D),E),F),G) PROBABLE LOSS OF STAGE Dpending when failure occurs as sequencing functions would be lost.	Same PROBABLE LOSS OF VEHICLE
	Input Command Supply Function B: Supplies 28 volt commands from switch selector to J2 and J3 of the sequencer. The commands for the sequencing of data acquisitions and main propulsion functions go through J2 and those for auxiliary propulsion through J3 (V-IVB-72-02, Function A-AE and Function AF-AN).		PARTIAL LOSS OF SUBSYSTEM Lack of required command voltages when required.	A) Not applicable. B) Delay in launching. C),D),E),F),G) PROBABLE LOSS OF STAGE Depending on when failure occurs and which function is lost. A detailed functional analysis will be found under sequencer (V-IVB-72-02).	Same PROBABLE LOSS OF VEHICLE
	Sensing Supply Function Function C: Supplies 28 volt indications of various sensing switch positions in the S-IVB through J4 to the sequencer (V-IVB-72-02, Functions T,X,Y Z, AA, AB, AC).		PARTIAL LOSS OF SUBSYSTEM Lack of required voltage indication to perform function when required.	A) Not applicable. B) Delay in launching. C),D),E),F),G) PROBABLE LOSS OF STAGE Depending on when failure occurs and which function is affected. A detailed analysis will be found under sequencer (V-IVB-72-02, Functions T,X,Y Z, AA, AB, AC)	Same PROBABLE LOSS OF VEHICLE
	Output Commands Supply Function Function D: Supplies 28 volt commands from the sequencer through J5 to the forward loads and through J6 to the after loads.		PARTIAL LOSS OF SUBSYSTEM Functions not performed.	A) Not applicable. B) Delay in launching. (continued)	Same

Δ ITEMS MARKED THUS (Δ) DO NOT OPERATE IN FLIGHT

RELIABILITY FAILURE EFFECT ANALYSIS

A) COUNTDOWN/CHECKOUT
B) COUNTDOWN-AUTOMATIC SEQUENCE
C) FLIGHT-BOOST PHASE
D) FLIGHT-POWERED PHASE, 1ST
E) FLIGHT-COAST PHASE, 1ST
F) FLIGHT-POWERED PHASE, 2ND
G) FLIGHT-COAST PHASE, 2ND

S-IVB SEQUENCING SUBSYSTEM

Δ ITEM	FUNCTION	FAILURE TYPE	FAILURE EFFECT ON SUBSYSTEM PERFORMANCE	FAILURE EFFECT ON S-IVB STAGE	FAILURE EFFECT ON SATURN VEHICLE
S-IVB Wiring and Connectors to S-IVB Sequencer V-IVB-72-01 (continued)	Function D (continued)	Opens, shorts, and intermittents. (continued)		(continued) C),D),E),F),G) PROBABLE LOSS OF STAGE Depending on when failure occurs and which function is lost. A detailed analysis will be found under sequencer (V-IVB-72-02).	PROBABLE LOSS OF VEHICLE
	Monitor Supply Function Function E: Indicates the presence of 28 volts on coils of command relays, or command wiring where no relays exist, from the sequencer through J7 to the DDAS.		None; supplies indication of voltage only.	A) Not applicable. B) Delay in launching. C),D),E),F),G) None Only provides indication of voltage to DDAS.	 Same Same
Sequencer V-IVB-72-02	Function A: Operating recorded measurements group. Provides 28 volts power from the peaking (aft) bus to the recorded measurements group. On t_o -7200 Saturn V Off t_3 -120 On t_o -7200 Off at end of coast at end of last transmission. Saturn 1B	1) Premature application of power.	PARTIAL LOSS OF SUBSYSTEM Function not in sequence.	A) Not applicable. B) Delay in launching. C),D),E),F),G) None; not applicable. Required to be on until F) phase. G) POSSIBLE LOSS OF STAGE Added power drain may degrade S-IVB.	Same Same Same POSSIBLE LOSS OF MISSION
		2) Late or failure to maintain power.	PARTIAL LOSS OF SUBSYSTEM Function does not occur when required or is interrupted.	A) Not applicable. B) Delay in launching. C),D),E),F) Loss of digital data acquisition system monitoring capability. G) None; not applicable.	Same Same Same Same

Δ ITEMS MARKED THUS (Δ) DO NOT OPERATE IN FLIGHT

RELIABILITY FAILURE EFFECT ANALYSIS

A) COUNTDOWN/CHECKOUT
B) COUNTDOWN-AUTOMATIC SEQUENCE
C) FLIGHT-BOOST PHASE
D) FLIGHT-POWERED PHASE, 1ST
E) FLIGHT-COAST PHASE, 1ST
F) FLIGHT-POWERED PHASE, 2ND
G) FLIGHT-COAST PHASE, 2ND

SEQUENCING SUBSYSTEM

Δ ITEM	FUNCTION	FAILURE TYPE	FAILURE EFFECT ON SUBSYSTEM PERFORMANCE	FAILURE EFFECT ON S-IVB STAGE	FAILURE EFFECT ON SATURN VEHICLE
Sequencer V-IVB-72-02 (continued)	Function A (continued)	3) Failure to stop application of power to measurements group when required.	PARTIAL LOSS OF SUBSYSTEM Function does not stop when required.	Saturn 1B: A),B),C),D) Not applicable. Occurs in phase E) E),F),G) Saturn V: POSSIBLE LOSS OF STAGE Added power drain may degrade S-IVB.	Saturn 1B: Same Saturn V: POSSIBLE LOSS OF MISSION
	Function B: Operating flight SCO Group - provides 28V power from the peaking (aft) bus. on t_o -7200.2 off t_2 +2.3 on t_3 -180.5 off t_4 +3.0 } Saturn V	1) Premature operation of flight SCO group.	PARTIAL LOSS OF SUBSYSTEM Function B not in sequence.	A) Not applicable. B) This failure holds automatic countdown sequence. C),D),E),F),G) Not applicable. (In phase B) An investigation would be necessary to eliminate possibility of later problems.	Same Same Same
	on t_o -7200.2 off t_2 +2.2 } Saturn 1B	2) Failure to operate flight SCO group when required.	PARTIAL LOSS OF SUBSYSTEM Function B does not occur when required.	A) Not applicable. B) This failure holds automatic countdown sequence - DDAS information would not be available. C),D),F),G) Not applicable. E) Loss of DDAS information.	Same (Affects DDAS information only, not vehicle operation.)
		3) Failure to maintain operation of flight SCO group.	PARTIAL LOSS OF SUBSYSTEM Performance of function B is interrupted.	A) Not applicable. B) This failure holds automatic countdown sequence - DDAS information would not be available. C),D),E),F),G) DDAS information would be lost.	Same (Affects DDAS information only, not vehicle operation.

Δ ITEMS MARKED THUS (Δ) DO NOT OPERATE IN FLIGHT

RELIABILITY FAILURE EFFECT ANALYSIS

A) COUNTDOWN/CHECKOUT
B) COUNTDOWN-AUTOMATIC SEQUENCE
C) FLIGHT-BOOST PHASE
D) FLIGHT-POWERED PHASE, 1ST
E) FLIGHT-COAST PHASE, 1ST
F) FLIGHT-POWERED PHASE, 2ND
G) FLIGHT-COAST PHASE, 2ND

SEQUENCING SUBSYSTEM

Δ ITEM	FUNCTION	FAILURE TYPE	FAILURE EFFECT ON SUBSYSTEM PERFORMANCE	FAILURE EFFECT ON S-IVB STAGE	FAILURE EFFECT ON SATURN VEHICLE
Sequencer V-IVB-72-02 (continued)	Function B (continued)	4) Failure to stop operation of flight SCO group.	PARTIAL LOSS OF SUBSYSTEM Function B does not stop when required.	A),B),C),D),F) Not applicable. E),G) POSSIBLE LOSS OF STAGE Power drain beyond that planned.	Not applicable. POSSIBLE LOSS OF MISSION FRT _____ sec.
	Function C: Operating orbit SCO group - provides 28V power from the peaking (aft) bus on t_o -7200.2 off t_2 +7.2 on, in range +0.1 off, out of range +30.2 on t_3 -180.4 off t_5 +60.1 } Saturn V on t_o -7200.2 off t_2 +2.3 on, in range +.1 off, out of range +30.2 } Saturn 1B	1) Premature operation of orbit SCO group.	PARTIAL LOSS OF SUBSYSTEM Function C not in sequence.	A),C),D),F),G) Not applicable. B),E) None (investigation required in phase B) to eliminate possibility of later problems.)	Not applicable. None
		2) Failure to operate orbit SCO group when required.	PARTIAL LOSS OF SUBSYSTEM Function D does not occur when required.	A),C),D),F),G) Not applicable. B) This failure holds automatic countdown sequence - certain DDAS information and calibration capability unavailable. E) Orbit "in range" information not available.	Same (Affects DDAS information only, not vehicle operation.)
		3) Failure to maintain operation of orbit SCO group.	PARTIAL LOSS OF SUBSYSTEM Performance of function C is interrupted.	A) Not applicable. B) This failure holds automatic countdown sequence - certain DDAS information would not be available. C),D),E),F),G) Loss of DDAS information.	Same Same
		4) Failure to stop operation of orbit SCO group.	PARTIAL LOSS OF SUBSYSTEM Function C does not stop when required.	A),B),C),D),F),G) Not applicable. E) None except additional power drain.	Same Same

Δ ITEMS MARKED THUS (Δ) DO NOT OPERATE IN FLIGHT

RELIABILITY FAILURE EFFECT ANALYSIS

A) COUNTDOWN/CHECKOUT
B) COUNTDOWN - AUTOMATIC SEQUENCE
C) FLIGHT - BOOST PHASE
D) FLIGHT - POWERED PHASE, 1ST
E) FLIGHT - COAST PHASE, 1ST
F) FLIGHT - POWERED PHASE, 2ND
G) FLIGHT - COAST PHASE, 2ND

SEQUENCING SUBSYSTEM

Δ ITEM	FUNCTION	FAILURE TYPE	FAILURE EFFECT ON SUBSYSTEM PERFORMANCE	FAILURE EFFECT ON S-IVB STAGE	FAILURE EFFECT ON SATURN VEHICLE
Sequencer V-IVB-72-02 (continued)	Function D: Operating single sideband group - provides 28V power from the peaking (aft) bus on t_o -7200.0 off t_2 +2.1 } C5 on t_o -7200.0 off t_2 +2.4 } C1B	1) Premature operation of single sideband group.	PARTIAL LOSS OF SUBSYSTEM Function D not in sequence.	A),C),D),E),F),G) Not applicable. B) This failure holds automatic countdown sequence for investigation (no ill effects)	Same Same
		2) Failure to operate single sideband group, when required.	PARTIAL LOSS OF SUBSYSTEM Function D does not occur when required.	A),C),D),E),F),G) Not applicable. B) This failure holds automatic countdown sequence - high frequency vibration and acoustic information not available.	Same
		3) Failure to maintain operation of single sideband group.	PARTIAL LOSS OF SUBSYSTEM Performance of function D is interrupted.	A),E),F),G) Not applicable. B) This failure holds automatic countdown sequence - high frequency vibration and acoustic information not available. C),D) Loss of high frequency vibration and acoustic information.	Same Same Same
		4) Failure to stop operation of single sideband group.	PARTIAL LOSS OF SUBSYSTEM Function D does not stop when required.	A),B),C),D),F),G) Not applicable. E) POSSIBLE LOSS OF STAGE Power drain beyond that planned.	Not applicable. POSSIBLE LOSS OF MISSION
	Function E: Operating single sideband transmitter - provides 28V power from the peaking (aft) bus on t_o -1800.6 off t_2 +1.7 } Saturn V on t_o -1800.6 off t_2 +1.9 } Saturn 1B	1) Premature operation of single sideband transmitter.	PARTIAL LOSS OF SUBSYSTEM Function E not in sequence.	A),C),D),E),F),G) Not applicable. B) This failure holds automatic countdown sequence for investigation.	Same Same

Δ ITEMS MARKED THUS (Δ) DO NOT OPERATE IN FLIGHT

RELIABILITY FAILURE EFFECT ANALYSIS

SEQUENCING SUBSYSTEM

A) COUNTDOWN/CHECKOUT
B) COUNTDOWN-AUTOMATIC SEQUENCE
C) FLIGHT-BOOST PHASE
D) FLIGHT-POWERED PHASE, 1ST
E) FLIGHT-COAST PHASE, 1ST
F) FLIGHT-POWERED PHASE, 2ND
G) FLIGHT-COAST PHASE, 2ND

Δ ITEM	FUNCTION	FAILURE TYPE	FAILURE EFFECT ON SUBSYSTEM PERFORMANCE	FAILURE EFFECT ON S-IVB STAGE	FAILURE EFFECT ON SATURN VEHICLE
Sequencer V-IVB-72-02 (continued)	Function E (continued)	2) Failure to operate single sideband transmitter when required.	PARTIAL LOSS OF SUBSYSTEM Function E does not occur when required.	A),C),D),E),F),G) Not applicable. B) This failure holds automatic countdown sequence for investigation.	Same Same
		3) Failure to maintain operation of single sideband transmitter.	PARTIAL LOSS OF SUBSYSTEM Performance of function E is interrupted.	A),E),F),G) Not applicable. B) This failure holds automatic countdown sequence for investigation. C),D) Loss of high frequency vibration and acoustic information.	Same Same Same
		4) Failure to stop operation of single sideband transmitter.	PARTIAL LOSS OF SUBSYSTEM Function E does not stop when required.	A),B),C),D) Not applicable. E),F),G) POSSIBLE LOSS OF STAGE Power drain beyond that planned.	Not applicable. POSSIBLE LOSS OF MISSION
	Function F: Operating flight transmitter group-provides 28V power from peaking (aft) bus. on t_o -1800.5 off t_2 +1.8 on t_3 -120.2 off t_4 +2.9 } Saturn V on t_o -1800.5 off t_2 +2.0 } Saturn 1B	1) Premature operation of flight transmitter group.	PARTIAL LOSS OF SUBSYSTEM Function F not in sequence.	A),C),D),E),G) Not applicable. F) POSSIBLE LOSS OF STAGE Power drain beyond that planned.	Same POSSIBLE LOSS OF MISSION
		2) Failure to operate flight transmitter group when required.	PARTIAL LOSS OF SUBSYSTEM Function F does not occur when required.	A),C),D),F),G) Not applicable. B) This failure holds automatic countdown sequence for investigation. E) Loss of information during engine burn; temperature, pressure, valve positions, etc.	Same Same Same

Δ ITEMS MARKED THUS (##) DO NOT OPERATE IN FLIGHT

RELIABILITY FAILURE EFFECT ANALYSIS

A) COUNTDOWN/CHECKOUT
B) COUNTDOWN-AUTOMATIC SEQUENCE
C) FLIGHT-BOOST PHASE
D) FLIGHT-POWERED PHASE, 1ST
E) FLIGHT-COAST PHASE, 1ST
F) FLIGHT-POWERED PHASE, 2ND
G) FLIGHT-COAST PHASE, 2ND

SEQUENCING SUBSYSTEM

Δ ITEM	FUNCTION	FAILURE TYPE	FAILURE EFFECT ON SUBSYSTEM PERFORMANCE	FAILURE EFFECT ON S-IVB STAGE	FAILURE EFFECT ON SATURN VEHICLE
Sequencer V-IVB-72-02 (continued)	Function F (continued)	3) Failure to maintain operation of flight transmitter group.	PARTIAL LOSS OF SUBSYSTEM Performance of function F is interrupted.	A) Not applicable. B) This failure holds automatic countdown sequence for investigation. C),D),E),F),G) Loss of information during engine burn; temperature, pressure, valve positions, etc.	Same Same Same
		4) Failure to stop operation of flight transmitter group.	PARTIAL LOSS OF SUBSYSTEM Function F does not stop when required.	A),B),C),D),F) Not applicable. E),G) POSSIBLE LOSS OF STAGE Power loss beyond that planned.	Not applicable POSSIBLE LOSS OF MISSION
	Function G: Operating orbit transmitter group - provides 28V power from peaking (aft) bus on t_o -1800.4 off t_2 +1.9 on, in range -120 off, out of range +30.1 on t_3 -120.1 off t_5 +60.0 } Saturn V on t_o -1800.4 off t_2 +2.1 on, in range -120 off, out of range +30.1 } Saturn 1B	1) Premature operation of orbit transmitter group.	PARTIAL LOSS OF SUBSYSTEM Function G is not in sequence.	A),C),D),F),G) Not applicable. B) This failure holds automatic countdown sequence for investigation. E) POSSIBLE LOSS OF STAGE Power loss beyond that planned.	Same Same POSSIBLE LOSS OF MISSION
		2) Failure to operate orbit transmitter group when required.	PARTIAL LOSS OF SUBSYSTEM Function G does not occur when required.	A),C),D),F),G) Not applicable. B) This failure holds automatic countdown sequence for investigation. E) Loss of information from recorded measurements group.	Same Same Same
		3) Failure to maintain operation of flight transmitter group.	PARTIAL LOSS OF SUBSYSTEM Performance of function G is interrupted.	A) Not applicable. B) This failure holds automatic countdown sequence for investigation. C),D),E),F),G) Loss of information from recorded measurements group.	Same Same Same

Δ ITEMS MARKED THUS (Δ) DO NOT OPERATE IN FLIGHT

RELIABILITY FAILURE EFFECT ANALYSIS

A) COUNTDOWN/CHECKOUT
B) COUNTDOWN-AUTOMATIC SEQUENCE
C) FLIGHT-BOOST PHASE
D) FLIGHT-POWERED PHASE, 1ST
E) FLIGHT-COAST PHASE, 1ST
F) FLIGHT-POWERED PHASE, 2ND
G) FLIGHT-COAST PHASE, 2ND

SEQUENCING SUBSYSTEM

Δ ITEM	FUNCTION	FAILURE TYPE	FAILURE EFFECT ON SUBSYSTEM PERFORMANCE	FAILURE EFFECT ON S-IVB STAGE	FAILURE EFFECT ON SATURN VEHICLE
Sequencer V-IVB-72-02 (continued)	Function G (continued)	4) Failure to stop operation of orbit transmitter group.	PARTIAL LOSS OF SUBSYSTEM Function G does not stop when required.	A),B),C),D),F),G) Not applicable. E) POSSIBLE LOSS OF STAGE Power drain beyond that planned.	Not applicable. POSSIBLE LOSS OF MISSION
	Function H: Operating central calibration unit-provides 28V power from peaking (aft) bus. on t_o +135.5 off t_o +140.0 on t_o +525.5 off t_o +530.0 on t_1 +30.0 off t_1 +34.5 on t_3 -34.5 off t_3 -30.0 on t_3 +60.0 off t_3 +64.5 Saturn V	1) Premature operation of central calibration unit.	PARTIAL LOSS OF SUBSYSTEM Function H is not in sequence.	A),G) Not applicable. B) This failure would stop automatic countdown sequence. C),D),E),F) There is a possibility that this could interrupt some important DDAS information depending on when the malfunction occurred.	Same Same Same
		2) Failure to operate central calibration unit when required.	PARTIAL LOSS OF SUBSYSTEM Function H does not occur when required.	A),B),G) Not applicable. C),D),E),F) This would result in failure of calibration standard for DDAS. Would not stop information.	Same Same
	on t_o +135.5 off t_o +140.0 on t_1 +30.0 off t_1 +34.5 Saturn 1B	3) Failure to maintain operation of central calibration unit.	PARTIAL LOSS OF SUBSYSTEM Performance of function H is interrupted.	A),B),G) Not applicable. C),D),E),F) This would result in failure of calibration standard for DDAS. Would not stop information.	Same Same
		4) Failure to stop operation of central calibration unit.	PARTIAL LOSS OF SUBSYSTEM Function H does not stop when required.	A),B) None; not applicable until C) phase. C),D),E),F) None; central calibration unit discontinues output after a cycle. It is felt that the continued power drain would not cause degradation.	Same Same

Δ ITEMS MARKED THUS (⊕) DO NOT OPERATE IN FLIGHT

RELIABILITY FAILURE EFFECT ANALYSIS

A) COUNTDOWN/CHECKOUT
B) COUNTDOWN - AUTOMATIC SEQUENCE
C) FLIGHT - BOOST PHASE
D) FLIGHT - POWERED PHASE, 1ST
E) FLIGHT - COAST PHASE, 1ST
F) FLIGHT - POWERED PHASE, 2ND
G) FLIGHT - COAST PHASE, 2ND

SEQUENCING SUBSYSTEM

Δ ITEM	FUNCTION	FAILURE TYPE	FAILURE EFFECT ON SUBSYSTEM PERFORMANCE	FAILURE EFFECT ON S-IVB STAGE	FAILURE EFFECT ON SATURN VEHICLE
Sequencer V-IVB-72-02 (continued)	Function J: Selecting recorder mode. Provides 28V power from the peaking (aft) bus. Record, t_2 +.5 Playback, in range Record, out of range +30 NOTE: With "recorder mode" in the "on" (relay latched in) condition, recorder is in the record mode. With the "recorder mode" in the "off" (relay unlatched) condition, the recorder is in the playback mode.	1) Premature operation of recorder mode in the "on" condition.	PARTIAL LOSS OF SUBSYSTEM Function J is not in sequence.	A),C),D),F),G) Not applicable Recorded measurements group is off in phases F) and G). B) This failure holds automatic countdown sequence. May result in loss of capability to go from record to playback mode. Excessive premature operation would also result in tape runout before end of record mode. E) Result would depend on how premature the failure is. A certain amount of time is required for playback, depending on the amount of recorded material. A premature failure that breaks into this playback period will cause loss of DDAS information.	Same Same Same
		2) Failure to operate recorder mode in "on" condition when required.	PARTIAL LOSS OF SUBSYSTEM Function J does not occur when required.	A),B),D),F),G) Not applicable C) Loss of recorded DDAS information during phases C) and D). E) Loss of DDAS information from the out-of-range portion of the first coast phase E).	Same Same Same
		3) Failure to maintain operation of recorder mode in "on" condition.	PARTIAL LOSS OF SUBSYSTEM Performance of function J is interrupted.	A),B),F),G) Not applicable. (All of recorded measurements group is off in phases F) and G). C),D) Loss of recorded DDAS information during phases C) and D). E) Loss of DDAS information from the out-of-range portion of the first coast phase E).	Same Same Same

Δ ITEMS MARKED THUS (Δ) DO NOT OPERATE IN FLIGHT

RELIABILITY FAILURE EFFECT ANALYSIS

A) COUNTDOWN/CHECKOUT
B) COUNTDOWN-AUTOMATIC SEQUENCE
C) FLIGHT-BOOST PHASE
D) FLIGHT-POWERED PHASE, 1ST
E) FLIGHT-COAST PHASE, 1ST
F) FLIGHT-POWERED PHASE, 2ND
G) FLIGHT-COAST PHASE, 2ND

SEQUENCING SUBSYSTEM

Δ ITEM	FUNCTION	FAILURE TYPE	FAILURE EFFECT ON SUBSYSTEM PERFORMANCE	FAILURE EFFECT ON S-IVB STAGE	FAILURE EFFECT ON SATURN VEHICLE
Sequencer V-IVB-72-02 (continued)	Function J (continued)	4) Failure to stop operation of recorder mode in "on" condition.	PARTIAL LOSS OF SUBSYSTEM Function J does not stop when required.	A),B),C),D) Not applicable. E) This failure prevents operation of recorder in playback mode, results in lost DDAS information. F),G) None; entire recorded measurements group is turned off.	Same Same
	Function K: Operating 250W instrument heaters-provides 28V power from the peaking (aft) bus. on t_o -3600.2 off t_1 -4.2 on t_2 +0.4 off t_2 -0.2 } Saturn V on t_o -3600.2 off t_o +150.0 } Saturn 1B	1) Premature operation of 250W instrument heaters.	PARTIAL LOSS OF SUBSYSTEM Function K not in sequence.	A) Not applicable. B) This failure holds automatic countdown sequence. C),D) POSSIBLE LOSS OF STAGE Power drain beyond that planned. E),F),G) Not applicable.	Same Same POSSIBLE LOSS OF MISSION Same
		2) Failure to operate 250W instrument heaters when required.	PARTIAL LOSS OF SUBSYSTEM Function K does not occur when required.	A),C),D),F),G) Not applicable B) This failure holds automatic countdown sequence. E) POSSIBLE LOSS OF STAGE Loss of electronic control.	Same Same POSSIBLE LOSS OF MISSION
		3) Failure to maintain operation of 250W instrument heaters.	PARTIAL LOSS OF SUBSYSTEM Performance of function K is interrupted.	A),C),D),F),G) Not applicable B) This failure holds automatic countdown sequence. E) POSSIBLE LOSS OF STAGE Loss of electronic control.	Same Same POSSIBLE LOSS OF MISSION
		4) Failure to stop operation of 250W instrument heaters.	PARTIAL LOSS OF SUBSYSTEM Function K does not stop when required.	A),B) Not applicable. C),D),E),F),G) POSSIBLE LOSS OF STAGE Power drain beyond that planned.	Not applicable. POSSIBLE LOSS OF MISSION

Δ ITEMS MARKED THUS (Δ) DO NOT OPERATE IN FLIGHT

RELIABILITY FAILURE EFFECT ANALYSIS

A) COUNTDOWN/CHECKOUT
B) COUNTDOWN - AUTOMATIC SEQUENCE
C) FLIGHT - BOOST PHASE
D) FLIGHT - POWERED PHASE, 1ST
E) FLIGHT - COAST PHASE, 1ST
F) FLIGHT - POWERED PHASE, 2ND
G) FLIGHT - COAST PHASE, 2ND

SEQUENCING SUBSYSTEM

Δ ITEM	FUNCTION	FAILURE TYPE	FAILURE EFFECT ON SUBSYSTEM PERFORMANCE	FAILURE EFFECT ON S-IVB STAGE	FAILURE EFFECT ON SATURN VEHICLE
Sequencer V-IVB-72-02 (continued)	Function L: Operating propellant utilization D.C. oven - provides 28V power from the peaking (aft) bus. on t_o -3600.1 off t_4 +2.4 } Saturn V on t_o -3600.1 off t_2 +1.6 } Saturn 1B	1) Premature operation of P.U. oven.	PARTIAL LOSS OF SUBSYSTEM Function L not in sequence.	A),C),D),E),F),G) Not applicable. B) This failure holds automatic countdown sequence.	Same Same
		2) Failure to operate P.U. D.C. oven when required.	PARTIAL LOSS OF SUBSYSTEM Function L does not occur when required.	A),C),D),E),F), G) Not applicable. B) This failure holds automatic countdown. P.U. is not at proper temperature.	Same Same
		3) Failure to maintain operation of P.U. D.C. oven.	PARTIAL LOSS OF SUBSYSTEM Performance of function L is interrupted.	A) Not applicable. B) This failure holds automatic countdown sequence. C),D),E),F),G) POSSIBLE LOSS OF STAGE Possible loss of electronic control.	Same Same POSSIBLE LOSS OF MISSION
		4) Failure to stop operation of P.U. D.C. ovens.	PARTIAL LOSS OF SUBSYSTEM Function L does not stop when required.	A),B),C),D),E),F) Not applicable. G) No effect - P.U. is on separate bus with CDR #2. CDR #1 is redundant with CDR #2 in case of power loss.	Not applicable. No effect
	Function M: Operating propellant utilization D.C. system - provides 28V power from the peaking (aft) bus. on t_o -3600.0 off t_2 +900.1 on t_3 -3600.0 off t_4 +2.3 } Saturn V on t_o -3600.0 off t_2 +1.5 } Saturn 1B	1) Premature operation of P.U. D.C. system.	PARTIAL LOSS OF SUBSYSTEM Function M not in sequence.	A),F),G) Not applicable. B) This failure holds automatic countdown sequence. C),D),E) No effect on P.U. system - valves are maintained neutral. There would be power drain beyond that planned which could cause POSSIBLE LOSS OF STAGE	Same Same Same POSSIBLE LOSS OF MISSION

Δ ITEMS MARKED THUS (Δ) DO NOT OPERATE IN FLIGHT

RELIABILITY FAILURE EFFECT ANALYSIS

SEQUENCING SUBSYSTEM

A) COUNTDOWN/CHECKOUT
B) COUNTDOWN-AUTOMATIC SEQUENCE
C) FLIGHT-BOOST PHASE
D) FLIGHT-POWERED PHASE, 1ST
E) FLIGHT-COAST PHASE, 1ST
F) FLIGHT-POWERED PHASE, 2ND
G) FLIGHT-COAST PHASE, 2ND

Δ ITEM	FUNCTION	FAILURE TYPE	FAILURE EFFECT ON SUBSYSTEM PERFORMANCE	FAILURE EFFECT ON S-IVB STAGE	FAILURE EFFECT ON SATURN VEHICLE
Sequencer V-IVB-72-02 (continued)	Function M (continued)	2) Failure to operate propellant utilization D.C. system when required.	PARTIAL LOSS OF SUBSYSTEM Function M does not occur when required.	A),C),D),F),G) Not applicable. B) This failure holds automatic countdown sequence. P.U. system does not receive power. E) POSSIBLE LOSS OF STAGE Fuel-oxygen not used at correct ratio.	Same Same POSSIBLE LOSS OF MISSION
		3) Failure to maintain operation of P.U. D.C. system.	PARTIAL LOSS OF SUBSYSTEM Performance of function M is interrupted.	A) Not applicable. B) This failure holds automatic countdown sequence - P.U. system loses power. C),D),E),F),G) POSSIBLE LOSS OF STAGE Without power, P.U. system will not properly control use ratio of fuel and oxygen.	Same Same POSSIBLE LOSS OF MISSION
		4) Failure to stop operation of P.U. D.C. system.	PARTIAL LOSS OF SUBSYSTEM Function M does not stop when required.	A),B),C),D),F) Not applicable. E),G) POSSIBLE LOSS OF STAGE Power drain beyond that planned.	Not applicable POSSIBLE LOSS OF MISSION

Δ ITEMS MARKED THUS (Δ) DO NOT OPERATE IN FLIGHT

RELIABILITY FAILURE EFFECT ANALYSIS

A) COUNTDOWN/CHECKOUT
B) COUNTDOWN - AUTOMATIC SEQUENCE
C) FLIGHT - BOOST PHASE
D) FLIGHT - POWERED PHASE, 1ST
E) FLIGHT - COAST PHASE, 1ST
F) FLIGHT - POWERED PHASE, 2ND
G) FLIGHT - COAST PHASE, 2ND

SEQUENCING SUBSYSTEM

Δ	ITEM	FUNCTION	FAILURE TYPE	FAILURE EFFECT ON SUBSYSTEM PERFORMANCE	FAILURE EFFECT ON S-IVB STAGE	FAILURE EFFECT ON SATURN VEHICLE
	Sequencer V-IVB-72-02 (continued)	Function P: Operating static inverter-converter. Provides 28V power from peaking (aft) bus to close relay in forward power distribution box, which then passes power to the inverter-converter. on t_o -1800.3 off t_2 +900.0 on t_3 -1800.0 off t_4 +2.0 } Saturn V on t_o -1800.3 off t_2 +1.4 } Saturn 1B	1) Premature operation of static inverter-converter.	PARTIAL LOSS OF SUBSYSTEM Function P is not in sequence.	A),C),D),F),G) Not applicable. B) This failure holds automatic countdown sequence. E) POSSIBLE LOSS OF STAGE Power drain beyond that planned.	Same Same POSSIBLE LOSS OF MISSION
			2) Failure to operate static inverter-converter when required.	PARTIAL LOSS OF SUBSYSTEM Function P does not occur when required.	A),C),D),F),G) Not applicable B) This failure holds automatic countdown sequence - no power to propellant utilization systems. E) POSSIBLE LOSS OF STAGE Insufficient fuel or oxygen as result of incorrect use ratio.	Same Same POSSIBLE LOSS OF MISSION
			3) Failure to maintain operation of static inverter-converter.	PARTIAL LOSS OF SUBSYSTEM Performance of function P is interrupted.	A) Not applicable. B) This failure holds automatic countdown sequence - power not available to propellant utilization system. C) None; except any DDAS information involved. P.U. not used during boost. D),E),F) POSSIBLE LOSS OF STAGE Insufficient fuel or oxygen as result of incorrect use ratio. G) P.U. valves are not neutraled.	Same Same Same POSSIBLE LOSS OF MISSION Same

Δ ITEMS MARKED THUS (Δ) DO NOT OPERATE IN FLIGHT

RELIABILITY FAILURE EFFECT ANALYSIS

A) COUNTDOWN/CHECKOUT
B) COUNTDOWN - AUTOMATIC SEQUENCE
C) FLIGHT - BOOST PHASE
D) FLIGHT - POWERED PHASE, 1ST
E) FLIGHT - COAST PHASE, 1ST
F) FLIGHT - POWERED PHASE, 2ND
G) FLIGHT - COAST PHASE, 2ND

SEQUENCING SUBSYSTEM

Δ ITEM	FUNCTION	FAILURE TYPE	FAILURE EFFECT ON SUBSYSTEM PERFORMANCE	FAILURE EFFECT ON S-IVB STAGE	FAILURE EFFECT ON SATURN VEHICLE
Sequencer V-IVB-72-02 (continued)	Function P (continued)	4) Failure to stop operation of static inverter-converter.	PARTIAL LOSS OF SUBSYSTEM Function P does not stop when required.	A),B),C),D),F) Not applicable E),G) POSSIBLE LOSS OF STAGE Power drain beyond that planned.	Not applicable POSSIBLE LOSS OF MISSION
	Function Q: Operating engine control heaters - provides 28V power from the peaking (aft) bus. on t_o -1800.2 off t_o +229.9 on t_2 +0.2 off t_3 -300.0 } Saturn V on t_o -1800.2 off t_2 +1.4 } Saturn 1B	1) Premature operation of engine control heaters.	PARTIAL LOSS OF SUBSYSTEM Function Q is not in sequence.	A),C),E),F),G) Not applicable B) This failure holds automatic countdown sequence. D) POSSIBLE LOSS OF STAGE Power drain beyond that planned.	Same Same POSSIBLE LOSS OF MISSION
		2) Failure to operate engine control heaters when required.	PARTIAL LOSS OF SUBSYSTEM Function Q does not occur when required.	A),C),D),F),G) Not applicable B) This failure holds automatic countdown sequence. Engine control temperature not at proper level. E) PROBABLE LOSS OF STAGE Loss of engine control.	Same Same POSSIBLE LOSS OF MISSION
		3) Failure to maintain operation of engine control heaters.	PARTIAL LOSS OF SUBSYSTEM Performance of function Q is interrupted.	A),D),F),G) Not applicable. B) This failure holds automatic countdown sequence - improper engine control temperature. C),E) PROBABLE LOSS OF STAGE Engine control is not maintained at proper temperature for operation.	Same Same PROBABLE LOSS OF MISSION

Δ ITEMS MARKED THUS (#) DO NOT OPERATE IN FLIGHT

RELIABILITY FAILURE EFFECT ANALYSIS

A) COUNTDOWN/CHECKOUT
B) COUNTDOWN - AUTOMATIC SEQUENCE
C) FLIGHT - BOOST PHASE
D) FLIGHT - POWERED PHASE, 1ST
E) FLIGHT - COAST PHASE, 1ST
F) FLIGHT - POWERED PHASE, 2ND
G) FLIGHT - COAST PHASE, 2ND

SEQUENCING SUBSYSTEM

Δ ITEM	FUNCTION	FAILURE TYPE	FAILURE EFFECT ON SUBSYSTEM PERFORMANCE	FAILURE EFFECT ON S-IVB STAGE	FAILURE EFFECT ON SATURN VEHICLE
Sequencer V-IVB-72-02 (continued)	Function Q (continued)	4) Failure to stop operation of engine control heaters.	PARTIAL LOSS OF SUBSYSTEM Function Q does not stop when required.	A),B),D),F),G) Not applicable C),D) POSSIBLE LOSS OF STAGE Power drain beyond that planned.	Not applicable POSSIBLE LOSS OF MISSION
	Function R: Operating fuel chilldown pump and bleed valves. on t_o -300.1 off t_1 -3.0 on t_3 -332.0 off t_3 -3.0 } Saturn V on t_o -300.1 off t_1 -3.0 } Saturn 1B	1) Premature operation of fuel chilldown pump and bleed valves.	PARTIAL LOSS OF SUBSYSTEM Function R is not in sequence	A),C),F),G) Not applicable. B) This failure holds automatic countdown sequence. D) To be determined. Probably no effect - chilldown pump would not overcome liquid propellant pressure. E) None; fuel is circulated in lines.	Same Same Same Same
		2) Failure to operate fuel chilldown pump and bleed valves when required.	PARTIAL LOSS OF SUBSYSTEM Function R does not occur when required.	A),C),D),F),G) Not applicable B) This failure holds automatic countdown sequence; here and in phase E), failure could result in flashing and cavitation, causing PROBABLE LOSS OF STAGE	A),B),C),D),F),G) Same E) PROBABLE LOSS OF MISSION
		3) Failure to maintain operation of fuel chilldown pump and bleed valves.	PARTIAL LOSS OF SUBSYSTEM Performance of Function R is interrupted.	A),D),F),G) Not applicable. B) This failure holds automatic countdown sequence; here and in phases C) and E) failure could result in flashing and cavitation, causing PROBABLE LOSS OF STAGE	Same A),B),D),F),G) Same C),E) PROBABLE LOSS OF MISSION

Δ ITEMS MARKED THUS (H) DO NOT OPERATE IN FLIGHT

RELIABILITY FAILURE EFFECT ANALYSIS

SEQUENCING SUBSYSTEM

A) COUNTDOWN/CHECKOUT
B) COUNTDOWN - AUTOMATIC SEQUENCE
C) FLIGHT - BOOST PHASE
D) FLIGHT - POWERED PHASE, 1ST
E) FLIGHT - COAST PHASE, 1ST
F) FLIGHT - POWERED PHASE, 2ND
G) FLIGHT - COAST PHASE, 2ND

Δ ITEM	FUNCTION	FAILURE TYPE	FAILURE EFFECT ON SUBSYSTEM PERFORMANCE	FAILURE EFFECT ON S-IVB STAGE	FAILURE EFFECT ON SATURN VEHICLE
Sequencer V-IVB-72-02 (continued)	Function R (continued)	4) Failure to stop operation of fuel chilldown pump and bleed valves when required.	PARTIAL LOSS OF SUBSYSTEM Function R does not stop when required.	A),B) Not applicable. C),E),G) None; fuel is circulated in lines. D),F) Probably no effect, chilldown pump would not overcome liquid propellant pressure.	Same Same Same
	Function S: Operating oxygen chilldown pump-provides 28V power from peaking (aft) bus. on t_o -300.0 off t_1 -4.0 on t_3 -319.0 off t_3 -4.0 } Saturn V	1) Premature operation of oxygen chilldown pump.	PARTIAL LOSS OF SUBSYSTEM Function S is not in sequence.	A),C),F),G) Not applicable. B) This failure holds automatic countdown sequence. D) Probably none - chilldown pump would not overcome liquid propellant pressure. E) None; fuel is circulated in lines.	Same Same Same Same
	on t_o -300.0 off t_1 -4.0 } Saturn 1B	2) Failure to operate oxygen chilldown pump when required.	PARTIAL LOSS OF SUBSYSTEM Function S does not occur when required.	A),C),D),F),G) Not applicable B) This failure holds automatic countdown sequence; here and in phase E) failure could result in flashing and cavitation, causing PROBABLE LOSS OF STAGE	A),B),C),D),F),G) Same E) PROBABLE LOSS OF MISSION
		3) Failure to maintain operation of oxygen chilldown pump.	PARTIAL LOSS OF SUBSYSTEM Performance of function S is interrupted.	A),D),F),G) Not applicable. B) This failure holds automatic countdown sequence; here and in phases C) and E) failure could result in flashing and cavitation, causing PROBABLE LOSS OF STAGE	A),B),D),F),G) Same PROBABLE LOSS OF MISSION

Δ ITEMS MARKED THUS (Δ) DO NOT OPERATE IN FLIGHT

RELIABILITY FAILURE EFFECT ANALYSIS

A) COUNTDOWN/CHECKOUT
B) COUNTDOWN-AUTOMATIC SEQUENCE
C) FLIGHT-BOOST PHASE
D) FLIGHT-POWERED PHASE, 1ST
E) FLIGHT-COAST PHASE, 1ST
F) FLIGHT-POWERED PHASE, 2ND
G) FLIGHT-COAST PHASE, 2ND

SEQUENCING SUBSYSTEM

Δ ITEM	FUNCTION	FAILURE TYPE	FAILURE EFFECT ON SUBSYSTEM PERFORMANCE	FAILURE EFFECT ON S-IVB STAGE	FAILURE EFFECT ON SATURN VEHICLE
Sequencer V-IVB-72-02 (continued)	Function S (continued)	4) Failure to stop operation of oxygen chilldown pump when required.	PARTIAL LOSS OF SUBSYSTEM Function S does not stop when required.	A),B) Not applicable. C),E),G) None - fuel is circulated in lines. D),F) Probably no effect - chilldown pump would not overcome liquid propellant pressure.	Same Same Same
	Function T: Operating auxiliary hydraulic pump in normal and coast modes.* Provides 28V power from peaking (aft) bus. on t_o -210.0 off t_2 +0.6 Coast Mode(on) t_2 +0.7 Coast Mode(off) t_3 -180.1 on t_3 -180.0 off t_4 +0.1 } Saturn V on t_o -210.0 off t_2 +.6 } Saturn 1B *Coast mode applicable to Saturn V only.	1) Premature operation of auxiliary hydraulic pump.	PARTIAL LOSS OF SUBSYSTEM Function T is not in sequence.	A),C),D),F),G) Not applicable. B) This failure holds automatic countdown sequence. E) Premature operation of the auxiliary hydraulic pump in the coast mode would have no effect since pump is still being operated in the normal (continuous) mode.	Same Same Same
		2) Failure to operate auxiliary hydraulic pump when required.	PARTIAL LOSS OF SUBSYSTEM Function T does not occur when required.	A),C),D),F),G) Not applicable. B) This failure holds automatic countdown sequence. Engine attitude, hydraulic fluid temperature, and back-up for main hydraulic pump would not be maintained. E) SATURN V: POSSIBLE LOSS OF STAGE Failure to operate auxiliary hydraulic pump in the coast mode would result in inability to stabilize engine attitude or maintain proper hydraulic fluid temperature. Failure to operate auxiliary hydraulic pump in normal mode at end of phase E) would result in no back-up for main hydraulic pump during phase F). SATURN 1B: None; not applicable.	Same Same SATURN V: POSSIBLE LOSS OF MISSION Same

Δ ITEMS MARKED THUS (#) DO NOT OPERATE IN FLIGHT

RELIABILITY FAILURE EFFECT ANALYSIS

A) COUNTDOWN/CHECKOUT
B) COUNTDOWN - AUTOMATIC SEQUENCE
C) FLIGHT - BOOST PHASE
D) FLIGHT - POWERED PHASE, 1ST
E) FLIGHT - COAST PHASE, 1ST
F) FLIGHT - POWERED PHASE, 2ND
G) FLIGHT - COAST PHASE, 2ND

SEQUENCING SUBSYSTEM

Δ	ITEM	FUNCTION	FAILURE TYPE	FAILURE EFFECT ON SUBSYSTEM PERFORMANCE	FAILURE EFFECT ON S-IVB STAGE	FAILURE EFFECT ON SATURN VEHICLE
	Sequencer V-IVB-72-02 (continued)	Function T (continued)	3) Failure to maintain operation of auxiliary hydraulic pump.	PARTIAL LOSS OF SUBSYSTEM Performance of function T is interrupted.	A, G) Not applicable. B) This failure holds automatic countdown sequence - engine attitude stability, hydraulic fluid temperature control and main hydraulic pump back-up would be lost. C) POSSIBLE LOSS OF STAGE Engine attitude stability and hydraulic fluid temperature would not be properly maintained. D),F) Loss of back-up for main hydraulic pump, which provides hydraulic pressure in these phases. E) SATURN V: POSSIBLE LOSS OF STAGE Engine attitude stability and hydraulic fluid temperature would not be properly maintained. SATURN 1B: None; not applicable.	Same Same POSSIBLE LOSS OF MISSION None; main hydraulic pump provides operation. SATURN V: POSSIBLE LOSS OF MISSION Same
			4) Failure to stop operation of auxiliary hydraulic pump.	PARTIAL LOSS OF SUBSYSTEM Function T does not stop when required.	A),B),C),D),F) Not applicable. E) No effect on the hydraulic system, but PROBABLE LOSS OF STAGE Due to power drain beyond that planned. G) Not used in this phase.	Same PROBABLE LOSS OF MISSION

Δ ITEMS MARKED THUS (Δ) DO NOT OPERATE IN FLIGHT

RELIABILITY FAILURE EFFECT ANALYSIS

A) COUNTDOWN/CHECKOUT
B) COUNTDOWN - AUTOMATIC SEQUENCE
C) FLIGHT - BOOST PHASE
D) FLIGHT - POWERED PHASE, 1ST
E) FLIGHT - COAST PHASE, 1ST
F) FLIGHT - POWERED PHASE, 2ND
G) FLIGHT - COAST PHASE, 2ND

SEQUENCING SUBSYSTEM

Δ ITEM	FUNCTION	FAILURE TYPE	FAILURE EFFECT ON SUBSYSTEM PERFORMANCE	FAILURE EFFECT ON S-IVB STAGE	FAILURE EFFECT ON SATURN VEHICLE
Sequencer V-IVB-72-02 (continued)	Function U: Operating 25 watt instrument heaters - provides 28V power from peaking (aft) bus. on t_1 -4.1 off t_2 +0.3 on t_3 -0.1 off t_4 +2.1 } Saturn V on t_0 +150.1 off t_2 +0.1 } Saturn 1B	1) Premature operation of 25 watt instrument heaters.	PARTIAL LOSS OF SUBSYSTEM Function U is not in sequence.	A),D),F),G) Not applicable. B) This failure holds automatic countdown sequence. C),E) POSSIBLE LOSS OF STAGE Power drain beyond that planned.	Same Same POSSIBLE LOSS OF MISSION
		2) Failure to operate 25 watt instrument heaters when required.	PARTIAL LOSS OF SUBSYSTEM Function U does not occur when required.	A),B),D),F),G) Not applicable. C),E) POSSIBLE LOSS OF STAGE Failure to control temperature can cause a loss of electronic control.	Not applicable. POSSIBLE LOSS OF MISSION
		3) Failure to maintain operation of 25 watt instrument heaters.	PARTIAL LOSS OF SUBSYSTEM Performance of function U is interrupted.	A),B),E),G) Not applicable. D),F) POSSIBLE LOSS OF STAGE Failure to control temperature can cause a loss of electronic control.	Not applicable. POSSIBLE LOSS OF MISSION
		4) Failure to stop operation of 25 watt instrument heaters.	PARTIAL LOSS OF SUBSYSTEM Function U does not stop when required.	A),B),C),D),F) Not applicable. E),G) POSSIBLE LOSS OF STAGE There would be power drain beyond that planned.	Not applicable. POSSIBLE LOSS OF MISSION
	Function V: Starting engine. This is a direct line through the sequencer - no relays are involved. on $t_1 = t_o + 540$ on t_3 } Saturn V on $t_1 = t_o + 155.5$ Saturn 1B	1) Premature operation of engine.	PARTIAL LOSS OF SUBSYSTEM Function V is not in sequence.	A),D),F),G) Not applicable. B),C) LOSS OF STAGE Engine is fired before separation. E) PROBABLE LOSS OF STAGE Vehicle is not placed in proper escape path.	Not applicable. LOSS OF VEHICLE PROBABLE LOSS OF MISSION

Δ ITEMS MARKED THUS (Δ) DO NOT OPERATE IN FLIGHT

RELIABILITY FAILURE EFFECT ANALYSIS

A) COUNTDOWN/CHECKOUT
B) COUNTDOWN-AUTOMATIC SEQUENCE
C) FLIGHT-BOOST PHASE
D) FLIGHT-POWERED PHASE, 1ST
E) FLIGHT-COAST PHASE, 1ST
F) FLIGHT-POWERED PHASE, 2ND
G) FLIGHT-COAST PHASE, 2ND

SEQUENCING SUBSYSTEM

Δ ITEM	FUNCTION	FAILURE TYPE	FAILURE EFFECT ON SUBSYSTEM PERFORMANCE	FAILURE EFFECT ON S-IVB STAGE	FAILURE EFFECT ON SATURN VEHICLE
Sequencer V-IVB-72-02 (continued)	Function V (continued)	2) Failure to start engine when required.	PARTIAL LOSS OF SUBSYSTEM Function V does not occur when required.	A),B),C),E),G) Not applicable D),E) LOSS OF STAGE No stage thrust.	Not applicable. LOSS OF MISSION
		3) Failure to maintain operation of engine start function.	PARTIAL LOSS OF SUBSYSTEM Performance of function V is interrupted.	A),B),C),E),G) Not applicable D),E) LOSS OF STAGE Loss of stage thrust.	Not applicable. LOSS OF MISSION
		4) Failure to stop operation of engine start.	PARTIAL LOSS OF SUBSYSTEM Function V does not stop when required.	A),B),C) Not applicable. D),E) This would prevent resetting of engine cutoff circuit, which would prevent restart. "Engine Ready Bypass" would have to be accomplished manually. The possibility of this not being done determines the POSSIBILITY OF LOSS OF STAGE F),G) None; engine operation no longer needed.	Not applicable. POSSIBILITY OF LOSS OF MISSION Same
	Function W: Operation of propellant utilization activate function. Provides 28V power from peaking (aft) bus. on t_1 +2.0 off t_2 +2.4 on t_3 +2.0 off t_4 +2.2 } Saturn V on t_1 +2.0 off t_2 +1.8 } Saturn 1B	1) Premature operation of propellant utilization activate.	PARTIAL LOSS OF SUBSYSTEM Function W is not in sequence.	A),G) Not applicable. B) This failure holds automatic countdown sequence - mass sensing capability for propellant fill would be lost. C),D),E),F) No effect - the utilization control valves would be held in approximate neutral, allowing engine start.	Same Same Same

Δ ITEMS MARKED THUS (Δ) DO NOT OPERATE IN FLIGHT

RELIABILITY FAILURE EFFECT ANALYSIS

A) COUNTDOWN/CHECKOUT
B) COUNTDOWN-AUTOMATIC SEQUENCE
C) FLIGHT-BOOST PHASE
D) FLIGHT-POWERED PHASE, 1ST
E) FLIGHT-COAST PHASE, 1ST
F) FLIGHT-POWERED PHASE, 2ND
G) FLIGHT-COAST PHASE, 2ND

SEQUENCING SUBSYSTEM

Δ ITEM	FUNCTION	FAILURE TYPE	FAILURE EFFECT ON SUBSYSTEM PERFORMANCE	FAILURE EFFECT ON S-IVB STAGE	FAILURE EFFECT ON SATURN VEHICLE
Sequencer V-IVB-72-02 (continued)	Function W (continued)	2) Failure to operate propellant utilization activate function when required.	PARTIAL LOSS OF SUBSYSTEM Function W does not occur when required.	A),B),C),E),G) Not applicable D),F) POSSIBLE LOSS OF STAGE Insufficient propellant result of improper fuel-oxidizer ratio.	Not applicable. POSSIBLE LOSS OF MISSION
		3) Failure to maintain operation of propellant utilization activate function.	PARTIAL LOSS OF SUBSYSTEM Performance of function W is interrupted.	A),B),C) Not applicable. D),E),F) POSSIBLE LOSS OF STAGE Insufficient propellant result of improper fuel-oxidizer ratio. G) None; final burn is accomplished.	None POSSIBLE LOSS OF MISSION None
		4) Failure to stop operation of propellant utilization activate function.	PARTIAL LOSS OF SUBSYSTEM Function W does not stop when required.	A),B),C),D),F) Not applicable E) None; valves are maintained in approximate neutral, allowing engine start. G) None; final burn is accomplished.	Same Same Same
	Function X: Operating engine cutoff. Provides power from 28V peaking (aft) bus or directly from the command destruct receivers for cutting off engine burn. Power from the peaking bus is provided either by a command from the instrument unit or a signal from two of the three fuel point level sensors or two of the three oxygen point level sensors. on $t_2 = t_1 + 164.9$ off $t_2 + 1.6$ on $t_4 = t_3 + 312.2$ off $t_4 + 1.0$ } Saturn V on $t_2 = t_1 + 488.0$ off $t_2 + 1.3$ } Saturn 1B	1) Premature operation of engine cutoff.	PARTIAL LOSS OF SUBSYSTEM Function X is not in sequence.	A),G) Not applicable. B) This failure holds automatic countdown sequence. Engine cannot be started without initiating "engine ready bypass" continuously. C),E) Prevents ignition and phases D) and F) stop burning of engine unless "Engine Ready Bypass" is initiated continuously. This, in turn, prevents engine cutoff should a malfunction occur. If this malfunction is catastrophic, loss of stage results. This possibility is interpreted as POSSIBLE LOSS OF STAGE	Same Same POSSIBLE LOSS OF VEHICLE

Δ ITEMS MARKED THUS (Δ) DO NOT OPERATE IN FLIGHT

RELIABILITY FAILURE EFFECT ANALYSIS

A) COUNTDOWN/CHECKOUT
B) COUNTDOWN - AUTOMATIC SEQUENCE
C) FLIGHT - BOOST PHASE
D) FLIGHT - POWERED PHASE, 1ST
E) FLIGHT - COAST PHASE, 1ST
F) FLIGHT - POWERED PHASE, 2ND
G) FLIGHT - COAST PHASE, 2ND

SEQUENCING SUBSYSTEM

Δ	ITEM	FUNCTION	FAILURE TYPE	FAILURE EFFECT ON SUBSYSTEM PERFORMANCE	FAILURE EFFECT ON S-IVB STAGE	FAILURE EFFECT ON SATURN VEHICLE
	Sequencer V-IVB-72-02 (continued)	Function X (continued)	2) Failure to operate engine cutoff when required.	PARTIAL LOSS OF SUBSYSTEM Function X does not occur when required.	A),B),C),D),G) Not applicable D),F) Failure to sequence instrument unit command: no effect. Engine cutoff may be initiated manually when necessary. Failure to properly respond to fuel and oxygen point level sensors inidcating requirement for engine cutoff: Phase D - not applicable - no indication until tanks are nearly empty; Phase F - PROBABLE LOSS OF STAGE Depletion of fuel or oxygen from the turbine pump will cuase disintegration. The resulting shrapnel can break up the stage and vehicle. Failure to respond to command from command destruct receiver: continued engine burning will result in debris being spread over a wider area.	PROBABLE LOSS OF VEHICLE Failure to respond to command from command destruct receiver: POSSIBLE LOSS OF VEHICLE Continued engine burning results in a possibility that the engine assembly could move forward to collision with the escape vehicle.
			3) Failure to maintain operation of engine cutoff.	PARTIAL LOSS OF SUBSYSTEM Performance of function X is interrupted.	A),B),C) Not applicable. D),E),F),G) None; though 1.6 seconds is allowed by the sequencer, a minimum of 20 milliseconds will accomplish engine cutoff.	Same Same
			4) Failure to stop operation of engine cutoff.	PARTIAL LOSS OF SUBSYSTEM Function X does not stop when required.	A),B),C),D),F) Not applicable E) POSSIBLE LOSS OF STAGE Prevents re-ignition of engine unless "Engine Ready Bypass" is initiated (manual) continuously. But this, in turn, would prevent engine cutoff (continued)	POSSIBLE LOSS OF VEHICLE

Δ ITEMS MARKED THUS (Δ) DO NOT OPERATE IN FLIGHT

RELIABILITY FAILURE EFFECT ANALYSIS

A) COUNTDOWN/CHECKOUT
B) COUNTDOWN-AUTOMATIC SEQUENCE
C) FLIGHT-BOOST PHASE
D) FLIGHT-POWERED PHASE, 1ST
E) FLIGHT-COAST PHASE, 1ST
F) FLIGHT-POWERED PHASE, 2ND
G) FLIGHT-COAST PHASE, 2ND

SEQUENCING SUBSYSTEM

Δ ITEM	FUNCTION	FAILURE TYPE	FAILURE EFFECT ON SUBSYSTEM PERFORMANCE	FAILURE EFFECT ON S-IVB STAGE	FAILURE EFFECT ON SATURN VEHICLE
Sequencer V-IVB-72-02 (continued)	Function X (continued)	4) Failure to stop operation of engine cutoff. (continued)		(continued) should a malfunction occur. If this malfunction is catastrophic, loss of stage results. G) None; engine restart not required.	
	Function Y: Operating automatic venting enable provides continuity between orbital vent open pressure switch and instrument unit to allow signaling instrument unit of proper time for venting. on t_2 +900.2 off t_3 -350.1 Saturn V only.	1) Premature operation of automatic venting enable.	PARTIAL LOSS OF SUBSYSTEM Function Y is not in sequence.	A),F),G) Not applicable. B) This failure holds automatic countdown sequence. Loss of safety action preventing vent open. C) None; vent open would not be significant. D),E) Loss of safety action preventing vent open. No effect if vent remains closed.	Same Same Same Same
		2) Failure to operate automatic venting enable when required.	PARTIAL LOSS OF SUBSYSTEM Function Y does not occur when required.	A),B),C),D),F),G) Not applicable. E) Automatic venting would not be possible. However, this is backed up by a relief valve which would relieve at about 2 PSI higher.	
		3) Failure to maintain operation of automatic venting enable.	PARTIAL LOSS OF SUBSYSTEM Performance of function Y is interrupted.	A),B),C),D),F),G) Not applicable. E) Automatic venting would not be possible. However, this is backed up by a relief valve which would relieve at about 2 PSI higher.	
		4) Failure to stop operation of automatic venting enable.	PARTIAL LOSS OF SUBSYSTEM Function Y does not stop when required.	A),B),C),D),F),G) Not applicable. E) Loss of safety action preventing vent open. No effect as long as vent operates only when intended.	

Δ ITEMS MARKED THUS (Ⓗ) DO NOT OPERATE IN FLIGHT

RELIABILITY FAILURE EFFECT ANALYSIS

SEQUENCING SUBSYSTEM

A) COUNTDOWN/CHECKOUT
B) COUNTDOWN-AUTOMATIC SEQUENCE
C) FLIGHT-BOOST PHASE
D) FLIGHT-POWERED PHASE, 1ST
E) FLIGHT-COAST PHASE, 1ST
F) FLIGHT-POWERED PHASE, 2ND
G) FLIGHT-COAST PHASE, 2ND

Δ ITEM	FUNCTION	FAILURE TYPE	FAILURE EFFECT ON SUBSYSTEM PERFORMANCE	FAILURE EFFECT ON S-IVB STAGE	FAILURE EFFECT ON SATURN VEHICLE
Sequencer V-IVB-72-02 (continued)	Function Z: Operating vent open valve. Provides 28V power from the peaking (aft) bus. on t_1 +20.0 off, depends on pressure on t_3 -350.0 off, depends on pressure but before t_3 -20.2 NOTE: The vent open valve opens the vent valve.	1) Premature operation of vent open valve.	PARTIAL LOSS OF SUBSYSTEM Function Z is not in sequence.	A),F),G) Not applicable. B) This failure holds automatic countdown sequence - insufficient pressure for proper engine ignition. C) None; propellant tank pressures not significant during this phase. D) PROBABLE LOSS OF STAGE 1) Premature operation before engine start would cause failure to start. 2) Premature operation after engine start would cause severe degradation of performance due to low NPSH in pump inlet and this may cause engine cutoff. E) Repressurization operation failure.	Same Same PROBABLE LOSS OF MISSION Same
		2) Failure to operate vent open valve when required.	PARTIAL LOSS OF SUBSYSTEM Function Z does not occur when required.	A),B),C),D),F),G) Not applicable. E) POSSIBLE LOSS OF STAGE Venting operation prior to repressurization would not occur. Also, though relief valve would provide excess pressure control at about 2 PSI above normal venting, there would be no thrust provided for settling of liquid.	Not applicable. POSSIBLE LOSS OF MISSION Effect is dependent on tank ullage condition preceeding engine start.

Δ ITEMS MARKED THUS (Δ) DO NOT OPERATE IN FLIGHT

RELIABILITY FAILURE EFFECT ANALYSIS

A) COUNTDOWN/CHECKOUT
B) COUNTDOWN-AUTOMATIC SEQUENCE
C) FLIGHT-BOOST PHASE
D) FLIGHT-POWERED PHASE, 1ST
E) FLIGHT-COAST PHASE, 1ST
F) FLIGHT-POWERED PHASE, 2ND
G) FLIGHT-COAST PHASE, 2ND

SEQUENCING SUBSYSTEM

Δ ITEM	FUNCTION	FAILURE TYPE	FAILURE EFFECT ON SUBSYSTEM PERFORMANCE	FAILURE EFFECT ON S-IVB STAGE	FAILURE EFFECT ON SATURN VEHICLE
Sequencer V-IVB-72-02 (continued)	Function Z (continued)	3) Failure to maintain operation of vent open valve.	PARTIAL LOSS OF SUBSYSTEM Performance of function Z is interrupted.	A),B),C),D),F),G) Not applicable. E) POSSIBLE LOSS OF STAGE Venting operation prior to repressurization would not occur. Also, though relief valve would provide excess pressure control at about 2 psi above normal venting, there would be no thrust provided for settling of liquid.	Not applicable. POSSIBLE LOSS OF MISSION
		4) Failure to close vent open valve when required.	PARTIAL LOSS OF SUBSYSTEM Function Z does not stop when required.	A),B),C),D) Not applicable. E) LOSS OF STAGE Failure to close will cause loss of tank pressure when venting prior to repressurization. F) PROBABLE LOSS OF STAGE Degraded engine performance due to low NPSH in pump inlet, which may cause engine cutoff. G) None; no requirement.	Not applicable. LOSS OF MISSION PROBABLE LOSS OF MISSION Same

Δ ITEMS MARKED THUS (Δ) DO NOT OPERATE IN FLIGHT

RELIABILITY FAILURE EFFECT ANALYSIS

A) COUNTDOWN/CHECKOUT
B) COUNTDOWN-AUTOMATIC SEQUENCE
C) FLIGHT-BOOST PHASE
D) FLIGHT-POWERED PHASE, 1ST
E) FLIGHT-COAST PHASE, 1ST
F) FLIGHT-POWERED PHASE, 2ND
G) FLIGHT-COAST PHASE, 2ND

SEQUENCING SUBSYSTEM

Δ ITEM	FUNCTION	FAILURE TYPE	FAILURE EFFECT ON SUBSYSTEM PERFORMANCE	FAILURE EFFECT ON S-IVB STAGE	FAILURE EFFECT ON SATURN VEHICLE
Sequencer V-IVB-72-02 (continued)	Function AA: Operating vent close valve, which closes the vent valve. Provides 28V power from the peaking (aft) bus. On - at end of each venting cycle during automatic venting sequence. Off - when pressure builds up sufficiently to open contacts of orbital vent close pressure switch during automatic venting sequence. On - depends on pressure, but after t_3 -350.0. Off - t_3 -20.2 NOTE: Vent valve is spring loaded shut, allowing vent close valve to be closed, and still maintain a closed vent valve. Saturn V Only	1) Premature operation of vent close valve.	PARTIAL LOSS OF SUBSYSTEM Function AA is not in sequence.	A),F),G) Not applicable. B) This failure holds automatic countdown sequence. C),D) None; vent valve is intended to be closed during these phases. E) POSSIBLE LOSS OF STAGE Venting operation prior to repressurization would not occur. Also, proper venting, providing propellant settling, would not occur. Relief valve would provide excess pressure control.	Same Same Same POSSIBLE LOSS OF MISSION
		2) Failure to operate vent close valve when required.	PARTIAL LOSS OF SUBSYSTEM Function AA does not occur when required.	A),B),C),D),F),G) Not applicable. E) LOSS OF STAGE Vent valve would not close, would cause loss of tank pressure when venting prior to repressurization.	Not applicable. LOSS OF MISSION
		3) Failure to maintain operation of vent close valve.	PARTIAL LOSS OF SUBSYSTEM Performance of function AA is interrupted.	A),B),C),D),F),G) Not applicable. E) None; when vent valve has been once closed, spring loading will hold it shut.	Same Same
		4) Failure to close vent close valve when required.	PARTIAL LOSS OF SUBSYSTEM Function AA does not stop when required.	A),B),C),D) Not applicable. E) POSSIBLE LOSS OF STAGE Venting operation prior to repressurization could not occur. Also, venting could not occur during automatic venting sequence; vent valve would not open. Relief valve would (continued)	Not applicable. POSSIBLE LOSS OF MISSION

Δ ITEMS MARKED THUS (Δ) DO NOT OPERATE IN FLIGHT

RELIABILITY FAILURE EFFECT ANALYSIS

A) COUNTDOWN/CHECKOUT
B) COUNTDOWN-AUTOMATIC SEQUENCE
C) FLIGHT-BOOST PHASE
D) FLIGHT-POWERED PHASE, 1ST
E) FLIGHT-COAST PHASE, 1ST
F) FLIGHT-POWERED PHASE, 2ND
G) FLIGHT-COAST PHASE, 2ND

SEQUENCING SUBSYSTEM

Δ ITEM	FUNCTION	FAILURE TYPE	FAILURE EFFECT ON SUBSYSTEM PERFORMANCE	FAILURE EFFECT ON S-IVB STAGE	FAILURE EFFECT ON SATURN VEHICLE
Sequencer V-IVB-72-02 (continued)	Function AA (continued)	4) Failure to close vent close valve when required. (continued)		(continued) relieve over pressure, but thrust for propellant settling would not exist. Also, there would be power drain beyond that planned. This effect would carry over into phases F) and G).	F),G) Same
	Function AB: Phase 1 Operation of the fuel coast step pressure valve. on t_3 -20.1 off t_3 -2.0 NOTE: This valve is spring loaded normally closed. This function, fuel step pressurization, is applicable on Saturn V only and is divided into three phases for the purposes of this analysis.	1) Premature operation of the fuel coast step pressure valve.	PARTIAL LOSS OF SUBSYSTEM Function AB is out of sequence.	A) Delay of launch.	Same
				B) Possible delay; possibly holds automatic sequencer.	Same
				C),D),E) None; ambient helium would flow to the fuel tank prematurely. This phase would not be affected but the failure could have catastrophic results in phase F).	Same
				F) POSSIBLE LOSS OF STAGE Resulting from a depletion of the ambient helium supply in turn causing inability to repressurize and subsequent inability to restart.	POSSIBLE LOSS OF MISSION
				G) None; function not utilized.	Same
		2) Failure to operate the fuel coast step pressure valve.	PARTIAL LOSS OF SUBSYSTEM Failure to function AB.	A),B),C),D) Not applicable; function not required.	Same
				E) None; failure effect would not be significant during this phase; however, failure occurring during this phase would have a significant effect during the subsequent phase.	Same
				F) LOSS OF STAGE Resulting from engine pump cavitation due to loss of (continued)	LOSS OF MISSION

Δ ITEMS MARKED THUS (Δ) DO NOT OPERATE IN FLIGHT

RELIABILITY FAILURE EFFECT ANALYSIS

SEQUENCING SUBSYSTEM

A) COUNTDOWN/CHECKOUT
B) COUNTDOWN-AUTOMATIC SEQUENCE
C) FLIGHT-BOOST PHASE
D) FLIGHT-POWERED PHASE, 1ST
E) FLIGHT-COAST PHASE, 1ST
F) FLIGHT-POWERED PHASE, 2ND
G) FLIGHT-COAST PHASE, 2ND

Δ ITEM	FUNCTION	FAILURE TYPE	FAILURE EFFECT ON SUBSYSTEM PERFORMANCE	FAILURE EFFECT ON S-IVB STAGE	FAILURE EFFECT ON SATURN VEHICLE
Sequencer V-IVB-72-02 (continued)	Function AB (continued)	2) Failure to operate the fuel coast step pressure valve. (continued)		(continued) NPSH, thus causing loss of thrust. G) None; same as A).	 Same
		3) Failure to maintain operation of the fuel coast step pressure valve.	PARTIAL LOSS OF SUBSYSTEM Failure to function AB.	A),B),C),D) Not applicable; function not required. E) None; failure effect would not be significant during this phase; however, failure occurring during this phase would have a significant effect during the subsequent phase. F) LOSS OF STAGE Resulting from engine pump cavitation due to loss of NPSH, thus causing loss of thrust. G) None; same as A).	Same Same LOSS OF MISSION Same
		4) Failure to stop operation of fuel coast step pressure valve.	PARTIAL LOSS OF SUBSYSTEM Failure of function AB to cease.	A),B),C),D) None; function not required. E),F) None; excess resultant tank pressure is not significant. G) None; same as A).	Same Same Same
	Function AB: Phase 2 Operating the fuel step pressure valve. Provides 28 VDC power path from the peaking bus. NOTE: The fuel step pressure valve is spring loaded normally closed. The valve opens and closes on command from a pressure switch that senses fuel tank pressure.	1) Premature operation of fuel step pressure valve.	PARTIAL LOSS OF SUBSYSTEM Function AB is not in sequence.	A) Delay. B),C),D),E),F),G) None; tank pressure will become excessive, but the excessive pressure will not degrade engine performance.	Same Same

Δ ITEMS MARKED THUS (Δ) DO NOT OPERATE IN FLIGHT

RELIABILITY FAILURE EFFECT ANALYSIS

A) COUNTDOWN/CHECKOUT
B) COUNTDOWN-AUTOMATIC SEQUENCE
C) FLIGHT-BOOST PHASE
D) FLIGHT-POWERED PHASE, 1ST
E) FLIGHT-COAST PHASE, 1ST
F) FLIGHT-POWERED PHASE, 2ND
G) FLIGHT-COAST PHASE, 2ND

SEQUENCING SUBSYSTEM

Δ ITEM	FUNCTION	FAILURE TYPE	FAILURE EFFECT ON SUBSYSTEM PERFORMANCE	FAILURE EFFECT ON S-IVB STAGE	FAILURE EFFECT ON SATURN VEHICLE
Sequencer V-IVB-72-02 (continued)	Function AB (continued)	2) Failure to operate fuel step pressure valve when required.	PARTIAL LOSS OF SUBSYSTEM Function AE does not occur when required.	A),B),C),D),E) None; valve is functional only during second powered phase. F) PROBABLE LOSS OF STAGE Sufficient reduction of fuel tank pressure below minimum NPSH will cause engine pump cavitation resulting in loss of thrust. G) None; same as A).	Same PROBABLE LOSS OF MISSION Same
		3) Failure to maintain operation of fuel step pressure valve.	PARTIAL LOSS OF SUBSYSTEM Performance of function AE is interrupted.		
		4) Failure to stop operation of fuel step pressure valve when required.	PARTIAL LOSS OF SUBSYSTEM Function AE does not cease as required.	A),B),C),D),E) None; valve is functional only during second powered phase. F) None; same as phase F) in failure 1. G) None; same as A).	Same Same Same
	Function AB: Phase 3 Operating the fuel pressure control valve. Provides 28 VDC power path from the peaking bus. NOTE: The fuel pressure control valve is spring loaded normally closed. The valve opens and closes on command from a pressure switch located in the fuel tank.	1) Premature operation of fuel pressure control valve.	PARTIAL LOSS OF SUBSYSTEM Function AF is not in sequence.	A) Delay. B) Possible delay; may stop automatic sequencer. C),D),E),F),G) None; does not adversely affect engine operation.	Same Same Same
		2) Failure to operate fuel pressure control valve when required.	PARTIAL LOSS OF SUBSYSTEM Function AF does not occur when required.	A),B),C) None; valve does not normally function. D) POSSIBLE LOSS OF STAGE Resultant low pressure may not be adequate to sustain engine operation throughout first burn due to reduction of NPSH resulting in a loss of thrust. E),F),G) None; same as A).	Same POSSIBLE LOSS OF MISSION Same

Δ ITEMS MARKED THUS (Δ) DO NOT OPERATE IN FLIGHT

RELIABILITY FAILURE EFFECT ANALYSIS

A) COUNTDOWN/CHECKOUT
B) COUNTDOWN-AUTOMATIC SEQUENCE
C) FLIGHT-BOOST PHASE
D) FLIGHT-POWERED PHASE, 1ST
E) FLIGHT-COAST PHASE, 1ST
F) FLIGHT-POWERED PHASE, 2ND
G) FLIGHT-COAST PHASE, 2ND

SEQUENCING SUBSYSTEM

Δ ITEM	FUNCTION	FAILURE TYPE	FAILURE EFFECT ON SUBSYSTEM PERFORMANCE	FAILURE EFFECT ON S-IVB STAGE	FAILURE EFFECT ON SATURN VEHICLE
Sequencer V-IVB-72-02 (continued)	Function AB (continued)	3) Failure to maintain operation of fuel pressure control valve.	PARTIAL LOSS OF SUBSYSTEM Performance of function AF is interrupted.	A),B),C) None; valve does not normally function. D) POSSIBLE LOSS OF STAGE Resultant low pressure may not be adequate to sustain engine operation throughout first burn due to reduction of NPSH resulting in a loss of thrust. E),F),G) None; same as A).	Same POSSIBLE LOSS OF MISSION Same
		4) Failure to stop operation of fuel pressure control valve.	PARTIAL LOSS OF SUBSYSTEM Function AF does not cease as required.	A),B),C) None; valve not functional. D) None; same as failure 1 in phase D). E),F),G) None; same as phase A).	Same Same Same
	Function AC: Phase 1 Operating the LO_2 repressurization control valve. Provides 28 VDC power path from the peaking bus. on t_3 -20.0 off t_3 -0.3 NOTE: The LO_2 repressurization control valve is spring loaded normally closed. This function, liquid oxygen tank repressurization, is applicable on Saturn V only and is divided into three phases for the purposes of this analysis.	1) Premature operation of the LO_2 repressurization control valve.	PARTIAL LOSS OF SUBSYSTEM Function AC-1 out of sequence.	A) Launch delay. B) Possible delay; may stop automatic sequencer. C),D),E) None; result of failure applicable to restart only. F) Failure occurring in a previous phase could cause an insufficient pressure for restart thus resulting in a POSSIBLE LOSS OF STAGE. G) None; same as C).	Same Same Same POSSIBLE LOSS OF MISSION Same
		2) Failure to operate LO_2 repressurization control valve.	PARTIAL LOSS OF SUBSYSTEM Function AC-1 does not occur as required.	A),B),C),D),E) None; failure is significant to subsequent phase only. F) LOSS OF STAGE Pump cavitation will result due to loss of NPSH. (continued)	Same LOSS OF MISSION

Δ ITEMS MARKED THUS (Δ) DO NOT OPERATE IN FLIGHT

RELIABILITY FAILURE EFFECT ANALYSIS

A) COUNTDOWN/CHECKOUT
B) COUNTDOWN - AUTOMATIC SEQUENCE
C) FLIGHT - BOOST PHASE
D) FLIGHT - POWERED PHASE, 1ST
E) FLIGHT - COAST PHASE, 1ST
F) FLIGHT - POWERED PHASE, 2ND
G) FLIGHT - COAST PHASE, 2ND

SEQUENCING SUBSYSTEM

Δ ITEM	FUNCTION	FAILURE TYPE	FAILURE EFFECT ON SUBSYSTEM PERFORMANCE	FAILURE EFFECT ON S-IVB STAGE	FAILURE EFFECT ON SATURN VEHICLE
Sequencer V-IVB-72-02 (continued)	Function AC (continued)	2) Failure to operate LO_2 repressurization control valve. (continued)		(continued) G) Not applicable; function starts in previous phase.	
		3) Failure to maintain operation of LO_2 repressurization control valve.	PARTIAL LOSS OF SUBSYSTEM Function AC-1 is interrupted.	A),B),C),D) Not applicable. Function not normally required. E),F) POSSIBLE LOSS OF STAGE Loss of repressurization would cause engine pump cavitation. Actual criticality would depend on time of failure. G) Not applicable; function normally not required.	Same POSSIBLE LOSS OF MISSION Same
		4) Failure to stop operation of LO_2 repressurization control valve.	PARTIAL LOSS OF SUBSYSTEM Function AC-1 does not cease as required.	A),B),C),D) Not applicable; function occurs in subsequent phase. E),F) None; would not degrade stage function. G) Not applicable; function occurs in a previous phase.	Same Same Same
	Function AC: Phase 2 Operating the LO_2 tank pressure control valve. NOTE: This valve is spring loaded normally closed. It is operated by commands from flight control and a pre-pressure switch.	1) Premature operation of the LO_2 pressure control valve.	PARTIAL LOSS OF SUBSYSTEM Function AC-2 out of sequence.	A) Delay of launch. B) Possible delay; may stop automatic sequencer. C) None; LO_2 tank pressure would be low, but there would be no ill effects. D) POSSIBLE LOSS OF STAGE Due to lowered LO_2 pressurization causing loss of minimum NPSH. Criticality would depend on time of failure. E) None; same as C). (continued)	Same Same Same POSSIBLE LOSS OF MISSION Same

Δ ITEMS MARKED THUS (Δ) DO NOT OPERATE IN FLIGHT

RELIABILITY FAILURE EFFECT ANALYSIS

A) COUNTDOWN/CHECKOUT
B) COUNTDOWN - AUTOMATIC SEQUENCE
C) FLIGHT - BOOST PHASE
D) FLIGHT - POWERED PHASE, 1ST
E) FLIGHT - COAST PHASE, 1ST
F) FLIGHT - POWERED PHASE, 2ND
G) FLIGHT - COAST PHASE, 2ND

SEQUENCING SUBSYSTEM

Δ ITEM	FUNCTION	FAILURE TYPE	FAILURE EFFECT ON SUBSYSTEM PERFORMANCE	FAILURE EFFECT ON S-IVB STAGE	FAILURE EFFECT ON SATURN VEHICLE
Sequencer V-IVB-72-02 (continued)	Function AC (continued)	1) Premature operation of the LO_2 pressure control valve. (continued)		(continued) F) POSSIBLE LOSS OF STAGE Same as D). G) None; same as C).	POSSIBLE LOSS OF MISSION Same
		2) Failure to operate the LO_2 pressure control valve.	PARTIAL LOSS OF SUBSYSTEM Function AC-2 does not occur as required.	A),B),C) Not applicable, function not required. D) None; overpressurization is prevented by LO_2 tank vent valves. E) None; same as A). F) None; same as D). G) None; same as A).	Same Same Same Same Same
		3) Failure to maintain operation of the LO_2 pressure control valve.	PARTIAL LOSS OF SUBSYSTEM Function AC-2 is interrupted.		
		4) Failure to stop operation of the LO_2 pressure control valve.	PARTIAL LOSS OF SUBSYSTEM Function AC-2 does not cease as required.	A),B),C) None; function not required; thus no requirement to stop the operation. D) POSSIBLE LOSS OF STAGE Failure could cause pump cavitation. E) None; tank pressurization is controlled by repressurization module. F) POSSIBLE LOSS OF STAGE Same as D). G) None; no ill effects created.	Same POSSIBLE LOSS OF MISSION Same POSSIBLE LOSS OF MISSION Same

Δ ITEMS MARKED THUS (Δ) DO NOT OPERATE IN FLIGHT

RELIABILITY FAILURE EFFECT ANALYSIS

A) COUNTDOWN/CHECKOUT
B) COUNTDOWN - AUTOMATIC SEQUENCE
C) FLIGHT - BOOST PHASE
D) FLIGHT - POWERED PHASE, 1ST
E) FLIGHT - COAST PHASE, 1ST
F) FLIGHT - POWERED PHASE, 2ND
G) FLIGHT - COAST PHASE, 2ND

SEQUENCING SUBSYSTEM

Δ	ITEM	FUNCTION	FAILURE TYPE	FAILURE EFFECT ON SUBSYSTEM PERFORMANCE	FAILURE EFFECT ON S-IVB STAGE	FAILURE EFFECT ON SATURN VEHICLE
	Sequencer V-IVB-72-02 (continued)	Function AC: Phase 3 Operating the LO_2 cold helium shutoff valve. NOTE: The LO_2 tank cold helium control valve is spring loaded normally open. It is controlled by the LO_2 tank pressure sensing switch.	1) Premature operation of closing the LO_2 tank cold helium shut off valve.	PARTIAL LOSS OF SUBSYSTEM Function AC-3 occurs out of sequence.	A) Delay in launch. B) None; does not stop automatic sequencing. C) None; failure is considered significant for powered phases only. D) POSSIBLE LOSS OF STAGE Due to possible loss of tank pressure which in turn would result in engine pump cavitation. E) None; same as C). F) POSSIBLE LOSS OF STAGE Same as D). G) None; same as C).	Same Same Same POSSIBLE LOSS OF MISSION Same POSSIBLE LOSS OF MISSION Same
			2) Failure to operate the LO_2 tank cold helium shutoff valve.	PARTIAL LOSS OF SUBSYSTEM Function AC-3 does not occur.	A),B) None; system helium supply is maintained from ground. Vehicle may lift-off with this failure undetected. C) None; significant to powered phases only. D) POSSIBLE LOSS OF STAGE Possible depletion of helium supply would cause loss of LO_2 tank pressurization resulting in engine pump cavitation. E) None; same as C). F) POSSIBLE LOSS OF STAGE Same as D). G) None; same as C).	Same Same POSSIBLE LOSS OF MISSION Same POSSIBLE LOSS OF MISSION Same

Δ ITEMS MARKED THUS (Δ) DO NOT OPERATE IN FLIGHT

RELIABILITY FAILURE EFFECT ANALYSIS

A) COUNTDOWN/CHECKOUT
B) COUNTDOWN-AUTOMATIC SEQUENCE
C) FLIGHT-BOOST PHASE
D) FLIGHT-POWERED PHASE, 1ST
E) FLIGHT-COAST PHASE, 1ST
F) FLIGHT-POWERED PHASE, 2ND
G) FLIGHT-COAST PHASE, 2ND

SEQUENCING SUBSYSTEM

Δ ITEM	FUNCTION	FAILURE TYPE	FAILURE EFFECT ON SUBSYSTEM PERFORMANCE	FAILURE EFFECT ON S-IVB STAGE	FAILURE EFFECT ON SATURN VEHICLE
Sequencer V-IVB-72-02 (continued)	Function AC (continued)	3) Failure to maintain operation of the LO_2 tank cold helium shutoff valve.	PARTIAL LOSS OF SUBSYSTEM Function AC-3 is interrupted.	A),B) None; system helium supply is maintained from ground. Vehicle may lift-off with this failure undetected. C) None; significant to powered phases only. D) POSSIBLE LOSS OF STAGE Possible depletion of helium supply would cause loss of LO_2 tank pressurization resulting in engine pump cavitation. E) None; same as C). F) POSSIBLE LOSS OF STAGE Same as D). G) None; same as C).	Same Same POSSIBLE LOSS OF MISSION Same POSSIBLE LOSS OF MISSION Same
		4) Failure to stop operation of the LO_2 tank cold helium shutoff valve.	PARTIAL LOSS OF SUBSYSTEM Function AC-3 does not cease as required.	A) Delay in launch. B) None; does not stop automatic sequencing. C) None; failure is considered significant for powered phases only. D) POSSIBLE LOSS OF STAGE Due to possible loss of tank pressure which in turn would result in engine pump cavitation. E) None; same as C). F) POSSIBLE LOSS OF STAGE Same as D). G) None; same as C).	Same Same Same POSSIBLE LOSS OF MISSION POSSIBLE LOSS OF MISSION Same

Δ ITEMS MARKED THUS (Δ) DO NOT OPERATE IN FLIGHT

RELIABILITY FAILURE EFFECT ANALYSIS

A) COUNTDOWN/CHECKOUT
B) COUNTDOWN - AUTOMATIC SEQUENCE
C) FLIGHT - BOOST PHASE
D) FLIGHT - POWERED PHASE, 1ST
E) FLIGHT - COAST PHASE, 1ST
F) FLIGHT - POWERED PHASE, 2ND
G) FLIGHT - COAST PHASE, 2ND

Sequencing Subsystem

Δ	ITEM	FUNCTION	FAILURE TYPE	FAILURE EFFECT ON SUBSYSTEM PERFORMANCE	FAILURE EFFECT ON S-IVB STAGE	FAILURE EFFECT ON SATURN VEHICLE
	Sequencer V-IVB-72-02 (continued)	Function AD: Provide transfer of the engine ready bypass command from I.U. to engine. NOTE: This command is a 20 MS 28V pulse directly from switch selector. It is not programmed, but an over-ride to be able to start engine if engine control system does not give ready to start signal. This command merely passes through the sequencer to provide a telemetry monitor point. The sequencer does not act either upon or as a result of the command. The command is issued towards the end of the first coast phase. Saturn V Only	1) Failure to provide transfer of the engine ready bypass due to open wire. (This failure is actually a second failure. The first would be the absence of "Ready to Start" signal).	None; sequencing subsystem merely provides a transfer point and a telemetry monitor point for the command. The subsystem operation is not dependent upon this signal transfer.	A),B),C),D) Not applicable; signal not issued nor required. E) None; failure may have catastrophic results in the subsequent phase, however. F) POSSIBLE LOSS OF STAGE This signal is initiated from the ground and only in case the engine control system does not issue the "Ready to Start" signal. If the ready to start signal were not issued and the failure occurred, the engine would not start. G) None; same as A).	Same Same POSSIBLE LOSS OF MISSION Same
			2) Premature transfer of the engine ready bypass due to a failure of the wire insulation failing and the bare wire encountering a "hot" point.	None; same as for failure type 1).	A) Delay of launch. B) Possible delay; may hold automatic sequencer. C),D) None; the engine ready to start signal is present from lift-off through engine first burn normally. E) LOSS OF STAGE The continued presence of 28V on this signal wire would not allow the engine to be shut-off. F),G) Not applicable; signal is normally present if ready to start signal is absent.	Same Same Same LOSS OF MISSION Same

Δ ITEMS MARKED THUS (Δ) DO NOT OPERATE IN FLIGHT

RELIABILITY FAILURE EFFECT ANALYSIS

A) COUNTDOWN/CHECKOUT
B) COUNTDOWN-AUTOMATIC SEQUENCE
C) FLIGHT-BOOST PHASE
D) FLIGHT-POWERED PHASE, 1ST
E) FLIGHT-COAST PHASE, 1ST
F) FLIGHT-POWERED PHASE, 2ND
G) FLIGHT-COAST PHASE, 2ND

SEQUENCING SUBSYSTEM

Δ ITEM	FUNCTION	FAILURE TYPE	FAILURE EFFECT ON SUBSYSTEM PERFORMANCE	FAILURE EFFECT ON S-IVB STAGE	FAILURE EFFECT ON SATURN VEHICLE
Sequencer V-IVB-72-02 (continued)	Function AD (continued)	3) Failure to maintain transfer of engine ready bypass command.	None; same as for failure type 1).	A),B),C),D),E) Same as for failure type 1). F) POSSIBLE LOSS OF STAGE Same as for failure type 1). G) None; same as A).	Same POSSIBLE LOSS OF MISSION Same as for stage. Same
		4) Failure to stop transfer of engine ready bypass command.	None; not applicable; initiation and ceasing of command are not controlled in the sequencer.	All phases: None; same as for subsystem.	All phases: None; same as for stage.
	Function AE: Operation of propellant utilization fuel boiloff bias cutoff. (The operation stops the fuel boiloff bias.) on t_3 -2.0 NOTE: This bias is to alter the ratio kept by the P.U. system up until second burn, by the amount of extra fuel that is required to provide for fuel boiloff during first coast. If this were not provided, the P.U. system would dump this fuel into the engine, leaving insufficient fuel for both the boiloff and mission. Saturn V Only	1) Premature operation of the P.U. fuel boiloff bias cutoff.	PARTIAL LOSS OF SUBSYSTEM Function AE is out of sequence.	A) Delay or launch. B) Possible delay; may stop automatic sequencer. C),D),E) None; significant only to subsequent phase. F) POSSIBLE LOSS OF STAGE Due to insufficient fuel to complete mission. G) None; not applicable, function occurs in a previous phase.	Same Same Same POSSIBLE LOSS OF MISSION Same
		2) Failure to operate the P.U. fuel boiloff bias cutoff.	PARTIAL LOSS OF SUBSYSTEM Function AE does not occur.	A),B),C),D),E) None; significant only to subsequent phase. F) POSSIBLE LOSS OF STAGE Resulting from a mismanaged mixture being oxygen rich with the possibility of a premature depletion of the oxygen supply thus causing an engine cutoff prior to normal cutoff. G) None; operation not required.	Same POSSIBLE LOSS OF MISSION Same

Δ (ITEMS MARKED THUS (Δ) DO NOT OPERATE IN FLIGHT

RELIABILITY FAILURE EFFECT ANALYSIS

SEQUENCING SUBSYSTEM

A) COUNTDOWN/CHECKOUT
B) COUNTDOWN-AUTOMATIC SEQUENCE
C) FLIGHT-BOOST PHASE
D) FLIGHT-POWERED PHASE, 1ST
E) FLIGHT-COAST PHASE, 1ST
F) FLIGHT-POWERED PHASE, 2ND
G) FLIGHT-COAST PHASE, 2ND

Δ	ITEM	FUNCTION	FAILURE TYPE	FAILURE EFFECT ON SUBSYSTEM PERFORMANCE	FAILURE EFFECT ON S-IVB STAGE	FAILURE EFFECT ON SATURN VEHICLE
	Sequencer V-IVB-72-02 (continued)	Function AE (continued)	3) Failure to maintain operation of P.U. fuel boiloff bias cutoff.	PARTIAL LOSS OF SUBSYSTEM	A),B),C),D) Not applicable; function not required. E) None; however, failure during this phase may cause a catastrophic failure in the subsequent phase. F) POSSIBLE LOSS OF STAGE Erroneous operation of the P.U. fuel boiloff bias cutoff could cause a mismanaged mixture being oxygen rich and a premature depletion of the oxygen supply. G) None; function not utilized.	Same Same POSSIBLE LOSS OF MISSION Same
			4) Failure to stop operation of P.U. fuel boiloff bias cutoff.	None; there is no requirement for the operation to cease.	A),B),C),D),E),F) Not applicable; operation not required to cease. G) None; there is actually no requirement for operation to cease; however, failure would have no effect.	Same Same
		Function AF: Charge ullage ignitors one and two. Arms two sets of three E.B.W. firing units by providing them with 28 volts charging voltage. Each of the three ullage rockets may be fired by either of its associated E.B.W. firing units which are armed through its associated relay. NOTE: The E.B.W. firing unit will not arm if trigger voltage is present on its trigger input. on t_o +100 Saturn 1B Only	1) Premature application of charging voltage.	None; subsystem performance can still be accomplished.	A) Not applicable. B) Delay in launching. C),D),E) None	Same Same Same
			2) Late, failure to maintain or nonapplication of charging voltage.	None; redundancy provided.	A),B) None; not applicable because charging occurs during C) phase. C),D),E) None; redundancy provided.	Same Same

Δ ITEMS MARKED THUS (Δ) DO NOT OPERATE IN FLIGHT

RELIABILITY FAILURE EFFECT ANALYSIS

A) COUNTDOWN/CHECKOUT
B) COUNTDOWN-AUTOMATIC SEQUENCE
C) FLIGHT-BOOST PHASE
D) FLIGHT-POWERED PHASE, 1ST
E) FLIGHT-COAST PHASE, 1ST
F) FLIGHT-POWERED PHASE, 2ND
G) FLIGHT-COAST PHASE, 2ND

SEQUENCING SUBSYSTEM

Δ ITEM	FUNCTION	FAILURE TYPE	FAILURE EFFECT ON SUBSYSTEM PERFORMANCE	FAILURE EFFECT ON S-IVB STAGE	FAILURE EFFECT ON SATURN VEHICLE
Sequencer V-IVB-72-02 (continued)	Function AG: Fire ullage one and two. Supplies continuity for 28V, 20 milliseconds, triggering pulses, to trigger inputs of two sets of three E.B.W. firing units from the switch selector. Each of the three ullage rockets may be fired by either of its associated E.B.W. firing units upon reception of the trigger pulse. NOTE: The E.B.W. firing unit will not fire if trigger voltage is present before arming voltage is applied as the firing unit will not arm with trigger voltage present on its trigger input. on t_1 -2 Saturn 1B Only	1) Premature application of trigger voltage before arming.	None; subsystem performance can still be accomplished.	A) Not applicable. B) Delay in launching. C),D),E) None; redundancy provided.	Same Same Same
		2) Premature application of trigger voltage after arming.	PARTIAL LOSS OF SUBSYSTEM Function not in sequence.	A),B) None; not applicable because charging occurs during C) phase. C) None; the resultant firing of ullage rockets is considered significant only for its effect on the vehicle in phase C). D),E) PROBABLE LOSS OF STAGE Due to ullage burnout before separation and possible no engine start through pump cavitation because of lack of ullage positioning.	Same Same PROBABLE LOSS OF MISSION
		3) Late or non-application of trigger voltage.	None; redundancy provided.	A),B) None; not applicable because firing occurs during phase C). C),D),E) None; redundancy provided.	Same Same
	Function AH: Operating 1750 pound ullage positioning motors. Provides 28V power from peaking (aft) bus to close relay in forward power distribution box, which then passes power to the ullage system. on t_1 -2.0 off t_1 +5.0 on t_3 -23.0 off t_3 +5.0 Saturn V Only	1) Premature operation of 1750 pound ullage rockets.	PARTIAL LOSS OF SUBSYSTEM Function U is not in sequence.	A),D),F),G) Not applicable. B) This failure holds automatic countdown sequence - ullage fuel depleted. C),E) LOSS OF STAGE Due to early depletion of ullage fuel, there is not sufficient fuel for positioning of main engine propellant or vehicle.	Same Same LOSS OF MISSION

Δ ITEMS MARKED THUS (Δ) DO NOT OPERATE IN FLIGHT

RELIABILITY FAILURE EFFECT ANALYSIS

A) COUNTDOWN/CHECKOUT
B) COUNTDOWN - AUTOMATIC SEQUENCE
C) FLIGHT - BOOST PHASE
D) FLIGHT - POWERED PHASE, 1ST
E) FLIGHT - COAST PHASE, 1ST
F) FLIGHT - POWERED PHASE, 2ND
G) FLIGHT - COAST PHASE, 2ND

SEQUENCING SUBSYSTEM

Δ	ITEM	FUNCTION	FAILURE TYPE	FAILURE EFFECT ON SUBSYSTEM PERFORMANCE	FAILURE EFFECT ON S-IVB STAGE	FAILURE EFFECT ON SATURN VEHICLE
	Sequencer V-IVB-72-02 (continued)	Function AH (continued)	2) Failure to operate 1750 pound ullage rockets when required.	PARTIAL LOSS OF SUBSYSTEM Function U does not occur when required.	A),B),D),F),G) Not applicable C),E) LOSS OF STAGE Propellant is not properly positioned for restart.	Not applicable LOSS OF MISSION
			3) Failure to maintain operation of 1750 pound ullage rockets.	PARTIAL LOSS OF SUBSYSTEM Performance of function U is interrupted.	A),B),G) Not applicable. C),D),E),F) PROBABLE LOSS OF STAGE Propellant not properly positioned for restart, depedning on when the failure occurs in the ullage cycle.	Not applicable. PROBABLE LOSS OF MISSION
			4) Failure to stop operation of 1750 pound ullage rockets when required.	PARTIAL LOSS OF SUBSYSTEM Function U does not stop when required.	A),B),C),E),G) Not applicable. D),F) Failure at end of first start would cause depletion of fuel for second start, resulting in loss of fuel positioning capability, causing LOSS OF STAGE. Failure after either start would result in loss of attitude control during coast, causing PROBABLE LOSS OF STAGE	Not applicable. LOSS OF MISSION PROBABLE LOSS OF MISSION
		Function AJ: Charge ullage jettisons one and two. Arms two sets of three EBW firing units by provided them with 28 volts charging voltage. Each of the three ullage rockets may be jettisoned by either of its associated EBW firing units which are armed through its associated relay. NOTE: The EBW firing unit will not arm if trigger voltage is present on its trigger input. on t_1 +5 Saturn 1B Only	1) Premature application of charging voltage.	None; subsystem performance can still be accomplished.	A) Not applicable. B) Delay in launching. C),D),E) None	Same Same Same

Δ ITEMS MARKED THUS (Δ) DO NOT OPERATE IN FLIGHT

RELIABILITY FAILURE EFFECT ANALYSIS

SEQUENCING SUBSYSTEM

A) COUNTDOWN/CHECKOUT
B) COUNTDOWN-AUTOMATIC SEQUENCE
C) FLIGHT-BOOST PHASE
D) FLIGHT-POWERED PHASE, 1ST
E) FLIGHT-COAST PHASE, 1ST
F) FLIGHT-POWERED PHASE, 2ND
G) FLIGHT-COAST PHASE, 2ND

Δ ITEM	FUNCTION	FAILURE TYPE	FAILURE EFFECT ON SUBSYSTEM PERFORMANCE	FAILURE EFFECT ON S-IVB STAGE	FAILURE EFFECT ON SATURN VEHICLE
Sequencer V-IVB-72-02 (continued)	Function AJ (continued)	2) Late, failure to maintain or nonapplication of charging voltage.	None; redundancy provided.	A),B),C) None; not applicable because charging occurs during D) phase. D),E) None; redundancy provided.	Same Same
	Function AK: Fire ullage jettisons one and two. Provides continuity from the switch selector to the trigger inputs of two sets of three EBW firing units for 28 volt, 20 milliseconds triggering pulses. Each of the three ullage jettisons may be fired by either of its associated EBW firing units upon reception of the trigger pulse. NOTE: The EBW firing unit will not fire if trigger voltage is present before arming voltage is applied as the firing unit will not arm with trigger voltage present on its trigger input. on t_1 +15 Saturn 1B Only	1) Premature application of trigger voltage before arming.	None; subsystem performance can still be accomplished.	A) Not applicable. B) Delay in launching. C),D),E) None; redundancy provided.	Same Same Same
		2) Premature application of trigger voltage after arming.	None; subsystem performance can still be accomplished.	A),B),C) None; not applicable because arming does not occur until D) phase. D),E) None; because ullage rockets are used before arming of jettison occurs and their function is therefore completed.	Same Same
		3) Late or nonapplication of trigger voltage.	None; redundancy provided.	A),B),C) None; not applicable because jettisoning occurs during D) phase. D),E) None; redundancy provided.	Same Same
	Function AL: Operating 150 pound ullage motors. Provides 28V power from the peaking (aft) bus to close relay in aft. Power distribution box, which then passes power to the ullage motors. on t^1 off t^1 +21.0 on t_3 -354.8 off t_3 -23.1 Saturn V Only	1) Premature operation of 150 pound ullage motors.	PARTIAL LOSS OF SUBSYSTEM Function AL is not in sequence.	A),F),G) Not applicable. B) This failure holds automatic countdown sequence for refurbishment of 150# ullage system. C),D),E) PROBABLE LOSS OF STAGE Hypergolic fuels would have been expended before the requirement for them had been met. Main engine propellants would not be settled for engine ignition.	Same Same PROBABLE LOSS OF MISSION

Δ ITEMS MARKED THUS (Δ) DO NOT OPERATE IN FLIGHT

RELIABILITY FAILURE EFFECT ANALYSIS

A) COUNTDOWN/CHECKOUT
B) COUNTDOWN-AUTOMATIC SEQUENCE
C) FLIGHT-BOOST PHASE
D) FLIGHT-POWERED PHASE, 1ST
E) FLIGHT-COAST PHASE, 1ST
F) FLIGHT-POWERED PHASE, 2ND
G) FLIGHT-COAST PHASE, 2ND

SEQUENCING SUBSYSTEM

Δ ITEM	FUNCTION	FAILURE TYPE	FAILURE EFFECT ON SUBSYSTEM PERFORMANCE	FAILURE EFFECT ON S-IVB STAGE	FAILURE EFFECT ON SATURN VEHICLE
Sequencer V-IVB-72-02 (continued)	Function AL (continued)	2) Failure to operate 150 pound ullage motors when required.	PARTIAL LOSS OF SUBSYSTEM Function AL does not occur when required.	A),B),C),D),F),G) Not applicable. E) It is expected that there will be sufficient thrust from the venting operation to bring about ullage positioning. However, in accomplishing this there would be a small portion of liquid fuel dumped over board in bringing the fuel-gas separater up to speed.	
		3) Failure to maintain operation of 150 pound ullage motors.	PARTIAL LOSS OF SUBSYSTEM Performance of function AL is interrupted.	A),B),C),D),F),G) Not applicable. E) It is expected that there will be sufficient thrust from the venting operation to maintain ullage positioning.	Same Same
		4) Failure to stop operation of 150 pound ullage motors.	PARTIAL LOSS OF SUBSYSTEM Function AL does not stop when required.	A),B),C),D) Not applicable. E) PROBABLE LOSS OF STAGE Hypergolic fuels would be expended before the total requirement for them had been met. Main engine propellants could now not be properly settled for engine ignition. F),G) None; requirement for ullage motors has been completed.	Same PROBABLE LOSS OF MISSION Same

Δ ITEMS MARKED THUS (Δ) DO NOT OPERATE IN FLIGHT

RELIABILITY FAILURE EFFECT ANALYSIS

A) COUNTDOWN/CHECKOUT
B) COUNTDOWN-AUTOMATIC SEQUENCE
C) FLIGHT-BOOST PHASE
D) FLIGHT-POWERED PHASE, 1ST
E) FLIGHT-COAST PHASE, 1ST
F) FLIGHT-POWERED PHASE, 2ND
G) FLIGHT-COAST PHASE, 2ND

SEQUENCING SUBSYSTEM

Δ ITEM	FUNCTION	FAILURE TYPE	FAILURE EFFECT ON SUBSYSTEM PERFORMANCE	FAILURE EFFECT ON S-IVB STAGE	FAILURE EFFECT ON SATURN VEHICLE
Sequencer V-IVB-72-02 (continued)	Function AM: Charge retro ignitors one and two. Arms two sets of two EBW firing units by providing them with 28 volts charging voltage. Each of the two retro rockets may be fired by either of its associated EBW firing units which are armed through its associated relay. NOTE: The EBW firing unit will not arm if trigger voltage is present on its trigger input. on t_5 -60	1) Premature application of charging voltage.	None; subsystem performance can still be accomplished.	A) Not applicable. B) Delay in launching. C),D),E),F),G) None	Same Same Same
		2) Late, failure to maintain, or nonapplication of charging voltage.	None; redundancy provided.	A),B),C),D),E),F) Saturn V A),B),C),D) Saturn 1B Not applicable; because charging occurs prior to payload separation. E) Saturn 1B G) Saturn V: None; redundancy provided.	Same Same Same
	Function AN: Fire retro ignitors one and two. Provides continuity from the switch selector to the trigger inputs of two sets of two EBW firing units for 28 volt 20 millisecond triggering pulses. Both of the retro rockets may be fired by either set of EBW firing units upon reception of the trigger pulse. NOTE: The EBW firing unit will not fire if trigger voltage is present before arming voltage is applied as the firing unit will not arm with trigger voltage on its trigger input.	1) Premature application of trigger voltage before arming.	None; subsystem performance can still be accomplished.	A) Not applicable. B) Delay in launching. C),D),E),F),G) None	Same Same Same
		2) Premature application of trigger voltage after arming and before payload separation	PARTIAL LOSS OF SUBSYSTEM Function not in sequence.	A),B),C),D) None; not applicable because charging occurs prior to payload separation. Pre-separation; none, the resultant firing of the retro-rockets is considered significant only for its effect on the payload after payload separation. Post Separation; none, S-IVB flight is ended.	Same Same POSSIBLE LOSS OF VEHICLE Due to improper S-IVB/payload separation resulting from lack of retro-rocket thrust.
		3) Premature applicatio of trigger voltage after payload separation.	PARTIAL LOSS OF SUBSYSTEM Function not in sequence.	Pre-separation; none, not applicable because separation occurs at end of phase G). Post separation; none, retro rocket thrust will still be available when required.	Same Same

Δ ITEMS MARKED THUS (Δ) DO NOT OPERATE IN FLIGHT

RELIABILITY FAILURE EFFECT ANALYSIS

SEQUENCING SUBSYSTEM

A) COUNTDOWN/CHECKOUT
B) COUNTDOWN - AUTOMATIC SEQUENCE
C) FLIGHT - BOOST PHASE
D) FLIGHT - POWERED PHASE, 1ST
E) FLIGHT - COAST PHASE, 1ST
F) FLIGHT - POWERED PHASE, 2ND
G) FLIGHT - COAST PHASE, 2ND

Δ	ITEM	FUNCTION	FAILURE TYPE	FAILURE EFFECT ON SUBSYSTEM PERFORMANCE	FAILURE EFFECT ON S-IVB STAGE	FAILURE EFFECT ON SATURN VEHICLE
	Sequencer V-IVB-72-02 (continued)	Function AN (continued)	4) Late or nonapplication of trigger voltage.	None; redundancy provided.	Pre-separation; none, not applicable. Firing occurs after payload separation. Post separation; none, redundancy provided.	Same Same

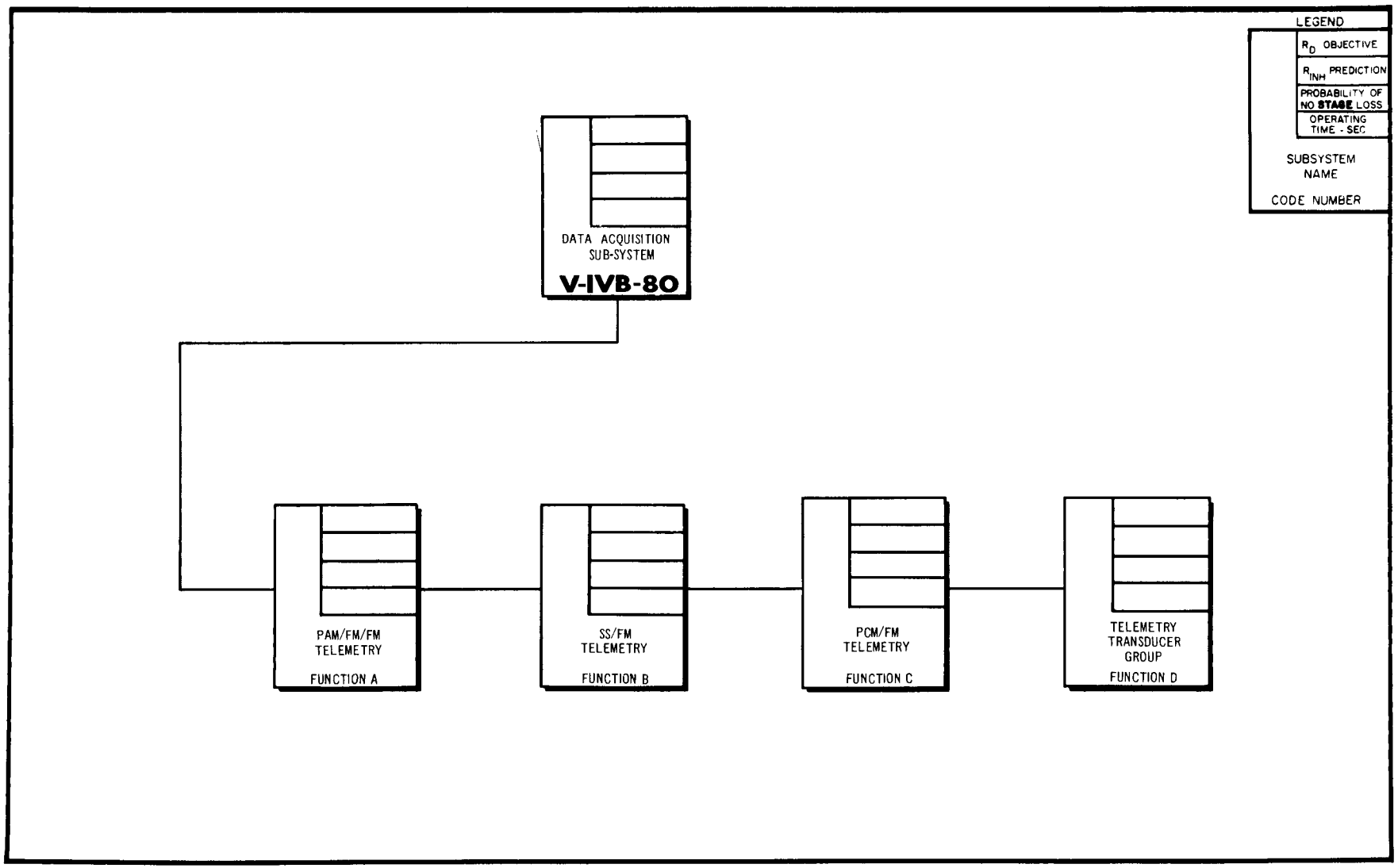
LEGEND
R_D OBJECTIVE
R_{INH} PREDICTION
PROBABILITY OF NO STAGE LOSS
OPERATING TIME - SEC
SUBSYSTEM NAME
CODE NUMBER
DATA ACQUISITION SUB-SYSTEM
V-IVB-80
PAM/FM/FM TELEMETRY
FUNCTION A
SS/FM TELEMETRY
FUNCTION B
PCM/FM TELEMETRY
FUNCTION C
TELEMETRY TRANSDUCER GROUP
FUNCTION D

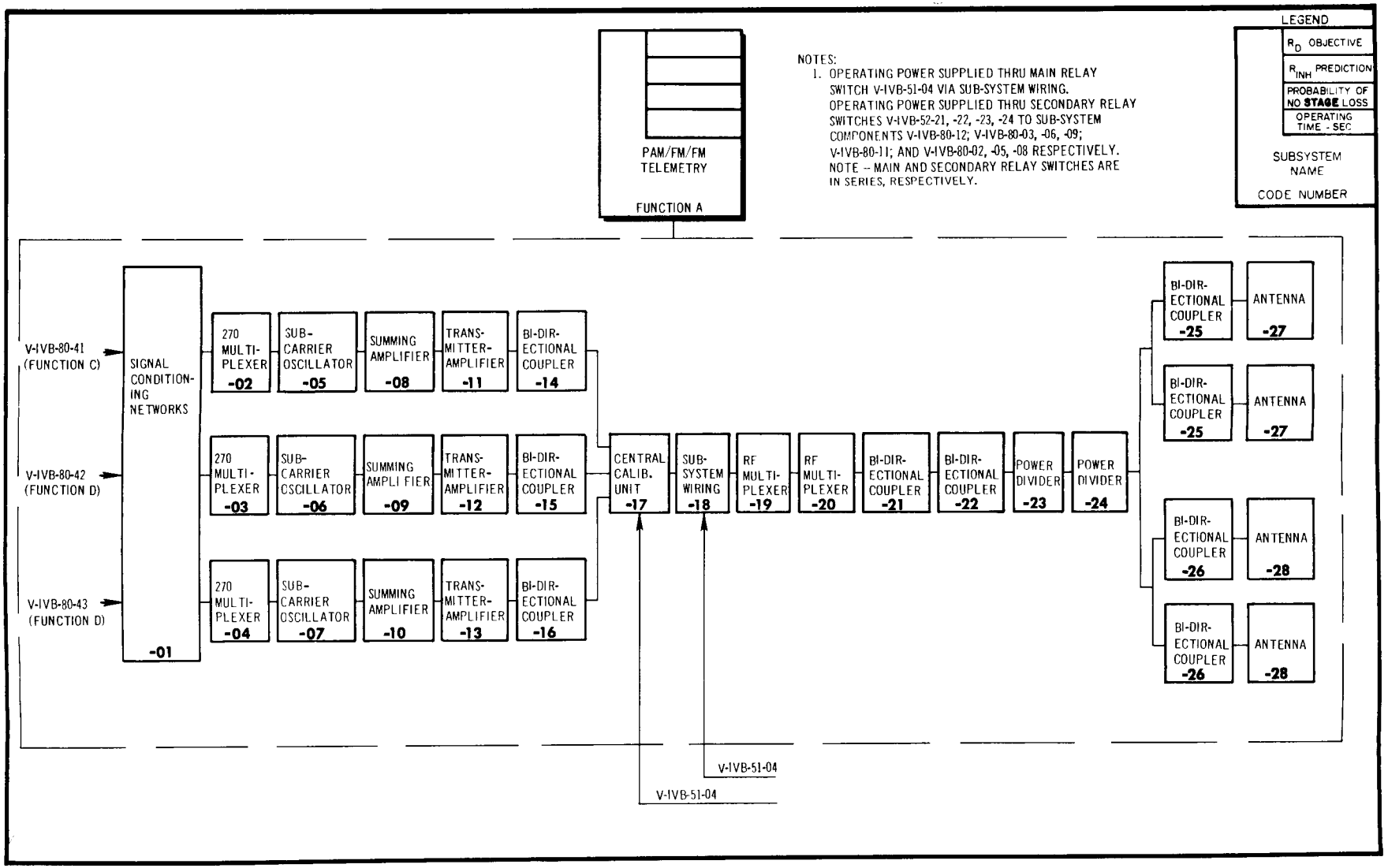
PAM/FM/FM TELEMETRY
FUNCTION A
NOTES:
1. OPERATING POWER SUPPLIED THRU MAIN RELAY SWITCH V-IVB-51-04 VIA SUB-SYSTEM WIRING. OPERATING POWER SUPPLIED THRU SECONDARY RELAY SWITCHES V-IVB-52-21, -22, -23, -24 TO SUB-SYSTEM COMPONENTS V-IVB-80-12; V-IVB-80-03, -06, -09; V-IVB-80-11; AND V-IVB-80-02, -05, -08 RESPECTIVELY. NOTE – MAIN AND SECONDARY RELAY SWITCHES ARE IN SERIES, RESPECTIVELY.
LEGEND
R_D OBJECTIVE
R_{INH} PREDICTION
PROBABILITY OF NO STAGE LOSS
OPERATING TIME - SEC
SUBSYSTEM NAME
CODE NUMBER
V-IVB-80-41 (FUNCTION C)
V-IVB-80-42 (FUNCTION D)
V-IVB-80-43 (FUNCTION D)
SIGNAL CONDITIONING NETWORKS -01
270 MULTIPLEXER -02
270 MULTIPLEXER -03
270 MULTIPLEXER -04
SUB-CARRIER OSCILLATOR -05
SUB-CARRIER OSCILLATOR -06
SUB-CARRIER OSCILLATOR -07
SUMMING AMPLIFIER -08
SUMMING AMPLIFIER -09
SUMMING AMPLIFIER -10
TRANSMITTER-AMPLIFIER -11
TRANSMITTER-AMPLIFIER -12
TRANSMITTER-AMPLIFIER -13
BI-DIRECTIONAL COUPLER -14
BI-DIRECTIONAL COUPLER -15
BI-DIRECTIONAL COUPLER -16
CENTRAL CALIB. UNIT -17
SUB-SYSTEM WIRING -18
RF MULTIPLEXER -19
RF MULTIPLEXER -20
BI-DIRECTIONAL COUPLER -21
BI-DIRECTIONAL COUPLER -22
POWER DIVIDER -23
POWER DIVIDER -24
BI-DIRECTIONAL COUPLER -25
BI-DIRECTIONAL COUPLER -25
BI-DIRECTIONAL COUPLER -26
BI-DIRECTIONAL COUPLER -26
ANTENNA -27
ANTENNA -27
ANTENNA -28
ANTENNA -28
V-IVB-51-04
V-IVB-51-04

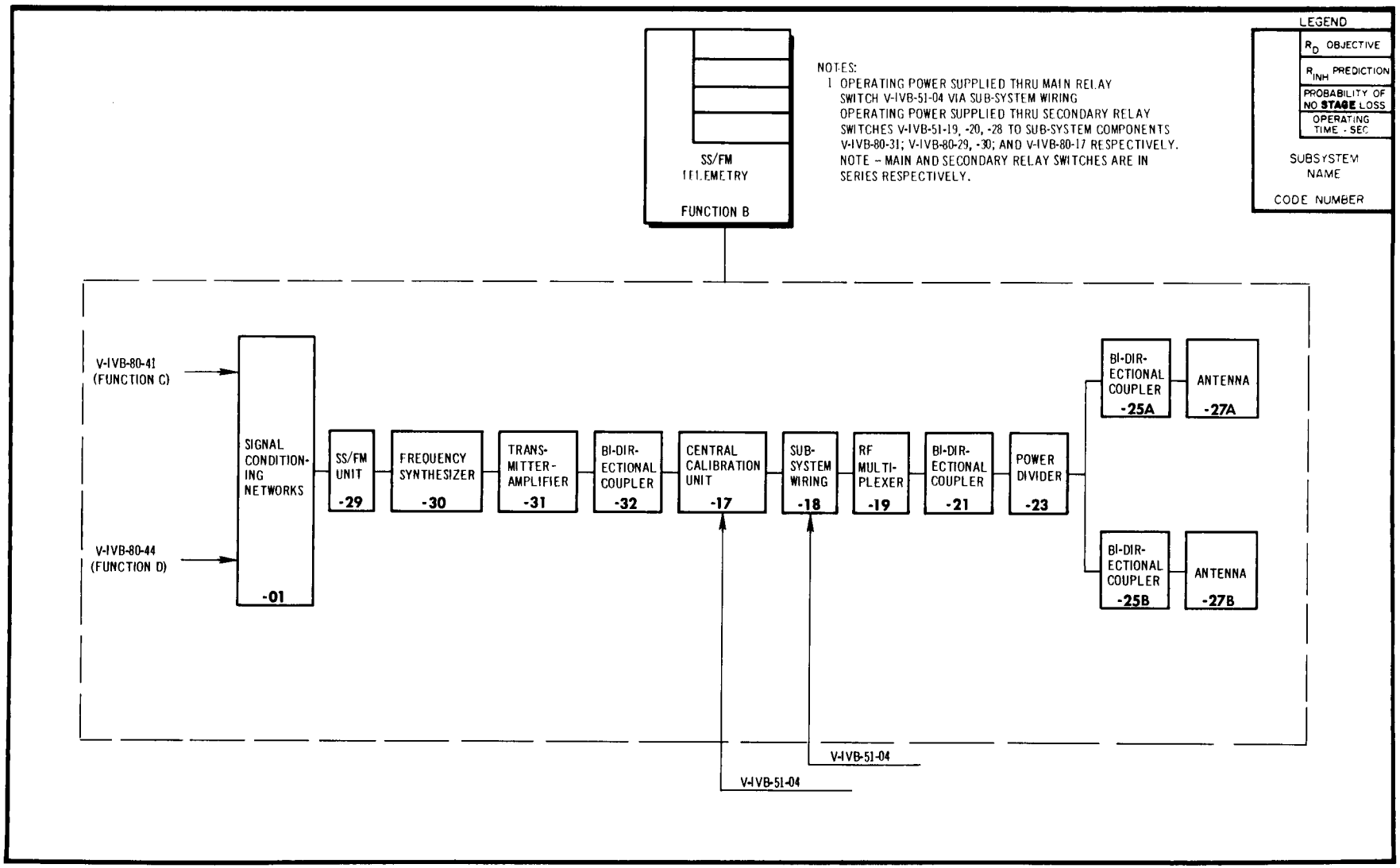
SS/FM TELEMETRY
FUNCTION B
NOTES:
1 OPERATING POWER SUPPLIED THRU MAIN RELAY SWITCH V-IVB-51-04 VIA SUB-SYSTEM WIRING
OPERATING POWER SUPPLIED THRU SECONDARY RELAY SWITCHES V-IVB-51-19, -20, -28 TO SUB-SYSTEM COMPONENTS V-IVB-80-31; V-IVB-80-29, -30; AND V-IVB-80-17 RESPECTIVELY.
NOTE – MAIN AND SECONDARY RELAY SWITCHES ARE IN SERIES RESPECTIVELY.
LEGEND
R_D OBJECTIVE
R_{INH} PREDICTION
PROBABILITY OF NO STAGE LOSS
OPERATING TIME - SEC
SUBSYSTEM NAME
CODE NUMBER
V-IVB-80-41 (FUNCTION C)
V-IVB-80-44 (FUNCTION D)
SIGNAL CONDITIONING NETWORKS -01
SS/FM UNIT -29
FREQUENCY SYNTHESIZER -30
TRANSMITTER-AMPLIFIER -31
BI-DIRECTIONAL COUPLER -32
CENTRAL CALIBRATION UNIT -17
SUB-SYSTEM WIRING -18
RF MULTIPLEXER -19
BI-DIRECTIONAL COUPLER -21
POWER DIVIDER -23
BI-DIRECTIONAL COUPLER -25A
ANTENNA -27A
BI-DIRECTIONAL COUPLER -25B
ANTENNA -27B
V-IVB-51-04
V-IVB-51-04

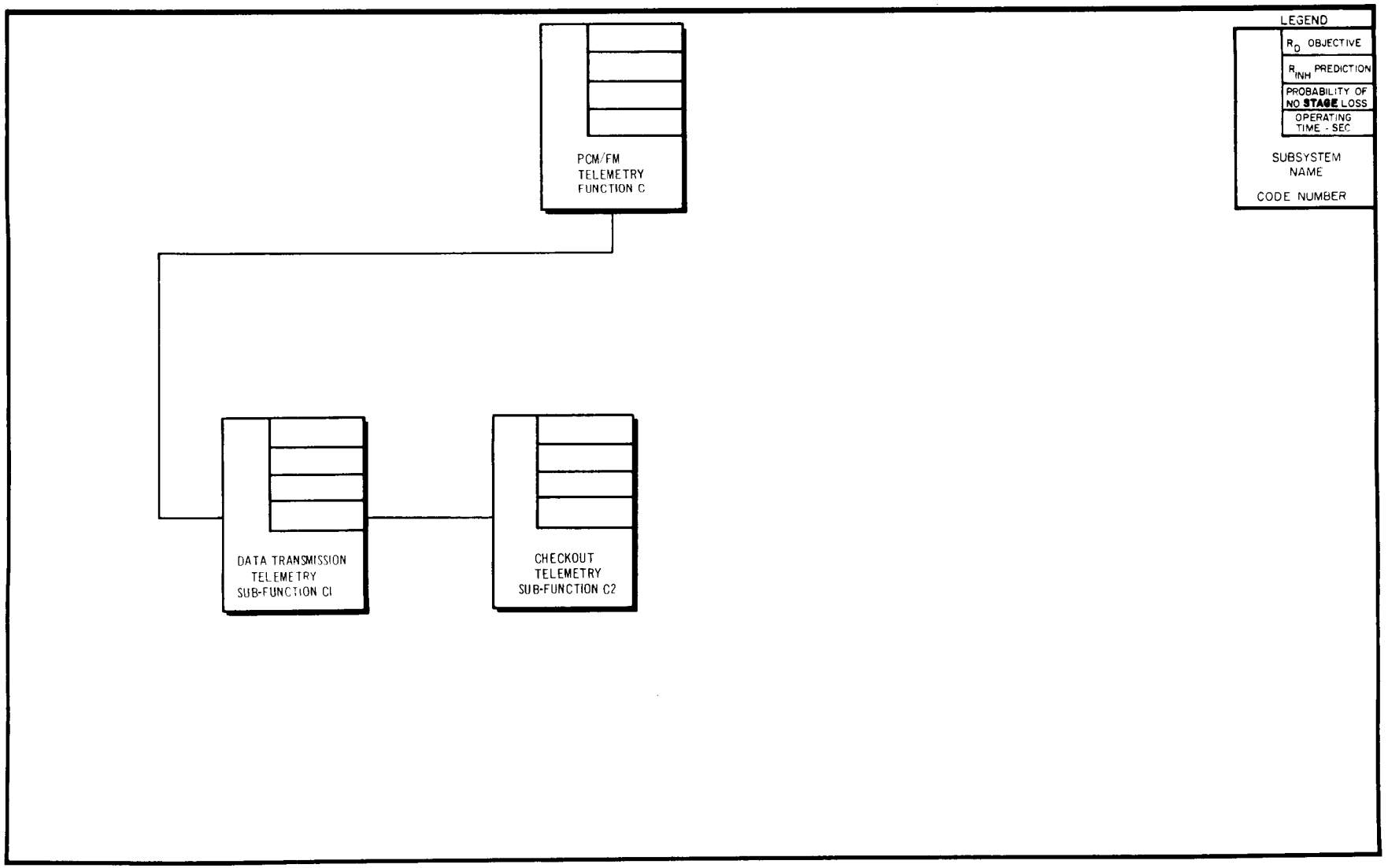
LEGEND
R_D OBJECTIVE
R_{INH} PREDICTION
PROBABILITY OF NO STAGE LOSS
OPERATING TIME - SEC
SUBSYSTEM NAME
CODE NUMBER
PCM/FM TELEMETRY FUNCTION C
DATA TRANSMISSION TELEMETRY SUB-FUNCTION C1
CHECKOUT TELEMETRY SUB-FUNCTION C2

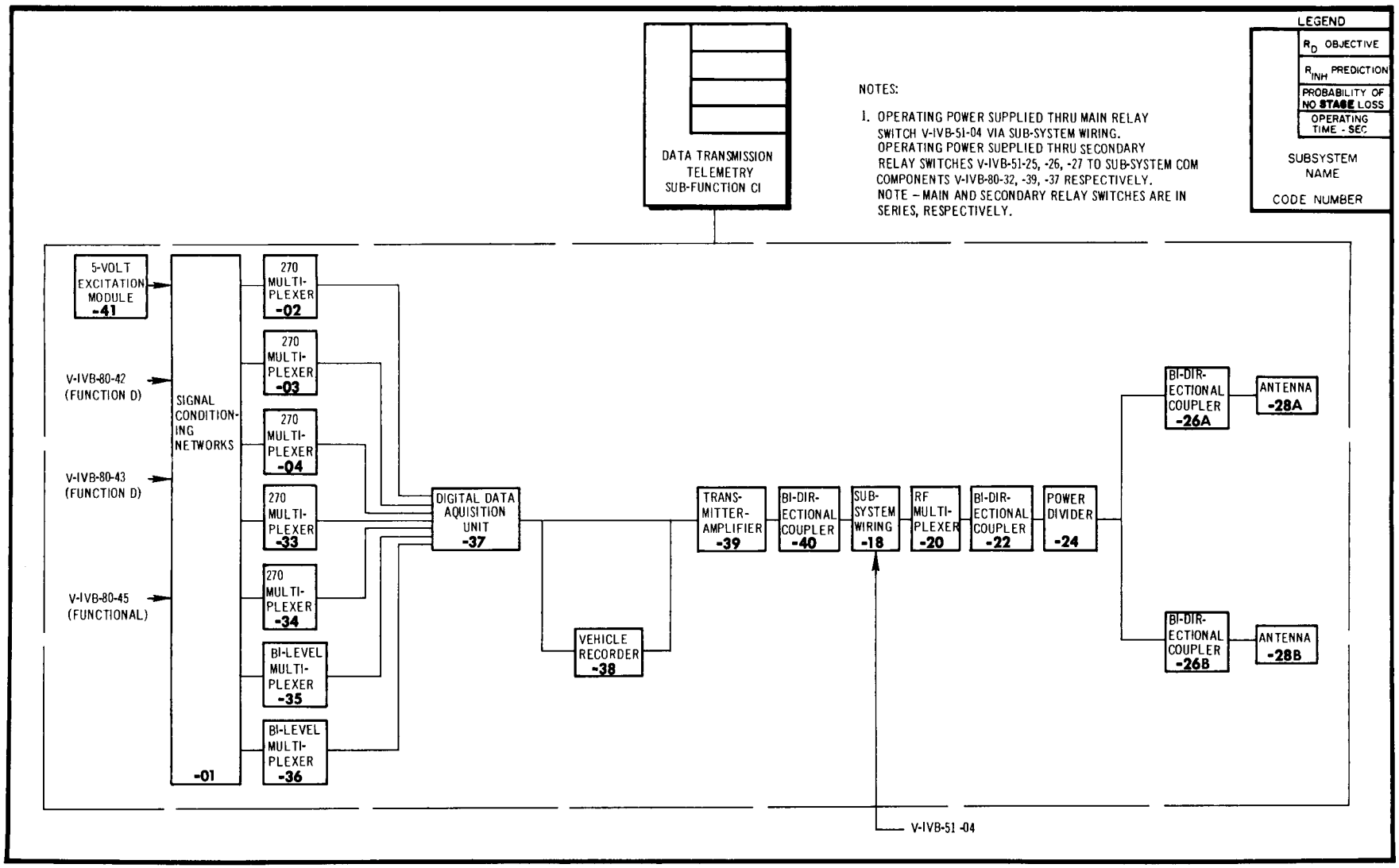
DATA TRANSMISSION TELEMETRY SUB-FUNCTION CI
NOTES:
1. OPERATING POWER SUPPLIED THRU MAIN RELAY SWITCH V-IVB-51-04 VIA SUB-SYSTEM WIRING. OPERATING POWER SUPPLIED THRU SECONDARY RELAY SWITCHES V-IVB-51-25, -26, -27 TO SUB-SYSTEM COM COMPONENTS V-IVB-80-32, -39, -37 RESPECTIVELY. NOTE – MAIN AND SECONDARY RELAY SWITCHES ARE IN SERIES, RESPECTIVELY.
LEGEND
R_D OBJECTIVE
R_{INH} PREDICTION
PROBABILITY OF NO STAGE LOSS
OPERATING TIME - SEC
SUBSYSTEM NAME
CODE NUMBER
5-VOLT EXCITATION MODULE -41
V-IVB-80-42 (FUNCTION D)
V-IVB-80-43 (FUNCTION D)
V-IVB-80-45 (FUNCTIONAL)
SIGNAL CONDITIONING NETWORKS -01
270 MULTI-PLEXER -02
270 MULTI-PLEXER -03
270 MULTI-PLEXER -04
270 MULTI-PLEXER -33
270 MULTI-PLEXER -34
BI-LEVEL MULTI-PLEXER -35
BI-LEVEL MULTI-PLEXER -36
DIGITAL DATA AQUISITION UNIT -37
VEHICLE RECORDER -38
TRANS-MITTER-AMPLIFIER -39
BI-DIR-ECTIONAL COUPLER -40
SUB-SYSTEM WIRING -18
RF MULTI-PLEXER -20
BI-DIR-ECTIONAL COUPLER -22
POWER DIVIDER -24
BI-DIR-ECTIONAL COUPLER -26A
BI-DIR-ECTIONAL COUPLER -26B
ANTENNA -28A
ANTENNA -28B
V-IVB-51-04

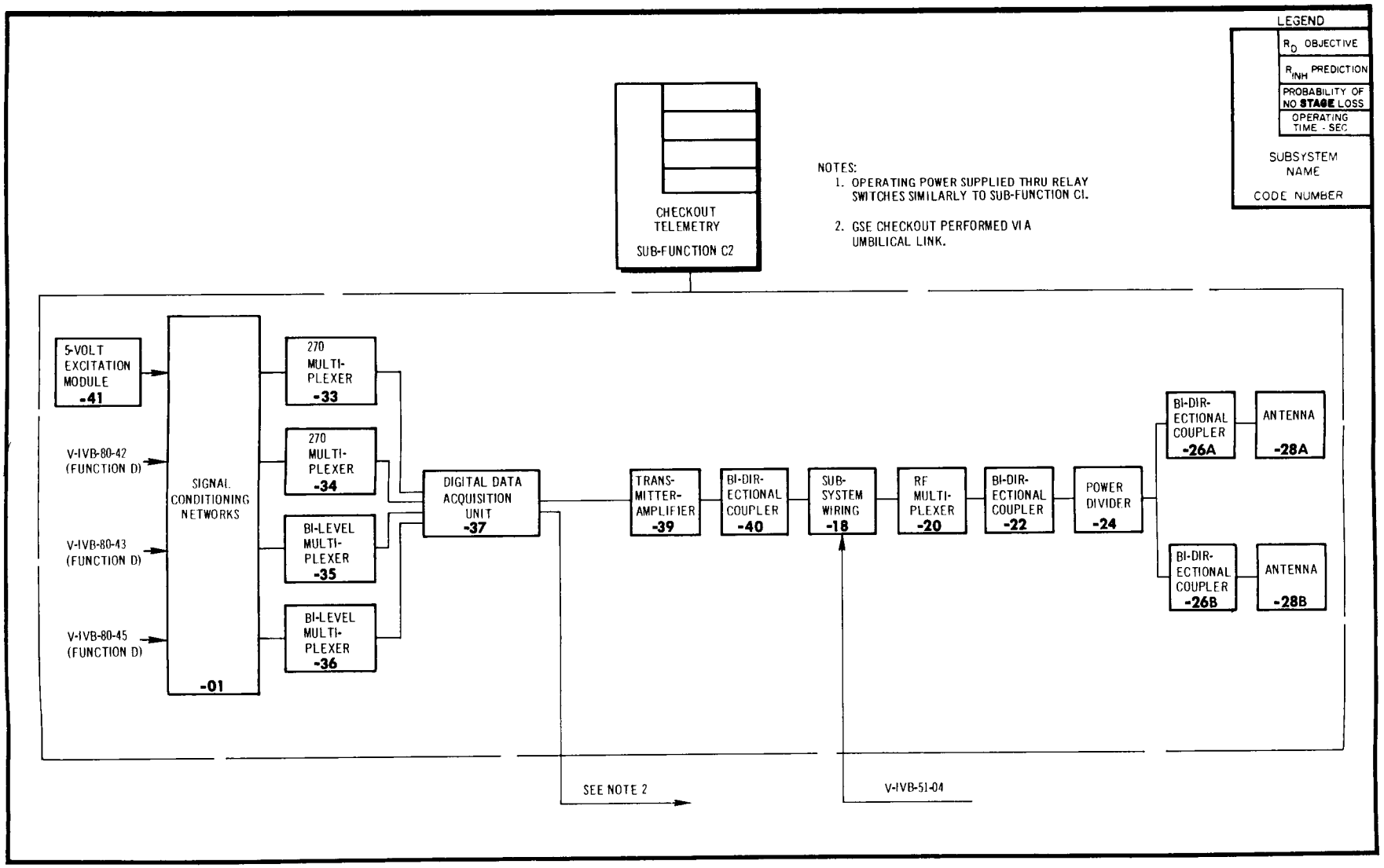
LEGEND
R_D OBJECTIVE
R_{INH} PREDICTION
PROBABILITY OF NO STAGE LOSS
OPERATING TIME - SEC
SUBSYSTEM NAME
CODE NUMBER
CHECKOUT TELEMETRY
SUB-FUNCTION C2
NOTES:
1. OPERATING POWER SUPPLIED THRU RELAY SWITCHES SIMILARLY TO SUB-FUNCTION C1.
2. GSE CHECKOUT PERFORMED VIA UMBILICAL LINK.
5-VOLT EXCITATION MODULE -41
V-IVB-80-42 (FUNCTION D)
V-IVB-80-43 (FUNCTION D)
V-IVB-80-45 (FUNCTION D)
SIGNAL CONDITIONING NETWORKS -01
270 MULTI-PLEXER -33
270 MULTI-PLEXER -34
BI-LEVEL MULTI-PLEXER -35
BI-LEVEL MULTI-PLEXER -36
DIGITAL DATA ACQUISITION UNIT -37
TRANS-MITTER-AMPLIFIER -39
BI-DIR-ECTIONAL COUPLER -40
SUB-SYSTEM WIRING -18
RF MULTI-PLEXER -20
BI-DIR-ECTIONAL COUPLER -22
POWER DIVIDER -24
BI-DIR-ECTIONAL COUPLER -26A
BI-DIR-ECTIONAL COUPLER -26B
ANTENNA -28A
ANTENNA -28B
SEE NOTE 2
V-IVB-51-04

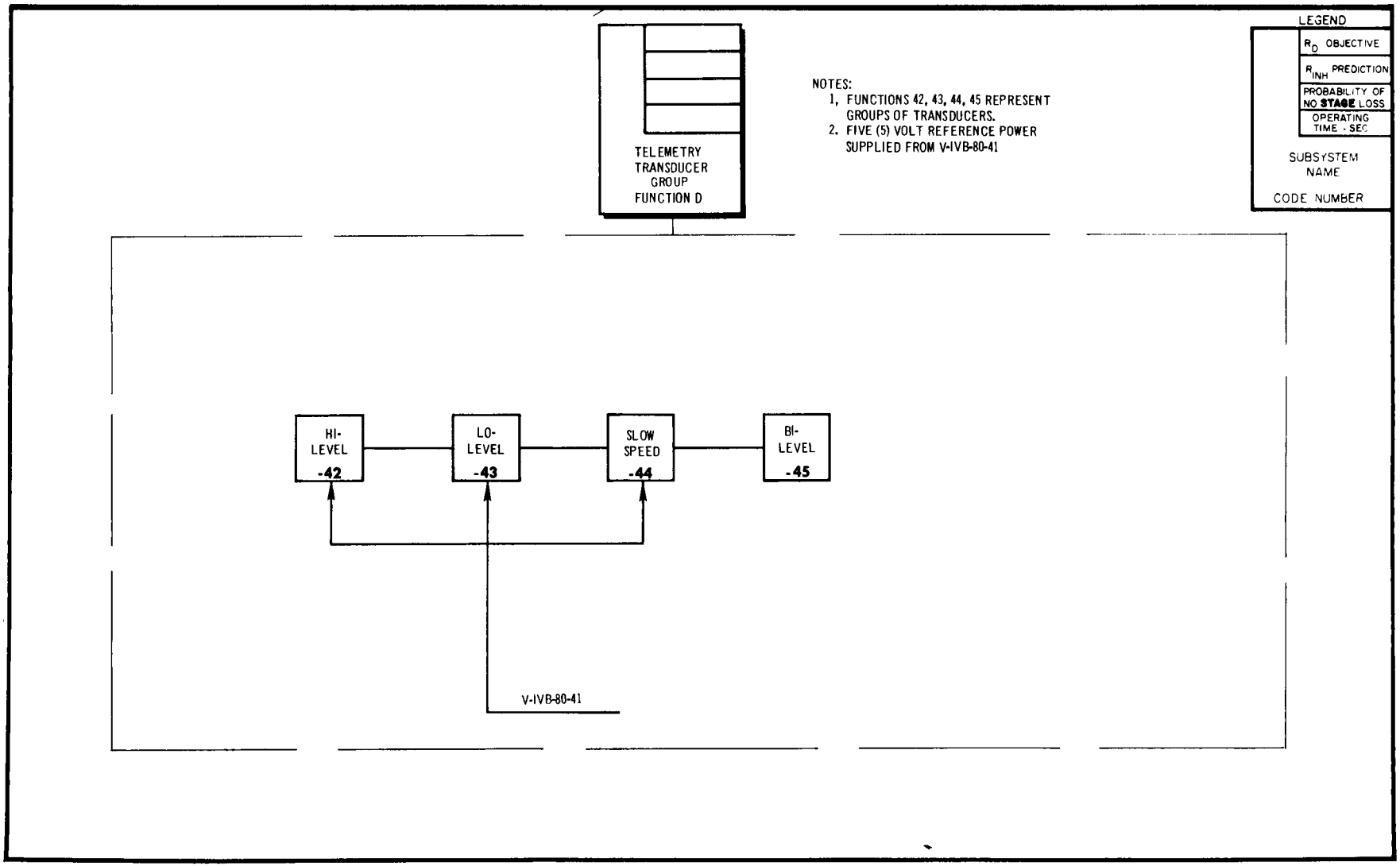
TELEMETRY
TRANSDUCER
GROUP
FUNCTION D
NOTES:
1, FUNCTIONS 42, 43, 44, 45 REPRESENT GROUPS OF TRANSDUCERS.
2. FIVE (5) VOLT REFERENCE POWER SUPPLIED FROM V-IVB-80-41
LEGEND
R_D OBJECTIVE
R_{INH} PREDICTION
PROBABILITY OF NO STAGE LOSS
OPERATING TIME - SEC
SUBSYSTEM NAME
CODE NUMBER
HI-LEVEL -42
LO-LEVEL -43
SLOW SPEED -44
BI-LEVEL -45
V-IVB-80-41

Δ ITEMS MARKED THUS (Δ) DO NOT OPERATE IN FLIGHT

RELIABILITY FAILURE EFFECT ANALYSIS

A) COUNTDOWN/CHECKOUT
B) COUNTDOWN - AUTOMATIC SEQUENCE
C) FLIGHT - BOOST PHASE
D) FLIGHT - POWERED PHASE, 1ST
E) FLIGHT - COAST PHASE, 1ST
F) FLIGHT - POWERED PHASE, 2ND
G) FLIGHT - COAST PHASE, 2ND

DATA ACQUISITION SUBSYSTEM

Δ	ITEM	FUNCTION	FAILURE TYPE	FAILURE EFFECT ON SUBSYSTEM PERFORMANCE	FAILURE EFFECT ON S-IVB STAGE	FAILURE EFFECT ON SATURN VEHICLE
	Signal Conditioning Networks V-IVB-80-01	Conditions electrical signals passing from transducers to multiplexer circuits.	Failure to operate or maintain operation as required due to electrical fault.	PARTIAL LOSS OF SUBSYSTEM Loss of input signal to multiplexer from any given transducer.	A) Possible delay in launching or scrub. B) TO BE DETERMINED Possible loss of automatic countdown sequence. C),D),E),F),G) Loss of one or more signals to SS/FM, PAM/FM/FM, PCM/FM transmission links. E) Possible loss of automatic checkout capability. F) TO BE DETERMINED (Possible delay in restart due to loss of automatic checkout capability.)	Same Same Same Same Same
	270 - Multiplexer V-IVB-80-02 270 - Multiplexer V-IVB-80-03 270 - Multiplexer V-IVB-80-04	1) Sequences all signals from low and high level transducer groups. 2) Provides signal amplification and isolation from following stage. 3) Provides time-division multiplexing in the form of PAM for transmission over PAM/FM/FM link.	Fails to operate or maintain operation as required due to electrical fault.	PARTIAL LOSS OF SUBSYSTEM Possible loss of all data on this channel.	A) Delay in launching. B) This failure does not hold automatic countdown sequence. C),D),E),F),G) 1) Possible loss of PAM/FM/FM data (270 data sources). 2) Possible loss of PCM/FM data (270 data sources). 3) Loss of redundant transmission.	Same Same Same

Δ ITEMS MARKED THUS (Δ) DO NOT OPERATE IN FLIGHT

RELIABILITY FAILURE EFFECT ANALYSIS

A) COUNTDOWN/CHECKOUT
B) COUNTDOWN - AUTOMATIC SEQUENCE
C) FLIGHT - BOOST PHASE
D) FLIGHT - POWERED PHASE, 1ST
E) FLIGHT - COAST PHASE, 1ST
F) FLIGHT - POWERED PHASE, 2ND
G) FLIGHT - COAST PHASE, 2ND

DATA ACQUISITION SUBSYSTEM

Δ	ITEM	FUNCTION	FAILURE TYPE	FAILURE EFFECT ON SUBSYSTEM PERFORMANCE	FAILURE EFFECT ON S-IVB STAGE	FAILURE EFFECT ON SATURN VEHICLE
	Subcarrier Oscillator (Center Frequency = 70 KC ± 30%) V-IVB-80-05	Generates an output subcarrier frequency that varies about 70 KC which is linearly proportional to the amplitude of the input PAM signal.	Failure to operate or maintain operation as required due to electrical fault.	PARTIAL LOSS OF SUBSYSTEM Possible loss of all data on this channel.	A) Delay in launching. B) TO BE DETERMINED This failure does not hold automatic countdown sequence. C),D),E),F),G) Possible loss of PAM/FM/FM data (270 data sources). NOTE: Redundancy provided on PCM/FM channel.	Same Same Same
	Subcarrier Oscillator (Center Frequency = 70 KC ± 30%) V-IVB-80-06					
	Subcarrier Oscillator (Center Frequency = 70 KC ± 30%) V-IVB-80-07					
	Summing Amplifier V-IVB-80-08	Amplifies subcarrier frequency signals to a signal level essential for transmitting after summing 15 separate input signals.	Fails to operate or maintain operation as required due to electrical fault.	PARTIAL LOSS OF SUBSYSTEM Possible loss of all data on this channel.	A) Delay in launching. B) This failure does not hold automatic countdown sequence. C),D),E),F),G) Possible loss of PAM/FM/FM data. (270 data sources). NOTE: Redundancy provided on PCM/FM channel.	Same Same Same
	Summing Amplifier V-IVB-80-09					
	Summing Amplifier V-IVB-80-10					

Δ ITEMS MARKED THUS (Δ) DO NOT OPERATE IN FLIGHT

RELIABILITY FAILURE EFFECT ANALYSIS

A) COUNTDOWN/CHECKOUT
B) COUNTDOWN-AUTOMATIC SEQUENCE
C) FLIGHT-BOOST PHASE
D) FLIGHT-POWERED PHASE, 1ST
E) FLIGHT-COAST PHASE, 1ST
F) FLIGHT-POWERED PHASE, 2ND
G) FLIGHT-COAST PHASE, 2ND

DATA ACQUISITION SUBSYSTEM

Δ ITEM	FUNCTION	FAILURE TYPE	FAILURE EFFECT ON SUBSYSTEM PERFORMANCE	FAILURE EFFECT ON S-IVB STAGE	FAILURE EFFECT ON SATURN VEHICLE
Transmitter-Amplifier PAM/FM/FM V-IVB-80-11	Transmits the output data signals from all subcarrier oscillators.	Fails to operate or maintain operation as required due to electrical fault.	PARTIAL LOSS OF SUBSYSTEM Possible loss of all data on this channel.	A) Delay in launching. B) This failure does not hold automatic countdown sequence. C),D),E),F),G) Possible loss of PAM/FM/FM data (270 data sources). NOTE: Redundancy provided on the PCM/FM channel.	Same Same Same
Transmitter-Amplifier PAM/FM/FM V-IVB-80-12					
Transmitter-Amplifier PAM/FM/FM V-IVB-80-13					
Bi-Directional Coupler V-IVB-80-14	Couples transmitted data from transmitter-amplifier to RF multiplexer for purpose of making standing wave ratio (SWR) measurement.	Fails to function or continue functioning as required due to electrical fault, e.g., crystal burnout or faulty connection.	PARTIAL LOSS OF SUBSYSTEM 1) Possible loss of all PAM/FM/FM data on channel. 2) Possible loss of SWR measured data.	A) Delay in launching. B) This failure does not hold automatic countdown sequence. C),D),E),F),G) 1) Possible loss of all PAM/FM/FM data (270 data sources). 2) Possible loss of SWR. NOTE: Redundancy provided on the PCM/FM channel.	Same Same Same
Bi-Directional Coupler V-IVB-80-15					
Bi-Directional Coupler V-IVB-80-16					

Δ ITEMS MARKED THUS (Δ) DO NOT OPERATE IN FLIGHT

RELIABILITY FAILURE EFFECT ANALYSIS

DATA ACQUISITION SUBSYSTEM

A) COUNTDOWN/CHECKOUT
B) COUNTDOWN-AUTOMATIC SEQUENCE
C) FLIGHT-BOOST PHASE
D) FLIGHT-POWERED PHASE, 1ST
E) FLIGHT-COAST PHASE, 1ST
F) FLIGHT-POWERED PHASE, 2ND
G) FLIGHT-COAST PHASE, 2ND

Δ ITEM	FUNCTION	FAILURE TYPE	FAILURE EFFECT ON SUBSYSTEM PERFORMANCE	FAILURE EFFECT ON S-IVB STAGE	FAILURE EFFECT ON SATURN VEHICLE
Calibration Unit V-IVB-80-17	1) Provides calibration voltage to PAM/FM/FM channel subcarrier oscillator. 2) Provides switching in SS/FM circuit for calibration purposes.	Failure to restore circuit to normal transmission mode due to electrical fault.	PARTIAL LOSS OF SUBSYSTEM Possible loss of PAM/FM/FM and/or SS/FM data.	A) Delay in launching.	Same
				B) TO BE DETERMINED Loss of automatic countdown sequence.	Same
				C),D),E),F),G) 1) Loss of PAM/FM/FM data (810 data sources). 2) Loss of SS/FM data.	Same
				F) TO BE DETERMINED Possible delay in restart based on human decision due to failure.	Same
		Failure to operate or maintain operation as required due to electrical fault.	PARTIAL LOSS OF SUBSYSTEM Possible loss of PAM/FM/FM and SS/FM data.	A) Delay in launching.	Same
				B) TO BE DETERMINED Loss of automatic countdown sequence.	Same
				C),D),E),F),G) 1) Probable degradation of PAM/FM/FM and SS/FM data. 2) Possible loss of all PAM/FM/FM and SS/FM data.	Same
				F) TO BE DETERMINED Possible delay in restart based on human decision due to inability to calibrate.	Same
Subsystem Wiring V-IVB-80-18	1) Provides electrical continuity between circuit elements in the data system.	Fails to maintain a continuous circuit path. (Open Circuit)	PROBABLE LOSS OF SUBSYSTEM Loss of data acquisition subsystem due to operating power loss.	A) Delay in launching.	Same
				B) Loss of automatic countdown sequence.	Same
				C) D) Loss of all data.	Same
				E) Loss of automatic checkout capability.	Same

(continued)

Δ ITEMS MARKED THUS (Δ) DO NOT OPERATE IN FLIGHT

RELIABILITY FAILURE EFFECT ANALYSIS

DATA ACQUISITION SUBSYSTEM

A) COUNTDOWN/CHECKOUT
B) COUNTDOWN-AUTOMATIC SEQUENCE
C) FLIGHT-BOOST PHASE
D) FLIGHT-POWERED PHASE, 1ST
E) FLIGHT-COAST PHASE, 1ST
F) FLIGHT-POWERED PHASE, 2ND
G) FLIGHT-COAST PHASE, 2ND

Δ ITEM	FUNCTION	FAILURE TYPE	FAILURE EFFECT ON SUBSYSTEM PERFORMANCE	FAILURE EFFECT ON S-IVB STAGE	FAILURE EFFECT ON SATURN VEHICLE
Subsystem Wiring V-IVB-80-18 (continued)		Fails to maintain a continuous circuit path. (Open Circuit) (continued)		(continued) F) TO BE DETERMINED Probable delay in restart. G) TO BE DETERMINED Loss of all checkout capability.	POSSIBLE LOSS OF MISSION FRT _____ sec. Same
		Fails to maintain circuit discontinuity (short circuit).	PROBABLE LOSS OF SUBSYSTEM Loss of data acquisition subsystem due to operating power loss.	A),B) POSSIBLE LOSS OF STAGE Fire caused by short circuit. C),D),E),F),G) POSSIBLE LOSS OF STAGE Fire caused by short circuit. B),C),D),E),F),G) POSSIBLE LOSS OF STAGE Battery depletion renders subsystem inoperative. F) TO BE DETERMINED Probable delay in restart. G) TO BE DETERMINED Loss of all checkout capability.	POSSIBLE LOSS OF VEHICLE FRT _____ sec. POSSIBLE LOSS OF VEHICLE FRT _____ sec. Same POSSIBLE LOSS OF MISSION FRT _____ sec. Same
RF Multiplexer V-IVB-80-19	Combines PAM/FM/FM and SS/FM signal energy for subsequent transmission to antenna array.	Fails to operate or maintain operation as required due to electrical or mechanical fault, e.g., structural collapse or cavity ionization.	PARTIAL LOSS OF SUBSYSTEM 1) Possible loss of PAM/FM/FM data. 2) Possible loss of SS/FM data.	A) Delay in launching or scrub. B) This failure does not hold automatic countdown sequence. C),D),E),F),G) 1) Possible loss of PAM/FM/FM data (270 data sources). 2) Possible loss of all SS/FM data.	Same Same Same

Δ ITEMS MARKED THUS (Δ) DO NOT OPERATE IN FLIGHT

RELIABILITY FAILURE EFFECT ANALYSIS

DATA ACQUISITION SUBSYSTEM

A) COUNTDOWN/CHECKOUT
B) COUNTDOWN-AUTOMATIC SEQUENCE
C) FLIGHT-BOOST PHASE
D) FLIGHT-POWERED PHASE, 1ST
E) FLIGHT-COAST PHASE, 1ST
F) FLIGHT-POWERED PHASE, 2ND
G) FLIGHT-COAST PHASE, 2ND

Δ ITEM	FUNCTION	FAILURE TYPE	FAILURE EFFECT ON SUBSYSTEM PERFORMANCE	FAILURE EFFECT ON S-IVB STAGE	FAILURE EFFECT ON SATURN VEHICLE
RF Multiplexer V-IVB-80-20	Combines PAM/FM/FM and PCM/FM signal energy for subsequent transmission to antenna array.	Fails to operate or maintain operation as required due to electrical or mechanical fault, e.g., structural collapse or cavity ionization.	PARTIAL LOSS OF SUBSYSTEM 1) Possible loss of PCM/FM data. 2) Possible partial loss of PAM/FM/FM data.	A) Delay in launching or scrub. B) This failure does not hold automatic countdown sequence. C),D),E),F),G) 1) Possible loss of PAM/FM/FM data (540 data sources). 2) Possible loss of PCM/FM data (1090 data sources). E) 1) Loss of automatic checkout capability. 2) Loss of recorded data. F) TO BE DETERMINED Possible delay in restart based on human decision due to loss of automatic checkout capability. G) TO BE DETERMINED Loss of checkout capability.	Same Same Same Same Same Same
Bi-Directional Coupler V-IVB-80-21	Couples transmitted data signals from RF multiplexer to power divider for standing wave ratio (SWR) measurement.	Fails to function or continue functioning as required due to electrical fault, e.g., crystal burnout or faulty connection.	PARTIAL LOSS OF SUBSYSTEM 1) Possible loss of SS/FM and PAM/FM/FM data. 2) Possible loss of SWR measured data.	A) Delay in launching. B) This failure does not hold automatic countdown sequence. C),D),E) 1) Possible loss of all SS/FM data. 2) Possible loss of PAM/FM/FM data (270 data sources). 3) Possible loss of SWR. F),G) Possible loss of PAM/FM/FM data (270 data sources).	Same Same Same Same

Δ ITEMS MARKED THUS (Δ) DO NOT OPERATE IN FLIGHT

RELIABILITY FAILURE EFFECT ANALYSIS

DATA ACQUISITION SUBSYSTEM

A) COUNTDOWN/CHECKOUT
B) COUNTDOWN-AUTOMATIC SEQUENCE
C) FLIGHT-BOOST PHASE
D) FLIGHT-POWERED PHASE, 1ST
E) FLIGHT-COAST PHASE, 1ST
F) FLIGHT-POWERED PHASE, 2ND
G) FLIGHT-COAST PHASE, 2ND

Δ	ITEM	FUNCTION	FAILURE TYPE	FAILURE EFFECT ON SUBSYSTEM PERFORMANCE	FAILURE EFFECT ON S-IVB STAGE	FAILURE EFFECT ON SATURN VEHICLE
	Bi-Directional Coupler V-IVB-80-22	Couples transmitted data signal from RF multiplexer to power divider for standing wave ratio(SWR)measurement.	Fails to function or continue functioning as required due to electrical fault,e.g., crystal burnout or faulty connection.	PARTIAL LOSS OF SUBSYSTEM 1) Possible loss of PAM/FM/FM and SS/FM data. 2) Possible loss of SWR measured data.	A) Delay in launching. B) This failure does not hold automatic countdown sequence. C),D),E),F),G) 1) Possible loss of PAM/FM/FM data (540 data sources). 2) Possible loss of PCM/FM/FM data (1080 data sources). 3) Possible loss of SWR. E) Loss of automatic checkout capability. F) TO BE DETERMINED Possible delay in restart due to loss of checkout capability. G) TO BE DETERMINED Loss of checkout capability.	Same Same Same Same Same
	Power Divider V-IVB-80-23	Divides the combined SS/FM and PAM/FM/FM signal energy between two antenna array.	Fails to operate or maintain operation as required due to electrical fault.	PARTIAL LOSS OF SUBSYSTEM Possible loss of PAM/FM/FM data and SS/FM data.	A) Delay in launching. B) This failure does not hold automatic countdown sequence. C),D),E),F),G) 1) Possible loss of PAM/FM/FM data (270 data sources). 2) Possible loss of all SS/FM data.	Same Same Same
	Power Divider V-IVB-80-24			PARTIAL LOSS OF SUBSYSTEM Possible loss of PAM/FM/FM data and PCM/FM data.	A) Delay in launching. B) This failure does not hold automatic countdown sequence. C),D),E),F),G) 1) Possible loss of PAM/FM/FM data (540 data sources).	Same Same Same

(continued)

Δ ITEMS MARKED THUS (Δ) DO NOT OPERATE IN FLIGHT

RELIABILITY FAILURE EFFECT ANALYSIS

A) COUNTDOWN/CHECKOUT
B) COUNTDOWN-AUTOMATIC SEQUENCE
C) FLIGHT-BOOST PHASE
D) FLIGHT-POWERED PHASE, 1ST
E) FLIGHT-COAST PHASE, 1ST
F) FLIGHT-POWERED PHASE, 2ND
G) FLIGHT-COAST PHASE, 2ND

DATA ACQUISITION SUBSYSTEM

Δ ITEM	FUNCTION	FAILURE TYPE	FAILURE EFFECT ON SUBSYSTEM PERFORMANCE	FAILURE EFFECT ON S-IVB STAGE	FAILURE EFFECT ON SATURN VEHICLE
Power Divider V-IVB-80-24 (continued)		Fails to operate or maintain operation as required due to electrical fault. (continued)		(continued) 2) Possible loss of PCM/FM data (1080 data sources). E) Loss of automatic check-out capability. F) TO BE DETERMINED Possible delay in restart based on human decision due to loss of automatic checkout. G) TO BE DETERMINED Loss of all checkout capability.	 Same Same Same
Bi-Directional Coupler(2) V-IVB-80-25	Couples transmitted data from power divider to antenna for standing wave ratio (SWR) measurement.	Fails to function or continue functioning as required due to electrical fault, e.g., crystal burnout or bad connection.	PARTIAL LOSS OF SUBSYSTEM Possible loss of all information on this channel. NOTE: This represents a worst-case condition affecting other side of two antenna array.	A) Delay in launching. B) This failure does not hold automatic countdown sequence. C),D),E) 1) Possible loss of SS/FM data. 2) Possible loss of PAM/FM/FM data (270 data sources). 3) Possible loss of SWR F),G) 1) Possible loss of PAM/FM/FM data (270 data sources). 2) Possible loss of SWR.	Same Same Same Same
Bi-Directional Coupler(2) V-IVB-80-26				A) Delay in launching. B) This failure does not hold automatic countdown sequence. C),D),E),F),G) 1) Possible loss of PAM/FM/FM data (540 data sources). 2) Possible loss of PCM/FM data (1080 data sources). 3) Possible loss of SWR. (continued)	Same Same Same Same

Δ ITEMS MARKED THUS (##) DO NOT OPERATE IN FLIGHT

RELIABILITY FAILURE EFFECT ANALYSIS

DATA ACQUISITION SUBSYSTEM

A) COUNTDOWN/CHECKOUT
B) COUNTDOWN-AUTOMATIC SEQUENCE
C) FLIGHT-BOOST PHASE
D) FLIGHT-POWERED PHASE, 1ST
E) FLIGHT-COAST PHASE, 1ST
F) FLIGHT-POWERED PHASE, 2ND
G) FLIGHT-COAST PHASE, 2ND

Δ	ITEM	FUNCTION	FAILURE TYPE	FAILURE EFFECT ON SUBSYSTEM PERFORMANCE	FAILURE EFFECT ON S-IVB STAGE	FAILURE EFFECT ON SATURN VEHICLE
	Bi-Directional Coupler(2) V-IVB-80-26 (continued)		Fails to function or continue functioning as required due to electrical fault, e.g., crystal burnout or bad connection. (continued)		(continued) E) Possible loss of automatic checkout sequence. F) TO BE DETERMINED Possible delay in restart. G) TO BE DETERMINED Loss of checkout capability.	 Same Same Same
	Antenna (2) V-IVB-80-27	Propagates PAM/FM/FM and SS/FM data signal energy from S-IVB stage.	Failure to operate or maintain operation as required due to electrical or mechanical fault; e.g., voltage break-down or structural deformation, etc.	PARTIAL LOSS OF SUBSYSTEM Possible loss of all data being propagated. Redundancy is limited due to the nature of design. Depending on failure, degradation or total loss can occur.	A) Possible delay in launching. B) This failure does not hold automatic countdown sequence. C),D),E),F),G) 1) Possible loss of PAM/FM/FM data (270 data sources). 2) Possible loss of SS/FM data. F) TO BE DETERMINED Possible delay in restart.	Same Same Same Same Same
	Antenna (2) V-IVB-80-28	Propagates PAM/FM/FM and PCM/FM data signal energy from S-IVB stage.	Failure to operate or maintain operation as required due to electrical or mechanical fault; e.g., voltage break-down or structural deformation, etc.	PARTIAL LOSS OF SUBSYSTEM Possible loss of propagated data. Redundancy is limited due to the nature of design. Depending on failure, degradation or total loss can occur.	A) Possible delay in launching. B) This failure does not hold automatic countdown sequence. C),D),E) 1) Possible loss of PAM/FM/FM data (540 data sources). 2) Possible loss of PAM/FM/FM data (1080 data sources). F) TO BE DETERMINED Possible delay in restart. G) TO BE DETERMINED Possible loss of checkout capability.	Same Same Same Same Same

Δ ITEMS MARKED THUS (Δ) DO NOT OPERATE IN FLIGHT

RELIABILITY FAILURE EFFECT ANALYSIS

A) COUNTDOWN/CHECKOUT
B) COUNTDOWN-AUTOMATIC SEQUENCE
C) FLIGHT-BOOST PHASE
D) FLIGHT-POWERED PHASE, 1ST
E) FLIGHT-COAST PHASE, 1ST
F) FLIGHT-POWERED PHASE, 2ND
G) FLIGHT-COAST PHASE, 2ND

DATA ACQUISITION SUBSYSTEM

Δ ITEM	FUNCTION	FAILURE TYPE	FAILURE EFFECT ON SUBSYSTEM PERFORMANCE	FAILURE EFFECT ON S-IVB STAGE	FAILURE EFFECT ON SATURN VEHICLE
SS/FM Unit V-IVB-80-29	1) Provides single sideband transmission for all vibration and acoustics parameter data. 2) Combines all subcarrier frequency channels into main RF carrier frequency for subsequent transmission.	Fails to operate and maintain operation as required due to electrical fault.	PARTIAL LOSS OF SUBSYSTEM Possible loss of all data on this channel.	A) Delay in launching. B) This failure does not hold automatic countdown sequence. C),D),E) Possible loss of all SS/FM data. F),G) None - SS/FM subsystem is not in operation.	Same Same Same Same
Frequency Synthesizer V-IVB-80-30	Provides separate channel frequencies for all measurements.	Fails to operate and maintain operation as required due to electrical fault.	PARTIAL LOSS OF SUBSYSTEM Possible loss of all data on this channel.	A) Delay in launching. B) This failure does not hold automatic countdown sequence. C),D),E) Possible loss of all SS/FM data. F),G) None; SS/FM subsystem is not in operation.	Same Same Same Same
Transmitter - Amplifier V-IVB-80-31	Transmits all SS/FM data.	Fails to operate and maintain operation as required due to electrical fault.	PARTIAL LOSS OF SUBSYSTEM Possible loss of all data on this channel.	A) Delay in launching. B) This failure does not hold automatic countdown sequence. C),D),E) Possible loss of all data. F),G) None - SS/FM subsystem is not in operation.	Same Same Same Same
Bi-Directional Coupler V-IVB-80-32	Couples transmitted data from transmitter-amplifier to RF multiplexer for purpose of making standing wave ratio (SWR) measurement.	Failure to function or continue functioning as required due to electrical fault, e.g. crystal burnout or faulty connection.	PARTIAL LOSS OF SUBSYSTEM 1) Possible loss of all SS/FM data. 2) Possible loss of SWR measured data.	A) Delay in launching. B) This failure does not hold automatic countdown sequence. C),D),E) Possible loss of all SS/FM data. F),G) None - SS/FM is not in operation.	Same Same Same Same

Δ ITEMS MARKED THUS (##) DO NOT OPERATE IN FLIGHT

RELIABILITY FAILURE EFFECT ANALYSIS

A) COUNTDOWN/CHECKOUT
B) COUNTDOWN-AUTOMATIC SEQUENCE
C) FLIGHT-BOOST PHASE
D) FLIGHT-POWERED PHASE, 1ST
E) FLIGHT-COAST PHASE, 1ST
F) FLIGHT-POWERED PHASE, 2ND
G) FLIGHT-COAST PHASE, 2ND

DATA ACQUISITION SUBSYSTEM

Δ	ITEM	FUNCTION	FAILURE TYPE	FAILURE EFFECT ON SUBSYSTEM PERFORMANCE	FAILURE EFFECT ON S-IVB STAGE	FAILURE EFFECT ON SATURN VEHICLE
	270 Multiplexer V-IVB-80-33	1) Sequences all signals from low and high-level transducer group. 2) Provides signal amplification and isolation from following stage. 3) Provides time-division multiplexing in the form of PAM for transmission over PCM/FM channel. NOTE: PAM is converted to PCM in the digital data acquisition unit.	Fails to operate or maintain operation as required due to electrical fault.	PARTIAL LOSS OF SUBSYSTEM Possible loss of all data on this channel.	A) Delay in launching or scrub. B) Possible loss of automatic countdown sequence. C),D),E),F),G) Possible loss of PCM/FM data (270 data sources). E) 1) Loss of automatic checkout capability. 2) Loss of flight data to vehicle recorder. F) TO BE DETERMINED Possible delay in restart due to loss of automatic checkout capability. G) TO BE DETERMINED Loss of checkout capability.	Same Same Same Same Same Same
*	270 Multiplexer V-IVB-80-34	1) Sequences all signals from low and high-level transducer groups. 2) Provides signal amplification and isolation from following stage. 3) Provides time-division multiplexing in the form of PAM for transmission over PCM/FM channel. NOTE: PAM is converted to PCM in the digital data acquisition unit.	Fails to operate and maintain operation as required due to electrical fault.	PARTIAL LOSS OF SUBSYSTEM Possible loss of all data on this channel.	A) Possible loss of checkout capability - delay in launching or scrub. B) Possible loss of automatic countdown sequence. C),D),E),F),G) None - component is not in operation.	Same Same Same
	Bi-Level Multiplexer V-IVB-80-35	1) Sequences all signals from high level transducer group. 2) Provides signal amplification and isolation from following stage. 3) Provides time-division multiplexing in the form of PAM for transmission over PCM/FM channel. NOTE: PAM is converted to PCM in the digital data acquisition unit.	Fails to operate and maintain operation as required due to electrical fault.	PARTIAL LOSS OF SUBSYSTEM Possible loss of all data on related channel.	A) Possible loss of checkout capability - delay in launching or scrub. B) Possible loss of automatic countdown sequence. C),D),E),F),G) Possible loss of all discrete data. E) Possible loss of automatic checkout capability. (continued)	Same Same Same Same

Δ ITEMS MARKED THUS (Δ) DO NOT OPERATE IN FLIGHT

RELIABILITY FAILURE EFFECT ANALYSIS

A) COUNTDOWN/CHECKOUT
B) COUNTDOWN - AUTOMATIC SEQUENCE
C) FLIGHT - BOOST PHASE
D) FLIGHT - POWERED PHASE, 1ST
E) FLIGHT - COAST PHASE, 1ST
F) FLIGHT - POWERED PHASE, 2ND
G) FLIGHT - COAST PHASE, 2ND

DATA ACQUISITION SUBSYSTEM

Δ	ITEM	FUNCTION	FAILURE TYPE	FAILURE EFFECT ON SUBSYSTEM PERFORMANCE	FAILURE EFFECT ON S-IVB STAGE	FAILURE EFFECT ON SATURN VEHICLE
	Bi-Level Multiplexer V-IVB-80-35 (continued)		Fails to operate and maintain operation as required due to electrical fault. (continued)		(continued) F) TO BE DETERMINED Possible delay in restart due to loss of automatic check-out capability.	Same
	Bi-Level Multiplexer V-IVB-80-36	1) Sequence all signals from high-level transducer group. 2) Provides signal amplification and isolation from following stage. 3) Provides time-division multiplexing in the form of PAM for transmission over PCM/FM channel. NOTE: PAM is converted to PCM in the digital data acquisition unit.	Fails to operate and maintain operation as required due to electrical fault.	PARTIAL LOSS OF SUBSYSTEM Possible loss of all data on related channel.	A) Possible loss of checkout capability - delay in launching or scrub. B) Possible loss of automatic countdown sequence. C),D),E),F),G) Possible loss of all discrete data. E) Possible loss of automatic checkout capability. F) TO BE DETERMINED Possible delay in restart due to loss of automatic checkout capability.	Same Same Same Same Same
	Digital Data Acquisition Unit V-IVB-80-37	1) Converts PAM data from four (4) PAM data channels into a pulse-code modulated (PCM) signal. 2) Digitalizes PAM data for in-flight recording and PCM/FM transmission. NOTE: Each data channel has a 300 data sources capacity.	Failure to operate or maintain operation as required due to electrical fault.	PARTIAL LOSS OF SUBSYSTEM Possible loss of all signal data to PCM/FM transmitter or to ground support equipment (checkout).	A) Possible loss of checkout capability - delay in launching or scrub. B) Possible loss of automatic countdown sequence. C),D),E),F),G) Possible loss of PCM/FM data (1080 data sources). NOTE: Redundancy provided for 810 data sources on PAM/FM/FM channels. E) 1) Loss of automatic checkout capability. 2) Loss of flight data to vehicle recorder. (continued)	Same Same Same Same

Δ ITEMS MARKED THUS (Δ) DO NOT OPERATE IN FLIGHT

RELIABILITY FAILURE EFFECT ANALYSIS

A) COUNTDOWN/CHECKOUT
B) COUNTDOWN - AUTOMATIC SEQUENCE
C) FLIGHT - BOOST PHASE
D) FLIGHT - POWERED PHASE, 1ST
E) FLIGHT - COAST PHASE, 1ST
F) FLIGHT - POWERED PHASE, 2ND
G) FLIGHT - COAST PHASE, 2ND

DATA ACQUISITION SUBSYSTEM

Δ	ITEM	FUNCTION	FAILURE TYPE	FAILURE EFFECT ON SUBSYSTEM PERFORMANCE	FAILURE EFFECT ON S-IVB STAGE	FAILURE EFFECT ON SATURN VEHICLE
	Digital Data Acquisition Unit V-IVB-80-37 (continued)		Failure to operate or maintain operation as required due to electrical fault. (continued)		(continued) F) TO BE DETERMINED Possible delay in restart based on human decision due to loss of automatic check-out capability. G) TO BE DETERMINED Loss of checkout capability.	 Same Same
	Vehicle Recorder V-IVB-80-38	1) Records flight parameter data when vehicle is "out-of-range". 2) Plays back recorded flight parameter data when vehicle is "in-range".	Failure to operate and maintain operation as required due to electrical or mechanical fault.	PARTIAL LOSS OF SUBSYSTEM Loss of data to verify LO_2 venting, attitude stabilization, and other recorded parameters.	A) Delay in launching or scrub. B) This failure does not hold automatic countdown sequence. C),D),E) Loss of recorded flight data. F) TO BE DETERMINED Possible delay in restart based on human decision - due to loss of data. G) None - recorder is not in operation.	Same Same Same Same Same
	Transmitter-Amplifier PCM/FM V-IVB-80-39	Transmits all PCM/FM data received from digital data acquisition unit.	Fails to operate or maintain operation as required due to electrical fault.	PARTIAL LOSS OF SUBSYSTEM Possible loss of all PCM/FM data, and recorded data.	A) Delay in launching or scrub. B) This failure does not hold automatic countdown sequence. C),D),E),F),G) 1) Possible loss of PCM/FM data (1080 data sources). 2) Redundancy provided for 810 data sources on PAM/FM/FM channels. E) 1) Loss of automatic check-out capability. 2) Loss of recorded flight data. (continued)	Same Same Same Same

Δ ITEMS MARKED THUS (Δ) DO NOT OPERATE IN FLIGHT

RELIABILITY FAILURE EFFECT ANALYSIS

DATA ACQUISITION SUBSYSTEM

A) COUNTDOWN/CHECKOUT
B) COUNTDOWN-AUTOMATIC SEQUENCE
C) FLIGHT-BOOST PHASE
D) FLIGHT-POWERED PHASE, 1ST
E) FLIGHT-COAST PHASE, 1ST
F) FLIGHT-POWERED PHASE, 2ND
G) FLIGHT-COAST PHASE, 2ND

Δ ITEM	FUNCTION	FAILURE TYPE	FAILURE EFFECT ON SUBSYSTEM PERFORMANCE	FAILURE EFFECT ON S-IVB STAGE	FAILURE EFFECT ON SATURN VEHICLE
Transmitter-Amplifier PCM/FM V-IVB-80-39 (continued)		Fails to operate or maintain operation as required due to electrical fault. (continued)		(continued) F) TO BE DETERMINED Possible delay in restart based on human decision due to loss of automatic check-out capability. G) TO BE DETERMINED Loss of checkout capability.	Same Same
Bi-Directional Coupler V-IVB-80-40	Couples all transmitted data to RF multiplexer for purpose of measuring standing wave ratio (SWR).	Fails to function or continue functioning as required due to electrical fault, e.g., crystal burnout or bad connection.	PARTIAL LOSS OF SUBSYSTEM Possible loss of all PCM/FM data, recorded data, and SWR.	A) Delay in launching or scrub. B) This failure does not hold automatic countdown sequence. C),D),E),F),G) 1) Possible loss of PCM/FM data (1080 data sources). NOTE: Redundancy provided for 810 data sources on PAM/FM/FM channels. 2) Possible loss of SWR. E) 1) Loss of automatic check-out capability. 2) Loss of recorded flight data. F) TO BE DETERMINED Possible delay in restart based on human decision due to loss of automatic checkout capability. G) TO BE DETERMINED Loss of checkout capability.	Same Same Same Same Same

Δ ITEMS MARKED THUS (Δ) DO NOT OPERATE IN FLIGHT

RELIABILITY FAILURE EFFECT ANALYSIS

A) COUNTDOWN/CHECKOUT
B) COUNTDOWN-AUTOMATIC SEQUENCE
C) FLIGHT-BOOST PHASE
D) FLIGHT-POWERED PHASE, 1ST
E) FLIGHT-COAST PHASE, 1ST
F) FLIGHT-POWERED PHASE, 2ND
G) FLIGHT-COAST PHASE, 2ND

DATA ACQUISITION SUBSYSTEM

Δ	ITEM	FUNCTION	FAILURE TYPE	FAILURE EFFECT ON SUBSYSTEM PERFORMANCE	FAILURE EFFECT ON S-IVB STAGE	FAILURE EFFECT ON SATURN VEHICLE
	5-Volt Excitation Module V-IVB-80-41	Provides excitation voltage to the high level, low level, and slow speed transducer groups and the 270-multiplexers.	Failure to operate and maintain operation as required due to electrical fault.	PARTIAL LOSS OF SUBSYSTEM Loss of expected transducer outputs due to loss or degradation in excitation voltage.	A) Loss of checkout capability - delay in launching or scrub. B) TO BE DETERMINED Possible loss of automatic countdown sequence. C),D),E) Loss of or degradation of SS/FM, PAM/FM/FM and PCM/FM data. E) Loss of automatic checkout capability. F),G) Loss and/or degradation of PAM/FM/FM and PCM/FM data.	Same Same Same Same
	High Level Output Transducer Group V-IVB-80-42	Provides input signals to subsystem for monitoring of pressure, acceleration, velocity, voltage, current, and position parameters.	Failure to operate and maintain operation as required due to either a mechanical or electrical fault.	PARTIAL LOSS OF SUBSYSTEM Loss of single transducer input into the subsystem.	A) Possible loss of checkout capability - delay in launching. B) TO BE DETERMINED Possible loss of automatic countdown sequence. C),D),E),F),G) Loss of capability to monitor failed transducer function. F) TO BE DETERMINED Possible delay in restart based on human decision.	Same Same Same Same
	Low Level Output Transducer Group V-IVB-80-43	Provides input signals to subsystem for monitoring of temperature and strain parameters.	Failure to provide and maintain a signal as required due to either a mechanical or electrical fault.	PARTIAL LOSS OF SUBSYSTEM Loss of single transducer signal.	A) Possible loss of checkout capability - delay in launching. B) TO BE DETERMINED Possible loss of automatic countdown sequence. C),D),E),F),G) Loss of capability to monitor failed transducer function. (continued)	Same Same Same

Δ ITEMS MARKED THUS (Δ) DO NOT OPERATE IN FLIGHT

RELIABILITY FAILURE EFFECT ANALYSIS

A) COUNTDOWN/CHECKOUT
B) COUNTDOWN-AUTOMATIC SEQUENCE
C) FLIGHT-BOOST PHASE
D) FLIGHT-POWERED PHASE, 1ST
E) FLIGHT-COAST PHASE, 1ST
F) FLIGHT-POWERED PHASE, 2ND
G) FLIGHT-COAST PHASE, 2ND

DATA ACQUISITION SUBSYSTEM

Δ ITEM	FUNCTION	FAILURE TYPE	FAILURE EFFECT ON SUBSYSTEM PERFORMANCE	FAILURE EFFECT ON S-IVB STAGE	FAILURE EFFECT ON SATURN VEHICLE
Low Level Output Transducer Group V-IVB-80-43 (continued)		Failure to provide and maintain a signal as required due to either a mechanical or electrical fault. (continued)		(continued) F) TO BE DETERMINED Possible delay in restart based on human decision.	Same
Slow Speed Output Transducer Group V-IVB-80-44	Provides input signals to subsystem for monitoring of vibration and acoustics parameters.	Failure to provide and maintain a signal as required due to an electrical or mechanical fault.	PARTIAL LOSS OF SUBSYSTEM Loss of single transducer signal.	A) Possible delay in launching.	Same
				B) TO BE DETERMINED This failure does not hold automatic countdown sequence.	Same
				C),D),E) Loss of capability to monitor function via SS/FM transmission link.	Same
				F),G) None - not used after first coast phase.	Same
Bi-Level Output Transducer Group V-IVB-80-45	Provides input signals to subsystem for monitoring of discrete voltage level signal data (0 or 28 volts).	Failure to provide and maintain a signal as required due to an electrical or mechanical fault.	PARTIAL LOSS OF SUBSYSTEM Loss of single transducer signal.	A) Possible loss of checkout capability - delay in launching.	Same
				B) TO BE DETERMINED Possible loss of automatic countdown sequence.	Same
				C),D),E),F),G) Loss of capability to monitor function via PCM transmission link.	Same
				E) Loss of automatic checkout capability.	Same
				F) TO BE DETERMINED Possible delay in restart due to loss of automatic checkout capability.	Same

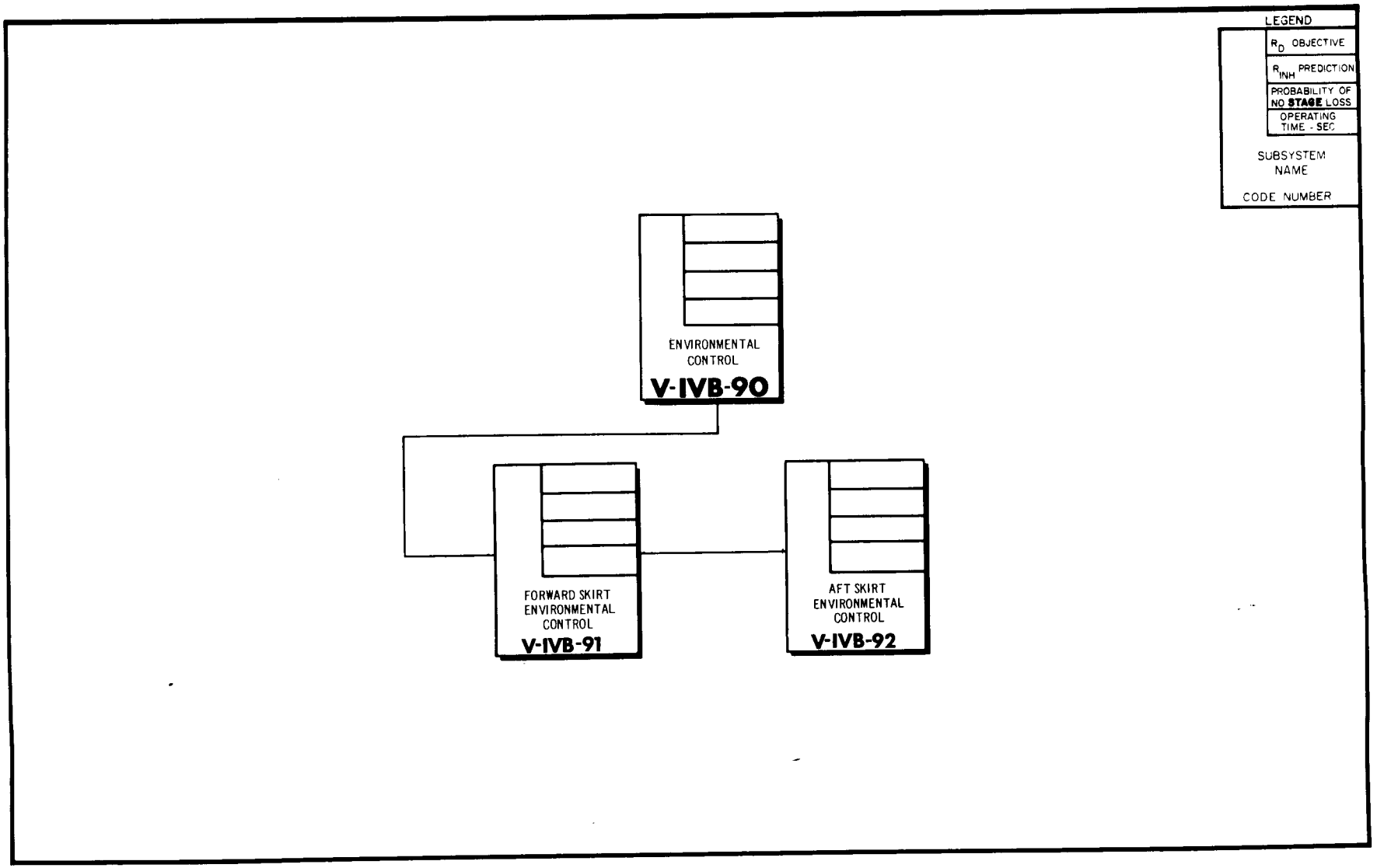
LEGEND
R_D OBJECTIVE
R_{INH} PREDICTION
PROBABILITY OF NO STAGE LOSS
OPERATING TIME - SEC
SUBSYSTEM NAME
CODE NUMBER
ENVIRONMENTAL CONTROL
V-IVB-90
FORWARD SKIRT ENVIRONMENTAL CONTROL
V-IVB-91
AFT SKIRT ENVIRONMENTAL CONTROL
V-IVB-92

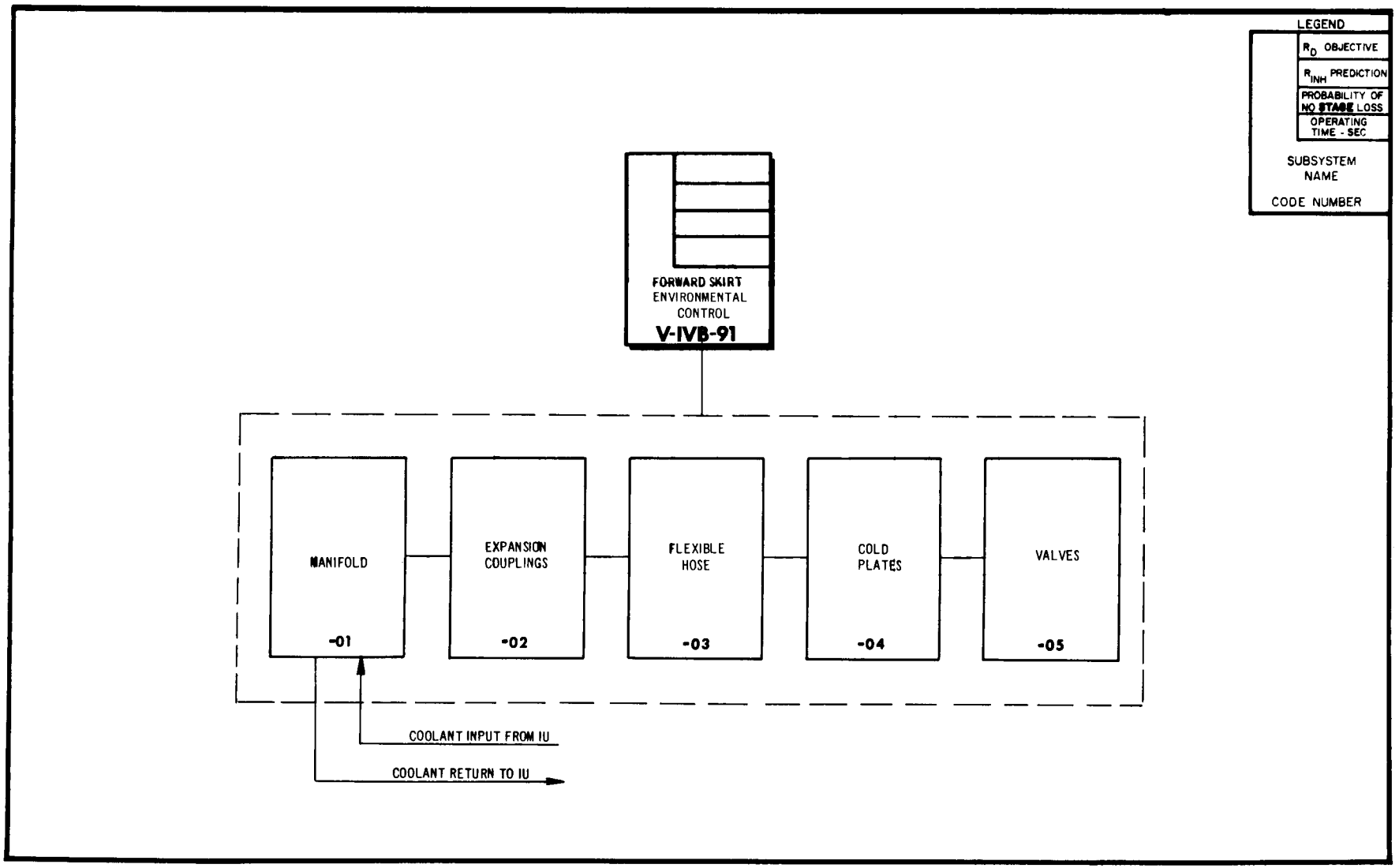
LEGEND
R_D OBJECTIVE
R_{INH} PREDICTION
PROBABILITY OF NO STAGE LOSS
OPERATING TIME - SEC
SUBSYSTEM NAME
CODE NUMBER
FORWARD SKIRT ENVIRONMENTAL CONTROL
V-IVB-91
MANIFOLD
-01
EXPANSION COUPLINGS
-02
FLEXIBLE HOSE
-03
COLD PLATES
-04
VALVES
-05
COOLANT INPUT FROM IU
COOLANT RETURN TO IU

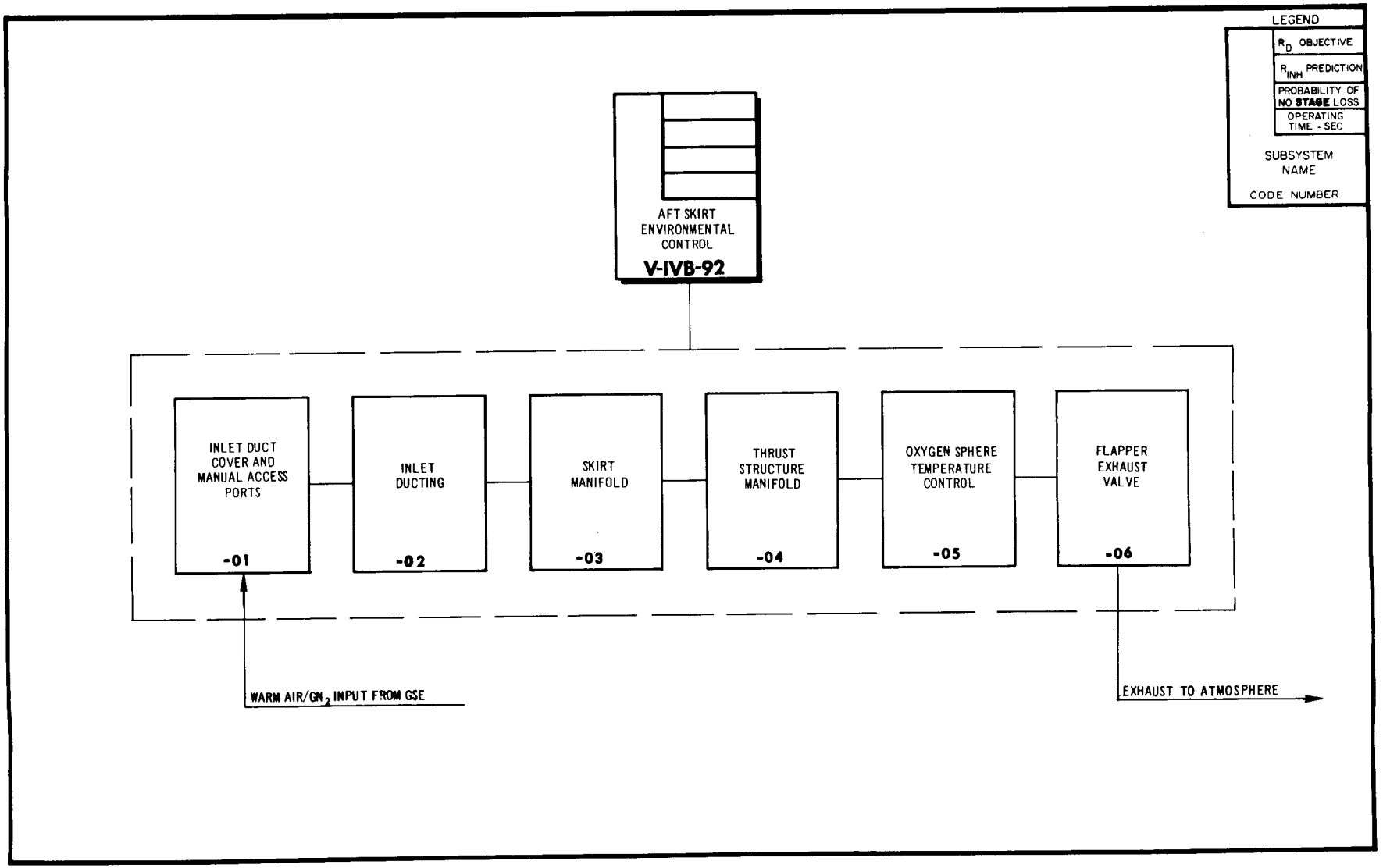
LEGEND
R_D OBJECTIVE
R_{INH} PREDICTION
PROBABILITY OF NO STAGE LOSS
OPERATING TIME - SEC
SUBSYSTEM NAME
CODE NUMBER
AFT SKIRT ENVIRONMENTAL CONTROL
V-IVB-92
INLET DUCT COVER AND MANUAL ACCESS PORTS
-01
INLET DUCTING
-02
SKIRT MANIFOLD
-03
THRUST STRUCTURE MANIFOLD
-04
OXYGEN SPHERE TEMPERATURE CONTROL
-05
FLAPPER EXHAUST VALVE
-06
WARM AIR/GN_2 INPUT FROM GSE
EXHAUST TO ATMOSPHERE

Δ ITEMS MARKED THUS (Δ) DO NOT OPERATE IN FLIGHT

RELIABILITY FAILURE EFFECT ANALYSIS

A) COUNTDOWN/CHECKOUT
B) COUNTDOWN - AUTOMATIC SEQUENCE
C) FLIGHT - BOOST PHASE
D) FLIGHT - POWERED PHASE, 1ST
E) FLIGHT - COAST PHASE, 1ST
F) FLIGHT - POWERED PHASE, 2ND
G) FLIGHT - COAST PHASE, 2ND

FORWARD SKIRT ENVIRONMENTAL CONTROL

Δ ITEM	FUNCTION	FAILURE TYPE	FAILURE EFFECT ON SUBSYSTEM PERFORMANCE	FAILURE EFFECT ON S-IVB STAGE	FAILURE EFFECT ON SATURN VEHICLE
Manifold V-IVB-91-01	The manifold consists of the supply and return lines providing a flow path for circulation of coolant from the thermo-conditioner, located forward of the S-IVB stage, to the cold plates (V-IVB-91-04). Circulating coolant maintains the cold plates at a temperature of approximately 60°F.	1) Leakage at connections or welded joints.	POSSIBLE LOSS OF SUBSYSTEM Leakage of coolant is continuous, and depending upon amount lost subsystem performance may be degraded or lost.	A) Delay in launching.	Same
				B) This failure does not hold automatic countdown. A failure during B) phase would have no effect until E) phase.	Same
				C),D) None; C),D) phase time too short for failure to produce an effect upon components located in forward skirt area; however, failure is considered significant during E) phase.	Same
				E) POSSIBLE LOSS OF STAGE Degradation of temperature control may result in failure of electronic units. Loss of propellant utilization control, power distribution, inverter-converter, or EBW firing unit may occur with resultant loss of control of stage. Failure of other units result in loss of data acquisition capabilities.	POSSIBLE LOSS OF MISSION FRT _____ minutes
				F) None; phase time too short for failure to produce an effect upon electronic components located in forward skirt.	Same
				G) POSSIBLE LOSS OF STAGE Same as E) phase.	POSSIBLE LOSS OF MISSION FRT _____ minutes

Δ ITEMS MARKED THUS (Δ) DO NOT OPERATE IN FLIGHT

RELIABILITY FAILURE EFFECT ANALYSIS

FORWARD SKIRT ENVIRONMENTAL CONTROL

A) COUNTDOWN/CHECKOUT
B) COUNTDOWN-AUTOMATIC SEQUENCE
C) FLIGHT-BOOST PHASE
D) FLIGHT-POWERED PHASE, 1ST
E) FLIGHT-COAST PHASE, 1ST
F) FLIGHT-POWERED PHASE, 2ND
G) FLIGHT-COAST PHASE, 2ND

Δ	ITEM	FUNCTION	FAILURE TYPE	FAILURE EFFECT ON SUBSYSTEM PERFORMANCE	FAILURE EFFECT ON S-IVB STAGE	FAILURE EFFECT ON SATURN VEHICLE
	Manifold V-IVB-91-01 (continued)		2) Rupture.		A) Delay in launching or scrub.	Same
					B) This failure does not hold automatic countdown sequence. However, subsequent temperature rise may produce electronic failures which hold automatic countdown sequence. Failure effect considered significant during E) phase.	Same
					C),D) None; phase time too short for failures to result from loss of temperature control. Failure considered significant during E) phase.	Same
					E) POSSIBLE LOSS OF STAGE Loss of temperature control may result in failure of electronic units. Loss of propellant utilization control, power distribution, inverter-converter, or retro rocket EBW firing unit may occur, with resultant loss of control of stage. Failure of other units result in loss of data acquisition capabilities.	POSSIBLE LOSS OF MISSION FRT _____ minutes
					F) None; phase time too short for failures to result from loss of temperature control. Failure considered significant during G) phase.	Same
					G) POSSIBLE LOSS OF STAGE Loss of temperature control may result in failure of electronic units. Loss of propellant utilization control, power distribution, inverter-converter, or retro rocket EBW may occur with resultant loss of control of stage. Failure of other units result in loss of data acquisition capabilities.	POSSIBLE LOSS OF MISSION FRT _____ minutes

Δ ITEMS MARKED THUS (Δ) DO NOT OPERATE IN FLIGHT

RELIABILITY FAILURE EFFECT ANALYSIS

FORWARD SKIRT ENVIRONMENTAL CONTROL

A) COUNTDOWN/CHECKOUT
B) COUNTDOWN-AUTOMATIC SEQUENCE
C) FLIGHT-BOOST PHASE
D) FLIGHT-POWERED PHASE, 1ST
E) FLIGHT-COAST PHASE, 1ST
F) FLIGHT-POWERED PHASE, 2ND
G) FLIGHT-COAST PHASE, 2ND

Δ ITEM	FUNCTION	FAILURE TYPE	FAILURE EFFECT ON SUBSYSTEM PERFORMANCE	FAILURE EFFECT ON S-IVB STAGE	FAILURE EFFECT ON SATURN VEHICLE
Couplings V-IVB-91-02	Joins sections of manifold to permit expansion and contraction.	Mechanical failure (leakage).	POSSIBLE LOSS OF SUBSYSTEM Leakage of coolant is continuous, and depending upon amount lost subsystem performance may be degraded or lost.	A) Delay in launching. B) This failure does not hold automatic countdown sequence Failure not considered significant until E) phase. C),D) None; phase time too short for electronic failures to result from loss of temperature control. Failure considered significant during E) phase. E) POSSIBLE LOSS OF STAGE Degradation of temperature control may result in failure of electronic units. Loss of inverter-converter, propellant utilization control, power distribution, or retro rocket EEW firing unit may occur, with resultant loss of control of stage. Failure of other units result in loss of data acquisition capability. F) None; phase time too short for electronic failure to result from loss of temperature control. Failure considered significant during G) phase. G) POSSIBLE LOSS OF STAGE Same as phase E).	Same Same Same POSSIBLE LOSS OF MISSION FRT _____ minutes Same POSSIBLE LOSS OF MISSION FRT _____ minutes
Flexible Hose V-IVB-91-03	Joins the manifold (V-IVB-91-01) supply and return lines to each cold plate (V-IVB-91-04).	Mechanical failure (leakage).	POSSIBLE LOSS OF SUBSYSTEM Leakage of coolant is continuous and depending upon amount lost subsystem performance may be degraded or lost.	A) Delay in launching. B) This failure does not hold automatic countdown sequence. Failure not considered significant until E) phase. (continued)	Same Same

Δ ITEMS MARKED THUS (Δ) DO NOT OPERATE IN FLIGHT

RELIABILITY FAILURE EFFECT ANALYSIS

FORWARD SKIRT ENVIRONMENTAL CONTROL

A) COUNTDOWN/CHECKOUT
B) COUNTDOWN-AUTOMATIC SEQUENCE
C) FLIGHT-BOOST PHASE
D) FLIGHT-POWERED PHASE, 1ST
E) FLIGHT-COAST PHASE, 1ST
F) FLIGHT-POWERED PHASE, 2ND
G) FLIGHT-COAST PHASE, 2ND

Δ	ITEM	FUNCTION	FAILURE TYPE	FAILURE EFFECT ON SUBSYSTEM PERFORMANCE	FAILURE EFFECT ON S-IVB STAGE	FAILURE EFFECT ON SATURN VEHICLE
	Flexible Hose V-IVB-91-03 (continued)		Mechanical failure (leakage). (continued)		(continued) C),D) None; phase time too short for electronic failures to result from loss of temperature control. Failure not considered significant until E) phase. E) POSSIBLE LOSS OF STAGE Degradation of temperature control may result in failure of electronic units. Loss of interter-converter, propellant utilization control, power distribution of retro rocket EBW firing unit may occur, with resultant loss of control of stage. Failure of other units result in loss of data acquisition capability. F) None; phase time too short for electronic failures to result from loss of temperature control. Failure considered significant during G) phase. G) POSSIBLE LOSS OF STAGE Same as E) phase.	Same POSSIBLE LOSS OF MISSION FRT _____ minutes Same POSSIBLE LOSS OF MISSION FRT _____ minutes
	Cold Plates V-IVB-91-04	Maintains temperature of electronic equipment mounted on the cold plates at approximately 60° ±10°F.	Mechanical failure (leakage).	POSSIBLE LOSS OF SUBSYSTEM Leakage of coolant is continuous and depending upon amount lost subsystem performance is degraded or lost.	A) Delay in launching. B) This failure does not hold automatic countdown. Failure not considered significant until E) phase. C),D) None; phase time too short for secondary failure to result from loss of temperature control. Failure not considered significant until E) phase. (continued)	Same Same Same

Δ ITEMS MARKED THUS (Δ) DO NOT OPERATE IN FLIGHT

RELIABILITY FAILURE EFFECT ANALYSIS

FORWARD SKIRT ENVIRONMENTAL CONTROL

A) COUNTDOWN/CHECKOUT
B) COUNTDOWN - AUTOMATIC SEQUENCE
C) FLIGHT - BOOST PHASE
D) FLIGHT - POWERED PHASE, 1ST
E) FLIGHT - COAST PHASE, 1ST
F) FLIGHT - POWERED PHASE, 2ND
G) FLIGHT - COAST PHASE, 2ND

Δ ITEM	FUNCTION	FAILURE TYPE	FAILURE EFFECT ON SUBSYSTEM PERFORMANCE	FAILURE EFFECT ON S-IVB STAGE	FAILURE EFFECT ON SATURN VEHICLE
Cold Plates V-IVB-91-04 (continued)		Mechanical failure (leakage). (continued)		(continued) E) POSSIBLE LOSS OF STAGE Degradation of temperature control may result in failure of electronic units. Depending upon which units fail, loss of propellant utilization control, power distribution, or retro rocket firing unit may occur, with possible loss of control of stage. Failure of other units result in loss of data acquisition capability. F) None; phase time too short for failures to result from loss of temperature control. Failure considered significant during G) phase. G) POSSIBLE LOSS OF STAGE Same as E) phase.	POSSIBLE LOSS OF MISSION FRT ____ minutes Same POSSIBLE LOSS OF MISSION FRT ____ minutes
Valve (N.C) V-IVB-91-05	Permits drainage of coolant after testing operations or for transporting stage.	Failure to close or remain closed.	POSSIBLE LOSS OF SUBSYSTEM Depending upon amount of coolant lost subsystem environmental control may be degraded or lost.	A) Delay in launching. B) This failure does not hold automatic countdown sequence. Failure during B) phase is considered significant during E) phase. C),D) None; phase time too short for failure to have an effect upon electronic components located in forward skirt area. Failure considered significant during E) phase. (continued)	Same Same Same

Δ ITEMS MARKED THUS (Δ) DO NOT OPERATE IN FLIGHT

RELIABILITY FAILURE EFFECT ANALYSIS

FORWARD SKIRT ENVIRONMENTAL CONTROL

A) COUNTDOWN/CHECKOUT
B) COUNTDOWN-AUTOMATIC SEQUENCE
C) FLIGHT-BOOST PHASE
D) FLIGHT-POWERED PHASE, 1ST
E) FLIGHT-COAST PHASE, 1ST
F) FLIGHT-POWERED PHASE, 2ND
G) FLIGHT-COAST PHASE, 2ND

Δ	ITEM	FUNCTION	FAILURE TYPE	FAILURE EFFECT ON SUBSYSTEM PERFORMANCE	FAILURE EFFECT ON S-IVB STAGE	FAILURE EFFECT ON SATURN VEHICLE
	Valve (N.C) V-IVB-91-05 (continued)		Failure to close or remain closed. (continued)		(continued) E) POSSIBLE LOSS OF STAGE Loss of temperature control may result in failure of electronic units such as propellant utilization control, power distribution, inverter-converter, retro rocket and EBW firing units, with resultant loss of control of stage. F) None; phase time too short for failures to result from loss of temperature control. Failure considered significant during G) phase. G) POSSIBLE LOSS OF STAGE Same as E) phase.	POSSIBLE LOSS OF MISSION FRT _____ minutes Same POSSIBLE LOSS OF MISSION FRT _____ minutes

Δ ITEMS MARKED THUS (Δ) DO NOT OPERATE IN FLIGHT

RELIABILITY FAILURE EFFECT ANALYSIS

A) COUNTDOWN/CHECKOUT
B) COUNTDOWN-AUTOMATIC SEQUENCE
C) FLIGHT-BOOST PHASE
D) FLIGHT-POWERED PHASE, 1ST
E) FLIGHT-COAST PHASE, 1ST
F) FLIGHT-POWERED PHASE, 2ND
G) FLIGHT-COAST PHASE, 2ND

AFT SKIRT ENVIRONMENTAL CONTROL

Δ	ITEM	FUNCTION	FAILURE TYPE	FAILURE EFFECT ON SUBSYSTEM PERFORMANCE	FAILURE EFFECT ON S-IVB STAGE	FAILURE EFFECT ON SATURN VEHICLE
	Inlet Duct Cover and Manual Access Port Covers V-IVB-92-01	The inlet duct and manual access covers seal the openings during boost phase to prevent too rapid escape of GN_2 and reduction of skirt area pressure.	1) Failure to close (leakage of duct or access door).	POSSIBLE LOSS OF SUBSYSTEM Depending upon rate of leakage, aft skirt area may loose pressurization too rapidly during boost phase.	A),B) Not applicable, covers required to be open. C) POSSIBLE LOSS OF STAGE Pressure must decrease to 0 psia during first 150 sec. of flight according to a predetermined rate. If internal pressure decreases too rapidly due to open duct cover, there is a possibility of structural failure. D),E),F),G) Not applicable because function is not required after C) phase.	Same POSSIBLE LOSS OF VEHICLE FRT $\geq$ 70 seconds Same
			2) Failure of inlet duct to open or remain open.	LOSS OF SUBSYSTEM Due to blocked duct warm air/GN_2 will not be pumped through aft skirt environmental control area.	A) Delay in launching. B) This failure does not stop automatic countdown sequence; failure would prevent purging of aft skirt area during fuel and oxidizer loading and chilldown with the possibility of an unsafe oxygen level existing. However, failure would be detected by aft skirt pressure sensing transducer. Loss of attitude temperature control while undesirable is not considered serious unless temperature drops below required minimum; however, temperature of attitude control is monitored. Loss of ability to keep helium sphere at required temperature may result in a loss of fuel repressurization during E) phase. C),D),E),F),G) None; cover not required to open after B) phase.	Same Same Same

Δ ITEMS MARKED THUS (*) DO NOT OPERATE IN FLIGHT

RELIABILITY FAILURE EFFECT ANALYSIS

AFT SKIRT ENVIRONMENTAL CONTROL

A) COUNTDOWN/CHECKOUT
B) COUNTDOWN-AUTOMATIC SEQUENCE
C) FLIGHT-BOOST PHASE
D) FLIGHT-POWERED PHASE, 1ST
E) FLIGHT-COAST PHASE, 1ST
F) FLIGHT-POWERED PHASE, 2ND
G) FLIGHT-COAST PHASE, 2ND

Δ	ITEM	FUNCTION	FAILURE TYPE	FAILURE EFFECT ON SUBSYSTEM PERFORMANCE	FAILURE EFFECT ON S-IVB STAGE	FAILURE EFFECT ON SATURN VEHICLE
*	Inlet Ducting V-IVB-92-02	Directs warm air/GN_2 to the skirt manifold and thrust structure manifold for distribution.	Mechanical failure (disconnect or leakage).	PARTIAL LOSS OF SUBSYSTEM Depending upon amount of leakage, effective temperature control of attitude modules and helium sphere and purging will be reduced.	A) Delay in launching. B) This failure does not stop automatic countdown procedure. While this failure would degrade environmental control, it would not cause failures leading to stage loss unless temperature of attitude control propellant drops below required minimum; however, temperature of attitude control propellant is monitored. C),D),E),F),G) None; warm air/GN_2 environmental control is not required after B) phase.	Same Same Same
*	Skirt Manifold V-IVB-92-03	During manual and automatic countdown, directs warm air around the aft skirt area to maintain module propellant at a temperature between 80 and 120°F. Also, directs GN_2 around skirt area during purge.	Mechanical failure (rupture).	PARTIAL LOSS OF SUBSYSTEM Rupture of manifold causes loss of manifold pressure and degradation in temperature control of attitude control module propellant.	A) Delay in launching or scrub. B) This failure does not stop automatic countdown sequence. Rupture of manifold causes aft skirt pressure buildup with possible structural failure to S-II stage LH_2 tank. Aft skirt area pressure is monitored. Temperature control of attitude control module propellant may be degraded; however, temperature is monitored. C),D),E),F),G) None; not applicalbe as function is not required after B) phase.	Same Possible structural failure to Stage II LH_2 tank. Same

Δ ITEMS MARKED THUS (*) DO NOT OPERATE IN FLIGHT

RELIABILITY FAILURE EFFECT ANALYSIS

AFT SKIRT ENVIRONMENTAL CONTROL

A) COUNTDOWN/CHECKOUT
B) COUNTDOWN-AUTOMATIC SEQUENCE
C) FLIGHT-BOOST PHASE
D) FLIGHT-POWERED PHASE, 1ST
E) FLIGHT-COAST PHASE, 1ST
F) FLIGHT-POWERED PHASE, 2ND
G) FLIGHT-COAST PHASE, 2ND

Δ	ITEM	FUNCTION	FAILURE TYPE	FAILURE EFFECT ON SUBSYSTEM PERFORMANCE	FAILURE EFFECT ON S-IVB STAGE	FAILURE EFFECT ON SATURN VEHICLE
*	Thrust Structure Manifold V-IVB-92-04	Directs GN_2 around thrust structure area during fuel and oxidizer loading and during engine chilldown prior to lift-off.	Mechanical failure (leakage or rupture).	PARTIAL LOSS OF SUBSYSTEM Depending upon amount of leakage, purging of thrust structure area will be degraded.	A) Delay in launching. B) This failure does not hold automatic countdown sequence. C),D),E),F),G) None; not applicalbe because function is not required after B) phase.	Same Same Same
*	Helium Sphere Temperature Control V-IVB-92-05	During engine chilldown, directs warm GN_2 around helium sphere to maintain temperature of sphere at required level.	Failure to keep warm GN_2 on sphere during engine chilldown.	PARTIAL LOSS OF SUBSYSTEM Over-all performance of subsystem not affected. Only capability of maintaining helium sphere temperature.	A) None; function is not required until B) phase. B) This failure does not stop automatic countdown sequence. Temperature of helium sphere is not monitored. Failure to maintain sphere temperature is not considered serious until E) phase. C),D) None; not applicable as function is not required after B) phase. E) POSSIBLE LOSS OF MISSION Result of failure during B) phase. Helium not available for repressurization of LO_2 tank prior to restart of engine or to purge J2 turbo-seals after first shutdown of engine. F),G) None; not applicable as function is not required after B) phase.	Same Same Same POSSIBLE LOSS OF MISSION FRT > _____ seconds Same

Δ ITEMS MARKED THUS (Δ) DO NOT OPERATE IN FLIGHT

RELIABILITY FAILURE EFFECT ANALYSIS

AFT SKIRT ENVIRONMENTAL CONTROL

A) COUNTDOWN/CHECKOUT
B) COUNTDOWN - AUTOMATIC SEQUENCE
C) FLIGHT - BOOST PHASE
D) FLIGHT - POWERED PHASE, 1ST
E) FLIGHT - COAST PHASE, 1ST
F) FLIGHT - POWERED PHASE, 2ND
G) FLIGHT - COAST PHASE, 2ND

Δ	ITEM	FUNCTION	FAILURE TYPE	FAILURE EFFECT ON SUBSYSTEM PERFORMANCE	FAILURE EFFECT ON S-IVB STAGE	FAILURE EFFECT ON SATURN VEHICLE
	Flapper Valve (4) V-IVB-92-06	Maintains the rate at which the aft skirt area is depleted of gaseous nitrogen during C) phase. Also vents air/GN_2 during A),B) phase.	1) Failure to open (closed valve).	PARTIAL LOSS OF SUBSYSTEM Functions of subsystem, temperature control, and purging are still maintained; however, the failure permits an undesirable buildup of pressure in aft skirt area, and during C) phase restricts the rate at which pressure is reduced.	A) Delay in launching or possible scrub due to structural failure. B) This failure does not stop automatic countdown sequence. The aft skirt pressure increases to approximately 4 in. of water, whereas the critical pressure of the hydrogen tank (empty) of the S-II stage is 6 in. of water. This condition is undesirable because of possible structural failure; however, aft skirt pressure will be monitored. C) POSSIBLE LOSS OF STAGE This failure prevents reduction of aft skirt pressure according to predetermined rate. If pressure deviations exceed prescribed limits, structural failure may result in S-II forward skirt area. D),E),F),G) None; not applicable because function is not required after C) phase.	Same Same POSSIBLE LOSS OF VEHICLE FRT > _____ seconds Same
			2) Failure to close (open valve).	None; functions of subsystem, temperature, and purging are still mantained.	A) None. B) This failure does not stop automatic countdown sequence. C) None; depending upon attitude of vehicle during flight air may vent in; however, this is not considered significant. D),E),F),G) None; not applicable because function is not required after C) phase.	Same Same Same

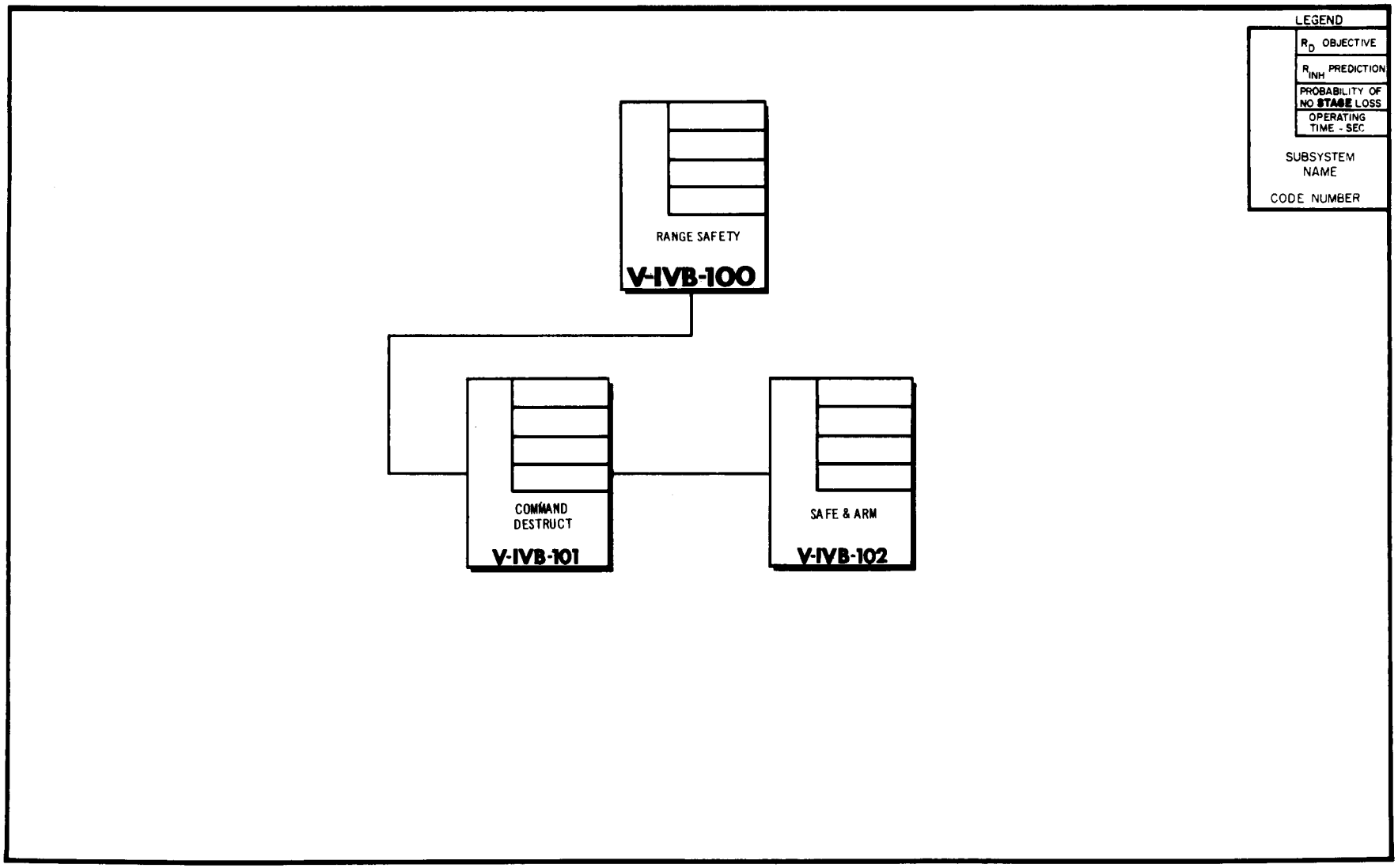
LEGEND
R_D OBJECTIVE
R_{INH} PREDICTION
PROBABILITY OF NO STAGE LOSS
OPERATING TIME - SEC
SUBSYSTEM NAME
CODE NUMBER
RANGE SAFETY
V-IVB-100
COMMAND DESTRUCT
V-IVB-101
SAFE & ARM
V-IVB-102

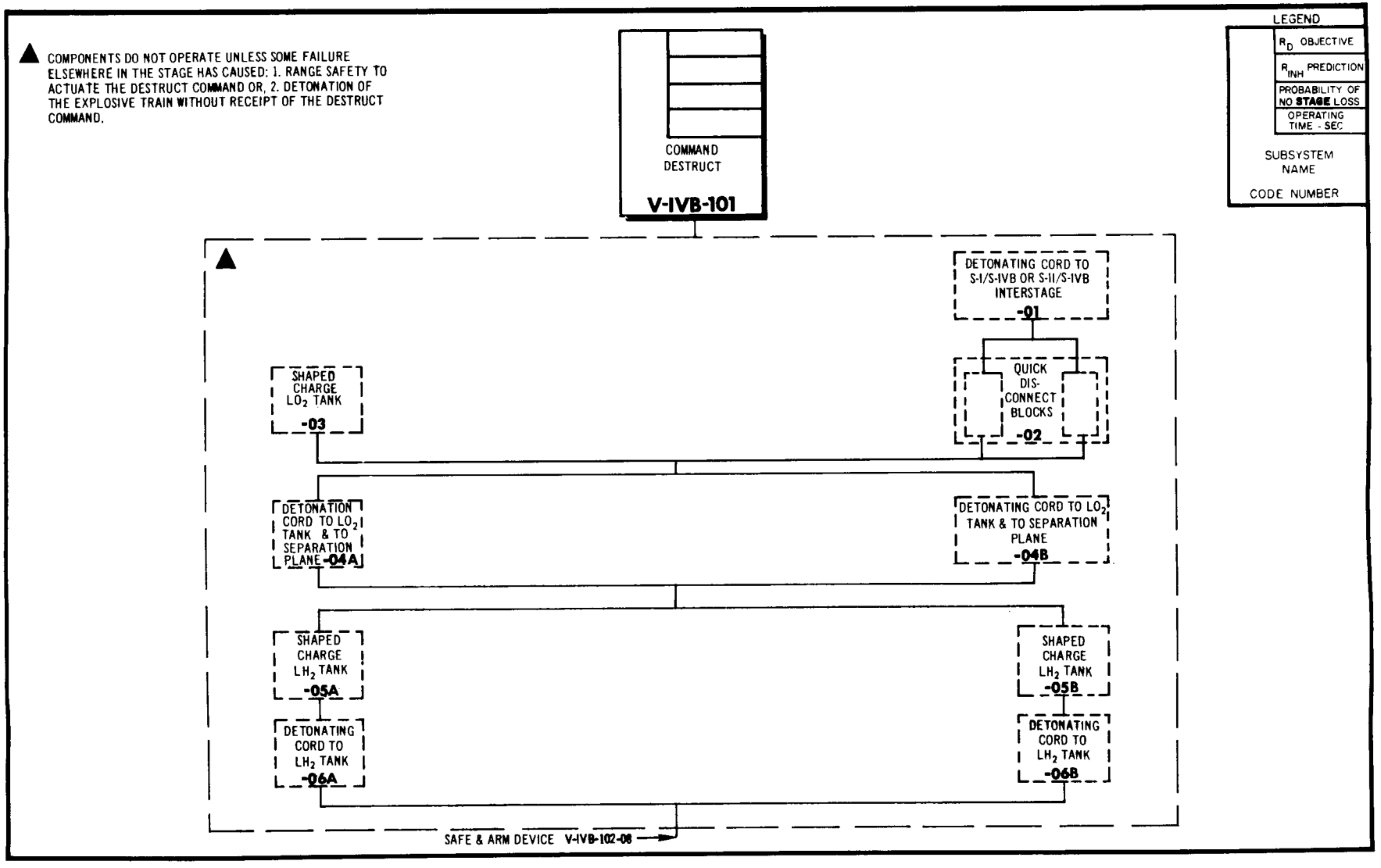
COMPONENTS DO NOT OPERATE UNLESS SOME FAILURE ELSEWHERE IN THE STAGE HAS CAUSED: 1. RANGE SAFETY TO ACTUATE THE DESTRUCT COMMAND OR, 2. DETONATION OF THE EXPLOSIVE TRAIN WITHOUT RECEIPT OF THE DESTRUCT COMMAND.
COMMAND DESTRUCT
V-IVB-101
LEGEND
R_D OBJECTIVE
R_{INH} PREDICTION
PROBABILITY OF NO STAGE LOSS
OPERATING TIME - SEC
SUBSYSTEM NAME
CODE NUMBER
DETONATING CORD TO S-I/S-IVB OR S-II/S-IVB INTERSTAGE -01
QUICK DIS-CONNECT BLOCKS -02
SHAPED CHARGE LO_2 TANK -03
DETONATION CORD TO LO_2 TANK & TO SEPARATION PLANE -04A
DETONATING CORD TO LO_2 TANK & TO SEPARATION PLANE -04B
SHAPED CHARGE LH_2 TANK -05A
SHAPED CHARGE LH_2 TANK -05B
DETONATING CORD TO LH_2 TANK -06A
DETONATING CORD TO LH_2 TANK -06B
SAFE & ARM DEVICE V-IVB-102-08

Δ ITEMS MARKED THUS (Δ) DO NOT OPERATE IN FLIGHT

RELIABILITY FAILURE EFFECT ANALYSIS

COMMAND DESTRUCT SUBSYSTEM

A) COUNTDOWN/CHECKOUT
B) COUNTDOWN-AUTOMATIC SEQUENCE
C) FLIGHT-BOOST PHASE
D) FLIGHT-POWERED PHASE, 1ST
E) FLIGHT-COAST PHASE, 1ST
F) FLIGHT-POWERED PHASE, 2ND
G) FLIGHT-COAST PHASE, 2ND

Δ ITEM	FUNCTION	FAILURE TYPE	FAILURE EFFECT ON SUBSYSTEM PERFORMANCE	FAILURE EFFECT ON S-IVB STAGE	FAILURE EFFECT ON SATURN VEHICLE
Detonating Cord to S-I/S-IVB (Saturn 1B), or S-II/S-IVB (Saturn 5), Interface V-IVB-101-01 Item does not function during normal flight; only in case of missile or stage failure elsewhere.	Terminates an explosive shock wave, to or from the boost stage, between the aft quick disconnect block at the separation plane and the interface. This item is a part of the explosive train providing for initiating the destruction of one stage from the destruct system of the other.	Failure to transmit the shock wave.	Not applicable or required during phases A) and B). No effect during phase C) since redundancy is provided. D),E),F),G) Not applicable.	A),B) Not applicable or required. C) None; redundancy provided. The destruct signal is common for receivers of both stages. D),E),F),G) Not applicable.	Same Same Same
Quick Disconnect Blocks V-IVB-101-02	Locate and hold adjacent explosive end fittings of two detonating cords in correct position for transmittal of shock wave across the separation plane.	Failure to hold parts as required.	None; redundancy provided. In effect, two explosive leads are provided either of which can transmit the shock wave.	A),B),C) None; redundancy provided. D),E),F),G) Not applicable.	Same Same
Shaped Charge, LO_2 Tank V-IVB-101-03 (See ▲ note on M/M diagram V-IVB-101)	Ruptures LO_2 tank by explosion.	Failure to rupture tank.	PARTIAL LOSS OF SUBSYSTEM LO_2 tank not destroyed as per destruct command.	See ▲ note on M/M diagram V-IVB-101.	Same
Detonating cord to LO_2 tank and to separation plane. V-IVB-101-04A V-IVB-101-04B	1) Transmits an explosive shock wave between termination end of LH_2 tank shaped charge and one end of single shaped charge at the LO_2 tank.	Failure to transmit shock wave to shaped charge.	None; redundancy provided. Each end of the LO_2 tank charge has a separate cord either of which can transmit the shock wave to the charge.		
	2) Transmits an explosive shock wave between termination end of LH_2 tank shaped charge and the forward quick disconnect block at the separation plane. Item is a part of the explosive train providing for initiating the destruct system of the other. (Transmits shock wave either to or from the S-IVB stage.)	Failure to transmits shock wave.	Not applicable or required during countdown. No effect during boost phase since redundancy is provided via a destruct signal that is common to both stage C.D.R.'s. Not applicable to subsequent phases.		
Shaped Charge, LH_2 Tank (2) V-IVB-101-05A V-IVB-101-05B	1) Rupture the LH_2 tank by explosion.	Failure to rupture tank.	None; redundancy provided. Either charge can rupture the tank.		
	2) Ignites a detonating cord which leads to single shaped charge at the LO_2 tank, and to the separation plane.	Failure to ignite cord.	None; redundancy provided. Either charge can ignite both cords.		

Δ ITEMS MARKED THUS (Δ) DO NOT OPERATE IN FLIGHT

RELIABILITY FAILURE EFFECT ANALYSIS

A) COUNTDOWN/CHECKOUT
B) COUNTDOWN - AUTOMATIC SEQUENCE
C) FLIGHT - BOOST PHASE
D) FLIGHT - POWERED PHASE, 1ST
E) FLIGHT - COAST PHASE, 1ST
F) FLIGHT - POWERED PHASE, 2ND
G) FLIGHT - COAST PHASE, 2ND

COMMAND DESTRUCT SUBSYSTEM

Δ	ITEM	FUNCTION	FAILURE TYPE	FAILURE EFFECT ON SUBSYSTEM PERFORMANCE	FAILURE EFFECT ON S-IVB STAGE	FAILURE EFFECT ON SATURN VEHICLE
	Detonating Cord to LH_2 Tank V-IVB-101-06A V-IVB-101-06B	Transmits an explosive shock wave between the safe and arm device and a linear shaped explosive charge at the LH_2 tank.	Failure to transmit shock wave to shaped charge.	None; redundancy provided. Either cord can transmit the shock wave to a shaped charge.	See ▲ note on M/M diagram V-IVB-101.	Same

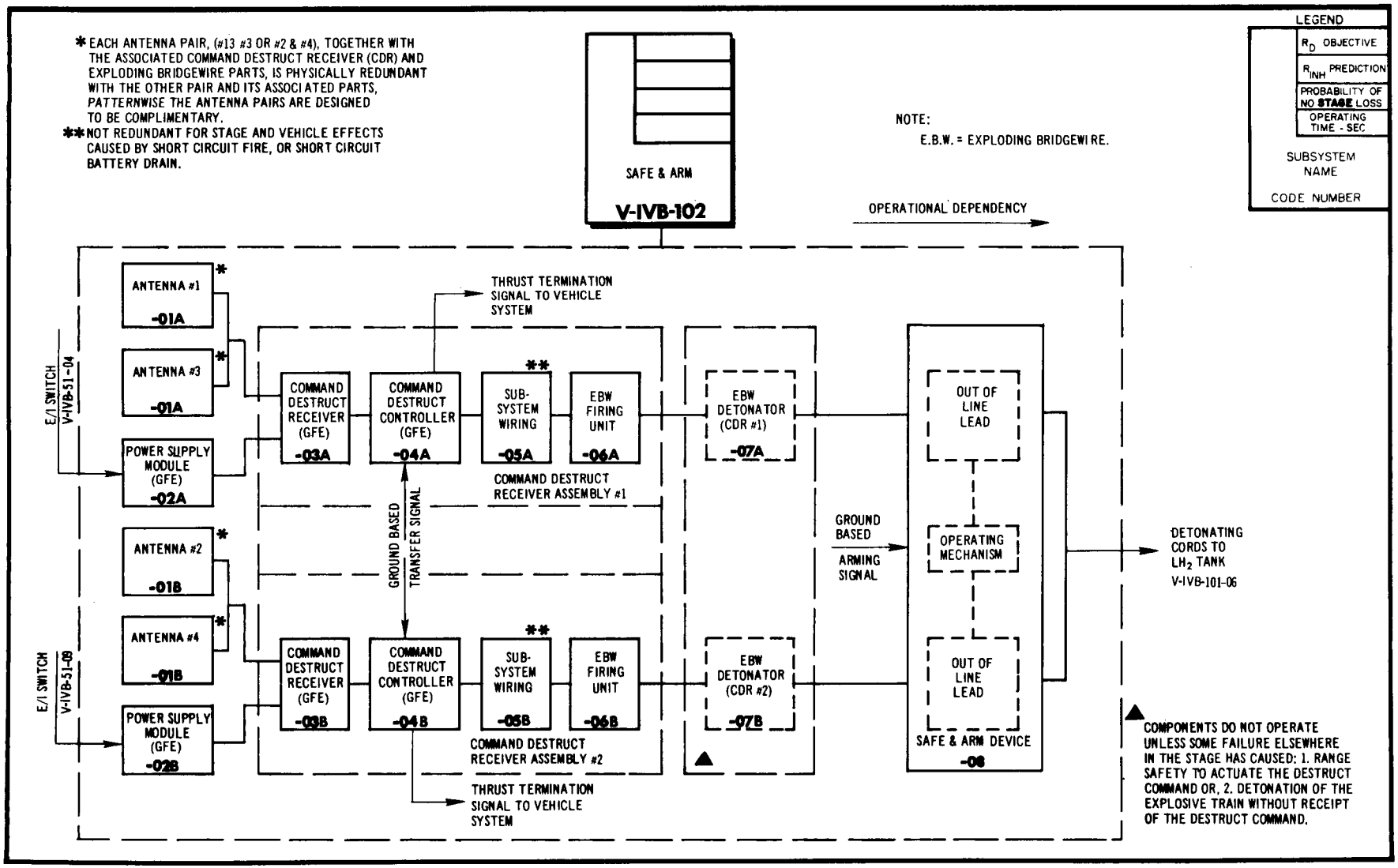
* EACH ANTENNA PAIR, (#13 #3 OR #2 & #4), TOGETHER WITH THE ASSOCIATED COMMAND DESTRUCT RECEIVER (CDR) AND EXPLODING BRIDGEWIRE PARTS, IS PHYSICALLY REDUNDANT WITH THE OTHER PAIR AND ITS ASSOCIATED PARTS, PATTERNWISE THE ANTENNA PAIRS ARE DESIGNED TO BE COMPLIMENTARY.
** NOT REDUNDANT FOR STAGE AND VEHICLE EFFECTS CAUSED BY SHORT CIRCUIT FIRE, OR SHORT CIRCUIT BATTERY DRAIN.
SAFE & ARM
V-IVB-102
NOTE:
E.B.W. = EXPLODING BRIDGEWIRE.
LEGEND
R_D OBJECTIVE
R_{INH} PREDICTION
PROBABILITY OF NO STAGE LOSS
OPERATING TIME - SEC
SUBSYSTEM NAME
CODE NUMBER
OPERATIONAL DEPENDENCY
E/I SWITCH V-IVB-51-04
E/I SWITCH V-IVB-51-09
ANTENNA #1 -01A
ANTENNA #3 -01A
POWER SUPPLY MODULE (GFE) -02A
ANTENNA #2 -01B
ANTENNA #4 -01B
POWER SUPPLY MODULE (GFE) -02B
COMMAND DESTRUCT RECEIVER (GFE) -03A
COMMAND DESTRUCT CONTROLLER (GFE) -04A
SUB-SYSTEM WIRING -05A
EBW FIRING UNIT -06A
COMMAND DESTRUCT RECEIVER ASSEMBLY #1
THRUST TERMINATION SIGNAL TO VEHICLE SYSTEM
GROUND BASED TRANSFER SIGNAL
COMMAND DESTRUCT RECEIVER (GFE) -03B
COMMAND DESTRUCT CONTROLLER (GFE) -04B
SUB-SYSTEM WIRING -05B
EBW FIRING UNIT -06B
COMMAND DESTRUCT RECEIVER ASSEMBLY #2
THRUST TERMINATION SIGNAL TO VEHICLE SYSTEM
EBW DETONATOR (CDR #1) -07A
EBW DETONATOR (CDR #2) -07B
GROUND BASED ARMING SIGNAL
OUT OF LINE LEAD
OPERATING MECHANISM
OUT OF LINE LEAD
SAFE & ARM DEVICE -08
DETONATING CORDS TO LH_2 TANK V-IVB-101-06
COMPONENTS DO NOT OPERATE UNLESS SOME FAILURE ELSEWHERE IN THE STAGE HAS CAUSED: 1. RANGE SAFETY TO ACTUATE THE DESTRUCT COMMAND OR, 2. DETONATION OF THE EXPLOSIVE TRAIN WITHOUT RECEIPT OF THE DESTRUCT COMMAND.

Δ ITEMS MARKED THUS (Δ) DO NOT OPERATE IN FLIGHT

RELIABILITY FAILURE EFFECT ANALYSIS

A) COUNTDOWN/CHECKOUT
B) COUNTDOWN - AUTOMATIC SEQUENCE
C) FLIGHT - BOOST PHASE
D) FLIGHT - POWERED PHASE, 1ST
E) FLIGHT - COAST PHASE, 1ST
F) FLIGHT - POWERED PHASE, 2ND
G) FLIGHT - COAST PHASE, 2ND

SAFE AND ARM SUBSYSTEM

Δ ITEM	FUNCTION	FAILURE TYPE	FAILURE EFFECT ON SUBSYSTEM PERFORMANCE	FAILURE EFFECT ON S-IVB STAGE	FAILURE EFFECT ON SATURN VEHICLE
Antennae (2 Pair) V-IVB-102-01A V-IVB-102-01B	Receive "Arm" and "Destruct" signals from range safety and transfer such signals to the input of the command destruct receiver.	Failure to receive and transfer as required.	None; redundancy provided. Each antenna pair and its associated receiver is redundant with the other antenna and associated receiver. Patternwise, the antenna pair is designed to be complementary, thus providing redundancy for signal area.	A) Delay in launching. B) None; does not hold automatic sequencing. C),D),E),F),G) None; redundancy provided.	Same Same Same
Power Supply Module (2) V-IVB-102-02A V-IVB-102-02B NOTE: G.F.E. Item	Provides required DC output for associated C.D.R. Inflight power source for 07A is the forward battery #1 and for 07B, the forward battery #2. Module provides 6V, 18V, and 28V unregulated, and 18V regulated.	Failure to provide one or more of the required voltages.	None; redundancy provided.	A) Delay in launching. B) May hold automatic sequencing, but only if failure results in loss of 28V output. C),D),E),F),G) None; redundancy provided.	Same Same Same
Command Destruct Receiver (2) V-IVB-102-03A V-IVB-102-03B NOTE: G.F.E. Item	Operates required controller relays upon receipt of command signals.	1) Operation of sending a destruct signal to the command destruct controller without receiving such signal from range safety. NOTE: Due to the circuit logic of the command destruct receiver a multiple failure would be required for this failure to have any effect on the system.	None; redundancy provided.	A) Delay in launching. B) None; does not hold automatic sequencing. C) None; the resultant cutoff of the engine is insignificant in this phase. D) LOSS OF STAGE Due to resultant engine cutoff. E) None; same as C) F) LOSS OF STAGE Same as D) G) None; Same as C).	Same Same Same LOSS OF MISSION Same LOSS OF MISSION Same
		2) Failure to provide the destruct command to the controller upon receipt of such command from range safety.	None; redundancy provided.	A),B) None; not applicable prior to launch. C),D),E),F),G) None; redundancy provided.	Same Same

Δ ITEMS MARKED THUS (#) DO NOT OPERATE IN FLIGHT

RELIABILITY FAILURE EFFECT ANALYSIS

A) COUNTDOWN/CHECKOUT
B) COUNTDOWN - AUTOMATIC SEQUENCE
C) FLIGHT - BOOST PHASE
D) FLIGHT - POWERED PHASE, 1ST
E) FLIGHT - COAST PHASE, 1ST
F) FLIGHT - POWERED PHASE, 2ND
G) FLIGHT - COAST PHASE, 2ND

SAFE AND ARM SUBSYSTEM

Δ ITEM	FUNCTION	FAILURE TYPE	FAILURE EFFECT ON SUBSYSTEM PERFORMANCE	FAILURE EFFECT ON S-IVB STAGE	FAILURE EFFECT ON SATURN VEHICLE
Command Destruct Controller (2) V-IVB-102-04A V-IVB-102-04B NOTE: G.F.E. Item	1) Transfers electrical load of one CDR set from ground power supply circuit to a stage battery supply circuit upon command.	1) Premature transfer.	None; no impairment of subsystem operation.	A) Delay in launch. B) None; not applicable. Normal transfer occurs at start of phase B). C),D),E),F),G) Not applicable	Same Same Same
		2) Failure to transfer upon command. 3) Failure to maintain transferred condition.	None; redundancy provided.	A) Delay in launch. B) Hold - respective "CDR INT T/B" signal not present. C),D),E),F),G) None; redundancy provided.	Same Same Same
	2) Triggers an associated exploding bridgewire unit upon receiving a destruct command via the associated receiver. NOTE: The fuel dispersion command relay is picked up by the arming relay upon receipt of the destruct command via the receiver and in turn triggers the firing unit. On manned flights the fuel dispersion command relay does not pick up until the time delay has expired.	Failure to trigger the EBW firing unit upon the receipt of the destruct signal.	None; redundancy provided.	A),B) None; not required to operate prior to launch. C),D),E),F),G) None; redundancy provided.	Same Same
	3) Operates the "Arm" relay upon receipt of the "Arm" signal, via the associated receiver unit. This arm relay performs the following operations: a) Prepares circuitry for destruct command. b) Gives a signal to the vehicle for thrust termination. c) Enables the time delay circuit. NOTE: Closure of the time delay relay enables the EBW circuit. A time delay is planned to be used on manned flights. On non-manned flights, a shorting device is used to bypass the time delay.	1) Operation of "Arm" relay without a destruct signal. NOTE: For failure probability analysis: A second failure would be necessary either in the C.D.R. or the controller to cause a trigger signal to be given to the EBW firing unit.	None; subsystem operation not significantly affected.	A) Delay in launch. B) None; failure does not hold automatic sequencing. C) None; resultant cutoff of the engine is significant only in powered phases. D) LOSS OF STAGE Due to cutoff of engine. E) None; same as C). F) LOSS OF STAGE Same as D). G) None; same as C).	Same Same Same LOSS OF MISSION Same LOSS OF MISSION Same

Δ ITEMS MARKED THUS (Δ) DO NOT OPERATE IN FLIGHT

RELIABILITY FAILURE EFFECT ANALYSIS

A) COUNTDOWN/CHECKOUT
B) COUNTDOWN - AUTOMATIC SEQUENCE
C) FLIGHT - BOOST PHASE
D) FLIGHT - POWERED PHASE, 1ST
E) FLIGHT - COAST PHASE, 1ST
F) FLIGHT - POWERED PHASE, 2ND
G) FLIGHT - COAST PHASE, 2ND

SAFE AND ARM SUBSYSTEM

Δ ITEM	FUNCTION	FAILURE TYPE	FAILURE EFFECT ON SUBSYSTEM PERFORMANCE	FAILURE EFFECT ON S-IVB STAGE	FAILURE EFFECT ON SATURN VEHICLE
Command Destruct Controller (2) V-IVB-102-04A V-IVB-102-04B NOTE: G.F.E. Item (continued)		2) Failure to operate "Arm" relay when signal is received.	None; redundancy provided.	A) None; not required to operate prior to launch. B) None; does not hold automatic sequencing. C),D),E),F),G) None; redundancy provided.	Same Same Same
Subsystem Wiring (2) V-IVB-102-05A V-IVB-102-05B	Provides electrical connection between all components of a CDR set. Includes power wiring for the CDR set, charging of EBW firing unit, and wiring for trigger signal to EBW unit.	1) Failure to provide continuous electrical paths for required connections. (Open Circuitry)	None; redundancy provided.	A) Delay in launch. B) Possible hold - may result in "Timer Hold" signal during automatic sequencing, depending on circuit affected. C),D),E),F),G) None; redundancy provided.	Same Same Same
		2) Failure to maintain required circuit isolation. (Shorted Circuitry)	None; redundancy provided.	A),B) POSSIBLE LOSS OF STAGE Short circuitry could cause a fire resulting in stage loss. C),D),E),F),G) POSSIBLE LOSS OF STAGE Fire could result as a result of short circuitry and the presence of a combustible mixture. A "Dead" battery resulting from shorted circuitry could cause a resultant loss of stage.	POSSIBLE LOSS OF VEHICLE POSSIBLE LOSS OF VEHICLE
E.B.W. Firing Unit (2) V-IVB-102-06A V-IVB-102-06B	Explodes an associated EBW detonator upon receipt of a trigger signal from the associated C.D. controller. Unit is charged prior to start of phase B), and sends discharge through bridgewire of detonator when triggered.	1) Exploding detonator without receipt of trigger signal. NOTE: S&A device is in armed position at time of this failure.	LOSS OF SUBSYSTEM Subsequent ignition of the associated explosive trains would occur.	A) None; not operational. B),C),D),E),F),G) LOSS OF STAGE	Same LOSS OF VEHICLE

Δ ITEMS MARKED THUS (Δ) DO NOT OPERATE IN FLIGHT

RELIABILITY FAILURE EFFECT ANALYSIS

A) COUNTDOWN/CHECKOUT
B) COUNTDOWN - AUTOMATIC SEQUENCE
C) FLIGHT - BOOST PHASE
D) FLIGHT - POWERED PHASE, 1ST
E) FLIGHT - COAST PHASE, 1ST
F) FLIGHT - POWERED PHASE, 2ND
G) FLIGHT - COAST PHASE, 2ND

SAFE AND ARM SUBSYSTEM

Δ ITEM	FUNCTION	FAILURE TYPE	FAILURE EFFECT ON SUBSYSTEM PERFORMANCE	FAILURE EFFECT ON S-IVB STAGE	FAILURE EFFECT ON SATURN VEHICLE
.E.B.W. Firing Unit (2) V-IVB-102-06A V-IVB-102-06B (continued)		2) Failure to explode the detonator when trigger signal is received.	None; redundancy provided.	A),B) None; not applicable. C),D),E),F),G) None; redundancy provided.	Same Same
EBW Detonator (2) V-IVB-102-07A V-IVB-102-07B	Ignites deontating cords leading to shaped charges at LH_2 tank. Either detonator can cause ignition in both cords.	Failure to ignite cords upon receipt of firing command voltage.	None; redundancy provided. NOTE: Item is not required to operate unless some failure elsewhere has caused range safety to actuate the destruct command or, detonation of the explosive train without receipt of the destruct command.	None; redundancy provided.	Same
Safe and Arm Device V-IVB-102-08	1) Provides physical interruption of two explosive trains. For safe position, a cylinder rotates within the device which moves a section of each explosive lead out of line. And also places a metal barrier between each detonator and its "downstream" explosive lead. For arm position, further cylinder rotation removes the barriers and restores the lead sections to their in-line position.	1) Failure to advance to the arm position when required. NOTE: Present planning requires the S&A device to be in arm position prior to the automatic countdown sequence.	LOSS OF SUBSYSTEM The S&A device is not redundant for electro-mechanical operation.	A) Delay in launching. B) Holds automatic sequencing - "S&A Armed" signal not present. C),D),E),F),G) None; not applicable.	Same Same Same
		2) Failure during operation in the form of moving to the safe position after arm signal.	LOSS OF SUBSYSTEM Failure prohibits normal operation of S-IVB destruct system.	A) Delay in launching. B) Holds automatic sequencing - "S&A Armed" signal not present. C) Loss of capability of initiating destruction from S-IVB stage. Destruction can be initiated from lower stage. D),E),F),G) LOSS OF DESTRUCT CAPABILITY	Same Same Same Same
	2) Provides signal for device position indication - safe or arm. NOTE: Includes all device stage wiring.	Failure to provide position signal.	None; subsystem destruct capability not affected.	A) Delay in launching. B) Holds automatic sequencing - "S&A Armed" signal not present. C),D),E),F),G) None; does not affect destruct capability.	Same Same Same

APPENDIX

This appendix provides a list of items which are considered flight critical by the Saturn S-IVB Reliability Analysis Section. It is a summary of all Saturn S-IVB stage items whose single failure may cause the loss of stage, or Saturn V or Saturn 1B vehicle. The list is based on the Reliability Mathematical Model - Failure Effect Analysis, Dwg. No. 1A58354.

APPENDIX

S-IVB FLIGHT CRITICAL ITEMS LIST

Math Model Number	Math Model Item	Dwg. Number Reference
Airframe V-IVB-10	All primary structural components	
Propulsion V-IVB-20		
Fuel Fill & Drain V-IVB-21.1		
-21.1-02	Shut-off Valve	1A48240
-21.1-03	Piping	
Oxidizer Fill & Drain V-IVB-21.2		
-21.2-02	Shut-off Valve	1A48240
-21.2-03	Piping	
Fuel Pressurization V-IVB-22.1		
-22.1-06	Control Solenoid Valve	
-22.1-07	Flight Control Pressure Switch	
-22.1-08	Step Solenoid Valve	
-22.1-09	Step Pressure Switch	
-22.1-11	Subsystem Plumbing	
Oxidizer Pressurization V-IVB-22.2		
-22.2-01	Pressure Spheres (5)	
-22.2-03	Cold Helium Relief Valve	
-22.2-04	Dump Solenoid Valve	
-22.2-07	Cold Helium Filter	
-22.2-08	Pressure Regulator	
-22.2-09	Helium Supply Shut-off Valve	
-22.2-10	Regulator Back-up Pressure Switch	
-22.2-11	Flight Control & Pre-Pressure Pressure Switch	
-22.2-12	High Pressure Plumbing	
-22.2-13	Low Pressure Plumbing	
-22.2-14	Plenum Chamber	
-22.2-15	By-pass Control Valve	
-22.2-17A	Pneumatic Vent Valve	
-22.2-17B	Relief Valve	

APPENDIX

S-IVB FLIGHT CRITICAL ITEMS LIST (continued)

Math Model Number	Math Model Item	Dwg. Number Reference
Propulsion V-IVB-20 (Cont'd.)		
Fuel Step Pressurization V-IVB-22.3 (Saturn 1B only)		
To be determined.		
Fuel Re-Pressurization V-IVB-22.4 (Saturn V only)		
-22.4-01	Pressure Spheres (5)	
-22.4-03	Relief Valve	
-22.4-04	Solenoid Dump Valve	
-22.4-06	Filter	
-22.4-07	Re-pressurization Solenoid Valve	
Oxidizer Re-Pressurization V-IVB-22.5 (Saturn V only)		
-22.5-01	Pressure Sphere	
-22.5-03	Relief Valve	
-22.5-04	Solenoid Dump Valve	
-22.5-05	Fill Filter	
-22.5-08	Filter	
-22.5-09	Solenoid Control Valve	
-22.5-10	Subsystem Plumbing	
Pneumatic Control V-IVB-23		
-23-01	Pneumatic Power Control Module	1A58345
-23-02	Plenum Chamber	
-23-03	Actuator Vent Control Module	1A49982
-23-05	Piping	
Thrust Generation (J-2 Engine) V-IVB-24		
To be determined.		
Fuel Feed & Chilldown V-IVB-25.1		
-25.1-01	Check Valve	1A49964
-25.1-02	Chilldown Pump	1A49421
-25.1-03	Piping	

APPENDIX

S-IVB FLIGHT CRITICAL ITEMS LIST (continued)

Math Model Number	Math Model Item	Dwg. Number Reference
Propulsion V-IVB-20 (Cont'd.)		
Oxidizer Feed & Chilldown V-IVB-25.2		
-25.2-01	Check Valve	1A49965
-25.2-02	Chilldown Pump	1A49423
-25.2-03	Piping	
Ullage Positioning V-IVB-26.1 (Saturn V only)		
-26.1-04	1750# Thrust Engine (2)	
-26.1-08	150# Thrust Engine (2)	
Ullage Positioning V-IVB-26.2 (Saturn 1B only)		
-26.2-04	Ullage Rocket Motor (3) (GFE)	
Fuel Tank Vent Control V-IVB-27		
-27-01	Relief Valve	
-27-02	Vent Relief Valve	
-27-03	High Pressure Sensing Switch	
-27-04	Low Pressure Sensing Switch	
-27-05	Venting System Plumbing	
-27-06	Directional Control Valve	
Propellant Utilization V-IVB-30		
-30-01	Subsystem Wiring	
-30-02	Electronic Assembly	
Propellant Mass Sensing V-IVB-31		
-31-01	Oxidizer Mass Sensor	
-31-02	Fuel Mass Sensor	
Propellant Utilization Control V-IVB-32		
-32-01	P.U. Valve Actuator Assembly	

APPENDIX

S-IVB FLIGHT CRITICAL ITEMS LIST (continued)

Math Model Number	Math Model Item	Dwg. Number Reference
Flight Control V-IVB-40		
Path Control V-IVB-41		
-41-01	Servo Cylinder Assembly (2)	
-41-02	Servo Valve (2)	
-41-03	Cylinder By-pass Valve (2)	
-41-05	Filter (2)	
-41-07	Subsystem Plumbing	
-41-08	Feedback Transducer (2)	
-41-09	Attaching Parts	
Attitude Control V-IVB-42		
-42-03	Fuel Tank (2)	
-42-04	Filter (2)	
-42-05	Subsystem Plumbing (2)	
-42-15	Oxidizer Tank (2)	
-42-16	Filter (2)	
-42-17	Subsystem Plumbing (2)	
-42-25	Helium Fill Disconnect (2)	1A48630
-42-27	Helium Sphere (4)	1A49994
-42-29	Helium Dump Valve (2)	
-42-30	Pressure Relief Valve (2)	
-42-31	Subsystem Plumbing (2)	
-42-32	Filter (2)	
-42-35	Subsystem Plumbing (2)	
-42-42	Pressure Relief Solenoid Valve (4)	
-42-43	Vent Line Disconnect (4)	1A49999
-42-44	Bellows (4)	
-42-45	Subsystem Plumbing (2)	
-42-49	Engine (6)	

APPENDIX

S-IVB FLIGHT CRITICAL ITEMS LIST (continued)

Math Model Number	Math Model Item	Dwg. Number Reference
Auxiliary Power Supply V-IVB-50		
Electric Power Supply V-IVB-51		
-51-01	Foward Battery #1 Cell Assembly	
-51-02	Forward Battery #1 Box Assembly	
-51-04	Forward Battery #1 External Internal Switch	
-51-05	Forward Power Distribution Box Assembly	
-51-06	Forward Battery #2 Cell Assembly	
-51-07	Forward Battery #2 Box Assembly	
-51-09	Forward Battery #2 External Internal Switch	
-51-10	Aft Battery #1 Cell Assembly	
-51-11	Aft Battery #1 Box Assembly	
-51-12	Aft Battery #1 Heater Assembly	
-51-13	Aft Battery #1 External-Internal Switch	
-51-14	Aft Power Distribution Box Assembly	
-51-15	Aft Battery #2 Cell Assembly	
-51-16	Aft Battery #2 Box Assembly	
-51-17	Aft Battery #2 Heater Assembly	
-51-18	Aft Battery #2 External-Internal Switch	
-51-19	S/S Transmitter Power Switching Relay	
-51-20	Flight Transmitter Group Power Switching Relay	
-51-21	Orbit Transmitter Group Power Switching Relay	
-51-22	Orbit SCO Group Power Switching Relay	
-51-23	Flight SCO Group Power Switching Relay	
-51-24	Recorded Measurement Group Power Switching Relay	
-51-25	DDA Power Switching Relay	
-51-26	SS Group Power Switching Relay	
-51-27	Checkout Measurement Group Power Supply Relay	
-51-28	Inverter-Converter Assembly	
-51-29	Inverter-Converter Power Distribution Relay	
-51-30	Inverter-Converter Box Assembly	
-51-31	Propellant Utilization & P.U. Over 28 VDC Power Supply Relay	
-51-32	Hydraulic Motor Pump Power Supply Relay	

APPENDIX

S-IVB FLIGHT CRITICAL ITEMS LIST (continued)

Math Model Number	Math Model Item	Dwg. Number Reference
Auxiliary Power Supply, V-IVB-50 (Cont'd.)		
Electrical Power Supply, V-IVB-51 (Continued)		
-51-33	Pressure & Temperature Switches Power Supply Relay	
-51-34	Oxygen Chilldown Motor Pump Power Supply Relay	
-51-35	Fuel Chilldown Motor Pump Power Supply Relay	
-51-37	Subsytem Wiring	
Hydraulic Power Supply V-IVB-52		
-52-01	Electric Motor	
-52-02	Pump	
-52-03	Thermal Switch	
-52-05	Pump Filter	
-52-08	Check Valve	
-52-09	Check Valve	
-52-10	Pump	
-52-11	Check Valve	
-52-12	Check Valve	
-52-13	Bleed & Sample Valve	
-52-14	Accumulator Reservoir Assembly	
-52-17	Nitrogen Fill Valve	
-52-18	High Pressure Relief Valve	
-52-20	Main System Filter	
-52-24	Subsystem Plumbing	
-52-25	Attaching Parts	
Separation V-IVB-60		
S-II to S-IVB Stage Separation V-IVB-61 (Saturn V only)		
-61-01	Mild Detonating Fuse Assembly	
-61-03	Tension Plate	
S-IVB to Upper Stage Separation V-IVB-62		
-62-01	Retro Rockets (2) (GFE)	
-62-02	Retro Rocket Igniter (GFE)	
-62-04	EBW Firing Unit (4)	

APPENDIX

S-IVB FLIGHT CRITICAL ITEMS LIST (continued)

Math Model Number	Math Model Item	Dwg. Number Reference
Separation V-IVB-60 (Cont'd.)		
S-I to S-IVB Stage Separation V-IVB-63 (Saturn 1B only)		
-63-01	Mild Detonating Fuse Assembly	
-63-03	Tension Plate	
Ullage Rocket Jettison V-IVB-64 (Saturn 1B only)		
-64-05	Ullage Rocket Jettison Devices (3)	
Electrical V-IVB-70		
S-IVB Command Code Conversion V-IVB-71		
-71-01	Wiring & Connectors	
-71-02	Switch Selector (GFE)	
S-IVB Sequencing V-IVB-72		
-72-01	Wiring & Connectors	
-72-02	Sequencer	
Data Acquisition V-IVB-80		
-80-18	Subsystem Wiring	
Environmental Control V-IVB-90		
Forward Skirt Environmental Control V-IVB-91		
-91-01	Manifold	
-91-02	Couplings	
-91-03	Flexible Hose	
-91-04	Cold Plates	
-91-05	Valve	
Aft Skirt Environmental Control V-IVB-92		
-92-01	Inlet Duct Cover	
-92-05	Helium Sphere Temperature Control	
-92-06	Flapper Valve	

APPENDIX

S-IVB FLIGHT CRITICAL ITEMS LIST (continued)

Math Model Number	Math Model Item	Dwg. Number Reference
Range Safety V-IVB-100		
Command Destruct V-IVB-101		
None		
Safe & Arm V-IVB-102		
-102-03	Command Destruct Receivers (2) (GFE)	
-102-04	Command Destruct Controllers (2) (GFE)	
-102-05	Subsystem Wiring (2)	
-102-06	EBW Firing Units (2)	