2-P (MIX) 7000 R -130150

WITTEN'S COPY

SPACE DIVISION

72SD4255
18 OCTOBER 1972

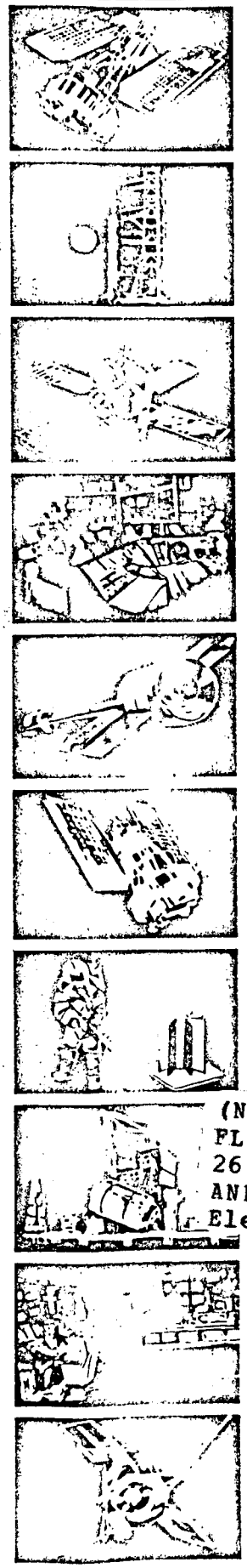

ERTS I LAUNCH AND FLIGHT ACTIVATION EVALUATION REPORT 23 TO 26 JULY 1972 LAUNCH THROUGH ORBIT 35 AND ORBIT ADJUST OPERATION

Prepared for

NATIONAL AERONAUTICS AND SPACE ADMINISTRATION
Goddard Space Flight Center
Greenbelt, Maryland 20771

NASA EARTH RESOURCES TECHNOLOGY SATELLITE

(NASA-CR-130150) ERTS 1 LAUNCH AND FLIGHT ACTIVATION EVALUATION REPORT, 23 - 26 JULY 1972. LAUNCH THROUGH ORBIT 35 AND ORBIT ADJUST OPERATION (General Electric Co.) 272 p HC $15.75 CSCL 22C

N73-22817

Unclas
G3/31 68719

GENERAL ELECTRIC

Contract NAS5-11320

72SD4255
18 OCTOBER 1972

ERTS I LAUNCH AND FLIGHT ACTIVATION EVALUATION REPORT 23 TO 26 JULY 1972 LAUNCH THROUGH ORBIT 35 AND ORBIT ADJUST OPERATION

Prepared for

NATIONAL AERONAUTICS AND SPACE ADMINISTRATION
Goddard Space Flight Center
Greenbelt, Maryland 20771
Contract NAS5-11320

Approved:

B. Phucas

Prepared by

SPACE DIVISION
Valley Forge Space Center
P. O. Box 8555 • Philadelphia, Penna. 19101

Details of illustrations in this document may be better studied on microfiche

GENERAL ELECTRIC

PRECEDING PAGES BLANK NOT FILMED

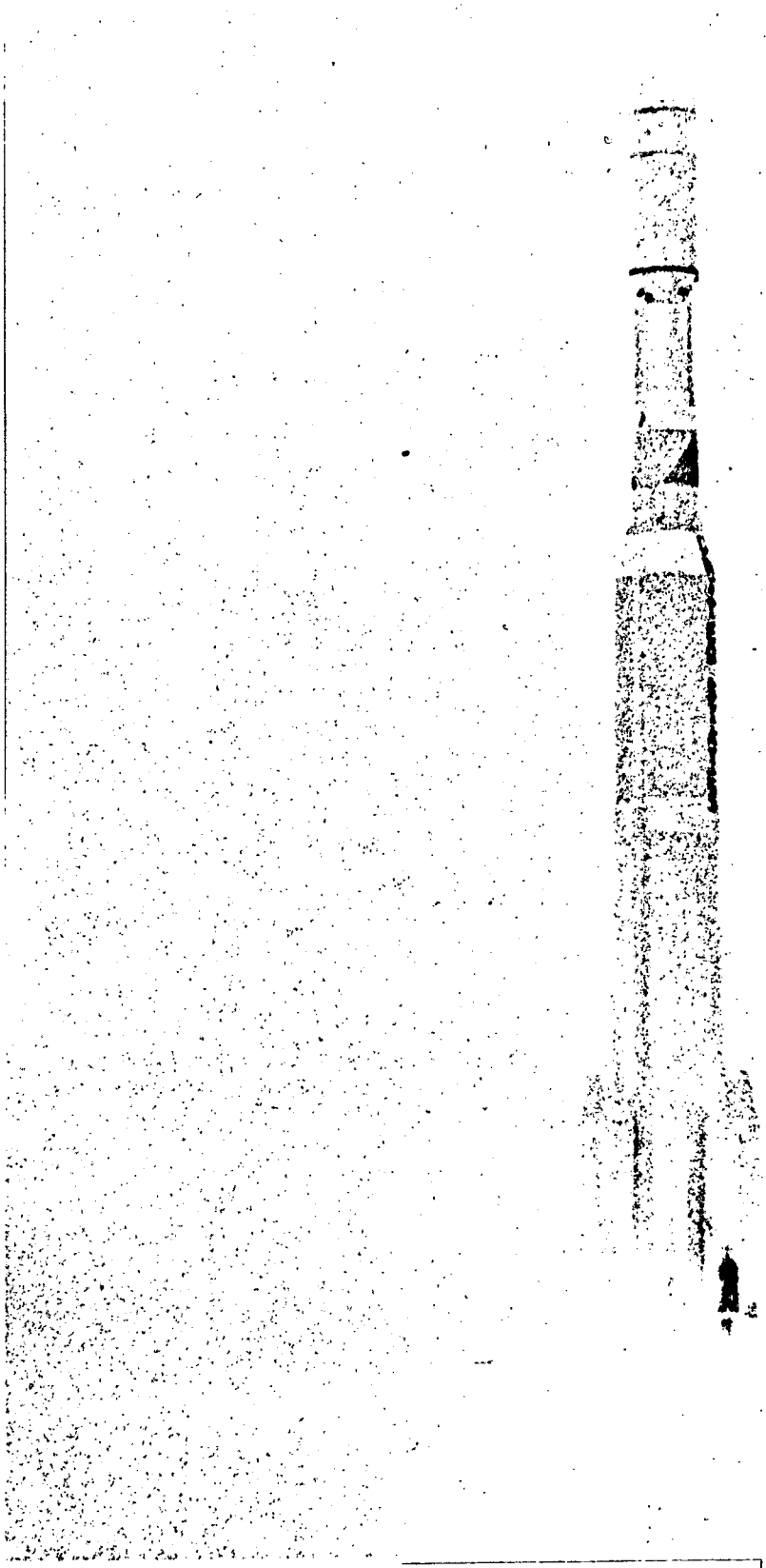

Reproduced from best available copy.

Preceding pagesblank

OBSERVATORY CONFIGURATION

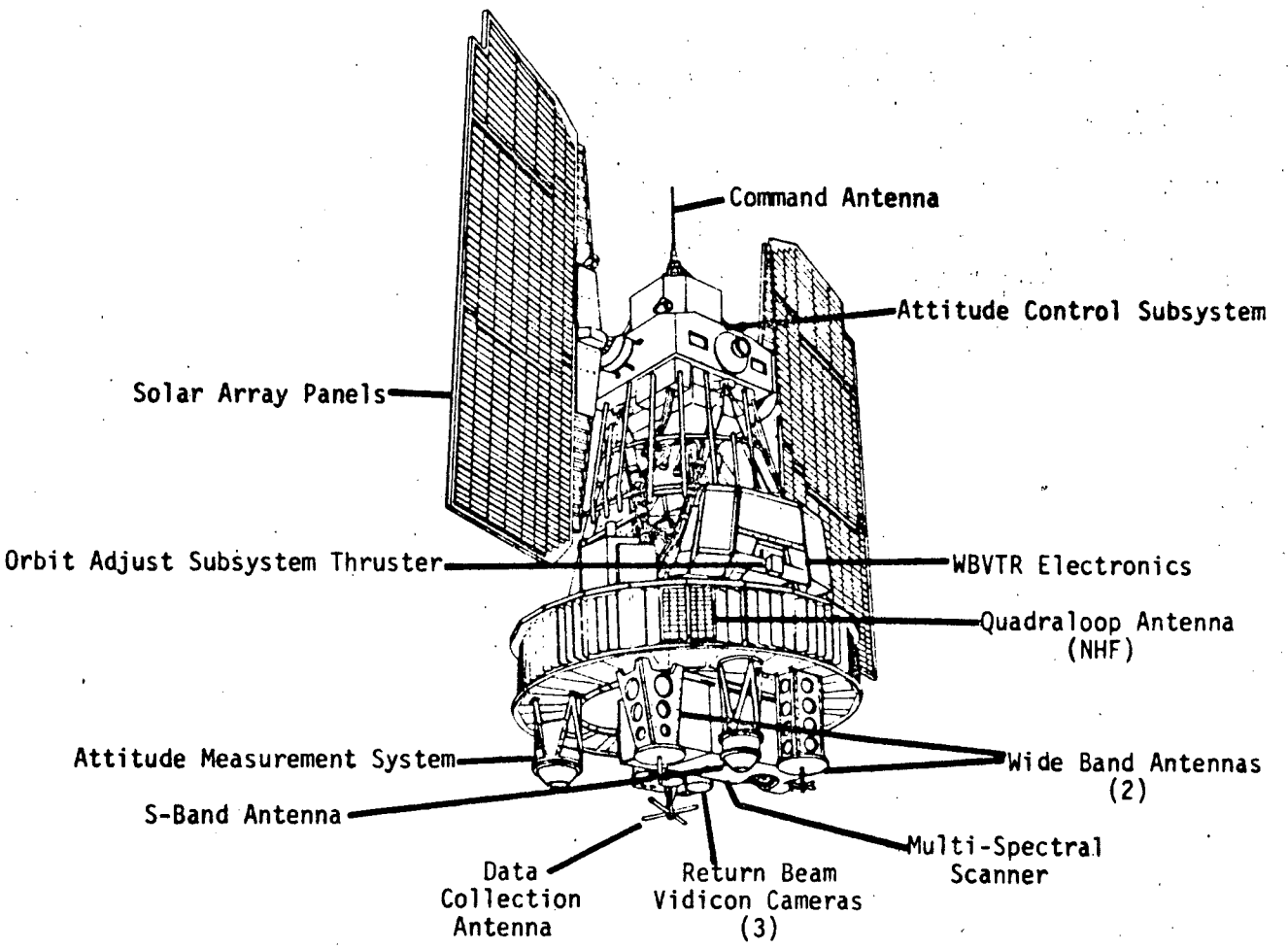

Reproduced from best available copy.

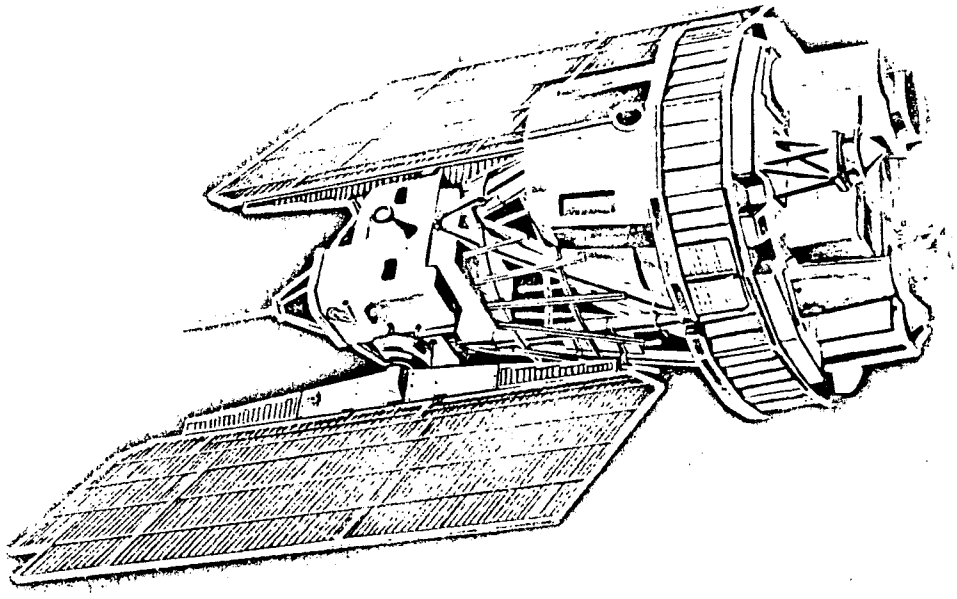

Reproduced from best available copy.

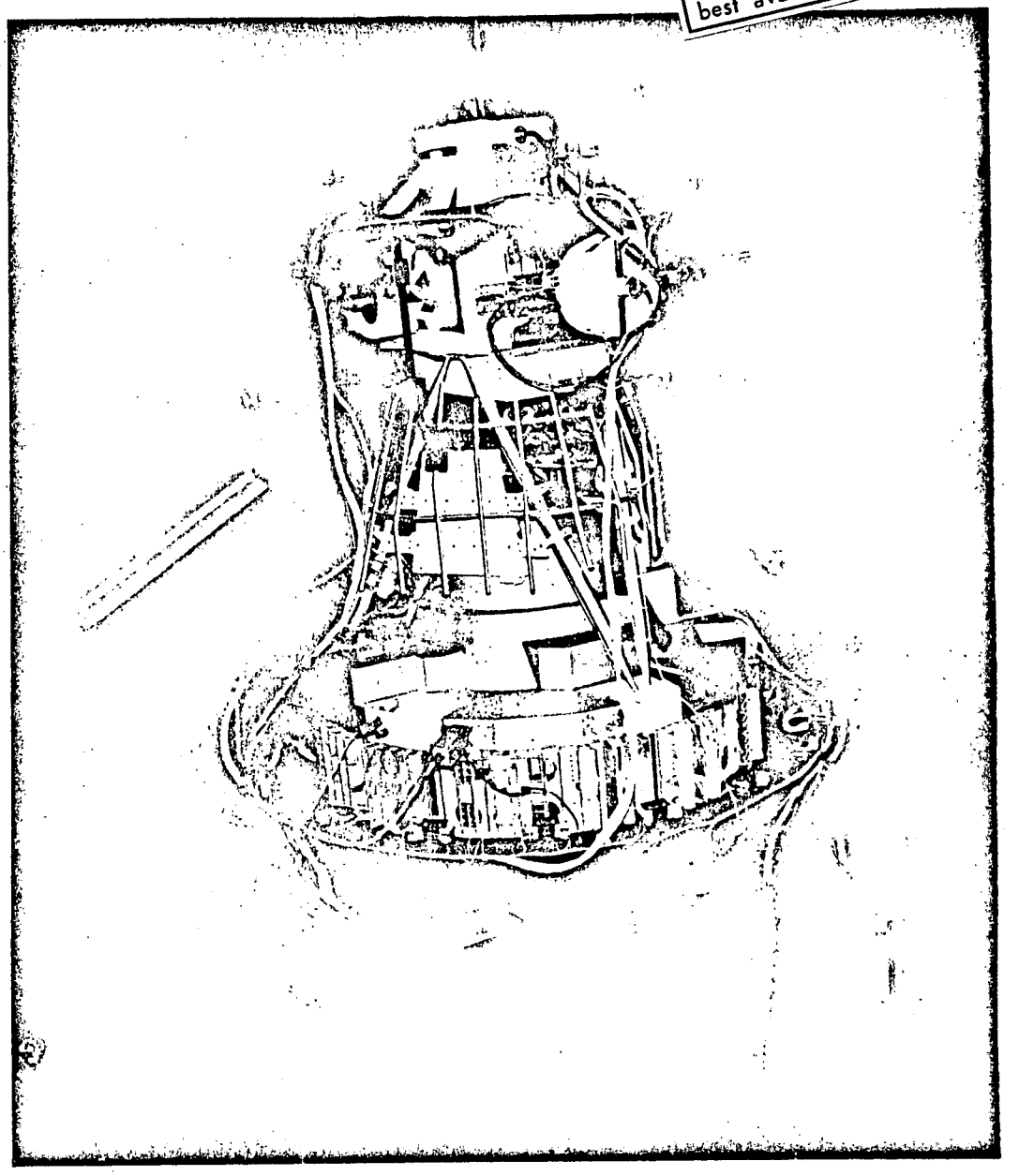

TABLE OF CONTENTS

Section		Page
1	Introduction	1-1
2	Summary	2-1
3	Spacecraft Activation Sequence	3-1
4	Orbital Parameters	4-1
5	Power Subsystem	5-1
6	Attitude Control Subsystem	6-1
7	Telemetry Subsystem	7-1
8	Command/Clock Telemetry	8-1
9	Orbit Adjust Subsystems (OAS)	9-1
10	Magnetic Moment Compensating Assembly (MMCA)	10-1
11	Unified 'S' Band Premodulation Processor	11-1
12	Separation and Unfold Subsystem	12-1
13	Electrical Interface Subsystem	13-1
14	Thermal Control Subsystem	14-1
15	Narrowband Tape Recorder (NBTR)	15-1
16	Wide Band Telemetry Subsystem	16-1
17	Attitude Measurement (AMS)	17-1
18	Wide Band Video Tape Recorders	18-1
19	Return Beam Vidicon Subsystem	19-1
20	Multispectral Scanner Subsystem	20-1
21	Data Collection System	21-1
APPENDIX	A - ERTS -1 Configuration	A-1
	B - Command Matrix	B-1
	C - Telemetry Matrix	C-1
	D - Strip Chart Payload Signatures	D-1
	E - Thermal Anomaly of Right Forward Sun Sensor	E-1
	F - RBV and MSS Photographs	F-1

LIST OF ILLUSTRATIONS

Figure		Page
4-1	ERTS I First Orbit After Launch	4-3
4-2	Subsatellite Plot of the ERTS-I Spacecraft	4-4
5-1	Functional Block Diagram, ERTS Power Subsystem	5-2
5-2	Power Subsystem	5-3
5-3	ERTS I Spacecraft Paddle Deployment	5-4
5-4	ERTS I Battery State of Charge	5-6
5-5	End of Night Voltages	5-7
5-6	ERTS I Solar Current vs Time	5-9
6-1	ACS Function Block Diagram	6-2
6-2	Attitude Control Subsystem	6-3
6-3	Separation and Acquisition Attitude Control System	6-7
6-4	Pitch Phase Plane Plot	6-10
7-1	Narrowband Telemetry Block Diagram	7-3
7-2	Narrowband Telemetry and Command Subsystem	7-4
8-1	Command and Clock Subsystem Block Diagram	8-2
8-2	Composite STADAN Audio Waveform	8-3
9-1	Orbit Adjust Subsystem Block Diagram	9-2
9-2	Orbit Adjust Thruster Orientation	9-3
9-3	Orbit Adjust Subsystem	9-4
9-4	Performance Characteristics	9-7
9-5	Performance Characteristics	9-9
9-6	Performance Characteristics	9-11
10-1	MMCA Functional Block Diagram	10-1
11-1	USBE/PMP Functional Block Diagram	11-2
11-2	S-Band Transmission Spectrum	11-3
11-3	MSFN/USB Uplink Modulation	11-4
12-1	ERTS Observatory/Shroud Envelope and Minimum Clearances	12-2
12-2	Separation and Unfold Subsystem Mechanical Details	12-3
12-3	Separation and Unfold Subsystem Functional Block Diagram	12-4
13-1	APU Functional Block Diagram	13-2
13-2	PSM Functional Block Diagram	13-3

LIST OF ILLUSTRATIONS (Cont)

Figure		Page
14-1	Functional Block Diagram of Thermal Control Subsystems	14-2
15-1	Narrowband Tape Recorder Block Diagram	15-2
16-1	Wideband Telemetry Subsystem Block Diagram	16-2
16-2	Wideband Telemetry Subsystem Block Diagram	16-3
17-1	AMS Block Diagram	17-2
17-2	Attitude Measurement Sensor	17-3
18-1	WBVTR Functional Block Diagram	18-2
18-2	Wideband Video Tape Recorder	18-3
18-3	Wideband Video Tape Recorder	18-4
18-4	ERTS VTR Transport	18-5
19-1	Return Beam Vidicon System Functional Block Diagram	19-2
19-2	Return Beam Vidicon System Functional Block Diagram	19-3
20-1	MSS Scanning Arrangement	20-2
20-2	Simplified Functions Block Diagram of the Overall MSS System	20-3
20-3	Multispectral Scanner	20-4
21-1	ERTS DCS System Description	21-2
21-2	Data Collection System Functional Block Diagram	21-3
21-3	Data Collection System Functional Block Diagram	21-4

LIST OF TABLES

Table		Page
4-1	Elements of the Mission Orbit	4-1
5-1	Power Subsystem Launch Configuration	5-1
5-2	Comparison of Battery Discharge Characteristics	5-5
5-3	Summary of Solar Array Orbit Average Energy	5-8
5-4	Regulated Voltage Telemetry Summary	5-11
5-5	System Parameters	5-12
6-1	Attitude Control Subsystem Launch Mode	6-4
6-2	Subsystem Temperature and Pressure Averages	6-16
6-3	ACS Voltages and Currents	6-17
7-1	Telemetry Subsystem Launch Mode	7-1
7-2	TMP Telemetry Values	7-2
8-1	Command/Clock Subsystem Launch Mode	8-4
8-2	Command/Clock Telemetry Summary	8-5
9-1	Orbit Adjust Subsystem Launch Mode	9-1
9-2	Orbit Adjust Subsystem Telemetry Values	9-6
10-1	MMCA Launch Mode	10-2
10-2	MMCA Telemetry Values	10-2
11-1	USB/PMP Launch Mode	11-5
11-2	USB/PMP Telemetry Values	11-5
13-1	APU Launch Mode	13-1
14-1	Thermal Telemetry Values	14-3
15-1	Narrowband Tape Recorders Launch Mode	15-1
15-2	Narrowband Tape Recorders Telemetry Values	15-3
16-1	Wide Band Telemetry Subsystem Launch Mode	16-4
17-1	AMS Telemetry Values	17-1
18-1	Launch Configuration	18-6
18-2	WBVTR Rewind Mode Telemetry Values	18-7
18-3	WBVTR Playback Mode Telemetry Values	18-8
18-4	WBVTR Record Mode Telemetry Values	18-9

LIST OF TABLES (Cont)

Table		Page
19-1	Return Beam Vidicon Subsystem Launch Mode.	19-1
19-2	Return Beam Vidicon Telemetry Values	19-5
20-1	Multispectral Scanner Subsystem Launch Mode	20-5
20-2	Multispectral Scanner Subsystem Telemetry	20-7
21-1	Data Collection System Launch Mode	21-1
21-2	Data Collection System Telemetry Values	21-5

SCOPE

This document is the initial issue of the ERTS-1 Performance Evaluation periodic reports. The data contained herein covers the spacecraft configuration just prior to launch and throughout the subsystem's activation sequences through orbit 35 including the orbit adjust operation. Baseline data established at the 20°C Plateau in the thermal vacuum testing are included to permit comparison.

SECTION 1

INTRODUCTION

SECTION 1
INTRODUCTION

This document contains the results of the analysis conducted on the telemetry data from the prelaunch, launch and flight activation phases of the ERTS-1 spacecraft. It is presented by subsystem sections and provides for inter-relationships as they exist between the several subsystems. A brief statement of subsystem characteristics precedes flight evaluation statements. The appendix contains a total list of components flown on ERTS-1 and a complete listing of commands and telemetry functions for reference.

Flight data is compared to baseline data established at the 20°C plateau during thermal vacuum testing of the spacecraft. Evaluation guidelines were derived from the specifications developed from the ERTS program objectives i.e., "The primary mission objective of ERTS-1 is the acquisition of multispectral images of the surface of the earth with the best practical resolution obtainable with near state-of-the-art sensors. To accomplish this objective, two different types of multispectral sensors are used; a three camera return beam vidicon (RBV) system, and a four-channel multispectral scanner (MSS).

A secondary objective is the use of the ERTS-1 receiving, frequency translating, and transmitting equipment as a relay system to gather data from fixed earth-based sensor platforms which are operated by individual investigators.

Systematic, repetitive earth coverage under nearly constant observation conditions is required for maximum utility of the multispectral imagery to be collected by ERTS-1. A circular sun-synchronous orbit will provide the optimum repetitive observation conditions."

SECTION 2

SUMMARY

SECTION 2
SUMMARY

ORBITS 1-35

The ERTS-1 spacecraft was launched from the Western Test Range on 23 July, 1972 at 18:06:06.508. The launch and orbital injection phase of the spaceflight were nominal and deployment of the spacecraft followed predictions.

POWER SUBSYSTEM (PWR)

After separation the solar paddles deployed successfully slewed to proper position and began normal sun tracking. The array current averaged 14.7 amperes and reached a peak current of 15.8 amperes. Battery voltages were 33.2 VDC at max charge and the end-of-night voltages were about 28.6 VDC. Battery temperatures averaged 20.0°C. All compensation and auxiliary loads completed checkout successfully. In orbit 2 the shunt loads drew current showing that the automatic shunt dissipators were operable.

ATTITUDE CONTROL SUBSYSTEM (ACS)

Following a nominal separation at 19:06:35 and subsequent stabilization, the ACS continued to operate normally. Roll, pitch and yaw position and rate specification were met successfully. Existing levels of spacecraft disturbance torques resulted in an average of 1-2 gates of +R and 0-1 gates +P polarities per orbit. Analyses are continuing to evaluate the nature of the disturbances and define subsequent compensation via the use of the Magnetic Moment Compensating Assembly (MMCA). The yaw mode was commanded to "normal" during interrogation 1 Alaska.

The overall performance of the ACS has been excellent.

COMMAND/CLOCK SUBSYSTEM (CMD)

All command functions have performed well. From separation of the spacecraft; commands, both real time and comstor, have been executed in a timely and exact manner. All difficulties

associated with commanding have been directly relatable to acquisition/pointing and non spacecraft problems.

TELEMETRY SUBSYSTEM (TLM)

Normal telemetry was consistently received with both the USB and VHF down links being exercised. All functions in the telemetry matrix are normal and within expected limits. Some fluctuations and noise have been experienced but not an unusual amount for transmission conditions. All telemetry indicates the spacecraft telemetry subsystem performance has been excellent.

ORBIT ADJUST SUBSYSTEM (OAS)

Health functions of the OAS were normal. The -X thruster was successfully fired for 4 seconds in orbit 38, 250 seconds in orbit 44, and 318 seconds in orbit 59. Operation was nominal. Tracking data confirmed the desired correction.

MAGNETIC MOMENT COMPENSATING ASSEMBLY (MMCA)

Health functions of the MMCA were normal. The unit was not activated during the period of this report. Insertion of dipole values was deferred pending evaluation of the ACS performance. ACS gating throughout this period has averaged 2-3 gates (in the +R and +P direction) per orbit.

UNIFIED "S" BAND/PREMODULATION PROCESSOR (USBE)

The USBE functioned normally throughout this period. Carrier and subcarrier frequencies and formats were present for commands, telemetry, (1KB real time and 24KB playback) ranging and data collection system transmissions.

SEPARATION AND UNFOLD SUBSYSTEM (SUS)

The separation subsystem performed as expected. The 2.5 second timer caused paddle unfold. Before separation the subsystem properly restrained the paddles, disabled the primary and redundant matrix A drivers, provided - 24.5 VDC to the Attitude Control reset line and provided telemetry signals indicating that the spacecraft was still mated to the Delta Vehicle. After separation all circuits were activated, separation was confirmed, and paddles were deployed properly.

THERMAL SUBSYSTEM (THM)

The operation of the thermal subsystem in both the sensory ring and the ACS was within the expected limits at all locations with only one exception. The forward sun sensor on the TV transition section registered temperatures of 60°C, about 20°C higher than expected. An in-depth analysis has substantiated this data. The increased temperature has not been detrimental to spacecraft operation.

Average temperatures were: ACS baseplate 22.4°C; sensory ring 20.1°C; and center section 18.4°C. The shutter position average at orbit 35 was 35.7°.

ELECTRICAL INTERFACE SUBSYSTEM (EIS)

All EIS functions which were exercised during launch and activation were executed and confirmed. After launch, power switching was held to a minimum. Operation of time code processing, search track data processing, back-up timer operation, signal switching and power switching was confirmed.

NARROWBAND TAPE RECORDERS (NBTR)

Both NBTR's operated in a nominal manner. Both recorders were On and recording during the launch phase. NBTR-1 was Played back over Alaska in orbit 1. Due to problems in maintaining lock on the USB link the data contained many dropouts. During orbit 2, both

NBTR-1 and 2 were played back simultaneously utilizing both the USB and VHF links. Data was satisfactory and continued to be normal throughout this report period. Telemetry points on the recorders were normal.

WIDEBAND TELEMETRY SUBSYSTEM (WBTS)

Both WB links were activated during orbit 12 in the 10 watt mode. All S/S telemetry data was normal. The high power mode (20 watts) was tested in orbit 13, and all telemetry was normal. Carrier to noise ratio in the wideband ground receiver IF was measured as a function of satellite elevation angle and checked against the RF link budget. Both links agreed within 2 dB with calculated performance, and link margins appear more than adequate for all RBV & MSS data. Prelaunch RBV and MSS data were played back over the wideband links in orbit 15 and all data appeared normal. MSS minor frame sync errors measured were the same as measured prior to launch. (5 errors per 10 seconds at Goldstone). Both wideband RF links, including receiving site equipment, performed as predicted throughout this period.

ATTITUDE MEASUREMENT SENSOR (AMS)

The AMS power was applied during orbit 6 and unit has performed as expected since then. ACS fine control agrees with AMS output.

WIDEBAND VIDEO TAPE RECORDERS (WBVTR)

Both recorders were OFF and at mid-tape position during launch. During orbit 5, the recorders were rewound in preparation for playing back of data recorded prior to launch.

In orbit 15, prelaunch RBV data from VTR 1 and MSS data from VTR 2 were played back, and all data were good. Data were recorded and played back through orbit 35 in a nominal manner.

WBVTR Telemetry values were normal.

RETURN BEAM VIDICON (RBV)

The RBV subsystem was activated over Greenbelt during orbit 19. Procedural problems prevented the activation profile from being successful but no anomalies of the payload hardware were noted. Cameras 1 and 2 were turned on.

Subsequent turn on during orbit 26 confirmed all operations to be normal. The RBV was operated in a routine manner after initial turn on and activation.

RBV Telemetry values were normal.

During the first 35 orbits the RBV photographed 54 scenes, (185KM x 185KM) each consisting of images from all three cameras. Real time scenes were obtained from the United States and recorded scenes from Australia.

MULTI-SPECTRAL SCANNER (MSS)

The MSS was activated over Goldstone during orbit 20, to obtain engineering data. All operations were normal. During orbit 21, a sun cal over Goldstone indicated that bands 1, 2 and 3 sun cal input amplitude was lower than anticipated, band 4 was normal. Subsequent to activation the MSS scanned 54 scenes (185KM x 185KM) through orbit 35, each consisting of images from 4 spectral bands. Real time scenes were obtained from the United States and recorded scenes from Australia.

DATA COLLECTION SYSTEM (DCS)

The DCS receiver was powered during orbit 5 and the system received and transmitted messages from 9 stations located in Massachusetts, California, Virginia, Pennsylvania, and Maryland. Performance was nominal.

SECTION 3

SPACECRAFT ACTIVATION SEQUENCE

SECTION 3
SPACECRAFT ACTIVATION SEQUENCE

The following paragraphs describe the activation sequence for the Spacecraft through Orbit 35. This sequence is subdivided by orbit and interrogation. For each interrogation, the stations and activities are listed. Only initial activations with associated time is shown. All subsequent commanding was normal.

Prelaunch (WTR, OCC)

1. Start NBTR2 in record at 17:24:05 GMT
2. Start NBTR1 in record at 17:50:04 GMT
3. Switch to internal power at 17:47:00 GMT

Orbit O/1 (WTR, VANGUARD, TAN, MAD, ULA, HAW)

1. Lift off at 18:06:06.508
2. Separation at 19:06:35
3. Ascending Node 19:07:14
4. Confirmed Controls Stabilization of S/C, 19:08:15
5. Satellite Night to Day Transition 19:15:00
6. Enable USB Transmitters 19:22:18
7. Established Command Ability 19:24:08
8. USB Ranging on 19:24:02
9. Playback of NBTR1 19:36:21

Orbit 2 (BUR, MAD, ULA, HAW, HSK)

1. Confirmed ability to turn auxiliary and compensation loads on and off. 21:03:09
2. Utilized VHF transmitters in high and low power modes. 21:17:06
3. Playback of NBTR2. 21:18:47

Orbit 3 (CY1, MAD, ULA, GWM, HSK)

1. Verified spacecraft status stored and real time command capability.

Orbit 4 (BDA, ENT, ULA, GWM, CRO)

1. Verified spacecraft status, stored and real time command capability.

Orbit 5 (MIL, BDA, ENT, ULA, CRO)

1. Wideband Video-2 Recorder on 02:09:40
2. Wideband Video-1 Recorder on 02:10:02
3. WBVTR-2 Rewind 02:09:53
4. WBVTR-1 Rewind 02:10:09
5. WBVTR-2 Off 02:11:52
6. WBVTR-1 Off 02:12:09
7. DCS Receiver-1 on 02:10:18

Orbit 6 (TEX, MIL, ENT, EGD, ULA)

1. Attitude Measurement Sensor on 04:00:22

Orbit 7 (EGD, ULA, HAW)

1. Verified spacecraft status and command capability

Orbit 8 (HAW, ULA)

1. Verified spacecraft status and command capability

Orbit 9 (ULA, MAD, CY1, GWM)

1. Verified spacecraft status and command capability

Orbit 10 (MAD, CY1, HSK, GWM)

1. Verified spacecraft status and command capability

Orbit 11 (HSK, CRO, BDA)

1. Verified spacecraft status and command capability

Orbit 12 (HSK, CRO, BDA)

1. Wideband power amplifiers 1 and 2 on 10 watts (no modulation) 14:36:48, off 14:50:00

2. Wideband frequency modulator inverter, on 14:36:51, off 14:50:03

Orbit 13 (ENT, EGD, MIL)

1. Wideband power amplifier-1 on 20 watts (no modulation) 16:18:54, off 16:29:01

2. Wideband power amplifier-2 on 20 watts (no modulation) 16:19:06, off 16:29:01

Orbit 14 (ULA, EGD)

1. Enabled and configured RBV/MSS filters. Real time RBV data on filter A and real time 2 MSS data on filter B. 17:59:38.

2. Wideband power amplifiers 1 and 2 ON 18:04:00, 20 watts. (WBPA reduced to 10 watts 18:08:16) - no modulation

3. WBPA's OFF 18:13:37

Orbit 15 (ULA, EGD, HAW)

1. WBVTR-1 Playback mode ON 19:41:41, OFF 19:46:45

2. WBVTR-2 Playback mode ON 19:43:33, OFF 19:48:53

Orbit 16 (ULA, HSK)

1. Verified spacecraft status and command capability

Orbit 17 (CY1, MAD, ULA)

1. Verified spacecraft status and command capability

Orbit 18 (BDA, ENT, ULA)

1. Verified spacecraft status and command capability

Orbit 19 (MIL, BDA, ENT, ULA, CRC

1. WBPA-1 ON 02:09:31

2. RBV power ON 02:11:05 (only Camera 1)

3. WBVTR-1 ON 02:13:08

4. Camera 1 OFF 02:14:41

5. Camera 2 ON 02:14:42

6. Payloads OFF 02:22:10

Orbit 20 (TEX, MIL, EGD, ULA, ENT)

1. Commanded MSS band and modes ON/OFF in sequence,then total system operated (including WBVTR-2) 03:56:22

Orbit 21 (EGD, ULA)

1. MSS System ON 05:38:32 Sun cal performed (WBVTR-2, ON; WBPA-2, ON)

Orbit 22 (ULA)

1. Verified spacecraft status and command capability

Orbit 23 (HAW, ULA, MAD, CY1

1. Verified spacecraft status and command capability

Orbit 24 (MAD, BDA, HSK, CRO)

1. Verified spacecraft status and command capability

Orbit 25 (BDA, CRO, HSK, MAD, GWM)

1. Verified spacecraft status and command capability

Orbit 26 (ENT, BDA)

1. Exercised the RBV system each camera, then all cameras. RBV ON 14:42:21

Orbit 27 (ENT, EGD)

1. Real time RBV and MSS operations

Orbit 28 (ULA, EGD)

1. Real time RBV and MSS operations

Orbit 29 (ULA, EGD, HAW)

1. Real time RBV and MSS operations

Orbit 30 (MAD, ULA)

1. Real time RBV and MSS operations

Orbit 31 (MAD, ULA)

1. Rewind of WBVTR 1 and 2. 23:10:15

Orbit 32 (ENT, ULA)

1. Playback of WBVTR 1 and 2 00:33:27

Orbit 33 (ENT, ULA)

1. Playback of WBVTR 1 and 2, 02:16:39

Orbit 34 (EGD, ULA)

1. Playback of WBVTR 1 and 2. 03:58:29

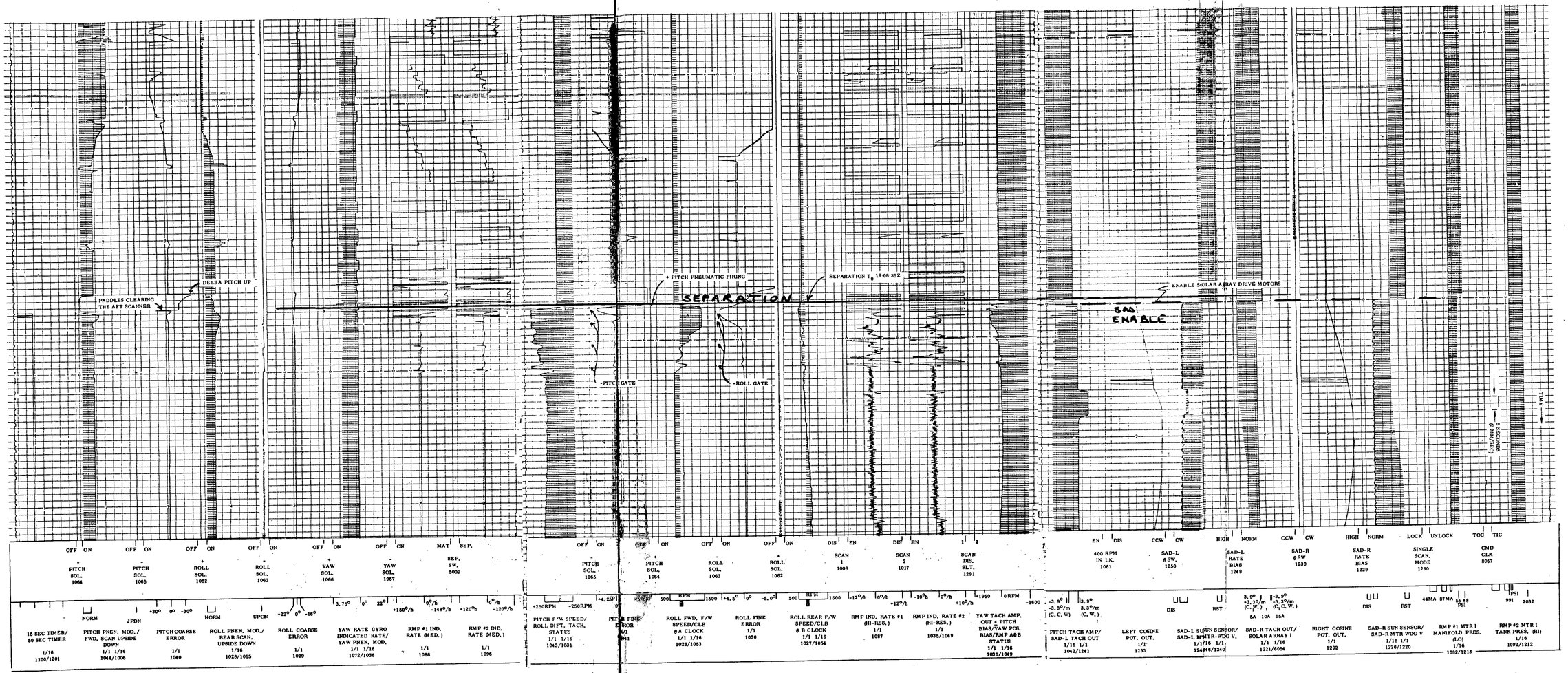

Fig. - 3.1

Fig. - 3.2

Figure 6-3. Separation and Acquisition, Attitude Control System

Fig. - 3.3

Orbit 35 (EGD, ULA)

1. WBVTR 1 and 2 REWIND 05:40:00

SECTION 4

ORBITAL PARAMETERS

SECTION 4
ORBITAL PARAMETERS

The ERTS-1 spacecraft was launched from the Western Test Range in a Near Polar Orbit on 23 July 1972 at 18:06:06.508Z. The official international designation is 1972-58A and the mission tracking and telemetry number is 7205801.

Following are the Brouwer mean orbital elements for satellite 1972-58A (ERTS-1) computed and issued by the Goddard Space Flight Center. EPOCH 72 Y 07 M23 D at 23 hours 25 minutes 10.029 sec. UT. Orbital elements are given in Table 4-1.

Table 4-1. Elements of the Mission Orbit

		Planned	Actual
(1)	Apogee	917 km	907.0119 km
(2)	Perigee	917 km	899.7304 km
(3)	Inclination	99.0919 deg*	99.1253 deg
(4)	Semimajor axis	7,294.662 km*	7,281.461 km
(5)	Eccentricity	0.0001*	0.000500 km
(6)	Anomalistic period	103.341 min	103.152 min**
(7)	Argument of perigee	0 deg	170.7493
(8)	Distance between adjacent ground tracks at the equator	157.420 km (85 nm)	157.2 km
(9)	Coverage cycle duration	18 days (251 revolutions)	18 days **

* The 3-sigma uncertainties for the inclination, semimajor axis, and eccentricity are ± 0.1 deg, ±24 km, and ±0.002, respectively.

** After orbit adjust.

Figure 4-1 shows spaceflight during first orbit after launch. All events went well and the spacecraft was stabilized and healthy at 1 Alaska.

The mission requirements are to correct the existing orbit to one having an 18-day repeat cycle giving a subsatellite plot as shown in Figure 4-2. All descending ground traces shown are approximately 10 AM local time with capability of being photographic passes. All ascending ground traces are in local darkness.

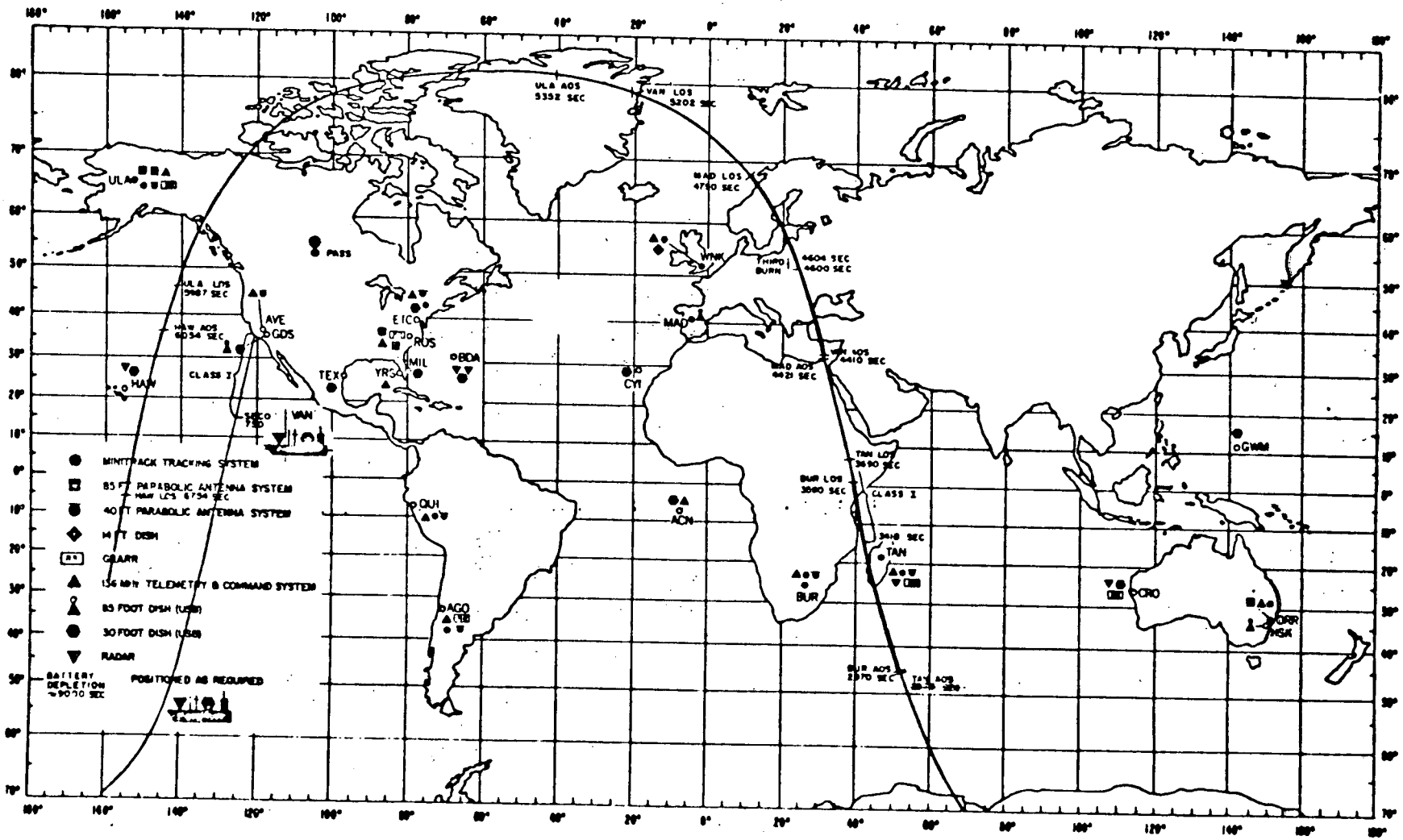

Figure 4-1. ERTS-1 First Orbit After Launch

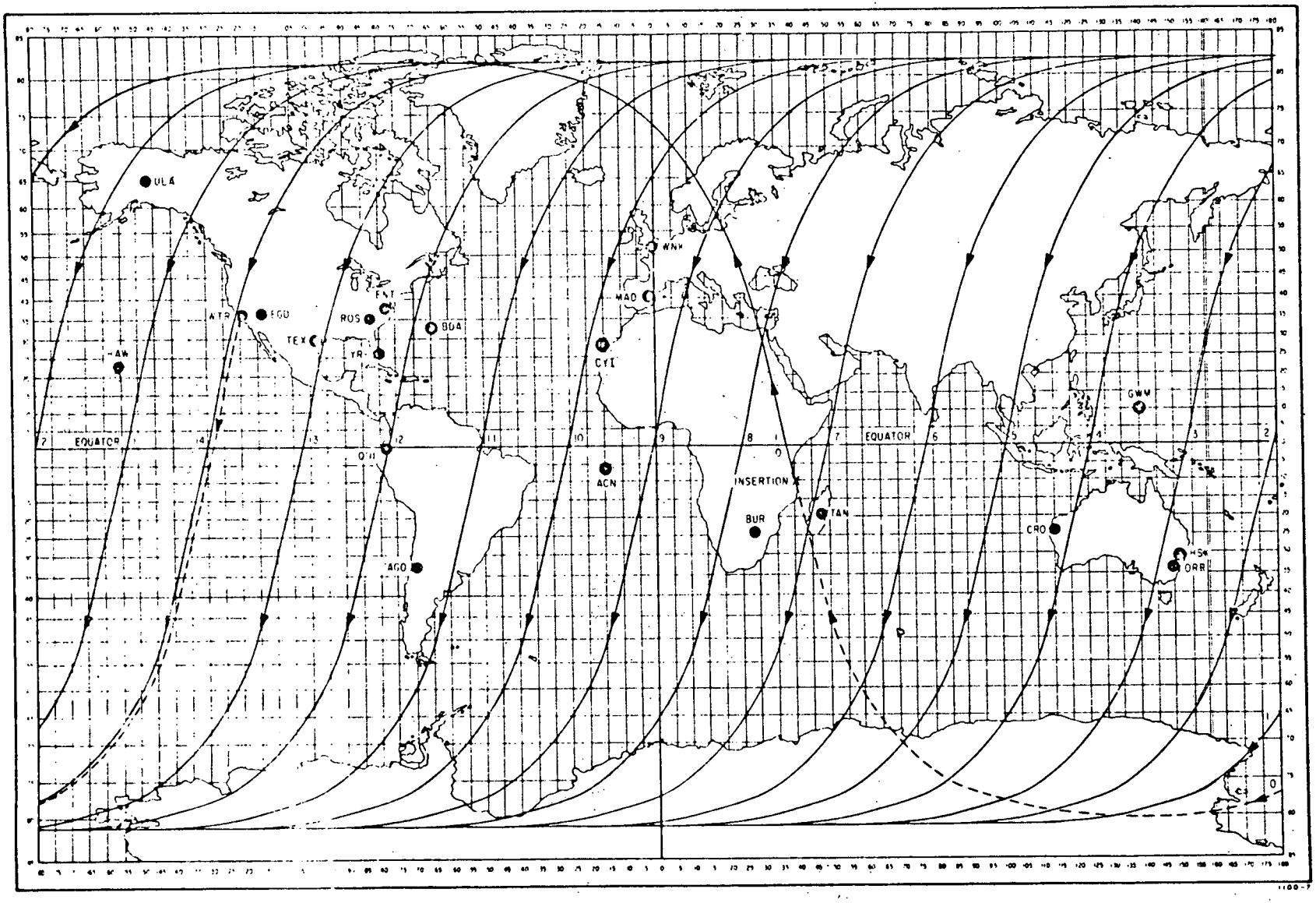

Figure 4-2. Subsatellite Plot of the ERTS-1 Spacecraft

SECTION 5

POWER SUBSYSTEM

SECTION 5
POWER SUBSYSTEM

The power subsystem includes two solar array platform assemblies to convert solar energy to electrical energy; eight storage modules to store electrical energy; one auxiliary load controller and two auxiliary load panels to dissipate excess electrical power; one power control module and one payload regulator module to regulate and distribute power. See Figure 5-1 for functional block diagram and Figure 5-2 and Figure 5-3 for hardware illustration.

The power subsystem provides unregulated and regulated power to satisfy the electrical load requirements of the spacecraft. Unregulated power is supplied with a voltage range of -26 vdc to -37.5 vdc. The regulated power bus is -24.5 ± 0.5 vdc with an output dc impedance of 0.01 ohm and an output ac impedance of 0.1 ohm at frequencies up to 10 KHz. The power control module can deliver up to 20 amperes and the payload regulator module can deliver up to 26 amperes under these conditions.

The Power Subsystem was launched in the configuration shown in Table 5-1.

Table 5-1. Power Subsystem Launch Configuration

	MODE	CMD		MODE	CMD
BATT 1	ON	353	SHUNT LD D	ON	437
BATT 2			COMP LD 1	OFF	355
BATT 3			COMP LD 2		
BATT 4			COMP LD 3		
BATT 5			COMP LD 4		
BATT 6			COMP LD 5		
BATT 7			COMP LD 6		
BATT 8			COMP LD 7		
AUX LD 1	OFF	374	COMP LD 8		
AUX LD 2			TR CHARGE	NORM	346
AUX LD 3			PRM	ON	727
AUX LD 4			PRM FTAP	ON	622
AUX LD 5			PSM BUSS	EN	655
SHUNT LD A	ON	437	SW TMP PWR	ON	614
SHUNT LD B			SPACECRAFT	REG 1	SEL
SHUNT LD C			PAYLOAD	REG 3	SEL

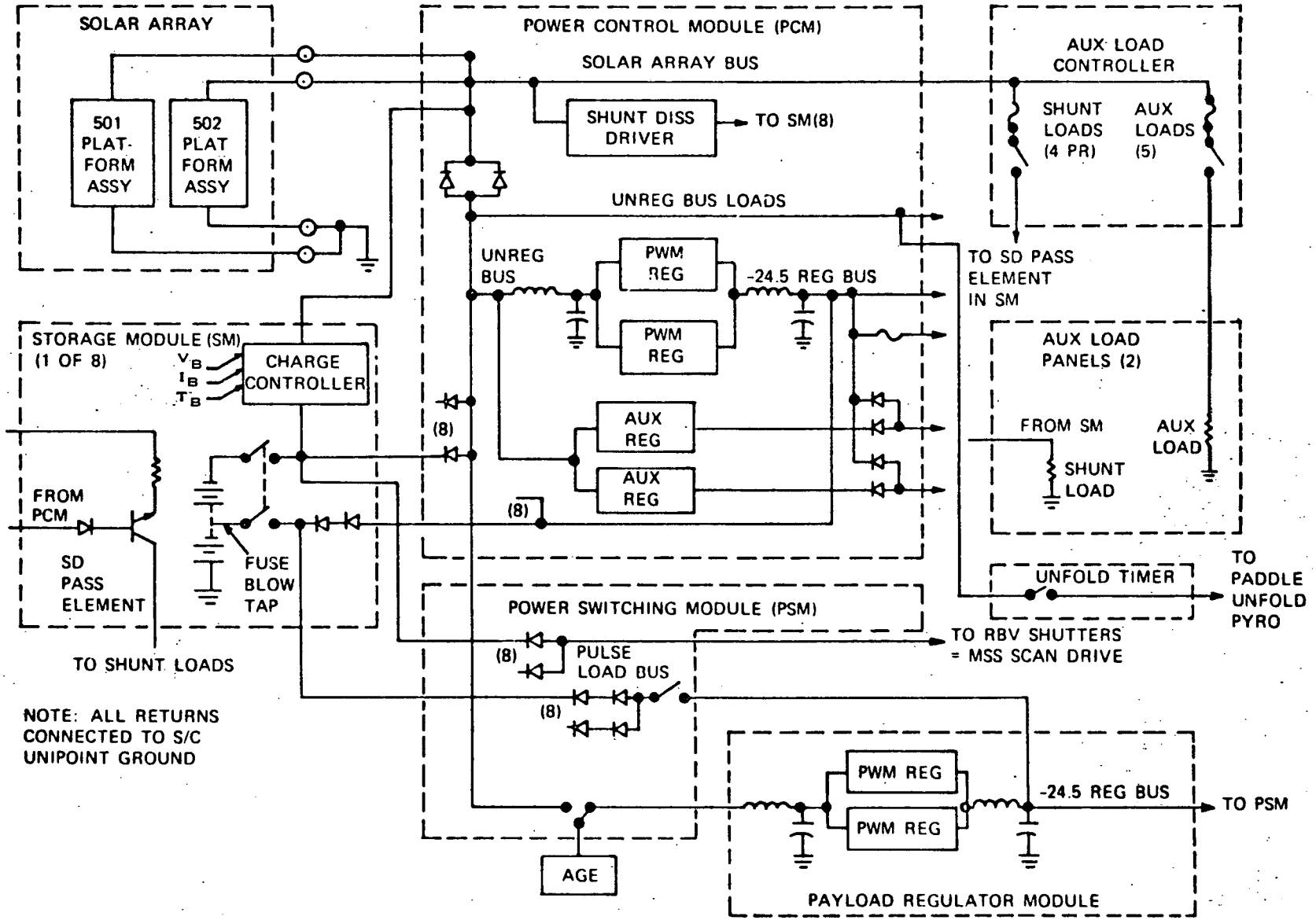

Figure 5-1. Functional Block Diagram, ERTS Power Subsystem

Reproduced from best available copy.

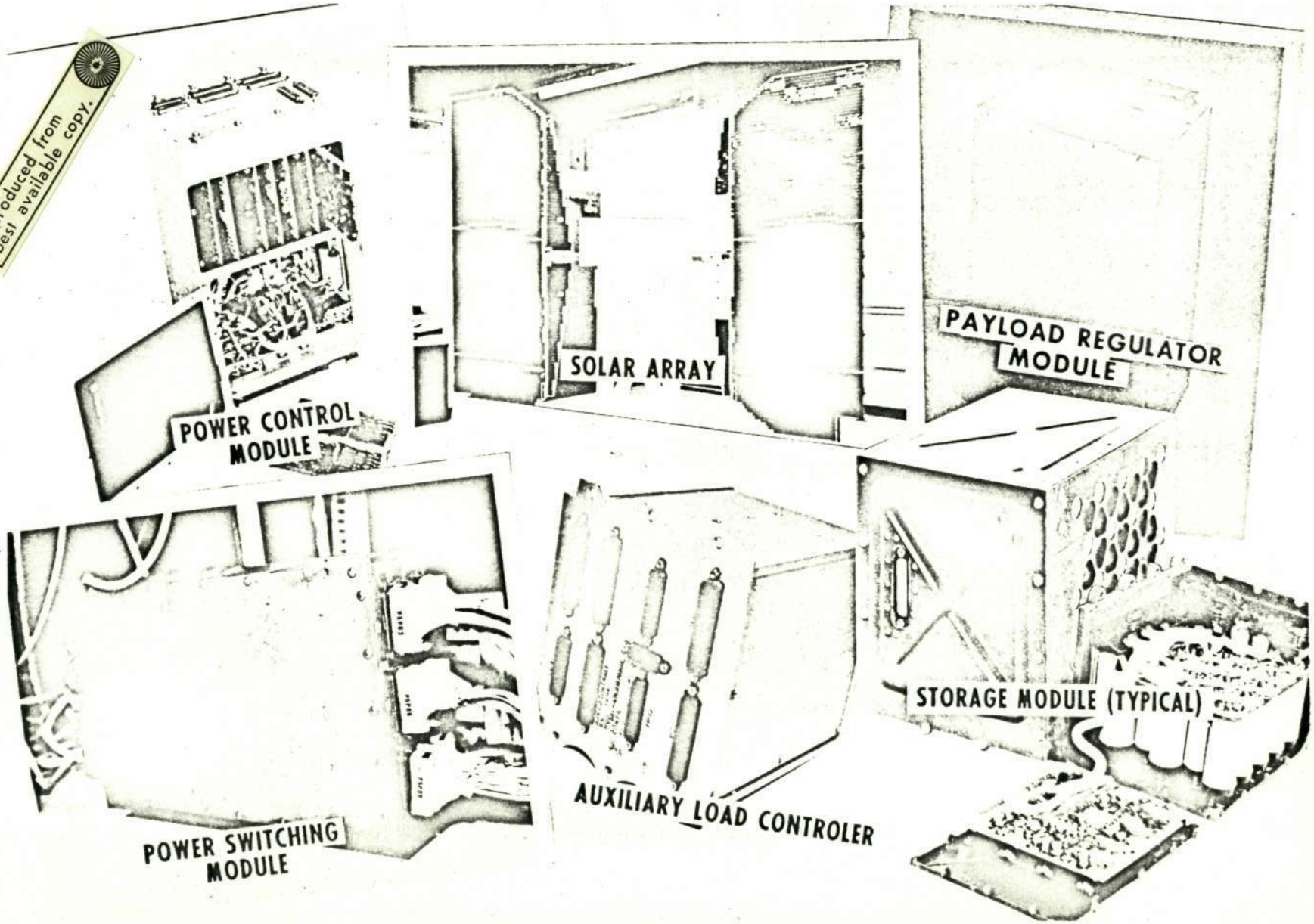

Figure 5-2. Power Subsystem

Reproduced from
best available copy.

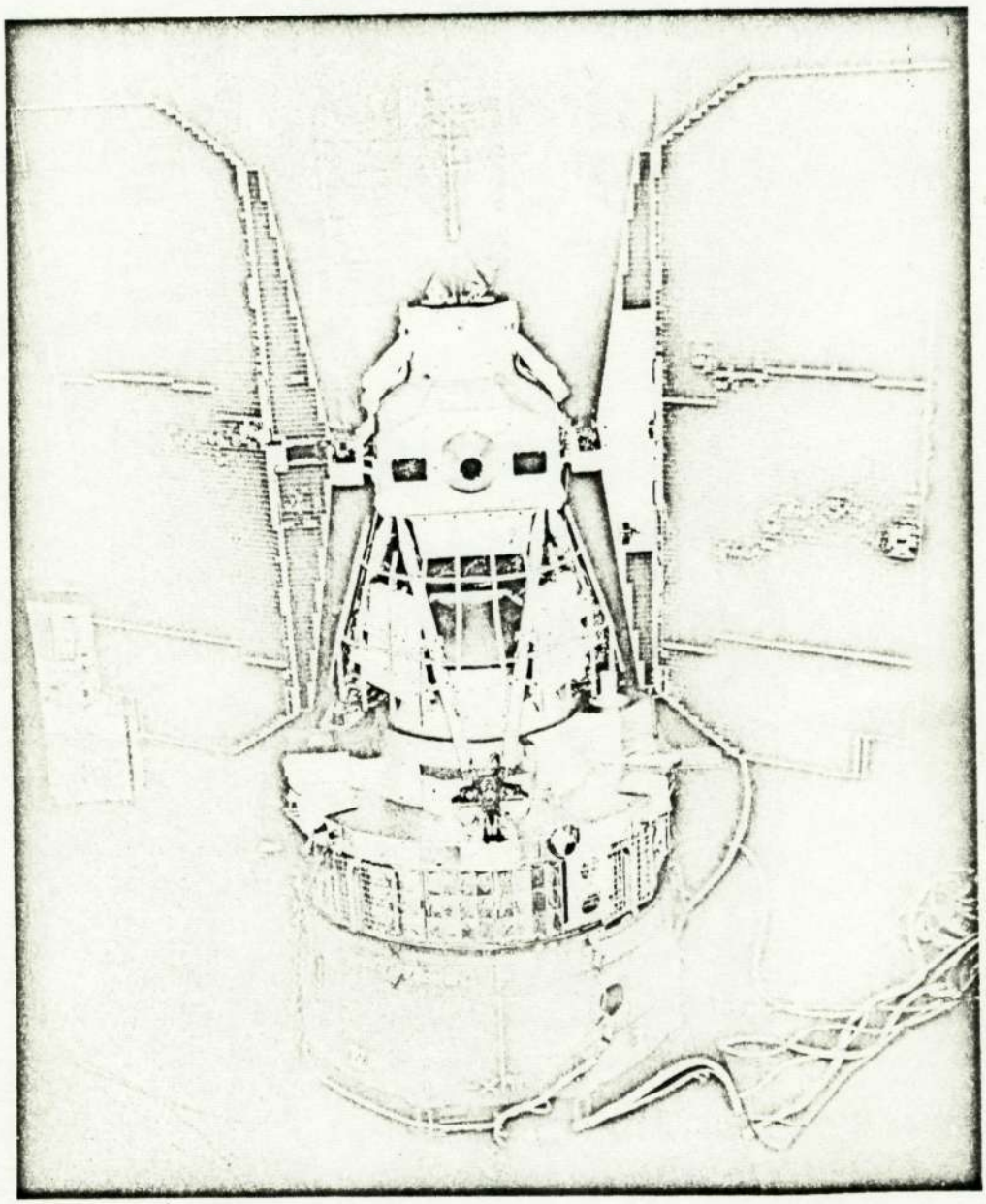

Figure 5-3. ERTS I Spacecraft Paddle Deployment

Performance

The battery packs in the ERTS I power subsystem were on low level charge until 17:47:00 GMT when the spacecraft was switched to internal power prior to launch. The batteries powered the spacecraft for approximately two hours until 19:47 GMT when the solar array current became high enough to supply the load and begin recharging the batteries. This is illustrated in Figure 5-4 which shows the battery state of charge (or depth of discharge) for the first three orbits. The maximum depth of discharge was 33%. The voltage was 28.63 at this point with a current of less then 50 milliamperes.

For comparison to pre-flight data a time of 19:21:26 GMT was taken when the battery voltages were near their minimum voltage due to high currents and deep discharge. Table 5-2 shows this comparison. The lower temperatures and current show that the flight data would have slightly lower voltages than preflight data if adjusted to the same conditions. The voltages are quite adequate to safely supply the ERTS mission.

Table 5-2. Comparison of Battery Discharge Characteristics

Discharge Test Date	Current Spread (Amperes)	Depth of Discharge (%)	Voltage Average (Volts)	Temperature Range (DGC)
6/21/72	0.88-0.95	27.8	28.17	21.0 - 23.5
6/24/72	0.86-0.93	27.8	28.31	23.0 - 24.5
ORBIT 0/1	0.72-0.82	27.8	28.21	18.8 - 21.5

A plot of end of night voltages, average battery temperatures, and temperature spread between batteries is shown in Figure 5-5.

The solar array drives were launched with the left drive in normal mode and the right drive in high mode. Following separation and successful solar panel deployment, the left and right drives were turning their respective solar panels. Upon entering sun the left solar panel slewed until the left panel faced the sun and the rear sun sensor was shaded. The front sun

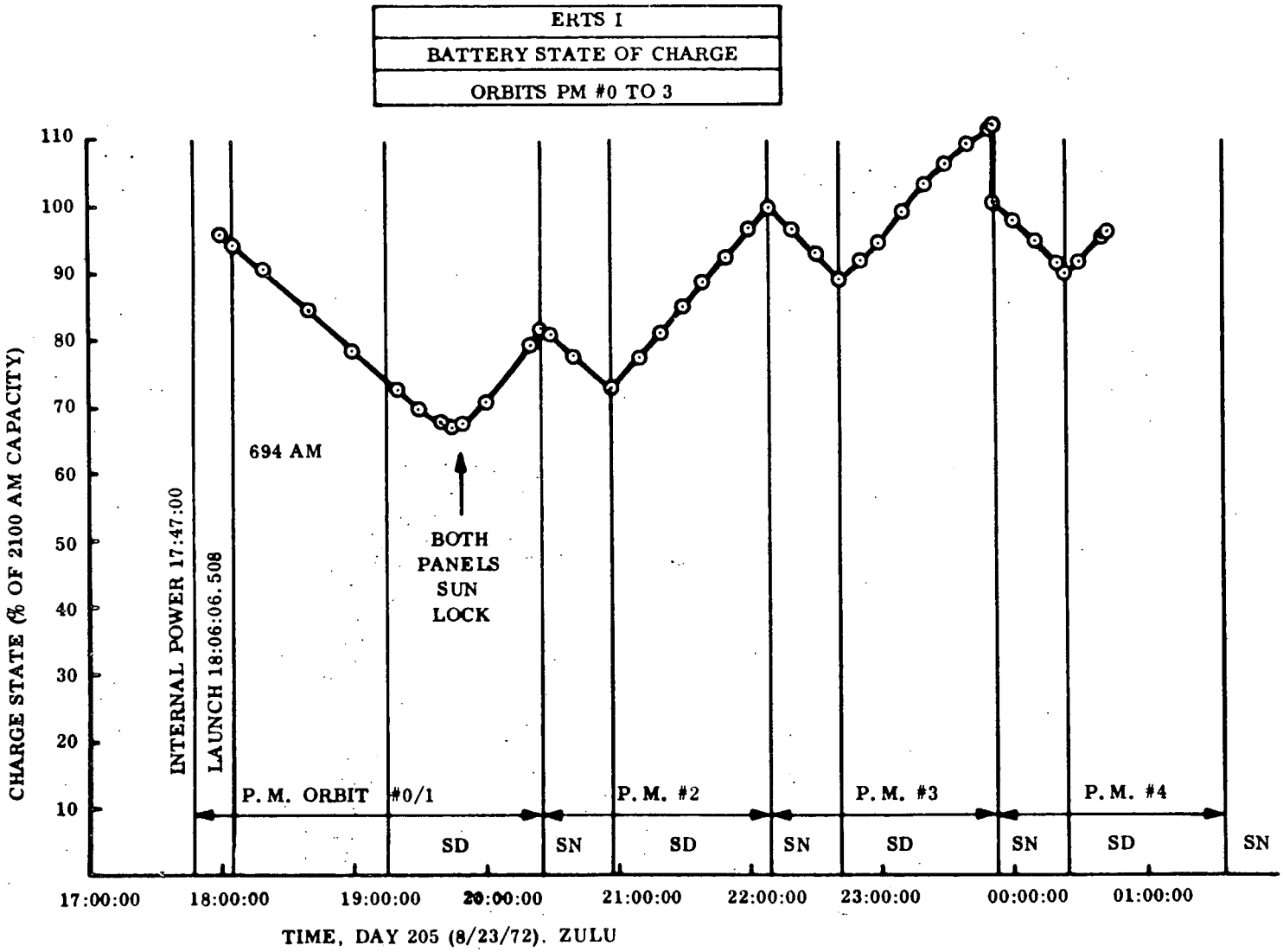

P. M. = POWER MANAGEMENT

Figure 5-4. ERTS 1 Battery State of Charge

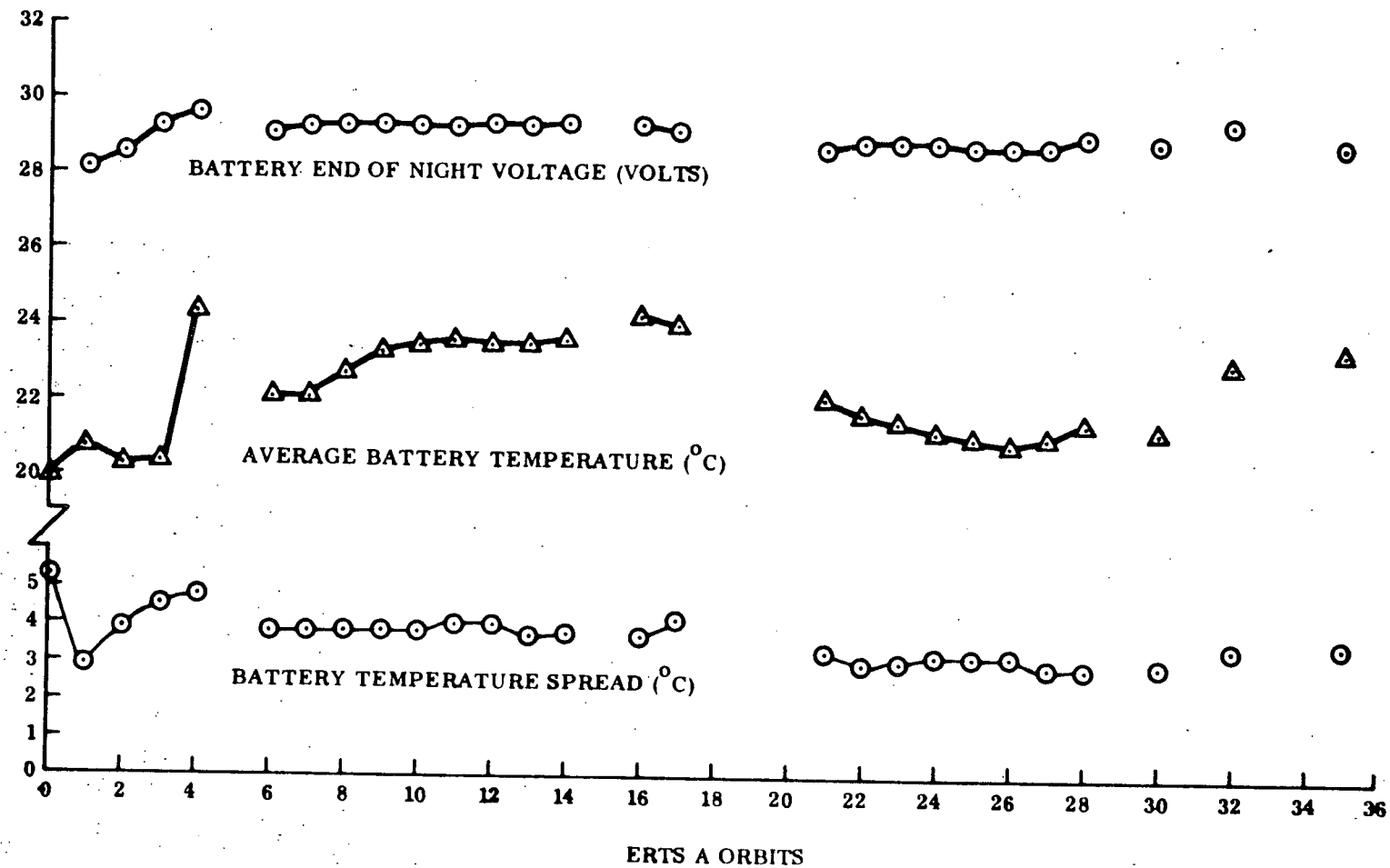

Figure 5-5. End of Night Voltages

sensor was in the albedo shield so the left solar array drive resumed turning at the normal (approximately orbital) rate as determined by the fixed bias input. The orbital turning rate maintained a fixed position in relation to the sun with an output current of 3.2 amperes until the front sun sensor cleared the albedo shield. At that time the left solar panel slewed until normal to the sun line where it began normal sun tracking. The right solar panel remained in the high mode when entering sunlight and continued turning at a fixed rate slightly higher than orbital rate. At 19:45:01 the right solar array drive sun sensor was seeing sun and it was commanded to normal mode. It immediately began slewing along with the left solar array which had begun slewing approximately four minutes earlier. Both panels slewed until normal sun tracking on each independent drive was achieved. The solar array current rose to peak of 15.2 amperes with an over and undershoot response. In mid day of orbit #2 solar array current was 15.0 amperes where there was no albedo contribution. Figure 5-6 is a plot of solar array current for the first two orbits and also illustrates the effects of sensor ring sun shading on portions of the solar panels at beginning and end of satellite day. It also illustrates the albedo contribution when the solar panels are in position to see both the sun and earth simultaneously. The albedo will vary with ground track and with the seasons of the year. The predicted orbit average energy for the solar array was 1046 ampere-minutes. The orbit average energy received from the solar array for the first ten orbits is shown in Table 5-3. The energy received is very close to the predicted value. Orbit to orbit variations are due to albedo variations and variations of spacecraft load and hence, voltage operating point (which effects the I-V load point and power from the array).

Table 5-3. Summary of Solar Array Orbit Average Energy

Orbit	Solar Array Average Energy (Ampere-Minutes)
1	527
2	1033
3	1009
4	1068
5	1027
6	1058
7	1058
8	1053
9	1066
10	1054

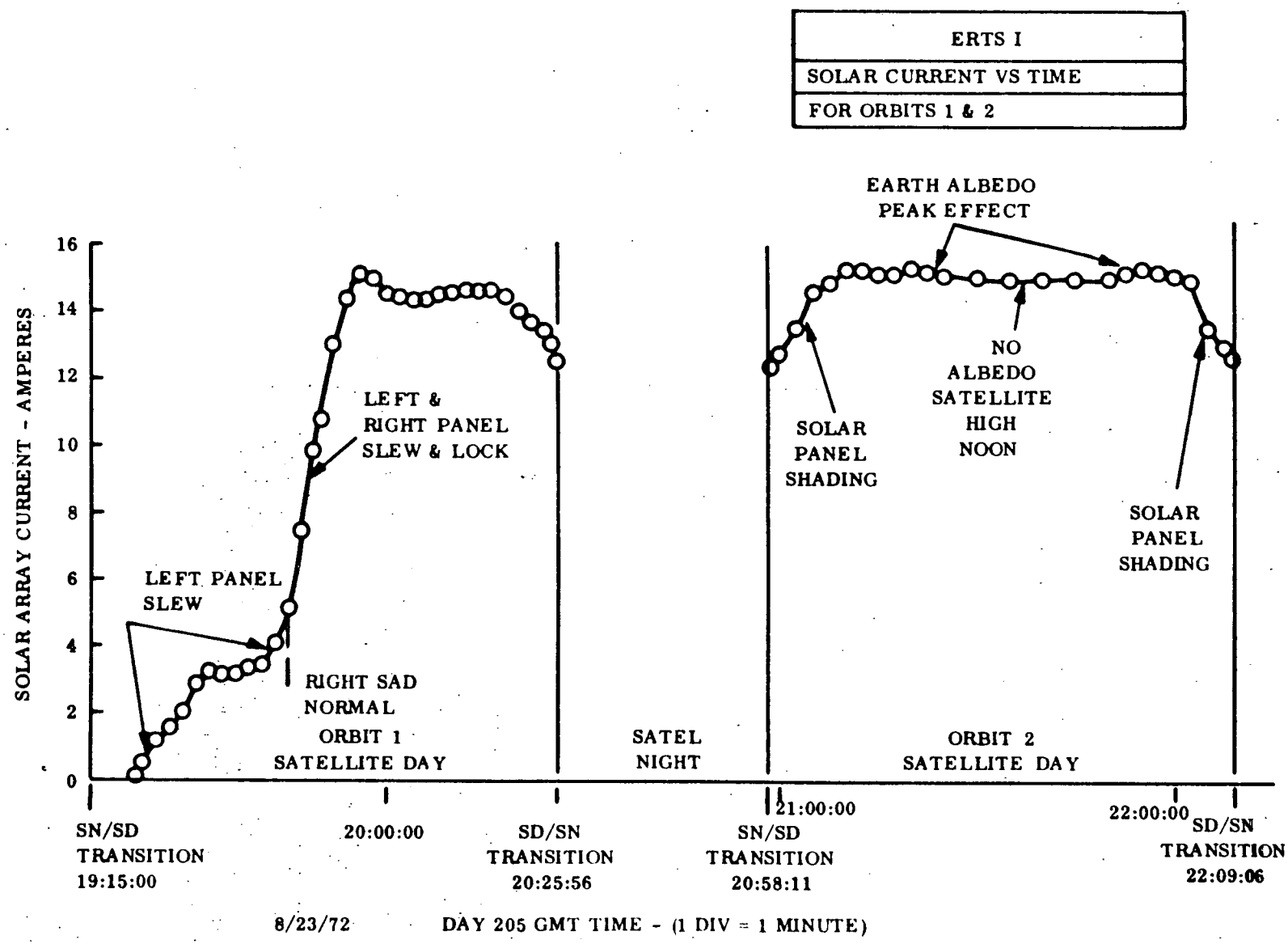

Figure 5-6. ERTS I Solar Current vs Time

Based on these results the power subsystem is anticipated to fully support the ERTS-A mission with adequate power.

During the first two orbits the shunt limiters operated during intervals when the solar array current exceeded the requirements of the load and the maximum charge current of the batteries. The maximum unregulated bus voltage during shunt limiter operation was 37.5 volts which indicates that the solar array bus voltage was being held at approximately 38.1 volts since it is a diode drop away. This is within the voltage cut in specifications of 38.0 $\pm$ 0.150 volts.

The auxiliary loads and compensation load command capability were verified in orbit 2. In orbit 3 compensation loads 3, 4, 5, 7, and 8 were turned on as scheduled to provide more even heating of the spacecraft until normal operation began. On orbit 4 a decision was made to add compensation loads 1 and 2 in addition to those already "on" in order to assist power management and to provide heat to the shadowed side of the spacecraft. All compensation loads except 6 remained on thru orbit 35.

Auxiliary loads were not required during orbits 1 and 2, and none were used on orbit 3 to allow a preplanned overcharge to be given to the batteries. In orbit 4 auxiliary loads 3 and 4 were turned on as scheduled by power management. After reviewing battery temperature spreads resulting from the overcharge in orbit 3 it was decided to add auxiliary load 2 to decrease the planned overcharge in order to hold heat dissipation and battery temperature spreads to a minimum. Normal auxiliary load programming proceeded as planned by power management in subsequent orbits.

Table 5-4 is a summary of regulated voltages on the spacecraft and compares orbits 1 and 35 to T/V values at a 20° plateau. Each regulated voltage is stable and in close agreement with ground measurements.

Table 5-5 shows representative values for various system parameters.

Table 5-4. Regulated Voltage Telemetry Summary

Function	Description	Orbit 1	Orbit 35	20°C T/V
6051	S/C Reg Bus Voltage	-24.52	-24.54	-24.5
6052	S/C Aux Reg A Bus Voltage	-23.49	-23.41	-23.4
6053	S/C Aux Reg B Bus Voltage	-23.50	-23.50	-23.5
6058	Temp., Heat Sink (°C)	22.17	23.00	22.0
6059	Temp., P.C. Bds (°C)	23.60	22.88	23.0
6070	P/L Reg Bus Voltage	-24.60	-24.67	-24.68
6073	P/L Aux Reg A Bus Voltage	-23.50	-23.51	-23.6
6074	P/L Aux Reg B Bus Voltage	-23.50	-23.51	-23.6
6075	P/L, Temp., Heat Sink (°C)	21.58	23.03	22.0
6076	P/L, Temp., P.C. Bds (°C)	21.50	21.60	21.5

Table 5-5. System Parameters

Description		Orbit 7	Orbit 26
Batt 1	Max	32.91	32.48
2	Chge	32.91	32.48
3	Volts	32.91	32.48
4		32.91	32.48
5		32.91	32.48
6		32.82	32.31
7		32.82	32.22
8		32.82	32.14
Average		32.87	32.38
Batt 1	End-	29.32	28.81
2	of-	29.32	28.81
3	Night	29.23	28.81
4	Volts	29.32	28.89
5		29.41	28.89
6		29.23	28.81
7		29.32	28.89
8		29.23	28.81
Average		29.30	28.84
Batt 1	Chge	13.51	13.11
2	Share	12.80	12.93
3	(%)	10.82	11.38
4		12.34	12.39
5		12.36	12.32
6		12.77	12.80
7		13.01	12.62
8		12.39	12.45
Batt 1	Load	12.81	12.71
2	Share	13.20	12.90
3	(%)	11.38	11.43
4		12.75	12.77
5		12.37	12.54
6		12.59	12.53
7		12.84	12.80
8		12.06	12.32
Batt 1	Temp	22.15	21.11
2	in	19.27	18.74
3	(°C)	19.14	18.77
4		22.14	21.57
5		22.86	21.82
6		22.38	21.21
7		22.80	21.41
8		22.99	21.82
Average		21.72	20.81
S/C reg Bus Pwr (W)		167.9	176.8
Comp Load Pwr (W) (P/O S/C Reg Bus Pwr)		49.0	49.0
P/L Reg Bus Pwr (w)		8.1	16.2
C/D Ratio		1.41	1.06
Total Charge (A-M)		327.8	309.2
Total Discharge (A-M)		232.6	290.0
Solar Array (A-M)		1058	1044
S.A. Peak I (A)		15.8	15.8
Beta Angle (deg)		3.22	3.13
MAX R PAD TEMP (°C)		+65.0	+65.0
MIN R PAD TEMP (°C)		-59.0	-62.0
MAX L PAD TEMP (°C)		+56.1	+57.9
MIN L PAD TEMP (°C)		-66.0	-67.0

SECTION 6

ATTITUDE CONTROL SUBSYSTEM

SECTION 6
ATTITUDE CONTROL SUBSYSTEM

The Attitude Control Subsystem (ACS) consists of 13 major component parts plus a thermal subsystem mounted to a structure composed of mounting surfaces above a honeycomb baseplate. Solar paddles are attached to two separate shafts with individual drive motors to provide greater reliability in solar tracking.

The major requirement of the ACS is to provide satellite alignment with the local earth vertical and orbit velocity vectors to within $\pm$ 0.7 degree in pitch and roll and $\pm$ 1 degree in yaw. The instantaneous angular rates about the axes during normal operation are required to be less than 0.04 degree/second.

To accomplish this, a 3-axis active ACS is provided, using horizon scanners for roll and pitch attitude error sensing and a rate gyro, used in a gyro compassing mode to sense yaw attitude. Included also is a yaw rate gyro to sense yaw rate in an acquisition mode. The torquing subsystem uses a combination of reaction jets to provide net momentum control and large control torques when required. Flywheels are utilized for fine control and residual momentum storage. See Figure 6-1 for functional block diagram, and Figure 6-2 for hardware configuration.

The ACS subsystem was launched in the mode shown in Table 6-1.

SUMMARY

The Attitude Control Subsystem (ACS) performance was excellent from launch through stabilization and activation. Stabilization of the spacecraft within the fine-limit cycle deadbands occurred within 57, 87 and 100 seconds in pitch, roll, and yaw, respectfully, after separation. The Solar Array Drives were enabled properly and drove at bias rate (left normal, right high). The right SAD was in the high bias mode to compensate for shading of the SAD Sun Sensor. Since the right SAD cannot acquire the sun in the high bias mode, it was commanded to

Reproduced from best available copy.

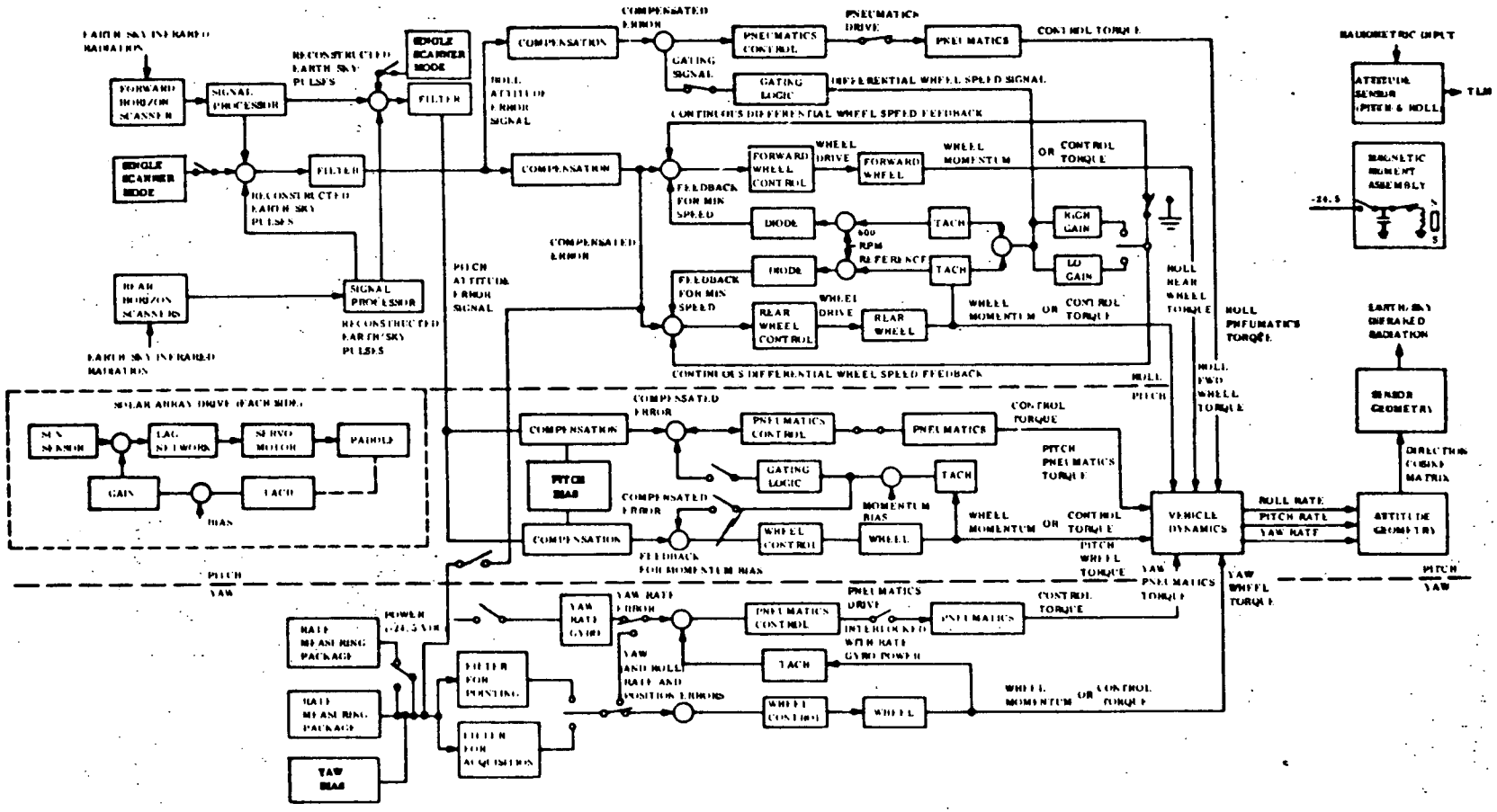

Figure 6-1. ACS Function Block Diagram

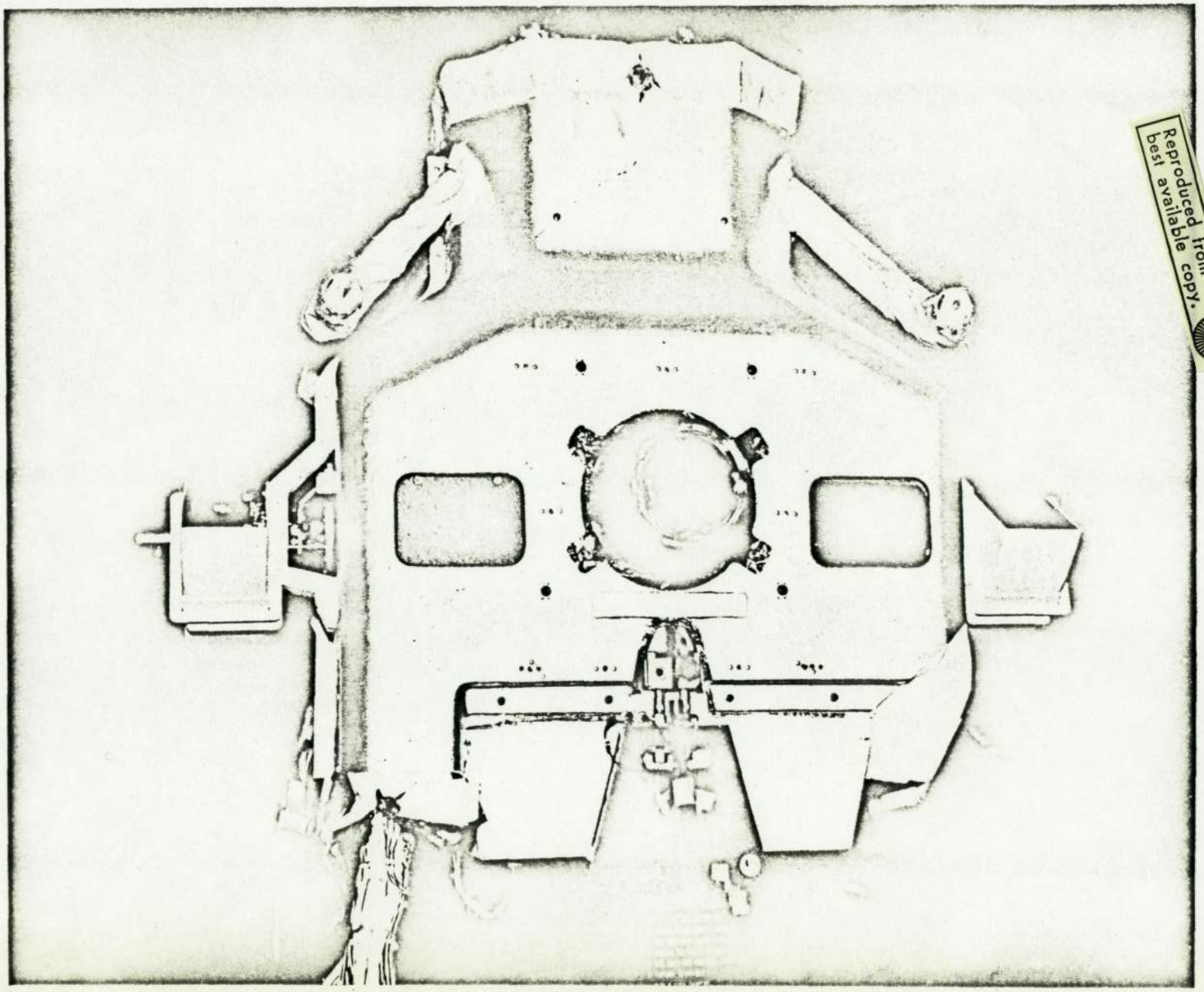

Reproduced from best available copy.

Figure 6-2. Attitude Control Subsystem

Table 6-1. Attitude Control Subsystem Launch Mode

	MODE	CMD
LO VOLT INT	RESET	044
RSAD RATE	HIGH	404
LSAD RATE	NORM	244
RSAD	EN	311
LSAD	EN	365
RSAD PWR	FUSE	674
LSAD PWR	FUSE	713
PNEU	EN	040
PNEU INTLK BYPS	DIS	042
PMB MODE	DIS	104
P POS BIAS	+	145
0.6 PPB	DIS	663
2.0 PPB	DIS	661
2.9 PPB	DIS	122
P UNLOAD	EN	165
R UNLOAD	EN	161
TACH	EN	064
TACH GAIN	NORM	100
YAW WHEEL	EN	163
YAW POS BIAS	+	160
0.1 YPB	DIS	120
0.3 YPB	DIS	060
0.6 YPB	DIS	623
RLNA/YAW	DIS	102
YAW MODE	ACQ	204
OA MODE	DIS	221
400 RPM INT	EN	203
RMP B	EN	223
RMP A HTR	ON	326
RMP B HTR	ON	305
RMP B MTR	ON	304
RMP A MTR	ON	410
EN SCAN SEL	A	636
SSM	LOCK	675

normal when the sun appeared in the RSAD sun sensor field-of-view at which time it began slewing to acquire the sun during orbit 1 Alaska. The usable pneumatic impulse available at 1A was ≈607 pound-seconds. Yaw was commanded to the "normal mode" at orbit 1 Alaska.

System Pneumatics were disabled during orbit 2 Madrid.

SEPARATION SEQUENCE TELEMETRY EVALUATION

The telemetry record for the first orbit has been studied to determine the sequence of events during separation and initial stabilization of ERTS-1. Separation rates are listed below. These rates can only be considered estimates due to the limited resolution of the solenoid telemetry. It should be noted that these are spacecraft rates and are not in respect to the Delta vehicle.

Axis	Rate (degrees/second)
Pitch	0.24
Roll	0.1
Yaw	-0.2

The net impulse required to stabilize is estimated to be 0.62 pound seconds.

The initial separation sequence of events was as follows:

Separation: T_o	19:06:35Z
Paddle surface clearing AFT scanner: T_o + 10 sec.	19:06:45Z
Enable pitch, roll, and yaw loops: T_o + 18 sec.	19:06:53Z
Enable Solar Array Drive: T_o + 52	19:07:27Z

End Initial Stabilization
in:

Pitch: T_o + 57 seconds	19:07:32Z
Roll: T_o + 87 seconds	19:08:02Z
Yaw: T_o + 100 seconds	19:09:15Z

Figure 6-3 is the actual telemetry record for separation and stabilization. Delta limit cycling can be observed on the RMP indicated rate and pitch-up can be observed on the pitch error channel. The Solar Array indicated slight movement after separation/squib firing as the array slid off the ramps. After the SAD's were enabled they drove at bias rate - left SAD normal, right SAD high.

SEPARATION RATES

The separation rates are directly related by the inverse factor of the body moments of inertia to the vehicle momentum absorbed by the control subsystem during the initial stabilization. It is assumed that the momentum interchange between axes was negligible during the initial stabilization period.

Because the pitch, roll and yaw loops were disabled until T_o + 18 seconds, any momentum existing in the vehicle at separation is removed by acceleration of the particular flywheel, plus the net gating impulse during initial stabilization.

ROLL SEPARATION RATE

It is possible to derive the roll separation rate directly from the fine error channel since the Solar Array paddles had cleared the "B" scanner at separation +10 seconds, computation was occurring, and the roll reaction roll error prior to loop activation (T_o) T_o -4 seconds was +0.2 degrees. The indicated error at T_o was +0.6 degrees. Therefore, the Roll Separation rate $= \frac{0.6 - 0.2}{4} = 0.1$ deg/sec.

Page intentionally left blank

The net pneumatics impulse required to stabilize in roll can be estimated as follows:

Separation rate = 0.1 deg/sec

Momentum required for 0.1 deg/sec in roll = $\frac{367(0.1)}{57.3}$ = 0.64 ft-lb-sec

The roll flywheel contributed 0.345 ft-lb-sec

$\therefore$ pneumatics contributed: 0.64 - 0.345 = 0.295 ft-lb-secs. Since the moment arm in roll is 2.49 ft, the impulse required is:

$$\frac{0.295}{2.49} = 0.12 \text{ lb-sec}$$

PITCH SEPARATION

When the pitch loop was enabled, the positive pitch solenoid fired immediately. The indicated error was -6 degrees (refer to Figure 6-4, Pitch Phase Plane Plot). The pitch flywheel accelerated in a negative direction for 7 seconds to a speed of -160 rpm. At that time it reversed and accelerated in a positive direction peaking at +1180 rpm 78 seconds later. The maximum positive error was 3.8 degrees which occurred 42 seconds after the loop was activated. The flywheel then accelerated in a negative direction to +160 rpm. At that time it reversed and went to +580 rpm.

PITCH SEPARATION RATE

Resolution of the solenoid telemetry precludes an exact computation of the pitch separation rate. An "estimated" separation rate was computed by utilizing the pitch telemetered error channel to determine rates after the loop was enabled, and back-tracking this into impulse expended. Refer to Figure 6-3 for the following discussion. The period following separation was broken up into two intervals: The first dictated by the positive pneumatics firing, the second by the negative pneumatics firing, terminated by the pitch error passing through zero.

First Interval

Enable loop (T_o) to T_o + 24 seconds. Qualification: Assume initial error rate of zero.

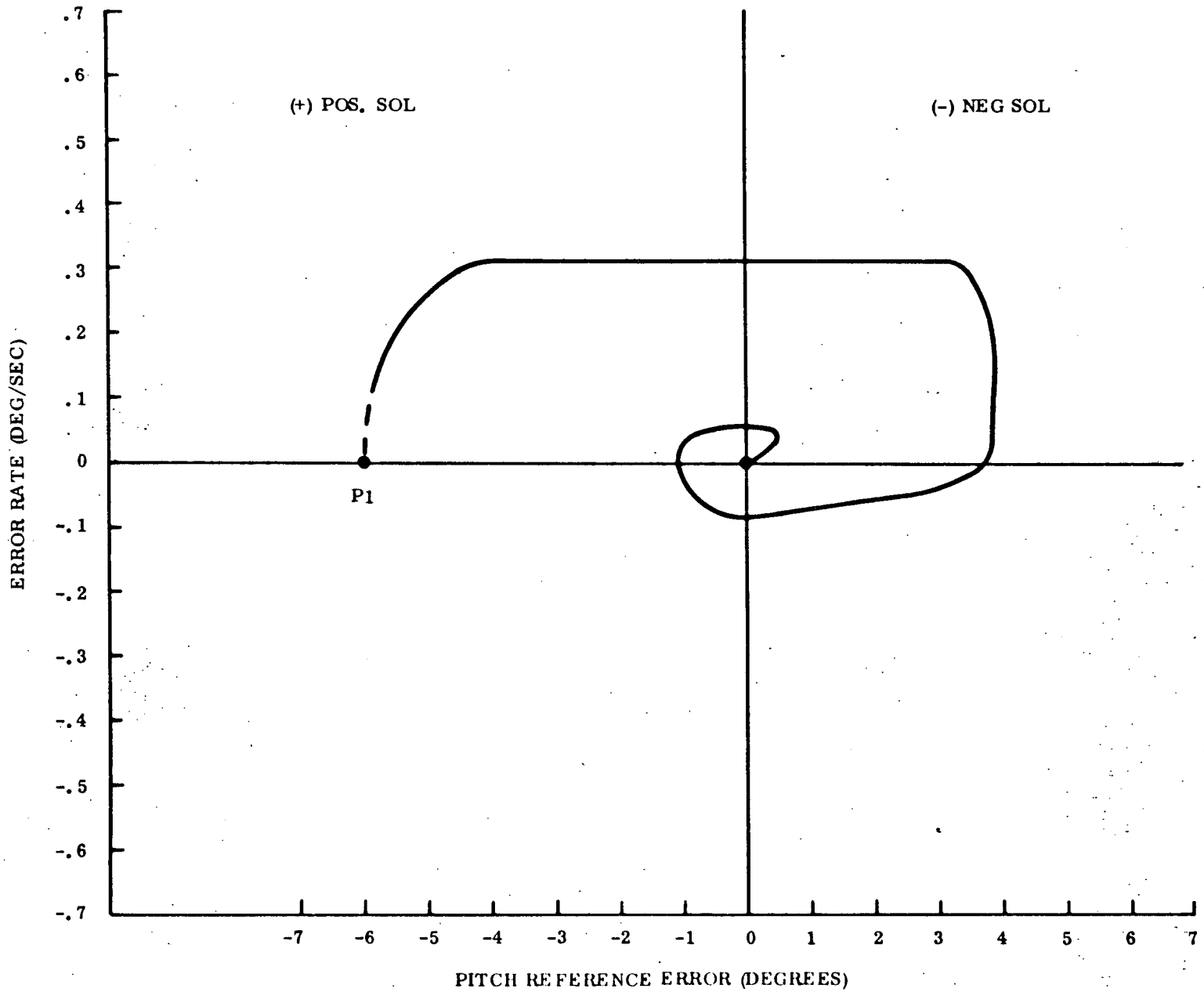

Figure 6-4. Pitch Phase Plane Plot

1. Initial error is -6°

2. Final error is $+1.9^{o}$

3. Average error rate is $\frac{7.9^{o}}{24 \text{ sec}} = 0.33$ deg/sec

4. Flywheel goes from zero to -160 rpm

   Pitch reaction wheel capacity at 1440 rpm is 1.64 ft-lb-sec

   $\therefore P_{FW}$ contributes $\left(\frac{-160}{1440}\right)(1.64) = -0.18$ ft-lb-sec

5. Momentum required for a rate of 0.33 deg/sec is determined from:

   $$\text{error rate} = \frac{\text{Momentum (57.3 deg/rad)*}}{\text{351 slug/ft}}$$

   (* The spacecraft moment of inertia about the pitch axis in the separation configuration is 351 slug-ft^2)

   $\therefore$ Momentum = 351 (0.33)/57.3

   = 2.01 ft-lb-sec

6. Pneumatics must contribute the difference between 2.01 ft-lb-sec and the flywheel contribution of 0.18 ft-lb-sec.

   $\therefore$ Pneumatics required = 2.01 - 0.18

   = 1.83 ft-lb-sec

7. Pitch moment arm is 5.37 feet, therefore the required impulse is:

   $$\frac{1.83}{5.37} = 0.34 \text{ lb-sec}$$

<u>Second Interval</u>

From $T_o + 24$ to $T_o + 112$ seconds

1. Initial error is $+1.9^{o}$

2. Final error is 0.0^{o}

3. Average error rate is $\frac{-1.9}{88} = -0.021$ deg/sec

   $\therefore$ change in error rate = (-0.021) - (0.33) = -0.351 deg/sec

4. The flywheel goes from -160 to +830 rpm, a change of 990 rpm

$\therefore$ Momentum (FW) = $\frac{990}{1440}$ (1.64) = 1.12 ft-lb-sec

5. Momentum required for a rate of -0.351 deg/sec is:

349 (-0.351)/57.3 = -2.11 ft-lb-sec

6. The Solar Array Drive was enabled during this period and contributed:

$$H_{SP} \approx \frac{12.2 \text{ slug/ft}^2 \ (+0.06 \text{ deg/sec})}{57.3} = 0.013 \text{ ft-lb-sec}$$

7. Pneumatics required are:

-2.11 + 0.013 + 1.12 = -0.98 ft-lb-sec

Impulse required is:

$$\frac{-0.98}{5.37} = -0.18 \text{ lb-seconds}$$

Impulse Required in Pitch for Stabilization

1. The total impulse required in pitch equals 0.18 + 0.34 = 0.52 pound-seconds.

2. The net impulse required in pitch is:

0.34 - 0.18 = +0.16 pound-seconds.

Separation Rate

Using the net impulse calculated above, the net momentum imparted by pitch pneumatics (H_p) is equal to:

$$H_p = +0.16 \text{ lb-sec} \times 5.37 \text{ ft} = +0.86 \text{ ft-lb-sec}$$

The vehicle momentum absorbed by the pitch flywheel is equal to the momentum held at stabilization since the wheel was held at zero during separation.

- Initial pitch FW velocity = 0 rpm
- Final pitch FW velocity = +510 rpm
- Net wheel velocity change = +510 rpm
- Wheel momentum stored (H_w) = $\frac{510}{1440}$ (1.64)

  H_w = 0.574 ft-lb-sec

The momentum absorbed by the solar paddles is that required to attain orbital rate.

$$H_{SP} = \frac{(12.2 \text{ slug-ft}^2)(0.06 \text{ deg/sec})}{57.3 \text{ deg/rad}}$$

$$H_{SP} = 0.013 \text{ ft-lb-sec}$$

The total pitch momentum absorbed by ACS at reference was:

$$H_y = H_p + H_w + H_{sp}$$

$$= 0.86 + 0.574 + 0.013$$

$$= 1.45 \text{ ft-lb-sec}$$

∴ The pitch separation rate was*:

$$W_{VP} = \frac{1.45 \text{ ft-lb-sec}}{351 \text{ slug-ft}^2} (57.3 \text{ deg/rad})$$

$$= 0.236 \text{ deg/sec.}$$

* It should be noted that the values obtained for pneumatics expended and separation rate should be treated as estimates.

YAW SEPARATION RATE

Before separation the yaw rate was essentially zero, based on the yaw rate gyro indicated rate telemetry, (refer to Figure 6-3). Immediately following separation the indicated rate

was -0.2 degrees/seconds and is assumed to be the actual yaw separation rate.

The momentum required to eliminate this rate is:

$$H_Z = \frac{154(-0.2)}{57.3} = 0.53 \text{ ft-lb-sec.}$$

Of this momentum the yaw flywheel contributed as follows:

1. The vehicle momentum absorbed by the yaw flywheel is equal to the momentum held at stabilization since the wheel was held at zero during separation.

   Initial yaw flywheel velocity = 0 rpm

   Final yaw flywheel velocity = +500 rpm (yaw rate zero)

   Wheel momentum stored $(H_{YW}) = \frac{+500}{1440} \quad (0.374)$

   $H_{YW} = 0.13$ ft-lb-sec

   Note that the flywheel momentum at reference is of opposite polarity than required to remove the initial separation rate.

2. The net pneumatics impulse required to remove the separation rate equals:

   0.53 + 0.13 = 0.66 ft-lb-sec

   The yaw moment arm = 2.336 ft.

   net gas expended $(H_{py}) = \frac{0.66}{2.336} = 0.28$ lb-sec*

*This figure is the net gas required for yaw stabilization. The actual gas expended was higher (refer to Figure 6-3).

POST SEPARATION PERFORMANCE

The ACS has performed well since launch. Following stabilization of the spacecraft, the pneumatics were disabled and pneumatic gates in pitch have occurred at a rate of ≈1 per orbit. Roll gating is ≈2 per orbit. Pneumatics unloading is accomplished by stored momentary enable commands. The commands are timed to occur in the umbra and away from the SN/SD and SD/SN transition.

The disturbance at the SN/SD transition (due to sun in the horizon scanner) is more severe than the disturbance at the SD/SN transition; however, neither disturbance is severe enough to necessitate utilizing the single scanner mode.

Yaw mode was commanded normal during Orbit 1 Alaska. RMP 2 has been selected as prime since launch. RMP 1 was turned off during Orbit 2 Alaska and has remained off.

ACS THERMAL PERFORMANCE

Temperatures and pressures have been normal with the exception of the Right SAD Forward Sun Sensor Temperature which is running much hotter than expected. (See Appendix E.) The average ACS temperature in orbit 31 was 26.7^{o}C. Table 6-2 is a summary of ACS temperatures and pressures.

ACS VOLTAGES AND CURRENTS

All voltages and currents have been within specified limits (refer to Table 6-3).

MAGNETIC MOMENT COMPENSATION ASSEMBLY

The pitch, roll, and yaw coils were set to near zero flux before launch and have not changed since (see Table 6-3). Corrections to the MMCA will be made after orbit adjust and ACS gating history is analyzed.

Table 6-2. Subsystem Temperature and Pressure Averages

Function	Units	Orbits		
		0/1	T/V *	31
1084 RMP 1 Gyro Temperature	DGC	71.7	79.0	44.5
1094 RMP 2 Gyro Temperature	DGC	74.1	73.0	74.3
1222 SAD RT MTR HSNG Temp.	DGC	25.2	28.0	21.1
1242 SAD LT MTR HSNG Temp.	DGC	26.3	27.0	27.0
1223 SAD RT MTR WNDNG Temp.	DGC	27.6	29.0	25.3
1243 SAD LT MTR WNDNG Temp.	DGC	26.9	29.0	28.7
1228 SAD RT HSG Pressure	PSI	7.7	7.57	7.6
1248 SAD LT HSG Pressure	PSI	7.0	6.91	7.0
1007 FWD Scanner MTR Temp. 2.90	DGC	20.0	17.00	19.8
1016 Rear Scanner MTR Temp. 2.37	DGC	20.5	25.00	20.5
1003 FWD Scanner Pressure	PSI	4.4	4.80	4.6
1012 Rear Scanner Pressure	PSI	7.7	5.16	7.8
1212 Gas Tank Pressure 3.67	PSI	1966	1810	1988
1210 Gas Tank Temperature	DGC	22.0	20.0	22.6
1213 Manifold Pressure	PSI	67.1	57.53	56.7
1211 Manifold Temperature	DGC	21.3	24.0	21.9
1059 CLB Power Supply Card Temp.	DGC	32.8	36.0	37.1
1260 THO1 EBP	DGC	26.7	26.0	25.4
1261 THO2 EBP	DGC	25.5	23.0	22.9
1262 THO3 EBP	DGC	28.1	25.0	23.4
1263 THO1 STS	DGC	11.9	-8.0	-6.8
1264 THO2 STS	DGC	6.2	-11.0	-14.6
1265 THO3 STS	DGC	11.4	-12.0	-3.1
1266 THO4 STS	DGC	9.7	4.0	-13.9
1267 THO5 STS	DGC	9.5	-2.0	-8.9
1224 SAD R FSST	DGC	14.0	28.0	39.5
1244 SAD L FSST	DGC	15.8	22.0	27.1

*Thermal Vacuum Test Data

Table 6-3. ACS Voltages and Currents

Function	Orbits			
	Units	0/1	T/V *	31
1081 RMP 1 MTR Volts	VDC	-30.1	-30.13	Off
1082 RMP 1 MTR Current	Amps	0.11	0.11	Off
1080 RMP 1 Supply Volts	VDC	-23.6	-23.88	Off
1091 RMP 2 MTR Volts	VDC	-29.6	-29.68	-29.7
1092 RMP 2 MTR Current	Amps	0.10	0.10	0.10
1090 RMP 2 Supply Volts	VDC	-23.3	-23.46	-23.4
1220 SAD RT MTR WNDNG Volts	VDC	-5.2	-5.0	-4.8
1240 SAD LT MTR WNDNG Volts	VDC	-5.4	-5.2	-4.8
1227 SAD RT -15 VDC Conv.	VDC	14.9	-14.88	14.9
1247 SAD LT -15 VDC Conv.	VDC	15.2	-15.12	15.2
1056 CLB ± 6 VDC	TMV	2.3	2.33	2.4
1055 CLB ± 10 VDC	TMV	2.7	2.73	2.75
1057 CLB Power Supply Volts	TMV	2.8	2.77	2.8
4006 MMCA Roll Coil	TMV	3.21	3.22	3.20
4005 MMCA Pitch Coil	TMV	3.15	3.12	3.12
4004 MMCA Yaw Coil	TMV	3.13	3.07	3.07

* Thermal Vacuum Test Data.

SECTION 7

TELEMETRY SUBSYSTEM

SECTION 7
TELEMETRY SUBSYSTEM

The Narrow Band Telemetry, samples, encodes, formats and transmits data from spacecraft service and payload subsystem to earth receiving stations. The subsystem processes and coherently retransmits an S-Band signal including a ranging code for use in orbit determination. The subsystem provides timing and synchronizing signals to spacecraft service and payload subsystems. See Figure 7-1 for functional block diagram, and Figure 7-2 for hardware illustration. The units in this subsystem are closely associated with those described in Section 11, Unified S-Band/Premodulation Processor and Section 7, Command/Clock Subsystem.

The Telemetry subsystem was launched in the ON mode and has been operating continuously since then providing data from the spacecraft either to ground stations, the narrow band recorders or both. The launch configuration is given in Table 7-1 and typical telemetry values in Table 7-2. Total performance has been excellent.

Table 7-1. Telemetry Subsystem Launch Mode

	MODE	CMD		MODE	CMD
POWER 1	ON	522	ANALOG MUX	A	262
POWER 2	ON	520	DIGITAL MUS	A	300
MEM WRITE	OFF	361	MEMORY	A	240
VER MEM	OFF	422	FOR LOG	A	302
MTX VER O/R	ON	341	VHF XMTR	YES	400
B. t 1	OFF	401	VHF XMTR O/R	ON	342
B. t 0	OFF	343			
FOR PROG	ON	462	VHF Transmitter		
MTX VER	NORM	502			
MEM/VER O/R	ON	500	VHF MODE	RT	207
PRE REG ON	A	460	VHF PB O/R	ON	230
PRE REG OUT	A	463	VHF RF PWR	LO	210
BUFF AMP	A	440	VHF PWR 1	ON	206
SEL SEQ	A	242	VHF PWR 2	ON	170
A/D CONV	A	260	VHF XMTR	A	231

Table 7-2. TMP Telemetry Values

Function No.	Function Name	Unit	Orbit 0-1	T/V* 20° Plateau	Orbit 35
9001	Memory Sequencer A Converter	VDC	6.40	6.34	6.35
9002	Memory Sequencer B Converter	VDC	**	6.44	**
9003	Memory Sequencer Temp	°C	15.27	20.1	19.59
9004	Formatter A Converter	VDC	5.96	5.99	5.99
9005	Formatter B Converter	VDC	**	6.02	**
9006	Dig. Mux A Converter	VDC	10.01	10.02	10.01
9007	Dig. Mux B Converter	VDC	**	10.01	**
9008	Formatter/Dig Mux Temp	°C	17.53	22.2	22.50
9009	Analog Mux A Converter	VDC	26.01	26.18	26.01
9010	Analog Mux B Converter	VDC	**	26.21	**
9011	A/D Converter A Voltage	VDC	10.00	10.00	10.00
9012	A/D Converter B Voltage	VDC	**	10.06	0.00
9013	Analog Mux, A/D Conv. Temp	°C	17.96	26.7	25.00
9014	Preregulator A Voltage	VDC	19.93	19.91	19.93
9015	Preregulator B Voltage	VDC	**	19.88	0.00
9016	Reprogrammer Temp	°C	17.50	19.9	22.00
9017	Memory A Converter	VDC	5.99	6.00	6.00
9018	Memory A Temp	°C	14.97	19.3	17.51
9019	Memory B Converter	VDC	**	6.03	**
9020	Memory B Temp	°C	15.00	17.4	17.68
9100	Reflected Power (Xmtr A)	dBm	13.20	0	11.94
9101	Xmtr A-20 VDC	VDC	-19.75	-19.76	-19.75
9103	Xmtr A Temp	°C	20.57	20.5	20.95
9105	Xmtr A Power Output	dBm	24.97	25.48	25.12

*Thermal Vacuum Test data
**Not turned on since Prelaunch

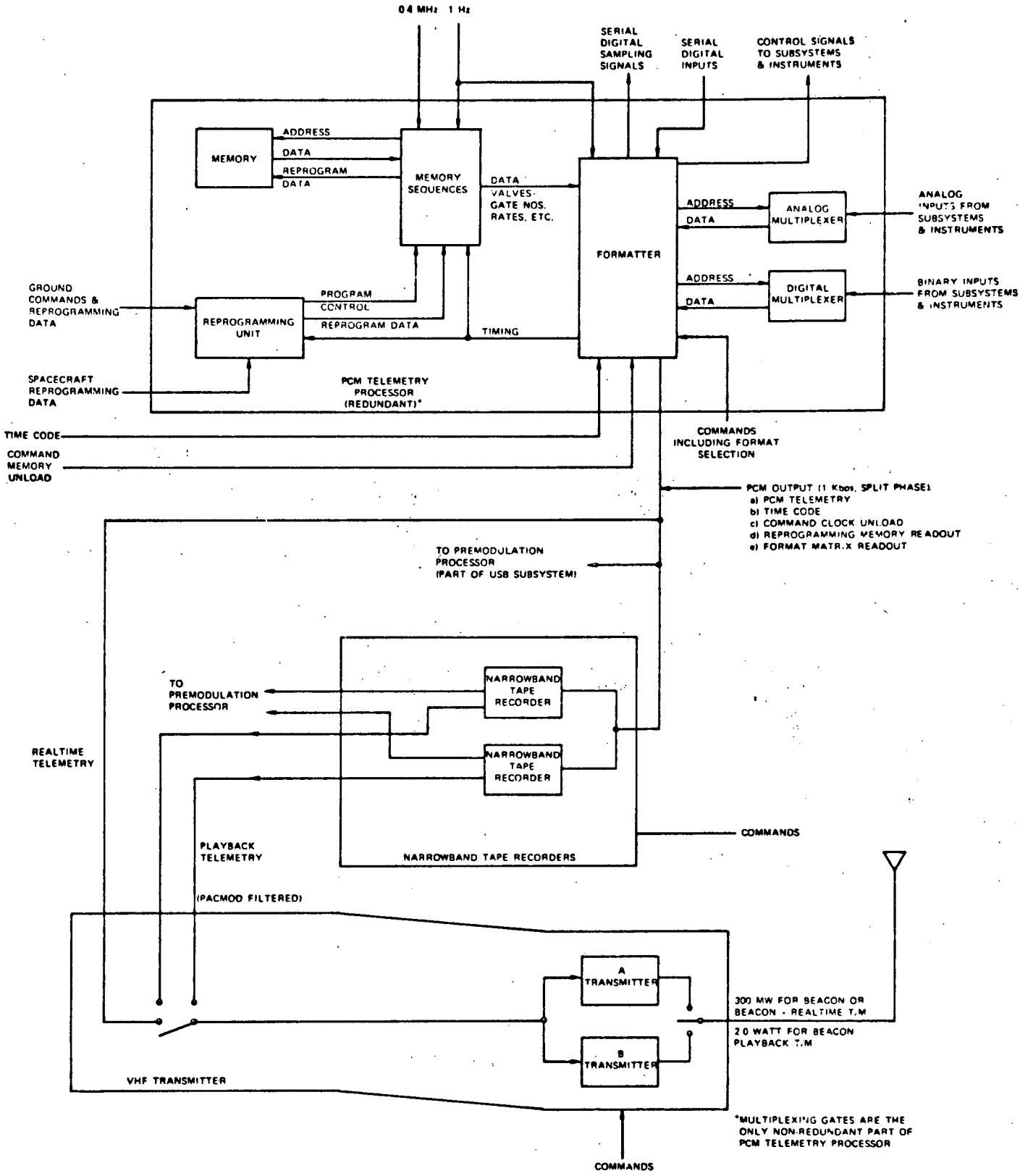

Figure 7-1. Narrowband Telemetry Block Diagram

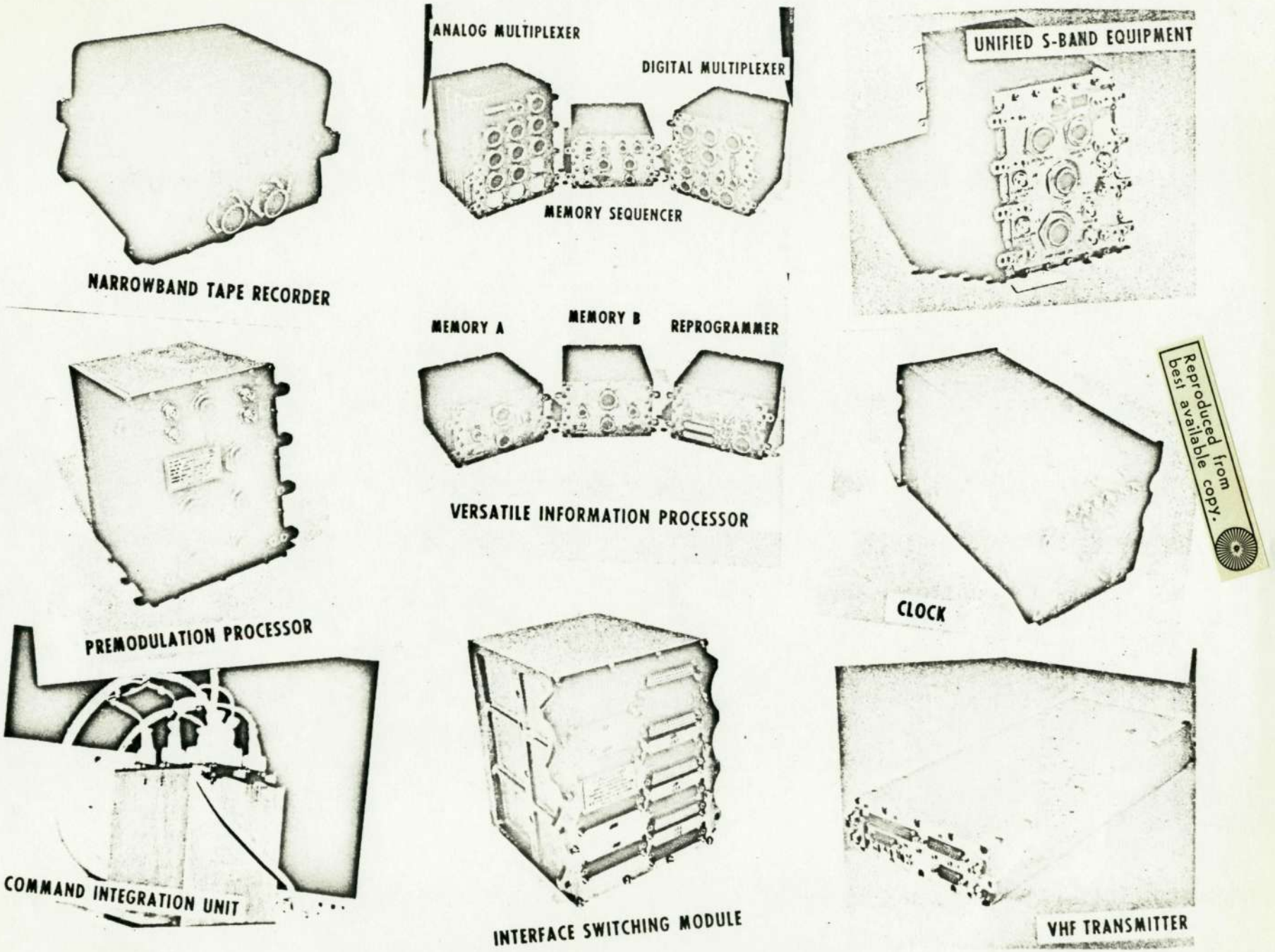

Reproduced from best available copy.

Figure 7-2. Narrowband Telemetry and Command Subsystem

SECTION 8

COMMAND/CLOCK SUBSYSTEM

SECTION 8
COMMAND/CLOCK SUBSYSTEM

The Command and Clock Subsystem consists of the following modules: VHF Receiver; Command integration unit; command clock.

All three modules are located in the sensory ring. Parts of two other modules (Unified S-Band Equipment and Premodulation Processor) provide one of the two primary inputs to the Command and Clock Subsystems but are not considered part of the subsystem.

The Command and Clock Subsystem performs the following functions:

1. Receives, processes, and stores command information from the USB and VHF ground station.

2. Receives, processes, and stores command information from the USB and VHF ground stations and executes these commands at the predetermined time.

3. Receives and transfers serial data to the TMP for reprogramming its memory.

4. Provides an accurate time base upon which all spacecraft activities can be planned, referenced, and measured.

5. Generates Minitrack 36-bit time code data which is stored and transmitted with TMP, RBV, and MSS data so that the time reference cited above may be used to process data in the ground station.

6. Generates standard frequencies and motor drive signals used by other subsystems.

The ERTS Systems Command matrix provides for 512 commands as noted in Appendix B.

Figure 8-1 is a simplified block diagram and Figure 8-2 is a modulation format. (Figure 7-2 illustrates hardware).

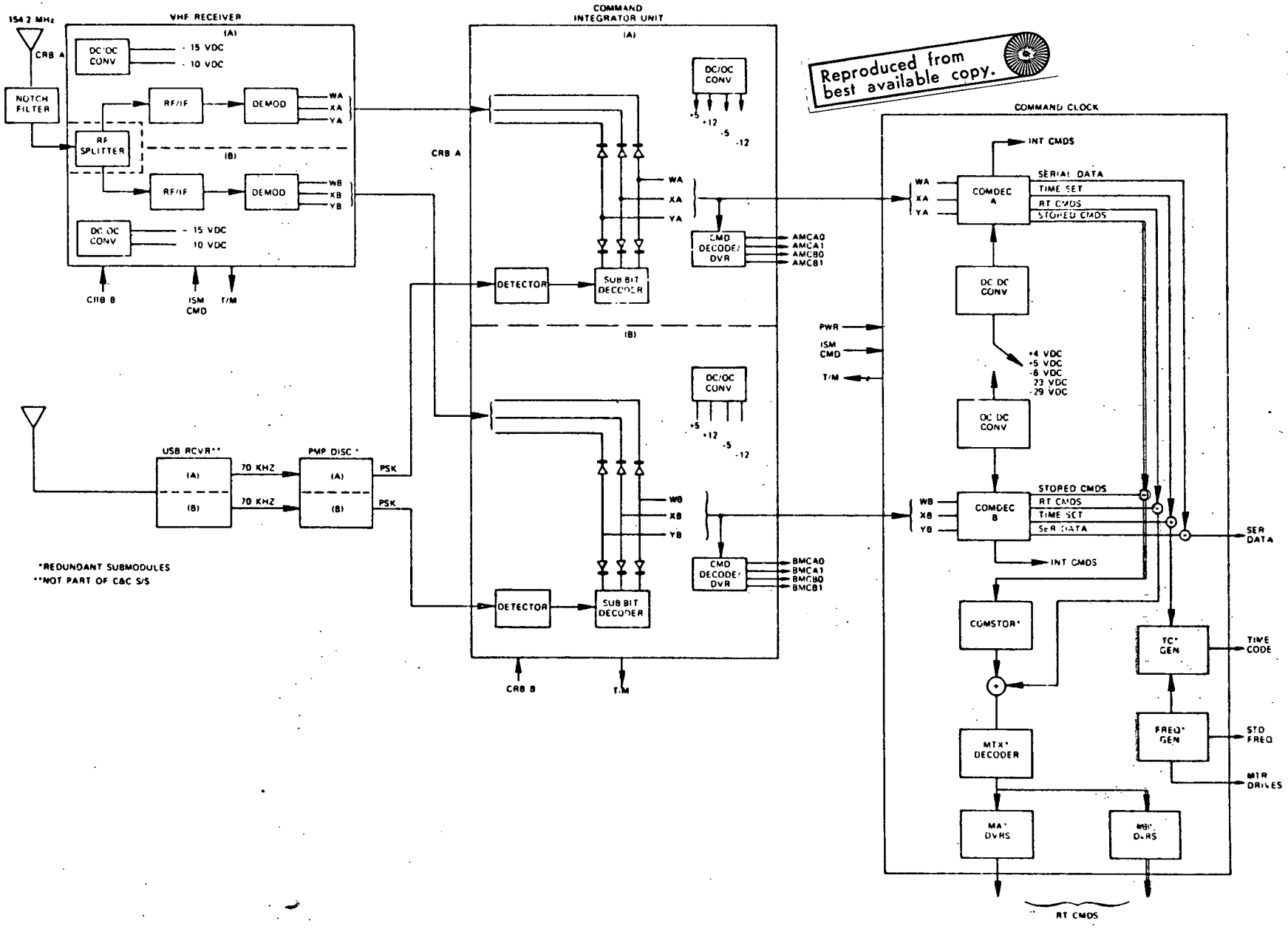

Figure 8-1. Command and Clock Subsystem Block Diagram

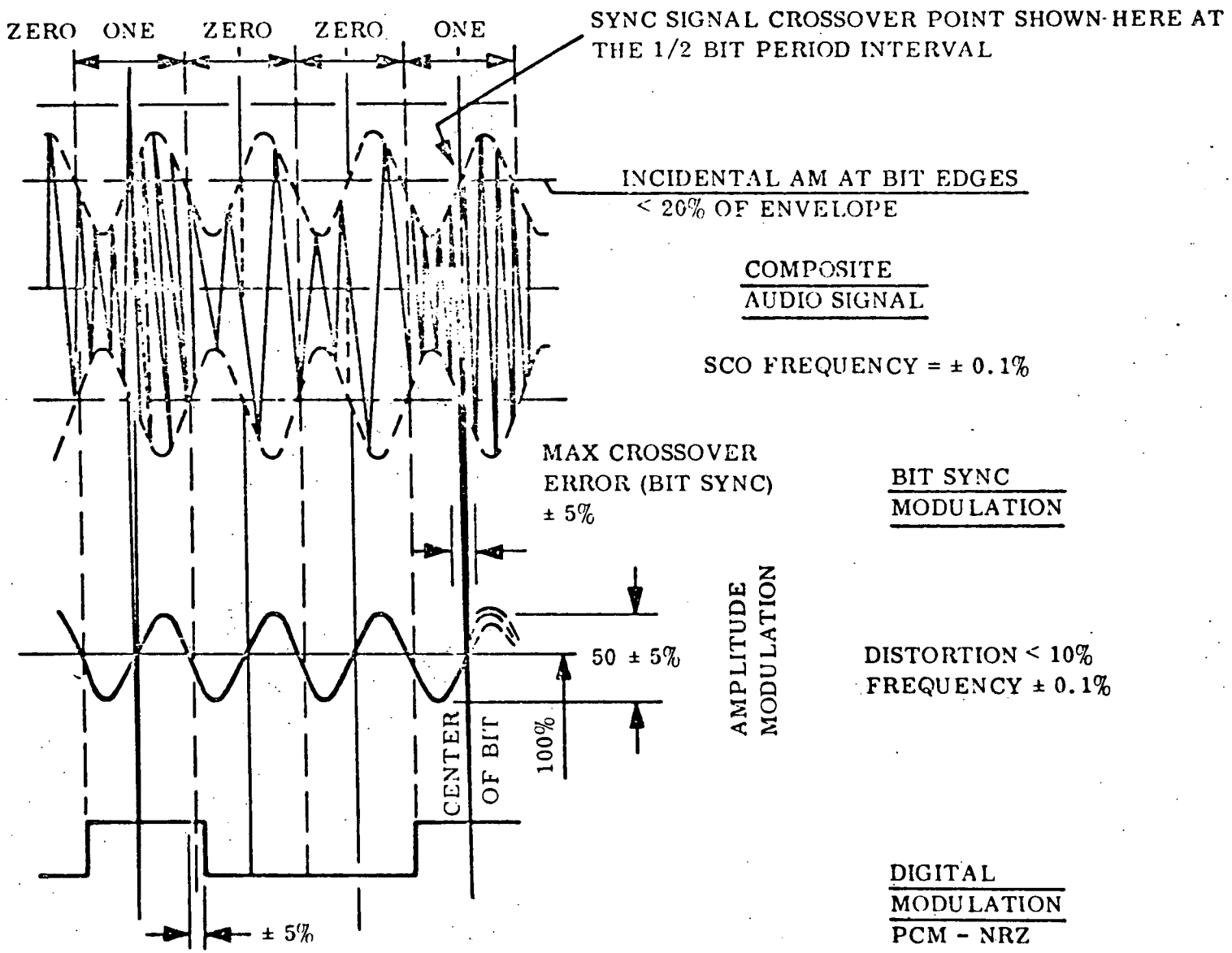

Figure 8-2. Composite STADAN Audio Waveform

The ERTS-1 command subsystem was launched in configuration given in Table 8-1 and activated with the separation and unfold contact closure determined to occur at 19:06:35z near Tananarive in orbit 0.

Table 8-1. Command/Clock Subsystem Launch Mode

	Mode	Cmd
COMSTOR A	OFF	005
COMSTOR B	OFF	025
MTX DECODER	PR1	011
MTX A DRIVE	PR1	012
MTX B DRIVE	PR1	013
OSCILLATOR	PR1	014
FREQ GEN	PR1	015
VERIFY	TOCK	457
MSFN/STADAN	A/B	616
CLOCK FUSE	1A	653
CIU CH B	ON	782
CIU CH A	ON	786
CLOCK PS/COM	ON	783

A summary of telemetry values is provided in Table 8-2. Flight data correlates very closely with Thermal Vacuum test data values.

Command processing of both real time and stored commands have been normal. No spurious or unexecuted commands have been observed. (Some commanding difficulties have been experienced but all cases have been coincidental with low elevation at the station, lock on side lobes or similar ground transmission difficulties.)

The time base provided for spacecraft activities planning has been well within specifications during this period. Clock drift has been on the order of -2 MS per orbit during this period.

Spacecraft time code, transmitted via RBV, MSS, and Tlm has been reliable and accurate.

All frequency outputs to other subsystems have been nominal.

Table 8-2. Command/Clock Telemetry Summary

Function No.	Name	Mode	Units	Orbit 0/1	* Thermal Vac 20° Plateau	Orbit 35
8005	Pri. Power Supply Temp.	-	°C	28.39	37.0	37.31
8006	Red. Power Supply Temp.	-	°C	28.05	41.3	35.73
8007	Pri. Osc. Temp.	-	°C	27.91	31.1	31.14
8008	Red. Osc. Temp.	-	°C	27.68	30.3	30.47
8009	Pri. Osc. Output	-	TMV	0.93	1.07	0.95
8010	Red. Osc. Output	-	TMV	0.00	0.98	0.00
8011	100 Khz	Pri. - Red.	TMV	3.10	3.10	3.11
8012	10 Khz	Pri. - Red.	TMV	3.08	3.07	3.10
8013	2.5 Khz	Pri. - Red.	TMV	2.93	2.95	2.95
8014	400 Hz	Pri. - Red.	TMV	4.38	4.40	4.40
8015	Pri. + 4V Power Supply	Pri. Clk ON	VDC	4.05	4.10	4.10
8016	Red. + 4V Power Supply	Red. Clk ON	VDC	3.95	3.98	3.95
8017	Pri. + 6V Power Supply	Pri. Clk ON	VDC	6.04	6.07	6.06
8018	Red. + 6V Power Supply	Red. Clk ON	VDC	5.93	5.95	6.00
8019	Pri. - 6V Power Supply	Pri. Clk ON	VDC	-6.02	-6.02	-6.02
8020	Red. - 6V Power Supply	Red. Clk ON	VDC	-5.99	-6.02	-5.99
8021	Pri. - 23V Power Supply	Pri. Clk ON	VDC	-22.90	-22.96	-22.88
8022	Red. - 23V Power Supply	Red. Clk ON	VDC	-22.98	-23.0	-22.98
8023	Pri. - 29V Power Supply	Pri. Clk ON	VDC	-29.07	-29.2	-29.13
8024	Red. - 29V Power Supply	Red. Clk ON	VDC	-29.21	-29.2	-29.07
8101	CIU A - 12V	CIU A ON	VDC	-12.32	-12.3	-12.33
8102	CIU B - 12V	CIU B ON	VDC	-12.24	-12.2	-12.26
8103	CIU A - 5V	CIU A ON	VDC	-5.34	-5.34	-5.32
8104	CIU B - 5V	CIU B ON	VDC	-5.32	-5.30	-5.31
8105	CIU A Temp.	CIU A ON	°C	23.68	24.3	24.47
8106	CIU B Temp.	CIU B ON	°C	24.12	24.6	24.96
8201	Receiver RF-A Temp.	-	°C	0.00	29.0	0.00
8202	Receiver RF-B Temp.	-	°C	26.79	28.5	27.98
8203	D MOD A Temp.	-	°C	24.23	37.5	25.41
8204	D MOD B Temp.	-	°C	32.50	35.4	35.03
8205	Receiver A AGC	Receiver A ON	DBM	*.**	-70.0	0.00**
8206	Receiver B AGC	Receiver B ON	DBM	-82.58	-57.0	-94.74
8207	Amp. A Output	Receiver A ON	TMV	*.**	1.50	0.00
8208	Amp. B Output	Receiver B ON	TMV	2.42	1.54	2.81
8209	Freq. Shift Key A OUT	Receiver A ON	TMV	*.**	1.11	0.00
8210	Freq. Shift Key B OUT	Receiver B ON	TMV	1.10	1.10	1.10
8211	Amp. A Output	Receiver A ON	TMV	*.**	1.11	0.00
8212	Amp. B Output	Receiver B ON	TMV	1.13	1.13	1.13
8215	D MOC A - 15V	Receiver A ON	TMV	*.**	4.98	*.**
8216	D MOD B -15V	Receiver B ON	TMV	5.00	4.99	5.00
8217	Regulator A-10V	Receiver A ON	TMV	*.**	5.39	
8218	Regulator B-10V	Receiver B ON	TMV	5.49	5.50	5.50

*Thermal Vacuum Test Data
**A component not used since Pre-launch

SECTION 9

ORBIT ADJUST SUBSYSTEMS (OAS)

SECTION 9
ORBIT ADJUST SUBSYSTEMS (OAS)

The Orbit Adjust Subsystem (OAS) is a monopropellant hydrazine fueled propulsion system consisting of three thruster assemblies, a propellant feed system, a support structure and the necessary interconnect plumbing, brackets and electrical harnessing. The propellant feed system consists of a single tank for storage of both the propellant and pressurant. The feed system operates in a blow-down mode during which the engine thrust decays from an initial level of 0.85 LB_f to a final value of 0.2 LB_f as the 67 LB_m of propellant is consumed.

The operation of the propulsion subsystem permits the flow of hydrazine propellant into a combustion chamber containing a catalyst. Within the chamber the catalyst spontaneously decomposes the hydrazine into ammonia, hydrogen and nitrogen gasses having a temperature of approximately 1800°F. These gasses are then expanded through a conical nozzle to produce thrust. See Figures 9-1 and 9-2 for functional block diagrams and Figure 9-3 for hardware configuration.

The OAS was launched in the OFF mode and remained OFF except as noted in Table 9-1.

Table 9-1. Orbit Adjust Subsystem Launch Mode

Orbit	Burn Time (sec)	Average Sma** (KM)	Performances % of Plan	N_2H_4 Used #
-*	-	7281.461	-	-
38	4	7281.484	60.0	0.01
44	250	7283.456	103.5	0.94
59	318	7285.838	101.5	1.10
Average Force ≈ 0.81 LB_f				

* After Injection

** Semi-Major Axis

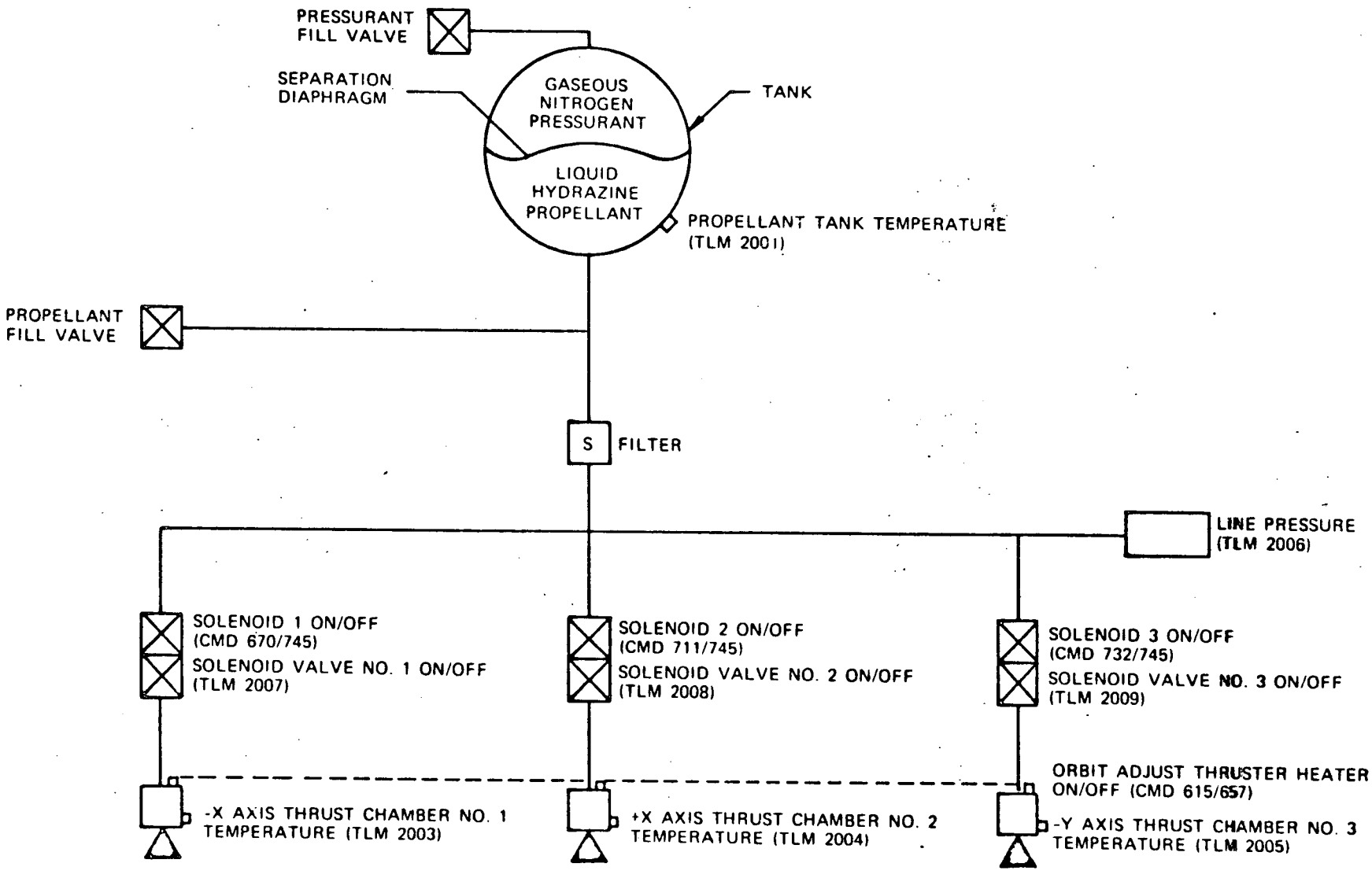

Figure 9-1. Orbit Adjust Subsystem Block Diagram

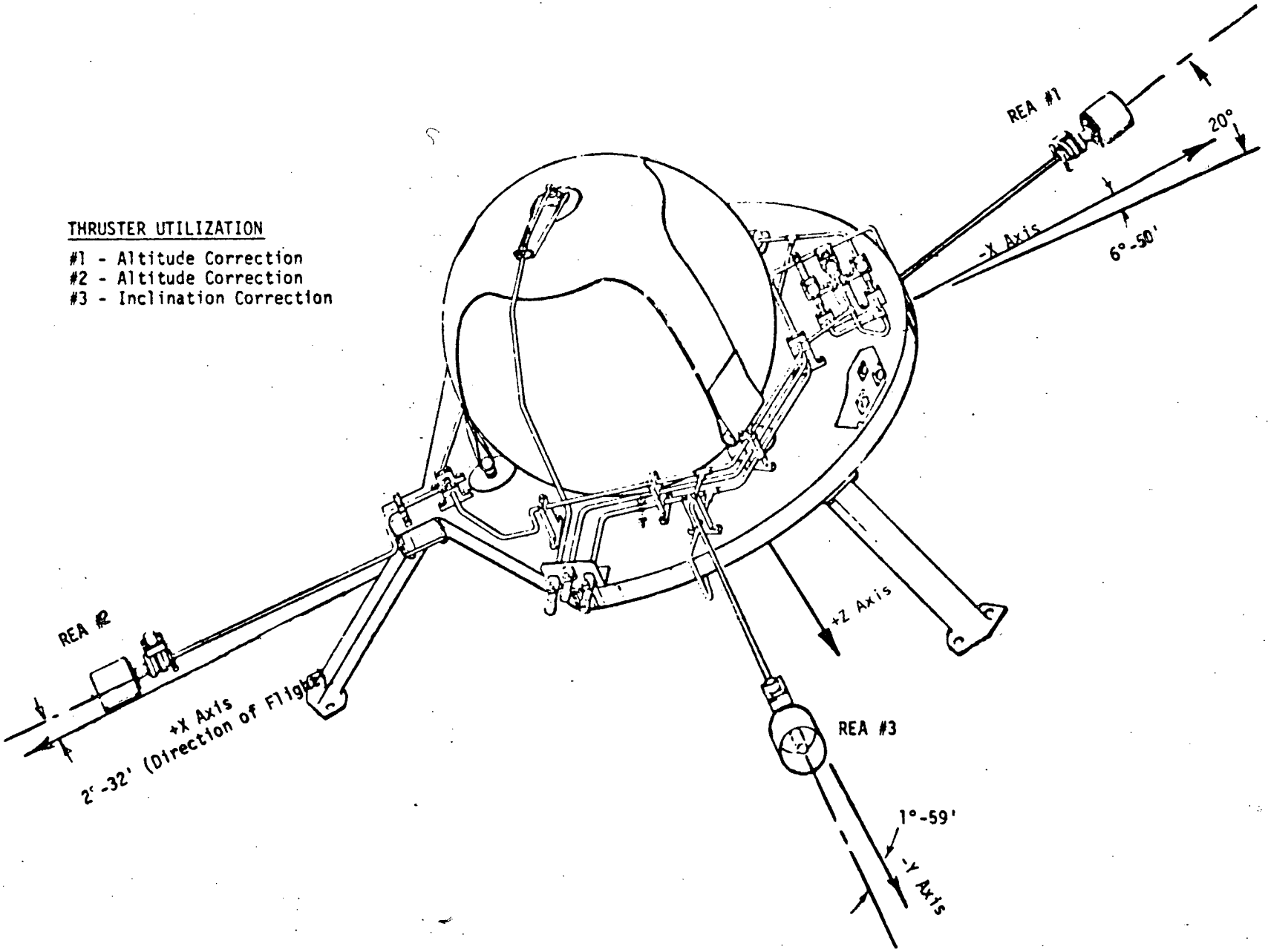

Figure 9-2. Orbit Adjust Thruster Orientation

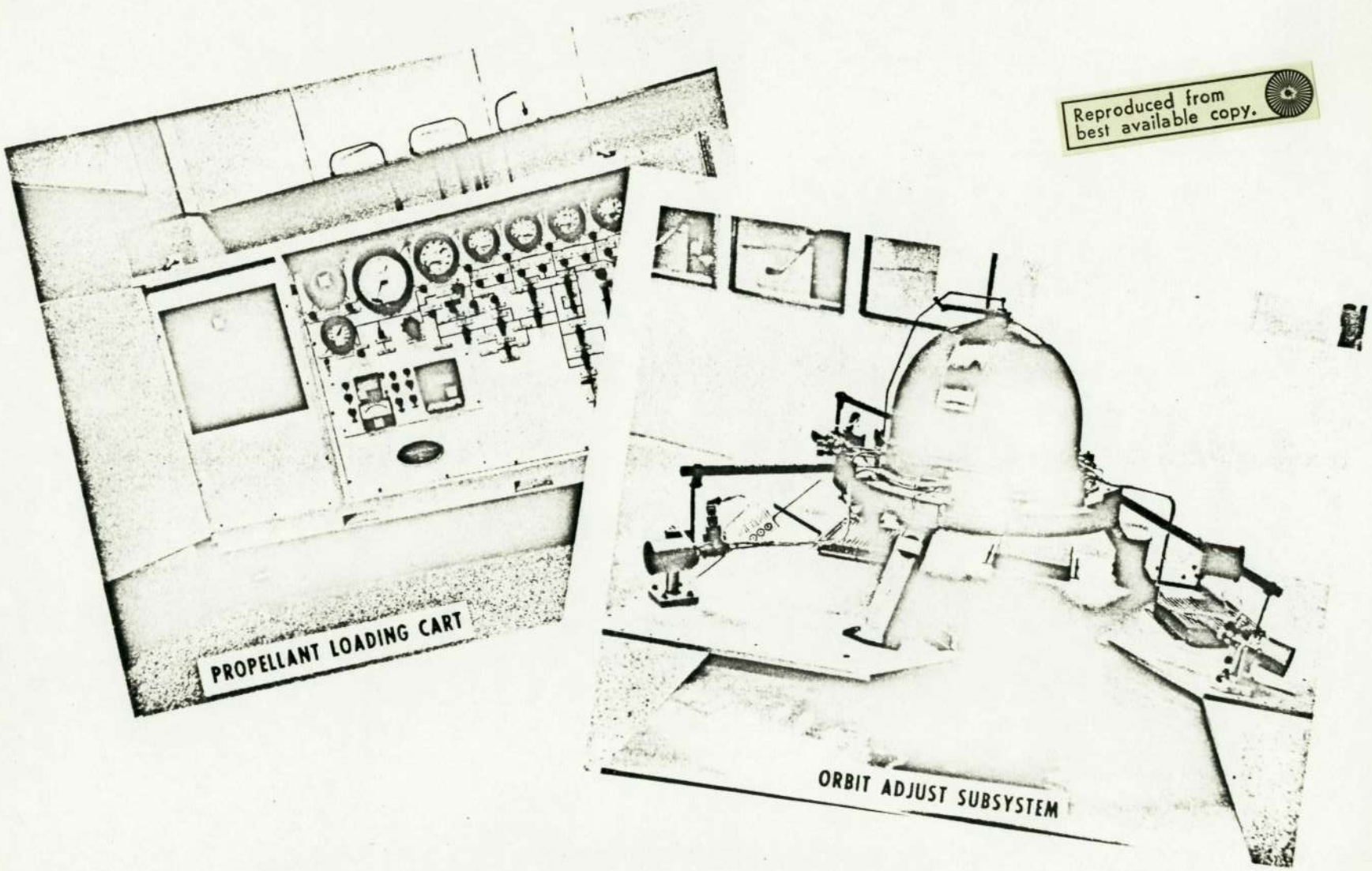

Reproduced from best available copy.

Figure 9-3. Orbit Adjust Subsystem

An orbit adjust sequence for ERTS-1 was initiated during orbit 38 to assess the OAS in preparation for an in plane correction of the launch-injection orbital semi-major axis from 7281.461 K.M. (18 day ground track repeat cycle 651.51 K.M.) to the mean nominal value of 7285.816 K K.M. (Error for 18 day ground track repeat cycle of 0.0 K.M.)

The OAS thruster heaters were turned on and verified at 09:04:16 in orbit 37 (before each burn the heaters were turned off). In orbit 38, after spacecraft telemetry values were confirmed to be normal for orbit adjust, the OAS and-X solenoid were turned on at 11:25:01 and off at 11:25:06 (backup off commands were in the Comstor). Due to spacecraft timing only four seconds of burn was achieved which is within timing constraints on the command system. Figure 9-4 shows dynamic response of the ACS and OAS parameters. An analysis of data and tracking of the spacecraft showed the firing to be normal in all respects. The semi-major axis was increased to 7281.484 K.M. (Error for 18 day ground track repeat cycle 648.36 K.M.) and the initial orbital correction sequence was planned.

In orbit 43 the OAS heaters were turned on at 19:50:26 and in orbit 44 the OAJ and -X solenoid were turned on at 21:44:35 and off at 21:48:46 to effect a firing period of 250 seconds. Again the performance was normal. Figure 9-5 shows performance characteristics. Tracking data confirmed that the semimajor axis was to 7283.456 K.M. (Error for 18 day ground track repeat cycle 353.18 K.M.).

A third burn was performed in orbit 59. The OAS heaters were turned on during orbit 58 at 21:37:21 and the OAS and -X thruster were turned on, at 23:34:40 and off at 23:39:58. All off commands were backed up in Comstor, for a firing period of 318 seconds. Figure 9-6 shows performance characteristics. Tracking data confirmed that the semimajor axis increased to 7285.838 K.M. (Error for 18 day ground track repeat cycle 2.4 K.M.) which was considered satisfactory for the initial ERTS-1 orbit correction.

Housekeeping functions of the OAS were normal. Table 9-2 gives average Telemetry values for the OFF quiescent state.

Table 9-2. OAS Telemetry Values

Function		Units	T/V * Average Value		
No.	Name		Orbit 0-1	20°C Plateau	Orbit 35
2001	Prop. Tank Temp.	°C	18.93	18.2	35
2003	Thrust Chamber No. 1 (-x) Temp	°C	23.31	20.9	22.03
2004	Thrust Chamber No. 2 (+x) Temp	°C	25.54	19.7	38.76
2005	Thrust Chamber No. 3 (-y) Temp	°C	32.81	18.9	34.55
2006	Line Pressure	Psia	531.02	4.0**	539.29

*Thermal Vacuum Test Data
These temperatures were without heater operation
**(Orbit Adjust Tank Not Loaded)

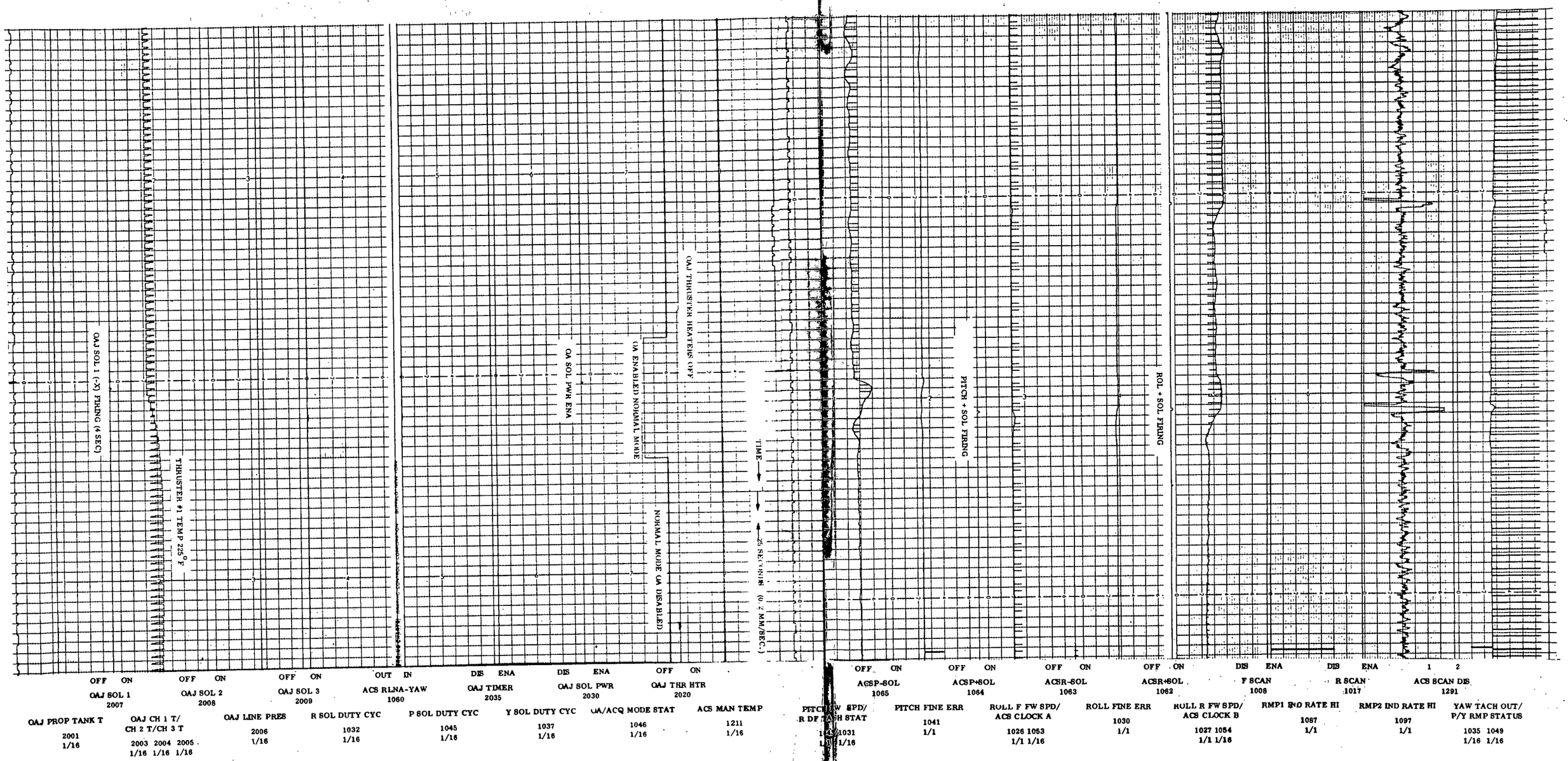

Fig. - 9.1

Fig. - 9.2

Figure 9-4. Performance Characteristics

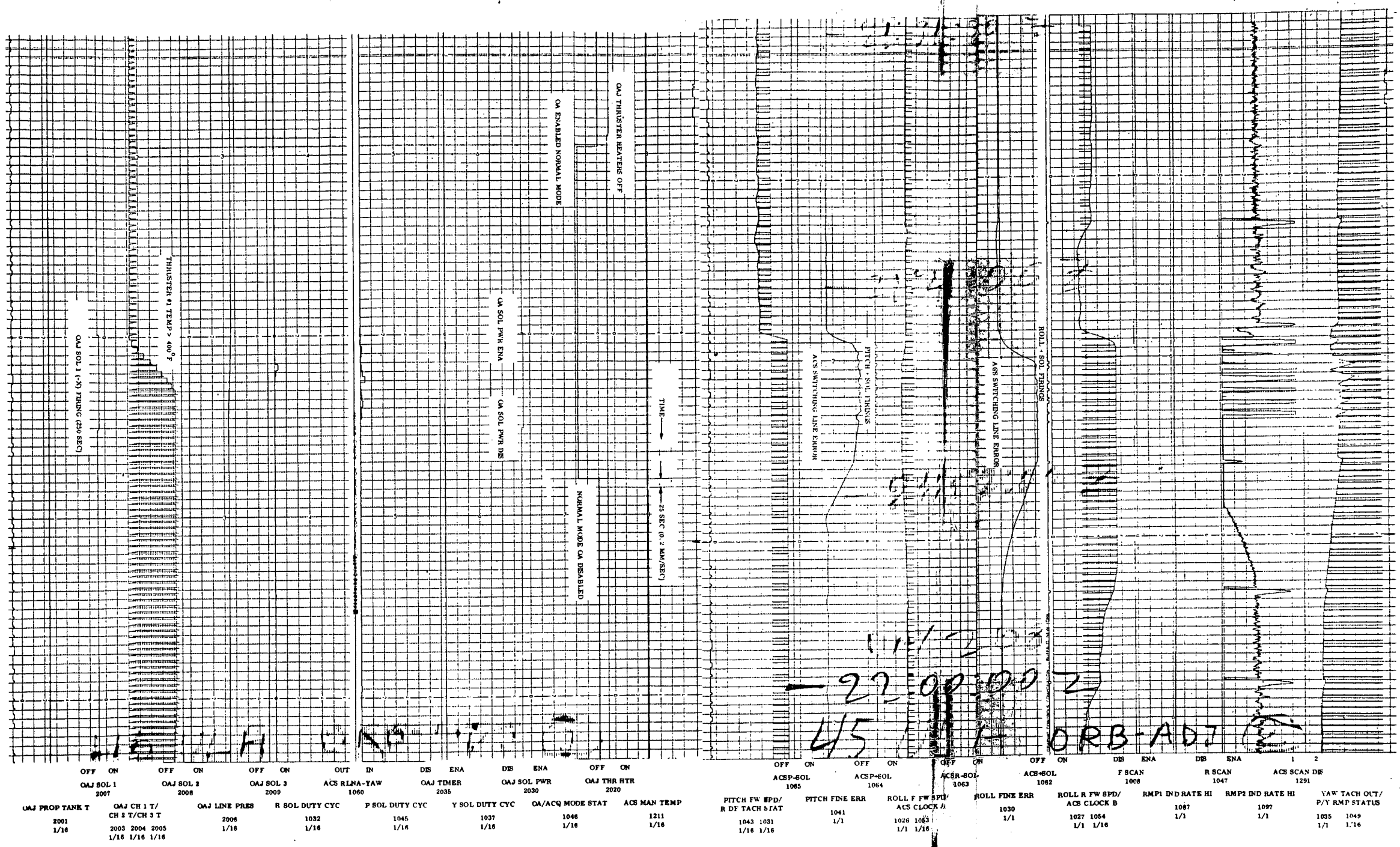

Figure 9-5. Performance C

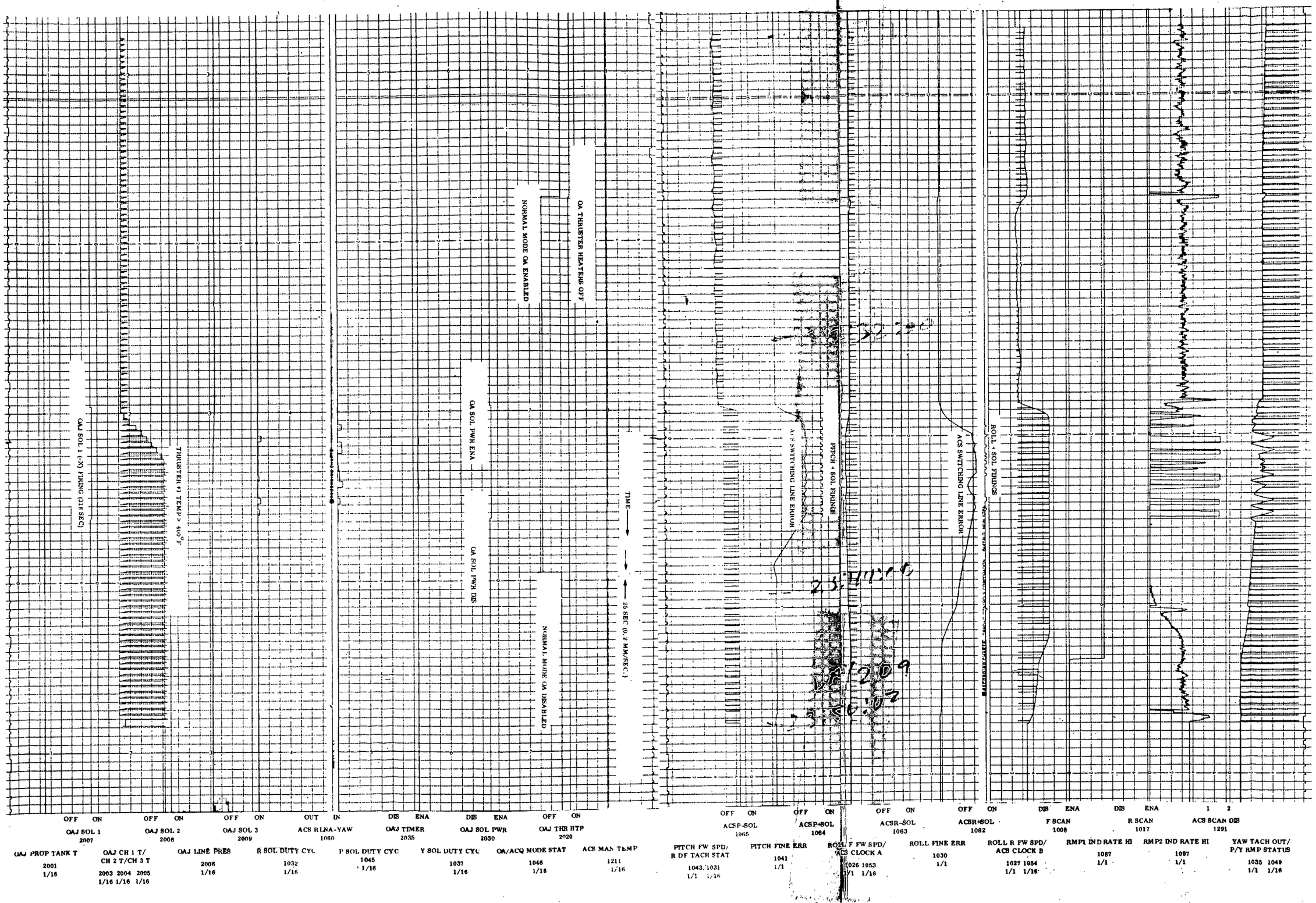

Figure 9-6. Performance Characte

SECTION 10

MAGNETIC MOMENT COMPENSATING ASSEMBLY (MMCA)

SECTION 10
MAGNETIC MOMENT COMPENSATING ASSEMBLY (MMCA)

The purpose of the MMCA is to provide means for generating magnetic dipole moments sufficient to cancel those residual dipole moments that may exist on the spacecraft. The MMCA consists of three, mutually perpendicular, chargeable, permanent magnet rods. Activation of the charging and discharging mechanism is by commands. See Figure 10-1 for functional block diagram.

The MMCA was launched in the OFF mode as noted in Table 10-1.

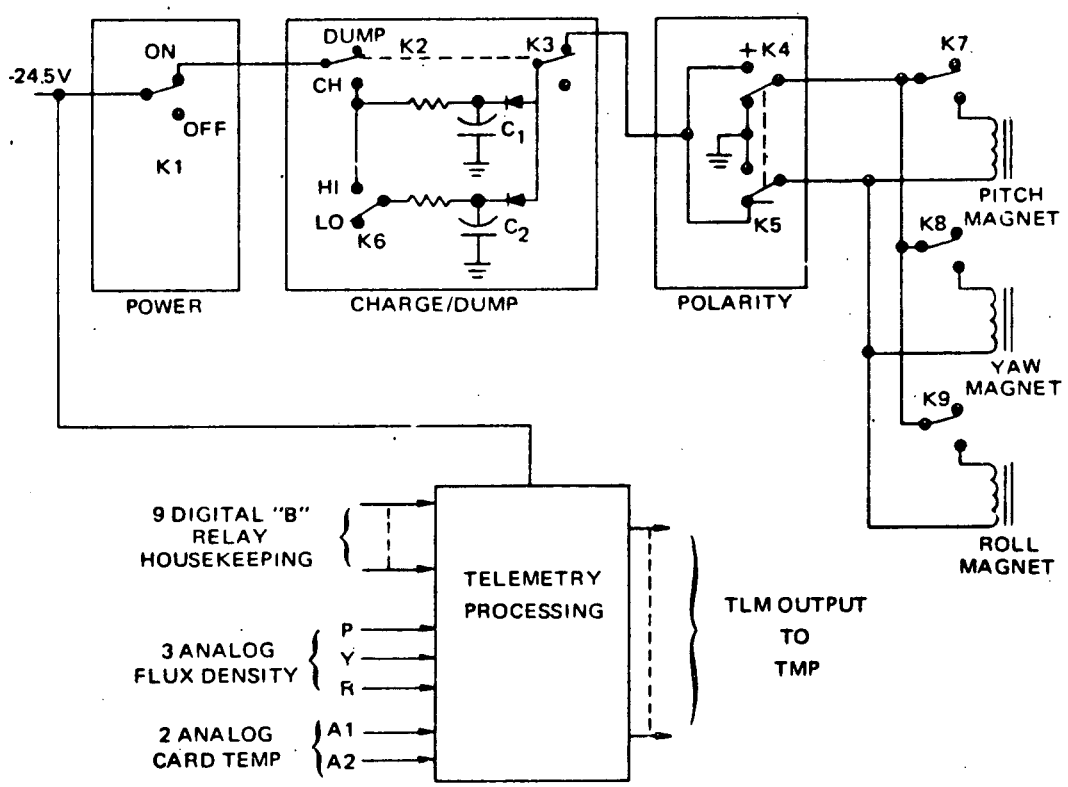

Figure 10-1. MMCA Functional Block Diagram

Table 10-1. MMCA Launch Mode

	MODE	CMD
POWER	OFF	765
CAPACITOR	HI	744
CAPACITOR	DUMP	706
POLARITY	+	742
PITCH COIL	OUT	702
ROLL COIL	OUT	761
YAW COIL	OUT	704

Housekeeping functions of the MMCA were normal. The unit was not activated; insertion of dipole values was deferred pending evaluation of the ACS performance. Gating throughout this period has averaged 1-2 gates in the +R and 0-1 gates in the +P direction per orbit. Table 10-2 gives average telemetry values.

Table 10-2. MMCA Telemetry Values

Number	Name	Units	Orbit 0-1	T/V	Orbit 35
				20°C Plateau*	
4001	A1 Board Temp	°C	21.12	19.8	19.77
4002	A2 Board Temp	°C	24.39	23.6	23.58
4003	Hall Current	TMV	3.48	3.50	3.48
4004	Yaw Flux Density	TMV	3.13	3.07	3.11
4005	Pitch Flux Density	TMV	3.16	3.12	3.13
4006	Roll Flux Density	TMV	3.21	3.22	3.19

*Thermal Vacuum Test Data

SECTION 11

UNIFIED S-BAND/PREMODULATION PROCESSOR (USB/PMP)

SECTION 11
UNIFIED S-BAND/PREMODULATION PROCESSOR (USB/PMP)

The Unified S-Band Equipment (USBE) consists of two S-Band transmitter/receiver pairs (transponders). Each transmitter/receiver pair normally operates as a separate unit, only one of the two is powered at any given time, but it is possible to cross-strap them by ground command. When cross-strapped, the receiver of one transponder and the transmitter of the other are powered. The USB Receiver receives the uplink RF signal, demodulates the command and ranging subcarriers, and when possible, provides a phase-locked oscillator signal for the down-link USB transmitter. A ranging (psuedo-random noise-PRN) signal is demodulated and is available for modulation of the downlink upon ground command. The subcarrier containing command information is sent to the PMP. One or the other USB receiver is powered at all times. The USB transmitter uses either the phase-locked oscillator of the USB receiver or, if sufficient signal for phase-lock is not present, an auxiliary oscillator for the transmitter RF driver. Back-up modes allow and sometimes require use of the auxiliary oscillator or the receiver oscillator (phase-locked or free-running) at all times. Modulation of the USB transmitter comes from the PMP and may or may not have the PRN ranging signal added. Switching permits either transmitter to be ON or OFF but both transmitters ON simultaneously is not possible. Protection against inadvertent leaving ON of either transmitter (and/or either of the wide band power amplifiers) is provided by a 32 minute cutoff timer. See Figure 11-1 for Functional Block diagram. Figures 11-2 and 11-3 are modulation formats.

The USBE was launched in the OFF mode as noted in Table 11-1 and activated after separation near 0 Tananarive. Commands were successfully uplinked at 1 Madrid and have continued to be normal since that time. Table 11-2 gives average telemetry values.

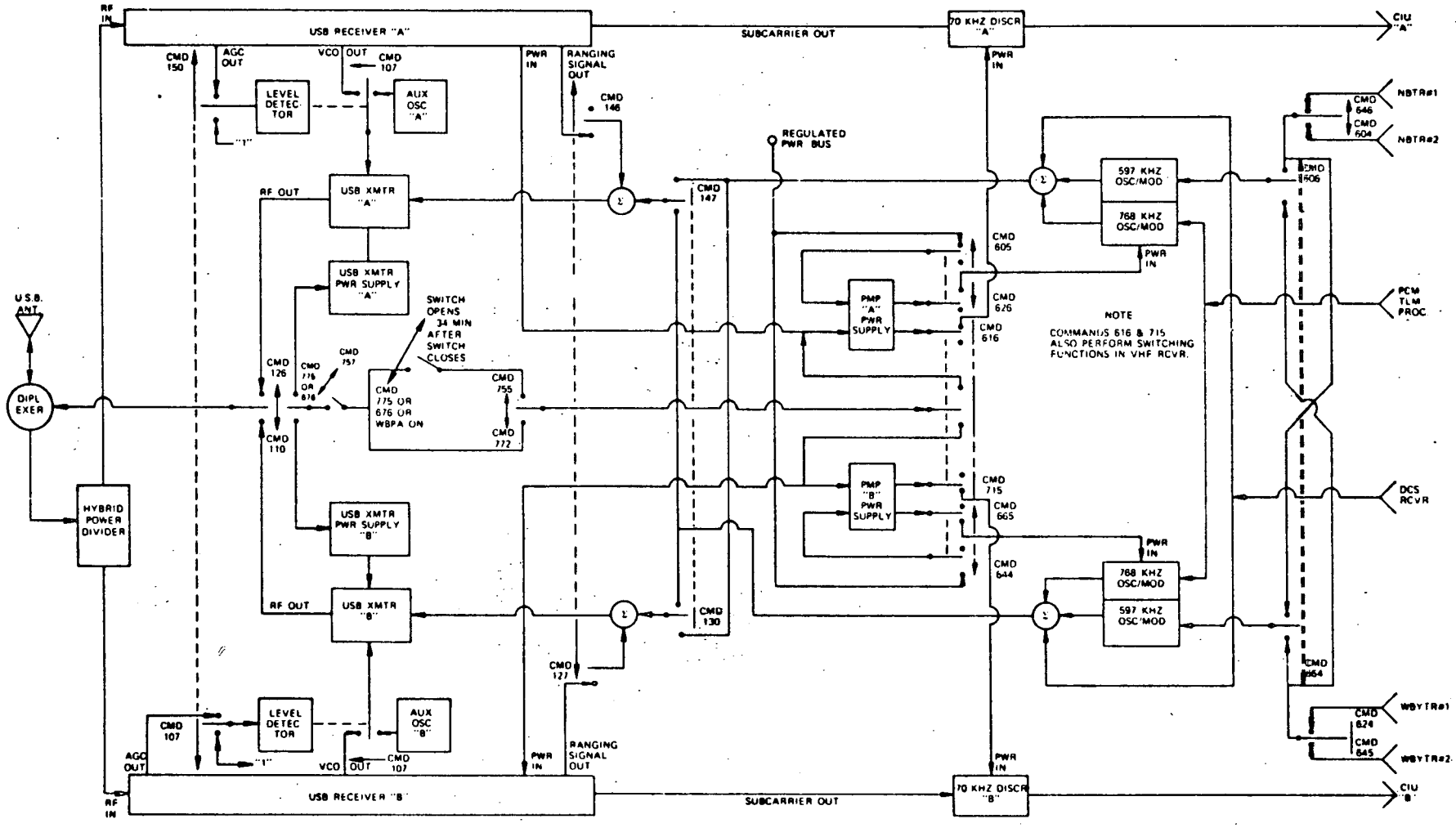

Figure 11-1. USBE/PMP Functional Block Diagram

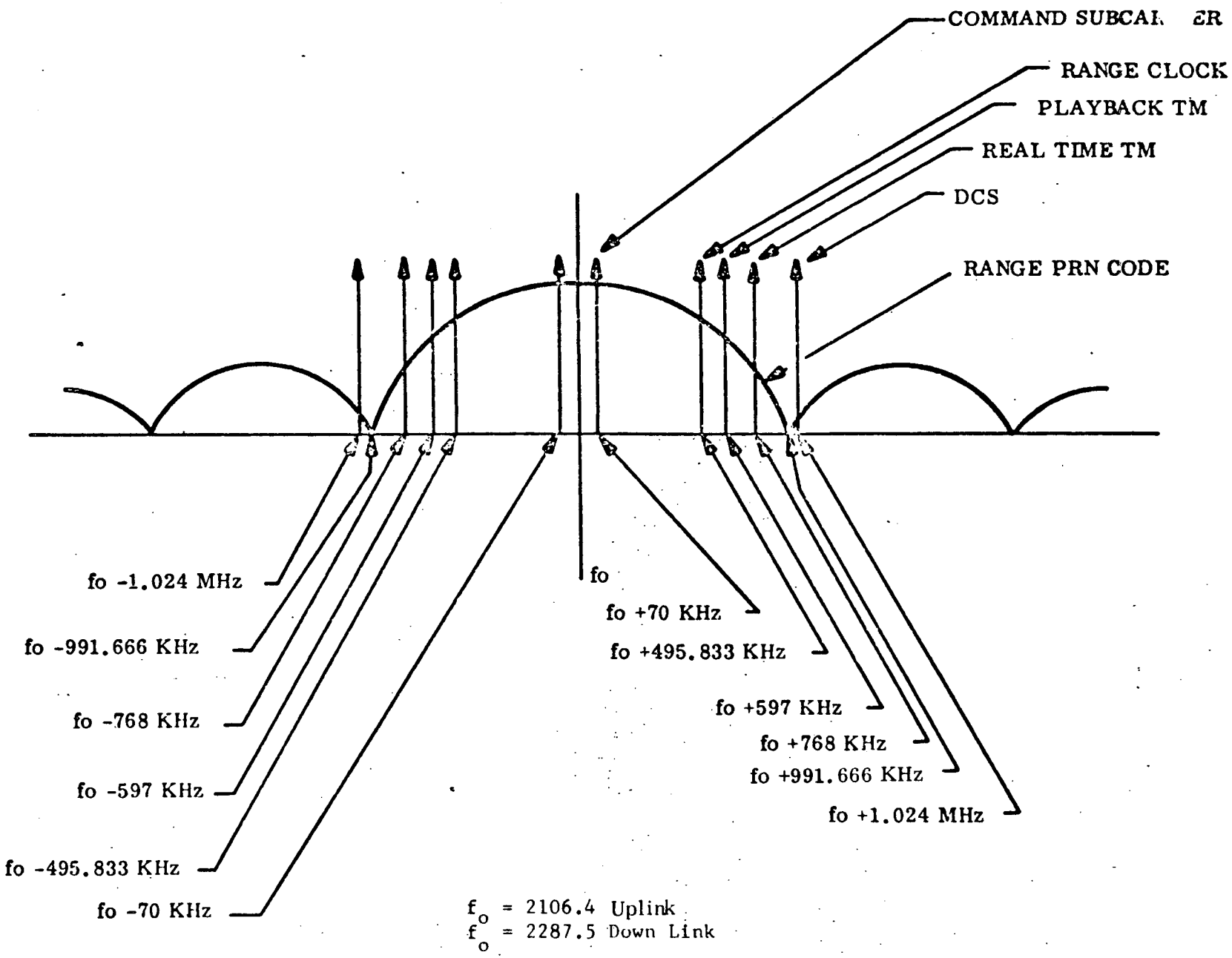

Figure 11-2. S-Band Transmission Spectrum

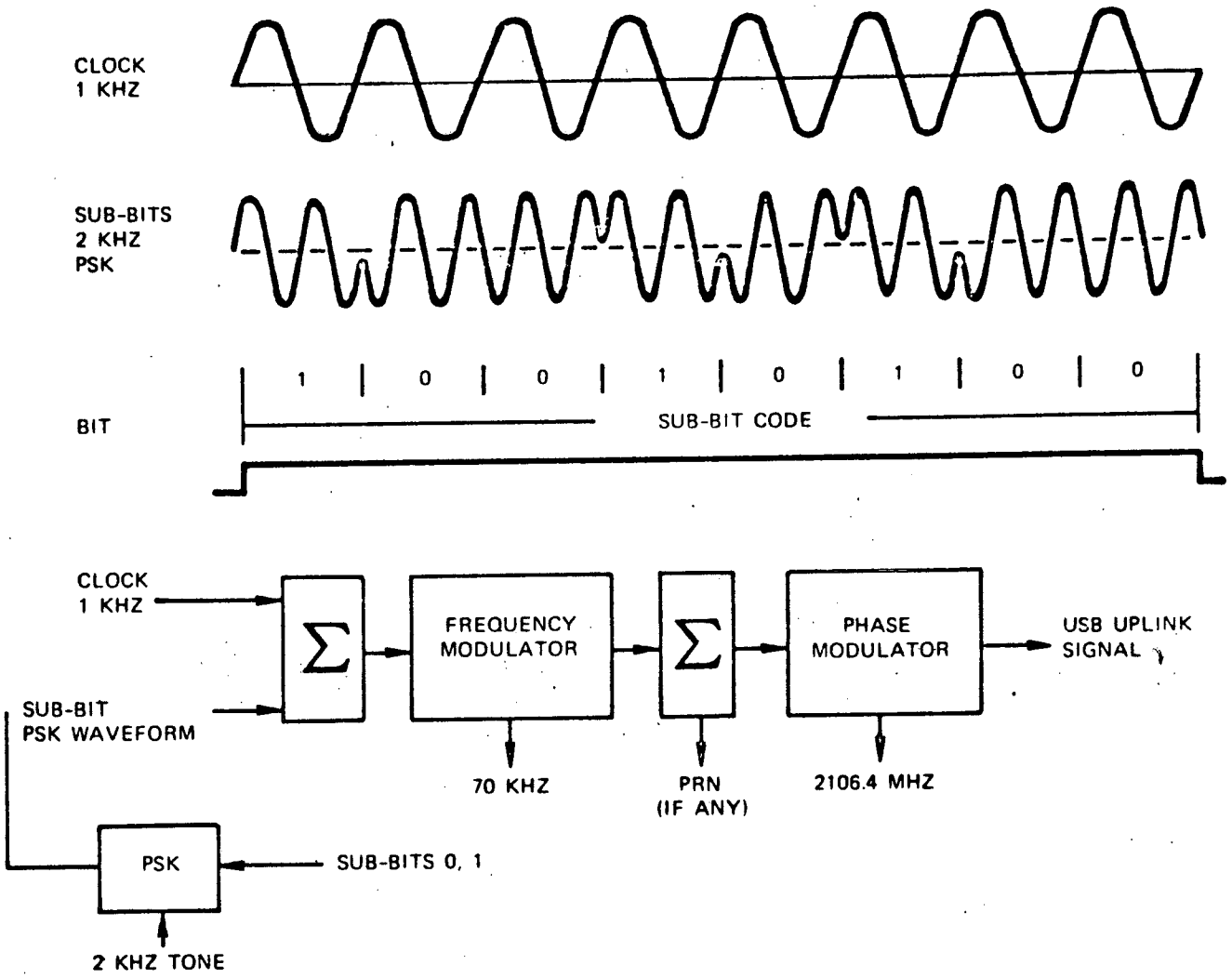

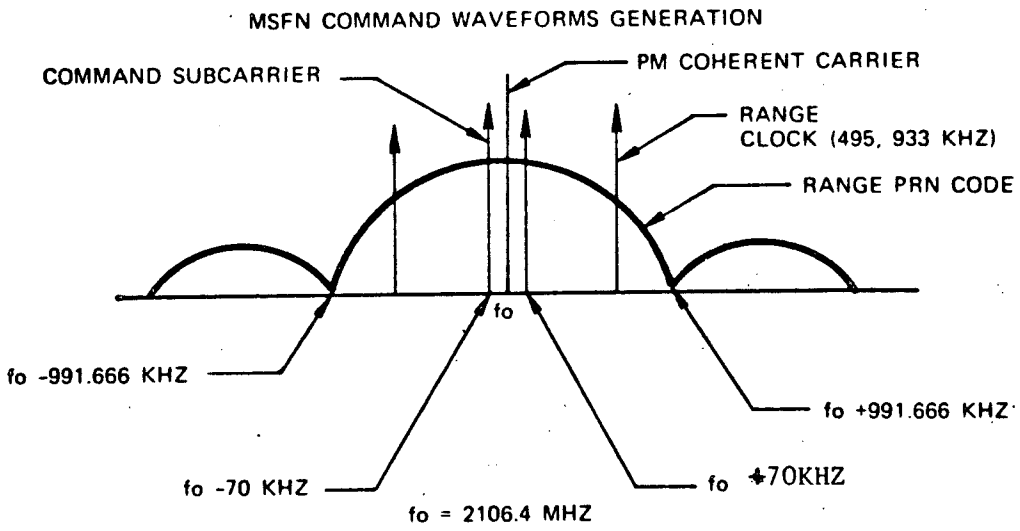

Figure 11-3. MSFN/USB Uplink Modulation

Table 11-1. USB/PMP Launch Mode

	MODE	CMD
USB XMTR PWR	EN	347
USB XMTR	DIS	757
AUX OSC	EN	150
SEL XMTR	A	126
RANGING	OFF	146
MOD INPUT	NORM	147
MOD A	OFF	626
MOD B	OFF	665
SEL	NBR	606
NBTR SEL	1	646
WBVTR SEL	1	624

Table 11-2. USB/PMP Telemetry Values

Function No.	Function Name	Mode	Units	Orbit 0-1	T/V* Average Value 20° Plateau	Orbit 35
11001	USB Receiver AGC	Receiver A Low	DBM	-127.24	-130.5	-122.78
11002	USB Transmitter Power	Transmitter A ON	WTS	2.21	1.26	3.11
11003	Receiver Error	Receiver A Normal	KHz	-24.23	-14.4	-21.79
11004	USB Transponder Temp.	Transponder ON	°C	20.37	25.1	22.92
11005	USB Transponder Pres.	Transponder ON	PSI	15.68	18.9	15.91
11007	USB Transmitter A-15V	Transmitter A ON	VDC	-15.16	-15.51	-15.20
11008	USB Transmitter B-15V	Transmitter B ON	VDC	**	-15.0	**
11009	USB Ranging Mode-15-V	Ranging ON Disc. A ON	VDC	-14.76	-14.4	-14.76
11101	PMP A Voltage	Discrim. A ON Mod A ON	VDC	-15.21	-14.74	-15.12
11102	PMP B Voltage	Discrim. B ON Mod B ON	VDC	**	14.7	**
11102	PMP B Voltage	Discrim. B ON Mod OFF	VDC	**	15.15	**
11103	PMP A Temp.	TLM Power ON	°C	23.14	31.0	30.44
11104	PMP B Temp.	TLM Power ON	°C	20.26	28.3	25.72

*Thermal Vacuum Test Data. T/V data for USBE S/N FT 01
**USBE-B and PMP-B not turned on as of orbit 35.

SECTION 12

SEPARATION AND UNFOLD SUBSYSTEM

SECTION 12
SEPARATION AND UNFOLD SUBSYSTEM

The Separation and Unfold Subsystem consists of the following components: Unfold Timer, Unfold Switch, Separation Switches, Unfold Motors, and Cable Cutter Assembly. At programmed separation time the launch vehicle provides power to fire four electro explosive bolt cutters to effect spacecraft separation. See Figures 12-1 and 12-2 for mechanical arrangement, and Figure 12-3 for a Functional Block Diagram.

The separation subsystem performed as expected. The 2.5 and 5 second timers caused paddle unfold. Before separation the subsystem properly restrained the paddles, disabled the primary and redundant matrix A drivers, provided - 24.5 VDC to the Attitude control reset line and provided telemetry signals indicating that the spacecraft was still mated to the Delta Vehicle. After separation all circuits were activated, separation was confirmed by Function 5002 Spacecraft Separation Switch changing from 0 to 1 state at 19:06:35 and subsequent readings from all subsystems activated by the separation event.

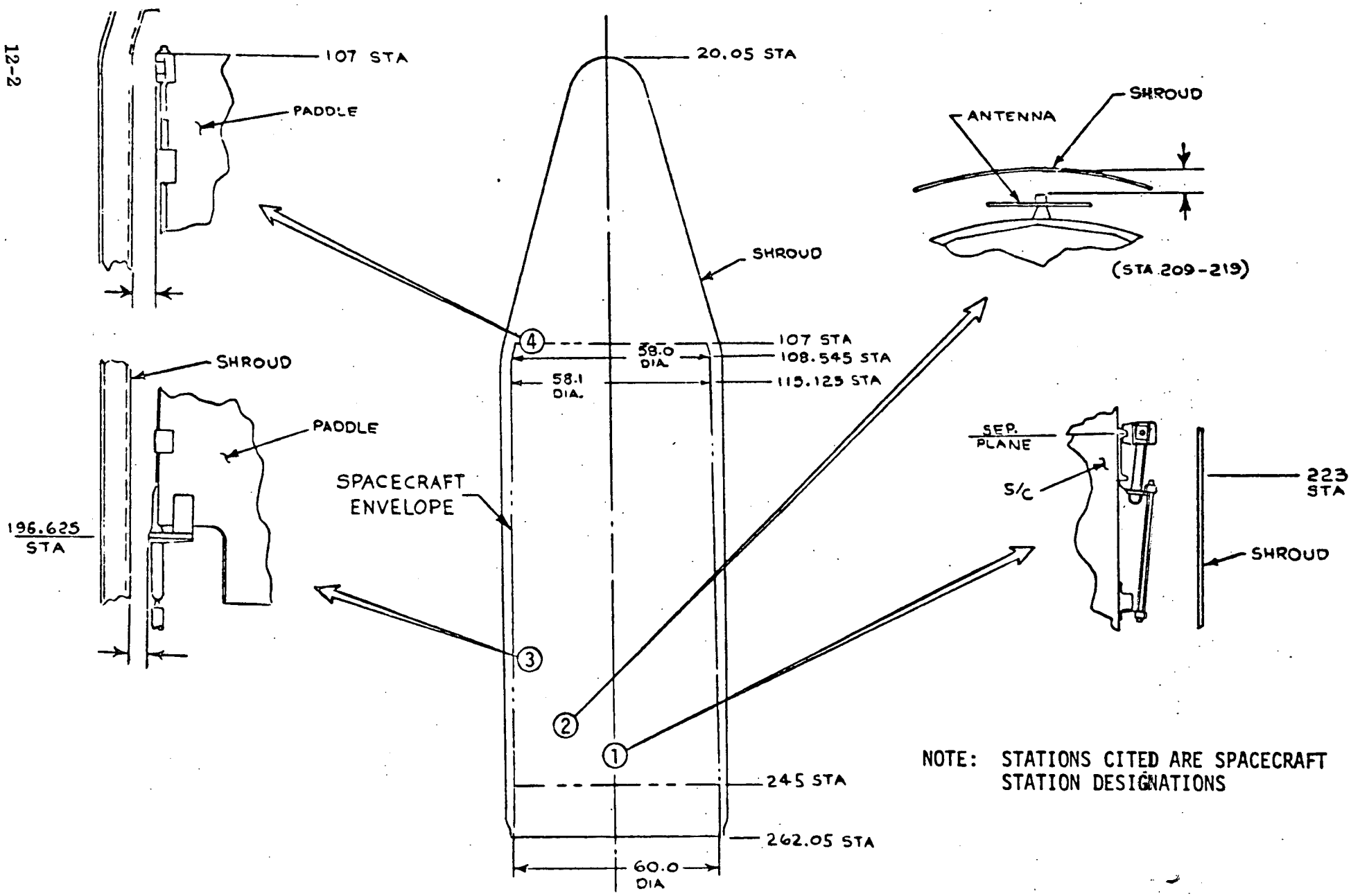

Figure 12-1. ERTS Observatory/Shroud Envelope and Minimum Clearances

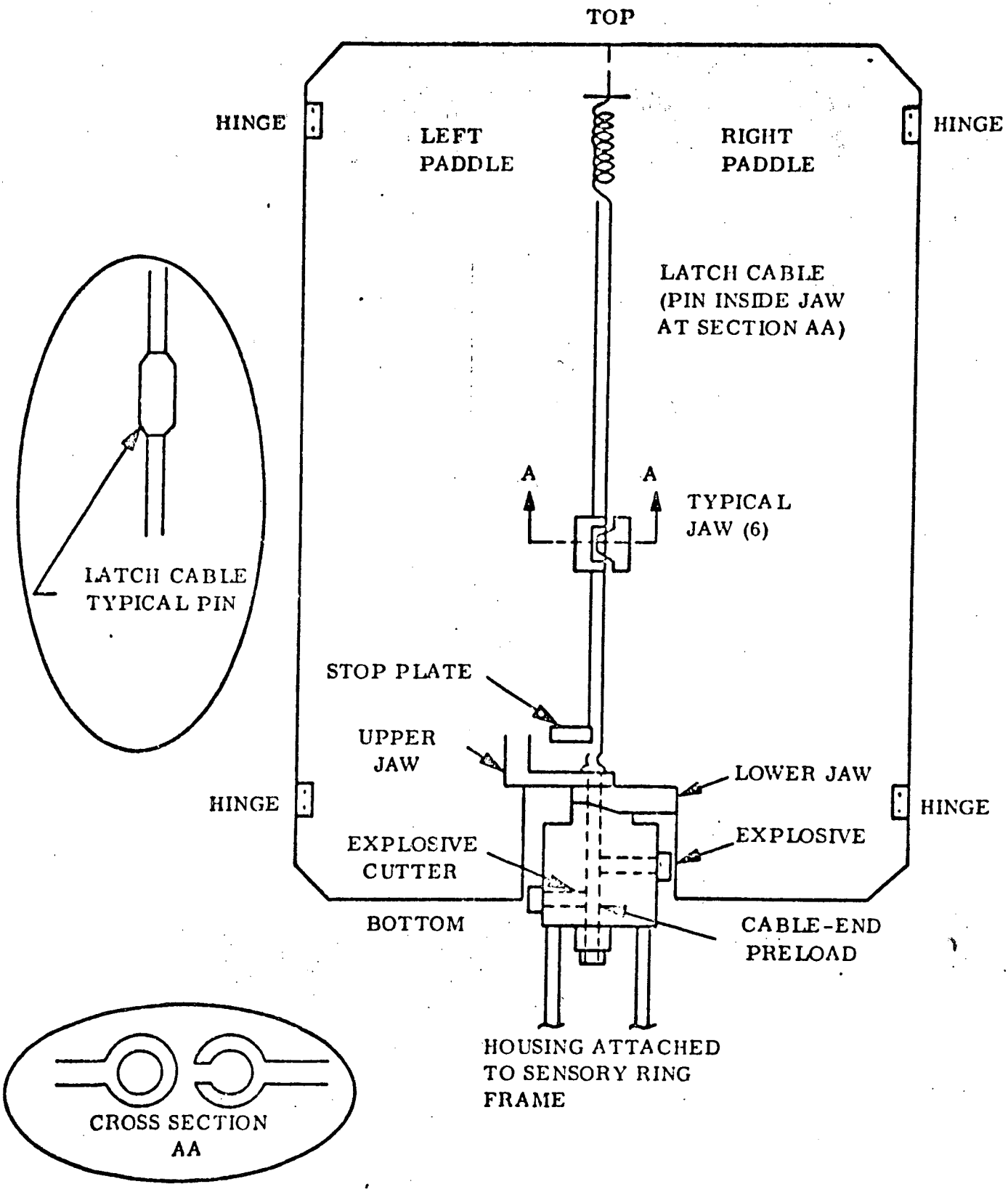

Figure 12-2. Separation and Unfold Subsystem Mechanical Details

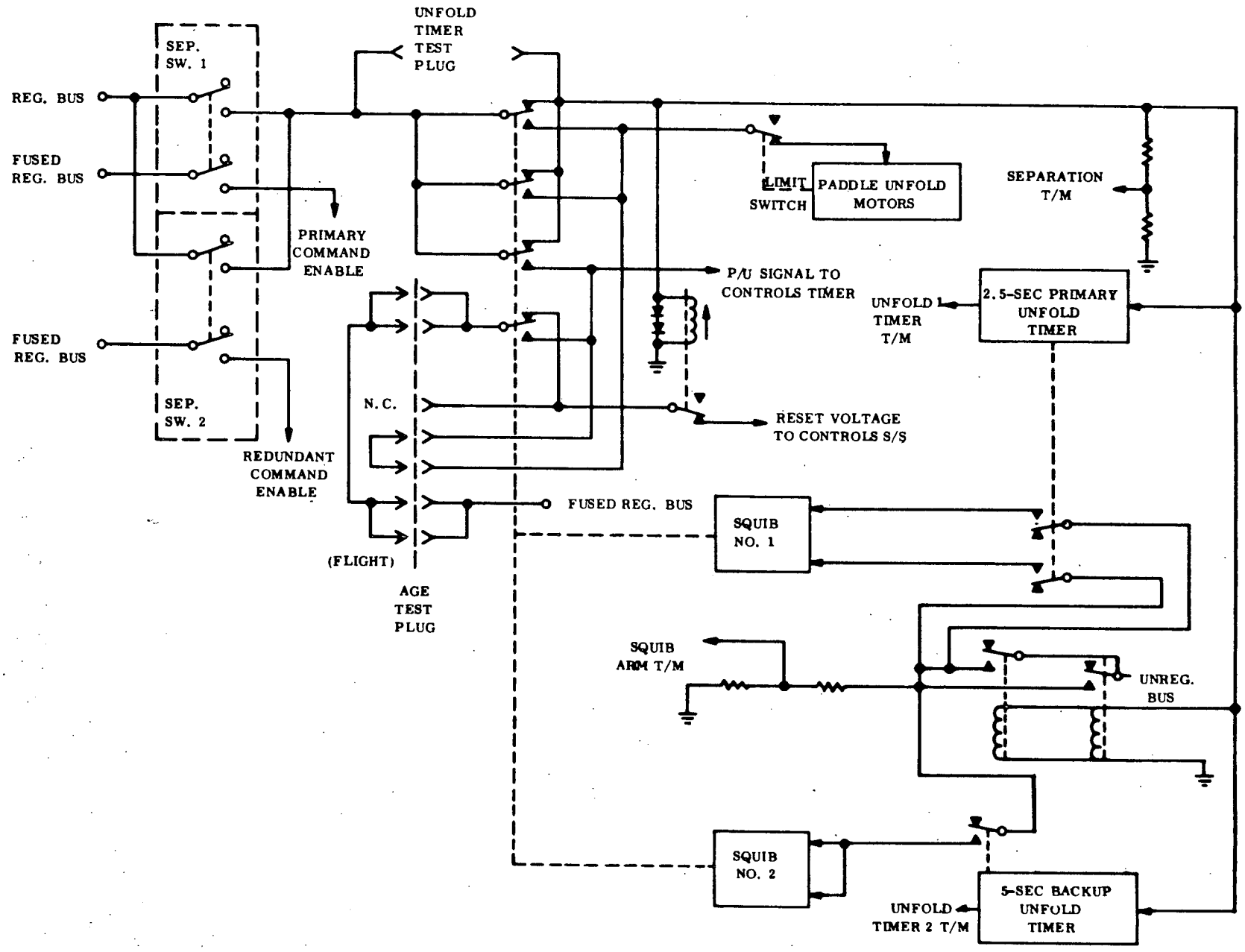

Figure 12-3. Separation and Unfold Subsystem Functional Block Diagram

SECTION 13

ELECTRICAL INTERFACE SUBSYSTEM

SECTION 13
ELECTRICAL INTERFACE SUBSYSTEM

The EIS is a collection of three modules: The Auxiliary Processor Unit (APU) (See Figure 13-1 for functional block diagram); The Power Switching Module (PSM) (See Figure 13-2 for functional block diagram) and the Interface Switching Module (ISM). Together they perform a variety of electrical interfacing functions including: Power switching, telemetry signal generation, switching logic, power fusing, signal switching (Data) time code processing, automatic "shut-off" timers.

The EIS contains a variety of telemetry points all of which are associated with other subsystems and have been discussed in those sections.

The Launch mode of the APU is given in Table 13-1.

Table 13-1. APU Launch Mode

	Mode	Cmd
POWER	ON	656
MOD	STBY	050
P/L TIMER	DIS	720
SEARCH TRACK	NORM	631
USB/WPA TIM	EN	755

All EIS functions which were exercised during launch and activation were executed and confirmed. After launch power switching was held to a minimum. Operation of time code processing, search track data processing, back-up timer operation, signal switching and power switching was confirmed as commands were executed.

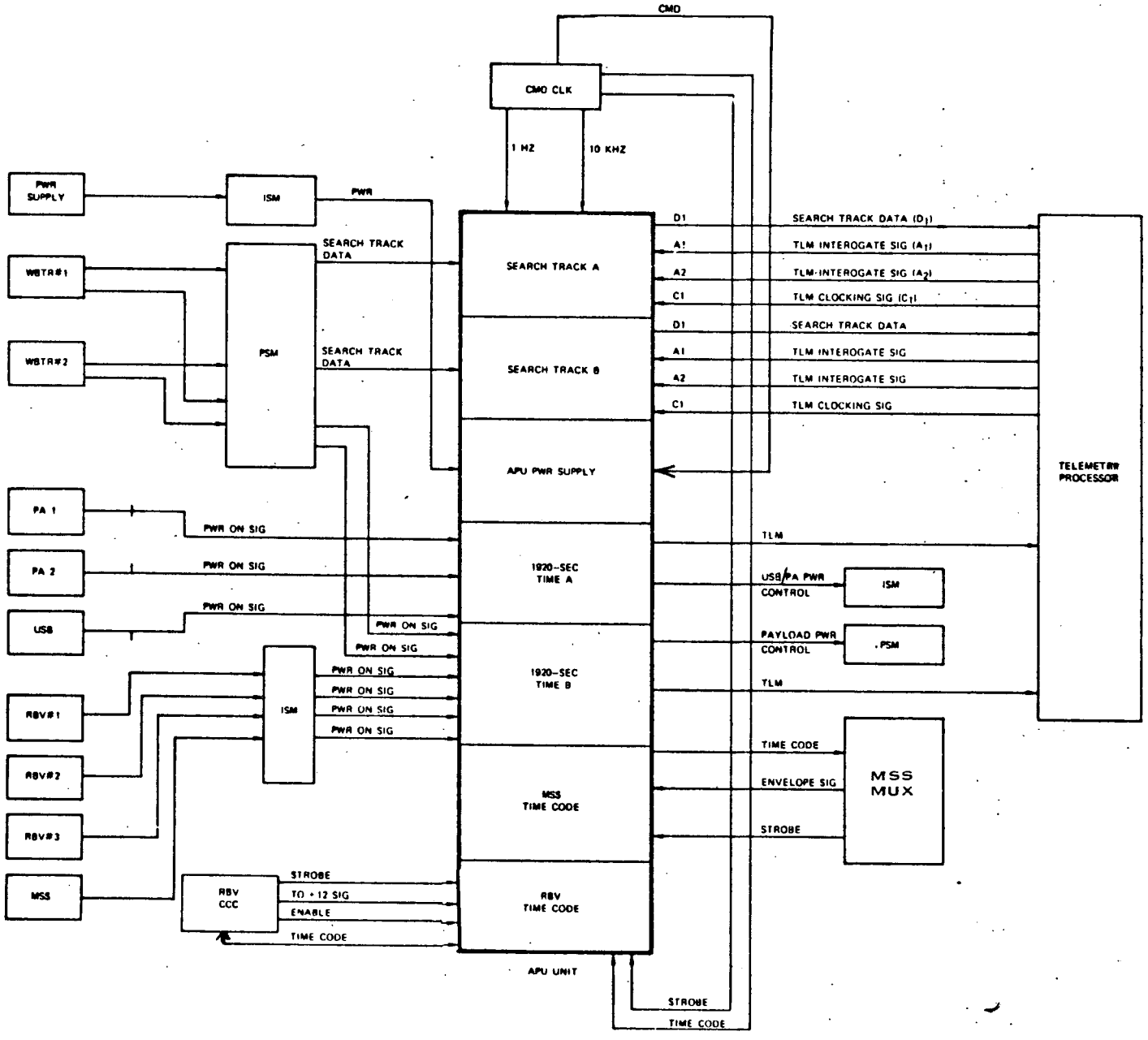

Figure 13-1. APU Functional Block Diagram

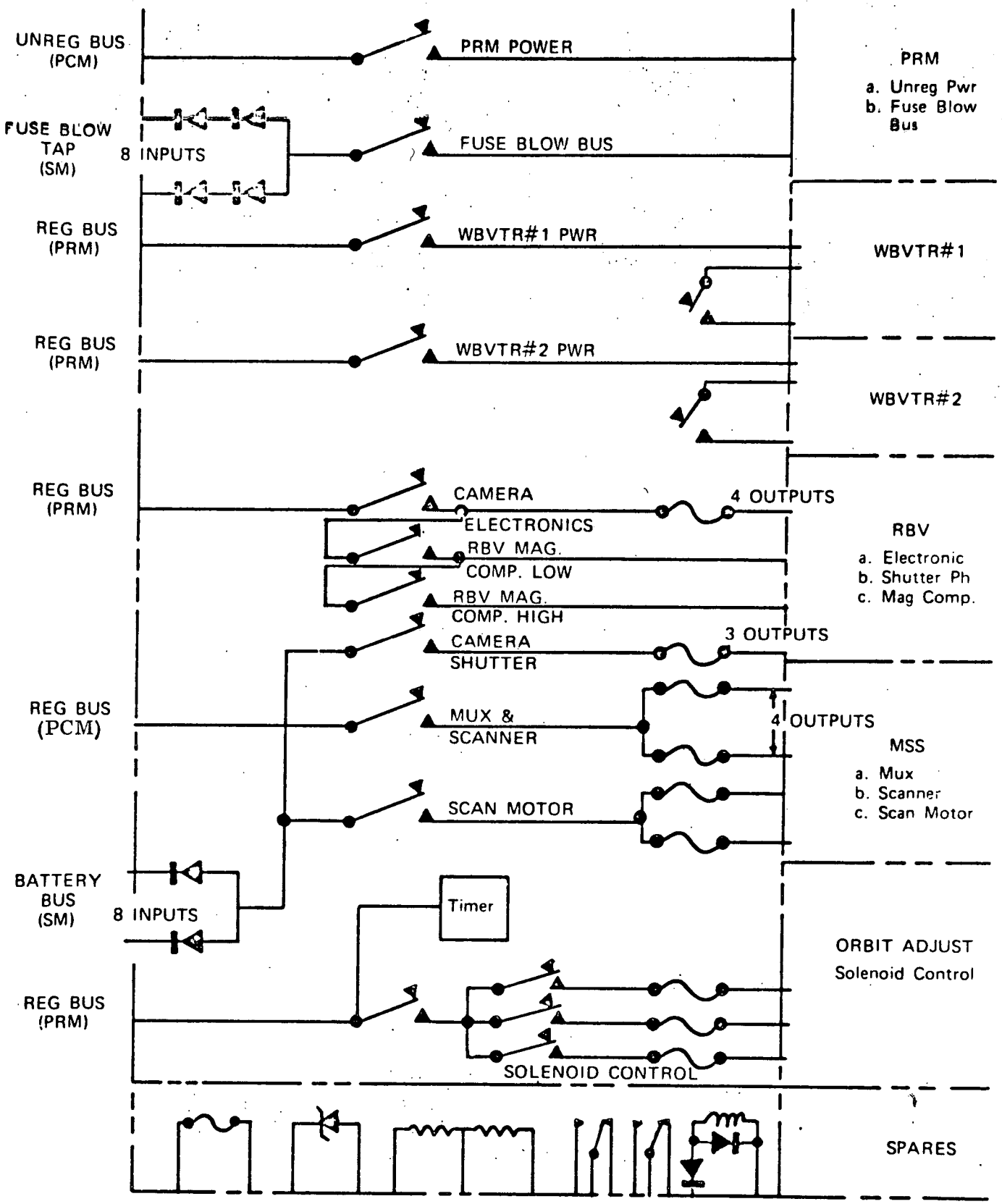

Figure 13-2. PSM Functional Block Diagram

SECTION 14

THERMAL CONTROL SUBSYSTEM

SECTION 14
THERMAL CONTROL SUBSYSTEM

Thermal control of the spacecraft is required in order to provide a mounting surface temperature of $20^{\circ} \pm 10^{\circ}C$ for all equipment mounting internal to the spacecraft. The ERTS spacecraft is composed of three separate elements, the solar arrays, Attitude Control Subsystem and the sensory ring. These elements are thermally decoupled such that the environment for mission support and payload equipment is provided by the sensory ring-Thermal Control Subsystem. The subsystem is composed of both semipassive and passive elements. The semipassive elements are shutters and heaters. Shutters are located on each of the 18 peripheral compartments and are actuated by two-phase, fluid-filler, bellows assemblies. The heaters are energized by ground command. Passive control in the form of insulation and coatings works in coordination with the semipassive elements to maintain the thermal balance of the vehicle. Figure 14-1 is a block diagram of the thermal control S/S.

In ERTS-1 the thermal control functions were balanced prior to launch and maintained their balance, within expected tolerances, throughout powered flight and orbital operations.

The thermal subsystem in both the sensory ring and the ACS was within the expected limits at all locations with only one exception.

The forward sun sensor on the array transition section registered temperatures of 60°, about $20^{\circ}C$ higher than expected. An in-depth analysis showed this value is reasonable for this particular sensor location. The increased temperature is not detrimental to spacecraft operation. (See Appendix E).

Average temperatures were: ACS baseplate $22.4^{\circ}C$; Sensory ring $20.1^{\circ}C$; and Center Section $18.4^{\circ}C$. The shutter Position average at orbit 35 was 35.7°.

Table 14-1 provides typical average telemetry values for the Zener modules obtained during thermal vacuum testing and early flight operations.

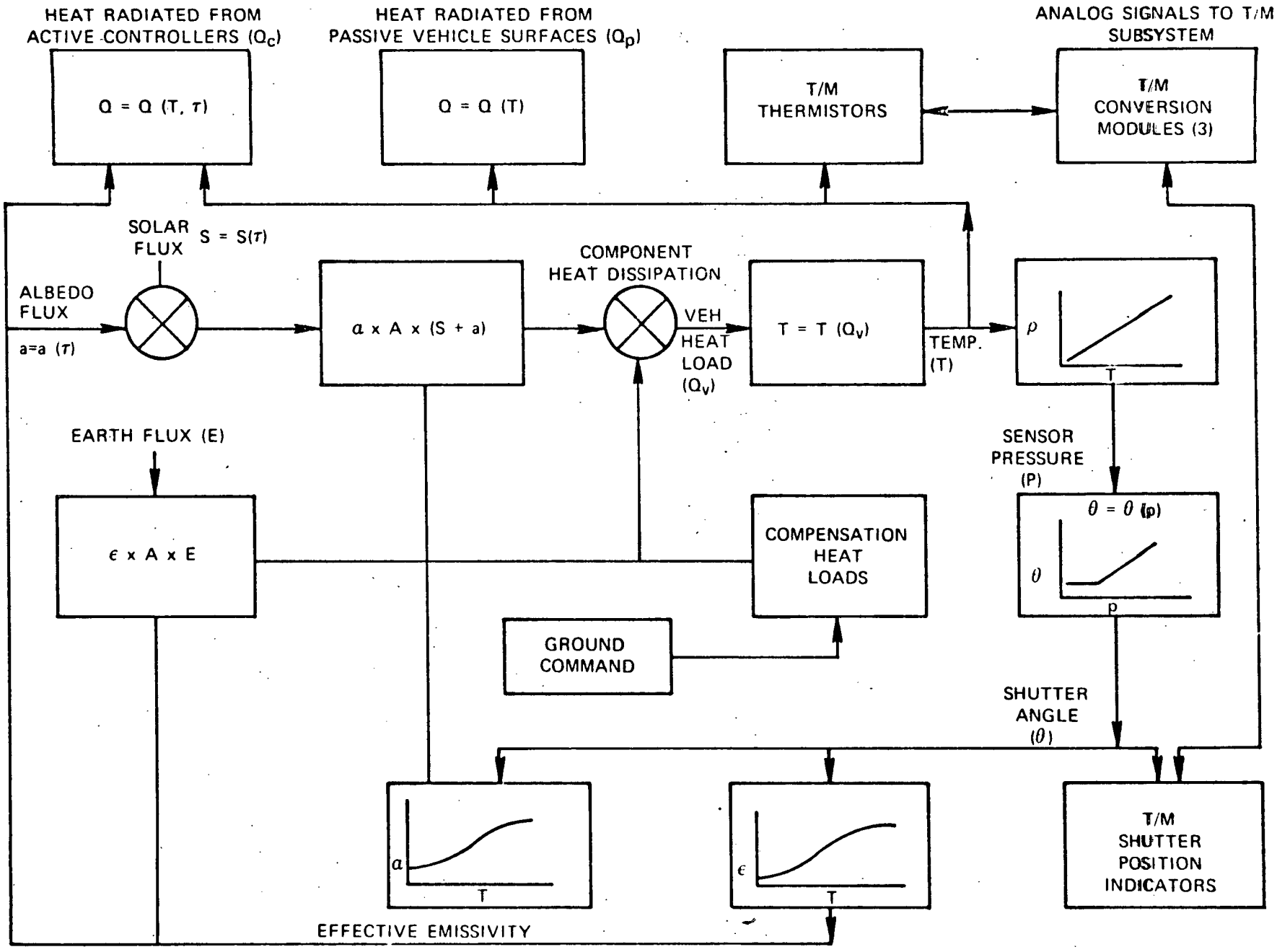

Figure 14-1. Functional Block Diagram of Thermal Control S/S

Table 14-1. Thermal Telemetry Values

Function No.	Function Name	Unit	T/V		
			Orbit 0-1	20°C* Plateau	Orbit 35
7080	TLM Conv. Mod. Q1 Thermistor Zener	VDC	8.16	8.18	8.19
7081	TLM Conv. Mod. Q2 Thermistor Zener	VDC	8.37	8.38	8.40
7082	TLM Conv. Mod. Q3 Thermistor Zener	VDC	8.31	8.31	8.31
7083	TLM Conv. Mod. Q1 Shutter Zener	VDC	8.31	8.31	8.32
7084	TLM Conv. Mod. Q2 Shutter Zener	VDC	8.19	8.19	8.19
7085	TLM Conv. Mod. Q3 Shutter Zener	VDC	8.14	8.15	8.15

*Thermal Vacuum Test Data

B

SECTION 15

NARROWBAND TAPE RECORDER (NBTR)

SECTION 15
NARROWBAND TAPE RECORDER (NBTR)

(NBTR) consists of a single-track recording mechanism and the associated electronics necessary for proper amplification and filtering of the RECORD and PLAYBACK signals and for control of the record mechanism. The recorder is completely contained in one box.

The recorder records 1 KBPS data from the Telemetry Processor and upon command plays back the stored data with simultaneous outputs to the VHF Transmitter and the Premodulation Processor. The playback speed is 24 times the record speed, and the output data rate is therefore 24KBPS. The NBTR erases the tape immediately after playback.

The recorder has a capacity for recording 210 minutes of data and stops automatically when it reaches end-of-tape. Playback is accomplished on command, affecting a reversal in tape direction at 24 times the record rate. Playback can be commanded at any time before the recorder reaches end-of-tape.

The ERTS spacecraft contains two Narrowband Tape Recorders, providing a total sequential recording capability of 420 minutes. A simplified block diagram of the Narrowband tape recorder is given in Figure 15-1.

The Narrowband Tape Recorders were launched in the record mode as shown in Table 15-1.

The launch mode was verified from telemetry on the CRT display and on the strip charts.

Table 15-1. Narrowband Tape Recorders Launch Mode

	MODE	CMD
NBTR 1	REC	543
NBTR 2	REC	601

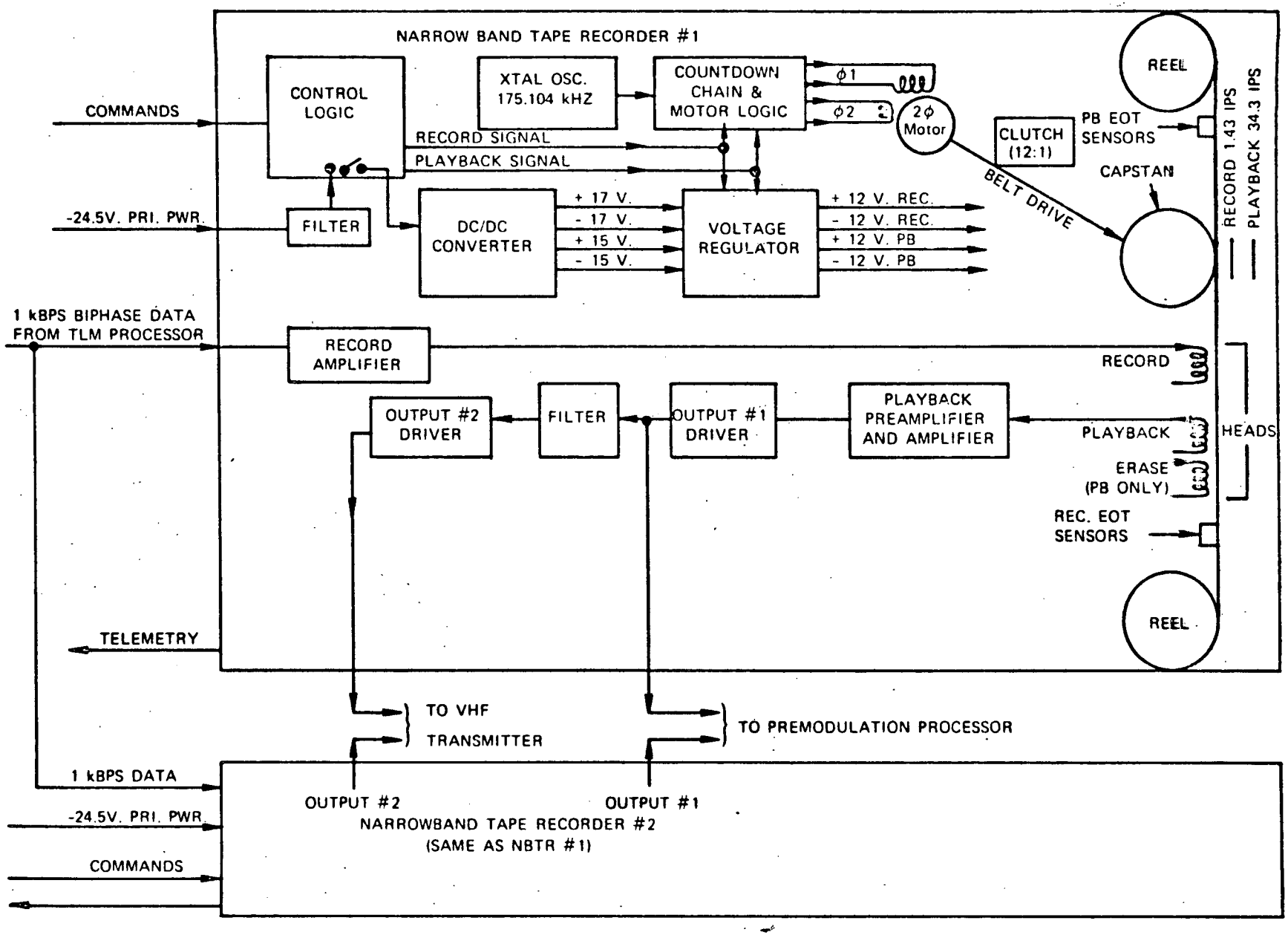

Figure 15-1. Narrowband Tape Recorder Block Diagram

Initial Turn On

Recorder B was recording from 17:24:37 on 23 July 1972, prior to launch; and Recorder A was recording from 17:48:37. Recorder A was commanded to PLAYBACK at Alaska at 19:36:51, in Orbit 1. Recorder B was commanded to PLAYBACK at Alaska at 21:18:47 in Orbit 2.

Subsequent Operations

After Orbit 0/1 when both recorders were in the record mode, Recorder B was left OFF from 19:45:41, in Orbit 1, until 21:18:47 in Orbit 2 when it was commanded to PLAYBACK just prior to taking its turn to relieve Recorder A.

Thereafter the recorders were alternated in the RECORD mode, and performed their PLAYBACK generally after 1 minute of overlap of the two recorders in the RECORD mode. Typical telemetry values are shown in Table 15-2. All are normal.

Table 15-2. Narrow Band Tape Recorder Telemetry Values

Func. No.	Name	Orbits: * T/V Value 20°C Plateau	1 A Rec B Rec "Rec" Mode	6 A Rec P/B Mode	13 B Rec P/B Mode
10001	A-Motor Current (ma)				
	Record	198	190.10		
	P/B	185		180.0	
10101	B Motor Current (ma)				
	Record	194	193.26		
	P/B	185			188.18
10002	A-Pwr Supply Cur. (ma)				
	Record	315	320.50		
	P/B	540		535.78	
10102	B-Pwr Supply Cur. (ma)				
	Record	313	317.62		
	P/B	535		570.78	
10003	A-Recorder Temp (DGC)	25.4	25.47	24.00	
10103	B-Recorder Temp (DGC)	23.8	24.58		24.09
10004	A-Supply Volt	-24.55	-24.47	-24.59	
10104	B-Supply Volt	-24.49	-24.44		-24.60

*Thermal Vacuum Test Data

SECTION 16

WIDE BAND TELEMETRY SUBSYSTEM

SECTION 16
WIDE BAND TELEMETRY SUBSYSTEM

The Wide band Telemetry Subsystem (WBTS) consists of two, 20-watt S-Band FM Transmitters and associated filters, antennas, and signal conditioning equipment (a 10-watt mode is available by command.) The subsystem is used to transmit Return Beam Vidicon (RBV) Video data, and Multispectral Scanner (MSS) pcm digital data to the ERTS ground stations. The RBV and MSS data can be transmitted in real time as it is being generated, or recorded on either of two Video Tape Recorders (or both) and played back through the WBTS when in view of ground station. A Functional Block Diagram is shown in Figure 16-1 and the physical configuration is illustrated in Figure 16-2.

It was launched in the OFF mode and in the configuration shown in Table 16-1. Verification of this mode was obtained in the telemetry from Madrid and Alaska playback early in orbit 1. The check compare (table 8) on the CRT verified there were no exceptions to the commanded configuration.

INITIAL TURN-ON

The Wide Band Telemetry Subsystem was initially turned on in orbit 12 while over Greenbelt. At 14:36:48 both wide band power amplifiers were turned on together with Inverter A at 14:36:51. 10 watts output power was selected for both power amplifiers at 14:38:04 for amplifier #1 and at 14:38:20 for amplifier #2. Filters A and B were both inhibited at 14:39:18 thus allowing only the unmodulated carrier to radiate.

The power amplifiers were both turned OFF at 14:50:00 and inverter A turned OFF at 14:50:03. All telemetry values were normal as shown in Table 16-2.

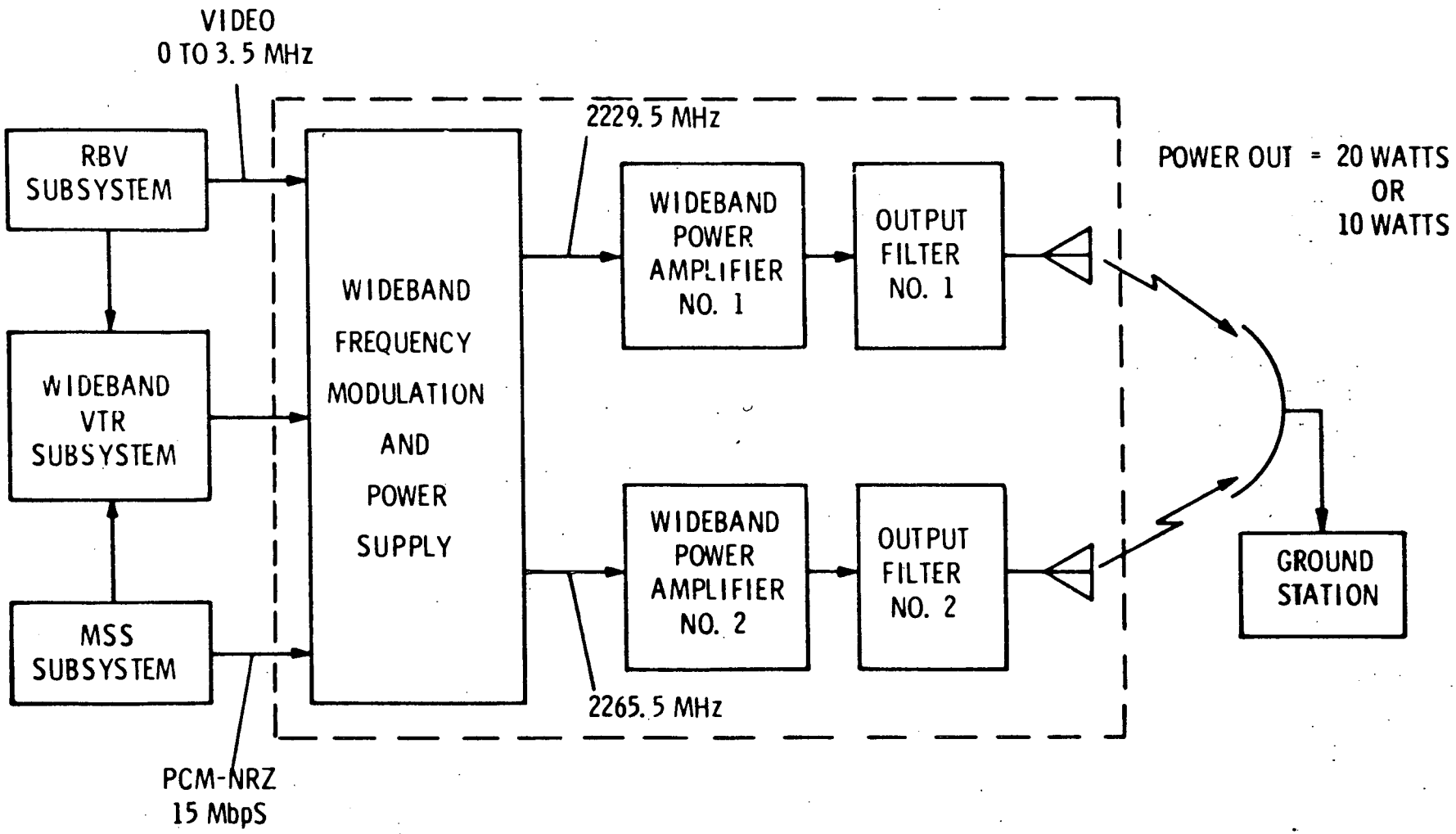

Figure 16-1. Wideband Telemetry Subsystem Block Diagram

Reproduced from best available copy.

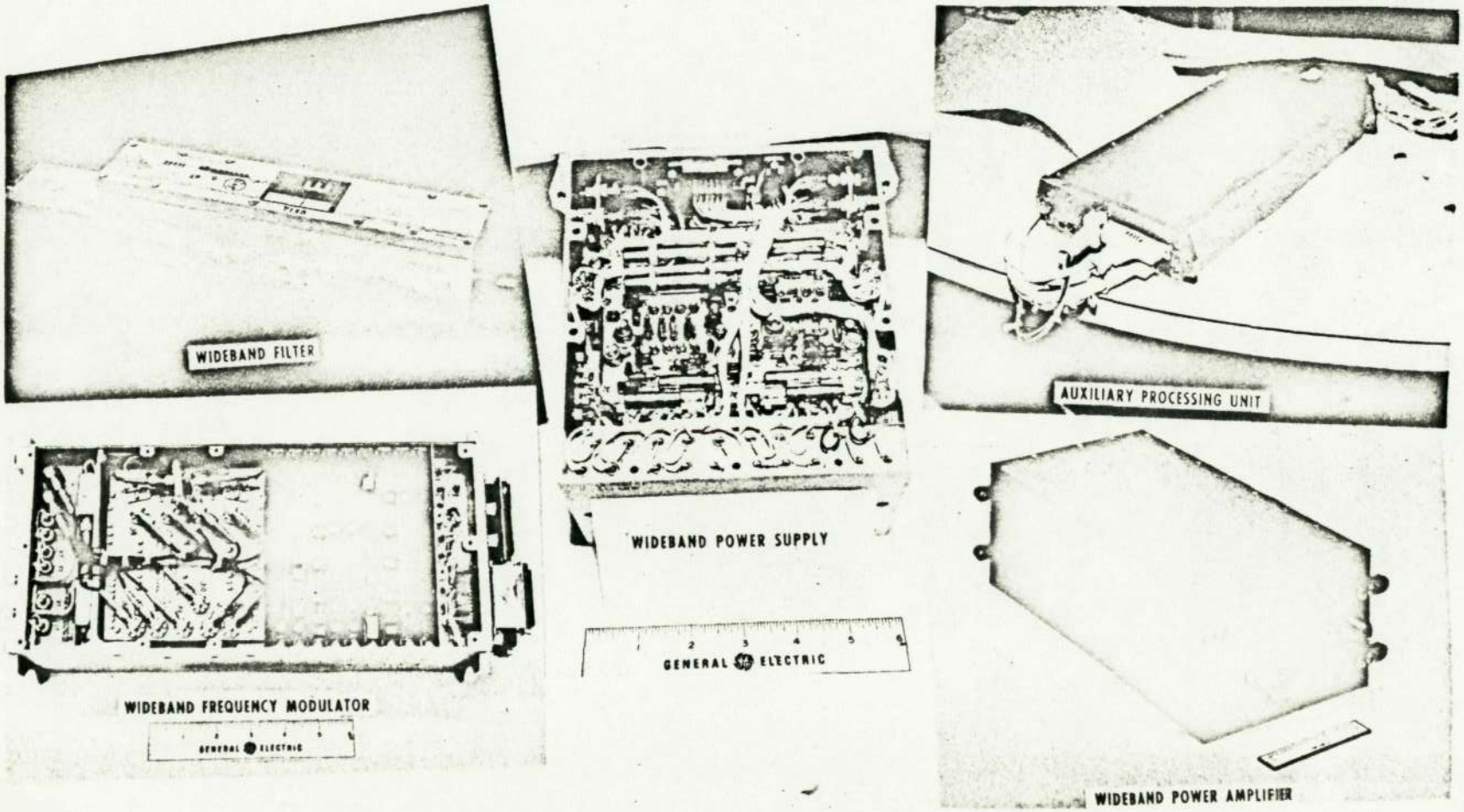

Figure 16-2. Wideband Telemetry Subsystem

Table 16-1. Wide Band Telemetry Subsystem Launch Mode

	MODE	CMD
WBPA1, 2 EN	PRIME/RED	776/754
WBPA 1	OFF	561
OUTPUT SEL 1	LO	541
WBPA 2	OFF	067
OUTPUT SEL 2	LO	047
RBV Bias	A	546
DATA WBPA	PRIME	705

Table 16-2. Wide Band Telemetry Subsystem

(1)	Name	Telem	Telemetry Values	
			Orbit 12	Orbit 28
12001	Temp, TWT Coll. (DGC)	Hi(3) 38.7	37.10	37.10
12101		Lo 31.5	32.50	30.77
12002	Cur, Helix (MA)	6.47 (3)	4.20	5.83
12102		5.26	4.99	5.37
12003	Cur, TWT Cath. (MA)	45.3	32.66	45.66
12103		33.5	33.30	34.02
12004	Fwd Power (DBM)	43.2	41.18	43.21
12104		41.2	41.07	41.25
12005	Refl Power (DBM)	32.4	31.79	35.03
12105		30.6	28.33	30.26
12227	Con. Volt, Loop Stress (MHz)	(4)	-2.5	-0.03
12228			0.99	1.44
12229	Temp, Mod (DGC)	24.4	22.74	20.3
12232	+15 VDC Pwr Sup (TMV) (5)	2.69	2.69	2.60
12234	-15 VDC Pwr Sup (TMV) (5)	5.91	5.98	5.78
12236	+5 VDC Pwr Sup (TMV) (5)	4.01	3.95	3.92
12238	-5 VDC Pwr Sup (TMV) (5)	5.26	5.28	5.06
12240	-24 VDC Unreg. Pwr (TMV) (5)	5.42	5.55	5.54
12242	Temp, Inv. (DGC)	20.0	21.55	21.16

NOTES:

(1) Function numbers for WBVTR-1 = XX0XX; for WBVTR 2 = XX1XX.
(2) Thermo-Vacuum Test data for comparison.
(3) Pwr outputs of 10 or 20 watts can be selected; both operated at 10 watts for Orbit 12, for Orbit 28, WBVTR-1 at 20w; WBVTR-2 at 10 watts.
(4) Any reading other than zero or -7.5 is acceptable
(5) Only power supply A operated during these orbits.

SUBSEQUENT OPERATIONS

The Wide Band Telemetry Subsystem was operated in orbits 12, 13, 14, 15, 16, 19 (#1 only), 20 (#2 only), 21 (#2 only), 26, 27, 28, 30 (#2 only), 32, 33 and 34. The entire subsystem operated normally throughout these orbits, as shown in the telemetry values of typical orbits shown in Table 16-2. In orbit 30, it was decided to operate both power amplifiers in the 20 watt mode to simplify operation. (PA #2 can be operated at 10 watts when MSS data is being transmitted, PA #1 with RBV data was always intended to be operated at 20 watts). At 21:25:57 the WPA2 mode was changed to 20 watts. The Helix current was 6.96 ma in orbit 30, and 7.32 in orbit 33. It has remained at about this value ever since.

SECTION 17

ATTITUDE MEASUREMENT (AMS)

SECTION 17
ATTITUDE MEASUREMENT (AMS)

The AMS is a passive radiometric balance sensor which operates in the 14 - 16 micron IR Band. This band pass was selected to take advantage of the earth's horizon predictability in the 14-16 micron region, and to improve the off-null accuracy by ground based correction. The entire earth disk is imaged by a germanium lens to a focal surface containing four light pipes (four field of view sectors). See Figure 17-1 for functional block diagram, and Figure 17-2 for hardware illustration. AMS Telemetry Values are shown in Table 17-1.

The AMS was launched in the OFF mode (CMD 774), turned ON during Orbit 6 and has been performing normally since then.

Table 17-1. AMS Telemetry Values

Function No.		Units	Average Value		
			Orbit 7	20°C Plateau	Orbit 35
3004	Case - Temp 1	°C	17.05	19.1	18.92
3005	Assembly - Temp 2	°C	17.45	18.9	19.15

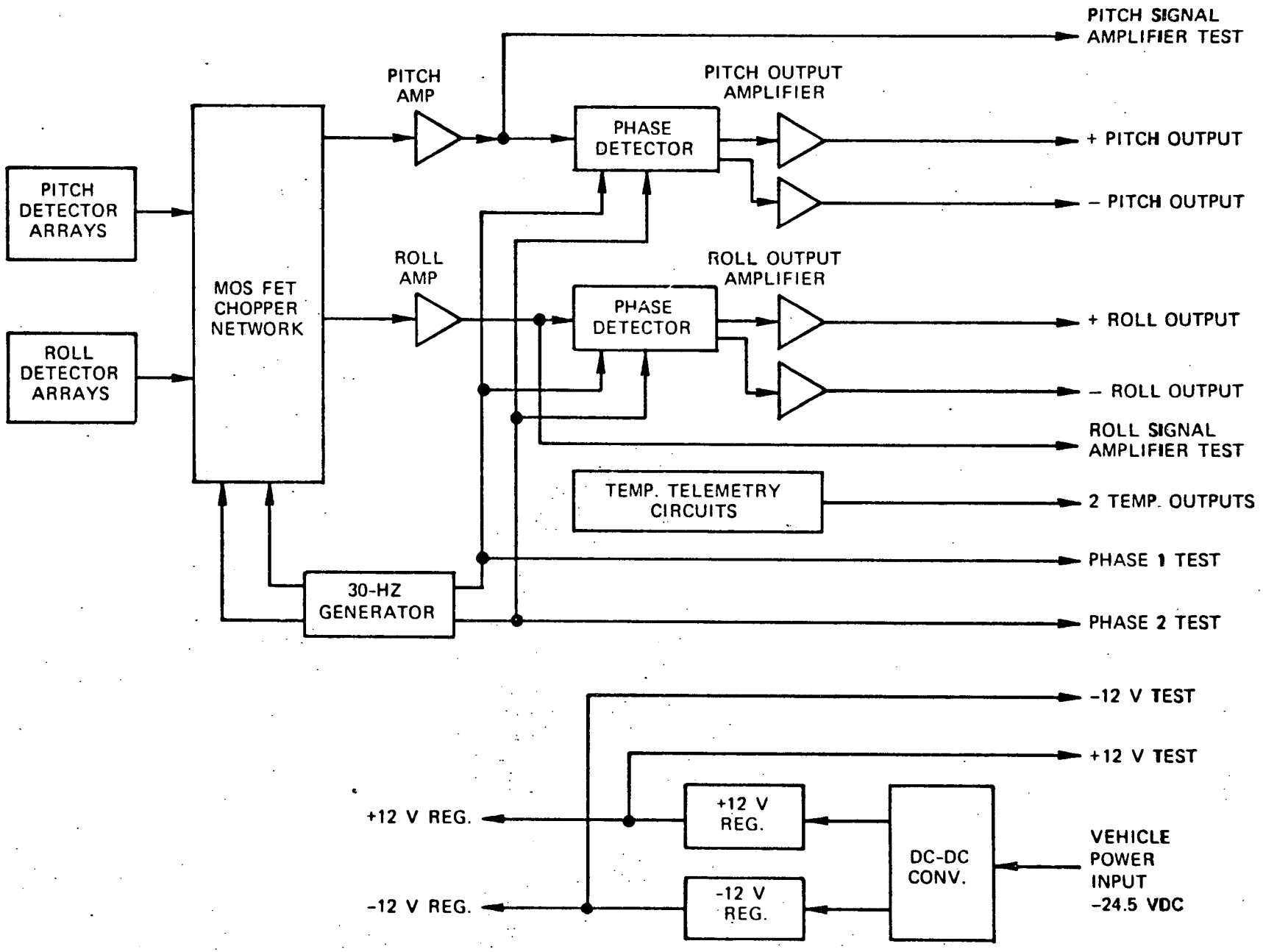

Figure 17-1. AMS Block Diagram

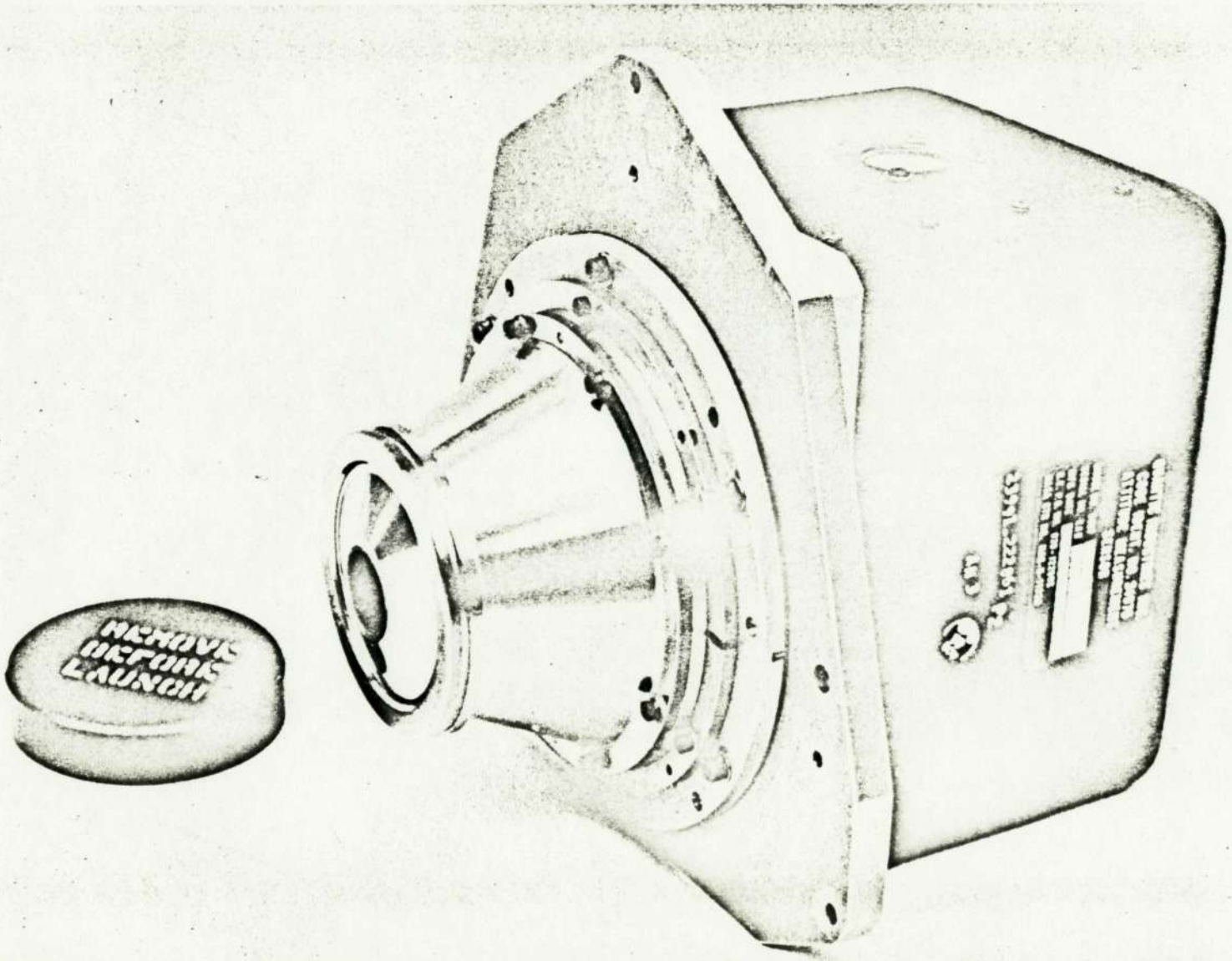

Figure 17-2. Attitude Measurement Sensor

SECTION 18
WIDEBAND VIDEO TAPE RECORDERS (WBVTR)

SECTION 18
THE WIDEBAND VIDEO TAPE RECORDERS (WBVTR)

The Wideband Video Tape Recorder (WBVTR) Subsystem is comprised of two rotating-head, magnetic tape recorders, each housed in two enclosures: (1) a pressurized housing for the Transport Unit (TU) and; (2) an unpressurized enclosure for the Electronics Unit (EU). The TU includes the transport mechanism, the video head wheel, record amplifiers, playback pre-amplifiers and transport controls. The EU includes the record and playback formatting circuitry, the voltage converter, motor control circuits and command and control circuits.

The primary function of either WBVTR is to selectively record, store and playback analog data from the Return Beam Vidicon (RBV) cameras or digital data from the Multispectral Scanner (MSS) Subsystem. Additional record and playback channels are provided on the tape. These include a prerecorded Search Track Signal for providing tape position information, an Auxiliary Track for recording PCM telemetry data and a servo control track for playback speed control. A transverse recording technique utilizing four rotating heads is used for Wideband RBV and MSS data. The narrowband data, (servo control, PCM data and search pattern) are recorded longitudinally with fixed heads. See Figure 18-1 for functional block diagram. Figures 18-2, 3 and 4 show physical configuration. The launch and activation evaluation follows.

LAUNCH MODE

The Wideband Video Tape Recorders 1 and 2 (WBVTR-1 and 2) were launched in the mode shown in Table 18-1. This launch mode was verified by OCC during prelaunch checkout at WTR, at Tananarive. At Madrid and subsequently by narrow band recorder playback from Alaska.

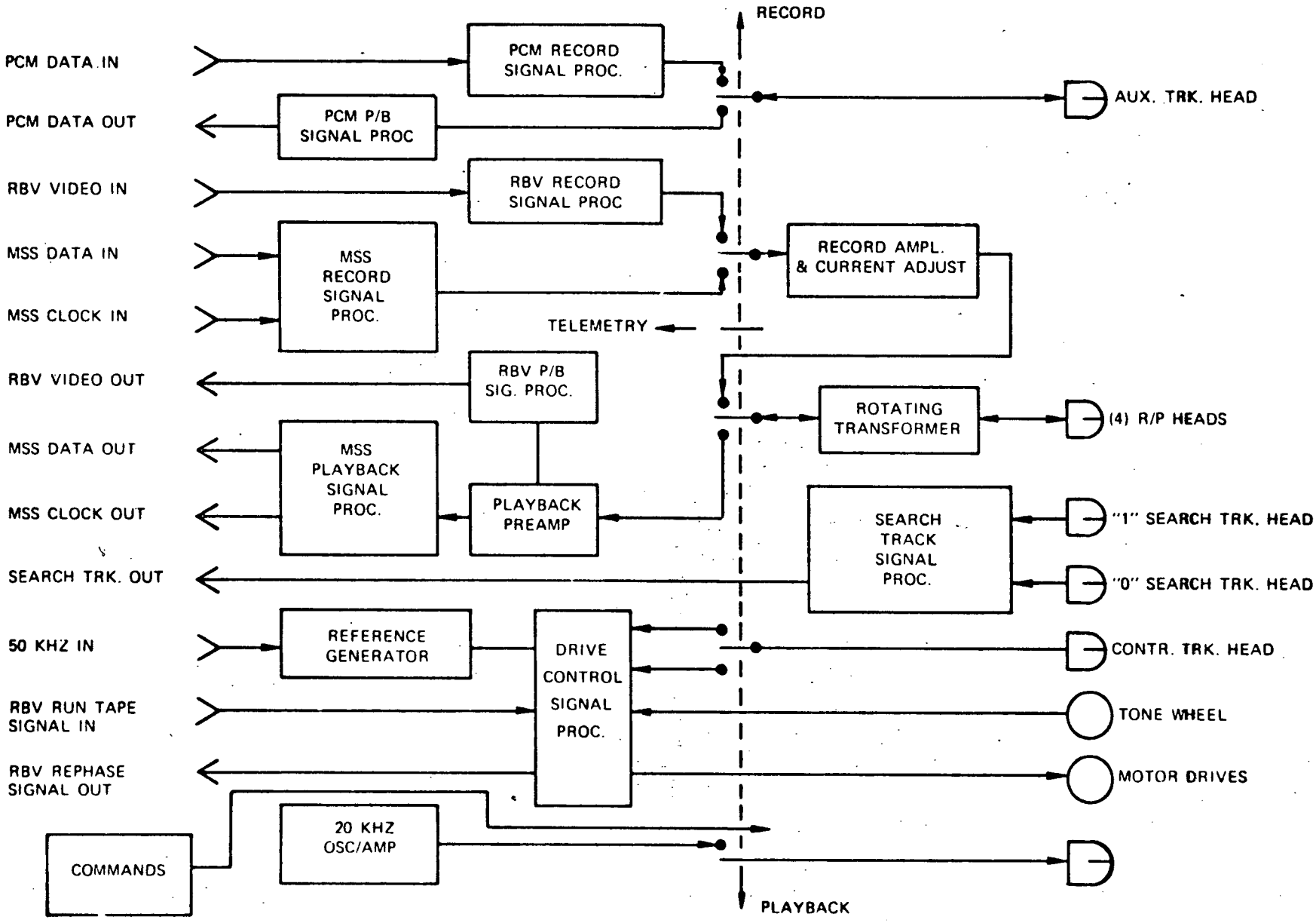

Figure 18-1. WBVTR Functional Block Diagram

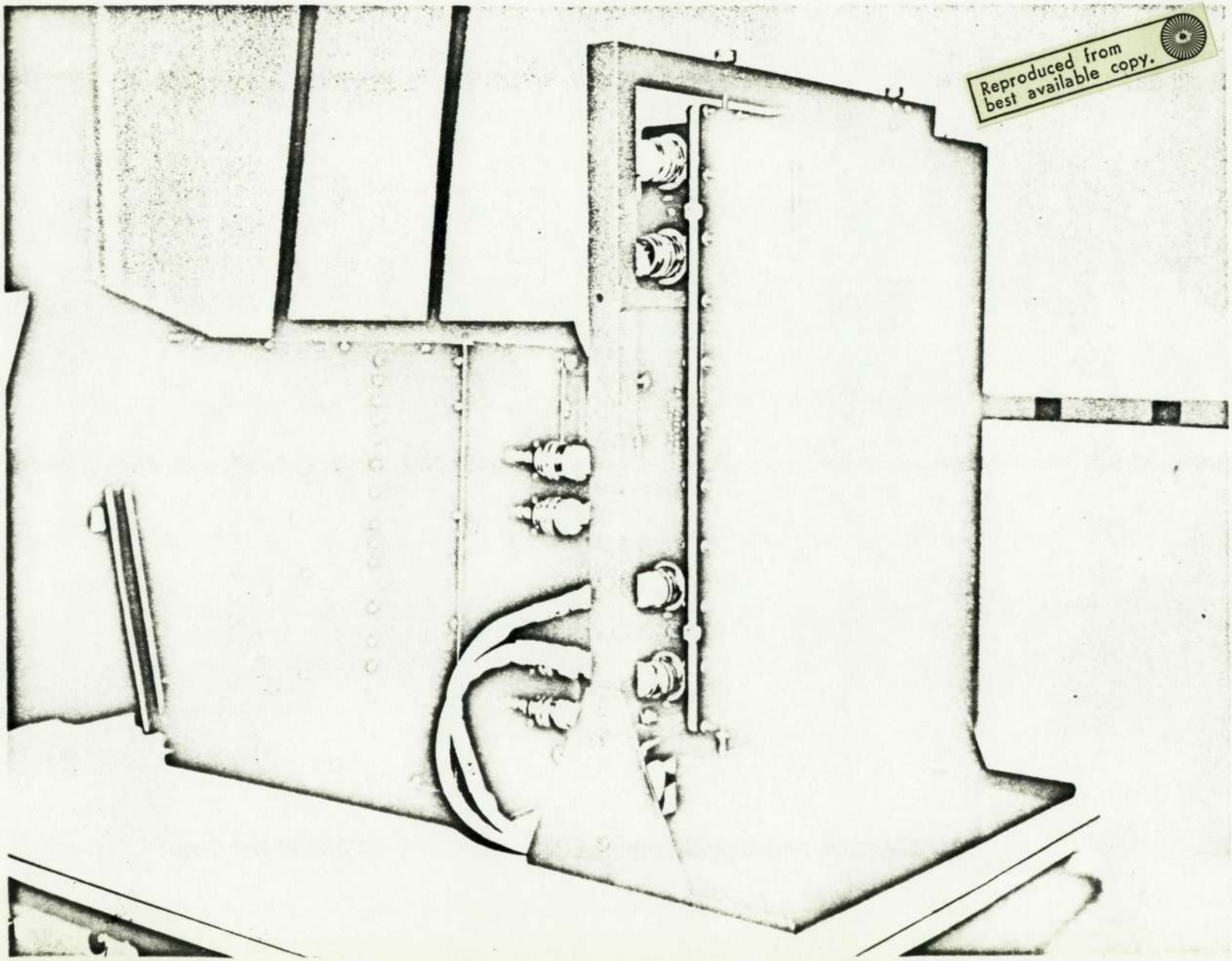

Reproduced from best available copy.

Figure 18-2. Wideband Video Tape Recorder

Reproduced from
best available copy.

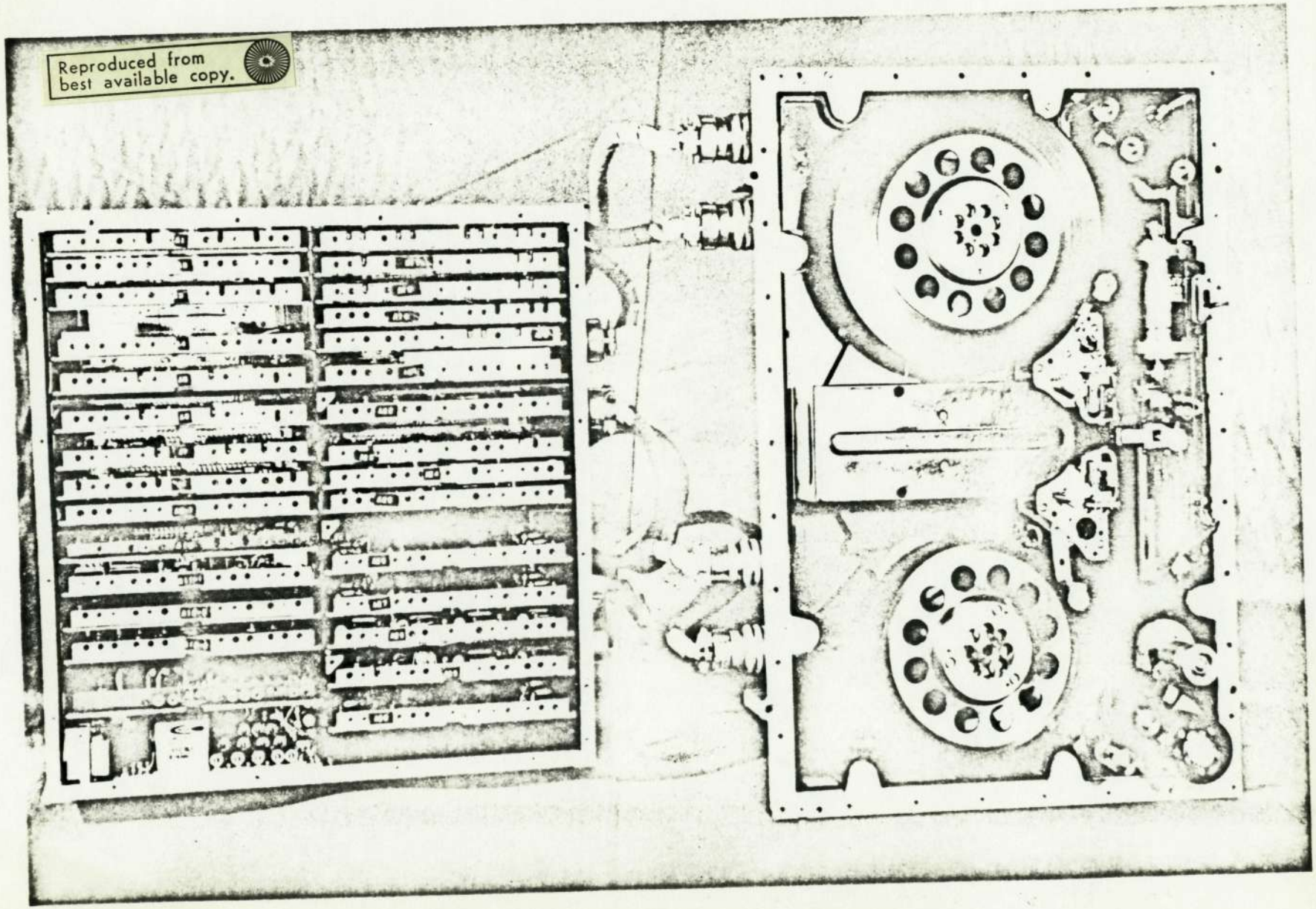

Figure 18-3. Wideband Tape Recorder

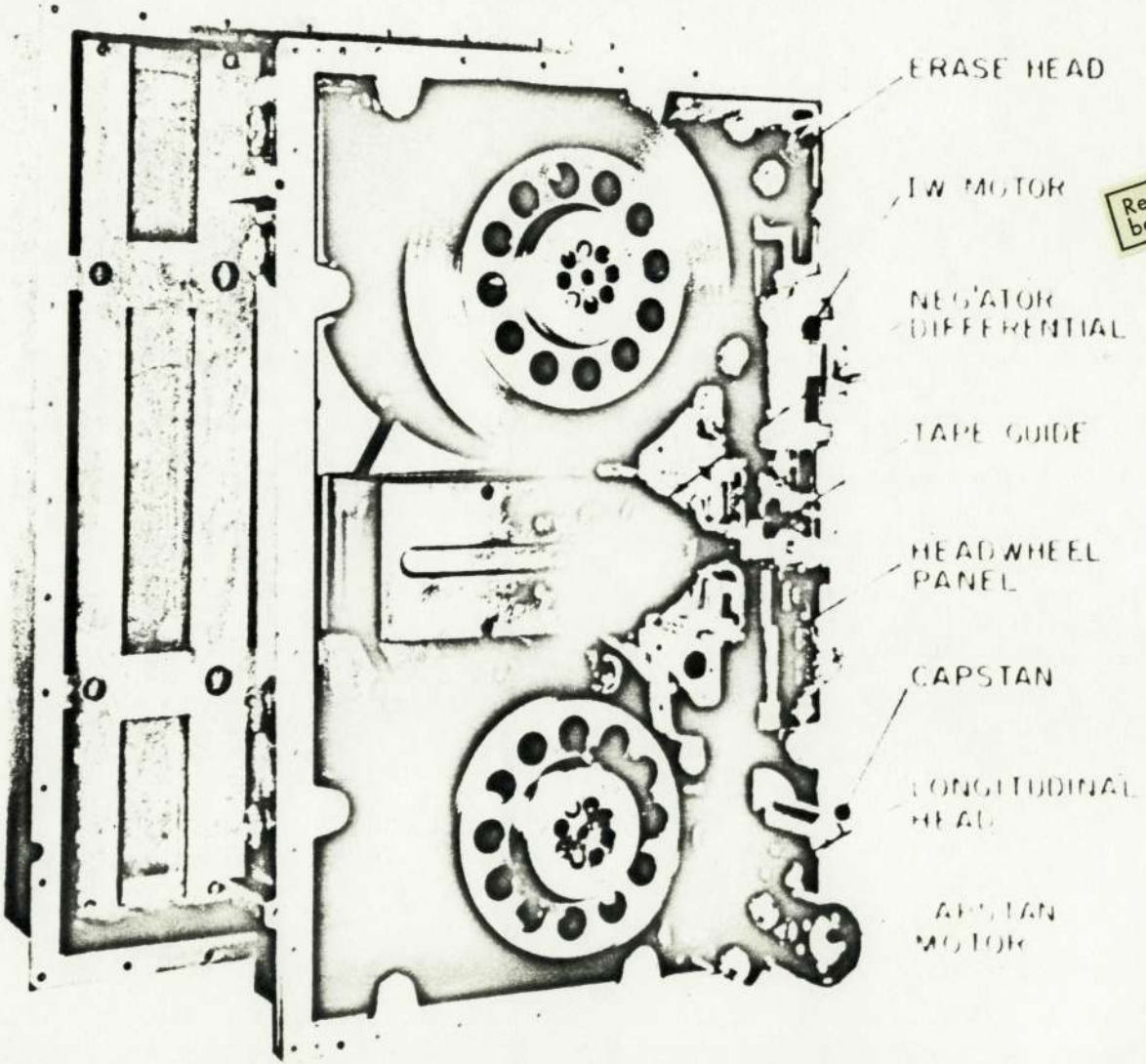

Reproduced from best available copy.

Figure 18-4. ERTS VTR Transport

ACTIVATION

Initial activation of the wideband video tape recorder began in Orbit 5 on July 24, 1972, while the spacecraft was making a night-time pass over Greenbelt. WBVTR-2 was turned on at 02:09:40 GMT and WBVTR-1 was turned on at 02:10:02. Both were immediately commanded to standby, then to fast rewind. WBVTR-2 was commanded OFF at 02:11:54; and WBVTR-1 was commanded OFF at 02:12:09. Everything was normal. Typical telemetry values of rewind in orbit 31 are shown in Table 18-2.

Table 18-1. Launch Configuration

	Mode	CMD
WBVTR 1	OFF	651
WBVTR 2	OFF	712
RBV STBY	1	464
MSS STBY	2	572
VO PROT 2	EN	554
VO PROT 1	EN	467
SEARCH TRA	NORM	563
WBVTR-1	TAPE POSITION	
WBVTR-2	TAPE POSITION	

SUBSEQUENT OPERATIONS

Operation in the fast rewind mode having been verified in orbit 5, operation in the playback mode was commanded during orbit 15 while over Greenbelt. WBVTR-1 was turned on, and configured to the playback mode at 19:41:41. WBVTR-2 followed at 19:43:33. WBVTR-1 was commanded OFF at 19:46:45, having run for 5 minutes and 4 sec. WBVTR-2 was commanded off at 19:48:53 having run for 5 minutes and 20 seconds. The input currents were shown in telemetry to be 3.15 and 3.70 respectively, both well within normal limits. Other telemetry readings for this orbit are shown in Table 18-3. The record mode of operation for WBVTR-1 was to be tested during orbit 19 when the RBV was scheduled for initial operation. WBVTR-1 was put in the record mode and configured for RBV data. Due to inability to complete the RBV tests before LOS, no video data was recorded in this orbit.

The record mode of operation for WBVTR-2 was verified in orbit 20, while over Greenbelt. With the MSS scheduled for initial operation, WBVTR-2 was put in the record mode and configured for MSS data. It was turned on at 03:55:34, and commanded OFF at 04:01:39, recording MSS test data during this interval. No telemetry verification of either MSS OFF or

Table 18-2. WBVTR Rewind Mode Telemetry Values

Function No.	Name	* T/V 20°C Plateau	Orbit 31
**13022	Pressure (PSI) Transport Unit	16.3	16.12
13122			15.99
13123	Temp (DGS) Transport Unit	22.0	18.97
13123			18.23
13024	Temp (DGS) Transport Unit	28.7	22.50
13124			23.83
13026	Speed (PCT) Capstan	102.2	100.70
13126			100.22
13027	Speed (PCT) Headwheel	101.9	99.53
13127			100.16
13028	Current (AMP) Capstan Motor	0.19	0.24
13128			0.22
13029	Voltage (VPP) Playback	0.76 (RBV)	0.81
		0.37 (MSS)	
13129			0.55
13030	Current (AMP) Headwheel	0.45	0.51
13130			0.52
13031	Current (AMP) Input to Recorder	2.16	1.89
13131			2.13
13032	Voltage Out (VPP) Limiter	1.48	1.38
13032			1.34
13033	Voltage (PCT) SERVO	50.0	49.66
13133			49.52
13034	5.6 Converter (VDC)	5.86	5.82
13134			5.64
13200	-24.5 VDC APU	-24.90	-24.90
13201	-12 VDC APU	-12.08	-12.08
13202	Temp (DGC) APU	20	26.21

*Thermal Vacuum Test Data (Present WBVTR-2 installed after T/V)
**WBVTR-1 (XX0XX)
WBVTR-2 (XX1XX)

Table 18-3. WBVTR Playback Mode Telemetry Values

Function No.	Name	* T/V 20°C Plateau	Orbits 15	Orbits 33
**13022	Pressure (PSI) Transport Unit	16.3	16.12	16.24
13122			15.99	15.99
13023	Temp (DGS) Transport Unit	22.0	19.50	20.34
13123			18.46	19.22
13024	Temp (DGS) Electronics Unit	28.7	22.77	24.94
13124				
13026	Speed (PCT) Capstan	98.0	100.51	98.28
13126			99.91	99.23
13027	Speed (PCT) Headwheel	99.7	95.16	97.64
13127			94.16	97.15
13028	Current (AMP) Capstan Motor	0.25	0.25	0.25
13128			0.17	0.27
13029	Voltage (VPP) Playback	(RBV) 0.76	0.72	0.84
		(MSS) 0.37		
13129			0.66	0.63
13030	Current (AMP) Headwheel	0.54	0.55	0.56
13130			0.55	0.54
13031	Current (AMP) Input to Recorder	3.27	3.15	3.06
13131			3.70	3.67
13032	Voltage Out (VPP) Limiter	1.48	1.44	1.45
13132			1.34	1.38
13033	Voltage (PCT) Servo	50.0	50.03	49.91
13133			49.47	49.55
13034	5.6 Converter (VDC)	5.66	5.66	5.77
13134			5.47	5.47
13200	-24.5 DC APU	-24.90	-24.91	-24.90
13201	-24 VDC APU	-12.08	-12.08	-12.08
13202	Temp (DGC) APU	20°	25.79	26.26

*Thermal Vacuum Test Data (Present WBVTR-2 installed after T/V)
**WBVTR-1 (XX0XX)
WBVTR-2 (XX1XX)

Table 18-4. WBVTR Record Mode Telemetry Values

Function No.	Name	* T/V 20°C Plateau	Orbits 26	Orbits 21
**13022	Pressure (PSI) Transport Unit	16.3	16.12	
13122				15.99
13023	Temp (DGS) Transport Unit	22.0	18.64	
13123				19.21
13024	Temp (DGC) Electronics Unit	28.7	22.46	
13124				23.83
13026	Speed (PCT) Capstan	98.0	96.80	
13126				100.58
13027	Speed (PCT) Headwheel	99.6	98.35	
13127				95.53
13028	Current (AMP) Capstan Motor	0.24	0.24	
13128				0.28
13029	Voltage (VPP) Playback	(RBV) 0.76 (MSS) 0.37	0.0	
13129				0.61
13030	Current (AMP) Headwheel	0.55	0.54	
13130				0.56
13031	Current (AMP) Input to Recorder	3.55	3.46	
13131				3.57
13032	Voltage Out (VPP) Limiter	1.48	1.42	
13132				1.28
13033	Voltage (PCT) Servo	50.0	49.75	
13133				48.97
13034	5.6 Converter (VDC)	5.66	5.77	
13134				5.68
13200	-24.5 DC APU	-24.90	-24.90	-24.90
13201	-24 VDC APU	-12.08	-12.08	12.08
13202	Temp (DGC) APU	20.0	25.72	25.72

*Thermal Vacuum Test Data (Present WBVTR-2 installed after T/V)
**WBVTR-1 (XX0XX)
WBVTR-2 (XX1XX)

WBVTR-2 OFF was received immediately. The command sequence was repeated twice, before verification was received of both systems OFF at 04:02:47. All telemetry functions were normal.

During orbit 21, WBVTR-2 was commanded on to record the MSS sun calibration tests over Goldstone. It was turned on at 05:39:17 and configured in the record mode. It operated throughout the MSS tests for 5 minutes and 52 seconds, being turned OFF at 05:45:01. The telemetry values were normal, the input current was 3.57 amperes, all telemetry was normal.

In orbit 26, the RECORD mode for WBVTR-1 was verified. It was configured to the RBV whose initiation cycle was repeated from the unsuccessful try in orbit 19. At 14:44:30, WBVTR-1 was commanded to RECORD and was commanded OFF at 14:51:57, successfully recording the video from the RBV pass. Telemetry values are shown in Table 18-4.

In orbit 31, while over Alaska, both WBVTR's were commanded to rewind at 23:10:15 to a postion 11 minutes from beginning of tape. At 23:13:18 WBVTR-2 was commanded to STANDBY and at 23:13:16 it was commanded OFF. WBVTR-1 was commanded to STANDBY at 23:14:04 and to OFF at 23:14:06. Telemetry values were normal and are shown in Table 18-2.

In orbit 32, the two recorders were commanded to playback at 02:16:25, to STANDBY at 02:26:09; and to OFF by 02:26:44. Telemetry values were normal.

In orbit 33 playback of both WBVTR's was commanded at 02:16:25. At 02:26:09 both WB recorders were commanded to STANDBY and then to OFF at 02:26:11. Telemetry indicated normal for all operations. (See Table 18-3.)

In orbit 34, playback was again commanded ON at 03:58:29 for WBVTR-1 and at 03:58:30 for WBVTR-2. Both were commanded to STANDBY at 04:03:18 and to OFF at 04:03:20. Telemetry values were normal.

In orbit 35, fast rewind was commanded for both WBR's at 05:40:00, STANDBY for both was commanded at 05:48:00. OFF was commanded for WBVTR-1 at 05:48:02 and for WBVTR-2 at 05:48:03.

SECTION 19

RETURN BEAM VIDICON SYSTEM (RBV)

SECTION 19
RETURN BEAM VIDICON SYSTEM (RBV)

Ground scene information is viewed through three Return Beam Vidicon (RBV) Camera Sensors as they are simultaneously exposed. The RBV sensors convert the scene information in three, unique spectral bands into low-level analog signals. The Camera Electronics convert this information into a video format that is fed to the Camera Controller Combiner (CCC) where the three camera videos are combined with sync, blanking, and timing signals and with coding information to produce a single composite video format. The Camera Controller Combiner controls the operating modes of the cameras and the generation of the composite video signal. The cameras may be commanded for single exposure, cyclic exposure and calibration. The composite video signal is either stored on a Wideband Video Tape Recorder for later playback or transmitted real time through the spacecraft Wideband Telemetry Subsystem. An auxiliary video signal from each camera may also be applied directly to the Wide Band Telemetry System without passing through the CCC. See Figure 19-1 for functional block diagram, and Figure 19-2 for physical illustration.

The RBV subsystem was launched in the mode shown in Table 19-1. Verification of this mode was obtained by telementry early in orbit 1 at Madrid and later by playback from Alaska.

Table 19-1. Return Beam Vidicon Subsystem Launch Mode

	MODE	CMD
CALIBRATE	EN	372
APERTURE CORR	OUT	431
EXPOSURE	4	454
CYCLE	CONT	470
CATH REACT	OFF	371
MAG COMP	EN	677
MAG COMP	HI	753
THER MOD 1	EN	770
THER MOD 2	EN	730
THER MOD 3	EN	672
RBV PWR	OFF	731
CCC	OFF	432
CAM 1	OFF	511
CAM 2	OFF	510
CAM 3	OFF	512

Initial Turn-on

The RBV subsystem was first turned ON and OFF in a rapid sequence while over Greenbelt in Orbit 19. It was turned ON at 02:12:09 and OFF 1 second later. Examination of strip chart records of the payload bus current and other telemetry values during this 1-second interval

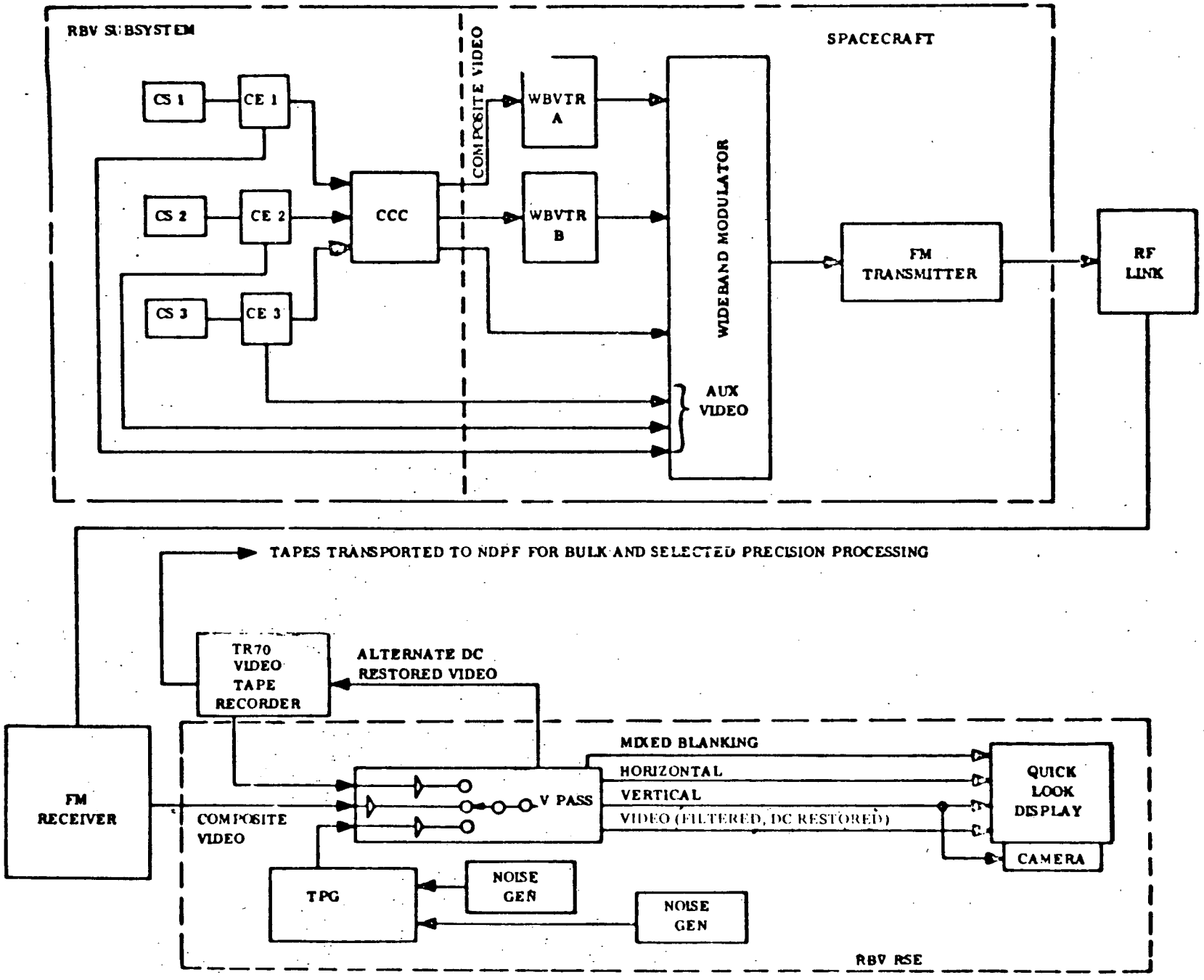

Figure 19-1. Return Beam Vidicon System Functional Block Diagram

Reproduced from best available copy.

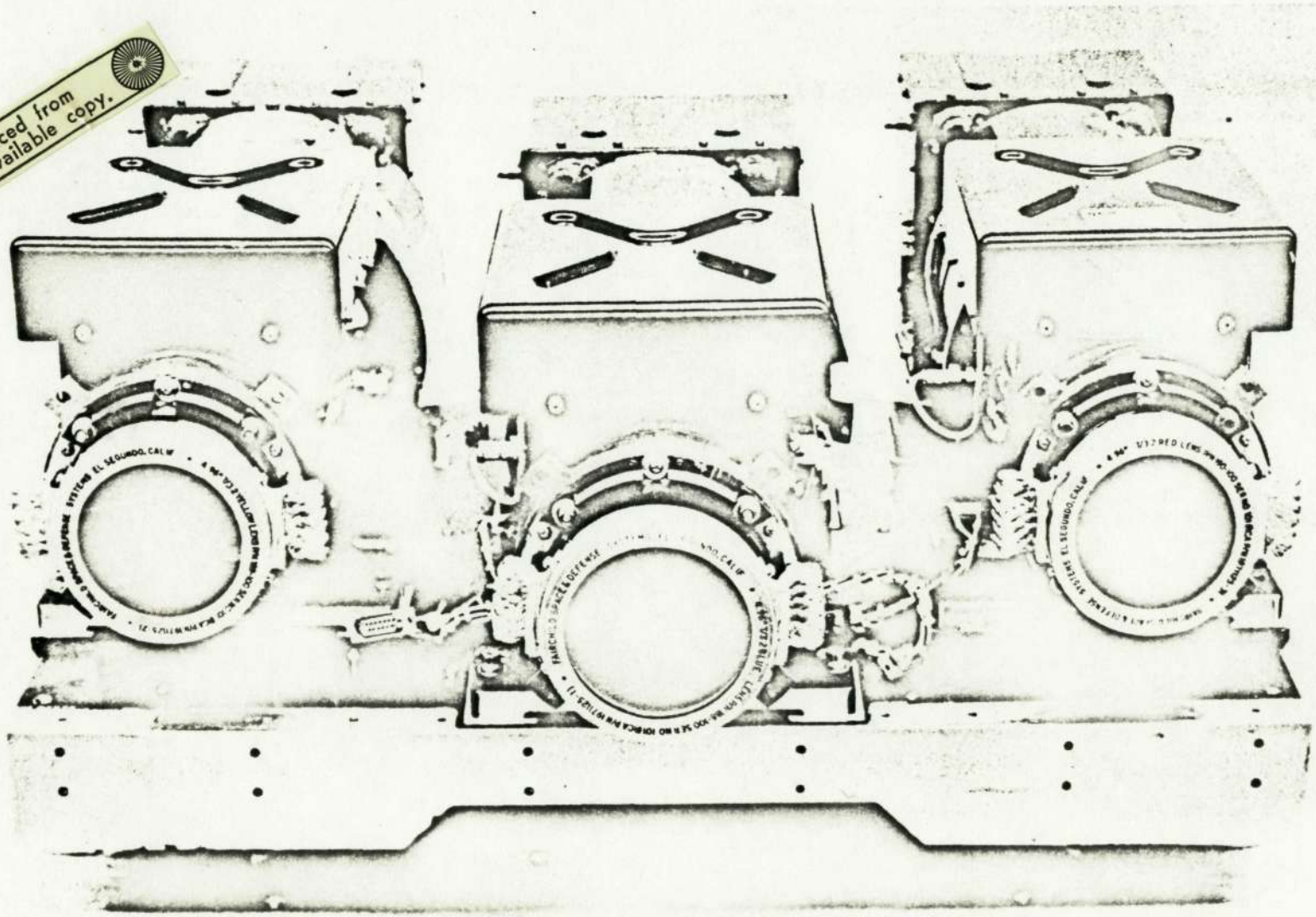

Figure 19-2. Return Beam Vidicon

showed everything normal. The RBV was turned on again at 02:13:07 with only CCC on and Camera 1 on transmitting via WBPA-1 and recording on WBVTR-1. RBV was turned OFF at 02:13:40. Camera 1 was turned OFF at 02:14:41 and Camera 2 was turned ON 02:14:42. Due to operational difficulties in configuring the Spacecraft Wideband filters the time for the complete test could not be maintained. It was decided to repeat the turn-on sequence in Orbit 26. Accordingly, the RBV was turned OFF at 02:20:02.

In Orbit 26 while over Greenbelt the RBV was turned ON. It transmitted via the WBPA-1 and recorded on the WBVTR-1. Exposure 3 was set at 14:40:51 and camera 1 was turned ON at 14:42:23. The RBV was turned OFF at 14:45:48, camera 1 turned OFF at 14:46:03 and camera 2 turned ON at 14:46:04. RBV was turned back ON at 14:46:20 and OFF at 14:47:36. Camera 2 was turned OFF at 14:47:51 and camera 3 turned ON at 14:47:52. RBV was again turned ON at 14:48:07 and turned OFF at 14:49:21. Camera 1 was turned ON at 14:49:37; Camera 2 added at 14:49:38 and RBV turned back ON at 14:49:51. Because Camera 3 was left ON in the prior test sequence, all three cameras were now operating. At 14:50:49 the Calibrate Enable command was given, and at 14:50:50 RBV was commanded to start Calibrate. At 14:51:57 RBV and WBVTR-1 were turned OFF.

Telemetry values throughout this test sequence were good and are shown in Table 19-2. The video signal was also watched on the "A" scope of the TR-70 tape recorder at OCC. The sync pulses and the video were normal throughout these tests.

Subsequent Operations

In Orbit 27 the RBV was operated with exposure 1 from 16:30:43 to 16:34:33, transmitting in real time thru WBPA-1. All telemetry and video were normal.

In Orbit 28 the RBV was turned ON at 18:09:25 and OFF at 18:15:01. All telemetry readings, video and sync pulses were normal.

In Orbit 30, the RBV was turned ON at 21:27L01 with exposure 1 with all three cameras operating in continuous cycle. All telemetry and video signals were normal.

In orbits 32 and 33 playback of RBV data was executed successfully.

Table 19-2. RBV Telemetry Values

Func. No.	Name	Telem Values T.V. Norm	26	30
1400 1	CCC Board Temp (DGC)	20.0	18.61	18.54
1400 2	CCC PWR Sup. Temp (DGC)	20.0	19.93	19.75
1400 3	15V SUPPLY (TMV)	3.95	3.69	3.95
1400 4	+6V,-5.25^{V} PWR.SUP(TMV)	3.05	2.84	3.03
14100	VIDEO OUTPUT VOLT (TMV)	1.06	-	-
14200		1.09	1.05	0.75
14300		1.05	1.03	0.67
14102	COMBINED ALIGNMENT CUR(TMV)	3.95	3.67	3.90
14202		3.92	3.90	3.87
14302		4.04	3.75	3.97
14103	TEMP. IN ELEC. UNIT (DGC)	20.84	20.84	20.24
14203		18.64	18.64	18.22
14303		21.05	21.05	20.51
14104	TEMP IN LV: PWR SUP (DG-C)	21.71	21.71	21.22
14204		18.38	18.38	18.00
14304		20.75	20.75	20.20
14105	DEFL PWR. SUP #10^{V} (TMV)	4.00	3.73	4.00
14205		3.97	3.71	3.97
14305		3.94	3.95	3.95
14106	L.V. PWR. Sup.+6 ^{V}, - 6.3 (TMV)	3.71	3.45	3.70
14206		3.69	3.42	3.66
14306		3.73	3.47	3.70
14107	Current in Ther.Elec (TMV)	2.62	2.50	2.48
14207		2.65	2.53	2.60
14307		2.64	2.54	2.77
14108	Vidicon Fili. Cur. (TMV)	2.47	2.30	2.47
14208		2.54	2.37	2.54
14308		2.61	2.44	2.62
14110	Target Volt. To Vidicon (TMV)	3.43	3.42	3.40
14210		3.36	3.13	3.32
14310		3.47	3.23	3.46
14113	Vert. Defl. Volt. (TMV)	2.96	2.75	3.46
14213		3.00	2.86	3.79
14313		3.45	3.45	2.71
14114	Temp Vidicon Face Plate (DGC)		18.15	18.40
14214		20.0	-	-
14314			18.54	18.70
14115	Temp Focus Coil (DGC)		17.71	18.02
14215		20.0	17.70	17.96
14315			18.03	18.35

SECTION 20

MULTISPECTRAL SCANNER SYSTEM

SECTION 20
MULTISPECTRAL SCANNER SYSTEM

The Multispectral Scanner (MSS) system consists of spacecraft and ground equipment which permits images of the earth to be obtained simultaneously in several spectral bands. The ERTS-1 MSS uses a 4-band scanner operating in the solar reflected spectral band region of from 0.5 to 1.1 micrometers (microns) wave length, and scans cross track swatchs of 0.5 Km (at a 496-nm altitude), imaging six scan lines across in each of the four spectral bands simultaneously. The object plane is scanned by means of an oscillating, flat mirror between the scene and the double reflector telescope optical chain. The 11.56 degree cross-track field-of-view is scanned as the mirror oscillates approximately ± 2.89 degrees about its nominal position as shown in Figure 20-1.

The instantaneous field-of-view of each detector subtends an earth-area square of 259 feet on a side from the nominal orbit altitude. Field stops are formed for each line imaged during a scan, and for each spectral band, by the square input end of an optical fiber. Six of these fibers in each of four bands are arranged in 4 x 6 matrix in the focal plane of the telescope. See Figure 20-2 for functional block diagram, and Figure 20-3 for hardware configuration.

The Multispectral Scanner (MSS) was launched in the OFF mode except that the Rotating shutter was commanded ON to distribute the launch mode stresses around the bearing. This configuration is shown in Table 20-1. Verification of this configuration was obtained from telemetry in Orbit 1 at Madrid and by playback from Orbit 1 at Alaska.

In Orbit 1 at Alaska, the rotating shutter (and the enabling primary power switch for MSS) was commanded OFF at 19:44:21.

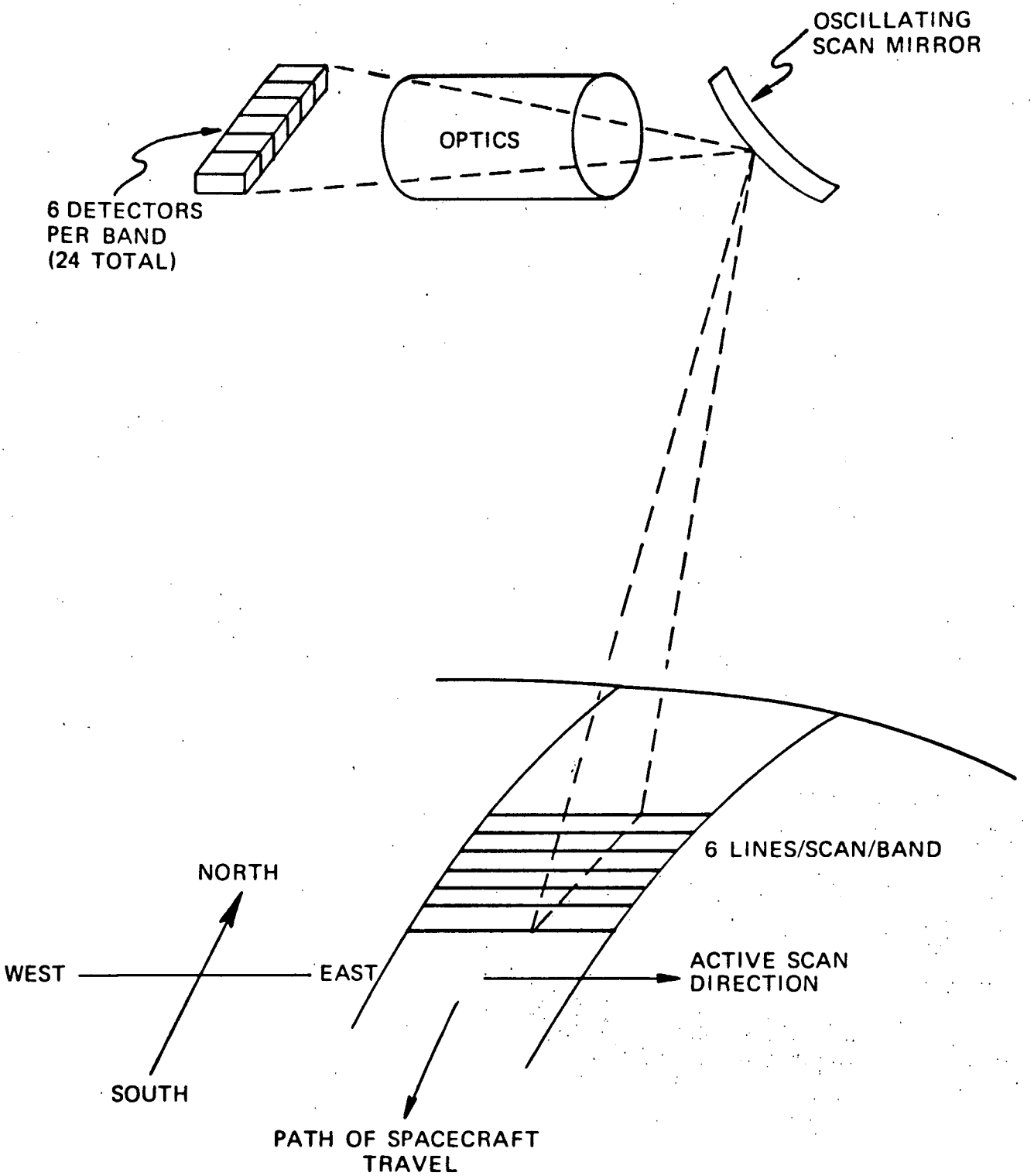

Figure 20-1. MSS Scanning Arrangement

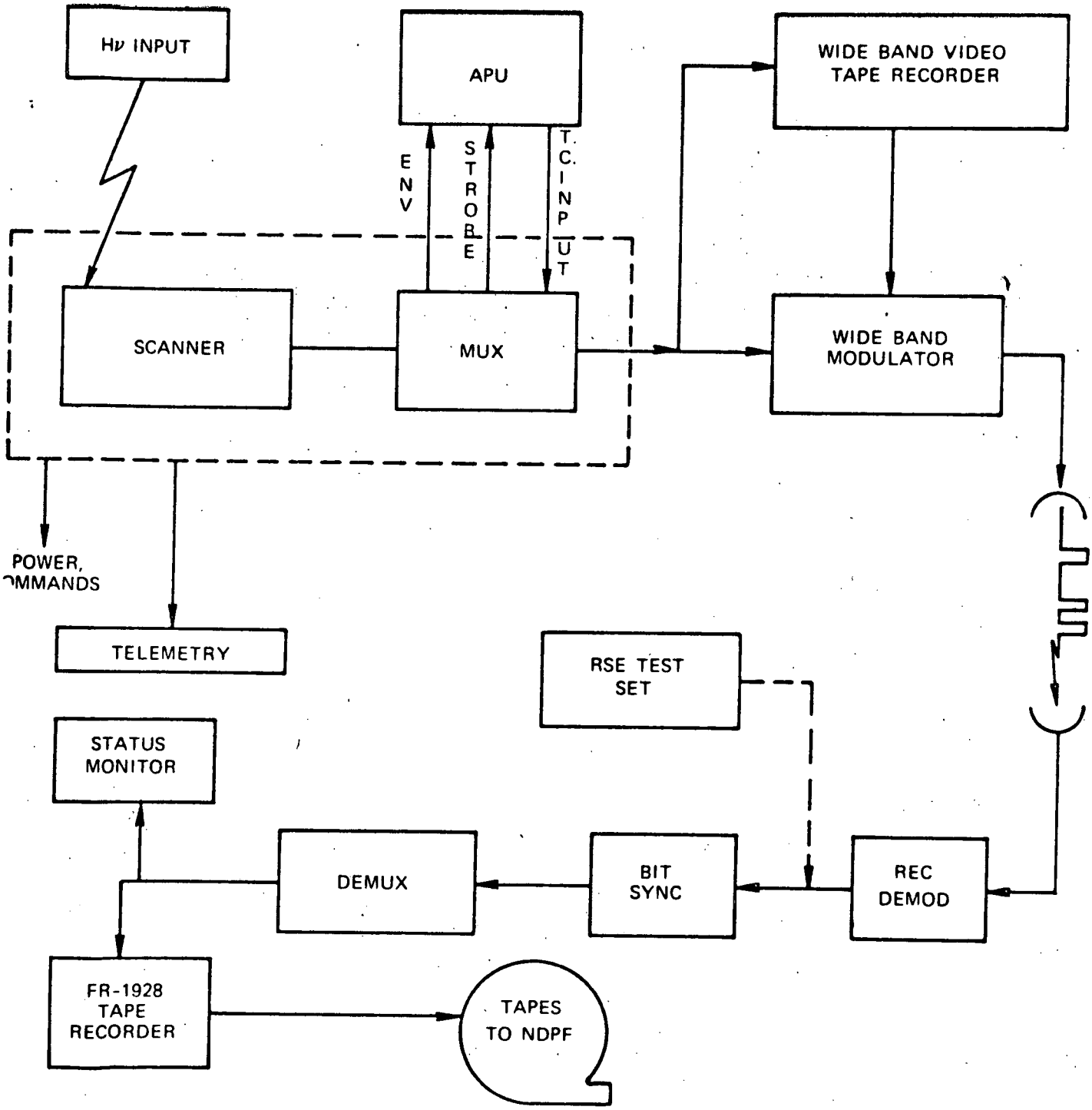

Figure 20-2. Simplified Functions Block Diagram of the Overall MSS System

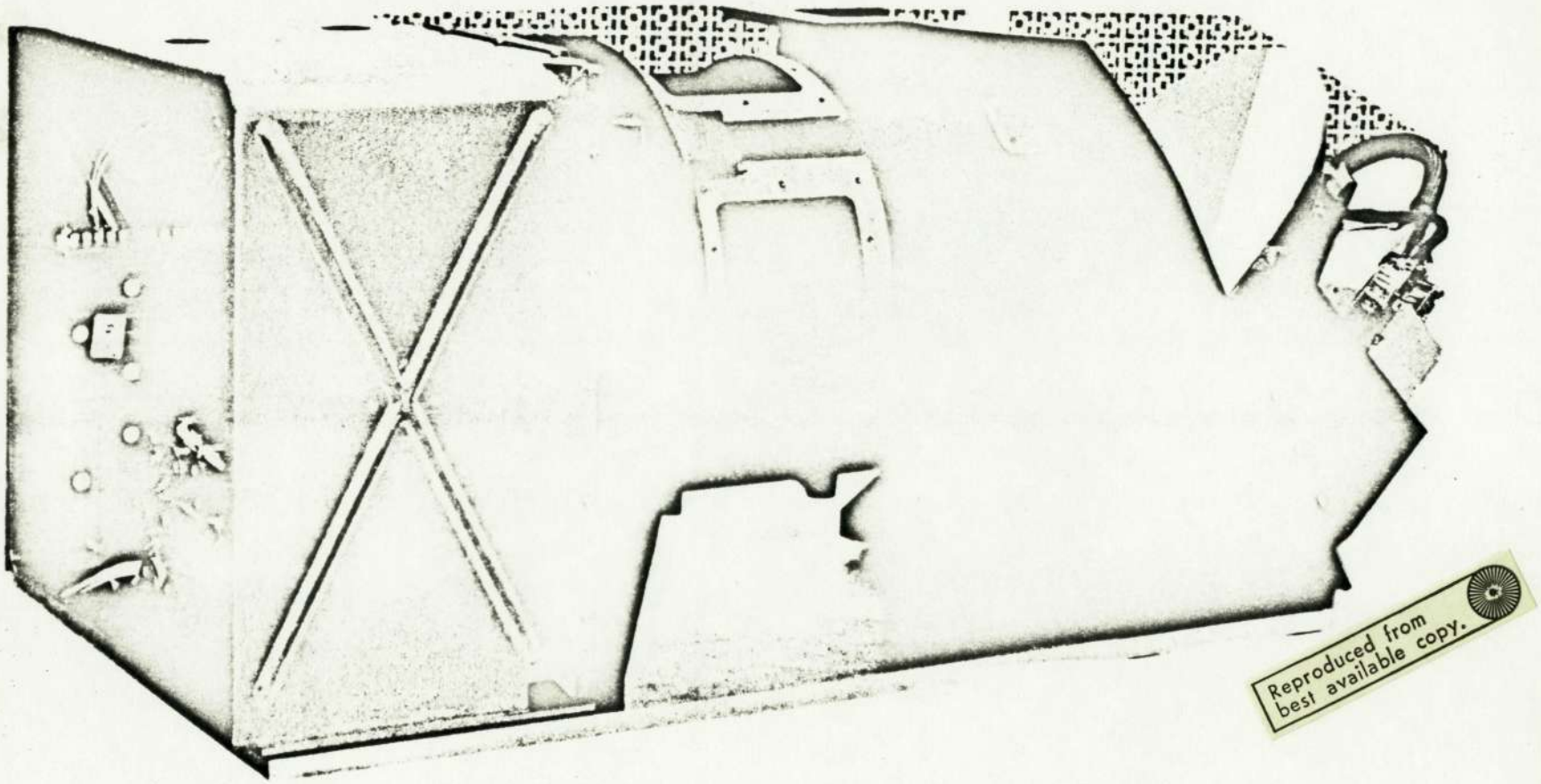

Reproduced from best available copy.

Figure 20-3. Multispectral Scanner

Table 20-1. Multispectral Scanner Subsystem Launch Mode

	Mode	Cmd
MSS BOTH	EN	632
SYSTEM PWR	ON	052
HIGH VOLT	OFF	073
SEL INV	A	053
BAND 1	OFF	076
BAND 2	OFF	132
BAND 3	OFF	135
BAND 1 HV	A	054
BAND 2 HV	A	055
BAND 3 HV	A	056
BAND 1 HV	OFF	176
BAND 2 HV	OFF	233
BAND 3 HV	OFF	232
SHUTTER	A	214
ROT SHUTTER	ON	152
CAL LAMP	A	117
CAL LAMP	OFF	177
SCAN PWR	1	217
SCAN MON	OFF	172
SCAN MON	A	255
SCAN MIRROR	INH	256
SCAN MIR PWR	1	312
MIR SCAN	OFF	335
MUX	INH	276
MUX MODE	COMP	315
HEATER	OFF	735
SYS ON/OFF	NORM	316
BAND 1 GAIN	LO	175
BAND 2 GAIN	LO	174

Initial Turn-On

The initial turn on of the MSS subsystem was in Orbit 20 while over Greenbelt.

The WBPA-2 was turned on by stored command 03:52:07. The launch mode of Mux COMPRESSED and LOW gain were still in effect from launch. Filter B was connected to real-time data output of the MSS at 03:54:54. The Calibration Lamp and Scan Mirror were turned on at 03:55:15; NORMAL mode was selected for Mux and the Scan Mirror; and Mid-Scan Code were turned ON at 03:55:16. WBVTR-2 was turned ON at 03:55:34, put in STANDBY

at 03:55:35, and in RECORD at 03:55:47. MSS System was commanded ON at 03:56:22. Band 4 was commanded on at 03:56:22 and left ON throughout the remainder of this test. MSS Hi-Voltage and Band 1 were both turned ON at 03:56:23. Telemetry as displayed on the CRT displays and on the strip charts, showed normal operation. At 03:57:53 Band 1 high voltage was turned ON. This was the first opportunity to observe if corona would occur. No sign of corona could be seen in either telemetry or the video output, being observed on the "A" scope of the FR 1928.

Band 1 and its Hi Voltage were turned OFF at 03:58:50 and Band 2, with its Hi Voltage was turned ON at 03:58:51. Again no corona effects could be observed.

Band 2 and its Hi Voltage were turned OFF at 03:59:23, and Band 3, with its Hi Voltage was turned ON at 03:59:24. Again no corona effects could be observed. Leaving Band 3 ON, Band 1 with its High Voltage was added at 04:00:08. Band 2 with its hi voltage was also added at 04:00:09. Now the full MSS system was operating, since Band 4 had been ON all the while. Video and telemetry were normal and no sign of corona could be observed.

MSS, WBPA-2 and WBVTR-2 were commanded OFF at 04:02:45. Telemetry values were normal as shown in Table 20-2. Video and strip charts were normal.

Subsequent Operations

In Orbit 21 a sun calibration was performed while over Goldstone. At 05:36:04 WBPA-2 was turned ON. At 05:38:32 MSS was turned ON. WBVTR-2 was turned ON at 05:39:04. put in STANDBY at 05:39:05 and in record at 05:39:17. The MSS was configured with all Bands operating, Mux mode LINEAR in LOW gain for Bands 1 and 2. The sun calibrate pulse appeared at 05:41:48 and vanished at 05:42:00. The amplitude of the pulse was distinctly below the expected value in all bands, being 0.1 the expected value in Band 1, 0.3 the expected valve in Band 2, 0.6 in Band 3 and 0.7 in Band 4. At 05:45:02 MSS and WBVTR-2 were turned OFF, and at 05:45:22 WBPA-2 was turned OFF.

Table 20-2. MSS Telemetry

Function	Name	* T.V. Norm	Orbits 20	27	30
15040.	MUX - 6 VDC (TMV)	3.95	4.03	3.84	4.03
15041	AID SUPPLY (TMV)	5.82	5.53	5.65	5.92
42	AVERAGE DENSITY (TMV)	1.76	1.67	2.02	2.44
43	FIBER OPTICS PLATE 1 TEMP (DGC)	20.6	17.67	17.38	17.67
44	FIBER OPTICS PLATES TEMP (DGC)	20.5	17.46	17.15	17.46
45	MUX TEMP (DGC)	22.4	21.19	19.44	19.55
46	ELEC COVER TEMP (DGC)	21.5	19.37	19.09	19.30
47	PWR. SUP. TEMP. (DGC)	21.6	17.41	17.03	17.22
48	SCAN MIR REG. TEMP (DGC)	22.8	16.35	15.70	15.79
49	SCAN MIR DRIVE ELEC. TEMP (PGC)	22.8	16.12	15.52	15.62
15150	SCAN MIR DRIVE COVER TEMP (DGC)	22.4	15.94	15.43	15.63
51	SCAN MIR TEMP (DGC)	21.1	15.60	14.97	15.35
52	ROT. SHUT HOUSING TEMP (DGC)	20.8	16.91	16.59	16.93
53	SCAN MIR REG VOLT (TMV)	4.44	4.42	4.40	4.64
54	CAL LAMP CURRENT (TMV)	1.06	1.08	1.07	1.12
55	BAND 1 15 VDC (TMV)	4.94	4.97	4.97	4.97
56	BAND 2 15 VDC (TMV)	5.05	5.10	5.10	5.10
57	BAND 3 15 VDC (TMV)	4.94	5.00	4.76	5.00
58	BAND 4 15 VDC (TMV)	5.00	5.10	4.86	5.10
59	TLM 15 VDC (TMV)	5.02	5.02	5.02	5.02
15060	+12 VDC + 6 VDC (TMV)	4.90	4.82	4.79	5.02
61	LOGIC + 5 VDC (TMV)	4.80	4.82	4.83	4.76
62	RECT. + 19 VDC (TMV)	4.81	4.80	4.76	5.00
63	RECT. - 19 VDC (TMV)	3.42	3.42	3.40	3.57
64	BAND 1 HVA (TMV)	5.12	5.10	5.10	5.10
65	BAND 1 HVB (TMV)	5.05	-	-	-
66	BAND 2 HVA (TMV)	4.46	4.50	4.50	4.50
67	BAND 2 HVB (TMV)	4.56	-	-	-
68	BAND 3 HVA (TMV)	4.58	4.60	4.60	4.60
69	BAND 3 HVB (TMV)	4.54	-	-	-
15070	SHUT MOT. CONTR. INTE (TMV)	2.46	2.43	2.41	2.52
15071	SCAN MIRROR DRIVE CLOCK (TMV)	1.94	1.93	1.90	1.99

*Thermal Vacuum Test Data

In Orbit 27 MSS was turned ON at 16:28:56 while over the mid western U.S. at 16:29:47 Band 1 was put in LOW gain; at 16:30:00 Band 2 was put in LOW gain. At 16:30:12 Mux was put in COMPRESSED mode. At 16:34:33 all payloads were turned OFF. Telemetry was normal as shown in Chart 20-2. Video and Strip charts were normal. In orbit 30 while over Alaska MSS was turned ON at 21:26:49. Mux was in COMPRESSED mode and Bands 1 and 2 in LOW gain. The mid-scan code was OFF. WBPA-2 has been turned on at 21:22:41 by stored command. The MSS was turned OFF at 21:36:37 and WBPA-2 OFF at 21:36:45. Telemetry was normal as shown in Chart 20-2. Video and strip charts were normal.

SECTION 21

DATA COLLECTION SYSTEM DCS

E

SECTION 21
DATA COLLECTION SYSTEM DCS

The Data Collection System is designed to relay data from randomly distributed Data Collection Platforms (DCP) through the ERTS-1 spacecraft to any one of three receiving sites Greenbelt, MD.; Fairbanks, Alaska; Goldstone, Calif. The DCS system will collect and provide at least one message from each of up to 1000 Data Collection Platforms in the continental U.S. every 12 hours, with a probability of 0.95; with a nominal ERTS S/C orbit and all 3 ground stations operating. See Figure 21-1 for system description, Figure 21-2 for functional block diagram, and Figure 21-3 for hardware configuration.

The Data Collection Subsystem was launched in the mode shown in Table 21-1. Verification of this mode was obtained by CRT displays and strip charts from telemetry received from Madrid and playback from Alaska early in Orbit 1. Six DCS ground station platforms were operational at launch time with three more added during this period.

Table 21-1. Data Collection System Launch Mode

	MODE	CMD
RECEIVER 1	OFF	407
RECEIVER 2	OFF	406

Initial-Turn-On

DCS Receiver #1 was turned ON at 02:10:19 in Orbit 5, and has been left ON since. The equipment operated normally, Telemetry values are shown in Table 21-2. The first two messages were poor due to improper tracking with the USB antenna, but the remainder of the 52 messages received at Greenbelt were good.

Five East Coast platforms were received during Orbit 5.

In Orbit 6 during overlapping passes at Greenbelt and Goldstone only 1 of the 159 messages was designated bad confidence.

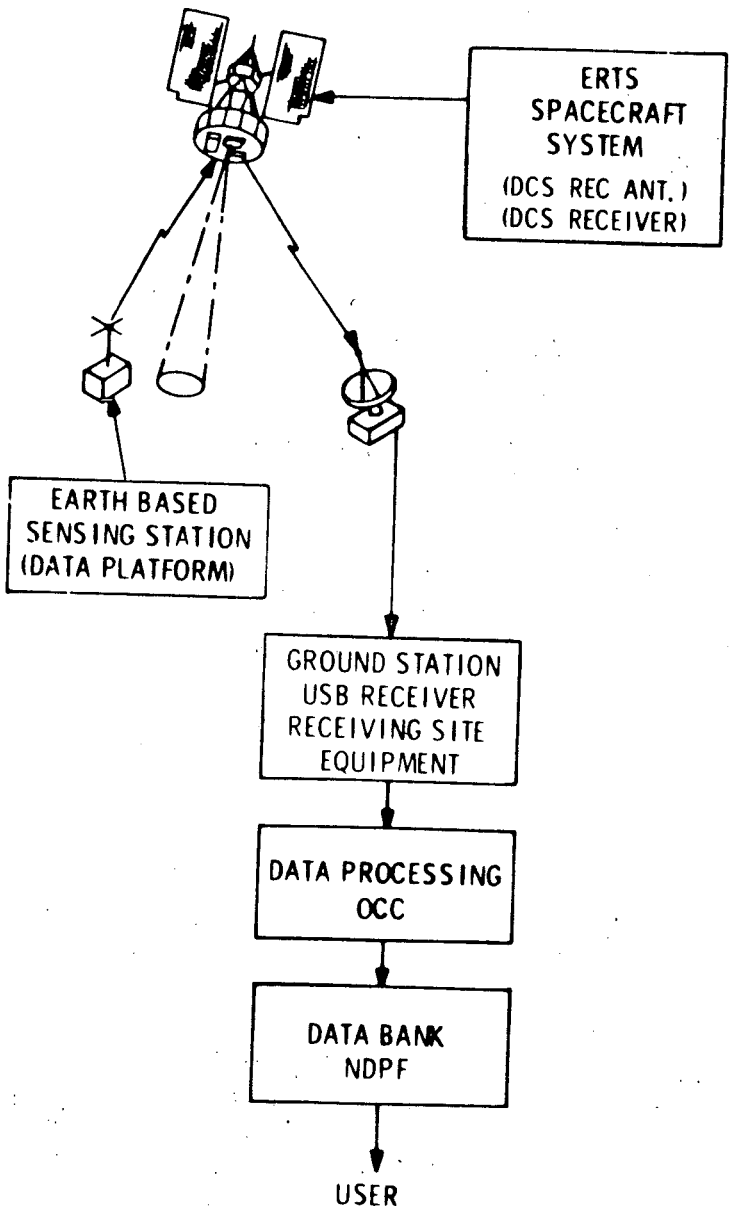

Figure 21-1. ERTS DCS System Description

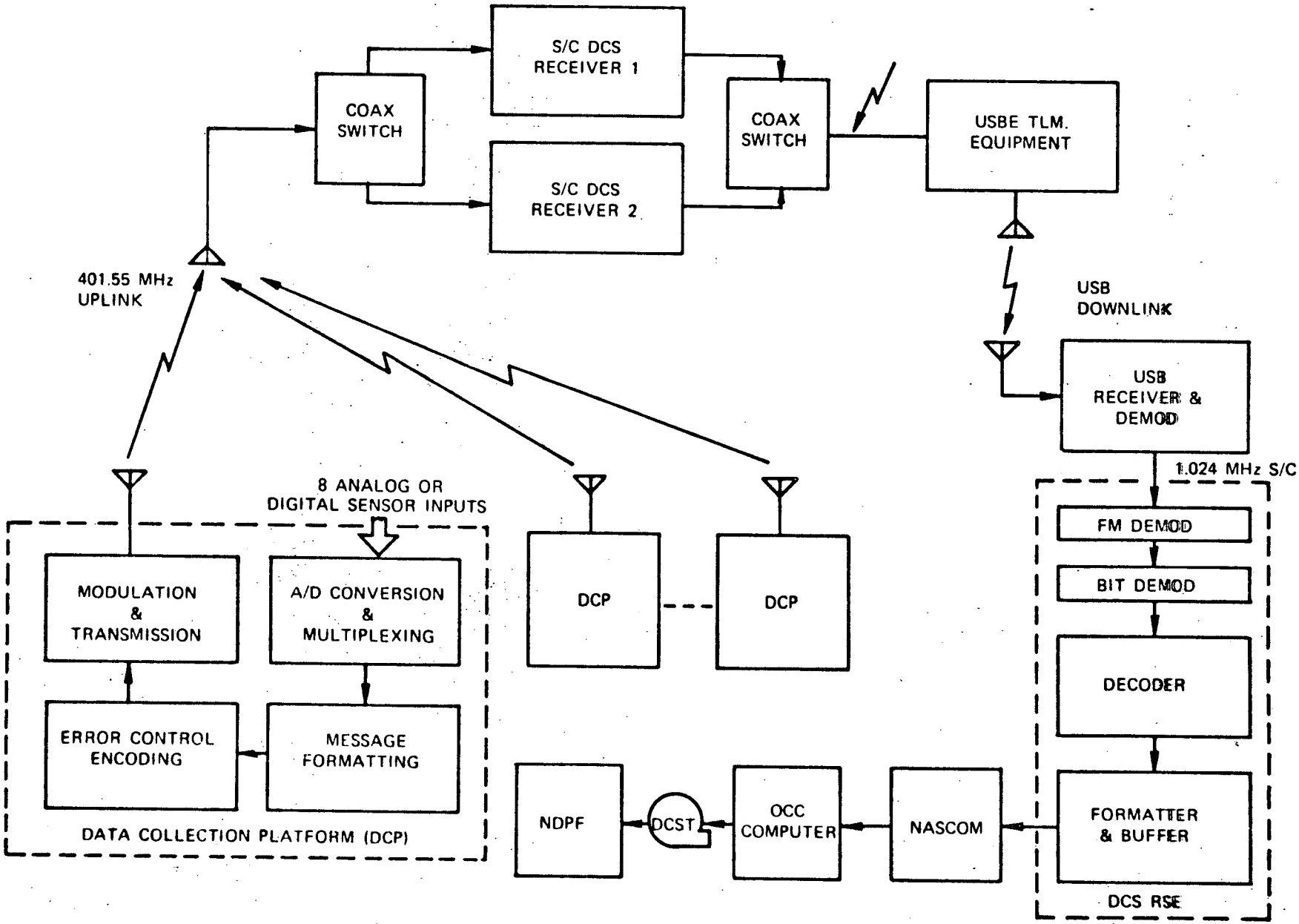

Figure 21-2. Data Collection System Functional Block Diagram

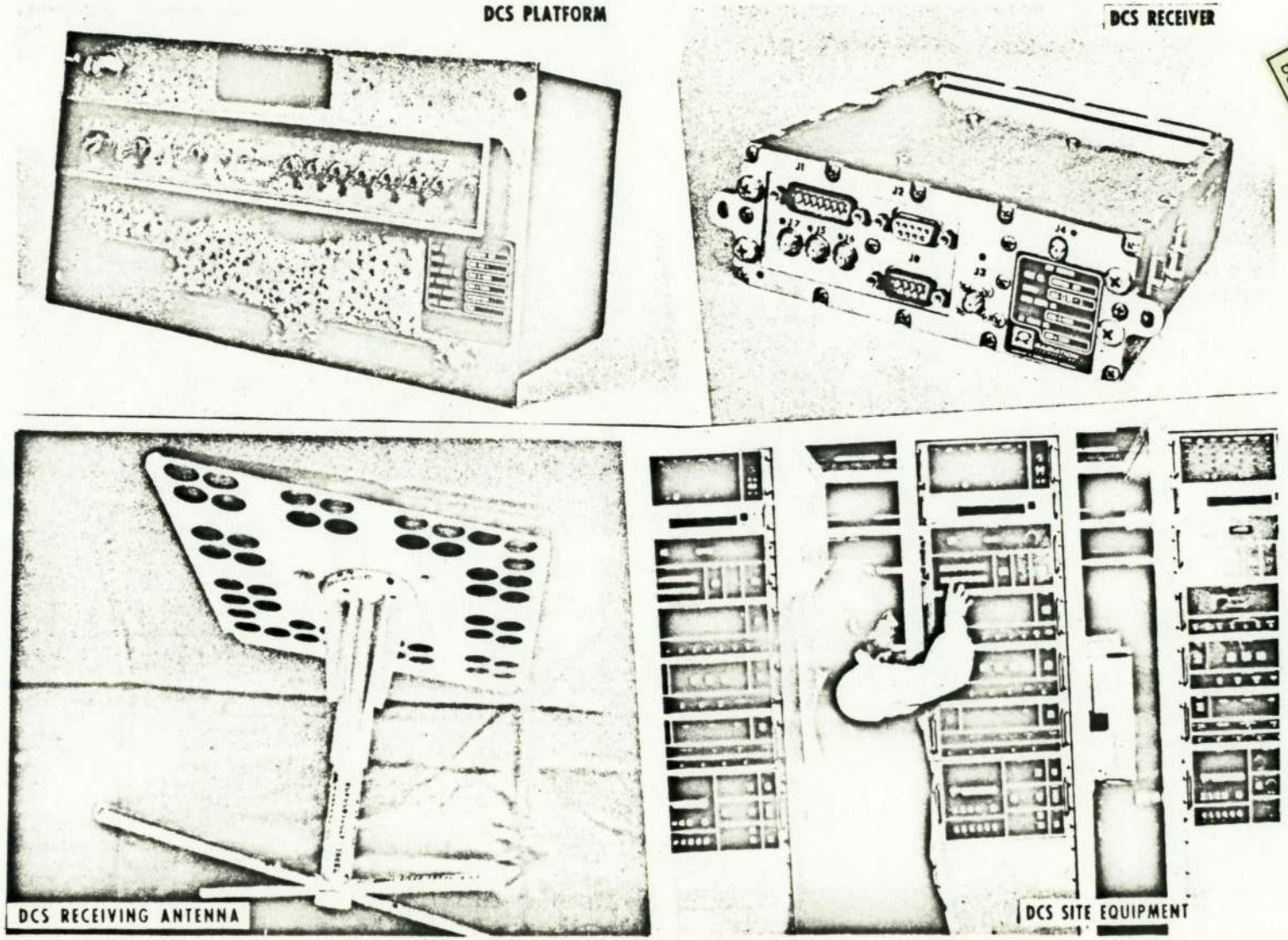

Reproduced from best available copy.

Figure 21-3. Data Collection System

Subsequent Operations

Overall performance of the Data Collection System during the remaining orbits has been well within the system design.

The OCC platform was operated at a 9.6 second repetition rate and was received 42 times on Orbit 5 and 22 times on Orbit 6 at Greenbelt. All 22 of the Orbit 6 messages were received at Goldstone.

Table 21-2. DCS Telemetry Values

Func. No.	Name	* 20°C Plateau	Orbits			
			5	15	24	34
16001	Receiver-1 Sig Volt (DBM)	-119**	-124.4	-124.1	-123.7	-125.0
16002	Receiver-1 Temp (DGC)	23.0	22.7	22.72	22.62	22.99
16003	Rec-1 Pwr Input Volt (VDC)	12.02	12.04	12.02	12.02	12.02
16004	Receiver-2 Sig Volt (DBM)	-119**	0	0	0	0
16005	Receiver-2 Temp (DGC)	21.6	0	0	0	0
16006	Receiver-2 Input Volt (VDC)	12.02	0	0	0	0

*Thermal Vacuum Test Data
**This value is for a CW carrier only
Receiver 2 was off for these 35 orbits

APPENDIX A

ERTS - 1 CONFIGURATION

Reproduced from best available copy.

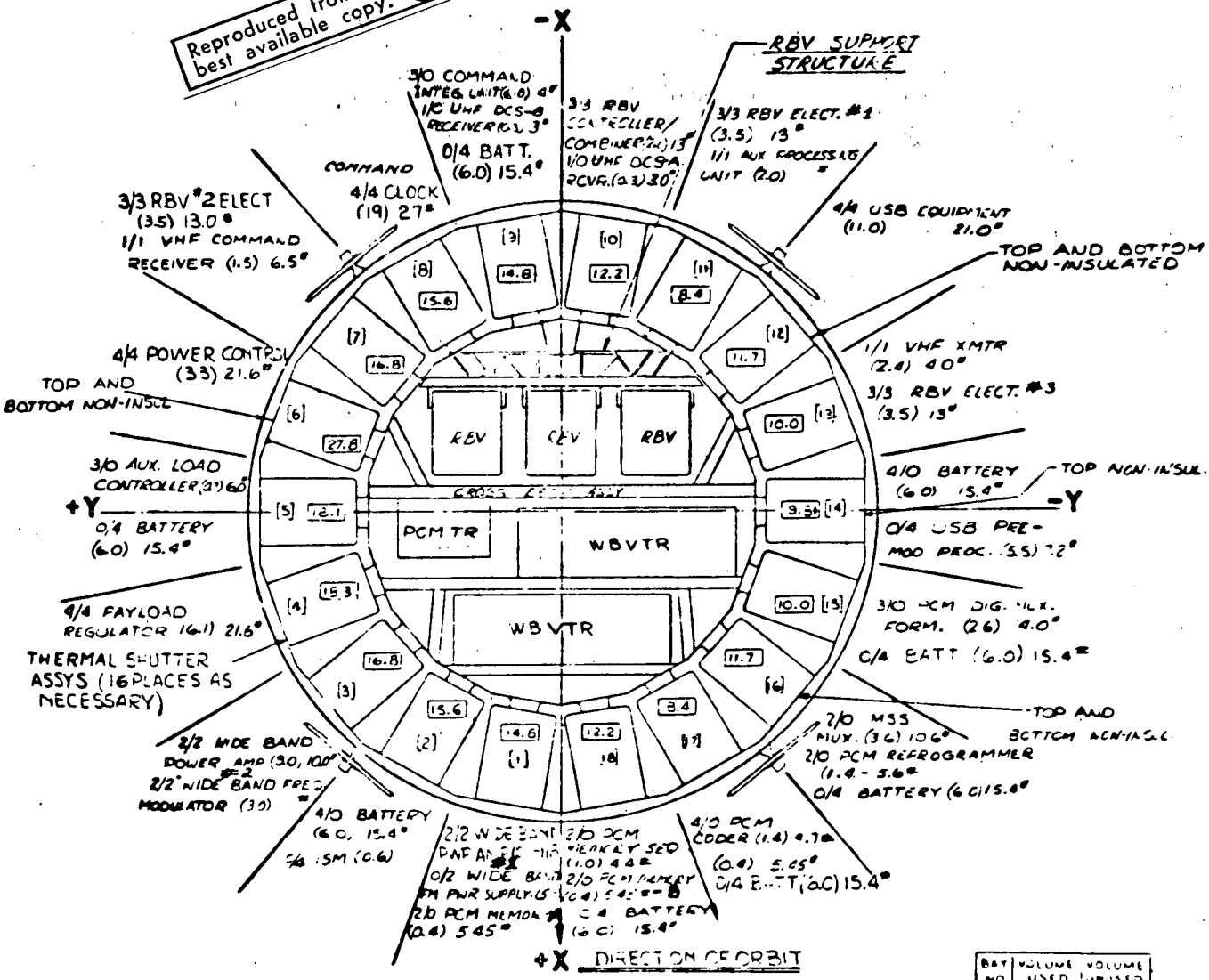

SECTION A-A

ROTATED 90° CCW.

[ ] = BAY NO

( ) = WATTS DISSIPATED (ORBIT AVERAGE)

[ ] = BAY HEAT DISSIPATING CAP

= UNIT WEIGHT

BAY NO	VOLUME USED	VOLUME UNUSED
1	4/4	—
2	4/4	—
3	4/4	—
4	4/4	—
5	3/4	1/0
6	4/4	—
7	4/4	—
8	4/4	—
9	4/4	—
10	4/3	0/1
11	4/4	—
12	4/4	—
13	4/4	—
14	4/4	—
15	3/4	1/0
16	4/4	—
17	4/4	—
18	4/4	—

Figure A-1. ERTS I Equipment and Payload Location

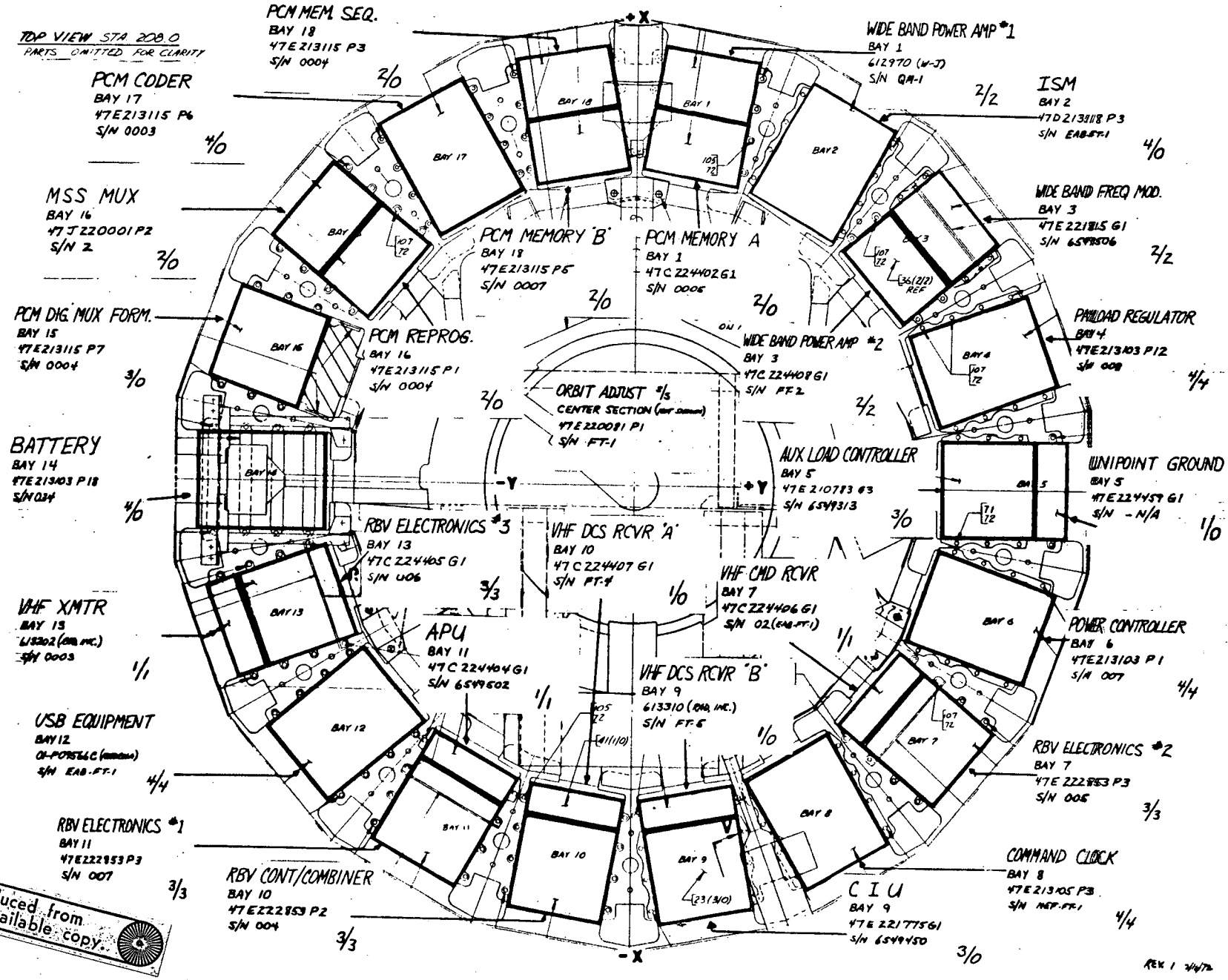

Figure A-2. ERTS I Equipment and Payload Location

Reproduced from best available copy.

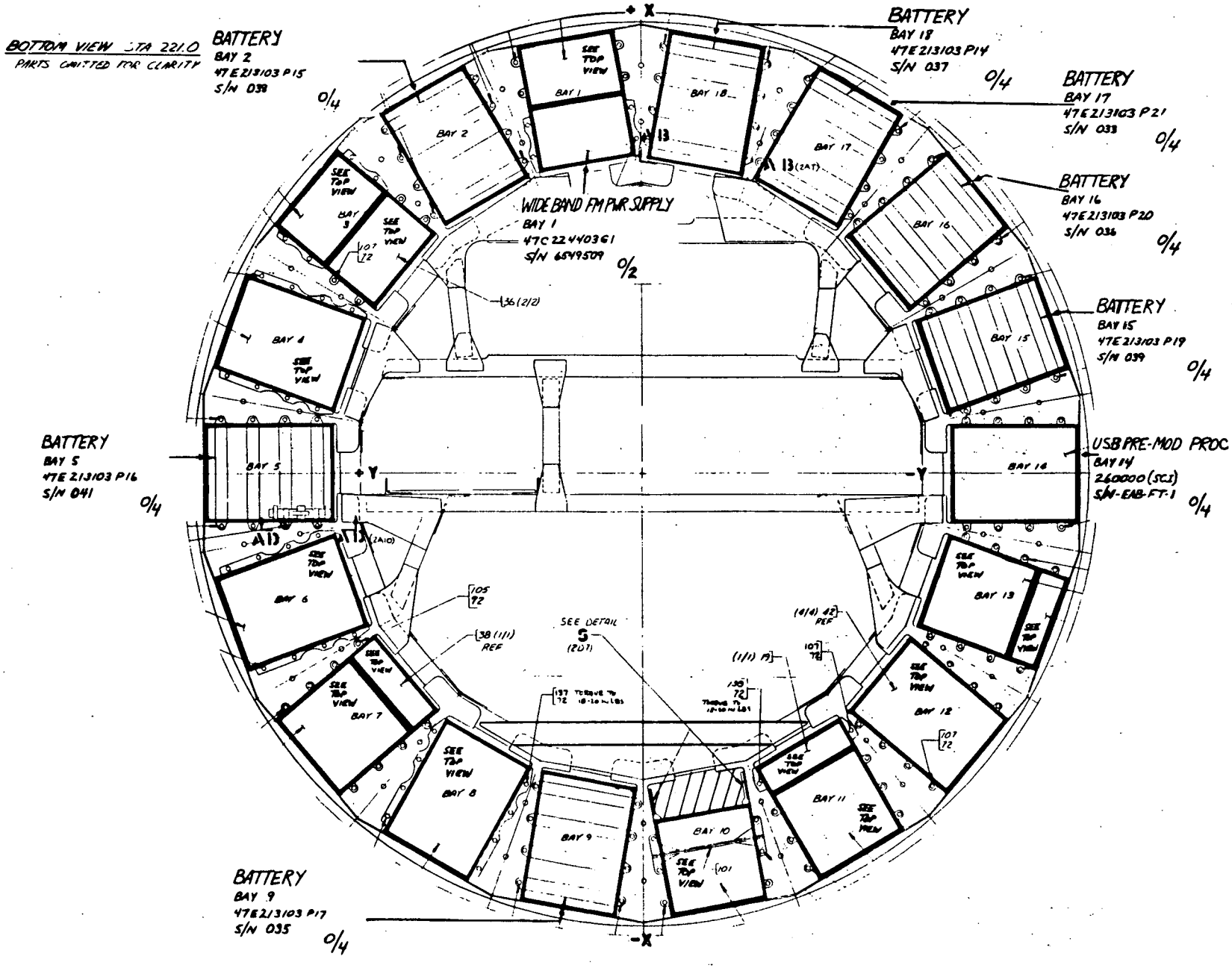

Figure A-3. ERTS I Equipment and Payload Location

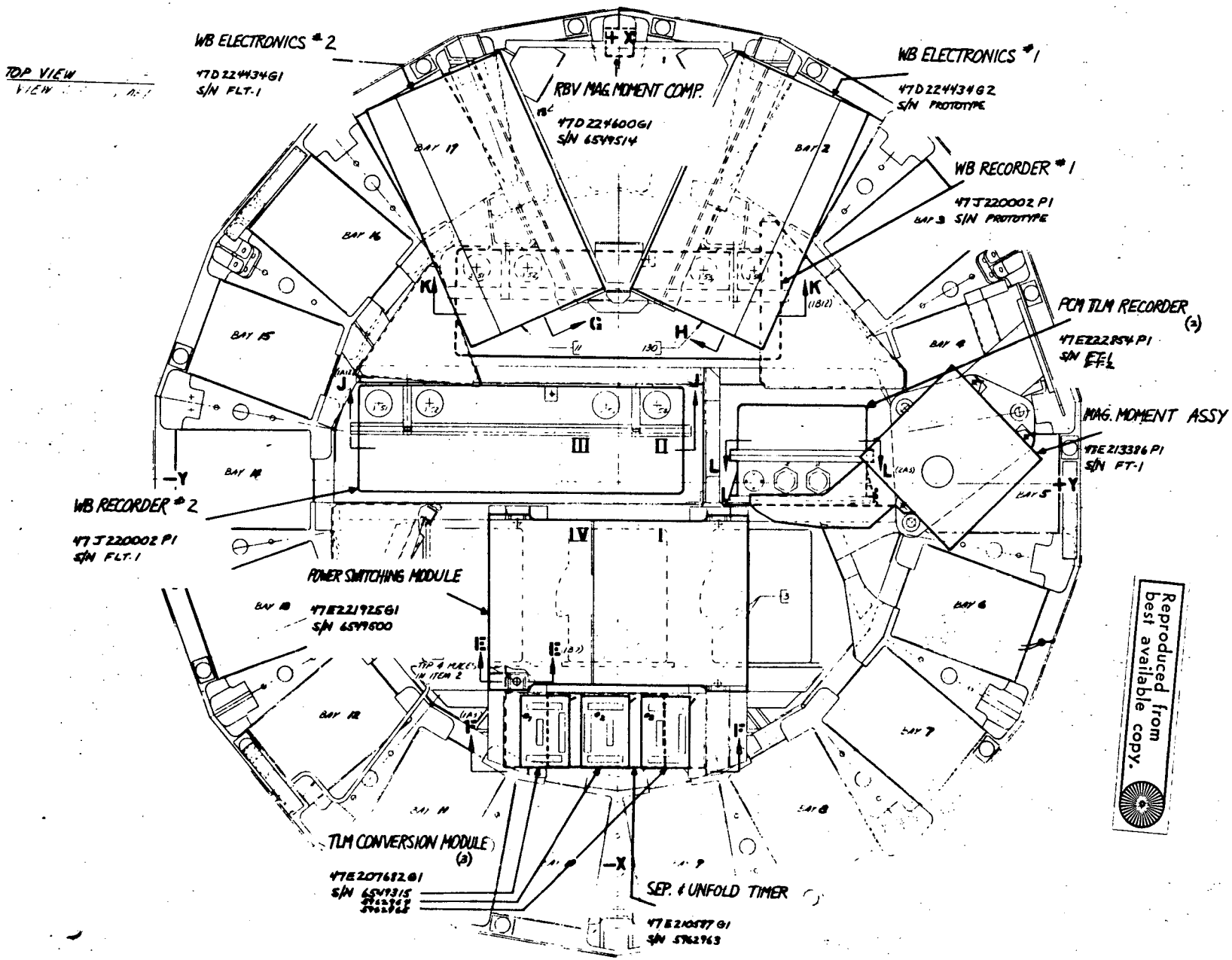

Reproduced from best available copy.

Figure A-4. ERTS I Equipment and Payload Location

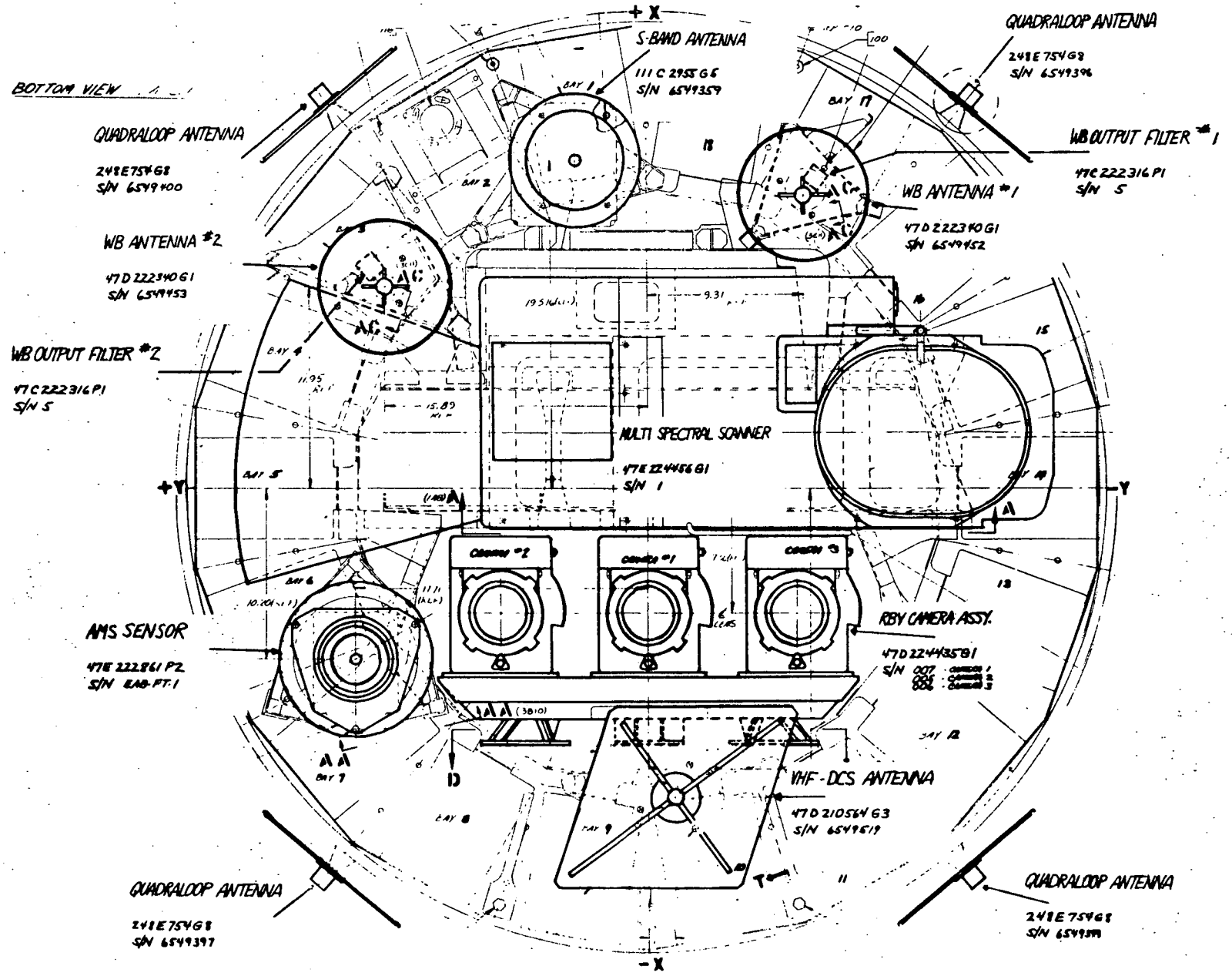

Figure A-5. ERTS I Equipment and Payload Location

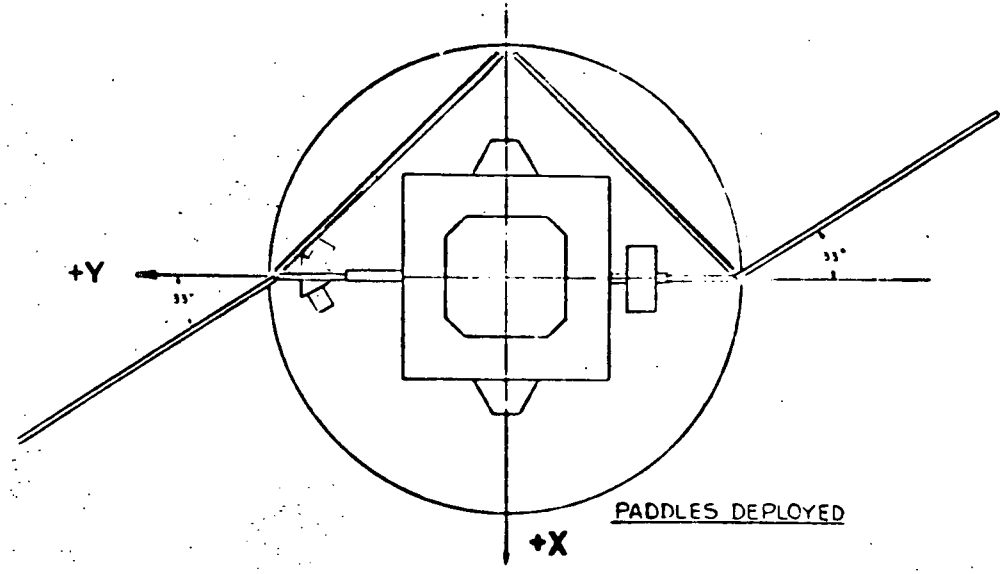

Figure A-6. ERTS I Equipment

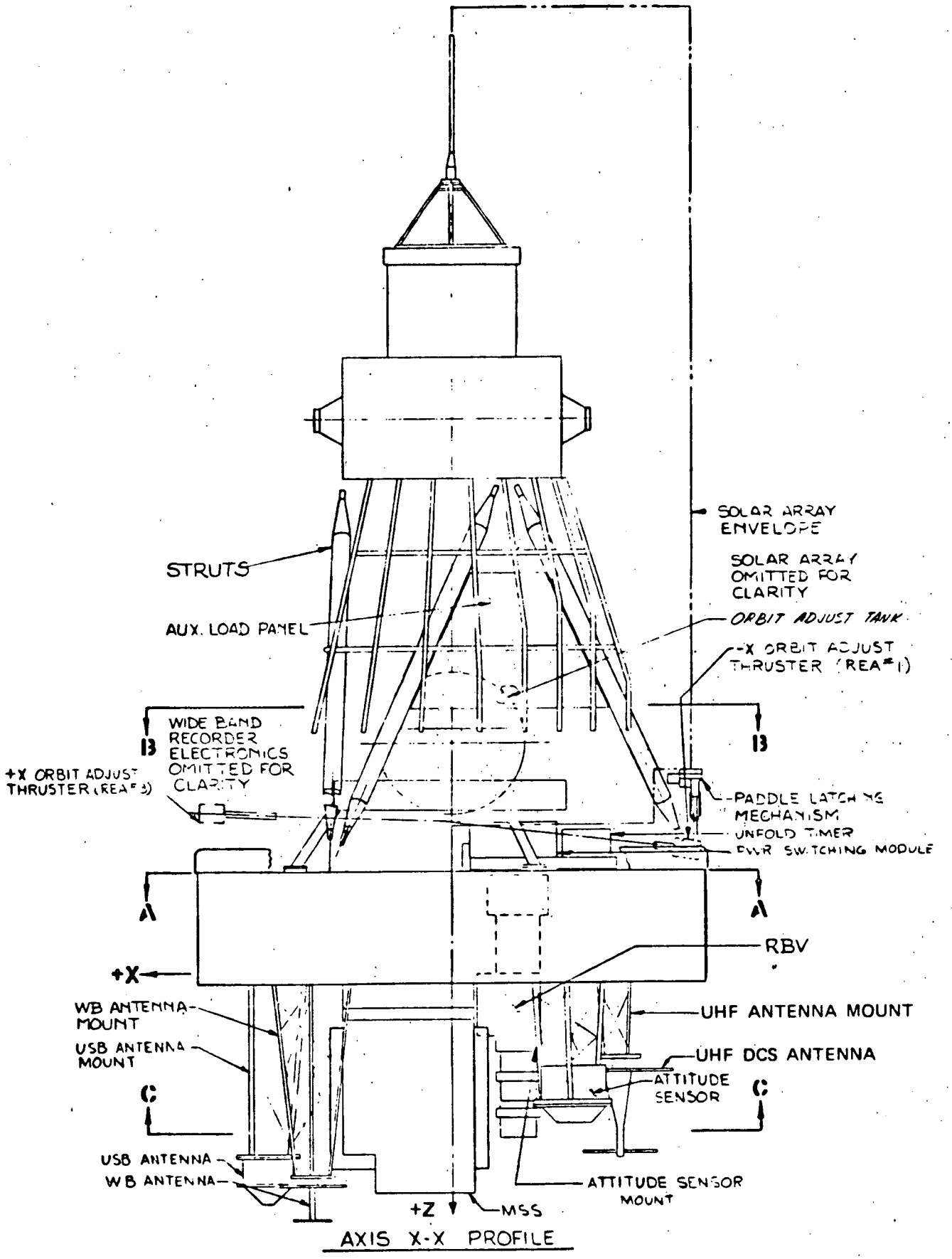

Figure A-7. ERTS I Configuration

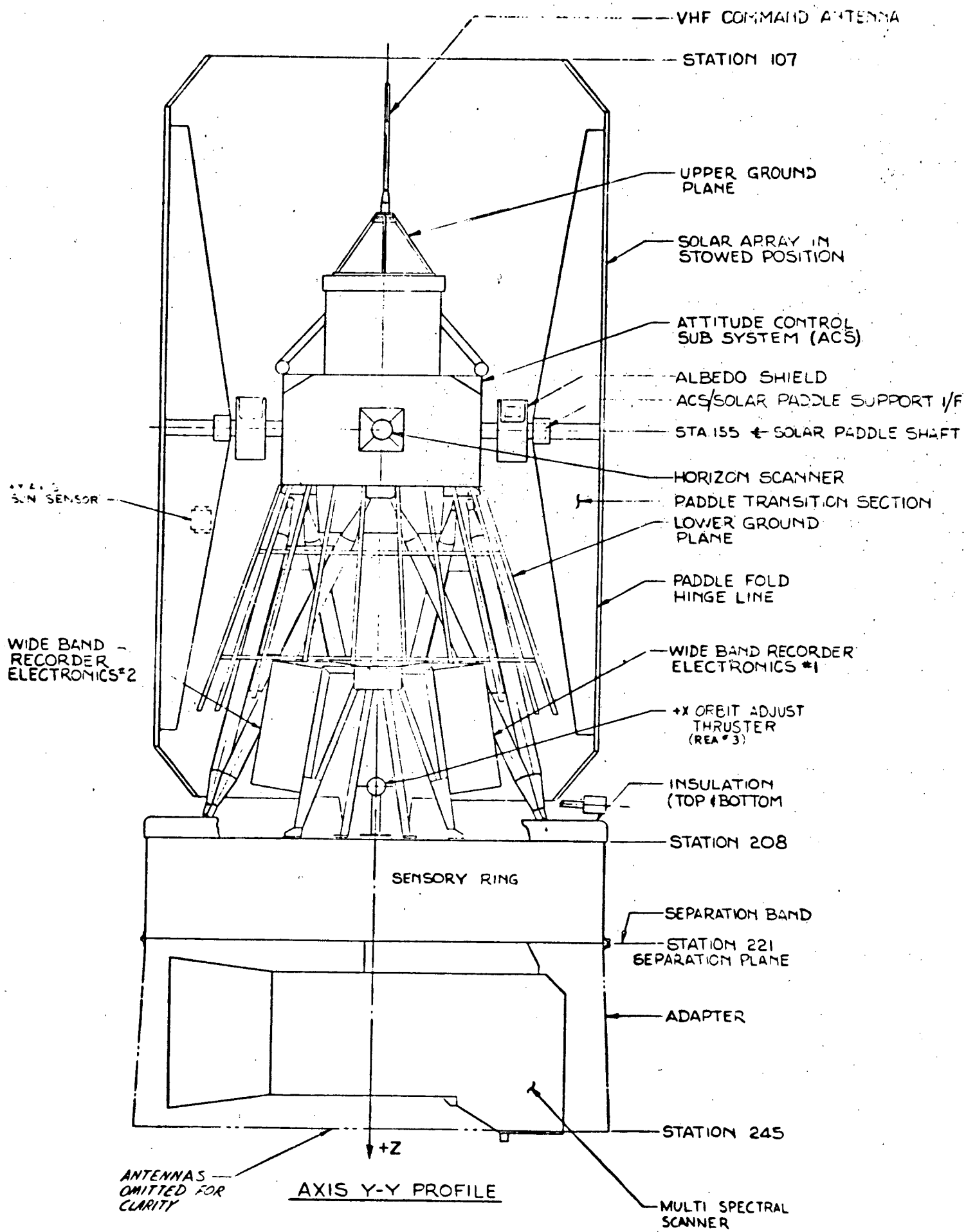

Figure A-8. ERTS I Configuration

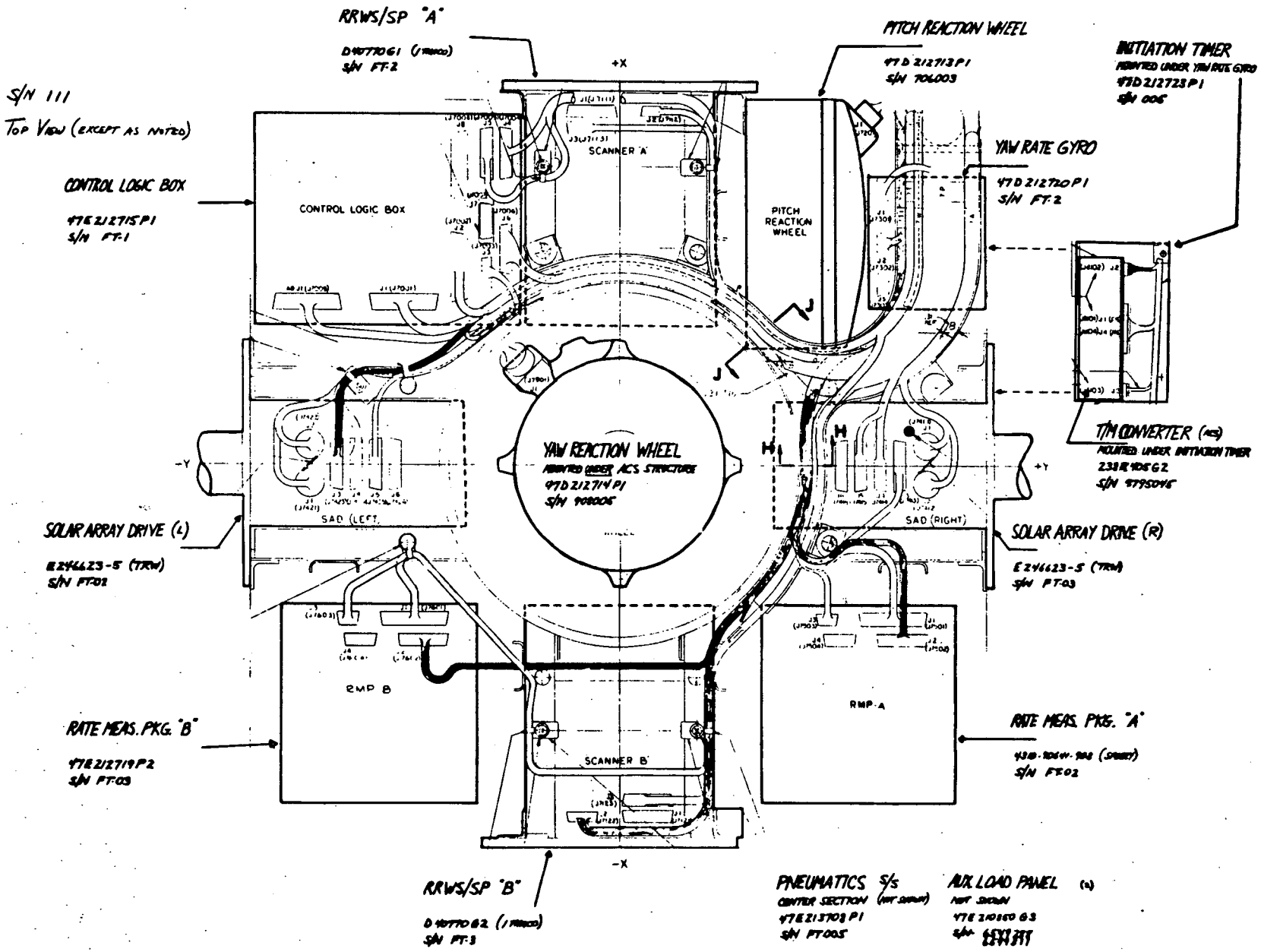

Figure A-9. ERTS I Attitude Control System

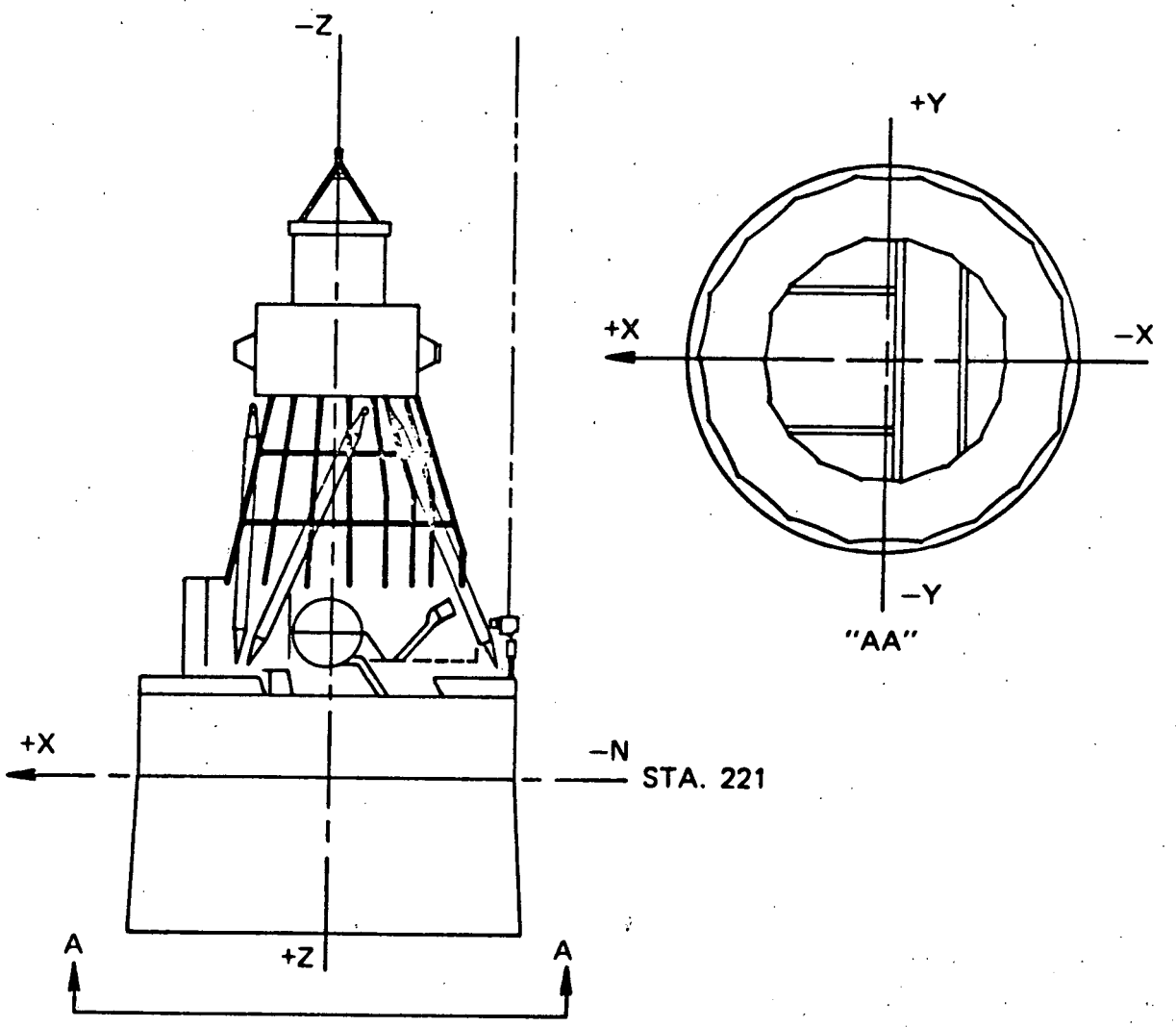

Figure A-10. ERTS I Observatory Reference Axes

CONFIGURATION MANAGEMENT — SPACE SYSTEMS

CONSOLIDATED CONFIGURED ARTICLES LIST

ERTS SPACECRAFT 904

Revision Status of Pages

SHEET #	INITIAL ISSUE	REV A	REV B	REV C	REV D	REV E	REV F	REV G
1 (INDEX)	1-21-72	2-14-72	3-1-72	3-15-72				
2	1-21-72	2-14-72	3-1-72	3-15-72	6-1-72	7-7-72		
3	1-21-72	5-1-72						
4	1-21-72	2-14-72	3-15-72	5-1-72				
5	1-21-72	3-1-72	6-1-72					
6	1-21-72	3-1-72	3-15-72	6-1-72	7-7-72			
7	1-21-72	7-7-72						
8	1-21-72	3-15-72	5-1-72	6-1-72	7-7-72			
9	1-21-72							
10	1-21-72	2-14-72	3-1-72	5-1-72	6-1-72	7-7-72		
11	1-21-72	3-15-72	5-1-72	7-7-72				
12	1-21-72	1-24-72	3-1-72					
13	1-21-72							
14	1-21-72							
15	1-21-72	3-1-72						
16	1-21-72	3-1-72	5-1-72					
17	1-21-72	2-14-72	3-1-72	5-1-72				
18	2-14-72	5-1-72						
19	2-14-72							
20	2-14-72	3-1-72	3-15-72	5-1-72	6-1-72			

Notes: 1. Those items which have been added or changed in this revision are noted with heavy black lines in the right margin.
2. See reverse side of this cover sheet for change-out log since 1-21-72.

ISSUED BY CONFIGURATION MANAGEMENT OFFICE

JULY 7, 1972

CONFIGURATION CHANGES SINCE INITIAL ISSUE

OF CONSOLIDATED CONFIGURED ARTICLES LIST (1/21/72)

NOMENCLATURE	DRAWING NUMBER	REMOVED DATE	REMOVED S.N.	REPLACED DATE	REPLACED S.N.	COMMENTS
Battery Module	RCA 2265943-501	2/1/72	035	2/3/72	035	To remove RBV cameras
RBV Cont./Combiner	RCA 2265346	2/1/72	004	2/13/72	004	Returned to RCA with RBV's
RBV Camera #1	RCA 2265343	2/1/72	007	2/13/72	007	Replacement of PC board
RBV Camera #2	RCA 2265343	2/1/72	005	2/13/72	005	Microphonics problem
RBV Camera #3	RCA 2265343	2/1/72	006	2/13/72	006	Microphonics problem
RBV Electronics #3	RCA 2265345	2/1/72	006	2/12/72	006	Microphonics problem
ACS Timer	GE 47D212723P1	2/5/72	005	2/8/72	005	Rework to eliminate possible short to case
Aux. Proc. Unit	GE 47E221855G1	2/5/72	6549503	2/7/72	6549502	Rework - MSS time code problem
RBV Electronics #1	RCA 2265345	2/5/72	007	2/12/72	007	Microphonics problem
RBV Electronics #2	RCA 2265343	2/7/72	005	2/12/72	005	Microphonics problem
Pitch Reaction Wheel	Bendix X1903155-1	2/7/72	908005	2/7/72	706003	Investigation due to Nimbus failure
VHF Xmtr.	Radiation 613202G1	2/12/72	0003	2/13/72	0003	Installation of RBV #1 Electronics
DCS Antenna	GE 47D210564G3	2/26/72	6549520	4/15/72	6549519	Reworked
WB Filter #1	Peninsula F1522A	3/9/72	5	3/20/72	Eng.Unit	Reworked - Multipacting problem
WB Filter #2	Peninsula F1522A	3/9/72	6	3/20/72	Eng.Unit	Reworked - Multipacting problem
WBVTR Electronics	RCA 8370949	3/10/72	Flt. 1	3/10/72	Flt. 3	Erratic search track data
WBVTR	RCA 8370948	3/10/72	Flt. 1	3/10/72	Flt. 3	Erratic search track data
Aux. Proc. Unit	GE 47E221855G1	3/10/72	6549502	3/10/72	6549503	Back-up timer problem
WBVTR	RCA 8370948	3/15/72	Flt. 3	3/16/72	Flt. 2	Noisy MSS playback mode
WBVTR Electronics	RCA 8370949	3/15/72	Flt. 3	3/16/72	Flt. 2	Noisy MSS playback mode
WB Filter #1	Peninsula F1522A	3/22/72	Eng.	3/23/72	3	Replacement of reworked unit
WB Filter #2	Peninsula F1522A	3/22/72	Eng.	3/23/72	6	Replacement of reworked unit
WB Antenna #2	GE 47D222340G1	3/22/72	6549453	3/23/72	6549453	Installation of WB Filter #2
WBVTR	RCA 8370948	4/7/72	Flt. 2	4/9/72	Flt. 3	Noisy MSS playback mode
WBVTR Electronics	RCA 8370949	4/7/72	Flt. 2	4/9/72	Flt. 3	Noisy MSS playback mode
RBV MMCA	47D224600G1	4/27/72	6549514	4/27/72	6549512	Possible rework of coil
RBV MMCA	47D224600G1	5/3/72	6549512	5/3/72	6549514	Replacement (not reworked)
RBV MMCA	47D22460081	5/13/72	6549514	5/21/72	6549512	Rework coil
RRWS/SP - REAR	D40770G2	6/7/72	FT 3	6/10/72	FT 6	Rework scanner
RRWS/SP - FWD	D40770G1	6/8/72	FT 2	6/10/72	FT 2	Change trim connector
Control Logic Box	D40778G1	6/12/72	FT 1	6/12/72	PR 1	Solder joint problem
RRWS/SP - FWD	D40770G1	6/15/72	FT 2	6/25/72	FT 2	Solder joint problem - (reworked)
RRWS/SP - REAR	D40770G2	6/15/72	FT 6	6/25/72	FT 6	Solder joint problem - (reworked)
Control Logic Box	D40778G1	6/15/72	PR 1	6/25/72	FT 1	Replacement of reworked unit
U	01-P09566C001	6/21/72	FT 1	6/23/72	FT 2	Test anomaly

CONSOLIDATED CONFIGURED ARTICLES LIST

ERTS SPACECRAFT 904

INDEX

Item	Page
Adapter	6
Antennas	4
Attitude Control System	10-13
Attitude Measurement Sensor	13
Aux. Load Controller	3
Aux. Load Panels	3
Aux. Processing Unit	4
Batteries	15,16
Clock, Command	9
Command Integration Unit (CIU)	3
Command Receiver	17
Control Logic Box	10
Controller Aux. Load	3
Controllers Temperature	5,6
Dampers, Paddle	6
Data Collection System Receivers	17
Disconnect Preflight	6
Filters, Wideband	8
Frequency Modulator, WB	2
Initiation Timer	10
Interface Switching Module	9
Mag. Moment Comp. Assembly-ACS	11
Mag. Moment Comp. Assembly-RBV	3
Module, Interface Switching	9
Module. Payload Regulator	15
Module, Power Control	15
Module, Power Switching (PSM)	2
Module, Telemetry Conversion	6
Module, Telemetry Conversion, ACS	10
Multi Spectral Scanner (MSS), & Mux	20
Narrow Band Tape Recorder	14
Orbit Adjust Subsystem	14
Paddle Dampers	6
Panels, Aux. Load	3
Payload Regulator Module	15
PCM TLM Tape Recorder	14
Pitch Reaction Wheel	10
Pneumatics, ACS	11
Power Amplifiers, Wideband	13,14
Power Control Module	15
Power Subsystem	15,16
Power Supply, WBFM	2
Power Switching Module (PSM)	2
Preflight Disconnect	6
Premodulation Processor	6
Rate Measuring Package (RMP)	12
Receiver, Command	17
Receivers, DCS	17
Return Beam Vidicon MMCA	3
Roll Reaction Wheel Scan/Sig.Proc.	10,11
Return Beam Vidicon (RBV), & Electr.	20
S Band Equipment, Unified	7,8
Separation and Unfold Timer	6
Separation Switches	6
Signal Processor, RRWS	10,11
Solar Arrays	16,17
Solar Array Drives (SAD)	12
Storage Modules, Power	15,16
Structure. ACS	10
Switches, Separation	6
Switches, Unfold	6
Tape Recorders, PCM TLM	14
Telemetry Conversion Modules	6
Telemetry Conversion Modules, ACS	10
Temperature Controllers	5,6
Thermal Subsystem, ACS	10
Timer, Initiation, ACS	10
Timer, Separation and Unfold	6
Transmitter, VHF	20
Unfold Switches	6
Unified S Band Equipment	7,8
Versatile Information Processor	18,19
Wideband Filter	8
Wideband Frequency Modulator (WBFM)	2
WBFM Power Supply	2
Wideband Power Amplifiers	13,14
Wideband Video Tape Recorder (WBVTR) & Electr.	20
Yaw Rate Gyro	13
Yaw Reaction Wheel	10

CONSOLIDATED CONFIGURED ARTICLES LIST

47E223410G1 AN-9

ERTS SPACECRAFT 904

NOMENCLATURE	SUPPLIER	DWG & PART NO.	REV	SERIAL NO.
WB FREQ. MOD. ASS'Y.	GE-SS	47E221815G1	AN -9	6549506
PW Board Ass'y A1	GE-SS	47E221832G1	AN -7	PP983
PW Board Ass'y A2	GE-SS	47E221832G1	AN -7	PR106
PW Board Ass'y A3	GE-SS	47D221830G1	AN -3	PP959
PW Board Ass'y A4	GE-SS	47D221834G1	AN -4	PQ360
PW Board Ass'y A5	GE-SS	47E221826G1	AN -6	PQ335
PW Board Ass'y A6	GE-SS	47E221828G1	AN -5	PQ285
PW Board Ass'y A7	GE-SS	47E221830G1	AN -3	PP960
PW Board Ass'y A8	GE-SS	47D221836G1	AN -8	PQ598
PW Board Ass'y A9	GE-SS	47D221836G1	AN -8	PQ016
Ref. Osc. X4 Mult. A11	GE-SS	47E223316G1	AN -2	PR265
Volt Reg/VCO A15	GE-SS	47E223311G1	AN -6	PQ470
Volt Reg/VCO A16	GE-SS	47E223311G1	AN -6	PQ468
Volt Reg/VCO A17	GE-SS	47E223311G2	AN -6	PQ469
Volt Reg/VCO A18	GE-SS	47E223311G2	AN -6	PQ467
Diode Module A19	GE-SS	47E223380G1	AN -1	PQ353
Stripline	GE-RESD	47D178444G1	Rev E	MY583A2
Dis. If. Lim. A12	GE-RESD	47C148186P1	Rev C	MY585A4
WBFM POWER SUPPLY	GE-SS	47E223321G1	AN -11	6549509
Post Reg. Ass'y	GE-SS	47D223325G1	AN -5	PQ441
XSTR Brkt. Ass'y	GE-SS	47B223342G2	AN -8	PQ611
Pwr Trans. Ass'y	GE-SS	47D223356G1	AN -1	PQ738
Pwr Trans. Ass'y	GE-SS	47D223356G1	AN -1	PQ739
Conv. Ass'y A1	GE-SS	47D223305G1	AN -5	PQ437
Conv. Ass'y A3	GE-SS	47D223305G2	AN -5	PQ436
Cap Module A5	GE-SS	47E223309G1	None	PP531
Diode Module A6	GE-SS	47D223310G1	AN -1	PP529
Rect. Ass'y A7	GE-SS	47C223324G1	AN -2	PQ144
Rect. Ass'y A8	GE-SS	47C223324G1	AN -2	PQ145
Diode Ass'y A9	GE-SS	47C223349G1	None	PQ354
POWER SWITCHING MODULE	GE-SS	47E221925G1	AN -9	6549500
Conn. Plate Ass'y	GE-SS	47D221879G1	AN -3	PQ346
Relay Ass'y A1	GE-SS	47D221956G1	AN -1	PQ166
Relay Ass'y A2	GE-SS	47D221956G1	AN -1	PQ168
Relay Ass'y A3	GE-SS	47D221956G1	AN -1	PQ165
Relay Ass'y A4	GE-SS	47D221956G1	AN -1	PQ169
Relay Ass'y A5	GE-SS	47D221956G1	AN -1	PQ167
Telem. Resistor Ass'y A6	GE-SS	47D221954G1	AN -3	PQ199
Diode Ass'y A7	GE-SS	47D221955G1	AN -2	PQ200
Fuse Ass'y A8	GE-SS	47D221953G1	AN -2	PQ171
Fuse Ass'y A9	GE-SS	47D221953G2	AN -2	PQ170
Relay Bd Ass'y A10	GE-SS	47D221886G1	AN -3	PQ064
Relay Panel, Top A11	GE-SS	47D221969G1	AN -2	PQ348
Relay Panel, Bot. A12	GE-SS	47D221970G1	AN -3	PQ351

Sheet 2
Rev. E

CONSOLIDATED CONFIGURED ARTICLES LIST

ERTS SPACECRAFT 904

NOMENCLATURE	SUPPLIER	DWG & PART NO	REV	SERIAL NO.
COMMAND INTEGRATION UNIT	GE-SS	47E221775G1	AN -5	6549450
Chassis Ass'y A1	GE-SS	47D221813G1	AN -3	PQ852
Cordwood Module A3	GE-SS	47D221797G1	AN -4	PQ674
Cordwood Module A5	GE-SS	47D221798G1	AN -5	PQ676
Cordwood Module A6	GE-SS	47D221796G1	AN -4	PQ637
Cordwood Module A7	GE-SS	47D221799G1	AN -4	PQ214
Cordwood Module A8	GE-SS	47E221800G1	AN -3	PQ212
Stick Module A9	GE-SS	47E221801G1	None	PQ417
Stick Module A12	GE-SS	47E221804G1	AN -1	PQ316
Stick Module A13	GE-SS	47E221805G1	None	PQ478
Stick Module A14	GE-SS	47E221806G1	AN -2	PQ313
Stick Module A15	GE-SS	47E221807G1	AN -1	PQ479
Cordwood Module A16	GE-SS	47E221852G1	AN -2	PQ210
Stick Module A17	GE-SS	47E221853G1	AN -3	PQ311
Cordwood Module A18	GE-SS	47E221851G1	AN -5	PQ665
Chassis Ass'y A2	GE-SS	47D221813G2	AN -3	PQ851
Cordwood Module A3	GE-SS	47D221797G1	AN -4	PQ673
Cordwood Module A5	GE-SS	47D221798G1	AN -5	PQ675
Cordwood Module A6	GE-SS	47D221796G1	AN -4	PQ636
Cordwood Module A7	GE-SS	47D221799G1	AN -4	PQ215
Cordwood Module A8	GE-SS	47E221800G1	AN -3	PQ213
Stick Module A9	GE-SS	47E221801G1	None	PQ416
Stick Module A12	GE-SS	47E221804G1	AN -1	PQ317
Stick Module A13	GE-SS	47E221808G1	None	PQ481
Stick Module A14	GE-SS	47E221806G1	AN -2	PQ648
Stick Module A15	GE-SS	47E221807G1	AN -1	PQ480
Cordwood Module A16	GE-SS	47E221852G1	AN -2	PQ211
Stick Module A17	GE-SS	47E221853G1	AN -3	PQ312
Cordwood Module A18	GE-SS	47D221851G1	AN -5	PQ666
Chassis Ass'y A3	GE-SS	47D221811G1	AN -4	PR021
P.C. Bd. Ass'y A1	GE-SS	47D221918G1	AN -6	PQ928
Rect. & Filter Module A2	GE-SS	47D221793G1	None	PQ344
P.C. Bd. Ass'y A3	GE-SS	47D221919G1	AN -5	PQ927
Rect. & Filter Module A4	GE-SS	47D221793G1	None	PQ345
RBV MMCA	GE-SS	47D224600G1	None	6549512
Coil Housing	GE-SS	47D224605G1	None	DJ089
Panel Assembly	GE-SS	47C224608G1	AN -3	PR012
Coil Assembly	GE-SS	47D224602G1	AN -2	PQ901
AUX LOAD PANEL #1	GE-SS	47E210850G3	AN -11	6549288
AUX LOAD PANEL #2	GE-SS	47E210850G3	AN -11	6549311
AUX LOAD CONTROLLER	GE-SS	47E210783G3	AN -8	6549313
Relay Panel A1	GE-SS	47E210781G1	AN -10	PN996
Relay Panel A2	GE-SS	47E210787G1	AN -14	PN995

Sheet 3
Rev. A

CONSOLIDATED CONFIGURED ARTICLES LIST

ERTS SPACECRAFT 904

NOMENCLATURE	SUPPLIER	DWG & PART NO.	REV	SERIAL NO.
AUX. PROCESSING UNIT	GE-SS	47E221855-G1	AN-14	6549503
Housing Assy. 1	GE-SS	47E221899-G1	AN-6	TY413
IC Chassis Assy. 2	GE-SS	47D221884-G1	AN-4	PQ600
Module A1	GE-SS	47E221861-G1	AN-3	PP840
Module A2	GE-SS	47E221862-G1	AN-1	PP844
Module A3	GE-SS	47E221861-G1	AN-3	PP841
Module A4	GE-SS	47E221862-G1	AN-1	PP843
Module A5	GE-SS	47E221867-G1	AN-3	PP863
Module A6	GE-SS	47E221868-G1	AN-6	PP862
Module A7	GE-SS	47E221868-G1	AN-6	PP864
Module A8	GE-SS	47E221865-G1	AN-2	PP895
Module A9	GE-SS	47E221866-G1	AN-2	PP894
Module A10	GE-SS	47E221863-G1	AN-1	PP842
Module A11	GE-SS	47E221864-G1	AN-3	PP848
Module A12	GE-SS	47E221869-G1	AN-2	PP861
Module A13	GE-SS	47E221870-G1	AN-1	PP859
Module A14	GE-SS	47E221871-G1	AN-2	PQ428
Module A15	GE-SS	47E221872-G1	AN-1	PP893
Module A16	GE-SS	47E221873-G1	AN-2	PP833
Module A17	GE-SS	47E221874-G1	AN-1	PP834
Module A18	GE-SS	47D221875-G1	AN-1	PP159
Module A19	GE-SS	47D221881-G1	AN-6	PQ203
Module A20	GE-SS	47D221875-G1	AN-1	PP161
Module A21	GE-SS	47D221881-G1	AN-6	PQ204
Module A22	GE-SS	47D221882-G1	AN-2	PQ201
Module A23	GE-SS	47D221880-G1	AN-3	PQ209
Module A24	GE-SS	47D221875-G1	AN-1	PP160
Module A25	GE-SS	47D221881-G1	AN-6	PQ202
Module A26	GE-SS	47D221876-G1	AN-3	PQ205
PC Bd. Assy.A27	GE-SS	47D221894-G1	AN-6	PQ376
PC Bd. Assy.A28	GE-SS	47D221897-G1	AN-1	PQ380
Module A29	GE-SS	47D221906-G1	AN-4	PQ 340
WIDEBAND ANTENNA # 1	GE-SS	47D222340G1	AN-4	6549452
WIDEBAND ANTENNA # 2	GE-SS	47D222340G1	AN-4	6549453
DCS ANTENNA	GE-SS	47D210564G3	AN-6	6549519
COMMAND ANTENNA	GE-SS	113C7468G1	AN-3	6549230
QUADRALOOP ANTENNA # 1	GE-SS	248E754G8	AN-6	6549399
QUADRALOOP ANTENNA # 2	GE-SS	248E754G8	AN-6	6549396
QUADRALOOP ANTENNA # 3	GE-SS	248E754G8	AN-6	6549397
QUADRALOOP ANTENNA # 4	GE-SS	248E754G8	AN-6	6549400
S BAND ANTENNA	GE-SS	111C2955G5	AN-8	6549359

Sheet 4
REV. C

CONSOLIDATED CONFIGURED ARTICLES LIST

ERTS SPACECRAFT 904

NOMENCLATURE	SUPPLIER	DWG & PART NO.	REV	SERIAL NO.
TEMPERATURE CONTROLLER-BAY 1	GE-SS	47E213640G5	AN-7	6549377
Bellows	Flexonics	47C213633P1	AN-2	FX566-A12
TEMPERATURE CONTROLLER-BAY 2	GE-SS	47E213640G5	AN-7	6549384
Bellows	Flexonics	47C213633P1	AN-2	FX566-A39
TEMPERATURE CONTROLLER-BAY 3	GE-SS	47E213640G5	AN-7	6549388
Bellows	Flexonics	47C213633P1	AN-2	FX566-A29
TEMPERATURE CONTROLLER-BAY 4	GE-SS	47E213640G5	AN-7	6549382
Bellows	Flexonics	47C213633P1	AN-2	FX566-A23
TEMPERATURE CONTROLLER-BAY 5	GE-SS	47E213640G5	AN-7	6549370
Bellows	Flexonics	47C213633P1	AN-2	FX566-A1
TEMPERATURE CONTROLLER-BAY 7	GE-SS	47E213640G5	AN-7	6549390
Bellows	Flexonics	47C213633P1	AN-2	*
TEMPERATURE CONTROLLER-BAY 8	GE-SS	47E213640G5	AN-7	6549373
Bellows	Flexonics	47C213633P1	AN-2	FX566-A48
TEMPERATURE CONTROLLER-BAY 9	GE-SS	47E213640G5	AN-7	6549375
Bellows	Flexonics	47C213633P1	AN-2	FX566-A51
TEMPERATURE CONTROLLER-BAY 10	GE-SS	47E213640G5	AN-7	6549387
Bellows	Flexonics	47C213633P1	AN-2	*
TEMPERATURE CONTROLLER-BAY 11	GE-SS	47E213640G5	AN-7	6549383
Bellows	Flexonics	47C213633P1	AN-2	FX566-A3
TEMPERATURE CONTROLLER-BAY 12	GE-SS	47E213640G5	AN-7	6549372
Bellows	Flexonics	47C213633P1	AN-2	FX566-A4
TEMPERATURE CONTROLLER-BAY 13	GE-SS	47E213640G5	AN-7	6549371
Bellows	Flexonics	47C213633P1	AN-2	FX566-A50
TEMPERATURE CONTROLLER-BAY 14	GE-SS	47E213640G5	AN-7	6549374
Bellows	Flexonics	47C213633P1	AN-2	FX566-A19
TEMPERATURE CONTROLLER-BAY 15	GE-SS	47E213640G5	AN-7	6549376
Bellows	Flexonics	47C213633P1	AN-2	FX566-A55
TEMPERATURE CONTROLLER-BAY 16	GE-SS	47E213640G5	AN-7	6549381
Bellows	Flexonics	47C213633P1	AN-2	FX566-A37
TEMPERATURE CONTROLLER-BAY 17	GE-SS	47E213640G5	AN-7	6549389
Bellows	Flexonics	47C213633P1	AN-2	FX566-A28
TEMPERATURE CONTROLLER-BAY 18	GE-SS	47E213640G5	AN-7	6549385
Bellows	Flexonics	47C213633P1	AN-2	FX566-A2

* Bellows S/N FX-566-A6 and FX-566-A22 are installed in Temperature Controllers 6549387 and 6549390. Ref: PAPE Memo 1350-ERTS-327.

Sheet 5
REV. B

CONSOLIDATED CONFIGURED ARTICLES LIST

ERTS SPACECRAFT 904

NOMENCLATURE	SUPPLIER	DWG & PART NO.	REV	SERIAL NO.
SEP. & UNFOLD TIMER	GE-SS	47E210587G1	AN-1	5962963
Comp. Assy. A1	GE-SS	47E210585G1	AN-1	00174
PADDLE DAMPER #1	GE-SS	248E126G1	AN-14	6549541
PADDLE DAMPER #2	GE-SS	248E126G1	AN-14	6549542
TELEMETRY CONVERSION MODULE#1	GE-SS	47E207682G1	AN-15	5962964
TELEMETRY CONVERSION MODULE#2	GE-SS	47E207682G1	AN-15	5962965
TELEMETRY CONVERSION MODULE#3	GE-SS	47E207682G1	AN-15	6549315
ADAPTER	GE-SS	47E224465G1	AN-6	006
PREFLIGHT DISCONNECT	KINETICS	47E211225P2	NONE	0010
SEPARATION SWITCH #1	MINN.-H.	133B1902P2	AN-5	201
SEPARATION SWITCH #2	MINN.-H.	133B1902P2	AN-5	200
SEPARATION SWITCH #3	MINN.-H.	133B1902P2	AN-5	202
SEPARATION SWITCH #4	MINN.-H.	133B1902P2	AN-5	204
UNFOLD SWITCH	MINN.-H.	133B1943P2	AN-5	300
PREMOD. PROCESSOR	SCI	2600000-1	A	FT1
Electronics Assy.	SCI	2600060-1	A	002
PCB Assy., Pwr. Filter	SCI	2600037-1	A	001
PCB Assy., Pwr. Supply	SCI	2600049-1	A	001
PCB Assy., Pwr. Supply	SCI	2600049-1	A	004
PCB Assy., Sec. Sw.	SCI	2600068-1	B	003
PCB Assy., Tape Rec. Sw.	SCI	2600043-1	A	004
PCB Assy., 597KHZ Mod.	SCI	2600031-1	A	002
PCB Assy., 768KHZ Mod.	SCI	2600034-1	B	003
PCB Assy., CSSN	SCI	2600046-1	A	003
PCB Assy., Discriminator	SCI	2600040-1	A	004
PCB Assy., Discriminator	SCI	2600040-1	A	005

Sheet 6
Rev. D

CONSOLIDATED CONFIGURED ARTICLES LIST

ERTS SPACECRAFT 904

NOMENCLATURE	SUPPLIER	DWG & PART NO.	REV	SERIAL NO.
Unified S-Band Equipment	Motorola	01-P09566C001	E	EAB - FT2
Frequency Multiplier 1A7		01-P09568C001	C	A106
Frequency Multiplier 1A17		01-P09568C001	C	A105
Wide Band Detector 1A4		01-P09570C001	D	A106
Limiter Amplifier AR001		01-P09627C001	None	A103
Limiter Amplifier AR002		01-P09627C001	None	A122
Limiter Amplifier AR003		01-P09627C001	None	A123
Limiter Amplifier AR006		01-P09627C001	None	A124
Divider 19-9.5MC A002		01-P09632C001	A	A106
Buffer Amplif. 9.5MC AR005		01-P09635C001	None	A106
Signal Driver A001		01-P09644C001	B	A103
Ref Driver A003		01-P09646C001	B	A106
Subcarrier Amp. AR007		01-P09648C001	None	A106
Ranging Ampl. AR004		01-P09650C001	A	A106
Wide Band Detector 1A14		01-P09570C001	D	A105
Limiter Amp. AR001		01-P09627C001	None	A118
Limiter Amp. AR002		01-P09627C001	None	A119
Limiter Amp. AR003		01-P09627C001	None	A120
Limiter Amp. AR006		01-P09627C001	None	A121
Divider 19-9.5MC A002		01-P09632C001	A	A105
Buffer Amp. 9.5MC AR005		01-P09635C001	None	A105
Signal Driver A001		01-P09644C001	B	A107
Ref. Driver A003		01-P09646C001	B	A105
Subcarrier Amp. AR007		01-P09648C001	None	A105
Ranging Amp. AR004		01-P09650C001	A	A104
Auxiliary Osc. PM 1A9		01-P09553C001	H	A105
Switching Network A001		01-P09557C001	None	A105
Auxiliary Osc. PM 1A19		01-P09553C001	H	A106
Switching Network A001		01-P09557C001	None	A106
Voltage Control Osc. 1A8		01-P09548C001	F	A106
Voltage Control Osc 1A18		01-P09548C001	F	A104
Narrow Band Detector 1A2		01-P09544C001	E	A106
Narrow Band Detector 1A12		01-P09544C001	E	A105
IF Amplifier Mixer 1A1		01-P09540C001	D	A106
IF Amplifier Mixer 1A11		01-P09540C001	D	A105
RF Converter 1A3		01-P09572C001	E	A105
RF Converter 1A13		01-P09572C001	E	A102
Pow. Amp/X30 Mult PM 1A10		01-P09585C001	H	A105
Helical Resonator A002		01-P09658C001	None	A105
Filter-Power Amp. A001		01-P09711C001	None	A105
Freq. Mult X3		01-P09714C001	A	A105
S Band Power Amp.		01-P09589C001	F	A106
Pow. Amp/X30 Mult PM 1A20		01-P09585C001	H	A106
Helical Resonator A002		01-P09658C001	None	A106
Filter-Power Amp. A001		01-P09711C001	None	A106
Freq. Mult X3		01-P09714C001	A	A106
S Band Power Amp		01-P09589C001	F	A103
Diplexer 1A21		01-P09602C001	D	A101
Power Converter XMTR 1A5		01-P09577C001	G	A105
Regulator A001		01-P09689C001	C	A111

Sheet 7
Rev. A

CONSOLIDATED CONFIGURED ARTICLES LIST

ERTS SPACECRAFT 904

NOMENCLATURE	SUPPLIER	DWG & PART NO.	REV	SERIAL NO.
Unified S-Band Equip. (Cont.)	Motorola			
Power Converter XMTR 1A15		01-P09577C001	G	A104
Regulator A001		01-P09689C001	C	A106
Power Converter RCVR 1A6		01-P09740C001	G	A106
Regulator A001		01-P09689C001	C	A110
Power Converter RCVR 1A16		01-P09740C001	G	A105
Regulator A001		01-P09689C001	C	A112
Connector/EMI Box 1A22		01-P09604C001	G	A102
Cable Assembly W1		30-P02306D001	D	A103
Cable Assembly W2		30-P02306D002	D	A103
Cable Assembly W3		30-P02306D003	D	A103
Cable Assembly W4		30-P02306D004	D	A103
Cable Assembly W5		30-P02306D005	D	A103
Cable Assembly W6		30-P02306D006	D	A103
Cable Assembly W7		30-P02306D007	D	A103
Cable Assembly W8		30-P02306D008	D	A103
Cable Assembly W9		30-P02306D009	D	A103
Cable Assembly W10		30-P02306D010	D	A103
Cable Assembly W11		30-P02306D011	D	A103
Cable Assembly W12		30-P02306D012	D	A103
Cable Assembly W13		30-P02306D013	D	A103
Cable Assembly W14		30-P02306D014	D	A103
Cable Assembly W15		30-P02306D015	D	A104
Cable Assembly W16		30-P02306D016	D	A101
Cable Assembly W17		30-P02306D017	D	A101
Cable Assembly W18		30-P02306D018	D	A103
Cable Assembly W19		30-P02306D019	D	A103
Cable Assembly W20		30-P02306D020	D	A103
Cable Assembly W21		30-P02306D021	D	A103
Cable Assembly W22		30-P02306D022	D	A103
Cable Assembly W23		30-P02306D023	D	A103
Cable Assembly W24		30-P02306D024	D	A103
Cable Assembly W25		30-P02319D001	B	A102
Cable Assembly W26		30-P02307D001	B	A103
Cable Assembly W27		30-P02307D002	B	A103
Cable Assembly W28		30-P02318D001	C	A103
Cable Assembly W29		30-P02317D001	B	A103
Cable Assembly W30		30-P02320D001	C	A103
Cable Assembly W31		30-P02321D001	B	A103
Cable Assembly W32		30-P02306D025	D	A103
Cable Assembly W33		30-P02306D026	D	A103
Wide band Filter #1	Peninsula	Model F1522B	none	3
Wide band Filter #2	Peninsula	Model F1522B	none	6

Sheet 8

Rev. D

CONSOLIDATED CONFIGURED ARTICLES LIST

ERTS SPACECRAFT 904

NOMENCLATURE	SUPPLIER	DWG & PART NO.	REV	SERIAL NO.
COMMAND CLOCK SUBASSEMBLY	Calcomp	20001-102-201	None	NEF-FT1
Motor Drive Ass'y	Calcomp	10812-502-000	3	F010
Frequency Amplifier Ass'y 1	Calcomp	10814-502-111	7	F010
Time Code Ass'y	Calcomp	10816-502-000	3	F011
Frequency Amplifier Ass'y 2	Calcomp	10818-502-000	2	F010
Comstor Memory Ass'y	Calcomp	10820-502-000	4	F010
Comstor Logic Ass'y	Calcomp	10822-502-000	1	F010
Comdec Ass'y	Calcomp	20438-502-000	1	F010
Telemetry Ass'y	Calcomp	10826-502-000	4	F010
Matrix Ass'y	Calcomp	10828-502-000	5	F010
Power Supply #1	Calcomp	10830-502-101	5	F010
Power Supply #2	Calcomp	10832-502-101	6	F010
Oscillator (A)	Calcomp	10003-503		F010
Oscillator (B)	Calcomp	10003-503		F011
INTERFACE SWITCHING MODULE	Calcomp	20002-102	1	EAB-FT1
Relay Network No. 2B	Calcomp	10326-502-100	3	F3007
Relay Network No. 1	Calcomp	10323-502-000	3	F3009
Relay Network No. 1	Calcomp	10323-502-000	3	F3010
Relay Network No. 2B	Calcomp	10326-502-100	3	F3008
Resistor Network	Calcomp	20431-502-000	1	F3003
Relay Network No. 1	Calcomp	10323-502-000	3	F3006
Relay Network No. 2B	Calcomp	10326-502-100	3	F3010
Resistor Network	Calcomp	20431-502-000	1	F3005
Relay Network No. 4B	Calcomp	10475-502-000	2	F3002
Relay Network No. 2B	Calcomp	10326-502-100	3	F3009
Relay Network No. 1	Calcomp	10323-502-000	3	F3008
Relay Network No. 1	Calcomp	10323-502-000	3	F3007
Cable No. 1 - Jumper	Calcomp	10111-401-000	4	F3006
Cable No. 1 - Jumper	Calcomp	10111-401-000	4	F3004
Cable No. 1 - Jumper	Calcomp	10111-401-000	4	F3005
Cable No. 2 - Jumper	Calcomp	10110-401-000	2	F3009
Cable No. 2 - Jumper	Calcomp	10110-401-000	2	F3010
Cable No. 2 - Jumper	Calcomp	10110-401-000	2	F3011
Cable No. 2 - Jumper	Calcomp	10110-401-000	2	F3008
Cable No. 4 - Jumper	Calcomp	10146-401-000	3	F3003
Cable No. 6 - Jumper	Calcomp	10269-401-000	5	F3003
Cable No. 6 - Jumper	Calcomp	10269-401-000	5	F3004
Cable No. 9 - Jumper	Calcomp	20205-401-000	None	F3004
Cable No. 9 - Jumper	Calcomp	20205-401-000	None	F3003

Sheet 9

CONSOLIDATED CONFIGURED ARTICLES LIST

ERTS SPACECRAFT 904

NOMENCLATURE	SUPPLIER	DWG & PART NO.	REV	SERIAL NO.
Attitude Control System	GE-SS	47E213514G2	AN-7	111
Telemetry Conversion Module	GE-SS	238R405G2	AN-17	9795045
Initiation Timer	NASA-GSFC	47D212723P1	AN-2 #	005
Structure/Thermal Subsystem	FHC	831-11-1000-1	A	NEF-FT1
Louver, Ht. Shld, & Supt.	FHC	831-11-0300-11	D	3
Louver Support Assembly	FHC	831-11-0301-21	G	3
Heat Shield Assembly	FHC	831-11-0306-31	K	3
Louver Assembly	FHC	831-11-0120-31	B	3
Temperature Sensing Inst.	FHC	831-11-0142-21	G	3
Albedo Shield, Left	FHC	831-11-0210-61	B*	3
Albedo Shield, Right	FHC	831-11-0210-62	B*	3
Temperature Sensing Inst.	FHC	831-11-0142-31	G	N/A
Structure	FHC	831-11-0101	H	NEF-FT1
Pitch Reaction Wheel	Bendix	X1903155-1	NONE	706003
Wheel, Hub, & Rotor Ass'y.	Bendix	X1875403-1	NONE	4
Shaft & Stator Assembly	Bendix	X1875402-1	A	18
Shaft Final Machining	Bendix	X1875404-1	NONE	18
Motor Rotor	Bendix	X1877013-1	A	1
Motor Stator	Bendix	X1877036-1	NONE	704001
Yaw Reaction Wheel	Bendix	X1898720-1	C	908005
Flywheel & Rotor Assembly	Bendix	X1898721-1	C	208
Housing & Closure Mach. Asy.	Bendix	X1891422-1	B	1
Motor Stator	Bendix	X1877036-1	C	902002
Bearing Sleeve	Bendix	X1898717-1	A	1
Shouldered Shaft	Bendix	X1898730-1	B	1
Labyrinth Seal	Bendix	X1898728-1	NONE	1
Locking Ring	Bendix	X1898729-1	B	1
Control Logic Box	Ithaco	D40778G1	NONE	FT1
A1 Card	Ithaco	D40721G1	C	11521
A2 Card	Ithaco	D40752G1	B	11553
A3 Card	Ithaco	D40753G1	B	11536
A4 Card	Ithaco	D40754G1	B	11538
A5 Card	Ithaco	D40755G1	C	11594
A6 Card	Ithaco	D40253G2	C	11613
A7 Card	Ithaco	D40253G2	C	11557
A8 Card	Ithaco	D40728G1	B	11561
A9 Card	Ithaco	D40179G2	F	11533
RRWS/Signal Processor Asy. #1	Ithaco	D40770G1	A	FT2
Signal Processor	Ithaco	D40769G1	A	007
A1 Card	Ithaco	C30302G1	F	6147
A2 Card	Ithaco	C30303G1	G	6148
A3 Card	Ithaco	C30304G1	E	6149
Roll Reaction Wheel Scanner	Bendix	X1871380-2		711002

Reworked by GE-SS to Program Directive, PD 431

*plus EAI 1B

Sheet 10
REV. E

CONSOLIDATED CONFIGURED ARTICLES LIST

ERTS SPACECRAFT 904

NOMENCLATURE	SUPPLIER	DWG & PART NO.	REV	SERIAL NO.
Attitude Control System (cont)				
RRWS/Signal Processor Asy.#2	Ithaco	D40770G4	A	FT6
Signal Processor	Ithaco	D40769G4	A	11634
A1 Card	Ithaco	C30302G1	I	11527
A2 Card	Ithaco	C31066G1	B	11530
A3 Card	Ithaco	C31167G1	B	11532
Roll Reaction Wheel Scanner	Bendix	X1871380-2		7101001
Magnetic Moment Comp. Ass'y.	Ithaco	D40634G2	B	FT1
A1 Card	Ithaco	D40614G1	A	11648
A2 Card	Ithaco	D40615G2	A	11647
Pneumatics Subsystem	TRW	113580	E-1	FT005
Solenoid Valves				
+ Pitch		PT2-3030-1	G	14
- Pitch		PT2-3030-1	G	11
+ Roll		PT2-3030	G	021
- Roll		PT2-3030	G	022
+ Yaw		PT2-3030	G	020
- Yaw		PT2-3030	G	019
Supt.Nozzle Tube Assemblies				
+ Yaw		116599-5	C-5	065
- Yaw		116599-6	C-5	065
+ Yaw		113586- 6	C-5	063
- Yaw		113586- 5	C-5	062
Nozzles				
+ Pitch		113591-3	B-6	006
- Pitch		113591-3	B-6	005
+ Roll		113593-3	B-4	001
- Roll		113593-3	B-4	004
+ Yaw		113593-3	B-4	002
- Yaw		113593-3	B-4	003
+ Yaw		113593-3	B-4	010
- Yaw		113593-3	B-4	005
Regulator		PT2-3032-1	E	002
Low Pressure Transducer		PT2-3068	C	017
High Pressure Transducer		PT2-3033	F	1001
Tank Temperature Transducer		PT2-3083	B	0001
Manifold Temp. Transducer		PT2-3035-2	F	0001
Pressure Vessel		C113441-2	A-4	7
Fill Valve		C263256-1	E001	002
Manifold		113582-2	E-1	005
Mounting Platform		113581-6	E-1	005
LLPS Filter		C120631-1	NONE	004
Junction Box		233586-4	D-3	005

Sheet 11
Rev. C

CONSOLIDATED CONFIGURED ARTICLES LIST

ERTS SPACECRAFT 904

NOMENCLATURE	SUPPLIER	DWG & PART NO.	REV	SERIAL NO.
Attitude Control System (cont.)				
Solar Array Drive , LH	TRW	E246623-5	E	FT02
A1 Electronics		E235406-3	H	FT08
A2 Electronics		E235397-3	F	FT08
Wabble Gear		233773-2	E4	FT04
Motor		264666	none	10,20
Sun Sensor		E242143-1	C2	FT18,FT19
Voltage Regulator		E250692-1	D3	FT06
Transducer		PT2-3039	B	1006
Potentiometer		PT2-3040	B	643312
Slip Ring		C232457-1	B1	7
Solar Array Drive , RH		E246623-5	E	FT03
A1 Electronics		E235406-3	H	FT07
A2 Electronics		E235397-3	F	FT07
Wabble Gear		233773-2	E4	FT03
Motor		264666	NONE	11,21
Sun Sensor		E242143-1	C2	FT15,16
Voltage Regulator		E250692-1	D3	FT07
Transducer		PT2-3039	B	1007
Potentiometer		PT2-3040	B	648492
Slip Ring		C232457-1	B1	8
Rate Measuring Package, B	Sperry	4310-90641-903	F	FT03
Rate Loop Elect. Card	Sperry	4216-67676	F	10
Power Conditioning Card	Sperry	4216-67677	G	10
Heater Controller Card	Sperry	4216-67678	K	10
Telem. Sig. Cond. Card	Sperry	4216-67679	H	10
Relay Card A	Sperry	4310-90848	A	10
Relay Card B	Sperry	4310-90841	B	10
Inverter Subassembly	Sperry	4310-90633	F	10
RFI Assembly	Sperry	4310-90627	C	10
RMP Cable Harness	Sperry	4216-90956-2	F	10
Gyro, Rate Integrating	Sperry	1200941	D	8
Normalization Assembly	Sperry	4310-90843	F	9
Rate Measuring Package , A	Sperry	4310-90641-903	F	FT02
Rate Loop Elect. Card	Sperry	4216-67676	F	09
Power Conditioning Card	Sperry	4216-67677	G	09
Heater Controller Card	Sperry	4216-67678	K	09
Telem. Sig. Cond. Card	Sperry	4216-67679	H	09
Relay Card A	Sperry	4310-90848	A	09
Relay Card B	Sperry	4310-90841	B	09
Inverter Subassembly	Sperry	4310-90633	F	9
RFI Assembly	Sperry	4310-90627	C	9
RMP Cable Harness	Sperry	4216-90956-2	F	9
Gyro, Rate Integrating	Kearfott	C702564005	NONE	R32B
Normalization Assembly	Sperry	4310-90843	F	13

Sheet 12
Rev. B

CONSOLIDATED CONFIGURED ARTICLES LIST

ERTS SPACECRAFT 904

NOMENCLATURE	SUPPLIER	DWG & PART NO.	REV	SERIAL NO.
Attitude Control System (cont)				
Yaw Rate Gyro	Northrop	63861-302	J	FT2
Choke, Module		63880-301	C	101
Transformer, Module		63881-301	C	101
Thermistor, Module		63866-302	E	103
Gyroscope, Rate		79142-301	E	D-973
P.C.Component Board		63876-302	H	N2
P.C.Component Board		63877-302	G	N2
P.C.Component Board		63878-302	J	N2
P.C.Component Board		63879-302	H	N2
Package Assembly		63843-302	M	NEF/EAB-FT2
Component Board		63844-302	E	N2
Orbit Adjust Subsystem	Rkt.Rsrch.	26058-9	C	FT1
Thruster Assembly		25111-49	L	313
Thruster Assembly		25111-49	L	318
Thruster Assembly		25111-59	L	320
Trans. Box & Connector		24949-5	F	101
Attitude Measurement Sensor	Quantic	51877-01	D	FT1
IR Telescope Assembly		51788-01	F	002
Housing Assembly		51903-01	E	002
Objective Lens Assembly		51791-01	C	002
Filter Assembly		51797-01	A	002
Heat Sink Assembly		51807-01	C	002
Chopper Board Assembly		51878-01	E	003
Signal Board - Lower		51849-01	B	002
Signal Board - Upper		51853-01	B	002
Signal Board Assembly		51909-01	C	002
Connector Assembly		51907-01	C	002
DC-DC Converter Bd. Assembly		51873-01	E	002
Regulator Board Assembly		51883-01	G	002
Output Board Assembly		51890-01	C	002
WIDEBAND POWER AMP. #1	Watkins-Johnson	612970	C	QM1
Traveling Wave Tube	"	612965	A	3
LV Pwr Supply Assy.	"	612982	A	303
Card Ass'y No.1, LV	"	612984	A	401
Card Ass'y No.2, LV	"	612986	A	401
HV Pwr Supply Ass'y	"	612980	C	301
Card Ass'y No.1, HV	"	612997	B	303
Card Ass'y No.2, HV	"	612999	B	303
Card Ass'y Turn-On Con.	"	612944	A	401
Cable Ass'y, RF	"	612977	A	35
Cable Ass'y, RF	"	612978	A	37
Cable Ass'y, RF	"	612979	A	31
Thermistor	"	612957	None	2

Sheet 13

CONSOLIDATED CONFIGURED ARTICLES LIST

ERTS SPACECRAFT 904

NOMENCLATURE	SUPPLIER	DWG & PART NO.	REV	SERIAL NO.
WIDEBAND POWER AMPLIFIER #2	Watkins-	612970	C	FT2
Traveling Wave Tube	Johnson	612965	A	5
LV Pwr Supply Ass'y	"	612982	A	403
Card Ass'y No. 1, LV	"	612984	A	403
Card Ass'y No. 2, LV	"	612986	A	403
HV Pwr Supply Ass'y	"	612980	C	402
Card Ass'y No. 1, HV	"	612997	B	402
Card Ass'y No. 2, HV	"	612999	B	402
Card Ass'y Turn-On Con.	"	612944	A	403
Cable Ass'y, RF	"	612977	A	36
Cable Ass'y, RF.	"	612978	A	39
Cable Ass'y, RF	"	612979	A	33
Thermistor	"	612957	None	14
PCM TLM RECORDER #1	Leach	202835-001	A*	EAB-FT2
Preamp, Digital	Leach	202911-001	B	911003
Repr & Erase Con,Rec Logic	Leach	202915-001	E	915004
Amplifier, Record/Repr.	Leach	202920-001	D	920003
Motor Drive & Telemetry	Leach	202925-001	D	925003
Transport Group Subass'y	Leach	202930-001	C	930003
Lt. Source & Sensor Ass'y	Leach	202932-001	None	932003
Electronic Switch,Mtr Invt.	Leach	202965-001	None	965005
Electronic Switch,Mtr Invt.	Leach	202965-001	None	965006
Power Supply	Leach	202966-001	None	966003
Vtg Reg & Current Telemetry	Leach	202973-001	C	973003
Filter, EOT Backup	Leach	11-16195	A	195003
Magnetic Tape	Leach	1/4 - 551	None	503
PCM TLM RECORDER #2	Leach	202835-001	A*	EAB-FT1
Preamp, Dig Repr & Erase	Leach	202911-001	B	911002
Control, Recorder Logic	Leach	202915-001	E	915003
Amplifier, Record/Repr.	Leach	202920-001	D	920002
Motor Drive & Telemetry	Leach	202925-001	D	925002
Transport Group Subass'y	Leach	202930-001	A	930002
Lt. Source & Sensor Ass'y	Leach	202932-001	None	932002
Electronic Switch,Mtr Invt.	Leach	202965-001	None	965003
Electronic Switch,Mtr Invt.	Leach	202965-001	None	965004
Power Supply	Leach	202966-001	None	966002
Vtg Reg & Current Telemetry	Leach	202973-001	C	973002
Filter, EOT Backup	Leach	11-16195	A	195002
Magnetic Tape	Leach	1/4 - 551	None	501

*PLUS E.O. 15659

CONSOLIDATED CONFIGURED ARTICLES LIST

ERTS SPACECRAFT 904

NOMENCLATURE	SUPPLIER	DWG & PART NO	REV	SERIAL NO.
POWER SUBSYSTEM	RCA			
CONTROL MODULE	RCA	1759712-503	AG	008
A-1 Fuse Board Assy.	RCA	1759561-503	G	013
A-2 Fuse Board Assy.	RCA	1759561-504	G	017
A-3 C.F. Regulator Board	RCA	1759567-501	B	013
A-4 C.F. Regulator Board	RCA	1759567-501	B	014
A-5 Regulator Buss	RCA	1759570-501	E	013
A-6 Aux. Reg. & Trickle	RCA	1759569-501	C	013
A-7 Shunt Dis. Dr. & Telem.	RCA	1759577-501	E	013
A-8 Cur., Sensing & Telem.	RCA	1759582-501	C	013
A-9 Harness Assy.	RCA	1849873-501	E	013
A-10 Switch Bd. Assy.	RCA	1966505-501	C	013
A-11 Diode & Fil.Bd.Assy.	RCA	1966505-501	C	014
A-12 Filter Board Assy.	RCA	1965840-501	None	014
A-13 Cap. Assy.	RCA	1768958-501	B	016
A-14 Cap. Assy.	RCA	1768957-501	B	013
A-15 Heat Sink Assy.	RCA	1849560-501	D	013
A-16 Bracket Ht.Sk. Assy.	RCA	1768982-501	C	014
A-17 Filter Assy.	RCA	2263400-501	E	013
Inductor Assy.	RCA	1768483-501	D	013
Inductor Assy.	RCA	1763941-501	C	013
CONTROL MODULE	RCA	1759712-502		007
A-1 Fuse Board Assy.	RCA	1759561-501		05
A-2 Fuse Board Assy.	RCA	1759561-502		07
A-3 C.F. Regulator Board	RCA	1754567-501		012
A-4 C.F. Regulator Board	RCA	1759567-501		011
A-5 Regulated Buss	RCA	1759570-501		06
A-6 Aux. Reg. & Trickle	RCA	1759569-501		06
A-7 Shunt Dis. Dr. Telem.	RCA	1759577-501		06
A-8 Current, Sens. & Telem.	RCA	1759582-501		06
A-9 Harness Assy.	RCA	1849873-501		06
A-10 Sw. Bd. Assy.	RCA	1966502-501		06
A-11 Diode & Fil. Bd. Assy.	RCA	1966505-501		06
A-12 Filter Board Assy.	RCA	1965840-501		06
A-13 Cap. Assy.	RCA	1768958-501		06
A-14 Cap. Assy.	RCA	1768757-501		010
A-15 Heat Sink Assy.	RCA	1849560-501		05
A-16 Bracket Heat Sink Assy	RCA	1768982-501		06
A-17 Filter Assy.	RCA	2263400-501		001
Inductor Assy.	RCA	1768483-501		06
Inductor Assy.	RCA	1768941-501		010
BATTERY MODULE ASSY NO. 1	RCA	2265943-501	C	37
Electronic Bd.	RCA	1759578-502	J	37
Electronic Bd.	RCA	1849843-502	G	37
Relay & Harness, Bkt.Assy.	RCA	1849822-502	E	37
Heat Sink, Wiring Assy.	RCA	1849598-502	G	37

Sheet 15
Rev. A

CONSOLIDATED CONFIGURED ARTICLES LIST

ERTS SPACECRAFT 904

NOMENCLATURE	SUPPLIER	DWG & PART NO.	REV	SERIAL NO.
POWER SUBSYSTEM (CONTINUED)				
Battery Module Assy. No. 2	RCA	2265943-501	E	38
Electronic Board	RCA	1759578-502	J	38
Electronic Board	RCA	1849843-502	G	38
Relay & Harn, Bkt Assy.	RCA	1849822-502	E	46
Heat Sink, Wiring Assy.	RCA	1849598-502	G	38
Battery Module Assy. No. 3	RCA	2265943-501	E	41
Electronic Board	RCA	1759578-502	J	40
Electronic Board	RCA	1849843-502	G	40
Relay & Harn, Bkt Assy.	RCA	1849822-502	E	40
Heat Sink, Wiring Assy.	RCA	1849598-502	G	40
Battery Module Assy. No. 4	RCA	2265943-501	E	35
Electronic Board	RCA	1759578-502	J	35
Electronic Board	RCA	1849843-502	G	35
Relay & Harn, Bkt Assy.	RCA	1849822-502	E	35
Heat Sink, Wiring Assy.	RCA	1849598-502	G	35
Battery Module Assy. No. 5	RCA	2265943-501	E	34
Electronic Board	RCA	1759578-502	J	34
Electronic Board	RCA	1849843-502	G	34
Relay & Harn, Bkt Assy.	RCA	1849822-502	E	34
Heat Sink, Wiring Assy.	RCA	1849598-502	G	34
Battery Module Assy. No. 6	RCA	2265943-501	E	39
Electronic Board	RCA	1759578-502	J	39
Electronic Board	RCA	1849843-502	G	39
Relay & Harn, Bkt Assy.	RCA	1849822-502	E	39
Heat Sink, Wiring Assy.	RCA	1849598-502	G	39
Battery Module Assy. No. 7	RCA	2265943-501	E	36
Electronic Board	RCA	1759578-502	J	36
Electronic Board	RCA	1849843-502	G	36
Relay & Harn, Bkt Assy.	RCA	1849822-502	E	36
Heat Sink, Wiring Assy.	RCA	1849598-502	G	36
Battery Module Assy. No. 8	RCA	2265943-501	E	33
Electronic Board	RCA	1759578-502	J	33
Electronic Board	RCA	1849843-502	G	33
Relay & Harn, Bkt Assy.	RCA	1849822-502	E	33
Heat Sink, Wiring Assy.	RCA	1849598-502	G	33
Solar Platform & Array	RCA	2271152-501	B	101
Transition Array	RCA	2271170-501	C	002
Solar Platform	RCA	2271139-501	C	002
Platform Motor Drive	RCA	2271118-501	D	102
Motor Mount Subassy.	RCA	2271109-501	D	102
Drive Motor Assy.	RCA	1751589-501	D	105
Motor	RCA	1751588-1		103

Sheet 16
Rev B

CONSOLIDATED CONFIGURED ARTICLES LIST

ERTS SPACECRAFT 904

NOMENCLATURE	SUPPLIER	DWG & PART NO.	REV	SERIAL NO.
POWER SUBSYSTEM (CONTINUED)				
Solar Platform & Array	RCA	2271152-502	B	101-001
Transition Array	RCA	2271113-501	B	001
Solar Platform	RCA	2271139-502	C	001
Platform Motor Drive	RCA	2263808-501	E	103
Plat. Motor Drive	RCA	1976768-501	C	105
Drive Motor Assembly	RCA	1751589-501	C	
Motor	RCA	1751588-1	A	32
COMMAND RECEIVER	RCA	2271145-501	M	02
A4 Receiver Assembly	RCA	2270108-501	E	002
A1 IF Amp. Board	RCA	1723546-503	L	103
A2 IF Amp. Board	RCA	1723546-503	L	104
A3 Osc. & RF Amp. Board	RCA	1843178-503	D	102
A4 Osc. & RF Amp. Board	RCA	1843178-503	D	103
Demodulator Comp.	RCA	2271154-501	H	004
Demodulator Comp.	RCA	2271154-501	H	005
Regulator & Telemetry	RCA	2271153-501	F	002
Antenna Coupler	RCA	2262728-501	B	005
Diode Board Assembly	RCA	1974688-501	A	002
Comp. Board Assembly	RCA	2262746-501	E	004
DCS RECEIVER "A"	Radiation	613310G1	B	FT4
Preselector Assembly	Radiation	529220G1	A	0004
Second IF	Radiation	124226G1	A	0004
Limiter	Radiation	124227G1	A	0004
Relay	Radiation	124228G1	A	0004
First IF	Radiation	124229G1	B	0004
R.F. Amplifier	Radiation	124230G1	A	0004
Power Supply	Radiation	124231G1	A	0004
Osc. & X6 VHF Receiver	Radiation	124232G1	A	0004
First Doubler	Radiation	124233G1	A	0004
Second Doubler	Radiation	124234G1	A	0004
Buffer Amplifier	Radiation	124609G1	A	0004
Coaxial Relay	Radiation	529228G1	None	0003
DCS RECEIVER "B"	Radiation	613310G1	B	FT5
Preselector Assembly	Radiation	529220G1	A	0005
Second IF	Radiation	124226G1	A	0005
Limiter	Radiation	124227G1	A	0005
Relay	Radiation	124228G1	A	0005
First IF	Radiation	124229G1	B	0005
R.F. Amplifier	Radiation	124230G1	A	0005
Power Supply	Radiation	124231G1	A	0005
Osc. & X6 VHF Receiver	Radiation	124232G1	A	0005
First Doubler	Radiation	124233G1	A	0005
Second Doubler	Radiation	124234G1	A	0005
Buffer Amplifier	Radiation	124609G1	A	0005
Coaxial Relay	Radiation	529228G1	None	0004

Sheet 17
Rev. C

CONSOLIDATED CONFIGURED ARTICLES LIST

ERTS SPACECRAFT 904

NOMENCLATURE	SUPPLIER	DWG & PART NO.	REV	SERIAL NO.
VERSATILE INFORMATION PROCESSOR	RADIATION	607640G11	B2	NIM D RESID
Reprogrammer		608141G3	B	0004
Elec. Assy.		608140G3	B	0004
Serial Regulator		520110G2	B	0004
Command Relays		520111G4	C	0004
Command Relays		520112G2	B	0004
Output Buffer Amplifier		520113G2	B	0004
Heat Sink		411483G2	B	0004
Digital Multiplexer		608091G5	C	0004
Elec. Assy.		608090G5	E	0004
Dig. Gates Assy. A1		520060G2	A	0016
Dig. Gates Assy. A2		520060G2	A	0015
Dig. Gates Assy. A3		520060G2	A	0014
Dig. Gates Assy. A4		520060G2	A	0013
Dig. Sequencer Assy. A5		520062G2	A	0004
Decoder Matrix A6		520063G2	B	0004
DC/DC Converter P.S. A7		520081G1	A	0003
Out. Reg. & T.C. Buffer A8		520086G1	A	0006
Out. Reg. & T.C. Buffer A9		520086G1	A	0005
Dig. Add. & Ser. Data A10		520087G1	C	0006
Dig. Add. & Ser. Data A11		520087G1	C	0005
Dig. Ctr.& CMD. A12		520089G1	A	0001
Dig. Ctr. & CMD A13		520089G1	A	0002
Formatter, DC/DC Conv. A14		520085G1	A	0003
Dig. Interface Buff. A15		520084G1	B	0006
Dig. Interface Buff. A16		520084G1	B	0003
Memory Sequencer		608241G3	E2	0004
Elec. Assy.		608240G2	A	0004
Cont & Out Reg Assy A1		520232G1	B	0006
Funct Gen & Repr Assy A2		520233G1	B1	0005
Instr Ctr & Comp Assy A3		520234G1	A	0006
Cont & Output Reg Assy A4		520232G1	B	0005
Funct Gen & Repr Assy A5		520233G1	B1	0006
Instr Ctr & Comp Assy A6		520234G1	A	0005
DC/DC Converter Assy A7		520235G1	B	0003
Memory A		608191G9	D2	0005
Elec. Assy.		608190G5	C2	0005
Section I Assy. A1		520170G3	C	NA
Mem. Amp. Assy, Sec I		520161G4	D	0009
Memory Array Assy, Sec II		519218G3	B	NA
Memory Array, Sec. I		520168G3	B	0008
Mem. Amp. Assy. Sec. I		520161G4	D	0010
Decode Assy Sec. I & III A2		520184G1	C1	0003
Bit Driver, Sec II A3		520185G1	D	0003
B.D. & Data Reg. Sec III A4		520186G2	C	0003
Decoder, Sec. II A5		520183G1	B	0003
Assy. Sec. II & III A6		520171G3	D1	NA

Sheet 18
Rev A

CONSOLIDATED CONFIGURED ARTICLES LIST

ERTS SPACECRAFT 904

NOMENCLATURE	SUPPLIER	DWG & PART NO	REV	SERIAL NO.
V.I.P. (continued)				
Memory A (continued)				
Mem. Array Assy, Sec II		519218G4	B	NA
Mem. Array See II		520168G4	B	0010
Mem. Amp Assy II & III		520182G2	A	0003
Mem. Array Assy, Core		519220G2	C	NA
Mem. Array Assy, Core		520169G2	B	0005
DC/DC Converter A7		520187G1	B	0003
Memory B		608191G9	D2	0007
Elec. Assy.		608190G5	C2	0007
Section I Assy. A1		520170G3	C	NA
Mem. Amp. Assy, Sec I		520161G4	D	0013
Memory Array Assy, Sec II		519218G3	B	NA
Memory Array Sec. I		520168G3	B	0012
Mem. Amp. Assy. Sec. I		520161G4	D	0014
Decode Assy Sec I & II A2		520184G1	C1	0005
Bit Driver, Sec II A3		520185G1	C	0005
B.D. & Data Reg Sec II A4		520186G2	C1	0005
Decoder, Sec. II A5		520183G1	B	0005
Assy. Sec. II & III A6		520171G3	D1	NA
Mem. Array Assy, Sec II		519218G4	B	NA
Mem. Array, Sec II		520168G4	B	0013
Mem. Amp. Assy, II & III		520182G2	A	0005
Mem. Array Assy, Core		519220G2	C	NA
Mem. Array Assy, Core		520169G2	B	0007
DC/DC Converter A7		520187G1	B	0005
Analog Multiplexer		608041G3	B	0003
Elec. Assy.		608040G3	C	0003
Coder Analog Assy A1		520033G1	C1	0003
DC/DC Conv. Card Assy. A2		520034G1	A2	0005
DC/DC Conv. Card Assy. A3		520034G1	A2	0003
Coder Analog Assy. A4		520033G1	C1	0004
Analog Matrix Assy. A5		520031G1	A2	0004
DC/DC Conv. &pwr. Assy A6		520032G1	B1	0003
Analog Matrix Assy. A7		520031G1	A2	0003
Analog Gates Assy. A8		520030G1	B	0018
Analog Gates Assy A9		520030G1	B	0017
Analog Gates Assy. A10		520030G1	B	0016
Analog Gates Assy. A11		520030G1	B	0015
Analog Gates Assy. A12		520030G1	B	0013
Analog Gates Assy. A13		520030G1	B	0011
Analog Gates Assy. A14		520030G1	B	0012
Analog Gates Assy. A15		520030G1	B	0010
Analog Gates Assy. A16		520030G1	B	0009

Sheet 19

CONSOLIDATED CONFIGURED ARTICLES LIST

ERTS SPACECRAFT 904

NOMENCLATURE		SUPPLIER	DWG & PART NO.	REV	SERIAL NO.
VHF TRANSMITTER		RADIATION	613202G1	A1	0003
Electrical Assembly			613205G1	None	0002
RF Transmitter Assembly			613203G1	B2	0002
Oscillator/Buffer	A1		529611G1	A5	0003
Phase Modulator	A2		529738G1	A2	0005
Limiter Tripler	A3		529612G1	A7	0005
Driver Amplifier	A4		418053G1	A7	0006
300 MV Amplifier	A5		529609G1	A5	0003
2 W Amplifier	A6		529610G1	A7	0008
Output Filter	A7		418054G1	A4	0003
Oscillator/Buffer	A8		529611G1	A5	0005
Phase Modulator	A9		529738G1	A2	0004
Limiter Tripler	A10		529612G1	A7	0006
Driver Amplifier	A11		418053G1	A7	0005
300 MV Amplifier	A12		529609G1	A5	0004
2 W Amplifier	A13		529610G1	A7	0007
Output Filter	A14		418054G1	A4	0004
Isolator	A15		115479-102	NA	13
Capacitor Assembly	A16		418650G1	None	N/A
Capacitor Assembly	A17		418650G1	None	N/A
Power Reg. Elec. Assembly			613209G1	A	0002
Power Regulator			529615G1	A2	0003
Filter Modulator			529732G1	A2	0002
GOVERNMENT FURNISHED EQUIPMENT					
Multi Spectral Scanner System		Hughes	3241000-100		1
Multiplexer		"	3241140-100		2
Scanner		"			
		(SBRC)	(43727)		(1)
Return Beam Vidicon		RCA	2265041-501		FLT B
Camera Sensor (Blue)		RCA	1976477-501		007
Camera Sensor (Yellow)		RCA	1976477-502		005
Camera Sensor (Red)		RCA	1976477-503		006
Camera Electronics		RCA	1976466-501		007
Camera Electronics		RCA	1976466-501		005
Camera Electronics		RCA	1976466-501		006
Com. Cont./Combiner		RCA	2265336-501		004
Base Plate		RCA	2265552-501		004
Wide Band Video Tape Recorder		RCA	8359652-501		N/A
Wide Band Video Tape Recorder		RCA	8359652-501		FLT 3
Transport Unit 1		RCA	8358497-501		PROTO
Transport Unit 2		RCA	8358497-501		FLT 3
Electronics Unit 1		RCA	8370323-501		PROTO
Electronics Unit 2		RCA	8370323-501		FLT 3

Sheet 20
Rev. D

APPENDIX B

COMMAND MATRIX

Table B-1. ERTS I Commands

CMD#	COMMAND FUNCTION	CMD#	COMMAND FUNCTION
000	Spare (Clock)		
001	Pri COMSTOR On & Fill	065	Spare
002	Spare (Clock)	066	Spare
003	Pri COMSTOR Verify	067	WBPA 2 Power Off
004	Pri COMSTOR Copy	070	Spare
005	Pri COMSTOR Off	071	APU Normal Mode
006	Pri COMSTOR Activate	072	MSS Select Inverter B
007	Serial Data Transfer On	073	MSS System Off
010	CMD Execution Counter Reset	074	MSS Select Band 2 High Voltage B
011	Select Pri Matrix Decoder	075	MSS Select Band 1 High Voltage B
012	Select Pri Matrix A Drivers	076	MSS Band 1 Off
013	Select Pri Matrix B Drivers	077	MSS Select Band 3 High Voltage B
014	Select Pri Oscillator	100	Differential Tach Normal Gain
015	Select Pri Freq Generator	101	0.1°Yaw Position Bias Enable
016	Spare (Clock)	102	RLNA into Yaw Disable
017	Load Time Code	103	2.9°Pitch Position Bias Enable
020	Non-Keyed PS/COMDECS Off	104	Pitch Momentum Bias Disable
021	Red COMSTOR On & Fill	105	Spare
022	Spare (Clock)	106	WBPA 2Select 20W Output
023	Red COMSTOR Verify	107	USB Bypass Aux Oscillator
024	Red COMSTOR Copy	110	USB Select Transmitter B
025	Red COMSTOR Off	111	Spare
026	Red COMSTOR Activate	112	MSS High Voltage On
027	Spare (Clock)	113	MSS Band 2 On
030	Spare (Clock)	114	MSS Band 3 On
031	Select Red Matrix Decoder	115	MSS Band 4 On
032	Select Red Matrix A Drivers	116	Spare (MSS)
033	Select Red Matrix B Drivers	117	MSS Select Calibration Lamp A
034	Select Red Oscillator	120	0.1°Yaw Position Bias Disable
035	Select Red Freq Generator	121	Differential Tach High Gain
036	Spare(Clock)	122	2.9°Pitch Position Bias Disable
037	Spare(Clock)	123	RLNA into Yaw Enable
040	Pneumatics Enable	124	Negative Pitch Position Bias
041	0.3°Yaw Position Bias Enable	125	Pitch Momentum Bias Enable
042	Pneu Interlock Bypass Disable	126	USB Select Transmitter A
043	Spare	127	USB Ranging On
044	Pneu Low Voltage Interlock Reset	130	USB Modulation Input Crossed
045	Differential Tach Disable	131	Spare
046	WBPA 2 Power On	132	MSS Band 2 Off
047	WBPA 2 Select 10W Output	133	Spare (MSS)
050	APU Standby Mode	134	MSS Band 4 Off
051	Spare	135	MSS Band 3 Off
052	MSS System On	136	MSS Select Calibration Lamp B
053	MSS Select Inverter A	137	Spare (MSS)
054	MSS Select Band 1 High Voltage A	140	Roll Unload Disable
055	MSS Select Band 2 High Voltage A	141	Negative Yaw Position Bias
056	MSS Select Band 3 High Voltage A	142	Yaw Wheel Disable
057	MSS Band 1 On	143	Spare
060	0.3°Yaw Position Bias Disable	144	Pitch Unload Disable
061	Pneumatics Disable	145	Positive Pitch Position Bias
062	Spare	146	USB Ranging Off
063	Pneu Interlock Bypass Enable	147	USB Modulation Input Normal
064	Differential Tach Enable	150	USB Enable Aux Oscillator

Table B-1. ERTS I Commands (Cont)

CMD#	COMMAND FUNCTION
151	Spare
152	MSS Rotating Shutter Driver On
153	MSS Scan Monitor On
154	MSS Band 1 High Gain
155	MSS Band 2 High Gain
156	MSS Calibration Lamp On
157	MSS Band 1 High Voltage On
160	Positive Yaw Position Bias
161	Roll Unload Enable
162	Pneumatics Momentary Enable
163	Yaw Wheel Enable
164	Spare
165	Pitch Unload Enable
166	VHF Xmtr Playback Mode 2
167	VHF Xmtr Power 1 Off
170	VHF Xmtr Power 2 On
171	VHF Xmtr Playback Override Off
172	MSS Scan Monitor Off
173	MSS Rotating Shutter Driver Off
174	MSS Band 2 Low Gain
175	MSS Band 1 Low Gain
176	MSS Band 1 High Voltage Off
177	MSS Calibration Lamp Off
200	Orbit Adjust Mode Enable
201	Spare
202	Rate Measuring Package A Enable
203	400 RPM Interlock Enable
204	Yaw Acquisition Mode
205	Spare
206	VHF Xmtr Power 1 On
207	VHF Xmtr Realtime Mode
210	VHF Xmtr Low Power Mode
211	VHF Xmtr Power 2 Off
212	MSS Band 2 High Voltage On
213	MSS Band 3 HIgh Voltage On
214	MSS Sel Shutter Monitor Source A
215	Spare (MSS)
216	Spare (MSS)
217	MSS Scanner Power Line 1
220	Spare
221	Orbit Adjust Mode Disable
222	400 RPM Interlock Disable
223	Rate Measuring Package B Enable
224	Spare
225	Yaw Normal Mode
226	Spare
227	VHF Xmtr High Power Mode
230	VHF Xmtr Playback Override On
231	VHF Select Xmtr A
232	MSS Band 3 High Voltage Off
233	MSS Band 2 High Voltage Off
234	Spare
235	MSS Sel Shutter Monitor Source 1
236	MSS Scanner Power Line 2
237	Spare (MSS)
240	TMP Select Memory Unit A
241	Spare
242	TMP Select Memory Sequencer A
243	Spare
244	Left SAD Normal Rate
245	Spare
246	Battery 1 Off
247	Rate Measuring Package B Htr Off
250	VHF Select Xmtr B
251	VHF Xmtr Playback Mode 1
252	Spare (MSS)
253	Spare (MSS)
254	Spare (MSS)
255	MSS Select Scan Monitor Source A
256	MSS Scan Mirror Inhibit
257	MSS Mux Normal
260	TMP Select A/D Converter A
261	TMP Select Memory Unit B
262	TMP Select Analog Mux A
263	TMP Select Memory Sequencer B
264	Battery 5 Off
265	Battery 6 Off
266	Rate Measuring Package B Off
267	Battery 2 Off
270	Right Sad Disable
271	RMP A Lower Motor Voltage
272	Spare (MSS)
273	Spare (MSS)
274	MSS Select Scan Monitor Source B
275	Spare (MSS)
276	MSS Mux Inhibit
277	MSS Scan Mirror Normal
300	TMP Select Digital Mux A
301	TMP Select A/D Converter B
302	TMP Select Formatter Logic A
303	TMP Select Analog Mux B
304	Rate Measuring Package B Mtr On
305	RMP B Heater & Electronics On
306	Battery 7 Off
307	Rate Measuring Package A Off
310	Battery 3 Off
311	Right Sad Enable
312	MSS Scan Mirror Power Line 1
313	Spare (MSS)
314	MSS Mid Scan Code On
315	MSS Mux Compression Mode
316	MSS System ON/OFF Normal
317	Spare (MSS)
320	Spare

Table B-1. ERTS I Commands (Cont)

CMD#	COMMAND FUNCTION
321	TMP Select Digital Mux B
322	Spare
323	TMP Select Formatter Logic B
324	Spare
325	Left SAD High Rate
326	RMP A Heater & Electronics On
327	Battery 8 Off
330	RMP B Lower Motor Voltage
331	Battery 4 Off
332	Spare (MSS)
333	MSS Mux Linear Mode
334	Spare (MSS)
335	MSS Mid Scan Code Off
336	MSS Scan Mirror Power Line 2
337	MSS System ON/OFF Override
340	TMP Memory Write On
341	TMP Matrix Verify Override On
342	TMP No Mod to VHF Override On
343	TMP Program Control Bit 0 Off
344	Left SAD Disable
345	Spare 8 Set
346	Trickle Charge Normal
347	Enable USBX OFF
350	DCS Receiver 2 On
351	Spare
352	RBV Cathode Reactivation On
353	All Batteries On
354	Shunt Load A Off
355	All Comp Loads Off
356	Aux Load 1 On
357	Aux Load 2 On
360	Spare 8 Reset
361	TMP Memory Write Off
362	TMP Program Control Bit 0 On
363	TMP Program Control Bit 1 On
364	Disable USBX OFF
365	Left SAD Enable
366	DCS Receiver 1 On
367	Trickle Charge Override
370	Rate Measuring Package A Htr Off
371	RBV Cathode Reactivation Off
372	RBV Enable Calibration
373	Verify Tick
374	All Aux Loads Off (A)
375	Shunt Load B Off
376	Comp Load 1 On
377	Comp Load 2 On
400	TMP Data to VHF Xmtr
401	TMP Program Control Bit 1 Off
402	TMP Matrix Verify Override Off
403	TMP Verify Memory On
404	Right SAD High Rate
405	RBV Camera 3 On
406	DCS Receiver 2 Off
407	DCS Receiver 1 Off
410	Rate Measuring Package A Mtr On
411	RBV/CCC Power On
412	RBV Aperature Corrector In
413	All Aux Loads Off (B)
414	Comp Load 3 On
415	Shunt Load C Off
416	Comp Load 4 On
417	Comp Load 5 On
420	TMP No Mod to VHF Override Off
421	TMP No Mod to VHF Xmtr
422	TMP Verify Memory Off
423	Spare
424	Spare
425	Right SAD Normal Rate
426	WBVTR 1 Record
427	RBV Single Cycle
430	RBV Start Prepare
431	RBV Aperature Corrector Out
432	RBV CCC Power Off
433	RBV Camera 1 On
434	Comp Load 6 On
435	Aux Load 3 On
436	Aux Load 4 On
437	All Shunt Loads On
440	TMP Select Xmtr Buffer AMP A
441	TMP Matrix Verify On
442	TMP Power 2 Off
443	TMP Force Program 00 Off
444	WBVTR 1 Volt. Protect Relay Reset
445	WBVTR 1 Record Current Adjust
446	WBVTR 1 RBV Enable
447	WBVTR 1 Playback
450	RBV Exposure 1
451	RBV Exposure 2
452	RBV Exposure 5
453	RBV Exposure 3
454	RBV Exposure 4
455	Aux Load 5 On
456	Shunt Load D Off
457	Verify Tock
460	TMP Pre-Regulator A On
461	TMP Select Xmtr Buffer AMP B
462	TMP Force Program 00 On
463	TMP Pre-Regulator Output A
464	WBVTR 1 RBV Standby
465	WBVTR 1 Fast Rewind
466	WBFM Select VCO B1
467	WBVTR 1 Voltage Protect Enable
470	RBV Continuous Cycle
471	RBV Camera 2 On

C3

Table B-1. ERTS I Commands (Cont)

CMD#	COMMAND FUNCTION
472	RBV Start Calibrate
473	RBV Disable Calibrate
474	Aux Data to RBV Filter A
475	RT 1 Data to MSS Filter B
476	RT Data To RBV Filter B
477	Enable RBV Filter B
500	TMP Memory Write/Verify Ovrd On
501	TMP Pre-Regulator Output B
502	TMP Matrix Normal
503	TMP Power 1 Off
504	WBVTR 1 Fast Forward
505	WBVTR 1 MSS Standby
506	WBVTR 1 Voltage Protect Disable
507	WBVTR 1 Lap
510	RBV Camera 2 Off
511	RBV Camera 1 Off
512	RBV Camera 3 Off
513	WBVTR 2 Record
514	RT 1 Data to MSS Filter A
515	RT Data to RBV Filter A
516	RT 2 Data to MSS Filter B
517	WBVTR 1 Data to RBV Filter B
520	TMP Power 2 On
521	TMP Memory Write/Verify Ovrd Off
522	TMP Power 1 On
523	TMP Pre-Regulator B On
524	WBFM Select VCO A1
525	WBFM Inverter A Power On
526	WBFM Enable Modulator A AFC
527	WBFM Inverter B Power Off
530	WBFM Disable Modulator B AFC
531	WBVTR 2 Data to RBV Filter B
532	WBVTR 2 Record Current Adjust
533	WBVTR 2 RBV Enable
534	WBVTR 2 Playback
535	RT 2 Data to MSS Filter A
536	WBVTR 1 Data to RBV filter A
537	WBVTR 1 Data to MSS Filter B
540	WBPA 1 Power On
541	WBPA 1 Select 10W Output
542	NBTR 2 Playback Mode
543	NBTR 1 Record Mode
544	Enable RBV Filter A
545	WBFM Disable Modulator A AFC
546	Select RBV Bias A
547	WBFM Select VCO A2
550	WBFM Inverter B Power On
551	WBVTR 2 RBV Standby
552	WBVTR 2 Fast Rewind
553	WBVTR 2 Voltage Relay Reset
554	WBVTR 2 Voltage Protect Enable
	Enable MSS Filter A

CMD#	COMMAND FUNCTION
556	WBVTR 1 Data to MSS Filter A
557	WBVTR 2 Data to RBV Filter A
560	Orbit Adjust Timer Enable
561	WBPA 1 Power Off
562	NBTR 1 Power Off
563	WBVTR Search Track Switched
564	Select RBV Bias B
565	WBFM Select VCO B2
566	WBFM Inverter A Power Off
567	WBFM Enable Modulator B AFC
570	WBVTR 2 Data to MSS Filter B
571	WBVTR 2 Fast Forward
572	WBVTR 2 MSS Standby
573	WBVTR 2 Voltage Protect Disable
574	WBVTR 2 Lap
575	Aux Data to RBV Filter B
576	Enable MSS Filter B
577	WBVTR 2 Data to MSS Filter A
600	WBPA 1 Select 20W Output
601	NBTR .2 Record Mode
602	0.6° Yaw Position Bias Enable
603	Orbit Adjust Timer Disable
604	Select NBTR 2
605	PMP Modulator A On
606	Select NBTR
607	WBVTR 1 On (Primary)
610	MSS Enable (Primary)
611	Spare
612	RBV #1 Thermoelectric Module Dis
613	ISM Disable Selected Scanner
614	ISM Switched Telemetry Power On
615	Orbit Adjust Thruster Heater On
616	MSFN to CIU A/STADAN to CIU B
617	Disable PSM Relay Buss
620	NBTR 2 Power Off
621	NBTR 1 Playback Mode
622	Payload Reg Module Fuse Tap On
623	0.6° Yaw Position Bias Disable
624	Select WBVTR 1
625	Inhibit WBFM RBVA/MSS B Filters
626	PMP Modulator A Off
627	Orbit Adjust On 1
630	WBVTR 1 On (Redundant)
631	WBVTR Search Track Normal
632	MSS Enable (Both)
633	Right SAD Unfused
634	CMD Clock Relays on 5A Fuse
635	ISM Separation Switch Bypass
636	ISM Enable Scan & Select A
637	MSS Heater On
640	2.0° Pitch Position Bias Enable
641	PSM Inverter A Power to WBFM

Table B-1. ERTS I Commands (Cont)

CMD#	COMMAND FUNCTION
642	0.6° Pitch Position Bias Enable
643	Spare
644	PMP Modulator B On
645	Select WBVTR 2
646	Select NBTR 1
647	MSS Disable
650	WBVTR 2 On (Primary)
651	WBVTR 1 Off
652	Spare 1 (Non-Latch)
653	CMD Clock Relays on 1A Fuse
654	Left SAD Unfused
655	Enable PSM Relay Bus
656	APU Power On
657	Orbit Adjust Thruster Heater Off
660	PSM Inverter B Power to WBFM
661	2.0° Pitch Position Bias Disable
662	MSS Enable (Redundant)
663	0.6° Pitch Position Bias Disable
664	Select WBVTR
665	PMP Modulator B Off
666	Inhibit WBFM RBV B/MSS A Filters
667	RBV On (Primary)
670	PSM Solenoid 1 On
671	WBVTR 2 On (Redundant)
672	RBV #3 Thermoelectric Module Ena
673	ISM Switched Telemetry Power Off
674	Right SAD Fused
675	Lock Single Scanner Mode
676	Enable USB Xmtrs (Redundant)
677	RBV Magnetic Compensator Enable
700	MMCA Power On
701	Enable Payload Timer Signal
702	MMCA Pitch Coil Out
703	Inhibit Data to RBV Filter A
704	MMCA Yaw Coil Out
705	Prime Data to WBPA 1/2
706	MMCA Capacitor Dump
707	RBV #2 Thermoelectric Module Dis
710	RBV On (Redundant)
711	PSM Solenoid 2 On
712	WBVTR 2 Off
713	Left SAD Fused
714	Unlock Single Scanner Mode
715	MSFN to CIU B/STADAN to CIU A
716	Attitude Sensor Power On
717	Spare (Non-Latch)
720	Disable Payload Timer Signal
721	MMCA Pitch Coil In
722	Inhibit Data to RBV Filter B
723	MMCA Yaw Coil In
724	Summed Data to WBPA 1
725	MMCA Capacitor Charge
726	Spare
727	Payload Reg Module On
730	RBV #2 Thermoelectric Module Ena
731	RBV Off
732	PSM Solenoid 3 On
733	Switch Payload Regulator
734	ISM Enable Scan & Select B
735	MSS Heater Off
736	RBV Magnetic Compensator Lo Mode
737	APU Power Off
740	MMCA Roll Coil In
741	Inhibit Data to MSS Filter A
742	MMCA Polarity Positive
743	Summed Data to WBPA 2
744	MMCA Capacitor High
745	PSM Solenoids Off
746	Orbit Adjust On 2
747	RBV ON Both
750	Payload Reg Module Off 1
751	RBV #3 Thermoelectric Module Dis
752	RBV Magnetic Compensator Disable
753	RBV Magnetic Compensator Hi Mode
754	Enable WBPA (Redundant)
755	Enable USB/WBPA Timer Signal
756	Comp Load 7 On
757	Disable USB Xmtrs
760	Inhibit Data to MSS Filter B
761	MMCA Roll Coil Out
762	MMCA Capacitor Low
763	MMCA Polarity Negative
764	Orbit Adjust Off
765	MMCA Power Off
766	Payloads Off
767	Payload Reg Module Fuse Tap Off
770	RBV #1 Thermoelectric Module Ena
771	Payload Reg Module Off 2
772	Disable USB/ WBPA Timer Signal
773	Comp Load 8 On
774	Attitude Sensor Power Off
775	Enable USB Xmtrs (Primary)
776	Enable WBPA (Primary)
777	Spare
780	Switch Spacecraft PWM Regulator
781	CIU Channel B OFF
782	CIU Ch B On/Sw STDN/MSFN Cmd Link
783	CMD Clock Pwr Supply/Comdecs On
784	Switch Spacecraft PWM Regulator
785	CIU Channel A Off
786	CIU Ch A On/Sw STDN/MSFN Cmd Link
787	CMD Clock Pwr Supply/Comdecs On

Table B-1. ERTS I Command Matrix

MA / MB	000	001	002	003	004	005	006	007	010	011	012	013	014	015	016	017
000	CLOCK (000) SPARE	CLOCK (001) PRIMARY COMSTOR ON & FILL [001,005,006]	CLOCK (002) SPARE	CLOCK (003) PRIMARY COMSTOR VERIFY [003,005,006]	CLOCK (004) PRIMARY COMSTOR COPY	CLOCK (005) PRIMARY COMSTOR OFF [001]	CLOCK (006) PRIMARY COMSTOR ACTIVATE [001,003,005]	CLOCK (007) SERIAL DATA TRANSFER ON	CLOCK (010) COMMAND EXECUTION COUNTER RESET	CLOCK (011) SELECT PRIMARY MATRIX DECODER [011]	CLOCK (012) SELECT PRIMARY MATRIX A DRIVERS [012]	CLOCK (013) SELECT PRIMARY MATRIX B DRIVERS [013]	CLOCK (014) SELECT PRIMARY OSCILLATOR [014]	CLOCK (015) SELECT PRIMARY FREQ GENERATOR [015]	CLOCK (016) SPARE	CLOCK (017) LOAD TIME CODE
020	CLOCK (020) TURN NON-KEYED PS/COMDEL OFF [020,025]	CLOCK (021) REDUNDANT COMSTOR ON & FILL [021,025,026]	CLOCK (022) SPARE	CLOCK (023) REDUNDANT COMSTOR VERIFY [021,025,026]	CLOCK (024) REDUNDANT COMSTOR COPY	CLOCK (025) REDUNDANT COMSTOR OFF [021]	CLOCK (026) REDUNDANT COMSTOR ACTIVATE [021,025,026]	CLOCK (027) SPARE	CLOCK (030) SPARE	CLOCK (031) SELECT REDUNDANT MATRIX DECODER [031]	CLOCK (032) SELECT REDUNDANT MATRIX A DRIVERS [032]	CLOCK (033) SELECT REDUNDANT MATRIX B DRIVERS [033]	CLOCK (034) SELECT REDUNDANT OSCILLATOR [034]	CLOCK (035) SELECT REDUNDANT FREQ GENERATOR [035]	CLOCK (036) SPARE	CLOCK (037) SPARE
040	ACS (040) PNEUMATICS ENABLE [041]	ACS (041) 0.3° YAW POS BIAS ENABLE [040]	ACS (042) PNEUMATICS INTERLOCK BYPASS DISABLE [043]		ACS (044) PNEUMATICS LOW VOLTAGE INTERLOCK RESET	ACS (045) DIFF TACH DISABLE [044]	WBPA 2 (046) POWER ON [047]		APU (047) STANDBY MODE [047]		MSS (052) SYSTEM ON [053]	MSS (053) SELECT INV. A [052]	MSS (054) SELECT BAND 1 HIGH VOLTAGE A [055]	MSS (055) SELECT BAND 2 HIGH VOLTAGE A [056]	MSS (056) SELECT BAND 3 HIGH VOLTAGE A [057]	MSS (057) BAND 1 ON [056]
060	ACS (060) 0.3° YAW POS BIAS DISABLE [061]	ACS (061) PNEUMATICS DISABLE [060]		ACS (063) PNEUMATICS INTERLOCK BYPASS ENABLE [062]	ACS (064) DIFF TACH ENABLE [065]		WBPA 2 (066) POWER OFF [046]		APU (067) NORMAL MODE [060]		MSS (072) SELECT INV. B [073]	MSS (073) SYSTEM OFF [072]	MSS (074) SELECT BAND 1 HIGH VOLTAGE B [075]	MSS (075) SELECT BAND 2 HIGH VOLTAGE B [076]	MSS (076) BAND 1 OFF [075]	MSS (077) SELECT BAND 3 HIGH VOLTAGE B [076]
100	ACS (100) DIFF TACH NORMAL GAIN [101]	ACS (101) 0.1° YAW POS BIAS ENABLE [100]	ACS (102) RLNA INTO YAW DISABLE [103]	ACS (103) 2.9° PITCH POS BIAS ENABLE [102]	ACS (104) PITCH MOMENTUM BIAS MODE DISABLE [125]		WBPA 2 (106) SELECT 20 WATT OUTPUT [107]	USB XPDR (107) BYPASS AUX OSC [110]	USB XPDR (110) SELECT XMTR B [126]		MSS (112) HIGH VOLTAGE ON	MSS (113) BAND 2 ON [126]	MSS (114) BAND 3 ON [135]	MSS (115) BAND 4 ON [134]	MSS (116) SPARE	MSS (117) SELECT CALIBRATION LAMP A [136]
120	ACS (120) 0.1° YAW POS BIAS DISABLE [121]	ACS (121) DIFF TACH HIGH GAIN [120]	ACS (122) 2.9° PITCH BIAS DISABLE [123]	ACS (123) RLNA INTO YAW ENABLE [122]	ACS (124) NEGATIVE PITCH POSITION BIAS [145]	ACS (125) PITCH MOMENTUM BIAS MODE ENABLE [124]	USB XPDR (126) SELECT XMTR A [110]	USB XPDR (127) RANGING ON [146]	USB XPDR (130) MODULATION INPUT CROSSED [147]		MSS (132) BAND 2 OFF [113]	MSS (133) SPARE	MSS (134) BAND 4 OFF [115]	MSS (135) BAND 3 OFF [114]	MSS (136) SELECT CALIBRATION LAMP B [117]	MSS (137) SPARE
140	ACS (140) ROLL UNLOAD DISABLE [141]	ACS (141) NEGATIVE YAW POS BIAS [140]	ACS (142) YAW WHEEL DISABLE [143]		ACS (144) PITCH UNLOAD DISABLE [145]	ACS (145) POSITIVE PITCH POSITION BIAS [124]	USB XPDR (146) RANGING OFF [127]	USB XPDR (147) MODULATION INPUT NORMAL [130]	USB XPDR (150) ENABLE AUX OSC [107]		MSS (152) ROTATING SHUTTER DRIVER ON [133]	MSS (153) SCAN MONITOR ON [132]	MSS (154) BAND 1 HIGH GAIN [131]	MSS (155) BAND 2 HIGH GAIN [134]	MSS (156) CALIBRATION LAMP ON [137]	MSS (157) BAND 1 HIGH VOLTAGE ON [136]
160	ACS (160) POSITIVE YAW POS BIAS [161]	ACS (161) ROLL UNLOAD ENABLE [140]	ACS (162) PNEUMATICS MOMENTARY ENABLE	ACS (163) YAW WHEEL ENABLE [142]		ACS (165) PITCH UNLOAD ENABLE [144]	VHF XMTR (166) PLAYBACK NBTR 2 [207,211]	VHF XMTR (167) POWER #1 OFF [206]	VHF XMTR (170) POWER #2 ON [211]	VHF XMTR (171) PLAYBACK OVERIDE OFF [150]	MSS (172) SCAN MONITOR OFF [153]	MSS (173) ROTATING SHUTTER DRIVER OFF [152]	MSS (174) BAND 2 LOW GAIN [155]	MSS (175) BAND 1 LOW GAIN [154]	MSS (176) BAND 1 HIGH VOLTAGE OFF [157]	MSS (177) CALIBRATION LAMP OFF [156]
200	ACS (200) ORBIT ADJUST MODE ENABLE [221]		ACS (202) RMP A ENABLE	ACS (203) 400 RPM INTERLOCK ENABLE [222]	ACS (204) YAW ACQUISITION MODE [225]		VHF XMTR (206) POWER #1 ON [207]	VHF XMTR (207) REAL TIME MODE [166,167]	VHF XMTR (210) XMTR LOW POWER MODE [211]	VHF XMTR (211) XMTR POWER #2 OFF [170]	MSS (212) BAND 2 HIGH VOLTAGE ON [213]	MSS (213) BAND 3 HIGH VOLTAGE ON [212]	MSS (214) SELECT SHUTTER MONITOR SOURCE A [215]	MSS (215) SPARE	MSS (216) SPARE	MSS (217) SCANNER POWER LINE 1 [216]
220		ACS (221) ORBIT ADJUST MODE DISABLE [200]	ACS (222) 400 RPM INTERLOCK DISABLE [203]	ACS (223) RMP B ENABLE [227]		ACS (225) YAW NORMAL MODE [204]		VHF XMTR (226) HIGH POWER MODE [210]	VHF XMTR (227) PLAYBACK OVERRIDE ON [171]	VHF XMTR (230) SELECT XMTR A [166]	MSS (232) BAND 3 HIGH VOLTAGE OFF [213]	MSS (233) BAND 2 HIGH VOLTAGE OFF [216]	MSS (234) SPARE	MSS (235) SELECT SHUTTER MONITOR SOURCE B [215]	MSS (236) SCANNER POWER LINE 2 [217]	MSS (237) SPARE
240	TMP (240) SELECT MEMORY UNIT A [241]		TMP (242) SELECT MEMORY SEQUENCER UNIT A [243]		ACS (244) LEFT SAD NORMAL RATE [245]		POWER (246) BATTERY #1 OFF [255]	ACS (247) RMP B HEATER OFF [250]	VHF XMTR (250) SELECT XMTR B [251]	VHF XMTR (251) PLAYBACK NBTR 1 [166,207]	MSS (252) SPARE	MSS (253) SPARE	MSS (254) SPARE	MSS (255) SELECT SCAN MONITOR SOURCE A [254]	MSS (256) SCAN MIRROR INHIBIT [257]	MSS (257) MUX NORMAL [256]
260	TMP (260) SELECT A/D CONVERTER A [261]	TMP (261) SELECT MEMORY UNIT B [260]	TMP (262) SELECT ANALOG MUX A [263]	TMP (263) SELECT MEMORY SEQUENCER UNIT B [262]	POWER (264) BATTERY #5 OFF [271]	POWER (265) BATTERY #6 OFF [270]	ACS (266) RMP B OFF [275]	POWER (267) BATTERY #2 OFF [271]	ACS (270) RIGHT SAD DISABLE [271]	ACS (271) RMP A LOWER MOTOR VOLTAGE [267]	MSS (272) SPARE	MSS (273) SPARE	MSS (274) SELECT SCAN MONITOR SOURCE B [275]	MSS (275) SPARE	MSS (276) MUX INHIBIT [277]	MSS (277) SCAN MIRROR NORMAL [276]
300	TMP (300) SELECT DIGITAL MUX A [321]	TMP (301) SELECT A/D CONVERTER B [320]	TMP (302) SELECT FORMATTER LOGIC A [323]	TMP (303) SELECT ANALOG MUX B [322]	ACS (304) RMP B MOTOR ON [286]	ACS (305) RMP B HEATER ELEC ON [286]	POWER (306) BATTERY #7 OFF [295]	ACS (307) RMP A OFF [370,310]	POWER (310) BATTERY #3 OFF [295]	ACS 310 RIGHT SAD ENABLE [270]	MSS (312) SCAN MIRROR POWER LINE 1 [306]	MSS (313) SPARE	MSS (314) MID SCAN CODE ON [339]	MSS (315) MUX COMPENSION MODE [316]	MSS (316) SYSTEM ON/OFF NORMAL [317]	MSS (317) SPARE
320		TMP (320) SELECT DIGITAL MUX B [301]		TMP (323) SELECT FORMATTER LOGIC B [302]		ACS (325) LEFT SAD HIGH RATE [324]	ACS (326) RMP A HEATER ELEC ON [307]	POWER (327) BATTERY #8 OFF [315]	ACS (330) RMP B LOWER MOTOR VOLTAGE [326]	POWER (331) BATTERY #4 OFF [301]	MSS (332) SPARE	MSS (333) MUX LINEAR MODE [308]	MSS (334) SPARE	MSS (335) MID SCAN CODE OFF [314]	MSS (336) SCAN MIRROR POWER LINE 2 [317]	MSS (337) SYSTEM ON/OFF OVERRIDE [316]
340	TMP (340) MEMORY WRITE ON [341]	TMP (341) MATRIX VERIFY OVERRIDE ON [407]	TMP (342) MODULATION TO VHF XMTR OVERRIDE ON [346]	TMP (343) PROGRAM CONTROL BIT 2 OFF [342]	ACS (344) LEFT SAD DISABLE [345]	PSM (345) SPARE B SET [344]	POWER (346) TRICKLE CHARGE NORMAL [351]	TMM (347) ENABLE USBX OFF [348]	OCS (350) RCVR 2 ON [406]		RBV (352) CATHODE REACTIVATION ON [353]	POWER (353) ALL BATTERIES ON [352]	POWER (354) SHUNT LOAD A OFF [355]	POWER (355) ALL COMP LOADS OFF [354]	POWER (356) AUX LOAD #1 ON [357,358]	POWER (357) AUX LOAD #2 ON [356,358]
360	PSM (360) SPARE B RESET [361]	TMP (361) MEMORY WRITE OFF [340]	TMP (362) PROGRAM CONTROL BIT 2 ON [363]	TMP (363) PROGRAM CONTROL BIT 2 ON [402]	PSM (364) DISABLE USBX OFF [347]	ACS (365) LEFT SAD ENABLE [364]	OCS (366) RCVR 1 ON [407]	POWER (367) TRICKLE CHARGE OVERRIDE [346]	ACS (370) RMP A HEATER OFF [307]	RBV (371) CATHODE REACTIVATION [352]	RBV (372) ENABLE CALIBRATION [373]	POWER (373) VERIFY TICK [353]	POWER (374) ALL AUX LOADS OFF (A) [355]	POWER (375) SHUNT LOAD B OFF [357]	POWER (376) COMP LOAD #1 ON [357]	POWER (377) COMP LOAD #2 ON [356]
400	TMP (400) VIP	TMP (401) PROGRAM	TMP (402) MATRIX	TMP (403) VERIFY	ACS (404) RIGHT	KBV (405) CAMERA A	OCS (406) RCVR 2	OCS (407) RCVR 1	ACS (410) RMP A	RBV (411) CCC	RBV (412) APERTURE	POWER (413) ALL	POWER (414) COMP	POWER (415) SHUNT	POWER (416) COMP	POWER (417) COMP

360	RESET	WRITE OFF	CONTROL BIT 2 ON	CONTROL BIT 2 ON	USBX OFF	SAD ENABLE	ON	CHARGE OVERRIDE	HEATER OFF	REACTIVATION OFF	CALIBRATION	TICK	AUX LOADS OFF (A)	LOAD B OFF	LOAD #1 ON	LOAD #2 ON
400	TMP VIP DATA TO VHF XMTR	TMP PROGRAM CONTROL BIT 2 OFF	TMP MATRIX VERIFY OVERRIDE OFF	TMP VERIFY MEMORY ON	ACS RIGHT SAD HIGH RATE	RBV CAMERA 3 ON	OCS RCVR 2 OFF	OCS RCVR 1 OFF	ACS PMP A MOTOR ON	RBV CCC POWER ON	RBV APERTURE CORRECTOR ON	POWER ALL AUX LOADS OFF (B)	POWER COMP LOAD 3 ON	POWER SHUNT LOAD C OFF	POWER COMP LOAD 4 ON	POWER COMP LOAD 5 ON
420	TMP NO MODULATION TO VHF XMTR OVERRIDE OFF	TMP NO MODULATION TO VHF XMTR	TMP VERIFY MEMORY OFF			ACS RIGHT SAD NORMAL RATE	WBVTR1 RECORD	RBV SINGLE CYCLE	RBV START PREPARE	RBV APERATURE CORRECTOR OUT	RBV CCC POWER OFF	RBV CAMERA 1 ON	POWER COMP LOAD 6 ON	POWER AUX LOAD 3 ON	POWER AUX LOAD 4 ON	POWER ALL SHUNT LOADS ON
440	TMP SELECT XMTR BUFFER AMP A	TMP MATRIX VERIFY ON	TMP POWER NO 2 OFF	TMP FORCE PROGRAM 0.0 OFF	WBVTR1 VOLTAGE PROTECT RELAY RESET	WBVTR1 RECORD CURRENT ADJUST	WBVTR1 RBV ENABLE	WBVTR1 PLAYBACK	RBV EXPOSURE 1	RBV EXPOSURE 2	RBV EXPOSURE 3	RBV EXPOSURE 3	RBV EXPOSURE 4	POWER AUX LOAD 5 ON	POWER SHUNT LOAD D OFF	POWER VERIFY TOCK
460	TMP PRE-REG A ON	TMP SELECT XMTR BUFFER AMP B	TMP FORCE PROGRAM 0.0 ON	TMP PRE-REG OUTPUT A	WBVTR1 RBV STANDBY	WBVTR1 FAST REWIND	WBFM SELECT VCO B1	WBVTR1 VOLTAGE PROTECT ENABLE	RBV CONTINUOUS CYCLE	RBV CAMERA 2 ON	RBV START CALIB	RBV DISABLE CALIB	WBFM AUX DATA TO RBV FILTER A	WBFM DATA TO MSS FILTER B	WBFM RT DATA TO RBV FILTER B	WBFM ENABLE RBV FILTER B
500	TMP MEMORY WRITE/VERIFY OVERRIDE ON	TMP PRE-REG OUTPUT B	TMP MATRIX NORMAL	TMP POWER NO 1 OFF	WBVTR1 FAST FORWARD	WBVTR1 MSS STANDBY	WBVTR1 VOLTAGE PROTECT DISABLE	WBVTR1 LAP	RBV CAMERA 2 OFF	RBV CAMERA 1 OFF	RBV CAMERA 3 OFF	WBVTR2 RECORD	WBFM DATA TO MSS FILTER A	WBFM RT DATA TO RBV FILTER A	WBFM DATA TO MSS FILTER B	WBVTR1 DATA TO RBV FILTER B
520	TMP POWER NO.2 ON	TMP MEMORY WRITE/VERIFY OVERRIDE OFF	TMP POWER NO.1 ON	TMP PRE-REG B ON	WBFM SELECT VCO A1	WBFM INVERTER A POWER ON	WBFM ENABLE MODULATOR A AFC	WBFM INVERTER B POWER OFF	WBFM DISABLE MODULATOR B AFC	WBVTR2 WBVTR 2 DATA TO RBV FILTER B	WBVTR2 RECORD CURRENT ADJUST	WBVTR2 RBV ENABLE	WBVTR2 PLAYBACK	WBFM DATA TO MSS FILTER A	WBFM WBVTR 1 DATA TO RBV FILTER A	WBFM WBVTR 1 DATA TO MSS FILTER B
540	WBPA POWER ON	WBPA SELECT 10 WATT OUTPUT	NBTR PLAYBACK MODE	NBTR RECORD MODE	WBFM ENABLE RBV FILTER A	WBFM DISABLE MODULATOR A AFC	WBFM SELECT RBV BIAS A	WBFM SELECT VCO A2	WBFM INVERTER B POWER ON	WBVTR2 RBV STANDBY	WBVTR2 FAST REWIND	WBVTR2 VOLTAGE PROTECT RELAY RESET	WBVTR2 VOLTAGE PROTECT ENABLE	WBFM ENABLE MSS FILTER A	WBFM WBVTR 1 DATA TO MSS FILTER A	WBFM WBVTR 2 DATA TO RBV FILTER A
560	PSM ORBIT ADJUST TIMER ENABLE	WBPA POWER OFF	NBTR POWER OFF	WBVTR SEARCH TRACK SWITCHED	WBFM SELECT RBV BIAS B	WBFM SELECT VCO B2	WBFM INVERTER A POWER OFF	WBFM ENABLE MODULATOR B AFC	WBFM WBVTR 2 DATA TO MSS FILTER B	WBVTR2 FAST FORWARD	WBVTR2 MSS STANDBY	WBVTR2 VOLTAGE PROTECT DISABLE	WBVTR2 LAP	WBFM AUX DATA TO RBV FILTER B	WBFM ENABLE MSS FILTER B	WBFM WBVTR 2 DATA TO MSS FILTER A
600	WBPA SELECT 20 WATT OUTPUT	NBTR2 RECORD MODE	ACS 0.6° YAW POS BIAS ENABLE	PSM ORBIT ADJUST TIMER DISABLE	PMP SELECT NBTR 2	PMP MODULATOR A ON	PMP SELECT NBTR	PSM WBVTR 1 ON (PRIMARY)	PSM MSS ENABLE (PRI)		PSM RBV #1 TEM DISABLE	TSM DISABLE SELECTED SCANNER	TSM SWITCHED TELEMETRY POWER ON	TSM ORBIT ADJUST THRUSTER HEATER ON	TSM MSFN TO CIU A/ STADAN TO CIU B	TSM DISABLE PSM RELAY BUS
620	NBTR2 POWER OFF	NBTR1 PLAYBACK MODE	PSM PRM FUSE TAP ON	ACS 0.6° YAW POS BIAS DISABLE	PMP SELECT WBVTR 1	PSM INHIBIT WBFM RBV B/MSS B FILTERS	PMP MODULATOR A OFF	PSM ORBIT ADJUST ON (1)	PSM WBVTR 1 ON (REDUNDANT)	PSM WBVTR SEARCH TRACK NORMAL	PSM MSS ENABLE (BOTH)	TSM RIGHT SAD UNFUSED	TSM CMD CLK RELAYS ON SA FUSE	TSM SEPARATION SWITCH BYPASS	TSM ENABLE SCAN 4 SELECT A	TSM MSS HEATER ON
640	ACS 2.0° PITCH POS BIAS ENABLE	PSM INVERTER A PWR TO WBFM	ACS 0.6° PITCH POS BIAS ENABLE		PMP MODULATOR B ON	PMP SELECT WBVTR 2	PMP SELECT NBTR 1	PSM MSS DISABLE	PSM WBVTR 2 ON (PRIMARY)	PSM WBVTR 1 OFF	PSM SPARE 1 NON-LATCH	TSM CMD CLK RELAYS ON 1A FUSE	TSM LEFT SAD UNFUSED	TSM ENABLE PSM RELAY BUS	TSM APU POWER ON	TSM INHIBIT ADJUST THRUSTER HEATER OFF
660	PSM INVERTER B PWR TO WBFM	ACS 2.0° PITCH POS BIAS DISABLE	PSM MSS ENABLE (RED)	ACS 0.6° PITCH POS BIAS DISABLE	PMP SELECT WBVTR	PMP MODULATOR B OFF	PSM INHIBIT WBFM RBV B/MSS A FILTERS	PSM RBV ON (PRIMARY)	PSM SOLENOID 1 ON	PSM WBVTR 2 ON (REDUNDANT)	PSM RBV #3 TEM ENABLE	TSM SWITCHED TELEMETRY POWER OFF	TSM RIGHT SAD FUSED	TSM LOCK SSM	TSM ENABLE USB XMTRS (RED)	PSM REV MAGNETIC COMPENSATOR ENABLE
700	MMCA POWER ON	MMCA ENABLE PAYLOAD TIMER SIGNAL	MMCA PITCH COIL OUT	PSM INHIBIT DATA TO RBV FILTER A	MMCA YAW COIL OUT	PSM PRIME DATA TO WBPA 1/ WBPA 2	MMCA CAP DUMP	PSM RBV #2 TEM DISABLE	PSM RBV ON (REDUNDANT)	PSM SOLENOID 2 ON	PSM WBVTR 2 OFF	TSM LEFT SAD FUSED	TSM UNLOCK SSM	TSM MSFN TO CIU B/ STADAN TO CIU A	TSM ATTITUDE SENSOR POWER ON	PSM SPARE NON-LATCH
720	PSM DISABLE PAYLOAD TIMER SIGNAL	MMCA PITCH COIL IN	PSM INHIBIT DATA TO RBV FILTER B	MMCA YAW COIL IN	PSM SUMMED DATA TO WBPA 1	MMCA CAP CHARGE		PSM PRM ON	PSM RBV #2 TEM ENABLE	PSM RBV OFF	PSM SOLENOID 3 ON	PSM SWITCH PAYLOAD REGULATOR	PSM ENABLE SCAN 4 SELECT B	TSM MSS HEATER OFF	PSM REV MAGNETIC COMPENSATOR LOW MODE	PSM APU POWER OFF
740	MMCA ROLL COIL IN	PSM INHIBIT DATA TO MSS FILTER A	MMCA POLARITY POSITIVE	PSM SUMMED DATA TO WBPA 2	MMCA CAP HIGH	PSM SOLENOIDS OFF	PSM ORBIT ADJUST ON (2)	PSM RBV ON (BOTH)	PSM PRM OFF (1)	PSM RBV #3 TEM DISABLE	PSM REV MAGNETIC COMPENSATOR DISABLE	PSM RBV MAGNETIC COMPENSATOR HIGH MODE	TSM ENABLE WBPA (RED)	TSM ENABLE USB XMTR/ WBPA TIMER SIGNAL	TSM COMP LOAD 7 ON	TSM DISABLE USB XMTRS
760	PSM INHIBIT DATA TO MSS FILTER B	MMCA ROLL COIL OUT	MMCA CAP LOW	MMCA POLARITY NEGATIVE	PSM ORBIT ADJUST OFF	MMCA POWER OFF	PSM PAYLOADS OFF	PSM PRM FUSE TAP OFF	PSM RBV #1 TEM ENABLE	PSM PRM OFF (2)	PSM DISABLE USB XMTR WBPA TIMER SIGNAL	PSM COMP LOAD 8 ON	TSM ATTITUDE SENSOR POWER OFF	TSM ENABLE USB XMTRS (PRI)	TSM ENABLE WBPA (PRI)	

COMMAND DESIGNATION	CIU COMMAND
CA00 (100)$_8$	SWITCH S/C REGULATOR
CA01 (101)$_8$	CIU CHANNEL B OFF
CA10 (102)$_8$	CIU CHANNEL B ON SWITCH STADAN/MSFN COMMAND LINKS
CA11 (103)$_8$	COMMAND CLOCK PS/COMDECS ON
CB00 (080)$_8$	SWITCH S/C REGULATOR
CB01 (081)$_8$	CIU CHANNEL A OFF
CB10 (082)$_8$	CIU CHANNEL A ON SWITCH STADAN/MSFN COMMAND LINKS
CB11	COMMAND CLOCK PS/COMDECS ON

APPENDIX C

TELEMETRY MATRIX

1000 - ATTITUDE CONTROL SUBSYSTEM

FUNC NO.	TLM FUNCTION	ACRONYM	SIGNL TYPE	SAMP SEC	GATE ADDR	COLUMN /ROW	TMP CONN	S/S CONN	INT CONN
	FORWARD SCANNER SIGNAL PROCESSOR								
1001	FWD SCAN LEAD EARTH PULSE	FSC L EP	ALOG	1/16	A106	15 09	4T80-81	7112-7	6T0073
1002	FWD SCAN TRAIL EARTH PULSE	FSC T EP	ALOG	1/16	A170	18 18	4T82-81	7112-6	6T00-72
1003	FWD SCAN PRESSURE	FSC PRES	ALOG	1/16	A233	18 27	4T84-01	7112-4	6T00-70
1004	FWD SCAN PREAMP. CARD TEMP	FSC PA T	ALOG	1/16	A298	02 37	4T86-81	7112-10	6T00-76
1005	FWD SCAN REF PROCESSOR CARD TEMP	FSC RP T	ALOG	1/16	A425	08 55	4T90-01	7112-8	6T00-74
1006	FWD SCAN UPSIDE DOWN	FSC UPDN	ALOG	1/16	A490	12 64	4T92-81	7112-11	6T00-77
1007	FWD SCAN MOTOR TEMP.	FSC TEMP	ALOG	1/16	A554	15 73	4T94-81	7112-5	6T00-71
	REAR SCANNER SIGNAL PROCESSOR								
1010	REAR SCAN LEAD EARTH PULSE	RSC L EP	ALOG	1/16	A105	12 09	4T80-01	7122-6	6T01-42
1011	REAR SCAN TRAIL EARTH PULSE	RSC T EP	ALOG	1/16	A169	15 18	4T82-01	7122-7	6T01-43
1012	REAR SCAN PRESSURE	RSC PRES	ALOG	1/16	A232	15 27	4T84-17	7122-4	6T01-40
1013	REAR SCAN PREAMP CARD TEMP	RSC PA T	ALOG	1/16	A297	01 37	4T86-01	7122-10	6T01-46
1014	REAR SCAN REF PROCESSOR CARD TEMP	RSC RP T	ALOG	1/16	A424	02 55	4T90-17	7122-8	6T01-44
1015	REAR SCAN UPSIDE DOWN	RSC UPDN	ALOG	1/16	A489	10 64	4T92-01	7122-11	6T01-47
1016	REAR SCAN MOTOR TEMP	RSC TEMP	ALOG	1/16	A553	12 73	4T94-01	7122-5	6T01-41
	CONTROL LOGIC BOX								
1020	ROLL LEAD AMP OUTPUT	R LD AMP	ALOG	1/1	A627	05 04	4T96-80	7001-24	6T00-21
1021	ROLL DIFF TACH AMP OUTPUT	R DF TCH	ALOG	1/1	A628	06 04	4T96-77	7001-7	6T00-6
1022	ROLL REAR MOTOR DRIVER (CCW)	RRMD CCW	ALOG	1/16	A104	10 09	4T80-17	7001-6	6T00-5
1023	ROLL FWD MOTOR DRIVER (CCW)	RFMD CCW	ALOG	1/16	A168	12 18	4T82-17	7001-8	6T00-7
1024	ROLL FWD MOTOR DRIVER (CW)	RFMD CW	ALOG	1/16	A235	02 28	4T84-36	7001-41	6T00-36
1025	ROLL REAR MOTOR DRIVER (CW)	RRMD CW	ALOG	1/16	A422	18 54	4T90-54	7001-39	6T00-34
1026	ROLL FWD FLYWHEEL SPEED	RFFW SPD	ALOG	1/1	A603	11 00	4T96-69	7001-22	6T00-19
1027	ROLL REAR FLYWHEEL SPEED	RRFW SPD	ALOG	1/1	A604	13 00	4T96-30	7001-40	6T00-35
1028	ROLL PNEUMATICS MODULATOR	R PN MOD	ALOG	1/16	A369	08 47	4T88-08	7001-25	6T00-22
1029	ROLL COARSE ERROR	R ER CRS	ALOG	1/1	A605	04 01	4T96-29	7001-42	6T00-37
1030	ROLL FINE ERROR	R ER FNE	ALOG	1/1	A606	05 01	4T96-50	7001-1	6T00-1
1031	ROLL DIFF TACH AMP STATUS	R DFT ST	ALOG	1/16	A488	08 64	4T92-17	7001-35	6T00-75
1032	ROLL SOLENOID DUTY CYCLE	R SOL DC	ALOG	1/16	A552	10 73	4T94-17	7001-50	6T00-45
1033	YAW MOTOR DRIVER (CW)	Y MD CW	ALOG	1/16	A102	02 09	4T80-54	7001-28	6T00-25
1034	YAW MOTOR DRIVER (CCW)	Y MD CCW	ALOG	1/16	A166	08 18	4T82-54	7001-11	6T00-10
1035	YAW TACH AMP OUTPUT	Y TACH	ALOG	1/1	A607	06 01	4T96-74	7001-12	6T00-11
1036	YAW PNEUMATICS MODULATOR	Y PN MOD	ALOG	1/16	A234	01 28	4T84-81	7001-45	6T00-40
1037	YAW SOLENOID DUTY CYCLE	Y SOL DC	ALOG	1/16	A296	18 36	4T86-17	7001-16	6T00-15
1038	PITCH MOTOR DRIVER (CCW)	P MD CCW	ALOG	1/16	A362	08 46	4T88-81	7001-43	6T00-38
1039	PITCH MOTOR DRIVER (CW)	P MD CW	ALOG	1/16	A421	15 54	4T90-31	7001-47	6T00-42
1040	PITCH COARSE ERROR	P ER CRS	ALOG	1/1	A608	07 01	4T96-16	7001-26	6T00-23
1041	PITCH FINE ERROR	P ER FNE	ALOG	1/1	A610	11 01	4T96-07	7001-34	6T00-31

FUNC NO.	TLM FUNCTION	ACRONYM	SIGNL TYPE	SAMP SEC	GATE ADDR	COLUMN /ROW	TMP CONN	S/S CONN	INT CONN
1042	PITCH TACH	P TACH	ALOG	1/16	A486	01 64	4T92-54	7001-17	6T00-16
1043	PITCH FLYWHEEL SPEED	P FW SPD	ALOG	1/1	A611	13 01	4T96-82	7001-27	6T00-24
1044	PITCH PNEUMATIC MODULATOR	P PN MOD	ALOG	1/1	A612	04 02	4T96-52	7001-10	6T00-9
1045	PITCH SOLENOID DUTY CYCLE	P SOL DC	ALOG	1/16	A550	02 73	4T94-54	7001-33	6T00-30
1046	O.A./ACQ MODE STATUS	OA/AQ ST	ALOG	1/16	A095	02 08	4T80-74	7001-18	6T00-79
1047	(0.6)(0.3)(0.1) DEG. YAW BIAS STATUS	YBIAS ST	ALOG	1/16	A159	08 17	4T82-74	7001-3	6T00-2
1048	(0.5)(1.6)(3.4) DEG PITCH POSIT BIAS STATUS	PBIAS ST	ALOG	1/16	A230	10 27	4T84-54	7001-2	6T00-78
1049	PLUS OR MINUS PITCH POSIT BIAS/ YAW POSIT BIAS/ RMP A/B STATUS	PYRMP ST	ALOG	1/16	A287	12 35	4T86-74	7001-20	6T00-17
1050	PITCH AND ROLL MSM. UNLOAD	PR UNLD	ALOG	1/16	A361	02 46	4T88-01	7001-37	6T00-32
1051	LOW VOLTAGE-PNEU INTERLOCK	LV/P INT	ALOG	1/16	A420	12 54	4T90-52	7001-46	6T00-41
1052	PNEU INTERLOCK BYPASS AND YAW FINE CONTROL	YFN C EN	ALOG	1/16	A485	18 63	4T92-31	7001-29	6T00-26
1053	CLB PHASE A CLOCK	CLOCK A	ALOG	1/16	A548	18 72	4T94-52	7001-38	6T00-33
1054	CLB PHASE B CLOCK	CLOCK B	ALOG	1/16	A094	01 08	4T80-50	7001-21	6T00-18
1055	CLB PLUS OR MINUS 10 VOLT SUPPPLY	+/- 10V	ALOG	1/16	A158	02 17	4T82-50	7001-23	6T00-20
1056	CLB PLUS OR MINUS 6 VOLT SUPPLY	+/- 6V	ALOG	1/16	A229	08 27	4T84-31	7001-9	6T00-08
1057	CLB POWER SUPPLY VOLTAGE	P/S VOLT	ALOG	1/16	A360	01 46	4T88-17	7001-30	6T00-27
1058	CLB MOTOR DRIVER CARD TEMP.	MTR DR T	ALOG	1/16	A484	15 63	4T92-52	7001-4	6T00-3
1059	CLB POWER SUPPLY CARD TEMP.	PS CRD T	ALOG	1/16	A549	01 73	4T94-31	7001-13	6T00-12
1060	RLNA INTO YAW OUT/IN	RLNA-YAW	DIG B	1/16	2848	10 01	4T02-34	7001-36	6T00-81
1061	400 RPM INTERLK DIS/EN	400 RPM	DIG B	1/16	2849	12 01	4T02-10	7001-44	6T00-39
1062	ROLL (+) SOLENOID ON/OFF	R + SOL	DIG B	1/1	8833	16 02	4T02-31	7001-15	6T00-14
1063	ROLL (-) SOLENOID ON/OFF	R - SOL	DIG B	1/1	5834	17 02	4T04-74	7001-48	6T00-43
1064	PITCH (+) SOLENOID ON/OFF	P + SOL	DIG B	1/1	5835	16 03	4T04-28	7001-49	6T00-44
1065	PITCH (-) SOLENOID ON/OFF	P - SOL	DIG B	1/1	5836	17 03	4T06-74	7001-32	6T00-29
1066	YAW (+) SOLENOID ON/OFF	Y + SOL	DIG B	1/1	7833	16 02	4T02-70	7001-31	6T00-28
1067	YAW (-) SOLENOID ON/OFF	Y - SOL	DIG B	1/1	3837	16 04	4T06-66	7001-14	6T00-13
	YAW RATE GYRO (YRG)								
1070	YRG HOUSING TEMPERATURE	YRG HS T	ALOG	1/16	A093	18 07	4T80-29	7302-3	6T01-13
1071	YRG WHEEL SPEED	YRG SPD	ALOG	1/16	A157	01 17	4T82-29	7302-5	6T01-14
1072	YRG INDICATED RATE	YRG RATE	ALOG	1/1	A613	05 02	4T96-31	7302-1	6T01-12
	RATE MEASURING PACKAGE NO 1								
1080	RMP SUPPLY VOLTAGE NO 1	RP1 PS V	ALOG	1/16	A220	01 26	4T84-30	7502-3	6T01-60
1081	RMP MOTOR VOLTAGE NO 1	RP1 MT V	ALOG	1/16	A286	10 35	4T86-50	7502-4	6T01-61
1082	RMP MOTOR CURRENT NO 1	RP1 MT I	ALOG	1/16	A351	15 44	4T88-74	7502-5	6T01-62
1083	RMP A HEATER POWER	RMP HTRP	ALOG	1/16	A415	18 53	4T90-74	7502-7	6T01-64
1084	RMP GYRO TEMPERATURE NO 1	RP1 GY T	ALOG	1/16	A479	01 63	4T92-74	7502-9	6T01-65
1085	RMP PACKAGE TEMP NO 1	RP1 PK T	ALOG	1/16	A543	02 72	4T94-74	7502-10	6T01-66
1086	RMP INDICATED RATE (MEDIUM RESOLUTION) NO 1	RP1 IR M	ALOG	1/1	A614	06 02	4T96-54	7502-12	6T01-68

DP47J222901AY REV B ERTS ELECTRICAL SYSTEM SCHEMATIC/TELEMETRY MATRIX 1/28/72

FUNC NO.	TLM FUNCTION	ACRONYM	SIGNL TYPE	SAMP SEC	GATE ADDR	COLUMN /ROW	TMP CONN	S/S CONN	INT CONN
1087	RMP INDICATED RATE (HIGH RESOLUTION) NO 1	RP1 IR H	ALOG	1/1	A609	09 01	4T96-03	7502-11	6T01-67
1088	RMP RELAY GROUP A STATUS NO 1	RP1 ASTA	ALOG	1/16	A092	15 07	4T80-30	7502-1	6T01-58
1089	RMP RELAY GROUP B STATUS NO 1	RP1 BSTA	ALOG	1/16	A156	18 16	4T82-30	7502-2	6T01-59

FUNC NO.	TLM FUNCTION	ACRONYM	SIGNL TYPE	SAMP SEC	GATE ADDR	COLUMN /ROW	TMP CONN	S/S CONN	INT CONN
	RATE MEASURING PACKAGE NO 2								
1090	RMP SUPPLY VOLTAGE NO 2	RP2 PS V	ALOG	1/16	A219	18 25	4T84-69	7602-3	6T01-54
1091	RMP MOTOR VOLTAGE NO 2	RP2 MT V	ALOG	1/16	A285	08 35	4T86-29	7602-4	6T01-63
1092	RMP MOTOR CURRENT NO 2	RP2 MT I	ALOG	1/16	A350	12 44	4T88-50	7602-5	6T01-69
1093	RMP HEATER POWER NO 2	RP2 HTRP	ALOG	1/16	A414	15 53	4T90-50	7602-7	6T01-78
1094	RMP GYRO TEMPERATURE NO 2	RP2 GY T	ALOG	1/16	A478	18 62	4T92-50	7602-9	6T01-79
1095	RMP PACKAGE TEMPERATURE NO 2	RP2 PK T	ALOG	1/16	A542	01 72	4T94-50	7602-10	6T01-80
1096	RMP INDICATED RATE (MEDIUM RESOLUTION) NO 2	RP2 IR M	ALOG	1/1	A616	09 02	4T96-17	7602-12	6T01-82
1097	RMP INDICATE RATE (HIGH RESOLUTION) NO 2	RP2 IR H	ALOG	1/1	A617	11 02	4T96-01	7602-11	6T01-81
1098	RMP RELAY GROUP A STATUS NO 2	RP2 ASTA	ALOG	1/16	A091	12 07	4T80-69	7602-1	6T01-51
1099	RMP RELAY GROUP B STATUS NO 2	RP2 BSTA	ALOG	1/16	A155	15 16	4T82-69	7602-2	6T01-52
	INITATION TIMER								
1200	INITIATION TIMER T15	15S TMR	ALOG	1/16	A218	15 25	4T84-43	8003-8	6T00-84
1201	INITIATION TIMER T50	50S TMR	ALOG	1/16	A284	02 35	4T86-30	8003-9	6T00-85
1202	INITIATION TIMER RESET ON/OFF	TIMR RST	DIG B	1/16	4838	01 00	4T08-01	8003-7	6T00-83
1203	INITIATION TIMER PADDLE UNFOLD ON/OFF	TIMR P/U	DIG B	1/16	3863	12 03	4T08-07	8003-6	6T00-82
	PNEUMATICS								
1210	GAS TANK TEMPERATURE	TANK T	ALOG	1/16	A349	10 44	4T88-29	7702-3	6T01-53
1211	MANIFOLD TEMPERATURE	MANFLD T	ALOG	1/16	A413	12 53	4T90-29	7702-5	6T01-55
1212	GAS TANK PRESSURE (HIGH)	TANK P	ALOG	1/16	A477	15 62	4T92-29	7702-9	6T01-57
1213	MANIFOLD PRESSURE (LOW)	MANFLD P	ALOG	1/16	A541	18 71	4T94-29	7702-7	6T01-56
	SOLAR ARRAY DRIVE (RIGHT)								
1220	SAD RIGHT MTR. WINDING VOLT	SDR MWDV	ALOG	1/1	A619	04 03	4T96-36	7413-11	6T00-48
1221	SAD RIGHT TACH OUTPUT	SDR TACH	ALOG	1/1	A620	05 03	4T96-15	7413-16	6T00-52
1222	SAD RIGHT MECH HOUSING TEMP	SDR MHGT	ALOG	1/16	A090	10 07	4T80-43	7413-9	6T00-46
1223	SAD RIGHT MTR WINDING TEMP	SDR MWDT	ALOG	1/16	A154	12 16	4T82-43	7413-10	6T00-47
1224	SAD RIGHT FWD SUN SENSOR TMP	SDR FSST	ALOG	1/16	A217	12 25	4T84-24	7413-22	6T00-58
1225	SAD RIGHT REAR SUN SUNSOR TEMP	SDR RSST	ALOG	1/16	A283	01 35	4T86-69	7413-21	6T00-57
1226	SAD RIGHT SUN SENSOR PREAMP OUTPUT	SDR SSPA	ALOG	1/16	A348	08 44	4T88-30	7413-18	6T00-54
1227	SAD RIGHT -15V CONVERTER	SDR -15V	ALOG	1/16	A412	10 53	4T90-30	7413-20	6T00-56
1228	SAD RIGHT HOUSING PRESSURE	SDR PRES	ALOG	1/16	A476	12 62	4T92-30	7413-14	6T00-50
1229	SAD RIGHT RATE BIAS NORMAL/HIGH	SDR RATE	DIG B	1/16	2850	15 01	4T04-34	7413-17	6T00-53
1230	SAD RIGHT PHASE SWITCH CW/CCW	SDR PHSW	DIG B	1/16	2851	18 01	4T04-10	7413-12	6T00-49
	SOLAR ARRAY DRIVE (LEFT)								

F NC NO.	TLM F NCTION	ACRONYM	SIGNL TYPE	SAMP SEC	GATE ADDR	COLUMN /ROW	TMP CONN	S/S CONN	INT CONN
1240	SAD LEFT MTR WINDING VOLT	SDL MWDV	ALOG	1/1	A621	06 03	4T96-53	7423-11	6T01-20
1241	SAD LEFT TACH OUTPUT	SDL TACH	ALOG	1/1	A622	07 03	4T96-33	7423-16	6T01-24
1242	SAD LEFT MECH HOUSING TEMP	SDL MHGT	ALOG	1/16	A540	15 71	4T94-30	7423-9	6T01-18
1243	SAD LEFT MTR WINDING TEMP	SDL MWDT	ALOG	1/16	A089	08 07	4T80-24	7423-10	6T01-19
1244	SAD LEFT FWD SUN SENSOR TEMP	SDL FSST	ALOG	1/16	A153	10 16	4T82-24	7423-22	6T01-30
1245	SAD LEFT REAR S/S TEMP	SDL RSST	ALOG	1/16	A216	10 25	4T84-11	7423-21	6T01-29
1246	SAD LEFT SUN SENSOR PREAMP OUTPUT	SDL SSPA	ALOG	1/16	A282	18 34	4T86-43	7423-18	6T01-26
1247	SAD LEFT -15V CONVERTER	SDL -15V	ALOG	1/16	A347	02 44	4T88-69	7423-20	6T01-28
1248	SAD LEFT HOUSING PRESSURE	SDL PRES	ALOG	1/16	A411	08 53	4T90-69	7423-14	6T01-22
1249	SAD LEFT RATE BIAS NORMAL/HI	SDL RATE	DIG B	1/16	2852	01 02	4T06-34	7423-17	6T01-25
1250	SAD LEFT PHASE SWITCH CW/CCW	SDL PHSW	DIG B	1/16	2853	02 02	4T06-10	7423-12	6T01-21

NOTE -- ALSO SEE ELECTRICAL INTERFACE S/S

ACS STRUCTURAL TEMPERATURES

1260	BASEPLATE 1 TEMP [-Y]	TH01BP-Y	ALOG	1/16	A475	10 62	4T92-69	8102-17	6T01-76
1261	BASEPLATE 2 TEMP [+X]	TH02BP+X	ALOG	1/16	A539	12 71	4T94-69	8102-28	6T01-75
1262	BASEPLATE 3 TEMP [+Y]	TH03BP+Y	ALOG	1/16	A088	02 07	4T80-11	8102-29	6T01-74
1263	THERMAL SHIELD 4 TEMP [+X]	TH04TS+X	ALOG	1/16	A152	08 16	4T82-11	8102-31	6T01-73
1264	THERMAL SHIELD 5 TEMP [-Y]	TH05TS-Y	ALOG	1/16	A215	08 25	4T84-46	8102-12	6T01-72
1265	THERMAL SHIELD 6 TEMP [-X]	TH06TS-X	ALOG	1/16	A281	15 34	4T86-24	8102-11	6T01-71
1266	THERMAL SHIELD 7 TEMP [+Y]	TH07TS+Y	ALOG	1/16	A346	01 44	4T88-43	8102-10	6T01-70
1267	THERMAL SHIELD 8 TEMP [+Z]	TH08TS+Z	ALOG	1/16	A410	02 53	4T90-43	8102-30	6T01-77
1268	LOUVER HOUSING +XEND 9 TEMP	TH01LH+X	ALOG	1/16	A474	08 62	4T92-43	8102-16	6T01-10
1269	LOUVER HOUSING MIDPOINT 10 TEMP	TH02LHM	ALOG	1/16	A538	10 71	4T94-43	8102-19	6T01-23
1270	FWD IR SCANNER MTG 11 TMP	TH01FSC	ALOG	1/16	A087	01 07	4T80-46	8102-15	6T01-27
1271	REAR IR SCANNER MTG 12 TEMP	TH02RSC	ALOG	1/16	A151	02 16	4T82-46	8102-14	6T01-35
1272	PNEU CYL AT MTG INTERFACE 13 TEMP	TH01LCY	ALOG	1/16	A214	02 25	4T84-13	8102-18	6T01-36
1273	LOWER STRUCTURE AT BASE OF CYLINDER 14 TEMP	TH01LSCB	ALOG	1/16	A280	12 34	4T86-11	8102-13	6T01-38
1274	PNEU CYL TOP 15 TEMP	TH01UCY	ALOG	1/16	A345	18 43	4T88-24	8102-32	6T01-39
1275	LEFT SAD RADIATOR 16 TEMP [+X]	TH01LRAD	ALOG	1/16	A409	01 53	4T90-24	8102-33	6T01-45
1276	RIGHT SAD RADIATOR 17 TEMP [-X]	TH01RRAD	ALOG	1/16	A473	02 62	4T92-24	8102-34	6T01-48
1277	TCM ZENER VOLTAGE	TCM ZN V	ALOG	1/16	A537	08 71	4T94-24	8102-20	6T01-84
1278	YAW NOZZLE ARM 20 TEMP	TH01YNZL	ALOG	1/16	A344	15 43	4T88-11	8102-37	6T01-83
1279	RIGHT +X RADIATOR 18 TEMP	TH01RR+X	ALOG	1/16	A449	15 58	4T92-23	8102-35	6T01-49
1280	LOUVER HOUSING -X END 19 TEMP	TH03LH-X	ALOG	1/16	A456	15 59	4T92-12	8102-36	6T01-50

NUMBER 2000 - ORBIT ADJUST SUBSYSTEM

C-8

FUNC NO.	TLM FUNCTION	ACRONYM	SIGNL TYPE	SAMP SEC	GATE ADDR	COLUMN /ROW	TMP CONN	S/S CONN	INT CONN
	ORBIT ADJUST S/S								
2001	PROPELLANT TANK TEMPERATURE	P TANK T	ALOG	1/16	A086	18 06	4T80-13	5003-*C	
2003	THRUST CHAMBER NO. 1 TEMPERATURE	CHMB 1 T	ALOG	1/16	A341	08 43	4T88-51	5003-Y	
2004	THRUST CHAMBER NO.2 TEMPERATURE	CHMB 2 T	ALOG	1/16	A405	10 52	4T90-51	5003-Z	
2005	THRUST CHAMBER NO.3 TEMPERATURE	CHMB 3 T	ALOG	1/16	A469	12 61	4T92-51	5003-*A	
2006	LINE PRESSURE	LINE P	ALOG	1/16	A534	18 70	4T94-13	5003-R	
2007	SOLENOID VALVE NO.1 ON/OFF	SOLND 1	DIG B	1/1	7B34	17 02	4T04-77	5003-A	
2008	SOLENOID VALVE NO.2 ON/OFF	SOLND 2	DIG B	1/1	7B36	17 03	4T06-77	5003-C	
2009	SOLENOID VALVE NO.3 ON/OFF	SOLND 3	DIG B	1/1	7B37	16 04	4T06-70	5003-E	

NOTE SEE ELECTRICAL INTERFACE S/S

3000 - ATTITUDE MEASUREMENT
SENSOR SUBSYSTEM

FUNC NO.	TLM FUNCTION	ACRONYM	SIGNL TYPE	SAMP SEC	GATE ADDR	COLUMN /ROW	TMP CONN	S/S CONN	INT CONN
	ATTITUDE MEASUREMENT SENSOR								
3000	+ROLL SIGNAL	ROLL +	ALOG	1/1	A623	09 03	4T96-18	5G03-A	
3001	-ROLL SIGNAL	ROLL -	ALOG	1/1	A624	11 03	4T96-09	5G03-B	
3002	+PITCH SIGNAL	PITCH +	ALOG	1/1	A625	13 03	4T96-08	5G03-E	
3003	-PITCH SIGNAL	PITCH -	ALOG	1/1	A626	04 04	4T96-06	5G03-F	
3004	TEMPERATURE NO.1 (CASE)	CASE T1	ALOG	1/16	A408	18 52	4T90-11	5G03-J	
3005	TEMPERATURE NO.2 (I.R. ASSEMBLY)	ASSY T2	ALOG	1/16	A472	01 62	4T92-11	5G03-K	

NOTE SEE ELECTRICAL INTERFACE S/S

MAGNETIC MOMENTS COMPENSATING ASSY.
4000

FUNC NO.	TLM FUNCTION	ACRONYM	SIGNL TYPE	SAMP SEC	GATE ADDR	COLUMN /ROW	TMP CONN	S/S CONN	INT CONN
	MAGNETIC MOMENT COMPENSATING ASSY								
4001	BOARD A1 TEMP	A1 BRD T	ALOG	1/16	A491	15 64	4T92-36	5G08-20	
4002	BOARD A2 TEMP	A2 BRD T	ALOG	1/16	A555	18 73	4T94-36	5G08-19	
4003	HALL SENSOR CURRENT	HALL CUR	ALOG	1/16	A064	15 03	4T80-10	5G08-21	
4004	YAW FLUX DENSITY	Y FLUX D	ALOG	1/16	A128	18 12	4T82-10	5G08-17	
4005	PITCH FLUX DENSITY	P FLUX D	ALOG	1/16	A384	10 49	4T90-10	5G08-16	
4006	ROLL FLUX DENSITY	R FLUX D	ALOG	1/16	A320	08 40	4T88-10	5G08-18	
4007	POWER ON/OFF	POWER	DIG B	1/16	1B63	12 03	4T08-61	5G08-09	
4008	CAPACITOR K2 DUMP/CHARGE	CAP K2	DIG B	1/16	2B39	02 00	4T08-02	5G08-10	
4009	CAPACITOR K3 DUMP/CHARGE	CAP K3	DIG B	1/16	2B40	08 00	4T02-57	5G08-11	
4010	POLARITY K5 (+)/(-)	POL K5	DIG B	1/16	2B41	10 00	4T02-19	5G08-07	
4011	POLARITY K4 (+)/(-)	POL K4	DIG B	1/16	2B42	12 00	4T04-57	5G08-08	
4012	CAPACITOR HI/LO	CAPTANCE	DIG B	1/16	2B43	15 00	4T04-19	5G08-12	
4013	YAW COIL OUT/IN	Y COIL	DIG B	1/16	2B44	18 00	4T06-57	5G08-05	
4014	PITCH COIL OUT/IN	P COIL	DIG B	1/16	2B45	01 01	4T06-19	5G08-04	
4015	ROLL COIL OUT/IN	R COIL	DIG B	1/16	2B46	02 01	4T08-57	5G08-06	

NUMBER 5000 - MECHANICAL SUBSYSTEM

FUNC NO.	TLM FUNCTION	ACRONYM	SIGNL TYPE	SAMP SEC	GATE ADDR	COLUMN /ROW	TMP CONN	S/S CONN	INT CONN
	MECHANICAL SUBSYSTEM								
5001	SQUIB ARM POWER	SQIB PWR	DIG B	1/1	0833	16 02	4T02-39	5P30-A	
5002	SPACECRAFT SEPARATION SW	SEP SW	DIG B	1/1	0834	17 02	4T04-84	5P30-H	
5003	UNFOLD TIMER 1 FIRED (2.5 SEC)	UF 1 2.5	DIG B	1/1	0835	16 03	4T04-39	5P30-C	
5004	UNFOLD TIMER 2 FIRED (5.0 SEC)	UF 2 5.0	DIG B	1/1	0836	17 03	4T06-84	5P30-E	

NUMBER 6000 - POWER SUBSYSTEM

FUNC NO.	TLM. FUNCTION	ACRONYM	SIGNL TYPE	SAMP SEC	GATE ADDR	COLUMN /ROW	TMP CONN	S/S CONN	INT CONN
	BATTERIES 1 THRU 8								
6001	BATTERY 1 DISCHARGE CURRENT	BAT1 DIS	ALOG	1/16	A096	08 08	4T80-16	1P04-02	5Z14-28
6002	BATTERY 2 DISCHARGE CURRENT	BAT2 DIS	ALOG	1/16	A160	10 17	4T82-16	1P03-02	5Z12-18
6003	BATTERY 3 DISCHARGE CURRENT	BAT3 DIS	ALOG	1/16	A224	12 26	4T84-16	1P21-02	5Z12-23
6004	BATTERY 4 DISCHARGE CURRENT	BAT4 DIS	ALOG	1/16	A288	15 35	4T86-16	2P15-02	5Z10-59
6005	BATTERY 5 DISCHARGE CURRENT	BAT5 DIS	ALOG	1/16	A352	18 44	4T88-16	3P04-02	
6006	BATTERY 6 DISCHARGE CURRENT	BAT6 DIS	ALOG	1/16	A416	01 54	4T90-16	4P03-02	5Z14-51
6007	BATTERY 7 DISCHARGE CURRENT	BAT7 DIS	ALOG	1/16	A480	02 63	4T92-16	4P09-02	5Z14-55
6008	BATTERY 8 DISCHARGE CURRENT	BAT8 DIS	ALOG	1/16	A544	08 72	4T94-16	4P15-02	5Z14-59
6011	BATTERY 1 CHARGE CURRENT	BAT1 CHG	ALOG	1/16	A097	10 08	4T80-03	1P04-03	5Z14-29
6012	BATTERY 2 CHARGE CURRENT	BAT2 CHG	ALOG	1/16	A161	12 17	4T82-03	1P03-03	5Z12-19
6013	BATTERY 3 CHARGE CURRENT	BAT3 CHG	ALOG	1/16	A225	15 26	4T84-03	1P21-03	5Z12-24
6014	BATTERY 4 CHARGE CURRENT	BAT4 CHG	ALOG	1/16	A289	18 35	4T86-03	2P15-03	5Z10-60
6015	BATTERY 5 CHARGE CURRENT	BAT5 CHG	ALOG	1/16	A353	01 45	4T88-03	3P04-03	
6016	BATTERY 6 CHARGE CURRENT	BAT6 CHG	ALOG	1/16	A417	02 54	4T90-03	4P03-03	5Z14-52
6017	BATTERY 7 CHARGE CURRENT	BAT7 CHG	ALOG	1/16	A481	08 63	4T92-03	4P09-03	5Z14-56
6018	BATTERY 8 CHARGE CURRENT	BAT8 CHG	ALOG	1/16	A545	10 72	4T94-03	4P15-03	5Z14-60
6021	BATTERY 1 VOLTAGE	BAT1 VLT	ALOG	1/16	A098	12 08	4T80-07	1P04-04	5Z14-30
6022	BATTERY 2 VOLTAGE	BAT2 VLT	ALOG	1/16	A162	15 17	4T82-07	1P03-04	5Z12-20
6023	BATTERY 3 VOLTAGE	BAT3 VLT	ALOG	1/16	A226	18 26	4T84-07	1P21-04	5Z12-25
6024	BATTERY 4 VOLTAGE	BAT4 VLT	ALOG	1/16	A290	01 36	4T86-07	2P15-04	5Z10-61
6025	BATTERY 5 VOLTAGE	BAT5 VLT	ALOG	1/16	A354	02 45	4T88-07	3P04-04	
6026	BATTERY 6 VOLTAGE	BAT6 VLT	ALOG	1/16	A418	08 54	4T90-07	4P03-04	5Z14-53
6027	BATTERY 7 VOLTAGE	BAT7 VLT	ALOG	1/16	A482	10 63	4T92-07	4P09-04	5Z14-57
6028	BATTERY 8 VOLTAGE	BAT8 VLT	ALOG	1/16	A546	12 72	4T94-07	4P15-04	5Z14-61
6031	BATTERY NO. 1 TEMPERATURE	BAT1 TMP	ALOG	1/16	A099	15 08	4T80-82	1P04-05	5Z14-31
6032	BATTERY NO. 2 TEMPERATURE	BAT2 TMP	ALOG	1/16	A163	18 17	4T82-82	1P03-05	5Z12-21
6033	BATTERY NO. 3 TEMPERATURE	BAT3 TMP	ALOG	1/16	A227	01 27	4T84-82	1P21-05	5Z12-26
6034	BATTERY NO. 4 TEMPERATURE	BAT4 TMP	ALOG	1/16	A291	02 36	4T86-82	2P15-05	5Z10-62
6035	BATTERY NO. 5 TEMPERATURE	BAT5 TMP	ALOG	1/16	A355	08 45	4T88-82	3P04-05	
6036	BATTERY NO. 6 TEMPERATURE	BAT6 TMP	ALOG	1/16	A419	10 54	4T90-82	4P03-05	5Z14-54
6037	BATTERY NO. 7 TEMPERATURE	BAT7 TMP	ALOG	1/16	A483	12 63	4T92-82	4P09-05	5Z14-58
6038	BATTERY NO. 8 TEMPERATURE	BAT8 TMP	ALOG	1/16	A547	15 72	4T94-82	4P15-05	5Z14-62

FUNC NO.	TLM FUNCTION	ACRONYM	SIGNL TYPE	SAMP SEC	GATE ADDR	COLUMN /ROW	TMP CONN	S/S CONN	INT CONN
	SOLAR ARRAY PADDLE 502 (RIGHT)								
6040	502 PADDLE TEMPERATURE	RT PAD T	ALOG	1/16	A292	08 36	4T86-52	7417-P	5Z15-31
6041	502 PADDLE VOLTAGE 'N'	RPAD V P	ALOG	1/16	A357	12 45	4T88-31	7417-R	5Z15-28
6042	502 PADDLE VOLTAGE 'M'	RPAD V O	ALOG	1/16	A294	12 36	4T86-54	7417-S	5Z15-29
	SOLAR ARRAY PADDLE 501 (LEFT)								
6044	501 PADDLE TEMPERATURE	LT PAD T	ALOG	1/16	A356	10 45	4T88-52	7427-P	5Z15-30
6045	501 PADDLE VOLTAGE 'F'	LPAD V F	ALOG	1/16	A293	10 36	4T86-31	7427-S	5Z15-27
6046	501 PADDLE VOLTAGE 'G'	LPAD V G	ALOG	1/16	A358	15 45	4T88-54	7427-R	5Z15-26
	POWER CONTROL MODULE(PCM)								
6050	UNREGULATED BUS VOLTAGE	UR BUS V	ALOG	1/16	A100	18 08	4T80-52	2P03-04	5Z10-63
6051	REGULATED BUS VOLTAGE	RG BUS V	ALOG	1/16	A165	02 18	4T82-31	2P03-05	5Z10-64
6052	AUXILIARY REGULATOR ''A'' VOLTAGE	AUX A V	ALOG	1/16	A164	01 18	4T82-52	2P03-06	5Z10-65
6053	AUXILIARY REGULATOR ''B'' VOLTAGE	AUX B V	ALOG	1/16	A228	02 27	4T84-52	2P03-07	5Z10-66
6054	SOLAR ARRAY CURRENT	SOLAR I	ALOG	1/16	A101	01 09	4T80-31	2P03-08	5Z10-67
6055	REGULATED BUS CURRENT	RG BUS I	ALOG	1/1	A600	06 00	4T96-11	2P03-10	5Z10-68
6056	REGULATED BUS CURRENT	RG BUS I	ALOG	1/1	A618	13 02	4T96-81	2P03-09	5Z10-69
6058	PCM THERMISTOR NO. 43 HOT SPOT (RT1)	PCMOD T1	ALOG	1/16	A192	01 22	4T84-10	P5T04-36	
6059	PCM THERMISTOR NO. 35 MODULE TEMP (RT2)	PCMOD T2	ALOG	1/16	A256	02 31	4T86-10	P5T12-11	
6060	TRICKLE CHARGE OVERRIDE/NORMAL	TRKL CHG	DIG B	1/16	OB58	18 02	4T04-23	2P03-15	5Z10-70
6061	PWM REGULATOR NO. 1 ON/OFF	PWM1 REG	DIG B	1/16	OB44	18 00	4T06-68	2P03-02	5Z10-71
6062	PWM REGULATOR NO. 2 ON/OFF	PWM2 REG	DIG B	1/16	OB51	18 01	4T04-38	2P03-03	5Z10-72
	PAYLOAD REGULATOR MODULE(PRM)								
6070	PAYLOAD REG. BUS VOLTAGE	PRG BS V	ALOG	1/16	A200	02 23	4T84-12	1P09-05	5Z12-22
6071	PAYLOAD UNREG. BUS VOLTAGE	PUR BS V	ALOG	1/16	A265	10 32	4T86-26	1P09-04	5Z12-27
6072	PAYLOAD REG. BUS CURRENT	PRG BS I	ALOG	1/1	A615	07 02	4T96-34	1P09-10	5Z12-28
6073	PAYLOAD AUX. REG. VOLTAGE A	PAUX A V	ALOG	1/16	A264	08 32	4T86-12	1P09-06	5Z12-29
6074	PAYLOAD AUX. REG. VOLTAGE B	PAUX B V	ALOG	1/16	A328	10 41	4T88-12	1P09-07	5Z12-30
6075	PRM THEMISTOR NO. 38 TOP OUTBOARD	PRMOD T1	ALOG	1/16	A193	02 22	4T84-23	P5T12-17	
6076	PRM THERMISTOR NO.69 CENTER INBOARD	PRMOD T2	ALOG	1/16	A257	08 31	4T86-23	P5T20-18	
6077	PWM REGULATOR NO. 3 ON/OFF	PWM3 REG	DIG B	1/16	OB43	15 00	4T04-40	1P09-02	5Z12-31
6078	PWM REGULATOR NO. 4 ON/OFF	PWM4 REG	DIG B	1/16	OB50	15 01	4T04-43	1P09-03	5Z12-32
6100	PAYLOAD REG. BUS CURRENT	PRG BS I	ALOG	1/1	A633	17 04	4T96-02	1P09-09	5Z12-16
	NOTE SEE ELECTRICAL INTERFACE S/S								

NUMBER 7000 - THERMAL SUBSYSTEM

FUNC NO.	TLM FUNCTION	ACRONYM	SIGNL TYPE	SAMP SEC	GATE ADDR	COLUMN /ROW	TMP CONN	S/S CONN	INT CONN
	THERMAL SUBSYSTEM								
7001	SEPARATOR NO.1,TOP INBOARD	TH01STI	ALOG	1/16	A120	15 11	4T80-05	5T04-07	
7002	SEPARATOR NO.2, BOTTOM OUTBOARD	TH02SBO	ALOG	1/16	A121	18 11	4T80-02	5T12-07	
7003	SEPARATOR NO.3, TOP INBOARD	TH03STI	ALOG	1/16	A122	01 12	4T80-19	5T20-07	
7004	TEMP CONTROL BELLOWS NO. 10	TH10TCB	ALOG	1/16	A123	02 12	4T80-78	5T04-25	
7005	SEPARATOR NO.4, TOP INBOARD	TH04STI	ALOG	1/16	A124	08 12	4T80-79	5T12-25	
7006	SEPARATOR NO.5, BOTTOM OUTBOARD	TH05SBO	ALOG	1/16	A125	10 12	4T80-58	5T20-25	
7007	REAR BULKHEAD GAS -X THRUSTER	THGAS-X	ALOG	1/16	A126	12 12	4T80-35	5T04-26	
7008	SEPARATOR NO.6, TOP OUTBOARD	TH06STO	ALOG	1/16	A127	15 12	4T80-57	5T12-26	
7009	SEPARATOR NO.6, BOTTOM INBOARD	TH06SBI	ALOG	1/16	A184	18 20	4T82-05	5T20-26	
7010	SEPARATOR NO.7, TOP INBOARD	TH07STI	ALOG	1/16	A185	01 21	4T82-02	5T04-19	
7011	SEPARATOR NO.8, TOP OUTBOARD	TH08STO	ALOG	1/16	A186	02 21	4T82-19	5T12-19	
7012	SEPARATOR NO.9, BOTTOM INBOARD	TH09SBI	ALOG	1/16	A187	08 21	4T82-78	5T20-19	
7013	SEPARATOR NO.10, BOTTOM OUTBOARD	TH10SBO	ALOG	1/16	A188	10 21	4T82-79	5T04-35	
7014	SEPARATOR NO.11, TOP INBOARD	TH11STI	ALOG	1/16	A189	12 21	4T82-58	5T12-35	
7015	SEPARATOR NO.12, BOTTOM OUTBOARD	TH12SBO	ALOG	1/16	A190	15 21	4T82-35	5T20-35	
7016	SEPARATOR NO.13, TOP INBOARD	TH13STI	ALOG	1/16	A191	18 21	4T82-57	5T04-33	
7017	RBV BEAM CENTER LINE	THRBVCL	ALOG	1/16	A248	01 30	4T84-05	5T12-33	
7018	SEPARATOR NO.14, TOP OUTBOARD	TH14STO	ALOG	1/16	A249	02 30	4T84-02	5T20-33	
7019	NBTR RADIATOR BAY 4 OUTBOARD	TH04NBR	ALOG	1/16	A250	08 30	4T84-19	5T04-31	
7020	SEPARATOR NO.15, BOTTOM INBOARD	TH15SBI	ALOG	1/16	A251	10 30	4T84-78	5T12-31	
7021	SEPARATOR NO.16, TOP INBOARD	TH16STI	ALOG	1/16	A252	12 30	4T84-79	5T20-31	
7022	SEPARATOR NO.17, BOTTOM INBOARD	TH17SBI	ALOG	1/16	A253	15 30	4T84-58	5T04-29	
7023	SEPARATOR NO.18, BOTTOM OUTBOARD	TH18SBO	ALOG	1/16	A254	18 30	4T84-35	5T12-29	
7030	UPPER RING AT BAY NO.3	TH03BUR	ALOG	1/16	A255	01 31	4T84-57	5T20-29	
7031	UPPER RING AT BAY NO.6	TH06BUR	ALOG	1/16	A312	02 39	4T86-05	5T04-16	
7032	UPPER RING AT BAY NO.9	TH09BUR	ALOG	1/16	A313	08 39	4T86-02	5112-16	
7033	UPPER RING AT BAY NO.12	TH12BUR	ALOG	1/16	A314	10 39	4T86-19	5T20-16	
7034	UPPER RING AT BAY NO.15	TH15BUR	ALOG	1/16	A315	12 39	4T86-78	5T04-14	
7035	UPPER RING AT BAY NO.18	TH18BUR	ALOG	1/16	A316	15 39	4T86-79	5T12-14	
7040	TEMPERATURE CONTROL BELLOWS NO.1	TH01TCB	ALOG	1/16	A317	18 39	4T86-58	5T20-14	
7041	TEMPERATURE CONTROL BELLOWS NO.2	TH02TCB	ALOG	1/16	A318	01 40	4T86-35	5T04-12	
7042	TEMPERATURE CONTROL BELLOWS NO. 3	TH03TCB	ALOG	1/16	A319	02 40	4T86-57	5T12-12	
7043	TEMPERATURE CONTROL BELLOWS NO.4	TH04TCB	ALOG	1/16	A376	08 48	4T88-05	5T20-12	
7044	TEMPERATURE CONTROL BELLOWS NO.5	TH05TCB	ALOG	1/16	A377	10 48	4T88-02	5T04-11	
7045	TEMPERATURE CONTROL BELLOWS NO. 7	TH07TCB	ALOG	1/16	A378	12 48	4T88-19	5T20-11	
7046	TEMPERATURE CONTROL BELLOWS NO9	TH09TCB	ALOG	1/16	A379	15 48	4T88-78	5T04-17	
7047	SPARE								
7048	TEMPERATURE CONTROL BELLOWS NO.11	TH11TCB	ALOG	1/16	A380	18 48	4T88-79	5T20-17	
7049	TEMPERATURE CONTROL BELLOWS NO12	TH12TCB	ALOG	1/16	A381	01 49	4T88-58	5T04-37	
7050	TEMPERATURE CONTROL BELLOWS NO.13	TH13TCB	ALOG	1/16	A382	02 49	4T88-35	5T12-37	
7051	TEMPERATURE CONTROL BELLOWS NO. 14	TH14TCB	ALOG	1/16	A383	08 49	4T88-57	5T20-37	
7052	TEMPERATURE CONTROL BELLOWS NO. 16	TH16TCB	ALOG	1/16	A440	10 57	4T90-05	5T12-36	

FUNC NO.	TLM FUNCTION	ACRONYM	SIGNL TYPE	SAMP SEC	GATE ADDR	COLUMN /ROW	TMP CONN	S/S CONN	INT CONN
7053	TEMPERATURE CONTROL BELLOWS NO. 17	TH17TCB	ALOG	1/16	A441	12 57	4T90-02	5T20-36	
7054	TEMPERATURE CONTROL BELLOWS NO. 18	TH18TCB	ALOG	1/16	A442	15 57	4T90-19	5T04-34	
7060	SHUTTER ASSEMBLY BAY NO. 1	SH01	ALOG	1/16	A119	12 11	4T80-56	5T04-23	
7061	SHUTTER ASSEMBLY BAY NO. 2	SH02	ALOG	1/16	A183	15 20	4T82-56	5T12-23	
7062	SHUTTER ASSEMBLY BAY NO. 3	SH03	ALOG	1/16	A223	10 26	4T84-74	5T20-23	
7063	SHUTTER ASSEMBLY BAY NO. 4	SH04	ALOG	1/16	A311	01 39	4T86-56	5T04-21	
7064	SHUTTER ASSEMBLY BAY NO. 5	SH05	ALOG	1/16	A375	02 48	4T88-56	5T12-21	
7065	SHUTTER ASSEMBLY,BAY NO. 7	SH07	ALOG	1/16	A439	08 57	4T90-56	5T04-22	
7067	SHUTTER ASSEMBLY,BAY NO. 9	SH09	ALOG	1/16	A567	12 75	4T94-56	5T20-22	
7068	SHUTTER ASSEMBLY,BAY NO. 10	SH10	ALOG	1/16	A118	10 11	4T80-55	5T04-4	
7069	SHUTTER ASSEMBLY,BAY NO. 11	SH11	ALOG	1/16	A182	12 20	4T82-55	5T12-4	
7070	SHUTTER ASSEMBLY,BAY NO. 12	SH12	ALOG	1/16	A222	08 26	4T84-50	5T20-4	
7071	SHUTTER ASSEMBLY,BAY NO. 13	SH13	ALOG	1/16	A310	18 38	4T86-55	5T04-3	
7072	SHUTTER ASSEMBLY,BAY NO. 14	SH14	ALOG	1/16	A374	01 48	4T88-55	5T12-3	
7073	SHUTTER ASSEMBLY,BAY NO. 15	SH15	ALOG	1/16	A438	02 57	4T90-55	5T20-3	
7074	SHUTTER ASSEMBLY,BAY NO. 16	SH16	ALOG	1/16	A501	02 66	4T92-32	5T04-2	
7075	SHUTTER ASSEMBLY,BAY NO. 17	SH17	ALOG	1/16	A566	10 75	4T94-55	5T12-2	
7076	SHUTTER ASSEMBLY,BAY NO. 18	SH18	ALOG	1/16	A117	08 11	4T80-32	5T20-2	
7080	T/M CONV.MOD.,Q1 THER. ZENER	ZNVQ1TH	ALOG	1/16	A181	10 20	4T82-32	5T04-20	
7081	T/M CONV. MOD.,Q2 THER. ZENER	ZNVQ2TH	ALOG	1/16	A221	02 26	4T84-29	5T12-20	
7082	T/M CONV. MOD.,Q3 THER. ZENER	ZNVQ3TH	ALOG	1/16	A309	15 38	4T86-32	5T20-20	
7083	T/M CONV. MOD.,Q1 SHUTTER ZENER	ZNVQ1SH	ALOG	1/16	A373	18 47	4T88-32	5T04-6	
7084	T/M CONV. MOD.,Q2 SHUTTER ZENER	ZNVQ2SH	ALOG	1/16	A437	01 57	4T90-32	5T12-6	
7085	T/M CONV. MOD.,Q3 SHUTTER ZENER	ZNVQ3SH	ALOG	1/16	A500	01 66	4T92-77	5T20-6	
7090	PSM MOUNT	THPSMM	ALOG	1/16	A443	18 57	4T90-78	5T12-18	
7091	INDEPENDANT ATTITUDE SENSOR MTG.	THIASM	ALOG	1/16	A444	01 58	4T90-79	5T12-34	
7092	RBV RADIATOR	THRBVR	ALOG	1/16	A445	02 58	4T90-58	5T20-34	
7093	RBV CAMERA SUPPORT BEAM(CENTER)	THRBVBC	ALOG	1/16	A446	08 58	4T90-35	5T20-32	
7094	WBVTR RADIATOR (RBBT)	THWBRRR	ALOG	1/16	A447	10 58	4T90-57	5T04-32	
7095	WBVTR RADIATOR (CENTER)	THWBRRC	ALOG	1/16	A504	12 66	4T92-05	5T12-32	
7096	WBVTR HEAT STRAP	THWBRHS	ALOG	1/16	A505	15 66	4T92-02	5T12-10	
7097	WB ELECTRONICS MOUNT OVER BAY NO. 1	TH01WBE	ALOG	1/16	A506	18 66	4T92-19	5T20-10	
7098	WB ELECTRONICS MOUNT OVER BAY NO.18	TH18WBE	ALOG	1/16	A507	01 67	4T92-78	5T04-18	
7099	WBVTR 1, INBOARD OF SEPARATOR 3	TH03WBR	ALOG	1/16	A508	02 67	4T92-79	5T04-30	
7100	WBVTR 1, INBOARD OF SEPARATOR 17	TH17WBR	ALOG	1/16	A509	08 67	4T92-58	5T12-30	
7101	WBVTR 1, CENTER	THC1WBR	ALOG	1/16	A510	10 67	4T92-35	5T20-30	
7102	WBVTR 2, INBOARD OF BAY 4	TH04WBR	ALOG	1/16	A511	12 67	4T92-57	5T04-28	
7103	WBVTR 2 BEAM INBOARD OF BAY 15	TH15WBR	ALOG	1/16	A568	15 75	4T94-05	5T12-28	
7104	WBVTR 2, BEAM CENTER	THC2WBR	ALOG	1/16	A569	18 75	4T94-02	5T20-28	
7105	NBTR BEAM INBOARD OF SEPARATOR NO.6	TH06NBR	ALOG	1/16	A570	01 76	4T94-19	5T04-15	
7106	NBTR BEAM INBOARD OF SEPARATOR NO.14	TH14NBR	ALOG	1/16	A571	02 76	4T94-78	5T12-15	
7107	NBTR BEAM CENTER	THCBNBR	ALOG	1/16	A572	08 76	4T94-79	5T20-15	
7108	MSS MOUNT NEAR SEPARATOR NO. 14	TH14MSS	ALOG	1/16	A573	10 76	4T94-58	5T04-13	
7109	REAR BULKHEAD BAS -Y THRUSTER	TH-YBAS	ALOG	1/16	A574	12 76	4T94-35	5T12-13	
7110	MSS MOUNT NEAR CENTER OF WBVTR BEAM	THCWMSS	ALOG	1/16	A575	15 76	4T94-57	5T20-13	
7111	REAR BULKHEAD BAS +X THRUSTER	TH+XBAS	ALOG	1/16	A503	10 66	4T92-56	5T04-10	

FUNC NO.	TLM FUNCTION	ACRONYM	SIGNL TYPE	SAMP SEC	GATE ADDR	COLUMN /ROW	TMP CONN	S/S CONN	INT CONN

NOTE SEE ELECTRICAL INTERFACE S/S

NUMBERS 8000, 9000, 10000, + 12000
COMMUNICATIONS AND DATA HANDLING

FUNC NO.	TLM FUNCTION	ACRONYM	SIGNL TYPE	SAMP SEC	GATE ADDR	COLUMN /ROW	TMP CONN	S/S CONN	INT CONN
	COMMAND CLOCK NO.8000								
8001	PRIMARY W CHANNEL INPUT (DATA)	PRI W IN	ALOG	1/16	A116	02 11	4T80-77	2C13-37	5Z10-01
8002	PRIMARY X CHANNEL INPUT (STROBE)	PRI X IN	ALOG	1/16	A180	08 20	4T82-77	2C13-36	5Z10-02
8003	REDUNDANT W CHANNEL INPUT (DATA)	RED W IN	ALOG	1/16	A114	18 10	4T80-06	2C13-08	5Z10-03
8004	REDUNDANT X CHANNEL INPUT (STROBE)	RED X IN	ALOG	1/16	A178	01 20	4T82-06	2C13-23	5Z10-04
8005	PRIMARY POWER SUPPLY TEMPERATURE	PPS TEMP	ALOG	1/16	A247	18 29	4T84-56	2C13-30	5Z10-05
8006	REDUNDANT POWER SUPPLY TEMPERATURE	RPS TEMP	ALOG	1/16	A245	12 29	4T84-32	2C13-29	5Z10-06
8007	PRIMARY OSCILLATOR TEMPERATURE	POSC TMP	ALOG	1/16	A308	12 38	4T86-77	2C13-33	5Z10-07
8008	REDUNDANT OSCILLATOR TEMPERATURE	ROSC TMP	ALOG	1/16	A306	08 38	4T86-06	2C13-32	5Z10-08
8009	PRIMARY OSCILLATOR OUTPUT	POSC OUT	ALOG	1/16	A372	15 47	4T88-77	2C13-31	5Z10-09
8010	REDUNDANT OSCILLATOR OUTPUT	ROSC OUT	ALOG	1/16	A370	10 47	4T88-06	2C13-28	5Z10-10
8011	100 KHZ MASTER CLOCK	100KHZ	ALOG	1/16	A371	12 47	4T88-80	2C13-18	5Z10-11
8012	10KHZ	10KHZ	ALOG	1/16	A435	15 56	4T90-80	2C13-09	5Z10-12
8013	2.5 KHZ	2.5KHZ	ALOG	1/16	A498	15 65	4T92-06	2C13-34	5Z10-13
8014	400 HZ PH A/PH B	400HZ AB	ALOG	1/16	A564	02 75	4T94-77	2C13-22	5Z10-14
8015	PRIMARY +4 VDC	PRI +4V	ALOG	1/16	A436	18 56	4T90-77	2C13-04	5Z10-15
8016	REDUNDANT +4VDC	RED +4V	ALOG	1/16	A434	12 56	4T90-06	2C13-11	5Z10-16
8017	PRIMARY +6.0 VDC	PRI +6V	ALOG	1/16	A499	18 65	4T92-80	2C13-10	5Z10-17
8018	REDUNDANT +6.0VDC	RED +6V	ALOG	1/16	A497	12 65	4T92-08	2C13-05	5Z10-18
8019	PRIMARY -6.0VDC	PRI -6V	ALOG	1/16	A565	08 75	4T94-32	2C13-15	5Z10-19
8020	REDUNDANT -6.0VDC	RED -6V	ALOG	1/16	A563	01 75	4T94-80	2C13-06	5Z10-20
8021	PRIMARY -23 VDC	PRI -23V	ALOG	1/16	A115	01 11	4T80-80	2C13-01	5Z10-21
8022	REDUNDANT -23VDC	RED -23V	ALOG	1/16	A246	15 29	4T84-55	2C13-02	5Z10-22
8023	PRIMARY -29VDC	PRI -29V	ALOG	1/16	A179	02 20	4T82-80	2C13-13	5Z10-23
8024	REDUNDANT -29VDC	RED -29V	ALOG	1/16	A307	10 38	4T86-80	2C13-03	5Z10-24
8025	PRIMARY POWER SUPPLY ON/OFF	PPWR SUP	DIG B	1/16	7B62	10 03	4T08-76	2C11-17	5Z10-25
8026	REDUNDANT POWER SUPPLY ON/OFF	RPWR SUP	DIG B	1/16	1839	02 00	4T08-41	2C11-33	5Z10-26
8027	POWER SUPPLY SELECT PRI./RED.	PWR SLCT	DIG B	1/16	0841	10 00	4T02-40	2C11-16	5Z10-27
8028	PRIMARY COMSTOR ON/OFF	PCOMSTOR	DIG B	1/16	1845	01 01	4T06-42	2C11-19	5Z10-28
8029	REDUNDANT COMSTOR ON/OFF	RCOMSTOR	DIG B	1/16	0840	08 00	4T02-68	2C11-36	5Z10-29
8030	MATRIX DECODER PRIMARY/REDUNDANT	MTX DCDR	DIG B	1/16	0842	12 00	4T04-68	2C11-08	5Z10-30
8031	MATRIX DRIVER A PRIMARY/REDUNDANT	MTX DR A	DIG B	1/16	1852	01 02	4T06-20	2C11-02	5Z10-31
8032	MATRIX DRIVER B PRIMARY/REDUNDANT	MTX DR B	DIG B	1/16	0849	12 01	4T02-38	2C11-24	5Z10-32
8033	FREQUENCY GEN. PRIMARY/REDUNDANT	FREQ GEN	DIG B	1/16	0847	08 01	4T08-40	2C11-09	5Z10-33
8034	SELECT OSCILLATOR PRIMARY/REDUNDANT	OSC SLCT	DIG B	1/16	0848	10 01	4T02-43	2C11-34	5Z10-34
8035	SERIAL DATA TRANSFER YES/NO	SER DATA	DIG B	1/16	0854	08 02	4T08-43	2C11-35	5Z10-35
8036	SERIAL DATA ERROR YES/NO	DATA ERR	DIG B	1/16	0861	08 03	4T06-62	2C11-18	5Z10-36
8037	1 HZ (A) YES/NO	1HZ (A)	DIG B	1/16	1859	01 03	4T04-61	2C13-19	5Z10-37
8038	1 HZ (B) YES/NO	1HZ (B)	DIG B	1/16	3851	18 01	4T04-24	2C13-07	5Z10-38
8039	PRIMARY Y CHAN. INPUT(ENABLE) YES/NO	PRI Y IN	DIG B	5/1	6832	14 00	4T02-32	2C13-20	5Z10-39
8040	REDUN. Y CHAN. INPUT(ENABLE) YES/NO	RED Y IN	DIG B	5/1	9832	14 00	4T02-56	2C13-21	5Z10-40
8041	COMMAND EXECUTE COUNTER BIT 1	CMD EX 1	DIG B	1/1	1833	16 02	4T02-41	2C11-12	5Z10-41

FUNC NO.	TLM FUNCTION	ACRONYM	SIGNL TYPE	SAMP SEC	GATE ADDR	COLUMN /ROW	TMP CONN	S/S CONN	INT CONN
8042	COMMAND EXECUTE COUNTER BIT 2	CMD EX 2	DIG B	1/1	2B33	16 02	4T02-02	2C11-26	5Z10-42
8043	COMMAND EXECUTE COUNTER BIT 4	CMD EX 4	DIG B	1/1	3B33	16 02	4T02-66	2C11-27	5Z10-43
8044	COMMAND EXECUTE COUNTER BIT 8	CMD EX 8	DIG B	1/1	4B33	16 02	4T02-59	2C11-13	5Z10-44
8045	COMMAND EXECUTE COUNTER BIT 16	CMD EX16	DIG B	1/1	5B33	16 02	4T02-28	2C11-14	5Z10-45
8046	COMMAND EXECUTE COUNTER BIT 32	CMD EX32	DIG B	1/1	6B33	16 02	4T02-47	2C11-29	5Z10-46
8047	PRIMARY COMSTOR FILL YES/NO	PCOMSTRF	DIG B	1/1	1B34	17 02	4T04-60	2C11-21	5Z10-47
8048	REDUNDANT COMSTOR FILL YES/NO	RCOMSTRF	DIG B	1/1	1B37	16 04	4T06-41	2C11-22	5Z10-48
8049	PRIMARY COMSTOR ACTIVATE YES/NO	PCOMSTRA	DIG B	1/1	0B37	16 04	4T06-39	2C11-10	5Z10-49
8050	REDUNDANT COMSTOR ACTIVATE YES/NO	RCOMSTRA	DIG B	1/1	2B36	17 03	4T06-82	2C11-23	5Z10-50
8051	PRIMARY COMSTOR VERIFY YES/NO	PCOMSTRV	DIG B	1/1	1B35	16 03	4T04-41	2C11-28	5Z10-51
8052	REDUNDANT COMSTOR VERIFY YES/NO	RCOMSTRV	DIG B	1/1	2B34	17 02	4T04-82	2C11-11	5Z10-52
8053	PRIMARY COMDEC IN-SYNC YES/NO	PCD SYNC	DIG B	1/1	1B36	17 03	4T06-60	2C11-01	5Z10-53
8054	REDUNDANT COMDEC IN-SYNC YES/NO	RCD SYNC	DIG B	1/1	2B35	16 03	4T04-02	2C11-03	5Z10-54
8055	PRIMARY COMDEC DATA ERROR YES/NO	PCD ERR	DIG B	5/1	0B32	14 00	4T02-84	2C11-20	5Z10-55
8056	REDUNDANT COMDEC DATA ERROR YES/NO	RCD ERR	DIG B	5/1	3B32	14 00	4T02-09	2C11-37	5Z10-56
	NOTE SEE ELEC. INTERFACE S/S								
	COMMAND INTEGRATOR UNIT								
8101	-12V MONITOR A	CIUA-12V	ALOG	1/16	A244	10 29	4T84-77	2C48-05	
8102	-12V MONITOR B	CIUB-12V	ALOG	1/16	A403	02 52	4T90-47	2C50-05	
8103	-5V MONITOR A	CIUA-5V	ALOG	1/16	A562	18 74	4T94-06	2C48-06	
8104	-5V MONITOR B	CIUB-5V	ALOG	1/16	A467	08 61	4T92-47	2C50-06	
8105	TEMPERATURE A	CIU A T	ALOG	1/16	A305	02 38	4T86-08	2C48-07	
8106	TEMPERATURE B	CIU B T	ALOG	1/16	A588	12 78	4T96-76	2C50-07	
8107	CHANNEL A ON/OFF	CHANNL A	DIG B	1/16	1B40	08 00	4T02-37	2C48-01	
8108	CHANNEL B ON/OFF	CHANNL B	DIG B	1/16	3B56	12 02	4T02-06	2C50-01	
8109	COMMAND INPUT A CLK/CIU	CMD IN A	DIG B	1/1	3B34	17 02	4T04-09	2C48-02	
8110	COMMAND INPUT B CLK/CIU	CMD IN B	DIG B	1/1	3B35	16 03	4T04-66	2C50-02	
8111	MSFN ENABLE A YES/NO	MSF A EN	DIG B	1/1	3B36	17 03	4T06-09	2C48-03	
8112	MSFN ENABLE B YES/NO	MSF B EN	DIG B	1/1	2B37	16 04	4T06-02	2C50-03	
	VHF COMMAND RECEIVER								
8201	TEMPERATURE [RF/IF A]	RF A T	ALOG	1/16	A433	10 56	4T90-08	2C06-35	
8202	TEMPERATURE [RF/IF B]	RF B T	ALOG	1/16	A112	12 10	4T80-09	2C06-37	
8203	TEMERATURE [DEMOD A]	DMOD A T	ALOG	1/16	A561	15 74	4T94-08	2C06-02	
8204	TEMERATURE [DEMOD B]	DMOD B T	ALOG	1/16	A176	15 19	4T82-09	2C06-05	
8205	AGC RECEIVER A	RCVA AGC	ALOG	1/1	A598	04 00	4T96-13	2C06-07	
8206	AGC RECEIVER B	RCVB AGC	ALOG	1/1	A599	05 00	4T96-46	2C06-09	
8207	AUDIO AMPLIFIER A OUTPUT	AMPA OUT	ALOG	1/16	A243	08 29	4T84-80	2C06-11	
8208	AUDIO AMPLIFIER B OUTPUT	AMPB OUT	ALOG	1/16	A304	01 38	4T86-09	2C06-13	
8209	FSK DEMODULATOR A OUTPUT	FSKA OUT	ALOG	1/16	A368	02 47	4T88-09	2C06-15	

FUNC NO.	TLM FUNCTION	ACRONYM	SIGNL TYPE	SAMP SEC	GATE ADDR	COLUMN /ROW	TMP CONN	S/S CONN	INT CONN
8210	FSK DEMODULATOR B OUTPUT	FSKB OUT	ALOG	1/16	A496	10 65	4T92-09	2C06-17	
8211	AM DEMODULATOR A OUTPUT	AM A OUT	ALOG	1/16	A432	08 56	4T90-09	2C06-19	
8212	AM DEMODULATOR B OUTPUT	AM B OUT	ALOG	1/16	A560	12 74	4T94-09	2C06-21	
8213	SUBCARRIER LEVEL DET A OUTPUT	DETA OUT	ALOG	1/1	A601	07 00	4T96-24	2C06-23	
8214	SUBCARRIER LEVEL DET B OUTPUT	DETB OUT	ALOG	1/1	A602	09 00	4T96-43	2C06-25	
8215	-15.7V DEMOD POWER A	DMDA-15V	ALOG	1/16	A533	15 70	4T94-51	2C06-27	
8216	-15.7V DEMOD POWER B	DMDB-15V	ALOG	1/16	A596	15 79	4T96-71	2C06-29	
8217	-10 REG VOLTS A	REGA-10V	ALOG	1/16	A071	15 04	4T80-28	2C06-31	
8218	-10 REG VOLTS B	REGB-10V	ALOG	1/16	A134	15 13	4T82-75	2C06-33	
8219	REC/DEMOD POWER A/B	R/D SLCT	DIG B	1/16	1843	15 00	4T04-42	2C06-04	
8220	REC/DEMOD POWER B/A	SLCT R/D	DIG B	1/16	8852	01 02	4T06-50	2C06-06	

FUNC NO.	TLM FUNCTION	ACRONYM	SIGNL TYPE	SAMP SEC	GATE ADDR	COLUMN /ROW	TMP CONN	S/S CONN	INT CONN
	TELEMETRY PROCESSOR (TMP)								
9001	MEMORY SEQUENCOR DC/DC CONVERTER A VOLTAGE	MSEQ A V	ALOG	1/16	A111	10 10	4T80-18	P4T56-2	
9002	MEMORY SEQUENCER DC/DC CONVERTER B VOLTAGE	MSEQ B V	ALOG	1/16	A558	08 74	4T94-33	P4T56-3	
9003	MEMORY SEQUENCER MODULE TEMPERATURE	MEMSEQ T	ALOG	1/16	A242	02 29	4T84-06	P4T56-6	
9004	FORMATTER DC/DC CONVERTER A VOLTAGE	FMTR A V	ALOG	1/16	A175	12 19	4T82-18	P4T20-1	
9005	FORMATTER DC/DC CONVERTER B VOLTAGE	FMTR B V	ALOG	1/16	A494	02 65	4T92-33	P4T20-6	
9006	DIG MUX DC/DC CONVERTER A VOLTAGE	DMUX A V	ALOG	1/16	A241	01 29	4T84-08	P4T20-7	
9007	DIG MUX DC/DC CONVERTER B VOLTAGE	DMUX B V	ALOG	1/16	A430	01 56	4T90-33	P4T20-18	
9008	FORMATTER/DIGITAL MUX MODULE TEMP	F/DMUX T	ALOG	1/16	A240	18 28	4T84-09	P4T20-37	
9009	ANALOG MUX DC/DC CONVERTER A VOLTAGE	AMUX A V	ALOG	1/16	A303	18 37	4T86-18	P4T74-4	
9010	ANALOG MUX DC/DC CONVERTER B VOLTAGE	AMUX B V	ALOG	1/16	A366	18 46	4T88-33	P4T74-5	
9011	A/D CONVERTER DC/DC CONVERTER A VOLTAGE	CONV A V	ALOG	1/16	A367	01 47	4T88-18	P4T74-14	
9012	A/D CONVERTER DC/DC CONVERTER B VOLTAGE	CONV B V	ALOG	1/16	A302	15 37	4T86-33	P4T74-15	
9013	ANALOG MUX A/D CONVERTER MODULE TEMP	AMUX T	ALOG	1/16	A512	15 67	4T94-10	P4T74-6	
9014	PREREGULATOR A VOLTAGE	PREG A V	ALOG	1/16	A431	02 56	4T90-18	P4T40-3	
9015	PREREGULATOR B VOLTAGE	PREG B V	ALOG	1/16	A239	15 28	4T84-18	P4T40-4	
9016	REPROGRAMMER MODULE TEMP	REPROG T	ALOG	1/16	A448	12 58	4T92-10	P4T40-5	
9017	MEMORY A DC/DC CONVERTER VOLTAGE	MEM A V	ALOG	1/16	A495	08 65	4T92-18	P1T08-13	
9018	MEMORY A MODULE TEMPERATURE	MEM A T	ALOG	1/16	A559	10 74	4T94-18	P1T08-11	
9019	MEMORY B DC/DC CONVERTER VOLTAGE	MEM B V	ALOG	1/16	A174	10 19	4T82-33	P4T50-13	
9020	MEMORY B MODULE TEMPERATURE	MEM B T	ALOG	1/16	A110	08 10	4T80-33	P4T50-11	
9021	POWER 1 OFF/ON	POWER 1	DIG B	1/16	1844	18 00	4T06-37	P4T40-1	
9022	POWER 2 OFF/ON	POWER 2	DIG B	1/16	9863	12 03	4T08-54	P4T40-2	
9023	MEMORY WRITE RELAY ON/OFF	MEM RITE	DIG B	1/16	1847	08 01	4T08-42	P4T40-14	
9025	MEMORY (A/B)	MEMORY	DIG B	1/16	1849	12 01	4T02-67	P4T40-06	
9026	MEMORY SEQUENCER (A/B)	MEM SEQ	DIG B	1/16	1850	15 01	4T04-20	P4T40-10	
9029	A/D CONVERTER STATUS (A/B)	A/D CONV	DIG B	1/16	1851	18 01	4T04-67	P4T40-7	
9030	ANALOG MUX (A/B)	ANAL MUX	DIG B	1/16	0855	10 02	4T08-38	P4T40-11	
9031	DIGITAL MUX (A/B)	DIG MUX	DIG B	1/16	0856	12 02	4T02-23	P4T40-8	
9032	FORMATTER LOGIC STATUS A/B	FORMATTR	DIG B	1/16	0857	15 02	4T02-62	P4T40-13	
9033	XMTR BUF AMP STATUS (A/B)	BUFF AMP	DIG B	1/16	1853	02 02	4T06-67	P4T40-15	
	VHF TRANSMITTER								
9100	REFLECTED POWER	REFL PWR	ALOG	1/16	A109	02 10	4T80-53	3T03-03	5Z14-01
9101	TRANSMITTER A +20 VDC OUTPUT	XMTA+20V	ALOG	1/16	A173	08 19	4T82-53	3T03-23	5Z14-02
9102	TRANSMITTER B +20 VDC OUTPUT	XMTB+20V	ALOG	1/16	A238	12 28	4T84-33	3T03-09	5Z14-03
9103	TRANSMITTER A TEMERATURE	XMTR A T	ALOG	1/16	A301	12 37	4T86-53	3T03-01	5Z14-04
9104	TRANSMITTER B TEMPERATURE	XMTR B T	ALOG	1/16	A365	15 46	4T88-53	3T03-14	5Z14-05
9105	XMTR A, RF POWER OUTPUT	A RF PWR	ALOG	1/16	A340	02 43	4T88-71	3T03-16	5Z14-06
9106	XMTR B, RF POWER OUTPUT	B RF PWR	ALOG	1/16	A429	18 55	4T90-53	3T03-18	5Z14-07

FUNC NO.	TLM FUNCTION	ACRONYM	SIGNL TYPE	SAMP SEC	GATE ADDR	COLUMN /ROW	TMP CONN	S/S CONN	INT CONN
9107	TRANSMITTER A ON/OFF	XMTR A	DIG B	1/16	1B55	10 02	4T08-67	3T03-25	5Z14-08
9108	TRANSMITTER B ON/OFF	XMTR B	DIG B	1/16	1B60	02 03	4T06-21	3T03-24	5Z14-09
9109	POWER MODE A HIGH/LOW	PWR MD A	DIG B	1/16	1B61	08 03	4T06-61	3T03-12	5Z14-10
9110	STORED DATA INPUT NBTR1/NBTR2	STRD IN	DIG B	1/16	9B62	10 03	4T08-73	3T03-05	5Z14-11
9111	DATA INPUT REALTIME/STORED	DATA IN	DIG B	1/16	1B56	12 02	4T02-21	3T03-10	5Z14-12
9112	POWER MODE B HIGH/LOW	PWR MD B	DIG B	1/16	7B51	18 01	4T04-71	3T03-11	5Z14-13
	NARROWBAND TAPE RECORDER NO. 1								
10001	MOTOR CURRENT 1	MOTR I 1	ALOG	1/16	A428	15 55	4T90-15	5N03-*F	5Z09-04
10002	POWER SUPPLY CURRENT 1	PS CUR 1	ALOG	1/16	A493	01 65	4T92-53	5N03-*J	5Z09-03
10003	RECORDER TEMPERATURE 1	RCDR T 1	ALOG	1/16	A557	02 74	4T94-53	5N03-M	5Z09-02
10004	POWER SUPPLY VOLTAGE 1	PS VLT 1	ALOG	1/16	A108	01 10	4T80-15	5N03-L	5Z09-01
10005	RECORD MODE 1 ON/OFF	RECORD 1	DIG B	1/16	3B38	01 00	4T08-09	5N03-P	5Z09-13
10006	PLAYBACK MODE 1 ON/OFF	PLAYBK 1	DIG B	1/16	3B39	02 00	4T08-66	5N03-*E	5Z09-14
10007	RECORD END OF TAPE PRIMARY 1 YES/NO	REOT P 1	DIG B	1/16	3B40	08 00	4T02-58	5N03-R	5Z09-15
10008	RECORD END OF TAPE SECONDARY 1 YES/NO	REOT S 1	DIG B	1/16	3B41	10 00	4T02-44	5N03-S	5Z09-16
10009	PLAYBACK END OF TAPE PRIMARY 1 YES/NO	PEOT P 1	DIG B	1/16	3B42	12 00	4T04-58	5N03-T	5Z09-17
10010	PLAYBACK END OF TAPE SECONDARY 1 YES/NO	PEOT S 1	DIG B	1/16	3B43	15 00	4T04-44	5N03-V	5Z09-18
10011	RECORDER PRESSURE 1 LOW/NOR	RCDR P 1	DIG B	1/16	8B63	12 03	4T08-12	5N03-N	5Z09-12
	NARROWBAND TAPE RECORDER NO. 2								
10101	MOTOR CURRENT 2	MOTR I 2	ALOG	1/16	A172	02 19	4T82-15	5N04-*F	5Z09-23
10102	POWER SUPPLY CURRENT 2	PS CUR 2	ALOG	1/16	A237	10 28	4T84-53	5N04-*J	5Z09-22
10103	RECORDER TEMPERATURE 2	RCDR T 2	ALOG	1/16	A300	10 37	4T86-15	5N04-M	5Z09-21
10104	POWER SUPPLY VOLTAGE 2	PS VLT 2	ALOG	1/16	A364	12 46	4T88-15	5N04-L	5Z09-20
10105	RECORD MODE 2 ON/OFF	RECORD 2	DIG B	1/16	3B44	18 00	4T06-58	5N04-P	5Z09-32
10106	PLAYBACK MODE 2 ON/OFF	PLAYBK 2	DIG B	1/16	3B45	01 01	4T06-44	5N04-*E	5Z09-33
10107	RECORD END OF TAPE PRIMARY 2 YES/NO	REOT P 2	DIG B	1/16	3B46	02 01	4T08-58	5N04-R	5Z09-34
10108	RECORD END OF TAPE SECONDARY 2 YES/NO	REOT S 2	DIG B	1/16	3B47	08 01	4T08-44	5N04-S	5Z09-35
10109	PLAYBACK END OF TAPE PRIMARY 2 YES/NO	PEOT P 2	DIG B	1/16	3B48	10 01	4T02-17	5N04-T	5Z09-36
10110	PLAYBACK END OF TAPE SECONDARY 2 YES/NO	PEOT S 2	DIG B	1/16	3B49	12 01	4T02-24	5N04-V	5Z09-37
10111	RECORDER PRESSURE 2 LOW/NOR	RCDR P 2	DIG B	1/16	1B57	15 02	4T02-61	5N04-N	5Z09-31
	UNIFIED S-BAND EQUIPMENT (USB)								
11001	RECEIVER AGC VOLTAGE	RCVR AGC	ALOG	1/16	A427	12 55	4T90-36	3U31-M	5Z14-17
11002	XMTR OUTPUT POWER LEVEL	XMTR PWR	ALOG	1/16	A492	18 64	4T92-15	3U31-T	5Z14-18

FUNC NO.	TLM FUNCTION	ACRONYM	SIGNL TYPE	SAMP SEC	GATE ADDR	COLUMN /ROW	TMP CONN	S/S CONN	INT CONN
11003	RECEIVER STATIC PHASE ERROR	RCVR ERR	ALOG	1/16	A556	01 74	4T94-15	3U31-N	5Z14-19
11004	TRANSPONDER TEMPERATURE	TRSPDR T	ALOG	1/16	A107	18 09	4T80-36	3U31-P	5Z14-20
11005	TRANSPONDER PRESSURE	TRSPDR P	ALOG	1/16	A171	01 19	4T82-36	3U31-U	5Z14-21
11006	RECEIVER A/B	RECEIVER	DIG B	1/16	3850	15 01	4T04-17	3U29-M	5Z14-22
11007	XMTR A [ON/OFF] -15V	XMTA-15V	ALOG	1/16	A078	15 05	4T80-48	3U29-T	5Z17-40
11008	XMTR B [ON/OFF] -15V	XMTB-15V	ALOG	1/16	A141	15 14	4T82-73	3U29-U	5Z17-42
11009	RANGING MODE [ON/OFF] -15V	RNG -15V	ALOG	1/16	A204	15 23	4T84-76	3U29-N	5Z17-19
11010	AUX OSCILLATOR BYPASS/ENABLED	AUX OSCL	DIG B	1/16	3853	02 02	4T06-24	3U29-S	5Z14-26
11011	MODULATION INPUT NORMAL/CROSSED	MOD IN	DIG B	1/16	3854	08 02	4T08-17	3U29-R	5Z14-27

FUNC NO.	TLM FUNCTION	ACRONYM	SIGNL TYPE	SAMP SEC	GATE ADDR	COLUMN /ROW	TMP CONN	S/S CONN	INT CONN
	PREMODULATOR PROCESSOR (PMP)								
11101	POWER SUPPLY A VOLTAGE	PWR A V	ALOG	1/16	A236	08 28	4T84-15	3U05-L	5Z14-34
11102	POWER SUPPLY B VOLTAGE	PWR B V	ALOG	1/16	A299	08 37	4T86-36	3U05-M	5Z14-35
11103	TEMPERATURE A	TEMP A	ALOG	1/16	A363	10 46	4T88-36	3U05-A	5Z14-36
11104	TEMPERATURE B	TEMP B	ALOG	1/16	A426	10 55	4T90-81	3U05-B	5Z14-37
11105	DISCRIMINATOR A ON/OFF	DISCR A	DIG B	1/16	3857	15 02	4T02-07	3U05-H	5Z14-38
11106	DISCRIMINATOR B ON/OFF	DISCR B	DIG B	1/16	3858	18 02	4T04-06	3U05-J	5Z14-39
11107	MODULATOR A ON/OFF	MODLTR A	DIG B	1/16	3859	01 03	4T04-07	3U05-P	5Z14-40
11108	MODULATOR B ON/OFF	MODLTR B	DIG B	1/16	3860	02 03	4T06-06	3U05-R	5Z14-41
11109	NBTR 1/2	NBTR SLT	DIG B	1/16	3861	08 03	4T06-07	3U05-S	5Z14-42
11110	WBVTR 1/2	WBVTR SL	DIG B	1/16	3862	10 03	4T08-06	3U05-T	5Z14-43
11111	RECORDER IN NBTR/WBVTR	RCDR IN	DIG B	1/16	0863	12 03	4T08-62	3U05-U	5Z14-44
	WIDEBAND POWER AMPLIFIER NO. 1								
12001	COLLECTOR TEMP 1	CLTR T 1	ALOG	1/16	A343	12 43	4T88-46	1W17-J	5Z12-60
12002	HELIX CURRENT 1	HELX I 1	ALOG	1/16	A407	15 52	4T90-46	1W17-D	5Z12-61
12003	CATHODE CURRENT 1	CATH I 1	ALOG	1/16	A471	18 61	4T92-46	1W17-C	5Z12-62
12004	FORWARD POWER 1	FWD PW 1	ALOG	1/16	A536	02 71	4T94-11	1W17-A	5Z12-63
12005	REFLECTED POWER 1	RFL PW 1	ALOG	1/16	A576	18 76	4T96-10	1W17-B	5Z12-64
12006	HEATER STATUS 1 ON/OFF	HTR ST 1	DIG B	1/16	2854	08 02	4T08-34	1W23-A	5Z12-65
12007	HIGH VOLTAGE 1 ON/OFF	HIGH V 1	DIG B	1/16	2855	10 02	4T08-10	1W23-B	5Z12-66
12008	POWER MODE 1 HIGH/LOW	PWR MD 1	DIG B	1/16	2856	12 02	4T02-08	1W23-J	5Z12-67
	WIDEBAND POWER AMPLIFIER NO. 2								
12101	COLLECTOR TEMP 2	CLTR T 2	ALOG	1/16	A342	10 43	4T88-13	1W29-J	5Z12-48
12102	HELIX CURRENT 2	HELX I 2	ALOG	1/16	A406	12 52	4T90-13	1W29-D	5Z12-49
12103	CATHODE CURRENT 2	CATH I 2	ALOG	1/16	A470	15 61	4T92-13	1W29-C	5Z12-50
12104	FORWARD POWER 2	FWD PW 2	ALOG	1/16	A535	01 71	4T94-46	1W29-A	5Z12-51
12105	REFLECTED POWER 2	RFL PW 2	ALOG	1/16	A597	18 79	4T96-51	1W29-B	5Z12-52
12106	HEATER STATUS 2 ON/OFF	HTR ST 2	DIG B	1/16	2858	18 02	4T04-08	1W35-A	5Z12-53
12107	HIGH VOLTAGE 2 ON/OFF	HIGH V 2	DIG B	1/16	2859	01 03	4T04-22	1W35-B	5Z12-54
12108	POWER MODE 2 HI/LOW	PWR MD 2	DIG B	1/16	2860	02 03	4T06-08	1W35-J	5Z12-55
	WIDEBAND FREQUENCY MODULATOR								
12200	RBV FILTER A OUT/IN	RBV FL A	DIG B	1/16	9854	08 02	4T08-33	1W46-10	
12201	RBV FILTER B OUT/IN	RBV FL B	DIG B	1/16	8855	10 02	4T08-30	1W46-29	
12202	AUX. DATA TO RBV FILT. A YES/NO	AX TO RA	DIG B	1/16	9839	02 00	4T08-16	1W46-01	
12203	AUX. DATA TO RBV FILT. B YES/NO	AX TO RB	DIG B	1/16	9840	08 00	4T02-49	1W46-21	
12204	RT DATA TO RBV FILT. A YES/NO	RT TO RA	DIG B	1/16	1841	10 00	4T02-42	1W46-02	
12205	RT DATA TO RBV FILT. B YES/NO	RT TO RB	DIG B	1/16	9842	12 00	4T04-49	1W46-22	
12206	TAPE 1 DATA TO RBV FILT. A YES/NO	T1 TO RA	DIG B	1/16	9843	15 00	4T04-79	1W46-03	
12207	TAPE 1 DATA TO RBV FILT. B YES/NO	T1 TO RB	DIG B	1/16	9844	18 00	4T06-49	1W46-23	

FUNC NO.	TLM FUNCTION	ACRONYM	SIGNL TYPE	SAMP SEC	GATE ADDR	COLUMN /ROW	TMP CONN	S/S CONN	INT CONN
12208	TAPE 2 DATA TO RBV FILT. A YES/NO	T2 TO RA	DIG B	1/16	9845	01 01	4T06-79	1W46-04	
12209	TAPE 2 DATA TO RBV FILT. B YES/NO	T2 TO RB	DIG B	1/16	9846	02 01	4T08-49	1W46-24	
12210	MSS FILTER A OUT/IN	MSS FL A	DIG B	1/16	9856	12 02	4T02-73	1W46-30	
12211	MSS FILTER B OUT/IN	MSS FL B	DIG B	1/16	9857	15 02	4T02-54	1W46-11	
12212	RT DATA* TO MSS FILT. A YES/NO	RT* M A	DIG B	1/16	5847	08 01	4T08-11	1W46-25	
12213	RT DATA* TO MSS FILT. B YES/NO	RT* M B	DIG B	1/16	9848	10 01	4T02-33	1W46-06	
12214	RT DATA** TO MSS FILT. A YES/NO	RT** M A	DIG B	1/16	7863	12 03	4T08-45	1W46-26	
12215	RT DATA** TO MSS FILT. B YES/NO	RT** M B	DIG B	1/16	9852	01 02	4T06-33	1W46-07	
12216	TAPE 1 DATA TO MSS FILT. A YES/NO	T1 TO MA	DIG B	1/16	9849	12 01	4T02-05	1W46-27	
12217	TAPE 1 DATA TO MSS FILT. B YES/NO	T1 TO MB	DIG B	1/16	9850	15 01	4T04-33	1W46-08	
12218	TAPE 2 DATA TO MSS FILT. A YES/NO	T2 TO MA	DIG B	1/16	9851	18 01	4T04-05	1W46-28	
12219	TAPE 2 DATA TO MSS FILT. B YES/NO	T2 TO MB	DIG B	1/16	9855	10 02	4T08-05	1W46-09	
12220	MODULATOR A, VCO A1/A2	MODA VCO	DIG B	1/16	9860	02 03	4T06-73	1W46-05	
12221	MODULATOR B, VCO B1/B2	MODB VCO	DIG B	1/16	9861	08 03	4T06-54	1W46-20	
12222	MODULATOR A, AFC OUT/IN	MODA AFC	DIG B	1/16	9858	18 02	4T04-73	1W46-12	
12223	MODULATOR B, AFC OUT/IN	MODB AFC	DIG B	1/16	9859	01 03	4T04-54	1W46-31	
12224	DATA OUTPUT A NORMAL/SUMMED	DATA A	DIG B	1/16	2838	01 00	4T08-82	1W46-17	
12225	DATA OUTPUT B NORMAL/SUMMED	DATA B	DIG B	1/16	9841	10 00	4T02-79	1W46-35	
12226	RBV BIAS A/B	RBV BIAS	DIG B	1/16	9847	08 01	4T08-79	1W46-13	
12227	MODULATOR A, LOOP STRESS	MODA L S	ALOG	1/16	A466	02 61	4T92-44	1W46-14	
12228	MODULATOR B, LOOP STRESS	MODB L S	ALOG	1/16	A586	08 78	4T96-45	1W46-33	
12229	WBM TEMPERATURE	WBM TEMP	ALOG	1/16	A338	18 42	4T88-44	1W46-15	
	WBM POWER INVERTER								
12230	WBM INVERTER A OFF/ON	INVRTR A	DIG B	1/16	9838	01 00	4T08-56	1W11-07	5Z12-70
12231	WBM INVERTER B OFF/ON	INVRTR B	DIG B	1/16	2847	08 01	4T08-19	1W11-08	5Z12-71
12232	+15 REG. VOLTAGE A	+15V A	ALOG	1/16	A113	15 10	4T80-08	1W05-13	5Z12-72
12233	+15 REG VOLTAGE B	+15V B	ALOG	1/16	A213	01 25	4T84-51	1W05-14	5Z12-73
12234	-15 REG VOLTAGE A	-15V A	ALOG	1/16	A212	18 24	4T84-71	1W05-03	5Z12-74
12235	-15 REG VOLTAGE B	-15V B	ALOG	1/16	A339	01 43	4T88-47	1W05-04	5Z12-75
12236	+5 REG VOLTAGE A	+5V A	ALOG	1/16	A402	01 52	4T90-44	1W05-11	5Z12-76
12237	+5 REG VOLTAGE B	+5V B	ALOG	1/16	A404	08 52	4T90-71	1W05-12	5Z12-77
12238	-5 REG VOLTAGE A	-5V A	ALOG	1/16	A177	18 19	4T82-08	1W05-05	5Z12-78
12239	-5 REG VOLTAGE B	-5V B	ALOG	1/16	A468	10 61	4T92-71	1W05-06	5Z12-79
12240	-24.5 MONITOR NO. 1 A/B	-24.5 M1	ALOG	1/16	A211	15 24	4T84-47	1W05-01	5Z12-80
12241	-24.5 MONITOR NO. 2 A/B	-24.5 M2	ALOG	1/16	A590	18 78	4T96-48	1W05-02	5Z12-81
12242	WBM INVERTER TEMP	INVRTR T	ALOG	1/16	A587	10 78	4T96-72	1W11-03	5Z12-82

```
*****************************************
*                                       *
*  13000,14000,15000,16000  PAYLOAD SYSTEM  *
*                                       *
*****************************************
```

FUNC NO.	TLM FUNCTION	ACRONYM	SIGNL TYPE	SAMP SEC	GATE ADDR	COLUMN /ROW	TMP CONN	S/S CONN	INT CONN
	WIDEBAND VIDEO TAPE RECORDER 1								
13001	MSS STANDBY 1 YES/NO	MSS SBY1	DIG B	1/1	4834	17 02	4T04-1	5W16-*R	
13002	RBV STANDBY 1 YES/NO	RBV SBY1	DIG B	1/1	4835	16 03	4T04-59	5W16-*Q	
13003	RECORD 1 YES/NO	WB RCD 1	DIG B	1/1	4836	17 03	4T06-1	5W16-*H	
13004	PLAYBACK 1 YES/NO	WB PBK 1	DIG B	1/1	4837	16 04	4T06-59	5W16-*I	
13005	FAST REWIND 1 YES/NO	REWIND 1	DIG B	1/16	2862	10 03	4T08-8	5W16-*J	
13006	FAST FWD 1 YES/NO	FORWARD 1	DIG B	1/16	2863	12 03	4T08-22	5W16-*S	
13007	RBV ENABLE 1 YES/NO	RBV EN 1	DIG B	1/1	6834	17 02	4T04-32	5W16-*E	
13008	PRIMARY END OF TAPE 1 YES/NO	P EOT 1	DIG B	1/16	4839	02 00	4T08-59	5W16-N	
13009	SECONDARY END OF TAPE 1 YES/NO	S EOT 1	DIG B	1/16	4840	08 00	4T02-83	5W16-M	
13010	PRIMARY BEGIN OF TAPE 1 YES/NO	P BOT 1	DIG B	1/16	4841	10 00	4T02-18	5W16-*F	
13011	SECONDARY BEGIN OF TAPE 1 YES/NO	S BOT 1	DIG B	1/16	4842	12 00	4T04-83	5W16-P	
13012	RBV RUN TAPE 1 YES/NO	RBV TP 1	DIG B	1/1	6835	16 03	4T04-47	5W16-*G	
13013	LAP NO 1 YES/NO	LAP 1	DIG B	1/16	4843	15 00	4T04-18	5W16-R	
13014	MSS/RBV STATUS NO 1 MSS/RBV	STATUS 1	DIG B	1/16	4844	18 00	4T06-83	5W16-*T	
13015	CURRENT SET TO 4DB NO 1 IN/OUT	4DB SET1	DIG B	1/16	4845	01 01	4T06-18	5W16-U	
13016	CURRENT SET TO 2 DB NO 1 IN/OUT	2DB SET1	DIG B	1/16	4846	02 01	4T08-83	5W16-V	
13017	CURRENT SET TO 1 DB NO 1 IN/OUT	1DB SET1	DIG B	1/16	4847	08 01	4T08-18	5W16-W	
13018	CONVERTER PRIMARY PWR 1 ON/OFF	CNV PWR1	DIG B	1/16	4849	12 01	4T02-69	5W16-*D	
13019	VOLTAGE PROTECT 1 ENABLE/DISABLE	VLT PRT1	DIG B	1/16	4850	15 01	4T04-3	5W16-T	
13020	PRIMARY VOLTAGE RANGE NO 1 IN/OUT	P V RNG1	DIG B	1/16	4851	18 01	4T04-69	5W16-*P	
13021	VOLTAGE PROTECT RELAY 1 OPEN/CLOSED	V PR RY1	DIG B	1/16	4852	01 02	4T06-3	5W16-S	
13022	TU PRESSURE 1	TU PRS 1	ALOG	1/16	A065	18 03	4T80-23	5W16-*A	
13023	TU TEMPERATURE 1	TU TEMP1	ALOG	1/16	A129	01 13	4T82-23	5W16-*B	
13024	EU TEMPERATURE 1	EU TEMP1	ALOG	1/16	A194	08 22	4T84-25	5W16-C	
13025	TAPE FOOTAGE 1	TAPE FT1	ALOG	1/16	A258	10 31	4T86-25	5W16-Z	
13026	CAPSTAN MOTOR SPEED 1	CPST MS1	ALOG	1/16	A321	10 40	4T88-23	5W16-B	
13027	HWP MOTOR SPEED 1	HWP MS 1	ALOG	1/16	A385	12 49	4T90-23	5W16-G	
13028	CAPSTAN MOTOR CURRENT 1	CPST MI1	ALOG	1/16	A450	18 58	4T92-25	5W16-J	
13029	PLAYBACK VOLTAGE 1	P/B V 1	ALOG	1/16	A513	18 67	4T94-23	5W16-E	
13030	HWP MOTOR CURRENT NO 1	HWP MI 1	ALOG	1/16	A595	12 79	4T96-47	5W16-H	
13031	RECORDER INPUT CURRENT 1	R IN I 1	ALOG	1/1	A629	07 04	4T96-32	5W16-*C	
13032	LIMITER VOLTAGE NO 1	LMTR V 1	ALOG	1/16	A066	01 04	4T80-25	5W16-D	
13033	SERVO VOLTAGE NO 1	SERV V 1	ALOG	1/16	A130	02 13	4T82-25	5W16-F	
13034	CONVERTER OUTPUT +5.6V 1	+5.6CNV1	ALOG	1/16	A400	15 51	4T90-04	5W16-K	
	WIDEBAND VIDEO TAPE RECORDER NO 2								
13101	MSS STANDBY 2 YES/NO	MSS SBY2	DIG B	1/1	6837	16 04	4T06-47	5W40-*R	
13102	RBV STANDBY 2 YES/NO	RBV SBY2	DIG B	1/1	8835	16 03	4T04-34	5W40-*G	
13103	RECORD 2 YES/NO	WB RCD 2	DIG B	1/1	8836	17 03	4T06-51	5W40-*H	
13104	PLAYBACK 2 YES/NO	WB PBK 2	DIG B	1/1	8837	16 04	4T06-31	5W40-*I	
13105	FAST REWIND 2 YES/NO	REWIND 2	DIG B	1/16	4853	02 02	4T06-69	5W40-*J	

FUNC NO.	TLM FUNCTION	ACRONYM	SIGNL TYPE	SAMP SEC	GATE ADDR	COLUMN /ROW	TMP CONN	S/S CONN	INT CONN
13106	FAST FORWARD 2 YES/NO	FOWARD 2	DIG B	1/16	4854	08 02	4T08-3	5W40--S	
13107	RBV ENABLE 2 YES/NO	RBV EN 2	DIG B	1/1	9834	17 02	4T04-56	5W40--E	
13108	PRIMARY END OF TAPE 2 YES/NO	P EOT 2	DIG B	1/16	4855	10 02	4T08-69	5W40-N	
13109	SECONDARY END OF TAPE 2 YES/NO	S EOT 2	DIG B	1/16	4856	12 02	4T02-35	5W40-M	
13110	PRIMARY BEGIN OF TAPE 2 YES/NO	P BOT 2	DIG B	1/16	4857	15 02	4T02-36	5W40--F	
13111	SECONDARY BEGIN OF TAPE 2 YES/NO	S BOT 2	DIG B	1/16	4858	18 02	4T04-35	5W40-P	
13112	RBV RUN TAPE 2 YES/NO	RBV TP 2	DIG B	1/1	9835	16 03	4T04-16	5W40--G	
13113	LAP NO 2 YES/NO	LAP 2	DIG B	1/16	4859	01 03	4T04-36	5W40-R	
13114	MSS/RBV STATUS 2 MSS/RBV	STATUS 2	DIG B	1/16	4860	02 03	4T06-35	5W40--T	
13115	CURRENT SET 4 DB 2 IN/OUT	4DB SET2	DIG B	1/16	4861	08 03	4T06-36	5W40-U	
13116	CURRENT SET 2 DB 2 IN/OUT	2DB SET2	DIG B	1/16	4862	10 03	4T08-35	5W40-V	
13117	CURRENT SET 1 DB 2 IN/OUT	1DB SET2	DIG B	1/16	4863	12 03	4T08-36	5W40-W	
13118	CONVERTER PRIMARY PWR 2 ON/OFF	CNV PWR2	DIG B	1/16	6838	01 00	4T08-32	5W40--D	
13119	VOLTAGE PROTECT 2 EN/DIS	VLT PRT2	DIG B	1/16	6839	02 00	4T08-47	5W40-T	
13120	PRIMARY VOLT. RANGE NO 2 IN/OUT	P V RNG2	DIG B	1/16	6840	08 00	4T02-75	5W40--P	
13121	VOLTAGE PROTECT RELAY 2 OPEN/CLOSED	V PR RY2	DIG B	1/16	6841	10 00	4T02-25	5W40-S	
13122	TU PRESSURE 2	TU PRS 2	ALOG	1/16	A195	10 22	4T84-68	5W40--A	
13123	TU TEMPERATURE 2	TU TEMP2	ALOG	1/16	A259	12 31	4T86-68	5W40--B	
13124	EU TEMPERATURE 2	EU TEMP2	ALOG	1/16	A322	12 40	4T88-25	5W40-C	
13125	TAPE FOOTAGE 2	TAPE FT2	ALOG	1/16	A387	18 49	4T90-68	5W40-Z	
13126	CAPSTAN MOTOR SPEED 2	CPST MS2	ALOG	1/16	A451	01 59	4T92-68	5W40-B	
13127	HWP MOTOR SPEED 2	HWP MS 2	ALOG	1/16	A514	01 68	4T94-25	5W40-G	
13128	CAPSTAN MOTOR CURRENT 2	CPST MI2	ALOG	1/16	A594	10 79	4T96-44	5W40-J	
13129	PLAYBACK VOLTAGE 2	P/B V 2	ALOG	1/16	A067	02 04	4T80-68	5W40-E	
13130	HWP MOTOR CURRENT 2	HWP MI 2	ALOG	1/16	A131	08 13	4T82-68	5W40-H	
13131	RECORDER INPUT CURRENT 2	R IN I 2	ALOG	1/1	A630	09 04	4T96-55	5W40--C	
13132	LIMITER VOLTAGE 2	LMTR V 2	ALOG	1/16	A196	12 22	4T84-70	5W40-D	
13133	SERVO VOLTAGE 2	SERV V 2	ALOG	1/16	A261	18 31	4T86-14	5W40-F	
13134	CONVERTER OUTPUT +5.6V NO 2	+5.6CNV2	ALOG	1/16	A463	15 60	4T92-49	5W40-K	
	RBV CAMERA CONTROLLER								
14000	CALIBRATE ENABLE/DISABLE	CALIBRAT	ALOG	1/16	A324	18 40	4T88-70	3R14-04	
14001	CCC BOARD TEMPERATURE	CCC BD T	ALOG	1/16	A388	01 50	4T90-70	3R14-15	
14002	CCC POWER SUPPLY TEMPERATURE	CCC PS T	ALOG	1/16	A452	02 59	4T92-70	3R03-01	5Z10-75
14003	PLUS OR MINUS 15 VOLT SUPPLY	15V SPLY	ALOG	1/16	A515	02 68	4T94-68	3R03-03	5Z10-76
14004	+6, +5.25 VOLT SUPPLY	+6-5.25V	ALOG	1/16	A593	08 79	4T96-27	3R03-04	5Z10-77
14005	APERTURE CORRECTOR OUT/IN	APT CORR	DIG B	1/16	6842	12 00	4T04-75	3R14-03	
14006	CYCLE CONT/SING	CYCLE	DIG B	1/16	6843	15 00	4T04-25	3R14-07	
14007	EXPOSURE C ON/OFF	EXPOSR C	DIG B	1/16	2857	15 02	4T02-22	3R14-05	
14008	EXPOSURE A ON/OFF	EXPOSR A	DIG B	1/16	6845	01 01	4T06-25	3R14-09	
14009	EXPOSURE B ON/OFF	EXPOSR B	DIG B	1/16	6846	02 01	4T08-75	3R14-10	
14010	1.6 MHZ CLOCK ON/OFF	1.6MHZ	DIG B	1/16	6847	08 01	4T08-25	3R14-11	
14011	HORIZONTAL SYNC ON/OFF	HOR SYNC	DIG B	1/16	6848	10 01	4T02-52	3R14-12	
14012	VERTICAL SYNC ON/OFF	VER SYNC	DIG B	1/16	6849	12 01	4T02-26	3R14-13	
14013	1HZ SYNC ON/OFF	1HZ SYNC	DIG B	1/16	6851	18 01	4T04-26	3R14-14	

DP47J222901AY REV B ERTS ELECTRICAL SYSTEM SCHEMATIC/TELEMETRY MATRIX 1/28/72

FUNC NO.	TLM FUNCTION	ACRONYM	SIGNL TYPE	SAMP SEC	GATE ADDR	COLUMN /ROW	TMP CONN	S/S CONN	INT CONN
14014	-24.5 VOLT INPUT ON/OFF	-24V IN	DIG B	1/16	6B52	01 02	4T06-52	3R03-02	5Z10-78
14015	CCC POWER ON/OFF	CCC PWR	DIG B	1/16	6B53	02 02	4T06-26	3R03-05	5Z10-79
14016	CATHODE REACTIVATION ON/OFF	CTH REAC	DIG B	1/16	6B54	08 02	4T08-52	3R14-08	

FUNC NO.	TLM FUNCTION	ACRONYM	SIGNL TYPE	SAMP SEC	GATE ADDR	COLUMN /ROW	TMP CONN	S/S CONN	INT CONN
	RBV CAMERA 1								
14100	VIDEO OUTPUT 1	VID OUT1	ALOG	1/16	A068	08 04	4T80-70	2R06-01	
14101	FOCUS CURRENT 1	FOC I 1	ALOG	1/16	A132	10 13	4T82-70	2R06-02	
14102	COMBINED ALIGNMENT CURRENT 1	ALGN I 1	ALOG	1/16	A198	18 22	4T84-75	2R06-04	
14103	TEMPERATURE ELECTRONICS 1	ELEC T 1	ALOG	1/16	A262	01 32	4T86-75	2R06-05	
14104	TEMPERATURE LOW-VOLTAGE PWR SUPPLY 1	LVPS T 1	ALOG	1/16	A325	01 41	4T88-14	2R06-07	
14105	DEFLECTION POWER SUPPLY 1	DFL PS 1	ALOG	1/16	A389	02 50	4T90-14	2R06-12	
14106	LOW VOLTAGE POWER SUPPLY 1	LV PWS 1	ALOG	1/16	A453	08 59	4T92-14	2R06-10	
14107	THERMOELECTRIC UNIT CURRENT 1	THMO I 1	ALOG	1/16	A516	08 68	4T94-70	2R06-03	
14108	VIDICON FILAMENT CURRENT 1	VFIL I 1	ALOG	1/16	A592	02 79	4T96-04	5R08-02	5Z08-01
14109	G1 VOLTAGE 1	G1 VLT 1	ALOG	1/16	A069	10 04	4T80-14	5R08-03	5Z08-02
14110	TARGET VOLTAGE 1	TGT V 1	ALOG	1/16	A133	12 13	4T82-14	5R08-11	5Z08-03
14111	VIDICON CATHODE CURRENT 1	VCTH I 1	ALOG	1/16	A199	01 23	4T84-28	5R08-01	5Z08-04
14112	HORIZONTAL DEFLECTION OUTPUT 1	HOR DEF1	ALOG	1/16	A263	02 32	4T86-28	5R08-04	5Z08-05
14113	VERTICAL DEFLECTION OUTPUT 1	VER DEF1	ALOG	1/16	A326	02 41	4T88-75	5R08-05	5Z08-06
14114	TEMPERATURE FACEPLATE 1	FPLT T 1	ALOG	1/16	A390	08 50	4T90-75	5R08-14	5Z08-07
14115	TEMPERATURE YOKE/FOCUS COIL 1	Y/FC T 1	ALOG	1/16	A454	10 59	4T92-75	5R08-06	5Z08-08
14116	-24.5V POWER IN NO. 1 ON/OFF	-24 IN 1	DIG B	1/16	6856	12 02	4T02-55	2R06-06	
14117	-28 VOLT SHUTTER CURRENT 1 ON/OFF	SHTR I 1	DIG B	5/1	1832	14 00	4T02-60	2R06-13	
14119	HIGH VOLTAGE CHOPPER 1 ON/OFF	HV CHP 1	DIG B	1/16	6857	15 02	4T02-72	5R08-09	5Z08-09
14120	+500 VOLTS 1 ON/OFF	+500V 1	ALOG	1/16	A197	15 22	4T84-14	5R08-08	5Z08-10
	RBV CAMERA 2								
14200	VIDEO OUTPUT 2	VID OUT2	ALOG	1/16	A517	10 68	4T94-14	3R24-01	
14201	FOCUS CURRENT 2	FOC I 2	ALOG	1/16	A591	01 79	4T96-49	3R24-02	
14202	COMBINED ALIGNMENT CURRENT 2	ALGN I 2	ALOG	1/16	A070	12 04	4T80-75	3R24-04	
14203	TEMPERATURE, ELECTRONICS 2	ELEC T 2	ALOG	1/16	A135	18 13	4T82-28	3R24-05	
14204	TEMPERATURE, LOW VOLTAGE PWR SUP 2	LVPS T 2	ALOG	1/16	A201	08 23	4T84-26	3R24-07	
14205	DEFLECTION POWER SUPPLY NO 2	DFL PS 2	ALOG	1/16	A266	12 32	4T86-45	3R24-12	
14206	LOW VOLTAGE POWER SUPPLY 2	LV PWS 2	ALOG	1/16	A327	08 41	4T88-28	3R24-10	
14207	THERMOELECTRIC UNIT CURRENT 2	THMO I 2	ALOG	1/16	A391	10 50	4T90-28	3R24-03	
14208	VIDICON FILAMENT CURRENT 2	VFIL I 2	ALOG	1/16	A455	12 59	4T92-28	5R18-02	5Z08-24
14209	G1 VOLTAGE 2	G1 VLT 2	ALOG	1/16	A518	12 68	4T94-75	5R18-03	5Z08-25
14210	TARGET VOLTAGE NO 2	TGT V 2	ALOG	1/16	A577	01 77	4T96-23	5R18-11	5Z08-26
14211	VIDICON CATHODE CURRENT NO 2	VCTH I 2	ALOG	1/16	A072	18 04	4T80-12	5R18-01	5Z08-27
14212	HORIZONTAL DEFLECTION OUTPUT 2	HOR DEF2	ALOG	1/16	A136	01 14	4T82-12	5R18-04	5Z08-28
14213	VERTICAL DEFLECTION OUTPUT 2	VER DEF2	ALOG	1/16	A202	10 23	4T84-45	5R18-05	5Z08-29
14214	TEMPERATURE, FACEPLATE 2	FPLT T 2	ALOG	1/16	A268	18 32	4T86-76	5R18-14	5Z08-30
14215	TEMPERATURE, YOKE/FOCUS COIL 2	Y/FC T 2	ALOG	1/16	A329	12 41	4T88-26	5R18-06	5Z08-31
14216	-24.5V POWER IN, NO.2 ON/OFF	-24 IN 2	DIG B	1/16	6860	02 03	4T06-55	3R24-06	
14217	-28 VOLT SHUTTER CURRENT 2 ON/OFF	SHTR I 2	DIG B	5/1	4832	14 00	4T02-1	3R24-13	
14220	+500 VOLTS 2 ON/OFF	+500V 2	ALOG	1/16	A260	15 31	4T86-70	5R18-08	5Z08-33

FUNC NO.	TLM FUNCTION	ACRONYM	SIGNL TYPE	SAMP SEC	GATE ADDR	COLUMN /ROW	TMP CONN	S/S CONN	INT CONN
14219	HIGH VOLTAGE CHOPPER 2 ON/OFF	HV CHP 2	DIG B	1/16	6861	08 03	4T06-72	5R18-09	5Z08-32

FUNC NO.	TLM FUNCTION	ACRONYM	SIGNL TYPE	SAMP SEC	GATE ADDR	COLUMN /ROW	TMP CONN	S/S CONN	INT CONN
	RBV CAMERA 3								
14300	VIDEO OUTPUT 3	VID OUT3	ALOG	1/16	A392	12 50	4T90-12	3R40-01	
14301	FOCUS CURRENT 3	FOC I 3	ALOG	1/16	A457	18 59	4T92-26	3R40-02	
14302	COMBINED ALIGNMENT CURRENT 3	ALGN I 3	ALOG	1/16	A520	18 68	4T94-12	3R40-04	
14303	TEMPERATURE, ELECTRONICS 3	ELEC T 3	ALOG	1/16	A578	02 77	4T96-25	3R40-05	
14304	TEMPERATURE, LOW VOLTAGE POWER SUPPLY 3	LVPS T 3	ALOG	1/16	A073	01 05	4T80-26	3R40-07	
14305	DEFLECTION POWER SUPPLY 3	DFL PS 3	ALOG	1/16	A137	02 14	4T82-26	3R40-12	
14306	LOW VOLTAGE POWER SUPPLY 3	LV PWS 3	ALOG	1/16	A203	12 23	4T84-72	3R40-10	
14307	THERMOELECTRIC UNIT CURRENT 3	THMO I 3	ALOG	1/16	A269	01 33	4T86-73	3R40-03	
14308	VIDICON FILAMENT CURRENT 3	VFIL I 3	ALOG	1/16	A331	18 41	4T88-72	5R28-02	5Z08-34
14309	G1 VOLTAGE NO 3	G1 VLT 3	ALOG	1/16	A394	18 50	4T90-45	5R28-03	5Z08-35
14310	TARGET VOLTAGE 3	TGT V 3	ALOG	1/16	A458	01 60	4T92-45	5R28-11	5Z08-36
14311	VIDICON CATHODE CURRENT 3	VCTH I 3	ALOG	1/16	A521	01 69	4T94-26	5R28-01	5Z08-37
14312	HORIZONTAL DEFLECTION OUTPUT 3	HOR DEF3	ALOG	1/16	A579	08 77	4T96-68	5R28-04	5Z08-38
14313	VERTICAL DEFLECTION OUTPUT 3	VER DEF3	ALOG	1/16	A074	02 05	4T80-45	5R28-05	5Z08-39
14314	TEMPERATURE, FACEPLATE 3	FPLT T 3	ALOG	1/16	A138	08 14	4T82-45	5R28-14	5Z08-40
14315	TEMPERATURE, YOKE/FOCUS COIL 3	Y/FC T 3	ALOG	1/16	A205	18 23	4T84-73	5R28-06	5Z08-41
14316	+24.5V POWER IN, NO.3 ON/OFF	+24 IN 3	DIG B	1/16	8838	01 00	4T08-51	3R40-06	
14317	-28 VOLT SHUTTER CURRENT 3 ON/OFF	SHTR I 3	DIG B	5/1	7B32	14 00	4T02-77	3R40-13	
14319	HIGH VOLTAGE CHOPPER 3 ON/OFF	HV CHP 3	DIG B	1/16	8839	02 00	4T08-31	5R28-09	5Z08-42
14320	+500 VOLTS 3 ON/OFF	+500V 3	ALOG	1/16	A323	15 40	4T88-68	5R28-08	5Z08-43
	MULTISPECTRAL SCANNER								
15002	MAIN INVERTER A/B	MAIN INV	DIG B	1/16	8842	12 00	4T04-27	5M07-02	
15003	BAND 1 HIGH VOLTAGE A/B	HV1 SLCT	DIG B	1/16	8843	15 00	4T04-4	5M07-03	
15004	BAND 2 HIGH VOLTAGE A/B	HV2 SLCT	DIG B	1/16	8844	18 00	4T06-27	5M07-04	
15005	BAND 3 HIGH VOLTAGE A/B	HV3 SLCT	DIG B	1/16	8845	01 01	4T06-4	5M07-05	
15006	HIGH VOLTAGE ON/OFF	HI VOLT	DIG B	1/16	8846	02 01	4T08-27	5M07-06	
15007	BAND 1 HIGH VOLTAGE ON/OFF	BND 1 HV	DIG B	1/16	8847	08 01	4T08-4	5M07-07	
15008	BAND 2 HIGH VOLTAGE ON/OFF	BND 2 HV	DIG B	1/16	8848	10 01	4T02-50	5M07-08	
15009	BAND 3 HIGH VOLTAGE ON/OFF	BND 3 HV	DIG B	1/16	8849	12 01	4T02-30	5M07-09	
15010	BAND 1 LOW VOLTAGE ON/OFF	BND 1 LV	DIG B	1/16	8850	15 01	4T04-50	5M07-10	
15011	BAND 2 LOW VOLTAGE ON/OFF	BND 2 LV	DIG B	1/16	8851	18 01	4T04-30	5M07-11	
15012	BAND 3 LOW VOLTAGE ON/OFF	BND 3 LV	DIG B	1/16	8853	02 02	4T06-30	5M07-12	
15013	BAND 4 LOW VOLTAGE ON/OFF	BND 4 LV	DIG B	1/16	8854	08 02	4T08-50	5M07-13	
15015	CALIBRATION LAMP A/B	CLMP SLT	DIG B	1/16	8856	12 02	4T02-81	5M07-15	
15016	CALIBRATION LAMP ON/OFF	CAL LAMP	DIG B	1/16	8857	15 02	4T02-12	5M07-20	
15017	SCAN MONITOR ON/OFF	SCAN MON	DIG B	1/16	8858	18 02	4T04-81	5M07-17	
15018	BAND 1 GAIN HIGH/LOW	BND 1 GN	DIG B	1/16	8859	01 03	4T04-12	5M07-18	
15019	BAND 2 GAIN HIGH/LOW	BND 2 GN	DIG B	1/16	8860	02 03	4T06-81	5M07-19	
15020	ROTATING SHUTTER ON/OFF	ROT SHTR	DIG B	1/16	8861	08 03	4T06-12	5M07-16	
15023	SHUTTER MONITOR SOURCE A/B	SHTR MON	DIG B	1/16	8862	10 03	4T08-81	5M07-21	
15027	MUX ON/OFF	MULTPLXR	DIG B	1/16	5843	15 00	4T04-11	4M02-08	

FUNC NO.	TLM FUNCTION	ACRONYM	SIGNL TYPE	SAMP SEC	GATE ADDR	COLUMN /ROW	TMP CONN	S/S CONN	INT CONN
15028	MUX NORM/INHIBIT	MUX STAT	DIG B	1/16	5844	18 00	4T06-14	5M07-36	
15029	MUX MODE STATUS COMPRES/LINEAR	MUX MODE	DIG B	1/16	5840	08 00	4T02-14	4M02-09	
15030	MID SCAN CODE OFF/ON	MID SCAN	DIG B	1/16	7B58	18 02	4T04-76	4M02-11	
15031	SCAN MONITOR SOURCE A/B	SCN SRCE	DIG B	1/16	5841	10 00	4T02-11	5M07-30	
15032	SCANNER POWER LINE 1/2	SCANR PL	DIG B	1/16	5842	12 00	4T04-14	5M07-32	
15033	SCAN MIRROR ON/OFF	SCN MIRR	DIG B	1/16	5839	02 00	4T08-28	5M07-24	
15034	SCAN MIRROR POWER LINE 1 YES/NO	SCNM PL1	DIG B	1/16	7B59	01 03	4T04-45	5M07-28	
15035	SCAN MIRROR POWER LINE 2 YES/NO	SCNM PL2	DIG B	1/16	7B60	02 03	4T06-76	5M07-29	
15036	SCAN MIRROR MODE NORMAL/INHIBIT	SCNM MDE	DIG B	1/16	5845	01 01	4T06-11	5M07-34	
15037	SCAN MIRROR PWR LINE 1/2	SMPL SLT	DIG B	1/16	5846	02 01	4T08-14	5M07-35	
15039	SYSTEM ON-OFF STATUS NORM/OVRD	SYS STAT	DIG B	1/16	9B53	02 02	4T06-05	5M07-33	
15040	MUX -6V G.P. POWER SUPPLY	MUX -6V	ALOG	1/16	A270	02 33	4T86-48	4M02-01	
15041	A/D CONVERTER REF SUPPLY	A/D SPLY	ALOG	1/16	A332	01 42	4T88-76	4M02-03	
15042	AVERAGE DENSITY OF DATA TRANSITIONS	AVG DENS	ALOG	1/16	A395	01 51	4T90-72	4M02-04	
15043	FIBER OPTICS PLATE 1 TEMPERATURE	FOPT 1 T	ALOG	1/16	A459	02 60	4T92-72	5M11-04	
15044	FIBER OPTICS PLATE 2 TEMPERATURE	FOPT 2 T	ALOG	1/16	A522	02 69	4T94-45	5M11-05	
15045	MUX TEMPERATURE	MUX TEMP	ALOG	1/16	A580	10 77	4T96-70	4M02-05	
15046	ELECTRONICS COVER TEMPERATURE	EL CVR T	ALOG	1/16	A075	08 05	4T80-72	5M11-06	
15047	POWER SUPPLIES TEMPERATURE	P SPLY T	ALOG	1/16	A139	10 14	4T82-72	5M11-07	
15048	SCAN MIRROR REGULATOR TEMP	SM REG T	ALOG	1/16	A206	01 24	4T84-48	5M11-08	
15049	SCAN MIRROR DRIVE ELECTRONICS TEMP	SMDR E T	ALOG	1/16	A271	08 33	4T86-49	5M11-09	
15050	SCAN MIRROR DRIVE COIL TEMP	SMDR C T	ALOG	1/16	A333	02 42	4T88-73	5M11-10	
15051	SCAN MIRROR TEMPERATURE	SCN MR T	ALOG	1/16	A396	02 51	4T90-76	5M11-11	
15052	ROTATING SHUTTER HOUSING TEMP	RSH HG T	ALOG	1/16	A460	08 60	4T92-76	5M11-31	
15053	SCAN MIRROR REGULATED VOLTAGE	SM REG V	ALOG	1/16	A523	08 69	4T94-72	5M11-34	
15054	CALIBRATION LAMP CURRENT	CALAMP I	ALOG	1/16	A581	12 77	4T96-14	5M11-13	
15055	BAND 1 PLUS AND MINUS 15 VDC REGULATOR	BND1 15V	ALOG	1/16	A076	10 05	4T80-76	5M11-14	
15056	BAND 2 PLUS AND MINUS 15 VDC REGULATOR	BND2 15V	ALOG	1/16	A140	12 14	4T82-76	5M11-15	
15057	BAND 3 PLUS AND MINUS 15 VDC REGULATOR	BND3 15V	ALOG	1/16	A207	02 24	4T84-49	5M11-16	
15058	BAND 4 PLUS AND MINUS 15 VDC REGULATOR	BND4 15V	ALOG	1/16	A272	10 33	4T86-04	5M11-17	
15059	-15 TLM REGULATED VOLTAGE	TLM -15V	ALOG	1/16	A334	08 42	4T88-48	5M11-12	
15060	+12 VDC -6VDC REGULATOR	+12-6VDC	ALOG	1/16	A397	08 51	4T90-73	5M11-19	
15061	+5 VDC LOGIC REGULATOR	LOGIC+5V	ALOG	1/16	A461	10 60	4T92-73	5M11-20	
15062	+19 VDC RECTIFIER OUTPUT	RECT+19V	ALOG	1/16	A524	10 69	4T94-76	5M11-21	
15063	-19 VDC RECTIFIER OUTPUT	RECT-19V	ALOG	1/16	A583	18 77	4T96-28	5M11-22	
15064	HIGH VOLTAGE MONITOR BAND 1 (A)	BND1 HVA	ALOG	1/16	A077	12 05	4T80-73	5M11-23	
15065	HIGH VOLTAGE MONITOR BAND 1 (B)	BND1 HVB	ALOG	1/16	A142	18 14	4T82-48	5M11-24	
15066	HIGH VOLTAGE MONITOR BAND 2 (A)	BND2 HVA	ALOG	1/16	A208	08 24	4T84-04	5M11-25	
15067	HIGH VOLTAGE MONITOR BAND 2 (B)	BND2 HVB	ALOG	1/16	A273	12 33	4T86-27	5M11-26	
15068	HIGH VOLTAGE MONITOR BAND 3 (A)	BND3 HVA	ALOG	1/16	A335	10 42	4T88-49	5M11-27	
15069	HIGH VOLTAGE MONITOR BAND 3 (B)	BND3 HVB	ALOG	1/16	A398	10 51	4T90-48	5M11-28	

FUNC NO.	TLM FUNCTION	ACRONYM	SIGNL TYPE	SAMP SEC	GATE ADDR	COLUMN /ROW	TMP CONN	S/S CONN	INT CONN
15070	SHUTTER MOTOR CONTROL INTEGRATOR OUTPUT	SHTR MCI	ALOG	1/16	A462	12 60	4T92-48	5M11-29	
15071	SCAN MIRROR DRIVE CLOCK	SMDR CLK	ALOG	1/16	A525	12 69	4T94-73	5M11-37	
15101	CHN 1 SCANNER VIDEO OUTPUT	CH1 SVO	ALOG	1/16	A079	18 05	4T80-49	5M15-01	
15102	CHN 2 SCANNER VIDEO OUTPUT	CH2 SVO	ALOG	1/16	A080	01 06	4T80-04	5M15-02	
15103	CHN 3 SCANNER VIDEO OUTPUT	CH3 SVO	ALOG	1/16	A081	02 06	4T80-27	5M15-03	
15104	CHN 4 SCANNER VIDEO OUTPUT	CH4 SVO	ALOG	1/16	A082	08 06	4T80-44	5M15-04	
15105	CHN 5 SCANNER VIDEO OUTPUT	CH5 SVO	ALOG	1/16	A083	10 06	4T80-47	5M15-05	
15106	CHN 6 SCANNER VIDEO OUTPUT	CH6 SVO	ALOG	1/16	A084	12 06	4T80-71	5M15-06	
15107	CHN 7 SCANNER VIDEO OUTPUT	CH7 SVO	ALOG	1/16	A143	01 15	4T82-49	5M15-08	
15108	CHN 8 SCANNER VIDEO OUTPUT	CH8 SVO	ALOG	1/16	A144	02 15	4T82-04	5M15-09	
15109	CHN 9 SCANNER VIDEO OUTPUT	CH9 SVO	ALOG	1/16	A145	08 15	4T82-27	5M15-10	
15110	CHN 10 SCANNER VIDEO OUTPUT	CH10 SVO	ALOG	1/16	A146	10 15	4T82-44	5M15-11	
15111	CHN 11 SCANNER VIDEO OUTPUT	CH11 SVO	ALOG	1/16	A147	12 15	4T82-47	5M15-12	
15112	CHN 12 SCANNER VIDEO OUTPUT	CH12 SVO	ALOG	1/16	A148	15 15	4T82-71	5M15-13	
15113	CHN 13 SCANNER VIDEO OUTPUT	CH13 SVO	ALOG	1/16	A274	15 33	4T86-44	5M15-15	
15114	CHN 14 SCANNER VIDEO OUTPUT	CH14 SVO	ALOG	1/16	A275	18 33	4T86-47	5M15-16	
15115	CHN 15 SCANNER VIDEO OUTPUT	CH15 SVO	ALOG	1/16	A276	01 34	4T86-71	5M15-17	
15116	CHN 16 SCANNER VIDEO OUTPUT	CH16 SVO	ALOG	1/16	A277	02 34	4T86-51	5M15-18	
15117	CHN 17 SCANNER VIDEO OUTPUT	CH17 SVO	ALOG	1/16	A278	08 34	4T86-13	5M15-19	
15118	CHN 18 SCANNER VIDEO OUTPUT	CH18 SVO	ALOG	1/16	A279	10 34	4T86-46	5M15-37	
15119	CHN 19 SCANNER VIDEO OUTPUT	CH19 SVO	ALOG	1/16	A527	18 69	4T94-49	5M15-22	
15120	CHN 20 SCANNER VIDEO OUTPUT	CH20 SVO	ALOG	1/16	A528	01 70	4T94-04	5M15-23	
15121	CHN 21 SCANNER VIDEO OUTPUT	CH21 SVO	ALOG	1/16	A529	02 70	4T94-27	5M15-24	
15122	CHN 22 SCANNER VIDEO OUTPUT	CH22 SVO	ALOG	1/16	A530	08 70	4T94-44	5M15-25	
15123	CHN 23 SCANNER VIDEO OUTPUT	CH23 SVO	ALOG	1/16	A531	10 70	4T94-47	5M15-26	
15124	CHN 24 SCANNER VIDEO OUTPUT	CH24 SVO	ALOG	1/16	A532	12 70	4T94-71	5M15-27	
	DCS RECEIVER								
16001	RECEIVER 1 SIG STRENGTH	RCVR1 SG	ALOG	1/16	A149	18 15	4T82-51	3D04-2	
16002	RECEIVER 1 TEMPERATURE	RCVR 1 T	ALOG	1/16	A209	10 24	4T84-27	3D04-1	
16003	RECEIVER 1 PWR SUPPLY VOLTAGE	RCVR 1 V	ALOG	1/16	A336	12 42	4T88-04	3D04-3	
16004	RECEIVER 2 SIGNAL STRENGTH	RCVR2 SG	ALOG	1/16	A399	12 51	4T90-49	2D04-2	
16005	RECEIVER 2 TEMPERATURE	RCVR 2 T	ALOG	1/16	A464	18 60	4T92-04	2D04-1	
16006	RECEIVER 2 PWR SUPPLY VOLTAGE	RCVR 2 V	ALOG	1/16	A584	01 78	4T96-12	2D04-3	

NOTE ALSO SEE ELEC. I.F. S/S

```
*****************************************
*                                       *
*   P/8  1000,2000,6000,7000,8000,11000 *
*   12000,13000,14000,15000  ELEC IF S/S *
*                                       *
*****************************************
```

FUNC NO.	TLM FUNCTION	ACRONYM	SIGNL TYPE	SAMP SEC	GATE ADDR	COLUMN /ROW	TMP CONN	S/S CONN	INT CONN
	INTERFACE SWITCHING MODULE (ISM)								
	(PART OF ACS S/S)								
1008	SCANNER 1 EN/DIS	SCAN 1	DIG B	1/16	5852	01 02	4T06-15	4X05-10	5Z17-05
1017	SCANNER 2 EN/DIS	SCAN 2	DIG B	1/16	5851	18 01	4T04-48	4X05-12	5Z17-06
1231	SAD RIGHT POWER UNFUSED/FUSED	SDR PWR	DIG B	1/16	5855	10 02	4T08-48	4X05-27	5Z17-12
1251	SAD LEFT POWER UNFUSED/FUSED	SDL PWR	DIG B	1/16	5854	08 02	4T08-15	4X05-25	5Z17-11
1290	SINGLE SCANNER MODE UNLOCK/LOCK	SGL SCNR	DIG B	1/16	5848	10 01	4T02-15	4X05-14	5Z17-07
1291	SCANNER DISABLE SELECT 2/1	SCAN DIS	DIG B	1/16	5850	15 01	4T04-15	4X05-8	5Z17-04
1292	RIGHT COSINE POT OUT	COS SIGR	ALOG	1/1	A631	11 04	4T96-56	4X05-16	5Z17-16
1293	LEFT COSINE POT OUT	COS SIGL	ALOG	1/1	A632	13 04	4T96-05	4X03-16	5Z17-13
	(PART OF OA S/S)								
2020	OA THRUSTER HEATERS ON/OFF	THRS HTR	DIG B	1/16	5859	01 03	4T04-46	4X03-27	5Z17-27
	(PART OF ATT. SENS. S/S)								
3006	ATTITUDE SENSOR ON/OFF	ATT SENS	DIG B	1/16	5853	02 02	4T06-48	4X05-6	5Z17-03
	(PART OF THERMAL S/S)								
7127	COMP. LOAD 7 ON/OFF	CMP LD 7	DIG B	1/16	5861	08 03	4T06-46	4X05-4	5Z17-02
7128	COMP. LOAD 8 ON/OFF	CMP LD 8	DIG B	1/16	5862	10 03	4T08-53	4X05-2	5Z17-01
7130	AUX. LOAD PANNEL 1, TEMP.	AUX P1 T	ALOG	1/16	A085	15 06	4T80-51	4X03-48	5Z17-15
7131	AUX. LOAD PANNEL 2, TEMP.	AUX P2 T	ALOG	1/16	A210	12 24	4T84-44	4X05-48	5Z17-17
	(PART OF C. AND D.H. S/S)								
8060	SEP SWITCH 1 BYPASS NO/YES	SS 1BYPS	DIG B	1/16	5856	12 02	4T02-53	4X05-19	5Z17-08
8061	SEP SWITCH 2 BYPASS NO/YES	SS 2BYPS	DIG B	1/16	5857	15 02	4T02-46	4X05-21	5Z17-09
8062	CLOCK FUSED PWR. PRI/RED	CLK FUSE	DIG B	1/16	5858	18 02	4T04-53	4X05-23	5Z17-10
8113	MSFN(STADAN) CHANNEL A/B(B/A)	M(S) CHN	DIG B	1/16	6858	18 02	4T04-55	4X03-19	5Z17-25
11020	USB XMTR PRIMARY POWER OFF/ON	P USB PW	DIG B	1/16	7843	15 00	4T04-29	4X03-12	5Z17-22
11021	USB XMTR REDUNDANT POWER OFF/ON	R USB PW	DIG B	1/16	1342	12 00	4T04-37	4X03-08	5Z17-20
12000	WIDEBAND POWER AMPLIFIERS PRIMARY POWER OFF/ON	P WPA PW	DIG B	1/16	7842	12 00	4T04-13	4X03-14	5Z17-23
12100	WIDEBAND POWER AMPLIFIERS REDUNDANT POWER OFF/ON	R WPA PW	DIG B	1/16	6844	18 00	4T06-75	4X03-10	5Z17-21
	(PART OF A.P.U.)								
13210	APU USB/PM P.U.T.SIGNAL ENA/DIS	U/P TSIG	DIG B	1/16	7844	18 00	4T06-13	4X03-04	5Z17-18
	(PART OF PAYLOAD S/S)								

FUNC NO.	TLM FUNCTION		ACRONYM	SIGNL TYPE	SAMP SEC	GATE ADDR	COLUMN /ROW	TMP CONN	S/S CONN	INT CONN
14118	CAMERA NO. 1	ON/OFF	CAMERA 1	DIG B	1/16	6B55	10 02	4T08-26	4X11-42	5Z17-32
14218	CAMERA NO. 2	ON/OFF	CAMERA 2	DIG B	1/16	6B59	01 03	4T04-72	4X11-45	5Z17-35
14318	CAMERA NO. 3	ON/OFF	CAMERA 3	DIG B	1/16	6B63	12 03	4T08-72	4X01-42	5Z17-29
15001	MSS SYSTEM	ON/OFF	MSS SYST	DIG B	1/16	8B41	10 00	4T02-04	4X23-41	5Z17-37
15038	MSS HEATER	ON/OFF	MSS HTR	DIG B	1/16	5B60	02 03	4T06-53	4X03-2	5Z17-24

FUNC NO.	TLM FUNCTION	ACRONYM	SIGNL TYPE	SAMP SEC	GATE ADDR	COLUMN /ROW	TMP CONN	S/S CONN	INT CONN
	POWER SWITCHING MODULE (PSM)								
	(PART OF OA S/S)								
2030	OA SOL POWER ENA/DIS	SOL PWR	DIG B	1/1	5837	16 04	4T06-28	5P13-12	5Z15-13
2035	OA TIMER ENA/DIS	OA TIMER	DIG B	1/16	5863	12 03	4T08-46	5P13-26	5Z15-01
	(PART OF POWER S/S)								
6079	PAYLOAD FUSE BLOW BUS VOLTAGE	FS BLO V	ALOG	1/16	A337	15 42	4T88-27	5P13-10	5Z15-11
6102	PSM RELAY BUS ENA/DIS	PSM RLYS	DIG B	1/16	1858	18 02	4T04-21	4X03-21	5Z17-26
	(PART OF A.P.U.)								
13209	APU:S PAYLOAD B.J.T. SIG ENA/DIS	PL TSIG	DIG B	1/16	7846	02 01	4T08-13	5P13-04	5Z15-09
13211	SEARCH TRACK (1+2) DATA TO APJ (A+B) NORM/SWITCHED	ST DATA	DIG B	1/16	7845	01 01	4T06-29	5P13-08	5Z15-06
	(PART OF PAYLOAD S/S)								
15000	MSS POWER ENABLE/DISABLE	MSS PWR	DIG B	1/16	7847	08 01	4T08-29	5P13-47	5Z15-10
15026	MSS SCAN MIRROR PWR ENA/DIS	SCNM PWR	DIG B	1/16	4848	10 01	4T02-03	5P13-48	5Z15-08
14017	RBV SHUTTER PWR ON/OFF	SHTR PWR	DIG B	1/16	5349	12 01	4T02-48	5P13-23	5Z15-07
6101	PRM IN RELAY CONFIGURATION MIXED/COMM	PRM[AGE]	DIG B	1/16	6850	15 01	4T04-52	5P13-32	5Z15-12
14400	RBV MAGNETIC COMPENSATOR ENA/DIS	MAG COMP	DIG B	1/16	5838	01 00	4T08-74	5P19-12	5Z15-32
14401	RBV MAGNETIC COMP CURRENT HIGH/LOW	MG CMP I	DIG B	1/16	8840	08 00	4T02-27	5P19-24	5Z15-47
14121	RBV 1 THERMOELECTRIC MOD ENA/DIS	THM MD 1	DIG B	1/16	7841	10 00	4T02-29	5P13-35	5Z15-05
14221	RBV 2 THERMOELECTRIC MOD ENA/DIS	THM MD 2	DIG B	1/16	7838	01 00	4T08-77	5P13-46	5Z15-02
14321	RBV 3 THERMOELECTRIC MOD ENA/DIS	THM MD 3	DIG B	1/16	7839	02 00	4T08-70	5P13-38	5Z15-03
	(PART OF C AND DH S/S)								
11022	USB XMTRS OFF SIG ENA/DIS	USBVOFF	DIG B	1/16	7840	08 00	4T02-13	5P19-48	5Z15-04
00000	SPARE LATCH RELAY	XXXXXXX	DIG B	1/16	3852	01 02	4T06-17	5P19-36	5Z15-14

FUNC NO.	TLM FUNCTION	ACRONYM	SIGNL TYPE	SAMP SEC	GATE ADDR	COLUMN /ROW	TMP CONN	S/S CONN	INT CONN
	AUX PROCESSING UNIT (APU)								
13200	-24.5 INPUT POWER	APU-24.5	ALOG	1/16	A401	18 51	4T90-27	3E06-13	
13201	-12V SUPPLY	APU -12V	ALOG	1/16	A465	01 61	4T92-27	3E06-15	
13202	TEMPERATURE	APU TEMP	ALOG	1/16	A585	02 78	4T96-26	3E06-14	
13207	34 MIN. PL B.U.T. START SIG. ON/OFF	34M PL	DIG B	1/16	7B48	10 01	4T02-80	3E06-04	
13208	34 MINUTE USB/PA B.U.T. START SIGNAL ON/OFF	34M U/PA	DIG B	1/16	7B49	12 01	4T02-71	3E06-07	
13212	POWER MODE NORM/STBY	PWR MODE	DIG B	1/16	1B48	10 01	4T02-20	3E06-16	
	(THE FOLLOWING ARE UTILIZED AS SPECIAL FUNCTIONS)								
17000	SEARCH TRACK 1, 1/2 DATA	STK1 1/2	DIG A	1/1	DA00	16 00	4T30-31	3E04-09	
17001	SEARCH TRACK 1, 2/2 DATA	STK1 2/2	DIG A	1/1	DA01	17 00	4T30-33	3E04-10	
17002	SEARCH TRACK 2, 1/2 DATA	STK2 1/2	DIG A	1/1	DA02	16 01	4T30-30	3E04-11	
17003	SEARCH TRACK 2, 2/2 DATA	STK2 2/2	DIG A	1/1	DA03	17 01	4T30-17	3E04-12	

FUNC NO.	TLM FUNCTION	ACRONYM	SIGNL TYPE	SAMP SEC	GATE ADDR	COLUMN /ROW	TMP CONN	S/S CONN	INT CONN
	AUX LOAD CONTROLLER								
	(PART OF POWER S/S)								
6080	SHUNT LOAD 1 CURRENT	SHUNT1 I	ALOG	1/16	A103	08 09	4T80-34	1P42-05	
6081	SHUNT LOAD 2 CURRENT	SHUNT2 I	ALOG	1/16	A167	10 18	4T82-34	1P42-06	
6082	SHUNT LOAD 3 CURRENT	SHUNT3 I	ALOG	1/16	A231	12 27	4T84-34	1P42-07	
6083	SHUNT LOAD 4 CURRENT	SHUNT4 I	ALOG	1/16	A295	15 36	4T86-34	1P42-18	
6084	SHUNT LOAD 5 CURRENT	SHUNT5 I	ALOG	1/16	A359	18 45	4T88-34	1P42-19	
6085	SHUNT LOAD 6 CURRENT	SHUNT6 I	ALOG	1/16	A423	01 55	4T90-34	1P42-20	
6086	SHUNT LOAD 7 CURRENT	SHUNT7 I	ALOG	1/16	A487	02 64	4T92-34	1P42-08	
6087	SHUNT LOAD 8 CURRENT	SHUNT8 I	ALOG	1/16	A551	08 73	4T94-34	1P42-21	
6089	SHUNT LOAD 'A' ON/OFF	SHUNT A	DIG B	1/16	0838	01 00	4T08-84	1P42-39	
6090	SHUNT LOAD 'B' ON/OFF	SHUNT B	DIG B	1/16	0845	01 01	4T06-40	1P42-02	
6091	SHUNT LOAD 'C' ON/OFF	SHUNT C	DIG B	1/16	0852	01 02	4T06-43	1P42-01	
6092	SHUNT LOAD 'D' ON/OFF	SHUNT D	DIG B	1/16	0859	01 03	4T04-62	1P42-42	
6093	AUXILIARY LOAD 1 ON/OFF	AUX LD 1	DIG B	1/16	0839	02 00	4T08-39	1P42-03	
6094	AUXILIARY LOAD 2 ON/OFF	AUX LD 2	DIG B	1/16	0846	02 01	4T08-68	1P42-04	
6095	AUXILIARY LOAD 3 ON/OFF	AUX LD 3	DIG B	1/16	0853	02 02	4T06-38	1P42-36	
6096	AUXILIARY LOAD 4 ON/OFF	AUX LD 4	DIG B	1/16	0860	02 03	4T06-23	1P42-37	
6097	AUXILIARY LOAD 5 ON/OFF	AUX LD 5	DIG B	1/16	0862	10 03	4T08-23	1P42-38	
	(PART OF THERMAL S/S)								
7121	COMP LOAD 1 ON/OFF	CMP LD 1	DIG B	1/16	7850	15 01	4T04-80	1P42-09	
7122	COMP LOAD 2 ON/OFF	CMP LD 2	DIG B	1/16	7852	01 02	4T06-80	1P42-27	
7123	COMP LOAD 3 ON/OFF	CMP LD 3	DIG B	1/16	7853	02 02	4T06-71	1P42-28	
7124	COMP LOAD 4 ON/OFF	CMP LD 4	DIG B	1/16	7854	08 02	4T08-80	1P42-22	
7125	COMP LOAD 5 ON/OFF	CMP LD 5	DIG B	1/16	7855	10 02	4T08-71	1P42-23	
7126	COMP LOAD 6 ON/OFF	CMP LD 6	DIG B	1/16	7856	12 02	4T02-76	1P42-24	
	(PART OF C+DH S/S)								
8057	TICK/TOCK TIC/TOC	TIC/TOC	DIG B	1/1	9836	17 03			

TELEMETRY REVISIONS
WAS CONDITIONS

FUNC NO.	TLM FUNCTION	ACRONYM	SIGNL TYPE	SAMP SEC	GATE ADDR	COLUMN /ROW	TMP CONN	S/S CONN	INT CONN
	CHANGES								
1042	PITCH FLYWHEEL SPEED	P FW SPD	ALOG	1/16	A486	01 64	4T92-54	7001-27	6T00-24
1043	PITCH TACH AMP OUTPUT	P TACH	ALOG	1/1	A611	13 01	4T96-82	7001-17	6T00-16
1063	ROLL (-) SOLENOID ON/OFF	R - SOL	DIG B	1/1	5834	17 02	4T02-74	7001-48	6T00-43
1260	BASEPLATE 1 TEMP	TH01EBP	ALOG	1/16	A475	10 62	4T92-69	8102-17	6T01-76
1261	BASEPLATE 2 TEMP	TH02EBP	ALOG	1/16	A539	12 71	4T94-69	8102-28	6T01-75
1262	BASEPLATE 3 TEMP	TH03EBP	ALOG	1/16	A088	02 07	4T80-11	8102-29	6T01-74
1263	THERMAL SHIELD 4 TEMP	TH01STS	ALOG	1/16	A152	08 16	4T82-11	8102-31	6T01-73
1264	THERMAL SHIELD 5 TEMP	TH02STS	ALOG	1/16	A215	08 25	4T84-46	8102-12	6T01-72
1265	THERMAL SHIELD 6 TEMP	TH03STS	ALOG	1/16	A281	15 34	4T86-24	8102-11	6T01-71
1266	THERMAL SHIELD 7 TEMP	TH04STS	ALOG	1/16	A346	01 44	4T88-43	8102-10	6T01-70
1267	THERMAL SHIELD 8 TEMP	TH05STS	ALOG	1/16	A410	02 53	4T90-43	8102-30	6T01-77
1268	STRUCTURE (FWD SUN SENSOR MTG) 9 TMP	TH01FSSM	ALOG	1/16	A474	08 62	4T92-43	8102-16	6T01-10
1269	STRUCTURE (REAR SUN SENSOR MTG) NUMBER 10 TEMP	TH02RSSM	ALOG	1/16	A538	10 71	4T94-43	8102-19	6T01-23
1273	LOWER STUCT AT PNEU CYL MTG INTERFACE NUMBER 14 TEMP	TH01LCS	ALOG	1/16	A280	12 34	4T86-11	8102-13	6T01-38
1275	LEFT SAD RADIATOR 16 TEMP	TH01LRAD	ALOG	1/16	A409	01 53	4T90-24	8102-33	6T01-45
1276	RIGHT SAD RADIATOR 17 TEMP	TH01RRAD	ALOG	1/16	A473	02 62	4T92-24	8102-34	6T01-48
7004	SEPARATOR NO.3, BOTTOM INBOARD	TH03SBI	ALOG	1/16	A123	02 12	4T80-78	5T04-25	
7007	SEPARATOR NO.6, TOP INBOARD	TH06STI	ALOG	1/16	A126	12 12	4T80-35	5T04-26	
7017	SEPARATOR NO.14, TOP INBOARD	TH14STI	ALOG	1/16	A248	01 30	4T84-05	5T12-33	
7019	SEPARATOR NO.14, BOTTOM INBOARD	TH14SBI	ALOG	1/16	A250	08 30	4T84-19	5T04-31	
7109	MSS MOUNT NEAR CENTER OF NOTR BEAM	THCNMSS	ALOG	1/16	A574	12 76	4T94-35	5T12-13	
7111	MSS MOUNT NEAR SEPARATOR NO. 16	TH16MSS	ALOG	1/16	A503	10 66	4T92-56	5T04-10	
8025	PRIMARY POWER SUPPLY ON/OFF	PPWR SUP	DIG B	1/16	1838	01 00	4T08-60	2C11-17	5Z10-25
8052	REDUNDANT COMSTOR VERIFY YES/NO	RCOMSTRV	DIG B	1/1	2834	17 02	4T02-82	2C11-11	5Z10-52
9022	POWER 2 OFF/ON	POWER 2	DIG B	1/16	1846	02 01	4T08-37	P4T40-2	
9110	STORED DATA INPUT NOTR1/NOTR2	STRD IN	DIG B	1/16	1862	10 03	4T08-21	3T03-05	5Z14-11
10011	RECORDER PRESSURE 1 LOW/NOR	RCDR P 1	DIG B	1/16	1854	08 02	4T08-20	5N03-N	5Z09-12
13029	RECORD CURRENT/PLAYBACK VOLTAGE 1	RI/PBV 1	ALOG	1/16	A513	18 67	4T94-23	5W16-E	
13129	RECORD CURRENT/PLAYBACK VOLTAGE 2	RI/PBV 2	ALOG	1/16	A067	02 04	4T80-68	5W40-E	
15027	MUX ON/OFF	MULTPLXR	DIG B	1/16	5843	18 00	4T04-11	4M02-08	
15028	MUX NORM/INHIBIT	MUX STAT	DIG B	1/16	5844	01 01	4T06-14	5M07-36	
15032	SCANNER POWER LINE 1/2	SCANR PL	DIG B	1/16	5842	12 02	4T04-14	5M07-32	
1008	SCANNER 1 EN/DIS	SCAN 1	DIG B	1/16	5852	01 02	4T04-48	4X05-12	5Z17-06
1017	SCANNER 2 EN/DIS	SCAN 2	DIG B	1/16	5851	18 01	4T06-15	4X05-10	5Z17-05
6101	PRM INPUT VOLTAGE - AGE TEST/FLT	PRM(AGE)	DIG B	1/16	6850	15 01	4T04-52	5P13-32	5Z15-12

ADDITIONS

1279 RIGHT +X RADIATOR 18 TEMP	TH01RR+X	ALOG	1/16	A449	15 58	4T92-23	8102-35	6T01-49
1280 LOUVER HOUSING -X END 19 TEMP	TH03LH-X	ALOG	1/16	A456	15 59	4T92-12	8102-36	6T01-50
15039 SYSTEM ON-OFF STATUS NORM/OVRD	SYS STAT	DIG B	1/16	9853	02 02	4T06-05	5M07-33	

FUNC NO.	TLM FUNCTION	ACRONYM	SIGNL TYPE	SAMP SEC	GATE ADDR	COLUMN /ROW	TMP CONN	S/S CONN	INT CONN
6102	PSM RELAY BUS ENA/DIS	PSM RLYS	DIG B	1/16	1858	18 02	4T04-21	4X03-21	5Z17-26
11022	USB XMTRS OFF SIG ENA/DIS	USBVOFF	DIG B	1/16	7840	08 00	4T02-13	5P19-48	5Z15-04
00000	SPARE LATCH RELAY	XXXXXXX	DIG B	1/16	3852	01 02	4T06-17	5P19-36	5Z15-14

DELETIONS

APPENDIX D

STRIP CHART PAYLOAD SIGNATURES

APPENDIX D

STRIP CHART PAYLOAD SIGNATURES

Figure D-1 is a strip chart (General Status 2) showing characteristic signatures of payload equipment. This record is made from a Narrowband tape recorder playback showing 22 frames of Wide Band Video tape recording. RBV, MSS, WBVTR-1 and WBVTR-2 were operating during this time period. The Wide Band Down Links were off. Increasing time is from right to left. The 17 pens are alternately analog and digital. The parameter values drawn by each pen are described below.

Pen #1 shows Greenwich Mean Time at the time of recording, as measured by the recording ground station. For example, the last time code, (left hand side) reads (binary):

01 0010 010 1001 000 0000 which converts to 12:29 digital.

Pen #2 shows spacecraft regulated bus current. The MSS is supplied from this bus. The first step-up (reading right to left) is the time of MSS turn-on. It reads 1.28 TMV (4.57 amps) before turn-on and 1.76 TMV (6.19 amps) after turn-on, the delta 1.62 amps being the MSS current demand.

Pen #3 shows two digital functions, the short duration function being MSS System ON, and the long duration function being Hi Voltage ON. (The elevated region is ON.) The non-coincidence in time between this Pen and Pen #2 is due to the sequential sampling format.

Pen #4 again shows duplexed functions, both relating to the Wide Band Power Amplifier No. 1. The bottom horizontal lines (reading zero, showing the WBPA was OFF) show the voltage of the +15 V A supply; and the top horizontal lines (reading 2.0 TMV equal to 17.0^{o}C) show the temperature of the collector.

Pen #5 shows the duplexed functions of RBV 24 Volts ON and RBV Shutter Power ON.

Pen #6 is similar to Pen #4 except it shows the parameters for WBPA No. 2 which is normally associated with the MSS.

Pen #7 shows duplexed function for RBV Magnetic Compensator ON and CCC Power ON.

Pen #8 shows the duplexed functions of Wideband Video Tape Recorder footages, the top horizontal lines associated with WBVTR-1 and the bottom lines with WBVTR-2. At the beginning of the RECORD session, the footage read 2.23 TMV (equal to 10.03 Min) for WBVTR-1 and 2.77 TMV (equal to 16.63 Min) for WBVTR-2. At the end, the corresponding footages are 20.43 min for WBVTR-1, and 25.79 min. for WBVTR-2.

Pen #9 shows whether WBVTR-1 is in Rewind. It reads zero (depressed) showing that WBVTR-1 is not in the Rewind mode.

Pen #10 shows WBVTR-1 input current. At Record Command, the current rose to 3.95 TMV (equal to 3.59 amps) after a brief saturation transient in excess of 8.18 amps. This transient is a characteristic signature of WBVTR turn-ON.

Pen #11 is duplexed to show Record and Playback modes. Because of the fast run time of the strip recorder, the brief interval between sampling and the mode displayed, the line blurred, making reading impossible.

Pen #12 duplexes the reflected power in the antenna systems of WBPA 1 and 2. Because both these systems were OFF, the readings are zero.

Pen #13 showing whether WBVTR-2 was in Standby or Rewind mode. It can be seen the top horizontal segment went to zero at start of record, terminating the Standby mode.

Pen #14 shows the Payload Regulated bus current, with its easily recognizable characteristic signature of RBV and WBVTR activity. After turn-on and warm-up, the WBVTR's can be seen suddenly increasing the current drain and producing characteristic WBVTR turn-on transient, WBVTR-2 first followed immediately by WBVTR-1. 22 RBV camera exposures and readouts can be seen. During this interval, it can be seen from Pen #8, that the scenes are being recorded on the moving tape. Turn-OFF is seen to be simultaneous for RBV, MSS and both video tape recorders.

Pen #15 shows whether WBVTR-2 is in Record or Playback mode. Again the fast speed of the strip chart and the proximity of sampling times obscures the message.

Pen #16 is identical to Pen #10 showing Recorder Input Current except that it relates to WBVTR-2. It can be seen that Recorder 2 comes on before Recorder 1.

Pen #17 shows GMT as measured in the Spacecraft at the time of data sampling.

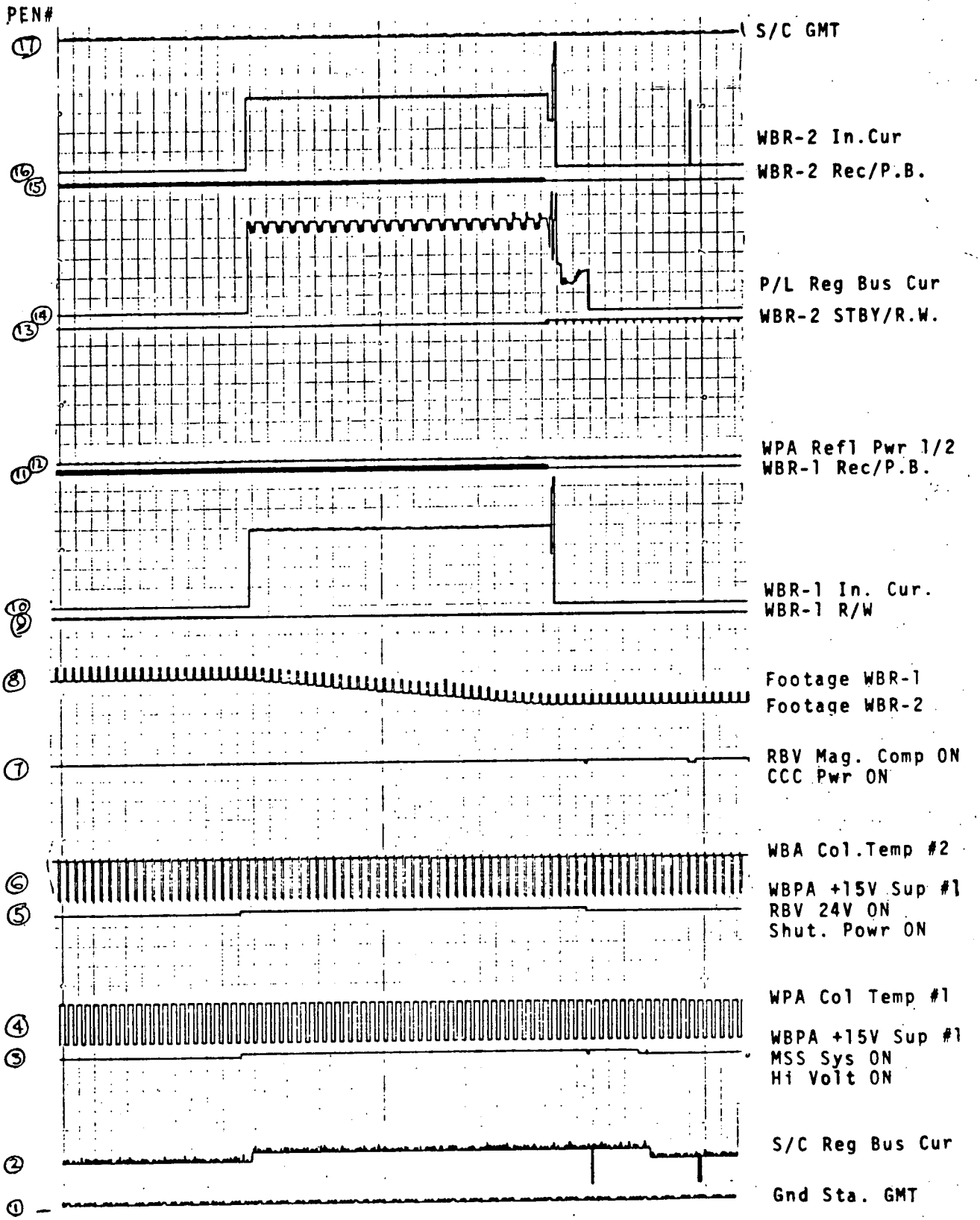

Figure D-1. Characteristic Strip Chart Payload Signatures

APPENDIX E

THERMAL ANOMALY OF RIGHT FORWARD SUN SENSOR (RFSS) ON ERTS- I

GENERAL ELECTRIC
SPACE DIVISION
PHILADELPHIA

PROGRAM INFORMATION REQUEST / RELEASE

PIR NO.	*CLASS. LTR.	OPERATION	PROGRAM	SEQUENCE NO.	REV. LTR.
	U	1R54	ERTS	641	

*USE "C" FOR CLASSIFIED AND "U" FOR UNCLASSIFIED

FROM: F. Drummond, Room U-2307

TO: S. Millman, Manager, Observatory Controls Systems, Room U-2113

DATE SENT	DATE INFO. REQUIRED	PROJECT AND REQ. NO.	REFERENCE DIR. NO.
8/21/72		4185-2002	

SUBJECT: THERMAL ANOMALY OF RIGHT FORWARD SUN SENSOR (RFSS) ON ERTS-A

INFORMATION REQUESTED/RELEASED

AUG 1972

1.0 INTRODUCTION

Within several orbits after the launch of ERTS-A, it was noted that the subject sun sensor was exceeding the established temperature limits. Maximum temperatures, obtained by extrapolation were $\approx$ 60°C and minimum temperatures were $\approx$ 30°C. A range of 30°C to 45°C had been expected. A review of the design and conversations with TRW indicated that there were no elements of the assembly which were inherently sensitive to high temperature. A similar design using the same basic elements, had seen higher temperatures on a TRW spacecraft as a result of a bad orbit, and survived. The RFSS has been qualified in T/V at a temperature of $50°C^{+5}_{-0}$. In terms of life expectancy the limiting factor is the quality of the solder joints.

2.0 ANALYSIS

2.1 Math Model

As a result of the discrepancy between actual and expected temperatures of the RFSS, a reanalysis was performed. No attempt was made to find the errors in the original analysis - a complete new analysis was done.

Figure 1 is a sketch giving the electrical analog of the math model. The node descriptions are:

NODE	DESCRIPTION
1	Sun Sensor Assembly
2	Insulation, Transition Section
3	Transition Section and Solar Cells
4	Solar Array
5	Transition Section under Insulation
6	Boundary - ACS
7	Boundary, Top of Sensory Ring

Since the solar array, transition section and sensor move with respect

ERTS DISTRIBUTION

PAGE NO. 1 OF 5

RETENTION REQUIREMENTS

COPIES FOR	MASTERS FOR
1 MO.	3 MOS.
3 MOS.	6 MOS.
6 MOS.	12 MOS.
MOS.	MOS.
	DO NOT DESTROY

FORM 1020 REV. (9-70)

to the ACS and Sensory Ring average values of radiation coupling were used.

2.2 Performance

The new model, in its basic form was exercised and performance data obtained. This temperature profile is shown on Curve #1 on Figure 2. These temperatures are cooler than the flight data by ~15°F on the high end and ~10°F on the low end. While these temperatures are quite close, they indicate that the original analysis was inadequate and did not accurately describe the actual conditions.

Once the reference data was obtained, the model was modified to produce data comparable to flight at the present flight Beta angle of 27°. This profile is shown on Curve #2 of Figure 2. Heat flux corrections to account for the anticipated 40° maximum Beta angle were then applied and Curve #3 was produced which shows that temperatures should decrease with increasing B angles. The model configuration for Curve #2 was iteratively modified (assumed hardware changes) to reduce sensor temperatures to normal levels, as shown on Curve #4. This temperature range can be reduced even further if required.

2.3 Thermal Design Change

The thermal performance shown on Curve #4 can be obtained on ERTS-B by adding Silver-Teflon tape to the sides of each sensor assembly. Figure 3 shows the location and width of this tape. An additional 10°F reduction can be obtained by making the strip 0.495" instead of 0.35".

3.0 CONCLUSIONS AND RECOMMENDATIONS

The RFSS on ERTS-A is operating in a hot condition because of inadequate heat rejection capability. It is recommended that the design change shown on Figure 3 be implemented and the 0.495" wide tape be used.

While the LFSS is running warm, it is recommended that the thermal configuration not be changed to agree with the RFSS. Should a lower operating temperature be desired on ERTS-B, then a separate analysis should be performed and specific changes developed.

SUN SENSOR
ELECTRICAL ANALOG OF MATH MODEL
FIGURE 1

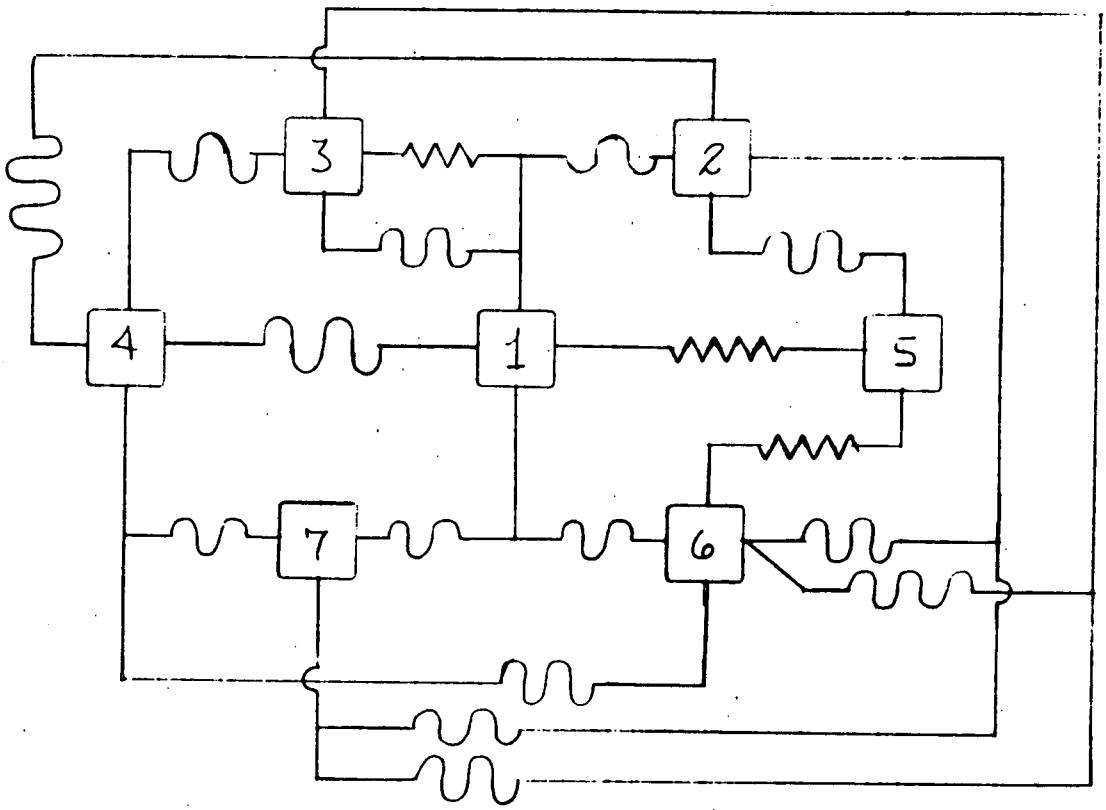

NODE	DESCRIPTION
1	SUN SENSOR
2	INSULATION, TRANSITION SECTION
3	TRANSITION SECTION & SOLAR CELLS
4	SOLAR ARRAY
5	TRANSITION SECTION UNDER INSULATION
6	ACS - BOUNDARY
7	SENSORY RING - BOUNDARY

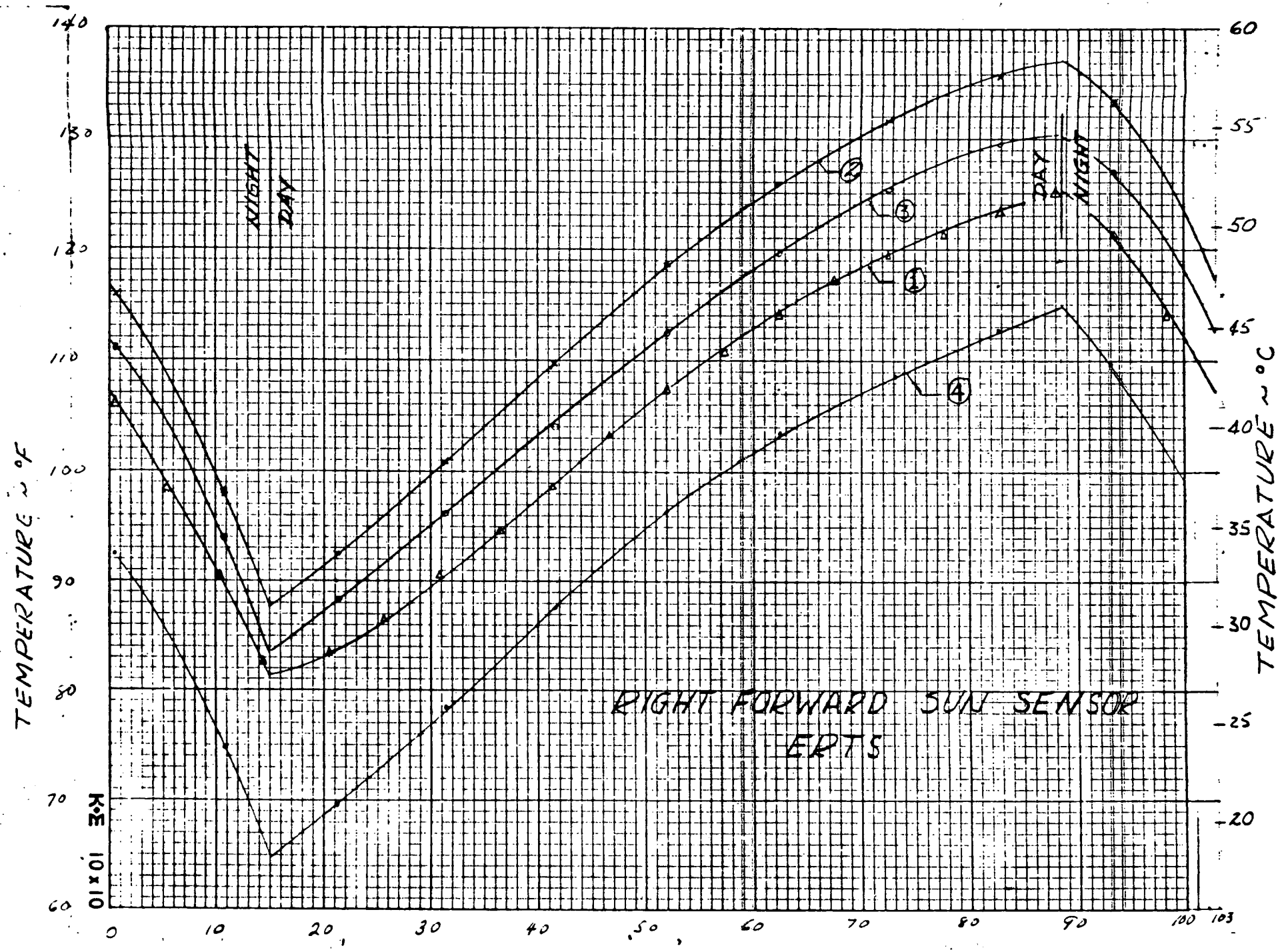
RIGHT FORWARD SUN SENSOR
ERTS
NIGHT
DAY
DAY
NIGHT
TEMPERATURE ~ °F
TEMPERATURE ~ °C
ORBIT TIME ~ MINUTES
K•E 10 x 10
140
130
120
110
100
90
80
70
60
60
55
50
45
40
35
30
25
20
0
10
20
30
40
50
60
70
80
90
100
103
1
2
3
4

FIGURE 2

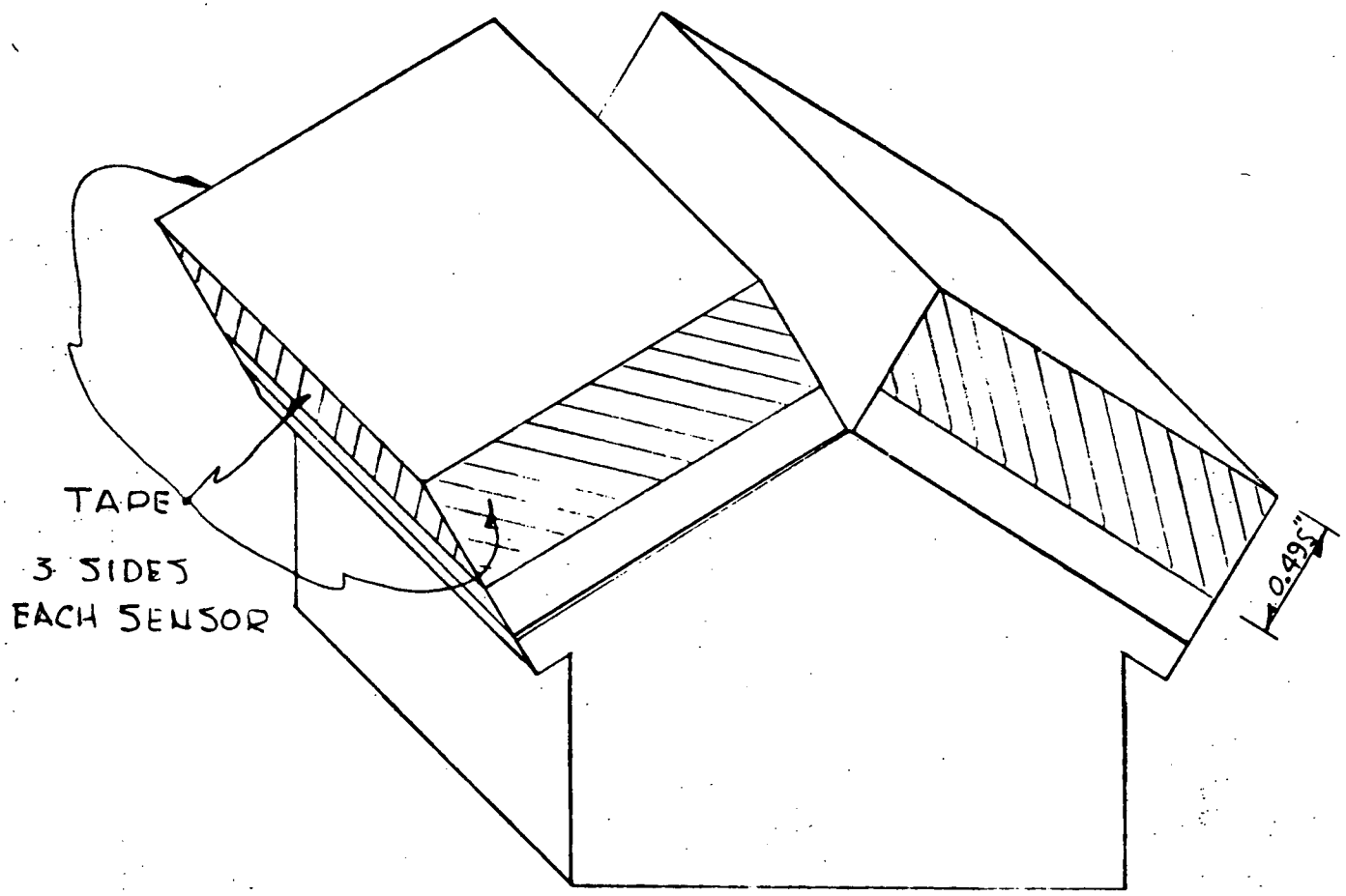

SKETCH OF SUN SENSOR SHOWING TAPE LOCATION

FIGURE 3

APPENDIX F

RBV AND MSS PHOTOGRAPHS

APPENDIX F

RBV AND MSS PHOTOGRAPHS

Representative imagery from the RBV and MSS is shown in the following figures. Spectral bands are given in Table F-1.

Table F-1. RBV/MSS Imagery

Figure	Band	Wavelength (Microns)	System
F-1	1	(0.475-0.575)	RBV
F-2	2	(0.580-0.680)	RBV
F-3	3	(0.698-0.830)	RBV
F-4	1, 2 and 3	(Color Composite)	RBV
F-5	1	(0.5-0.6)	MSS
F-6	2	(0.6-0.7)	MSS
F-7	3	(0.7-0.8)	MSS
F-8	4	(0.8-1.1)	MSS
F-9	1, 2 and 4	(*Color Composite)	MSS

*Color Composites of MSS use three bands 1, 2 and 4 or 1, 2 and 3.

NOTE: Imagery is annotated RBV 123, MSS 4, 5, 6, 7.

All photographs show the same ground scene, 185 x 185 square kilometers in area. The large body of water seen is Lake Tahoe in North Central California.

Reproduced from best available copy.

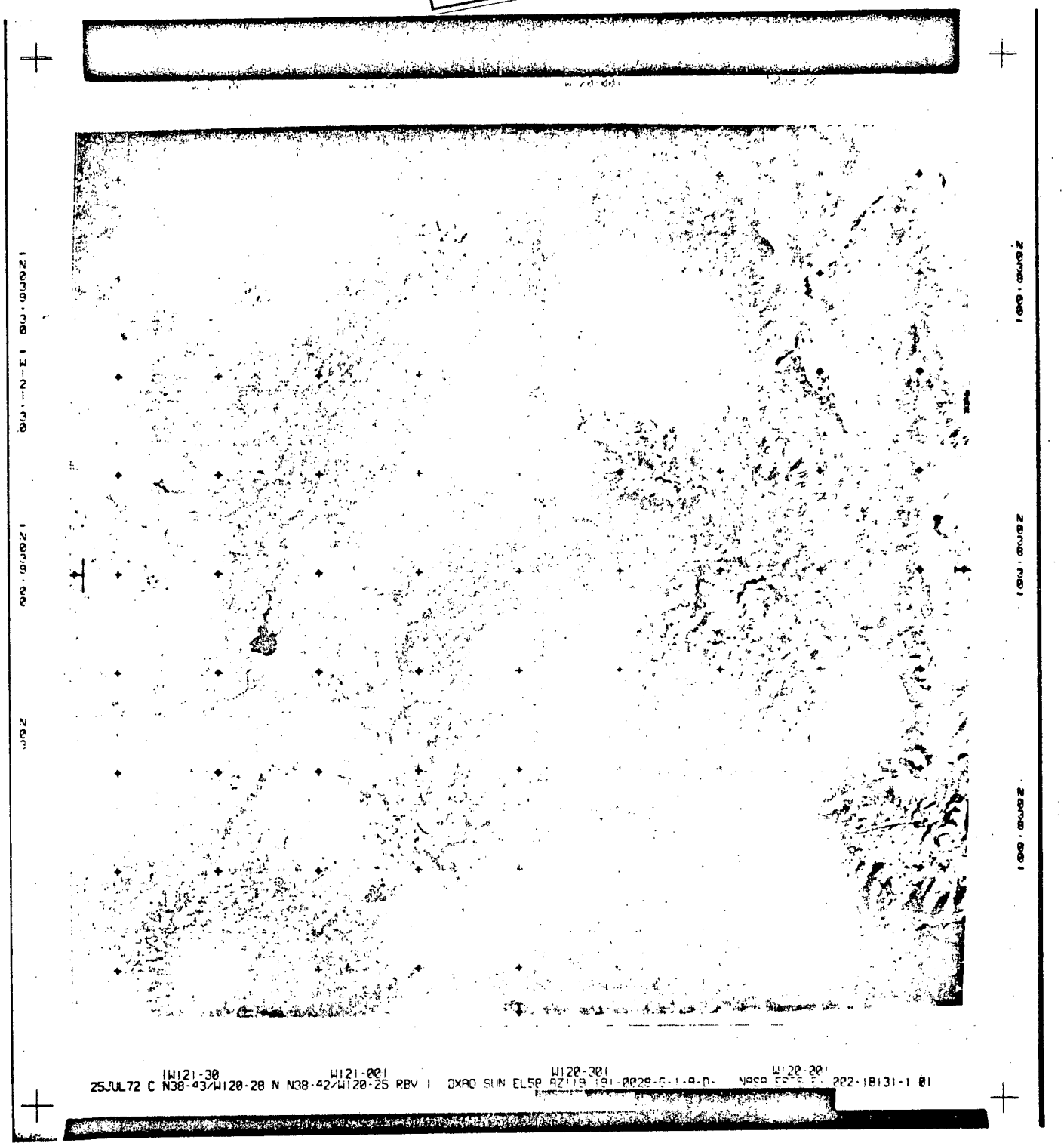

Figure F-1

Reproduced from best available copy.

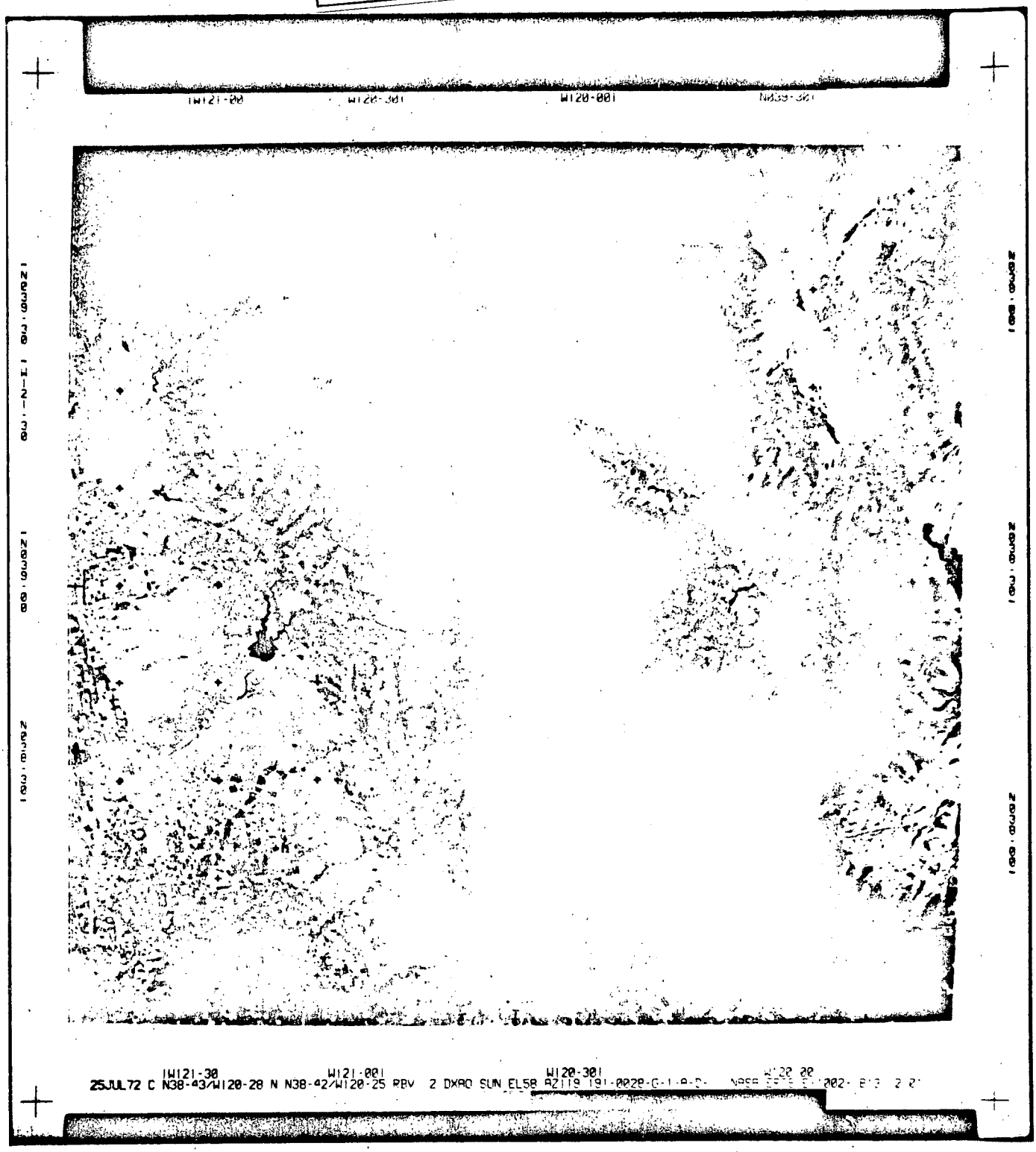

Figure F-2

Reproduced from best available copy.

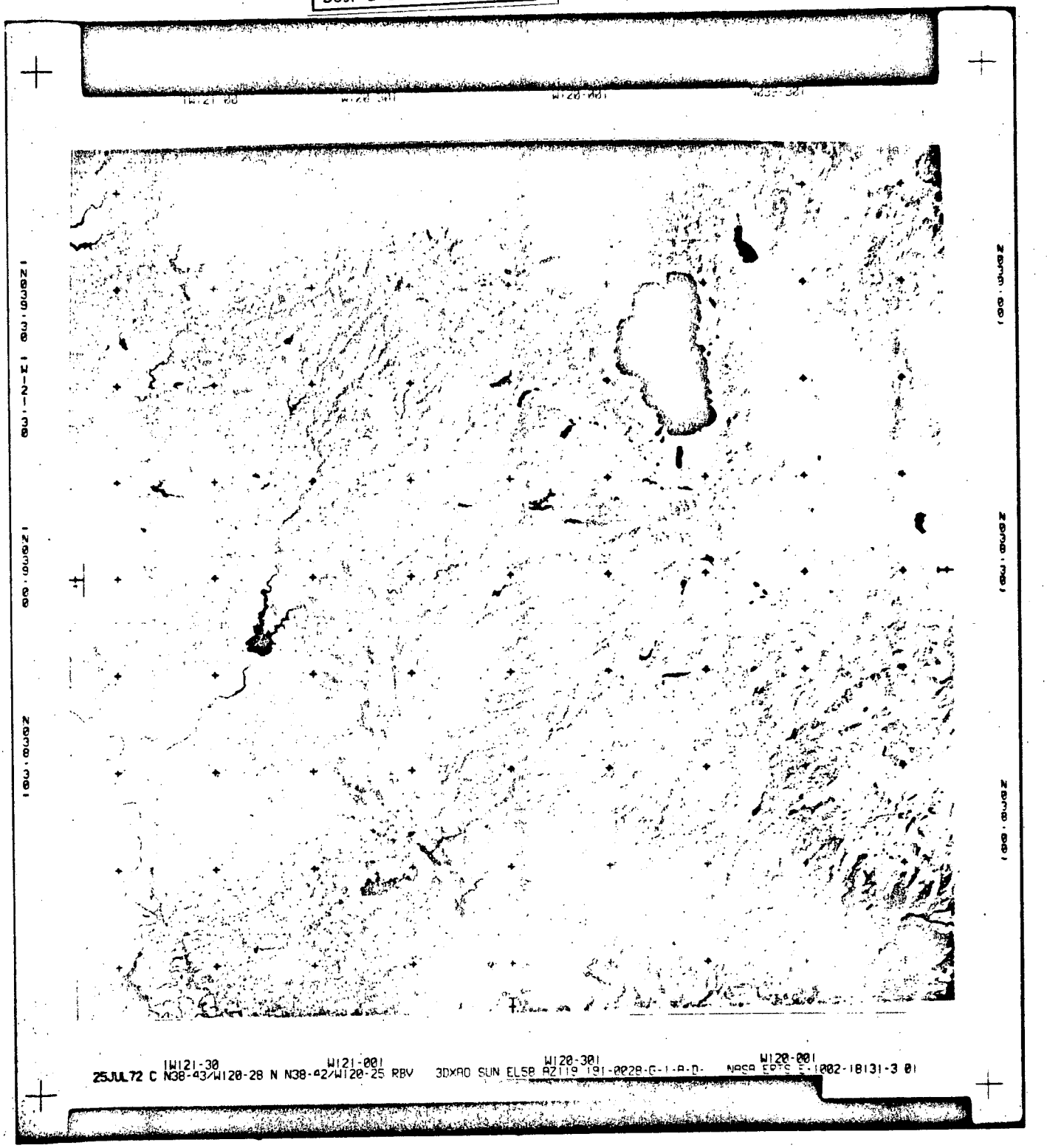

Figure F-3

Reproduced from best available copy.

Figure F-4

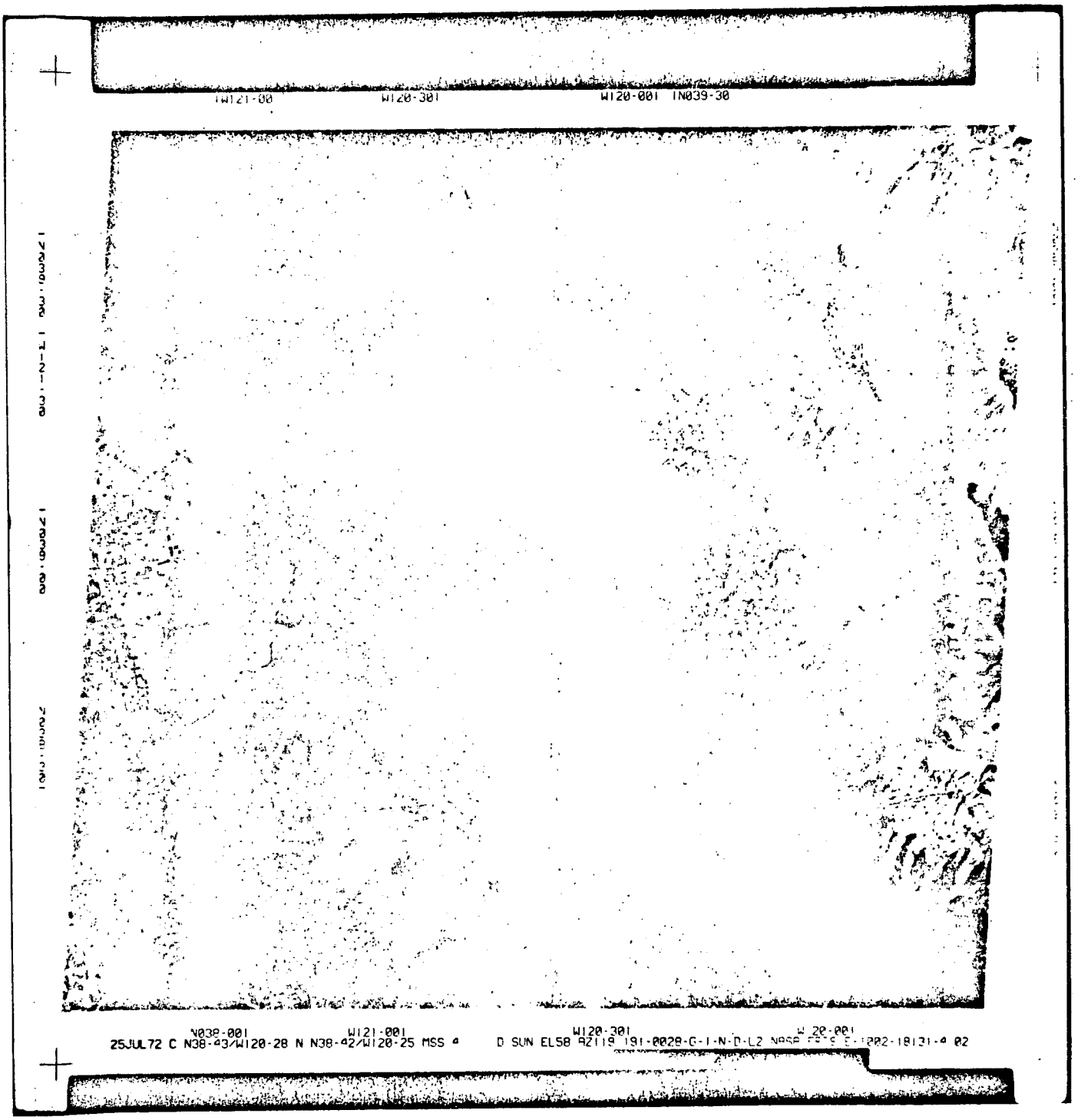
W121-00
W120-301
W120-001 N039-30
N038-001
W121-001
W120-301
W 20-001
25JUL72 C N38-43/W120-28 N N38-42/W120-25 MSS 4
D SUN EL58 AZ119 191-0028-G-1-N-D-L2

Figure F-5

Reproduced from best available copy.

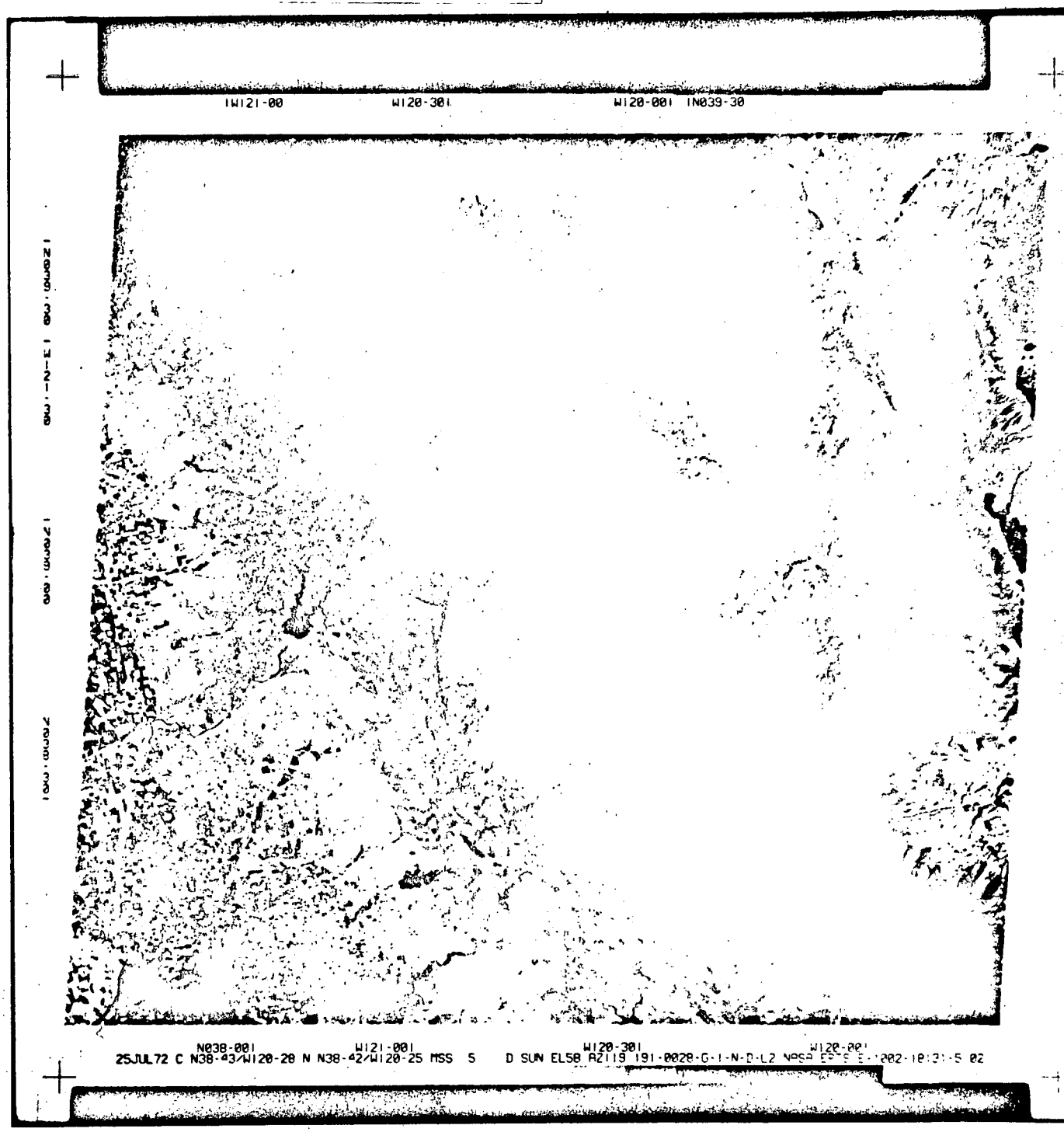

Figure F-6

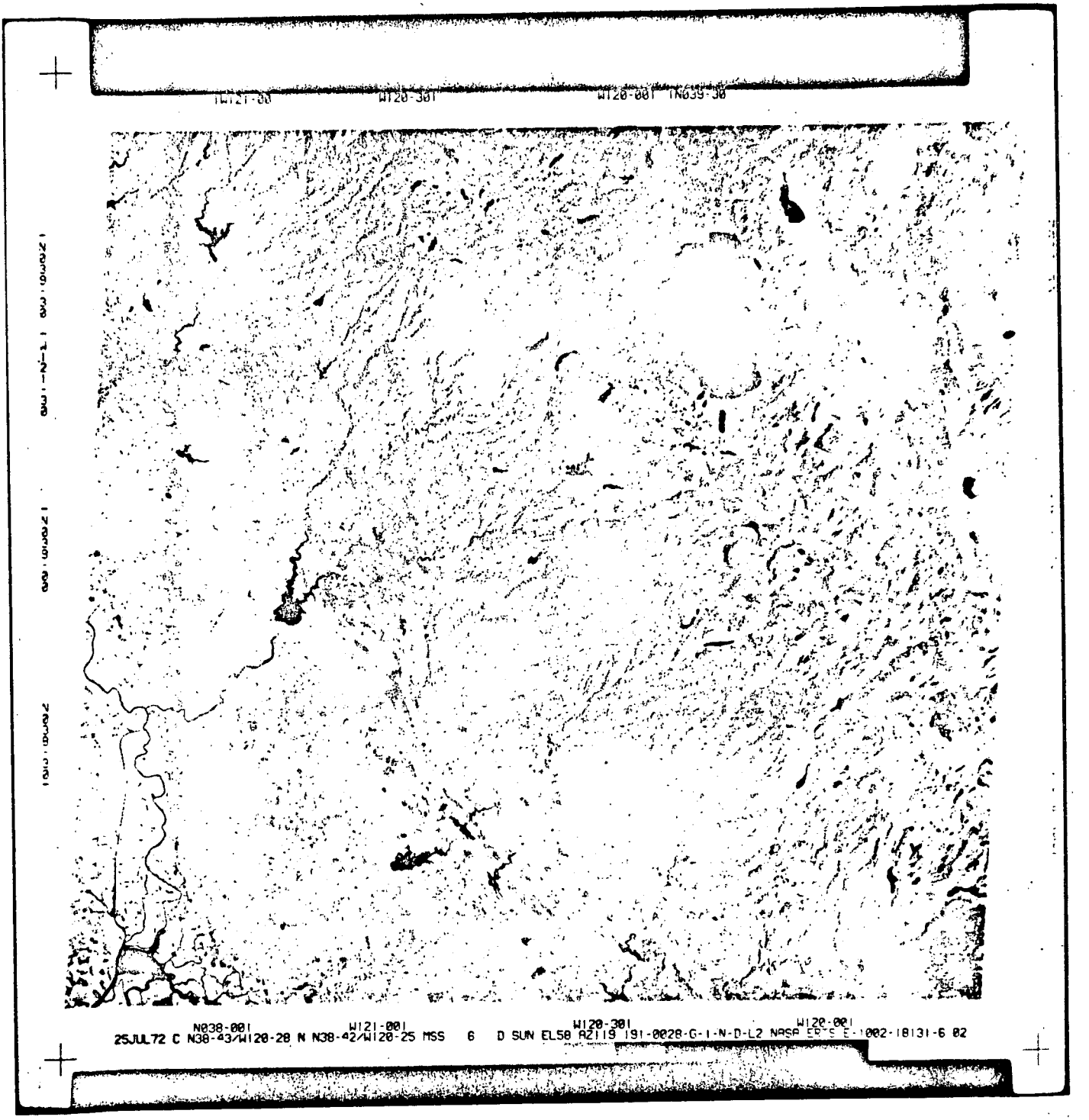
W121-30
W120-301
W120-001
N039-30
N038-001
W121-001
W120-301
W120-001
25JUL72 C N38-43/W120-28 N N38-42/W120-25 MSS 6 D SUN EL58 AZ119 191-0028-G-1-N-D-L2 NASA

Figure F-7

Reproduced from best available copy.

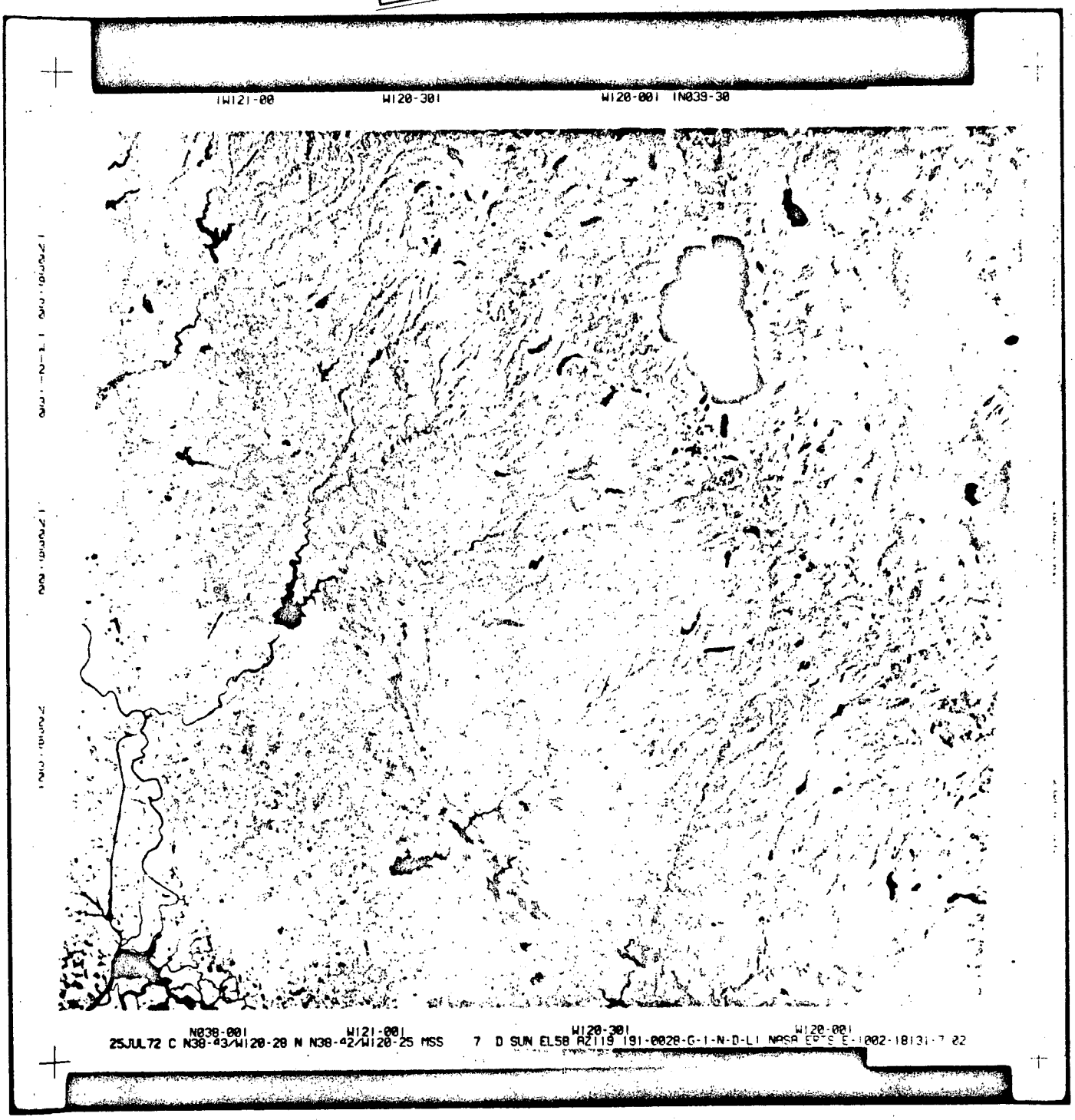

Figure F-8

Reproduced from best available copy.

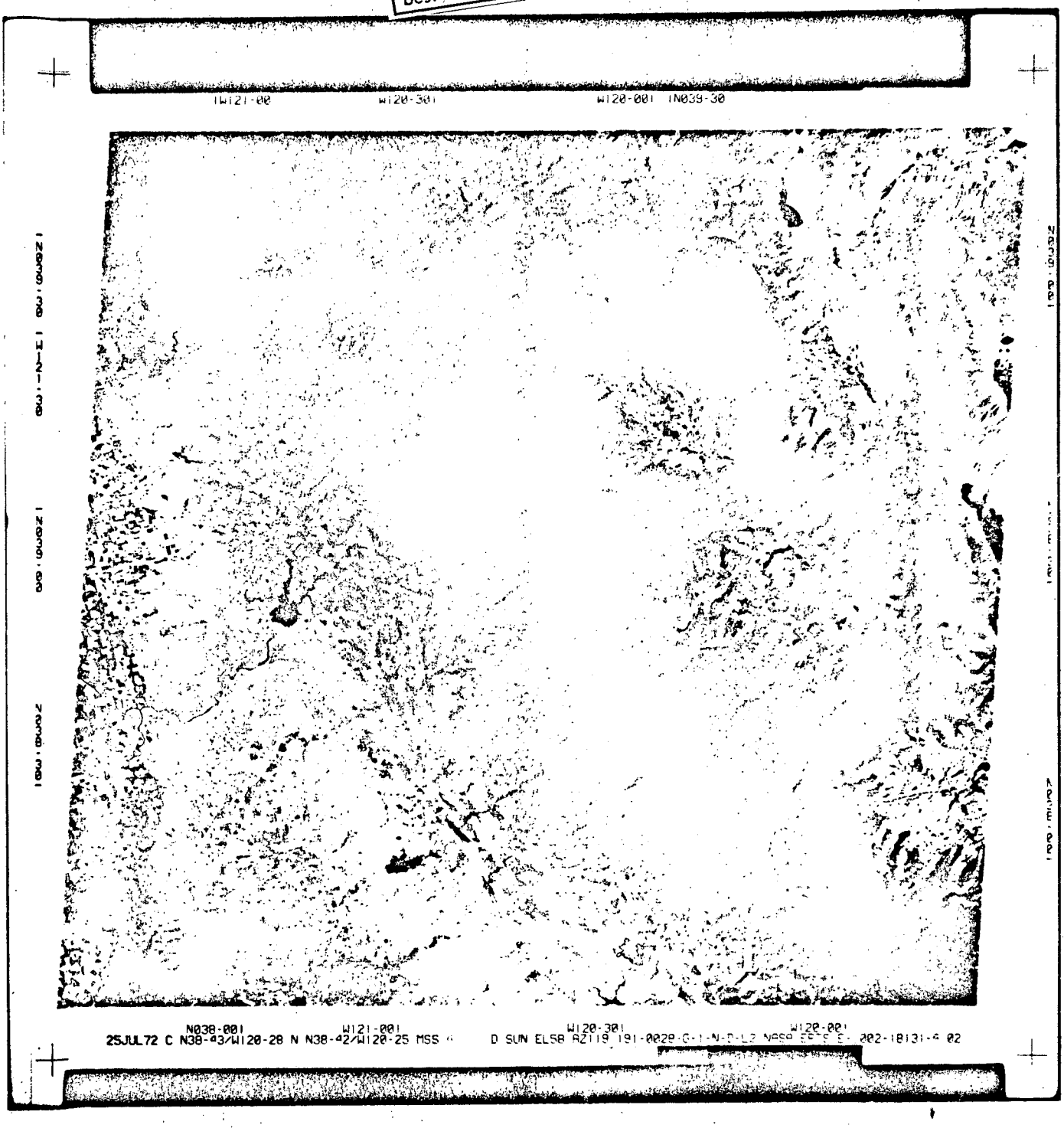

Figure F-9