NASA CR–114601

V/STOL TILT ROTOR AIRCRAFT STUDY MATHEMATICAL MODEL FOR A REAL TIME SIMULATION OF A TILT ROTOR AIRCRAFT (BOEING VERTOL MODEL 222)

VOLUME VIII

By: H. Rosenstein
M. A. McVeigh
P. A. Mollenkof

APRIL 1973

Distribution of this Report is provided in the interest of information exchange. Responsibility for the contents resides in the author or organization that prepared it.

Prepared Under Contract No. NAS2-6598 by

BOEING VERTOL COMPANY
A DIVISION OF THE BOEING COMPANY
P.O. BOX 16858
PHILADELPHIA, PENNSYLVANIA 19142

for

AMES RESEARCH CENTER
NATIONAL AERONAUTICS AND SPACE ADMINISTRATION

and

UNITED STATES ARMY AIR MOBILITY RESEARCH & DEVELOPMENT LABORATORY
AMES DIRECTORATE

NASA-CR-114601 V/STOL TILT ROTOR AIRCRAFT STUDY MATHEMATICAL MODEL FOR A REAL TIME SIMULATION OF A TILT ROTOR AIRCRAFT Boeing Vertol Co. Philadelphia, Pa. 530 P HC $0.50 CSCL 01C N73-31947 Unclas G3/02 18184

Boeing Document D222-10061-1

PRECEDING PAGE BLANK NOT FILMED

FOREWORD

This report is one of a series prepared by The Boeing Vertol Company, Philadelphia, Pennsylvania for the National Aeronautics and Space Administration, Ames Research Center, Moffett Field, California under contract NAS2-6598. The studies reported under Volumes I through IV and VIII through X were jointly funded by NASA and the U.S. Army Air Mobility Research and Development Laboratory, Ames Directorate. Volumes V through VII were funded by the U. S. Air Force Flight Dynamics Laboratory, Wright Patterson Air Force Base, Ohio.

This contract was administered by the National Aeronautics and Space Administration. Mr. Richard J. Abbott was the Contract Administrator, Mr. Gary B. Churchill, Tilt Rotor Research Aircraft Project Office, was the Technical Monitor, and coordination and liaison with the U. S. Air Force Flight Dynamics Laboratory was through Mr. D. Fraga. The Boeing Vertol Company Project Engineer for the work presented in this report was Mr. H. Rosenstein.

The complete list of reports published under this contract is as follows:

Volume I -- Conceptual Design of Useful Military and/or Commercial Aircraft, NASA CR-114437

Volume II -- Preliminary Design of Research Aircraft, NASA CR-114438

Volume III -- Overall Research Aircraft Project Plan, Schedules, and Estimated Cost, NASA CR-114439

Volume IV -- Wind Tunnel Investigation Plan for a Full Scale Tilt Rotor Research Aircraft, CR-114440

Volume V -- Definition of Stowed Rotor Research Aircraft, NASA CR-114598

Volume VI -- Preliminary Design of a Composite Wing for Tilt Rotor Aircraft, NASA CR-114599

Volume VII -- Tilt Rotor Flight Control Program Feedback Studies, NASA CR-114600

Volume VIII -- Mathematical Model for a Real Time Simulation of a Tilt Rotor Aircraft (Boeing Vertol Model 222), NASA CR-114601

Volume IX -- Piloted Simulator Evaluation of the Boeing Vertol Model 222 Tilt Rotor Aircraft, NASA CR-114602

Volume X -- Performance and Stability Test of a 1/4.622 Froude Scaled Boeing Vertol Model 222 Tilt Rotor Aircraft (Phase I), NASA CR-114603

SUMMARY

This report documents the development of a real time mathematical model of a tilt rotor aircraft. This mathematical model is to be used in conjunction with the NASA Flight Simulator for Advanced Aircraft (FSAA) at Ames Research Center for evaluation of aircraft performance and handling qualities. In addition to developing the mathematical model, a parallel programming effort was conducted utilizing Boeing-Vertol's Hybrid Simulation Laboratory for the purpose of developing and evaluating model simplification.

The mathematical model is an eleven degree of freedom total force model. This model includes the basic six degree of freedom rigid body outer loop equations written about the instantaneous center of gravity with the inertial and aerodynamic terms included. The rotor is treated as a point source of forces and moments with appropriate response time lags and actuator dynamics. The wing has one vertical bending and one wing torsion degree of freedom. These structural degrees of freedom are treated on a "quasistatic"basis; i.e., the natural frequencies of vibration of the structure are much higher than the frequencies of the rigid body motion, and the coupling is in the aerodynamic terms. Each nacelle has an independent pitch degree of freedom about the wing pivot. The aerodynamics of the wing, tail, rotors, landing gear and fuselage are included. Wing and tail mutual interference effects and turbine engine performance and dynamic responses are represented.

The control system elements represented include pilot command (longitudinal and lateral stick, pedals, nacelle position and rate, power), three-axis stability augmentation systems (SAS), thrust management system (includes rotor constant speed governor) and a load alleviation system (LAS). The LAS system incorporates feedback to rotor cyclic and collective pitch for purposes of improving stability, blade load reduction, gust alleviation and increased damping of aeroelastic modes. Control system actuator dynamics are represented by appropriate second order systems.

The mathematical model was programmed on Boeing's hybrid computer. This program was real time and was used to evaluate model simplification and also to develop and optimize stability augmentation, control, and load alleviation systems.

The mathematical model was written to make it as flexible and as general as possible while still retaining the real time execution capability. This program is a valuable design tool for control system design, SAS optimization, and flying qualities evaluations and improvements. The model is capable of operating in all modes of V/STOL flight (forwards, backwards, and sidewards) with no restrictions. This mathematical model represents the Model 222 tilt rotor configuration as proposed in Boeing's "Study of V/STOL Tilt Rotor Research Aircraft Program (Phase II)", dated January 1973.

TABLE OF CONTENTS

		PAGE
	FOREWORD	iii
	SUMMARY	v
	LIST OF ILLUSTRATIONS	xi
	NOMENCLATURE	xv
1.0	INTRODUCTION	1.0-1
2.0	GENERAL DESCRIPTION OF SIMULATION	2.0-1
3.0	SIGN CONVENTIONS	3.0-1
4.0	MODEL 222 TILT ROTOR AIRCRAFT DESCRIPTION	4.0-1
5.0	EQUATIONS OF MOTION	5.0-1
	5.1 AXES SYSTEM	5.0-1
	5.2 AIRCRAFT GROUND TRACK	5.0-3
	5.3 FORCE EQUATIONS	5.0-4
	5.4 MOMENT EQUATIONS	5.0-5
	5.5 EQUATIONS OF MOTION FOR A MASS ELEMENT	5.0-5
	5.6 EQUATIONS OF MOTION FOR NACELLES	5.0-10
	5.7 DETERMINATION OF ROTOR GYROSCOPIC MOMENTS	5.0-13
6.0	AIRFRAME AERODYNAMICS	6.0-1
	6.1 FUSELAGE	6.0-1
	6.2 NACELLES	6.0-3
	6.3 HORIZONTAL TAIL	6.0-4
	6.4 VERTICAL TAIL	6.0-10
	6.5 WING AERODYNAMICS	6.0-12
	6.5.1 BASIC WING AERODYNAMICS	6.0-12
	6.5.2 ROTOR SLIPSTREAM INTERFERENCE	6.10-13

TABLE OF CONTENTS

PAGE

7.0 ROTOR AERODYNAMICS 7.0-1

7.1 FORMAT AND RANGE OF DATA 7.0-1

7.2 PROGRAMS USED TO COMPUTE ROTOR DATA . . . 7.0-4

7.3 ROTOR SIGN CONVENTION 7.0-10

7.4 CURVE FIT FORMAT 7.0-10

7.5 EFFECT OF WING UPWASH ON ROTOR PERFORMANCE . 7.0-12

7.6 ROTOR/ROTOR INTERFERENCE 7.0-12

7.7 ISOLATED ROTOR AERODYNAMICS 7.0-13

7.7.1 THRUST 7.0-13

7.7.2 POWER 7.0-14

7.7.3 NORMAL FORCE 7.0-14

7.7.4 SIDE FORCE 7.0-15

7.7.5 HUB PITCHING MOMENT 7.0-15

7.7.6 HUB YAWING MOMENT 7.0-16

7.8 CORRELATIONS OF ROTOR PREDICTION METHODS WITH TEST DATA 7.0-18

7.8.1 MODEL 213 FOUR BLADE HINGELESS ROTOR CORRELATION 7.0-18

7.8.2 CORRELATION WITH MODEL 222 26-FOOT DIAMETER ROTOR TEST IN NASA-AMES 40x80-FOOT TUNNEL 7.0-18

7.8.3 CORRELATION WITH MODEL 222 1/4.622 SCALE MODEL DATA 7.0-21

8.0 CONTROL SYSTEM DESCRIPTION 8.0-1

8.1 CONTROL AERODYNAMIC CONFIGURATION 8.0-1

8.2 LONGITUDINAL CONTROL 8.0-1

8.3 LATERAL CONTROL 8.0-3

TABLE OF CONTENTS

		PAGE
8.4	DIRECTIONAL CONTROL.	8.0-5
8.5	THRUST/COLLECTIVE CONTROL.	8.0-5
8.6	CONTROL FEEL	8.0-6
8.7	STABILITY AUGMENTATION SYSTEMS	8.0-7
8.8	LOAD ALLEVIATION SYSTEM (LAS)	8.0-8
8.9	THRUST MANAGEMENT SYSTEM	8.0-10
9.0	ENGINE REPRESENTATION	9.0-1
10.0	GROUND EFFECTS	10.0-1
11.0	AIRFRAME REPRESENTATION (PREPROCESSOR)	11.0-1
12.0	AEROELASTIC REPRESENTATION	12.0-1
13.0	CONCLUSIONS AND RECOMMENDATIONS	13.0-1
14.0	REFERENCES	14.0-1

APPENDICES

A.	TREATMENT OF WING FLEXIBILITY	A-1
A.1	WING TWIST	A-1
A.2	WING VERTICAL BENDING	A-5
B.	DERIVATION OF LANDING GEAR EQUATIONS	B-1
C.	VELOCITY AND ACCELERATION TRANSFORMATION AND CENTER OF GRAVITY/INERTIA EQUATIONS	C-1
C.1	VELOCITY TRANSFORMATIONS	C-1
C.2	CENTER OF GRAVITY AND INERTIA EQUATIONS . .	C-5
C.3	PILOT STATION ACCELERATION-BODY AXES . . .	C-8
C.4	AIRCRAFT INERTIAS	C-9

TABLE OF CONTENTS

		PAGE
D.	CALCULATIONS OF SLIPSTREAM-IMMERSED WING AREAS .	D-1
E.	COMPUTER REPRESENTATION	E-1
F.	MATHEMATICAL MODEL INPUT DATA	F-1
	F.1 CONTROL SYSTEM INPUT DATA	F-11
	F.2 ENGINE INPUT DATA	F-26
	F.3 ROTOR AERODYNAMIC INPUT DATA	F-34
	F.4 AIRFRAME AERODYNAMIC INPUT DATA	F-44
	F.5 GEOMETRIC, WEIGHTS AND BALANCE DATA . . .	F-50
	F.6 SIMULATION INPUT DATA	F-53
G.	IN-HOUSE HYBRID SIMULATION	G-1
	G.1 SIMULATION ARCHITECTURE	G-3
	G.2 TRIM LOOPS	G-160
	G.3 SIMULATION PROGRAM OUTPUT	G-238
H.	VALIDATION OF THE MODEL 222 SIMULATION AT AMES RESEARCH CENTER	H-1
	H.1 VALIDATION PLAN AND CRITERIA	H-1
	H.2 SIMULATION ACCEPTANCE	H-3
	H.3 OPERATING INSTRUCTIONS AND LIMITATIONS . .	H-8

LIST OF ILLUSTRATIONS

FIGURE NO.	TITLE	PAGE
1.1	SUMMARY OF USES FOR PILOTED SIMULATION . . .	1.0-2
2.1	SALIENT FEATURES OF MATH MODEL	2.0-5
4.1	MODEL 222 TILT ROTOR RESEARCH AIRCRAFT . . .	4.0-3
5.1	AXES SYSTEMS	5.0-2
6.1	VARIATION OF HORIZONTAL TAIL DOWNWASH ANGLE WITH THRUST COEFFICIENT	6.0-5
6.2	CORRELATION OF THEORY WITH TEST FOR PREDICTIONS OF SLIPSTREAM FORCES AND MOMENTS .	6.0-20
7.1	ROTOR SIGN CONVENTIONS	7.0-11
7.2	MODEL 213 1/9 SCALE CONVERSION MODEL - 85 FT/SEC DERIVATIVE VARIATION WITH RPM .	7.0-19
7.3	26 FT. ROTOR TEST STAND IN NASA's 40'x80' TUNNEL	7.0-20
7.4	CORRELATION OF 26 FT ROTOR TEST DATA WITH VARIOUS ROTOR DERIVATIVE PROGRAMS . . .	7.0-22
7.5	CORRELATION OF 26 FT ROTOR TEST DATA WITH VARIOUS ROTOR DERIVATIVE PROGRAMS - CYCLIC MOMENT DERIVATIVES	7.0-23
7.6	CORRELATION OF 26 FT ROTOR TEST DATA WITH VARIOUS ROTOR DERIVATIVE PROGRAMS - CYCLIC FORCE DERIVATIVES	7.0-24
7.7	ROTOR MOMENT AND AZIMUTH ANGLE DUE TO ANGLE OF ATTACK - CORRELATION WITH 26 FT ROTOR DATA	7.0-25
7.8	COMPARISON OF CALCULATED AND TEST ROTOR HUB FORCE AND MOMENT DERIVATIVES FOR M222 1/4.622 SCALE MODEL (YAW SWEEP) Ω=386 RPM :	7.0-27
7.9	COMPARISON OF CALCULATED AND TEST ROTOR HUB FORCE AND MOMENT DERIVATIVES FOR M222 1/4.622 SCALE MODEL (PITCH SWEEP) Ω=386 RPM	7.0-28
10.1	EFFECT OF ROTOR HEIGHT ON THRUST AUGMENTATION RATIO	10.0-3

LIST OF ILLUSTRATIONS

FIGURE NO.	TITLE	PAGE
A.1	WING GEOMETRY FOR DERIVATION OF FLEXIBILITY	A-3
A.2	WING BENDING FUNCTIONS	A-10
B.1	GEOMETRY OF LANDING GEAR	B-2
C.1	REFERENCE AXES SYSTEMS	C-2
D.1	GEOMETRY OF ROTOR SLIPSTREAM/WING PLANFORM INTERACTION	D-4
E.1	BLOCK DIAGRAM ELEMENT INDEX NUMBERS	E-2
F.1	MASS PROPERTIES	F-7
F.2	C.G. LIMIT DIAGRAM	F-9
F.3	DIFFERENTIAL LONG. CYCLIC FOR YAW CONTROL VS NACELLE INCIDENCE	F-14
F.4	ROTOR ROLL CONTROL SCHEDULES IN TRANSITION	F-15
F.5	LONGITUDINAL CYCLIC FOR PITCH CONTROL GAIN VS NACELLE INCIDENCE	F-16
F.6	LOAD ALLEVIATION SYSTEM GAIN SCHEDULE	F-17
F.7	PROGRAMMED CYCLIC, ELEVATOR, AND FLAP DEFLECTION VS NACELLE INCIDENCE	F-18
F.8	ROLL CONTROL DEFLECTION VS STICK DEFLECTION	F-19
F.9	SPOILER ACTUATOR LIMIT VS AIRSPEED	F-20
F.10	ASSUMED THROTTLE TRAVEL MODEL 222 SIMULATION BOTH ENGINES	F-21
F.11	ENGINE CHARACTERISTICS LYCOMING T53-L13 ENGINE	F-22
F.12	ENGINE CHARACTERISTICS LYCOMING T53-L13 ENGINE	F-23
F.13	THRUST MANAGEMENT SYSTEM-SCHEDULED PARAMETERS	F-24
F.14	THRUST MANAGEMENT SYSTEM - SCHEDULED PARAMETERS	F-25

LIST OF ILLUSTRATIONS

FIGURE NO.	TITLE	PAGE
F.15	TURBINE ENGINE PERFORMANCE - ENGINE CYCLE 1.78	F-30
F.16	TURBINE ENGINE PERFORMANCE - ENGINE CYCLE 1.78	F-31
F.17	TURBINE ENGINE PERFORMANCE - ENGINE CYCLE 1.78	F-32
F.18	TURBINE ENGINE PERFORMANCE - ENGINE CYCLE 1.78	F-33
F.19	COEFFICIENTS OF CURVE FIT EQUATIONS FOR THRUST COEFFICIENT	F-35
F.20	COEFFICIENTS OF CURVE FIT EQUATIONS FOR POWER COEFFICIENT	F-36
F.21	COEFFICIENTS OF CURVE FIT EQUATIONS FOR NORMAL FORCE COEFFICIENT	F-37
F.22	COEFFICIENTS OF CURVE FIT EQUATIONS FOR SIDE FORCE COEFFICIENT	F-38
F.23	COEFFICIENTS OF CURVE FIT EQUATIONS FOR PITCHING MOMENT COEFFICIENT	F-39
F.24	COEFFICIENTS OF CURVE FIT EQUATIONS FOR YAWING MOMENT COEFFICIENT	F-40
F.25	CURVE FIT COEFFICIENTS FOR $\frac{\partial C_{PM}}{\partial Q}$	F-41
F.26	CURVE FIT COEFFICIENTS FOR $\frac{\partial C_{YM}}{\partial R}$	F-42
F.27	CONSTANTS FOR CYCLIC PITCH EFFECTIVENESS IN ROTOR EQUATIONS	F-43
F.28	MODEL 222 DOWNWASH FUNCTIONS @ $C_T=0$, $i_W=+2.0°$	F-47
F.29	VARIATION OF LIFT CURVE SLOPE WITH GROUND HEIGHT	F-48
F.30	ROTOR/ROTOR AND WING/ROTOR INTERFERENCE	F-49
F.31	MODEL 222 PILOT STATION REQUIREMENTS	F-54

LIST OF ILLUSTRATIONS

FIGURE NO.	TITLE	PAGE
F.32	MODEL 222 CONTROL FORCE GRADIENTS AND BREAKOUT FORCES	F-55
G.1	UTILIZATION OF THE HYBRID LABORATORY FOR THE MODEL 222 MATH MODEL	G-5
G.2	FOREGROUND OPTIONS	G-8
G.3	GHP PHASE OVERLAY STRUCTURE (DIGITAL CORE ALLOCATIONS)	G-10
G.4	CONTENTS OF REAL TIME TASK - FAST LOOP	G-11
G.5	CONTENTS OF REAL TIME TASK - SLOW LOOP	G-13
G.6	MODEL 222 SIMULATION DIGITAL LISTING	F-15
G.7	ANALOG SYMBOLS	G-161
G.8	ANALOG DIAGRAMS FOR MODEL 222 SIMULATION	G-162
G.9	ANALOG STATIC CHECK ROUTINE (DIGITAL)	G-194
G.10	TYPICAL MODEL 222 TRIM SHEET	G-239
G.11	DEFINITION OF TRIM SHEET PARAMETERS	G-241
G.12	TYPICAL TIME HISTORY RESPONSE TO A .25 INCH LONGITUDINAL STICK PULSE AT 150 KNOTS	G-243

LIST OF TABLES

TABLE NO.	TITLE	PAGE
7.1	RANGE OF ROTOR DATA	7.0-5
8.1	FLIGHT CONTROL MIXING	8.0-2
9.1	ENGINE CYCLE DATA FORMAT	9.0-2
12.1	WING UNCOUPLED FREQUENCIES (BLADES OFF) CRUISE CONFIGURATION	12.0-2

NOMENCLATURE

Symbol	Definition	Units
A	Rotor disc area (per rotor)	ft^2
AR	Aspect ratio	N.D.
$A_{D(u+5v)}$	Coefficients of curve fit equation for wing drag coefficient as a function of angle of attack and surface deflection	--
$A_{NF(u+4v)}$	Coefficients of curve fit equation for normal force coefficient with zero cyclic pitch	--
$A_{P(u+4v)}$	Coefficients of curve fit equation for rotor power coefficient with zero cyclic pitch	--
$A_{PM(u+4v)}$	Coefficients of curve fit equation for rotor pitching moment coefficient with zero cyclic pitch	--
$A_{SF(u+4v)}$	Coefficients of curve fit equation for rotor side force coefficient with zero cyclic pitch	--
$A_{T(u+4v)}$	Coefficients of curve fit equation for rotor thrust coefficient with zero cyclic pitch	--
$A_{YM(u+4v)}$	Coefficients of curve fit equation for rotor yawing coefficient with zero cyclic pitch	--
A_{1c}	Lateral cyclic angle in rotor wind axes	deg
A'_{1c}	Lateral cyclic angle in swashplate axes	deg
A''_{1c}	Lateral cyclic angle in swashplate axes resolved through swashplate phase angle	deg
$\bar{a}$	Speed of sound or acceleration	ft/sec or ft/sec^2
a	Acceleration	ft/sec^2
(a_g/a)	Ratio of lift curve slope in ground effect to lift curve slope out of ground effect	ND

NOMENCLATURE

Symbol	Definition	Units
B_G	Percent brake pedal deflection	N.D.
B.L.	Aircraft butt line	inches
B_{1c}	Longitudinal cyclic angle in rotor wind axes	deg
B'_{1c}	Longitudinal cyclic angle in swashplate axes	deg
B''_{1c}	Longitudinal cyclic angle in swashplate axes resolved through swashplate phase angle	deg
b	Span of lifting surface (wing, tail,etc.)	feet
C	Chord	ft.
C_D	Drag coefficient = $\frac{D}{qS}$	ND
C_{D_o}	Drag coefficient at zero lift	ND
ΔC_D	Drag coefficient increment	ND
C_{DS}	Drag coefficient referred to rotor slipstream dynamic pressure = D/q_sS	ND
C_L	Lift coefficient = L/qS	ND
C_{L_o}	Average lift coefficient	ND
ΔC_L	Lift coefficient increment	ND
C_{L_s}	Lift coefficient referred to rotor slipstream dynamic pressure = L/q_sS	ND
C_{L_α}	Lift curve slope	1/rad
C_{L_δ}	Lift increment due to flap deflection	1/deg
C_L	Rolling moment coefficient = $L/q\ bS$	ND
C_{L_s}	Rolling moment coefficient referred to rotor slipstream dynamic pressure = L/q_sbS	ND

NOMENCLATURE

Symbol	Definition	Units
C_M	Pitching moment coefficient = M/qSC	ND
C_{M_o}	Wing pitching moment coefficient as a function of flap deflection; pitching moment coefficient of fuselage or nacelles at zero angle of attack	ND
$\triangle C_M$	Pitching moment coefficient increment	ND
C_{M_s}	Pitching moment coefficient referred to rotor slipstream dynamic pressure = $M/q_s SC$	
C_{M_δ}	Change in wing/body pitching moment coefficient as a function of flaperon deflection	ND
C_N	Yawing moment coefficient = N/qSb	ND
C_{N_o}	Yawing moment coefficient of fuselage or nacelles at zero angle of attack	ND
C_{n_s}	Yawing moment coefficient referred to rotor slipstream dynamic pressure = $N/q_s Sb$	ND
C_{NF}	Rotor normal force coefficient = $NF/\rho\pi\Omega^2R^4$	ND
C_{NF_o}	Rotor normal force coefficient with zero cyclic pitch	ND
C_P	Rotor power coefficient = $\frac{550RHP}{\rho\pi\Omega^3R^5}$	ND
C_{P_o}	Rotor power coefficient with zero cyclic pitch	ND
C_{PM}	Rotor hub pitching moment coefficient = $PM/\rho\pi\Omega^2R^5$	ND
C_{PM_o}	Rotor hub pitching moment coefficient with zero cyclic pitch	ND
C_{SF}	Rotor side force coefficient = $SF/\rho\pi\Omega^2R^4$	ND

NOMENCLATURE

Symbol	Definition	Units
C_{SF_o}	Rotor side force coefficient with zero cyclic pitch	ND
C_T	Rotor thrust coefficient = $T/\rho\pi\Omega^2R^4$	ND
C_{T_o}	Rotor thrust coefficient with zero cyclic pitch	ND
C_{T_s}	Rotor thrust coefficient referred to rotor slipstream dynamic pressure = T/q_sA	ND
C_Y	Side force coefficient = Y/qS	ND
C_{YM}	Rotor yawing moment coefficient $\eta/\rho\pi\Omega^2R^5$	ND
C_{YM_o}	Rotor yawing moment coefficient with zero cyclic pitch	ND
C_{Y_α}	Lift curve slope of vertical tail	1/rad
C_o	Coefficient of equation that defines pitching moment coefficient as a function of flap deflection	ND
C_1	Coefficient of equation that defines pitching moment coefficient as a function of flap deflection	1/rad
C_2	Coefficient of equation that defines pitching moment coefficient as a function of flap deflection	$1/rad^2$
D	Rotor diameter	ft.
(D/T)	Aircraft download to thrust ratio	ND
$D_{NF_{1\to4}}$	Coefficients in the equation for the change in normal force coefficient with lateral cyclic angle	1/deg
$D_{PM_{1\to7}}$	Coefficients in the equation for the change in hub pitching moment coefficient with lateral cyclic angle	1/deg
$D_{SF_{1\to4}}$	Coefficients in the equation for the change in side force coefficient with lateral cyclic angle	1/deg

NOMENCLATURE

Symbol	Definition	Units
D_{ST_n}	Damping coefficients of the landing gear oleo struts	lb/ft/sec
$D_{YM_{1\to 7}}$	Coefficients in the equation for the change in hub yawing moment coefficient with lateral cyclic angle	1/deg
dC_{NF}/dA_{1c}	Change in normal force coefficient with lateral cyclic angle	1/deg
dC_{NF}/dB_{1c}	Change in normal force coefficient with longitudinal cyclic angle	1/deg
dC_{PM}/dA_{1c}	Change in hub pitching moment coefficient with lateral cyclic angle	1/deg
dC_{PM}/dB_{1c}	Change in hub pitching moment coefficient with longitudinal cyclic angle	1/deg
dC_{PM}/dQ	Change in hub pitching moment coefficient with pitch rate	1/rad/sec
dC_{SF}/dA_{1c}	Change in side force coefficient with lateral cyclic angle	1/deg
dC_{SF}/dB_{1c}	Change in side force coefficient with longitudinal cyclic angle	1/deg
dC_{YM}/dA_{1c}	Change in hub yawing moment coefficient with lateral cyclic angle	1/deg
dC_{YM}/dB_{1c}	Change in hub yawing moment coefficient with longitudinal cyclic angle	1/deg
dC_{YM}/dR	Change in hub yawing moment coefficient with yaw rate	1/rad/sec
dC_M/dC_L	Change in wing pitching moment with lift coefficient	ND
$d\sigma/d\beta$	Change in fuselage sidewash angle with sideslip angle	ND
EI	Product of modulus of elasticity and moment of inertia	$lb\text{-}in^2$
EI_o	Product of modulus of elasticity and moment of inertia at wing root	$lb\text{-}in^2$

NOMENCLATURE

Symbol	Definition	Units
$E_{NF_{1\to4}}$	Coefficients in the equation for the change in normal force coefficient with longitudinal cyclic angle	1/deg
$E_{PM_{1\to7}}$	Coefficients in the equation for the change in hub pitching moment coefficient with longitudinal cyclic angle	1/deg
$E_{SF_{1\to4}}$	Coefficients in the equation for the change in side force coefficient with longitudinal cyclic angle	1/deg
$E_{YM_{1\to7}}$	Coefficients in the equation for the change in hub yawing moment coefficient with longitudinal cyclic angle	1/deg
e	Oswald efficiency of wing or tail	ND
F	Generalized force or force on nacelle	lb
FPR	Lateral-directional SAS function	--
FR1	Lateral-directional SAS function	--
$F\phi$	Lateral-directional SAS function	--
$F\phi1$	Lateral-directional SAS function	--
$F\phi2$	Lateral-directional SAS function	--
$F\psi1$	Lateral-directional SAS function	--
$F\psi2$	Lateral-directional SAS function	--
F_a	Aerodynamic force on nacelle	lb
F_{qzn}	Landing gear oleo strut vertical force	lb
F_{sn}	Landing gear oleo strut lateral force	lb
F_x	Longitudinal generalized force	lb
F_y	Lateral generalized force	lb
F_z	Vertical generalized force	lb
$F_{\mu n}$	Landing gear oleo strut longitudinal force	lb

NOMENCLATURE

Symbol	Definition	Units
f_{e_u}	Leading edge umbrella drag	ft^2
f_{NF}	Multiplier on rotor normal force	ND
f_p	Multiplier on rotor power	ND
f_{PM}	Multiplier on rotor hub pitching moment	ND
f_Q	Multiplier on rotor torque	ND
f_{SF}	Multiplier on rotor side force	ND
f_T	Multiplier on rotor thrust	ND
f_{YM}	Multiplier on rotor hub yawing moment	ND
G	Generalized moment	ft-lb
GEF	Ground effect factor $= \left[1 - \frac{(\Delta\epsilon)_g}{\epsilon_0}\right]$	ND
G_{Al_α}	Load alleviation system gain - change in lateral cyclic with angle of attack	deg/deg
G_{Al_β}	Load alleviation system gain - change in lateral cyclic with angle of sideslip	deg/deg
G_{Bl_α}	Load alleviation system gain - change in longitudinal cyclic with angle of attack	deg/deg
G_{G1}	Governor gain	deg/sec/rad/sec
G_{G2}	Governor gain	deg/sec/ rad/sec
G_{G3}	Governor gain	deg/sec/deg
G_p	Lateral directional SAS gain	inches/rad/sec
G_{pr1}	Lateral directional SAS gain	inches/rad/sec
$G_{p\delta_s}$	Lateral directional SAS gain	inches/inch
G_q	Longitudinal SAS gain	deg/rad/sec
G_r	Lateral directional SAS gain	inches/rad/sec

NOMENCLATURE

Symbol	Definition	Units
G_{r2}	Lateral directonal SAS gain	inches/rad/sec
$G_{r_{\delta r}}$	Lateral directional SAS gain	inches/rad/sec
$G_{\beta p}$	Lateral directional SAS gain	inches/rad
$G_{\beta r}$	Lateral directional SAS gain	inches/rad
$G_{\beta\delta r}$	Lateral directional SAS gain	inches/inch
$G_{\delta B1}$	Longitudinal SAS gain	deg/inch
$G_{\delta B2}$	Longitudinal SAS gain	deg/inch
$G_{\delta TH}$	Governor throttle gain	deg/inch
G_{θ}	Longitudinal SAS gain	deg/rad/sec
G_{ϕ}	Lateral-directional SAS gain	inches/rad/sec
G_{ψ}	Lateral directional SAS gain	inch/inch
$G_{\psi\delta r}$	Lateral directional SAS gain	inch/inch
g	Gravitational constant	ft/sec^2
H	Height	ft
HP	Horsepower	--
$H_{PM(u+4v)}$	Coefficients in the equation for the change in hub pitching moment with pitch rate	--
$H'_{w'FUEL}$	Horizontal distance between wing mass element center of gravity and fuel center of gravity	ft
$H'_{w'NF}$	Horizontal distance between wing mass element center of gravity and fixed nacelle center of gravity	ft
$H'_{w'w}$	Horizontal distance between wing mass element center of gravity and fixed nacelle center of gravity	ft

NOMENCLATURE

Symbol	Definition	Units
h	Height or angular momentum	ft or lb-ft-sec
h_{CG}^{N}	Angular momentum of nacelle about aircraft center of gravity	lb-ft-sec
h_F	Distance from wing pivot plane to fuselage mass element center of gravity	ft
h_P	Height of pivot above wing chord line or angular momentum of nacelle about the pivot	
h_T	Landing gear oleo strut deflection during ground contact	ft
h_w	Distance from wing pivot plane to wing mass element center of gravity	ft
h_o	Angular momentum of an element of mass about its own center of gravity	lb-ft-sec
h_1	Wing vertical bending deflection	ft
h/D	Rotor hub height to rotor diameter ratio	ND
h_θ	Distance from aircraft center of gravity bottom of right main gear following a positive pitch rotation	ft
h_ϕ	Distance from aircraft center of gravity to bottom of right main gear following a positive roll	ft
I	Mass moment of inertia	slug-ft^2
I_{xx}	Vehicle mass roll moment of inertia about center of gravity	slug-ft^2
I_{xx_o}	Mass roll moment of inertia of aircraft components about their own center of gravity	slug-ft^2
$I_{xx}^{(F)}$	Mass roll moment of inertia of fuselage mass element about its center of gravity	slug-ft^2

NOMENCLATURE

Symbol	Definition	Units
$I_{xx}^{(W)}$	Mass roll moment of inertia of wing mass element about its center of gravity	slug-ft^2
I'_{xx}	Mass roll moment of inertia of the tilting portion of <u>each</u> nacelle about its center of gravity	slug-ft^2
I_{yy}	Vehicle mass pitch moment of inertia about center of gravity	slug-ft^2
I_{yy_o}	Mass pitch moment of inertia of aircraft components about their own center of gravity	slug-ft^2
$I_{yy}^{(F)}$	Mass pitch moment of inertia of fuselage mass element about its center of gravity	slug-ft^2
$I_{yy}^{(W)}$	Mass pitch moment of inertia of wing mass element about its center of gravity	slug-ft^2
I'_{yy}	Mass pitch moment of inertia of the tilting portion of <u>each</u> nacelle about its center of gravity	slug-ft^2
I_{xz}	Vehicle mass product of inertia about center of gravity	slug-ft^2
I_{xz_o}	Mass product of inertia of aircraft components about their own center of gravity	slug-ft^2
$I_{xz}^{(F)}$	Mass product of inertia of fuselage mass element about its center of gravity	slug-ft^2
$I_{xz}^{(W)}$	Mass product of inertia of wing mass element about its center of gravity	slug-ft^2
I'_{xz}	Mass product of inertia of the tilting portion of <u>each</u> nacelle about its center of gravity	slug-ft^2

NOMENCLATURE

Symbol	Definition	Units
I_{zz}	Vehicle mass yaw moment of inertia about center of gravity	slug-ft^2
I_{zz_o}	Mass yaw moment of inertia of aircraft components about their own center of gravity	slug-ft^2
$I_{zz}^{(F)}$	Mass yaw moment of inertia of fuselage mass element about its center of gravity	slug-ft^2
$I_{zz}^{(W)}$	Mass yaw moment of inertia of wing mass element about its center of gravity	slug-ft^2
I'_{zz}	Mass yaw moment of inertia of the tilting portion of <u>each</u> nacelle about its center of gravity	slug-ft^2
i	Incidence angle	deg or rad
$\hat{\underline{i}}$	Unit vector in i direction	--
J_{xx}	Dummy inertia = $(I_{zz}-I_{yy})$	slug-ft^2
$J_{YM(u+4v)}$	Coefficients of curve fit equation for rotor hub moment with hub yaw rate	--
J_{yy}	Dummy inertia = $(I_{xx}-I_{zz})$	slug-ft^2
J_{zz}	Dummy inertia = $(I_{yy}-I_{xx})$	slug-ft^2
$\hat{\underline{j}}$	Unit vector in j direction	--
K'_A	Wing slipstream correction factor	ND
$\frac{K_{D1}}{T} \rightarrow \frac{K_{D4}}{T}$	Coefficients of curve fit equation for wing download as a function of rotor height/diameter ratio	ND
$\frac{K_{M1}}{T} \rightarrow \frac{K_{M4}}{T}$	Coefficients of curve fit equation for wing pitching moment as a function of rotor height/diameter ratio	ND
$K_{\mathcal{L}}$	Multiplier on slipstream rolling moment coefficient	ND
$K_{\mathcal{N}}$	Multiplier on slipstream yawing moment coefficient	ND

NOMENCLATURE

Symbol	Definition	Units
K_{ST_η}	Landing gear spring constants	lb/ft
$K_{WI} \rightarrow K_{W10}$	Coefficients for wing bending equations	--
K_{δ_B}	Multiplier on longitudinal cyclic pitch available from longitudinal stick	inch/inch
K_{δ_e}	Ratio between longitudinal stick motion and elevator deflection	deg/inch
K_{δ_R}	Multiplier on longitudinal cyclic pitch available from pedal displacement	inch/inch
$K\delta_{RUD}$	Ratio between pedal and rudder deflection	deg/inch
$K_{\delta s}$	Multiplier on longitudinal cyclic pitch and differential collective available from lateral stick	inch/inch
$K_{\delta' s}$	Provision for lateral cyclic pitch on lateral stick	deg/deg
K_θ	Wing stiffness	ft-lb/rad
K_o	Coefficient of fuselage drag coefficient equation to account for drag due to sideslip	$1/rad^3$
K_1	Coefficient of fuselage drag coefficient equation	$1/rad^2$
K_2	Coefficient of fuselage drag coefficient equation	1/rad
K_3	Coefficient of fuselage lift coefficient equation	1/rad
K_4	Coefficient of fuselage lift coefficient equation	$1/rad^2$
K_5	Coefficient of fuselage pitching moment coefficient equation	1/rad

NOMENCLATURE

Symbol	Definition	Units
K_6	Coefficient of fuselage pitching moment coefficient equation	$1/rad^2$
K_7	Coefficient of fuselage side force coefficient equation	1/rad
K_8	Coefficient of fuselage side force coefficient equation	1/rad
K_9	Coefficient of fuselage yawing moment coefficient equation	1/rad
K_{10}	Coefficient of fuselage yawing moment coefficient equation	$1/rad^2$
K_{20}	Wing/body interference effects on $C_{L\beta}$	1/rad
K_{21}	Wing planform effects on $C_{L\beta}$	1/rad
K_{22}	Wing planform and lift effects on $C_{\eta\beta}$	1/rad
K_{30}	Coefficient of nacelle drag coefficient equation	1/rad
K_{31}	Coefficient of nacelle drag coefficient equation	$1/rad^2$
K_{32}	Coefficient of nacelle lift coefficient equation	1/rad
K_{34}	Coefficient of nacelle pitching moment coefficient equation	1/rad
K_{35}	Coefficient of nacelle pitching moment coefficient equation	$1/rad^2$
K_{36}	Coefficient of nacelle side force coefficient equation	1/rad
K_{37}	Coefficient of nacelle side force coefficient equation	$1/rad^2$
K_{38}	Coefficient of nacelle yawing moment coefficient equation	1/rad
K_{39}	Coefficient of nacelle yawing moment coefficient equation	$1/rad^2$

NOMENCLATURE

Symbol	Definition	Units
K_{40}	Coefficient of nacelle yawing moment coefficient equation	1/rad
K_{41}	Coefficient of nacelle yawing moment coefficient equation	$1/rad^2$
K_{42}	Coefficient of fuselage lift coefficient equation	ND
$\hat{\underline{k}}$	Unit vector in k direction	--
L	Rolling moment or nacelle shaft length	ft-lb ,ft
L	Rolling Moment	ft-lb
ℓ	Distance from nacelle pivot to nacelle center of gravity	ft
ℓ'	Horizontal distance from nacelle pivot to noted aircraft component center of gravity position - positive forward from pivot	ft
ℓ_{AC}	Horizontal distance from horizontal tail quarter chord to wing aerodynamic center	ft
ℓ_F	Horizontal distance from pivot to center of gravity of fuselage mass element	ft
ℓ_0	Wing root lift/foot	lb/ft
ℓ_{PA}	Horizontal distance from pivot to center of gravity of pilots station - positive forward from pivot	ft
ℓ_w	Horizontal distance from pivot to wing mass element center of gravity	
M	Pitching moment	ft-lb
m	Pitching moment	ft-lb
M/T	Pitching moment/rotor thrust	ft-lb/lb
m	Aircraft total mass	slugs

NOMENCLATURE

Symbol	Definition	Units
$\dot{m}_f$	Mass of fuselage mass element	slugs
m_N	Mass of one nacelle	slugs
m_w	Mass of wing mass element	slugs
N	Yawing moment	ft-lb
η	Yawing moment	ft-lb
NF	Rotor normal force	lb
N_I	Engine gas generator speed	rev/min
$N_{1\ IND}$	Engine gas generator indicator	--
N_I^*	Engine gas generator speed at sea level standard, static conditions	rev/min
$N_{1\theta\ IND}$	Referred engine gas generator speed indicator	--
N_{II}	Engine power turbine speed	
N^*_{II}	Engine power turbine speed at sea level standard static conditions	
P	Body axes roll rate	rad/sec
PC	Horizontal distance from wing leading edge to pivot location	ft.
P^N	Nacelle axes roll rate	rad/sec
PR	Nacelle wind axes roll rate	rad/sec
p	Body axes roll rate	rad/sec
Q	Body axes pitch rate or rotor torque	rad/sec or lb-ft
Q_{IND}	Torque indicator	ND
Q_{MAX}	Maximum engine torque available	lb-ft
Q^N	Nacelle axes pitch rate	rad/sec
Q^R	Nacelle wind axes pitch rate	rad/sec

NOMENCLATURE

Symbol	Definition	Units
Q^*	Engine torque at sea level standard static condition	lb-ft
q	Body axes pitch rate or freestream dynamic pressure	rad/sec or lb/ft^2
q_s	Dynamic pressure based on rotor slipstream = $(q + T/A)$	lb/ft^2
R	Body axes yaw rate or rotor resultant force or rotor radius	rad/sec or lb or ft
RHP	Rotor horsepower	--
R^N	Nacelle axes yaw rate	rad/sec
R^R	Nacelle wind axes yaw rate	rad/sec
r	Body axes yaw rate	rad/sec
$\underline{r}$	Radius vector	--
r_n	Landing gear tire radius	ft.
S	Surface area	ft^2
SF	Rotor side force	lb
SHP	Shaft horsepower	--
SHP*	Engine shaft horsepower at sea level standard static conditions	
T	Rotor thrust	lb
TEA	Engine referred turbine inlet temperature	degrees
(T_{IGE}/T_{OGE})	Ratio of the rotor thrust in ground effect to the thrust out of ground effect	--
$T_1 \rightarrow T_3$	Coefficients of curve fit equations for rotor/rotor interference	ND
t	Time	sec

NOMENCLATURE

Symbol	Definition	Units
u	Body axes longitudinal component of velocity at aircraft center of gravity or rotor hub, wing, horizontal and vertical tail velocities referred to rotor shaft and local surface chord axes respectively.	ft/sec
u'	Body axes longitudinal component of velocity at rotor hub and wing aerodynamic center	ft/sec
u_{PA}	Body axes longitudinal component of velocity at pilots station	ft/sec
V	Total velocity	ft/sec
V_t	Rotor tip speed	ft/sec
V'	Resultant flow through rotor disc	ft/sec
V_*	Non-dimensional rotor forward velocity	N.D.
$\underline{V}$	Total Velocity Vector	——
v	Body axes lateral component of velocity at aircraft center of gravity or rotor hub wing, horizontal and vertical tail velocities referred to rotor shaft and local surface chord axes respectively	ft/sec
v'	Body axes lateral component of velocity at rotor hub and wing aerodynamic center	ft/sec
v_i	Rotor induced velocity	ft/sec
v_{PA}	Body axes lateral component of velocity at pilots station.	ft/sec
v_*	Non-dimensional rotor induced velocity	N.D.
W.L.	Fuselage water line position	inches
W'	Weight of aircraft components	lb.
WDTIND	Fuel flow indicator	——
w	Body axes vertical component of velocity at aircraft center of gravity or rotor	ft/sec

NOMENCLATURE

Symbol	Definition	Units
	hub, wing, horizontal and vertical tail velocities referred to rotor shaft and local surface chord axes respectively	
w'	Body axes vertical component of velocity at rotor hub and wing aerodynamic center	ft/sec
w_{PA}	Body axes vertical component of velocity at pilots station.	
$X_{subscript}$	Longitudinal distance, measured positive forward from nacelle pivot along body axes	ft.
$\Delta X_{subscript}$	Longitudinal force, measured positive forward along body axes	lb.
X_{aero}	Total longitudinal aerodynamic force at center of gravity measured positive forward along body axes.	lb.
$X^{sprscript}_{subscript}$	Longitudinal force, measured positive forward along body axes.	lb.
$\dot{X}_{North}$	Longitudinal ground track velocity	ft/sec
$Y_{subscript}$	Lateral distance, measured positive along right wing along body axes	ft.
$\Delta Y_{subscript}$	Lateral force, measured positive along right wing in body axes	lb.
Y_{aero}	Total lateral aerodynamic force at center of gravity measured positive along right wing in body axes	lb.
$Y^{sprscript}_{subscript}$	Lateral force, measured positive along right wing in body axes	lb.
$\dot{Y}_{East}$	Lateral ground track velocity	ft/sec
$Z_{subscript}$	Vertical distance, measured positive down nacelle pivot along body axes	ft.
$\Delta Z_{subscript}$	Vertical force, measured positive down along body axes	lb.
Z_{aero}	Total vertical aerodynamic force at center	lb.

NOMENCLATURE

Symbol	Definition	Units
	of gravity, measured positive down along body axes.	
$Z^{sprscript}_{subscript}$	Vertical force, measured positive down along body axes	lb.
$\dot{Z}_{down}$	Vertical ground track velocity	ft/sec
z	Vertical distance from nacelle pivot to center of gravity of aircraft component, positive down from nacelle pivot along body axes.	ft.
α	Angle of attack	rad
β	Angle of sideslip	rad
$\Delta'_{w'fuel}$	Vertical distance between wing fuel center of gravity and wing mass element center of gravity	ft.
$\Delta'_{w'NF}$	Vertical distance between fixed nacelle center of gravity and wing mass element center of gravity.	ft.
$\Delta'_{w'w}$	Vertical distance between wing center of gravity and wing mass element center of gravity.	ft.
δ	Control element (surface or stick) angular or linear displacement	deg. or in.
δ'_{c}	Vertical distance between cargo center of gravity and fuselage mass element center of gravity	ft.
δ'_{CR}	Vertical distance between crew center of gravity and fuselage mass element center of gravity	ft.
$\delta'_{F'}$	Vertical distance between fuselage center of gravity and fuselage mass element center of gravity.	ft.
δ'_{HT}	Vertical distance between horizontal tail center of gravity and fuselage mass element center of gravity	ft.

Symbol	NOMENCLATURE Definition	UNITS
δ'_{VT}	Vertical distance between vertical tail center of gravity and fuselage mass element center of gravity	ft.
ε	Wing or rotor downwash angle	rad
ε_o	Wing downwash angle at zero wing angle of attach	rad
ε_{iLR}	Rotor/rotor interference angle, left rotor on right rotor	rad
ε_{iRL}	Rotor/rotor interference angle, right rotor on left rotor	rad
ε_w	Wing on rotor interference	rad
ζ	Rotor sideslip angle or damping ratio	rad orN.D.
$\zeta_{w1} \rightarrow \zeta_{w4}$	Wing damping ratio	N.D.
$H'_{w'fuel}$	Horizontal distance between wing fuel center of gravity and wing mass element center of gravity	ft.
$H'_{w'NF}$	Horizontal distance between fixed nacelle center of gravity and wing mass element center of gravity	ft.
$H'_{w'w}$	Horizontal distance between wing center of gravity and wing mass element center of gravity	ft.
η'_c	Horizontal distance between cargo center of gravity and fuselage mass element center of gravity	ft.
η'_{CR}	Horizontal distance between crew center of gravity and fuselage mass element center of gravity	ft.
η'_F	Horizontal distance between fuselage center of gravity and fuselage mass	ft

Symbol	NOMENCLATURE Definition	Units
	element center of gravity	
η_{HT}	Horizontal tail efficiency	N.D.
η'_{HT}	Horizontal distance between horizontal tail center of gravity and fuselage mass element center of gravity.	lb.
η_{VT}	Vertical tail efficiency factor	N.D.
η'_{VT}	Horizontal distance between vertical tail center of gravity and fuselage mass element center of gravity	ft.
η_{TR}	Transmission efficiency	N.D.
θ	Aircraft pitch or Euler angle or temperature ratio	rad or N.D.
θ_t	Wing twist angle	rad
$\theta_{0.75}$	Rotor collective pitch angle at three quarter radius	deg.
λ	Angle between the rotor shaft and a line drawn through the nacelle center of gravity from the pivot.	rad
μ	Rotor advance ratio = $V/\Omega R$	N.D.
μ_s	Tire sliding coefficient of friction when sliding sidewards (for concrete)	N.D.
μ_o	Tire rolling coefficient of friction (for concrete)	N.D.
μ_1	Coefficient of rolling friction for brakes	N.D.
$\xi_{R1} \rightarrow \xi_{R4}$	Terms of wing immersed area calculation	——
π	3.14159	——
ρ	Ambient air density	slug/ft^3
σ	Fuselage sidewash angle	rad

Symbol	NOMENCLATURE Definition	Units
σ_h	Ambient density ratio	N.D.
τ	Angle between freestream velocity and rotor resultant force	rad
τ_D	Engine response time constant	sec.
τ_E	Engine response time constant	sec.
τ_{HT}	Horizontal tail effectiveness	rad/rad
τ_{LAS}	Load alleviation system time constant	sec
τ_{VT}	Vertical tail effectiviness	rad/rad
τ_P	Lateral directional SAS time constant	sec
τ_r	Lateral directional SAS time constant	sec
τ_ϕ	Lateral directional SAS time constant	sec
$\tau_{\phi_{\delta s}}$	Lateral directional SAS time constant	sec
τ_ψ	Lateral directional SAS time constant	sec
$\tau_{\psi_{\delta r}}$	Lateral directional SAS time constant	sec
τ_1	Rotor thrust response time constant	sec
τ_2	Rotor thrust response time constant	sec
ϕ	Aircraft roll angle or Euler angle	rad
ϕ_P	Rotor swashplate phase angle	rad
$\phi_1 \rightarrow \phi_5$	Functions in wing vertical bending equations	——
χ	Rotor wake skew angle	rad
ψ	Aircraft yaw angle or Euler angle	rad
Ω	Rotor or engine rotational speed	rad/sec
$\underline{\Omega}$	Rotational speed vector	rad/sec
ω	Natural frequency	rad/sec
$\omega_{w1} \rightarrow \omega_{w3}$	Wing natural frequency	rad/sec

Subscripts

A	Available
AC	Aerodynamic center
ACT	Actuator
AERO	Aerodynamic force
a	Aileron
B	Longitudinal stick
c	Cargo
CG	Center of gravity
CR	Crew
C/4	Quarter chord
DUM	Dummy variable
E	Engine
EFF	Effective
e	Elevator or effective
F	Fuselage
FAC	Fuselage aerodynamic center
FUEL	Fuel in wing
$FUEL_{CG}$	Fuel center of gravity
FUS	Fuselage
F'	Fuselage less landing gear
f	Flap
GLAS	Load alleviation system
GYRO	Gyroscopic
g	Ground or gust
HL	Left rotor hub

Subscripts

HR	Right rotor hub
HT	Horizontal tail
HTCG	Horizontal tail center of gravity
IGE	In ground effect
i	Immersed
L	Left wing or rotor
LAS	Load alleviation system
LE	Left engine
LG	Landing gear
L-L	Rotor lead-lag
LN	Left nacelle
LR	Left rotor
LRH	Left rotor hub
LT	Left wing tip
LW	Left wing
LW_o	Left wing referred to freestream
MAX	Maximum
N	Nacelle or natural frequency
NF	Fixed portion of nacelle
NFCG	Fixed portion of nacelle center of gravity
NL	Left nacelle
NR	Right nacelle
NT	Tilting portion of nacelle
n	Landing gear index, n=1 left gear, n=2 right gear, n=3 nose gear

Subscripts

OGE	Out of ground effect
P	Power, nacelle pivot, or rotor polar moment of inertia
POWER	Power
PA	Pilot station
R	Right wing, rotor or rudder pedal
RE	Right engine
REQ	Required
RIGID	Rigid
RN	Right nacelle
RR	Right rotor
RRH	Right rotor hub
RT	Right wing tip
RUD	Rudder
RW	Right wing
RW_o	Right wing referred to freestream
S	Rotor shaft, side, or lateral stick
SP	Spoiler
STALL	Stall
T	Tail, total or wing tip
TH	Throttle
VT	Vertical tail
VTCG	Vertical tail center of gravity
W	Wing
WAC	Wing aerodynamic center
WCG	Wing center of gravity

Subscripts

x	Along the lonitudinal body axes, positive forward
y	Along the lateral body axes, positive out right wing
z	Along the vertical body axes, positive down
——	Denotes a vector quantity

Superscripts

(c)	Referes to cargo or payload weight
(CR)	Refers to aircraft crew weight
F	Fuselage
F'	Fuselage less landing gear
HT	Horizontal tail
(HT)	Refers to horizontal tail weight component
IGE	In ground effect
LW	Left wing
N	Nacelle
NL	Left wing tip at pivot
NR	Right wing tip at pivot
(p)	Roll axes
(q)	Pitch axes
RW	Right wing
(r)	Yaw axes
T	Total of horizontal and vertical tail
VT	Vertical tail
(VT)	Referes to vertical tail weight component
W	Wing

Superscripts

(W'_{FUEL})	Refers to wing fuel weight
(W_f')	Refers to fuselage weight component
(W'_{NF})	Refers to weight of fixed portion of nacelle
(W'_W)	Refers to wing weight component
$\bullet$	First derivative with respect to time; represents velocity
$\bullet\bullet$	Second derivative with respect to time; represents acceleration
"	Denotes an interim calculation or coeffiecient in local wind axes
'''	Denotes an interim calculation
-	Denotes average value
*	Denotes interim calculation or calculation in freestream wind axes
'	Denotes an interim calculation
+	Denotes an interim calculation
^	Denotes an interim calculation
| |	Absolute values

NOTES

1. Some symbols not defined in this section, but used in this report, are defined in the section of the report they are used.

2. Alternate definitions, where applicable, for each symbol are given. Select the appropiate definition for each particular section

3. All distances are measured with respect to the nacelle pivot. Distances are positive forward, down and to the right of the pivot. Forces are positive forward, down, and to the right.

4. Δ or δ preceeding a symbol generally denotes an incremental change.

1.0 INTRODUCTION

Piloted simulation is a useful and important tool in the design, development and test of new flight vehicles. Figure 1.1 shows a summary of some of these uses as they could be applied to the Model 222 tilt rotor aircraft.

As part of Contract NAS2-6598 Boeing Vertol developed a complex mathematical model of the Model 222 tilt rotor, intended primarily for use with the NASA Flight Simulator for Advanced Aircraft (FSAA) at Ames Research Center. The purpose of this report is to document the development of that mathematical model and to substantiate the methods which were uniquely developed for this purpose.

- Evaluation of Tilt Rotor Handling Qualities
  - Stability and Control
  - Control System Optimization
  - Evaluation of Man-in-the-Loop System Compatibility
  - Evaluation of Malfunction Effects
- Evaluation of Tilt Rotor Performance
  - Maneuver Capability
  - VTOL and STOL Takeoff and Landing Capability
- As a Tool to Evaluate Configuration Changes
  - Changes in Cockpit Layout
  - Changes in Tail Size
  - Changes in Geometry
  - Changes in SAS Configuration
  - Changes in Elastic Characteristics
- As a Flight Test Support Tool
  - Development of Emergency Techniques
  - Familiarization of Flight Crews with Aircraft Characteristics Prior to Flight
  - Correlation Studies
  - Exploration of Flight-Discovered Phenomena

Figure No. 1.1. Summary of Uses for Piloted Simulation

2.0 GENERAL DESCRIPTION OF SIMULATION

The objective of this program was to develop a real time simulation program for a tilt rotor aircraft to be used at the NASA-Ames simulation facility in conjunction with the Flight Simulator for Advanced Aircraft (FSAA) for evaluation of tilt rotor aircraft performance and handling characteristics throughout the flight envelope and identifying problem areas within the envelope.

The mathematical model developed under this contract includes the basic 6 degree of rigid body freedom outer loop equations written about the instantaneous center of gravity with all inertial and aerodynamic coupling terms included. Euler angles are used to properly orient the aircraft in space.

Rotor forces and moments are input to the equations from curve-fit data. The rotor data bank applies to the Boeing Model 222 tilt rotor. Calculation of the rotor forces and moments on-line for real time simulation is not practical because of the complexity of the programs required to represent the lag-flap coupling effects of the soft-in-plane hingless rotor. Analytical studies show that the lag-flap coupling has a large effect upon the phasing of the hub forces and moments of the rotor thereby altering the direct rotor effects on aircraft stability significantly. The rotor rotational degree of freedom is included to represent the effects of rotor inertia which are included in the representation of the thrust management system.

The effects of rotor-on-wing, wing-on-rotor, and rotor-on-horizontal tail are included in this program. The effects of rotor-on-wing are represented by calculation of the slipstream angle of attack of the portions of the aircraft operating in the rotor slipstream by momentum methods and resolving the associated forces and moments to body axes. Correlation with test data are shown in Section 6.5.2 to verify these interference effects. The effects of the rotor slipstream on the horizontal tail downwash are also calculated by momentum methods. The angle through which the flow through the rotor is turned is assumed to represent the change in tail downwash. Provisions are made to incorporate the upwash effects of the wing on the rotor. Lifting line theory should be used to compute these effects.

The effects on lateral/directional parameters caused by rotor wake skew on the wing are included by computing the change in immersed wing area during sidewards flight and sideslips.

Structural dynamics effects included consist of the first mode wing vertical bending and the first wing torsion mode. These wing structural modes have been included on a "quasistatic" basis; i.e. the natural frequencies of vibration of the structure are much higher than the frequencies of the rigid body motion, and the coupling is in the aerodynamic terms.

The aerodynamics of the fuselage, empennage, nacelles, wings and rotors are included in detail. The aerodynamics of the

wing and rotors are written separately for the left and right sides. The effects of the wing leading edge umbrellas are included, with provisions for the direct effects of wing download and pitching moment with the umbrellas open in slow flight. Ground effects are considered on the rotors, wing and horizontal tail. The effects of Mach number on the airplane are treated by application of the Prandtl-Glauert rule. The effects of Mach number on the rotor data have been included in the curve fit equations.

The control system elements represented include pilot command, three axis stability augmentation systems, a load alleviation system (LAS) and a thrust management system. Control system actuator dynamics are represented by appropriate first order and second order lags. The systems are assumed to be "tight" in that thresholds, biases and hysteresis loops are neglected.

Turbine engine performance with appropriate dynamic responses are included. Engine power is computed for the range of flight condition necessary to cover the flight envelope. A relatively simple engine dynamic response model modulates the power output in response to pilot control of throttle position.

Landing gear is represented by a spring-damper system without complex calculation of oleo strut response.

The effects of rotor tilt angle on the aircraft center of gravity and inertia are included. Forces and moments resulting from

acceleration of the nacelles during tilting maneuvers are calculated in the program.

An airframe representation/preprocessor calculation is included that enables the user to input the location of major structural elements of the aircraft in terms of water line, butt line and station line location. All lengths and inertias required by the equation are then calculated. This feature enables the user to quickly change the location of major elements to assess their impact on vehicle response. The rest of the input data required has been kept to a minimum to augment the programs' usefulness. Provisions have been included to provide a very flexible design tool which enables the astute user to perform a wide variety of studies. Figure 2.1 summarizes the salient features of the mathematical model described in this document. It should be emphasized that this model has full flight envelope capability.

- Full Flight Envelope Capability with Total Force Representation
- 6 Rigid Body Degrees of Freedom
- Independent Nacelle Pitch Degree of Freedom
- 2 Elastic Degrees of Freedom
- 1 Rotor Rotational Degree of Freedom
- Includes the Aerodynamics of:
  - Rotors
  - Wings
  - Rotor/Wing & Wing/Rotor Interference
  - Fuselage
  - Landing Gear
  - Tail Surfaces
  - Engines
- Control System Elements:
  - Pilot Command
  - SAS
  - Load Alleviation System (LAS)
  - Thrust and Power Management System
- Aeroelastic Representation
  - Wing Vertical Bending
  - Wing Torsion

Figure 2.1. Salient Features of Math Model

3.0 SIGN CONVENTIONS

Standard aircraft sign conventions have been used throughout this report. Sign conventions are as follows:

Positive X axis forward

Positive Y axis outward along the right wing.

Positive Z axis downward perpendicular to the XY plane.

Lift is positive along the negative Z axis.

Pitching moment is positive nose-up about the Y axis.

Sideforce is positive outward in the direction of the positive Y axis.

Yawing moment is positive nose-right.

Rolling moment is positive right wing down.

Positive elevator deflection is trailing edge down

Positive rudder deflection is rudder-trailing-edge-left.

Positive aileron deflection is right-flaperon-trailing-edge-down.

Positive spoiler deflection is left-hand-spoiler-deflected-upward.

Positive deflection of the pilot's stick and rudder pedals yields positive aircraft pitch, roll, and yaw moments from negative control deflections.

Rotor sign conventions are illustrated in Section 7.0

Special sign convention used in the derivations are noted in the appropriate section.

4.0 MODEL 222 TILT ROTOR AIRCRAFT DESCRIPTION

The Boeing Model 222 Tilt Rotor Research Aircraft, shown in Figure 4.1 uses two 26-foot diameter soft in-plane hingeless rotors of the same design that has already been demonstrated in the NASA/Ames 40 by 80-foot tunnel. The soft in-plane rotor is mechanically simple and provides excellent flying qualities characteristics as well as freedom from aeroelastic problems. It is service proven on the FAA certified BO-105 helicopter. For transition,the rotors tilt from hover position (rotor disk horizontal) to cruise position (rotor disk vertical). Intermediate nacelle positions provide optimum performance capability for climb, descent and for STOL operations.

The Model 222 is powered by two modified Lycoming T53-L-13B turboshaft engines mounted in fixed (nontilting) nacelles at each wing tip. The rotors are interconnected by a cross shaft for single engine operation. The engine power available yields excellent single engine and temperature-altitude performance.

Fuselage and empennage are production (MU-2J) components, modified to accept the Model 222 wing and two production (OV-10) ejection seats. The retractable tricycle landing gear is also the existing MU-2J gear modified to provide increased energy absorption.

Collective and cyclic pitch of the rotors, together with nacelle tilt, provide high control power in hover. In the cruise mode, control is by conventional airplane elevators,

rudder, flaperons and spoilers. Leading-edge "umbrella" flaps and large deflection trailing-edge flaps reduce download and ground effect turbulences in hover. Operation of flaps, umbrellas and elevator as well as phasing out of the rotor controls is mechanically programmed with nacelle tilt to relieve pilot workload.

A limited-authority stability augmentation system includes feedback from angle-of-attack, yaw angle, and dynamic pressure. In cruise flight it feeds back two axes of cyclic pitch to the rotor control. This provides increased static stability and reduces blade loads to increase fatigue margins. The feedback system is not required for either stability or structural integrity. This system permits easy variation of the stability characteristics of the aircraft.

WING

SPAN	33 FT 5 IN.
CHORD	71.8 IN.
AREA	200 FT^2
ASPECT RATIO	5.61
TAPER RATIO	1.0
THICKNESS – CHORD RATIO	.21
WING LOADING	67.7 LB/FT^2 (DESIGN GROSS WT)

HORIZONTAL TAIL

SPAN	15 FT 9 IN.
AREA	68.3 FT^2

VERTICAL TAIL

SPAN	8 FT 9 IN.
AREA	43.3 FT^2

ROTOR

DIAMETER	26 FT 0 IN.
SOLIDITY	.115
DISC LOADING	12.75 LB/FT^2 (DESIGN GROSS WT)
NO. OF BLADES	3

WEIGHTS

DESIGN GROSS WT	13,541 LB
ALTERNATE GROSS WT	15,500 LB
NORMAL GROSS WT	12,321 LB

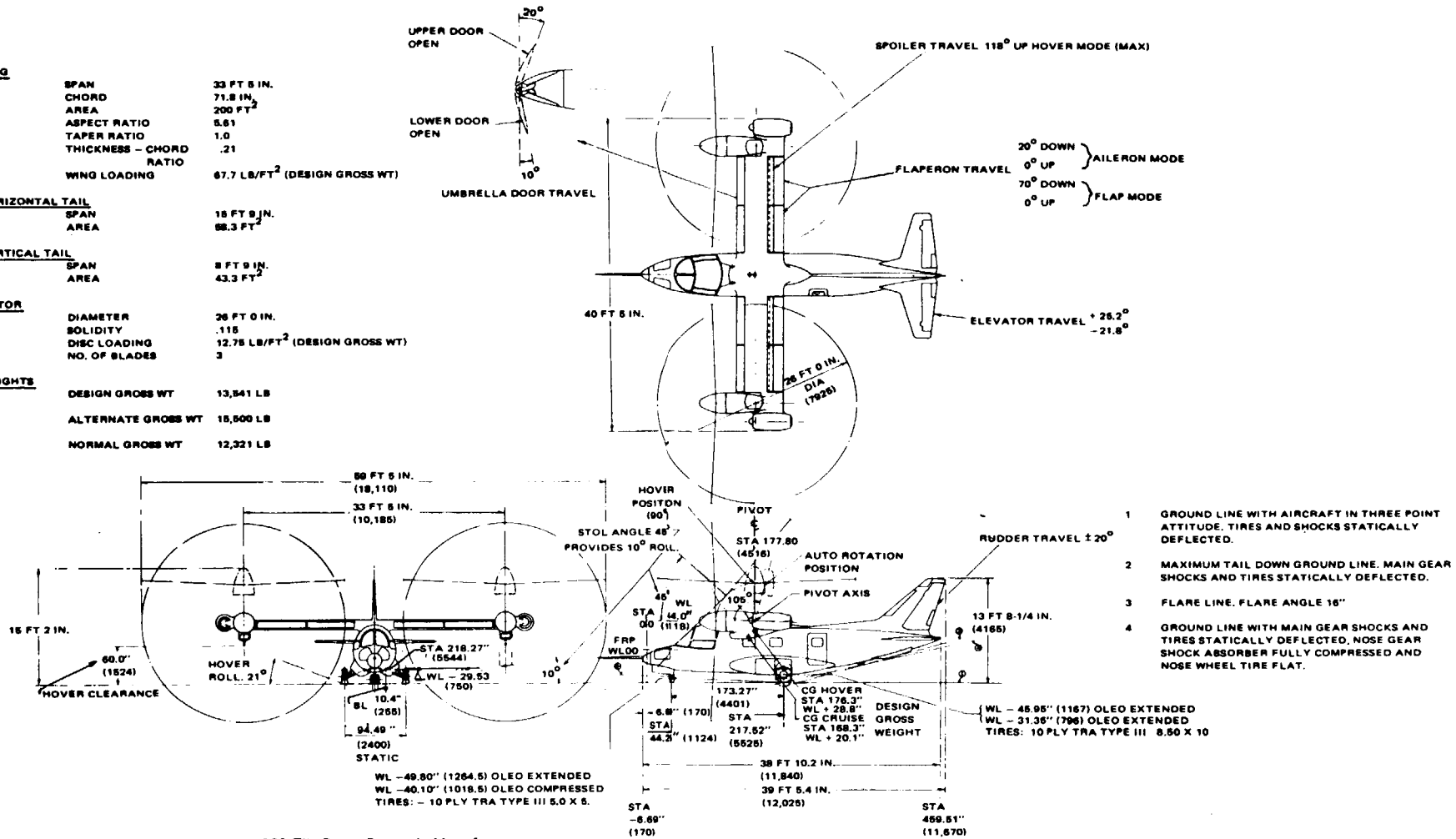

Figure No. 4.1. Model 222 Tilt Rotor Research Aircraft

FOLDOUT FRAME 1

FOLDOUT FRAME 2

5.0 EQUATIONS OF MOTION

This section presents the derivation of the airframe equations of motion and the simplifications that were made in order to obtain the final equations as presented in Appendix E. The treatment accounts for all six rigid-body degrees-of-freedom including the effects of the tilting nacelles and rotors. The principal features of the derivation are:

- Assumption of X-Z plane of symmetry
- The basic equations are derived about the instantaneous center of gravity of the aircraft since the center of gravity is strongly dependent on nacelle incidence.
- Rotor and engine gyroscopic terms are included
- The wing elastic degrees of freedom do not couple inertially. The coupling occurs through the aerodynamic terms in the equations as discussed in Section 12.
- Wing aeroelastic effects are not included in the center of gravity calculations.

5.1 AXES SYSTEM

A set of right-handed orthogonal axes OXYZ is placed at the center of mass of the aircraft and is fixed in the aircraft such that OX lies in the lateral plane of symmetry and is positive forward parallel to the fuselage water line zero. The remaining axes are placed as shown in Figure 5.1.

The orientation of the aircraft is defined with respect to a

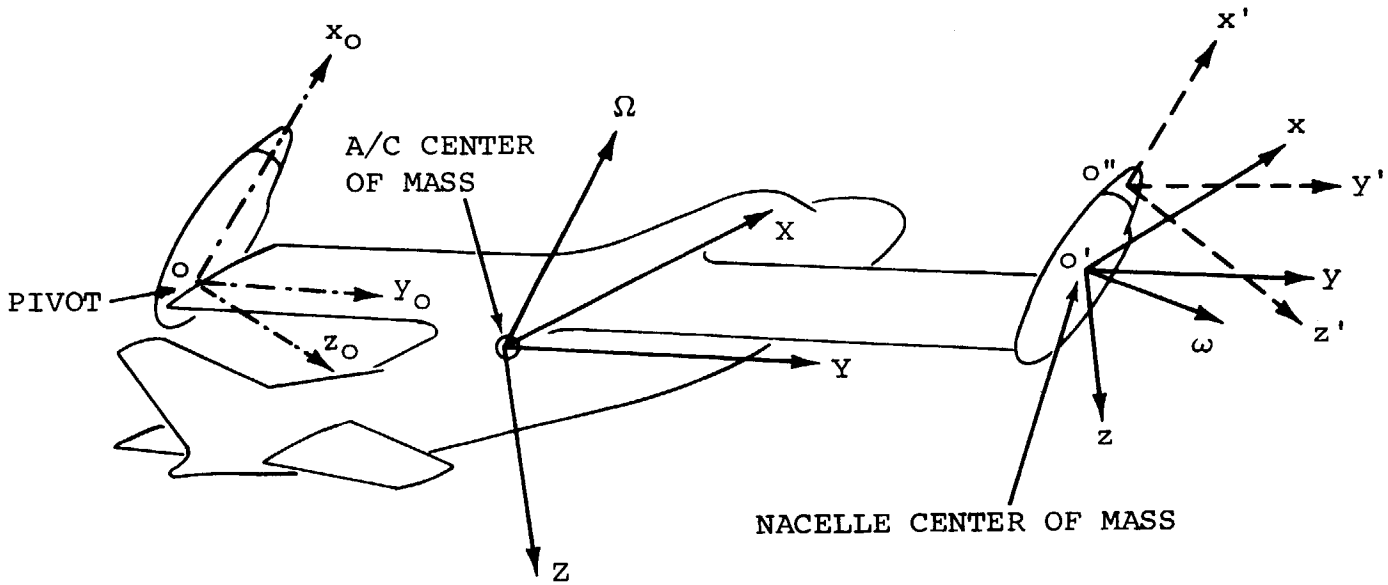

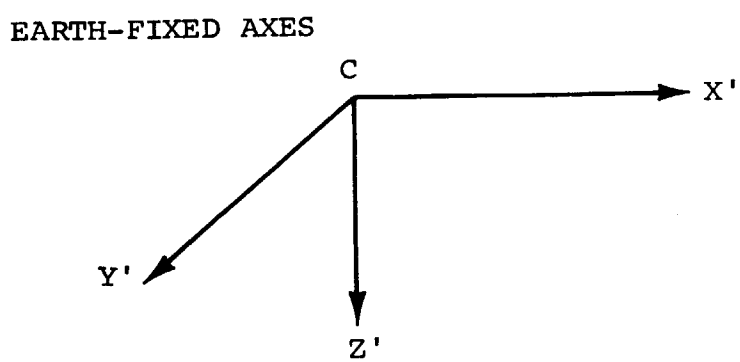

Figure 5.1. Axes Systems

set of earth-fixed axes C X'Y'Z'. With the axes OXYZ initially parallel to C X'Y'Z', the aircraft is yawed to the right about O through an angle ψ, then pitched up about OZ through the angle θ and finally rolled right about OX through the angle ϕ.

If $\underline{V}$ and $\underline{\Omega}$ are the aircraft velocity and angular velocity vectors relative to the earth-fixed axes, the projections of these vectors on the moving axes are U, V, and W, for the components along OX, OY and OZ, and P, Q and R for the angular velocity components.

Thus

$$\underline{V} = U\hat{\underline{i}} + V\hat{\underline{j}} + W\hat{\underline{k}} \tag{5.1}$$

$$\underline{\Omega} = P\hat{\underline{i}} + Q\hat{\underline{j}} + R\hat{\underline{k}} \tag{5.2}$$

where the unit vectors $\hat{\underline{i}}$, $\hat{\underline{j}}$ and $\hat{\underline{k}}$ lie along OX, OY and OZ.

5.2 AIRCRAFT GROUND TRACK

The components of $\underline{V}$ relative to the earth-fixed axes are obtained in terms of U, V, W and ψ, θ, ϕ as, (See Reference 10),

$$\begin{aligned}
\frac{dX'}{dt} &= U \cos\theta \cos\psi + V(\sin\phi \sin\theta \cos\psi - \cos\phi \sin\psi) \\
&\quad + W(\cos\phi \sin\theta \cos\psi + \sin\theta \sin\psi) \\
\frac{dY'}{dt} &= U \cos\theta \sin\psi + V(\sin\phi \sin\theta \sin\psi + \cos\phi \cos\psi) \\
&\quad + W(\cos\phi \sin\theta \sin\psi - \sin\phi \cos\psi) \qquad (5.3) \\
\frac{dZ'}{dt} &= -U \sin\theta + V\sin\phi \cos\theta + W\cos\phi \cos\theta
\end{aligned}$$

Integration of these equations gives the aircraft ground track. A further relationship may be obtained between the rate of

change of the Euler angles (ψ, θ, ϕ) and the components of the angular velocity in the moving axes system, viz,

$$\begin{aligned} \dot{\psi} &= (R\cos\phi + Q\sin\phi)\sec\theta \\ \dot{\theta} &= Q\cos\phi - R\sin\phi \\ \dot{\phi} &= P + \dot{\psi}\sin\theta \end{aligned} \tag{5.4}$$

5.3 FORCE EQUATION

The total external force, $\underline{F}$, acting at the aircraft center of mass is given by

$$F = \frac{d}{dt}(m\underline{V}) = m\left[\frac{\delta \underline{V}}{\delta t} + \underline{\Omega} \times \underline{V}\right] \tag{5.5}$$

where m is the mass of the aircraft and $\frac{\delta \underline{V}}{\delta t}$ is the rate of change of $\underline{V}$ with respect to the moving reference frame OXYZ i.e.

$$\frac{\delta \underline{V}}{\delta t} = U\,\hat{\underline{i}} + V\hat{\underline{j}} + W\hat{\underline{k}} \tag{5.6}$$

If $\underline{F}$ has components F_x, F_y and F_z along the respective axes then

$$\underline{F} = F_x\,\hat{\underline{i}} + F_y\hat{\underline{j}} + F_z\,\hat{\underline{k}} = m\left\{U\,\hat{\underline{i}} + V\hat{\underline{j}} + W\hat{\underline{k}} + \begin{vmatrix} \hat{i} & \hat{j} & \hat{k} \\ P & Q & R \\ U & V & W \end{vmatrix}\right\}$$

thus

$$\begin{aligned} F_x &= m\,(\dot{U} + QW - RV) \\ F_y &= m\,(\dot{V} + RU - PW) \\ F_z &= m\,(\dot{W} + PV - QU) \end{aligned} \tag{5.7}$$

The forces F_x, F_y and F_z are given by

$$F_x = X_{AERO} - mg \sin \theta$$
$$F_y = Y_{AERO} + mg \sin \phi \cos \theta \qquad (5.8)$$
$$F_z = Z_{AERO} + mg \cos \phi \cos \theta$$

where X_{AERO}, etc., are the components of the total aerodynamic force acting at the aircraft center of mass.

Substituting equations (5.8) in equations (5.7), the following equations are obtained for the aircraft accelerations,

$$\dot{U} = \frac{X_{AERO}}{m} - g \sin \theta - QW + RV$$
$$\dot{V} = \frac{Y_{AERO}}{m} + g \cos \theta \sin \phi - RU + PW \qquad (5.9)$$
$$\dot{W} = \frac{Z_{AERO}}{m} + g \cos \theta \cos \phi + QU - PV$$

5.4 MOMENT EQUATION

The derivation of the equations for the total moment acting about the aircraft center of mass is complicated by the fact that the center of mass changes position due to the tilting nacelles. Thus the centers of gravity of the principal aircraft component masses of the wings (m_w), fuselage (including tails) (m_f), and nacelles (m_N), move with respect to the reference axes OXYZ placed at the instantaneous overall center of gravity of the aircraft. The equation of motion for such a mass element will first be obtained and the total moment found by adding the contributions of all the elements.

5.5 EQUATION OF MOTION FOR A MASS ELEMENT

With reference to Figure (5.1) O'xyz is a right-handed set of axes placed at the center of gravity of the representative mass. The axes are parallel to the set OXYZ. The mass, m,

rotates about its own center of gravity with angular velocity $\underline{\omega}$ which, in general, differs from $\underline{\Omega}$ the angular velocity of the aircraft. If $\underline{r}$ is the radius vector from O to O' then the velocity of the center of mass of the element is

$$V = \frac{\delta \underline{r}}{\delta t} + \underline{\Omega} \times \underline{r} \tag{5.10}$$

The angular momentum of this mass about O is

$$\underline{h} = m\ (\underline{r} \times \underline{V}) + \underline{ho} \tag{5.11}$$

where $\underline{ho}$ is the angular momentum of m about its own center of mass and is given by

$$\underline{ho} = \bar{I}\ \underline{\omega} \tag{5.12}$$

where

$$\bar{I} = \begin{bmatrix} I_{xx} & -I_{xy} & -I_{xz} \\ -I_{yx} & I_{yy} & -I_{yz} \\ -I_{zx} & -I_{zy} & I_{zz} \end{bmatrix} \tag{5.13}$$

and I_{xx}, etc., are the moments and products of inertia of the mass about O'xyz.

The total moment, $\underline{G}$, about the aircraft center of mass is given by

$$G = \frac{d\underline{h}}{dt} = \frac{\delta \underline{h}}{\delta t} + \underline{\Omega} \times \underline{h} \tag{5.14}$$

Using equations (5.10), (5.11) and (5.12) in (5.14) the moment becomes

$$\underline{G} = m\left[\frac{\delta \underline{r}}{\delta t} \times \left(\frac{\delta \underline{r}}{\delta t} + \underline{\Omega} \times \underline{r}\right) + \underline{r} \times \frac{\delta}{\delta t}\left(\frac{\delta \underline{r}}{\delta t} + \underline{\Omega} \times \underline{r}\right)\right] + \frac{\delta}{\delta t}(\bar{I}\underline{\omega})$$
$$+ m\ \underline{\Omega} \times \left[\underline{r} \times \left(\frac{\delta \underline{r}}{\delta t} + \underline{\Omega} \times \underline{r}\right)\right] + \underline{\Omega} \times \left(\bar{I}\underline{\omega}\right) \tag{5.15}$$

which reduces to

$$\underline{G} = 2m\underline{\Omega}\left(\underline{r}\cdot \frac{\delta \underline{r}}{\delta t}\right) + m\underline{r} \times \frac{\delta^2 \underline{r}}{\delta t^2} + m \frac{\delta \underline{\Omega}}{\delta t} (\underline{r}\cdot\underline{r}) - m\underline{r}\left(\underline{r}\cdot \frac{\delta \underline{\Omega}}{\delta t}\right) \tag{5.16}$$

$$-2m \frac{\delta \underline{r}}{\delta t} (\underline{\Omega}\cdot\underline{r}) - m(\underline{r}\cdot\underline{\Omega})(\underline{\Omega}\times\underline{r}) + I \frac{\delta \underline{\omega}}{\delta t} + \underline{\Omega} \times \left(\bar{I}\ \underline{\omega}\right)$$

The only masses that possess angular velocities different from that of the aircraft are the nacelles, which are free to pitch about O' with angular rate $\dot{i} = \frac{di_N}{dt}$. Thus $\underline{\omega}$ may be written generally as

$$\underline{\omega} = P\hat{\underline{i}} + (Q + \dot{i}_N)\ \hat{\underline{j}} + R\ \hat{\underline{k}} \tag{5.17}$$

Now, with $\underline{r} = X\hat{\underline{i}} + Y\hat{\underline{j}} + Z\hat{\underline{k}}$, where X, Y, and Z are the instantaneous coordinates of the individual mass center relative to the aircraft mass center, the various terms of equation (5.16) are, in component form,

$$\underline{r}\cdot \frac{\delta \underline{r}}{\delta t} = XX + YY + ZZ$$

$$\underline{r} \times \frac{\delta^2 \underline{r}}{\delta t^2} = (YZ - ZY)\hat{\underline{i}} - (XZ - ZX)\hat{\underline{j}} + (XY - YX)\hat{\underline{k}}$$

$$\frac{\delta \underline{\Omega}}{\delta t} (\underline{r}\cdot\underline{r}) = (X^2 + Y^2 + Z^2)(\dot{P}\hat{\underline{i}} + \dot{Q}\hat{\underline{j}} + \dot{R}\hat{\underline{k}})$$

$$r\cdot \frac{\delta \underline{\Omega}}{\delta t} = X\dot{P} + Y\dot{Q} + Z\dot{R}$$

$$\underline{\Omega}\cdot\underline{r} = XP + YQ + ZR$$

$$(\underline{r}\cdot\underline{\Omega})(\underline{\Omega}\times\underline{r}) = (XP+YQ+XR)\left[(QZ-RY)\hat{\underline{i}} - (PZ-RX)\hat{\underline{j}} + (PY-XQ)\hat{\underline{k}}\right]$$

$$\bar{I}\ \frac{\delta \underline{\omega}}{\delta t} = (I_{xx}\dot{P} - I_{xz}R)\hat{\underline{i}} + I_{yy}(\dot{Q} + \ddot{i}_N)\hat{\underline{j}} + (I_{zz}\dot{R} - I_{xz}\dot{P})\hat{\underline{k}}$$

$$\begin{aligned}\underline{\Omega} \times (\bar{I}\underline{\omega}) = {} & (QR\ I_{zz} - QPI_{xz} - RQI_{yy} - R\dot{i}_N I_{yy})\hat{\underline{i}} \\ & - (PR\ I_{zz} - P^2 I_{xz} - PR\ I_{xx} + R^2 I_{xz})\hat{\underline{j}} \\ & + (QR\ I_{xz} + PQI_{yy} + P\dot{i}_N I_{yy} - PQ\ I_{xx})\hat{\underline{k}}\end{aligned}$$

where, in the last two terms, the products of inertia I_{xy} and I_{yz} are zero from symmetry considerations.

Substituting the above relations into equation (5.16) and noting that $\dot{Y}$ and $\ddot{Y}$ are always zero (no lateral motion of the individual masses) the following expressions are obtained for the components of the moment $\underline{G} = \Delta L\hat{\underline{i}} + \Delta M\hat{\underline{j}} + \Delta N\hat{\underline{k}}$:

$$\Delta L = \dot{P}[I_{xx} + m(Y^2 + Z^2)] - (\dot{R}+PQ)[I_{xz} + m\ XZ]$$

$$+ RQ[I_{zz}-I_{yy}+m(Y^2-Z^2)] + m\ YZ(R^2-Q^2) - I_{yy}R\ \dot{i}_N$$

$$+ m\ (Y\ddot{Z}-2\dot{X}YR - 2\dot{X}ZR + 2Z\dot{Z}P - XY\ (\dot{Q} - PR))$$

$$\Delta M = \dot{Q}\ [I_{yy}+m(X^2+Z^2)] - (R^2-P^2)[I_{xz} + mXZ]$$

$$+ PR\ [I_{xx}-I_{zz} + m(Z^2-X^2)] + I_{yy}\dot{i}_N \qquad (5.19)$$

$$+ m\ [\ddot{X}Z-X\ddot{Z} + 2Q(Z\dot{Z}+X\dot{X})-XY\ (\dot{P}+RQ)+YZ(PQ-\dot{R})]$$

$$\Delta N = \dot{R}\ [I_{zz}+m(X^2+Y^2)] - (\dot{P}-RQ)\ [I_{xz}+m\ XZ] \qquad (5.20)$$

$$+ PQ\ [I_{yy}-I_{xx} + m(X^2-Y^2)] + I_{yy}P\ \dot{i}_N$$

$$+ m\ [2X\dot{X}R - Y\ddot{X} - 2XZP - 2Y\dot{Z}Q - YZ\ (\dot{Q}+PR)+XY(Q^2-P^2)]$$

Summing the rolling moment equation:

$$L = I_{XX}\ \dot{P}-I_{XZ}\ (\dot{R}+PQ) + (I_{ZZ}-I_{YY})RQ \qquad (5.21)$$

$$+ m_N(R^2-Q^2)(Z_{NR}-Z_{NL})Y_N + m_N\Big\{Y_N(\ddot{Z}_{NR}-\ddot{Z}_{NL})$$

$$-2Q(\dot{X}_{NR}-\dot{X}_{NL})Y_N-2R(\dot{X}_{NR}Z_{NR} + \dot{X}_{NL}Z_{NL}) + 2P(\dot{Z}_{NR}Z_{NR} +$$

$$\dot{Z}_{NL}Z_{NL})-(\dot{Q}-PR)(X_{NR}-X_{NL})\ Y_N\Big\}+ 2m_fZ_f(P\dot{Z}_f -$$

$$R\dot{X}_f) + 2m_wZ_w(P\dot{Z}_w - R\dot{X}_w)-R\ I_{yy}^N\ (\dot{i}_{NL} + \dot{i}_{NR})$$

where I_{XX}, I_{XZ}, I_{ZZ} and I_{YY} are the inertias of the aircraft about its center of gravity, and the subscripts f, w, NL and NR stand for fuselage, wing, left nacelle and right nacelle. The remaining symbols are defined in the List of Symbols. Similar expressions are obtained for the pitching moment and yawing

moment. In the interests of brevity the remainder of the discussion will be limited to equation (5.21).

Evaluation of the terms of the rolling moment equation indicate that this equation may be simplified considerably without a significant change in accuracy. For example, terms containing $(\dot{X}_{NR}-\dot{X}_{NL})$ may be dropped because $\dot{X}_{NR}$ is normally identical to $\dot{X}_{NL}$, i.e. the nacelles are raised or lowered together at the same rate. Equation (5.21) may thus be written

$$L=I_{XX}\dot{P}-I_{XZ}(\dot{R}+PQ) + (I_{ZZ}-I_{YY})RQ + m_N Y_N(\ddot{X}_{NR}-\ddot{Z}_{NL}) \qquad (5.22)$$

where the last term has been retained in consideration of the high differential nacelle accelerations encountered during hover maneuvers.

From the relationships presented in Appendix C the last term of equation (5.22) may be rewritten as

$$-\ell m_N Y_N\ [\ddot{i}_{NR}\cos(i_{NR}-\lambda) + i_{NL}^2\sin(i_{NL}-\lambda)$$
$$-i_{NR}^2\sin(i_{NR}-\lambda) - \ddot{i}_{NL}\cos(i_{NL}-\lambda)] \qquad (5.23)$$

which may be approximated to

$$-\ell m_N Y_N\ [\ddot{i}_{NR}\cos(i_{NR}-\lambda) - \ddot{i}_{NL}\cos(i_{NL}-\lambda)] \qquad (5.24)$$

since the nacelle rates appear as squared terms.

Similar treatment of the pitching moment and yawing moment equations results in the following final form of the moment equations.

$$L_{AERO} = I_{XX}\dot{P} - I_{XZ}(\dot{R}+PQ) + (I_{ZZ}-I_{YY})RQ$$
$$-\ell m_N Y_N \left[\ddot{i}_{NR} \cos(i_{NR}-\lambda) - \ddot{i}_{NL} \cos(i_{NL}-\lambda)\right]$$

$$M_{AERO} = I_{YY}\dot{Q} - I_{XZ}(R^2-P^2) + (I_{XX}-I_{ZZ})PR$$
$$+ \ddot{i}_{NR}\left\{I^N_{YY_o} + \ell m_N \left[X_R \cos(i_{NR}-\lambda) - Z_R \sin(i_{NR}-\lambda)\right]\right\} \quad (5.25)$$
$$+ \ddot{i}_{NL}\left\{I^N_{YY_o} + \ell m_N \left[X_L \cos(i_{NL}-\lambda) - Z_L \sin(i_{NL}-\lambda)\right]\right\}$$

$$N_{AERO} = I_{ZZ}\dot{R} - I_{XZ}(\dot{P}-RQ) + (I_{YY}-I_{XX})PQ$$
$$+ \ell m_N Y_N \left[\ddot{i}_{NR} \sin(i_{NR}-\lambda) - \ddot{i}_{NL} \sin(i_{NL}-\lambda)\right]$$

where the moments L_{AERO}, M_{AERO} and N_{AERO} represent the sum of the aerodynamic moments and rotor/engine gyroscopic moments about the aircraft center of mass. $I^N_{YY_o}$ is the nacelle pitch inertia referred to the nacelle-fixed axes system described in Appendix C. Equations for the aircraft inertias are also presented in that Appendix.

5.6 EQUATIONS OF MOTION FOR NACELLES

The equation of motion for a nacelle is required in order to obtain the moment exerted by the nacelle on the wing tip at the pivot. This moment is then used in the equations for wing twist.

The angular momentum of a nacelle about its pivot point is given by

$$\underline{h}_p = (\underline{r}-\underline{r}_p) \times m_N\underline{V} + \underline{h}_{o_N}$$
$$= m_n (\underline{r} \times \underline{V}) + \underline{h}_o - m_n\underline{r}_p \times \underline{V} \quad (5.26)$$

where $\underline{r}$ is the radius vector from aircraft c.g. to nacelle c.g.

$\underline{V}$ is the velocity of the nacelle c.g.

$\underline{h}_{o_N}$ is the angular momentum of the nacelle about its own c.g.

m_N is the nacelle mass

and $\underline{r}_p$ is the radius vector from aircraft c.g. to nacelle pivot

The term $m_n\ (\underline{r} x \underline{V}) + \underline{h}_{o_N}$ is the angular momentum of the nacelle about the aircraft c.g. $(= \underline{h}^N_{CG})$

$$\text{i.e.} \quad \underline{h}_p = \underline{h}^N_{CG} - m_N(\underline{r}_p \times \underline{V})$$

The moment about the pivot is

$$G_p = \frac{d\underline{h}_p}{dt} = \frac{d\underline{h}_N}{dt} - m_n \frac{d}{dt}(\underline{r}_p \times \underline{V}) = \underline{G}^N_{CG} - \Delta\underline{G} \qquad (5.27)$$

Since the quantity $\underline{G}^N_{cg}$ has already been obtained (equations (5.18), (5.19) and (5.20)), only the remaining term needs to be evaluated.

$$\Delta\underline{G} = m_N \frac{d}{dt}(\underline{r}_p x \underline{V}) = m_N\left\{\frac{\delta \underline{r}_p}{\delta t} \times \underline{V} + \underline{r}_p \times \frac{\delta \underline{V}}{\delta t} + \underline{\Omega}(\underline{r}_p \times \underline{V})\right\}$$

$$= m_N \left\{\frac{\delta \underline{r}_p}{\delta t} \times \left(\frac{\delta \underline{r}}{\delta t} + \underline{\Omega} x \underline{r}\right) + \underline{r}_p \times \frac{\delta}{\delta t}\left(\frac{\delta \underline{r}}{\delta t} + \underline{\Omega} x \underline{r}\right)\right. \qquad (5.28)$$

$$\left. + \underline{\Omega} \times \left[\underline{r}_p \times \left(\frac{\delta \underline{r}}{\delta t} + \underline{\Omega} \times \underline{r}\right)\right]\right\}$$

Expansion of these terms results in the following expression

$$\Delta\underline{G} = m_N\left\{\frac{\delta \underline{r}_p}{\delta t} \times \frac{\delta \underline{r}}{\delta t} + \underline{\Omega}\left(\underline{r}.\frac{\delta \underline{r}_p}{\delta t}\right) - \underline{r}\left(\frac{\delta \underline{r}_p}{\delta t}.\underline{\Omega}\right) + \underline{r}_p \times \frac{\delta^2 \underline{r}}{\delta t^2} + \frac{\delta \underline{\Omega}}{\delta t}(\underline{r}.\underline{r}_p)\right.$$

$$- \underline{r}\left(\underline{r}_p.\frac{\delta \underline{\Omega}}{\delta t}\right) + \underline{\Omega}\left(\frac{\delta \underline{r}}{\delta t}.\underline{r}_p\right) - 2\frac{\delta \underline{r}}{\delta t}(\underline{r}_p.\underline{\Omega})$$

$$\left. + \underline{r}_p\left(\frac{\delta \underline{r}}{\delta t}.\underline{\Omega}\right) - (\underline{r}_p.\underline{\Omega})(\underline{\Omega} x \underline{r})\right\}$$

We require only the $\hat{\underline{j}}$ component of this vector in order to obtain the nacelle pivot pitching moment.

The components of the vectors $\underline{r}_p$, $\underline{r}$ and $\underline{\Omega}$ are

$$\underline{r}_p = X_p\hat{\underline{i}} + Y_N\hat{\underline{j}} + Z_p\hat{\underline{k}} = -X_{CG}\hat{\underline{i}} + Y_N\hat{\underline{j}} - Z_{CG}\hat{\underline{k}}$$

$$\underline{r} = X_N\hat{\underline{i}} + Y_N\hat{\underline{j}} + Z_N\hat{\underline{k}}$$

$$\underline{\Omega} = P\hat{\underline{i}} + Q\hat{\underline{j}} + R\hat{\underline{k}}$$

Noting that the $\hat{\underline{j}}$ components of $\frac{\delta \underline{r}_p}{\delta t}$, $\frac{\delta \underline{r}}{\delta t}$ are zero (since Y_N is a constant), the above expression yields

$$\Delta M = m_N\left\{\ddot{X}_N Z_{CG} - \ddot{Z}_N X_{CG} + \dot{Z}_{CG}\dot{X}_N + \dot{Z}_N\dot{X}_{CG} + PQ\ Y_N Z_N - RQ\ X_N Y_N\right\} \tag{5.30}$$

Combining this equation with Equation (5.19) and using the transformations given in Appendix C, the final equation for the right-hand nacelle pivot actuator pitching moment becomes, after some simplification,

$$\begin{aligned} M_{NR} = & -\ddot{i}_{NR}\left[I^N_{yy_o} + \ell^2 m_N\left(1-\frac{m_N}{m}\right)\right] - \ell^2 m_N\left(1-\frac{m_N}{m}\right)\left[\dot{Q} - PR\cos 2(i_{NR}-\lambda)\right. \\ & \left. + (R^2-P^2)\sin(i_{NR}-\lambda)\cos(i_{NR}-\lambda)\right] - (R^2-P^2)\ I^N_{zz_o}\sin i_{NR}\cos i_{NR} \\ & - I_{yy_o}\dot{Q} + \ell\frac{m_N}{m}\left[X_{AERO}\sin(i_{NR}-\lambda) + Z_{AERO}\cos(i_{NR}-\lambda)\right] \\ & - \ell m_N Y_N\left\{(\dot{R}-PQ)\sin(i_{NR}-\lambda) - (\dot{P}+RQ)\cos(i_{NR}-\lambda)\right\} \\ & + M_{NR_{AERO}} \end{aligned} \tag{5.31}$$

where $M_{NR_{AERO}}$ includes the moment resulting from nacelle aerodynamic loads and the rotor gyroscopic moments. The terms X_{AERO} and Z_{AERO} are, respectively, the total aircraft aerodynamic X and Z forces.

The corresponding equation for the left nacelle actuator moment is obtained by substituting $-Y_N = Y_N$ and changing the R subscript to L.

5.7 DETERMINATION OF ROTOR GYROSCOPIC MOMENTS

The gyroscopic moments are most readily obtained as follows. A set of axes O"x'y'z' is taken at the rotor hub (rotor c.g.) parallel to the nacelle-fixed set of axes $Ox_oy_oz_o$. Associated with each axis are the corresponding unit vectors $\hat{\underline{i}}'$ $\hat{\underline{j}}'$ and $\hat{\underline{k}}'$. The angular velocity of the rotor with respect to these axes is the vector

$$\underline{\omega} = \Omega_R \hat{\underline{i}}' \tag{5.32}$$

where Ω_R is the rotor rotational speed.

The angular momentum of the rotor with respect to its c.g. is

$$\underline{h}_o = \bar{I}_R \underline{\omega} \tag{5.33}$$

where $\bar{\underline{I}}_R$ is the inertia matrix $\begin{bmatrix} I_{R_{x'}} & & \\ & I_{R_{y'}} & \\ & & I_{R_{z'}} \end{bmatrix}$

the off-diagonal terms being zero since the axes O"x'y'z' are principal axes of inertia of the rotor and hub.

In component form the angular momentum of the rotor is

$$\underline{h}_o = I_{R_{y'}} \Omega_R \hat{\underline{i}}' = I_R \Omega_R \hat{\underline{i}}' \tag{5.34}$$

With respect to the inertial axes OXYZ, the components of $\underline{h}_o$ are

$$\underline{h}_o = I_R \Omega_R \cos i_N \hat{\underline{i}} - I_R \Omega_R \sin i_N \hat{\underline{k}} \tag{5.35}$$

The hub moment is therefore given by

$$\underline{G}_{HUB} = \frac{d\underline{h}_o}{\delta t} = \frac{\delta \underline{h}_o}{\delta t} + \underline{\Omega} \times \underline{h}_o \tag{5.36}$$

where $\underline{\Omega} = P\hat{\underline{i}} + Q\hat{\underline{j}} + R\hat{\underline{k}}$ (5.37)

Substitution of equations (5.35) and (5.37) into equation (5.36) results in the following equations for the rotor gyroscopic moments.

$$L_{gyro} = I_R\dot{\Omega}_R \cos i_N - I_R\Omega_R (\dot{i}_N+Q) \sin i_N \tag{5.38}$$

$$M_{gyro} = I_R P\Omega_R \sin i_N + I_R R\Omega_R \cos i_N \tag{5.39}$$

$$N_{gyro} = -I_R\dot{\Omega}_R \sin i_N - I_R\Omega_R (\dot{i}_N+Q) \cos i_N \tag{5.40}$$

The above terms appear in the Computer Representation (Appendix E) as additions to the rotor aerodynamic forces and moments.

6.0 AIRFRAME AERODYNAMICS

This section presents the mathematical equations and representations of the aerodynamic data for the aircraft without rotors. The contribution of the rotors is described in Section 7. The overall airframe aerodynamics are obtained from the following components:

(a) Fuselage

(b) Wings

(c) Horizontal Tail

(d) Vertical Tail

(e) Nacelles

The data and equations for each of the aerodynamic components are discussed below, together with the substantiating methods. The aerodynamic data are presented in local wind axes. Resolution to aircraft body axes is accomplished as described in the mathematical model (Appendix E). Where required, the equations have been written so as to be applicable over the entire range of angle of attack $\pm$ 180 degrees.

6.1 FUSELAGE

The aerodynamic lift, drag and pitching moment coefficients of the fuselage were estimated using the methods of Reference 1 . The forces and moments are referred to the point on the fuselage corresponding to the wing quarter chord position. This reference point was selected in order to minimize the number of force and moment transfer equations in the mathematical

model. Wing-to-body carryover effects have been included in fuselage loads.

The equations for the fuselage forces and moments are:

Lift: $C_{L_F} = K_{42} + K_3 \mathrm{Sin}\alpha_F \mathrm{Cos}\alpha_F + K_4 \mathrm{Sin}\alpha_F \mathrm{Cos}\alpha_F | \mathrm{Sin}\alpha_F \mathrm{Cos}\alpha_F |$

Drag: $C_{D_F} = C_{D_{O_F}}(1 + K_o |\beta_F|^3) + K_2 (\mathrm{Sin}\alpha_F \mathrm{Cos}\alpha_F)^2 + K_1 |\mathrm{Sin}\alpha_F \mathrm{Cos}\alpha_F| + \Delta C_{D_{LG}}$

Side Force: $C_{Y_F} = K_7 \mathrm{Sin}\beta_F \mathrm{Cos}\beta_F + K_8 \mathrm{Sin}\beta_F \mathrm{Cos}\beta_F |\mathrm{Sin}\beta_F \mathrm{Cos}\beta_F|$

Pitching Moment: $C_{M_F} = C_{M_{O_F}} + K_5 \mathrm{Sin}\alpha_F \mathrm{Cos}\alpha_F + K_6 \mathrm{Sin}\alpha_F \mathrm{Cos}\alpha_F | \mathrm{Sin}\alpha_F \mathrm{Cos}\alpha_F | + \Delta C_{M_{LG}}$

Yawing Moment: $C_{N_F} = C_{N_{OF}} + K_9 \mathrm{Sin}\beta_F \mathrm{Cos}\beta_F + K_{10} \mathrm{Sin}\beta_F \mathrm{Cos}\beta_F |\mathrm{Sin}\beta_F \mathrm{Cos}\beta_F|$

Rolling Moment: $C_{\ell_F} = 0$

where $\alpha_F = \mathrm{Tan}^{-1}\left(\frac{W}{U}\right)$, $C_{L_F} = \dfrac{L_F}{\frac{1}{2}\rho V_{FUS}^2 S_W}$ etc.

$\beta_F = \mathrm{Tan}^{-1}\left[\dfrac{V}{\sqrt{U^2 + W^2}}\right]$, $C_{M_F} = \dfrac{M_F}{\frac{1}{2}\rho V_{FUS}^2 S_W C_W}$ etc.

and $\Delta C_{D_{LG}}$, $\Delta C_{M_{LG}}$, are the landing gear contributions to fuselage drag and pitching moment coefficients, when the landing gear is extended.

The fuselage forces and moments are then resolved into body axes at the aircraft C.G.

6.2 NACELLES

The forces and moments acting on the nacelles were estimated using the cross-flow methods of Reference 12 . For convenience the resulting forces and moments are referred to the rotor hub, so that they may be added directly to the rotor forces and moments. The following equations are for the forces and moments on two nacelles:

$$C_{L_N} = K_{32} \sin \alpha_N \cos \alpha_N$$

$$C_{D_N} = C_{D_{O_N}} + K_{30}|\alpha_N| + K_{31} \alpha_N^2$$

$$C_{M_N} = C_{M_{O_N}} + K_{34} \sin \alpha_N \cos \alpha_N + K_{35} \sin \alpha_N \cos \alpha_N |\sin \alpha_N \cos \alpha_N|$$

$$C_{Y_N} = K_{36} \sin \beta_N \cos \beta_N + K_{37} \sin \beta_N \cos \beta_N |\sin \beta_N \cos \beta_N|$$

$$C_{N_N} = C_{N_{O_N}} + K_{38} \sin\beta_N \cos\beta_N + K_{39} \sin\beta_N \cos \beta_N |\sin\beta_N \cos \beta_N|$$

$$C_{\mathcal{L}_N} = 0$$

The nacelle forces and moments in nacelle axes are:

$$\Delta X'_N = q_N S_W[-C_{D_N} \cos \alpha_N + C_{L_N} \sin \alpha_N - C_{Y_N} \sin \beta_N \cos \alpha_N]\frac{1}{2}$$

$$\Delta Y'_N = q_N S_W[C_{Y_N} \cos \beta_N - C_{D_N} \sin \beta_N] \frac{1}{2}$$

$$\Delta Z'_N = q_N S_W[-C_{L_N} \cos \alpha_N - C_{D_N} \cos \beta_N \sin \alpha_N - C_{Y_N} \sin \beta_N \sin \alpha_N]\frac{1}{2}$$

$$\Delta \mathcal{L}'_N = q_N S_W b_W[-\left(\frac{C_W}{b_W}\right) C_{M_N} \sin \beta_N \cos \alpha_N - C_{N_N} \sin \alpha_N]\frac{1}{2}$$

$$\Delta M'_N = q_N S_W C_W[C_{M_N} \cos \beta_N]\frac{1}{2}$$

$$\Delta N'_N = q_N S_W b_W[C_{N_N} \cos \alpha_N - \left(\frac{C_W}{b_W}\right) C_{M_N} \sin \beta_N \cos \alpha_N]\frac{1}{2}$$

6.3 HORIZONTAL TAIL

Aerodynamics of the horizontal tail were obtained using the methods of Reference 1 in combination with test data. The horizontal tail includes a plain elevator.

The angle of attack of the horizontal tail, including interference effects, for zero elevator deflection, is

$$\alpha_{HT} = \mathrm{Tan}^{-1}\left[\frac{w_{HT}}{u_{HT}}\right] - \varepsilon + i_{HT}$$

where ε is the total downwash at the tail due to wing, rotor and ground effects and i_{HT} is the tail incidence angle.

The effect of elevator deflection on the effective tail angle of attack is introduced through the elevator effectiveness parameter, τ_{HT}, which is a function of the elevator and horizontal tail areas. Thus the effective horizontal tail angle of attack is

$$\alpha_{e_{HT}} = \alpha_{HT} + \tau_{HT}\delta_e$$

where δ_e is the elevator deflection.

The tail downwash angle, ε, depends on wing angle of attack and on rotor slipstream deflection. At a given rotor angle of attack, the slipstream deflection is a function of rotor thrust coefficient, C_{T_S}, where the coefficient is based on the slipstream dynamic pressure. Figure 6.1 presents data on downwash angles measured during tests on a tilt rotor wind tunnel model (Reference 7). As can be seen, the downwash at low values of thrust coefficient is the same as the value of the power-off wing

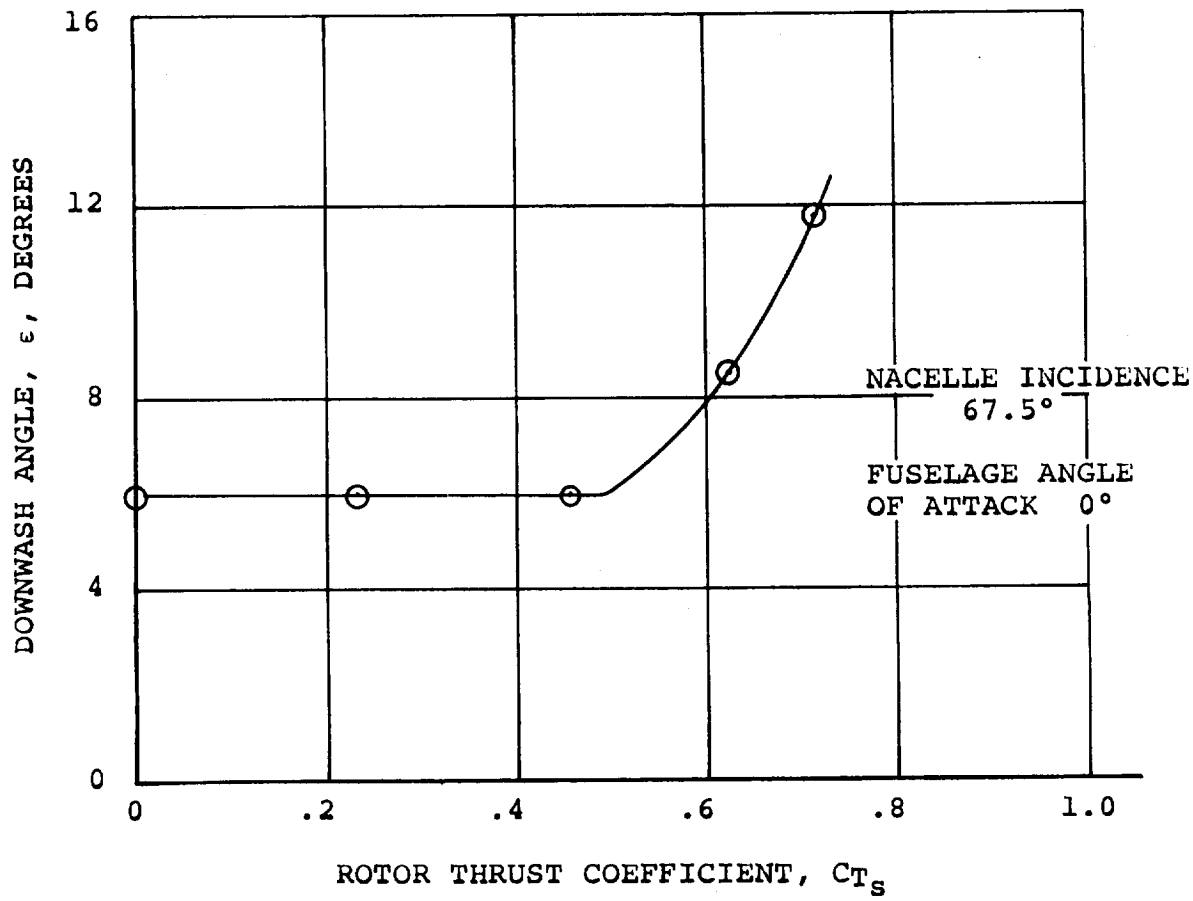

Figure 6.1. Variation of Horizontal Tail Downwash Angle with Thrust Coefficient

downwash (C_{T_S}=0). Above values of C_{T_S} in the neighborhood of C_{T_S}=.5 the downwash increases with increasing thrust coefficient. The values in the increasing portion of ε vs C_{T_S} were found to correspond approximately to the slipstream deflection angle ε_p. Therefore, the approach adopted in the mathematical

model was to test if the rotor slipstream downwash ($\bar{\varepsilon}_p$) exceeded the wing downwash and, if so, to use the computed slipstream downwash value as the tail downwash angle. Otherwise the wing downwash value was used.

Thus if

$$\bar{\varepsilon}_p \geq \varepsilon_o + \frac{d\varepsilon}{d\alpha}\left(\bar{\alpha}_w - \ell_{AC}\frac{\dot{W}}{U^2}\right)$$

then $$\varepsilon = \frac{\bar{\varepsilon}_p(1-GEF)}{\sqrt{1-M^2}}$$

otherwise

$$\varepsilon = \left[\varepsilon_o + \frac{d\varepsilon}{d\alpha}\left(\bar{\alpha}_w - \ell_{AC}\frac{\dot{W}}{U^2}\right)\right]\frac{(1-GEF)}{\sqrt{1-M^2}}$$

In these expressions ε_o is the wing downwash angle at zero wing angle-of-attack, $\frac{d\varepsilon}{d\alpha}$ is the downwash derivative, ℓ_{AC} is the distance from the wing to the tail aerodynamic centers, and $\ell_{AC}\frac{\dot{W}}{U^2}$ is the familiar downwash lag term. In general, the quantities ε_o and $\frac{d\varepsilon}{d\alpha}$ depend on the average of the left and right flaperon deflections. The effect of differential deflection of aileron/spoiler in producing an asymmetrical downwash field at the horizontal tail was not included because of the small contribution this makes to total aircraft rolling moment.

The term (1-GEF) in the above equations is the ground effect factor. This quantity was obtained from Reference 10 and is a function of the wing span and height of the horizontal tail above the ground. This factor, when multiplied by the downwash which would be found out of ground effect, yields the downwash in ground effect. Ground effect is discussed in more detail in Section 10.

The lift and drag forces acting on the horizontal tail are required over the complete range of angle of attack -180° to +180°, since the tilt rotor can fly backwards. The following sketch shows the schematic variation of lift and drag coefficients over this range plotted as a function of the effective horizontal tail angle of attack, $\alpha_{e_{HT}}$.

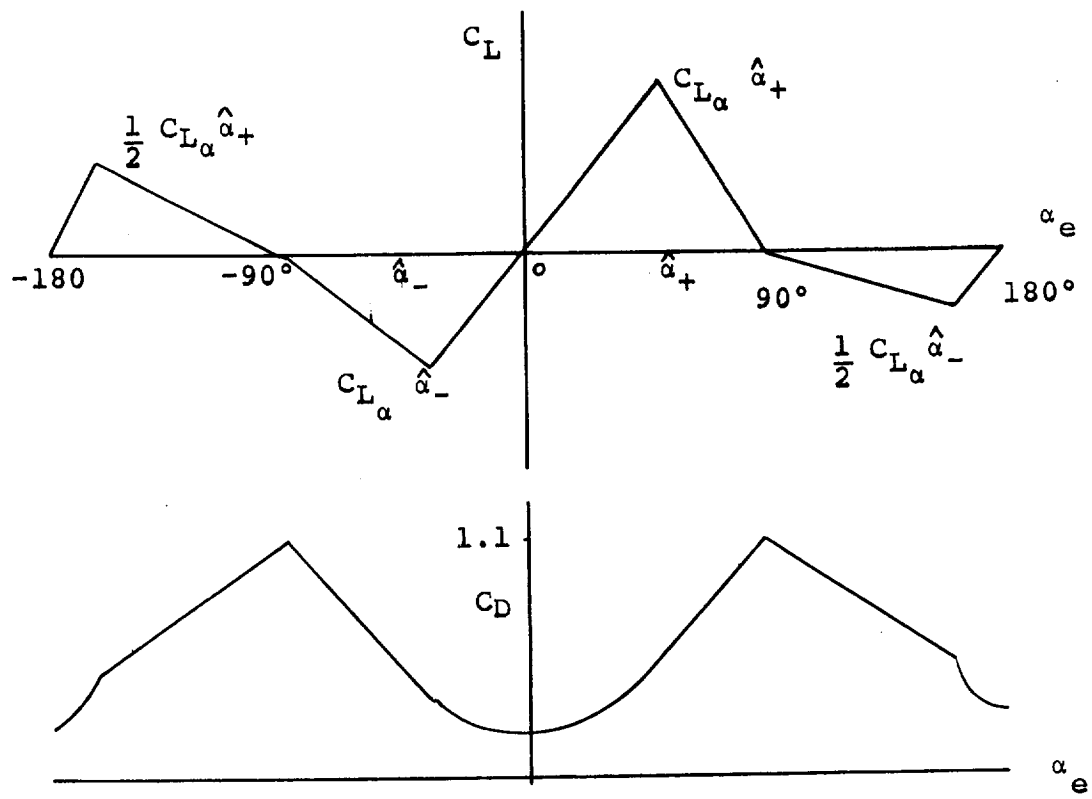

The angle of attack for $C_{L_{HT_{MAX}}}$ is denoted by $\hat{\alpha}_{HT_+}$ and is the value of the effective angle of attack at the stall less 2 degrees i.e.

$$\hat{\alpha}_{HT_+} = (\alpha_{HT_{STALL}} - 2°) + \tau_{HT}\delta_e$$

Similarly the angle of attack for stall at negative angles of attack is

$$\hat{\alpha}_{HT_-} = -(\alpha_{HT_{STALL}} - 2°) + \tau_{HT}\delta_e$$

The slope of the lift curve within this range of positive and negative angles of attack is given by

$$C_{L_\alpha} = \frac{C_{L_{\alpha_{HT}}}\left(\frac{a_g}{a}\right)}{\sqrt{1-M^2}}$$

where a_g/a is the ratio of tail lift-curve slopes in and out of ground effect, and $\sqrt{1-M^2}$ is the Prandtl-Glauert correction factor for the effect of Mach number on lift-curve slope.

Within this region on the lift curve the value of lift coefficient is given by $C_{L_{HT}} = C_{L_\alpha}\,\alpha_{eHT}$ and the corresponding drag coefficient by

$$C_{D_{HT}} = C_{D_{O_{HT}}} + \frac{2C_{L_{HT}}^2}{\pi AR_{HT}}$$

After stall angle of attack is passed the lift is assumed to fall linearly to zero at $\alpha_e = \pm 90°$.

In these regions the lift is given by

$$C_{L_\alpha} = C_{L_\alpha}\,\hat{\alpha}_{\pm}\,\frac{(\pm 90 - \alpha_{e_{HT}})}{(\pm 90 - \hat{\alpha}_{HT_\pm})}$$

where the appropriate signs are taken depending on the sign of α_{eHT}.

The corresponding drag is obtained by assuming a linear variation of drag from the value at $C_{L_{MAX}}$ to a value of $C_D = 1.1$ (flat plate normal to stream) at $\alpha_{e_{HT}} = 90°$. Thus

$$C_{L_{HT_{STALL}}} = C_{L_\alpha} \hat{\alpha}_{HT_\pm}$$

$$C_{D_{HT_{STALL}}} = C_{D_{O_{HT}}} + \frac{2C^2_{L_{HT_{STALL}}}}{\pi AR_{HT}}$$

and

$$C_{D_{HT}} = C_{D_{HT_{STALL}}} + \frac{(\alpha_{e_{HT}} - \hat{\alpha}_{HT_\pm})(1.1 - C_{D_{HT_{STALL}}})}{(\pm 90 - \hat{\alpha}_{HT_\pm})}$$

If the effective angle of attack of the horizontal tail exceeds $\pm 90°$ the tail will point trailing-edge first into the relative wind. Under this condition early stalling is precipitated because of the sharp "leading edge" and blunt "trailing edge". In order to represent this, it was assumed that the attainable $C_{L_{MAX}}$ of the tail under these conditions is half that occurring in normal flight.

Thus if $\quad 90° < \alpha_{e_{HT}} \leq (180 - \frac{1}{2} \hat{\alpha}_{HT_-})$

or $(-180 + \frac{1}{2} \hat{\alpha}_{HT_+}) \leq \alpha_{e_{HT}} < -90°$

then

$$C_{L_{HT}} = .5 C_{L_\alpha} \hat{\alpha}_{HT_-} \quad \frac{(\alpha_{e_{HT}} - 90°)}{(90° - \frac{1}{2}\hat{\alpha}_{HT_-})}$$

or

$$C_{L_{HT}} = .5 C_{L_\alpha} \hat{\alpha}_{HT_+} \quad \frac{(\alpha_{e_{HT}} + 90°)}{(-90 + \frac{1}{2} \hat{\alpha}_{HT_+})}$$

The corresponding drag coefficients are:

for $90° < \alpha_{e_{HT}} \leq (180 - \frac{1}{2} \hat{\alpha}_{HT_-})$;

$$C_{L_{HT_{STALL}}} = 0.5\ C_{L_\alpha} \hat{\alpha}_{HT_-}$$

$$C_{D_{HT_{STALL}}} = \frac{2C^2_{L_{HT_{STALL}}}}{\pi AR_{HT}} + C_{D_{O_{HT}}}$$

which gives $C_{D_{HT}} = C_{D_{HT_{STALL}}} + \frac{(\alpha_{e_{HT}} + 0.5\ \hat{\alpha}_{HT_-} - 180°)}{(0.5\ \hat{\alpha}_{HT_-} - 90°}(1.1 - C_{D_{HT_{STALL}}})$

and for $(-180 + \frac{1}{2}\ \hat{\alpha}_{HT_+}) \leq \alpha_{e_{HT}} < -90°$;

$$C_{L_{HT_{STALL}}} = 0.5\ C_{L_\alpha}\ \hat{\alpha}_{HT_+}$$

$$C_{D_{HT_{STALL}}} = \frac{2C^2_{L_{HT_{STALL}}}}{\pi AR_{HT}} + C_{D_{O_{HT}}}$$

which gives $C_{D_{HT}} = C_{D_{HT_{STALL}}} - \frac{(\alpha_{e_{HT}} + 180° - .5\hat{\alpha}_{HT_+})}{(.5\hat{\alpha}_{HT_+} - 90°)}(1.1 - C_{D_{HT_{STALL}}}$

In the range $(180 - .5\hat{\alpha}_{HT_-}) \leq \alpha_{e_{HT}} \leq 180°$ when the tail has unstalled

$$C_{L_{HT}} = C_{L_\alpha}\ (\alpha_{e_{HT}} - 180°)$$

$$C_{D_{HT}} = C_{D_{O_{HT}}} + \frac{2C^2_{L_{HT}}}{\pi\ AR_{HT}}$$

and similarly for the range $-180° \leq \alpha_{e_{HT}} < (-180 + .5\ \hat{\alpha}_{HT_+})$

$$C_{L_{HT}} = C_{L_\alpha}\ (\alpha_{e_{HT}} + 180°)$$

$$C_{D_{HT}} = C_{D_{O_{HT}}} + \frac{2C^2_{L_{HT}}}{\pi AR_{HT}}$$

The above equations define the variation of tail lift and drag over the entire range of angle of attack. The tail pitching moment is not computed since it makes only a small contribution to the total aircraft pitching moment.

6.4 VERTICAL TAIL

The aerodynamic forces and moments acting on the vertical tail were estimated using the methods of Reference 1. The angle of attack of the vertical tail is given by

$$\alpha_{VT} = -\,\mathrm{Tan}^{-1}\left[\frac{v_{VT}}{\sqrt{u^2_{VT}+w^2_{VT}}}\right] + \beta_F\left(\frac{d\sigma}{d\beta}\right)$$

where u_{VT}, v_{VT} and w_{VT} are the components of velocity at the vertical tail aerodynamic center as given in Appendix C. The term $\beta_F\left(\frac{d\sigma}{d\beta}\right)$ is the sidewash correction for the presence of the fuselage.

As in the treatment of the horizontal tail, the effect of rudder deflection is obtained using a rudder effectiveness parameter τ_{VT}. Thus the effective angle of attack of the vertical tail when the rudder is deflected is

$$\alpha_{e_{VT}} = \alpha_{VT} + \tau_{VT}\,\delta_{RUD}$$

The treatment of the vertical tail aerodynamics through the complete angle of attack range -180° to +180° then follows the same lines as that for the horizontal tail aerodynamics previously described.

The vertical tail forces and moments in body axes are then obtained from:

$$X^{VT}_{AERO} = \bar{q}S_{VT}\eta_{VT}\left[-C_{D_{V_T}}\cos(\beta_{VT}-\sigma)\cos(\alpha_{HT}-i_{HT}) - C_{Y_{VT}}\sin(\beta_{VT}-\sigma)\cos(\alpha_{HT}-i_{HT})\right]$$

$$Y^{VT}_{AERO} = \bar{q}S_{VT}\eta_{VT}\left[C_{Y_{VT}}\cos(\beta_{VT}-\sigma) - C_{D_{VT}}\sin(\beta_{VT}-\sigma)\right]$$

$$Z^{VT}_{AERO} = \bar{q}S_{VT}\eta_{VT}\left[-C_{D_{VT}}\cos(\beta_{VT}-\sigma)\sin(\alpha_{HT}-i_{HT}) - C_{Y_{VT}}\sin(\beta_{VT}-\sigma)\sin(\alpha_{HT}-i_{HT})\right]$$

$$M_{AERO}^{VT} = Z_{AERO}^{VT} (X_{CG}-X_{VT}) + X_{AERO}^{VT} (Z_{VT}-Z_{CG})$$

$$N_{AERO}^{VT} = -Y_{AERO}^{VT} (X_{CG}-X_{VT})$$

$$L_{AERO}^{VT} = - Y_{AERO}^{VT} (Z_{VT}-Z_{CG})$$

6.5 WING AERODYNAMICS

The treatment of the wing aerodynamics is the most complex of all the components. Because wing flexibility must be represented, each wing panel required a separate treatment. The approach adopted for simulation purposes was first to obtain the aerodynamic forces and moments on the complete wing considered as rigid and uninfluenced by slipstream interference effects. With this data as a basis the effects of elastic deflection were introduced as an increment in the effective angle of attack of each wing panel and the rotor slipstream interference was then calculated. This approach is described in detail below.

6.5.1 BASIC WING AERODYNAMICS

The basic wing lift, drag and pitching moment coefficients for the wing in the presence of the fuselage rotors-off, were calculated using the methods of Reference 1 . This data is applicable to low speed flight. Corrections for Mach number effects are introduced through the Prandtl-Glauert factor $\sqrt{1-M^2}$. Beyond stall angle of attack, the lift, drag and pitching moment curves are extended linearly to $\pm 90°$

angle of attack in order to provide a representation of wing behavior at low transition speeds when wing angles of attack approach 90°. The data was calculated for the complete range of flaperon settings.

The complete wing basic lift, drag and pitching moment data also applies to each individual wing panel provided the data is obtained at the appropriate panel angle of attack. This approximation is acceptable if the angles of attack of each wing panel are not substantially different. This condition is normally fulfilled.

In addition to the above data, the effects of spoiler deflection on panel lift, drag and pitching moment are required. These were estimated using the data of Reference 1 . As can be seen from the equations presented in Appendix E the spoiler effectiveness is strongly dependent upon flaperon deflection, a result of the spoilers being slot-lip spoilers.

6.5.2 ROTOR SLIPSTREAM INTERFERENCE

Before the basic wing aerodynamic data can be utilized in the calculation of the wing forces, the effects of the rotor slipstream must be calculated. The calculation procedure presented here has been developed and used at Boeing for some years, and gives acceptable agreement with wind tunnel test data on a wide variety of both tilt rotor and tilt wing configurations.

The method uses momentum theory to obtain the direction and

speed of the rotor slipstream in the neighborhood of the wing. From this the effective angle of attack of that part of the wing that is immersed in the slipstream is calculated. The lift, drag and pitching moment on the wing are then calculated for this angle of attack as if the entire wing were immersed. The area of the wing immersed in the slipstream is now computed and, using the ratio of the immersed to total wing area, the forces acting on the immersed portion are approximated.

At the angle of attack of the wing outside the slipstream, the wing forces and moments are obtained from the basic wing data as if no slipstream effects were present. These forces are then scaled by the ratio of unimmersed to total wing areas to obtain approximately the forces acting on the unimmersed wing. The sum of the approximations to immersed and unimmersed wing forces is now formed. This sum is then multiplied by a correction factor to obtain the final forces.

This correction factor is obtained from a consideration of the mass flows associated with the rotor-wing combination. In the following outline of the method only one rotor is considered.

From the following sketch, which shows the forces acting on the rotor, the inclination of

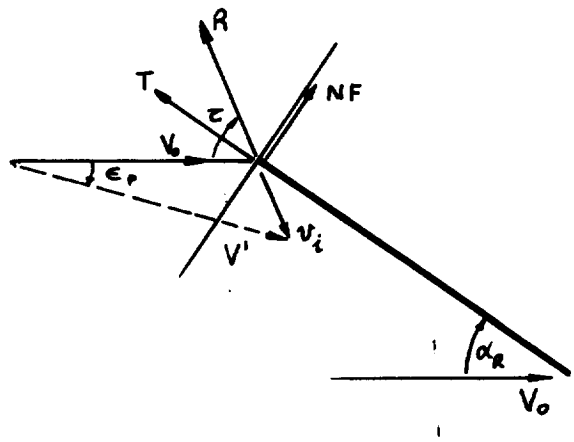

the resultant force on the rotor to the freestream direction is given by

$$\tau_R = \alpha_R + \mathrm{Tan}^{-1}\left(\frac{NF}{T}\right)$$

The resultant force on the rotor is

$$R = \sqrt{T^2 + NF^2 + SF^2}$$

where T, NF and SF are the thrust, normal force and sideforce, respectively.

The mass flow through the disc is

$$m = \rho\ A\ V'$$

where A is the disc area and V' is obtained from the induced velocity triangle at the disc plane.

$$V' = \sqrt{(V_o + v_i \cos \tau)^2 + (v_i \sin \tau)^2}$$

The resultant force on the rotor is related to the mass flow by (Glauert's assumption)

$$R = 2m\, v_i = 2\rho A\, V'\, v_i$$

From these equations the following quartic equation is obtained for the induced velocity at the disc.

$$v_*^4 + 2V_* v_*^3 \cos\tau + v_*^2 V_*^2 = 1$$

where the nondimensional notations

$$v_* = \frac{v_i}{\sqrt{\frac{R}{2\rho A}}} \qquad V_* = \frac{V_o}{\sqrt{\frac{R}{2\rho A}}}$$

have been introduced.

This equation is then solved for v_* and the direction of the slipstream just behind the rotor disc is calculated from

$$\varepsilon_p = \mathrm{Tan}^{-1}\left[\frac{v_* \sin\tau}{v_* \cos\tau + V_*}\right]$$

The rotor thrust coefficient C_{T_s} is defined as

$$C_{T_s} = \frac{T}{\left(q + \frac{T}{A}\right)A}$$

NOTE: Because the rotor diameter to wing chord is large the slipstream is considered to be uncontracted in the vicinity of the wing.

with $T = R\cos(\tau - \alpha_R)$

and $q = \frac{1}{2}\rho V^2 = \frac{1}{4} V_*^2 R$

then $C_{T_s} = \dfrac{\cos(\tau - \alpha_R)}{\cos(\tau - \alpha_R) + \frac{V_*^2}{4}}$

The aspect ratio of the slipstream-immersed wing area is given by

$$AR_i = \frac{S_i}{c^2}$$

where S_i is the immersed area calculated by the method described in Appendix D, and c is the wing chord.

The lift on the wing, if the slipstream were absent, is obtained by calculating the effective angle of attack of the wing outside the slipstream from

$$\alpha_o = \sin^{-1}\left[\frac{wW}{\sqrt{u_w^2+w_W^2}}\right] + \theta_t$$

where w_W, u_w are the velocites at the wing aerodynamic center and θ_t is the elastic twist at the point. The lift coefficient (C_L^*) for this angle of attack is obtained from the aerodynamic data for the appropriate flaperon/spoiler deflection.

Similarly the lift (C_L'') and drag (C_D'') coefficients of the wing in the slipstream (assuming wing is completely immersed) are obtained from the aerodynamic data at the angle of attack

$$\alpha_s = \alpha_o - \varepsilon$$

The total lift coefficient of the wing with slipstream is therefore

$$C_{L_s} = K_A'\left[\frac{S_i}{S}\,(C_L''\cos\varepsilon - C_D''\sin\varepsilon) + C_L^*\,(1-C_{T_s})\,(1-\frac{S_i}{S})\right]$$

where

$$C_{L_s} = \frac{L}{q_s S_w}$$

in which q_s is the nominal slipstream dynamic pressure, defined by $q_s = q + \frac{T}{A}$

The factor K_A' is a correction factor to account for the fact that the lift-sharing between the immersed and unimmersed portions

of the wing is not simply proportional to the respective areas.

From considerations of the mass flows associated with the wing-rotor combination the factor K_A' was obtained in the form

$$K_A' = \frac{V_* + \frac{C_{L_{\alpha i}}}{C_{L_\alpha}} v_*}{V_* + v_*}$$

where, from wing theory,

$$\frac{C_{L_{\alpha i}}}{C_{L_\alpha}} = \frac{1}{1 + \frac{C_{L_\alpha}}{\pi}\left[\frac{1}{AR_i} - \frac{1}{AR}\right]}$$

The drag and pitching moments for the wing with slipstream are obtained similarly and are given by:

$$C_{D_S} = K_A'\left\{\frac{S_i}{S}\left(C_L'' \sin\varepsilon + C_D'' \cos\varepsilon\right) + C_D^* \left(1-C_{T_S}\right)\left(1-\frac{S_i}{S}\right)\right\}$$

$$C_{M_S} = K_A'\left\{\frac{S_i}{S} C_M'' + C_M^* \left(1-C_{T_S}\right)\left(1-\frac{S_i}{S}\right)\right\}$$

The rolling moment and yawing moment coefficients for the wing are given by

$$C_{\mathcal{L}S} = \left(K_{20} + K_{21}\bar{C}_L\right)\left(1-\bar{C}_{T_S}\right)\beta_F + \bar{Y}_{AC}\left(\frac{1-C_{T_S}}{2b_W}\right)\left(C^*_{L_{LW}} - C^*_{L_{RW}}\right)$$

$$+ \Delta C_{\mathcal{L}S_{POWER}}$$

$$C_{\eta S} = K_{22}\bar{C}_L^{\,2}\left(1-C_{T_S}\right)\beta_F + \bar{Y}_{AC}\frac{\left(1-C_{T_S}\right)}{2b_W}\left(C^*_{D_{RW}} - C^*_{D_{LW}}\right)$$

$$+\Delta C_{\eta S_{POWER}}$$

where the increment in rolling moment due to power is

$$\Delta C_{\mathcal{L}S_{POWER}} = \frac{1}{4}\left\{\left[C_{L_{S_{LW}}} - \left(1-\bar{C}_{T_S}\right)C^*_{L_{LW}}\right]\left[1-\frac{1}{2}\left(\frac{S_i}{S}\right)_{LW}\right] - \left[C_{L_{S_{RW}}} - \left(1-\bar{C}_{T_S}\right)C^*_{L_{RW}}\right]\left[1-\frac{1}{2}\left(\frac{S_i}{S}\right)_{RW}\right]\right\}$$

and the increment in yawing moment is

$$\Delta C_{\eta_{S_{POWER}}} = \frac{1}{4}\left\{\left[C_{D_{S_{RW}}} - (1-\bar{C}_{T_S})C^*_{D_{RW}}\right]\left[1-\frac{1}{2}\left(\frac{S_i}{S}\right)_{RW}\right]\right.$$

$$\left. - \left[C_{D_{S_{LW}}} - (1-\bar{C}_{T_S})C^*_{D_{LW}}\right]\left[1-\frac{1}{2}\left(\frac{S_i}{S}\right)_{LW}\right]\right.$$

Figure 6.2 shows a correlation between the wing-in-slipstream method described above and experimental results for the Boeing Model 160 tilt rotor aircraft. As may be seen the simple treatment gives acceptable predictions of wing forces and moments.

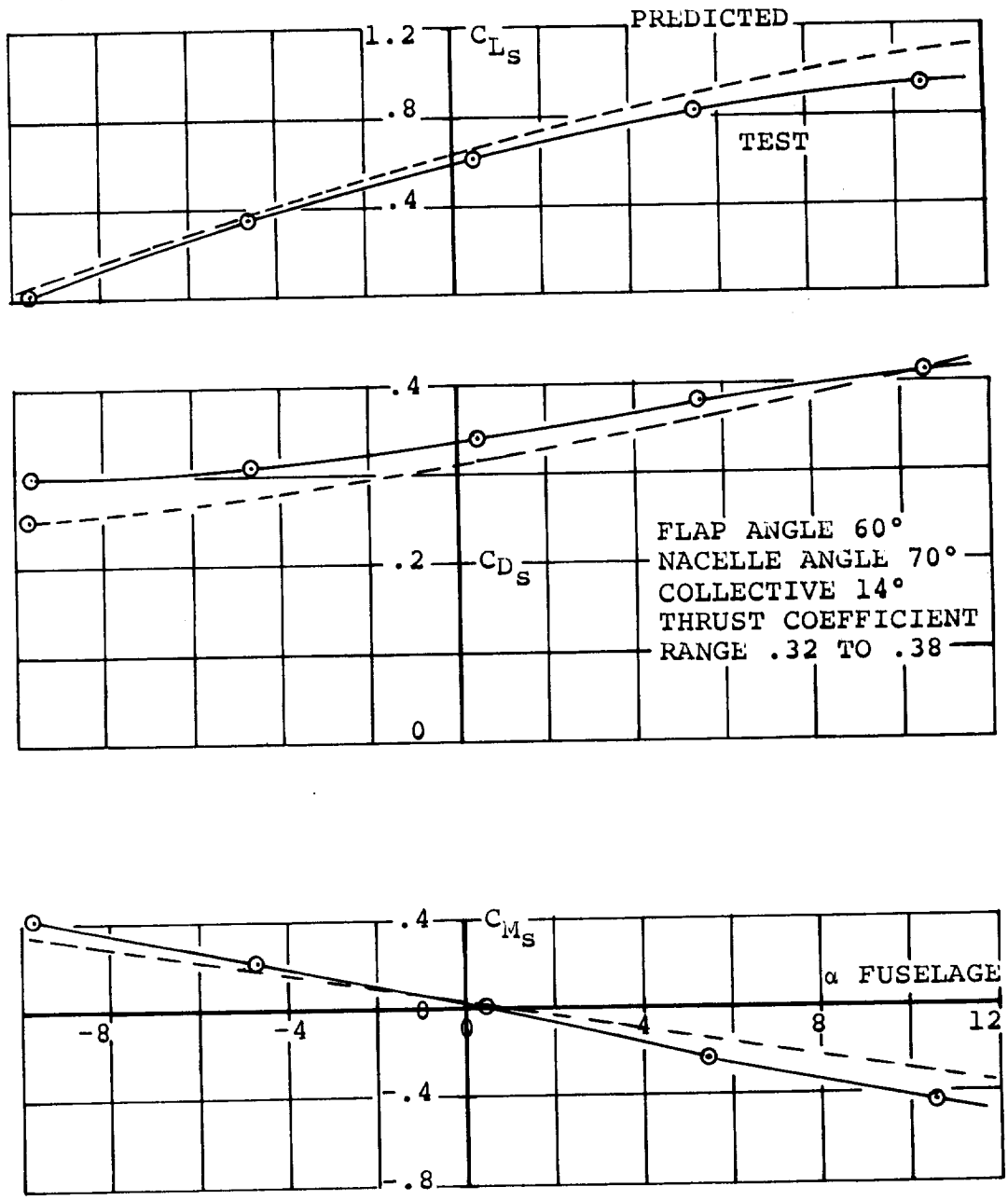

Figure 6.2. Correlation of Theory with Test for Predictions of Slipstream Forces and Moments

7.0 ROTOR AERODYNAMICS

The rotor aerodynamics as used in the mathematical model are described in this section. Also presented are the methods used to compute the rotor aerodynamics, a discussion on wing upwash as it effects the rotor, and a description of the technique used to account for rotor on rotor interference in skewed flight. In addition, correlation of the methods described in this section with test data for soft-in-plane hingeless rotors are presented. Calculation of the Model 222 rotor forces and moments was not practicable because of the complexity and size of the programs required to represent the lag-flap coupling effects of the rotor. In this mathematical model, the rotor forces and moments are input from a series of curve plot fit equations. These equations were generated by computing rotor data using the computer programs discussed in Section 7.2, and then a least squares curve fit program was used to obtain the curve fit equations. The rotor forces and moments used in the mathematical model include the six basic forces and moments (thrust, power, normal force, side force, pitching moment, yawing moment), hub pitching and yawing moments due to aircraft pitch and yaw rate, and changes to the six basic forces and moments due to cyclic pitch application.

7.1 FORMAT AND RANGE OF DATA

Rotor forces and moments are functions of thirteen variables. In order to reduce the size of the data bank, these variables were combined and non-dimensionalized. Each rotor force and

moment can be written as:

$$F = f(V, V_t, \theta_{0.75} \text{ or } T, \alpha, \beta, P, Q, R, A_1, B_1, P_N^R, Q_N^R, R_N^R) \quad (7\text{-}1)$$

where V = Forward speed

V_t = Rotor tip speed

$\theta_{0.75}$ = Collective pitch at the .75 radius

T = Rotor thrust

α = Rotor angle of attack

β = Rotor sideslip angle

P = Body axis roll rate

Q = Body axis pitch rate

R = Body axis yaw rate

A_1 = Longitudinal cyclic pitch

B_1 = Lateral cyclic pitch

P_N^R = Rotor wind axis roll rate

Q_N^R = Rotor wind axis pitch rate

R_N^R = Rotor wind axis yaw rate

Forward speed and tip speed were combined to form rotor advance ratio and collective pitch or thrust were retained. Rotor angles of attack and sideslip and body axis roll, pitch and yaw rates were combined into a resultant angle of attack. Longitudinal and lateral cyclic pitch angles are retained. By combining the thirteen variables in this manner, Equation 7-1 can be expressed as:

$$F = f(\mu, \theta_{.75} \text{ or } C_T, \alpha_R) + [\Delta F = f(A_1, B_1)] + [\Delta F = f(P_N^R, Q_N^R, R_N^R)] \quad (7\text{-}2)$$

where μ = rotor advance ratio

α_R = rotor resultant angle of attack

By using this functional relationship, basic rotor forces and moments can be written as functions of three variables plus increments due to cyclic pitch control application and wind axis pitch roll and yaw rates at the rotor hub. This is the format used in the mathematical model. In addition, the rotor forces and moments are non-dimensionalized by dividing forces by $(\rho \pi R^2 V_t^2)$, moments by $(\rho \pi R^2 V_t^2 R)$, and power by $(\rho \pi R^2 V_t^3)$.

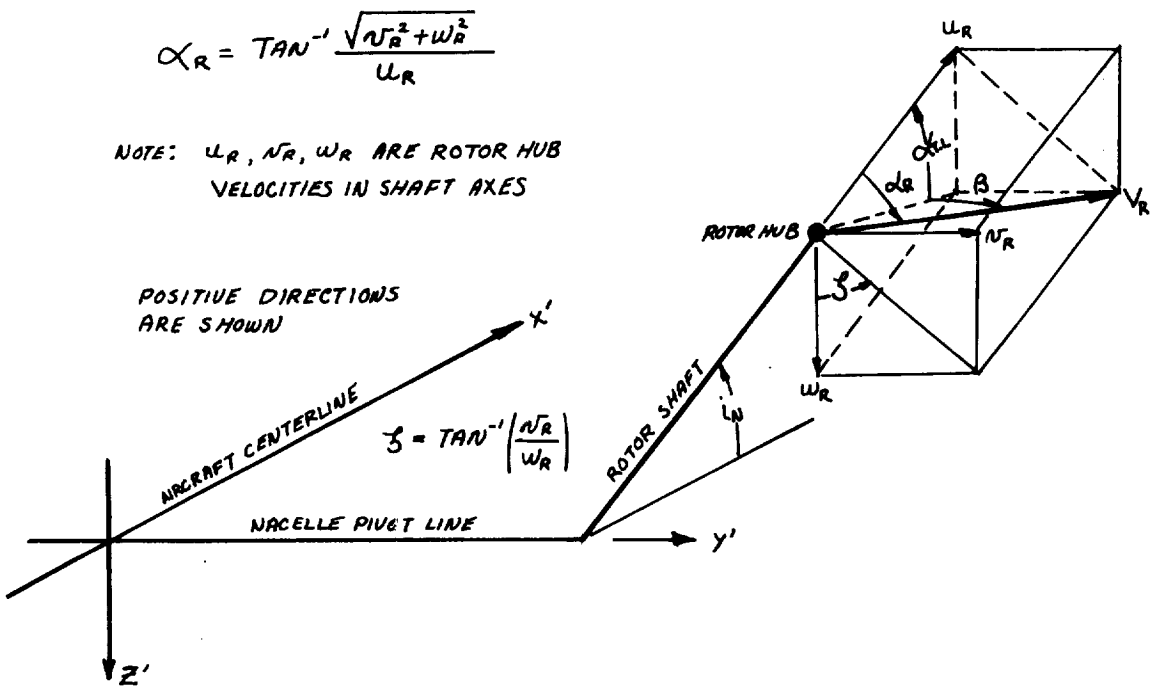

The above sketch shows a rotor under condition of combined angle of attack ($\alpha_{T.L.}$) and sideslip (β). The resultant angle of attack (α_R) is the angle between the "u_R" component of velocity at the rotor hub and the total velocity (V_R) at the hub. The velocity components that define this resultant angle are the rotor hub velocities resolved to shaft axes and

derived in Appendix C. They include body axes pitch, roll and yaw rates. Other functional relationships that define the rotor resultant angle of attack are shown in Appendix D. Also shown on the sketch is the rotor sideslip angle (ζ). This angle represents the inclination of the plane containing the resultant velocity. Rotor wind axis forces and moments are defined relative to this plane. Since the resultant angle is defined from 0 through 180° the inclination of the rotor sideslip angle (ζ) determines the signs of the rotor forces and moments when they are resolved back to body axes.

After the functional format for the rotor data was established, the ranges of the variables were established. Discrete speeds and rotor rpm conditions were selected. A range of rotor resolved angles of attack and thrust levels were selected at each combination. These conditions were carefully selected to cover the total operating envelope of the Model 222. The ranges of the rotor data are shown in Table 7.1.

7.2 PROGRAMS USED TO COMPUTE ROTOR DATA

Rotor data used in the mathematical model were predicted from Boeing-developed computer programs. Hover and cruise performance (thrust-power) were obtained from a propeller performance analysis computer program (B-92). This analysis establishes a radial distribution of induced velocity based on a prescribed wake contraction schedule to calculate rotor induced and total power coefficients at specified thrust or

TABLE 7.1 RANGE OF ROTOR DATA

Total Velocity (V) ~ KTS	Rotor Speed (rpm)	Resultant Angle of Attack Range (α_R) ~ deg	Rotor Thrust (T) ~ Lb
0	551	0 → 180°	500 → 7000
45	551	0 → 180°	500 → 7000
60	551	0 → 180°	2000 → 6500
90	551	0 → 180°	2000 → 6500
120	400	0 → 45°	500 → 2600
142	386	0 → 20°	-700 → 3500
160	386	0 → 20°	-500 → 4750
200	386	0 → 20°	-500 → 6000
240	386	0 → 20°	0 → 3700
280	386	0 → 20°	0 → 3800
320	386	0 → 20°	0 → 4800
360	386	0 → 20°	0 → 3500

thrust coefficients. The radial airload distribution is also defined. A detailed description of this program is given in Reference 4.

Transition performance data, in-plane forces and moments and cyclic pitch effectiveness throughout the flight envelope were estimated using computer program D88 (Reference 5).

The D-88 computer program is an aeroelastic analysis for the study of aerodynamic, dynamic, and structural characteristics of current and advanced rotor and prop/rotor concepts. Airloads are calculated considering the effects of section geometry, compressibility and non-uniform inflow. An iterative process between the airloads and coupled flap-pitch dynamic response establishes blade accelerations which in turn are used to compute hub loads and rotor aerodynamic performance.

The rotor analysis is based on the idealization of a continuous, elastic, non-uniform beam into one composed of lumped discrete masses connected by weightless elastic sections. Associated with each mass is a flat rigid airfoil segment, with the mass center located at the midpoint. The aerodynamic loads generated by each segment are assumed to act at the mass center.

The effects of non-uniform inflow are included by considering a discontinuous constant circulation along part of the rotor blade, of sufficient strength to maintain the desired thrust. A vortex is assumed to trail from the inboard and outboard

circulation discontinuities, of equal and opposite strength. By summing the effects of all the vortices on a given blade around the azimuth the non-uniform induced flow for each blade at every dynamic bay is determined. Total velocity at each point in the blade is computed by vector addition of the velocity components.

The local angle of attack of each blade element is then computed at every blade station for specified azimuth angles and the aerodynamic coefficients (C_L, C_D, C_M) are looked up from tables of coefficients as a function of Mach number. From these coefficients the airloads are computed. The vertical, tangential and pitching aerodynamic loads are then harmonically analyzed into 10 harmonics and act as the forcing functions for each blade section.

To obtain a thrust match, an iteration process is performed on the airloads until a steady collective pitch angle is obtained which corresponds to the desired thrust. To perform the dynamic analysis, the lumped mass and elastic bay elements of the idealized rotor blade are transformed into a sequence of transfer matrix products, by means of the Associated Matrix Method. This method replaces each blade element by an equivalent "transfer matrix" that transfers the dynamic system variables, shear, moment, deflection and slope, inboard across the element. Therefore, multiplying the system variables outboard of the element by the transfer matrix gives the variables

inboard of the element. The whole mass, elastic blade idealization is then reduced to a sequence of transfer matrix products.

In-plane elastic rotor derivatives (both static and rate) in axial flow were calculated using computer program C-41 (Reference 2).

Dynamic derivatives for a rotor system are defined taking account of the modal behavior of the blades in two general flap-lag modes. These derivatives are given as matrix arrays of the partial derivatives of rotor forces with respect to unit amounts of elementary linear and angular motions of the hub and unit displacements in the blade modes. These effects are separated into inertial, damping and gyroscopic, and stiffness effects. Thus an element m_{ij} in the inertia derivative matrix is $\partial F_i/\partial g_j$, i.e., the force in the i direction due to unit acceleration in the j direction, all other quantities being held constant.

Similarly element d_{ij} of the damping derivative matrix will represent $\partial F_i/\partial g_j$ which might for appropriate (ij) be the aggregate gyroscopic and aerodynamic pitching moment due to unit velocity of yaw.

Similarly the elements of the stiffness derivative matrix represent such quantities as the normal force due to unit amount of shaft angle of attack, and generalized forces in the blade freedoms due to unit displacements in each of the other freedoms.

The matrices are of order 15 x 15 maximum. The first 6 rows and columns refer to forces in the vertical, lateral and axial directions and moments in the yaw pitch and roll directions due to unit acceleration, rates and displacements in each of the directions. These are the only numbers present if the rotor blades are assumed rigid. Three additional rows and columns are added for each blade mode considered. A limit of two blade modes is currently applied. The final three rows are for cyclic and collective pitch.

These derivative matrices provide a ready means for evaluating the contribution of the rotor to the coefficients of the aircraft dynamic equations. This program also provides the in-plane elastic rotor derivatives.

Elastic rotor rate derivatives in transition were estimated using computer program C-49 (Reference 3). This program evaluates hub force and moment derivatives for shaft angles varying from cruise to hover conditions. Dynamic derivatives suitable for transient analysis are computed. The dynamic derivatives are the partial differentials of hub forces and moments with respect to hub positions rates and accelerations and include inertial and gyroscopic effects as well as aerodynamic effects. For the static derivatives a constant shaft angle to the relative wind is assumed and the resulting blade motion computed. The effects of blade aerodynamic and inertia and gyroscopic forces are combined to give the hub derivatives

due to constant shaft angle and constant rate of change of shaft angle.

The output rotor forces and moments of these programs are in rotor wind axis.

7.3 ROTOR SIGN CONVENTION

The rotor sign conventions as used in this mathematical model are shown in Figure 7.1 . Positive directions of all rotor forces, moments and cyclic pitch angles are noted.

7.4 CURVE FIT FORMAT

The rotor data generated for the Model 222 mathematical model was curve fit at each advance ratio. A curve fit which is third order in angle of attack and second order in thrust coefficient or collective pitch was found to yield the most accurate results. The curve fits have the following general form.

$$C_F = \sum_{v=0}^{2} \sum_{u=0}^{3} \left[A_{(u+4v)} \alpha^u C_T^v \right]$$

The double summation is expanded starting with the inner quantity i.e. set v and expand u from 0 to 3. Repeat until the summations are satisfied. The expansion of the generalized form is

$$\begin{aligned} C_F = {} & A_0 + A_1\alpha + A_2\alpha^2 + A_3\alpha^3 \\ & + (A_4 + A_5\alpha + A_6\alpha^2 + A_7\alpha^3)C_T \\ & + (A_8 + A_9\alpha + A_{10}\alpha^2 + A_{11}\alpha^3)C_T^2 \end{aligned}$$

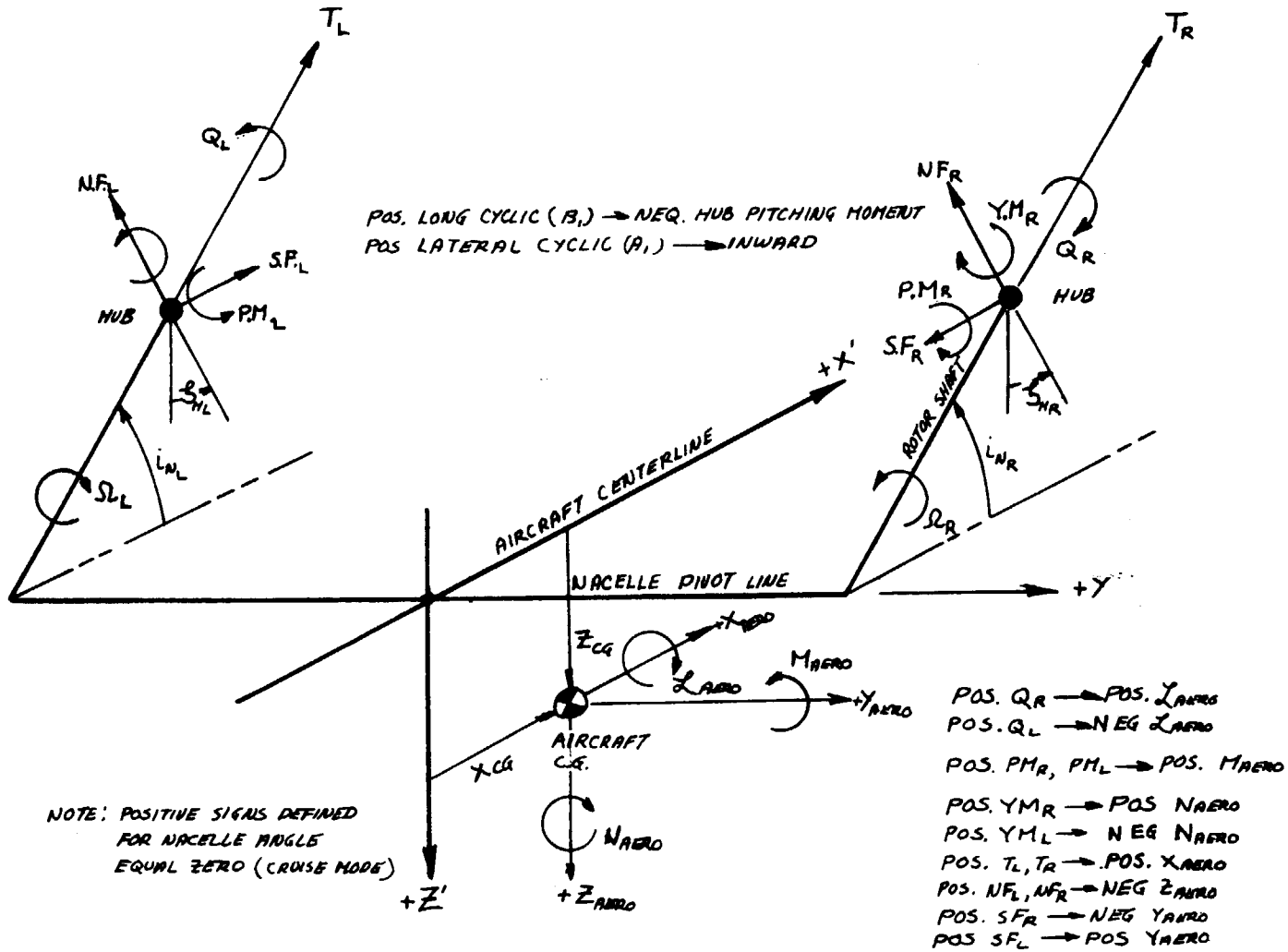

Figure 7.1. Rotor Sign Conventions

All of the rotor forces and moments are curve fit in this format. The coefficients of the equation were obtained from a least squares fit of the computed rotor data. The criteria used to determine the final coefficients was to have not more than a 5% difference between the curve fit equations and the computed rotor data at the nominal aircraft trim condition. In general this criteria was met.

7.5 EFFECT OF WING UPWASH ON ROTOR PERFORMANCE

The rotor operates in the upwash field associated with the lifting wing. Thus, the rotor behaves as if it were operating at an increased angle of attack. The effective upwash angles were calculated using lifting line theory. In the mathematical model the upwash angles are input in the form of a table of upwash angles as a function of wing lift coefficient, and nacelle incidence angle.

7.6 ROTOR/ROTOR INTERFERENCE

In order to obtain the correct lateral stick gradient when flying sidewards or at large sideslip angles, a calculation for rotor-on-rotor interference is included in the mathematical model. In Reference 11, the wake skew angle is defined as in the sketch below for a lifting rotor.

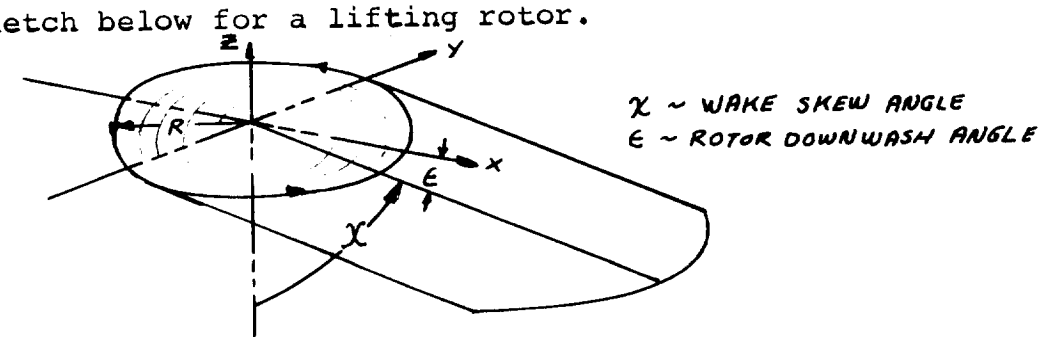

Also presented in this reference are contour charts of the normal component of induced velocity near a rotor with a triangular disc loading for six different skew angles in the range from 0° to 90°. For the Model 222 geometry, a curve of normal induced velocity/average induced velocity as a function of skew angle was obtained. For the case of the Model 222 flying sidewards, the downwind rotor is assumed to be operating at a lower angle of attack than the upwind rotor, and will therefore generate different forces and moments. The downwash angle is calculated from the normal component of induced velocity. The rotor/rotor interference is washed out as a function of nacelle angle and sideslip angle such that there is no interference in the high transition speed and cruise modes. The equations derived are shown in Appendix E , under the rotor/rotor interference section.

7.7 ISOLATED ROTOR AERODYNAMICS

The equations utilized to represent the isolated rotor aerodynamics are presented below. These equations are then resolved into body axis forces and moments to be used in the equation of motion.

7.7.1 Thrust [1]

$$C_{T_R} = [C_{T_{ORR}} \cos A_{1C_R} \cos B_{1C_R}]$$

where $C_{T_{ORR}} = \sum_{v=0}^{2} \sum_{u=0}^{3} [A_{T_{(u+4v)}} \alpha_{RR}^{u} \theta_{0.75}^{v}]$

[1] In the equations that follow, subscript RR denotes right rotor. The left rotor is identical provided due regard is paid to sign convention and azimuth reference.

$A_{T_{(u+4v)}}$ = function of $\mu \left(\mu = \frac{V}{V_t}\right)$ and is obtained from Appendix F

A_{1C_R} = Lateral cyclic pitch

B_{1C_R} = Longitudinal cyclic pitch

$\theta_{0.75}$ = Blade pitch angle at 75% blade radius

$$\alpha_{RR} = \mathrm{Tan}^{-1}\left\{\frac{\sqrt{v_{RR}^2 + (w_{RR}+u_{RR}\varepsilon_{wRR})^2}}{u_{RR}}\right\} + \varepsilon i_{LR}$$

u_{RR}, v_{RR}, w_{RR} = rotor shaft axis velocity components

$\varepsilon_{w_{RR}}$ = Wing upwash angle

εi_{LR} = Rotor/rotor interference angle

The effect of close proximity to the ground is accounted for by use of the following relationships

$$C_{T_{RR}} = C'_{T_{RR}} \left(\frac{T_{IGE}}{T_{OGE}}\right)_{RR}$$

where $\left(\frac{T_{IGE}}{T_{OGE}}\right)$ is defined in Section 10 under the discussion of ground effect.

7.7.2 <u>Power</u>

$$C_{P_{RR}} = C_{P_{O_{RR}}} = \sum_{v=0}^{2} \sum_{u=0}^{3} \left[A_p(u+4v)\,\alpha_{RR}^{u}\, C'^{v}_{T_{RR}}\right]$$

where: $A_p(u+4v)$ may be obtained from Appendix F as a function of μ_{RR}

7.7.3 <u>Normal Force</u>

$$C_{NF_{RR}} = C_{NF_{O_{RR}}} + \frac{dC_{NF_{RR}}}{dA_{1C_R}} A_{1C_R} + \frac{dC_{NF_{RR}}}{dB_{1C_R}} B_{1C_R}$$

where: $C_{NF_{O_{RR}}} = \sum_{v=0}^{2} \sum_{u=0}^{3} \left[A_{NF}(u+4v)\,\alpha_{RR}^{u}\, C'^{v}_{T_{RR}}\right]$

$A_{NF}(u+4v)$= Function of μ_{RR} and may be obtained from Appendix F.

$$\frac{dC_{NF_{RR}}}{dA_{1C_R}} = D_{NF_1} C_{T_{RR}} + D_{NF_2}\mu_{RR}^2 + D_{NF_3}\mu_{RR} + D_{NF_4}$$

$$\frac{dC_{NF_{RR}}}{dB_{1C_R}} = E_{NF_1} C_{T_{RR}} + E_{NF_2}\mu_{RR}^2 + E_{NF_3}\mu_{RR} + E_{NF_4}$$

The coefficients in the above 2 equations may be obtained from Appendix F.

7.7.4 Side Force

$$C_{SF_{RR}} = C_{SF_{o_{RR}}} + \frac{dC_{SF_{RR}}}{dA_{1C_R}} A_{1C_R} + \frac{dC_{SF_{RR}}}{dB_{1C_R}} B_{1C_R}$$

where: $$C_{SF_{o_{RR}}} = \sum_{v=0}^{2} \sum_{u=0}^{3} \left[A_{SF}(u+4v)\, \alpha_{RR}^{u}\, C_{T'_{RR}}^{v} \right]$$

$A_{SF}(u+4v)$=function of μ_{RR} and may be obtained from Appendix F.

$$\frac{dC_{SF_{RR}}}{dA_{1C_R}} = D_{SF_1} C_{T_{RR}} + D_{SF_2}\mu_{RR}^2 + D_{SF_3}\mu_{RR} + D_{SF_4}$$

$$\frac{dC_{SF_{RR}}}{dB_{1C_R}} = E_{SF_1} C_{T_{RR}} + E_{SF_2}\mu_{RR}^2 + E_{SF_3}\mu_{RR} + E_{SF_4}$$

The coefficients in the above 2 equations may be obtained from Appendix F.

7.7.5 Hub Pitching Moment

$$C_{PM_{RR}} = C_{PM_{o_{RR}}} + \frac{dC_{PM_{RR}}}{dA_{1C_R}} A_{1C_R} + \frac{dC_{PM_{RR}}}{dB_{1C_R}} B_{1C_R} + \frac{dC_{PM_{RR}}}{dQ} Q_{NR}^{R}$$

where: $$C_{PM_{o_{RR}}} = \sum_{v=0}^{2} \sum_{u=0}^{3} \left[A_{PM}(u+4v)\, \alpha_{RR}^{u}\, C_{T_{RR}}'^{v} \right]$$

$A_{PM}(u+4v)$ = function of μ_{RR} and may be obtained from Appendix F.

$$\frac{dC_{PM_{RR}}}{dQ} = \sum_{v=0}^{2} \sum_{u=0}^{3} \left[H_{PM}(u+4v)\, \alpha_{RR}^{u}\, C_{T_{RR}}'^{v} \right]$$

$H_{PM}(u+4v)$ = function of μ_{RR} and may be obtained from Appendix F

$$Q_{NR}^{R} = Q_{NR}^{N} \cos \zeta_{HR} + R_{NR}^{N} \sin \zeta_{HR}$$

$$Q_{NR}^{N} = Q + \dot{i}_{N_R}$$

$$R_{NR}^{N} = -R \cos i_{N_R} - P \sin i_{N_R}$$

ζ_{HR} = right rotor sideslip angle

i_{NR} = right nacelle velocity

i_{NR} = right nacelle angle

$$\frac{dC_{PM_{RR}}}{dA_{1C_R}} = D_{PM_1}\, C_{T_{RR}} + D_{PM_2}\mu^2_{RR} + D_{PM_3}\mu_{RR} + D_{PM_4} \quad (\mu_{RR} \leq .35)$$

$$= D_{PM_1}\, C_{T_{RR}} + D_{PM_5}\mu^2_{RR} + D_{PM_6}\mu_{RR} + D_{PM_7} \quad (\mu_{RR} > .35)$$

$$\frac{dC_{PM_{RR}}}{dB_{1C_R}} = E_{PM_1}\, C_{T_{RR}} + E_{PM_2}\mu^2_{RR} + E_{PM_3}\mu_{RR} + E_{PM_4} \quad (\mu_{RR} \leq .35)$$

$$= E_{PM_1}\, C_{T_{RR}} + E_{PM_5}\mu^2_{RR} + E_{PM_6}\mu_{RR} + E_{PM_7} \quad (\mu_{RR} > .35)$$

Values for the coefficients in the above 2 sets of equations may be found in Appendix F.

7.7.6 Hub Yawing Moment

$$C_{YM_{RR}} = C_{YM_{O_{RR}}} + \frac{dC_{YM_{RR}}}{dA_{1C_R}} A_{1C_R} + \frac{dC_{YM_{RR}}}{dB_{1C_R}} B_{1C_R} + \frac{dC_{YM_{RR}}}{dR} R_{NR}^{R}$$

where: $$C_{YM_{O_{RR}}} = \sum_{v=0}^{2} \sum_{u=0}^{3} \left[A_{YM(u+4v)}\, \alpha_{RR}^{u}\, C_{T_{RR}}'^{v} \right]$$

$A_{YM}(u+4v)$ is a function of μ_{RR} and may be obtained from Appendix F.

$$\frac{dC_{YM_{RR}}}{dR} = \sum_{v=0}^{2} \sum_{u=0}^{3} \left[J_{YM(u+4v)} \alpha_{RR}^{u} C_{T_{RR}}^{\prime\, v} \right]$$

$J_{YM}(u+4v)$ is a function of μ_{RR} and may be obtained from Appendix F.

$$R_{NR}^{R} = R_{NR}^{N} \cos \zeta_{HR} - Q_{NR}^{N} \sin \zeta_{HR}$$

$$R_{NR}^{N} = -R \cos i_{NR} - P \sin i_{NR}$$

$$Q_{NR}^{N} = Q + \dot{i}_{NR}$$

ζ_{HR} = Right rotor sideslip angle

i_{NR} = Right nacelle velocity

i_{NR} = Right nacelle angle

$$\frac{dC_{YM_{RR}}}{dA_{1C_R}} = D_{YM1} C_{T_{RR}} + D_{YM2} \mu^2{}_{RR} + D_{YM3} \mu_{RR} + D_{YM4} (\mu_{RR} \leq .35)$$

$$= D_{YM1} C_T + D_{YM5} \mu_{RR}^2 + D_{YM6} \mu_{RR} + D_{YM7} (\mu_{RR} > .35)$$

$$\frac{dC_{YM_{RR}}}{dB_{1C_R}} = E_{YM1} C_T + E_{YM2} \mu^2{}_{RR} + E_{YM3} \mu_{RR} + E_{YM4} (\mu_{RR} \leq .35)$$

$$= E_{YM1} C_{T_{RR}} + E_{YM5} \mu^2{}_{RR} + E_{YM6} \mu_{RR} + E_{EM7} (\mu_{RR} > .35)$$

Values for the coefficients in the above 2 sets of equations may be found in Appendix F.

Notes: (1) Application of rotor equations for left rotor follow similar format with subscript "RR" changed to "LR".

(2) When solving equations with double summations for values of μ not given in tables, solve equations for the two values of μ closest to the value desired and then interpolate linearly for exact value of μ.

7.8 CORRELATIONS OF ROTOR PREDICTION METHODS WITH TEST DATA

This section presents the results of correlation studies that were conducted to verify the adequacy of the rotor prediction methods used for the Model 222 tilt rotor. In general, prediction of trends is excellent with quite good agreement in absolute magnitudes.

7.8.1 Model 213 Four Blade Hingeless Rotor Correlation

Figure 7.2 presents correlation with rotor derivatives measured on a 1/9 scale dynamically similar model of a tilt/stowed rotor conversion model. In this test the rotor hub forces and moments were carefully measured over a range of RPM in which the lead-lag modal frequency progressed from less than 1 per rev at 900 RPM to values significantly greater than 1 per rev as the rotor was feathered. The measured values confirm the predicted behavior trend and the quantitative correlation is also excellent.

7.8.2 Correlation with Model 222 26-Foot Diameter Rotor Test in NASA-Ames 40 x 80-Foot Tunnel

Figure 7.3 shows the schematic of the windmilling test stand and its instrumentation. Test data were obtained from strain gages mounted on the outer portion of the wing as shown, and calibrated to measure normal force, pitching moment and yawing moment. Comparison with test data was made by calculating the moments about the wing strain gage locations using forces and moments predicted by the C-41 program. The results of this

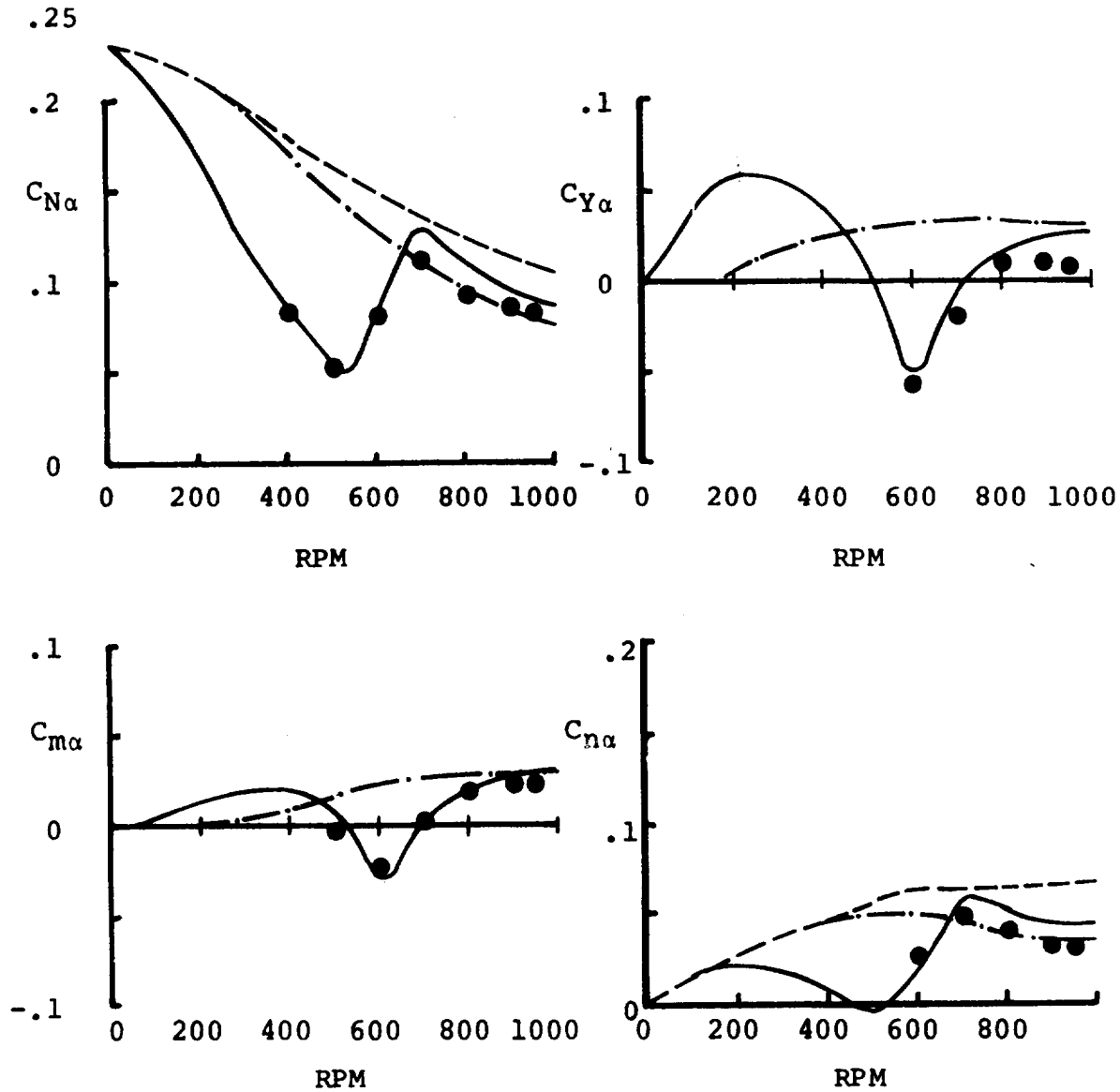

Test Points ●

Theoretical Predictions

— — — — Rigid Blades

—·— Flap Only

——— Flap & Lead Lag

$\frac{dC_L}{d\alpha} = 5.7$

Definitions

Normal Force = $1/2\rho\pi R^2V^2C_{N\alpha}\cdot\alpha$

Side Force = $1/2\rho\pi R^2V^2C_{Y\alpha}\cdot\alpha$

Pitching Moment = $\rho\pi R^3V^2C_{m\alpha}\cdot\alpha$

Yawing Moment = $\rho\pi R^3V^2C_{n\alpha}\cdot\alpha$

Figure 7.2. Model 213 1/9 Scale Conversion Model – 85 Ft/Sec Derivative Variation with RPM

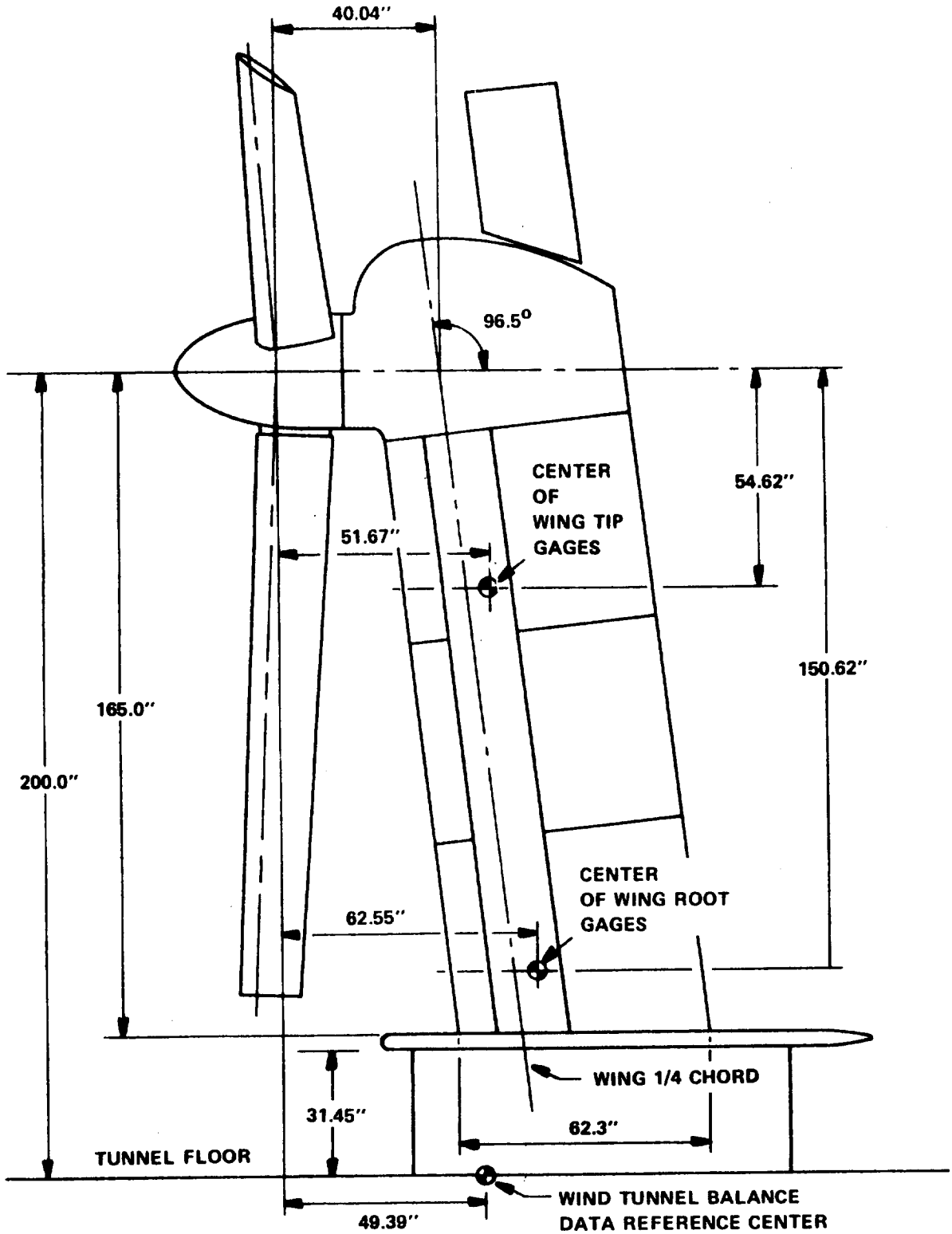

Figure 7.3. 26 Ft. Rotor Test Stand in NASA's 40' x 80' Tunnel

comparison for alpha derivatives are given in Figure 7.4 and for cyclic pitch derivatives in Figures 7.5 and 7.6 .

The analysis did not attempt to account for force and moment contributions from nacelle and wing aerodynamic interference. Nevertheless, quite good correlation is observed. These plots also show the values of derivatives predicted by several other programs. These include D-88 program which accounts for compressible non-linear downwash and L-22 which uses linear airfoil theory and uncoupled flap-lag freedoms. C-49 accounts for unsteady aerodynamics while C-41 uses a linear representation. C-41 and C-49 use a modal representation of blade freedoms (2 coupled flap-lag modes) while D-88 and L-22 make use of a finite element discrete mass representation.

The rotor derivative data was also compared with C-41 using a total unresolved moment approach. Total moments about the center of the wing tip gages and the reference azimuth position (orientation of the moment vector in the rotor disc plane) were calculated from the C-41 hub forces and moments and compared with test results (Figure 7.7). The interesting conclusion which is not apparent from the resolved forces and moments is that the total moment is predicted well but there are slight differences in the reference azimuth position.

7.8.3 Correlation with Model 222 1/4.622 Scale Model Data

The subject model is a dynamically similar version of the M222. The test data presented in Figures 7.8 and 7.9 were taken

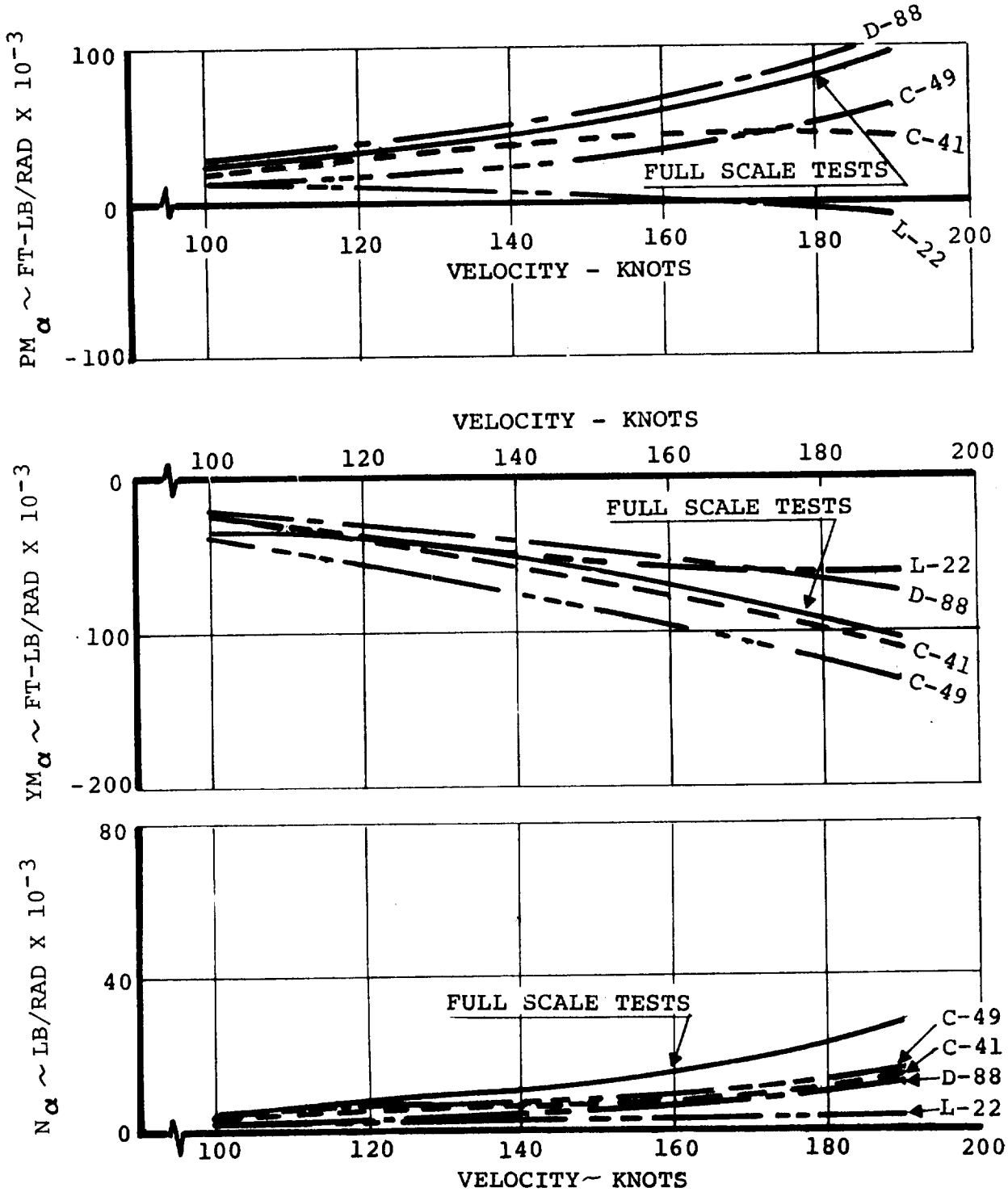

Figure 7.4. Correlation of 26 Ft Rotor Test Data with Various Rotor Derivative Programs

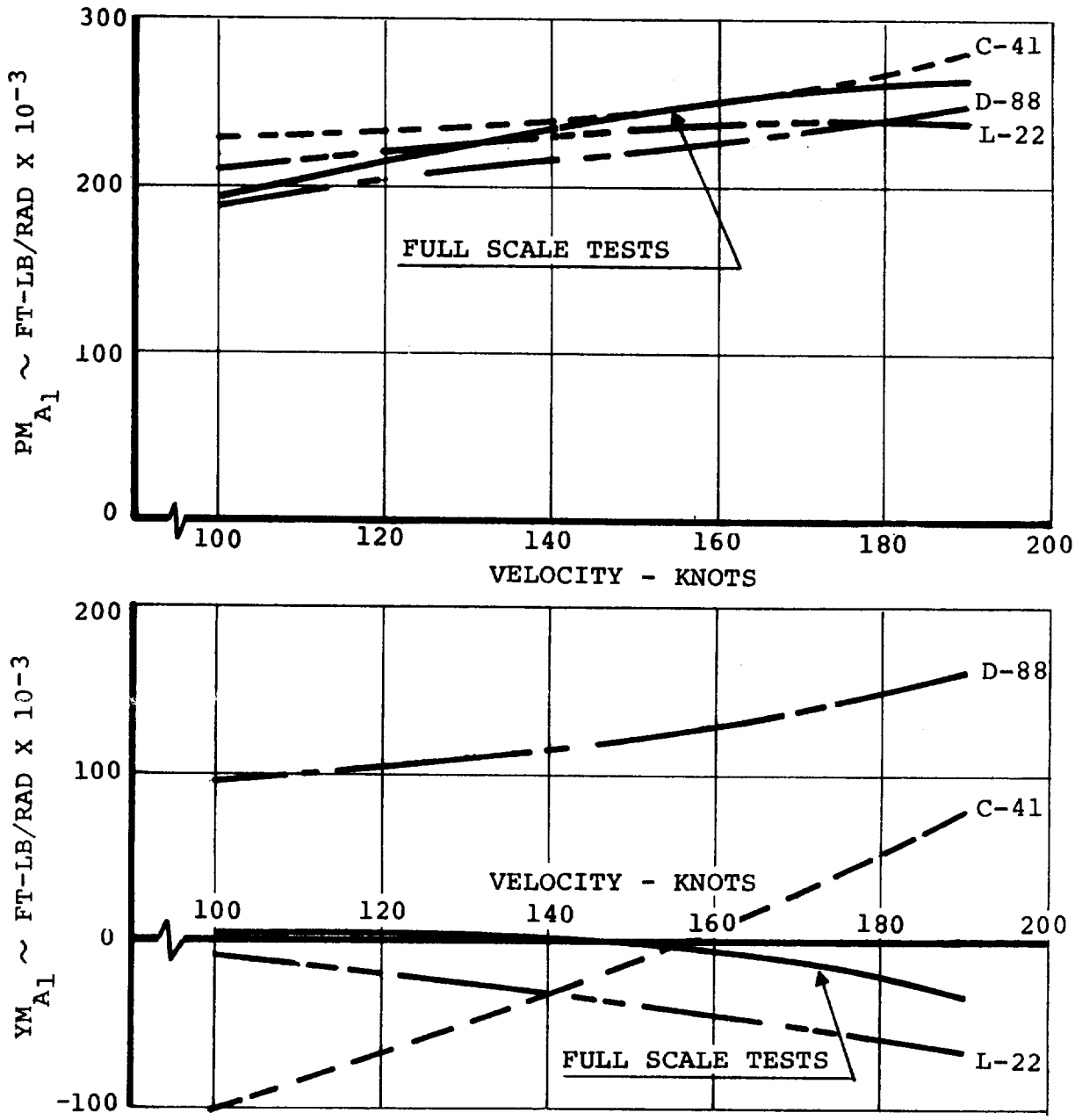

Figure 7.5. Correlation of 26 Ft Rotor Test Data with Various Rotor Derivative Programs — Cyclic Moment Derivatives

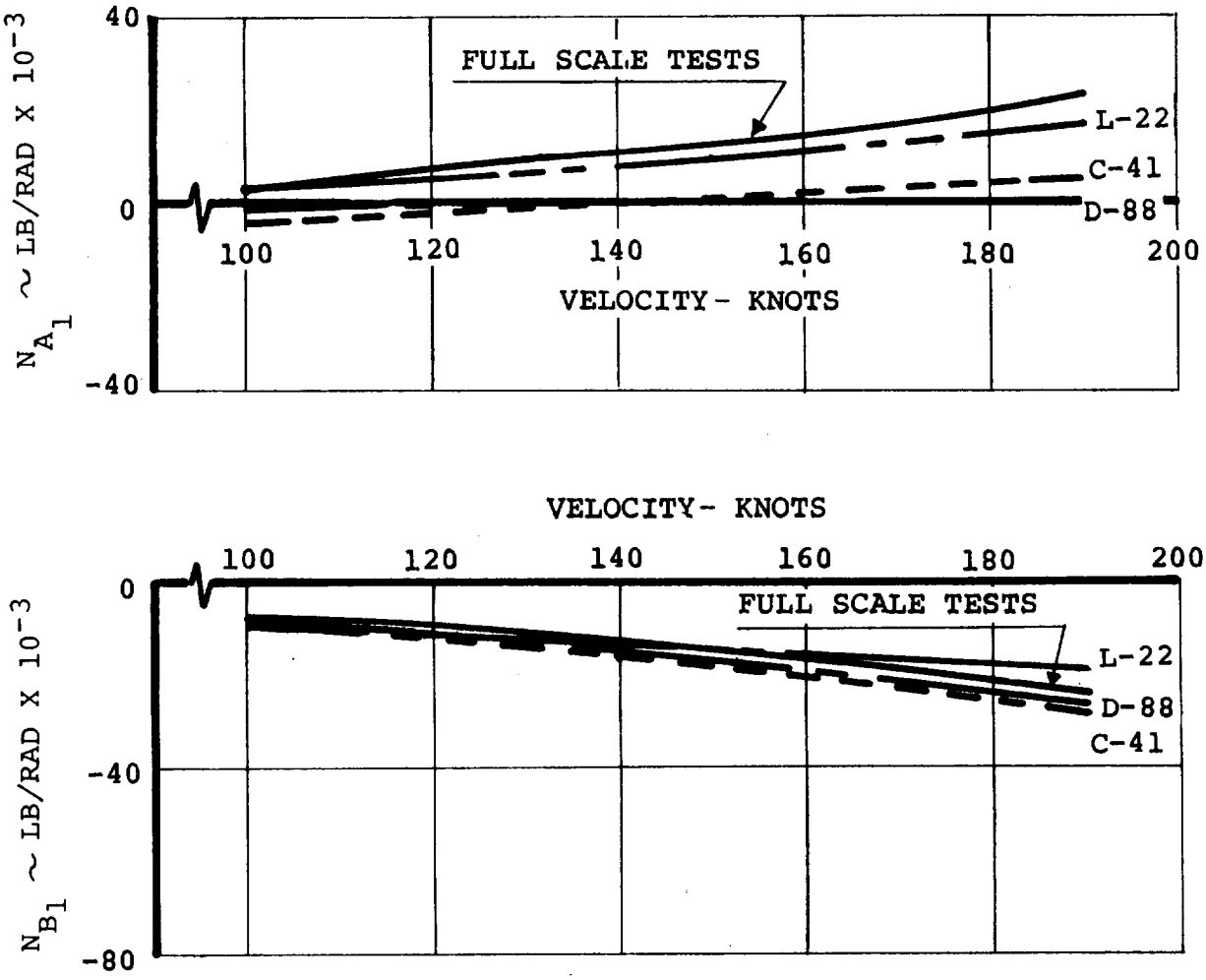

Figure 7.6. Correlation of 26 Ft Rotor Test Data with Various Rotor Derivative Programs — Cyclic Force Derivatives

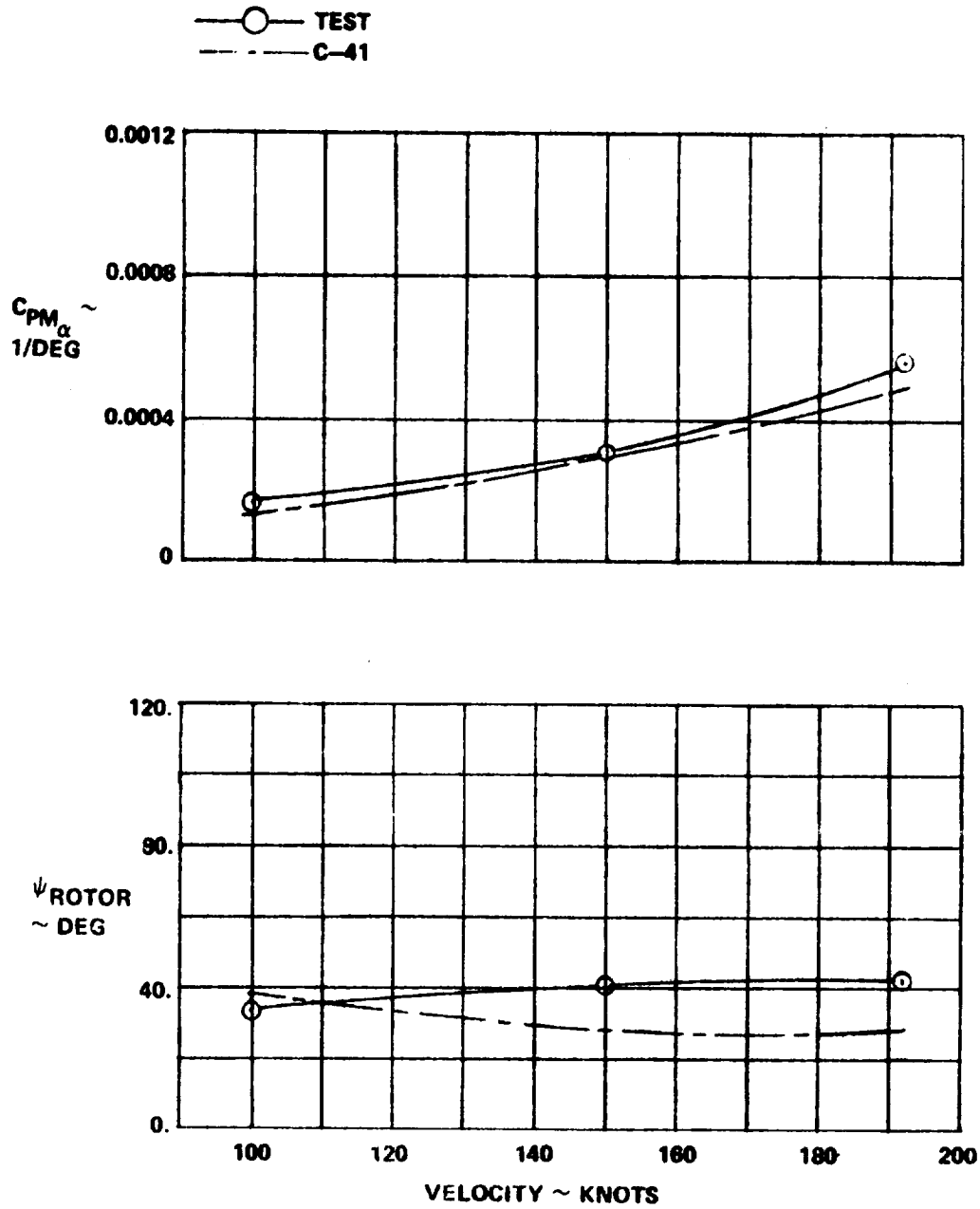

Figure 7.7. Rotor Moment and Azimuth Angle Due to Angle of Attack — Correlation with 26 Ft Rotor Data

with the model mounted on a pedestal in the tunnel. The rotors were given angles of attack to the free stream by pitching the complete model with zero sideslip angle and yawing the model at zero angle of attack. The yawing data contains minimal wing induced flow effects and comparison with the pitch data indicates the importance of induced flow on the rotor forces and moments. Forces and moments were computed for the isolated rotor and it is seen from Figure 7.8 that correlation with test data is excellent when wing induced effects are small; in Figure 7.9 wing effects introduce perceptible shifts which increase with dynamic pressure.

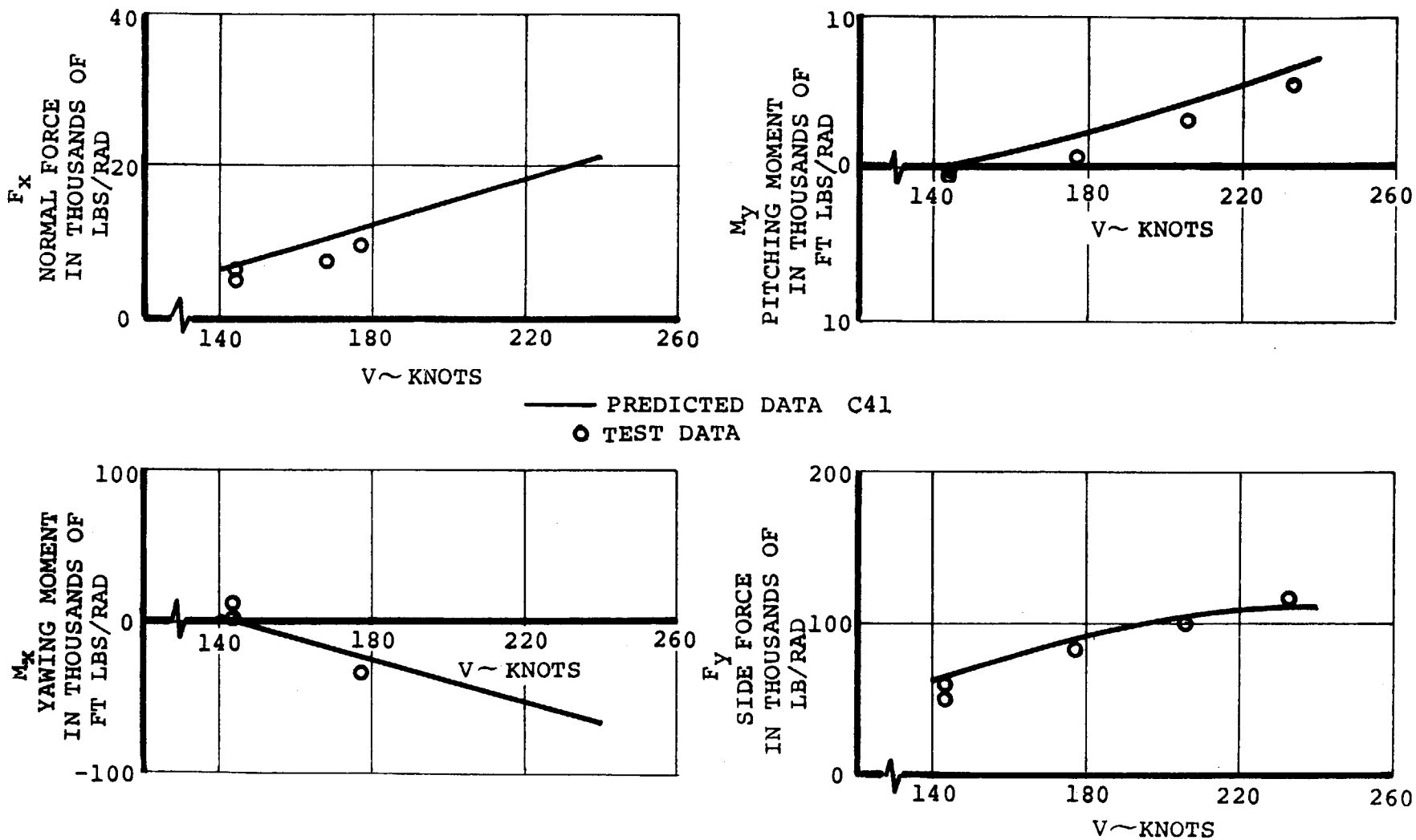

Figure 7.8. Comparison of Calculated and Test Rotor Hub Force and Moment Derivatives for M222 1/4.622 Scale Model (Yaw Sweep) Ω = 386 RPM

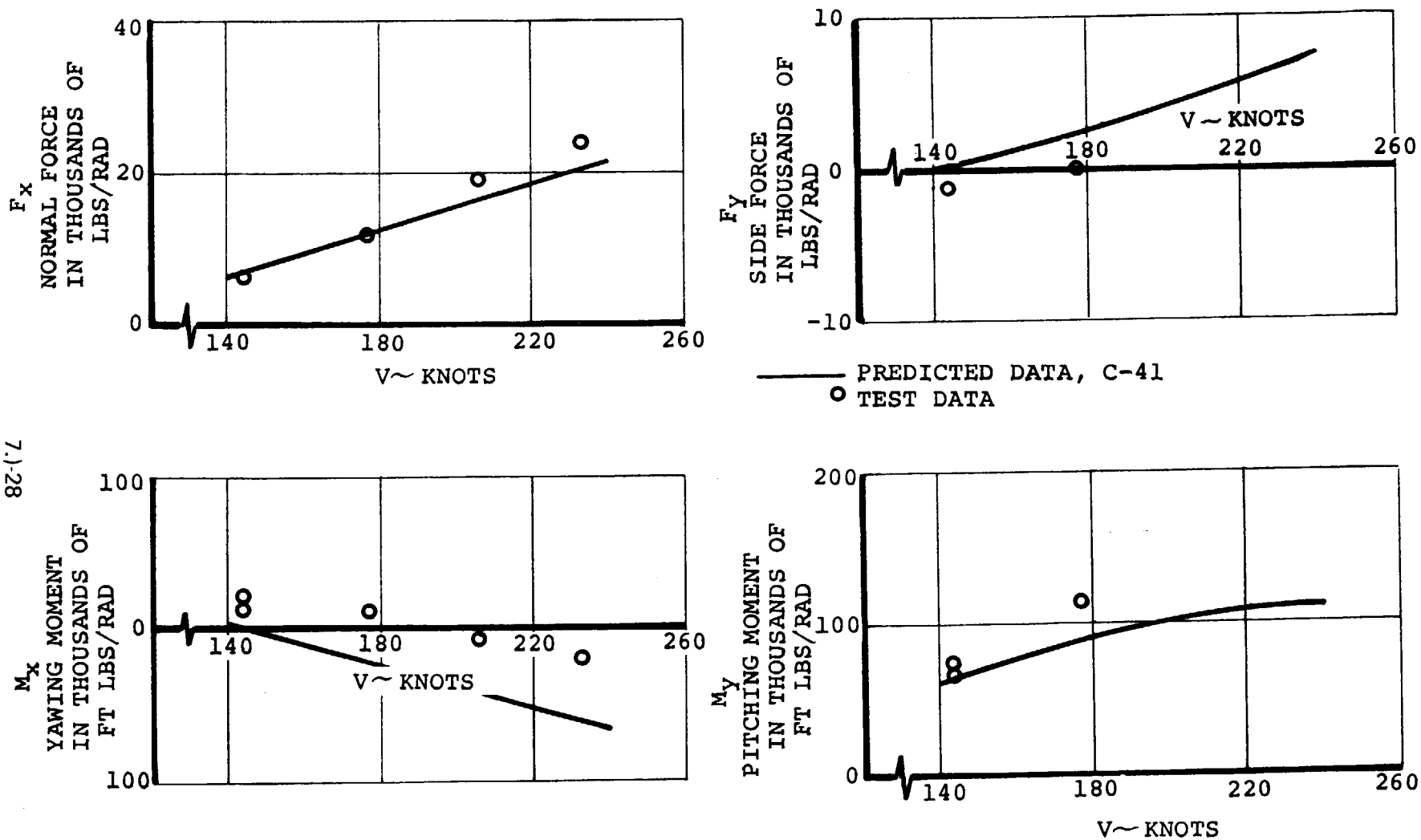

Figure 7.9. Comparison of Calculated and Test Rotor Hub Force and Moment Derivatives for M222 1/4.622 Scale Model (Pitch Sweep) Ω = 386 RPM

8.0 CONTROL SYSTEM DESCRIPTION

This section describes the control system, stability augmentation systems, load alleviation system and thrust management system utilized in the mathematical model. A more complete description is given in Reference 8. .

8.1 CONTROL AERODYNAMIC CONFIGURATION

Control of the Model 222 aircraft is accomplished by utilization of longitudinal cyclic, differential longitudinal cyclic, collective and differential collective pitch, and differential nacelle tilt control in conjunction with the airplane control surfaces. The airplane control surfaces consist of conventional elevator and rudder and a flaperon and spoiler arrangement. The primary controls in each axis for each regime of flight are shown in Table 8.1.

The rotor controls provide a major portion of the control capability from hover through the low transition speed range, but airplane surface controls are operative in all regimes of flight, including hover. The rotor controls are phased out during transition as nacelle incidence decreases, speed increases, and the surface controls become more effective.

8.2 LONGITUDINAL CONTROL

Longitudinal control in hover is provided by longitudinal cyclic pitch. This is phased out through transition as the elevator becomes more effective. The elevator provides longitudinal control in the cruise mode.

TABLE 8.1 FLIGHT CONTROL MIXING

FLIGHT MODE	PRIMARY CONTROLS
Helicopter (Hover)	
Pitch	Longitudinal Cyclic
Roll	Differential Collective
Yaw	Differential Longitudinal Cyclic and Differential Nacelle Tilt
Height Control	Collective/Engine Power
Transition	
Pitch	Longitudinal Cyclic and Elevator
Roll	Differential Collective, Differential Longitudincal Cyclic, Differential Nacelle Tilt, Aileron and Spoiler
Yaw	Differential Longitudinal Cyclic, Differential Nacelle Tilt, and Rudder
Airplane	
Pitch	Elevator
Roll	Aileron and Spoiler
Yaw	Rudder

8.3 LATERAL CONTROL

Lateral control in hover is provided by differential collective pitch, together with differential engine fuel flow (power). The differential engine power is provided to ensure maintaining roll control in the event of a cross shaft failure. It also serves to minimize the cross shaft torque. In transition, differential collective and differential cyclic are scheduled as a function of nacelle tilt.

When differential cyclic pitch is commanded the nacelles are also actuated to tilt differentially, thereby increasing the thrust vectoring effect of the cyclic pitch. Differential deflection of the nacelles is ± 1.55 degrees per degree of cyclic plus approximately ± 0.20 degrees of differential nacelle tilt due to elasticity of wing and nacelles. This results in a large increase in control power as compared to the control power available from cyclic alone. The control power requirements may, therefore, be met with modest amounts of cyclic control resulting in low blade stresses and long rotor fatigue life. Collective pitch is also scheduled with nacelle tilt so that when the nacelles are tilted differentially, pitch is increased on the rotor whose disc is tilted down, and decreased on the rotor which is tilted up. This maintains the thrust approximately equal on the two rotors, ensuring that thrust vectoring rather than differential thrust is achieved by the differential cyclic pitch and differential nacelle tilt.

The wing has full span flaps and spoilers mounted on the trailing edge. The flaps are single slotted of 30 percent chord with a fixed hinge point 14.6 percent below the wing chord line. The flaps act as flaperons for roll control and deflect downward only by a maximum of 20 degrees from the nominal flap setting. Maximum incremental lift from the flaps is attained at approximately 35 degrees deflection and the maximum rolling moment occurs at the same time, so the flaperon deflection for roll control is limited to a maximum total flap deflection of 35 degrees. If, for example, the flaps are symmetrically deflected 30 degrees, only 5 degrees additional deflection is utilized for roll control. Full span spoilers of 12.7 percent chord are located forward of the flaps and hinged to the rear spar. The spoilers are "slot-lipped", i.e., they open up the slot forward of the flap with the flaps extended resulting in a large increase in roll control as compared to the control power with flaps closed. Maximum deflection of the spoilers for roll control is 45 degrees from the closed position.

Maximum spoiler rolling moment coefficient is also attained with flaps deflected approximately 35 degrees. Spoiler effectiveness with the flaps retracted is approximately one-third that attainable with the flaps extended. Spoiler rolling moment is further reduced at high speed by limiting the spoiler actuator force capability, thereby restricting the spoiler extension at speeds above 175 knots.

The spoilers and flaps are also used in conjunction with download alleviation devices referred to as umbrellas mounted on the leading edge of the wing for download relief in the hover and low-speed range. The umbrellas are 18.6 percent chord on the upper and lower wing surfaces. Maximum deflections of the surfaces for download alleviation are: flaps 70 degrees, spoilers 110 degrees from closed, and umbrellas aft-edge-of-the-upper surface up to 20 degrees from vertical and aft-edge-of-lower-surface down to 10 degrees from vertical. The umbrellas and spoilers retract at 50 knots automatically.

8.4 DIRECTIONAL CONTROL

Directional control in hover is provided by differential longitudinal cyclic pitch, which, as discussed above under lateral control, also actuates differential nacelle tilt to amplify the thrust vectoring effect of the cyclic pitch.

In transition, the differential cyclic and its associated nacelle tilt are phased out as the rudder becomes more effective. This results in near zero initial roll acceleration in response to a yaw input.

8.5 THRUST/COLLECTIVE CONTROL

In hover, forward motion of the thrust/collective lever mechanically commands both increased collective pitch and increased power. The governor provides a fine adjustment to the collective pitch to maintain rpm. Over travel of the pilot's lever, beyond the normal max power position, provides a collective

pitch landing flare capability. The over travel is entered by going through a "gate",which shuts down the rotor governor and leaves the pilot's lever directly connected to collective pitch, just like a helicopter collective pitch lever.

The collective pitch is also scheduled through transition as a function of nacelle incidence, minimizing the adjustment needed from the governor and also providing the pitch variation with differential nacelle tilt required for roll and yaw control.

In cruise the mechanical interconnection of the thrust/collective lever with collective pitch is phased out completely so that a pure power demand system with governed pitch, like a conventional fixed wing airplane, is provided. The control system block diagrams are shown in Appendix E.

8.6 CONTROL FEEL

Control force gradient variation with dynamic pressure prevents excessive sensitivity of control at high speed. In the model 222, the force gradients of the primary controls (longitudinal and lateral stick, and pedals) are varied linearly with dynamic pressure. The rudder and elevator deflections vary linearly with pilot's rudder pedal and longitudinal stick travel. Aileron deflection is programmed linearly and spoiler deflection nonlinearly with lateral stick deflection, to provide near-linear rolling moment effectiveness to near cruise speed. As mentioned earlier, spoiler deflection is limited at high speed by limiting the actuator capacity. The control force breakout forces and gradients are shown in Appendix F.

8.7 STABILITY AUGMENTATION SYSTEMS

Stability augmentation systems are provided to enhance aircraft flying qualities. The system consists of longitudinal, lateral and direction SAS. The longitudinal stability augmentation system incorporates a pitch rate feedback and a longitudinal stick pickoff. In addition, a lagged pitch rate signal is incorporated to provide some degree of attitude stabilization without the autopilot. (An autopilot is not represented in this simulation.) These signals are shaped and put through an authority limit. The longitudinal SAS commands longitudinal cyclic ptich to provide the required damping in hover and transition. It is not required in the cruise mode and is phased out at 175 knots. The block diagram of the longitudinal SAS is given in Appendix E.

The lateral stability augmentation system is operative in all flight modes. It consists of roll rate feedback for increased damping in roll, lagged roll rate feedback to provide roll attitude stability, and a lateral stick pickoff. In addition a sideslip feedback is incorporated to decrease the strong dihedral effect. These feedback loops are shaped and phased to yield good aircraft dynamic characteristics. A lateral SAS authority limit is incorporated in the circuit. The output of the lateral stability augmentation system is input to the control system in terms of equivalent lateral stick, since the drive actuator is in series with, and commands the same control as, the pilots lateral stick control linkage. The

lateral SAS never opposes the pilots' command. The block diagram of this system is shown in Appendix E.

A directional stability augmentation system is provided and operates in all flight regimes. The yaw channel consists of yaw rate feedback for increased directional damping in hover and low speed flight modes, lagged yaw rate feedback to provide yaw attitude stability, and a rudder pedal pickoff for quickening. Directional damping provided by the rotors is quite high in the higher transition and cruise speed ranges. No additional yaw rate damping is therefore needed in cruise. A feedback is provided to modify the effective yawing moment due to roll rate which exists in the basic unaugmented aircraft configuration in the cruise speed range. The feedback gains, and the relative phasing of these gains have been optimized to provide good directional dynamic response. A directional SAS authority limit is incorporated. The SAS command is input to the control system in terms of equivalent inches of rudder pedal. The block diagram for the directional stability augmentation system is shown in Appendix E.

The stability augmentation systems used for the simulation are not set up to investigate individual component failures. Modifications are required in order to do malfunction type studies with this simulation.

8.8 LOAD ALLEVIATION SYSTEM (LAS)

Propeller type aircraft experience significant blade loads during exposure to skewed flow due to steady state or transient conditions (climb, sideslip, gusts, etc). The tilt rotor configuration can have similar problems. However, since cyclic pitch is a basic part of the tilt rotor control system it provides the means to significantly reduce the sensitivities to these effects. It also can be used to reduce the destabilizing moments which come from the rotors and thus improve static stability.

An automatic load alleviation system is provided and operates via the swashplate to reduce both transient and steady state hub forces and moments and the destabilizing moments at the nacelle pivot. It is not a required system for the Model 222, but will significantly enhance the static stability and the fatigue margins of the aircraft.

The overall objectives to be achieved through the use of cyclic feedback control are:

- Reduce rotor hub forces and moments for both steady state operation and gust encounter

- Improve flying qualities of the aircraft by using the cyclic control system to reduce pilot workload and improve short period response by reducing destabilizing forces and moments of the rotors

- Reduce aircraft structural loads resulting from gust turbulence
- Improve ride qualities by damping the response to gust turbulence

The load alleviation system, as mechanized in this simulation consists of angle of attack, angle of sideslip, and dynamic pressure sensors which drive through appropriate gains and filters to reduce the longitudinal and lateral moments at the nacelle pivot. The lateral cyclic pitch used for load alleviation is authority limited and drives separate actuators in each hub. The longitudinal cyclic pitch is summed in with the longitudinal SAS. The block diagram for this system as mechanized is shown in Appendix . This system is operative from low transition speed (approx. 50 knots) through dive speed and reduces the pivot moments from 50% in the 150 to 200 knot range to 100% in all other modes of flight.

8.9 THRUST MANAGEMENT SYSTEM

The thrust and power management system for a tilt rotor aircraft must be compatible with both the helicopter and airplane configurations. Thrust control for the hover task, rpm control, gust response (especially in the cruise flight regime), and effect on aircraft flying qualities must all be considered. Classically, helicopters have used collective pitch demand to control thrust and fuel governing to control rpm while fixed-wing aircraft have used fuel flow demand to control thrust and

collective pitch governing to control rpm. Each system has its advantages. For a tilt rotor aircraft it is desirable from a practical viewpoint to have one type of governing for both the helicopter and fixed-wing flight regimes. Collective pitch governing was chosen for Model 222 for several reasons:

- It is more readily adapted to the hover flight regime than the fuel governor is to cruise
- It has better gust response characteristics
- It is fast acting and has high accuracy
- Thrust response to pilot control can be easily shaped with feed forward loops
- It has been demonstrated successfully in hover, transition and cruise in the CL-84 aircraft

With collective pitch governing there are two areas in the thrust management system to be considered: (1) style of the collective pitch governor; and (2) the feed forward loops for shaping pilot thrust control. The block diagram for this system as mechanized in this simulation is shown in Appendix E.

Several different governor configurations were considered for The M222 in order to determine the governor system best suited to meet the following objectives: (1) 0.3 percent steady state error in 2.5 to 3 seconds; (2) 2 percent rpm overshoot; and (3), satisfactory effect on aircraft flying qualities in the

all-operational mode (i.e., all aircraft components operational and performing as designed) and various failure modes. A single governor reference which used the rpm signal from each rotor and averaged them was chosen as the configuration that best satisfied the design criteria. To achieve the required accuracy and transient response goals, integral as well as proportional feedback of rpm was necessary in both the hover and cruise regimes. Governor gain is scheduled with nacelle incidence to maintain a near optimum level of governing throughout the flight envelope. Gains are varied linearly as the rotor rpm is changed from 551 in hover to 386 in cruise. The second requirement of the governor system is shaping the rotor thrust output for a pilot throttle input. Considerations in determining the proper shaping include:

(1) throttle sensitivity;

(2) time constant to reach 63% of steady-state thrust; and

(3) allowable thrust overshoot

Variable pilot's control sensitivity is employed to give the optimum sensitivity in the hover power range yet maintain full power control within a reasonable throttle throw (8 inches). Shaping of the pilot command with collective quickening is done to improve the thrust time constant and thrust response transient shaping so that the pilot may perform the precision hover task with a minimum of difficulty. In the cruise regime, shaping of the thrust output is unnecessary and is phased out during transition.

The thrust/collective pitch control system is designed in such a manner that, during hover, when the pilot moves his control, he commands both a change in engine fuel setting and, mechanically, a change in collective setting. The governor then operates with a time lag to trim the collective to the value required to maintain rpm. The mechanical collective change feature is washed out as a function of nacelle incidence so that when nacelle incidence is decreased to zero, the pilot commands only engine fuel. In addition, the reference setting schedule for collective has been established to maintain equal thrust output from both rotors during application of differential nacelle tilt.

As was mentioned previously, additional details on the Model 222 control system may be obtained from Reference 8.

9.0 ENGINE REPRESENTATION

This section describes the engine performance and dynamic model representation that is used in the mathematical model. The basic engine cycle performance data consists of tabulated values of four variables: power, fuel flow, gas generator shaft rpm, and power turbine shaft rpm. These parameters are a function of Mach number and turbine inlet temperature. All data are in referred, normalized format as shown in Table 9.1. Because of the normalized, referred format, all data are valid for any ambient conditions. The effects on engine performance of operating at non-optimum power turbine speed are included in this model. The referred format also facilitates including engine thermodynamic and mechanical limits. Limitations on engine cycle operation may be input on any combination of the following: fuel flow, torque, gas generator speed, gas generator referred rpm or output shaft speed. A detailed description of this routine is in Reference 9. The flow charts which describe this routine mathematically are shown in Appendix E.

A simplified dynamic model of the Lycoming T53-L-13 engine was formulated for use in the tilt rotor mathematical model. This model was coupled to the output of the engine performance program described above. The model consists basically of 2 first order lags in series with variable time constants and gains. The output of the model is rate limited to reflect actual engine performance. This simplified model gives satisfactory

results for both large and small power transients. The block diagram for this system is shown as part of the thrust management system block diagram shown in Appendix E.

TABLE 9.1 ENGINE CYCLE DATA FORMAT

VARIABLE	SYMBOL	REFERRED, NORMALIZED FORM
Thrust	F_N	$F_N/\delta F_N^*$
Power	SHP	$SHP/\delta\sqrt{\theta}SHP^*$
Gas Generator rpm	N_I	$N_I/\sqrt{\theta}N_I^*$
Power Turbine rpm	N_{II}	$N_{II}/\sqrt{\theta}N_{II}^*$
Fuel Flow	W_f	$W_f/\delta\sqrt{\theta}F_N^*$
		$W_f/\delta\sqrt{\theta}SHP^*$
Turbine Inlet Temperature	T	T/θ

Where:

$*$ = Max. Power Setting, Static, Sea Level, Standard Day

θ = Ambient Temperature (°R) Divided by 518.69°R

δ = Ambient Pressure (psia) Divided by 14.696 psia

10.0 GROUND EFFECTS

The effects of operating near the ground on the rotors and airframe are included in this model. The presence of the ground on the airframe imposes a boundary condition which inhibits the downward flow of air normally associated with the lifting action of the wing and tail. The reduced downwash has three main effects;

- A reduction in the downwash angle at the tail
- An increase in the wing lift curve slope
- An increase in the tail lift curve slope

These have been accounted for by the methods given in Reference 10 Appendix B-7. The data given in the reference for the change in wing and tail lift curve slope has been used directly. The equation specified for the change in downwash angle at the tail due to ground proximity was modified for convenience. The equation as stated is:

$$\frac{(\Delta\varepsilon)_g}{\varepsilon} = \frac{b_1^2 + 4(h-H)^2}{b_1^2 + 4(h+H)^2}$$

where $(\Delta\varepsilon)_g$ = the change in tail downwash angle due to ground proximity

ε = the downwash remote from ground

h = the height of the tail root quarter chord point above the ground

H = the height of the wing root quarter chord point above the ground

b_1 = a function of wing lift and wing flap geometry

For this mathematical model, the b_1 in the above equation was taken to be equal to the wing span, b_w. This results in a small error in the change in horizontal tail downwash. It is, however, sufficiently accurate for this simulation.

Ground effects on the rotor are difficult to predict analytically, especially in forward flight. Wind tunnel test data for the Model 160 powered model, Reference 6 was plotted as a thrust ratio versus effective rotor height/diameter ratio, for two rotor advance ratios. This data, shown in Figure 10.1 was curve fit and linearly interpolated for advance ratio. The resulting equation is as follows: - (for the right rotor. The left rotor is identical except for subscripts)

$$\left(\frac{T_{IGE}}{T_{OGE}}\right)_{RR} = \left[\left(\frac{h}{D}\right)^2_{\substack{EFF\\RR}} (.1741 - .6216\ \mu_{RR}) + \left(\frac{h}{D}\right)_{\substack{EFF\\RR}} (1.4779\ \mu_{RR} - .4143) + 1.2479 - .8806\ \mu_{RR}\right]$$

where $$\left(\frac{h}{D}\right)_{\substack{EFF\\RR}} = \frac{h_{RR}}{2R[|\sin(\theta + i_{N_R})\cos\phi| + .0174]}$$

$$h_{RR} = -Z_{DOWN} + (L_S \cos i_{N_R} - X_{CG}) \sin\theta + [(L_S \sin i_{N_R} + Z_{CG}) \cos\phi - Y_N \sin\phi] \cos\theta$$

= Rotor hub height above the ground

L_S = Distance from the nacelle pivot to the rotor hub

X_{CG} = Longitudinal distance from the pivot to the CG

Z_{CG} = Vertical distance from the pivot to the CG

θ = Aircraft pitch attitude

ϕ = Aircraft roll attitude

i_{N_R} = Right rotor nacelle angle

Y_N = Wing semispan

$$\left(\frac{T_{IGE}}{T_{OGE}}\right) = \left[\left(\frac{h}{D}\right)^2_{EFF} (.1741-.6216\mu) + \left(\frac{h}{D}\right)_{EFF} (1.4779\mu-.4143) + 1.2479 - .8806\mu\right]$$

NOTE: If $\mu > 0.283$; $\left(\frac{T_{IGE}}{T_{OGE}}\right) = 1.0$

or

If $\left(\frac{h}{D}\right)_{EFF} > 1.3$; $\left(\frac{T_{IGE}}{T_{OGE}}\right) = 1.0$

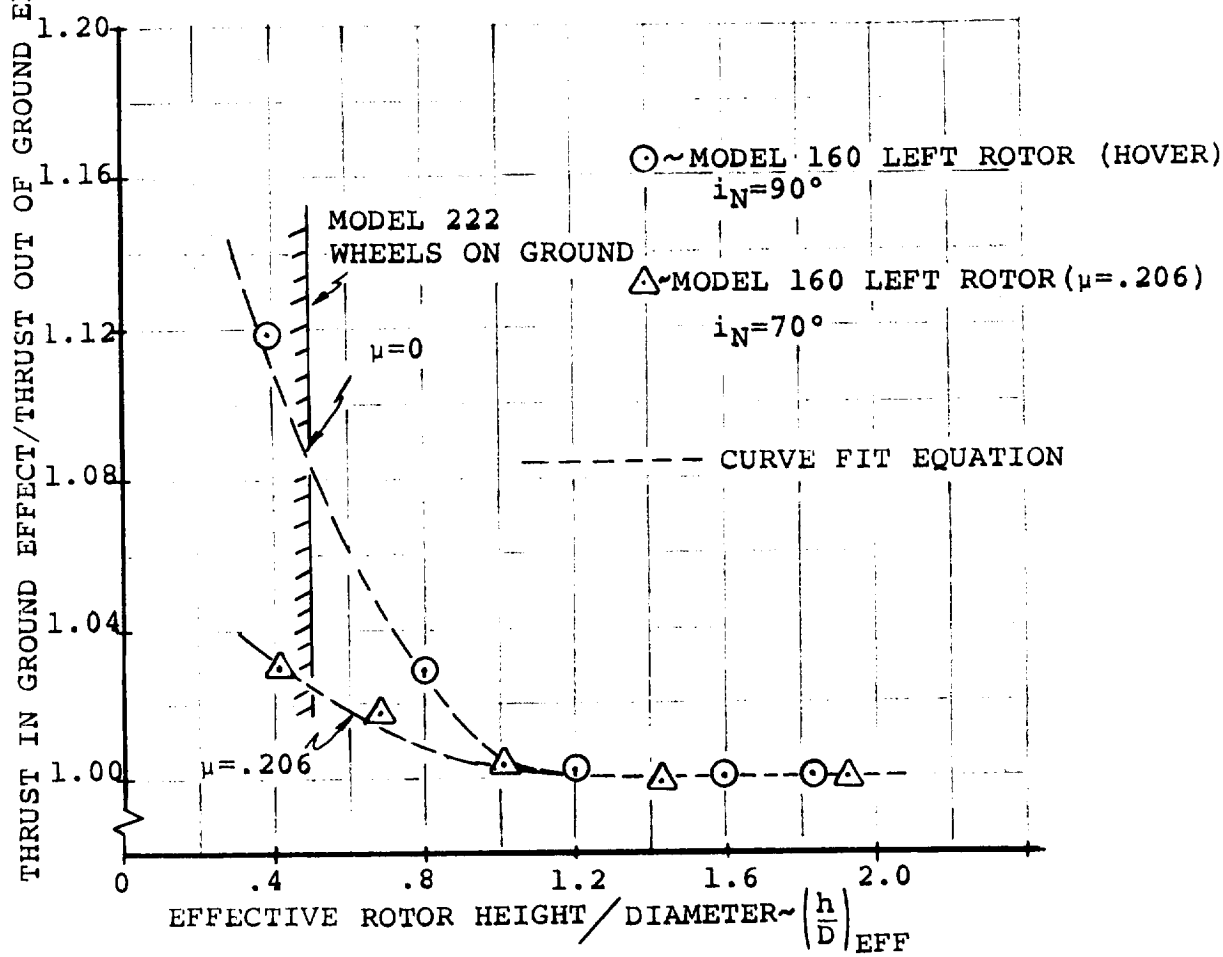

Figure 10.1. Effect of Rotor Height on Thrust Augmentation Ratio

The equation for the effective rotor height to diameter ratio $(h/D)_{EFF}$ was derived by dividing the rotor hub height by $[\sin(\theta+i_N)\cos\phi]$. This yields the rotor height along the shaft. For the cruise condition the hub height is infinite, $(h/D)_{EFF}$ is infinite and the augmentation ratio due to ground effect is unity. Some special conditions which must be observed when using these equations are noted in Figure 10.1.

11.0 AIRFRAME REPRESENTATION (PREPROCESSOR)

An airframe representation/preprocessor calculation is included in the mathematical model that enables the user to input the location of major structural elements of the aircraft in terms of water line, butt line and station line location. All lengths, center of gravity distances and inertias used in the equations are then calculated. This feature enables the user to quickly change the location of major structural elements to assess their impact on vehicle response.

In the derivation of the basic equations of motion, the aircraft was divided into three principal mass elements. The fuselage mass element (m_f), the wing mass element (m_W) and the tilting nacelle mass element (m_N). The components of the three mass elements are shown below and are available from a standard mass properties buildup of the Model 222.

- fuselage mass element (m_f)
  - Fuselage and contents
  - Horizontal tail and contents
  - Vertical tail and contents
  - Crew and trapped liquids
  - Cargo
- wing mass element (m_W)
  - Wing and contents
  - Fuel carried in wing
  - Fixed nacelles and/or engines
- tilting nacelle mass element (m_N)
  - Tilting nacelle (including rotors)

These three mass elements along with their respective distances from the nacelle pivot to the center of each mass element are used to compute the aircraft center of gravity distances with

respect to the nacelle pivot. The equations for these center of gravity distances, derived in Appendix C, and including the effects of nacelle tilt are:

$$X_{CG} = \frac{m_f \ell_f + m_w \ell_w}{m} + \ell \left(\frac{m_N}{m}\right) \left[\cos(i_{NL}-\lambda) + \cos(i_{NR}-\lambda)\right]$$

$$Z_{CG} = \frac{m_f h_f + m_w h_w}{m} - \ell \left(\frac{m_N}{m}\right) \left[\sin(i_{NL}-\lambda) + \sin(i_{NR}-\lambda)\right]$$

The masses and distances used in these equations are defined on the sketch below.

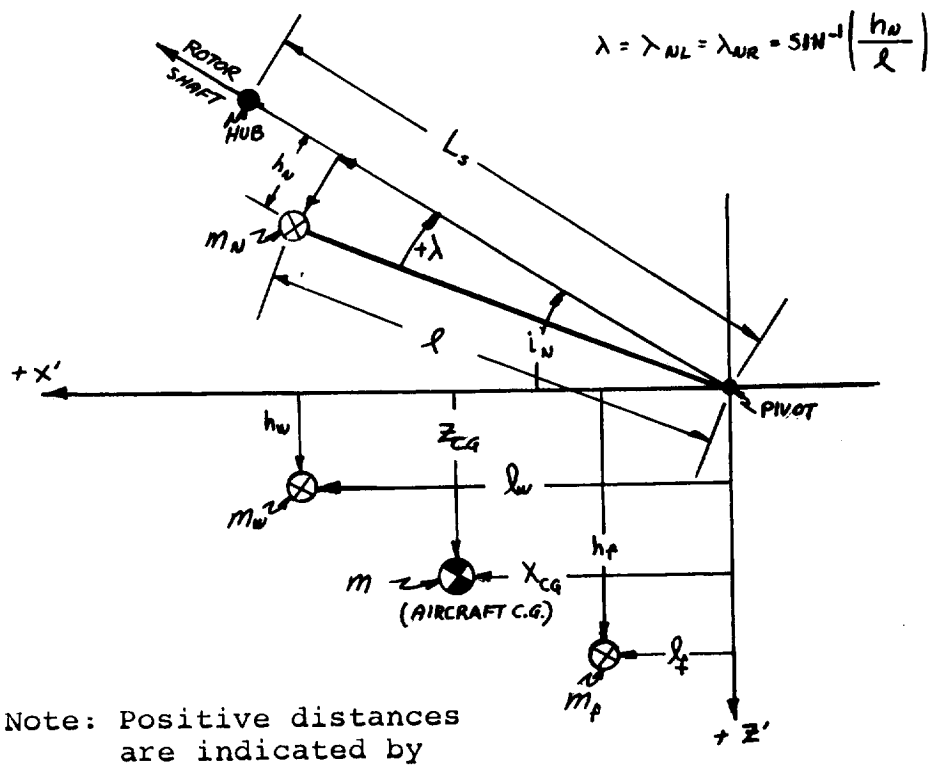

Note: Positive distances are indicated by the direction of the arrows

The quantities required to compute m_f, ℓ_f, m_w, ℓ_w, m, ℓ, m_N, λ, h_f, h_w are available from an aircraft three-view drawing and a standard mass properties buildup. The quantities ℓ and λ (defined in the sketch) are easily obtainable from a drawing. The mass quantities (m, m_N, m_f, m_w) are computed from a mass properties buildup by adding up the components of each mass element as described in the previous paragraph. The lengths ℓ_f, ℓ_w, h_f and h_w are computed by summing the weight moments of the components of each mass element about the nacelle pivot. The equations for these operations have been derived and are presented in Appendix E under the preprocessor equations. The input data to these equations include the weight of each component, and its location in terms of water line, fuselage station line, and butt line.

When the center of gravity distance of each mass element has been determined, the component and total aircraft mass moments of inertia can be computed. The equations for the total aircraft mass moments of inertia are presented in Appendix C. The moments of inertia of each mass element are computed by application of the parallel axis theorem. The moments of inertia of each component about its own center of gravity must be known. The parallel axis theorem states:

$$I_{xx} = \sum_{i=1}^{N} \left[I_{xx_{o_i}} + m_i (y_i^2 + z_i^2) \right]$$

$$I_{yy} = \sum_{i=1}^{N} \left[I_{yy_{o_i}} + m_i (z_i^2 + x_i^2) \right]$$

$$I_{zz} = \sum_{i=1}^{N} \left[I_{zz_{o_i}} + m_i (x_i^2 + y_i^2) \right]$$

$$I_{xz} = \sum_{i=1}^{N} \left[I_{xz_{o_i}} + m_i (x_i z_i) \right]$$

where N represents the number of component masses.

These equations have been expanded to compute the moments of inertia of each mass element and are shown in Appendix E under the preprocessor section. The only additional input data required are the inertias of each component about their own centers of gravity. These are readily available from the mass properties buildup of the Model 222.

Other lengths required for the mathematical model are computed in this section. The input data for these computations are in terms of the water line, butt line and fuselage station line locations of the elements in question.

12.0 AERO-ELASTIC REPRESENTATION

Two aero-elastic degrees of freedom are included in the tilt rotor mathematical model. These are first mode wing vertical bending and first mode wing torsion. The stability and control characteristics of flexible airplanes may be significantly influenced by distortions of the structure under transient loading conditions. When the separation in frequency between the elastic degrees of freedom and the rigid body motions is not large, then significant aerodynamic and inertial coupling can occur between the two. Many of the important effects of elastic distortion, however, can be accounted for simply by modifying the aerodynamic equations. The assumption is made that the changes in aerodynamic loading take place so slowly that the structure is at all times in static equilibrium. This is equivalent to assuming that the natural frequencies of vibration of the structure are much higher than the frequencies of the rigid body motions. Thus a change in load produces a proportional change in the shape of the airplane, which in turn influences the load. This is known as the method of "quasistatic" deflections where all the coupling occurs in the aerodynamic equations.

The wing uncoupled natural frequencies were investigated to determine which method would be used. Table 12.1 shows the

TABLE 12.1 WING UNCOUPLED FREQUENCIES (BLADES OFF) CRUISE CONFIGURATION

Symmetric Mode	Frequency
Vertical Bending	3.6 cps
Chordwise Bending	5.4 cps
Torsion	6.1 cps
Antisymmetric Mode	**Frequency**
Vertical Bending	11.2 cps
Chordwise Bending	9.1 cps
Torsion	5.7 cps

Model 222 wing uncoupled frequencies for the cruise condition for both the symmetric and anti-symmetric modes. As can be noted in the table, the lowest vertical bending frequency is 3.6 cps and the lowest wing torsional frequency is 5.7 cps. The rigid body short period mode varies from approximately 0.40 cps to 1.35 cps. Since the rigid body short period modes are separated from the elastic modes by a substantial margin, the method of "quasistatic" deflection is used to represent the wing bending and torsion modes, with the only coupling in the aerodynamic terms (through angle of attack). The wing twists and bends instantaneously when subjected to an applied load. The assumptions made in deriving the wing bending and torsion relationships are as follows:

- No coupling between bending and torsion modes
- Wings are cantilevered from the fuselage
- Elliptical loading assumed for the rigid untwisted wing
- Aerodynamic loads act at the wing quarter chord
- Wing elastic axis coincident with cross shaft
- Wing center of mass assumed to lie on the elastic axis
- First wing torsional mode assumed linear from tip to root

In the mathematical model, wing twist at the tip is calculated using the following equation:

$$K_{\theta_t}\theta_t = M_{ACT} - I_E\Omega_E R + q\,\frac{c_w^2\, b_w}{2}\, C_{m_o}$$
$$+ q c_w^2 \left(\frac{dC_{m_{c/4}}}{dC_\ell} + \frac{x_{WAC}}{c_w} \right) \left(\frac{C_{L_\alpha}\, b_w}{6\pi} \right) \left(4\theta_t + 3\pi\alpha_{RIGID} \right)$$

where: K_{θ_t} = Wing torsional spring constant

θ_t = Wing twist angle in degrees

MACT = Nacelle actuator pitching moment

I_E = Engine inertia

Ω_E = Engine speed

R = Body yaw rate

q = Dynamic pressure

c_w = Wing reference chord

b_w = Wing reference span

C_{m_o} = Wing zero lift pitching moment coefficient

$\frac{dC_{m_{c/4}}}{dC_\ell}$ = Wing pitching moment slope with lift coefficient

C_{L_α} = Wing lift curve slope

α_{RIGID} = Wing angle of attack without twist

Assuming a linear mode shape from the wing tip to the root and a cantilevered wing (zero twist at root), the wing twist at the aerodynamic center location of the wing is obtained by linear interpolation. The wing twist represents the change in angle of attack of the wing tip and aerodynamic center and are used in the aerodynamic equations.

Wing vertical bending deflection is also treated on a "quasi-static" basis. The form of the equation used in the mathematical model for the wing tip deflection is as follows:

$$h_1 = K_{W_1} Z^N_{AERO} + K_{W_2} Z^W_{AERO} - K_{W_3} L^N_{AERO} - K_{W_4} \bar{a}_T - K_{W_5} \bar{a}_{WAC}$$

where: h_1 = Wing tip deflection

Z^W_{AERO} = Wing lift

Z^N_{AERO} = Total wing lift

L^N_{AERO} = Nacelle rolling moment

$\bar{a}_T$ = Vertical acceleration of the nacelle

$\bar{a}_{WAC}$ = Vertical acceleration of the wing aerodynamic center

$K_{W_1} \rightarrow K_{W_5}$ = Constants for Model 222 wing

The form of the equation for the wing deflection at the aerodynamic center is written similarly:

$$h_{1_{WAC}} = K_{W_6} Z^N_{AERO} + K_{W_7} Z^W_{AERO} - K_{W_8} L^N_{AERO} - K_{W_9} \bar{a}_T - K_{W_{10}} \bar{a}_{WAC}$$

The symbols represent the same quantities as the tip deflections except the quantities K_{w_6} to $K_{w_{10}}$ are different from K_1 to K_5.

These equations are derived in Appendix A. Since the wings are assumed cantilevered, these equations may be written for

the left and right sides. The equations as used in the mathematical model are written in Appendix E.

The wing tip and aerodynamic center vertical bending velocities are computed by dividing the change in vertical bending deflection by the simulation time frame. The vertical bending deflections and velocities are then added to the velocity components at the wing tip and aerodynamic center. These velocity components are then used in the calculation of the aerodynamic angle of attack.

In addition to the aerodynamic coupling via angle of attack, as discussed above, the wing tip vertical forces and moments act as the driving functions to a set of second order equations that are forced at the wing vertical bending frequency. This results in giving the pilot a "seat of the pants" feel for the vibratory aspects of the wing vertical bending mode. The equations were written in this manner to see if the pilot could induce a P.I.O. (pilot induced oscillation) during the piloted simulations due to wing vertical bending.

13.0 CONCLUSIONS AND RECOMMENDATIONS

1. Formulation of an eleven degree of freedom tilt rotor mathematical model and setting up an in-house hybrid simulation program using this model have been successfully completed.

2. The simulation model has been successfully checked out and validated at the Ames Research Center.

3. The in-house simulation model is "real time" and executes in 40 milliseconds. The Ames simulation is also real time with a 50 millisecond time frame. This increased time is due to the all digital nature of the Ames simulation.

4. It is desirable to shorten the frame time of the simulation. This may be accomplished by streamlining the following elements of the mathematical model:

   - Slipstream aerodynamics
   - Input aerodynamic data in body axes rather than wind axes to eliminate axes transforms

5. The simulation could be improved by incorporating advances in methodology in such areas as:

   - Rotor Representation - Formulate a simplified analytical model to adequately represent the dynamics and aerodynamics of soft-in-plane hingeless

rotors for all flight regimes. This would avoid the necessity for complex time-consuming table look ups of rotor data.

- Slipstream Aerodynamics - Simplify the analytical representation based on wind tunnel test data.
- Interference Effects - Improve the prediction of the tail downwash environment at low transition speeds.

14.0 REFERENCES

1. USAF Stability and Control DATCOM, Air Force Flight Dynamics Laboratory, October 1960, (Revised September 1970).
2. Reed, T. J., "User Report" Prop/Rotor Dynamic Derivative Program C41 J.N.", Boeing Document D210-10116-1, Vertol Division, The Boeing Company, Philadelphia, Pa., June 1970.
3. Amos, A. K.; Miao, W., "Program C-49: Rotor Stability Derivatives", Boeing Interoffice Memorandum, 8-7453-1-2483, Vertol Division, The Boeing Company, Philadelphia, Pa., July 1971.
4. Davenport, F. J., "Analysis of Propeller and Rotor Performance in Static and Axial Flight by an Explicit Vortex Influence Technique", Boeing Document R-372, Boeing Company, Vertol Division, Philadelphia, Pa., February 1965.
5. Tarzanin, F. and Thomas, E., "Aeroelastic Rotor Analysis", Boeing Document D8-0614, Boeing Company, Vertol Division, Philadelphia, Pa., May 1967.
6. Magee, J. P., et al, "Test Program II, Wind Tunnel Test of a Powered Tilt Rotor Performance Model, Volume VI, Results and Analysis", Boeing Document D213-10000-6, Boeing Company, Vertol Division, Philadelphia, Pa., August 1970.
7. Smith, M. C., "University of Maryland Wind Tunnel Test 489, Force, Moment and Downwash Measurements on a Rigid Rotor

and Semispan Wing", (4 volumes), Boeing Document D8-1062-1, The Boeing Company, Vertol Division, Philadelphia, Pa., March 1968.

8. "Study of V/STOL Tilt Rotor Research Aircraft Program (Phase I)", Volumes II and III, Prepared under contract NAS2-7259 for NASA, Ames Research Center, Boeing Vertol Company, Philadelphia, Pa., January 1973.

9. Schoen, A. H., "User's Manual for VASCOMP II, The V/STOL Aircraft Sizing and Performance Computer Program", Boeing Document D8-0375, Volume VI, Boeing Company, Vertol Division, Philadelphia, Pa., March 1968.

10. Etkin, Bernard, "Dynamics of Flight", John Wiley and Sons, Inc., 1959.

11. Heyson, Harry H. and Katzoff, S.; "Induced Velocities Near a Lifting Rotor with Non-uniform Disk Loading", NACA Report 1319, December 7, 1956.

12. Allen, H.J. and Perkins, E.W., "A Study of Effects of Viscosity on Flow Over Slender Inclined Bodies of Revolution", NACA TR 1048, 1951.

APPENDIX A - TREATMENT OF WING FLEXIBILITY

As described in Section 12 the large separation which exists between the natural frequencies of vibration of the wing structure and the aircraft rigid body motions, enables the elastic deformations of the wing structure to be calculated on a quasi-static basis.

In the simple treatment presented below, the bending and torsion modes are considered to be uncoupled. The wing is treated as a cantilever with a built-in root end. The wing is free to twist about the elastic axis which is assumed to coincide with the nacelle pivot line. The center of mass of each chordwise strip is also taken to lie on the pivot line. The unloaded wing has neither geometric nor aerodynamic twist.

WING TWIST

Spanwise twisting of the wing takes place under the action of the nacelle aerodynamic and inertial moments, the wing lift distribution, and the spanwise distribution of aerodynamic pitching moment. The nacelle aerodynamic moments consist of rotor hub loads, transferred to the pivot, together with the aerodynamic loads on the nacelle itself. Nacelle inertial moments include the gyroscopic effects of the rotor drive system.

With reference to Figure A.1 , M_N is the moment supplied or absorbed by the nacelle tilt actuator. If K_θ is the wing stiffness as seen by the wing tip, then

$$M_N = K_\theta \ \theta_T \tag{A-1}$$

The total moment about the elastic axis due to wing aerodynamics, nacelle loads and engine gyroscopic torque is

$$T = \int_0^{b/2} m \, dy + M_N + M_{gyro} \tag{A-2}$$

The aerodynamic moment about the elastic axis at any station y is given by

$$m = m_{c/4} + \ell x \tag{A-3}$$

where ℓ is the section lift and x is the distance from the quarter chord to the elastic axis. In terms of the section aerodynamic coefficients,

$$m(y) = \frac{1}{2}\rho V^2 c^2 \ C_{m_{c/4}} + \frac{1}{2}\rho V^2 c^2 C_\ell \ \frac{x}{c} \tag{A-4}$$

The section lift coefficient, C_ℓ, is given by

$$\begin{aligned} c_\ell &= k \ \frac{dC_\ell}{d\alpha} \ (\alpha - \alpha_o) \ \sqrt{1-\left(\frac{2y}{b}\right)^2} \\ &= k \ a_o \ (\alpha_R - \varepsilon_p - \alpha_o + \theta_t(y)) \ \sqrt{1-\left(\frac{2y}{b}\right)^2} \end{aligned} \tag{A-5}$$

where α_R is the wing root section angle of attack

ε_p is the rotor induced downwash, assumed constant spanwise

α_o is the section zero-lift angle

θ_t is the structural twist at station y

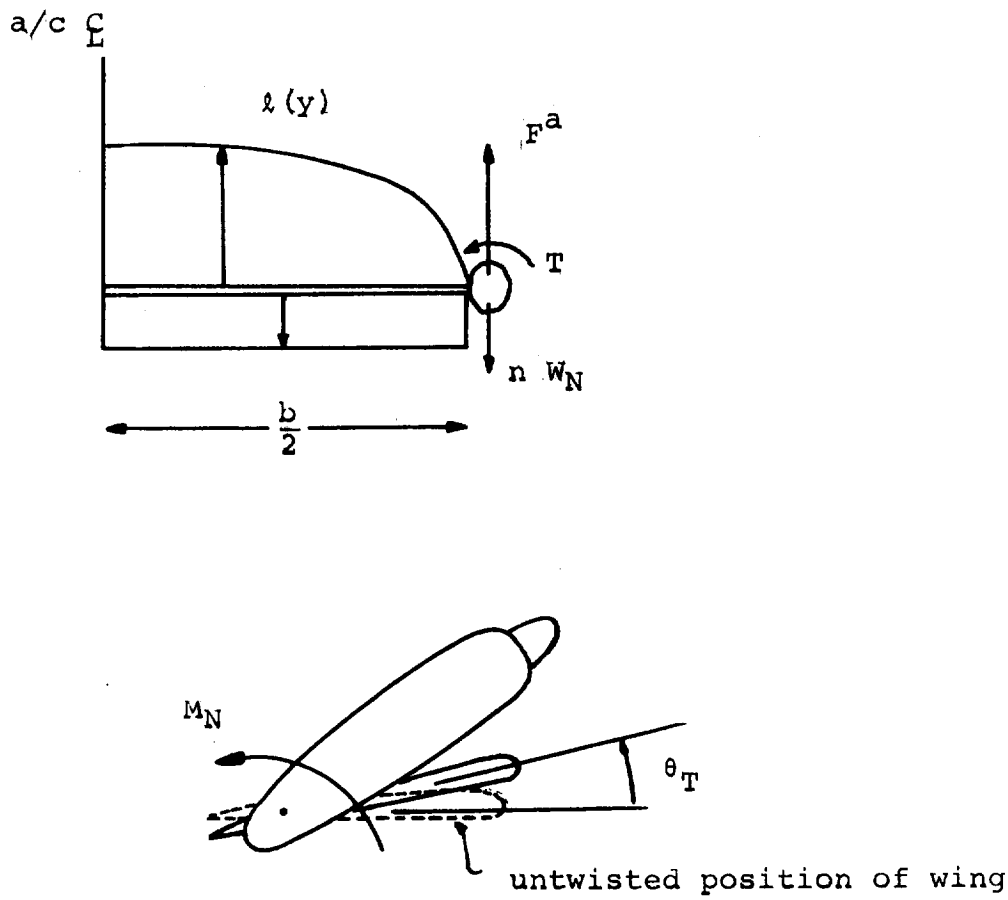

Figure A.1. Wing Geometry for Derivation of Flexibility

The factor $k\sqrt{1-\left(\frac{2y}{b}\right)^2}$ is introduced so that, for the untwisted wing, the lift distribution is elliptical. The value of k is obtained from the rigid wing elliptical loading as

$$k = \frac{4}{\pi} \frac{C_{L_\alpha}}{a_o} \tag{A-6}$$

Thus the equation for C_ℓ becomes, with $\alpha_{RIGID} = \alpha_R - \varepsilon_p - \alpha_o$,

$$C_\ell = \frac{4}{\pi} C_{L_\alpha} \left[\alpha_{RIGID} \sqrt{1-\left(\frac{2y}{b}\right)^2} + \theta_t \sqrt{1-\left(\frac{2y}{b}\right)^2} \right] \tag{A-7}$$

In equation (A-4) we can write, for low angles of attack,

$$C_{m_{c/4}} = C_{m_o} + \frac{dC_{m_{c/4}}}{dC_\ell} C_\ell \tag{A-8}$$

and therefore

$$m(y) = \frac{1}{2} \rho V^2 c^2 \left\{ C_{m_o} + \left(\frac{dC_{m_{c/4}}}{dC_\ell} + \frac{x}{c} \right) C_\ell \right\} \tag{A-9}$$

The equation for the total wing twisting moment, equation (A-2),can now be written as,

$$T = M_{actuator} + M_{GYRO} + \frac{1}{4} \rho V^2 c^2 C_{m_o} b + \frac{1}{2} \rho V^2 c^2 \left(\frac{dC_{m_{c/4}}}{dC_\ell} + \frac{x}{c} \right) \int_0^{b/2} C_\ell dy \tag{A-10}$$

Using equation (A-7), assuming a linear structural twist from root to tip and performing the indicated integrations, the equation for total wing twisting moment becomes

$$T = K_\theta \theta_T = M_{actuator} + M_{gyro} + \frac{1}{4} \rho V^2 b c^2 C_{m_o} + \frac{1}{2} \rho V^2 c^2 \left(\frac{dC_{m_{c/4}}}{dC_\ell} + \frac{x}{c} \right) \times \frac{C_{L_\alpha} b}{6\pi} \left(3\pi \alpha_{RIGID} + 4\theta_T \right) \tag{A-11}$$

The equation for the actuator moment is given in the equations of motion, Section 5.0.

Rearranging, and writing $q = q_s\ (1-C_{T_s}) = \frac{1}{2}\rho V^2$

$$\theta_T = \frac{M_N + M_{gyro} + \frac{1}{2} q_s (1-C_{T_s}) c_w^2 \left[6\pi\alpha_{rigid} \left(\frac{dC_m}{dC_L} + \frac{x}{c} \right) + b_w C_{m_o} \right]}{K_\theta - \frac{2}{3\pi} q_s b_w c_w^2\ C_{L_\alpha} (1-C_{T_s}) \left(\frac{dC_m}{dC_L} + \frac{x}{c} \right)} \qquad \text{(A-12)}$$

where C_{m_o}, the zero-lift wing section pitching moment coefficient, is a function of flap deflection:

$$C_{m_o} = C_1 + C_2\delta_f + C_3\delta_f^2 \qquad \text{(A-13)}$$

Knowing the tip value of twist, the twist at any other spanwise station is obtained by assuming a linear variation of twist from zero at the root to the tip value.

WING VERTICAL BENDING

The spanwise bending moment at any spanwise station y, on the wing is the sum of the bending moments due to wing aerodynamic lift, wing weight, nacelle lift, nacelle weight and net torque on the nacelle. The expressions for each contribution to the bending moments are derived below.

- Bending moment due to wing loading.

  Assuming an elliptical distribution of lift the bending moment is given by

$$M^a(y_1) = \int_{y_1}^{b/2} \ell(y)(y-y_1)dy \qquad \text{(A-14)}$$

$$= \frac{\ell_o b^2}{4} \int_{y_1}^{b/2} \sqrt{1-\left(\frac{2y}{b}\right)^2} \left(\frac{2y}{b} - \frac{2y_1}{b} \right) d\left(\frac{2y}{b}\right)$$

where ℓ_o is the lift per unit length at the wing root. Introducing the spanwise variable $\theta=\cos^{-1}\left(\frac{2y}{b}\right)$ making the required substitutions and integrating, the bending moment at any point y is:

$$M^a(y) = \frac{\ell_o b^2}{4}\left[\frac{1}{2}(\sin\theta-\theta\cos\theta)-\frac{1}{6}\sin^3\theta\right] \qquad \text{(A-15)}$$

- <u>Bending due to nacelle net vertical load.</u>

The net vertical force on nacelle is

$$F=F^a - nW_N$$

where F^a is the aerodynamic force and nW_N is the inertial load on the nacelle. The bending moment due to nacelle force is

$$M^N(y) = \frac{Fb}{2}(1-\cos\theta) \qquad \text{(A-16)}$$

- <u>Bending due to wing weight.</u>

Assuming a uniform distribution of wing weight

$$M^w(y_1) = -n\int_{y_1}^{b/2} w(y)(y-y_1)dy$$

and $w(y) = 2W/b$ where W is the weight of one wing panel

$$\therefore M^w(y_1) = \frac{2nW}{b}\int_{y_1}^{b/2}(y-y_1)dy \qquad \text{(A-17)}$$

i.e. $$M^w(y) = -\frac{nWb}{2}\left(1-\cos\theta-\frac{1}{2}\sin^2\theta\right)$$

- <u>Bending due to nacelle torque (rolling moment)</u>

$$T(y) = \text{constant} = T \qquad \text{(A-18)}$$

Total bending moment at station y is therefore

$$M(y) = M^a(y) + M^N(y) + M^W(y) + T \tag{A-19}$$

Assuming a linear variation of EI from root to tip given by

$$EI(y) = EI_o\left[1-a\left(\frac{2y}{b}\right)\right] = EI_o\ (1-a\cos\theta), \tag{A-20}$$

the curvature of the wing due to bending is

$$\frac{M(y)}{EI(y)} = \frac{d^2z}{dy^2} = \frac{\ell_o b^2}{8EI_o}\left[\frac{(\sin\theta-\theta\cos\theta)-1/3\sin^3\theta}{1-a\cos\theta}\right] + \frac{F_a b}{2EI_o}\left[\frac{1-\cos\theta}{1-a\cos\theta}\right]$$

$$- \frac{nW_N b}{2EI_o}\left[\frac{1-\cos\theta}{1-a\cos\theta}\right] - \frac{nW_w b}{2EI_o}\left[\frac{1-\cos\theta-\frac{1}{2}\sin^2\theta}{1-a\cos\theta}\right]$$

$$+ \frac{T}{EI_o}\left[\frac{1}{(1-a\cos\theta)}\right] \tag{A-21}$$

Double integration of this equation yields the following expression for the bending deflection of the wing at any point y on the span:-

$$z(y) = \frac{Lb^3}{8\pi EI_o}\phi_1 + \frac{b^3F^a}{8EI_o}\phi_2 - \frac{nW_N b^3}{8EI_o}\phi_3$$

$$- \frac{nW_w b^3}{8EI_o}\phi_4 + \frac{Tb^3}{4EI_o}\phi_5 \tag{A-22}$$

where $\phi_1 = \int_o^y \left\{ \int_o^y \frac{(\sin\theta - \theta\cos\theta) - \frac{1}{3}\sin^3\theta}{1-a\cos\theta}\, dy \right\} dy$

$$\phi_2 = \phi_3 = \int_o^y \left\{ \int_o^y \frac{1-\cos\theta}{1-a\cos\theta}\, dy \right\} dy$$

$$\phi_4 = \int_o^y \left\{ \int_o^y \frac{1-\cos\theta - \frac{1}{2}\sin^2\theta}{1-a\cos\theta}\, dy \right\} dy$$

$$\phi_5 = \int_0^y \left\{ \int_0^y \frac{dy}{1-a \cos \theta} \right\} dy$$

and where the wing lift (2 wing panels) $L=\frac{\pi}{4} \ell_o b$. The function ϕ_1 through ϕ_5 were obtained numerically and are presented in Figure A.2 .

Since $L = -2 Z^W_{AERO}$

$F^a = - Z^N_{AERO}$

$T = - L^N_{AERO}$

$nW_w = \frac{1}{2} m_w \frac{Z_{AERO}}{m} = \frac{1}{2} m_w \bar{a}_{WAC}$

$nW_N = m_N \bar{a}_T$

where m_w is the mass of two wing panels

m is the total aircraft mass

$\bar{a}_{WAC}$ is the acceleration of the wing aerodynamic center

$\bar{a}_T$ is the acceleration of the wing tip

and since the values of ϕ_1 through ϕ_5 are constant for any given station y on the wing we can write the final equation for wing bending in the form

$$h_1 = K_{W_1} Z^N_{AERO} + K_{W_2} Z^W_{AERO} - K_{W_3} L^N_{AERO} - K_{W_4} \bar{a}_T - K_{W_5} \bar{a}_{WAC}$$

where $h_1 = -z$

$K_{W_1} = \frac{b^3 \phi_2}{8EI_o}$

$$K_{W_2} = \frac{b^3 \phi_1}{4\pi EI_o}$$

$$K_{W_3} = \frac{b^3 \phi_5}{4EI_o}$$

$$K_{W_4} = \frac{m_N b^3 \phi_2}{8EI_o}$$

$$K_{W_5} = \frac{m_W b^3 \phi_4}{8EI_o}$$

This is the form given in the computer representation. The bending deflection at the aerodynamic center and at the wing tip are obtained using the values of $\phi_1 \rightarrow \phi_5$ appropriate to these stations.

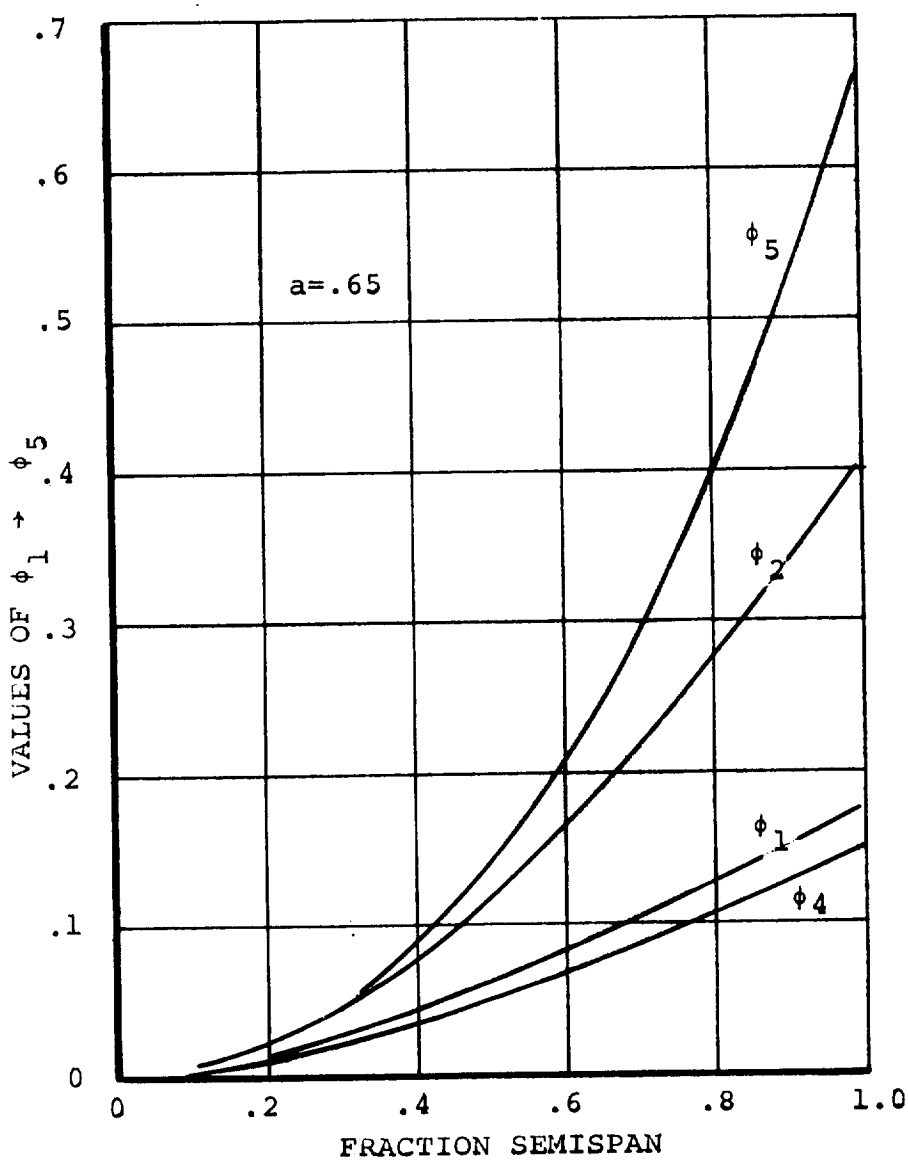

Figure A.2. Wing Bending Functions

APPENDIX B - DERIVATION OF LANDING GEAR EQUATIONS

Presented below are the equations for landing gear forces and moments arising from ground contact. The derivation accounts for brake and friction forces together with a simplified representation of the oleo dynamics. Nose wheel steering is not included.

With reference to Figure B-1 the distance from the center of gravity to the bottom of the right main wheel following a positive pitch rotation is

$$h_\theta = X \sin \theta - Z \cos \theta - r \tag{B-1}$$

where X and Z are the coordinates of the hub of the wheel relative to the C.G. and r is the tire radius. If the aircraft is now rolled right, through the angle ϕ, the bottom of the right gear moves through a distance

$$h_\phi = \left[Y \sin \phi + (Z+r)(\cos \phi - 1)\right] \cos \theta \tag{B-2}$$

The height of the bottom of the wheel above the ground is therefore

$$h = H_{CG} + h_\theta - h_\phi \tag{B-3}$$

and the oleo deflection during ground contact is given by

$$h_T = \frac{H_{CG} + h_\theta - h_\phi}{\cos \phi \cos \theta} \tag{B-4}$$

By differentiation of equation B-4 and making small angle assumptions regarding the aircraft pitch and roll angles during touchdown, the rate of change of oleo strut deflection is

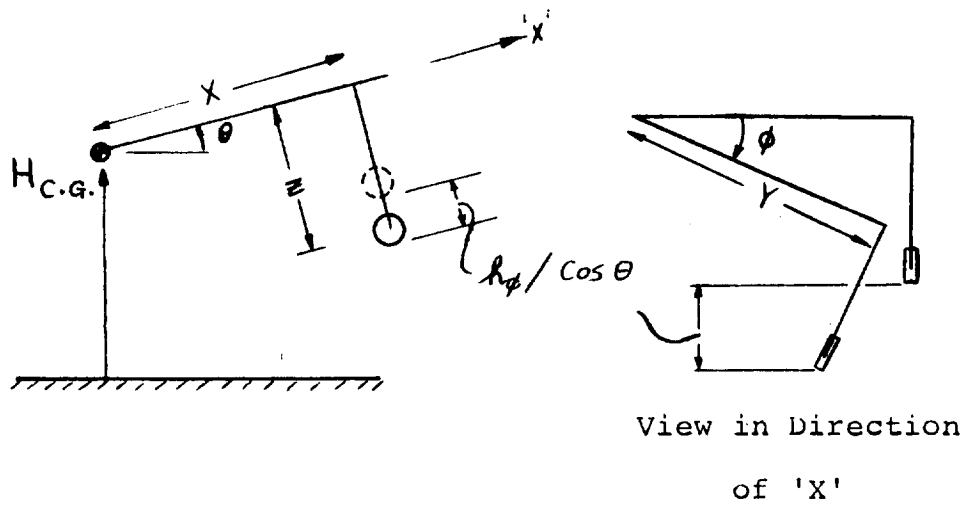

Figure B.1. Geometry of Landing Gear

obtained as

$$\dot{h}_T = \frac{\dot{H}_{CG}}{\cos\phi \cos\theta} + XQ - YP \qquad \text{(B-5)}$$

Assuming that the oleo response is that of a second order system, the equation of motion for the landing gear is

$$F_G = K_{ST}\, h_T + D_{ST}\, \dot{h}_T \qquad \text{(B-6)}$$

where K_{ST} and D_{ST} are the equivalent spring rates and damping for the oleo, and F_G is the force on the landing gear strut.

Tire Friction and Side Force

The friction force acting on each tire during ground contact is resolved into a force F_μ along the line of intersection of the plane of the wheel and the ground plane, positive forward, and a side force F_μ at right angles to F_μ lying in the ground plane and positive to starboard. The friction force F_s is assumed to be proportional to oleo force and the amount of braking exerted by the pilot. The side force is proportional to the oleo force.

The components of tire friction are:

$$F_\mu = (\mu_0 + \mu_1 B_G)\, F_{GZ} \frac{u}{|u|} \qquad \text{(B-7)}$$

$$F_s = \mu_s F_{GZ} \frac{v}{|v|} \qquad \text{(B-8)}$$

where μ_s, μ_1 and μ_s are the coefficients for rolling friction, brake friction and sliding friction. B_G is expressed as a percentage of full brake pedal deflection. The signs of the forward and sidewards velocity are introduced to properly orient the tire forces.

The force and moment contributions of each landing gear to the aircraft total forces and moments are, assuming small angles;

$$\Delta X_n = F_{\mu_n} - F_{GZ_n}\theta \tag{B-9}$$

$$\Delta Y_n = F_{s_n} + F_{GZ_n}\phi \tag{B-10}$$

$$\Delta Z_n = F_{\mu_n}\theta - F_{s_n}\phi + F_{GZ_n} \tag{B-11}$$

$$\Delta M_n = -\Delta Z_n X_n + \Delta X_n (Z_n + r_n + h_{T_n}) \tag{B-12}$$

$$\Delta L_n = \Delta Z_n Y_n - \Delta Y_n (Z_n + r_n + h_T) \tag{B-13}$$

$$\Delta N_n = -\Delta X_n Y_n + X_n \Delta Y_n \tag{B-14}$$

where n=1,2 and 3 denote the left main gear, right main gear and nose gear, respectively.

The total contribution of the landing gear forces to the forces and moments at the center of gravity of the aircraft are:

$$\Delta X_{LG} = \sum_{n=1}^{3} \Delta X_n$$

$$\Delta Y_{LG} = \sum_{n=1}^{3} \Delta Y_n$$

$$\Delta Z_{LG} = \sum_{n=1}^{3} \Delta Z_n$$

$$\Delta L_{LG} = \sum_{n=1}^{3} \Delta L_n$$

$$\Delta M_{LG} = \sum_{n=1}^{3} \Delta M_n$$

$$\Delta N_{LG} = \sum_{n=1}^{3} \Delta N_n$$

APPENDIX C - VELOCITY AND ACCELERATION TRANSFORMATIONS AND CENTER OF GRAVITY/INERTIA EQUATIONS

C.1 Velocity Transformations

The calculation of aerodynamic forces on wings, fuselage, nacelles and tail surfaces requires that the angle of attack and relative wind velocity at these surfaces be known. These velocities are obtained most conveniently in terms of the velocity of the pivot reference point.

With reference to Figure C.1 , the velocity of a general point in the aircraft relative to the airplane center of gravity is

$$V = \frac{\delta \underline{r}}{\delta t} + \underline{\Omega} \times \underline{r} \tag{C-1}$$

where $\underline{r}$ is the radius vector from the c.g. to the point and $\underline{\Omega}$ is the angular velocity of the aircraft. Thus, expanding equation C-1, the velocity of the pivot relative to the c.g. is

$$\begin{aligned} u_p' &= \dot{X}_p + QZ_P - Y_P R \\ v_p' &= \dot{Y}_p - PZ_P + X_P R \\ w_p' &= \dot{Z}_p + PY_P - QX_P \end{aligned} \tag{C-2}$$

where X_p, Y_p and Z_p are the distances of the pivot from the c.g., measured positively forward, to the right and downwards, respectively. If we measure all distances from the pivot location then $X_P = -X_{CG}$, $Y_P = -Y_{CG} = 0$, $Z_P = -Z_{CG}$ and the velocity of the pivot relative to inertial space can be written,

$$\begin{aligned} u_p &= U + u_p' = U - \dot{X}_{CG} - QZ_{CG} \\ v_p &= V + v_p' = V + PZ_{CG} - X_{CG}R \\ w_p &= W + w_p' = W + QX_{CG} - \dot{Z}_{CG} \end{aligned} \tag{C-3}$$

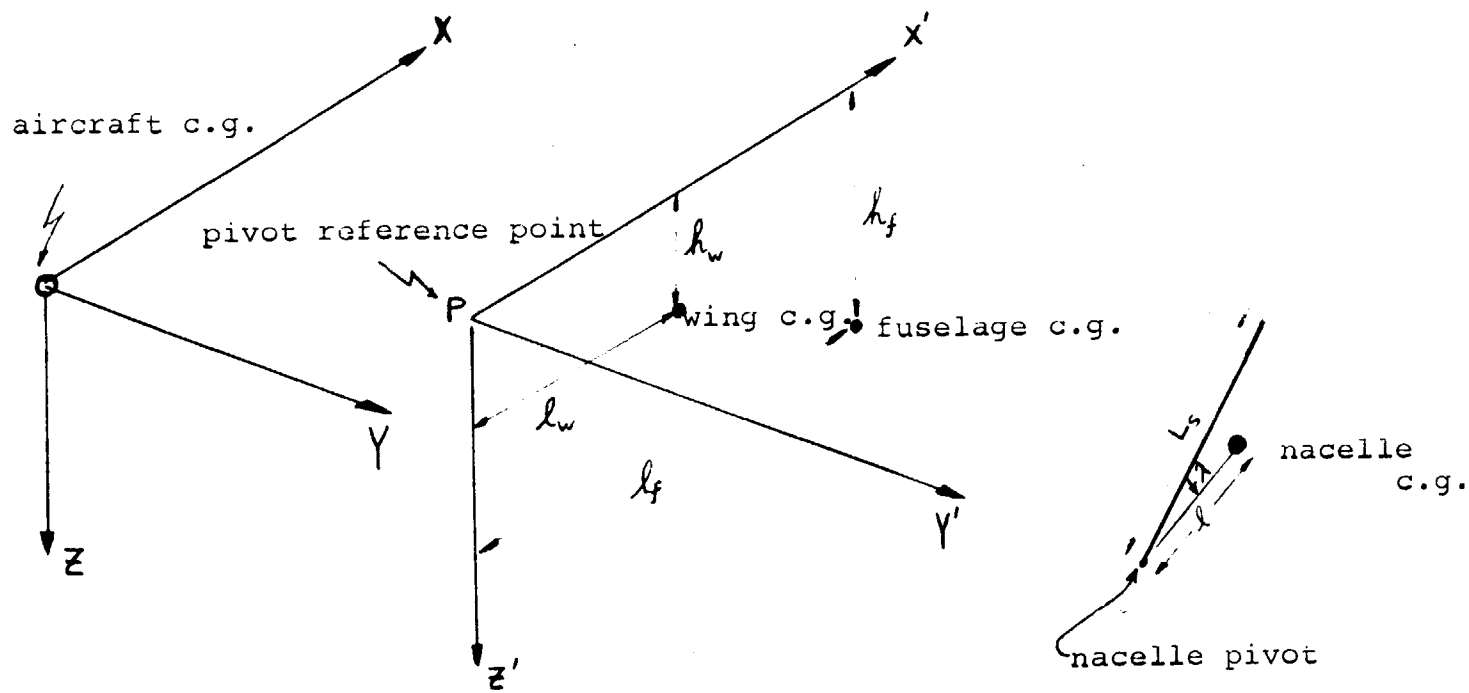

Figure C.1. Reference Axes Systems

where U, V and W are the components of the velocity of the airplane center of gravity.

The velocity of a point in the aircraft relative to the pivot is

$$
\begin{aligned}
u &= \dot{X} + QZ - YR \\
v &= \dot{Y} + RX - PZ \\
w &= \dot{Z} + PY - QX
\end{aligned}
\tag{C-4}
$$

where X, Y, and Z are measured from the pivot to the point. By adding equations (C-3) and (C-4) the velocities of the following components are obtained relative to inertial space. The indicated distances are measured relative to the pivot.

<u>Velocity of Horizontal Tail Aerodynamic Center</u>

$$
\begin{aligned}
u_{HT} &= u_P + Z_{HT}Q \\
v_{HT} &= v_P + X_{HT}R - Z_{HT}P \\
w_{HT} &= w_P - X_{HT}Q
\end{aligned}
\tag{C-5}
$$

<u>Velocity of Vertical Tail Aerodynamic Center</u>

$$
\begin{aligned}
u_{VT} &= u_P + Z_{VT}Q \\
v_{VT} &= u_P + X_{VT}R - Z_{VT}P \\
w_{VT} &= w_P + X_{VT}Q
\end{aligned}
\tag{C-6}
$$

<u>Velocity of Left Wing Aerodynamic Center - Body Axes</u>

$$
\begin{aligned}
u'_{LW} &= u_P + Q\,(Z_{WAC} + h_{1_{L_{WAC}}}) + Y_{WAC}R \\
v'_{LW} &= u_P + X_{WAC}R - P(Z_{WAC} + h_{1_{L_{WAC}}}) \\
w'_{LW} &= w_P - Y_{WAC}P - X_{WAC}Q + \dot{h}_{1_{L_{WAC}}}
\end{aligned}
\tag{C-7}
$$

where $h_{1_{L_{WAC}}}$ is the elastic deflection of the left wing aerodynamic center. The equations for the right wing are obtained by substituting

$$Y_{R_{WAC}} = -Y_{L_{WAC}}$$

and $$h_{1_{R_{WAC}}} = h_{1_{L_{WAC}}}$$

Velocity of Left Wing Aerodynamic Center-Chord Axes

In order to compute wing angle-of-attack the velocity components are required relative to the wing chord line. If the wing chord makes an angle i_w with the body centerline then

$$\begin{aligned} u_{LW} &= u'_{LW} \cos i_w - w'_{LW} \sin i_w \\ v_{LW} &= v'_{LW} \\ w_{LW} &= w'_{LW} \cos i_w + w'_{LW} \sin i_w \end{aligned} \qquad \text{(C-8)}$$

The equations for the right wing are obtained by changing the subscript.

Velocity of Left Rotor Hub - Body Axes

$$\begin{aligned} u'_{RL} &= u_P + RY_N - L_s (\dot{i}_{NL} + Q) \sin i_{NL} + Qh_{1_L} \\ v'_{RL} &= v_P + L_s(R \cos i_{NL} + P \sin i_{NL}) - Ph_{1_L} \\ w'_{RL} &= w_P - PY_N - L_s (\dot{i}_{NL} + Q) \cos i_{NL} + \dot{h}_{1_L} \end{aligned} \qquad \text{(C-9)}$$

where L_s is the distance from the rotor pivot point to the rotor hub and h_{1_L} is the deflection of the wing tip. The equations for the right hub are obtained by changing subscripts and substituting $Y_N = - Y_N$.

Velocity of Left Rotor Hub - Shaft Axes

Since the rotor aerodynamic forces and moments are functions of the shaft angle of attack and sideslip, the velocity components are required relative to shaft axes.

$$u_{RL} = u'_{RL} \cos i_{NL} - w'_{RL} \sin i_{NL}$$

$$v_{RL} = v'_{RL} \qquad \text{(C-10)}$$

$$w_{RL} = w'_{RL} \sin i_{NL} + w'_{RL} \cos i_{NL}$$

The corresponding equations for the right hub are obtained by changing the subscript.

C.2 Center of Gravity and Inertia Equations

Equations are required that express the overall aircraft center of gravity position and inertias in terms of the centers of gravity and inertias of the individual mass components. In order to do this a fixed reference point is chosen in the aircraft defined by the intersection of the line joining the nacelle pivots and the vertical plane of symmetry of the aircraft, see Figure C.1. A set of axes $PX^PY^PZ^P$ is taken at this pivot reference point, parallel to the axes OXYZ at the aircraft center of gravity. If the location of the aircraft center of gravity with respect to the pivot reference axes is $(X'_{CG}, Y'_{CG}, Z'_{CG})$ and if (ℓ_f, h_f) and (ℓ_w, h_w) are the x and z coordinates of the fuselage and wing masses measured from the pivot, then the following relationships are obtained between the centers of mass of the components and the aircraft center of gravity.

Fuselage CG Relative to Aircraft CG

$$X_f = \ell_f - X'_{CG}$$

$$X_f = h_f - Z_{CG} \tag{C-11}$$

Wing CG Relative to Aircraft CG

$$X_w = \ell_w - X'_{CG} \tag{C-12}$$

$$Z_w = h_w - Z'_{CG}$$

Nacelle CG Relative to Aircraft CG

$$X_{NR} = \ell \cos (i_{NR} - \lambda) - X'_{CG}$$

$$X_{NL} = \ell \cos (i_{NL} - \lambda) - X'_{CG} \tag{C-13}$$

$$Z_{NR} = \ell \sin (i_{NR} - \lambda) - Z'_{CG}$$

$$Z_{NL} = \ell \sin (i_{NL} - \lambda) - Z'_{CG}$$

where ℓ is the distance from the nacelle pivot point to the nacelle c.g., and λ is the angular depression of the nacelle center of mass below the nacelle pivot, when the nacelle is in the down position, see Figure C.1.

Aircraft Center of Gravity Position

By taking moments about the pivot, the aircraft center of gravity is given by

$$X'_{CG} = \frac{m_f \ \ell_f + m_w \ \ell_w}{m} + \ell \left(\frac{m_N}{m}\right) \left[\cos(i_{NL}-\lambda) + \cos(i_{NR}-\lambda)\right]$$

$$Z'_{CG} = \frac{m_f \ h_f + m_w \ h_w}{m} - \ell \left(\frac{m_N}{m}\right) \left[\sin(i_{NL}-\lambda) + \sin(i_{NR}-\lambda)\right] \tag{C-14}$$

The equations of motion (Section 5) require the first and second time derivatives of the center of gravity position. They are as follows:

<u>Center of Gravity Velocity Relative to Pivot Point</u>

$$\dot{X}'_{CG} = -\ell \left(\frac{m_N}{m}\right)\left[i_{NR}\sin(i_{NR}-\lambda) + i_{NL}\sin(i_{NL}-\lambda)\right]$$

$$\dot{Z}'_{CG} = -\ell \left(\frac{m_N}{m}\right)\left[i_{NR}\cos(i_{NR}-\lambda) + i_{NL}\cos(i_{NL}-\lambda)\right] \tag{C-15}$$

<u>Center of Gravity Acceleration Relative to Pivot Point</u>

$$\ddot{X}'_{CG} = -\ell\left(\frac{m_N}{m}\right) \left[\ddot{i}_{NR}\sin(i_{NR}-\lambda) + \ddot{i}_{NL}\sin(i_{NL}-\lambda) + \dot{i}^2_{NL} \cos (i_{NL}-\lambda) + i^2_{NR} \cos (i_{NR}-\lambda)\right] \tag{C-16}$$

$$\ddot{Z}'_{CG} = -\ell \left(\frac{m_N}{m}\right) \left[\ddot{i}_{NR}\cos(i_{NR}-\lambda) + \ddot{i}_{NL}\cos(i_{NL}-\lambda) - \dot{i}^2_{NL}\sin (i_{NL}-\lambda) - \dot{i}^2_{NR}\sin (i_{NR}-\lambda)\right]$$

<u>Pilot Station Velocities - Body Axes</u>

The velocities at the pilot's station are required in order to drive the visual display. From equations (C-3) and (C-4) the components of velocity of the pilot's station in body axes are:

$$u_{PA} = u_P + QZ_{PA} - RY_{PA}$$

$$v_{PA} = v_P + R\ell_{PA} - PZ_{PA}$$

$$w_{PA} = w_P + PY_{PA} - Q\ell_{PA}$$

C-3 Pilot Station Acceleration - Body Axes

The pilot station acceleration is also required to drive the visual display. These accelerations are derived here.

The velocity at the pilot's station is

$$\underline{V}_{PA} = \underline{V}_{CG} + \underline{\Omega} \times \underline{r}_{PA} + \frac{\delta \underline{r}_{PA}}{\delta t}$$

where $\underline{r}_{PA}$ is the vector from the aircraft CG to the pilot's station and $\frac{\delta \underline{r}_{PA}}{\delta t}$ is the rate of change of the pilot's station with respect to the aircraft CG.

The pilot's station acceleration is

$$\underline{a}_{PA} = \frac{d\underline{V}_{PA}}{dt} = \frac{d\underline{V}_{CG}}{dt} + \frac{d}{dt}(\underline{\Omega} \times \underline{r}_{PA}) + \frac{d}{dt}\left(\frac{\delta \underline{r}_{PA}}{\delta t}\right)$$

$$= \underline{a}_{CG} + \frac{\delta}{\delta t}(\underline{\Omega} \times \underline{r}_{PA}) + \underline{\Omega} \times (\underline{\Omega} \times \underline{r}_{PA}) + \frac{\delta^2 \underline{r}_{PA}}{\delta t^2} + \underline{\Omega} \times \frac{\delta \underline{r}_{PA}}{\delta t}$$

$$= \underline{a}_{CG} + \frac{\delta \underline{\Omega}}{\delta t} \times \underline{r}_{PA} + 2\Omega \times \frac{\delta \underline{r}_{PA}}{\delta t} + \underline{\Omega}(\underline{r}_{PA} \cdot \underline{\Omega}) - \Omega^2 \underline{r}_{PA} + \frac{\delta^2 \underline{r}_{PA}}{\delta t^2}$$

with $\underline{\Omega} = P\hat{\underline{i}} + Q\hat{\underline{j}} + R\hat{\underline{k}}$

$$\frac{\delta \Omega}{\delta t} = \dot{P}\hat{\underline{i}} + \dot{Q}\hat{\underline{j}} + \dot{R}\hat{\underline{k}}$$

$$\underline{r}_{PA} = (X_{PA} - X_{CG})\,\hat{\underline{i}} + (Y_{PA} - Y_{CG})\,\hat{\underline{j}} + (Z_{PA} - Z_{CG})\,\hat{\underline{k}}$$

$$\frac{\delta \underline{r}_{PA}}{\delta t} = (\dot{X}_{PA} - \dot{X}_{CG})\,\hat{\underline{i}} + (\dot{Y}_{PA} - \dot{Y}_{CG})\,\hat{\underline{j}} + (\dot{Z}_{PA} - \dot{Z}_{CG})\,\hat{\underline{k}}$$

and noting that Y_{CG} and the time derivatives of X_{PA}, Y_{PA}, Z_{PA} are always zero, the above equation yields the pilot's station accelerations as: -

$$a_{x_{PA}} = \frac{X_{AERO}}{m} + (\dot{Q} + PR)(Z_{PA} - Z_{CG}) + (Q^2 + R^2)(X_{CG} - \ell_{PA})$$

$$+ Y_{PA}(PQ - \dot{R}) - 2Q\dot{Z}_{CG} - \ddot{X}_{CG}$$

$$a_{y_{PA}} = \frac{Y_{AERO}}{m} + (\dot{P} - QR)(Z_{CG} - Z_{PA}) + (\dot{R} + PQ)(\ell_{PA} - X_{CG})$$

$$- Y_{PA}(R^2 + P^2) + 2(P\dot{Z}_{CG} - R\dot{X}_{CG})$$

$$a_{z_{PA}} = \frac{Z_{AERO}}{m} + (\dot{Q} - PR)(X_{CG} - \ell_{PA}) + (P^2 + Q^2)(Z_{CG} - Z_{PA})$$

$$+ Y_{PA}(\dot{P} + QR) + 2Q\dot{X}_{CG} - \ddot{Z}_{CG}$$

where $a_{x_{CG}} = \frac{Z_{AERO}}{m}$ etc.

$X_{PA} = \ell_{PA}$, the distance from the pivot to the pilot's station

C.4 Aircraft Inertias

The aircraft roll inertia about the aircraft center of gravity is, from the parallel axis theorem,

$$I_{xx} = I_{xx}^{f} + I_{xx}^{w} + I_{xx}^{NL} + I_{xx}^{NR} + m_f Z_f^2 + m_w Z_w^2 + 2m_N Y_N^2 + m_N Z_{NL}^2 + m_N Z_{NR}^2 \quad \text{(C-17)}$$

where I_{xx}^{f}, etc., are the inertias of the various components about their individual centers of gravity.

In the case of the nacelles the inertias I_{xx}^{NL}, I_{xx}^{NR} are dependent on the nacelle tilt angle, i_N. These inertias are related to the inertias of the nacelle with respect to a set of nacelle-fixed axes O"xyz placed as shown in Figure 5.1. The relationships are

$$
\begin{aligned}
I_{xx}^N &= I_{xx_o}^N + (I_{zz_o}^N - I_{xx_o}^N) \sin^2 i_N - I_{xz_o} \sin 2i_N \\
I_{yy}^N &= I_{yy_o}^N \\
I_{zz}^N &= I_{zz_o}^N + (I_{xx_o}^N - I_{zz_o}^N) \sin^2 i_N + I_{xz_o} \sin 2i_N \\
I_{xz}^N &= I_{xz_o}^N \cos 2i_N + \frac{1}{2} (I_{xx_o} - I_{zz_o}) \sin 2i_N
\end{aligned}
\tag{C-18}
$$

Using equations (C-18) together with (C-13), (C-11) and (C-12), in equation (C-17), the roll inertia becomes

$$
\begin{aligned}
I_{xx} = {} & I_{xx}^f + I_{xx}^w + 2I_{xx_o}^N + (I_{zz_o}^N - I_{xx_o}^N) (\sin^2 i_{NL} + \sin^2 i_{NR}) \\
& - I_{xz_o}^N (\sin 2i_{NL} + \sin 2i_{NR}) + 2\, m_N Y_N^2 + m_f h_f Z_f \\
& + m_w h_w z_w - m_f Z_f Z'_{CG} - m_w Z_w Z'_{CG} \\
& - m_N Z_{NL} Z'_{CG} - m_N Z_{NR} Z'_{CG} \\
& - \ell m_N \left[Z_{NR} \sin(i_{NR} - \lambda) + Z_{NL} \sin(i_{NL} - \lambda) \right]
\end{aligned}
$$

$$= I^f_{xx} + I^w_{xx} + 2I^N_{xx_o} + (I^N_{zz_o} - I^N_{xx_o})\ (\sin^2 i_{NL} + \sin^2 i_{NR})$$

$$- I^N_{xz_o}\ (\sin 2i_{NL} + \sin 2i_{NR}) + 2\ m_N Y_N^2 + m_f h_f Z_f$$

$$+ m_w h_w Z_w - \ell m_N \left[Z_{NR} \sin\ (i_{NR} - \lambda) + Z_{NL} \sin\ (i_{NL} - \lambda)\right]$$

since the terms containing Z'_{CG} sum to zero.

Similarly

$$I_{xz} = I^f_{xz} + I^w_{xz} + I^N_{xz}\ (\cos 2i_{NL} + \cos 2i_{NR})$$

$$+ \frac{1}{2}\ (I^N_{xx_o} - I^N_{zz_o})\ (\sin 2i_{NL} + \sin 2i_{NR}) + m_f \ell_f Z_f$$

$$+ m_w Z_w \ell_w + \ell m_N \left[Z_{NR} \cos\ (i_{NR} - \lambda) + Z_{NL} \cos\ (i_{NL} - \lambda)\right]$$

$$(I_{zz} - I_{yy}) = I^f_{zz} - I^f_{yy} + I^w_{zz} - I^w_{yy} + 2(I^N_{zz_o} - I^N_{yy_o})$$

$$+ (I^N_{xx_o} - I^N_{zz_o})(\sin^2 i_{NL} + \sin^2 i_{NR}) + I^N_{xz_o}(\sin 2i_{NL} + \sin 2i_{NR})$$

$$-(m_f h_f Z_f + m_w h_w Z_w) + m_N \ell \left[Z_{NL} \sin\ (i_{NL} - \lambda)\right.$$

$$\left. + Z_{NR} \sin\ (i_{NR} - \lambda)\right] + 2m_N Y_N^2$$

Similar expressions are obtained for I_{yy} and I_{zz} and these are presented in Appendix E.

APPENDIX D - CALCULATION OF SLIPSTREAM-IMMERSED WING AREAS

The wing areas washed by the rotor slipstreams are required in the calculation of wing lift and drag. These immersed areas depend on rotor shaft inclination, wing angle of attack and sideslip, and rotor thrust. The equations presented in Appendix E for the immersed areas S_{i_L} and S_{i_R} were obtained as follows.

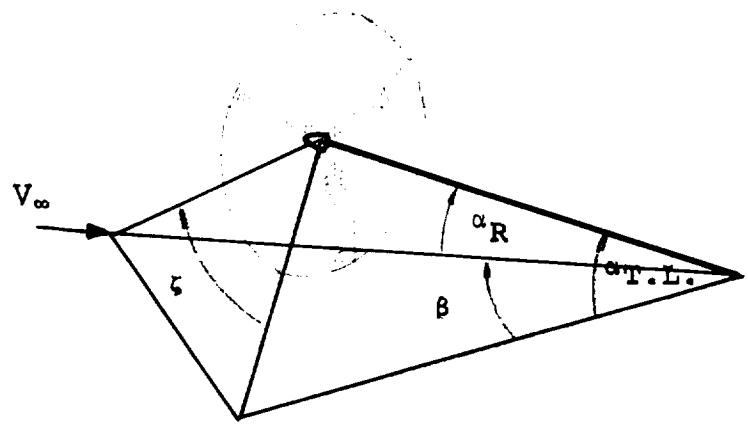

The above sketch shows a rotor under conditions of combined angle of attack ($\alpha_{T.L.}$) and sideslip (β). The resultant angle of attack of the shaft is given by

$$\alpha_R = \cos^{-1} (\cos \alpha_{T.L.} \cos \beta) \qquad \text{(D-1)}$$

If the rotor shaft is inclined to the fuselage centerline at angle i_N and the fuselage is at angle of attack α_f then

$$\alpha_{T.L.} = \alpha_f + i_N \qquad \text{(D-2)}$$

The rotor "sideslip" angle, ζ, is defined by

$$\zeta = \mathrm{Tan}^{-1}\left[\frac{\mathrm{Tan}\ \beta}{\mathrm{Sin}\ \alpha_{T.L.}}\right] \qquad \text{(D-3)}$$

and is the angle shown in the sketch.

Figure D.1 presents four views of the geometry of rotor slipstream/wing planform interaction.

Figure D.1[a] is a view of the plane taken through the rotor shaft parallel to the aircraft vertical plane of symmetry. The line PT is the wing chord, the distances PC and h_p are the horizontal and vertical coordinates of the pivot measured from the wing leading edge, and ℓ is the spinner-to-pivot shaft length.

Figure D.1[b] is a view taken normal to the rotor disc plane. In this view, the traces of the slipstream on planes taken through the wing leading and trailing edges parallel to the disc plane appear as circles. This assumes that the slipstream is a sheared circular cylinder.

Figure D.1[c] is a section taken in the plane containing the rotor shaft and the freestream velocity vector V_∞. The angle ε is the deflection of the slipstream relative to the freestream direction. Planes are taken through the wing leading and trailing edges parallel to the rotor disc. These intersect the rotor shaftline at the points O and T, and intersect the slipstream centerline at the points O' and O". These points enable the slipstream traces shown in (b) to be constructed.

Figure (D.1[d]) is a view taken perpendicular to the wing surface showing the areas washed by the slipstream. For convenience this view combines the immersed areas of both left and right wings. In general, the imprint of the slipstream on the wing will be bounded in the chordwise direction by curved lines; however, the approximation is made that these lines are straight.

The immersed area of the right wing panel is (assuming that the tip is immersed),

$$S_{i_R} = \frac{1}{2}(PM + TN)c$$

$$= \frac{1}{2}(PR + RM + TS + SN)c \qquad \text{(D-4)}$$

From Figure D.1[b] $PR = OO' \sin \zeta$ (D-5)

From Figure D.1[c] $OO' = (\ell - OD) \operatorname{Tan} (\alpha_R - \varepsilon)$ (D-6)

From Figure D.1[a] $OD = PC \cos (i_N - i_W) - h_p \sin(i_N - i_W)$ (D-7)

From Figure D.1[b] $RM = R'M' = \sqrt{\frac{D_s^2}{4} - O'R'^2}$ (D-8)

From Figure D.1[b] $O'R' = OO' \cos \zeta + OP$ (D-9)

From Figure D.1[a] $OP = PC \sin (i_N - i_W) + h_p \cos (i_N - i_W)$ (D-10)

These equations define the leading edge intersection PM. If RM is zero or negative, the slipstream does not intersect the leading edge and the wing is considered to be unaffected by the slipstream.

For the trailing edge intersection, TN:

$$TS = OO'' \sin \zeta \qquad \text{(D-11)}$$

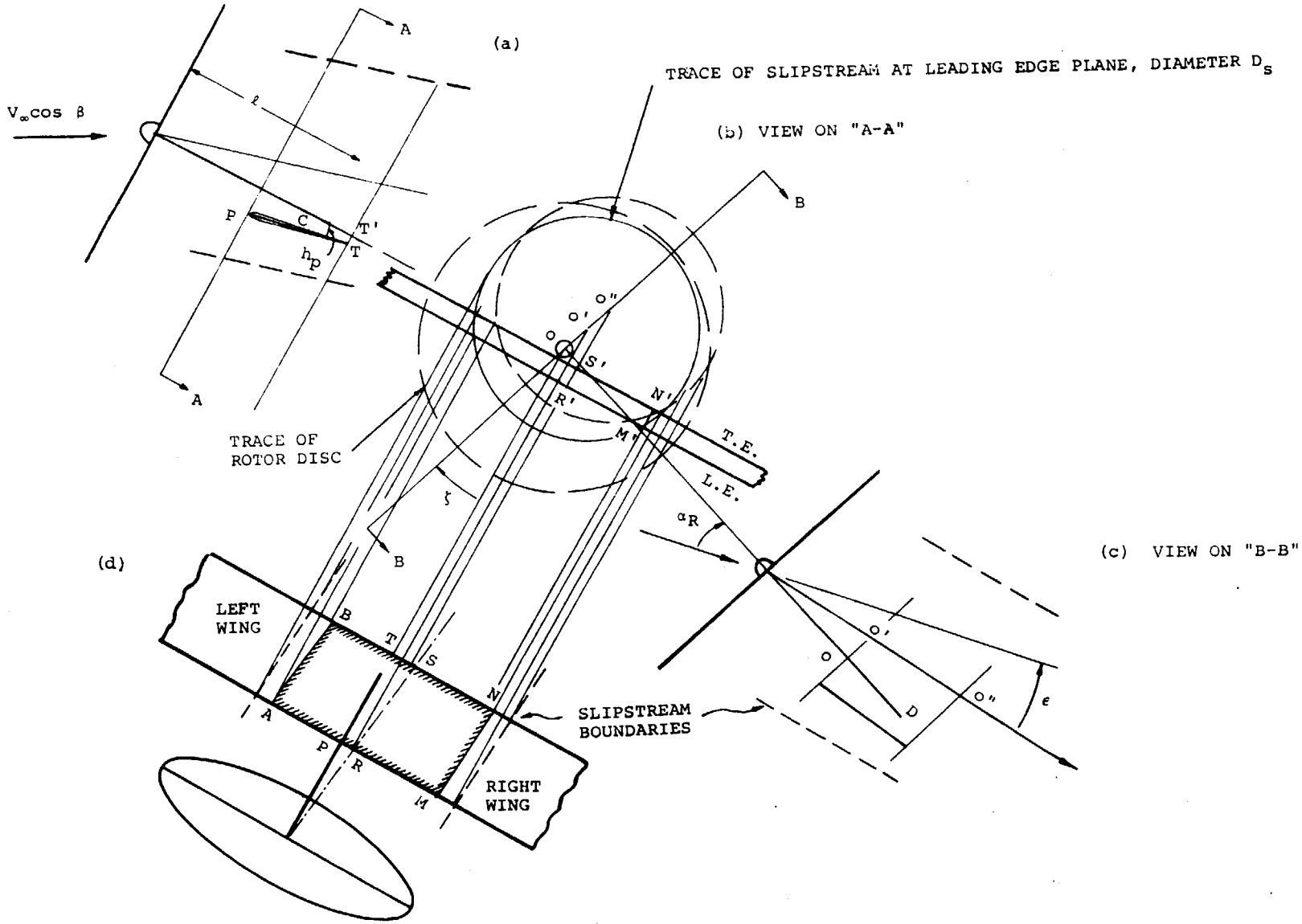

Figure D.1. Geometry of Rotor Slipstream/Wing Planform Interaction

$$OO'' = (\ell + c \cos (i_N - i_W) - OD) \operatorname{Tan} (\alpha_R - \varepsilon) \qquad \text{(D-12)}$$

$$SN = S'N' = \frac{D_s^2}{4} - O''S'^2 \qquad \text{(D-13)}$$

$$O''S' = OO'' \cos \zeta + TT' \qquad \text{(D-14)}$$

$$TT' = OP - c \sin (i_N - i_W) \qquad \text{(D-15)}$$

If we write

$$\xi_1 = PR, \ \xi_2 = RM, \ \xi_3 = TS, \text{ and } \xi_4 = SN$$

then, using the above equations,

$$\xi_1 = [\ell - PC \cos (i_N - i_W) + h_p \sin(i_N - i_W)] \operatorname{Tan}(\alpha_R - \varepsilon) \sin \xi \qquad \text{(D-16)}$$

and

$$\xi_2 = \sqrt{\frac{D_s^2}{4} - \{[\ell - PC \cos(i_N - i_W) + h_p \sin(i_N - i_W)] \operatorname{Tan}(\alpha_R - \varepsilon) \cos \zeta + PC \sin(i_N - i_W) + h_p \cos(i_N - i_W)\}} \qquad \text{(D-17)}$$

The corresponding equations for ξ_3 and ξ_4 are obtained by replacing PC in (D-16) and (D-17) with (PC-c)

Thus the immersed area of the right wing panel is given by

$$S_{i_R} = \frac{1}{2} c \ (\xi_1 + \xi_2 + \xi_3 + \xi_4) \qquad \text{(D-18)}$$

From the symmetry of Figure D.1(d), SN=BS and RM=AR. The total immersed area of both wing panels is

$$S_{i_T} = \frac{1}{2} c \ (AM + BN) = \frac{1}{2} c \ (2\xi_2 + 2\xi_4) = C(\xi_2 + \xi_4) \qquad \text{(D-19)}$$

and therefore the immersed area of the left wing is obtained from

$$S_{i_L} = S_{i_T} - S_{i_R} \qquad \text{(D-20)}$$

The above equations correspond to those presented in Appendix E for calculating immersed wing area.

APPENDIX E COMPUTER REPRESENTATION

The equations derived in previous sections of this report have been collected and written in a format to facilitate computer programming. The complete set of equations which define the Model 222 simulation mathematical model are contained in this section. The computer block diagram for the simulation is also included. Each element of this block diagram contains an index number. Figure E.1 lists the index number, the name of the element, and its page number in this appendix. In addition the input and output, where appropriate, to each element are identified by their index numbers.

INDEX NUMBER	BLOCK DIAGRAM ELEMENT NAMES	PAGE NUMBER
1.	Control Mixing, Load Alleviation System and Actuator Dynamics	E-4
2.	Stability Augmentation System	E-7
3.	Density Calculation	E-9
4.	Engines and Thrust Management System	E-10
5.	Rotor Control Coordinate Axis Transforms	E-14
6.	Center of Gravity Calculation	E-15
7.	Aerodynamic Coordinate Transforms	E-16
8.	Wing Equations (Including Interference)	E-19
9.	Wing A.C. to Elastic Axis Transform	E-33
10.	Wing Force and Moment Resolution to Center of Gravity	E-34
11.	Horizontal and Vertical Tail Aerodynamics (Including Interference)	E-35
12.	Tail Force and Moment Resolution to Center of Gravity	E-43
13.	Nacelle Aerodynamics	E-44
14.	Landing Gear Equations	E-46
15.	Fuselage Aerodynamics	E-49
16.	Fuselage Force and Moment Resolution to Center of Gravity (Includes Landing Gear)	E-50
17.	Wing/Rotor Interference	E-51
18.	Rotor/Rotor Interference	E-52
19.	Rotor Aero Input Equations	E-53
20.	Rotor Equations	E-54
21.	Rotor Force and Moment Resolution	E-61
22.	Wing Vertical Bending	E-64
23.	Wing Torsion	E-66
24.	Total Force and Moment Summation About Center of Gravity	E-67
25.	Basic Equations of Motion	E-68
26.	Euler Angle Calculation	E-77
27.	Aircraft Condition Calculation and Ground Track	E-78
28.	Gust Model	E-80
29.	Preliminary Calculation (Preprocess)	E-81
30.	Trim Loops	E-87

Figure E.1. Block Diagram Element Index Numbers

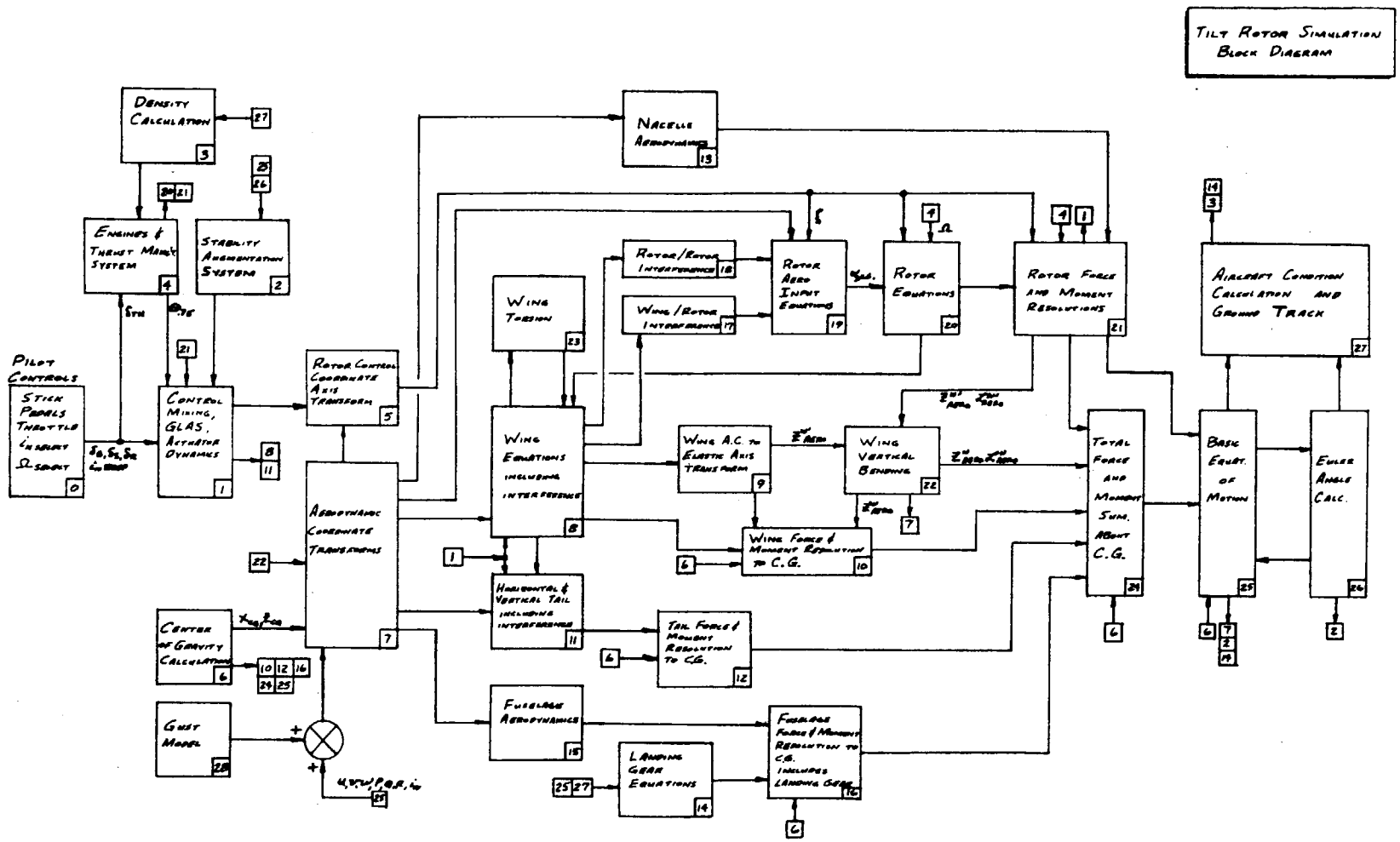
Tilt Rotor Simulation Block Diagram
Density Calculation
Engines & Thrust Mgmt System
Stability Augmentation System
Pilot Controls
Stick Pedals Throttle
Control Mixing, GLAS, Actuator Dynamics
Rotor Control Coordinate Axis Transform
Aerodynamic Coordinate Transforms
Center of Gravity Calculation
Gust Model
Nacelle Aerodynamics
Wing Torsion
Rotor/Rotor Interferences
Wing/Rotor Interferences
Rotor Aero Input Equations
Rotor Equations
Rotor Force and Moment Resolutions
Wing Equations including interferences
Wing A.C. to Elastic Axis Transform
Wing Vertical Bending
Wing Force & Moment Resolution to C.G.
Horizontal & Vertical Tail including interferences
Tail Force & Moment Resolution to C.G.
Fuselage Aerodynamics
Landing Gear Equations
Fuselage Force & Moment Resolution to C.G. includes Landing Gear
Total Force and Moment Sum. About C.G.
Aircraft Condition Calculation and Ground Track
Basic Equat. of Motion
Euler Angle Calc.

PRELIMINARY
CONTROL SYSTEM BLOCK DIAGRAM

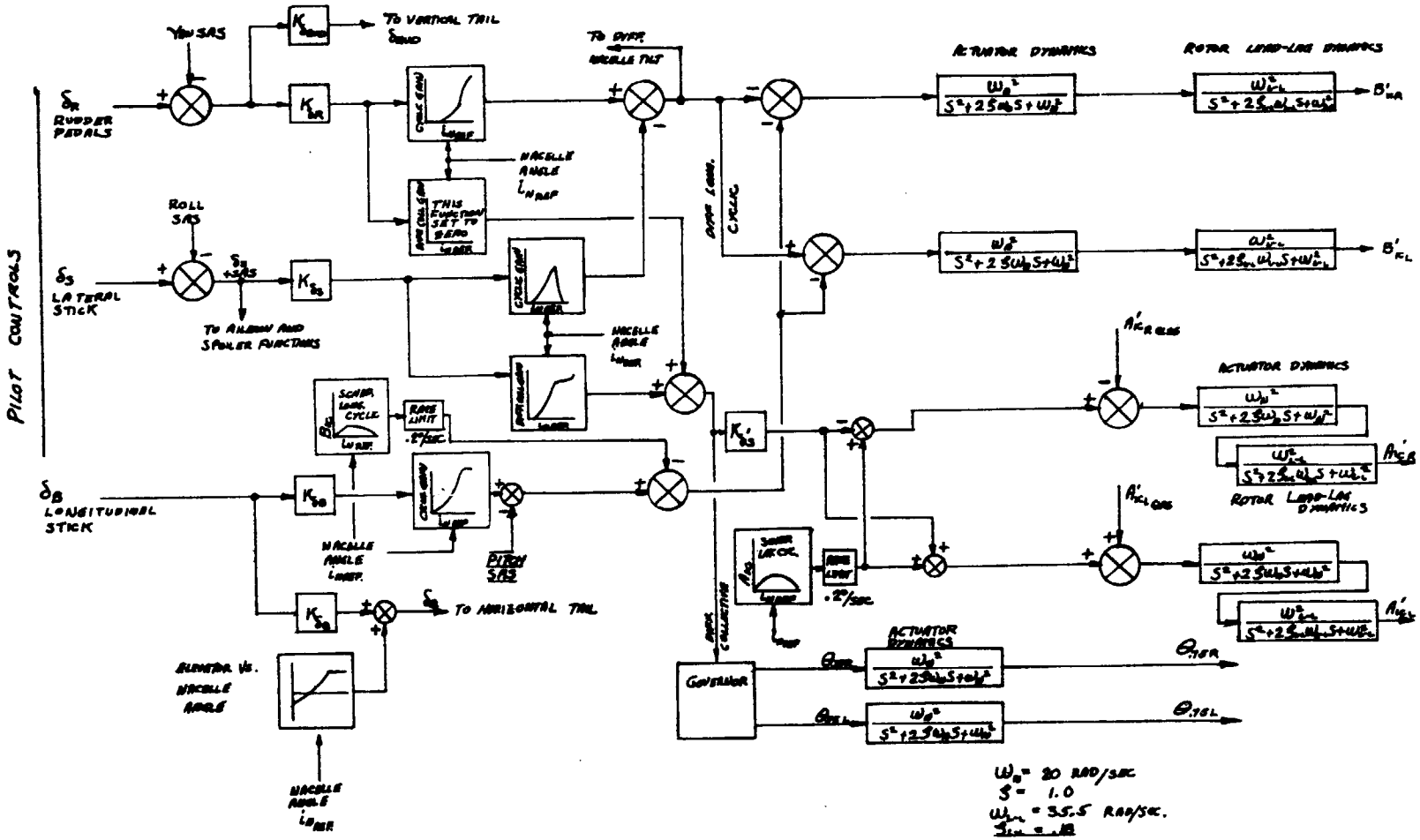

MODEL 222 LOAD ALLEVIATION SYSTEM (LAS)

(FOR PIVOT MOMENTS - SINGLE COMMON LONG. ACTUATOR)

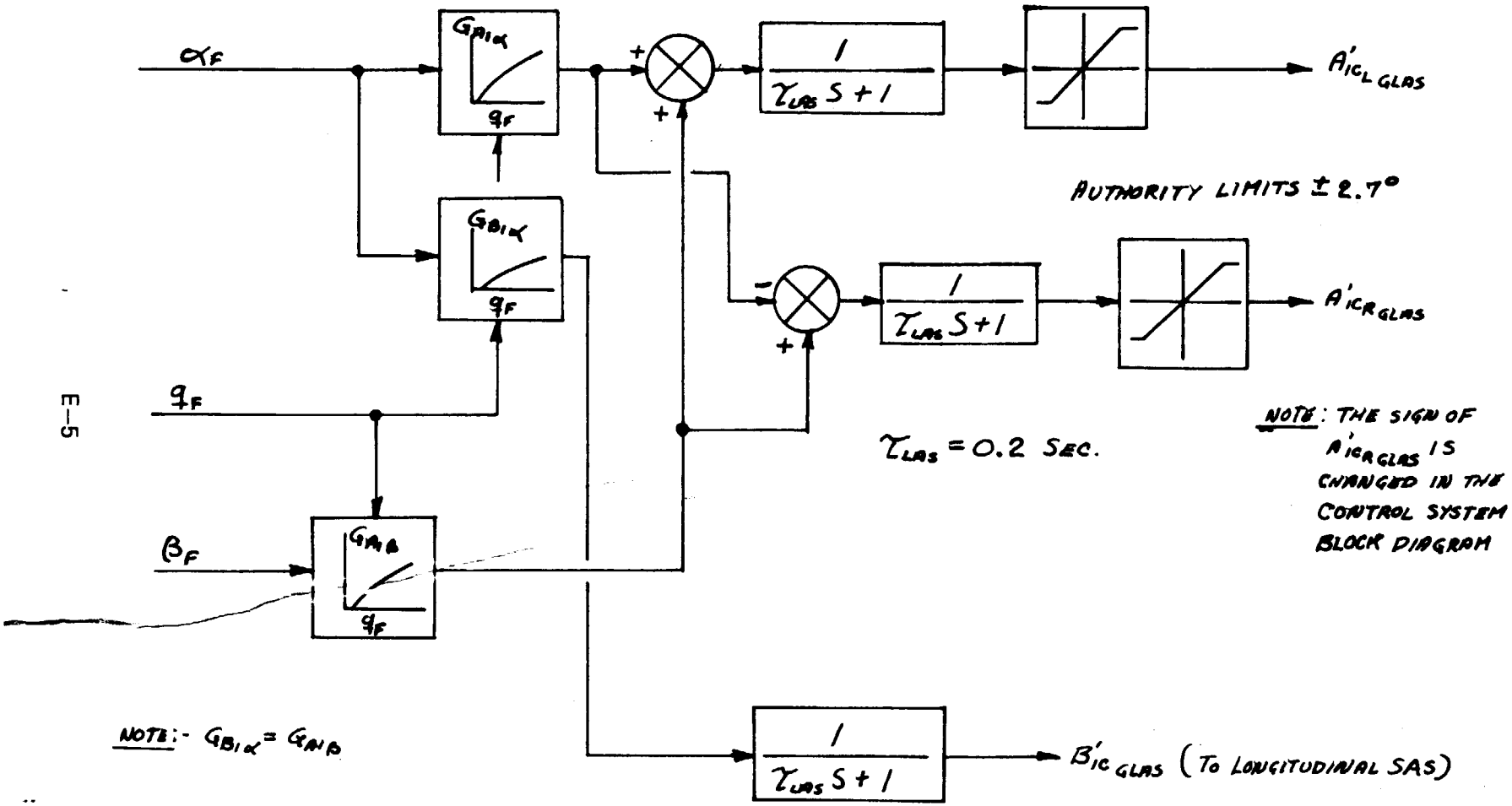

NOTE: THE SIGN OF $A'_{IC_{R\,GLAS}}$ IS CHANGED IN THE CONTROL SYSTEM BLOCK DIAGRAM

NOTE:- $G_{B_{I\alpha}} = G_{A_{I\beta}}$

GOVERNING EQUATIONS

$$A'_{IC_{L\,GLAS}} = G_{A_{I\alpha}}\,\alpha + G_{A_{I\beta}}\,\beta$$

$$A'_{IC_{R\,GLAS}} = G_{A_{I\alpha}}\,\alpha - G_{A_{I\beta}}\,\beta$$

$$B'_{IC_{GLAS}} = G_{B_{I\alpha}}\,\alpha$$

MODEL 222
NACELLE, FLAP, FLAPERON, & SPOILER CONTROLS

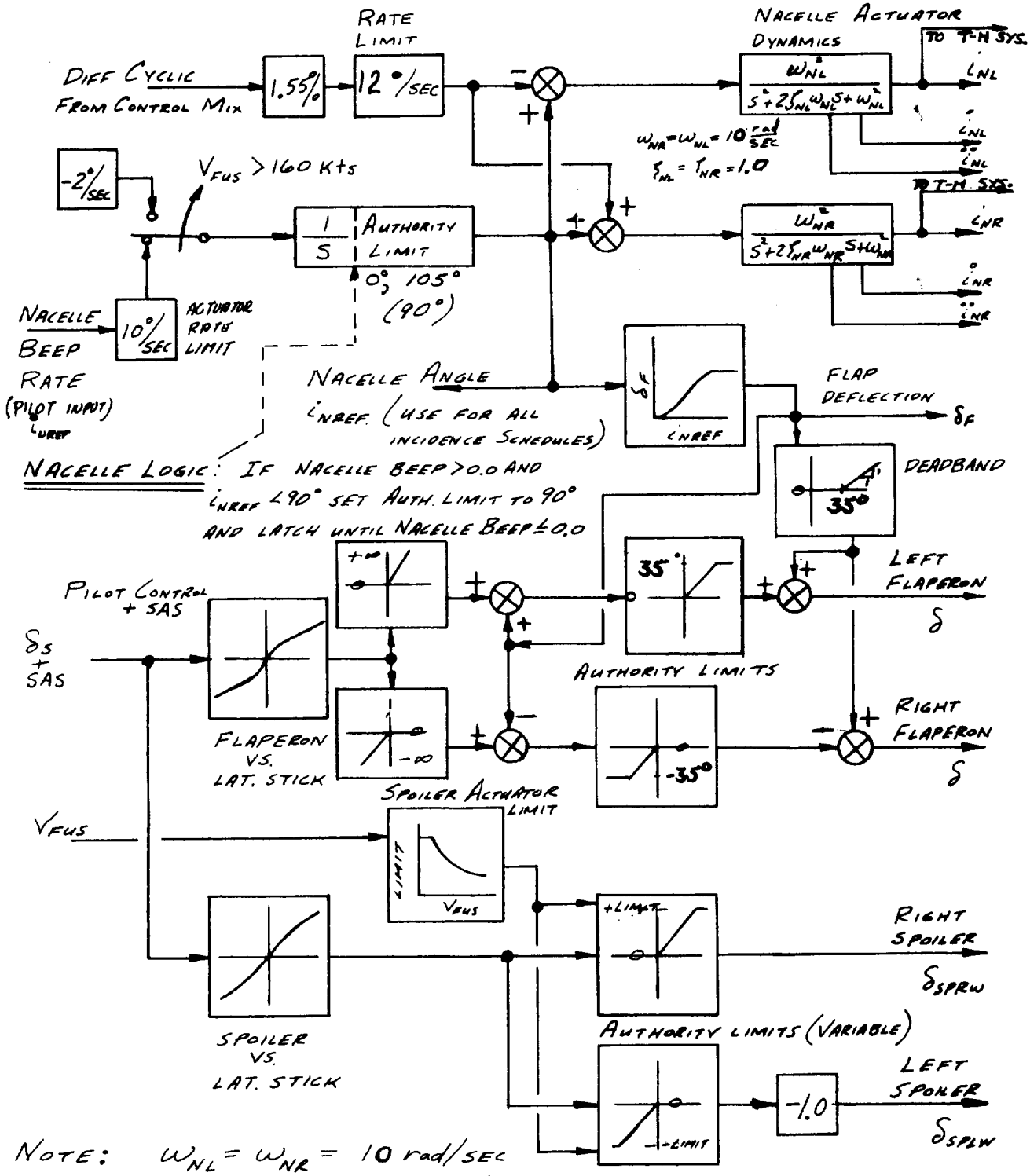

NOTE: $\omega_{NL} = \omega_{NR} = 10$ rad/sec

$\zeta_{NL} = \zeta_{NR} = 1.0$ (critical)

LATERAL-DIRECTIONAL SAS

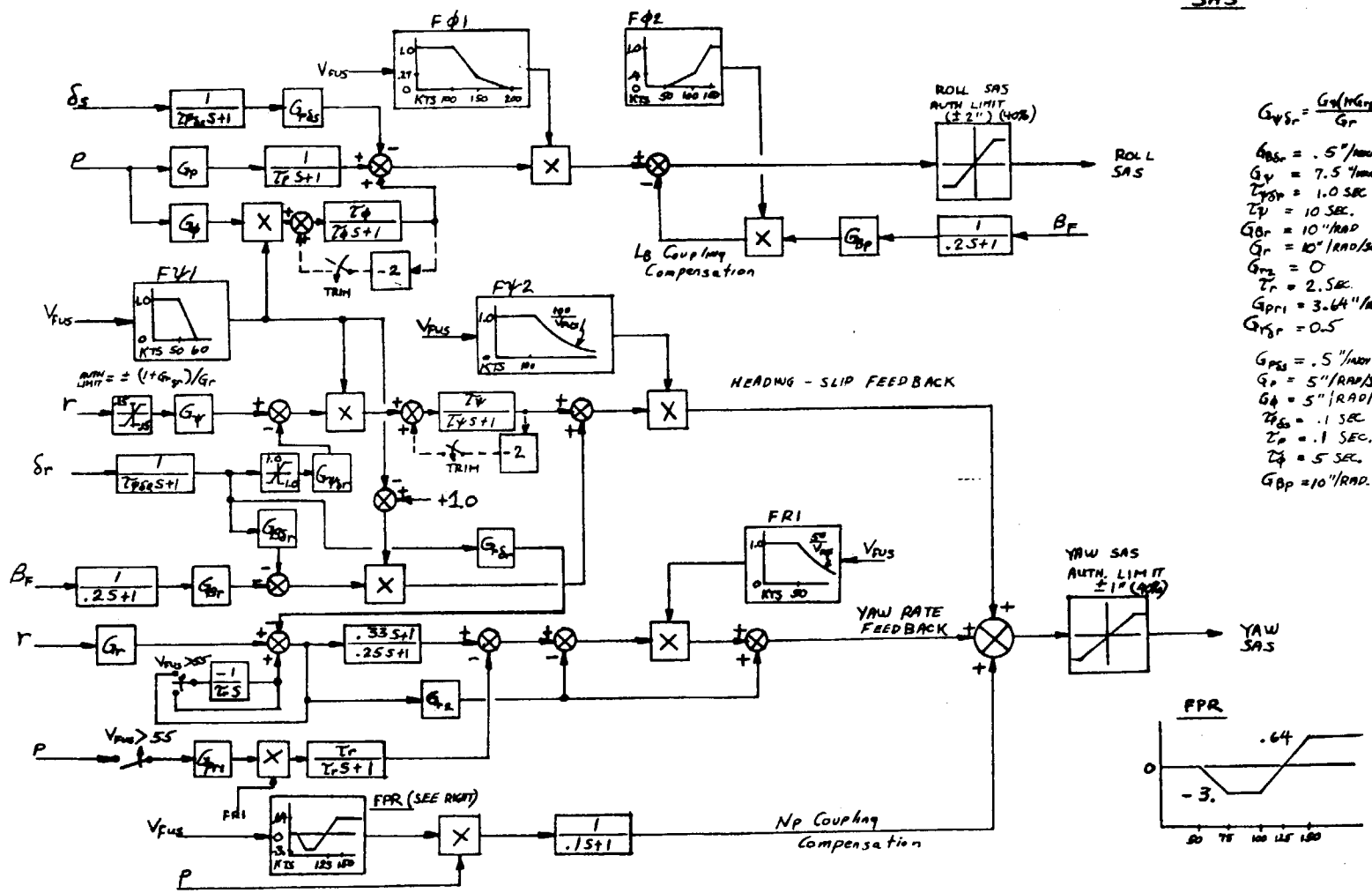

$G_{\psi S_r} = \frac{G_\psi(1+G_{\psi\beta})}{G_r} = 1.125\%$

$G_{\beta S_r} = .5$"/KNOT
$G_\psi = 7.5$ "/KNOT
$\tau_{\psi S_r} = 1.0$ SEC.
$\tau_\psi = 10$ SEC.
$G_{\beta r} = 10$"/RAD
$G_r = 10$"/RAD/SEC.
$G_{r_2} = 0$
$\tau_r = 2.5$ SEC.
$G_{pr_1} = 3.64$"/RAD/SEC
$G_{r_\delta r} = 0.5$

$G_{P_{\delta S}} = .5$ "/KNOT
$G_p = 5$"/RAD/SEC
$G_\phi = 5$"/RAD/SEC.
$\tau_{\phi_{\delta S}} = .1$ SEC
$\tau_p = .1$ SEC.
$\tau_\phi = 5$ SEC.
$G_{\beta p} = 10$"/RAD.

LONGITUDINAL SAS

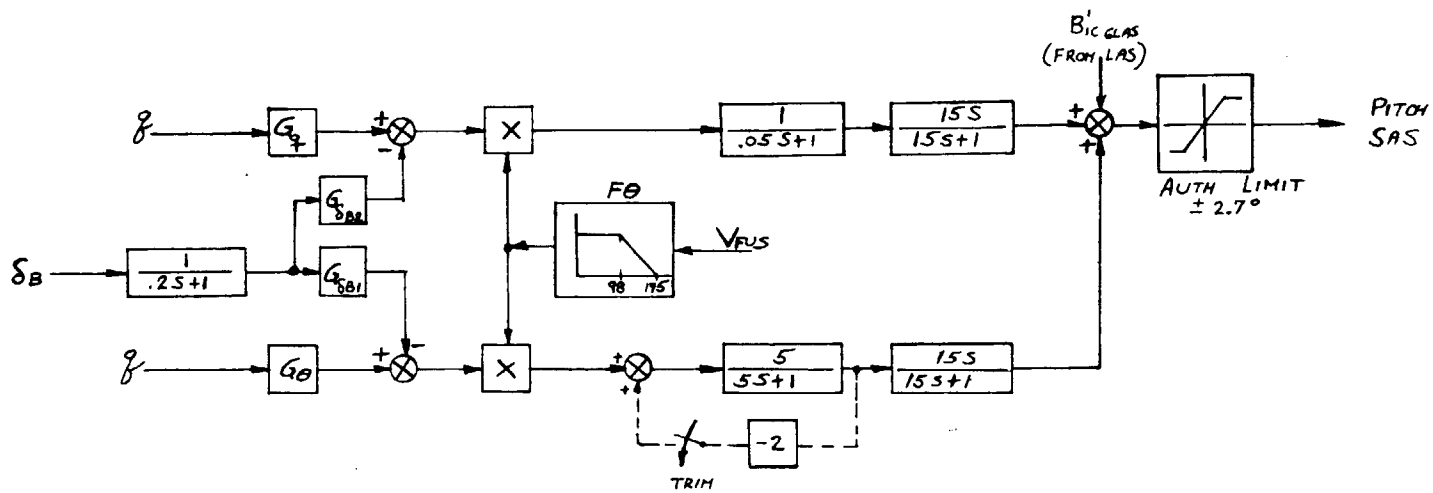

$G_q = 0.50$ DEG/RAD/SEC

$G_\theta = 2.0625$ DEG/RAD/SEC

$G_{\delta B_1} = .17$ DEG/INCH

$G_{\delta B_2} = 0$ DEG/INCH

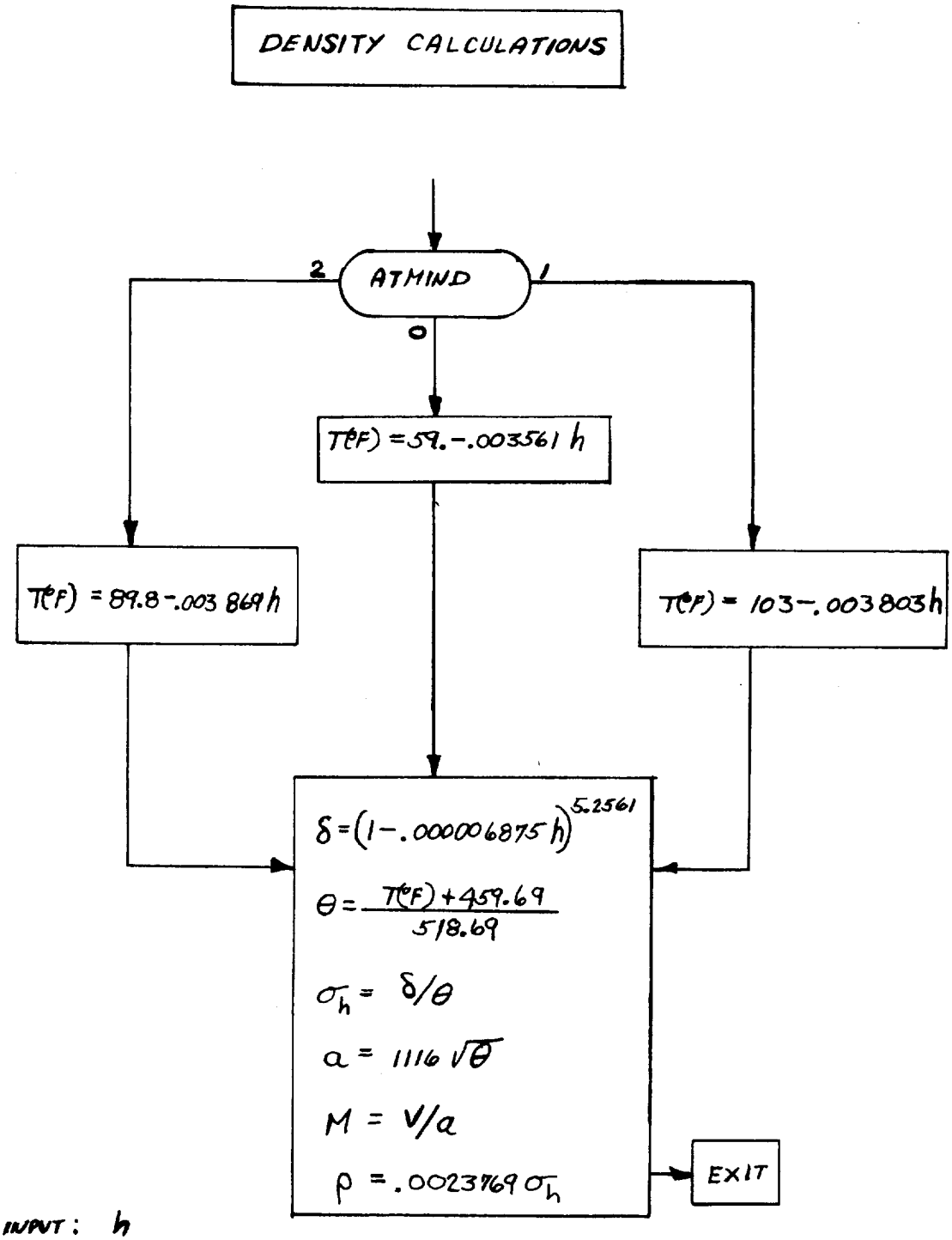

INPUT: h

ATMIND: 0 ~ STD ATMOS
1 ~ HOT ATMOS
2 ~ TROPICAL ATMOS

OUTPUT: δ, θ, σ_h, a, M, ρ

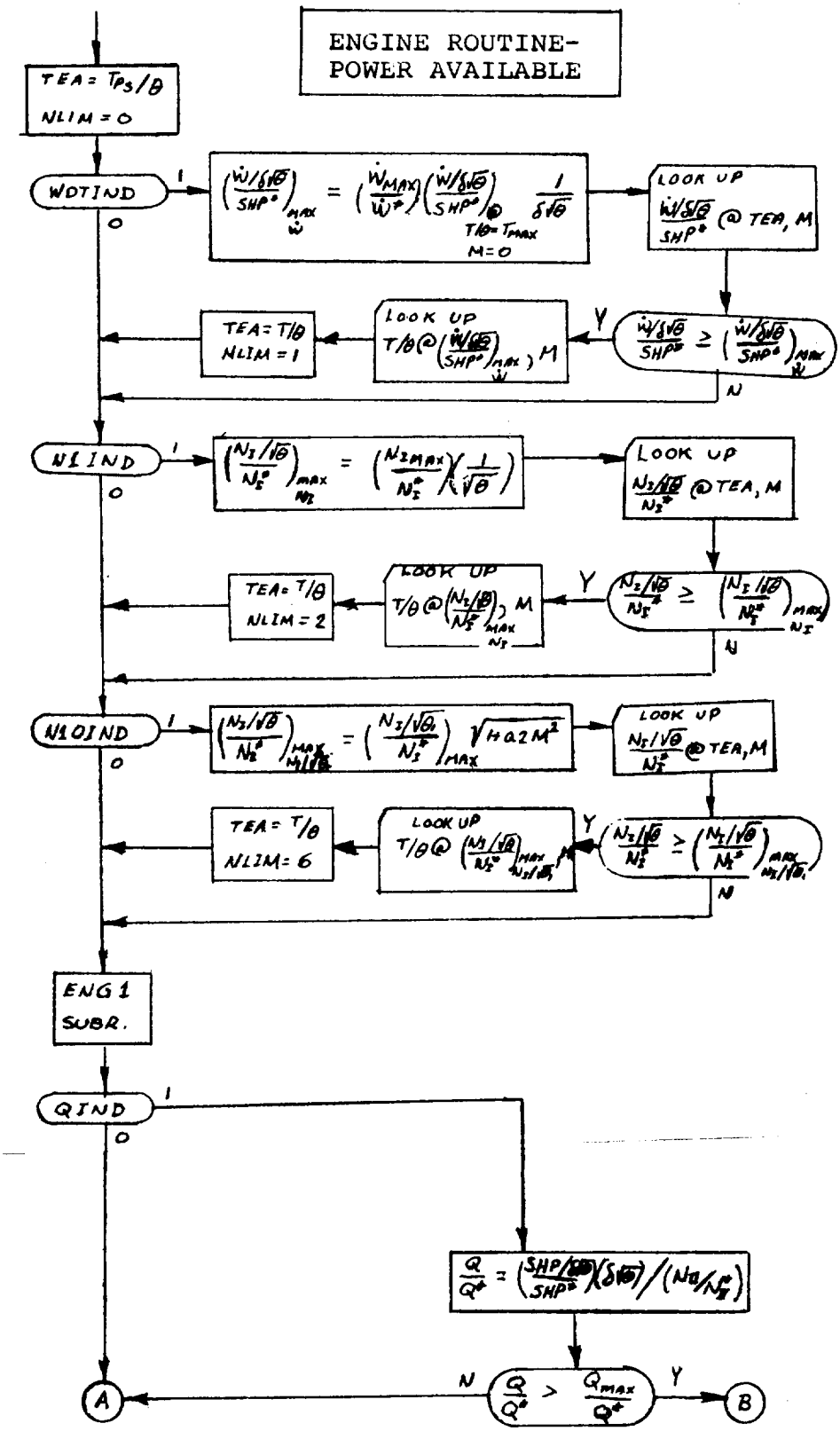
ENGINE ROUTINE-
POWER AVAILABLE
TEA = TPS/θ
NLIM = 0
WDTIND
LOOK UP
@ TEA, M
TEA = T/θ
NLIM = 1
LOOK UP
NLIND
LOOK UP
@ TEA, M
TEA = T/θ
NLIM = 2
LOOK UP
N1OIND
LOOK UP
@ TEA, M
TEA = T/θ
NLIM = 6
LOOK UP
ENG 1
SUBR.
QIND
A
B

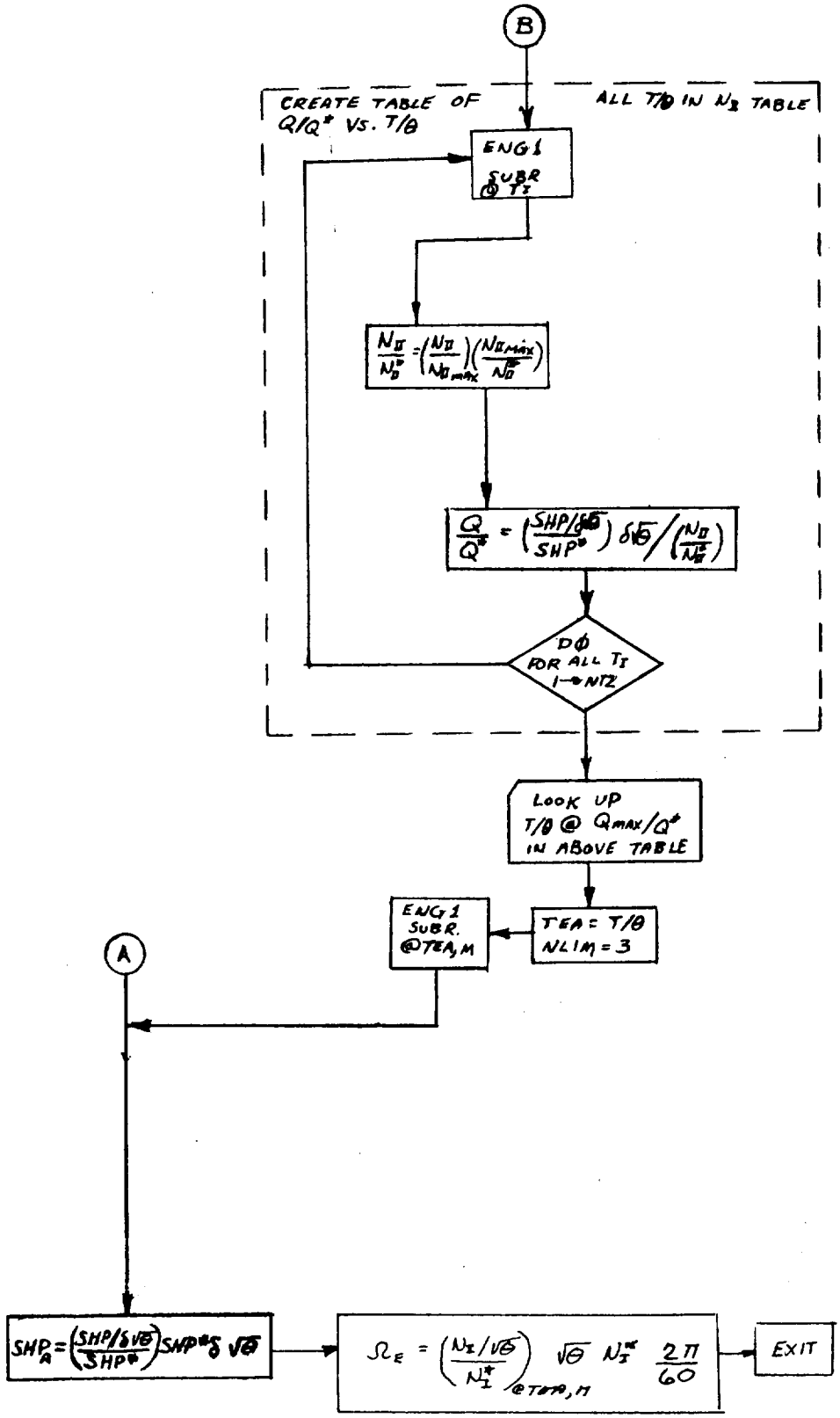
B
CREATE TABLE OF Q/Q* VS. T/θ
ALL T/θ IN N_I TABLE
ENG 1 SUBR @ T_I
N_II/N_II* = (N_II/N_II max)(N_II max/N_II*)
Q/Q* = (SHP/δ√θ / SHP*) δ√θ / (N_II/N_II*)
DO FOR ALL T_I 1→NT2
LOOK UP T/θ @ Q max/Q* IN ABOVE TABLE
TEA = T/θ
NLIM = 3
ENG 1 SUBR. @TEA, M
A
SHP_A = (SHP/δ√θ / SHP*) SHP* δ √θ
Ω_E = (N_I/√θ / N_I*)_@TEA,M √θ N_I* 2π/60
EXIT

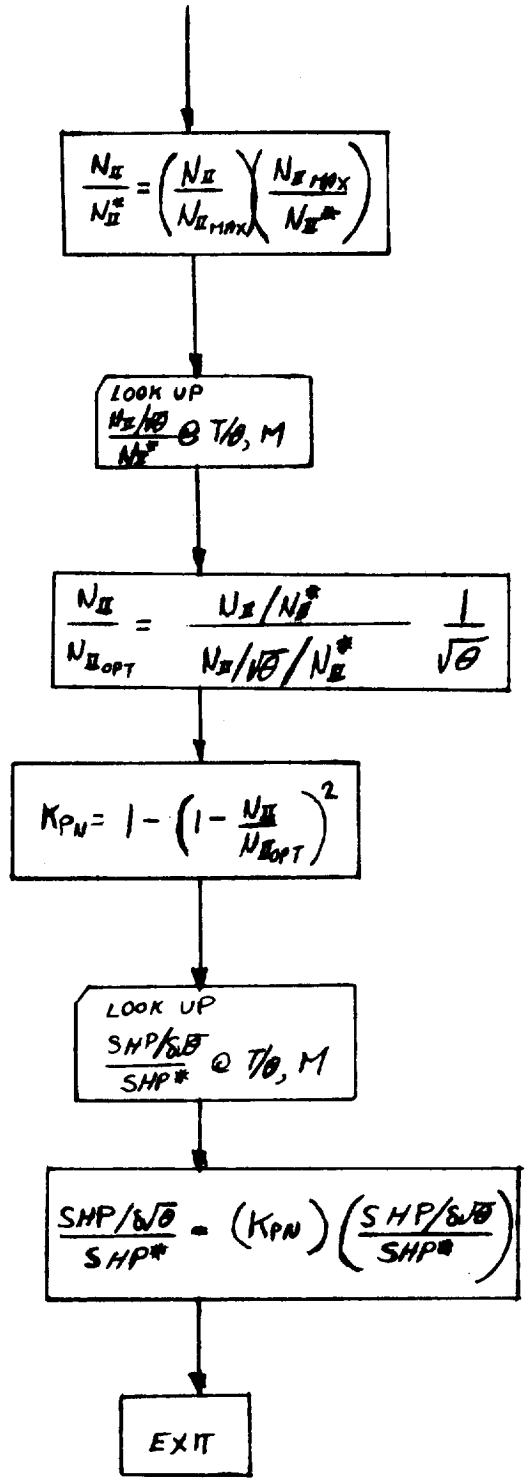

ENG 1 SUBROUTINE, FLOW CHART

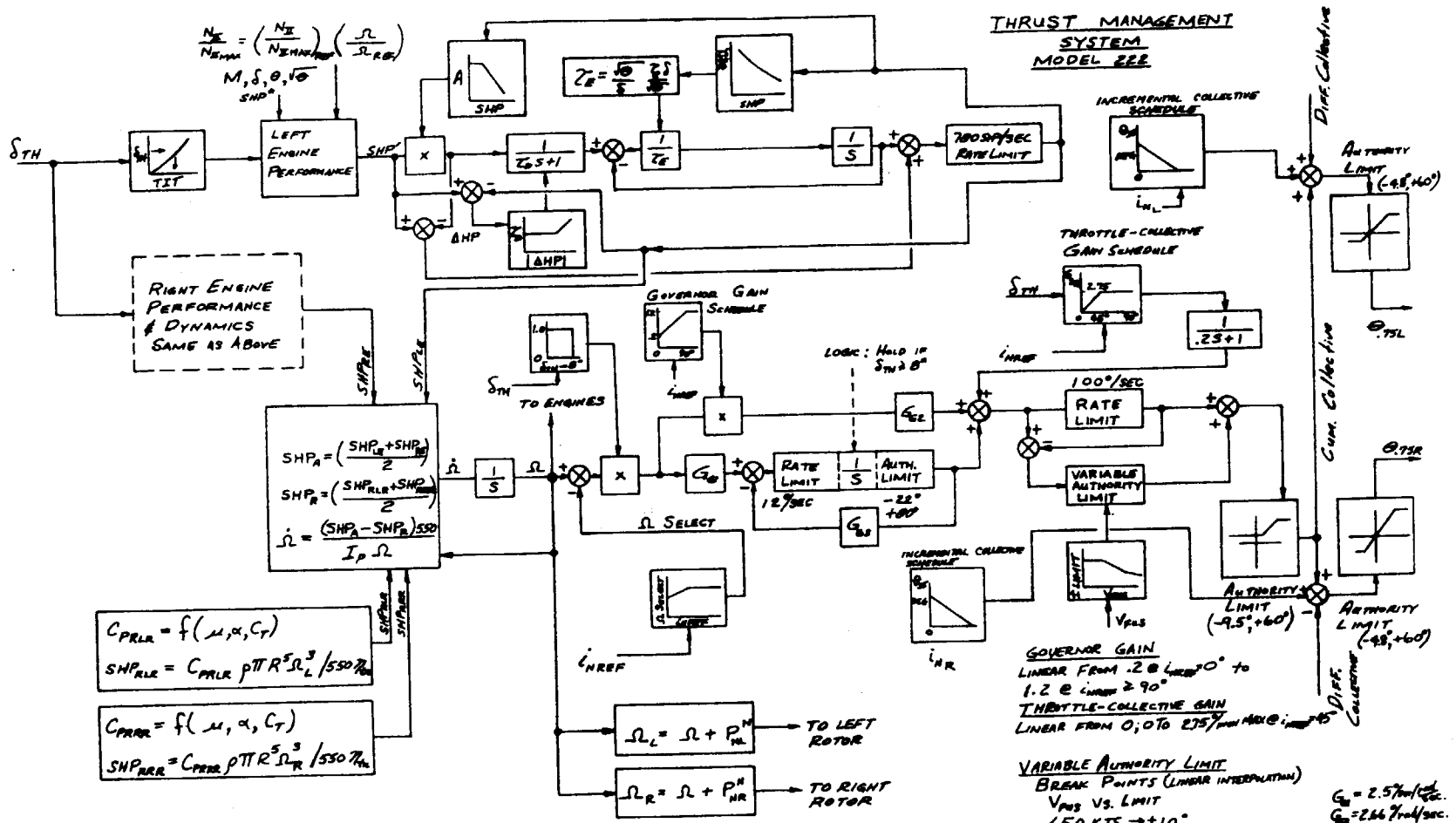
THRUST MANAGEMENT SYSTEM MODEL 222
LEFT ENGINE PERFORMANCE
RIGHT ENGINE PERFORMANCE & DYNAMICS SAME AS ABOVE
TIT
SHP
ΔHP
|ΔHP|
780 SHP/SEC RATE LIMIT
INCREMENTAL COLLECTIVE SCHEDULE
AUTHORITY LIMIT (-4.8°, +60°)
THROTTLE-COLLECTIVE GAIN SCHEDULE
GOVERNOR GAIN SCHEDULE
LOGIC: HOLD IF δTH ≥ 8°
100°/SEC RATE LIMIT
VARIABLE AUTHORITY LIMIT
RATE LIMIT
AUTH. LIMIT
12%/SEC
-22° +80°
Ω SELECT
TO ENGINES
TO LEFT ROTOR
TO RIGHT ROTOR
DIFF. COLLECTIVE
COM. COLLECTIVE
θ.75L
θ.75R
AUTHORITY LIMIT (-9.5°, +60°)
AUTHORITY LIMIT (-4.8°, +60°)
GOVERNOR GAIN
LINEAR FROM .2 @ iNREF = 0° TO 1.2 @ iNREF ≥ 90°
THROTTLE-COLLECTIVE GAIN
LINEAR FROM 0; 0 TO 275%/rad MAX @ iNREF = 45
VARIABLE AUTHORITY LIMIT
BREAK POINTS (LINEAR INTERPOLATION)
VPLS VS. LIMIT
<50 KTS → ±10.°
150 KTS → ±3.0°
400 KTS → ±.833°
GΩ = 2.5%rad/sec.
GΩ = 2.66 %rad/sec.
GGS = .05%/deg.

ROTOR CONTROL COORDINATE AXIS TRANSFORM

LEFT

$$A''_{ICL} = A'_{ICL} \cos \phi_p + B'_{ICL} \sin \phi_p$$

$$B''_{ICL} = -A'_{ICL} \sin \phi_p + B'_{ICL} \cos \phi_p$$

$$A_{ICL} = A''_{ICL} \cos \zeta_{HL} - B''_{ICL} \sin \zeta_{HL}$$

$$B_{ICL} = A''_{ICL} \sin \zeta_{HL} + B''_{ICL} \cos \zeta_{HL}$$

RIGHT

$$A''_{ICR} = A'_{ICR} \cos \phi_p + B'_{ICR} \sin \phi_p$$

$$B''_{ICR} = -A'_{ICR} \sin \phi_p + B'_{ICR} \cos \phi_p$$

$$A_{ICR} = + A''_{ICR} \cos \zeta_{HR} + B''_{ICR} \sin \zeta_{HR}$$

$$B_{ICR} = - A''_{ICR} \sin \zeta_{HR} + B''_{ICR} \cos \zeta_{HR}$$

ROTOR SIDESLIP ANGLE

$$\zeta_{HR} = \tan^{-1} \frac{v_{RR}}{w_{RR} + \epsilon_{wRR} u_{RR}}$$

$$\zeta_{HL} = \tan^{-1} \frac{v_{RL}}{w_{RL} + \epsilon_{wRL} u_{RL}}$$

FORM THE sin & cos OF ζ_{HR} & ζ_{HL}

NOTE: ϕ_p IS THE CONTROL PHASE ANGLE. ϕ_p IS <u>POSITIVE</u> FOR THE CONTROL AXIS MOVED <u>OPPOSITE</u> TO ROTOR ROTATION.

CENTER OF GRAVITY CALCULATION

C.G. LOCATION w.r.t. PIVOT

$$X_{CG} = \frac{m_f l_f + m_w l_w}{m} + l\left(\frac{m_N}{m}\right)\left[\cos(i_{NL}-\lambda) + \cos(i_{NR}-\lambda)\right]$$

$$Z_{CG} = \frac{m_f h_f + m_w h_w}{m} - l\left(\frac{m_N}{m}\right)\left[\sin(i_{NL}-\lambda) + \sin(i_{NR}-\lambda)\right]$$

C.G. VELOCITY w.r.t. PIVOT

$$\dot{X}_{CG} = -l\frac{m_N}{m}\left[\dot{i}_{NL}\sin(i_{NL}-\lambda) + \dot{i}_{NR}\sin(i_{NR}-\lambda)\right]$$

$$\dot{Z}_{CG} = -l\frac{m_N}{m}\left[\dot{i}_{NL}\cos(i_{NL}-\lambda) + \dot{i}_{NR}\cos(i_{NR}-\lambda)\right]$$

C.G. ACCELERATION w.r.t. PIVOT

$$\ddot{X}_{CG} = -l\frac{m_N}{m}\left[\ddot{i}_{NL}\sin(i_{NL}-\lambda) + \dot{i}_{NL}^2\cos(i_{NL}-\lambda) + \ddot{i}_{NR}\sin(i_{NR}-\lambda) + \dot{i}_{NR}^2\cos(i_{NR}-\lambda)\right]$$

$$\ddot{Z}_{CG} = -l\frac{m_N}{m}\left[\ddot{i}_{NL}\cos(i_{NL}-\lambda) - \dot{i}_{NL}^2\sin(i_{NL}-\lambda) + \ddot{i}_{NR}\cos(i_{NR}-\lambda) - \dot{i}_{NR}^2\sin(i_{NR}-\lambda)\right]$$

FUSELAGE PIVOT VELOCITY

$$u_p = u - Z_{CG}\,q - \dot{X}_{CG}$$

$$v_p = v + Z_{CG}\,p - X_{CG}\,r$$

$$w_p = w + X_{CG}\,q - \dot{Z}_{CG}$$

AERODYNAMIC COORDINATE TRANSFORM

LEFT WING A.C. VELOCITY - BODY AXES

$$u'_{Lw} = u_p + Z_{WAC}\, q + Y_{WAC}\, r + q\, h_{ILWAC}$$

$$v'_{Lw} = v_p + X_{WAC}\, r - Z_{WAC}\, p - p\, h_{ILWAC}$$

$$w'_{Lw} = w_p - Y_{WAC}\, p - X_{WAC}\, q + \dot{h}_{ILWAC}$$

RIGHT WING A.C. VELOCITY - BODY AXES

$$u'_{Rw} = u_p + Z_{WAC}\, q - Y_{WAC}\, r + q\, h_{IRWAC}$$

$$v'_{Rw} = v_p + X_{WAC}\, r - Z_{WAC}\, p - p\, h_{IRWAC}$$

$$w'_{Rw} = w_p + Y_{WAC}\, p - X_{WAC}\, q + \dot{h}_{IRWAC}$$

LEFT ROTOR HUB VELOCITY - BODY AXES

$$u'_{RL} = u_p + r\, Y_N - L_S \sin i_{NL} \left(\dot{i}_{NL} + q\right) + q\, h_{IL}$$

$$v'_{RL} = v_p + L_S \left(r \cos i_{NL} + p \sin i_{NL}\right) - p\, h_{IL}$$

$$w'_{RL} = w_p - p\, Y_N - L_S \left(\dot{i}_{NL} + q\right) \cos i_{NL} + \dot{h}_{IL}$$

RIGHT ROTOR HUB VELOCITY - BODY AXES

$$u'_{RR} = u_p - r\, Y_N - L_S \sin i_{NR} \left(\dot{i}_{NR} + q\right) + q\, h_{IR}$$

$$v'_{RR} = v_p + L_S \left(r \cos i_{NR} + p \sin i_{NR}\right) - p\, h_{IR}$$

$$w'_{RR} = w_p + p\, Y_N - L_S \left(\dot{i}_{NR} + q\right) \cos i_{NR} + \dot{h}_{IR}$$

AERODYNAMIC COORDINATE TRANSFORM (CONT'D.)

LEFT ROTOR HUB VELOCITY - SHAFT AXES

$$u_{RL} = u'_{RL} \cos i_{NL} - w'_{RL} \sin i_{NL}$$

$$v_{RL} = v'_{RL}$$

$$w_{RL} = u'_{RL} \sin i_{NL} + w'_{RL} \cos i_{NL}$$

RIGHT ROTOR HUB VELOCITY - SHAFT AXES

$$u_{RR} = u'_{RR} \cos i_{NR} - w'_{RR} \sin i_{NR}$$

$$v_{RR} = v'_{RR}$$

$$w_{RR} = u'_{RR} \sin i_{NR} + w'_{RR} \cos i_{NR}$$

LEFT WING A.C. VELOCITY - CHORD AXES

$$u_{LW} = u'_{LW} \cos i_W - w'_{LW} \sin i_W$$

$$v_{LW} = v'_{LW}$$

$$w_{LW} = u'_{LW} \sin i_W + w'_{LW} \cos i_W$$

RIGHT WING A.C. VELOCITY - CHORD AXES

$$u_{RW} = u'_{RW} \cos i_W - w'_{RW} \sin i_W$$

$$v_{RW} = v'_{RW}$$

$$w_{RW} = u'_{RW} \sin i_W + w'_{RW} \cos i_W$$

AERODYNAMIC COORDINATE TRANSFORM (Cont'd.)

HORIZONTAL STABILIZER A.C. VELOCITY

$$u_{HT} = u_p + Z_{HT} q$$

$$v_{HT} = v_p + X_{HT} r - Z_{HT} p$$

$$w_{HT} = w_p - X_{HT} q$$

VERTICAL FIN A.C. VELOCITY

$$u_{VT} = u_p + Z_{VT} q$$

$$v_{VT} = v_p + X_{VT} r - Z_{VT} p$$

$$w_{VT} = w_p - X_{VT} q$$

WING EQUATIONS

$$\tau_{RR} = \alpha_{RR} + \tan^{-1}\left(\frac{N.F_R}{T_R}\right)$$

$$R_{RR} = \sqrt{T_R^2 + N.F_R^2 + S.F_R^2}$$

$$V_{*R} = \frac{V_{RR}}{\sqrt{\frac{|R_{RR}|+10}{2\rho A}}}$$

$$v_{*R}^4 + 2\,V_{*R}\,v_{*R}^3 \cos\tau_{RR} + v_{*R}^2 V_{*R}^2 = 1 \quad (\text{Solve for } v_{*R})$$

$$\epsilon_{P_{RR}} = \tan^{-1} \frac{v_{*R}\sin\tau_{RR}}{V_{*R} + v_{*R}\cos\tau_{RR}}$$

$$C_{TS\,RR} = \frac{\cos(\tau_{RR} - \alpha_{RR})}{\cos(\tau_{RR} - \alpha_{RR}) + \frac{V_{*R}^2}{4}}$$

$$\tau_{LR} = \alpha_{LR} + \tan^{-1}\left(\frac{N.F_L}{T_L}\right)$$

$$R_{LR} = \sqrt{T_L^2 + N.F_L^2 + S.F_L^2}$$

$$V_{*L} = \frac{V_{LR}}{\sqrt{\frac{|R_{LR}|+10}{2\rho A}}}$$

$$v_{*L}^4 + 2\,V_{*L}\,v_{*L}^3 \cos\tau_{LR} + v_{*L}^2 V_{*L}^2 = 1 \quad (\text{solve for } v_{*L})$$

$$\epsilon_{PLR} = \tan^{-1} \frac{v_{*L}\sin\tau_{LR}}{V_{*L} + v_{*L}\cos\tau_{LR}}$$

$$C_{TSLR} = \frac{\cos(\tau_{LR} - \alpha_{LR})}{\cos(\tau_{LR} - \alpha_{LR}) + \frac{V_{*L}^2}{4}}$$

WING EQUATIONS (Cont'd.)

$$\bar{\xi} = (\xi_{HR} + \xi_{HL}).5$$

$$\bar{\alpha}_R = (\alpha_{RR} + \alpha_{LR}).5$$

$$\left.\begin{aligned} \bar{\epsilon}_p &= (\epsilon_{PRR} + \epsilon_{PLR}).5 \\ \bar{C}_{TS} &= (C_{TSRR} + C_{TSLR}).5 \end{aligned}\right\} \text{Used in Tail Aerodynamics}$$

$$\left.\begin{aligned} \bar{i}_N &= (i_{NL} + i_{NR}).5 \\ C_{LW} &= \frac{(C_{LSRW} + C_{LSLW})}{(1-\bar{C}_{TS})}.5 \end{aligned}\right\} \text{Used in Wing/Rotor Interfer.}$$

$$\xi_{R1} = \left[L_S - PC\cos(\bar{i}_N - i_W) + h_p \sin(\bar{i}_N - i_W)\right]\tan(\bar{\alpha}_R - \bar{\epsilon}_p)\sin\bar{\xi}$$

$$\xi_{R2} = \sqrt{\frac{D^2}{4} - \left\{\left[L_S - PC\cos(\bar{i}_N - i_W) + h_p\sin(\bar{i}_N - i_W)\right]\tan(\bar{\alpha}_R - \bar{\epsilon}_p)\cos\bar{\xi} + PC\sin(\bar{i}_N - i_W) + h_p\cos(\bar{i}_N - i_W)\right\}^2}$$

IF: $\xi_{R2} = 0$ OR Imaginary, $S_{iRW} = 0$ and $S_{iLW} = 0$,
also $\left(\frac{C_{Lwi}}{C_{L\alpha}}\right)_{RW} = 0$ and $\left(\frac{C_{Lwi}}{C_{L\alpha}}\right)_{LW} = 0.0$

FORM ξ_{R3} BY REPLACING PC IN ξ_{R1} EQUATION WITH $(PC - C_W)$

FORM ξ_{R4} BY REPLACING PC IN ξ_{R2} EQUATION WITH $(PC - C_W)$

IF: $\xi_{R4} = 0$ OR Imaginary; $S_{iRW} = 0$ and $S_{iLW} = 0$,
also $\left(\frac{C_{Lwi}}{C_{L\alpha}}\right)_{RW} = 0.0$ and $\left(\frac{C_{Lwi}}{C_{L\alpha}}\right)_{LW} = 0.0$

IF: UMBRELLAS OPEN; SET $C_{LW} = 0.0$

UMBRELLA LOGIC:

IF: $i_{NREF} < F_{iN}$ OR $q_F > 8.479^{LB/FT^2}$,
SET UMBRELLAS CLOSED (Hysterosis $F_{iN} \pm 1°$; $q_F \pm .1 \frac{LB}{FT^2}$)

WING EQUATIONS (CONT'd)

$$S_{i_{RW}} = \frac{C_W}{2}\left[\xi_{R1} + \xi_{R2} + \xi_{R3} + \xi_{R4}\right]$$

$$\left(\frac{S_i}{S}\right)_{RW} = 2\left(\frac{S_{iR}}{S_W}\right)$$

$$S_{i_T} = C_W\left[\xi_{R2} + \xi_{R4}\right]$$

$$S_{i_{LW}} = S_{i_T} - S_{iR}$$

$$\left(\frac{S_i}{S}\right)_{LW} = 2\left(\frac{S_{iL}}{S_W}\right)$$

$$(AR_i)_{LW} = \left(\frac{S_{i_L}}{C_W^2}\right)$$

$$(AR_i)_{RW} = \left(\frac{S_{iR}}{C_W^2}\right)$$

$$AR_W = \frac{S_W}{C_W^2} \quad \text{(PRELIMINARY)}$$

$$\left(\frac{C_{L\alpha_i}}{C_{L\alpha}}\right)_{LW} = \frac{1}{1 + \frac{C_{L\alpha_W}}{\pi}\left[\frac{1}{(AR_i)_{LW}} - \frac{1}{AR_W}\right]}$$

$$\left(\frac{C_{L\alpha_i}}{C_{L\alpha}}\right)_{RW} = \frac{1}{1 + \frac{C_{L\alpha}}{\pi}\left[\frac{1}{(AR_i)_{RW}} - \frac{1}{AR_W}\right]}$$

$$K'_{A_L} = \frac{V_{\Phi_L} + \left(\frac{C_{L\alpha_i}}{C_{L\alpha}}\right)_{LW} N_{\Phi_L}}{V_{\Phi_L} + N_{\Phi_L}}$$

$$K'_{AR} = \frac{V_{\Phi_R} + \left(\frac{C_{L\alpha_i}}{C_{L\alpha}}\right)_{RW} N_{\Phi_R}}{V_{\Phi_R} + N_{\Phi_R}}$$

WING EQUATIONS (CONTINUED)

$$\bar{q}_S = \left[\frac{1}{2}\rho\left(u^2+v^2+w^2\right) + \frac{(T_L + T_R).5}{A} \right]$$

$$q_{S_{RW}} = \left[\frac{1}{2}\rho\left(u_{RW}^2 + v_{RW}^2 + w_{RW}^2\right) + \frac{T_R}{A} \right]$$

$$q_{S_{LW}} = \left[\frac{1}{2}\rho\left(u_{LW}^2 + v_{LW}^2 + w_{LW}^2\right) + \frac{T_L}{A} \right]$$

WING EQUATIONS (Cont'd.)

WING ANGLE OF ATTACK AND SIDESLIP

$$\alpha_{LWO} = \sin^{-1}\left[\frac{w_{LW}}{\sqrt{u_{LW}^2 + w_{LW}^2}}\right] + \theta_{tLWAC}$$

$$\alpha_{RWO} = \sin^{-1}\left[\frac{w_{RW}}{\sqrt{u_{RW}^2 + w_{RW}^2}}\right] + \theta_{tRWAC}$$

$$\beta_{LWO} = \sin^{-1}\left[\frac{v_{LW}}{\sqrt{u_{LW}^2 + v_{LW}^2 + w_{LW}^2}}\right]$$

$$\beta_{RWO} = \sin^{-1}\left[\frac{v_{RW}}{\sqrt{u_{RW}^2 + v_{RW}^2 + w_{RW}^2}}\right]$$

$$\alpha_{LWSS_O} = \alpha_{LWO} - \epsilon_{PLR}$$

$$\alpha_{RWSS_O} = \alpha_{RWO} - \epsilon_{PRR}$$

$$\bar{\alpha}_W = (\alpha_{LWO} + \alpha_{RWO}) \cdot .5$$

$$\alpha_{LW\,rigid} = \sin^{-1}\left[\frac{w_{LW}}{\sqrt{u_{LW}^2 + w_{LW}^2}}\right] - \epsilon_{PLR}$$

$$\alpha_{RW\,rigid} = \sin^{-1}\left[\frac{w_{RW}}{\sqrt{u_{RW}^2 + w_{RW}^2}}\right] - \epsilon_{PRR}$$

$$\alpha'_{LWO} = \alpha_{LWO} - i_W - \theta_{tLWAC}$$

$$\alpha'_{RWO} = \alpha_{RWO} - i_W - \theta_{tRWAC}$$

NOTE: IF α_{LWSS_O} OR $\alpha_{RWSS_O} \geq \alpha_{MAX}$; PRINT OUT STALL WARNING

WING EQUATIONS (CONT'D)

CALCULATION OF INCREMENTAL LIFT, DRAG AND MOMENT COEFFICIENTS

CALCULATE:

$C_{L_{LW_0}} = C_L @ \alpha = \alpha_{LW_{SS_0}}, \quad \delta = \delta_{a_{LW}} + \delta_f, \quad \delta_{SP} = \delta_{SP_L}$

$C_{L_{RW_0}} = C_L @ \alpha = \alpha_{RW_{SS_0}}, \quad \delta = \delta_{a_{RW}} + \delta_f, \quad \delta_{SP} = \delta_{SP_R}$

$C^*_{L_{LW_0}} = C_L @ \alpha = \alpha_{LW_0}, \quad \delta = \delta_{a_{LW}} + \delta_f, \quad \delta_{SP} = \delta_{SP_L}$

$C^*_{L_{RW_0}} = C_L @ \alpha = \alpha_{RW_0}, \quad \delta = \delta_{a_{RW}} + \delta_f, \quad \delta_{SP} = \delta_{SP_R}$

$C_{L_0} = C_L @ \alpha_F + i_W, \quad \delta = \delta_f$

CALCULATE:

$$\alpha^+_{N.L} = 14.6^\circ - 0.12\,\delta \qquad (0^\circ \le \delta \le 40^\circ)$$

$$= 9.8^\circ \qquad (\delta > 40^\circ)$$

$$\alpha^-_{N.L} = -16.7^\circ - .1138\delta \qquad (0^\circ \le \delta \le 40^\circ)$$

$$= -21.25^\circ \qquad (\delta > 40^\circ)$$

IF: $\alpha^-_{N.L} \le \alpha \le \alpha^+_{N.L}$

$$C_L = 0.134 + C_{L_{\alpha_W}}\alpha + \Delta C_{L_\delta} + F\,\Delta C_{L_{SP}}$$

WHERE:

$$\Delta C_{L_\delta} = .0269\,\delta \qquad (0^\circ \le \delta \le 22.22906^\circ)$$

$$= -2.437137 + .20607\,\delta - .003128\,\delta^2 \qquad (22.22906^\circ < \delta \le 29.786^\circ)$$

$$= .442188 + .0263\,\delta - .000338\,\delta^2 \qquad (\delta > 29.786^\circ)$$

$$\Delta C_{L_{SP}} = -0.01132\,\delta_{SP} \qquad (0^\circ \le \delta_{SP} \le 30^\circ)$$

$$= .076 - .018666\,\delta_{SP} + .00016\,\delta_{SP}^2 \qquad (\delta_{SP} > 30^\circ)$$

$$F = 1.003412 + .011163\,\delta + .002168\,\delta^2 \qquad (0^\circ \le \delta \le 20.1665^\circ)$$

$$F = -.756323 + .185684\,\delta - .002159\,\delta^2 \qquad (\delta > 20.1665^\circ)$$

WING EQUATIONS (CONT'D)

IF: $\alpha^{+}_{N.L} < \alpha \leq \alpha^{+}_{N.L} + 8.534^\circ$

CALCULATE: $C'_{L_{N.L}} = 0.134 + C_{L\alpha_w}\alpha^{+}_{N.L} + \Delta C_{L_\delta} + F\Delta C_{L_{SP}}$

$\alpha_{DUM} = \alpha - \alpha^{+}_{N.L} + 14.6^\circ$

$\Delta C_{L_{N.L}} = -.00547619\,\alpha^2_{DUM} + .18254762\,\alpha_{DUM} - 1.421571513$

$C_L = C'_{L_{N.L}} + \Delta C_{L_{N.L}}$ AND PRINT STALL WARNING

IF: $-(\alpha^{+}_{N.L} + 8.534^\circ) < \alpha < 90^\circ$

CALCULATE: $C'_{L_{N.L}} = 0.134 + C_{L\alpha_w}\alpha^{+}_{N.L} + \Delta C_{L_\delta} + F\Delta C_{L_{SP}}$

$$C_L = \frac{C'_{L_{N.L}}(90^\circ - \alpha)}{90^\circ - (\alpha^{+}_{N.L} + 8.534^\circ)}$$ AND PRINT STALL WARNING.

IF: $(\alpha^{-}_{N.L} - 8.534^\circ) \leq \alpha < \alpha^{-}_{N.L}$

CALCULATE:

$C'_{L_{N.L}} = 0.134 + C_{L\alpha_w}\alpha^{-}_{N.L} + \Delta C_{L_\delta} + F\Delta C_{L_{SP}}$

$\alpha_{DUM} = \alpha^{-}_{N.L} - \alpha + 14.6^\circ$

$\Delta C_{L_{N.L}} = -.00547619\,\alpha^2_{DUM} + 0.18254762\,\alpha_{DUM} - 1.421571513$

$C_L = C'_{L_{N.L}} - \Delta C_{L_{N.L}}$ AND PRINT STALL WARNING

IF: $-90^\circ \leq \alpha < (\alpha^{-}_{N.L} - 8.534^\circ)$

CALCULATE:

$C'_{L_{N.L}} = 0.134 + C_{L\alpha_w}\alpha^{-}_{N.L} + \Delta C_{L_\delta} + F\Delta C_{L_{SP}}$

$$C_L = \frac{C'_{L_{N.L}}(90^\circ + \alpha)}{90^\circ + \alpha^{-}_{N.L} - 8.534^\circ}$$ AND PRINT STALL WARNING

NOTE:- α, α_{DUM}, δ, δ_{α_w}, $\delta_{\alpha_{HS}}$, δ_F, $\alpha^{-}_{N.L}$, $\alpha^{+}_{N.L}$, δ_{SPL}, δ_{SPR}, IN DEGREES; $C_{L\alpha_w} \sim 1/\text{DEGREES}$

WING EQUATIONS (CONT'D)

CALCULATE:-

$$C_{D_{LW}} = C_D \text{ @ } \alpha = \alpha_{LW_{SSO}}, \quad \delta = \delta_f + \delta a_{LW}, \quad \delta_{SP} = \delta_{SP_L}$$

$$C_{D_{RW}} = C_D \text{ @ } \alpha = \alpha_{RW_{SSO}}, \quad \delta = \delta_f + \delta a_{RW}, \quad \delta_{SP} = \delta_{SP_R}$$

$$C_{D_{LW_0}}^{*\prime} = C_D \text{ @ } \alpha = \alpha_{LW_0}, \quad \delta = \delta_f + \delta a_{LW}, \quad \delta_{SP} = \delta_{SP_L}$$

$$C_{D_{RW_0}}^{*\prime} = C_D \text{ @ } \alpha = \alpha_{RW_0}, \quad \delta = \delta_f + \delta a_{RW}, \quad \delta_{SP} = \delta_{SP_R}$$

AS FOLLOWS:

IF:- $-20^\circ \le \alpha \le 20^\circ$

CALCULATE: $C_D = .00059250\,\alpha^2 + .002109993\,\alpha + .01765$

$$+ \sum_{v=0}^{4} \sum_{u=0}^{4} \left[A_{D(u+5v)}\, \delta^u \alpha^v \right] + \Delta C_{D_{SP}}$$

WHERE: $\Delta C_{D_{SP}} = -.000098784\,\delta_{SP} + .000009622\,\delta_{SP}^2$

IF: $20^\circ < \alpha \le 90^\circ$, $\alpha_{DUM} = 20^\circ$

CALCULATE: $C_D^+ = 0.31105749 + \sum_{v=0}^{4} \sum_{u=0}^{4} \left[A_{D(u+5v)}\, \delta^u \alpha_{DUM}^v \right] + \Delta C_{D_{SP}}$

$$C_D = C_D^+ + \frac{(1 - C_D^+)}{70^\circ}(\alpha - 20^\circ)$$

IF: $-90^\circ \le \alpha < -20^\circ$, $\alpha_{DUM} = -20^\circ$

CALCULATE: $C_D^- = 0.19124389 + \sum_{v=0}^{4} \sum_{u=0}^{4} \left[A_{D(u+5v)}\, \delta^u \alpha_{DUM}^v \right] + \Delta C_{D_{SP}}$

$$C_D = C_D^- - \frac{(1 - C_D^-)}{70^\circ}(\alpha + 20^\circ)$$

NOTE: α, α_{DUM}, δ, δa_{RW}, δa_{LW}, δ_{SP_R}, δ_{SP_L} IN DEGREES

WING EQUATIONS (CONT'D)

CALCULATE:

$$C_{M_{LW}} = C_M @ \alpha = \alpha_{LW_{SSO}} \quad , \quad \delta = \delta_f + \delta_{a_{LW}}$$

$$C_{M_{RW}} = C_M @ \alpha = \alpha_{RW_{SSO}} \quad , \quad \delta = \delta_f + \delta_{a_{RW}}$$

$$C^{*\prime}_{M_{LW_0}} = C_M @ \alpha = \alpha_{LW_0} \quad , \quad \delta = \delta_f + \delta_{a_{LW}}$$

$$C^{*\prime}_{M_{RW_0}} = C_M @ \alpha = \alpha_{RW_0} \quad , \quad \delta = \delta_f + \delta_{a_{RW}}$$

AS FOLLOWS:

IF:- $-20° \leq \alpha \leq 20°$

CALCULATE:- $C_M' = -.030117 - .0003162\,\alpha$

$$\Delta C_{M_\delta} = .0000778\,\delta^2 - .010033\,\delta \qquad (0° \leq \delta \leq 45°)$$

$$\Delta C_{M_\delta} = .0000322\,\delta^2 - .0049045\,\delta - .1384272 \qquad (\delta > 45°)$$

$$C_M = C_M' + \Delta C_{M_\delta}$$

IF: $\alpha > 20°$

CALCULATE: $C_M' = -.036441 + \Delta C_{M_\delta}$

$$C_M = C_M' \frac{(90° - \alpha)}{70°}$$

IF $\alpha < -20°$

CALCULATE $C_M' = -.023793 + \Delta C_{M_\delta}$

$$C_M = C_M' \frac{(90° + \alpha)}{70°}$$

NOTE: α, α_{DWN}, δ, $\delta_{a_{RW}}$, $\delta_{a_{LW}}$, δ_{SP_R}, δ_{SP_L} IN DEGREES

WING EQUATIONS (CONT'D)

CALCULATE :-

$$C_{L_{LW}}''' = C_{L_{LW_0}} \quad ; \quad C_{D_{LW}}''' = C_{D_{LW}} \quad ; \quad C_{M_{LW}}'' = C_{M_{LW}}$$

$$C_{L_{RW}}''' = C_{L_{RW_0}} \quad ; \quad C_{D_{RW}}''' = C_{D_{RW}} \quad ; \quad C_{M_{RW}}'' = C_{M_{RW}}$$

$$C_{L_{LW_{MAX}}}'' = C_{L_{MAX}} + \Delta C_{L_\delta} + \Delta C_{L_{SP}}$$

$$C_{L_{RW_{MAX}}}'' = C_{L_{MAX}} + \Delta C_{L_\delta} + \Delta C_{L_{SP}}$$

$$C_{L_{RW}}^{*\prime} = C_{L_{RW_0}}^{*} \quad ; \quad C_{D_{RW}}^{*\prime} = C_{D_{RW_0}}^{*\prime} \quad ; \quad C_{M_{RW}}^{*} = C_{M_{RW_0}}^{*\prime}$$

$$C_{L_{LW}}^{*\prime} = C_{L_{LW_0}}^{*} \quad ; \quad C_{D_{LW}}^{*\prime} = C_{D_{LW_0}}^{*\prime} \quad ; \quad C_{M_{LW}}^{*} = C_{M_{LW_0}}^{*\prime}$$

$$C_{L_{LW_{MAX}}}^{*} = C_{L_{LW_{MAX}}}''$$

$$C_{L_{RW_{MAX}}}^{*} = C_{L_{RW_{MAX}}}''$$

$$\overline{C_L} = \frac{C_{L_0}\left(\frac{a_g}{a}\right)_w}{\sqrt{1-M^2}}$$

$$C_{L_{LW}}''^{IGE} = C_{L_{LW}}''' \frac{\left(\frac{a_g}{a}\right)_w}{\sqrt{1-M^2}} \quad ; \quad C_{L_{RW}}''^{IGE} = C_{L_{RW}}''' \frac{\left(\frac{a_g}{a}\right)_w}{\sqrt{1-M^2}} \quad ;$$

$$C_{L_{LW}}^{*IGE} = C_{L_{LW}}^{*\prime} \frac{\left(\frac{a_g}{a}\right)_w}{\sqrt{1-M^2}} \quad ; \quad C_{L_{RW}}^{*IGE} = C_{L_{RW}}^{*\prime} \frac{\left(\frac{a_g}{a}\right)}{\sqrt{1-M^2}}$$

WING EQUATIONS (CONT'D)

$$\Delta C''^{IGE}_{DLW} = K_{99} \frac{\left(C''^{IGE}_{LLW} - C'''_{LLW}\right)^2}{\pi AR_W} ; \quad \Delta C''^{IGE}_{DRW} = K_{99} \frac{\left(C''^{IGE}_{LRW} - C'''_{LRW}\right)^2}{\pi AR_W} ;$$

$$\Delta C^{\star IGE}_{DLW} = K_{99} \frac{\left(C^{\star IGE}_{LLW} - C^{\star\prime}_{LLW}\right)^2}{\pi AR_W} ; \quad \Delta C^{\star IGE}_{DRW} = K_{99} \frac{\left(C^{\star IGE}_{LRW} - C^{\star\prime}_{LRW}\right)^2}{\pi AR_W}$$

IF: $C''^{IGE}_{LLW} \geq C''_{LLWMAX}$; SET $\Delta C''^{IGE}_{DLW} = 0.0$ & $C''^{IGE}_{LLW} = C''_{LLWMAX}$

IF: $C''^{IGE}_{LRW} \geq C''_{LRWMAX}$; SET $\Delta C''^{IGE}_{DRW} = 0.0$ & $C''^{IGE}_{LRW} = C''_{LRWMAX}$

IF: $C^{\star IGE}_{LLW} \geq C^{\star}_{LLWMAX}$; SET $\Delta C^{\star IGE}_{DLW} = 0.0$ & $C^{\star IGE}_{LLW} = C^{\star}_{LLWMAX}$

IF: $C^{\star IGE}_{LRW} \geq C^{\star}_{LRWMAX}$; SET $\Delta C^{\star IGE}_{DRW} = 0.0$ & $C^{\star IGE}_{LRW} = C^{\star}_{LRWMAX}$

IF: $\left({}^{a_g}/_{a}\right) > 1.0$; SET $K_{99} = -1.0$

$\left({}^{a_g}/_{a}\right) \leq 1.0$; SET $K_{99} = +1.0$

CALCULATE

$$C''_{LLW} = C''^{IGE}_{LLW}$$

$$C''_{DLW} = C'''_{DLW} + \Delta C''^{IGE}_{DLW}$$

$$C''_{LRW} = C''^{IGE}_{LRW}$$

$$C''_{DRW} = C'''_{DRW} + \Delta C''^{IGE}_{DRW}$$

$$C^{\star}_{LLW} = C^{\star IGE}_{LLW}$$

$$C^{\star}_{DLW} = C^{\star\prime}_{DLW} + \Delta C^{\star IGE}_{DLW}$$

$$C^{\star}_{LRW} = C^{\star IGE}_{LRW}$$

$$C^{\star}_{DRW} = C^{\star\prime}_{DRW} + \Delta C^{\star IGE}_{DRW}$$

WING EQUATIONS (cont'd.)

$$C_{LSLW} = K'_{A_L}\left\{\left(\frac{S_i}{S}\right)_{LW}\left(C''_{LLW}\cos\epsilon_{PLR} - C''_{DLW}\sin\epsilon_{PLR}\right) + C^{\star}_{LLW}\left(1-C_{TSLR}\right)\left[1-\left(\frac{S_i}{S}\right)_{LW}\right]\right\}$$

$$C_{LSRW} = K'_{A_R}\left\{\left(\frac{S_i}{S}\right)_{RW}\left(C''_{LRW}\cos\epsilon_{PRR} - C''_{DRW}\sin\epsilon_{PRR}\right) + C^{\star}_{LRW}\left(1-C_{TSRR}\right)\left[1-\left(\frac{S_i}{S}\right)_{RW}\right]\right\}$$

$$C_{DSLW} = K'_{A_L}\left\{\left(\frac{S_i}{S}\right)_{LW}\left(C''_{LLW}\sin\epsilon_{PLR} + C''_{DLW}\cos\epsilon_{PLR}\right) + C^{\star}_{DLW}\left(1-C_{TSLR}\right)\left[1-\left(\frac{S_i}{S}\right)_{LW}\right]\right\}$$

$$C_{DSRW} = K'_{A_R}\left\{\left(\frac{S_i}{S}\right)_{RW}\left(C''_{LRW}\sin\epsilon_{PRR} + C''_{DRW}\cos\epsilon_{PRR}\right) + C^{\star}_{DRW}\left(1-C_{TSRR}\right)\left[1-\left(\frac{S_i}{S}\right)_{RW}\right]\right\}$$

$$C_{MSLW} = K'_{A_L}\left\{\left(\frac{S_i}{S}\right)_{LW}\left(C''_{MLW}\right) + C^{\star}_{MLW}\left(1-C_{TSLR}\right)\left[1-\left(\frac{S_i}{S}\right)_{LW}\right]\right\}$$

$$C_{MSRW} = K'_{A_R}\left\{\left(\frac{S_i}{S}\right)_{RW}\left(C''_{MRW}\right) + C^{\star}_{MRW}\left(1-C_{TSRR}\right)\left[1-\left(\frac{S_i}{S}\right)_{RW}\right]\right\}$$

WING EQUATIONS (cont'd.)

$$\Delta C_{\mathcal{Y}S\,POWER} = \frac{1}{4}\left\{\left[C_{LSLW} - (1-\bar{C}_{TS})\,C^{*}_{LLW}\right]\left[1-\frac{1}{2}\left(\frac{S_i}{S}\right)_{LW}\right] - \left[C_{LSRW} - (1-\bar{C}_{TS})\,C^{*}_{LRW}\right]\left[1-\frac{1}{2}\left(\frac{S_i}{S}\right)_{RW}\right]\right\}$$

$$\Delta C_{\eta S\,POWER} = \frac{1}{4}\left\{\left[C_{DSRW} - (1-\bar{C}_{TS})\,C^{*}_{DRW}\right]\left[1-\frac{1}{2}\left(\frac{S_i}{S}\right)_{RW}\right] - \left[C_{DSLW} - (1-\bar{C}_{TS})\,C^{*}_{DLW}\right]\left[1-\frac{1}{2}\left(\frac{S_i}{S}\right)_{LW}\right]\right\}$$

$$C_{\mathcal{Y}SW} = (K_{20} + K_{21}\bar{C}_L)(1-\bar{C}_{TS})\beta_f + \left(\frac{1-\bar{C}_{TS}}{2b_W}\right)(K_{\mathcal{Y}})\left(C^{*}_{LLW} - C^{*}_{LRW}\right)\bar{Y}_{AC}$$

$$+\Delta C_{\mathcal{Y}S\,POWER}$$

$$C_{\eta SW} = (K_{22}\bar{C}_L^{2})(1-\bar{C}_{TS})\beta_f + \left(\frac{1-\bar{C}_{TS}}{2b_W}\right)(K_{\eta})\left\{\left(C^{*}_{DRW} - C^{*}_{DLW}\right) - \left[C^{*}_{LRW}\sin(\alpha_{RW_0} - i_W) + C^{*}_{LLW}\sin(i_W - \alpha_{LW_0})\right]\right\}\bar{Y}_{AC}$$

$$+\Delta C_{\eta S\,POWER}$$

WING EQUATIONS

SPECIAL CONDITIONS (FOR UMBRELLAS OPEN)

IF : UMBRELLAS CLOSED; GO THROUGH WING EQUATIONS

IF : UMBRELLAS OPEN ; CALCULATE THE WING FORCES AND MOMENTS AS FOLLOWS:

$$X_{AERO}^{LW} = f_{e_u}\, q_{SLW}\left(1 - C_{TSLR}\right)\left[\frac{-u_{LW}}{|u_{LW}| + .1}\right]$$

$$X_{AERO}^{RW} = f_{e_u}\, q_{SRW}\left(1 - C_{TSRR}\right)\left[\frac{-u_{RW}}{|u_{RW}| + .1}\right]$$

$$Y_{AERO}^{LW} = 0.0$$

$$Y_{AERO}^{RW} = 0.0$$

$$\left.\begin{aligned} Z_{AERO}^{LWP} &= T_L \left(\frac{D}{T}\right)_L \\ Z_{AERO}^{RWP} &= T_R \left(\frac{D}{T}\right)_R \end{aligned}\right\} \text{GO } \underline{\text{TO}} \text{ WING BENDING}$$

$$\left.\begin{aligned} M_{AERO}^{LW} &= -X_{\frac{c}{2}}\, Z_{AERO}^{LW} + \left(\frac{M}{T}\right)_L T_L \\ M_{AERO}^{RW} &= -X_{\frac{c}{2}}\, Z_{AERO}^{RW} + \left(\frac{M}{T}\right)_R T_R \end{aligned}\right\} \quad Z_{AERO}^{LW} \,\&\, Z_{AERO}^{RW} \text{ FROM WING BENDING}$$

$$\mathcal{L}_{AERO}^{W} = \left(\frac{b_w}{2}\right)\left\{ Z_{AERO}^{RW}\left[1 - \frac{\left(\frac{S_i}{S}\right)_{RW}}{2}\right] - Z_{AERO}^{LW}\left[1 - \frac{\left(\frac{S_i}{S}\right)_{LW}}{2}\right]\right\}$$

$$\mathcal{N}_{AERO}^{W} = 0.0$$

IF: $\left[\frac{h}{D}\right]_{EFF\,LR} \leq 1.3$; $\left(\frac{D}{T}\right)_L = K_{\frac{D1}{T}}\left[\frac{h}{D}\right]^2_{EFF\,LR} + K_{\frac{D2}{T}}\left[\frac{h}{D}\right]_{EFF\,LR} + K_{\frac{D3}{T}}$;

$\&\ \left(\frac{M}{T}\right)_R = K_{\frac{M1}{T}}\left[\frac{h}{D}\right]^2_{EFF\,LR} + K_{\frac{M2}{T}}\left[\frac{h}{D}\right]_{EFF\,LR} + K_{\frac{M3}{T}}$

IF: $\left[\frac{h}{D}\right]_{EFF\,LR} > 1.3$; $\left(\frac{D}{T}\right)_L = K_{\frac{D4}{T}}$; $\&\ \left(\frac{M}{T}\right)_L = K_{\frac{M4}{T}}$

IF: $\left[\frac{h}{D}\right]_{EFF\,RR} \leq 1.3$; $\left(\frac{D}{T}\right)_R = K_{\frac{D1}{T}}\left[\frac{h}{D}\right]^2_{EFF\,RR} + K_{\frac{D2}{T}}\left[\frac{h}{D}\right]_{EFF\,RR} + K_{\frac{D3}{T}}$

$\&\ \left(\frac{M}{T}\right)_R = K_{\frac{M1}{T}}\left[\frac{h}{D}\right]^2_{EFF\,RR} + K_{\frac{M2}{T}}\left[\frac{h}{D}\right]_{EFF\,RR} + K_{\frac{M3}{T}}$

IF: $\left[\frac{h}{D}\right]_{EFF\,RR} > 1.3$; $\left(\frac{D}{T}\right)_R = K_{\frac{D4}{T}}$; $\&\ \left(\frac{M}{T}\right)_R = K_{\frac{M4}{T}}$

WING A.C. TO ELASTIC AXIS TRANSFORM

PITCHING MOMENT

$$M_{AERO}^{RW} = C_{MSRW}\, q_{SRW}\, \frac{S_W}{2}\, c_W - X_{WAC}\, Z_{AERO}^{RW} + Z_{WAC}\, X_{AERO}^{RW}$$

$$M_{AERO}^{LW} = C_{MSLW}\, q_{SLW}\, \frac{S_W}{2}\, c_W - X_{WAC}\, Z_{AERO}^{LW} + Z_{WAC}\, X_{AERO}^{LW}$$

VERTICAL FORCES

$$Z_{AERO}^{RW'} = \left[-C_{LSRW} - C_{DSRW}\, \alpha'_{RWO} \right] q_{SRW}\, \frac{S_W}{2}$$

$$Z_{AERO}^{LW'} = \left[-C_{LSLW} - C_{DSLW}\, \alpha'_{LWO} \right] q_{SLW}\, \frac{S_W}{2}$$

NOTE: $Z_{AERO}^{RW'}$ & $Z_{AERO}^{LW'}$ ARE USED IN VERTICAL BENDING EQ.'S

WING FORCE & MOMENT RESOLUTION - BODY AXES @ C.G.

$$X_{AERO}^{LW} = \left[-C_{DSLW} + C_{LSLW}\,\alpha'_{LWO} \right] q_{SLW} \frac{S_W}{2}$$

$$X_{AERO}^{RW} = \left[-C_{DSRW} + C_{LSRW}\,\alpha'_{RWO} \right] q_{SRW} \frac{S_W}{2}$$

$$Y_{AERO}^{LW} = \left[-C_{DSLW}\,\beta_{LWO} \right] q_{SLW} \frac{S_W}{2}$$

$$Y_{AERO}^{RW} = \left[-C_{DSRW}\,\beta_{RWO} \right] q_{SRW} \frac{S_W}{2}$$

$$\left.\begin{matrix} Z_{AERO}^{LW} \\ Z_{AERO}^{RW} \end{matrix}\right\} \text{FROM VERTICAL BENDING}$$

$$\mathcal{L}_{AERO}^{W} = C_{\mathcal{L}SW}\,\bar{q}_S\,S_W\,b_W$$

$$\mathcal{M}_{AERO}^{W} = M_{AERO}^{LW} + M_{AERO}^{RW} + X_{CG}\left(Z_{AERO}^{LW} + Z_{AERO}^{RW}\right) - Z_{CG}\left(X_{AERO}^{LW} + X_{AERO}^{RW}\right)$$

$$\mathcal{N}_{AERO}^{W} = C_{\mathcal{N}SW}\,\bar{q}_S\,S_W\,b_W$$

NOTE: OBSERVE WING EQUATION SPECIAL CONDITIONS

HORIZONTAL TAIL LIFT AND DRAG.

$$\alpha_{e_{HT}} = \alpha_{HT} + \tau_{HT}\,\delta_e$$

$$\hat{\alpha}_{HT_+} = (\alpha_{HT_{STALL}} - 2^\circ) + \tau_{HT}\,\delta_e$$

$$\hat{\alpha}_{HT_-} = -(\alpha_{HT_{STALL}} - 2^\circ) + \tau_{HT}\,\delta_e$$

$$C_{L\alpha} = C_{L\alpha_{HT}} \left(\frac{a_T}{a}\right)_{HT} \Big/ \sqrt{1-M^2}$$

WHERE $\left(\frac{a_T}{a}\right)_{HT} = f(h_{TC/4})$; $\tau_{HT} = f(S_e/S_T)$

IF:- $\hat{\alpha}_{HT_-} \leq \alpha_{e_{HT}} \leq \hat{\alpha}_{HT_+}$

$$C_{L_{HT}} = C_{L\alpha}\,\alpha_{e_{HT}}$$

$$C_{D_{HT}} = C_{D_{0_{HT}}} + \frac{2C_{L_{HT}}^2}{\pi AR_{HT}}$$

IF:- $\hat{\alpha}_{HT_+} < \alpha_{e_{HT}} \leq 90^\circ$

$$C_{L_{HT}} = C_{L\alpha}\,\hat{\alpha}_{HT_+}\left[\frac{90^\circ - \alpha_{e_{HT}}}{90^\circ - \hat{\alpha}_{HT_+}}\right]$$

$$C_{L_{HT_{STALL}}} = C_{L\alpha}\,\hat{\alpha}_{HT_+}$$

$$C_{D_{HT_{STALL}}} = C_{D_{0_{HT}}} + \frac{2C_{L_{HT_{STALL}}}^2}{\pi AR_{HT}}$$

$$C_{D_{HT}} = C_{D_{HT_{STALL}}} + \frac{(\alpha_{e_{HT}} - \hat{\alpha}_{HT_+})(1.1 - C_{D_{HT_{STALL}}})}{90^\circ - \hat{\alpha}_{HT_+}}$$

HORIZONTAL TAIL LIFT AND DRAG (CONT'D)

IF:- $90° < \alpha_{eHT} \leq (180° - .5\,\hat{\alpha}_{HT-})$

$$C_{LHT} = .5\, C_{L\alpha}\, \hat{\alpha}_{HT-} \frac{(\alpha_{eHT} - 90°)}{(90° - .5\,\hat{\alpha}_{HT-})}$$

$$C_{LHTSTALL} = .5\, C_{L\alpha}\, \hat{\alpha}_{HT-}$$

$$C_{DHTSTALL} = \frac{2\, C_{LHTSTALL}^2}{\pi AR_{HT}} + C_{D_{0HT}}$$

$$C_{DHT} = C_{DHTSTALL} + \frac{(\alpha_{eHT} + .5\,\hat{\alpha}_{HT-} - 180°)(1.1 - C_{DHTSTALL})}{(.5\,\hat{\alpha}_{HT-} - 90°)}$$

IF:- $(180° - .5\hat{\alpha}_{HT-}) \leq \alpha_{eHT} \leq 180°$

$$C_{LHT} = C_{L\alpha}(\alpha_{eHT} - 180°)$$

$$C_{DHT} = C_{D_{0HT}} + \frac{2\, C_{LHT}^2}{\pi AR_{HT}}$$

IF:- $-90° \leq \alpha_{eHT} < \hat{\alpha}_{HT-}$

$$C_{LHT} = C_{L\alpha}\, \hat{\alpha}_{HT-} \frac{(-90° - \alpha_{eHT})}{(-90° - \hat{\alpha}_{HT-})}$$

$$C_{LHTSTALL} = C_{L\alpha}\, \hat{\alpha}_{HT-}$$

$$C_{DHTSTALL} = C_{D_{0HT}} + \frac{2\, C_{LHTSTALL}^2}{\pi AR_{HT}}$$

$$C_{DHT} = C_{DHTSTALL} + \frac{(\alpha_{eHT} - \hat{\alpha}_{HT-})(1.1 - C_{DHTSTALL})}{(-90° - \hat{\alpha}_{HT-})}$$

HORIZONTAL TAIL LIFT AND DRAG (CONT'D)

IF:- $(-180^\circ + .5\hat{\alpha}_{HT_+}) < \alpha_{eHT} < -90^\circ$

$$C_{L_{HT}} = .5\, C_{L\alpha}\, \hat{\alpha}_{HT_+} \frac{(\alpha_{eHT} + 90^\circ)}{(-90^\circ + .5\hat{\alpha}_{HT_+})}$$

$$C_{L_{HT_{STALL}}} = .5\, C_{L\alpha}\, \hat{\alpha}_{HT_+}$$

$$C_{D_{HT_{STALL}}} = C_{D_{0HT}} + \frac{2\, C^2_{L_{HT_{STALL}}}}{\pi AR_{HT}}$$

$$C_{D_{HT}} = C_{D_{HT_{STALL}}} - \frac{(\alpha_{eHT} + 180^\circ - .5\hat{\alpha}_{HT_+})(1.1 - C_{D_{HT_{STALL}}})}{(.5\hat{\alpha}_{HT_+} - 90^\circ)}$$

IF:- $-180^\circ \le \alpha_{eHT} < (-180^\circ + .5\hat{\alpha}_{HT_+})$

$$C_{L_{HT}} = C_{L\alpha}\, (\alpha_{eHT} + 180^\circ)$$

$$C_{D_{HT}} = C_{D_{0HT}} + \frac{2\, C^2_{L_{HT}}}{\pi AR_{HT}}$$

VERTICAL TAIL AERODYNAMICS

VERTICAL TAIL ANGLE OF ATTACK AND SIDESLIP

$$\beta_{VT} = \tan^{-1} \frac{v_{VT}}{\sqrt{u_{VT}^2 + w_{VT}^2}}$$

$$\alpha_{VT} = -\beta_{VT} + \beta_F \left(\frac{d\sigma}{d\beta}\right)$$

{NOTE: THIS VALUE OF α_{VT} IS USED IN RESOLUTION OF FORCES AND MOMENTS}

IF: $|\alpha_{VT}| > 180°$; $\alpha_{VT} = \alpha_{VT} - (\text{SIGN}\ \alpha_{VT})(360°)$

{NOTE: THIS VALUE OF α_{VT} ONLY USED IN CALC. OF FORCE AND MOMENT COEFFICIENTS}

$$\alpha_{eVT} = (\alpha_{VT} + \tau_{VT}\,\delta_{RUD})$$

$$\hat{\alpha}_{VT_+} = (\alpha_{VT_{STALL}} - 2°) + \tau_{VT}\,\delta_{RUD}$$

$$\hat{\alpha}_{VT_-} = -(\alpha_{VT_{STALL}} - 2°) + \tau_{VT}\,\delta_{RUD}$$

$$C_{Y_\alpha} = C_{Y_{\alpha VT}} / \sqrt{1-M^2}$$

TAIL DYNAMIC PRESSURE AND SIDEWASH

$$\bar{q} = \frac{\rho}{2}(u^2 + v^2 + w^2)$$

$$\sigma = \frac{d\sigma}{d\beta}\,\beta_F$$

VERTICAL TAIL LIFT AND DRAG

IF:- $\hat{\alpha}_{VT_-} \leq \alpha_{eVT} \leq \hat{\alpha}_{VT_+}$

$$C_{YVT} = C_{Y_\alpha}\,\alpha_{eVT}$$

$$C_{DVT} = C_{D_{0VT}} + \frac{2\,C_{YVT}^2}{\pi AR_{VT}}$$

VERTICAL TAIL LIFT AND DRAG (CONT'D)

IF:- $\hat{\alpha}_{VT_+} < \alpha_{eVT} \leq 90°$

$$C_{YVT} = C_{Y\alpha}\,\hat{\alpha}_{VT_+}\left[\frac{90° - \alpha_{eVT}}{90° - \hat{\alpha}_{VT_+}}\right]$$

$$C_{YVTSTALL} = C_{Y\alpha}\,\hat{\alpha}_{VT_+}$$

$$C_{DVTSTALL} = C_{D_0VT} + \frac{2\,C^2_{YVTSTALL}}{\pi AR_{VT}}$$

$$C_{DVT} = C_{DVTSTALL} + \frac{(\alpha_{eVT} - \hat{\alpha}_{VT_+})(1.1 - C_{DVTSTALL})}{90° - \hat{\alpha}_{VT_+}}$$

IF:- $90° < \alpha_{eVT} \leq (180° - .5\,\hat{\alpha}_{VT_-})$

$$C_{YVT} = .5\,C_{Y\alpha}\,\hat{\alpha}_{VT_-}\left(\frac{\alpha_{eVT} - 90°}{90° - .5\,\hat{\alpha}_{VT_-}}\right)$$

$$C_{YVTSTALL} = .5\,C_{Y\alpha}\,\hat{\alpha}_{VT_-}$$

$$C_{DVTSTALL} = C_{D_0VT} + \frac{2\,C^2_{YVTSTALL}}{\pi AR_{VT}}$$

$$C_{DVT} = C_{DVTSTALL} + \frac{(\alpha_{eVT} + .5\,\hat{\alpha}_{VT_-} - 180°)(1.1 - C_{DVTSTALL})}{(.5\,\hat{\alpha}_{VT_-} - 90°)}$$

IF:- $(180° - .5\,\hat{\alpha}_{VT_-}) \leq \alpha_{eVT} \leq 180°$

$$C_{YVT} = C_{Y\alpha}(\alpha_{eVT} - 180°)$$

$$C_{DVT} = C_{D_0VT} + \frac{2\,C^2_{YVT}}{\pi AR_{VT}}$$

VERTICAL TAIL LIFT AND DRAG (CONT'D)

IF:- $-90° \leq \alpha_{eVT} < \hat{\alpha}_{VT-}$

$$C_{YVT} = C_{Y\alpha}\,\hat{\alpha}_{VT-}\,\frac{(-90° - \alpha_{eVT})}{(-90° - \hat{\alpha}_{VT-})}$$

$$C_{YVT\,STALL} = C_{Y\alpha}\,\hat{\alpha}_{VT-}$$

$$C_{DVT\,STALL} = C_{DoVT} + \frac{2\,C^2_{YVT\,STALL}}{\pi\,AR_{VT}}$$

$$C_{DVT} = C_{DVT\,STALL} + \frac{(\alpha_{eVT} - \hat{\alpha}_{VT-})(1.1 - C_{DVT\,STALL})}{(-90° - \hat{\alpha}_{VT-})}$$

IF:- $(-180° + .5\,\hat{\alpha}_{VT+}) < \alpha_{eVT} < -90°$

$$C_{YVT} = .5\,C_{Y\alpha}\,\hat{\alpha}_{VT+}\,\frac{(\alpha_{eVT} + 90°)}{(-90° + .5\,\hat{\alpha}_{VT+})}$$

$$C_{YVT\,STALL} = .5\,C_{Y\alpha}\,\hat{\alpha}_{VT+}$$

$$C_{DVT\,STALL} = C_{DoVT} + \frac{2\,C^2_{YVT\,STALL}}{\pi\,AR_{VT}}$$

$$C_{DVT} = C_{DVT\,STALL} - \frac{(\alpha_{eVT} + 180° - .5\,\hat{\alpha}_{VT+})(1.1 - C_{DVT\,STALL})}{(.5\,\hat{\alpha}_{VT+} - 90°)}$$

IF:- $-180° \leq \alpha_{eVT} < (-180° + .5\,\hat{\alpha}_{VT+})$

$$C_{YVT} = C_{Y\alpha}\,(\alpha_{eVT} + 180°)$$

$$C_{DVT} = C_{DoVT} + \frac{2\,C^2_{YVT}}{\pi\,AR_{VT}}$$

TAIL EQUATIONS LOGIC

HORIZONTAL TAIL

1. IF $h_{w_{c/4}} > 100$ FT., SET GEF = 0.0
2. IF THE UMBRELLAS OPEN ; SET $\epsilon = \frac{\bar{G}_P (1 - GEP)}{\sqrt{1-M^2}}$
3. IF $\alpha_{e_{HT}} > \hat{\alpha}_{HT_+}$ PRINT STALL WARNING.
4. IF $\alpha_{e_{HT}} < \hat{\alpha}_{HT_-}$ PRINT STALL WARNING

VERTICAL TAIL

1. IF $\alpha_{e_{VT}} > \hat{\alpha}_{VT_+}$ PRINT STALL WARNING
2. IF $\alpha_{e_{VT}} < \hat{\alpha}_{VT_-}$ PRINT STALL WARNING

TAIL FORCE AND MOMENT RESOLUTION TO C.G.

HORIZONTAL TAIL NOTE:- IF UMBRELLAS OPEN AND $M > 0$; SET $\eta_{HT} = .5\,\eta_{HT}$

$$X^{HT}_{AERO} = \left[-C_{DHT}\cos(\alpha_{HT}-i_{HT})\cos(\beta_{VT}-\sigma) + C_{LHT}\sin(\alpha_{HT}-i_{HT})\right]\bar{q}\,S_{HT}\,\eta_{HT}$$

$$Y^{HT}_{AERO} = \left[-C_{DHT}\sin(\beta_{VT}-\sigma)\right]\bar{q}\,S_{HT}\,\eta_{HT}$$

$$Z^{HT}_{AERO} = \left[-C_{LHT}\cos(\alpha_{HT}-i_{HT}) - C_{DHT}\cos(\beta_{VT}-\sigma)\sin(\alpha_{HT}-i_{HT})\right]\bar{q}\,S_{HT}\,\eta_{HT}$$

$$\mathcal{L}^{HT}_{AERO} = -Y^{HT}_{AERO}\left(Z_{HT}-Z_{CG}\right)$$

$$\mathcal{M}^{HT}_{AERO} = Z^{HT}_{AERO}\left(X_{CG}-X_{HT}\right) + X^{HT}_{AERO}\left(Z_{HT}-Z_{CG}\right)$$

$$\mathcal{N}^{HT}_{AERO} = -Y^{HT}_{AERO}\left(X_{CG}-X_{HT}\right)$$

VERTICAL TAIL

$$X^{VT}_{AERO} = \left[-C_{DVT}\cos(\beta_{VT}-\sigma)\cos(\alpha_{HT}-i_{HT}) - C_{yVT}\sin(\beta_{VT}-\sigma)\cos(\alpha_{HT}-i_{HT})\right]\times \bar{q}\,S_{VT}\,\eta_{VT}$$

$$Y^{VT}_{AERO} = \left[C_{yVT}\cos(\beta_{VT}-\sigma) - C_{DVT}\sin(\beta_{VT}-\sigma)\right]\bar{q}\,S_{VT}\,\eta_{VT}$$

$$Z^{VT}_{AERO} = \left[-C_{DVT}\cos(\beta_{VT}-\sigma)\sin(\alpha_{HT}-i_{HT}) - C_{yVT}\sin(\beta_{VT}-\sigma)\sin(\alpha_{HT}-i_{HT})\right]\bar{q}\,S_{VT}\,\eta_{VT}$$

$$\mathcal{L}^{VT}_{AERO} = -Y^{VT}_{AERO}\left(Z_{VT}-Z_{CG}\right)$$

$$\mathcal{M}^{VT}_{AERO} = Z^{VT}_{AERO}\left(X_{CG}-X_{VT}\right) + X^{VT}_{AERO}\left(Z_{VT}-Z_{CG}\right)$$

$$\mathcal{N}^{VT}_{AERO} = -Y^{VT}_{AERO}\left(X_{CG}-X_{VT}\right)$$

TOTAL TAIL CONTRIBUTION

$$X^{T}_{AERO} = X^{VT}_{AERO} + X^{HT}_{AERO} \;;\; Z^{T}_{AERO} = Z^{VT}_{AERO} + Z^{HT}_{AERO} \qquad \mathcal{M}^{T}_{AERO} = \mathcal{M}^{VT}_{AERO} + \mathcal{M}^{HT}_{AERO}$$

$$Y^{T}_{AERO} = Y^{VT}_{AERO} + Y^{HT}_{AERO} \;;\; \mathcal{L}^{T}_{AERO} = \mathcal{L}^{VT}_{AERO} + \mathcal{L}^{HT}_{AERO} \qquad \mathcal{N}^{T}_{AERO} = \mathcal{N}^{VT}_{AERO} + \mathcal{N}^{HT}_{AERO}$$

NACELLE AERODYNAMICS

NACELLE ANGLE OF ATTACK AND SIDESLIP

$$\alpha_{RN} = \tan^{-1} \frac{w_{RR}}{u_{RR}} \quad ; \quad q_{RN} = \frac{1}{2}\rho V_{RR}^2$$

$$\alpha_{LN} = \tan^{-1} \frac{w_{RL}}{u_{RL}} \quad ; \quad q_{LN} = \frac{1}{2}\rho V_{LR}^2$$

$$\beta_{RN} = \tan^{-1} \frac{v_{RR}}{\sqrt{u_{RR}^2 + w_{RR}^2}}$$

$$\beta_{LN} = \tan^{-1} \frac{v_{RL}}{\sqrt{u_{RL}^2 + w_{RL}^2}}$$

NACELLE WIND AXIS FORCE & MOMENT COEF.'S

$$C_{DRN} = C_{DORN} + K_{30}\left|\alpha_{RN}\right| + K_{31}\left|\alpha_{RN}^2\right|$$

$$C_{DLN} = C_{DOLN} + K_{30}\left|\alpha_{LN}\right| + K_{31}\left|\alpha_{LN}^2\right|$$

NOTE: CHECK RANGE OF α_{RN} & α_{LN} TO DETERMINE VALUES FOR CONSTANTS.

WHERE: $C_{DORN} = C_{DON}$

$C_{DOLN} = C_{DON}$

$$C_{LRN} = K_{32} \sin\alpha_{RN} \cos\alpha_{RN}$$

$$C_{LLN} = K_{32} \sin\alpha_{LN} \cos\alpha_{LN}$$

$$C_{MRN} = C_{MON} + K_{34} \sin\alpha_{RN} \cos\alpha_{RN} + K_{35}(\sin\alpha_{RN} \cos\alpha_{RN})\left|\sin\alpha_{RN} \cos\alpha_{RN}\right|$$

$$C_{MLN} = C_{MON} + K_{34} \sin\alpha_{LN} \cos\alpha_{LN} + K_{35}(\sin\alpha_{LN} \cos\alpha_{LN})\left|\sin\alpha_{LN} \cos\alpha_{LN}\right|$$

SPECIAL CONDITIONS

1. IF: $V_{RR}^2 \leq 1 (ft/sec)^2$; RIGHT NACELLE AERO $\equiv 0.0$ & HOLD VALUE OF α_{RN} & β_{RN}
2. IF: $V_{LR}^2 \leq 1 (ft/sec)^2$; LEFT NACELLE AERO $\equiv 0.0$ & HOLD VALUE OF α_{LN} & β_{LN}

NACELLE AERODYNAMICS (Cont'd.)

$$C_{YRN} = K_{36} \sin\beta_{RN} \cos\beta_{RN} + K_{37}(\sin\beta_{RN} \cos\beta_{RN}) \left| \sin\beta_{RN} \cos\beta_{RN} \right|$$

$$C_{YLN} = K'_{36} \sin\beta_{LN} \cos\beta_{LN} + K'_{37}(\sin\beta_{LN} \cos\beta_{LN}) \left| \sin\beta_{LN} \cos\beta_{LN} \right|$$

$$C_{NRN} = C_{NORN} + K_{38} \sin\beta_{RN} \cos\beta_{RN} + K_{39}(\sin\beta_{RN} \cos\beta_{RN}) \left| \sin\beta_{RN} \cos\beta_{RN} \right|$$

$$C_{NLN} = C_{NOLN} + K_{40} \sin\beta_{LN} \cos\beta_{LN} + K_{41}(\sin\beta_{LN} \cos\beta_{LN}) \left| \sin\beta_{LN} \cos\beta_{LN} \right|$$

$$C_{\mathcal{L}RN} = C_{\mathcal{L}LN} \equiv 0.0$$

NACELLE FORCES & MOMENTS - NACELLE AXES

RIGHT

$$\Delta X'_{RN} = q_{RN} S_w \left[-C_{DRN} \cos\alpha_{RN} + C_{LRN} \sin\alpha_{RN} - C_{YRN} \sin\beta_{RN} \cos\alpha_{RN} \right] \tfrac{1}{2}$$

$$\Delta Y'_{RN} = q_{RN} S_w \left[C_{YRN} \cos\beta_{RN} - C_{DRN} \sin\beta_{RN} \right] \tfrac{1}{2}$$

$$\Delta Z'_{RN} = q_{RN} S_w \left[-C_{LRN} \cos\alpha_{RN} - C_{DRN} \cos\beta_{RN} \sin\alpha_{RN} - C_{YRN} \sin\beta_{RN} \sin\alpha_{RN} \right] \tfrac{1}{2}$$

$$\Delta \mathcal{L}'_{RN} = q_{RN} S_w b_w \left[-\left(\frac{c_w}{b_w}\right) C_{MRN} \sin\beta_{RN} \cos\alpha_{RN} - C_{NRN} \sin\alpha_{RN} \right] \tfrac{1}{2}$$

$$\Delta \mathcal{M}'_{RN} = q_{RN} S_w c_w \left[C_{MRN} \cos\beta_{RN} \right] \tfrac{1}{2}$$

$$\Delta \mathcal{N}'_{RN} = q_{RN} S_w b_w \left[C_{NRN} \cos\alpha_{RN} - \left(\frac{c_w}{b_w}\right) C_{MRN} \sin\beta_{RN} \cos\alpha_{RN} \right] \tfrac{1}{2}$$

LEFT

$$\Delta X'_{LN} = q_{LN} S_w \left[-C_{DLN} \cos\alpha_{LN} + C_{LLN} \sin\alpha_{LN} - C_{YLN} \sin\beta_{LN} \cos\alpha_{LN} \right] \tfrac{1}{2}$$

$$\Delta Y'_{LN} = q_{LN} S_w \left[C_{YLN} \cos\beta_{LN} - C_{DLN} \sin\beta_{LN} \right] \tfrac{1}{2}$$

$$\Delta Z'_{LN} = q_{LN} S_w \left[-C_{LLN} \cos\alpha_{LN} - C_{DLN} \cos\beta_{LN} \sin\alpha_{LN} - C_{YLN} \sin\beta_{LN} \sin\alpha_{LN} \right] \tfrac{1}{2}$$

$$\Delta \mathcal{L}'_{LN} = q_{LN} S_w b_w \left[-\left(\frac{c_w}{b_w}\right) C_{MLN} \sin\beta_{LN} \cos\alpha_{LN} - C_{NLN} \sin\alpha_{LN} \right] \tfrac{1}{2}$$

$$\Delta \mathcal{M}'_{LN} = q_{LN} S_w c_w \left[C_{MLN} \cos\beta_{LN} \right] \tfrac{1}{2}$$

$$\Delta \mathcal{N}'_{LN} = q_{LN} S_w b_w \left[C_{NLN} \cos\alpha_{LN} - \left(\frac{c_w}{b_w}\right) C_{MLN} \sin\beta_{LN} \cos\alpha_{LN} \right] \tfrac{1}{2}$$

LANDING GEAR EQUATIONS

PERFORM THE FOLLOWING CALCULATIONS FOR EACH OF THREE LANDING GEAR i.e. $n = 1, 2 \& 3$.

LANDING GEAR - A/C LOCATION

$n = 1$ LEFT MAIN GEAR
$n = 2$ RIGHT MAIN GEAR
$n = 3$ NOSE GEAR

$$X_n = -X_{CG} + X_{Gn}$$

$$Y_n = Y_{Gn}$$

$$Z_n = -Z_{CG} + Z_{Gn}$$

Strut Deflection

$$h_{G\theta n} = X_n \sin\theta - Z_n \cos\theta - r_n$$

$$h_{G\phi n} = \left[Y_n \sin\phi + (Z_n + r_n)(\cos\phi - 1) \right] \cos\theta$$

$$h_{Tn} = \left(-Z_{Down} + h_{G\theta n} - h_{G\phi n} \right) / (\cos\phi \cos\theta)$$

Rate of Strut Deflection

$$\dot{h}_{Tn} = -\dot{Z}_{Down} \left(\frac{1}{\cos\phi \cos\theta} \right) + X_n q - Y_n p$$

Vertical force

$$F_{GZn} = K_{STn} h_{Tn} + D_{STn} \dot{h}_{Tn}$$

NOTE: COMPUTE F_{GZn} ONLY IF $h_{Tn} < 0$;

IF $h_{Tn} > 0$; $F_{GZn} = 0.0$ &

REMAINING CALCULATIONS MAY BE SET TO ZERO.

LANDING GEAR EQUATIONS (Cont'd.)

Longitudinal force:

$$F_{\mu n} = +\left(\mu_0 + \mu_1 B_{Gn}\right) F_{Gzn} \frac{+u}{|u|}$$

i.e. IF $u > 0$ $F_{\mu n}$ is negative
IF $u < 0$ $F_{\mu n}$ is positive
IF $u = 0$ $F_{\mu n} \equiv 0.0$

NOTE: B_{Gn} is percent brake pedal deflection

Side force:

$$F_{sn} = \mu_s F_{Gzn} \frac{+v}{|v|}$$

i.e. IF $v > 0$ F_{sn} is negative
IF $v < 0$ F_{sn} is positive
IF $v = 0$ $F_{sn} = 0.0$

FORCE & MOMENT CONTRIBUTION OF EACH GEAR

$$\Delta X_n = F_{\mu n} - F_{Gzn}\,\theta$$

$$\Delta Y_n = F_{sn} + F_{Gzn}\,\phi$$

$$\Delta Z_n = F_{\mu n}\,\theta - F_{sn}\,\phi + F_{Gzn}$$

$$\Delta \mathcal{M}_n = -\Delta Z_n X_n + \Delta X_n \left(Z_n + r_n + h_{Tn}\right)$$

$$\Delta \mathcal{L}_n = \Delta Z_n Y_n - \Delta Y_n \left(Z_n + r_n + h_{Tn}\right)$$

$$\Delta \mathcal{N}_n = -\Delta X_n Y_n + X_n \Delta Y_n$$

LANDING GEAR EQUATIONS (Cont'd.)

$$\Delta X_{LG} = \sum_{1}^{3} \Delta X_n$$

$$\Delta Y_{LG} = \sum_{1}^{3} \Delta Y_n$$

$$\Delta Z_{LG} = \sum_{1}^{3} \Delta Z_n$$

$$\Delta \mathcal{L}_{LG} = \sum_{1}^{3} \Delta \mathcal{L}_n$$

$$\Delta \mathcal{M}_{LG} = \sum_{1}^{3} \Delta \mathcal{M}_n$$

$$\Delta \mathcal{N}_{LG} = \sum_{1}^{3} \Delta \mathcal{N}_n$$

FUSELAGE AERODYNAMICS

FUSELAGE INPUT EQUATIONS

$$\alpha_F = \tan^{-1} \frac{w}{u} \qquad \beta_F = \tan^{-1} \frac{v}{\sqrt{u^2+w^2}}$$

$$\alpha_p' = \sin\alpha_F \cos\alpha_F \qquad \beta_F' = \sin\beta_F \cos\beta_F$$

$$V_F = \sqrt{u^2+v^2+w^2}$$

$$q_F = \frac{1}{2}\rho V_F^2$$

(q) SAME AS TAIL DYNAMIC PRESSURE

$$V_{FOS} = V_F\sqrt{\sigma_h}$$

FUSELAGE WIND AXIS COEF'S

$$C_{DF} = C_{DOF}\left(1+K_0|\beta_F|^3\right) + K_2\alpha_F^2 + K_1|\alpha_F| + \Delta C_{DLG}$$

$$C_{LF} = K_3\alpha_F' + K_4\alpha_F'|\alpha_F'| + K_{42}$$

$$C_{YF} = K_7\beta_F' + K_8\beta_F'|\beta_F'|$$

$$C_{MF} = C_{MOF} + K_5\alpha_F' + K_6\alpha_F'|\alpha_F'| + \Delta C_{MLG}$$

$$C_{NF} = C_{NOF} + K_9\beta_F' + K_{10}\beta_F'|\beta_F'|$$

NOTE: IF GEAR IS UP; ΔC_{DLG} & $\Delta C_{MLG} \equiv 0.0$

SPECIAL CONDITIONS

1. IF $V_F^2 \leq 1\ (ft/sec)^2$ FUSELAGE AERO $= 0.0$ & HOLD VALUE OF α_F & β_F

FUSELAGE FORCES & MOMENT ABOUT A/C C.G.

$$X^{F'}_{AERO} = \left[-C_{DF} \cos\alpha_F + C_{LF} \sin\alpha_F - C_{YF} \sin\beta_F \cos\alpha_F \right] q_F S_W$$

$$Y^{F'}_{AERO} = \left[C_{YF} \cos\beta_F - C_{DF} \sin\beta_F \right] q_F S_W$$

$$Z^{F'}_{AERO} = \left[-C_{LF} \cos\alpha_F - C_{DF} \cos\beta_F \sin\alpha_F - C_{YF} \sin\beta_F \sin\alpha_F \right] q_F S_W$$

$$\mathcal{L}^{F'}_{AERO} = \left[-\left(\frac{c_W}{b_W}\right) C_{MF} \sin\beta_F \cos\alpha_F - C_{NF} \sin\alpha_F \right] q_F S_W b_W + Y^{F'}_{AERO} \left[Z_{CG} - Z_{FAC} \right]$$

$$\mathcal{M}^{F'}_{AERO} = \left[C_{MF} \cos\beta_F \right] q_F S_W c_W + Z^{F'}_{AERO} \left[X_{CG} - X_{FAC} \right] - X^{F'}_{AERO} \left[Z_{CG} - Z_{FAC} \right] +$$

$$\mathcal{N}^{F'}_{AERO} = \left[C_{NF} \cos\alpha_F - \left(\frac{c_W}{b_W}\right) C_{MF} \sin\beta_F \sin\alpha_F \right] q_F S_W b_W - Y^{F'}_{AERO} \left[X_{CG} - X_{FAC} \right] +$$

$$X^{F}_{AERO} = X^{F'}_{AERO} + \Delta X_{LG}$$

$$Y^{F}_{AERO} = Y^{F'}_{AERO} + \Delta Y_{LG}$$

$$Z^{F}_{AERO} = Z^{F'}_{AERO} + \Delta Z_{LG}$$

$$\mathcal{L}^{F}_{AERO} = \mathcal{L}^{F'}_{AERO} + \Delta \mathcal{L}_{LG}$$

$$\mathcal{M}^{F}_{AERO} = \mathcal{M}^{F'}_{AERO} + \Delta \mathcal{M}_{LG}$$

$$\mathcal{N}^{F}_{AERO} = \mathcal{N}^{F'}_{AERO} + \Delta \mathcal{N}_{LG}$$

WING ON ROTOR INTERFERENCE

AVERAGE NACELLE INCIDENCE

$$\bar{i}_N = 0.5\,(i_{NL} + i_{NR})$$

AVERAGE LIFT COEF.

$$C_{LW} = 0.5\,\frac{(C_{LSRW} + C_{LSLW})}{(1 - \bar{C}_{TS})}$$

LOOK-UP: ϵ_{WRR} & ϵ_{WRL} @ $\bar{i}_N$ & C_{LW}

WING INTERFERENCE LOGIC

1. IF: UMBRELLAS OPEN, SET $C_{LW} = 0.0$ & $\epsilon = \dfrac{\epsilon_p(1 - GEP)}{\sqrt{1-M^2}}$

ROTOR / ROTOR INTERFERENCE

POSITIVE SIDESLIP i.e., $v > 0.0$ (LOGIC REQUIRED)

$$\chi = 1.5708 - \epsilon_{PRR}$$

$$\left(\frac{\delta v_{RL}^*}{v_{RR}^*}\right) = T_1 + T_2(\chi) + T_3(\chi)^2$$

$$\delta v_{RL} = \left(\frac{\delta v_{RL}^*}{v_{RR}^*}\right) v_{RR} \sqrt{\frac{R_{RR}}{2\rho\pi R^2}}$$

$$\epsilon'_{iRL} = -\tan^{-1}\left[\frac{\delta v_{RL}}{V_{LR} + 1.0}\right]$$

$$\epsilon_{iRL} = (|\beta_F|)(.40528\, i_{NL})\, \epsilon'_{iRL}$$

$$\epsilon_{iLR} = 0.0$$

NEGATIVE SIDESLIP i.e. $v < 0.0$

$$\chi = 1.5708 - \epsilon_{PLR}$$

$$\left(\frac{\delta v_{LR}^*}{v_{LR}^*}\right) = T_1 + T_2(\chi) + T_3(\chi)^2$$

$$\delta v_{LR} = \left(\frac{\delta v_{LR}^*}{v_{RR}^*}\right) v_{NL} \sqrt{\frac{R_{LR}}{2\rho\pi R^2}}$$

$$\epsilon'_{iLR} = -\tan^{-1}\left[\frac{\delta v_{LR}}{V_{RR} + 1.0}\right]$$

$$\epsilon_{iLR} = (|\beta_F|)(.40528\, i_{NR})\, \epsilon'_{iLR}$$

$$\epsilon_{iRL} = 0.0$$

NOTE: v_{xR} & v_{NL} FROM WING EQUATIONS.

ROTOR AERO INPUT EQUATIONS

RIGHT ROTOR

$$\alpha_{RR} = \tan^{-1}\left\{ \frac{\sqrt{v_{RR}^2 + (w_{RR} + u_{RR}\epsilon_{wRR})^2}}{u_{RR}} \right\} + \epsilon_{iLR}$$

$$V_{RR} = \sqrt{u_{RR}^2 + v_{RR}^2 + w_{RR}^2} \quad ; \quad \mu_{RR} = \frac{V_{RR}}{\Omega_R R}$$

LEFT ROTOR

$$\alpha_{LR} = \tan^{-1}\left\{ \frac{\sqrt{v_{RL}^2 + (w_{RL} + u_{RL}\epsilon_{wRL})^2}}{u_{RL}} \right\} + \epsilon_{iRL}$$

$$V_{LR} = \sqrt{u_{RL}^2 + v_{RL}^2 + w_{RL}^2} \quad ; \quad \mu_{LR} = \frac{V_{LR}}{\Omega_L R}$$

ROTOR ANGULAR RATE TRANSFORMS

RIGHT - NACELLE AXES

$$P_{NR}^N = -p\cos i_{NR} + r\sin i_{NR}$$

$$Q_{NR}^N = q + \dot{i}_{NR}$$

$$R_{NR}^N = -r\cos i_{NR} - p\sin i_{NR}$$

LEFT - NACELLE AXES

$$P_{NL}^N = p\cos i_{NL} - r\sin i_{NL}$$

$$Q_{NL}^N = q + \dot{i}_{NL}$$

$$R_{NL}^N = r\cos i_{NL} + p\sin i_{NL}$$

RIGHT WIND AXES

$$P_{NR}^R = P_{NR}^N$$

$$Q_{NR}^R = Q_{NR}^N \cos\xi_{HR} + R_{NR}^N \sin\xi_{HR}$$

$$R_{NR}^R = R_{NR}^N \cos\xi_{NR} - Q_{NR}^N \sin\xi_{HR}$$

LEFT WIND AXES

$$P_{NL}^R = P_{NL}^N$$

$$Q_{NL}^R = Q_{NL}^N \cos\xi_{HL} - R_{NL}^N \sin\xi_{HL}$$

$$R_{NL}^R = R_{NL}^N \cos\xi_{HL} + Q_{NL}^N \sin\xi_{HL}$$

NOTE: USE WIND AXIS RATES IN ROTOR ROUTINE

ROTOR EQUATIONS

RIGHT ROTOR

THRUST

$$C'_{TRR} = \left[\frac{\tau_1 s + 1}{\tau_2 s + 1}\right]\left[C_{TORR} \cos A_{1GR} \cos B_{1OR}\right]$$

WHERE:-

$$C_{TORR} = \sum_{v=0}^{2}\sum_{u=0}^{3}\left[A_{T(u+4v)}\ \alpha_{RR}^{u}\ \theta_{0.75_R}^{v}\right]$$

$$A_{T(u+4v)} = f\left(\mu_{RR}\right)$$

INTERPOLATE C_{TORR} LINEARLY BETWEEN μ'S

GROUND EFFECT

$$h_{RR} = -Z_{DOWN} + \left(L_S \cos i_{NR} - X_{CG}\right)\sin\theta + \left[\left(L_S \sin i_{NR} + Z_{CG}\right)\cos\phi - Y_N \sin\phi\right]\cos\theta$$

$$\left(\frac{h}{D}\right)_{\substack{EFF\\RR}} = \frac{h_{RR}}{2R\left[\left|\sin(\theta + i_{NR})\cos\phi\right| + .0174\right]}$$

$$\left(\frac{T_{IGE}}{T_{OGE}}\right)_{RR} = \left[\left(\frac{h}{D}\right)^2_{\substack{EFF\\RR}}\left(.1741 - .6216\,\mu_{RR}\right) + \left(\frac{h}{D}\right)_{\substack{EFF\\RR}}\left(1.4779\,\mu_{RR} - .4143\right) + 1.2479 - .8806\,\mu_{RR}\right]$$

$$C_{TRR} = C'_{TRR}\left(\frac{T_{IGE}}{T_{OGE}}\right)_{RR}$$

SPECIAL CONDITIONS: IF $\mu_{RR} \geq 0.283$; $\left(\frac{T_{IGE}}{T_{OGE}}\right)_{RR} = 1.0$

OR IF $\left(\frac{h}{D}\right)_{\substack{EFF\\RR}} \geq 1.3$; $\left(\frac{T_{IGE}}{T_{OGE}}\right)_{RR} = 1.0$

ROTOR EQUATIONS (CONTINUED)

POWER

$$C_{P_{RR}} = C_{P_{ORR}}$$

WHERE :-

$$C_{P_{ORR}} = \sum_{v=0}^{2} \sum_{u=0}^{3} \left[A_{P(u+4v)} \, \alpha_{RR}^{u} \, C_{T_{RR}}'^{v} \right]$$

$$A_{P(u+4v)} = f(\mu_{RR})$$

INTERPOLATE $C_{P_{ORR}}$ LINEARLY BETWEEN μ'S

NORMAL FORCE

$$C_{NF_{RR}} = C_{NFO_{RR}} + \frac{d C_{NF_{RR}}}{d A_{1CR}} A_{1CR} + \frac{d C_{NF_{RR}}}{d B_{1CR}} B_{1CR}$$

WHERE :-

$$C_{NFO_{RR}} = \sum_{v=0}^{2} \sum_{u=0}^{3} \left[A_{NF(u+4v)} \, \alpha_{RR}^{u} \, C_{T_{RR}}'^{v} \right]$$

$$A_{NF(u+4v)} = f(\mu_{RR})$$

INTERPOLATE $C_{NFO_{RR}}$ LINEARLY BETWEEN μ'S

$$\frac{d C_{NF_{RR}}}{d A_{1CR}} = D_{NF_1} C_{T_{RR}} + D_{NF_2} \mu_{RR}^2 + D_{NF_3} \mu_{RR} + D_{NF_4}$$

$$\frac{d C_{NF_{RR}}}{d B_{1CR}} = E_{NF_1} C_{T_{RR}} + E_{NF_2} \mu_{RR}^2 + E_{NF_3} \mu_{RR} + E_{NF_4}$$

ROTOR EQUATIONS (CONTINUED)

SIDE FORCE

$$C_{SF_{RR}} = C_{SFO_{RR}} + \frac{dC_{SF_{RR}}}{dA_{ICR}} A_{ICR} + \frac{dC_{SF_{RR}}}{dB_{ICR}} B_{ICR}$$

WHERE:-

$$C_{SFO_{RR}} = \sum_{v=0}^{2} \sum_{u=0}^{3} \left[A_{SF(u+4v)} \alpha_{RR}^{u} C_{TRR}'^{v} \right]$$

$$A_{SF(u+4v)} = f(\mu_{RR})$$

INTERPOLATE $C_{SFO_{RR}}$ LINEARLY BETWEEN μ'S

$$\frac{dC_{SF_{RR}}}{dA_{ICR}} = D_{SF_1} C_{TRR} + D_{SF_2} \mu_{RR}^2 + D_{SF_3} \mu_{RR} + D_{SF_4}$$

$$\frac{dC_{SF_{RR}}}{dB_{ICR}} = E_{SF_1} C_{TRR} + E_{SF_2} \mu_{RR}^2 + E_{SF_3} \mu_{RR} + E_{SF_4}$$

ROTOR EQUATIONS (CONTINUED)

HUB PITCHING MOMENT

$$C_{PM_{RR}} = C_{PM_{0RR}} + \frac{d C_{PM_{RR}}}{d A_{1CR}} A_{1CR} + \frac{d C_{PM_{RR}}}{d B_{1CR}} B_{1CR} + \frac{d C_{PM_{RR}}}{d Q} Q^{R}_{NR}$$

WHERE :-

$$C_{PM_{0RR}} = \sum_{v=0}^{2} \sum_{u=0}^{3} \left[A_{PM(u+4v)} \, \alpha^{u}_{RR} \, C'^{v}_{T\,RR} \right]$$

$$A_{PM(u+4v)} = f(\mu_{RR})$$

$$\frac{d C_{PM_{RR}}}{d Q} = \sum_{v=0}^{2} \sum_{u=0}^{3} \left[H_{PM(u+4v)} \, \alpha^{u}_{RR} \, C'^{v}_{T\,RR} \right]$$

$$H_{PM(u+4v)} = f(\mu_{RR})$$

INTERPOLATE $C_{PM_{0RR}}$ AND $\frac{d C_{PM_{RR}}}{d Q}$ LINEARLY BETWEEN μ'S

NOTE:-

FOR $\mu_{RR} \leq 0.35$

$$\frac{d C_{PM_{RR}}}{d A_{1CR}} = D_{PM_1} C_{T_{RR}} + D_{PM_2} \mu^2_{RR} + D_{PM_3} \mu_{RR} + D_{PM_4}$$

FOR $\mu_{RR} > 0.35$, THE COEFF'S ABOVE CHANGE AS FOLLOWS

$D_{PM_2} \equiv D_{PM_5}$

$D_{PM_3} \equiv D_{PM_6}$

$D_{PM_4} \equiv D_{PM_7}$

ROTOR EQUATIONS (CONTINUED)

HUB PITCHING MOMENT (CONTINUED)

$$\frac{d\,C_{PMRR}}{d\,B_{ICR}} = E_{PM_1} C_{TRR} + E_{PM_2} \mu_{RR}^2 + E_{PM_3} \mu + E_{PM_4}$$

NOTE:- USE THE ABOVE EQUATION FOR $\mu_{RR} \leq 0.35$

FOR $\mu_{RR} > 0.35$: $E_{PM_2} \equiv E_{PM_5}$

$E_{PM_3} \equiv E_{PM_6}$

$E_{PM_4} \equiv E_{PM_7}$

HUB YAWING MOMENT

$$C_{YM_{RR}} = C_{YM_{ORR}} + \frac{d\,C_{YMRR}}{d\,A_{ICR}} A_{ICR} + \frac{d\,C_{YMRR}}{d\,B_{ICR}} B_{ICR} + \frac{d\,C_{YMRR}}{d\,R} R_{NR}^{R}$$

WHERE:-

$$C_{YM_{O_{RR}}} = \sum_{v=0}^{2} \sum_{u=0}^{3} \left[A_{YM(u+4v)} \alpha_{RR}^{u} C_{T_{RR}}'^{v} \right]$$

$$A_{YM(u+4v)} = f(\mu_{RR})$$

$$\frac{d\,C_{YMRR}}{d\,R} = \sum_{v=0}^{2} \sum_{u=0}^{3} \left[J_{YM(u+4v)} \alpha_{RR}^{u} C_{T_{RR}}'^{v} \right]$$

$$J_{YM(u+4v)} = f(\mu_{RR})$$

INTERPOLATE C_{YMRR} AND $\frac{d\,C_{YMRR}}{d\,R}$ LINEARLY BETWEEN μ's.

ROTOR EQUATIONS (CONTINUED)

HUB YAWING MOMENT (CONTINUED)

FOR $\mu_{RR} \leq 0.35$

$$\frac{d\,C_{YMRR}}{d\,A_{1CR}} = D_{YM_1} C_{TRR} + D_{YM_2} \mu_{RR}^2 + D_{YM_3} \mu_{RR} + D_{YM_4}$$

FOR $\mu_{RR} > 0.35$

$$D_{YM_2} \equiv D_{YM5}$$

$$D_{YM_3} \equiv D_{YM6}$$

$$D_{YM_4} \equiv D_{YM7}$$

FOR $\mu_{RR} \leq 0.35$

$$\frac{d\,C_{YMRR}}{d\,B_{1CR}} = E_{YM_1} C_{TRR} + E_{YM_2} \mu_{RR}^2 + E_{YM_3} \mu_{RR} + E_{YM_4}$$

FOR $\mu_{RR} > 0.35$

$$E_{YM_2} \equiv E_{YM5}$$

$$E_{YM_3} \equiv E_{YM6}$$

$$E_{YM_4} \equiv E_{YM7}$$

ROTOR EQUATIONS (Cont'd)

ROTOR FORCE & MOMENT CALCULATION

$$T_R = f_{T_R} C_{TRR} \rho \pi R^4 \Omega_R^2$$

$$N.F_R = f_{N.F_R} C_{NFRR} \rho \pi R^4 \Omega_R^2$$

$$S.F_R = f_{S.F_R} C_{SFRR} \rho \pi R^4 \Omega_R^2$$

$$\mathcal{M}_R = f_{PM_R} C_{PMRR} \rho \pi R^5 \Omega_R^2$$

$$\mathcal{N}_R = f_{Y.M_R} C_{YMRR} \rho \pi R^5 \Omega_R^2$$

$$Q_{RREQ} = f_{Q_R} C_{PRR} \rho \pi R^5 \Omega_R^2$$

$$RHP_{RR} = f_{P_R} C_{PRR} \rho \pi R^5 \Omega_R^3 / 550 \quad \text{OR} \quad RHP_{RR} = Q_{RREQ} \left(\frac{\Omega_R}{550}\right)$$

LEFT ROTOR FOLLOWS SIMILAR FORMAT

WITH SUBSCRIPTS CHANGED.

THE LEFT ROTOR ALTITUDE EQUATION IS AS FOLLOWS:

$$h_{LR} = -Z_{DOWN} + (L_S \cos i_{NL} - X_{CG}) \sin\theta + \left[(L_S \sin i_{NL} + Z_{CG}) \cos\phi + Y_N \sin\phi \right] \cos\theta$$

OR;

$$h_{LR} = h_{RR} + 2 Y_N \sin\phi \cos\theta$$

ROTOR FORCE & MOMENT RESOLUTION

HUB MOMENTS – NACELLE AXES

LEFT

$$\mathcal{L}_{LRH} = -Q_{LREQ} - I_p \dot{\Omega}_L$$

$$\mathcal{M}_{LRH} = \mathcal{M}_L \cos \xi_{HL} - \mathcal{N}_L \sin \xi_{HL} - I_p \Omega_L \left(p \sin i_{NL} + r \cos i_{NL} \right)$$

$$\mathcal{N}_{LRH} = -\mathcal{N}_L \cos \xi_{HL} - \mathcal{M}_L \sin \xi_{HL} + I_p \Omega_L \left(\dot{i}_{NL} + q \right)$$

RIGHT

$$\mathcal{L}_{RRH} = Q_{RREQ} + I_p \dot{\Omega}_R$$

$$\mathcal{M}_{RRH} = \mathcal{M}_R \cos \xi_{HR} + \mathcal{N}_R \sin \xi_{HR} + I_p \Omega_R \left(p \sin i_{NR} + r \cos i_{NR} \right)$$

$$\mathcal{N}_{RRH} = \mathcal{N}_R \cos \xi_{HR} - \mathcal{M}_R \sin \xi_{HR} - I_p \Omega_R \left(\dot{i}_{NR} + q \right)$$

NOTE: NACELLE AXES ARE RIGHT HANDED SYSTEMS

ROTOR FORCES & MOMENT RESOLUTION (Cont'd.)

LEFT TIP PIVOT - BODY AXES@ TIP (w/ NACELLE AERO)

$$X_{AERO}^{NL} = (T_L + \Delta X'_{LN}) \cos i_{NL} - \sin i_{NL} \left(N.F._L \cos \zeta_{HL} + S.F._L \sin \zeta_{HL} - \Delta Z'_{LN} \right)$$

$$Y_{AERO}^{NL} = S.F._L \cos \zeta_{HL} - N.F._L \sin \zeta_{HL} + \Delta Y'_{LN}$$

$$Z_{AERO}^{NL\,\prime} = -(T_L + \Delta X'_{LN}) \sin i_{NL} - \cos i_{NL} \left(N.F._L \cos \zeta_{HL} + S.F._L \sin \zeta_{HL} - \Delta Z'_{LN} \right)$$

$$\mathcal{L}_{AERO}^{NL\,\prime} = (\mathcal{L}_{LRH} + \Delta \mathcal{L}'_{LN}) \cos i_{NL} + \sin i_{NL} \left(\mathcal{M}_{LRH} + \Delta \mathcal{M}'_{LN} + L_S Y_{AERO}^{NL} \right)$$

$$\mathcal{M}_{AERO}^{NL} = \mathcal{M}_{LRH} + \Delta \mathcal{M}'_{LN} + N.F._L L_S \cos \zeta_{HL} + S.F._L L_S \sin \zeta_{HL} - L_S \Delta Z'_{LN} - I_E \Omega_{EL} r$$

$$\mathcal{N}_{AERO}^{NL} = \cos i_{NL} \left(\mathcal{N}_{LRH} + \Delta \mathcal{N}'_{LN} + L_S Y_{AERO}^{NL} \right) - \sin i_{NL} \left(\mathcal{L}_{LRH} + \Delta \mathcal{L}'_{LN} \right) + I_E \Omega_{EL} q$$

NACELLE EQUATION INPUT - LEFT

$$\mathcal{M}_{NLAERO} = \mathcal{M}_{LRH} + \Delta \mathcal{M}'_{LN} + \left(N.F._L \cos \zeta_{HL} + S.F._L \sin \zeta_{HL} - \Delta Z'_{LN} \right) L_S$$

GLAS INPUTS - LEFT

$$\mathcal{M}_{NL\,AERO\,GLAS} = \mathcal{M}_{LRH} + L_S \left(N.F._L \cos \zeta_{HL} + S.F._L \sin \zeta_{HL} \right)$$

$$\mathcal{N}_{NL\,AERO\,GLAS} = \mathcal{N}_{LRH} + L_S \left(S.F._L \cos \zeta_{HL} - N.F._L \sin \zeta_{HL} \right)$$

ROTOR FORCE & MOMENT RESOLUTION (Cont'd.)

RIGHT TIP PIVOT - BODY AXES @ TIP (w/ NACELLE AERO)

$$X_{AERO}^{NR} = (T_R + \Delta X'_{RN}) \cos i_{NR} + \sin i_{NR} (-N.F_R \cos \zeta_{HR} + S.F_R \sin \zeta_{HR} + \Delta Z'_{RN})$$

$$Y_{AERO}^{NR} = -S.F_R \cos \zeta_{HR} - N.F_R \sin \zeta_{HR} + \Delta Y'_{RN}$$

$$Z_{AERO}^{NR} = -(T_R + \Delta X'_{RN}) \sin i_{NR} + \cos i_{NR} (-N.F_R \cos \zeta_{HR} + S.F_R \sin \zeta_{HR} + \Delta Z'_{RN})$$

$$\mathcal{L}_{AERO}^{NR} = (\mathcal{L}_{RRH} + \Delta \mathcal{L}'_{RN}) \cos i_{NR} + \sin i_{NR} (\mathcal{M}_{RRH} + L_S Y_{AERO}^{NR} + \Delta \mathcal{M}'_{RN})$$

$$\mathcal{M}_{AERO}^{NR} = \mathcal{M}_{RRH} + \Delta \mathcal{M}'_{RN} + N.F_R L_S \cos \zeta_{HR} - S.F_R L_S \sin \zeta_{HR} - L_S \Delta Z'_{RN} - I_E \Omega_{ER} r$$

$$\mathcal{N}_{AERO}^{NR} = \cos i_{NR} (\mathcal{N}_{RRH} + \Delta \mathcal{N}'_{RN} + L_S Y_{AERO}^{NR}) - \sin i_{NR} (\mathcal{L}_{RRH} + \Delta \mathcal{L}'_{RN}) + I_E \Omega_{ER} q$$

NACELLE EQUATION INPUT - RIGHT

$$\mathcal{M}_{NR\,AERO} = \mathcal{M}_{RRH} + \Delta \mathcal{M}'_{RN} + (N.F_R \cos \zeta_{HR} - S.F_R \sin \zeta_{HR} - \Delta Z'_{NR}) L_S$$

GLAS INPUTS - RIGHT

$$\mathcal{M}_{NR\,AERO\,GLAS} = \mathcal{M}_{RRH} + L_S (N.F_R \cos \zeta_{HR} - S.F_R \sin \zeta_{HR})$$

$$\mathcal{N}_{NR\,AERO\,GLAS} = \mathcal{N}_{RRH} - L_S (S.F_R \cos \zeta_{HR} + N.F \sin \zeta_{HR})$$

WING VERTICAL BENDING

RIGHT WING TIP DEFLECTION

$$\bar{a}_{RT} = \frac{Z_{AERO}}{m} + Y_N \dot{p}$$

$$\bar{a}_{RWAC} = \frac{Z_{AERO}}{m} + Y_{WAC} \dot{p}$$

$$h_{1R} = K_{w1} Z_{AERO}^{NR'} + K_{w2} Z_{AERO}^{RW'} + K_{w3} \mathcal{L}_{AERO}^{NR'} - K_{w4} \bar{a}_{RT} - K_{w5} \bar{a}_{RWAC}$$

$$\dot{h}_{1R} = \Delta h_{1R} / \Delta t$$

WHERE; Δh_{1R} IS THE DIFFERENCE OF h_{1R} BETWEEN TIME FRAMES AND Δt IS THE TIME FRAME

RIGHT WING A.C. DEFLECTION

$$h_{1RWAC} = K_{w6} Z_{AERO}^{NR'} + K_{w7} Z_{AERO}^{RW'} + K_{w8} \mathcal{L}_{AERO}^{NR'} - K_{w9} \bar{a}_{RT} - K_{w10} \bar{a}_{RWAC}$$

$$\dot{h}_{1RWAC} = \Delta h_{1RWAC} / \Delta t$$

WHERE: Δh_{1RWAC} IS THE DIFFERENCE OF h_{1RWAC} BETWEEN TIME FRAMES AND Δt IS THE TIME FRAME.

FORCE AND MOMENT EFFECTS

$$\ddot{Z}_{AERO}^{NR} = -2 \zeta_{w1} \omega_{w1} \dot{Z}_{AERO}^{NR} - \omega_{w1}^2 Z_{AERO}^{NR} + \omega_{w1}^2 Z_{AERO}^{NR'}$$

$$\ddot{Z}_{AERO}^{RW} = -2 \zeta_{w2} \omega_{w2} \dot{Z}_{AERO}^{RW} - \omega_{w2}^2 Z_{AERO}^{RW} + \omega_{w2}^2 Z_{AERO}^{RW'}$$

$$\ddot{\mathcal{L}}_{AERO}^{NR} = -2 \zeta_{w3} \omega_{w3} \dot{\mathcal{L}}_{AERO}^{NR} - \omega_{w3}^2 \mathcal{L}_{AERO}^{NR} + \omega_{w3}^2 \mathcal{L}_{AERO}^{NR'}$$

FORM Z_{AERO}^{NR}, Z_{AERO}^{RW}, & $\mathcal{L}_{AERO}^{NR}$

WING VERTICAL BENDING (Cont'd.)

LEFT WING TIP DEFLECTION

$$\bar{a}_{LT} = \frac{Z_{AERO}}{m} - Y_N \dot{p}$$

$$\bar{a}_{LWAC} = \frac{Z_{AERO}}{m} - Y_{WAC} \dot{p}$$

$$h_{1L} = K_{w1} Z_{AERO}^{NL'} + K_{w2} Z_{AERO}^{LW'} - K_{w3} \mathcal{L}_{AERO}^{NL'} - K_{w4} \bar{a}_{LT} - K_{w5} \bar{a}_{LWAC}$$

$$\mathring{h}_{1L} = \Delta h_{1L} / \Delta t$$

WHERE: Δh_{1L} IS THE DIFFERENCE OF h_{1L} BETWEEN TIME FRAMES AND Δt IS THE TIME FRAME

LEFT WING A.C. DEFLECTION

$$h_{1LWAC} = K_{w6} Z_{AERO}^{NL'} + K_{w7} Z_{AERO}^{LW} - K_{w8} \mathcal{L}_{AERO}^{NL'} - K_{w9} \bar{a}_{LT} - K_{w10} \bar{a}_{LWAC}$$

$$\mathring{h}_{1LWAC} = \Delta h_{1LWAC} / \Delta t$$

WHERE: Δh_{1LWAC} IS THE DIFERENCE OF h_{1LWAC} BETWEEN TIME FRAMES AND Δt IS THE TIME FRAME

FORCE AND MOMENT EFFECTS

$$\ddot{Z}_{AERO}^{NL} = -2 \zeta_{w1} \omega_{w1} \dot{Z}_{AERO}^{NL} - \omega_{w1}^2 Z_{AERO}^{NL} + \omega_{w1}^2 Z_{AERO}^{NL'}$$

$$\ddot{Z}_{AERO}^{LW} = -2 \zeta_{w2} \omega_{w2} \dot{Z}_{AERO}^{LW} - \omega_{w2}^2 Z_{AERO}^{LW} + \omega_{w2}^2 Z_{AERO}^{LW'}$$

$$\ddot{\mathcal{L}}_{AERO}^{NL} = -2 \zeta_{w3} \omega_{w3} \dot{\mathcal{L}}_{AERO}^{NL} - \omega_{w3}^2 \mathcal{L}_{AERO}^{NL} + \omega_{w3}^2 \mathcal{L}_{AERO}^{NL'}$$

FORM Z_{AERO}^{NL}, Z_{AERO}^{LW}, & $\mathcal{L}_{AERO}^{NL}$

WING TORSION

LEFT WING TWIST @ TIP

$$K_{\theta t}\,\theta_{tLW} = M_{NLACT} - I_E\,\Omega_{EL}\,r$$
$$+\, q_{SLW}\,\frac{c_w^2 b_w}{2}\,C_{Mo}\,(1 - C_{TSLR})$$
$$+\,(1 - C_{TSLR})\,q_{SLW}\,c_w^2\left(\frac{dC_{MWC/4}}{dC_L} + \frac{X_{WAC}}{C_w}\right)\left(\frac{C_{L\alpha} b_w}{6\pi}\right)\left(4\theta_{tLW} + 3\pi\alpha_{LWRIGID}\right)$$

RIGHT WING TWIST @ TIP

$$K_{\theta t}\,\theta_{tRW} = M_{NRACT} - I_E\,\Omega_{ER}\,r$$
$$+\, q_{SRW}\,\frac{c_w^2 b_w}{2}\,C_{Mo}\,(1 - C_{TSRR})$$
$$+\,(1 - C_{TSRR})\,q_{SRW}\,c^2\left(\frac{dC_{MWC/4}}{dC_L} + \frac{X_{WAC}}{C_w}\right)\left(\frac{C_{L\alpha} b_w}{6\pi}\right)\left(4\theta_{tRW} + 3\pi\alpha_{RWRIGID}\right)$$

WHERE: $C_{Mo} = C_1 + C_2\,\delta_F + C_3\,\delta_F^2$

$$\theta_{tLWAC} = \frac{Y_{WAC}}{Y_N}\,\theta_{tLW}$$

$$\theta_{tRWAC} = \frac{Y_{WAC}}{Y_N}\,\theta_{tRW}$$

NOTE: IF UMBRELLAS ARE OPEN ; SET TERMS CONTAINING $q_S(1 - C_{TS})$ EQUAL TO ZERO

TOTAL FORCE AND MOMENT SUMMATION ABOUT C.G.

$$X_{AERO} = X^{NL}_{AERO} + X^{NR}_{AERO} + X^{F}_{AERO} + X^{LW}_{AERO} + X^{RW}_{AERO} + X^{T}_{AERO}$$

$$Y_{AERO} = Y^{NL}_{AERO} + Y^{NR}_{AERO} + Y^{F}_{AERO} + Y^{LW}_{AERO} + Y^{RW}_{AERO} + Y^{T}_{AERO}$$

$$Z_{AERO} = Z^{NL}_{AERO} + Z^{NR}_{AERO} + Z^{F}_{AERO} + Z^{LW}_{AERO} + Z^{RW}_{AERO} + Z^{T}_{AERO}$$

$$\mathcal{L}_{AERO} = \mathcal{L}^{NL}_{AERO} + \mathcal{L}^{NR}_{AERO} + \mathcal{L}^{F}_{AERO} + \mathcal{L}^{W}_{AERO} + \mathcal{L}^{T}_{AERO} + Y_N \left(Z^{NR}_{AERO} - Z^{NL}_{AERO} \right) + Z_{CG} \left(Y^{NL}_{AERO} + Y^{NR}_{AERO} \right)$$

$$\mathcal{M}_{AERO} = \mathcal{M}^{NL}_{AERO} + \mathcal{M}^{NR}_{AERO} + \mathcal{M}^{F}_{AERO} + \mathcal{M}^{W}_{AERO} + \mathcal{M}^{T}_{AERO} + X_{CG} \left(Z^{NL}_{AERO} + Z^{NR}_{AERO} \right) - Z_{CG} \left(X^{NL}_{AERO} + X^{NR}_{AERO} \right)$$

$$\mathcal{N}_{AERO} = \mathcal{N}^{NL}_{AERO} + \mathcal{N}^{NR}_{AERO} + \mathcal{N}^{F}_{AERO} + \mathcal{N}^{W}_{AERO} + \mathcal{N}^{T}_{AERO} + Y_N \left(X^{NL}_{AERO} - X^{NR}_{AERO} \right) - X_{CG} \left(Y^{NL}_{AERO} + Y^{NR}_{AERO} \right)$$

NOMENCLATURE

l_f, h_f ~ FUSELAGE MASS CENTER w.r.t. PIVOT FUSE. CENTER, AXES.

l_w, h_w ~ WING " " " " " " "

l ~ NACELLE PIVOT TO NACELLE C.G. DISTANCE

λ ~ ANGLE BETWEEN NACELLE SHAFT AXIS AND ITS C.G. to PIVOT AXIS.

m_f ~ MASS OF FUSELAGE

m_w ~ MASS OF BOTH WINGS

m_N ~ MASS OF <u>ONE</u> NACELLE

i_N ~ NACELLE SHAFT TO FUSELAGE X-AXIS ANGLE

$I_{xx}^{(f)}, I_{yy}^{(f)}, I_{zz}^{(f)}, I_{xz}^{(f)}$ ~ FUSELAGE INERTIAS ABOUT ITS C.G.

$I_{xx}^{(w)}, I_{yy}^{(w)}, I_{zz}^{(w)}, I_{xz}^{(w)}$ ~ WING INERTIAS ABOUT <u>THEIR</u> C.G.

$I'_{xx}, I'_{yy}, I'_{zz}, I'_{xz}$ ~ MOMENTS OF INERTIA OF ONE NACELLE ABOUT ITS C.G.

p, q, r ~ FUSELAGE BODY AXIS ANGULAR RATES

u, v, w ~ FUSELAGE BODY AXIS LINEAR RATES

I_p ~ ROTOR POLAR MOMENT OF INERTIA

Ω ~ ROTOR SPEED, ANGULAR

$X_{AERO}; Y_{AERO}; Z_{AERO}$ ~ TOTAL AERODYNAMIC FORCES IN THE BODY AXIS.

SUBSCRIPTS

R ~ RIGHT
L ~ LEFT
w ~ WING
f ~ FUSELAGE

BASIC EQUATIONS OF MOTION

PRELIMINARY CALCULATIONS

FUSELAGE C.G. w.r.t. A/C C.G.

$$X_f = l_f - X_{CG}$$

$$Z_f = h_f - Z_{CG}$$

WING C.G w.r.t. A/C C.G.

$$X_w = l_w - X_{CG}$$

$$Z_w = h_w - Z_{CG}$$

NACELLE C.G.'s w.r.t. A/C C.G.

$$X_R = l \cos(i_{NR} - \lambda) - X_{CG}$$

$$Z_R = -l \sin(i_{NR} - \lambda) - Z_{CG}$$

$$X_L = l \cos(i_{NL} - \lambda) - X_{CG}$$

$$Z_L = -l \sin(i_{NL} - \lambda) - Z_{CG}$$

PRELIMINARY CALCULATIONS

INERTIA TERMS

$$\sum_k I_{ij}^{(k)} = I_{ij}^{(f)} + I_{ij}^{(w)} + 2I'_{ij}$$

$$\begin{aligned} I_{xx} = \sum_k I_{xx}^{(k)} &+ (I'_{zz} - I'_{xx})(\sin^2 i_{NR} + \sin^2 i_{NL}) \\ &- I'_{xz}(\sin 2i_{NR} + \sin 2i_{NL}) + 2 m_N Y_N^2 \\ &+ m_f h_f Z_f + m_w h_w Z_w + \\ &- l m_N [Z_R \sin(i_{NR} - \lambda) + Z_L \sin(i_{NL} - \lambda)] \end{aligned}$$

$$\begin{aligned} J_{xx} = \sum_k (I_{zz}^{(k)} - I_{yy}^{(k)}) &+ (I'_{xx} - I'_{zz})(\sin^2 i_{NR} + \sin^2 i_{NL}) \\ &+ I'_{xz}(\sin 2i_{NR} + \sin 2i_{NL}) + 2 m_N Y_N^2 \\ &- (m_f h_f Z_f + m_w h_w Z_w) \\ &+ l m_N [Z_R \sin(i_{NR} - \lambda) + Z_L \sin(i_{NL} - \lambda)] \end{aligned}$$

$$\begin{aligned} I_{xz}^{(P)} = I_{xz}^{(f)} + I_{xz}^{(w)} &+ \tfrac{1}{2}(I'_{xx} - I'_{zz})(\sin 2i_{NR} + \sin 2i_{NL}) \\ &+ I'_{xz}(\cos 2i_{NR} + \cos 2i_{NL}) + (m_f l_f Z_f + m_w l_w Z_w) \\ &+ m_N l [Z_R \cos(i_{NR} - \lambda) + Z_L \cos(i_{NL} - \lambda)] \end{aligned}$$

INERTIA TERMS

$$I_{yy} = \sum_{k} I_{yy}^{(k)} + m_f(\ell_f X_f + h_f Z_f) + m_w(\ell_w X_w + h_w Z_w)$$
$$+ m_N \ell\left[X_R \cos(i_{NR}-\lambda) - Z_R \sin(i_{NR}-\lambda)\right]$$
$$+ m_N \ell\left[X_L \cos(i_{NL}-\lambda) - Z_L \sin(i_{NL}-\lambda)\right]$$

$$J_{yy} = \left(I_{xx}^{(f)} - I_{zz}^{(f)}\right) + \left(I_{xx}^{(w)} - I_{zz}^{(w)}\right) +$$
$$+\left(I'_{xx} - I'_{zz}\right)\left(\cos 2i_{NR} + \cos 2i_{NL}\right)$$
$$- 2I'_{xz}\left(\sin 2i_{NR} + \sin 2i_{NL}\right) + m_f(-\ell_f X_f + h_f Z_f)$$
$$+ m_w(-\ell_w X_w + h_w Z_w)$$
$$- m_N \ell\left[X_R \cos(i_{NR}-\lambda) + Z_R \sin(i_{NR}-\lambda) + X_L \cos(i_{NL}-\lambda)\right.$$
$$\left. + Z_L \sin(i_{NL}-\lambda)\right]$$

$$I_{xz}^{(g)} = I_{xz}^{(f)} + I_{xz}^{(w)} + \frac{1}{2}\left(I'_{xx} - I'_{zz}\right)\left(\sin 2i_{NR} + \sin 2i_{NL}\right)$$
$$+ I'_{xz}\left(\cos 2i_{NR} + \cos 2i_{NL}\right)$$
$$- m_N \ell\left[X_R \sin(i_{NR}-\lambda) + X_L \sin(i_{NL}-\lambda)\right]$$
$$+ m_f h_f X_f + m_w h_w X_w$$

INERTIA TERMS

$$I_{zz} = \sum_{k} I_{zz}^{(k)} + (I'_{xx} - I'_{zz})(\sin^2 i_{NR} + \sin^2 i_{NL})$$
$$+ I'_{xz}(\sin 2i_{NR} + \sin 2i_{NL}) + 2 m_N Y_N^2$$
$$+ m_f l_f X_f + m_w l_w X_w$$
$$+ m_N l [X_R \cos(i_{NR} - \lambda) + X_L \cos(i_{NL} - \lambda)]$$

$$J_{zz} = \sum_{k} (I_{yy}^{(k)} - I_{xx}^{(k)}) + (I'_{xx} - I'_{zz})(\sin^2 i_{NR} + \sin^2 i_{NL})$$
$$+ I'_{xz}(\sin 2i_{NR} + \sin 2i_{NL}) - 2 m_N Y_N^2$$
$$+ m_f l_f X_f + m_w l_w X_w$$
$$+ m_N l [X_R \cos(i_{NR} - \lambda) + X_L \cos(i_{NL} - \lambda)]$$

$$I_{xz}^{(r)} = I_{xz}^{(f)} + I_{xz}^{(w)} + \frac{1}{2}(I'_{xx} - I'_{zz})(\sin 2i_{NR} + \sin 2i_{NL})$$
$$+ I'_{xz}(\cos 2i_{NR} + \cos 2i_{NL}) + m_f h_f X_f + m_w h_w X_w$$
$$- l m_N [X_R \sin(i_{NR} - \lambda) + X_L \sin(i_{NL} - \lambda)]$$

BASIC EQUATIONS – FINAL SIMPLIFICATION

ROLL EQUATION

$$I_{xx}\dot{p} = -J_{xx}\,rq + I_{xz}^{(p)}(\dot{r} + pq)$$
$$+ \ell m_N Y_N \left\{ \ddot{i}_{NR}\cos(i_{NR}-\lambda) - \ddot{i}_{NL}\cos(i_{NL}-\lambda) \right\}$$
$$+ \mathcal{L}_{AERO}$$

PITCH EQUATION

$$I_{yy}\dot{q} = -J_{yy}\,pr - I_{xz}^{(q)}(p^2 - r^2)$$
$$- \ddot{i}_{NR}\left\{ I'_{yy} + \ell m_N\left[-Z_R\sin(i_{NR}-\lambda) + X_R\cos(i_{NR}-\lambda)\right]\right\}$$
$$- \ddot{i}_{NL}\left\{ I'_{yy} + \ell m_N\left[-Z_L\sin(i_{NL}-\lambda) + X_L\cos(i_{NL}-\lambda)\right]\right\}$$
$$+ \mathcal{M}_{AERO}$$

YAW EQUATION

$$I_{zz}\dot{r} = -J_{zz}\,pq - (rq - \dot{p})\,I_{xz}^{(r)}$$
$$- \ell m_N Y_N \left\{ \ddot{i}_{NR}\sin(i_{NR}-\lambda) - \ddot{i}_{NL}\sin(i_{NL}-\lambda) \right\}$$
$$+ \mathcal{N}_{AERO}$$

BASIC EQUATIONS

RIGHT NACELLE ACTUATOR PITCHING MOMENT EQUATION

$$
\begin{aligned}
M_{NRACT} = & -\ddot{i}_{NR}\left[I'_{yy} + \ell^2 m_N \left(1 - \frac{m_N}{m}\right)\right] \\
& - \ell^2 m_N \left(1 - \frac{m_N}{m}\right)\Big[-pr\cos 2(i_{NR}-\lambda) + \dot{q} \\
& \quad + (r^2 - p^2)\sin(i_{NR}-\lambda)\cos(i_{NR}-\lambda)\Big] \\
& - (r^2 - p^2)\left[I'_{zz} \sin i_{NR} \cos i_{NR}\right] - I'_{yy}\dot{q} \\
& + \ell \frac{m_N}{m}\left[X_{AERO} \sin(i_{NR}-\lambda) + Z_{AERO}\cos(i_{NR}-\lambda)\right] \\
& - \ell m_N V_N \Big\{ (\dot{r} - pq)\left[\sin(i_{NR}-\lambda)\right] \\
& \qquad - (\dot{p} + rq)\left[\cos(i_{NR}-\lambda)\right]\Big\} \\
& + \mathcal{M}_{NRAERO}
\end{aligned}
$$

Note: The above equation must be calculated for wing torsion calculation <u>only</u>

BASIC EQUATIONS

LEFT NACELLE ACTUATOR PITCHING MOMENT EQUATION

$$
\begin{aligned}
M_{NLACT} = &- \ddot{i}_{NL}\left[I'_{yy} + l^2 m_N \left(1 - \frac{m_N}{m}\right)\right] \\
&- l^2 m_N \left(1 - \frac{m_N}{m}\right)\Big[- pr \cos 2(i_{NL} - \lambda) + \dot{q} \\
&\quad + (r^2 - p^2) \sin(i_{NL} - \lambda) \cos(i_{NL} - \lambda)\Big] \\
&- (r^2 - p^2)\left[I'_{zz} \sin i_{NL} \cos i_{NL} \right] - I'_{yy}\dot{q} \\
&+ l \frac{m_N}{m}\left[X_{Aero} \sin(i_{NL} - \lambda) + Z_{AERO} \cos(i_{NL} - \lambda)\right] \\
&+ l m_N Y_N \Big\{ (\dot{r} - pq)\left[\sin(i_{NL} - \lambda)\right] \\
&\qquad - (\dot{p} + rq)\left[\cos(i_{NL} - \lambda)\right]\Big\} \\
&+ \mathcal{M}_{NLAERO}
\end{aligned}
$$

NOTE: The above equation must be calculated for wing torsion calculation <u>ONLY</u>.

LINEAR EQUATIONS OF MOTION (ψ, θ, ϕ-EULER SYSTEM)

$$\dot{u} = \frac{X_{AERO}}{m} - g\sin\theta - qw + rv$$

$$\dot{v} = \frac{Y_{AERO}}{m} + g\cos\theta\sin\phi - ru + pw$$

$$\dot{w} = \frac{Z_{AERO}}{m} + g\cos\theta\cos\phi + qu - pv$$

EULER ANGLE CALCULATION - ψ, θ, ϕ SYSTEM

$$\dot{\psi} = (r\cos\phi + q\sin\phi)/\cos\theta$$

$$\dot{\theta} = q\cos\phi - r\sin\phi$$

$$\dot{\phi} = p + \dot{\psi}\sin\theta$$

Aircraft Condition Calculations

Ground Track

Northward Velocity

$$\dot{X}_{NORTH} = U \cos\theta \cos\psi + V(\sin\phi \sin\theta \cos\psi - \cos\phi \sin\psi) + W(\cos\phi \sin\theta \cos\psi + \sin\phi \sin\psi)$$

Eastward Velocity

$$\dot{Y}_{EAST} = U \cos\theta \sin\psi + V(\sin\phi \sin\theta \sin\psi + \cos\phi \cos\psi) + W(\cos\phi \sin\theta \sin\psi - \sin\phi \cos\psi)$$

Downward Velocity

$$\dot{Z}_{DOWN} = -U \sin\theta + V \sin\phi \cos\theta + W \cos\phi \cos\theta$$

PILOT STATION ACCELERATIONS (BODY AXES)

$$a_{xPA} = \frac{X_{AERO}}{m} + (\dot{q} + pr)(Z_{PA} - Z_{CG}) + (q^2 + r^2)(X_{CG} - l_{PA}) + Y_{PA}(pq - \dot{r}) - 2q\dot{Z}_{CG} - \ddot{X}_{CG}$$

$$a_{yPA} = \frac{Y_{AERO}}{m} + (\dot{p} - qr)(Z_{CG} - Z_{PA}) + (\dot{r} + pq)(l_{PA} - X_{CG}) - Y_{PA}(r^2 + p^2) + 2(p\dot{Z}_{CG} - r\dot{X}_{CG})$$

$$a_{zPA} = \frac{Z_{AERO}}{m} + (\dot{q} - pr)(X_{CG} - l_{PA}) + (p^2 + q^2)(Z_{CG} - Z_{PA}) + Y_{PA}(\dot{p} + qr) + 2q\dot{X}_{CG} - \ddot{Z}_{CG}$$

PILOT STATION VELOCITIES (BODY AXES)

$$u_{PA} = u_P + qZ_{PA} - rY_{PA}$$

$$v_{PA} = v_P + rl_{PA} - pZ_{PA}$$

$$w_{PA} = w_P + pY_{PA} - ql_{PA}$$

GUST MODEL

The Gust Model to be used with the simulation will consist of:

NASA-AMES program number NAPS-80.

The output of this program is in the form of gust components that will be added to the inertial components of the basic equations of motion. In practice, the following equations will be used in formulating the input to the aerodynamic coordinate transforms etc.,.

$$u = u' + u_g \qquad P = P' + P_g$$

$$v = v' + v_g \qquad Q = Q' + Q_g$$

$$w = w' + w_g \qquad R = R' + R_g$$

The primed terms above are derived from the basic equations.

Alterations to nomenclature in the Vertol equations has been resisted at this time for the sake of simplicity.

PRELIMINARY CALCULATIONS (PREPROCESS)

CENTER OF GRAVITY CALCULATIONS

$$m = \frac{1}{32.174}\left[W'_f + W'_{NT} + W'_{HT} + W'_{VT} + W'_w + W'_{NF} + W'_{CR} + W'_{FUEL} + W'_c\right]$$

$$m_N = \frac{1}{32.174}\left(\frac{W'_{NT}}{2}\right)$$

$$m_f = \frac{1}{32.174}\left[W'_f + W'_{HT} + W'_{VT} + W'_{CR} + W'_c\right]$$

$$m_w = \frac{1}{32.174}\left[W'_w + W'_{FUEL} + W'_{NF}\right]$$

$$l'_f = \left[(FS)_P - (FS)_{f'}\right]\frac{1}{12}$$

$$l'_{HT} = \left[(FS)_P - (FS)_{HTCG}\right]\frac{1}{12}$$

$$l'_{VT} = \left[(FS)_P - (FS)_{VTCG}\right]\frac{1}{12}$$

$$l'_{PA} = \left[(FS)_P - (FS)_{PA}\right]\frac{1}{12}$$

$$l'_c = \left[(FS)_P - (FS)_c\right]\frac{1}{12}$$

$$l_f = \frac{1}{m_f(32.174)}\left[W'_f\, l'_f + W'_{HT}\, l'_{HT} + W'_{VT}\, l'_{VT} + W'_{CR}\, l_{PA} + W'_c\, l'_c\right]$$

$$l'_w = \left[(FS)_P - (FS)_w\right]\frac{1}{12}$$

$$l'_{FUEL} = \left[(FS)_P - (FS)_{FUEL}\right]\frac{1}{12}$$

$$l'_{NF} = \left[(FS)_P - (FS)_{NF}\right]\frac{1}{12}$$

$$l_w = \frac{1}{m_w(32.174)}\left[W'_w\, l'_w + W'_{FUEL}\, l'_{FUEL} + W'_{NF}\, l'_{NF}\right]$$

PRELIMINARY CALCULATIONS (CONT'D.)

$$z'_f = \left[(WL)_p - (WL)_{f'}\right]\frac{1}{12}$$

$$z'_{HT} = \left[(WL)_p - (WL)_{HTCG}\right]\frac{1}{12}$$

$$z'_{VT} = \left[(WL)_p - (WL)_{VTCG}\right]\frac{1}{12}$$

$$Z_{PA} = \left[(WL)_p - (WL)_{PA}\right]\frac{1}{12}$$

$$z'_c = \left[(WL)_p - (WL)_c\right]\frac{1}{12}$$

$$h_f = \frac{1}{(32.174)(m_f)}\left[W'_f z'_f + W'_{HT} z'_{HT} + W'_{VT} z'_{VT} + W'_{CR} Z_{PA} + W'_c z'_c\right]$$

$$z'_w = \left[(WL)_p - (WL)_w\right]\frac{1}{12}$$

$$z'_{FUEL} = \left[(WL)_p - (WL)_{FUEL}\right]\frac{1}{12}$$

$$z'_{NF} = \left[(WL)_p - (WL)_{NF}\right]\frac{1}{12}$$

$$h_w = \frac{1}{(32.174)\, m_w}\left[W'_w z'_w + W'_{FUEL} z'_{FUEL} + W'_{NF} z'_{NF}\right]$$

$$X_{WAC} = \left[(FS)_p - (FS)_{WAC}\right]\frac{1}{12}$$

$$Y_{WAC} = \left[(BL)_{WAC}\right]\frac{1}{12}$$

$$Z_{WAC} = \left[(WL)_p - (WL)_{WAC}\right]\frac{1}{12}$$

$$Y_N = \left[(BL)_N\right]\frac{1}{12}$$

PRELIMINARY CALCULATIONS (CONT'D.)

$$X_{HT} = \left[(FS)_P - (FS)_{HT}\right] \frac{1}{12}$$

$$Z_{HT} = \left[(WL)_P - (WL)_{HT}\right] \frac{1}{12}$$

$$X_{VT} = \left[(FS)_P - (FS)_{VT}\right] \frac{1}{12}$$

$$Z_{VT} = \left[(WL)_P - (WL)_{VT}\right] \frac{1}{12}$$

$$A = 3.14159\ R^2$$

$$\bar{Y}_{WAC} = \left[(\bar{B}L)_{WAC}\right] \frac{1}{12}$$

$$X_{G2} = X_{G1} = \left[(FS)_P - (FS)_{G2}\right] \frac{1}{12}$$

$$Z_{G2} = Z_{G1} = \left[(WL)_P - (WL)_{G2}\right] \frac{1}{12}$$

$$Y_{G2} = \left[(BL)_{G2}\right] \frac{1}{12}$$

$$Y_{G1} = -Y_{G2}$$

$$Y_{G3} = 0.$$

$$Y_{PA} = \left[(BL)_{PA}\right] \frac{1}{12}$$; POSITIVE FOR PILOT IN RIGHT SEAT

$$X_{FAC} = \left[(FS)_P - (FS)_{FAC}\right] \frac{1}{12}$$

$$Z_{FAC} = \left[(WL)_P - (WL)_{FAC}\right] \frac{1}{12}$$

PRELIMINARY CALCULATIONS (CONT'D)

$$X_{c/2} = \left[(FS)_P - (FS)_{c/2}\right]\frac{1}{12}$$

$$Z_{G3} = \left[(WL)_P - (WL)_{G3}\right]\frac{1}{12}$$

$$X_{G3} = \left[(FS)_P - (FS)_{G3}\right]\frac{1}{12}$$

$$Y_{NF} = \left[(BL)_{NFCG}\right]\frac{1}{12}$$

$$Y_{HT} = \left[(BL)_{HTCG}\right]\frac{1}{12}$$

$$Y_w = \left[(BL)_{WCG}\right]\frac{1}{12}$$

$$Y_{FUEL} = \left[(BL)_{FUEL\,CG}\right]\frac{1}{12}$$

INERTIA CALCULATIONS

$$\eta'_{f'} = l_f - l'_f$$

$$\delta'_{f'} = h_f - z'_f$$

$$\eta'_{HT} = l_f - l'_{HT}$$

$$\delta'_{HT} = h_f - z'_{HT}$$

$$\eta'_{VT} = l_f - l'_{VT}$$

$$\delta'_{VT} = h_f - z'_{VT}$$

$$\eta'_{CR} = l_f - l_{PA}$$

$$\delta'_{CR} = h_f - z_{PA}$$

PRELIMINARY CALCULATIONS (CONT'D)

$$\eta'_c = l_f - l'_c$$

$$\delta'_c = h_f - z'_c$$

$$I_{YY}^{(f)} = I_{YY_o}^{(W_{f'})} + I_{YY_o}^{(HT)} + I_{YY_o}^{(VT)} + I_{YY_o}^{(CR)} + I_{YY_o}^{(c)} + \frac{W'_f}{32.174}\left(\eta'^2_{f'} + \delta'^2_{f'}\right)$$

$$+ \frac{W'_{HT}}{32.174}\left(\eta'^2_{HT} + \delta'^2_{HT}\right) + \frac{W'_{VT}}{32.174}\left(\eta'^2_{VT} + \delta'^2_{VT}\right)$$

$$+ \frac{W'_{CR}}{32.174}\left(\eta'^2_{CR} + \delta'^2_{CR}\right) + \frac{W'_c}{32.174}\left(\eta'^2_c + \delta'^2_c\right)$$

$$I_{XX}^{(f)} = I_{XX_o}^{(W_{f'})} + I_{XX_o}^{(HT)} + I_{XX_o}^{(VT)} + I_{XX_o}^{(CR)} + I_{XX_o}^{(c)} + \frac{W'_f}{32.174}\delta'^2_{f'} + \frac{W'_{HT}}{32.174}\left(\delta'^2_{HT} + Y^2_{HT}\right)$$

$$+ \frac{W'_{VT}}{32.174}\delta'^2_{VT} + \frac{W'_{CR}}{32.174}\delta'^2_{CR} + \frac{W'_c}{32.174}\delta'^2_c$$

$$I_{ZZ}^{(f)} = I_{ZZ_o}^{(W_{f'})} + I_{ZZ_o}^{(HT)} + I_{ZZ_o}^{(VT)} + I_{ZZ_o}^{(CR)} + I_{ZZ_o}^{(c)} + \frac{W'_f}{32.174}\eta'^2_{f'} + \frac{W'_{HT}}{32.174}\left(\eta'^2_{HT} + Y^2_{HT}\right)$$

$$+ \frac{W'_{VT}}{32.174}\eta'^2_{VT} + \frac{W'_{CR}}{32.174}\eta'^2_{CR} + \frac{W'_c}{32.174}\eta'^2_c$$

$$I_{XZ}^{(f)} = I_{XZ_o}^{(W_{f'})} + I_{XZ_o}^{(HT)} + I_{XZ_o}^{(VT)} + I_{XZ_o}^{(CR)} + I_{XZ_o}^{(c)} + \frac{W'_f}{32.174}\eta'_{f'}\delta'_{f'}$$

$$+ \frac{W'_{HT}}{32.174}\eta'_{HT}\delta'_{HT} + \frac{W'_{VT}}{32.174}\eta'_{VT}\delta'_{VT} + \frac{W'_{CR}}{32.174}\eta'_{CR}\delta'_{CR}$$

$$+ \frac{W'_c}{32.174}\eta'_c\delta'_c$$

$$H'_{w'_w} = l_w - l'_w$$

$$\Delta'_{w'_w} = h_w - z'_w$$

$$H'_{w'_{FUEL}} = l_w - l'_{FUEL}$$

$$\Delta'_{w'_{FUEL}} = h_w - z'_{FUEL}$$

PRELIMINARY CALCULATIONS (CONT'D)

$$H'_{w'NF} = l_w - l'_{NF}$$

$$\Delta'_{w'NF} = h_w - z'_{NF}$$

$$I_{YY}^{(w)} = I_{YY_0}^{(w'_w)} + I_{YY_0}^{(w'_{FUEL})} + I_{YY_0}^{(w'_{NF})} + \frac{W'_w}{32.174}\left(H'^2_{w'_w} + \Delta'^2_{w'_w}\right)$$

$$+ \frac{W'_{FUEL}}{32.174}\left(H'^2_{w'_{FUEL}} + \Delta'^2_{w'_{FUEL}}\right) + \frac{W'_{NF}}{32.174}\left(H'^2_{w'_{NF}} + \Delta'^2_{w'_{NF}}\right)$$

$$I_{XX}^{(w)} = I_{XX_0}^{(w'_w)} + I_{XX_0}^{(w'_{FUEL})} + I_{XX_0}^{(w'_{NF})} + \frac{W'_w}{32.174}\left(\Delta'^2_{w'_w} + Y_w^2\right)$$

$$+ \frac{W'_{FUEL}}{32.174}\left(\Delta'^2_{w'_{FUEL}} + Y^2_{FUEL}\right) + \frac{W'_{NF}}{32.174}\left(\Delta'^2_{w'_{NF}} + Y^2_{NF}\right)$$

$$I_{ZZ}^{(w)} = I_{ZZ_0}^{(w'_w)} + I_{ZZ_0}^{(w'_{FUEL})} + I_{ZZ_0}^{(w'_{NF})} + \frac{W'_w}{32.174}\left(H'^2_{w'_w} + Y_w^2\right)$$

$$+ \frac{W'_{FUEL}}{32.174}\left(H'^2_{w'_{FUEL}} + Y^2_{FUEL}\right) + \frac{W'_{NF}}{32.174}\left(H'^2_{w'_{NF}} + Y^2_{NF}\right)$$

$$I_{XZ}^{(w)} = I_{XZ_0}^{(w'_w)} + I_{XZ_0}^{(w'_{FUEL})} + I_{XZ_0}^{(w'_{NF})} + \frac{W'_w}{32.174} H'_{w'_w} \Delta_{w'_w}$$

$$+ \frac{W'_{FUEL}}{32.174} H'_{w'_{FUEL}} \Delta'_{w'_{FUEL}} + \frac{W'_{NF}}{32.174} H'_{w'_{NF}} \Delta'_{w'_{NF}}$$

MATH MODEL TRIM LOOP OPTIONS

1.) When specifying i_{NREF}, form:

$$\theta = K_{T17}\int \dot{u}\,dt + K_{T18}\dot{u}$$

Note: This option will be commonly used in cruise flight when the nacelles are down and locked.

APPENDIX F MATHEMATICAL MODEL INPUT DATA

Presented in this section is the input data for the mathematical model. A general description of the Model 222 tilt rotor was given in Section 4.0. Model 222 dimensional data and control surface deflections and travels are given on the following pages. Weight, balance and moment of inertia data for five nominal design operating conditions are defined in Figure F.1 . Center of gravity envelopes for the condition of nacelle incidence zero (cruise configuration) and nacelle incidence 90 degrees (hover configuration) are illustrated in Figure F.2. The mathematical model input data are given in Section F.1 to F.5 and are referenced by page number to the equations presented in Appendix E.

MODEL 222 DIMENSIONAL DATA

WING

AREA (THEO.)	200 FT^2
ASPECT RATIO	5.61
SPAN (BETWEEN ROTOR ℄)	33.42 FT
TAPER RATIO	1.00
CHORDS:	
ROOT	71.8 IN
TIP	71.8 IN
MEAN AERODYNAMIC	71.8 IN
SWEEPBACK	0 DEGREES
DIHEDRAL	0 DEGREES
INCIDENCE	
ROOT	2.0 DEGREES
TIP	2.0 DEGREES
AIRFOIL SECTION	
ROOT	NACA 63_4221 (MODIFIED)
TIP	NACA 63_4221 (MODIFIED)

FUSELAGE

LENGTH	38.83 FT
DEPTH (NOT INCLUDING SPONSONS)	5.45 FT
WIDTH (NOT INCLUDING SPONSONS)	5.45 FT
WETTED AREA (INCLUDING SPONSONS)	582 FT^2

MODEL 222 DIMENSIONAL DATA (Continued)

NACELLES	
ENGINE	
LENGTH	5.58 FT
DEPTH	2.37 FT
WIDTH	2.37 FT
WETTED AREA (PER NACELLE)	21 FT^2
TILTING	
LENGTH	3.70 FT
DEPTH	3.35 FT
WIDTH	2.37 FT
WETTED AREA (PER NACELLE)	22 FT^2
HORIZONTAL TAIL	
AREA (EXPOSED)	46.3 FT^2
AREA (THEO)	58.3 FT^2
SPAN	15.75 FT
ASPECT RATIO	4.26
TAPER RATIO	.379
DISTANCE $(\bar{c}/4)_W$ to $(\bar{c}/4)_{HT}$	20.29 FT
CHORDS	
ROOT	66.0 IN
TIP	25.0 IN
MEAN AERODYNAMIC	48.0 IN
SWEEPBACK AT 0 PERCENT CHORD	14° 51'
DIHEDRAL	0 DEGREES

MODEL 222 DIMENSIONAL DATA (Continued)

INCIDENCE	
ROOT	0 DEGREES
TIP	0 DEGREES
AIRFOIL SECTION	
ROOT	NACA 64A010 (MODIFIED
TIP	NACA 64A010 (MODIFIED)
VERTICAL TAIL	
AREA (EXPOSED, EXCLUDES DORSAL)	35.5 FT^2
AREA (REFERENCE)	43.3 FT^2
SPAN (REFERENCE)	8.14 FT
ASPECT RATIO	1.53
TAPER RATIO	.303
DISTANCE $(\bar{c}/4)_W$ to $(\bar{c}/4)_{VT}$	18.88 FT
CHORDS (REFERENCE)	
ROOT	8.17 FT
TIP	2.48 FT
MEAN AERODYNAMIC	5.83 FT
SWEEPBACK AT 0 PERCENT CHORD	46° 28'
AIRFOIL SECTION	NACA 64A008
CONTROL SURFACES	
FLAPERON	
AREA (AFT OF HINGE)	52.5 FT
SPAN (LENGTH EACH SIDE)	151.56 IN
CHORD (% OF WING CHORD)	30
SWEEPBACK OF HINGE LINE	0°
SPOILERS	
AREA	19.15 FT^2

CONTROL SURFACE DEFLECTIONS AND CONTROL TRAVELS

Control Surface Deflections (Positive deflection is trailing edge down unless indicated otherwise)

Elevator		±20° (Pilot Stick Command-Deflection From Scheduled Elevator Position)
Flaperon	(Flap Mode)	+70°, -0°
	(Aileron Mode)	+20°, -0° (Flaperon Used for Roll Control to a Maximum of 35° Combined Flap + Aileron Mode Deflection)
Rudder		±20°
Spoiler	(Roll Control)	45° (T.E. Up)
	(Max. Download Alleviation in Hover)	110° (T.E. Up)
Umbrella	Upper Surface	Aft Edge 20° From Vertical
	Lower Surface	Aft Edge 10° From Vertical

Rotor Control Authorities

Longitudinal Cyclic	±2.5° for Pitch Trim Plus Maneuver ±2.7° for Combined SAS + Load Alleviation
Differential Longitudinal Cyclic	±4.5° Maximum for Roll Command (Function of Nacelle Incidence)
Maximum Longitudinal Cyclic for Combined Inputs	±7°
Collective Pitch	0° to 56.5° (at .75R)
Differential Collective	±3.0° Maximum for Yaw Command & ±4.8° for Maximum Roll Command (Function of Nacelle Incidence)
Lateral Cyclic	±2.7° for Rotor Load Alleviation

Nacelle Deflection Authorities

Nacelle Tilt	0° to 105°
Differential Nacelle Tilt	1.55° Per Degree Differential Longitudinal Cyclic

Pilot Control Movements

Stick - Longitudinal	±6 Inches
- Lateral	±5 Inches
Rudder Pedals	±2.5 Inches

MASS PROPERTIES

(WEIGHT BALANCE AND MOMENTS OF INERTIA)

		NACELLE HORIZONTAL							NACELLE VERTICAL						
		BALANCE			INERTIA - SLUG FT^2				BALANCE			INERTIA - SLUG FT^2			
SUB-GROUPS	WEIGHT	X (F.S.)	Y (W.S.)	Z (W.L.)	I_{XX} (ROLL)	I_{YY} (PITCH)	I_{ZZ} (YAW)	I_{XZ}	X (F.S.)	Y (W.S.)	Z (W.L.)	I_{XX} (ROLL)	I_{YY} (PITCH)	I_{XX} (YAW)	I_{XZ}
• FUSELAGE & CONTENTS	3696	149.7		-9.0	903	6058	6152								
• HORIZONTAL TAIL	130	419.4	27.7	13.4	23	15	38								
• VERTICAL TAIL	96	406.7		63.8	15	22	7	SAME							
• WING & CONTENTS	1695	182.2	107.4	40.3	1266	200	1346								
• NACELLE & CONTENTS	(4267)	(160.0)	(210.1)	(42.4)	(224)	(1395)	(1507)								
FIXED	1475	202.7	227.8	43.1	43	115	81								
TILTING	2792	137.5	200.7	42.0	45	386	369		176.4	200.7	84.3	389	388	45	
OPER. WEIGHT EMPTY	9884	165.8		22.6	48674	12256	57263	490	176.8		34.6	50751	13308	56238	1141
• OBSERVER	200	150.0		1.0	6	7	4								
• FUEL	1280	178.6	109.0	37.0	380	32	416								
• INSTRU. & RES	1157	178.6		.5	110	275	300	SAME							
• OTHER	1020	171.5		.5	110	250	225								
BASIC DESIGN GROSS WEIGHT	13541	168.3		20.1	52843	13191	61576	474	176.3		28.8	55176	14482	50533	1197
• OBSERVER	200	150.0		1.0	6	7	4								
• FUEL	1375	178.6	109.0	37.0	380	32	416								
• INSTRU. & RES.	1157	178.6		.5	110	275	300	SAME							
• OTHER	1020	171.5		.5	110	250	225								
• BALLAST	1864	171.5		.5	120	350	375								
ALTERNATE GROSS WEIGHT	15500	168.8		17.9	53308	13697	62254	412	175.7		25.5	55781	15120	61204	1182
• FUEL	1280	178.6	109.0	37.0	380	32	416								
• INSTRU. & RES.	1157	178.6		.5	110	275	300	SAME							
TYPICAL FLIGHT TAKE-OFF WEIGHT	12321	168.3		22.0	52573	12787	61359	453	177.1		31.6	54826	13971	60290	1104
• FUEL	759	178.6	109.0	33.0	187	12	195								
• INSTRU. & RES	1157	178.6		.5	110	275	300	SAME							
MEAN OPERATING GROSS WEIGHT	11800	167.9		21.1	51053	12717	59743	425	177.1		31.1	53291	13856	58673	1101

NOTE: • ROTOR BLADE INERTIAS (I_O) ARE NOT INCLUDED IN THE ABOVE VALUES. THE ROTOR BLADE WEIGHT IS ASSUMED TO BE ACTING AT THE HUB ℄.

• ROTOR BLADE WEIGHT (COMPLETE AS REMOVED FROM HUB), BALANCE AND INERTIAS (I_O) ARE AS FOLLOWS:

BLADE WEIGHT 124 LBS., SPAN BALANCE 54.9" FROM HUB ℄, CHORD BALANCE FROM LEADING EDGE OF BLADE 4.7", INERTIAS (SLUG FT^2 AROUND BLADE C.G.) I_{XX} = 52, I_{YY} = 2, I_{ZZ} = 55.

Figure F.1. Mass Properties

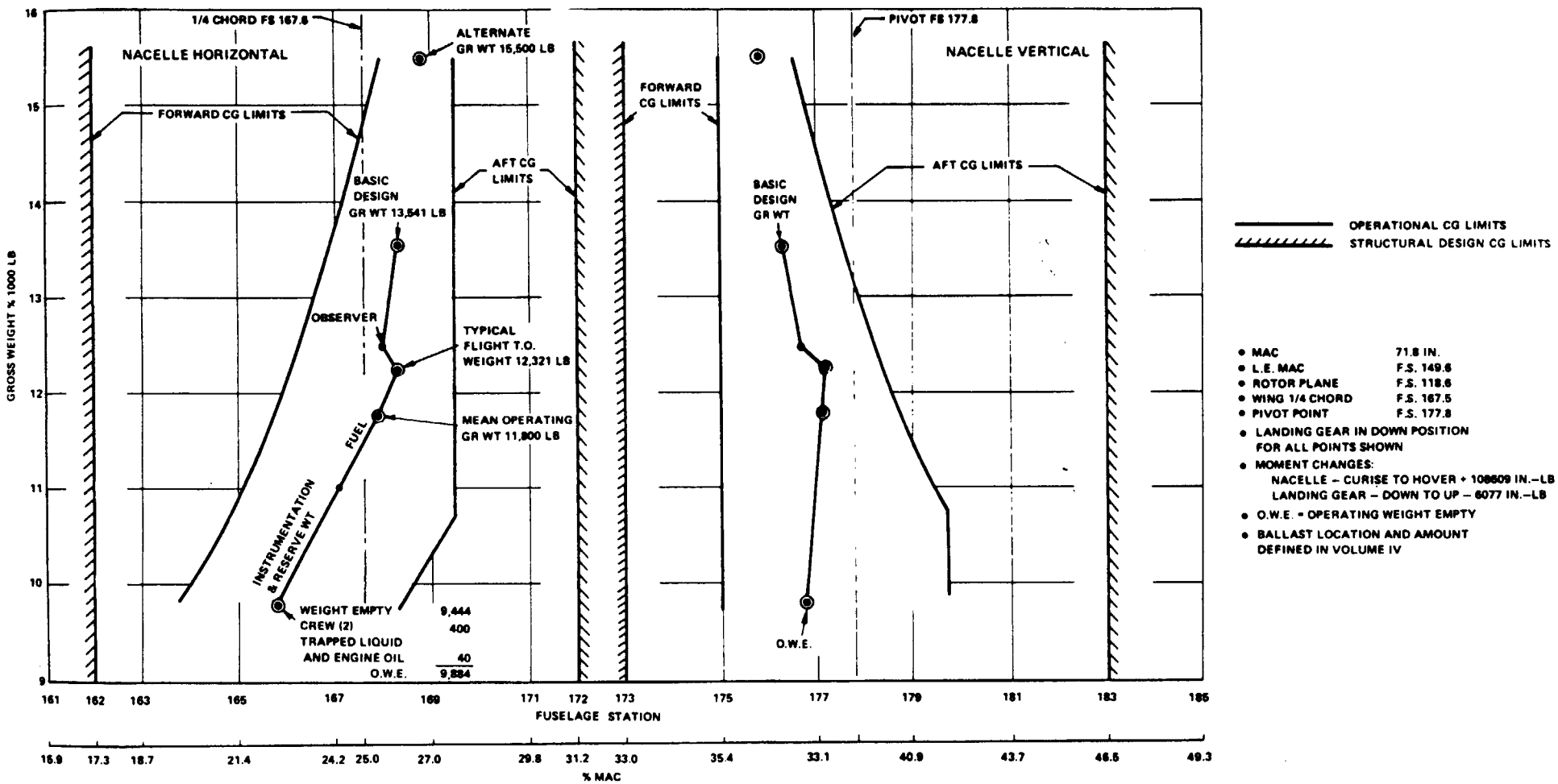

Figure F.2. C.G. Limit Diagram

F.1 CONTROL SYSTEM INPUT DATA

The input data for the control system, SAS, thrust management, and load alleviation system are in this section, and are referenced by page number to the equations presented in Appendix E. Figures F.3 to F.14 present the scheduled function.

F.1.1 Control System Input Data[1]

Control Mixing (Page E.4)

$K_{\delta_{RUD}}$ = -8 deg/inch

K_{δ_R} = 1.0

K_{δ_s} = 1.0

K_{δ_B} = 1.0

K_{δ_e} = -3.33 deg/inch

$K_{\delta'_s}$ = 0

Actuator Dynamics

ω_N = 20 rad/sec

ζ = 1.0

Lead-lag Dynamics

ω_{L-L} = 35.5 rad/sec

ζ = .18

Scheduled Functions - Refer to Graphs

a) Scheduled Longitudinal Cyclic vs Nacelle Incidence

---

(1) Gains and time constants not shown on these pages are noted on the block diagrams.

b) Cyclic Gain vs Nacelle Incidence (Pedals)

c) Differential Collective Gain vs Nacelle Incidence (Pedals)

d) Differential Collective Gain vs Nacelle Incidence (Lateral Stick)

e) Longitudinal Cyclic Gain vs Nacelle Incidence (Long. Stick)

f) Lateral Cyclic Gain vs Nacelle Incidence

g) Elevator Deflection vs Nacelle Incidence

h) Scheduled Lateral Cyclic vs Nacelle Incidence

Load Alleviation System (LAS) (Page E.5)

$\tau_{LAS} = 0.2$ sec.

LAS Functions

$G_{B_{1_\alpha}}$, $G_{A_{1_\beta}}$, $G_{A_{1_\alpha}}$ vs Dynamic Pressure

Nacelle and Airplane Controls (Page E.6)

Nacelle Actuator Dynamics

$\omega_{NR} = \omega_{NL} = 10$ rad/sec

$\zeta_{NL} = \zeta_{NR} = 1.0$

Scheduled Functions

a) Scheduled Flap Angle vs Nacelle Incidence

b) Flaperon vs Lateral Stick

c) Spoiler Deflection vs Lateral Stick

d) Spoiler Actuator Limit

Stability Augmentation System (Page E.7 and E.8)

Gains, time constants and scheduled functions noted on block diagrams.

Roll SAS Authoritiy Limit = ± 2 inches

Yaw SAS Authority Limit = $\pm$ 1 inch

Pitch SAS Authority Limit = $\pm$ 2.7°

Thrust Management System (Page E.13)

$(N_{II}/N_{II_{MAX}})_{REF} = .8865$

$\Omega_{REF} = 57.6923$ rad/sec

$\eta_{TR} = 1.0$

$I_P = 564$ slug-ft^2

$G_{G1} = 2.5$ deg/sec / rad/sec

$G_{G2} = 2.66$ deg/rad/sec

$G_{G3} = .05$ deg/sec/deg

Scheduled Functions

a) Turbine Inlet Temperature vs Throttle Position

b) τ_D vs (ΔHP)

c) $\tau_e \delta/\sqrt{\theta}$ vs SHP

d) Output Gain Ratio vs Power Output

e) Governor Gain Schedule

f) RPM Select Schedule

g) Throttle Collective Gain Schedule

h) Incremental Collective Schedule

i) Variable Authority Limit

Rotor Control Coordinate Axis Transforms (Page E.14)

$\phi_P = -12$ degrees

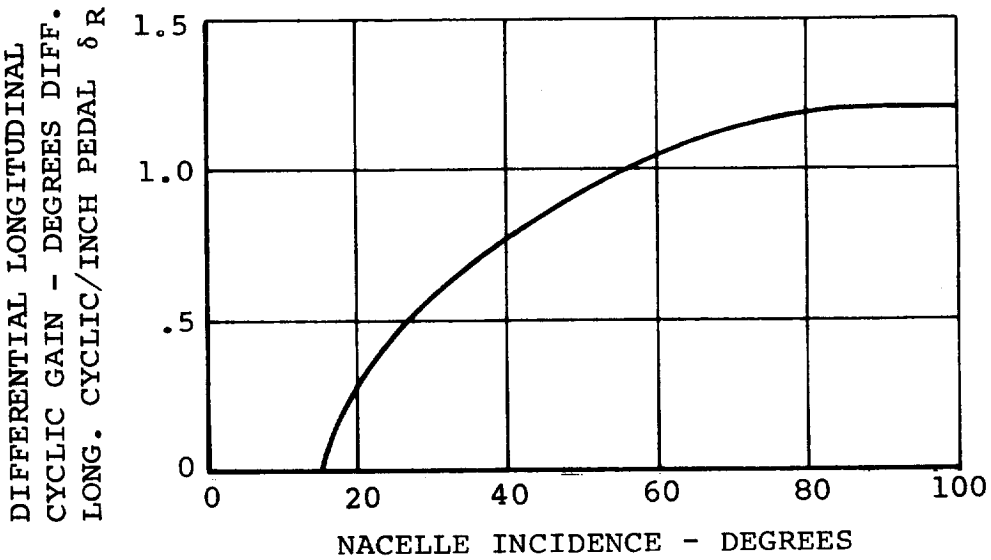

NOTE: DIFFERENTIAL NACELLE TILT IS 1.55 DEGREES PER NACELLE PER DEGREE OF DIFF. CYCLIC

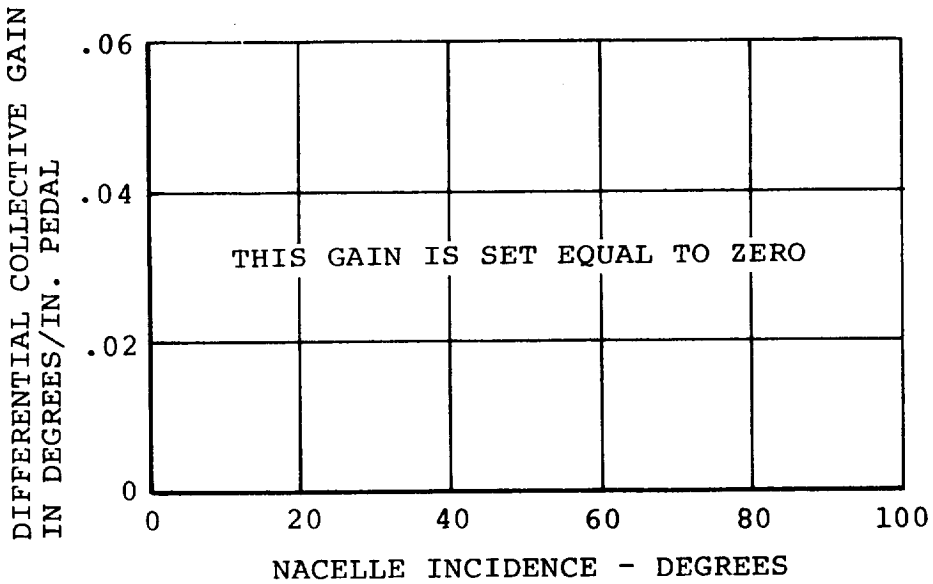

Figure F.3. Differential Long. Cyclic for Yaw Control vs Nacelle Incidence

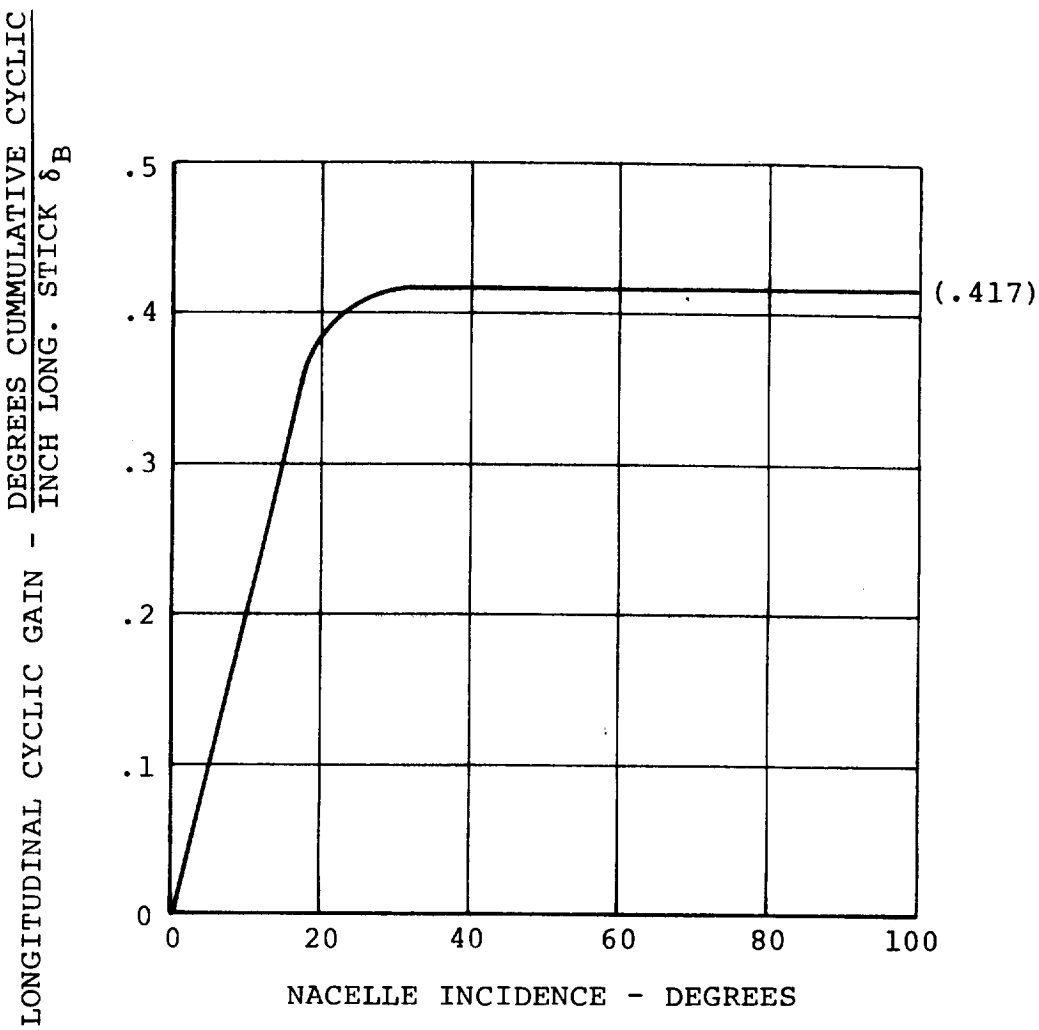

NOTE: ELEVATOR DEFLECT 3.3333 DEGREES PER INCH OF LONGITUDINAL STICK

MAXIMUM LONG. STICK TRAVEL IS ± 6 INCHES

Figure F.5. Longitudinal Cyclic for Pitch Control Gain vs Nacelle Incidence

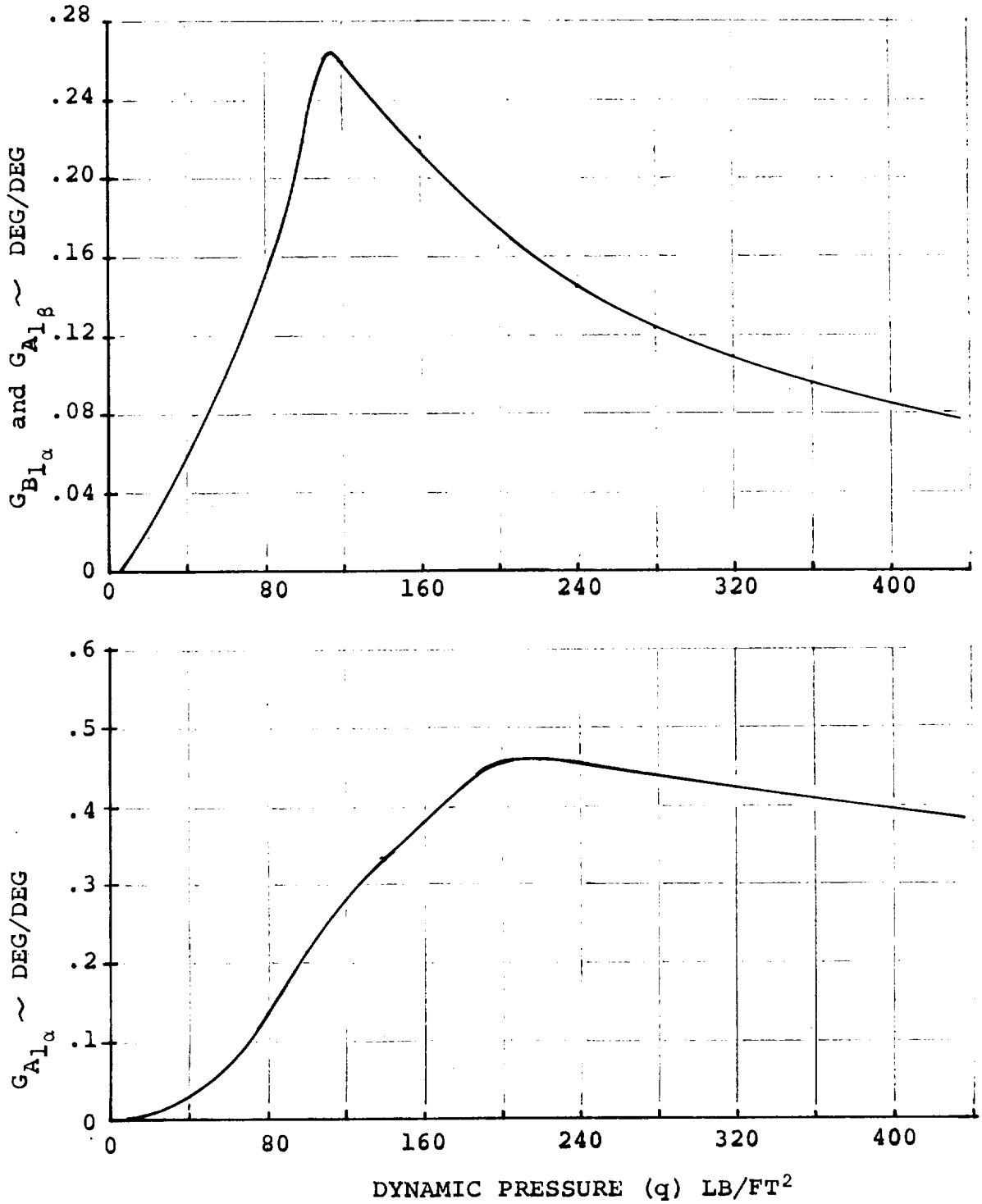

Figure F.6. Load Alleviation System Gain Schedule.

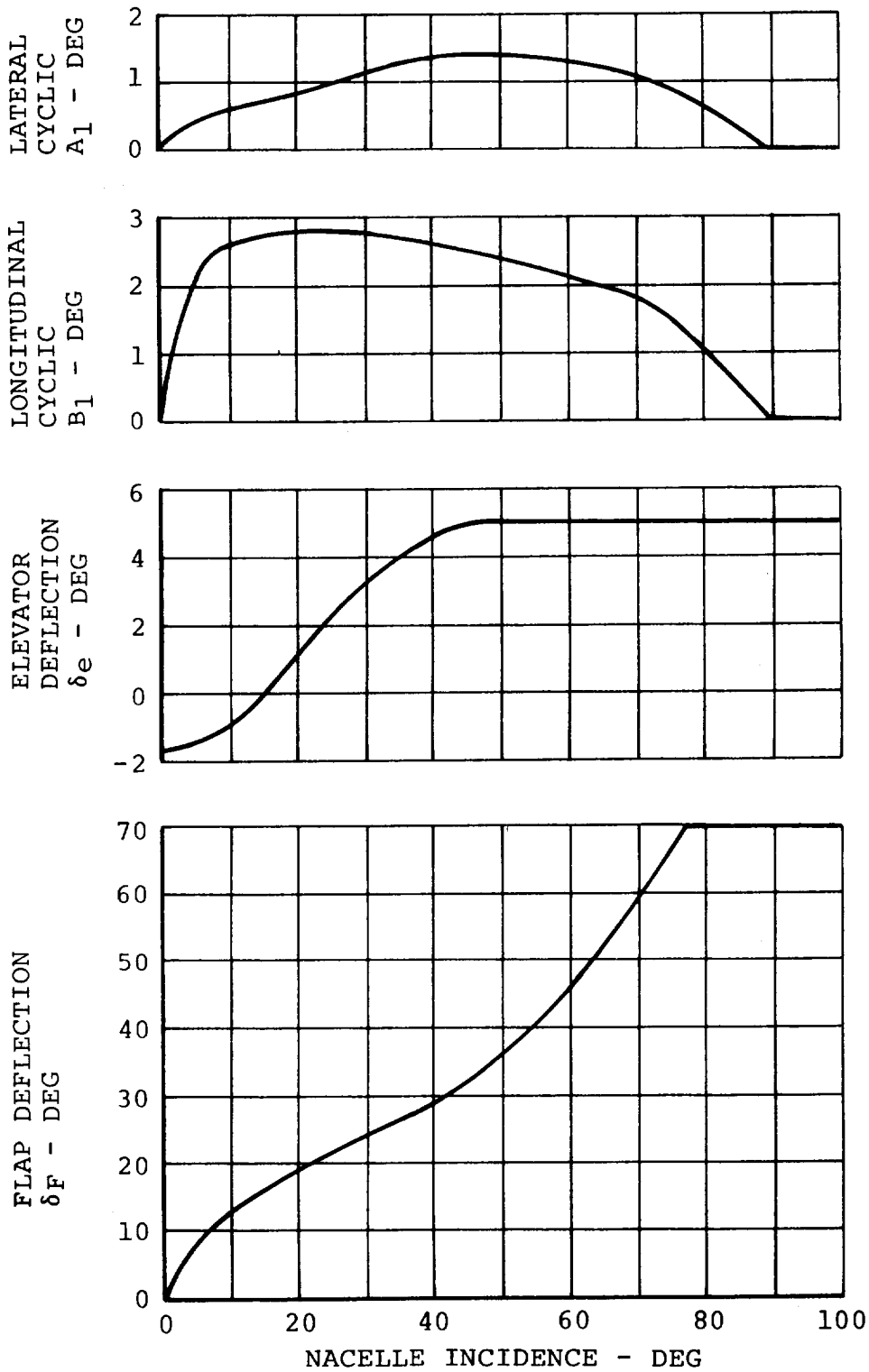

Figure F.7. Programmed Cyclic, Elevator, and Flap Deflection vs Nacelle Incidence

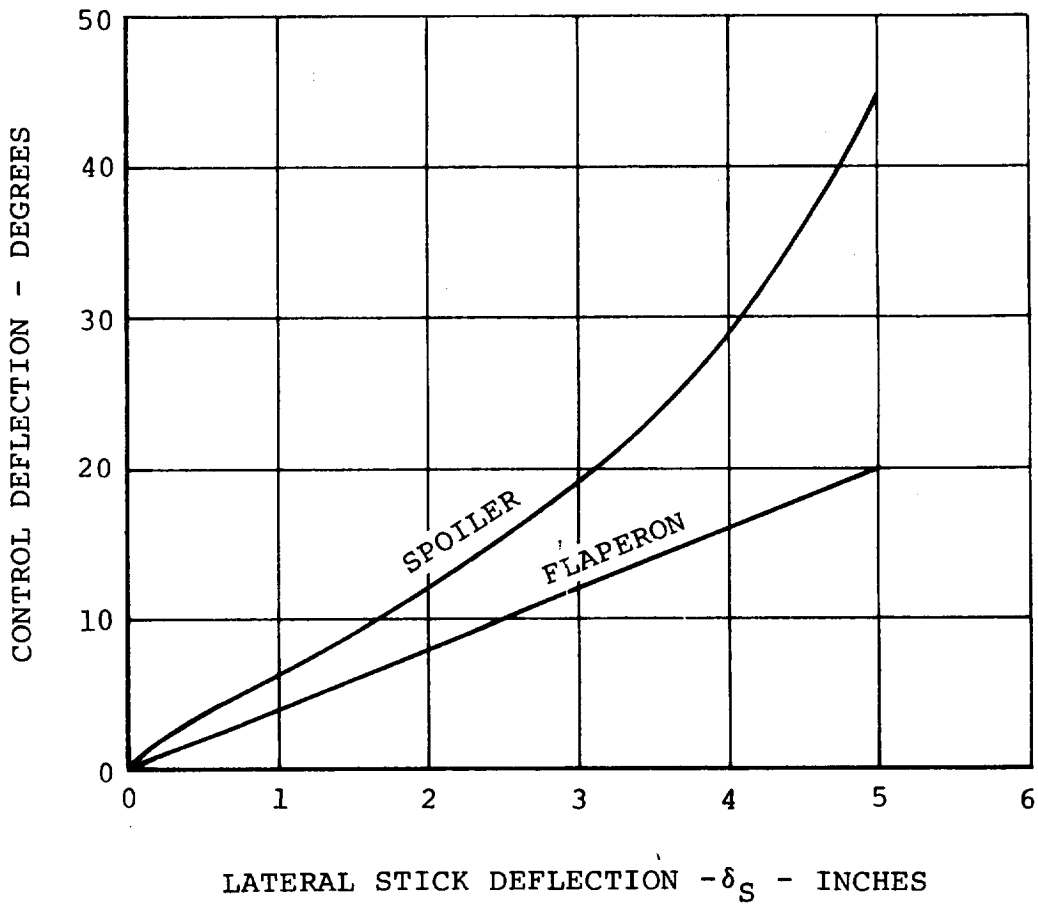

MAXIMUM LATERAL STICK TRAVEL IS ± 5 INCHES

Figure F.8. Roll Control Deflection vs Stick Deflection

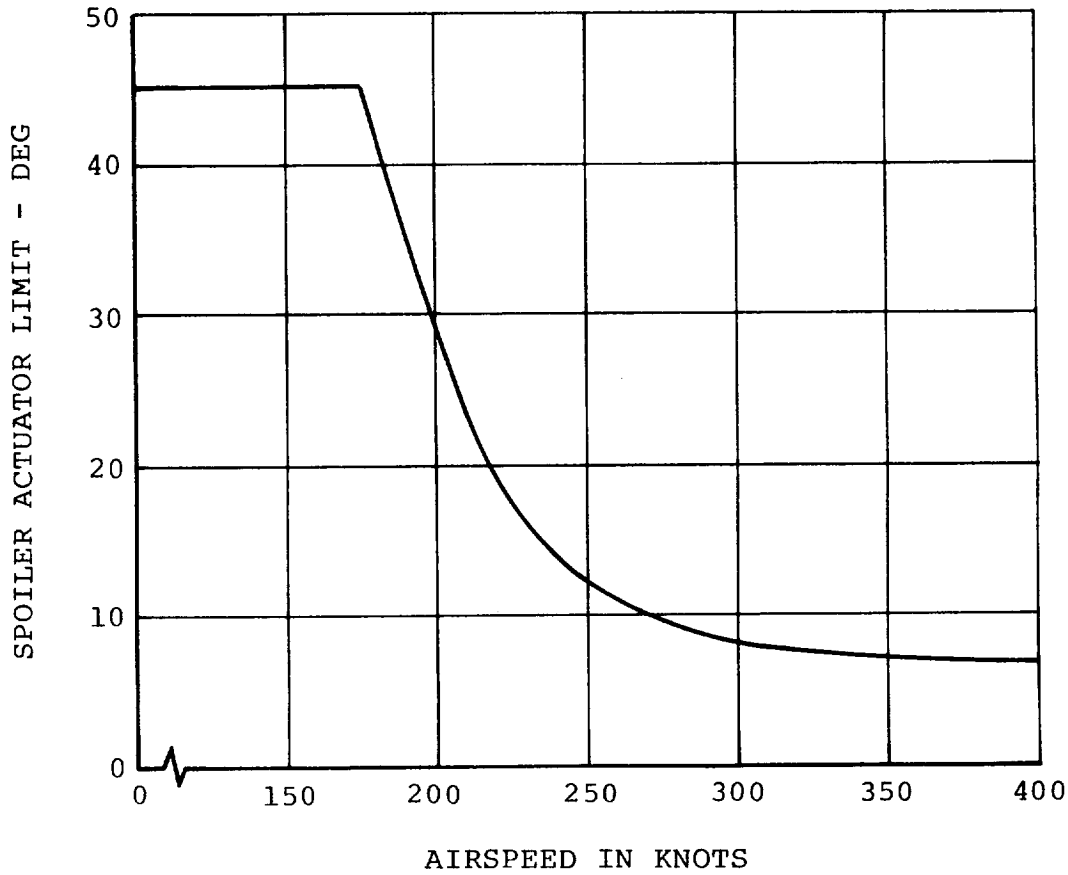

Figure F.9. Spoiler Actuator Limit vs Airspeed

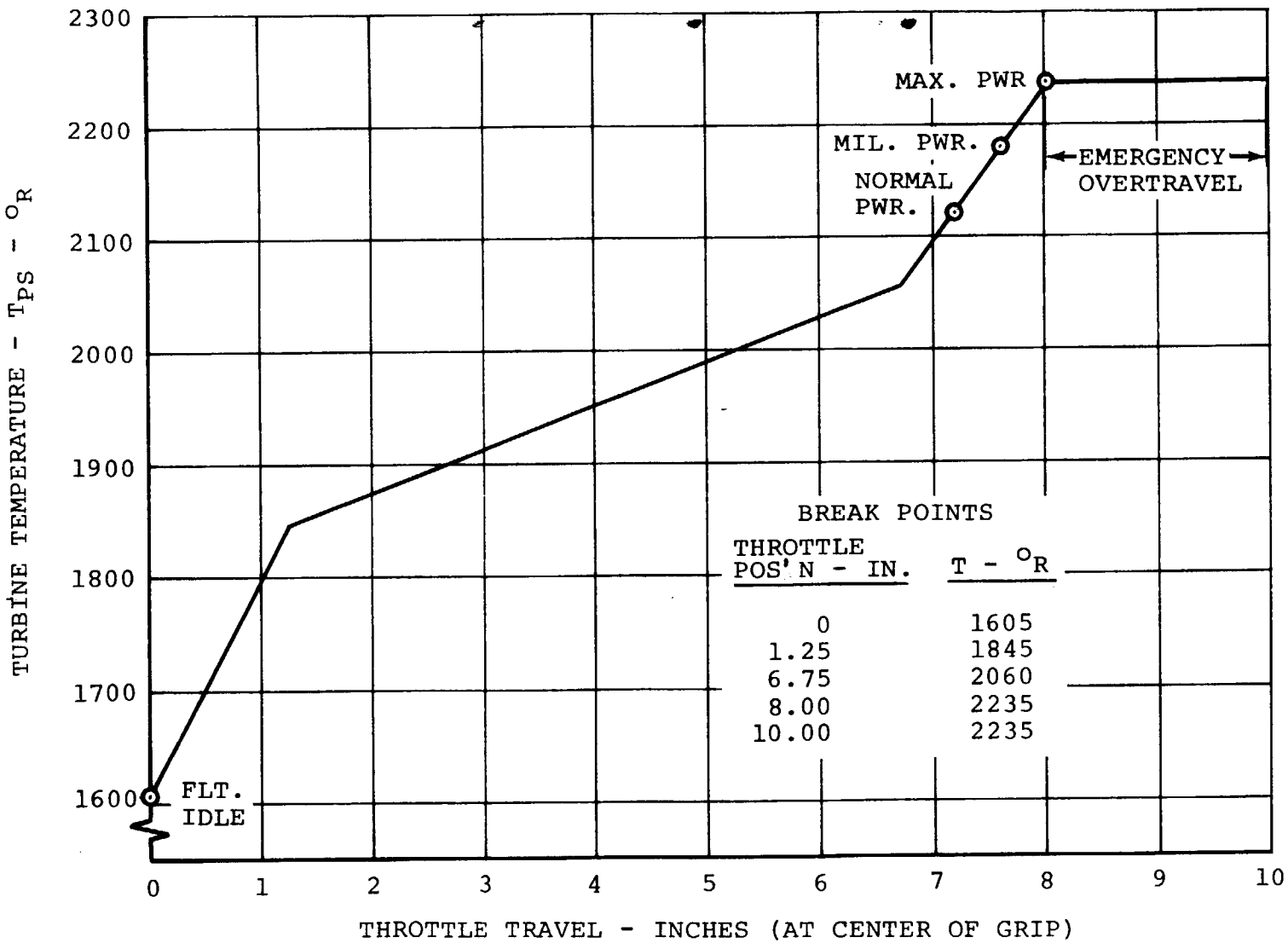

Figure F.10. Assumed Throttle Travel Model 222 Simulation Both Engines

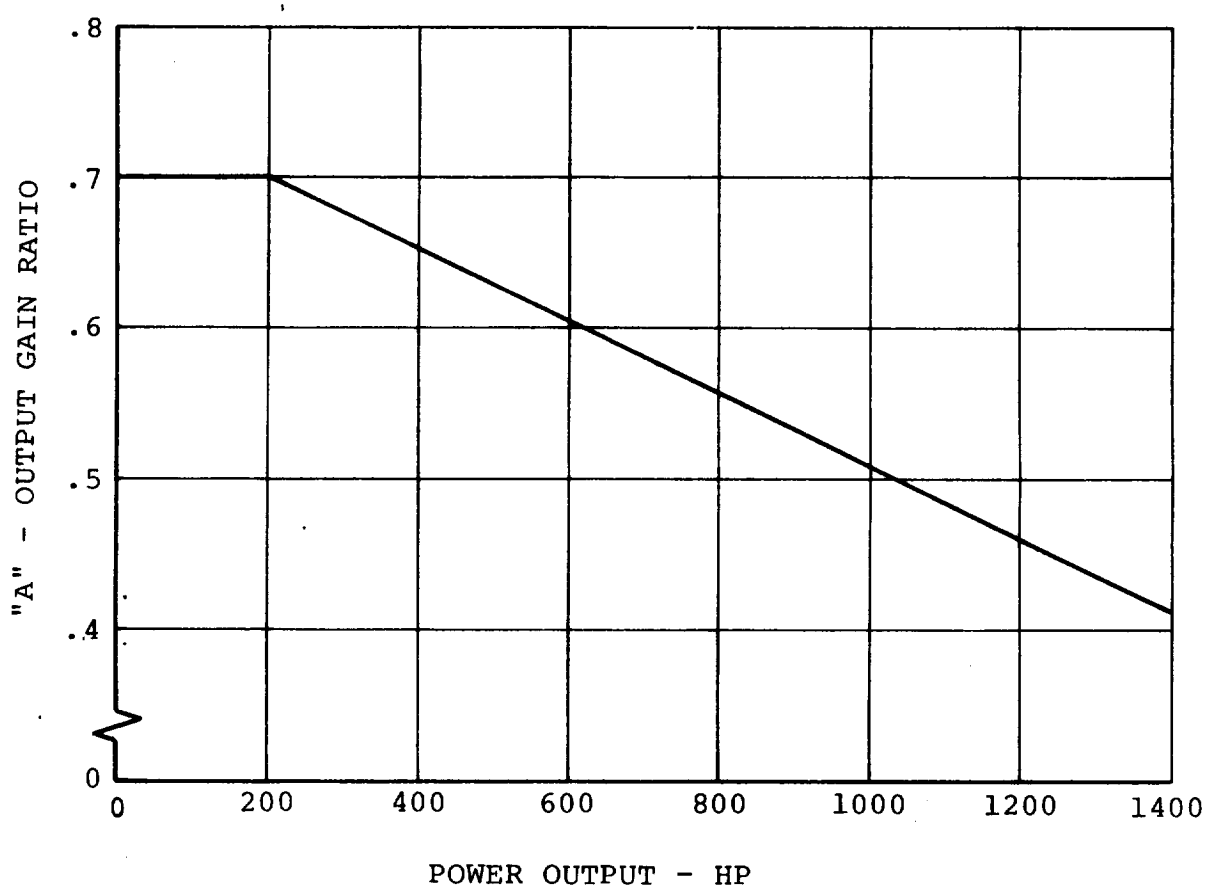

Figure F.12. Engine Characteristics Lycoming T53-L13 Engine

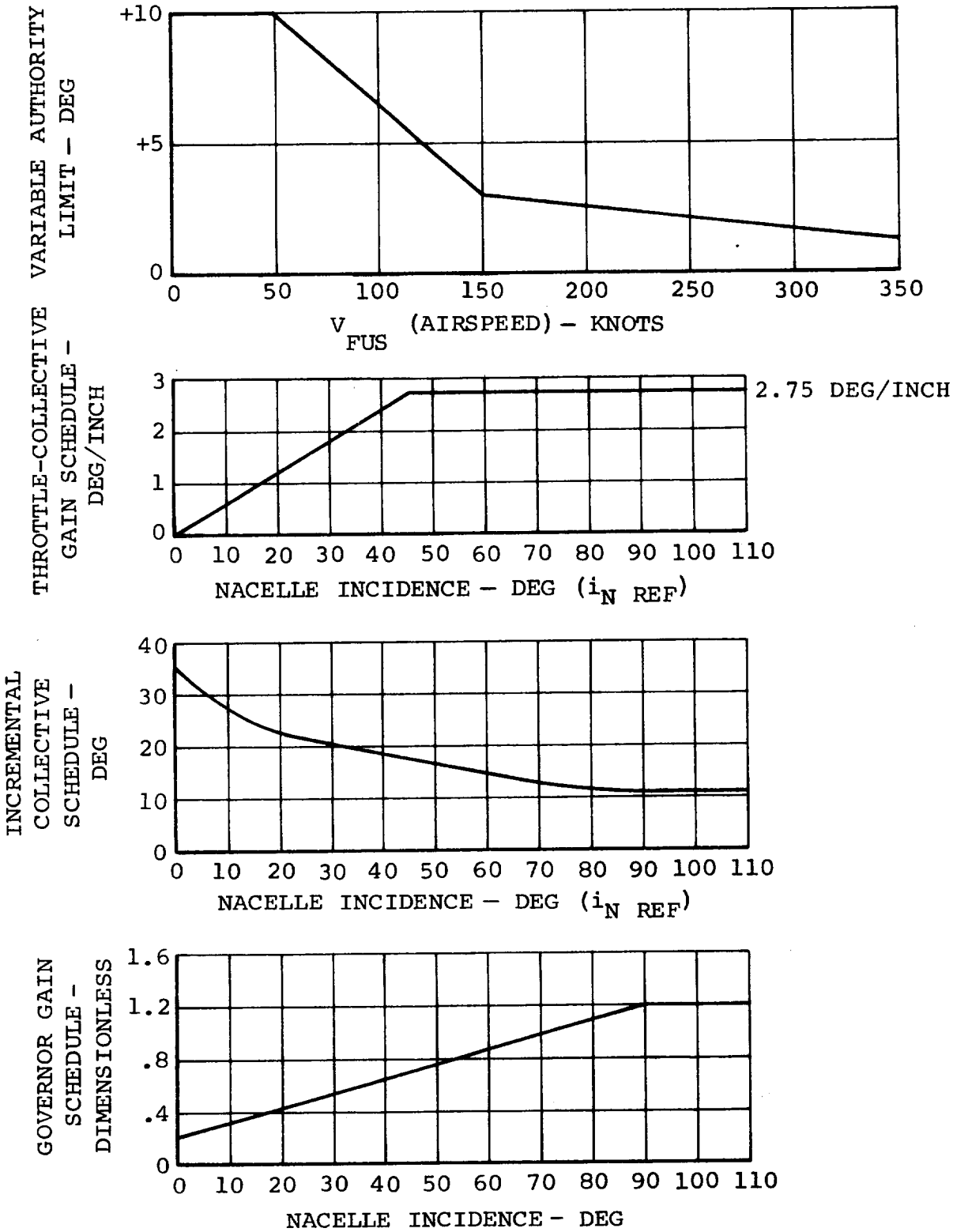

Figure F.13. Thrust Management System-Scheduled Parameters

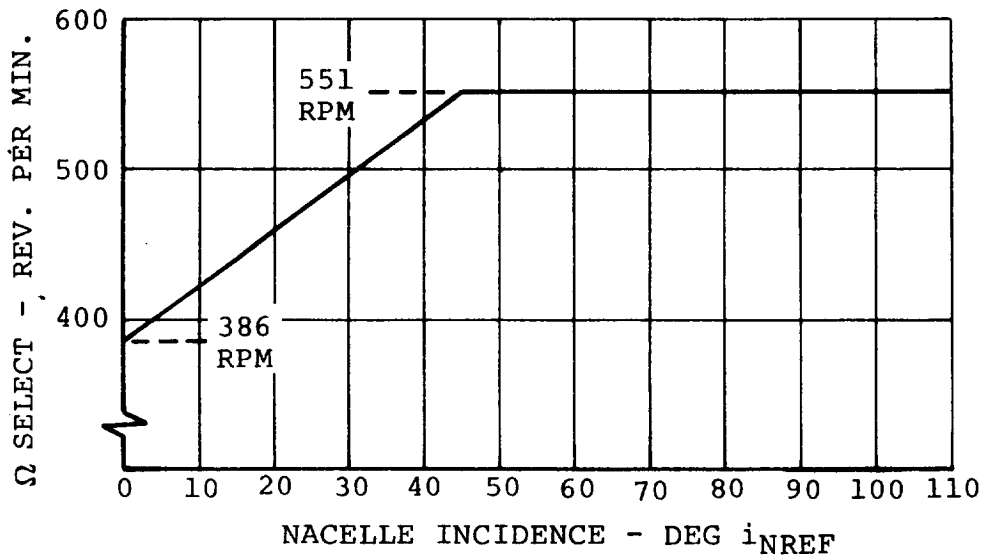

Figure F.14. Thrust Management System-Scheduled Parameters

F.2 ENGINE INPUT DATA

The input data for the engine performance subroutine is given in this section, and are referenced by page number to the equation presented in Appendix E. Plotted data are shown in Figures F.15 to F.18.

F.2.1 Turbine Engine Performance Input Data

Engine Performance Data (Pages E.10, E.11 and E.12)

SHP* = 1550

WDTIND = 1.0

N1IND = 1.0

N1θIND = 0

QIND = 1.0

$\dot{w}_{MAX}/\dot{w}^* = 1.11$

$N_{I_{MAX}}/N_I^* = 1.04$

$(N_I/\sqrt{\theta_1}/N_I^*)_{MAX} = 0$

$Q_{MAX}/Q^* = 1.446$

$N_{II_{MAX}}/N_{II}^* = 1.128$

$N_I^* = 25425$ RPM

$(N_{II}/N_{II_{MAX}})_{REF} = .8865$

$\Omega_{REF} = 57.6923$

Tabular Engine Cycle Input Data

a) Values of Referred Horsepower

b) Values of Referred Fuel Flow

c) Values of Referred Gas Generator Speed

d) Values of Referred Power Turbine Speed

1. VALUES OF REFERRED HORSEPOWER $SHP/\delta\sqrt{\theta}/SHP^*$

MACH NO.	T/θ=1600	T/θ=1800	T/θ=2000	T/θ=2200	T/θ=2400	T/θ=2600	T/θ=2800
0	.035	.330	.630	.920	1.200	1.340	1.400
.2	.075	.375	.670	.960	1.245	1.390	1.450
.4	.125	.425	.720	1.010	1.295	1.440	1.500
.6	.180	.480	.775	1.065	1.350	1.495	1.550
.8	.240	.534	.835	1.125	1.410	1.550	1.600

2. VALUES OF REFERRED FUEL FLOW $W/\delta\sqrt{\theta}/SHP^*$

MACH NO.	T/θ=1600	T/θ=1800	T/θ=2000	T/θ=2200	T/θ=2400	T/θ=2600	T/θ=2800
0	.150	.278	.407	.535	.662	.750	.802
.2	.150	.278	.407	.535	.662	.750	.802
.4	.150	.278	.407	.535	.662	.750	.802
.6	.150	.278	.407	.535	.662	.750	.802
.8	.150	.278	.407	.535	.662	.750	.802

3. VALUES OF REFERRED GAS GENERATOR SPEED $N_I/\sqrt{\theta}/N_I^*$

MACH NO.	T/θ=1600	T/θ=1800	T/θ=2000	T/θ=2200	T/θ=2400	T/θ=2600	T/θ=2800
0	.722	.840	.925	.990	1.045	1.097	1.150
.2	.735	.846	.927	.992	1.048	1.100	1.154
.4	.748	.853	.933	.997	1.052	1.105	1.158
.6	.766	.860	.939	1.004	1.059	1.111	1.162
.8	.789	.871	.950	1.015	1.068	1.119	1.170

4. VALUES OF REFERRED POWER TURBINE SPEED $N_{II}/\sqrt{\theta}/N_{II}^*$

MACH NO.	T/θ=1600	T/θ=1800	T/θ=2000	T/θ=2200	T/θ=2400	T/θ=2600	T/θ=2800
0	.445	.685	.856	.983	1.084	1.178	1.264
.2	.461	.699	.880	.997	1.088	1.169	1.246
.4	.500	.734	.908	1.009	1.089	1.158	1.224
.6	.557	.789	.940	1.023	1.086	1.145	1.197
.8	.640	.858	.973	1.029	1.076	1.123	1.161

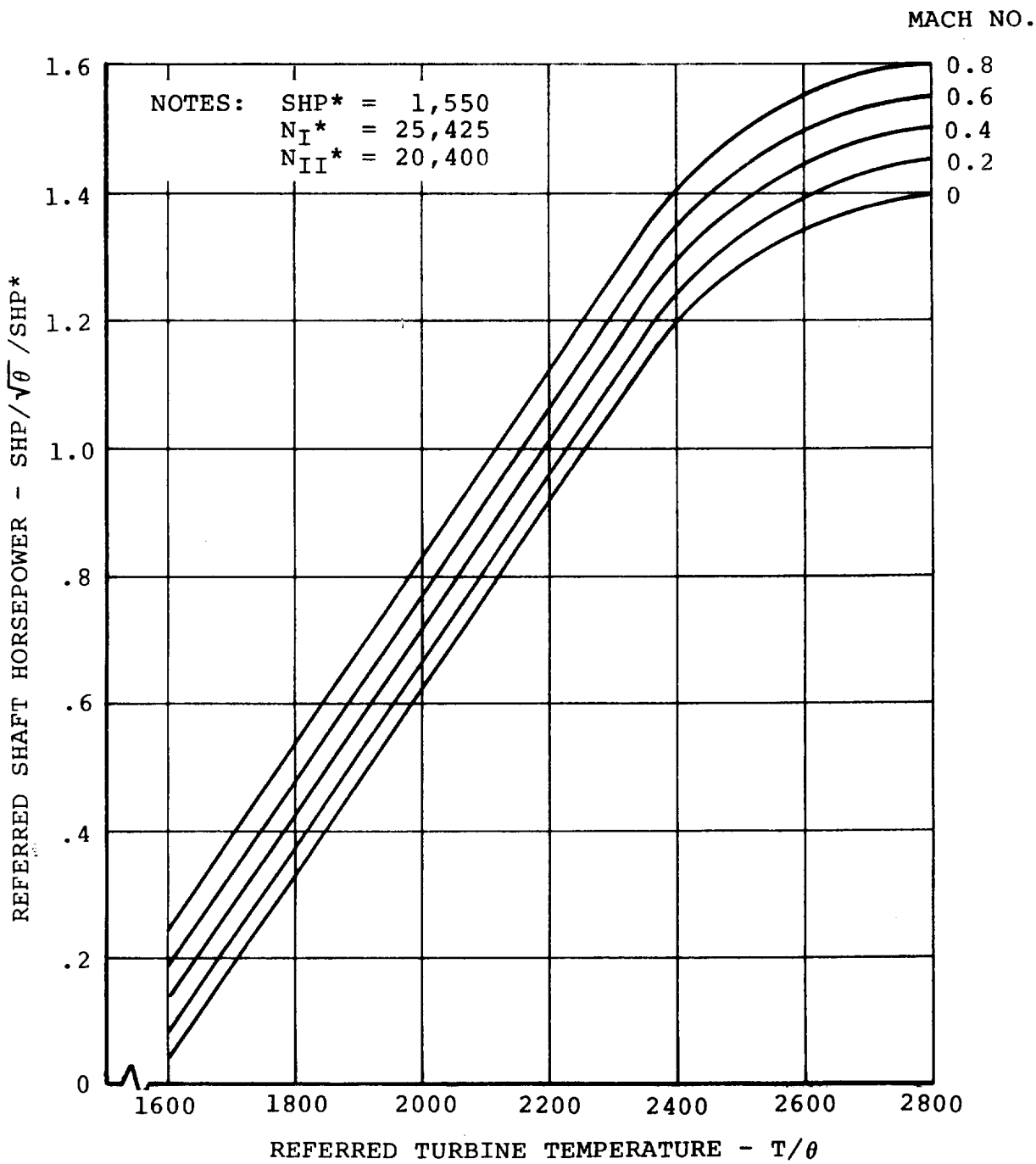

Figure F.15. Turbine Engine Performance - Engine Cycle 1.78

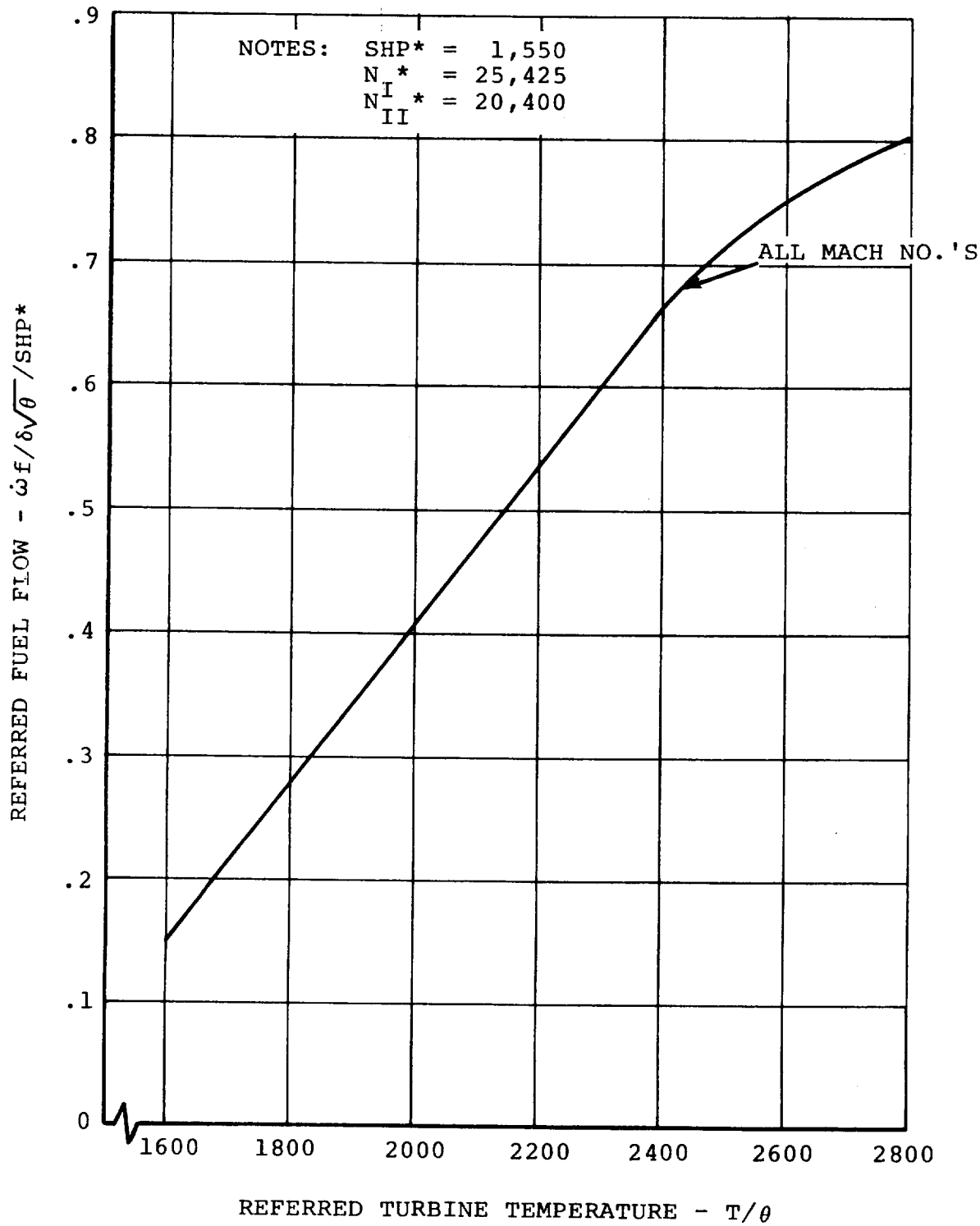

Figure F.16. Turbine Engine Performance - Engine Cycle 1.78

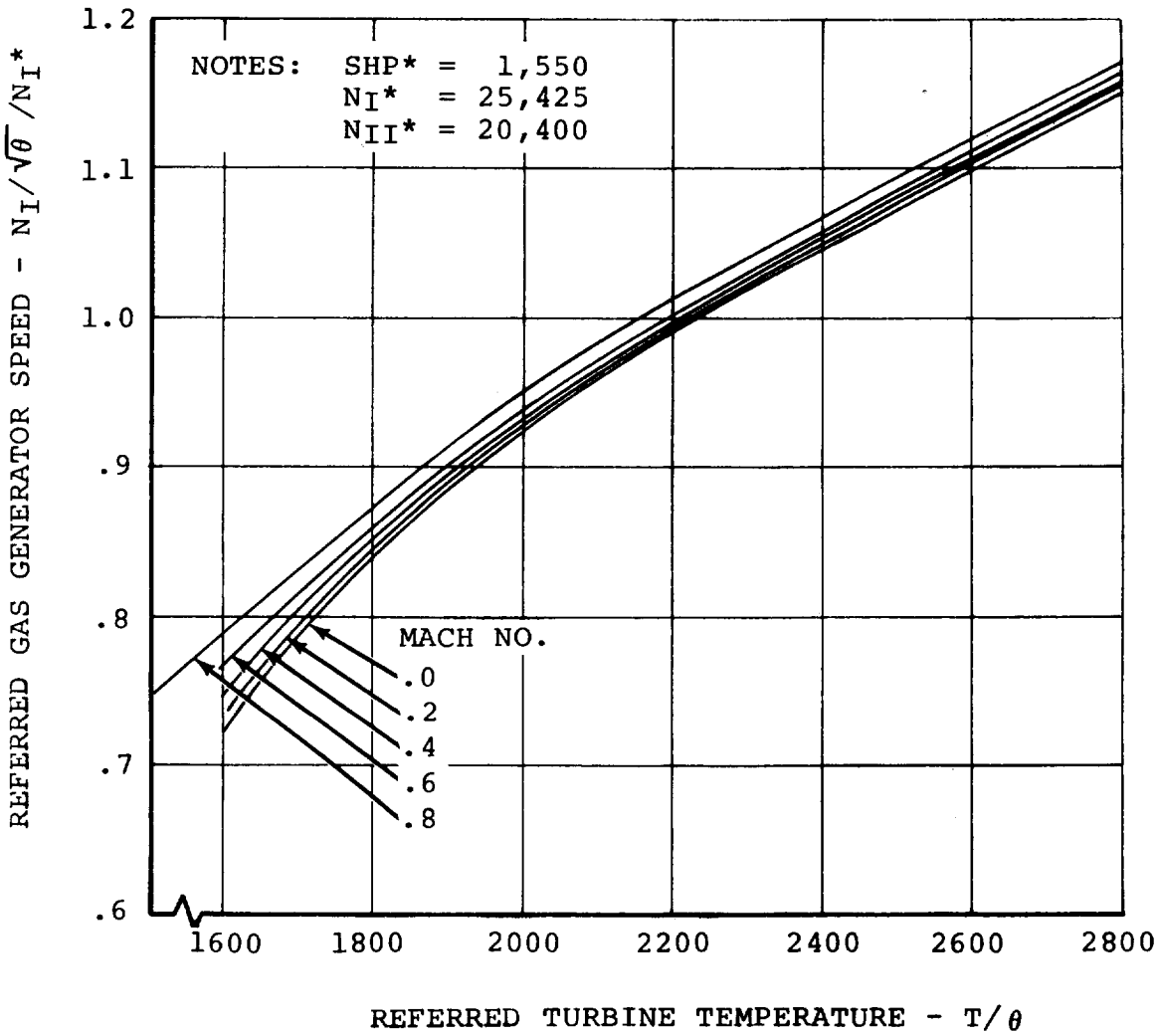

Figure F.17. Turbine Engine Performance - Engine Cycle 1.78

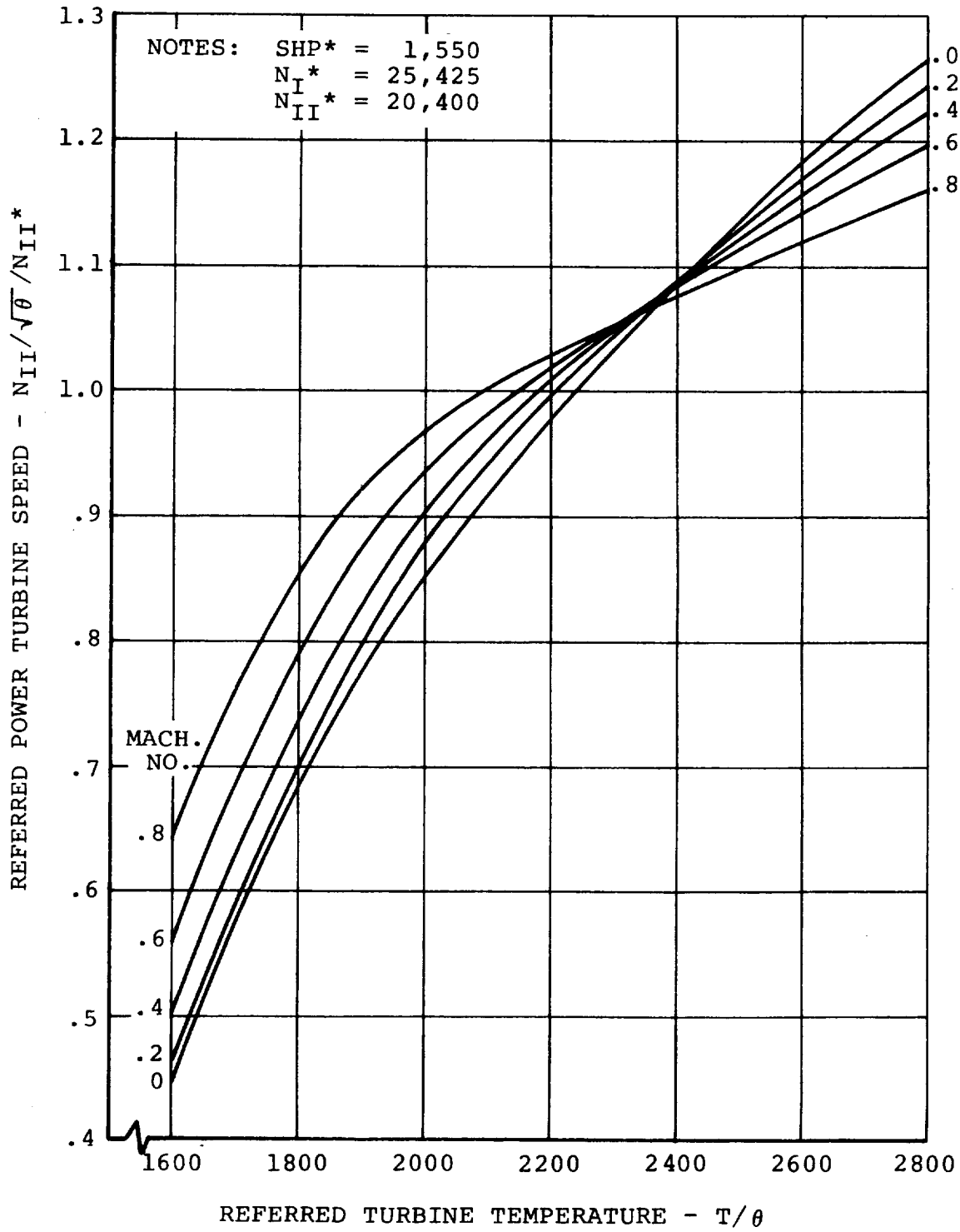

Figure F.18. Turbine Engine Performance - Engine Cycle 1.78

F.3 ROTOR AERODYNAMIC INPUT DATA

The input data for the rotor aerodynamics are given in this section, and are referenced by page number to the equations presented in Appendix E. Tabulated coefficients of the curve fit equations are shown in Figures F.19 to F.27.

F.3.1 Rotor Aerodynamic Input Data

Rotor Thrust (Page E.54)

$\tau_1 = .10$

$\tau_2 = .10$

$R = 13$ Ft.

Rotor Force and Moment Calculations (Page E.60)

$f_{TR} = f_{TL} = 1.0$

$f_{NFR} = f_{NF_L} = 1.0$

$f_{SFR} = f_{SF_L} = 1.0$

$f_{PMR} = f_{PM_L} = 1.0$

$f_{YMR} = f_{YM_L} = 1.0$

$f_{QR} = f_{Q_L} = 1.0$

$f_{PR} = f_{P_L} = 1.0$

$\mu \rightarrow$	0	.1014	.1351	.2027	.3723	.4565	.6432	.8038	1.125
A_{T0}	$.131167 \times 10^{-2}$	$-.539532 \times 10^{-2}$	$-.203368 \times 10^{-1}$	$-.427861 \times 10^{-1}$	$-.470950 \times 10^{-1}$	$-.439534 \times 10^{-1}$	$-.522445 \times 10^{-1}$	$-.708703 \times 10^{-1}$	$-.878713 \times 10^{-1}$
A_{T1}	0	$-.119838 \times 10^{-3}$	$.841758 \times 10^{-4}$	$.481855 \times 10^{-3}$	$.266417 \times 10^{-3}$	0	0	0	0
A_{T2}	0	$.26831x-10^{-5}$	$.260200 \times 10^{-5}$	$.399507 \times 10^{-6}$	$-.596957 \times 10^{-5}$	0	0	0	0
A_{T3}	0	$-.904463 \times 10^{-8}$	$-.127543 \times 10^{-7}$	$-.681927 \times 10^{-8}$	$.36307 \times 10^{-7}$	0	0	0	0
A_{T4}	$.747733 \times 10^{-3}$	$.784148 \times 10^{-3}$	$.254258 \times 10^{-2}$	$.250025 \times 10^{-2}$	$.186317 \times 10^{-2}$	$.108914 \times 10^{-2}$	$.408704 \times 10^{-3}$	$.766317 \times 10^{-3}$	$.704819 \times 10^{-3}$
A_{T5}	0	$.8905 \times 10$	$-.387201 \times 10$	$-.220100 \times 10$	$-.270408 \times 10^{-4}$	0	0	0	0
A_{T6}	0	$-.699401 \times 10^{-7}$	$.413387 \times 10^{-6}$	$.151901 \times 10^{-6}$	$-.510959 \times 10^{-6}$	0	0	0	0
A_{T7}	0	$.156844 \times 10^{-9}$	$-.151355 \times 10^{-8}$	$-.407612 \times 10^{-9}$	$.306610 \times 10^{-7}$	0	0	0	0
A_{T8}	$.120357 \times 10^{-4}$	$.996174 \times 10^{-5}$	$-.926255 \times 10^{-4}$	$-.825240 \times 10^{-5}$	$-.307987 \times 10^{-5}$	$.100012 \times 10^{-4}$	$.214303 \times 10^{-4}$	$.163128 \times 10^{-4}$	$.161866 \times 10^{-4}$
A_{T9}	0	$-.592706 \times 10^{-8}$	$.371573 \times 10^{-5}$	$.215847 \times 10^{-6}$	$-.111356 \times 10^{-6}$	0	0	0	0
A_{T10}	0	$-.10436 \times 10^{-8}$	$-.449157 \times 10^{-7}$	$-.725582 \times 10^{-9}$	$.769226 \times 10^{-7}$	0	0	0	0
A_{T11}	0	$.388825 \times 10^{-11}$	$.168184 \times 10^{-9}$	$-.196520 \times 10^{-11}$	$-.167159 \times 10^{-8}$	0	0	0	0

NOTE: α and $\theta_{0.75}$ must be in degrees when these coefficients are used in the thrust equation.

Figure F.19. Coefficients of Curve Fit Equations for Thrust Coefficient

$\mu \rightarrow$	0	.1014	.1351	.2027	.3723	.4565	.6432	.8038	1.125
A_{P0}	$.118188 \times 10^{-3}$	$.117752 \times 10^{-3}$	$.575597 \times 10^{-3}$	$.204675 \times 10^{-3}$	$.283014 \times 10^{-3}$	$.362823 \times 10^{-3}$	$.511711 \times 10^{-3}$	$.539983 \times 10^{-3}$	$.12581 \times 10^{-2}$
A_{P1}	0	$.262107 \times 10^{-5}$	$-.835529 \times 10^{-5}$	$-.551959 \times 10^{-5}$	$-.952757 \times 10^{-5}$	0	0	0	0
A_{P2}	0	$.379347 \times 10^{-7}$	$.973647 \times 10^{-7}$	$.145048 \times 10^{-6}$	$-.615163 \times 10^{-7}$	0	0	0	0
A_{P3}	0	$-.147777 \times 10^{-9}$	$-.180303 \times 10^{-9}$	$-.391787 \times 10^{-9}$	$.131638 \times 10^{-8}$	0	0	0	0
A_{P4}	$.223227 \times 10^{-1}$	$.143376 \times 10^{0}$	$.143289 \times 10^{0}$	$.304517 \times 10^{0}$	$.383466 \times 10^{0}$	$.466013 \times 10^{0}$	$.662959 \times 10^{0}$	$.854989 \times 10^{0}$	$.114909 \times 10^{-1}$
A_{P5}	0	$-.263395 \times 10^{-2}$	$-.391803 \times 10^{-2}$	$-.56844 \times 10^{-2}$	$-.278572 \times 10^{-2}$	0	0	0	0
A_{P6}	0	$.115613 \times 10^{-4}$	$.421318 \times 10^{-4}$	$.336549 \times 10^{-4}$	$.129237 \times 10^{-4}$	0	0	0	0
A_{P7}	0	$-.239424 \times 10^{-7}$	$-.174886 \times 10^{-6}$	$-.109523 \times 10^{-6}$	$-.595181 \times 10^{-6}$	0	0	0	0
A_{P8}	$.601436 \times 10^{1}$	$.153503 \times 10^{1}$	$-.759331 \times 10^{0}$	$-.718612 \times 10^{1}$	$-.297074 \times 10^{-1}$	$.186185 \times 10^{-1}$	$-.810072 \times 10^{-1}$	$.960492 \times 10^{-3}$	$.631924 \times 10^{0}$
A_{P9}	0	$.212258 \times 10^{0}$	$.443411 \times 10^{0}$	$.50642 \times 10^{0}$	$-.477549 \times 10^{-2}$	0	0	0	0
A_{P10}	0	$-.297147 \times 10^{-2}$	$-.703113 \times 10^{-2}$	$-.624918 \times 10^{-2}$	$.327815 \times 10^{-3}$	0	0	0	0
A_{P11}	0	$.985059 \times 10^{-5}$	$.27991 \times 10^{-4}$	$.221158 \times 10^{-4}$	$-.543824 \times 10^{-5}$	0	0	0	0

NOTE: α must be in degrees when these coefficients are used in the power equation.

Figure F.20. Coefficients of Curve Fit Equations for Power Coefficient

	$\mu=0$	$\mu=.1014$	$\mu=.1351$	$\mu=.2027$	$\mu=.3723$	$\mu=.4565$
A_{NF0}	0	$-.154857\times10^{-5}$	$.204691\times10^{-5}$	$.450018\times10^{-4}$	$-.982094\times10^{-4}$	$.179585\times10^{-6}$
A_{NF1}	0	$.467546\times10^{-5}$	$.942028\times10^{-5}$	$.211604\times10^{-4}$	$.19641\times10^{-3}$	$.323623\times10^{-3}$
A_{NF2}	0	$-.285003\times10^{-7}$	$-.100977\times10^{-6}$	$-.251209\times10^{-6}$	$-.639116\times10^{-5}$	$.684873\times10^{-6}$
A_{NF3}	0	$.128888\times10^{-10}$	$.270048\times10^{-9}$	$.746916\times10^{-9}$	$.657985\times10^{-7}$	$-.249423\times10^{-7}$
A_{NF4}	0	$-.102821\times10^{-3}$	$.224724\times10^{-3}$	$.929207\times10^{-3}$	$-.157595\times10^{-2}$	$-.809587\times10^{-4}$
A_{NF5}	0	$.749984\times10^{-3}$	$.125801\times10^{-2}$	$.178593\times10^{-2}$	$.24356\times10^{-2}$	$.572817\times10^{-2}$
A_{NF6}	0	$-.945697\times10^{-5}$	$-.132674\times10^{-4}$	$-.217638\times10^{-4}$	$.234598\times10^{-3}$	$.109167\times10^{-2}$
A_{NF7}	0	$.293263\times10^{-7}$	$.348545\times10^{-7}$	$.65423\times10^{-7}$	$-.470641\times10^{-5}$	$-.963463\times10^{-4}$
A_{NF8}	0	$.109342\times10^{0}$	$.275072\times10^{-1}$	$-.543699\times10^{-1}$	$.443939\times10^{-1}$	$.53212\times10^{-2}$
A_{NF9}	0	$.943903\times10^{-1}$	$.696523\times10^{-1}$	$.18035\times10^{0}$	$-.138981\times10^{-1}$	$.159926\times10^{0}$
A_{NF10}	0	$-.108604\times10^{-2}$	$-.923809\times10^{-3}$	$-.232838\times10^{-2}$	$.632501\times10^{-3}$	$-.115516\times10^{0}$
A_{NF11}	0	$.317682\times10^{-5}$	$.29846\times10^{-5}$	$.738683\times10^{-5}$	$-.814596\times10^{-5}$	$.994553\times10^{-2}$

	$\mu=.5147$	$\mu=.6432$	$\mu=.772$	$\mu=.9008$	$\mu=1.03$	$\mu=1.158$
A_{NF0}	$.137987\times10^{-5}$	$.161374\times10^{-5}$	$.245107\times10^{-5}$	$-.132502\times10^{-6}$	$-.173383\times10^{-5}$	$.585875\times10^{-5}$
A_{NF1}	$.439095\times10^{-3}$	$.760961\times10^{-3}$	$.109347\times10^{-2}$	$.140037\times10^{-2}$	$.170687\times10^{-2}$	$.199778\times10^{-2}$
A_{NF2}	$.228487\times10^{-5}$	$.440349\times10^{-6}$	$.823616\times10^{-6}$	$-.191532\times10^{-6}$	$-.139327\times10^{-5}$	$-.209278\times10^{-5}$
A_{NF3}	$-.762918\times10^{-7}$	$-.152524\times10^{-7}$	$-.545001\times10^{-7}$	$.257742\times10^{-7}$	$.512513\times10^{-7}$	$.76607\times10^{-7}$
A_{NF4}	$-.792358\times10^{-3}$	$-.58501\times10^{-3}$	$-.578165\times10^{-4}$	$-.185878\times10^{-3}$	$.212865\times10^{-2}$	$-.228619\times10^{-2}$
A_{NF5}	$.665352\times10^{-2}$	$.282596\times10^{-2}$	$-.625689\times10^{-2}$	$-.258884\times10^{-2}$	$-.513321\times10^{-2}$	$.123733\times10^{-1}$
A_{NF6}	$-.208908\times10^{-3}$	$.266667\times10^{-3}$	$.122656\times10^{-2}$	$.658596\times10^{-3}$	$.878786\times10^{-3}$	$-.583625\times10^{-3}$
A_{NF7}	$.776787\times10^{-5}$	$-.517496\times10^{-5}$	$-.361453\times10^{-4}$	$-.249126\times10^{-4}$	$-.316126\times10^{-4}$	$.101001\times10^{-4}$
A_{NF8}	$.324054\times10^{-1}$	$.487661\times10^{-1}$	$-.60177\times10^{-1}$	$.804597\times10^{-2}$	$-.162981\times10^{0}$	$.466581\times10^{-1}$
A_{NF9}	$-.688518\times10^{-1}$	$.113439\times10^{0}$	$.642961\times10^{0}$	$.208291\times10^{-1}$	$.515108\times10^{0}$	$-.898786\times10^{0}$
A_{NF10}	$.875982\times10^{-2}$	$-.243064\times10^{-1}$	$-.967895\times10^{-1}$	$-.520537\times10^{-2}$	$-.665886\times10^{-1}$	$.324115\times10^{-1}$
A_{NF11}	$-.327294\times10^{-3}$	$.563958\times10^{-3}$	$.300992\times10^{-2}$	$.261473\times10^{-3}$	$.221409\times10^{-2}$	$-.439838\times10^{-3}$

NOTE: α must be in degrees when these coefficients are used in the normal force equation.

Figure F.21. Coefficients of Curve Fit Equations for Normal Force Coefficient

	$\mu=0$	$\mu=.1014$	$\mu=.1351$	$\mu=.2027$	$\mu=.3723$	$\mu=.4565$
A_{SF0}	0	$.291745\times10^{-6}$	$.115843\times10^{-5}$	$.564885\times10^{-4}$	$.610186\times10^{-8}$	$.237281\times10^{-7}$
A_{SF1}	0	$-.12407\times10^{-5}$	$-.106448\times10^{-5}$	$.633856\times10^{-6}$	$.557813\times10^{-4}$	$.650575\times10^{-5}$
A_{SF2}	0	$.113747\times10^{-7}$	$.671759\times10^{-8}$	$-.252897\times10^{-7}$	$-.598734\times10^{-6}$	$.769321\times10^{-7}$
A_{SF3}	0	$-.245443\times10^{-10}$	$-.440653\times10^{-11}$	$.119483\times10^{-9}$	$-.659238\times10^{-8}$	$-.349334\times10^{-8}$
A_{SF4}	0	$.143202\times10^{-3}$	$.317272\times10^{-3}$	$.147537\times10^{-2}$	$-.842079\times10^{-4}$	$.117121\times10^{-4}$
A_{SF5}	0	$-.830999\times10^{-4}$	$-.118232\times10^{-3}$	$-.544752\times10^{-4}$	$-.550991\times10^{-4}$	$-.300935\times10^{-2}$
A_{SF6}	0	$.958551\times10^{-7}$	$.242609\times10^{-6}$	$-.267651\times10^{-5}$	$-.171925\times10^{-4}$	$-.563082\times10^{-4}$
A_{SF7}	0	$.200043\times10^{-8}$	$.227584\times10^{-8}$	$.163762\times10^{-7}$	$.296356\times10^{-6}$	$.233296\times10^{-5}$
A_{SF8}	0	$-.193731\times10^{-2}$	$-.509539\times10^{-2}$	$-.833551\times10^{-1}$	$.686884\times10^{-2}$	$-.759009\times10^{-3}$
A_{SF9}	0	$.407909\times10^{-2}$	$.722497\times10^{-2}$	$.315085\times10^{-2}$	$-.101352\times10^{-1}$	$.111362\times10^{-1}$
A_{SF10}	0	$-.450147\times10^{-4}$	$-.916859\times10^{-4}$	$.612312\times10^{-4}$	$.130744\times10^{-2}$	$.411265\times10^{-2}$
A_{SF11}	0	$.124524\times10^{-6}$	$.285967\times10^{-6}$	$-.428818\times10^{-6}$	$-.239885\times10^{-4}$	$-.168146\times10^{-3}$

	$\mu=.5147$	$\mu=.6432$	$\mu=.772$	$\mu=.9008$	$\mu=1.03$	$\mu=1.158$
A_{SF0}	$.136092\times10^{-5}$	$.976607\times10^{-6}$	$-.97825\times10^{-6}$	$.786968\times10^{-6}$	$-.216019\times10^{-5}$	$-.253321\times10^{-5}$
A_{SF1}	$-.23559\times10^{-4}$	$-.130694\times10^{-3}$	$-.316773\times10^{-3}$	$-.557452\times10^{-3}$	$-.809093\times10^{-3}$	$-.109376\times10^{-2}$
A_{SF2}	$.127659\times10^{-5}$	$-.366955\times10^{-6}$	$-.859884\times10^{-6}$	$-.124574\times10^{-6}$	$-.856051\times10^{-7}$	$.385756\times10^{-5}$
A_{SF3}	$-.572509\times10^{-7}$	$.121016\times10^{-7}$	$.301607\times10^{-7}$	$.115477\times10^{-7}$	$.178906\times10^{-7}$	$-.120107\times10^{-6}$
A_{SF4}	$.119258\times10^{-2}$	$-.100898\times10^{-3}$	$.725157\times10^{-3}$	$.258719\times10^{-4}$	$.167271\times10^{-3}$	$.130762\times10^{-2}$
A_{SF5}	$-.740273\times10^{-2}$	$-.367008\times10^{-2}$	$-.55614\times10^{-2}$	$-.320731\times10^{-2}$	$-.721592\times10^{-2}$	$.259621\times10^{-3}$
A_{SF6}	$.104627\times10^{-2}$	$.662111\times10^{-4}$	$.25791\times10^{-3}$	$-.165071\times10^{-3}$	$.327913\times10^{-3}$	$-.372471\times10^{-3}$
A_{SF7}	$-.487885\times10^{-4}$	$-.2585357\times10^{-5}$	$-.751767\times10^{-5}$	$.278601\times10^{-6}$	$-.134919\times10^{-4}$	$.126176\times10^{-4}$
A_{SF8}	$-.177106\times10^{0}$	$.363417\times10^{-2}$	$-.600228\times10^{-1}$	$-.274394\times10^{-1}$	$.157176\times10^{-1}$	$-.693893\times10^{-1}$
A_{SF9}	$.683888\times10^{0}$	$-.104633\times10^{0}$	$-.660259\times10^{-1}$	$-.178098\times10^{0}$	$.175384\times10^{0}$	$-.835669\times10^{-2}$
A_{SF10}	$-.161739\times10^{0}$	$-.18044\times10^{-2}$	$-.812251\times10^{-2}$	$.208395\times10^{-1}$	$-.938934\times10^{-2}$	$.198682\times10^{-1}$
A_{SF11}	$.75356\times10^{-2}$	$.896371\times10^{-4}$	$.125335\times10^{-3}$	$-.295016\times10^{-3}$	$.401628\times10^{-3}$	$-.916932\times10^{-3}$

NOTE: α must be in degrees when these coefficients are used in the side force equation.

Figure F.22. Coefficients of Curve Fit Equations for Side Force Coefficient

	$\mu=0$	$\mu=.1014$	$\mu=.1351$	$\mu=.2027$	$\mu=.3723$	$\mu=.4565$
A_{PM0}	0	$.377218\times10^{-5}$	$.688095\times10^{-5}$	$-.79344\times10^{-5}$	$-.310285\times10^{-6}$	$-.884622\times10^{-8}$
A_{PM1}	0	$.539482\times10^{-5}$	$.125905\times10^{-4}$	$.316671\times10^{-4}$	$.820375\times10^{-4}$	$.141415\times10^{-4}$
A_{PM2}	0	$-.12652\times10^{-6}$	$-.252414\times10^{-6}$	$-.581828\times10^{-6}$	$-.27116\times10^{-6}$	$.345339\times10^{-7}$
A_{PM3}	0	$.537895\times10^{-9}$	$.101607\times10^{-8}$	$.226169\times10^{-8}$	$-.151223\times10^{-7}$	$-.105759\times10^{-8}$
A_{PM4}	0	$.172117\times10^{-3}$	$.562525\times10^{-3}$	$.201324\times10^{-2}$	$.193688\times10^{-3}$	$-.738879\times10^{-5}$
A_{PM5}	0	$.146772\times10^{-2}$	$.1652\times10^{-2}$	$.206142\times10^{-2}$	$.464123\times10^{-2}$	$-.159412\times10^{-2}$
A_{PM6}	0	$-.11507\times10^{-4}$	$-.121292\times10^{-4}$	$-.131115\times10^{-4}$	$-.229179\times10^{-4}$	$.508798\times10^{-5}$
A_{PM7}	0	$.185794\times10^{-7}$	$.164608\times10^{-7}$	$.913233\times10^{-8}$	$-.119169\times10^{-6}$	$-.10134\times10^{-6}$
A_{PM8}	0	$-.165488\times10^{-1}$	$-.189205\times10^{-1}$	$.766096\times10^{-1}$	$-.133686\times10^{-1}$	$.955878\times10^{-3}$
A_{PM9}	0	$.181983\times10^{-2}$	$.224173\times10^{-3}$	$-.692308\times10^{-2}$	$-.487350\times10^{-2}$	$.216812\times10^{-1}$
A_{PM10}	0	$-.236138\times10^{-4}$	$.16657\times10^{-6}$	$.684175\times10^{-4}$	$.362062\times10^{-3}$	$-.13177\times10^{-2}$
A_{PM11}	0	$.796661\times10^{-7}$	$-.470343\times10^{-8}$	$-.176422\times10^{-6}$	$-.598035\times10^{-5}$	$.362472\times10^{-4}$

	$\mu=.5147$	$\mu=.6432$	$\mu=.772$	$\mu=.9008$	$\mu=1.03$	$\mu=1.158$
A_{PM0}	$-.163818\times10^{-6}$	$-.771885\times10^{-6}$	$-.248968\times10^{-5}$	$.145349\times10^{-6}$	$.168996\times10^{-5}$	$.274231\times10^{-6}$
A_{PM1}	$-.177418\times10^{-5}$	$-.922672\times10^{-4}$	$-.202383\times10^{-3}$	$-.308712\times10^{-3}$	$-.383796\times10^{-3}$	$-.470485\times10^{-3}$
A_{PM2}	$.356703\times10^{-7}$	$.111958\times10^{-6}$	$.704986\times10^{-6}$	$.536055\times10^{-7}$	$-.912361\times10^{-7}$	$.25489\times10^{-6}$
A_{PM3}	$-.137756\times10^{-8}$	$-.216285\times10^{-9}$	$-.328566\times10^{-7}$	$.53226\times10^{-9}$	$-.27077\times10^{-9}$	$-.640161\times10^{-8}$
A_{PM4}	$.401368\times10^{-4}$	$.225413\times10^{-4}$	$.778302\times10^{-3}$	$-.483831\times10^{-3}$	$-.497667\times10^{-3}$	$-.321648\times10^{-3}$
A_{PM5}	$-.240092\times10^{-2}$	$-.399324\times10^{-2}$	$-.641948\times10^{-2}$	$-.70195\times10^{-2}$	$-.100188\times10^{-1}$	$-.687551\times10^{-2}$
A_{PM6}	$-.120839\times10^{-4}$	$-.665199\times10^{-4}$	$-.128724\times10^{-3}$	$-.119008\times10^{-3}$	$-.416504\times10^{-4}$	$-.344122\times10^{-3}$
A_{PM7}	$.387065\times10^{-6}$	$.204615\times10^{-5}$	$.638786\times10^{-5}$	$.396756\times10^{-5}$	$.168316\times10^{-5}$	$.12192\times10^{-4}$
A_{PM8}	$-.227747\times10^{-2}$	$.261322\times10^{-1}$	$-.424198\times10^{-1}$	$.428319\times10^{-1}$	$.392666\times10^{-1}$	$.256492\times10^{-1}$
A_{PM9}	$-.751961\times10^{-1}$	$-.183726\times10^{0}$	$.359543\times10^{-1}$	$.143102\times10^{-1}$	$.949637\times10^{-1}$	$-.135728\times10^{0}$
A_{PM10}	$.10527\times10^{-2}$	$.210223\times10^{-1}$	$-.33401\times10^{-3}$	$.856042\times10^{-2}$	$.12569\times10^{-1}$	$.336543\times10^{-1}$
A_{PM11}	$-.393332\times10^{-4}$	$-.726143\times10^{-3}$	$-.78287\times10^{-4}$	$-.33099\times10^{-3}$	$-.435573\times10^{-3}$	$-.115452\times10^{-2}$

NOTE: α must be in degrees when these coefficients are used in the pitching moment equation.

Figure F.23. Coefficients of Curve Fit Equations for Pitching Moment Coefficient

	$\mu=0$	$\mu=.1014$	$\mu=.1351$	$\mu=.2027$	$\mu=.3723$	$\mu=.4565$
A_{YM0}	0	$.109092\times10^{-5}$	$.286933\times10^{-7}$	$-.110543\times10^{-4}$	$-.115949\times10^{-4}$	$.75428\times10^{-6}$
A_{YM1}	0	$.126647\times10^{-4}$	$.191392\times10^{-4}$	$.250948\times10^{-4}$	$.442163\times10^{-4}$	$.199993\times10^{-3}$
A_{YM2}	0	$-.148631\times10^{-6}$	$-.229016\times10^{-6}$	$-.220845\times10^{-6}$	$.979871\times10^{-6}$	$.672974\times10^{-6}$
A_{YM3}	0	$.435436\times10^{-9}$	$.68199\times10^{-9}$	$.154233\times10^{-9}$	$-.231738\times10^{-7}$	$-.198906\times10^{-7}$
A_{YM4}	0	$.216295\times10^{-3}$	$.61904\times10^{-3}$	$.303865\times10^{-4}$	$.76278\times10^{-3}$	$-.989016\times10^{-4}$
A_{YM5}	0	$.636091\times10^{-4}$	$.533431\times10^{-4}$	$.880677\times10^{-3}$	$.600766\times10^{-2}$	$.890334\times10^{-2}$
A_{YM6}	0	$.290233\times10^{-5}$	$.265736\times10^{-5}$	$-.16908\times10^{-4}$	$-.24055\times10^{-3}$	$.101251\times10^{-4}$
A_{YM7}	0	$-.182158\times10^{-7}$	$-.164399\times10^{-7}$	$.10332\times10^{-6}$	$.289645\times10^{-5}$	$-.239883\times10^{-6}$
A_{YM8}	0	$-.158447\times10^{-1}$	$-.2112\times10^{-1}$	$-.171322\times10^{-1}$	$-.27995\times10^{-1}$	$.646468\times10^{-2}$
A_{YM9}	0	$.147256\times10^{-2}$	$.323912\times10^{-3}$	$-.426356\times10^{-2}$	$.116529\times10^{-1}$	$.486429\times10^{-1}$
A_{YM10}	0	$-.178633\times10^{-4}$	$-.158877\times10^{-5}$	$.873694\times10^{-4}$	$-.78607\times10^{-3}$	$-.277348\times10^{-2}$
A_{YM11}	0	$.579483\times10^{-7}$	$.374405\times10^{-8}$	$-.533888\times10^{-6}$	$.133698\times10^{-4}$	$.407947\times10^{-4}$

	$\mu=.5147$	$\mu=.6432$	$\mu=.772$	$\mu=.9008$	$\mu=1.03$	$\mu=1.158$
A_{YM0}	$.811278\times10^{-6}$	$-.689819\times10^{-6}$	$-.140611\times10^{-5}$	$-.959155\times10^{-6}$	$.232776\times10^{-5}$	$.776742\times10^{-6}$
A_{YM1}	$.2549\times10$	$.358353\times10^{-3}$	$.40651\times10^{-3}$	$.423457\times10^{-3}$	$.404494\times10^{-3}$	$.400109\times10^{-3}$
A_{YM2}	$.298133\times10^{-6}$	$-.483638\times10^{-6}$	$.711836\times10^{-6}$	$.366298\times10^{-6}$	$-.978679\times10^{-6}$	$.483519\times10^{-6}$
A_{YM3}	$-.7069\times10^{-8}$	$.165027\times10^{-7}$	$-.242848\times10^{-7}$	$-.201739\times10^{-7}$	$.384779\times10^{-7}$	$-.178582\times10^{-7}$
A_{YM4}	$-.138358\times10^{-3}$	$-.376316\times10^{-3}$	$-.111605\times10^{-3}$	$-.498142\times10^{-3}$	$-.859507\times10^{-3}$	$-.170495\times10^{-3}$
A_{YM5}	$.84517\times10^{-2}$	$.731418\times10^{-2}$	$.111654\times10^{-1}$	$.700776\times10^{-2}$	$.495335\times10^{-2}$	$.937562\times10^{-3}$
A_{YM6}	$.511468\times10^{-4}$	$.25651\times10^{-3}$	$-.397326\times10^{-3}$	$-.179799\times10^{-3}$	$.475445\times10^{-3}$	$.428652\times10^{-3}$
A_{YM7}	$-.113402\times10^{-5}$	$-.882347\times10^{-5}$	$.127859\times10^{-4}$	$.100219\times10^{-4}$	$-.172489\times10^{-4}$	$-.224772\times10^{-4}$
A_{YM8}	$.135303\times10^{-3}$	$.322547\times10^{-1}$	$.931734\times10^{-2}$	$.392748\times10^{-1}$	$.62677\times10^{-1}$	$.242592\times10^{0}$
A_{YM9}	$.664771\times10^{-1}$	$.729796\times10^{-1}$	$-.283071\times10^{0}$	$-.697861\times10^{-1}$	$.101986\times10^{0}$	$.629868\times10^{0}$
A_{YM10}	$-.647118\times10^{-2}$	$-.170565\times10^{-1}$	$.292923\times10^{-1}$	$.166632\times10^{-1}$	$-.284635\times10^{-1}$	$-.600989\times10^{-1}$
A_{YM11}	$.140141\times10^{-3}$	$.575827\times10^{-3}$	$-.960904\times10^{-3}$	$-.821801\times10^{-3}$	$.101423\times10^{-2}$	$.245749\times10^{-2}$

NOTE: α must be in degrees when these coefficients are used in the yawing moment equation.

Figure F.24. Coefficients of Curve Fit Equations for Yawing Moment Coefficient

$\mu \rightarrow$	0	.1014	.1351	.2027	.3723	.4565	.5147	.6432	.7720
H_{PM0}	-1.503×10^{-3}	-1.633×10^{-3}	-1.633×10^{-3}	-1.708×10^{-3}	-2.935×10^{-3}	-2.815×10^{-3}	-2.75×10^{-3}	-2.425×10^{-3}	-2.00×10^{-3}
H_{PM1}	0	0	0	0	0	0	0	0	0
H_{PM2}									
H_{PM3}									
H_{PM4}									
H_{PM5}									
H_{PM6}									
H_{PM7}									
H_{PM8}									
H_{PM9}									
H_{PM10}									
H_{PM11}	0	0	0	0	0	0	0	0	0

$\mu \rightarrow$	.9009	1.03	1.158
H_{PM0}	-1.575×10^{-3}	-1.225×10^{-3}	-0.925×10^{-3}
H_{PM1}	0	0	0
H_{PM2}			
H_{PM3}			
H_{PM4}			
H_{PM5}			
H_{PM6}			
H_{PM7}			
H_{PM8}			
H_{PM9}			
H_{PM10}			
H_{PM11}	0	0	0

NOTE: α must be in degrees when these coefficients are used in the pitching moment rate equation.

Figure F.25. Curve Fit Coefficients for $\frac{\alpha C_{PM}}{\alpha Q}$

$\mu \rightarrow$	0	.1014	.1351	.2027	.3723	.4565	.5147	.6432	.7720
J_{YM0}	1.503×10^{-3}	1.633×10^{-3}	1.633×10^{-3}	1.708×10^{-3}	2.935×10^{-3}	2.815×10^{-3}	2.75×10^{-3}	2.425×10^{-3}	2.00×10^{-3}
J_{YM1}	0	0	0	0	0	0	0	0	0
J_{YM2}	|	|	|	|	|	|	|	|	|
J_{YM3}	|	|	|	|	|	|	|	|	|
J_{YM4}	|	|	|	|	|	|	|	|	|
J_{YM5}	|	|	|	|	|	|	|	|	|
J_{YM6}	|	|	|	|	|	|	|	|	|
J_{YM7}	|	|	|	|	|	|	|	|	|
J_{YM8}	|	|	|	|	|	|	|	|	|
J_{YM9}	|	|	|	|	|	|	|	|	|
J_{YM10}	|	|	|	|	|	|	|	|	|
J_{YM11}	0	0	0	0	0	0	0	0	0

$\mu \rightarrow$	.9008	1.03	1.158
J_{YM0}	1.575×10^{-3}	1.225×10^{-3}	$.925 \times 10^{-3}$
J_{YM1}	0	0	0
J_{YM2}	|	|	|
J_{YM3}	|	|	|
J_{YM4}	|	|	|
J_{YM5}	|	|	|
J_{YM6}	|	|	|
J_{YM7}	|	|	|
J_{YM8}	|	|	|
J_{YM9}	|	|	|
J_{YM10}	|	|	|
J_{YM11}	0	0	0

NOTE: α must be in degrees when these equations are used in the hub yawing moment rate equation.

Figure F.26. Curve Fit Coefficients for $\frac{\alpha C_{YM}}{\alpha R}$

$$\left.\begin{aligned} E_{NF_1} &= -.024 \\ E_{NF_2} &= -.002703 \\ E_{NF_3} &= -.000346 \\ E_{NF_4} &= .00039 \end{aligned}\right\} \text{Coeff. of } \frac{dC_{NF}}{dB_{1C}} \sim \frac{1}{DEG}$$

$$\left.\begin{aligned} D_{NF} &= .006 \\ D_{NF_1} &= -.0012318 \\ D_{NF_2} &= .000033 \\ D_{NF_3} &= -.0000268 \end{aligned}\right\} \text{Coeff. of } \frac{dC_{NF}}{dA_{1C}} \sim \frac{1}{DEG}$$

$$\left.\begin{aligned} E_{SF_1} &= .0025 \\ E_{SF_2} &= .0011896 \\ E_{SF_3} &= -.00001246 \\ E_{SF_4} &= .00001669 \end{aligned}\right\} \text{Coeff. of } \frac{dC_{SF}}{dB_{1C}} \sim \frac{1}{DEG}$$

$$\left.\begin{aligned} D_{SF} &= .025 \\ D_{SF_1} &= .0025356 \\ D_{SF_2} &= -.0002264 \\ D_{SF_3} &= -.000044 \end{aligned}\right\} \text{Coeff. of } \frac{dC_{SF}}{dA_{1C}} \sim \frac{1}{DEG}$$

$$\left.\begin{aligned} E_{PM_1} &= -.0025 \\ E_{PM_2} &= -.0014304 \\ E_{PM_3} &= .0003029 \\ E_{PM_4} &= -.0002938 \\ E_{PM_5} &= -.0001367 \\ E_{PM_6} &= -.0004888 \\ E_{PM_7} &= -.0001767 \end{aligned}\right\} \text{Coeff. of } \frac{dC_{PM}}{dB_{1C}} \sim \frac{1}{DEG}$$

$$\left.\begin{aligned} D_{PM_1} &= -.0015 \\ D_{PM_2} &= .0010726 \\ D_{PM_3} &= -.0001564 \\ D_{PM_4} &= .0001762 \\ D_{PM_5} &= +.0000966 \\ D_{PM_6} &= .000571 \\ D_{PM_7} &= .0000422 \end{aligned}\right\} \text{Coeff. of } \frac{dC_{PM}}{dA_{1C}} \sim \frac{1}{DEG}$$

$$\left.\begin{aligned} E_{YM_1} &= .0025 \\ E_{YM_2} &= -.0013888 \\ E_{YM_3} &= .000336 \\ E_{YM_4} &= -.000187 \\ E_{YM_5} &= -.0000723 \\ E_{YM_6} &= -.0006354 \\ E_{YM_7} &= -.0000098 \end{aligned}\right\} \text{Coeff of } \frac{dC_{YM}}{dB_{1C}} \sim \frac{1}{DEG}$$

$$\left.\begin{aligned} D_{YM_1} &= -.0025 \\ D_{YM_2} &= -.0009883 \\ D_{YM_3} &= .000089 \\ D_{YM_4} &= -.0002866 \\ D_{YM_5} &= -.0001503 \\ D_{YM_6} &= -.0004564 \\ D_{YM_7} &= -.0001993 \end{aligned}\right\} \text{Coeff of } \frac{dC_{YM}}{dA_{1C}} \sim \frac{1}{DEG}$$

Figure F.27. Constants for Cyclic Pitch Effectiveness in Rotor Equations

F.4 AIRFRAME AERODYNAMIC INPUT DATA

The input data for the airframe aerodynamic data are given in this section and are referenced by page number to the equations presented in Appendix E. Plotted aerodynamic data are presented in Figures F.28 to F.30 .

F.4.1 Input Data

PAGE	
E.21	$C_{L_{\alpha w}} = 3.94$ 1/rad
E.28	$C_{L_{MAX}} = 1.232$
E.31	$K_{20} = -.0975$/RAD $K_{21} = -.0916$/RAD $K_{22} = .015$ $K_{\alpha} = 1.0$ $K_{\eta} = 1.0$
E.32	$f_{eu} = 60$ ft^2 $D/T = .05$ $K_{D1/T} = 0.0$ $K_{D2/T} = 0.0$ $K_{D3/T} = .05$ $K_{D4/T} = .05$ $K_{M1/T} = 0.0$ $K_{M2/T} = 0.0$ $K_{M3/T} = 0.0$ $K_{M4/T} = 0.0$
E.36	$\tau_{HT} = .52$ $\alpha_{HT_{STALL}} = 16$ DEG $C_{L_{\alpha HT}} = .061$ 1/DEG $C_{D_{oHT}} = .0084202$
E.39	$\frac{d\sigma}{d\beta} = -.025$ $\tau_{VT} = .55$ $\alpha_{VT_{STALL}} = 20.0$ DEG $C_{x_{\alpha VT}} = .0546$ 1/DEG $C_{D_{oVT}} = .0078915$

PAGE	
E.43	$\eta_{HT} = 1.0$ $\eta_{VT} = 1.0$ $\alpha_N \leq .5236$RAD/$>.5236$RAD
E.44	$C_{DON} = .001821/-.016179$ $K_{30} = .04773/-.2034$ $K_{31} = .16086/-.071138$ $K_{32} = .1087$ $C_{MON} = 0$ $K_{34} = 0$ $K_{35} = 0$ $K_{36} = -.1087$ $K_{37} = 0$ $K_{36}^{1} = -.1087$ $K_{37}^{1} = 0$ $C_{NON} = 0$ $K_{38} = 0$ $K_{39} = 0$ $K_{40} = 0$ $K_{41} = 0$
E.49	$C_{DOF} = .0075705$ $K_o = 18$ $K_1 = -.03581$ $K_2 = .2561$ $\Delta C_{DLG} = .05$ $K_3 = .922$/RAD $K_4 = 0$ $K_5 = .67709$ $K_6 = 0$ $K_7 = -.478$

E.49 $K_8 = 0$
$K_9 = -.131/RAD$
$K_{10} = 0$
$C_{MOF} = .0001883$
$C_{NOF} = 0$
$\Delta C_{MLG} = 0$
$K_{42} = .0537$

E.52 $T_1 = 0$
$T_2 = -.04808$
$T_3 = .3795$

E.54 $\tau_1 = .1$
$\tau_2 = .1$

E.60 $f_{TR} = f_{NFR} = f_{SFR} = f_{PMR} = f_{YMR} = f_{QR} = f_{PR} = 1.0$

E.66 $\frac{dC_{Mwc/4}}{dC_L} = -.03215$
$C_1 = -.065$
$C_2 = -.0025\ 1/DEG$
$C_3 = 0.0\ \ 1/DEG^2$
$C_{L_\alpha} = 3.94/RAD$

Wing Aerodynamic Input Data

Coefficients of $\sum_{v=0}^{4} \sum_{u=0}^{4} [A_{D_{(u+5v)}} \delta^u \alpha^v]$ (Page E.26)

$A_{D_0} = .582990 \times 10^{-3}$

$A_{D_1} = .126170 \times 10^{-2}$

$A_{D_2} = .391649 \times 10^{-4}$

$A_{D_3} = .110058 \times 10^{-5}$

$A_{D_4} = -.159415 \times 10^{-7}$

$A_{D_5} = .245484 \times 10^{-3}$

$A_{D_6} = .265950 \times 10^{-3}$

$A_{D_7} = .404673 \times 10^{-5}$

$A_{D_8} = -.152693 \times 10^{-6}$

$A_{D_9} = .102320 \times 10^{-8}$

$A_{D_{10}} = -.313543 \times 10^{-5}$

$A_{D_{11}} = .624554 \times 10^{-6}$

$A_{D_{12}} = .141804 \times 10^{-6}$

$A_{D_{13}} = -.821732 \times 10^{-8}$

$A_{D_{14}} = .119984 \times 10^{-9}$

$A_{D_{15}} = -.474069 \times 10^{-5}$

$A_{D_{16}} = .771740 \times 10^{-6}$

$A_{D_{17}} = -.800800 \times 10^{-7}$

$A_{D_{18}} = .208761 \times 10^{-8}$

$A_{D_{19}} = -.114899 \times 10^{-10}$

$A_{D_{20}} = .238184 \times 10^{-6}$

$A_{D_{21}} = .196213 \times 10^{-7}$

$A_{D_{22}} = -.204613 \times 10^{-8}$

$A_{D_{23}} = .133330 \times 10^{-10}$

$A_{D_{24}} = .492127 \times 10^{-13}$

NOTES: δ, α in degrees.

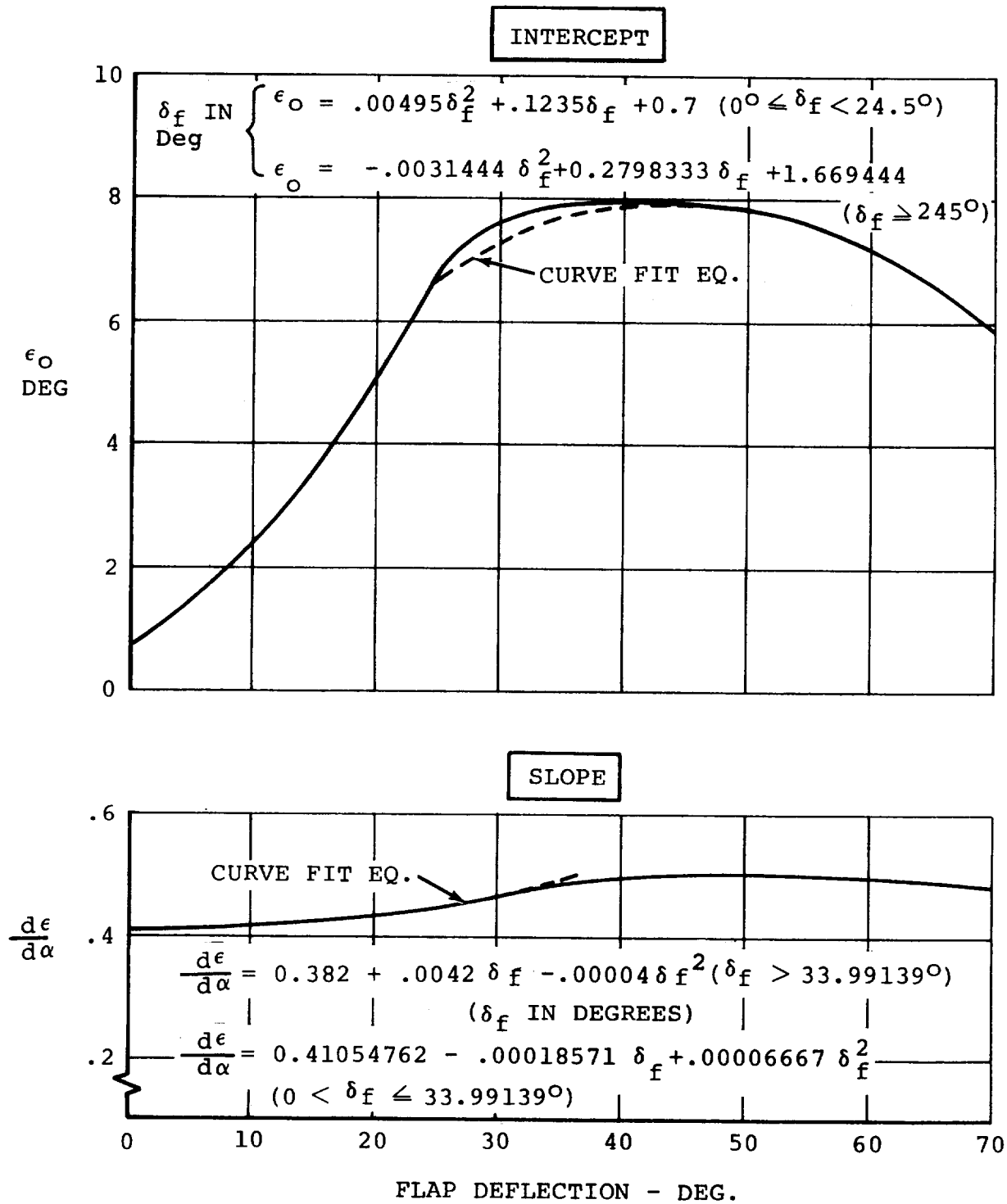

Figure F.28. Model 222 Downwash Functions @ $C_T = 0$, $i_w = +2.0^o$

REF: APPENDIX B-7 ETKIN

FOR TAIL;

$$\frac{a_g}{a} = 1.2103 - .038\ h_T + .00184 h_T^2;\ h_T \leqslant 6.3219$$

$$\frac{a_g}{a} = 1.1096 - .01284\ h_T + .00038 h_T^2;\ h_T > 6.3219$$

$$\frac{a_g}{a} = 1.00;\ h_{T_{c/4}} \geqslant 17.'$$

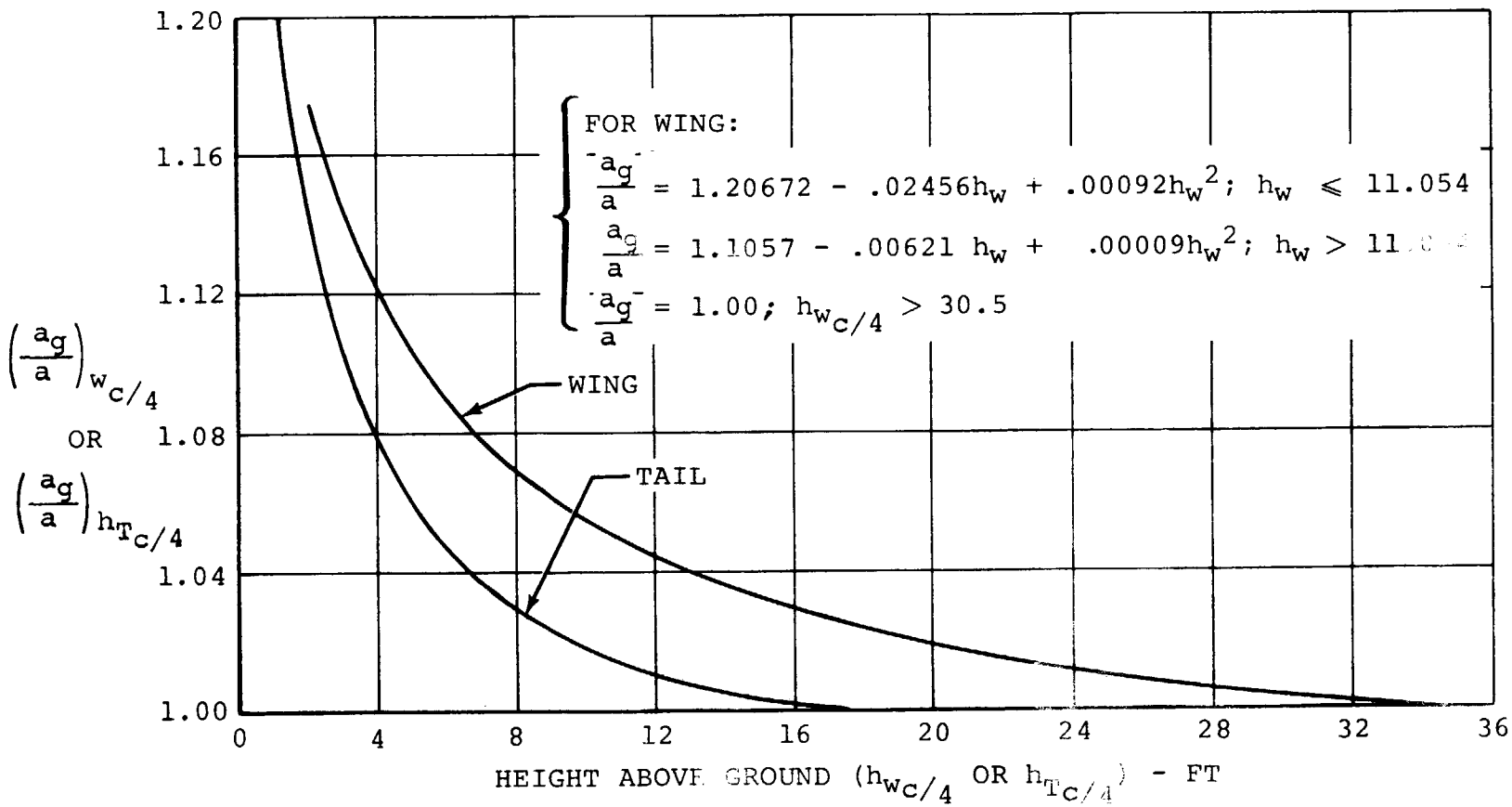

Figure F.29. Variation of Lift Curve Slope with Ground Height

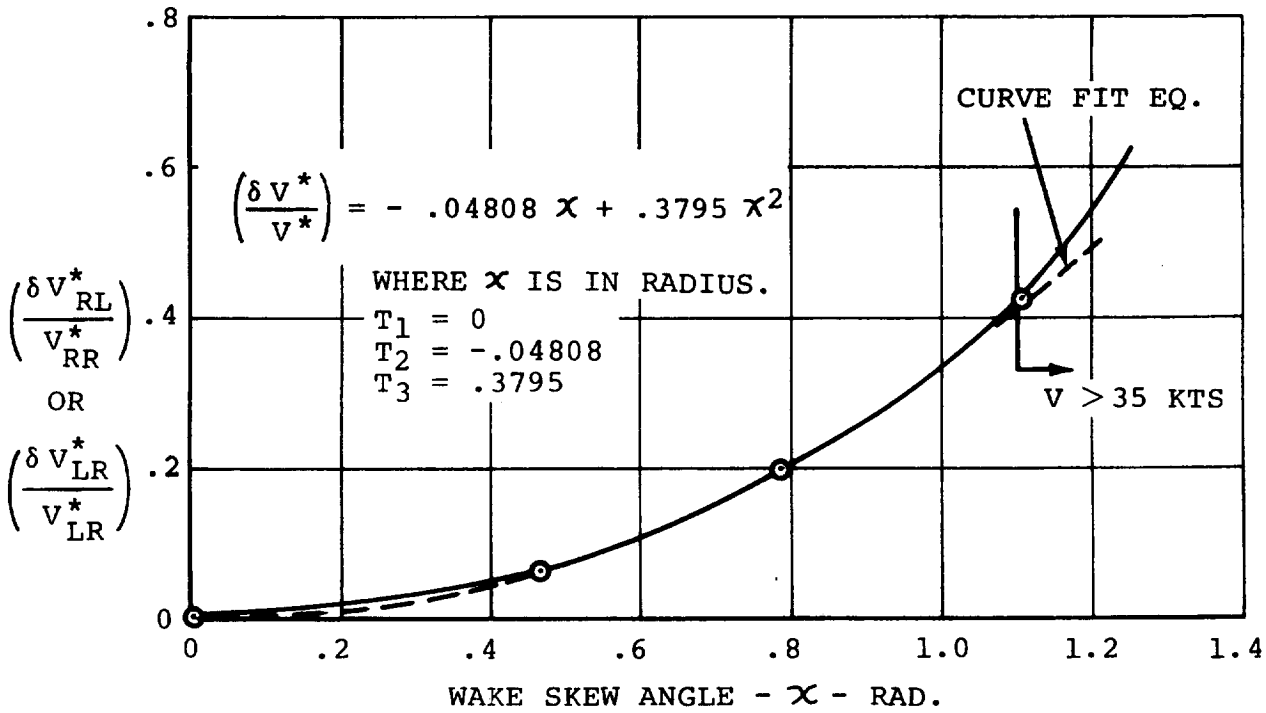

ESTIMATED ROTOR/ROTOR INTERFERENCE PARAMETER

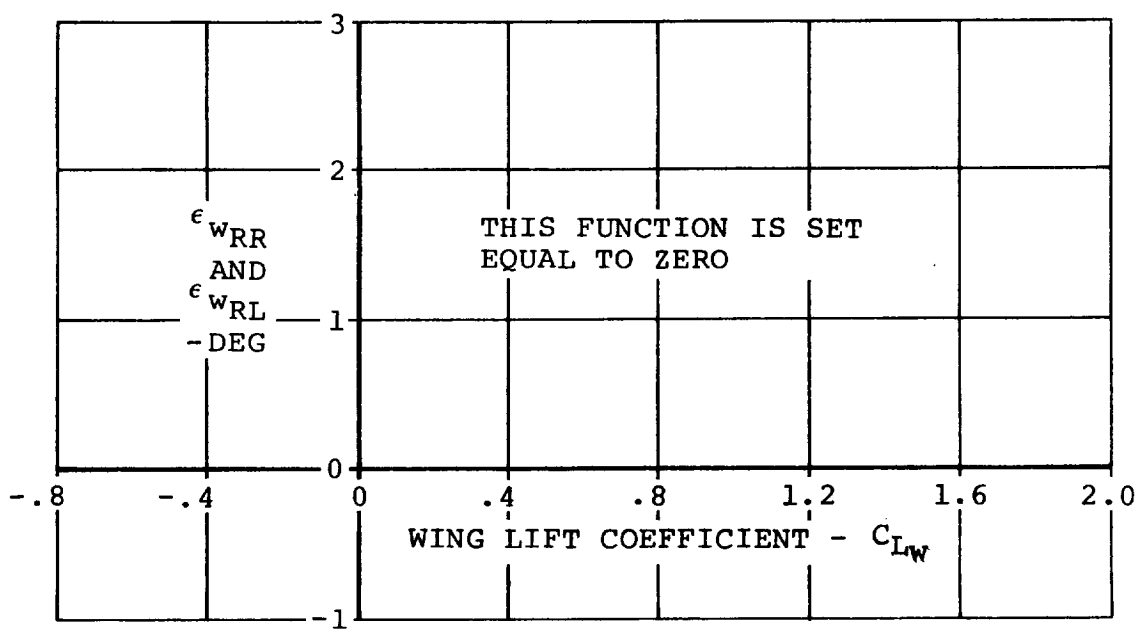

WING ON ROTOR INTERFERENCE

Figure F.30. Rotor/Rotor and Wing/Rotor Interference

F.5 GEOMETRIC, WEIGHTS AND BALANCE DATA

The input data for the Model 222 geometry, weights and balance are presented in this section, and are referenced in Appendix E. Input data for the preprocessor calculations are not presented, but are easily obtainable from an aircraft three-view drawing and the weights and balance data presented in this section. It should be emphasized that the lengths and inertias presented here were calculated using the preprocessor.

F.5.1 Input Data

Page	
E.16	X_{WAC} = .84 ft
	Y_{WAC} = 8.333 ft
	Z_{WAC} = .4 ft
	L_S = 4.94 ft
	Y_N = 16.666 ft
E.18	X_{HT} = -19.45 ft
	Z_{HT} = 2.51 ft
	X_{VT} = -18.04 ft
	Z_{VT} = -1.0226 ft
E.19	A = 530929 ft^2
	R = ft
E.20	PC = 2.36 ft, F_{IN}=0°
	h_p = .33 ft
	c_w = 5.983 ft
	S_w = 200 ft^2

Page	
E.23,E.17	i_w = 2 DEG
E.31	b_w = 33.417 ft
	$\bar{Y}$ = 6.92 ft
E.32	$X_{c/2}$ = -.25 ft
E.35	i_{HT} = 0.0
E.36	AR_{HT} = 4.255
E.39	AR_{VT}= 1.768
	S_{HT} = 58.3 ft^2
	S_{VT} = 43.3 ft^2
E.46	Z_{G_1} = 7.08 ft
	Z_{G_2} = 7.08 ft
	Z_{G_3} = 7.53 ft
	Y_{G_1} = -3.86 ft
	Y_{G_2} = 3.86 ft
	Y_{G_3} = 0

Page		
E.46	X_{G_1}	= -3.7 ft
	X_{G_2}	= -3.7 ft
	X_{G_3}	= 10.67
	r_1	= 1.065 ft
	r_2	= 1.065 ft
	r_3	= .60 ft
	K_{ST_1}	= 3840 lb/ft
	K_{ST_2}	= 3840 lb/ft
	K_{ST_3}	= 3840 lb/ft
	D_{ST_1}	= 600 lb/ft/sec
	D_{ST_2}	= 600 lb/ft/sec
	D_{ST_3}	= 600 lb/ft/sec
	μ_0	= .03
	μ_1	= .005
	μ_s	= .5
E.50	X_{FAC}	= .84 ft
	Z_{FAC}	= 3.66 ft
E.61	I_P	= 564 slu-ft^2
E.62	I_E	= 1.47 slug-ft^2
E.64	K_{W_1}	= .59678 x 10^{-4}
	K_{W_2}	= .1637 x 10^{-4}
	K_{W_3}	= .58356 x 10^{-5}
	K_{W_4}	= .2959 x 10^{-2}
	K_{W_5}	= .1656 x 10^{-2}

Page		
E.64	ζ_{W_1}	= .5
	ζ_{W_2}	= .5
	ζ_{W_3}	= .5
	ζ_{W_4}	= .5
	ζ_{W_5}	= .5
	K_{W_6}	= .1709x10^{-4}
	K_{W_7}	= .05768x10^{-4}
	K_{W_8}	= .1221x10^{-5}
	K_{W_9}	= .0847x10^{-2}
	$K_{W_{10}}$	= .0559x10^{-2}
	ω_{W1}	= 19.92 rad/sec
	ω_{W2}	= 19.92 rad/sec
	ω_{W3}	= 19.92 rad/sec
	ω_{W4}	= 19.92 rad/sec
E.66	$K_{\theta t}$	= 0.98 x10^6FT-LB/RAD
	$\frac{X_{WAC}}{C_w}$	= .275
E.79	Y_{PA}	= 0
	ℓ_{PA}	= 6.75 ft
	Z_{PA}	= 4.75 ft

E.68 to
E.78 Equations of motion input constant (Weight = 12321 lb, nominal CG)

m_W = 138.32 slugs

m_N = 43.39 slugs

m_f = 157.88

m = 382.98 (12321 LBS)

$I_{xx}^{(f)}$ = 789.3 slug-ft^2

$I_{yy}^{(f)}$ = 10845.6 slug-ft^2

$I_{zz}^{(f)}$ = 10707.4 slug-ft^2

$I_{xz}^{(f)}$ = 399.9 slug-ft^2

$I_{xx}^{(w)}$ = 23978.4 slug-ft^2

$I_{yy}^{(w)}$ = 664.8 slug-ft^2

$I_{zz}^{(w)}$ = 24513.6 slug-ft^2

$I_{xz}^{(w)}$ = 384.5 slug-ft^2

I_{xx}' = 22.5 slug-ft^2

I_{yy}' = 194.0 slug-ft^2

I_{zz}' = 195.4 slug-ft^2

I_{xz}' = -20.0 slug-ft^2

ℓ_f = .6917 ft

h_f = 4.075 ft

ℓ_w = -.775 ft

h_w = .30417

Y_N = 16.666 ft

ℓ = 3.3624 ft

λ = 2.841 DEG

L_s = 4.94 ft

F.6 SIMULATION INPUT DATA

This section presents the input data required to drive the Flight Simulator for Advanced Aircraft (FSAA). Figure F.31 shows the instrumentation requirements and Figure F.32 shows the Model 222 control force gradients and breakout forces.

CAB INSTRUMENTATION:

Instrument	Range
Vertical Situation Indicator	±90° Pitch and Roll
Horizontal Situation Indicator	±120° Heading
Airspeed	0 → 520 KIAS
Pressure Altimeter	0 → 10,000 Ft
Radar Altimeter	0 → 1000 Ft
Rate of Climb	± 6000 FT/MIN
Turn and Bank	± 3 Needle Widths
	± 1 1/2 Ball Widths
"g" Meter	-1, +3 "g"
Nacelle Angle	0 → 120°
Clock	
Sideward Velocity	± 40 Knots
Angle of Attack	± 20°
Wing Flap Position	0 → 100°
Rotor Speed	0 → 125%
Engine Torque Meters (2)	0 → 125%

PRIMARY FLIGHT CONTROLS

Stick (±6° Long.; ±5" Lateral)
Pedals (±2.5")
Power Lever (0→8" Normal; 0→10" Emergency)
Nacelle Position thumb Switch

MISCELLANEOUS EQUIPMENT AND FEATURES

Back Drives to Trim Stick and Pedals while in Initial Condition (I.C.)
Landing Gear Up - Down Switch with Indicator Light
SAS ON-OFF Switch
Detent Switches on Spring Cartridges (Pedals & Lateral Stick)
Magnetic Brake on Pedals, Long. and Lateral Controls
Long. and Lateral Beep Force Trim on Stick
Power Lever Null Meter
Toe Brakes
Specified Force Feel System

Figure F.31. Model 222 Pilot Station Requirements

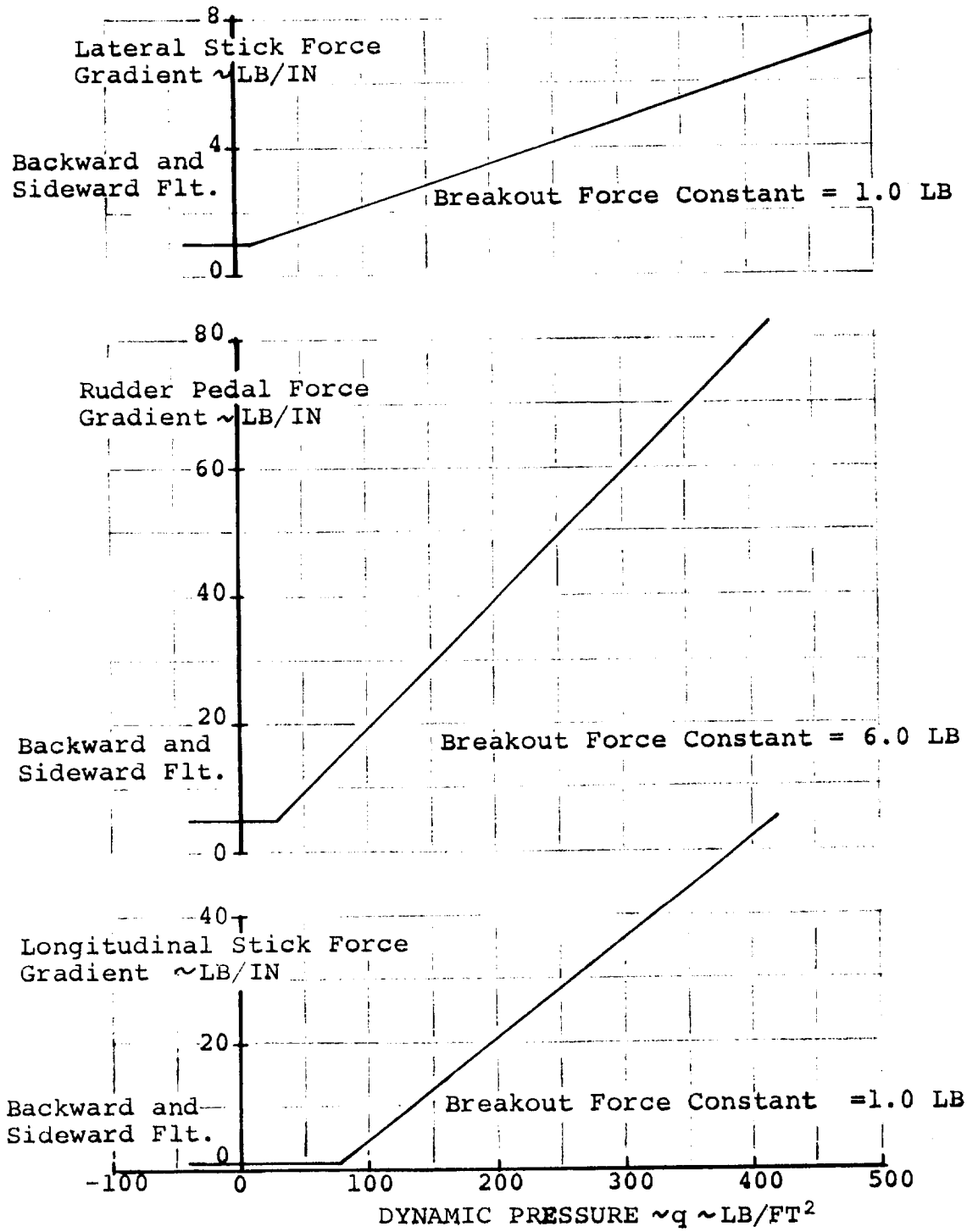

Figure F.32. Model 222 Control Force Gradients and Breakout Forces

APPENDIX G - IN-HOUSE HYBRID SIMULATION

The math model described in this report was mechanized in the Boeing Hybrid Simulation Laboratory for the purpose of developing and evaluating math model simplifications. This was accomplished in a parallel time frame to the NASA simulation, which also used the described math model.

The Hybrid Simulation Laboratory is a large scale hybrid computation complex. It is capable of providing simultaneous operation of several hybrid and analog simulations, depending on problem size. The complex is totally state of the art, with recent acquisition of two mini-computers for the purpose of multivariable function generation.

The Hybrid Simulation Laboratory complex is comprised of the following elements:

- Digital

  IBM 360/44 system

  25600 byte core

  32 priority interrupts

  16 hi-speed floating point register

  2 hi-speed, 1 low speed channels

  2 - 800 B.P.I. tape transport

  1 - 2311 disk system

  2 - 2315 disk system

  1 - hi-speed card read/punch

  1 - hi-speed line printer

2 - alpha-meric scope/keyboard

1 - console typewriter

1 - ball printer

Basic Computer Arts Function Generation System (BOA)

1 - Interdata processor with 24000 byte core

1 - Interdata processor with 16000 byte core

2 - 16 channels analog to digital

2 - 16 channels digital to analog

2 - read only memory software systems

- Analog

4 - 3/4 expanded Applied Dynamics (AD-4)

771 amplifiers (all solid state)

4 resolver expansions

2 display consoles

10 ufd integrator system in 6 decades

1 - 1/8 expanded AD4 maintenance console

128 channels 100 KC analog to digital converters

128 channels digital to analog converters

1 applied dynamics 256

- Analog Output

4 - 8 channel Brush strip chart recorders

4 - 8 channel Varian Statos III strip chart recorders

4 - XY plotters

- Software System

  Integrated disk resident state of the art system embracing "real time" languages:

  Assembly Language

  Modified Fortran IV, Level G and non-real time languages

  Non-procedural block modeling, DSL/44

  Fortran IV, Level G

  Full utility system

  Other special hybrid oriented programs

G.1 SIMULATION ARCHITECTURE

The tilt rotor simulation model utilized the entire hybrid facility. When tied to Boeing's Nudge Base Simulator, four consoles of Applied Dynamics from (AD-4's) analog, the Applied Dynamics 256 (AD-256) and two Simulator Laboratory analog computers were in use. In addition the IBM 360/44 digital computer and two Basic Computing Acts (BCA) function generators were utilized. Figure G.1 shows the utilization of the hybrid facility and also shows the location of the major elements of the tilt rotor mathematical model.

In programming the digital portion of the tilt rotor simulation, core size and execution time were of immediate concern. Along with the complex wing and rotor representations, there was a large number of functions which had to be handled in the digital computer with trade-offs considered on core used if functions were programmed as tables and execution time for digital table

look-up versus curve-fit equations. In most cases, curve-fit equations were used to program functions. A program was written to curve fit the various functions needed, and the equation programmed for the real time task.

The single largest difficulty was the rotor representation. To program the curve-fit equations for each of the eight functions, for both rotors, would take 30 milliseconds (timing estimates without rotor indicated only 10 milliseconds were available). To program as tables and look-up answers, would not only take too long, but use too much core. So the rotor data was put in the function generation mini-computers (BCA). To get the rotor data into format for the BCA, several steps had to be executed; 1) data points were input to the curve-fit program which punched out the coefficients of the curve-fit expansion, 2) these coefficients were input to a program that punched data in the correct format at the correct breakpoints to be input to 3) the BCA program which punched a deck of cards that are input to the function generator mini-computer.

Although the BCA enabled the programming of the rotor without using digital time or core, it did not have enough room to hold 8 functions x 2 rotors for the rotor 'maps' of the size required. To obviate this, the BCA was multiplexed, such that only one rotor's results would be calculated each BCA cycle, with the left and right rotor being alternated. In this case it took 8 milliseconds per BCA cycle, resulting in a total rotor update every 16 milliseconds.

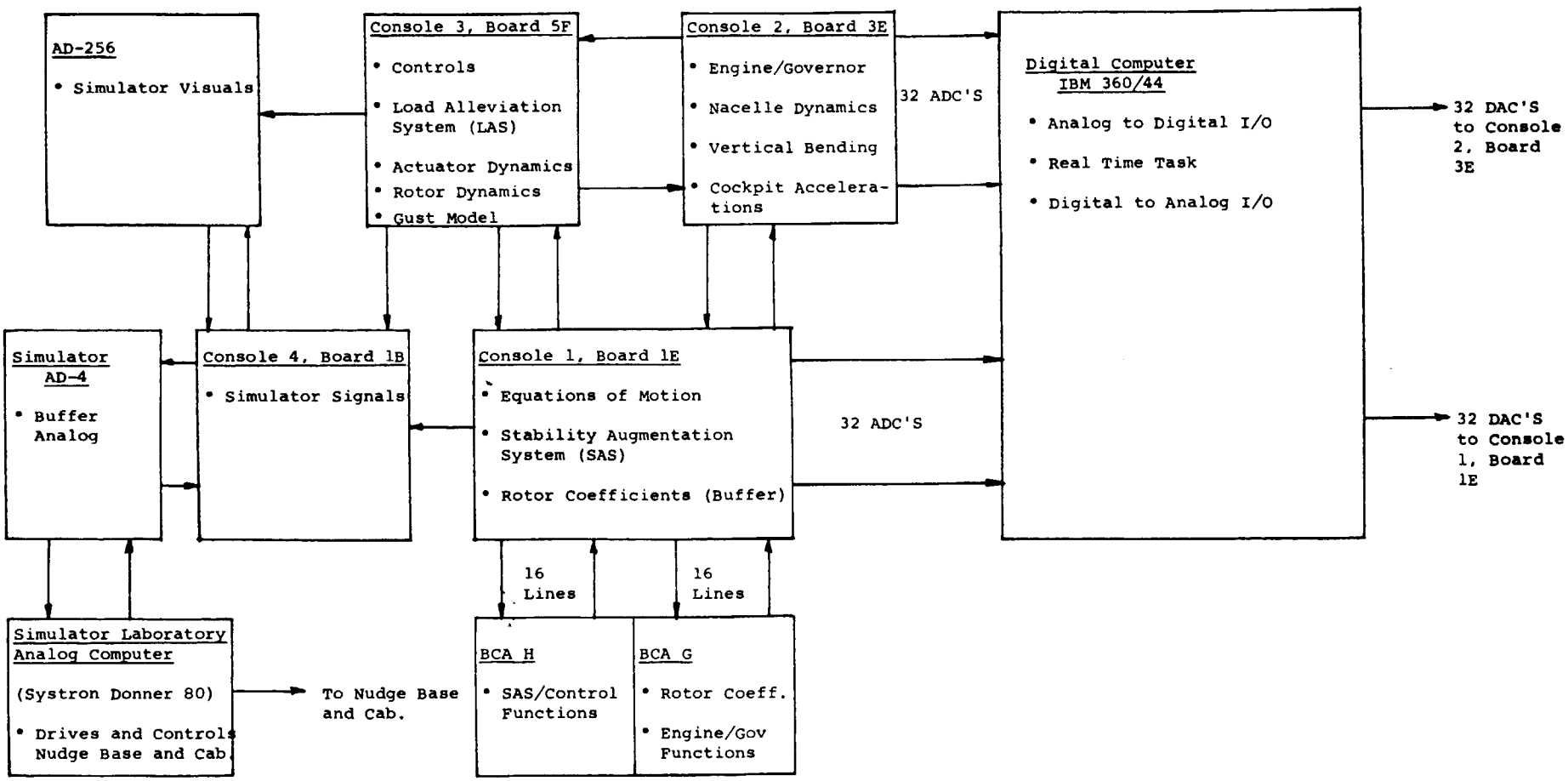

Figure G.1. Utilization of the Hybrid Laboratory for the Model 222 Math Model

As programming progressed, timing estimates showed the time frame would be a problem. The objective was a 40. millisecond (ms) time frame which results in 7 updates/cycle for the 3.5 cycle per second first mode vertical bending calculations. Due to the large number of angles and trigonometric functions, the complexity of the model and the real time requirement, every effort was made to reduce the time frame.

A parallel real time task method, where a 40 ms. time frame could be achieved, was selected. This method had two real time tasks, a 'Fast' real time task that was calculated every frame and a 'Slow' real time task that was executed every 3 frames. Thus, it was important to separate the equations to ensure only low frequency equations were placed in the slow loop. In order to minimize execution time, the system routines for taking the sine, cosine and square root, having unnecessary accuracy at the expense of time, were discarded and replaced by streamlined routines. Since there are a total of 21 sine-cosine pairs and 20 square-roots, the saving was substantial. The need for the time savings is emphasized by the fact that at present, using the parallel real time task, the total execution time is 38 ms. leaving 2 ms. for the foreground options, shown in Figure G.2 to be executed. The 40 ms. time frame objective has been achieved.

The digital portions of the simulation were programmed using the General Hybrid Program (GHP) structure, which utilizes a

- Direct control of the analog computer state and the interval timer (initial condition, hold, operate)
- Change aircraft trim conditions (airspeed, lateral speed, altitude, rate of climb, trim pitch attitude, trim nacelle angle)
- Control of line printer real-time printout
- Control of line printer trim printout
- Ability to change values of simulation flags (landing gear on/off ground effect on/off, vertical bending on/off, wing twist on/off)
- Ability to change real time phases (dual phase, total phase, plot phase; used to plot any digital function)

Figure G.2. Foreground Options

phase overlay scheme. The basic phase overlay structure is shown in Figure G.3. This figure also summarizes what is contained in each phase. Of most interest to this discussion are three phases; 1) the Preprocess phase, 2) the Run phase and 3) the Dual phase. The Preprocess phase loads the simulation data and sets up the analog computer by setting the potentiometers to the correct values and by reading out a test condition to ensure that no components are statically bad. Once the analogs are set up and checked, control is transferred by GHP to the run phase. This phase is in control while actually 'running' hybrid and executing the real time task. It is in the run phase that various options are provided, while the simulation is being used. These foreground options have been described in Figure G.2. The two line printer options, the line printer trim sheet and the line printer real time printout, are powerful tools allowing visibility into the simulation equations.

The Dual phase contains the two real time tasks, the fast (RTFAST) and the slow (RTSLOW). Figures G.4 and G.5 show what each real time task contains. The execution time of RTFAST is 32 ms. while that of RTSLOW is 18 ms. Since RTFAST is executed every 'frame' but RTSLOW only every 3 frames, the execution time is 32 + 18/3 or 38 ms.

The digital listing for the simulation program is shown in Figure G.6. This listing contains the fast and slow real

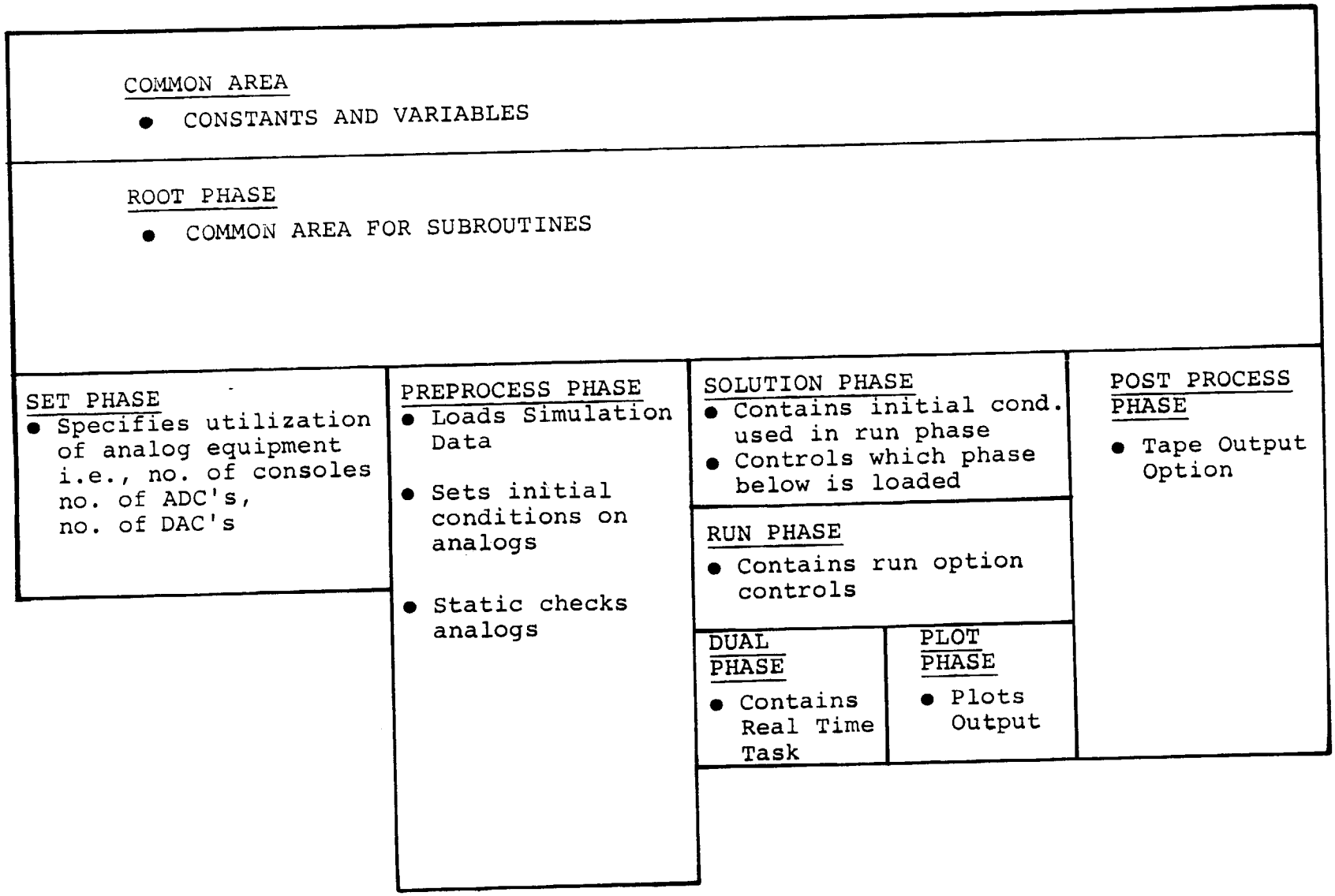

Figure G.3. GHP Phase Overlay Structure (Digital Core Allocations)

1. ANALOG TO DIGITAL I/O
   - Reads analog ADC lines
   - Converts to floating point

2. ENTRY FOR STATIC CHECK OF FAST REAL TIME TASK
   - Used for test cases W/O I/O

3. ANGLE INITIALIZATION SECTION
   - Sin, cos i_{NL} & i_{NR}
   - $I_{NACELLE}$
   - Sin, cos $i_{NL}-\lambda$, $i_{NR}-\lambda$ using trig
   - $\delta_{FLAP}{}^2$

4. VELOCITY SECTION (VELOCITIES, VELOCITIES^2, FREESTREAM, DYN. PRESSURE, TRANSFORM.)
   - Fuselage (also α_{fus}, β_{fus}, sin , cos)
   - Doors open/close logic-f(i_{NAC},q_{FUSE})
   - Rotor Hub - body axes, shaft axes, free-stream
   - Wing A/C - body axes, chord axes, free-stream
   - Tail

5. ROTOR SECTION - LEFT AND RIGHT
   - α,ζ,sin, cos of α and ζ
   - Rotor angular rate transform. p,q,R
   - Ω, V_{TIP}, μ, Ω^2, μ^2
   - Rotor control axes transform A_{1C}, B_{1C} WRT ϕ_p, ζ
   - Rotor EQS for CNF, CSF, CP, CYM
   - Forces and moments from coefficients T, N.F., S.F., M,N,Q
   - Hub moments - Nacelle axes
   - Resolution of forces & moments - body axes at tip
   - Summation with nacelle aero
   - Gust load alleviation system

6. WING SECTION - LEFT AND RIGHT
   - q_{LW}, q_{RW}, q_{WING}
   - Doors open/close check
   - If doors open
     - Calc. X,Y,Z, L,M,N_{AERO}
     - Leave wing section & Set q's=0
   - If doors closed
     - α, β, α_{SSO}, α_{RIG}, $\bar{\alpha}$
     - Aileron, Spoiler, Flap contribution to lift, drag, moment; Call AILSP
     - Contribution due to totally washed wing; call CLCDCM
     - Contribution due to totally unwashed wing; call CLCDCM $\bar{C}_L$; Call CCF2
     - α, sin & cosα, sin & cosβ, sin & cos ϵ_p
     - α, β check for stall
     - Aero Calc & resolution
     - Wing/rotor interference

7. TAIL SECTION
   - ϵ_{TAIL}, ϵ_o if necessary; logic for doors open/closed
   - α_{HT}, sin, cos($\alpha_{HT}-i_{HT}$)
   - 7 region $C_{L_{HT}}$, $C_{D_{HT}}$ curve
   - β_{VT}, α_{VT}, σ, sin, cos ($\beta_{VT}-\sigma$)
   - 7 Region C_{LVT}, C_{DVT}, curve
   - If doors open; 1/2 efficiency of horizontal tail
   - Vertical tail Aero
   - Total tail Aero

8. EQUATION OF MOTION SECTION
   - Call gear subroutine
   - Total Fuse Aero
   - Calculate total aircraft Aero X_{AERO}, Y_{AERO}, Z_{AERO}, L_{AERO}, M_{AERO}, N_{AERO}
   - Break Z_{AERO}, L_{AERO}, M_{AERO} into vertical bending/non-vertical bending parts
   - EOM coefficients
   - Vertical bending equations with flag
   - Torsion equation with flag
   - Fill DAC array (64)

9. DIGITAL TO ANALOG I/O
   - Convert DACS to integer
   - Write values

Figure G.4. Contents of Real Time Task – Fast Loop

1. ANALOG TO DIGITAL I/O

- Reads discretes
- Assigns flags to discretes
- Check for trim sheet flag
- Read 3rd console ADCS if required

2. ENTRY FOR STATIC CHECK OF SLOW REAL TIME TASK

- Used for test cases w/o I/o

3. PRELIMINARY CALCULATIONS

- $\sin^2 i_{NL}$, i_{NR}; sin, cos $2i_{NR}$, $2i_{NL}$; h^2, q_{FUSE}
- XCG, ZCG
- V_{NORTH}, V_{EAST}, ground track

4. AIR & ENGINE MODEL

- δ, T°F, ρ, a, M, $\sqrt{1-M^2}$
- TEA, preliminary engine routine calculations
- SHP, ΩE, %Q; call engine

5. FUSELAGE SECTION

- C_{DF}, C_{LF}, C_{YF}, C_{MF}, C_{NF}
- Aero calculation

6 GROUND EFFECT SECTION (WING & ROTOR)

- (ag/a)w, K_{99}, (T_{TGE}/T_{OGE}), D/T, (M/T)

7. NACELLE SECTION LEFT & RIGHT

- α_{NAC}, β_{NAC}; sin & cos α_{NAC}, β_{NAC}
- C_D, C_L, C_Y, C_M, C_N nacelle
- Aero calculation

8. WING IMMERSED AREA SECTION - LEFT & RIGHT

- τ, V_*, Look-up v_*,
- $\bar{\epsilon}_p$, C_{TSR}
- $\bar{\zeta}$, $\bar{\alpha}_R$, $\bar{\epsilon}_p$ $\bar{C}_{T_s}$, $\sin\zeta \cos\bar{\zeta}$, $\sin\bar{\zeta} \cos(\bar{I}_{NAC} - \bar{I}_w)$, $\tan(\bar{\alpha}_R - \bar{\epsilon}_p)$
- ζ_{R1}, ζ_{R2}, ζ_{R3}, ζ_{R4}
- S_{iR}, S_{iL}, S_{iL}/S, S_{iR}/S, S_{iT}, AR_i, C_{L_i}, K_a

9. ROTOR/ROTOR INTERFERENCE

10. GROUND EFFECT - TAIL

- $H_{w_{c/4}}$, $H_{T_{c/4}}$, $(a_q/a)_t$

Figure G.5. Contents of Real Time Task – Slow Loop

```
      SUBROUTINE RTEAST
      COMMON/CONST/ ISCOPE,IFLAG(100),IDSPC(4,8),MIFCB(2),MICNT(2),
     *              EDSIM ,IPAS      ,PILMSK      ,NFRAME(2),KONFIG(2)
      COMMON/ENG/  NWDTIP,NEIPD ,NETHID,NPIND ,NQIND ,NPNOID ,
     *             NOTMX,ENIMX ,ENITMX, NPMX ,EQMX  ,SHPSTR
     *             ENDIPS,ENISTE,RDES  ,ZERO ,TCDEF
      COMMON/FLAGS/ IWARN1(10),IWARN2(10),ISENCE(2),IWREVT(2),ICONDP,
     1 ITRIM,JTRIM,KTRIM,NPLOT,NPLOT2,IPHASE,ISLOW,SWLG,GBUTON,
     2 ISTA,ISTP,ASET,NVB,ATNST
      LOGICAL*1  IWARN1,IWARN2
      COMMON/HYP  PI/PROJ  ,NCONSL,NPCS(2),NCHAIN(2),IFRAME(2),NADCS(2),
     *             BDMOS(4),NDACS(4),IPCX(4),IFC(4),NCCN(4) ,LETR(4) ,
     *             IC(19)  ,ISTIC   ,HOLD(19),ISTHO,OPERA(19),
     *             ISTGO   ,DIGAN(19),ISTDA  ,ANDIG(19),ISTAD,
     *             IC2(19) ,ISTIC2  ,HOLD2(19),ISTHO2 ,OPERA2(19),
     *             ISTGO2  ,DIGAN2(19),ISTDA2  ,ANDIG2(19),ISTAD2, IGN,
     *             ISTOTT  ,IRONIT,IAD,IOC,IOC21,ICLR,ITSC,ILEX,ISETC ,
     *             MONITS  ,IDORC(4)  ,ISHRC(4) ,ISYNC(4) , NITS  ,
     *             IHOR    ,ISCHAN    ,ISBASE(2),ISREQD(2), IRCTS(4),
     *              TAUL(4) ,IPSNDS(10,5),DTIM(2) ,TRIM(19) ,ISTRM ,
     *              TRIM2(19),ISTRM2
      COMMON/HYPRID/ KBD(2,2)
      COMMON/RTDATA/ SIGIW ,COSIW ,SINLAM,COSLAM,SUMIXX,SUMIXZ,SUMIYY,
     *              SUMIZZ,XFCON ,XRLCON,YWCON ,XXICON,XXJCON,XZICON,
     *              YYICON,YYJCON,ZFCON ,ZRLCON,ZWCON ,ZZICON,ZZJCON,
     *              SLAC  ,HTSTLL,VTSTLL,DOVDSK,ARWING,CPHIP ,SPHIP ,
     *              CVDTIM,
     *              COEF1 ,COEF2 ,COEF3 ,COEF4 ,COEF5 ,COEF6 ,COEF7 ,
     *              COEF8 ,COEF9 ,COEF10,COEF11,COEF12,COEF13,COEF14,
     *              COEF15,COEF16,COEF17,COEF18,COEF19,COEF20,COEF21,
     *              COEF22,COEF23,COEF24,COEF25,COEF26,COEF27,COEF28,
     *              COEF29,COEF30,COEF31,COEF32,COEF33,COEF34,COEF35
     *              COEF36,COEF37,COEF38,COEF39,COEF40,COEF41,COEF42
      COMMON/KAIN/ SCADC1(32),SCADC2(32),SCADC3(32),SCADC4(32),
     *             SCDAC1(32),SCDAC2(32),SCDAC3(32),SCDAC4(32),
     1          ,DPRIME,DPRIME,DPRIME,VPRIME,VPRIME,THE   ,PHI   ,  30  IF
     *          ,HDOT  ,H     ,DDM13 ,DDM14 ,DDM14 ,DDM15 ,HDOT  ,
     *          ,DELAIS,DELSPP,DELSPL,CTLPRM,CNEPL ,CSEPL ,CPMPL ,
     *          ,CPL   ,CTLPRM,CTLPRP,CSEPR ,CPMPR ,CYMPR ,CPR   ,
     *          ,AICRP ,AICDTL,SINL  ,ICLPR,ICLPR,AICRPL,BICRPR,
     6          ,DDM45 ,DDM45 ,DDM45 ,DDM46 ,DDM47 ,DDM48 ,  80  IF
     7          ,VSIST ,VSIST ,VSIST ,PSIST ,QSIST ,RSIST ,QMDDT ,  80  IF
     *          ,TDS   ,AMSCLP,SMACLP,ENSL  ,ENER  ,DELELV,DELELP
     *        , DELST ,DELST ,DELST ,DELT4 ,DELRS ,DELSS ,DELRS ,THTSR ,
     *          THTSL ,ADCS(23)
      COMMON/XMAP/ EMFE1  ,EMF2  ,EMF3  ,EMF4  ,DMF1  ,DMF2  ,DMF3  ,     1  TO  7
     *             DMF4  ,ESF1  ,ESF2  ,ESF3  ,ESF4  ,DSF1  ,DSF2  ,     8  TO 14
     *             DSF3  ,DSF4  ,EPM1  ,EPM2  ,EPM3  ,EPM4  ,EPM5  ,    15  TO 21
     *             EPM6  ,EPM7  ,DPM1  ,DPM2  ,DPM3  ,DPM4  ,DPM5  ,    22  TO 28
     *             DPM6  ,DPM7  ,EYM1  ,EYM2  ,EYM3  ,EYM4  ,EYM5  ,    29  TO 35
     *             EYM6  ,EYM7  ,DYM1  ,DYM2  ,DYM3  ,DYM4  ,DYM5  ,    36  TO 42
     *             DYM6  ,DYM7
      COMMON/XYZ/ AINHT ,AINH  ,ALAMDA,ALHTST,ALVTST,AREAHT,AREAW ,     1  TO  7
     *            ,SHOT  ,ARVT  ,AVEYAC,AVEYCS,BLS   ,CDOF  ,CDOHT ,CDOVT ,     8  TO 14
     *            ,CLALHT,CLALVT,CMOF  ,CNON  ,CNOF  ,CNOLN ,CNORN ,CYALVT,    15  TO 25
```

Figure G.6. Model 222 Simulation Digital Listing

```
      3DOPLG ,DCMLC ,FINPR ,DOVT  ,DSDAET,EFFHT ,EFFVT ,FIE   ,FINDEG,    26 TO 34
      *FIP   ,FIXXF ,FIXXPR,FIXXW ,FIXZF ,FIXZPR,FIXZW ,FIYYF ,FIYYPR,    35 TO 43
      *FIYYW ,FIZZF ,FIZZPR,FIZZW ,HP    ,OMREF ,PC    ,PI    ,RDTRAD,    44 TO 52
      *SPEPR ,SRWPR ,SG    ,SHF   ,SHW   ,SK0   ,SK1   ,SK2   ,SK3   ,    53 TO 61
      *SK4   ,SK5   ,SK6   ,SK7   ,SK8   ,SK9   ,SK10  ,SK20  ,SK21  ,    62 TO 70
      *SK22  ,CDONLO,SK31LO,SK31LO,SK32  ,CDONHI,SK34  ,SK35  ,SK36  ,    71 TO 79
      *SK37  ,SK38  ,SK39  ,SK40  ,SK41  ,SK42  ,SK43  ,SK44  ,SK45  ,    80 TO 88
      *SK46  ,SK47  ,SK48  ,SK49  ,SK50  ,SL    ,SLF   ,SLPA  ,SLW   ,    89 TO 97
      *SM    ,SMF   ,SMN   ,SMW   ,SPAN  ,TAUHT ,TAUVT ,XFAC  ,XHT   ,    98 TO106
      *XWAC  ,XVT   ,YN    ,YPA   ,YWAC  ,ZFAC  ,ZHT   ,ZPA   ,ZWAC  ,
      *ZVT   ,CLOAL ,PHIPH ,SK30HI,EN2REF,XWC2  ,BT1   ,BT2   ,BT3   ,
      *BKD1T ,BKD2T ,BKD3T ,BKM1T ,BKM2T ,BKM3T ,BKM4T ,SK31HI,
      *EEH   ,CLMAX ,ALBRK ,BKLSW ,BKNSW ,SQFPRM,DEG20 ,DGTORD,HTVTKT,   133TO141
      *RTOV2 ,RDTODG,ROTEPS,SKEPS ,ALNCBK,TAURT1,TAURT2
12    COMMON/DACIO/ DAC1(32),DAC2(32)
13    COMMON/XLINTP/ AKEY(16),AMEM(2),BKEY(16),BMEM(2),GKEY(10),GMEM
14    COMMON/XEUMC / VSTARG(33), TAJAG(9),SVSTAR(33,9),SQFARG(35),
     1       GAATAB(35),GPATAB(35),ALFTAB(35)
15    COMMON/XCNTRL/ SKDLR,SKDLS,SKDLB,SKDLE,SKDLRD,TH75LP,TH75LN,
     1       TAUGLS,GLSLM,TAUGTC,GTCLM,CNTRBL(4),DMA,ETAA,
     2       SKDA  ,GTH,TAUTH,DMSC,DMSLP,DMLM,GDMG,SKDCOL,THRTLM,THDMLP,
     3       THDMLN,SHPLM,GTHGOV,DMRD,ETARD,TTMSLP,TTMSLN,GDB1,GD32,
     4       TAUDR,GQ,GTHF,TAUD1,TAUD2,TAUTHF,GLPS,GLPSLP,GPDS,TAUPDS,
     5       GP,TAUP,GBETP,TAUHFT,GPHI,TAUPHI,GPSIDR,GBETDR,GRDR,TAUDR,
     6       GPSI,TAUPSI,GBETR,TAUPR,GPR1,TAUPR1,GR,TAUR1,TAUR2,TAUR3,
     6       PLM,DPLM,DLBL4,DLSLM,DLRLM,
     7       TDMDLM,GDLTH,SKW1,SHW2,SHW3,SKW4,SKW5,
     8       SKW6,SKW7,SKW8,SKW9,SKW10,GGUST,TAUGST,DMWB,ETAW3,GINRF,
     9       DMIRF,ETAIRF,SKTHTW,SC1,SC2,DCMDCL,AINPLM,TAUR01,TAUR02,
     4       TAUFF,TAUCYR,DCYRLM,AC,ASLP,ALIM,TAUSHP,DELALM,
     3       DLFLP
16    COMMON/INITVR/                                                       1 - 9
     1 AVEIN ,CILAML,CILAMR,COSINL,COSINR,COSPSI,C2INL ,C2INR ,DLFPSQ,
     2 HSQ   ,SILAML,SILAMR,SININL,SININR,SINPSI,SSQINL,SSQINR,S2INL ,   10 - 18
     3 S2INR                                                              19
17    COMMON/GGSTVR/                                                       1 - 6
     1 VEAST ,VNORTH,XGG   ,XDTGG ,ZGG   ,ZDTGG
18    COMMON/ENGVAR/                                                       1 - 9
     1 AMACH ,AMACSQ,DEL   ,EMAXN1,EMAXN2,EMXWDT,EN2STR,ESMACH,OMEGEL,
     2 OMEGER,ONOVTC,OVFSM,OVSDTH,OVTHDL,RDE   ,RDEOV2,SHPPRL,SHPPRR,    10 - 18
     3 SMA   ,SDTMX,SDTHTC,SDWDTX,TDEGE ,TEAL  ,TEAR  ,THCDEL,THETC      19 - 27
     4,RDTCL,RDTDR                                                        28 TO 29
19    COMMON/VELVAR/                                                       1 - 9
     1 AMUL  ,AMULSQ,AMUR  ,AMURSQ,WRDTL ,OMDTL ,OMDTR ,OMEGAL,OMEGAR,
     2 OMSOL ,OMSDR ,OHT   ,ULW   ,ULWPR ,ULWSQ ,UP    ,URL   ,URLPR ,    10 - 18
     3 URLURL,URR   ,URRPR ,URRURR,URW   ,URWPR ,URWSQ ,USQ   ,UVT   ,    19 - 27
     4 VALFLW,VALFRW,VALFS ,VALNCL,VALNCR,VBETVT,VLW   ,VLWPR ,VLWSQ ,    28 - 36
     5 VP    ,VRL   ,VRLPR ,VRLVRL,VRR   ,VRRPR ,VRRVRR,VRW   ,VRWPR ,    37 - 45
     6 VRWSQ ,VSQ   ,VTIRL ,VTIRR ,VTOTAL,VTOTLR,VTOTRR,VVT   ,VZETL ,    46 - 54
     7 VZETR ,WHT   ,WLW   ,WLWPR ,WLWSQ ,WP    ,WRL   ,WRLPR ,WRLWRL,    55 - 63
     8 WRW   ,WRWPR ,WRWSQ ,WRR   ,WRRPR ,WRRWRR,WSQ   ,WVT               64 - 71
20    COMMON/FUSVAR/                                                       1 - 9
     1 ALARF ,ALARFP,ALFSQ ,ALPHF ,AMARF ,AMARFP,ANARF ,ANARFP,BETAF ,
     2 BETFSQ,CBCMF ,CDF   ,CLF   ,CMF   ,CNF   ,COSALF,COSBTF,CYF   ,    10 - 18
     3 DLLG  ,DMLG  ,DNLG  ,DXLG  ,DYLG  ,DZLG  ,DFSW  ,SBFCAF,SBFSAF,    19 - 27
```

Figure G.6. (Continued)

```
     4 SINZLE,SINRTE,COF    ,XAERE ,XARFP ,YAERE ,YARFP ,ZAERE ,ZARFP     28 - 36
     * ,SINTHE,COSTHE,SINPHI,COSPHI
21   COMMON/GEEVAR/
     1 AGCVAT,AGCVAW,BIGX  ,HKR2  ,HMCVTL,HMCVTR,CDKCOR,CLTCOR,CLWCOR,    1 -  9
     2 DDVTL ,DDVTR ,EPRRM ,GEE   ,HGEELR,HGEERR,HLHUB ,HRHUB ,HTC4  ,   10 - 18
     3 HTC4  ,RPTI  ,RRI2  ,SHI   ,TICEL ,TICER                          19 - 24
22   COMMON/HADVAR/
     1 ALLNSQ,ALPHLN,ALPHRN,ALRNSQ,BETALN,BETARN,BTLNSQ,BTRNSQ,CALLN ,    1 -  9
     2 CALRN ,CBETLN,CBETRN,CDLN  ,CDDLN ,CDDRN ,CDRN  ,CLLN  ,CLRN  ,   10 - 18
     3 CMLN  ,CMRN  ,CNLN  ,CNRN  ,CYLN  ,CYRN  ,DLLNC ,DLRNC ,DMLNC ,   19 - 27
     4 DMRNC ,DNLNC ,DNRNC ,DXLNC ,DXRNC ,DYLNC ,DYRNC ,DZLNC ,DZRNC ,   27 - 36
     5 SALLN ,SALRN ,SBETLN,SBETRN,SQLNC ,SQRNC ,TNAC1 ,TNAC2            36 - 44
23   COMMON/ROTVAR/
     1 AICL  ,AICLDP,AICR  ,AICRDP,ALARNC,ALLRH ,ALARNL,ALARNR,ALRRH ,    1 -  9
     2 ALPHLR,ALPHRR,AMARNC,AMARNL,AMARNR,AMLRH ,AMRNLP,AMRNRP,AMROTL,   10 - 18
     3 AMROTR,AMRRH ,ANARNC,ANARNL,ANARNR,ANLRH ,ANROTL,ANROTR,ANRRH ,   19 - 27
     4 BICL  ,BICLDP,BICR  ,BICRDP,CNFA1L,CNFA1R,CNFB1L,CNFB1R,CNFL  ,   28 - 36
     5 CNFR  ,CPSZHL,CPSZHR,CPMA1L,CPMA1R,CPMB1L,CPML  ,CPMR  ,          37 - 45
     6 CSFA1L,CSFA1R,CSFB1L,CSFB1R,CSFL  ,CSFR  ,CTL   ,CTR   ,CYMA1L,   46 - 54
     7 CYMA1R,CYMB1L,CYMB1R,CYML  ,CYMR  ,FIPOML,FIPOMR,FNORML,FNORMR,   55 - 63
     8 FSIDEL,FSIDER,PNLN  ,PNLR  ,PNRN  ,PNRR  ,QNLN  ,QNLR  ,QNRN  ,   64 - 72
     9 QNRR  ,RNLN  ,RNLR  ,RNRN  ,RNRR  ,ROPIR4,ROPIR5,SHPROL,SHPROR,   73 - 81
     * SINZHL,SINZHR,TL    ,TORQL ,TORQR ,TR    ,TRMAR1,TRMAR2,TRMAR3,   82 - 90
     8 TRMAR4,TRMHR1,TRMHR2,XAERNC,XAERNL,XAERNR,YAERNC,YAERNL,YAERNR,   91 - 99
     9 ZAERNC,ZAERNL,ZAERNR,ZETHL ,ZETHR                                100- 104
24   COMMON/WNGVAR/
     1 ALARWG,ALLWPR,ALPHLW,ALPHRW,ALRGLW,ALRGRW,ALRWPR,ALWSSO,AMARLW,    1 -  9
     2 AMARRW,AMARWG,ANARWG,ARILW ,ARIRW ,ARWSSO,ATAULR,ATAURR,AVEALR,   10 - 18
     3 AVEALW,AVECLW,AVECTS,AVEERR,AVEZET,BETALW,BETARW,BKALPR,BKARPR,   19 - 27
     4 CALLW ,CALRW ,CAVINW,CAVZET,CBETLW,CBETRW,CEPLW ,CEPRW ,CDCNTL,   28 - 36
     5 CDCRTR,CDDUM ,CDLWAD,CDLWPR,CDLWSS,CDRWAD,CDRWPR,CDRWSS,CDSLW ,   37 - 45
     6 CDSRW ,CLAVE ,CLCNTL,CLCNTR,CLDUM ,CLILW ,CLIRW ,CLLWAD,CLLWPR,   46 - 54
     7 CLLWSS,CLRWAD,CLRWPR,CLRWSS,CLSLW ,CLSRW ,CLSW  ,CLZERO,CMCNTL,   55 - 63
     8 CMCNTR,CMLWAD,CMLWSS,CMRWAD,CMRWSS,CMSLW ,CMSRW ,CMSW  ,CTAULR,   64 - 72
     9 CTAURR,CTSLR ,CTSRR ,DCDDF ,DCDLDA,DCDLSP,DCDRDA,DCDRSP,DCLDF ,   73 - 81
     * DCLLDA,DCLLSP,DCLRDA,DCLRSP,DCLSPW,DCMDF ,DCMLDA,DCMLSP,DCMRDA,   82 - 90
     8 DCMRSP,DCMSPW,EPILR ,EPIRL ,EPPLR ,EPPRR ,EPWRL ,EPWRR ,EPSLR ,   91 - 99
     9 RESLR ,SALLW ,SALRW ,SAVINW,SAVZET,SBETLW,SBETRW,SEPLW ,SEPRW ,  100- 108
     * SGNULW,SGNURW,SIL   ,SILW  ,SIR   ,SIRW  ,SIT   ,STAULR,STAURR,  109- 117
     8 SVSTAN,SVSTRL,SQLW  ,SQRESL,SQRESR,SQRW  ,SQWING,TAULR ,TAURR ,  118- 126
     9 TAVSEW,TEMWG1,TEMWG5,TEMWG6,TEMWG7,TEMWG8,TZETI ,TZET2 ,TZET3 ,  127- 135
     * TZET4 ,TZETS ,TZETT ,VSTAR ,VSTARL,XAERLW,XAERRW,XAERWG,YAERLW,  136- 144
     8 YAERRW,YAERWG,ZAERLW,ZAERRW,ZAERWG,ZETR1 ,ZETR2 ,ZETR3 ,ZETR4   145- 153
25   COMMON/WNGVR2/
     1 TRMWG4,TRMWG9,TRMWG10,TRMWG11,HWACR ,HDTACR,HWACL ,HDTACL,HIR   ,  1 TO 9
     2 HIDTR ,HIL   ,HIDTL ,AMACTL,AMACTR,THTLAC,THTRAC
26   COMMON/TAILV2/
     1 ALARHT,ALART ,ALARVT,ALPHHT,ALPHVT,AMARHT,AMART ,AMARVT,ANARHT,    1 -  9
     2 ANART ,ANARVT,ETVT  ,CALTHE,CBETSQ,CDHT  ,CDVT  ,CLHT  ,CYVT  ,   10 - 18
     3 CRTAIL,CRZERO,SALTHT,SBETSQ,STC4A ,TRMHT ,TRMVT ,XAERT ,XARHT ,   19 - 27
     4 XARVT ,YAERT ,YARHT ,YARVT ,ZAERT ,ZARHT ,ZARVT ,EPTL1 ,ALHTPR,   28 TO 36
     5 ALHTE ,ALHTP ,ALHTM ,CLAT  ,TRMHT2,TRMHT3,CLHTST,CDHTST,ALVTPR,   37 TO 45
     6 ALVTE ,ALVTP ,ALVTM ,CYAT  ,TRMVT2,TRMVT3,CYVTST,CDVTST           46 TO 53
27   COMMON/FIXVAR/
     1 CLAERD,CMAERD,CNAERD,CMDW  ,FIXX  ,FIXZP ,FIXZD ,FIXZR ,FIYY  ,    1 -  9
```

Figure G.6. (Continued)

```
                2 FIZZ   ,FJXX   ,FJYY   ,FJZZ   ,DOVIXX,DOVIYY,DOVIZZ,PP     ,PQ     ,   10 - 18
                3 PR     ,RR     ,RO     ,TERM1  ,TERM2  ,TERM3  ,TERM4  ,TERM5  ,TERM6  ,   19 - 27
                4 TERMP1,TERMQ1,TERMR1,TERM1R,TERM2R,TERM3R,TERM1L,TERM2L,TERM3L,   28 - 36
                5 TRMTTL,TRMTTP,XAERO ,XF     ,XFMFLF,XL     ,XLCOS ,XLSIN ,XR     ,   37 - 45
                6 XRCOS ,XRSIN ,XW     ,XWMWHW,YAERO ,ZAERO ,ZF     ,ZFMFHF,ZL     ,   46 - 54
                7 ZLCOS ,ZLSIN ,ZR     ,ZRCOS ,ZRSIN ,ZW     ,ZWMWHW,P      ,Q      ,   55 - 63
                8 R      ,U      ,V      ,W
28               COMMON/TRMCON/ UTRIM,VTRIM,HTRIM,HDTRIM,THTRIM,AITRIM,
                1               SKTRIM(13)
29               COMMON/XPAR3/ CONS1 ,CONS2 ,CONS3 ,CONS4 ,CONS5 ,CONS6 ,CONS7 ,     1 TO  7
                1               CONS8 ,CONS9 ,CONS10,CONS11,CONS12,CONS13,CONS14,     8 TO 14
                2               CONS15,CONS16,CONS17,CONS18,CONS19,CONS20,CONS21,    15 TO 21
                3               CONS22,CONS23,CONS24,CONS25,CONS26,CONS27,CONS28,    22 TO 28
                4               CONS29,CONS30,CONS31,CONS32,CONS33,CONS34,CONS35,    29 TO 35
                5               CONS36,CONS37,CONS38,CONS39,CONS40,CONS41,CONS42,    36 TO 42
                6               CONS43,CONS44,CONS45,CONS46,CONS47,CONS48,CONS49,    43 TO 49
                7               CONS50,CONS51,CONS52,CONS53,CONS54,CONS55,CONS56,    50 TO 56
                8               CONS57,CONS58,CONS59,CONS60,CONS61,CONS62,CONS63,    57 TO 63
                9               CONS64,CONS65,CONS66,CONS67,CONS68,CONS69,CONS70,    64 TO 70
                A               DBRK1 ,DBRK2 ,DBRK3 ,DBRK4 ,DBRK5 ,DBRK6 ,DBRK7 ,    71 TO 77
                B               DBRK8 ,DBRK9 ,DBRK10,DBRK11,DBRK12,DBRK13,DBRK14,    78 TO 84
                *               DBRK15,DBRK16,DBRK17,DBRK18,DBRK19,DBRK20,DBRK21     85 TO 91
                D              ,SFTL  ,SFNFL ,SFSFL ,SFPML ,SFYML ,SFOL  ,SFPL  ,
                E               SFTR  ,SFNFR ,SFSFR ,SFPMR ,SFYMR ,SFOR  ,SFPR
                F              ,CONS71,CONS72,CONS73,CONS74,CONS75,CONS76,CONS77     106TO112
                G             ,CONS78,CONS79,CONS80,CONS81                           113TO116
30               DIMENSION ADC(64)
31               EQUIVALENCE (ADC(1), PPRIME)
C
C
C          TABLE OF PRE-COOKED COEFFICIENTS DEFINITION C
C        XFCON =    SLF*(1.-SMF/SM) -SLW*SMW/SM
C        ZFCON =    SHF*(1.-SMF/SM) -SHW*SMW/SM
C        XWCON =    SLW*(1.-SMW/SM) -SLF*SMF/SM
C        ZWCON =    SHW*(1.-SMW/SM) -SHF*SMF/SM
C        XRLCON=   -(SMF*SLF +SMW*SLW)/SM
C        ZRLCON=   -(SMF*SHF +SMW*SHW)/SM
C        XXICON=    SUMIXX + 2.*SMN*YN*YN
C        YYICON=    SUMIYY
C        ZZICON=    SUMIZZ + 2.*SMN* YN*YN
C        XZICON=    FIXZF + FIXZW
C        XXJCON=    SUMIZZ -SUMIYY +2.*SMN*YN*YN
C        YYJCON=   (FIXXF -FIZZF)+(FIXXW-FIZZW)
C        ZZJCON=   (SUMIYY-SUMIXX) -2.*SMN* YN*YN
C        COEF1 =    SL*SMN/SM
C        COEF2 =    SL*(1. -SMN/SM)
C        COEF3 =    FIXXPR -FIZZPR
C        COEF4 =    SL*SMN
C        COEF5 =    SMF * SHF
C        COEF6 =    SMW * SHW
C        COEF7 =    SMF * SLF
C        COEF8 =    SMW * SLW
C        COEF9 =    SL*SMN*YN
C           COEF10=  1. / SM
C        COEF11= BKLSW*AVEYAC/2./SPAN
```

Figure G.6. (Continued)

```
C       COEF12= RKMSW*AVEYAC/2./SPAN
C       COEF13 =        (FIYYPR+SL*SL*SMN*(1.-SMN/SM))
C       COEF16= AREAW*SPAN          (S * B )   .
C       COEF17= CH  /SPAN           (C / B )   . WING CHARACTERISTICS
C          COEF18=  S / 2
C       COEF19 =  PI*ROTRAD*ROTRAD*ROTRAD*ROTRAD*ROTRAD
C       COEF20 =  COEF19 * ROTRAD
C       COEF21 =  1./(0.5*PI * ARHT)
C       COEF22 =  1./(0.5*PI * ARVT)
C       COEF23 =  ARSAHT * EFFHT
C       COEF24 =  ARSAVT * EFFVT
C       COEF25 =   1./(2.*PI* ROTRAD*ROTRAD)
C       COEF26 =  CHORD /2.
C       COEF27 =  1./CHORD/CHORD
C       COEF28 =  1./(AREAW/2.)
C       COEF29 =   PI * ARWING
C          COEF30=  1./(PI*ARWING)
C          COEF31=  S * C /2
C          COEF32= S * C /2 *CLALPH*(DCMDCL+XWAC/C )
C          COEF33= S * C /2 *CLALPH*(DCMDCL+XWAC/C ) *4/3/PI *YN/YWAC
C          COEF34=  YWAC / YN / X TH TWIST
C       COEF35=  B =
C          TABLE OF INTERMEDIATE CALCULATIONS
C       ZRSIN =  ZR* SIN(INR-LAMDA)
C       ZRCOS =  ZR* COS(INR-LAMDA)
C       XRSIN=   XR* SIN(INR-LAMDA)
C       XRCOS=   XR* COS(INR-LAMDA)
C       ZLSIN =  ZL* SIN(INL-LAMDA)
C       ZLCOS =  ZL* COS(INL-LAMDA)
C       XLSIN =  XL* SIN(INL-LAMDA)
C       XLCOS =  XL* COS(INL-LAMDA)
C       ZFMFHF=   SMF* SHF * ZF
C       ZWMWW=   SMW* SHW * ZW
C       XFMFLF =   SMF* SLF * XF
C       XWMWLW=   SMW* SLW * XW
C       TERM1 =  (IXXPR-IZZPR)*(SSQINR + SSQINL)
C       TERM2 =  (IXZPR)*( S2INR +S2INL)
C       TERM3 =  (SL *SMN)*(ZRSIN +ZLSIN)
C       TERM4 =  (IXXPR-IZZPR)*(S2INR +S2INL) * 0.5
C       TERM5 =   IXZPR *(C2INR+C2INL)
C       TERM6 =   (SL *SMN) *(XRCOS + XLCOS)
C       DOVIXX=   1./FIXX
C       DOVIYY=   1./FIYY
C       DOVIZZ=   1./FIZZ
C       XD =      3*0
C       YD =      0*0
C       ZD =       0
C       XW =      0*0
C       YW =      0*0
C          FOR TFT CALC USE FOLLOWING TRIG IDENTITIES WHERE
C             A= INCIDENCE ANGLE INR,INL   B = LAMDA
C          COS(A-B) = COS(A)*COS(-B) -SIN(A)*SIN(-B)
C                   = COS(A)*COS(B)  +SIN(A)*SIN(B)
C          SIN(A-B) = SIN(A)*COS(-B) +COS(A)*SIN(-B)
C                   = SIN(A)*COS(B)  -COS(A)*SIN(B)
```

Figure G.6. (Continued)

```
C
C         SIN(2A) = 2.*SIN(A)*COS(A)
C         COS(2A) = 1. - 2.*SIN(A)*SIN(A)
C
C
C         DISCRETE LINE  ALLOCATION
C
C             CONSOLE  1
C
C         BIT NUMBER    DGS NUMBER    FUNCTION
C            31            17          PANIC
C            30            16          TRIM
C            29            15          CONSOLE OPERATE
C
C         HORIZONTAL TAIL
C
C           1. IF HWC/4 GT 50 FT.   GEF = 0.
C           2. IF  V  LE  30 KT   TAIL AERO = 0.
C           3. IF  DEL FLAP GT  75 DEG    EPSILON TAIL = 0.
C           4. IF  CTS LT 0.5  EPSILON P = 0.
C           5. LIMIT RANGE OF ABS(ALPHAT) TO (ALHTSTALL - 2. DEG) AND
C                PRINT WARNING
C         VERTICAL  TAIL
C           1. LIMIT THE RANGE OF ABS(ALPHVT) TO(ALVTSTALL -2 DEG) AND
C                PRINT WARNING
32                                  ( B L A N K   C A R D )
                                    ( B L A N K   C A R D )
                                    ( B L A N K   C A R D )
                                    ( B L A N K   C A R D )
                                    ( B L A N K   C A R D )
                                    ( B L A N K   C A R D )
                                    ( B L A N K   C A R D )
                                    ( B L A N K   C A R D )
                                    ( B L A N K   C A R D )
                                    ( B L A N K   C A R D )
                                    ( B L A N K   C A R D )
                                    ( B L A N K   C A R D )
                                    ( B L A N K   C A R D )
                                    ( B L A N K   C A R D )
                                    ( B L A N K   C A R D )
                                    ( B L A N K   C A R D )
                                    ( B L A N K   C A R D )
                                    ( B L A N K   C A R D )
                                    ( B L A N K   C A R D )
                                    ( B L A N K   C A R D )
****|************************ S Y N T A X   E R R O R ************************  8  ))
33          CALL TRACK('RTFAST  ',1)
C
C             READ ADCS
34          CALL USEAID(ANDIG )
35          KPAN = 371
36     40   GO TO(40 ,50,500),ISTAD
C
C             CONVERT TO FLOATING POINT
```

Figure G.6. (Continued)

```
37      5     CALL ADCELT(KAP(IPSNDS(7,1)),ADC,64,SCADCL )
        C
38
                                        ( B L A N K   C A R D )
                                        ( B L A N K   C A R D )
                                        ( B L A N K   C A R D )
                                        ( B L A N K   C A R D )
                                        ( B L A N K   C A R D )
                                        ( B L A N K   C A R D )
                                        ( B L A N K   C A R D )
                                        ( B L A N K   C A R D )
                                        ( B L A N K   C A R D )
                                        ( B L A N K   C A R D )
                                        ( B L A N K   C A R D )
                                        ( B L A N K   C A R D )
                                        ( B L A N K   C A R D )
                                        ( B L A N K   C A R D )
                                        ( B L A N K   C A R D )
                                        ( B L A N K   C A R D )
****|*********************************** S Y N T A X   E R R O R ************************   E  ))
39            ENTRY TSRTF
        C
40             CALL SINCOS(AINNR,SININR ,COSINR )
41            CALL SINCOS(AINNL,SININL ,COSINL )
42            AVFIN  =  ATAN2(AINNL +AINNR)
        C
43            CILAMR =  COSLAM*COSINR +SINLAM* SININR
44            CILAML =  COSLAM*COSINL +SINLAM* SININL
45            SILAMR =  COSLAM*SININR -SINLAM* COSINR
46            SILAML =  COSLAM*SININL -SINLAM* COSINL
        C
47             DLEPS2 =  DELELP * DELELP
        C
        C
48
                                        ( B L A N K   C A R D )
                                        ( B L A N K   C A R D )
                                        ( B L A N K   C A R D )
                                        ( B L A N K   C A R D )
                                        ( B L A N K   C A R D )
                                        ( B L A N K   C A R D )
                                        ( B L A N K   C A R D )
                                        ( B L A N K   C A R D )
                                        ( B L A N K   C A R D )
                                        ( B L A N K   C A R D )
                                        ( B L A N K   C A R D )
                                        ( B L A N K   C A R D )
                                        ( B L A N K   C A R D )
                                        ( B L A N K   C A R D )
                                        ( B L A N K   C A R D )
****|*********************************** S Y N T A X   E R R O R ************************   E  ))
        C        C.G. VELOCITY W.R.T. PIVOT (NON ROTATING AXES)
49            XDTCG =  -CDEFI*(AINDTL*SILAML+AINDTR*SILAMR )
50            YDTCG =  -CDEFI*(AINDTL*CILAML+AINDTR*CILAMR )
        C
51             TE = TPLANE + TGUST
```

Figure G.6. (Continued)

```
      V =  VPRIME + VGUST
      W =  WPRIME + WGUST
      P =  PPRIME + PGUST
      Q =  QPRIME + QGUST
      R =  RPRIME + RGUST
      USQ= U*U
      VSQ=  V*V
      WSQ=  W*W
      VALFS=  FSQRT(USQ+WSQ,WORK)
      ALPHF=  ATAN2(W,U)
      BETAF=  ATAN2(V,VALFS)
      VTOTAL=  FSQRT(USQ+VSQ+WSQ,WORK)
      SQF= RHOHV2 *(USQ+VSQ+WSQ)
      IF(SQF.GT.SQFPRM) GO TO 130
      NCLOSE = 0
      SQFPRM= DBRK18+DBRK19
      GO TO 140
13    NCLOSE= 1
      SQFPRM= DBRK18-DBRK19
140   CONTINUE
C        GLAS SYSTEM
      CALL GINT(GKEY,GMEM,GMEM,ISTG,SQF,GAATAB,GAIALF,GBATAB,GBIALF,
     1          ALFTAB,ALFREF)
      GAIBET = GBIALF
      ALFGLS= ALPHF*RDTODG
      BETGLS = BETAF*RDTODG
      AIGLGS= ALFGLS*GAIALF+BETGLS*GAIBET
      AIGBGS= BETGLS*GAIBET-ALFGLS*GAIALF
      BIGGLS= ALFGLS*GBIALF
C        FUSELAGE PIVOT VELOCITY
      UP =  U - Q*ZCG -XDTCG
      VP =  V + P*ZCG-R* XCG
      WP =  W + Q*XCG -ZDTCG
C
C
C        LEFT ROTOR HUB VELOCITY - BODY AXES
      UPLPR = UP +R*YN -BLS*SININL*(Q+AINDTL)+Q* H1L
      VRLPR = VP +BLS*(R*COSINL+P*SININL) -P* H1L
      WRLPR = WP -P*YN-BLS*(Q+AINDTL)*COSINL +H1DTL
C
C        RIGHT ROTOR HUB VELOCITY - BODY AXES
      URRPR =UP-R*YN -BLS*SININR*(Q+AINDTR) +Q* H1R
      VRRPR =VP +BLS*(R*COSINR +P*SININR) -P* H1R
      WRRPR = WP +P*YN -BLS*(Q+AINDTR)*COSINR +H1DTR
C
C        LEFT ROTOR HUB VELOCITY - SHAFT AXES
      URL= URLPR*COSINL -WRLPR*SININL
      VRL=  VRLPR
      WRL=  URLPR*SININL +WRLPR*COSINL
C
C        RIGHT ROTOR HUB VELOCITY - SHAFT AXES
      URR =  URRPR*COSINR -WRRPR*SININR
      VRR =  VRRPR
      WRR=   URRPR*SININR +WRRPR*COSINR
C
```

Figure G.6. (Continued)

```
C        FREE STREAM VELOCITY
         UFLUFL = UFL *UFL
         VFLVFL =  VFL*VFL
         WFLWFL =  WFL*WFL
         UFRUFR = UFR * UFR
         VFRVFR =  VFR*VFR
         WFRWFR =  WFR*WFR
         VTOTFR =  FSQRT(UFRUFR+VFRVFR+WFRWFR,WORK)
         VTOTFL =  FSQRT(UFLUFL+VFLVFL+WFLWFL,WORK)
         WROTFL =  WFL+EPWFL*UFL
         WROTFR =  WFR + EPWFR*UFR
         VZETFL = FSQRT(VFLVFL+WROTFL*WROTFL,WORK)  + ROTEPS
         VZETFR =  FSQRT(VFRVFR+WROTFR*WROTFR,WORK)  + ROTEPS
C        LEFT WING A.C. VELOCITY - BODY AXES
         ULWPF = UP+Q*YWAC+Q*(ZWAC+HWACL)
         VLWPF =  VP+P*XWAC-P*(ZWAC+HWACL)
         WLWPF =  WP -P* YWAC -Q*  XWAC + HOTACL
C        LEFT WING A.C. VELOCITY - CHORD AXES
         ULW = ULWPF*COSIW -WLWPF *SINIW
         VLW = VLWPF
         WLW = ULWPF*SINIW  +WLWPF* COSIW

C        RIGHT WING A.C. VELOCITY - BODY AXES
         URWPF =  UP-Q*YWAC+Q*(ZWAC+HWACR)
         VRWPF =  VP+P*XWAC-P*(ZWAC+HWACR)
         WRWPF = WP +P* YWAC -Q*  XWAC + HOTACR

C        RIGHT WING A.C. VELOCITY - CHORD AXES
         URW = URWPF*COSIW - WRWPF*SINIW
         VRW = VRWPF
         WRW = URWPF*SINIW +WRWPF *COSIW


C        FREE STREAM VELOCITY

         VLWSQ =  VLW * VLW
         WLWSQ =  WLW * WLW
         ULWSQ =  ULW * ULW
C
         VALFL =  FSQRT(ULWSQ+WLWSQ,WORK)
C
         URWSQ =  URW* URW
         VRWSQ =  VRW* VRW
         WRWSQ =  WRW* WRW
         VALFR =  FSQRT(URWSQ+WRWSQ,WORK)

C

         UHT  = UP + ZHT *Q
         WHT  = WP - XHT *Q
C
C        VERTICAL TAIL AERO COORDINATE TRANSFORM
         UVT = UP + Q* ZVT
         ZVT =  WP + W* XVT -P*YVT
         WVT =  VP - Q* XVT
         VRETL = FSQRT(UVT*UVT+WVT*WVT,WORK)
```

Figure G.6. (Continued)

```
          C
  132                                 ( B L A N K   C A R D )
                                      ( B L A N K   C A R D )
                                      ( B L A N K   C A R D )
                                      ( B L A N K   C A R D )
                                      ( B L A N K   C A R D )
                                      ( B L A N K   C A R D )
                                      ( B L A N K   C A R D )
                                      ( B L A N K   C A R D )
                                      ( B L A N K   C A R D )
                                      ( B L A N K   C A R D )
                                      ( B L A N K   C A R D )
                                      ( B L A N K   C A R D )
                                      ( B L A N K   C A R D )
                                      ( B L A N K   C A R D )
                                      ( B L A N K   C A R D )
                                      ( B L A N K   C A R D )
                                      ( B L A N K   C A R D )
****|*********************** S Y N T A X   E R R O R ************************          6  ))
          C
          C        ROTOR INPUT EQUATIONS (AE2))
          C          NOTE ALPHRR AND ALPHLR ARE DEFINED BETWEEN 0 AND 180 DEGREES
          C                 I.E.  90 +OR- 90 DEGREES
  133           ALPHLR=  ATAN2(VZETL,URL)  + EPILR
  134           ZETHL=  ATAN2(VRL,WROTL)
  135           CALL SINCOS(ZETHL,SINZHL,COSZHL)
          C
  136           ALPHRR=  ATAN2(VZETR,URR)  + EPILR
  137           ZETHR=  ATAN2(VRR,WROTR)
  138           CALL SINCOS(ZETHR,SINZHR,COSZHR)
          C        VELOCITIES
          C
          C        ROTOT ANGULAR RATE TRANSFORMS
          C
          C        LEFT ROTOR - NACELLE AXES
  139           PNLN= P*COSINL - R*SININL
  140           QNLN= Q+AINDTL
  141           RNLN= P*SININL +R*COSINL
          C        LEFT ROTOR - WIND AXES
  142           PNLR=  PNLN
  143           QNLR= QNLN*COSZHL -RNLN*SINZHL
  144           RNLR= RNLN*COSZHL +QNLN*SINZHL
          C
          C        RIGHT ROTOR - NACELLE AXES
  145           PNRN=  -P*COSINR +R*SININR
  146           QNRN= Q+AINDTR
  147           RNRN=-P*SININR -R*COSINR
          C        RIGHT ROTOR - WIND AXES
  148           PNRR=  PNRN
  149           QNRR= QNRN*COSZHR +RNRN*SINZHR
  150           RNRR= RNRN*COSZHR -QNRN*SINZHR
          C
  151           OMEGAL=  OMEGA + PNLR
  152           OMEGAR=  OMEGA + PNRR
  153           OMSQL =   OMEGAL * OMEGAL
```

Figure G.6. (Continued)

```
      OMSQ2 =   OMEGAR * OMEGAR
      VTIPL =  ROTRAD * OMEGAL
      VTIPR =  ROTRAD * OMEGAR
      AMUL  =VTIPL / VTIPR
      AMUR  =VTIPR / VTIPR
      AMULS = AMUL * AMUL
      AMURS = AMUR * AMUR
C
C
C        ROTOR CONTROL COORDINATE AXIS TRANSFORM
C          LEFT ROTOR
      AICLR = AICLRP *CPHIR +BICLRP*SPHIR
      BICLR = -AICLRP *SPHIR +BICLRP*CPHIR
C
      AICL  =   AICLR*COSZHL -BICLR*SINZHL
      BICL  =   AICLR*SINZHL +BICLR*COSZHL
C
C          RIGHT ROTOR
      AICRR =   AICRRP*CPHIR + BICRRP*SPHIR
      BICRR =  -AICRRP*SPHIR + BICRRP*CPHIR
C
      AICR  =   AICRR*COSZHR +BICRRR*SINZHR
      BICR  =  -AICRRR*SINZHR +BICRRR*COSZHR
C
C        ROTOR FORCES
C
      DNF1  =  DNF1*CTL +DNF2*AMULSQ +DNF3*AMUL  + DNF4
      DNF1  =  DNF1*CTR +DNF2*AMURSQ +DNF3*AMUR  + DNF4
      DSF1  =  DSF1*CTL +DSF2*AMULSQ +DSF3*AMUL  + DSF4
      DSF1  =  DSF1*CTR +DSF2*AMURSQ +DSF3*AMUR  + DSF4
      IF(AMUR.GT. DRRKR)  GO TO 150
      DPM1  =  DPM1*CTR +DPM2*AMURSQ +DPM3*AMUR  + DPM4
      DPM1  =  DPM1*CTR +DPM2*AMURSQ +DPM3*AMUR  + DPM4
      DYM1  =  DYM1*CTR +DYM2*AMURSQ +DYM3*AMUR  + DYM4
      DYM1  =  DYM1*CTR +DYM2*AMURSQ +DYM3*AMUR  + DYM4
      GO TO 14
150   CONTINUE
      DPM1  =  DPM1*CTR +DPM5*AMURSQ +DPM6*AMUR +DPM7
      DPM1  =  DPM1*CTR +DPM5*AMURSQ +DPM6*AMUR +DPM7
      DYM1  =  DYM1*CTR +DYM5*AMURSQ +DYM6*AMUR +DYM7
      DYM1  =  DYM1*CTR +DYM5*AMURSQ +DYM6*AMUR +DYM7
14    CONTINUE
C
      DNF1  = DNF1 +DNF1*AICR*AICR +DNF1R *BICR
      DSF1  = DSF1 +DSF1*AICR*AICR +DSF1R *BICR
      DPM1  = DPM1 +DPM1*AICR*AICR +DPM1R *BICR
      DYM1  = DYM1 +DYM1*AICR*AICR +DYM1R *BICR
C
      DNF1  =  DNF1*CTL +DNF2*AMULSQ +DNF3*AMUL  + DNF4
      DNF1  =  DNF1*CTL +DNF2*AMULSQ +DNF3*AMUL  + DNF4
      DSF1  =  DSF1*CTL +DSF2*AMULSQ +DSF3*AMUL  + DSF4
      DSF1  =  DSF1*CTL +DSF2*AMULSQ +DSF3*AMUL  + DSF4
      IF(AMUL.GT. DRRKR)  GO TO 17
      DPM1  =  DPM1*CTL +DPM2*AMULSQ +DPM3*AMUL  + DPM4
      DPM1  =  DPM1*CTL +DPM2*AMULSQ +DPM3*AMUL  + DPM4
```

Figure G.6. (Continued)

```
      CYMB1L =  EYM1*CTL +EYM2*AMULSQ +EYM3*AMUL  + EYM4
      CYMA1L =  DYM1*CTL +DYM2*AMULSQ +DYM3*AMUL  + DYM4
      GO TO 180
170    CONTINUE
      CPMB1L =  EPM1*CTL +EPM5*AMULSQ +EPM6*AMUL +EPM7
      CPMA1L =  DPM1*CTL +DPM5*AMULSQ +DPM6*AMUL +DPM7
      CYMB1L =  EYM1*CTL +EYM5*AMULSQ +EYM6*AMUL +EYM7
      CYMA1L =  DYM1*CTL +DYM5*AMULSQ +DYM6*AMUL +DYM7
180   CONTINUE
      CNFL   = CNFPL +CNFA1L*AICL +CNFB1L* BICL
      CSFL   = CSFPL +CSFA1L*AICL +CSFB1L* BICL
      CPML   = CPMPL +CPMA1L*AICL +CPMB1L *BICL
      CYML   = CYMPL +CYMA1L*AICL +CYMB1L *BICL
C
C        CALCULATIONS OF FORCES AND MOMENTS FROM COEFFICIENTS
      ROPIR4 =  COEFI9 * ROE
      ROPIR5 =  COEF20 * ROE
      CTL=  CTLPRM*TIGEL
      TL     =  CTL * ROPIR4 * OMSQL
      FNORML =  CNFL *ROPIR4 *OMSQL
      FSIDEL =  CSFL *ROPIR4 * OMSQL
      AMROTL =  CPML *ROPIR5 * OMSQL
      ANROTL =  CYML *ROPIR5 * OMSQL
      TOROL=  CPL*ROPIR5*OMSQL
C
       CTR=  CTRPRM*TIGER
      TR     =  CTR  * ROPIR4 * OMSQR
      FNORMR =  CNFR * ROPIR4 * OMSQR
      FSIDER =  CSFR * ROPIR4 * OMSQR
      AMROTR =  CPMR * ROPIR5 * OMSQR
      ANROTR =  CYMR * ROPIR5 * OMSQR
      TOROR=  CPR*ROPIR5*OMSQR
      OMDTL=  OMDOT
      OMDTR=  OMDOT
C
C        HUB MOMENTS  -  NACELLE AXES
      FIPOML=  FIP*OMEGAL
      FIPOMR=  FIP*OMEGAR
      TRMHB1=  FIE*OMEGEL * R
      TRMHB2=  FIE*OMEGER * R
      TRMHB3=  AMROTL*COSZHL-ANROTL*SINZHL
      TRMHB4= -ANROTL*COSZHL-AMROTL*SINZHL
      TRMHB5= AMROTR*COSZHR+ANROTR*SINZHR
      TRMHB6= ANROTR*COSZHR-AMROTR*SINZHR
C            LEFT
      ALLRH=  -TOROL  -FIP*OMDTL
      AMLRH=  TRMHB3-FIPOML*RNLN
      ANLRH= TRMHB4+FIPOML*CNLN
C            RIGHT
      ALRRH=  TOROR  + FIP*OMDTR
      AMRRH=  TRMHB5-FIPOMR*RNRN
      ANRRH=  TRMHB6-FIPOMR*CNRN
C
C        ROTOR FORCE AND MOMENT RESOLUTION
C           PRELIMINARY CALCULATIONS
```

Figure G.6. (Continued)

```
      TRMHR2= ENDRML*COSZHL +ESIDFL*SINZHL
      TRMHR3= -ENDRMR*COSZHR+ESIDER*SINZHR
      TRMAR1=  TRMHR2-DZLNC
      TRMAR2=  TRMHR3 +DZRNC
      TRMHR2= ESIDFL*COSZHL-ENDRML*SINZHL
      TRMHR1=  -ESIDER*COSZHR-ENDRMR*SINZHR
C        LEFT TIP PIVOT - BODY AXES AT TIP
      XAERNL = (TL+DXLNC)*COSINL - SININL*TRMAR1
      YAERNL =  TRMHR2 +DYLNC
      ZAERNL =  -(TL+DXLNC)*SININL -COSINL*TRMAR1
C
      TRMAR3=  ALPH +DALNC + ALS*YAERNL
C
      ALARNL=  (ALLPH+DLLNC)*COSINL +SININL*TRMAR3
C
      AMRNLP=  AMLPH + DMLNC +ALS*TRMAR1
C
      AMARNL=  AMRNLP -TRMHR1
      ANARNL=  COSINL*TRMAR3 -SININL*(ALLPH+DLLNC) +FIF*OMEGFL*C
C
C        RIGHT TIP PIVOT - BODY AXES AT TIP
      XAERNR=  (TR+DXRNC)*COSINR +SININR*TRMAR2
      YAERNR=  TRMHR3 +DYRNC
C
C
      ZAERNR=  -(TR+DXRNC)*SININR +COSINR*TRMAR2
C
      TRMAR4=  AMRNRP + DARNC +ALS*YAERNR
C
      ALARNR=  (ALLRPH+DLRNC)*COSINR +SININR*TRMAR4
C
      AMRNRP=  AMRPH +DMRNC -ALS*TRMAR2
C
      AMARNR=  AMRNRP - TRMHR2
      ANARNR=  COSINR*TRMAR4 -SININR*(ALLRPH+DLRNC)+FIF*OMEGER*C
C
      XAERNL =  XAERNL + XAERNR
      YAERNL =  YAERNL + YAERNR
      ZAERNL =  ZAERNL + ZAERNR
      ALARNL =  ALARNL + ALARNR
      AMARNL =  AMARNL + AMARNR
      ANARNL =  ANARNL + ANARNR
C
                                  ( B L A N K   C A R D )
                                  ( B L A N K   C A R D )
                                  ( B L A N K   C A R D )
                                  ( B L A N K   C A R D )
                                  ( B L A N K   C A R D )
                                  ( B L A N K   C A R D )
                                  ( B L A N K   C A R D )
                                  ( B L A N K   C A R D )
                                  ( B L A N K   C A R D )
                                  ( B L A N K   C A R D )
                                  ( B L A N K   C A R D )
                                  ( B L A N K   C A R D )
```

Figure G.6. (Continued)

```
                                    ( B L A N K   C A R D )
                                    ( B L A N K   C A R D )
                                    ( B L A N K   C A R D )
                                    ( B L A N K   C A R D )
                                    ( B L A N K   C A R D )
                                    ( B L A N K   C A R D )
                                    ( B L A N K   C A R D )
                                    ( B L A N K   C A R D )
                                    ( B L A N K   C A R D )
                                    ( B L A N K   C A R D )
                                    ( B L A N K   C A R D )
                                    ( B L A N K   C A R D )
****|************************ S Y N T A X   E R R O R ************************
  270          SQWING =  SQF + 0.5*DOVDSK*(TR +TL )
  271          SQLW   =     RDEOV2 *(ULWSQ+VLWSQ+WLWSQ)+ TL * DOVDSK
  272          SQRW   =    RDEOV2*(URWSQ+VRWSQ+WRWSQ)  + TR * DOVDSK
  273          IF(NCLOSE.EQ.1)  GO TO 420
  274          FINPR=   FINDEG-DBRK17
        C         EQUATIONS FOR DOORS OPEN
  275          SGNULW= 1.0
  276          IF(ULW.LT.0.) SGNULW= -1.0
  277          SGNURW= 1.0
  278          IF(URW.LT.0.0) SGNURW= -1.0
  279          XAERLW=  -SGNULW*FEU*SQLW*(1.-CTSLR)
  280          XAERRW=  -SGNURW*FEU*SQRW*(1.-CTSRR)
  281          YAERLW =  0.
  282          YAERRW=  0.
  283          ZAERLW =  DOVTL*TL
  284          ZAERRW =  DOVTR*TR
  285          AMARLW=  -XWC2*ZAERLW + BMOVTL * TL
  286          AMARRW =  -XWC2*ZAERRW + BMOVTR*TR
  287          ALARWG=  .5*SPAN*(ZAERRW*(1.-0.5*SIRW)-ZAERLW*(1.-0.5*SILW))
  288          ANARWG =  0.
        C         SET WING DYNAMIC PRESSURE = TO HARD 0.0  FOR THETA TWIST EQ
  289          SQWING = 0.0
  290          SQLW=  0.0
  291          SQRW=  0.0
        C
  292          AVECLW=  0.0
  293          GO TO 430
  294     420  CONTINUE
        C         EQUATIONS FOR DOORS CLOSED
  295          FINPR=  FINDEG + DBRK17
        C
        C
        C         ANGLE OF ATTACK AND SIDESLIP
  296          ALPHLW=  ATAN2(WLW,ULW)  +THTLAC
  297          BETALW=  ATAN2(VLW,VALFLW)
        C
  298          ALPHRW=  ATAN2(WRW,URW)  + THTRAC
  299          BETARW=  ATAN2(VRW,VALFRW)
        C
  300          ALWSSQ  =  ALPHLW  - EPPLR
  301          ARWSSQ  =  ALPHRW  - EPPRR
  302          ALRGLW  =  ALWSSQ  - THTLAC
  303          ALRGRW  =  ARWSSQ  - THTRAC
```

Figure G.6. (Continued)

```
304          AVEALW  =  0.5 *(ALPHLW + ALPHRW )
        C
        C
        C       CALCULATE LIFT AND DRAG INCREMENTS
        C
        C       FLAP , AILERON , SPOILER CONTRIBUTION
        C
        C
        C       REVISED 11/29/72
        C
305          CALL AILSP(  DELAIL     ,DELSPL,DCLLDA,DCDLDA,DCMLDA,DCLLSP,DCDLSP,
            * DCMLSP)
306          CALL AILSP(  DELAIR     ,DELSPR,DCLRDA,DCDRDA,DCMRDA,DCLRSP,DCDRSP,
            * DCMRSP)
        C
307          CDCNTL= DCDLDA+DCDLSP
308          CMCNTL= DCMLDA+DCMLSP
        C
309          CDCNTR= DCDRDA+DCDRSP
310          CMCNTR= DCMRDA+DCMRSP
        C
        C            CONTRIBUTION DUE TO TOTALLY DOWNWASHED WING (ALPHA - EPSILON)
        C
311          CALL CLCDCM(ALWSSO,  DELAIL     ,DCLLDA,DCLLSP,CDCNTL,CMCNTL,
            * CLLWSS,CDLWSS,CMLWSS,CLDUM,CDDUM)
312          CALL CLCDCM(ARWSSO,  DELAIR     ,DCLRDA,DCLRSP,CDCNTR,CMCNTR,
            * CLRWSS,CDRWSS,CMRWSS,CLDUM,CDDUM)
        C
        C
        C            CONTRIBUTION DUE TO TOTALLY UN-WASHED WING  ( ALPHA )
        C
        C
313          CALL CLCDCM(ALPHLW,  DELAIL     ,DCLLDA,DCLLSP,CDCNTL,CMCNTL,
            * CLLWAO,CDLWAO,CMLWAO,CLLWPR,CDLWPR)
314          CALL CLCDCM(ALPHRW,  DELAIR     ,DCLRDA,DCLRSP,CDCNTR,CMCNTR,
            *   CLRWAO,CDRWAO,CMRWAO,CLRWPR,CDRWPR)
        C
315          CALL CLF1(DELFLP,CLZERO)
316          CALL CLF2(ALPHF+AINW,CLZERO,2.0,CLAVE)
        C
        C
317          ALLWPR= ALPHLW - AINW -THTLAC
318          ALRWPR=  ALPHRW - AINW - THTRAC
319          SALLW=  ALLWPR
320          CALLW=  1.0
321          SALRW=  ALRWPR
322          CALRW=  1.0
323          SBETLW=  BETALW
324          CBETLW=  1.0
325          SBETRW=  BETARW
326          CBETRW=  1.0
327          IWARN1( 7)=  .FALSE.
328          IWARN1( 8)=  .FALSE.
329          IWARN1( 9)=  .FALSE.
330          IWARN1(10)=  .FALSE.
```

Figure G.6. (Continued)

```
331          IF(ALWSSO.GT.DEG20) IWARN1( 7)=  .TRUE.
332          IF(ARWSSO.GT.DEG20) IWARN1( 8)=  .TRUE.
333          IF(ALPHLW.GT.DEG20) IWARN1( 9)=  .TRUE.
334          IF(ALPHRW.GT.DEG20) IWARN1(10)=  .TRUE.
335          CALL SINCOS(EPPLR,SEPLW,CEPLW)
336          CALL SINCOS(EPPRR,SEPRW,CEPRW)
       C
       C
337          TRMWG5 =  (1.-CTSLR)*(1.-SILW)
338          TRMWG6 =  (1.-CTSRR)*(1.-SIRW)
339          CLSLW =  (SILW*(CLLWSS*CEPLW-CDLWSS*SEPLW) + CLLWAO* TRMWG5)*
            *  BKALPR
340          CDSLW =  (SILW*(CLLWSS*SEPLW+CDLWSS*CEPLW) + CDLWAO* TRMWG5)*
            *  BKALPP
341          CMSLW =  (SILW*CMLWSS + CMLWAO* TRMWG5)*BKALPR
       C
342          CLSRW =  (SIRW*(CLRWSS*CEPRW -CDRWSS*SEPRW)+ CLRWAO* TRMWG6)*
            *  BKARPP
343          CDSRW =  (SIRW*(CLRWSS*SEPRW +CDRWSS*CEPRW)+ CDRWAO* TRMWG6)*
            *  BKARPP
344          CMSRW =  (SIRW*CMRWSS + CMRWAO *TRMWG6 )*BKARPR
       C
345          DCLSPW= 0.25*((1.-.5*SILW)*(CLSLW-CLLWAO*(1.-AVECTS))-(1.-.5*
            * SIRW)*(CLSRW-CLRWAO*(1.-AVECTS)))
346          DCNSPW= .25*((1.-.5*SIRW)*(CDSRW-CDRWAO*(1.-AVECTS))-(1.-.5*
            * SILW)*(CDSLW-CDLWAO*(1.-AVECTS)))
       C
347          CLSW= (1.-AVECTS)*(BETAF*(SK22+SK21*CLAVE)+COEF11*(CLLWAO
            * -CLRWAO)) + DCLSPW
348          CNSW= (1.-AVECTS)*(BETAF*SK22*CLAVE*CLAVE+COEF12*(CDRWAO
            * -CDLWAO-    CLRWAO*(ALPHRW-AINW )-CLLWAO*(AINW-ALPHLW ))) +DCNSPW
       C
349          TRMWG7= SQLW * COEF18
350          TRMWG8=  SQRW * COEF18
       C
       C
351          ZAERLW = -TRMWG7 *(CLSLW*CALLW +CDSLW*CBETLW*SALLW )
352          XAERLW =  TRMWG7 *(CLSLW*SALLW -CDSLW*CBETLW*CALLW )
353          YAERLW = -TRMWG7 *CDSLW * SBETLW
354          AMARLW =  TRMWG7 *CHORD *CMSLW * CBETLW
            * -XWAC*ZAERLW + ZWAC*XAERLW
       C
       C
355          ZAERRW = -TRMWG8 *(CLSRW*CALRW +CDSRW*CBETRW*SALRW )
356          XAERRW =  TRMWG8 *(CLSRW*SALRW -CDSRW*CBETRW*CALRW )
357          YAERRW = -TRMWG8 * CDSRW * SBETRW
358          AMARRW =  TRMWG8 *CHORD * CMSRW * CBETRW
            *  -XWAC*ZAERRW  +ZWAC*XAERRW
       C
359          AVECLW=  0.5*(CLSRW+CLSLW)/(1.-1-AVECTS)
360     43    CONTINUE
361          XAERWG =  XAERLW + XAERRW
362          YAERWG =  YAERLW + YAERRW
363          ZAERWG=  ZAERLW + ZAERRW
364          ALARWG =  CLSW * SQWING * COEF15
```

Figure G.6. (Continued)

```
                                                                                  PAGE   17

 355          [illegible]
              [illegible]
 356          [illegible]
        C
        C
        C        WING/BODY INTERFERENCE
        C
 357          PWBL = ([illegible]+CONS[illegible]AVFCLW
 358          FPWBL = FPWBL
        C        ANGLE OF ATTACK
        C
 359
                                        ( B L A N K   C A R D )
                                        ( B L A N K   C A R D )
                                        ( B L A N K   C A R D )
```

```
 385      248   CONTINUE
 386            EPTL1 =  EPZERO+DEPDAL*(AVEALK- SLAC*WDOT/(U*U+0.01))
 387             IF(AVEEPP.LT.EPTL1 ) GO TO 250
 388            EPTAIL=  AVEEPP*(1.-GEF)*DOVFSM
 389            GO TO 265
 390      250    CONTINUE
 391             EPTAIL=  EPTL1*(1.-GEF)*DOVFSM
 392       265   CONTINUE
 393      250   CONTINUE
 394            IF(UPRIME.LE.0.) EPTAIL= 0.
 395            ALPHHT=  ATAN2(WHT,UHT)  -EPTAIL + AINHT
 396            IF(ALPHHT.GT.PI) ALPHHT=ALPHHT-2.*PI
 397            IF(ALPHHT.LT.-PI)  ALPHHT=ALPHHT+2.*PI
 398            CALL SINCOS(ALPHHT-AINHT,SALIHT,CALIHT)
        C
        C          TAIL REVISION   9/6/72
        C
 399            ALHTPR   = TAUHT *DELELV
 400            ALHTE    = ALPHHT + ALHTPR
 401            ALHTP    = HTSTLL + ALHTPR
 402            ALHTM    = -HTSTLL + ALHTPR
 403            CLAT     = CLALHT *CLTCOP
 404            TRMHT2   = 0.5 * ALHTP
 405            TRMHT3   = 0.5 * ALHTM
 406            IWARN1(5)=  .TRUE.
 407            IF(ALHTE) 270,277,276
 408      270   IF(ALHTE.GT.(-PI +TRMHT2)) GO TO 272
        C          REGION 7
 409            CLHT =  CLAT *( ALHTE +PI)
 410            CDHT =  CDOHT + CLHT*CLHT *COEF21
 411            GO TO 288
 412      272   IF(ALHTE.GT. -PIOV2) GO TO 274
        C          REGION 6
 413            CLHTST =  CLAT *TRMHT2
 414            CLHT   =  CLHTST *(ALHTE+PIOV2)/(-PIOV2+TRMHT2)
 415            CDHTST = CDOHT +CLHTST*CLHTST *COEF21
 416            CDHT = CDHTST -(1.1-CDHTST)*(ALHTE+PI-TRMHT2)/(TRMHT2 -PIOV2)
 417            GO TO 288
 418      274       IF(ALHTE .GT.ALHTM) GO TO 276
        C          REGION 5
 419            CLHTST =  CLAT * ALHTM
 420            CLHT   =  CLHTST *(PIOV2+ALHTE)/(PIOV2+ALHTM)
 421            CDHTST = CDOHT +CLHTST*CLHTST *COEF21
 422            CDHT   = CDHTST +(1.1-CDHTST)*(ALHTE-ALHTM)/(-PIOV2 -ALHTM)
 423            GO TO 288
 424      276   IF(ALHTE .GT.ALHTP) GO TO 278
        C          REGION 1
 425      277   CLHT  =  CLAT * ALHTE
 426            CDHT  =  CDOHT + CLHT*CLHT *COEF21
 427            IWARN1(5)=  .FALSE.
 428            GO TO 288
 429      278   IF(ALHTE.GT.PIOV2)  GO TO 280
        C          REGION 2
 430            CLHTST  =  CLAT *ALHTP
 431            CLHT    =  CLHTST*(PIOV2-ALHTE)/(PIOV2-ALHTP)
```

Figure G.6. (Continued)

```
      CDHTST  =  CDOHT +CLHTST*CLHTST*COEF21
      CDHT    =  CDHTST+(1.1-CDHTST)*(ALHTF-ALHTP)/(PIOV2-ALHTP)
      GO TO 238
  23  IF(ALHTF .GT.(PI -TRMHT3)) GO TO 232
C        REGION 3
      CLHTST = CLAT * TRMHT3
      CLHT   = CLHTST*(ALHT--PIOV2)/(PIOV2 -TRMHT3)
      CDHTST = CDOHT +CLHTST*CLHTST* COEF21
      CDHT =  CDHTST +(1.1-CDHTST)*(ALHTF-PI+TRMHT3)/(TRMHT3 -PIOV2 )
      GO TO 238
C        REGION 4
  232 CLHT =  CLAT *(ALHTF -PI)
      CDHT =  CDOHT + CLHT*CLHT*COEF21
  238 CONTINUE
C        VERTICAL TAIL AERO COORDINATE TRANSFORM
      BETVT=  ATAN2(VVT,VRETVT)
      ALPHVT=  -BETVT+BETAF*DSDBET
      IF(ALPHVT.GT.PI)  ALPHVT= ALPHVT-2.*PI
      IF(ALPHVT.LT.-PI) ALPHVT=ALPHVT+2.*PI
      SIGMA=  DSDBET*BETAF
      CALL SLCOS(BETVT-SIGMA,SBETSG,CBETSG)

      ALVTP2  =   TANVT * DELDIV
      ALVTF   =   ALPHVT  + ALVTP2
      ALVTP   =   VTSTLL  + ALVTP2
      ALVTM   =  -VTSTLL  + ALVTP2
      CYST    =   CYALVT  * DEVFSM
      TRMVT2  =   2.5 *ALVTP
      TRMVT3  =   2.5 *ALVTM
C
      LAPRI(-1)=  .TRUE.
      IF(ALVTF) 290,297,296
  290 IF(ALVTF.GT.(-PI +TRMVT2)) GO TO 292
C        REGION 2
      CYVT  =   CYAT* (ALVTF +PI)
      CDVT  =   CDOVT + CYVT*CYVT * COEF22
      GO TO 300
  292 IF(ALVTF.GT. -PIOV2) GO TO 294
C        REGION 3
      CYVTST =  CYAT * TRMVT2
      CYVT = CYVTST *(ALVTF+PIOV2)/(-PIOV2+TRMVT2)
      CDVTST =  CDOVT +CYVTST*CYVTST *COEF22
      CDVT   =  CDVTST-(1.1-CDVTST)*(ALVTF+PI -TRMVT2)/(TRMVT2 -PIOV2)
      GO TO 300
  294 IF(ALVTF.GT.ALVTM ) GO TO 296
C        REGION 5
      CYVTST =  CYAT * ALVTM
      CYVT = CYVTST *(PIOV2+ALVTF)/(PIOV2+ALVTM)
      CDVTST =  CDOVT +CYVTST *CYVTST *COEF22
      CDVT   =  CDVTST +(1.1-CDVTST)*(ALVTF-ALVTM)/(-PIOV2 -ALVTM)
      GO TO 300
  296 IF(ALVTF .GT.ALVTP) GO TO 298
C        REGION 1
  297 CYVT  = CYAT * ALVTF
      CDVT  =  CDOVT  +CYVT*CYVT *COEF22
```

Figure G.6. (Continued)

```
      IWARN1(6)=  .FALSE.
      GO TO 308
  298 IF(ALVTE .GT.PIOV2) GO TO 300
C        REGION 2
      CYVTST  =  CYAT * ALVTP
      CYVT    =  CYVTST *(PIOV2 -ALVTE)/(PIOV2 -ALVTP)
      CDVTST  =  CDOVT +CYVTST*CYVTST * COEF22
      CDVT    =  CDVTST +(1.1-CDVTST)*(ALVTE -ALVTP)/(PIOV2-ALVTP)
      GO TO 308
  300 IF(ALVTE .GT.(PI -TRMVT3)) GO TO 302
C        REGION 3
      CYVTST  =   CYAT * TRMVT3
      CYVT    =  CYVTST *(ALVTE -PIOV2)/(PIOV2 -TRMVT3)
      CDVTST  =  CDOVT + CYVTST*CYVTST* COEF22
      CDVT = CDVTST+(1.1-CDVTST)*(ALVTE-PI+TRMVT3)/(TRMVT3-PIOV2)
      GO TO 308
C        REGION 4
  302 CYVT =  CYAT *(ALVTE -PI)
      CDVT =  CDOVT + CYVT *CYVT * COEF22
  308 CONTINUE
C
C        TOTAL TAIL FORCE AND MOMENT RESOLUTION
C
C
C
C
C
      TRMHT =  SQF* COEF23
C
C        CHANGE MADE TO HALVE EFFHT FOR I NAC  GT  FINDEG
      IF(NCLOSE.EQ.0.AND.UPRIME.GT.0.) TRMHT= TRMHT*0.5
C
C
      XARHT =  TRMHT*(CLHT*SALIHT -CDHT*CALIHT *CBETSG)
      YARHT = -TRMHT* SBETSG *CDHT
      ZARHT = -TRMHT *(CLHT*CALIHT +CDHT*CBETSG*SALIHT )
      ALARHT=  -YARHT *(ZHT- ZCG)
      AMARHT=   ZARHT*(XCG-XHT) +XARHT*(ZHT-ZCG)
      ANARHT=   -YARHT *(XCG -XHT )
C
C
      TRMVT =   SQF* COEF24
C
      XARVT = -TRMVT*CALIHT*(CDVT*CBETSG +CYVT*SBETSG)
      YARVT =  TRMVT*(CYVT*CBETSG -CDVT*SBETSG )
      ZARVT = -TRMVT*SALIHT*(CDVT*CBETSG + CYVT*SBETSG )
      ALARVT=   - YARVT *(ZVT -ZCG)
      AMARVT =  ZARVT *(XCG-XVT)+XARVT *(ZVT-ZCG)
      ANARVT =  -YARVT *(XCG -XVT)
C
      XAERT  =  XARHT + XARVT
      YAERT  =  YARHT + YARVT
      ZAERT  =  ZARHT + ZARVT
      ALAERT =  ALARHT + ALARVT
      AMAERT =  AMARHT + AMARVT
```

Figure G.6. (Continued)

```
515          AMART  =  AMARHT + AMARVT
        C
516                                  ( B L A N K   C A R D )
                                     ( B L A N K   C A R D )
                                     ( B L A N K   C A R D )
                                     ( B L A N K   C A R D )
                                     ( B L A N K   C A R D )
                                     ( B L A N K   C A R D )
                                     ( B L A N K   C A R D )
                                     ( B L A N K   C A R D )
                                     ( B L A N K   C A R D )
                                     ( B L A N K   C A R D )
                                     ( B L A N K   C A R D )
                                     ( B L A N K   C A R D )
                                     ( B L A N K   C A R D )
****|********************** S Y N T A X   E R R O R ************************   6  +4
        C
517          IF(SELG.NE.1.0) GO TO 800
518          CALL XFAR
519     800  CONTINUE
        C
520          XAERF= XAERF + DXLG
521          YAERF= YAERF + DYLG
522          ZAERF= ZAERF + DZLG
523          ALAERF= ALAERF+ DELG
524          AMAERF= AMAERF+ DMLG
525          ANAERF= ANAERF+ DNLG
        C
        C
        C       PLASTIC AXES TO C.G. TRANSFORM
        C         AERODYNAMIC FORCES AND MOMENTS RESOLVED TO THE
        C           TOTAL CENTER OF GRAVITY
        C
526          XAERC  =  XAERNC +XAERF +XAERT +XAERWG
527          YAERC  =  YAERNC +YAERF +YAERT +YAERWG
        C       ZAERO BROKEN INTO TERMS  1) FOR VETICAL BENDING
        C                                2) NOT FOR VERTICAL BENDING
528          ZAERVB=  ZAERNC + ZAERWG
529          ZAERNB=  ZAERF + ZAERT
530          ZAERC=  ZAERV3 + ZAERN3
        C
        C
        C       LAERO BROKEN INTO TERMS  1) FOR VETICAL BENDING
        C                                2) NOT FOR VERTICAL BENDING
531          ALAERV4=  ALAERNC*YN*(ZAERV3-ZCG)
532          ALAERN4=  ALAERF+ALAERT+ALAERWG+ZCG*YAERNC
533          ALAERC=  ALAERV4+ALAERN4
        C
        C       MAERO BROKEN INTO TERMS  1) FOR VETICAL BENDING
        C                                2) NOT FOR VERTICAL BENDING
534          AMAERV3=  XCG*ZAERNC
535          AMAERN3= AMAERNC+AMAERF+AMAERT+AMAERWG-ZCG*XAERNC
536          AMAERC=  AMAERV3+AMAERN3
        C
537          AMAERC=  ANAERNC +ANAERF +ANAERT +ANAERWG
```

Figure G.6. (Continued)

```
              * +YN*(XAERNL-XAERNR)-XCG*YAERNC
538            RQ =       R*Q
539            PQ =       P*Q
540            RR =       R*R
541            PR =       P*R
542            PP =       P*P
543            RQ =       R*Q
        C         PDOT EQUATION   CROSS TERMS
544            TERMP1 = -FJXX * RQ +FIXZP* PQ
        C         QDOT EQUATION   CROSS TERMS
545            TERMQ1 = -FJYY * PR -FIXZQ*(PP -RR)
        C         RDOT EQUATION    CROSS TERMS
546            TERMR1 = -FJZZ * PQ -FIXZR* RQ
        C         AINDDR  EQUATION   CROSS TERMS
547            TERM1R =  COEF4*COEF2*( PR*(1.-2.*SILAMR*SILAMR)- (RR-PP)*SILAMR*
              *  CILAMR )
548            TERM2R =  -(RR -PP)* FIZZPR*SININR *COSINR +COEF1*(XAERO*SILAMR
              *  + ZAERO*CILAMR )
549            TERM3R =   COEF9*(PQ*SILAMR +RQ*CILAMR)
        C
        C         AINDDL EQUATION  CROSS TERMS
550            TERM1L =  COEF4*COEF2*( PR*(1.-2.*SILAML*SILAML)-(RR-PP)*SILAML *
              *  CILAML )
551            TERM2L =  -(RR-PP)* FIZZPR *SININL*COSINL +COEF1*(XAERO*SILAML
              * +  ZAERO*CILAML )
552            TERM3L =  -COEF9*(PQ* SILAML + RQ*CILAML )
553            IF(NVR.EQ.1) GO TO 60
554            H1R= 0.
555            H1DTR= 0.
556            H1L= 0.
557            H1DTL= 0.
558            HWACR= 0.
559            HDTACR= 0.
560            HWACL= 0.
561            HDTACL= 0.
562            GO TO 70
563       50   CONTINUE
564            TRMH1S=  COEF10*ZAERO
565            H1R=SKW1*ZAERNP+SKW2*ZAERPW+SKW3*ALARNR-TRMH1S*(SKW4+SKW5)
566            H1DTR= DVDTIM*(H1R-H1ROLD)
567            H1ROLD=  H1R
568            H1L=SKW1*ZAERNL+SKW2*ZAERLW-SKW3*ALARNL-TRMH1S*(SKW4+SKW5)
569            H1DTL= DVDTIM*(H1L-H1LOLD)
570            H1LOLD=  H1L
571            HWACR= SKW6*ZAERNR+SKW7*ZAERRW+SKW9*ALARNR-TRMH1S*(SKW9+SKW10)
572            HDTACR=  DVDTIM*(HWACR-HACROD)
573            HACROD=  HWACR
574            HWACL= SKW6*ZAERNL+SKW7*ZAERLW-SKW9*ALARNL-TRMH1S*(SKW9+SKW10)
575            HDTACL=  DVDTIM*(HWACL-HACLOD)
576            HACLOD=  HWACL
577       70   CONTINUE
        C         TERMS FOR THETA TWIST EQUATION
578            CMDW=  SC1 + SC2*DELFLP
        C
579            TRMTL1=  SOLW*(1.-CTSLR)
```

Figure G.6. (Continued)

```
      TRMTTW=  COEF31*CMPX
      TRMTL1=  SQRWF(1.-CTSQR)
      TMHB11= AMACLP+TERM1L+TERM2L+TERM3L
      TMHB12=  AMACRP+TERM1R+TERM2R+TERM3R
      AMACTR= AMACRP+TMHB12
      AMACTL=  AMACLP+TMHB11
      THTRAC= 0.
      THTLAC= 0.
      IF(NTW .NE.1) GO TO 72
      THTRAC= COEF34*(AMACTR-TRMHB2+TRMTL1*(TRMTTW+COEF32*ALRGRW+
     1 COEF33*THTRAC))
      THTLAC= COEF34*(AMACTL-TRMHB1+TRMTL1*(TRMTTW+COEF32*ALRGLW+
     1 COEF33*THTLAC))
   72 CONTINUE
                                  ( B L A N K   C A R D )
                                  ( B L A N K   C A R D )
                                  ( B L A N K   C A R D )
                                  ( B L A N K   C A R D )
                                  ( B L A N K   C A R D )
                                  ( B L A N K   C A R D )
                                  ( B L A N K   C A R D )
                                  ( B L A N K   C A R D )
                                  ( B L A N K   C A R D )
                                  ( B L A N K   C A R D )
                                  ( B L A N K   C A R D )
                                  ( B L A N K   C A R D )
                                  ( B L A N K   C A R D )
                                  ( B L A N K   C A R D )
                                  ( B L A N K   C A R D )
                                  ( B L A N K   C A R D )
                                  ( B L A N K   C A R D )
                                  ( B L A N K   C A R D )
C
C        ALPHA FUS
      DACII(1) = -ALPHF
C        PORT EQUATION -- MAIN-WING RELATING TERMS
      DACII(2)=  CONVIXX*(TERM1+ALPHFS)
C        COEFFICIENT OF PORT  IN THE PORT EQUATION
      DACII(3)= FIKZP * CONVIXX
C        PORT EQUATION -- MAIN-WING RELATING TERMS
      DACII(4)=  CONVIXX*(TERM2L+AMAR 5)
C        COEFFICIENT OF ALPHOF IN THE PORT EQUATION
      DACII(5)=  CILAM2 * CONVIXX
C        PORT EQUATION -- REMAINING TERMS
      DACII(6) =  CONVIZZ *(TERM3L + AMAR20 )
C        COEFFICIENT OF ALPHOF IN THE PORT EQUATION
      DACII(7)=  CILAML*CONVIXX
C        PORT EQUATION  VARIOUS TERM
      DACII(8) =  XVARP
C        UTPIT DAC
      DACII(9)=  UTPIT
C        VPOT EQUATION  VARIOUS  TERM
      DACII(10) =  XVARP
C        VTPIT DAC
```

Figure G.6. (Continued)

```
      DAC1(11) = VTRIM
C        WDOT EQUATION  NON-WING BENDING TERMS
      DAC1(12)=   ZARRG
C        HTRIM DAC
      DAC1(13) = -HTRIM
C        SQRT(ROE/ROEO)*VTOTAL FOR BCA FUNCTIONS
      DAC1(14)=  ESQRT(ROE/ROEO,WORK)  * U
C        COEFFICIENT OF AINDDR IN THE QDOT EQUATION
      DAC1(15)=  (FIYYPR+COEF4*(XRCOS-ZRSIN)) * DDVIYY
C        VTOTLR FOR MU CALC ON ANALOG
      DAC1(16)=  VTOTLR
C        COEFFICIENT OF AINDDL IN THE QDOT EQUATION
      DAC1(17)=  (FIYYPR+COEF4*(XLCOS-ZLSIN)) * DDVIYY
C        LEFT ROTOR ALPHA FOR BCA
      DAC1(18)= -ALPHLR
C        THETA TRIM DAC
      DAC1(19) = THTRIM
C        VTOTRR FOR MU CALC ON ANALOG
      DAC1(20)=  VTOTRR
C        AVERAGE ALPHA WING FOR SIMULATOR
      DAC1(21)=  -AVEALW
C        RIGHT ROTOR ALPHA TO USE IN BCA
      DAC1(22)=  -ALPHRR
C        COEFFICIENT OF RDOT IN THE RDOT EQUATION
      DAC1(23)=   FIXZR * DDVIZZ
C        PNLR FOR MU CALC ON ANALOG
      DAC1(24)=  PNLR
C        COEFFICIENT OF AINDDR IN THE RDOT EQUATION
      DAC1(25)=   SILAMR * DDVIZZ
C        PNRR FOR MU CALC ON ANALOG
      DAC1(26)=  PNRR
C        COEFFICIENT OF AINDDL IN THE RDOT EQUATION
      DAC1(27)=   SILAML * DDVIZZ
C        VNORTH  FOR SIMULATOR
      DAC1(28)=  -VNORTH
C        FUSELAGE DYNAMIC PRESSURE FOR SIMULATOR
      SGNSQF =  1.0
      IF(U.LT.0.) SGNSQF  = -1.0
      DAC1(29) =  - SQF * SGNSQF
C        VEAST  FOR SIMULATOR
      DAC1(30)=  -VEAST
C        BETA FUSE FOR CONTROL SYSTEM FEEDBACK
      DAC1(32)= -BETAF
      DAC2( 1)=  -CILAMR
      DAC2(02) = BICGLS
      DAC2( 3)=  COEF13
      DAC2(04)=  -AICLGS
      DAC2( 5)=  SILAMR
C        MOMENT ARM FOR CG ACCELERATION EQS FOR SIMULATOR
      DAC2( 6)=  XCG-SLPA
C        HDOT TRIM DAC
      DAC2(07) = HDTRIM
C        AVAILABLE HORSEPOWER RIGHT ENGINE
      DAC2(8)=  SHPPRR
      DAC2( 9)=  CILAML
```

Figure G.6. (Continued)

```
C          S [illegible](THETC)/P
           DAC2(10)= -SOTHTC/DEL
           DAC2(11)=  COFEIA
           DAC2(12)=  THRIB2
           DAC2(13)=  -SILAMB
           DAC2(14)=  THRIB1
C          INFLOW TRIM EQS
           DAC2(15) = AITRIM
C          RHO*PI**5**5/IP  FOR GOV.
C          ROOT EQUATION   WING BENDING TERMS
           DAC2(16)=  DDVIXX*ALARVP
           DAC2(17)=  RDRIB5
C          DROT EQUATION   WING BENDING TERMS
           DAC2(18)=  DDVIYY*AMARVP
C          WROT EQUATION   WING BENDING TERMS
           DAC2(20)=   ZARV
C          ONRP FOR ROTOR
           DAC2(21)=  -DNRP
           DAC2(22)= AICPGS
C          ONLP FOR ROTOR
           DAC2(23)=  -DNLP
C          ENDP FOR ROTOR
           DAC2(24)=  DNRP
C          ENLP FOR ROTOR
           DAC2(27)=  DNLP
C          PERCENT TORQUE  FROM ENGINE  FOR SIMULATION
           DAC2(30)=   PCTQE
                                    ( B L A N K   C A R D )
                                    ( B L A N K   C A R D )
                                    ( B L A N K   C A R D )
                                    ( B L A N K   C A R D )
                                    ( B L A N K   C A R D )
                                    ( B L A N K   C A R D )
                                    ( B L A N K   C A R D )
                                    ( B L A N K   C A R D )
                                    ( B L A N K   C A R D )
                                    ( B L A N K   C A R D )
                                    ( B L A N K   C A R D )
                                    ( B L A N K   C A R D )
                                    ( B L A N K   C A R D )
                                    ( B L A N K   C A R D )
                                    ( B L A N K   C A R D )
                                    ( B L A N K   C A R D )
                                    ( B L A N K   C A R D )
                                    ( B L A N K   C A R D )
           CALL DACFLT(KA(IPSNOS(4,1)),DAC1,64,SCDAC1,ISFLT )
           KPAN = 395
           IWARN1(13)=  .FALSE.
           IF(ISFLT.EQ.2)  IWARN1(13)=  .TRUE.
   531     CONTINUE
           KPAN = 330
   54      GO TO(54,55,[illegible]),ISTOP
   55      CONTINUE
           CALL [illegible](DISAM)
           CALL [illegible]TEX
           [illegible] =
```

Figure G.6. (Continued)

```
      CALL TRACK('RTFAST  ',2)
      RETURN
  500 DO 510 J=1,32
  510 CALL DISABL(J-1)
  520 IPAN= KPAN
      RETURN
      END
```

Figure G.6. (Continued)

REFERENCES

5	-	36*						
6	-	46	[illegible]*					
6	-	[illegible]	[illegible]					
7	-	[illegible]	[illegible]					
72	-	[illegible]	531*					
13[illegible]	-	55	[illegible]					
14[illegible]	-	68	71*					
15[illegible]	-	173	170*					
16[illegible]	-	178	184*					
17[illegible]	-	193	199*					
18[illegible]	-	198	214*					
24[illegible]	-	373	373*					
242	-	375	378*					
244	-	377	379*					
24[illegible]	-	38	383*					
2[illegible]	-	392	396*					
26[illegible]	-	392	392*					
26[illegible]	-	397	397*					
265	-	393	397*					
27[illegible]	-	407	4[illegible]*					
272	-	408	41[illegible]					
27[illegible]	-	412	418*					
27[illegible]	-	4[illegible]7	418	424*				
277	-	407	425*					
27[illegible]	-	424	428*					
28[illegible]	-	429	435*					
282	-	435	441*					
288	-	411	417	422	428	434	440	443*
29[illegible]	-	459	459*					
2[illegible]	-	459	463*					
294	-	463	463*					
296	-	458	465	475*				
297	-	469	474*					
29[illegible]	-	475	4[illegible]*					
3[illegible]	-	[illegible]	4[illegible]					
3[illegible]	-	446	4[illegible]					
3[illegible]	-	442	466	474	4[illegible]	485	491	494*
43[illegible]	-	273	294*					
43[illegible]	-	333	347*					
5[illegible]	-	[illegible]36	656	663*				
51[illegible]	-	[illegible]	4546					
52[illegible]	-	465*						
54[illegible]	-	554*						
54[illegible]	-	554*						
55[illegible]	-	456	457*					
8[illegible]	-	517	5[illegible]*					
A[illegible]	-	[illegible]	[illegible]	371				
* ADCFLT	-	[illegible]7*						
ADC3	-	[illegible]						
ADOVAT	-	[illegible]						
ADOVAW	-	[illegible]						
ATCL	-	23[illegible]	[illegible]*	[illegible]	[illegible]	[illegible]	256	
ATCL02	-	[illegible]	[illegible]	163	164			

Figure G.6. (Continued)

```
AICLGS  -   76=   628
AICLPR  -   9C0   161   162
AICR    -  23C0   167=  185   186   187   188
AICRDP  -  23C0   165=  167   168
AICRGS  -   77=   645
AICRPR  -   9C0   165   166
*AILSP  -  3C5*   3C6*
AINDTL  -   9C0    49    50    82    84   140
AINDTR  -   9C0    49    50    85    87   146
AINHT   -  11C0   395   398AG
AINL    -   9C0   41AG   42
AINR    -   9C0   40AG   42
AINREF  -   9C0
AINRLM  -  15C0
AINW    -  11C0   316AG  317   318   348
AITRIM  -  28C0   639
AKEY    -  13C0
ALAERO  -  27C0   533=
ALAMDA  -  11C0
ALARF   -  20C0   523=   532
ALAREP  -  20C0   523
ALARHT  -  26C0   5C0=   513
ALARNC  -  23C0   266=   531
ALARNL  -  23C0   251=   266   568   574
ALARNR  -  23C0   259=   266   565   571
ALARRG  -  532=   533   593
ALART   -  26C0   513=   532
ALARVB  -  531=   533   640
ALARVT  -  26C0   537=   513
ALARWG  -  24C0   287=   364=   532
ALBRK   -  11C0
ALFGLS  -   74=    76    77    78
ALFREF  -   72AG
ALFSQ   -  20C0
ALFTAB  -  14C0   72AG
ALHTE   -  26C0   4C0=   407   408   409   412   414   416   418   420   422   424   425
           429    431   433   435   437   439   441
ALHTM   -  26C0   402=   405   418   419   420   422
ALHTP   -  26C0   401=   404   424   430   431   433
ALHTPR  -  26C0   399=   400   401   402
ALHTST  -  11C0
ALIM    -  15C0
ALLNSQ  -  22C0
ALLRH   -  23C0   235=   251   254
ALLWPP  -  24C0   317=   319
ALNCBK  -  11C0
ALPHE   -  20C0    61=    74   316AG  592
ALPHHT  -  26C0   395=   396   397   398AG  4C0
ALPHLN  -  22C0
ALPHLR  -  23C0   133=   609
ALPHLW  -  24C0   296=   3C0   3C4   313AG  317   333   348
ALPHRN  -  22C0
ALPHRR  -  23C0   136=   613
ALPHRW  -  24C0   298=   3C1   3C4   314AG  318   334   348
ALPHVT  -  26C0   445=   446   447   451
```

Figure G.6. (Continued)

ALPSLW	-	2400	312=	590										
ALPSRW	-	2400	313=	589										
ALPNSQ	-	2200												
ALPRH	-	2300	239=	259	262									
ALPWPP	-	2400	318=	321										
ALVTE	-	2600	451=	458	459	461	463	465	467	469	471	473	475	476
		487	482	484	486	488	490	492						
ALVTM	-	2600	453=	456	469	470	471	473						
ALVTP	-	2600	452=	455	475	481	482	484						
ALVTPP	-	2600	450=	451	452	453								
ALVTST	-	1100												
ALWSSQ	-	2400	300=	302	311AG	331								
AMACH	-	1800												
AMACLP	-	900	585											
AMACRP	-	900	584											
AMACSQ	-	1800												
AMACTL	-	2500	585=	587										
AMACTR	-	2500	584=	589										
AMASRQ	-	2700	536=											
AMARF	-	2700	524=	525										
AMARFP	-	2700	524											
AMARHT	-	2600	501=	514										
AMARLP	-	2400	235=	354=	365									
AMARNC	-	2300	267=	535										
AMARNL	-	2300	253=	267										
AMARNR	-	2300	261=	267										
AMARPG	-	535=	536	595										
AMARRW	-	2400	236=	358=	365									
AMART	-	2600	514=	535										
AMARVR	-	534=	536	642										
AMARVT	-	2600	5[illegible]8=	514										
AMARWG	-	2400	365=	535										
AMEM	-	1300												
AMLRH	-	2300	236=	252										
AMRNLP	-	2300	252=	253	592									
AMRNRP	-	2300	260=	261	593									
AMRUTL	-	2300	215=	231	232									
AMRUTR	-	2300	222=	233	234									
AMRRH	-	2300	239=	260										
AMUL	-	1900	157=	159	1[illegible]	1[illegible]	1[illegible]	192	193	194	195	196	197	200
		201	202	203										
AMULSQ	-	1900	159=	189	19[illegible]	191	192	194	195	196	197	200	201	202
		203												
AMUR	-	1900	158=	160	169	170	171	172	173	174	175	176	177	180
		181	182	183										
AMURSQ	-	1900	160=	169	17[illegible]	171	172	174	175	176	177	180	181	182
		183												
ANARFR	-	2700	537=	597										
ANARF	-	2700	525=	537										
ANARFP	-	2000	525											
ANARHT	-	2600	502=	515										
ANARNC	-	2300	268=	537										
ANARNL	-	2300	254=	268										
ANARNR	-	2300	262=	268										
ANART	-	2600	515=	537										

Figure G.6. (Continued)

	ANARVT	-	2600	539=	515								
	ANARWG	-	2400	238=	366=	527							
	ANDIG	-	600	34AG									
	ANDIG2	-	600										
	ANLRH	-	2300	237=	250								
	ANRDTL	-	2300	216=	231	232							
	ANRDTR	-	2300	223=	233	234							
	ANRRH	-	2300	242=	258								
	AREAHT	-	1100										
	AREAVT	-	1100										
	AREAW	-	1100										
	ARHT	-	1100										
	ARILW	-	2400										
	ARIRW	-	2400										
*	ARTEX	-	659*										
	ARVT	-	1100										
	ARWING	-	800										
	ARWSSO	-	2400	301=	303	312AG	332						
	ASLP	-	1500										
*	ATAN2	-	61	62	133	134	136	137	296	297	298	299	395	444
	ATAJLR	-	2400										
	ATAURR	-	2400										
	AVEALR	-	2400										
	AVEALW	-	2400	304=	386	612							
	AVECLW	-	2400	292=	359=	367							
	AVECTS	-	2400	345	346	347	348	359					
	AVEEPP	-	2400	371	387	388							
	AVEIN	-	1600	42=	367								
	AVEYAC	-	1100										
	AVEYCS	-	1100										
	AVEZET	-	2400										
	AZ	-	1500										
	BDNOS	-	600										
	BETAF	-	2000	62=	75	347	348	445	448	624			
	BETALN	-	2200										
	BETALW	-	2400	297=	323								
	BETARN	-	2200										
	BETARW	-	2400	219=	325								
	BETESQ	-	2000										
	BETGLS	-	75=	76	77								
	BETVT	-	2600	444=	445	449AG							
	BIGGLS	-	78=	626									
	BICL	-	2300	154=	205	206	207	208					
	BICLDP	-	2300	152=	163	164							
	BICLPR	-	900	161	162								
	BICR	-	2300	168=	185	186	187	188					
	BICRDP	-	2300	166=	167	168							
	BICRPR	-	900	165	166								
	BIGX	-	2100										
	BKALPR	-	2400	339	340	341							
	BKARPR	-	2400	342	343	344							
	BKD1T	-	1100										
	BKD2T	-	1100										
	BKD3T	-	1100										
	BKEY	-	1300										

Figure G.6. (Continued)

BKLSW	-	1100										
BKMIT	-	1100										
BKM2T	-	1100										
BKM3T	-	1100										
BKM4T	-	1100										
BKNSW	-	1100										
BLOB	-	2100										
BLT	-	1100	32	83	84	85	86	87	250	252	258	26
BMEM	-	1300										
BMOVTL	-	2100	235									
BMOVTS	-	2100	286									
BTLSSO	-	2200										
BTMSSO	-	2200										
BT1	-	1100										
BT2	-	1100										
BT3	-	1100										
CALIHT	-	2500	32315	427	429	5 4						
CALLN	-	2200										
CALLW	-	2400	32?=	351	352							
CALRN	-	2200										
CALRW	-	2400	322=	355	356							
CAVINW	-	2400										
CAVZET	-	2400										
CBCMF	-	2500										
CBETLN	-	2200										
CBETLW	-	2400	324=	351	352	354						
CBETRN	-	2200										
CBETRW	-	2400	326=	355	356	358						
CBETSS	-	2400	4+512	432	433	504	505	506				
CDCNTL	-	2400	2 2=	311	31315							
CDCNTS	-	2400	3 3=	31255	31455							
CDDUM	-	2400	31[illegible]	31246								
CDF	-	2200										
CDHT	-	2400	41?=	415=	422=	424=	431=	439=	442=	437	498	499
CDHTST	-	2400	415=	416	421=	422	432=	433	438=	439		
CDLN	-	2200										
CDLWAC	-	2400	31345	34[illegible]	345	34[illegible]						
CDLWPG	-	2400	31346									
CDLWSS	-	2400	31135	342	34[illegible]							
CDOF	-	1100										
CDOHT	-	1100	41[illegible]	415	421	42[illegible]	437	43[illegible]	442			
CDOLN	-	2200										
CDONHT	-	1100										
CDONLO	-	1100										
CDRRN	-	2200										
CDRVT	-	1100	451	466	472	477	483	489	493			
CDRW	-	2200										
CDRWAC	-	2400	31465	343	345	348						
CDRWPG	-	2400	31446									
CDRWSS	-	2400	31235	342	347							
CDSLW	-	2400	347=	346	351	352	353					
CDSRW	-	2400	343=	346	355	356	357					
CDVT	-	2500	451=	457=	473=	477=	486=	491=	497=	5 4	[illegible]	[illegible]
CDVTST	-	2400	466=	467	472=	473	483=	484	489=	49[illegible]		
CDWCOR	-	2100										

Figure G.6. (Continued)

```
     CEPLW   -   2400   335AG   339    340
     CEPRW   -   2400   336AG   342    343
*    CGGTVR  -   17*
     CHORD   -   1100   354     358
     CILAML  -   1600    44=     50    550    551    552    598    633
     CILAMR  -   1600    43=     50    547    548    549    596    625
     CLALHT  -   1100   403
     CLALPH  -   1100
     CLAT    -   2600   403=    409    413    419    425    430    436    441
     CLAVE   -   2400   316AG   347    348
*    CLCDCM  -   311*   312*    313*   314*
     CLCNTL  -   2400
     CLCNTR  -   2400
     CLDUM   -   2400   311AG   312AG
     CLF     -   2000
*    CLF1    -   315*
*    CLF2    -   316*
     CLHT    -   2600   409=    410    414=   420=   425=   426    431=   437=   441=   442    497    499
     CLHTST  -   2600   413=    414    415    419=   420    421    430=   431    432    436=   437    438
     CLILW   -   2400
     CLIRW   -   2400
     CLLN    -   2200
     CLLWAD  -   2400   313AG   339    345    347    348
     CLLWPR  -   2400   313AG
     CLLWSS  -   2400   311AG   339    340
     CLMAX   -   1100
     CLOAL   -   1100
     CLRN    -   2200
     CLRWAD  -   2400   314AG   342    345    347    348
     CLRWPR  -   2400   314AG
     CLRWSS  -   2400   312AG   342    343
     CLSLW   -   2400   339=    345    351    352    359
     CLSRW   -   2400   342=    345    355    356    359
     CLSW    -   2400   347=    364
     CLTCOR  -   2100   403
     CLWCOR  -   2100
     CLZERO  -   2400   315AG   316AG
     CMCNTL  -   2400   309=    311AG  313AG
     CMCNTR  -   2400   310=    312AG  314AG
     CMF     -   2000
     CMLN    -   2200
     CMLWAD  -   2400   313AG   341
     CMLWSS  -   2400   311AG   341
     CMOF    -   1100
     CMON    -   1100
     CMOW    -   2700   578=    580
     CMRN    -   2200
     CMRWAD  -   2400   314AG   344
     CMRWSS  -   2400   312AG   344
     CMSLW   -   2400   341=    354
     CMSRW   -   2400   344=    358
     CNF     -   2000
     CNFA1L  -   2300   170=    205
     CNFA1R  -   2300   170=    185
     CNFB1L  -   2300   189=    205
```

Figure G.6. (Continued)

CNFB10	-	2300	148=	195					
CNFL	-	2300	235=	213					
CNFPL	-	900	235						
CNFPR	-	900	135						
CNFR	-	2300	135=	[illegible]					
CNLN	-	2200							
CNOF	-	1100							
CNOLN	-	1100							
CNORN	-	1100							
CNRN	-	2200							
CNSW	-	2400	348=	356					
CNTRAL	-	1500							
COEF1	-	800	49	[illegible]	548	551			
COEF10	-	900	564						
COEF11	-	800	347						
COEF12	-	800	348						
COEF13	-	800	527	535					
COEF14	-	800							
COEF15	-	800							
COEF16	-	800	354	366					
COEF17	-	800							
COEF18	-	800	345	351					
COEF19	-	800	[illegible]						
COEF2	-	800	547	550					
COEF20	-	800	210						
COEF21	-	800	415	415	421	425	432	433	442
COEF22	-	800	451	466	471	477	483	483	493
COEF23	-	800	435						
COEF24	-	800	513						
COEF25	-	800							
COEF26	-	800							
COEF27	-	800							
COEF28	-	800							
COEF29	-	800							
COEF3	-	800							
COEF30	-	800							
COEF31	-	800	531						
COEF32	-	800	535	537					
COEF33	-	800	535	53[illegible]					
COEF34	-	800	535	53[illegible]					
COEF35	-	800							
COEF36	-	800							
COEF37	-	800							
COEF38	-	800							
COEF39	-	800							
COEF4	-	800	547	550	666	668			
COEF40	-	800							
COEF41	-	800							
COEF42	-	800							
COEF5	-	800							
COEF6	-	800							
COEF7	-	800							
COEF8	-	800							
COEF9	-	800	[illegible]	[illegible]					
COUS1	-	2200							

Figure G.6. (Continued)

```
CONS10  -   29C0
CONS11  -   29C0
CONS12  -   29C0
CONS13  -   29C0
CONS14  -   29C0
CONS15  -   29C0
CONS16  -   29C0
CONS17  -   29C0
CONS18  -   29C0
CONS19  -   29C0
CONS2   -   29C0
CONS20  -   29C0
CONS21  -   29C0
CONS22  -   29C0
CONS23  -   29C0
CONS24  -   29C0
CONS25  -   29C0
CONS26  -   29C0
CONS27  -   29C0
CONS28  -   29C0
CONS29  -   29C0
CONS3   -   29C0
CONS30  -   29C0
CONS31  -   29C0
CONS32  -   29C0
CONS33  -   29C0
CONS34  -   29C0
CONS35  -   29C0
CONS36  -   29C0
CONS37  -   29C0
CONS38  -   29C0
CONS39  -   29C0
CONS4   -   29C0
CONS40  -   29C0
CONS41  -   29C0   376
CONS42  -   29C0   376
CONS43  -   29C0   376
CONS44  -   29C0
CONS45  -   29C0
CONS46  -   29C0
CONS47  -   29C0
CONS48  -   29C0
CONS49  -   29C0
CONS5   -   29C0
CONS50  -   29C0
CONS51  -   29C0
CONS52  -   29C0
CONS53  -   29C0
CONS54  -   29C0
CONS55  -   29C0
CONS56  -   29C0
CONS57  -   29C0
CONS58  -   29C0
CONS59  -   29C0
CONS6   -   29C0
```

Figure G.6. (Continued)

```
CONS60  -   2900
CONS61  -   2900
CONS62  -   2900
CONS63  -   2900
CONS64  -   2900
CONS65  -   2900   367
CONS66  -   2900   347
CONS67  -   2900
CONS68  -   2900
CONS69  -   2900
CONS7   -   2900
CONS70  -   2900
CONS71  -   2900
CONS72  -   2900   334
CONS73  -   2900   334
CONS74  -   2900   334
CONS75  -   2900   [illegible]
CONS76  -   2900   [illegible]
CONS77  -   2900   [illegible]
CONS78  -   2900   341
CONS79  -   2900   341
CONS8   -   2900
CONS80  -   2900   341
CONS81  -   2900   [illegible]
CONS9   -   2900
*CONTRL -   [illegible]
COSALF  -   [illegible]
COSBTE  -   [illegible]
COSIML  -   1600   [illegible]   [illegible]   44   53   86   [illegible]   [illegible]   141   247   249   251
            253    551
COSIMR  -   1600   [illegible]   [illegible]   46   86   87   91   93   145   147   255   257   259
            263    564
COSIW   -   [illegible]   [illegible]   111   115   117
COSLAM  -   [illegible]   43   44   45   46
COSPHI  -   [illegible]
COSPSI  -   1600
COSTHE  -   [illegible]
COSZML  -   2300   [illegible]   [illegible]   [illegible]   [illegible]   [illegible]   231   232   241   245
COSZMR  -   2300   [illegible]   [illegible]   [illegible]   [illegible]   [illegible]   233   234   [illegible]   246
CPHIP   -   900    161   [illegible]   165   166
CPI     -   900    217
CPMAIL  -   2300   [illegible]=   [illegible]=   [illegible]
CPMAIR  -   2300   175=   [illegible]=   187
CPMBIL  -   2300   [illegible]=   [illegible]=   [illegible]
CPMBIR  -   2300   174=   [illegible]=   187
CPML    -   2300   [illegible]=   [illegible]
CPMPL   -   900    [illegible]
CPMPR   -   900    [illegible]
CPR     -   2300   [illegible]   [illegible]
CPS     -   900    214
CSFAIL  -   2300   172=   [illegible]
CSFAIR  -   2300   172=   [illegible]
CSFBIL  -   2300   171=   [illegible]
CSFBIR  -   2300   171=   [illegible]
CSFL    -   2300   [illegible]=   [illegible]
```

Figure G.6. (Continued)

```
      CSFPL   -    9C0   236
      CSFPR   -    9C0   186
      CSFR    -   23C0   186=   221
      CTAULR  -   24C0
      CTAURR  -   24C0
      CTL     -   23C0   189    190    191    192    194    195    196    197    200    201    202    203
                 211=    212
      CTLPRM  -    9C0   211
      CTR     -   23C0   169    170    171    172    174    175    176    177    180    181    182    183
                 218=    219
      CTRPRM  -    9C0   218
      CTSLR   -   24C0   279    337    579
      CTSRR   -   24C0   280    338    581
      CYALVT  -   11C0   454
      CYAT    -   26C0   454=   460    464    470    476    481    487    492
      CYF     -   20C0
      CYLN    -   22C0
      CYMA1L  -   23C0   197=   203=   238
      CYMA1R  -   23C0   177=   183=   188
      CYMB1L  -   23C0   196=   202=   238
      CYMB1R  -   23C0   176=   182=   188
      CYML    -   23C0   208=   216
      CYMPL   -    9C0   238
      CYMPR   -    9C0   188
      CYMR    -   23C0   188=   223
      CYRN    -   22C0
      CYVT    -   26C0   460=   461    465=   471=   476=   477    482=   488=   492=   493    504    505
                 506
      CYVTST  -   26C0   464=   465    466    470=   471    472    481=   482    483    487=   488    489
      C2INL   -   16C0
      C2INR   -   16C0
*     DACFLT  -   650*
*     DACIO   -   12*
      DAC1    -   12C0   592=   593=   594=   595=   596=   597=   598=   599=   600=   601=   602=   603=
                 604=    605=   606=   607=   608=   609=   610=   611=   612=   613=   614=   615=   616=
                 617=    618=   619=   622=   623=   624=   650AG
      DAC2    -   12C0   625=   626=   627=   628=   629=   630=   631=   632=   633=   634=   635=   636=
                 637=    638=   639=   640=   641=   642=   643=   644=   645=   646=   647=   648=   649=
      DBRK1   -   29C0   375
      DBRK10  -   29C0
      DBRK11  -   29C0
      DBRK12  -   29C0
      DBRK13  -   29C0
      DBRK14  -   29C0
      DBRK15  -   29C0
      DBRK16  -   29C0
      DBRK17  -   29C0   274    295
      DBRK18  -   29C0    67     70
      DBRK19  -   29C0    67     70
      DBRK2   -   29C0
      DBRK20  -   29C0
      DBRK21  -   29C0
      DBRK3   -   29C0
      DBRK4   -   29C0
      DBRK5   -   29C0
```

Figure G.6. (Continued)

DRRK6	-	2900						
DRRK7	-	2900						
DRRK8	-	2900						
DRRK9	-	2900	173	193				
DCDDF	-	2400						
DCDLDA	-	2400	3[illegible]5A6	3[illegible]7				
DCDLG	-	1100						
DCDLSP	-	2400	3[illegible]5A6	3[illegible]7				
DCDRDA	-	2400	3[illegible]6A6	3[illegible]9				
DCDRSP	-	2400	3[illegible]6A6	3[illegible]				
DCLDF	-	2400						
DCLLDA	-	2400	3[illegible]5A6	311A6	313A6			
DCLLSP	-	2400	3[illegible]5A6	3113[illegible]	313A6			
DCLRDA	-	2400	3[illegible]6A6	312A6	314A6			
DCLRSP	-	2400	3[illegible]6A6	312A6	314A6			
DCLSPW	-	2400	345=	347				
DCMDCL	-	1500						
DCMDF	-	2400						
DCMLDA	-	2400	3[illegible]5A6	3[illegible]9				
DCMLG	-	1100						
DCMLSP	-	2400	3[illegible]5A6	3[illegible]9				
DCMRDA	-	2400	3[illegible]6A6	31[illegible]				
DCMRSP	-	2400	3[illegible]6A6	31				
DCMSPW	-	2400	346=	34[illegible]				
DCYPLM	-	1500						
DEG2C	-	1100	331	33[illegible]	333	334		
DEL	-	1800	534					
DELALM	-	1500						
DELBS	-	900						
DELBT	-	900						
DELELV	-	900	329					
DELEPZ	-	374=	375	376	378	380	381	384
DELFLP	-	900	47	315A6	578			
DELRS	-	900						
DELRT	-	900						
DELRUD	-	900	45					
DELSPL	-	900	3[illegible]					
DELSPR	-	900	3[illegible]A6					
DELSS	-	900						
DELST	-	900						
DELTH	-	900						
DERDAL	-	381=	3[illegible]	3[illegible]				
DELAIL	-	900	3[illegible]	311A6	313A6	374		
DELAIP	-	900	3[illegible]	312A6	314A6	374		
DGTORD	-	1100	376	378				
DIGAN	-	600	5[illegible]					
DIGAN2	-	600						
DISABL	-	564*						
DLBLM	-	1500						
DLELPC	-	1500						
DLERSC	-	1600	47=					
DLLG	-	2300	533					
DLLNC	-	2200	251	254				
DLRLM	-	1500						
DLSNC	-	2200	259	262				

Figure G.6. (Continued)

DLSLM	-	1500				
DMLG	-	2000	524			
DMLNC	-	2200	252			
DMRNC	-	2200	250			
DNF1	-	1000	170	190		
DNF2	-	1000	170	190		
DNF3	-	1000	170	190		
DNF4	-	1000	170	190		
DNLG	-	2000	525			
DNLNC	-	2200	250			
DNRNC	-	2200	258			
DOVT	-	1100				
DOVTL	-	2100	283			
DOVTR	-	2100	284			
DPM1	-	1000	175	181	195	201
DPM2	-	1000	175	195		
DPM3	-	1000	175	195		
DPM4	-	1000	175	195		
DPM5	-	1000	181	201		
DPM6	-	1000	181	201		
DPM7	-	1000	181	201		
DRLM	-	1500				
DSDBET	-	1100	445	449		
DSF1	-	1000	172	192		
DSF2	-	1000	172	192		
DSF3	-	1000	172	192		
DSF4	-	1000	172	192		
DTIM	-	600				
DUM12	-	900				
DUM13	-	900				
DUM14	-	900				
DUM15	-	900				
DUM43	-	900				
DUM44	-	900				
DUM45	-	900				
DUM46	-	900				
DUM47	-	900				
DUM48	-	900				
DXLG	-	2000	520			
DXLNC	-	2200	247	249		
DXRNC	-	2200	255	257		
DYLG	-	2000	521			
DYLNC	-	2200	248			
DYM1	-	1000	177	183	197	203
DYM2	-	1000	177	197		
DYM3	-	1000	177	197		
DYM4	-	1000	177	197		
DYM5	-	1000	183	203		
DYM6	-	1000	183	203		
DYM7	-	1000	183	203		
DYRNC	-	2200	256			
DZLG	-	2000	522			
DZLNC	-	2200	243			
DZRNC	-	2200	244			
EFFHT	-	1100				

Figure G.6. (Continued)

	EFFVT	-	1100					
	EMAXN1	-	1900					
	EMAXN2	-	1800					
	EMXVOT	-	1800					
	ENFL	-	900					
	ENFS	-	900					
	ENF1	-	1000	169	189			
	ENF2	-	1000	169	189			
	ENF3	-	1000	169	189			
	ENF4	-	1000	169	189			
*	ENG	-	3*					
*	ENGVAR	-	18*					
	EN1MX	-	300					
	EN1STP	-	300					
	EN1TMX	-	300					
	EN2MX	-	300					
	EN2REF	-	110					
	EN2STP	-	1800					
*	FCMVAR	-	27*					
	EPILR	-	2400	136				
	EPIPL	-	2400	133				
	EPM1	-	1000	174	192	194	2[illegible]	
	EPM2	-	1000	174	194			
	EPM3	-	1000	174	194			
	EPM4	-	1000	174	194			
	EPM5	-	1000	186	200			
	EPM6	-	1000	185	200			
	EPM7	-	1000	180	200			
	EPPLR	-	2400	300	335AG			
	EPPPM	-	2100					
	EPPPR	-	2400	331	336AG			
	EPTAIL	-	2600	371=	388=	391=	394=	395
	EPTL1	-	2600	386=	387	391		
	EPWRL	-	2400	132	367=	368		
	EPWRR	-	2400	133	369=			
	EPZERO	-	2600	376=	378=	396		
	ECMX	-	1300					
	ESF1	-	1000	171	191			
	ESF2	-	1000	171	191			
	ESF3	-	1000	171	191			
	ESF4	-	1000	171	191			
	ETAA	-	1500	[illegible]	[illegible]	[illegible]	[illegible]	[illegible]
	ETAIRF	-	1500					
	ETARD	-	1500					
	ETAWB	-	1500					
	EXDTMX	-	300					
	EXDTRR	-	300					
	EYM1	-	1000	176	192	196	202	
	EYM2	-	1000	176	196			
	EYM3	-	1000	176	196			
	EYM4	-	1000	176	196			
	EYM5	-	1000	192	202			
	EYM6	-	1000	192	202			
	EYM7	-	1000	192	202			
	FEI	-	1100	279	285			

Figure G.6. (Continued)

```
      FIE      -    11C0   229    230    254    242
      FINDEG   -    11C0   274    295
      FINPR    -    11C0   274=   295=
      FIP      -    11C0   227    228    235    238
      FIPOML   -    23C0   227=   236    237
      FIPOMR   -    23C0   228=   239    240
      FIXX     -    27C0
      FIXXF    -    11C0
      FIXXPR   -    11C0
      FIXXW    -    11C0
      FIXZF    -    11C0
      FIXZP    -    27C0   544    594
      FIXZPR   -    11C0
      FIXZQ    -    27C0   545
      FIXZR    -    27C0   546    614
      FIXZW    -    11C0
      FIYY     -    27C0
      FIYYF    -    11C0
      FIYYPR   -    11C0   606    608
      FIYYW    -    11C0
      FIZZ     -    27C0
      FIZZF    -    11C0
      FIZZPR   -    11C0   548    551
      FIZZW    -    11C0
      FJXX     -    27C0   544
      FJYY     -    27C0   545
      FJZZ     -    27C0   546
*     FLAGS    -     4*
      FNORML   -    23C0   213=   241    245
      FNORMR   -    23C0   220=   242    246
      FSIDEL   -    23C0   214=   241    245
      FSIDER   -    23C0   221=   242    246
      FSMACH   -    18C0
               THE VARIABLE- FSQRT   -IS USED BEFORE IT IS DEFINED
      FSQRT    -    60     63     100    101    104    105    121    125    131    605
*     FUSVAR   -    20*
      GAATAB   -    14C0   72AG
      GA1ALF   -    72AG   76     77
      GA1BET   -    73=    76     77
      GBATAB   -    14C0   72AG
      GBETDR   -    15C0
      GBETP    -    15C0
      GBETR    -    15C0
      GBUTON   -     4C0
      GB1ALF   -    72AG   73     78
      GDB1     -    15C0
      GDB2     -    15C0
      GDLTH    -    15C0
*     GEAR     -    518*
      GEF      -    21C0   371    388    391
*     GEFVAR   -    21*
      GGUST    -    15C0
      GICLM    -    15C0
      GINRF    -    15C0
      GKEY     -    13C0   72AG
```

Figure G.6. (Continued)

```
GLPSLP  -    1500
GLPO    -    1500
GLSLM   -    1500
GMEM    -    1300    72AG
GOMG    -    1500
GP      -    1500
GPDS    -    1500
GPHI    -    1500
GPRI    -    1500
GPSI    -    1500
GPSIDP  -    1500
GQ      -    1500
GR      -    1500
GRDR    -    1500
GTH     -    1500
GTHF    -    1500
GTHGOV  -    1500
H       -     300
        THE VARIABLE- HACL[illegible] -IS USED BEFORE IT IS DEFINED
HACLOD  -    575     576=
        THE VARIABLE- HACROD -IS USED BEFORE IT IS DEFINED
HACROD  -    572     573=
HDOT    -     300
HDTACL  -    2500    1[illegible]4     561=    575=
HDTACR  -    2500    11[illegible]     559=    572=
HDTRIM  -    2800    631
HGEFLR  -    2100
HGEFRR  -    2100
HLHUB   -    2100
HOLD    -     600
HOLD2   -     600
HP      -    1100
HRHUB   -    2100
HSQ     -    1600
HTC4    -    2100
HTRIM   -    2800    6[illegible]4
HTSTLL  -     800    4[illegible]1     4[illegible]2
HTVTRT  -    1100
HWACL   -    2500    1[illegible]6     1[illegible]7     56[illegible]=    574=    575     576
HWACR   -    2500    112     113     558=    571=    572     573
HWC4    -    2100
*  HYBCON  -     5*
*  HYBIO   -     7*
HIDTL   -    2500     84     557=    569=
HIDTR   -    2500     87     555=    566=
HIL     -    2500     82      83     556=    568=    569     57[illegible]
        THE VARIABLE- HILOLD -IS USED BEFORE IT IS DEFINED
HILOLD  -    569     57[illegible]=
HIR     -    2500     85      86     554=    565=    566     567
        THE VARIABLE- HIROLD -IS USED BEFORE IT IS DEFINED
HIROLD  -    566     567=
IAD     -     600
IC      -     600
ICDSPC  -     200
ICLR    -     600
```

Figure G.6. (Continued)

```
  ICONDP  -    400
  IC2     -    600
  IDURC   -    600
  IFC     -    600
  IFCHAN  -    600
  IFLAG   -    200
  IFRAME  -    600
  IGN     -    600
  IHJB    -    600
  ILEX    -    600
* INITVR  -   16*
  IOC     -    600
  IOC21   -    600
  IPAN    -    200   665=
  IPHASE  -    400
  IPSNDS  -    600    37AG   650AG
  IRCTS   -    600
  IRCX    -    600
  IRUNIT  -    600
  ISCOPE  -    200
  ISENCE  -    400
  ISETC   -    600
  ISHRC   -    600
  ISLOW   -    400
  ISTA    -    400
  ISTAD   -    600     36
  ISTAD2  -    600
  ISTB    -    400
  ISTDA   -    600   656
  ISTDA2  -    600
  ISTFLT  -  650AG   653
  ISTG    -   72AG
  ISTGO   -    600
  ISTGO2  -    600
  ISTHO   -    600
  ISTHO2  -    600
  ISTIC   -    600
  ISTIC2  -    600
  ISTPIT  -    600
  ISTRM   -    600
  ISTRM2  -    600
  ISYNC   -    600
  ITRIM   -    400
  ITSC    -    600
  IWARN1  -    400     5LG   327=    328=    329=    330=    331=    332=    333=    334=    406=    427=    457=
                478=   652=   653=
  IWARN2  -    400     5LG
  IWREVT  -    400
  J       -  56300   66430
  JTRIM   -    400
  KAR     -    700    37AG   650AG
  KONER   -    200   660=
  KPAN    -     35=   651=    655=    665
  KTRIM   -    400
  LETR    -    600
```

Figure G.6. (Continued)

*	LINT	-	72*						
	MICNT	-	200						
	MIECB	-	200						
	MONDIG	-	600						
*	NACVAR	-	22*						
	NADCS	-	600						
	NCHAIN	-	600						
	NCLOSE	-	66=	69=	273	370	436		
	NCON	-	600						
	NCONSL	-	600						
	NDACS	-	600						
	NERSME	-	200						
	NGEE	-	400						
	NICS	-	600						
	NOSIM	-	200						
	NPCS	-	600						
	NPLOT	-	400						
	NPLOT2	-	400						
	N2IND	-	300						
	N4LOID	-	300						
	NTWST	-	400	533					
	NVR	-	400	533					
	NWDTIP	-	3[illegible]						
	N1IN	-	3[illegible]						
	N1THID	-	3[illegible]						
	N2IND	-	3[illegible]						
	OMA	-	150[illegible]						
	OMDOT	-	200	225	226				
	OMDTL	-	1300	225=	235				
	OMDTS	-	1300	226=	238				
	OMEGA	-	300	151	152				
	OMEGAL	-	1300	151=	153	155	227		
	OMEGAS	-	1300	152=	154	156	228		
	OMEGEL	-	1800	229	254				
	OMEGEP	-	180[illegible]	23[illegible]	262				
	OMGT	-	1500						
	OMIPE	-	150[illegible]						
	OMLM	-	150[illegible]						
	OMPD	-	1[illegible]						
	OMPEE	-	110[illegible]						
	OMSLP	-	1[illegible]						
	OMSOL	-	1[illegible]	153=	212	213	214	215	216	217
	OM[illegible]	-	[illegible]	154=	219	[illegible]	221	222	223	224
	OM[illegible]	-	150[illegible]						
	OMVTC	-	130[illegible]						
	OPVDSK	-	800	271	271	272			
	OPVESN	-	1400	371	443	331	454		
	OPVIXX	-	2700	593	594	596	598	[illegible]	
	OPVIYY	-	2700	595	615	628	642		
	OPVIZZ	-	2700	597	614	616	618		
	OPERA	-	600						
	OPERA2	-	600						
	OVOTIM	-	300	564	562	572	575		
	OVSOTH	-	1800						
	OVTIDL	-	1500						

Figure G.6. (Continued)

	P	-	27C0	54=	80	83	84	86	87	107	108	113	114	129	139
			141	145	147	539	541	542							
	PC	-	11C0												
	PCTOL	-	18C0												
	PCTOR	-	18C0	649											
	PGUST	-	9C0	54											
	PHI	-	9C0												
	PHIPH	-	11C0												
	PI	-	11C0	396	397	408	409	416	435	439	441	446	447	459	460
			467	486	490	492									
	PILMSK	-	2C0												
	PIOV2	-	11C0	412	414	416	420	422	429	431	433	437	439	463	465
			467	471	473	480	482	484	488	490					
	PNLN	-	23C0	139=	142										
	PNLR	-	23C0	142=	151	615									
	PNRN	-	23C0	145=	148										
	PNRR	-	23C0	148=	152	617									
	PP	-	27C0	542=	545	547	548	550	551						
	PPRIME	-	9C0	31E0	54										
	PQ	-	27C0	539=	544	546	549	552							
	PR	-	27C0	541=	545	547	550								
	PROJ	-	6C0												
	PSI	-	9C0												
	Q	-	27C0	55=	79	81	82	84	85	87	106	108	112	114	126
			127	128	130	140	146	254	262	538	539	543			
	QFSW	-	22C0												
	QGUST	-	9C0	55											
	QNLN	-	23C0	140=	143	144	237								
	QNLR	-	23C0	143=	646										
	QNRN	-	23C0	146=	149	150	240								
	QNRR	-	23C0	149=	644										
	QPRIME	-	9C0	55											
	R	-	27C0	56=	80	82	83	85	86	106	107	112	113	129	139
			141	145	147	229	230	538	540	541	543				
	ROTODG	-	11C0	74	75										
	RESLR	-	24C0												
	RESRR	-	24C0												
*	RETURN	-	662*	666*											
	RGUST	-	9C0	56											
	RLM	-	15C0												
	RNLN	-	23C0	141=	143	144	236								
	RNLR	-	23C0	144=	648										
	RNRN	-	23C0	147=	149	150	239								
	RNRR	-	23C0	150=	647										
	ROF	-	18C0	209	210	605									
	ROFOV2	-	18C0	64	271	272									
	ROED	-	3C0	605											
	ROPIR4	-	23C0	209=	212	213	214	219	220	221					
	ROPIR5	-	23C0	210=	215	216	217	222	223	224	641				
	ROTFPS	-	11C0	104	105										
	ROTRAD	-	11C0	155	156										
*	ROTVAR	-	23*												
	RPRIME	-	9C0	56											
	RQ	-	27C0	539=	543=	544	546	549	552						
	RR	-	27C0	540=	545	547	548	550	551						

Figure G.6. (Continued)

	RRI1	-	2100				
	RRI2	-	2100				
*	RTFAST	-	1*				
*	RTPASS	-	9*				
	SALIHT	-	2600	338AG	497	499	5[illegible]
	SALLN	-	2200				
	SALLW	-	2400	313=	351	352	
	SALRN	-	2200				
	SALRW	-	2400	321=	355	356	
	SAVINW	-	2400				
	SAVZET	-	2400				
	SBETLN	-	2200				
	SBETLW	-	2400	323=	353		
	SBETRN	-	2200				
	SBETRW	-	2400	325=	357		
	SBETSG	-	2600	449AG	498	5[illegible]4	535	5[illegible]6
	SBESAF	-	2200				
	SBFPR	-	1100				
	SBFSAF	-	2200				
	SBWPR	-	1100				
	SC1	-	2100				
	SCADC1	-	900	3733			
	SCADC2	-	900				
	SCADC3	-	900				
	SCADC4	-	900				
	SCDAC1	-	900	450AG			
	SCDAC2	-	900				
	SCDAC3	-	900				
	SCDAC4	-	900				
	SC1	-	1500	578			
	SC2	-	1500	578			
	SEPLW	-	2400	335AG	339	340	
	SEPRW	-	2400	336AG	342	343	
	SFNFL	-	2200				
	SFNFR	-	2200				
	SFPL	-	2200				
	SFPML	-	2200				
	SFPMR	-	2200				
	SFPR	-	2900				
	SFQL	-	2200				
	SFQR	-	2900				
	SFSFL	-	2900				
	SFSFR	-	2200				
	SFTI	-	2900				
	SFTR	-	2900				
	SFYML	-	2900				
	SFYMR	-	2900				
	SG	-	1100				
	SGNSOF	-	4[illegible]=	621=	622		
	SGNILW	-	2400	275=	276=	279	
	SGNIRW	-	2400	277=	278=	2[illegible]	
	SHF	-	1100				
	SHPLW	-	1500				
	SHPPPL	-	1300				
	SHPPPR	-	1900	332			

Figure G.6. (Continued)

```
SHPRQL  -   23CO
SHPRQP  -   23CO
SHPSTP  -    3CO
SHW     -   11CO
SHW2    -   15CO
SHW3    -   15CO
SIGMA   -   26CO   448=    449AG
SIL     -   24CO
SILAML  -   16CO    46=     49     55O    551    552    618    637
SILAMR  -   16CO    45=     49     547    548    549    616    629
SILW    -   24CO   287     337     339    34O    341    345    346
SINALF  -   2OCO
SINBTF  -   2OCO
SINCOS  -   4O*     41*    135*    138*   335*   336*   398*   449*
SININL  -   16CO    41AG    44      46     82     83     88     9C     139    141    247    249    251
           254     551
SININR  -   16CO    4CAG    43      45     95     86     91     93     145    147    255    257    259
           262     548
SINIW   -    8CO   109     111     115    117
SINLAM  -    8CO    43      44      45     46
SINPHI  -   2OCO
SINPSI  -   16CO
SINTHE  -   2OCO
SINZHL  -   23CO   135AG   143     144    163    164    231    232    241    245
SINZHR  -   23CO   138AG   149     15O    167    168    233    234    242    246
SIR     -   24CO
SIRW    -   24CO   287     338     342    343    344    345    346
SIT     -   24CO
SKDA    -   15CO
SKDCOL  -   15CO
SKDLB   -   15CO
SKDLE   -   15CO
SKDLR   -   15CO
SKDLRD  -   15CO
SKDLS   -   15CO
SKEPS   -   11CO
SKTHTW  -   15CO
SKTRIM  -   28CO
SKW1    -   15CO   565     568
SKW1C   -   15CO   571     574
        THE VARIABLE- SKW2    -IS USED BEFORE IT IS DEFINED
SKW2    -   565    568
        THE VARIABLE- SKW3    -IS USED BEFORE IT IS DEFINED
SKW3    -   565    568
SKW4    -   15CO   565     568
SKW5    -   15CO   565     568
SKW6    -   15CO   571     574
SKW7    -   15CO   571     574
SKW8    -   15CO   571     574
SKW9    -   15CO   571     574
SK0     -   11CO
SK1     -   11CO
SK1C    -   11CO
SK2     -   11CO
SK2C    -   11CO   347
```

Figure G.6. (Continued)

SK21	-	[illegible]							
SK22	-	[illegible]	[illegible]						
[illegible]	-	[illegible]							
SK3[illegible]	-	[illegible]							
SK3[illegible]	-	[illegible]							
SK31H1	-	1100							
SK31L[illegible]	-	1100							
SK32	-	[illegible]							
SK34	-	[illegible]							
SK35	-	1100							
SK36	-	1100							
SK37	-	1100							
SK38	-	1100							
SK39	-	1100							
SK4	-	1100							
SK40	-	1100							
SK41	-	[illegible]							
SK42	-	[illegible]							
SK43	-	1100							
SK44	-	1100							
SK45	-	1100							
SK46	-	1100							
SK47	-	[illegible]							
SK48	-	[illegible]							
SK49	-	[illegible]							
SK5	-	[illegible]							
SK50	-	[illegible]							
SK6	-	[illegible]							
SK7	-	[illegible]							
SK8	-	1100							
SK9	-	[illegible]							
SL	-	1100							
SLAC	-	[illegible]	[illegible]						
SLF	-	1100							
SLPA	-	[illegible]	[illegible]						
SLW	-	1100							
SM	-	1100							
SMA	-	[illegible]							
SMF	-	1100							
SMN	-	[illegible]							
SMW	-	1100							
SPAN	-	[illegible]	237						
SPHIP	-	[illegible]	141	142	165	166			
SQF	-	2000	[illegible]4=	55	72A[illegible]	272	[illegible]35	503	622
SQFARG	-	1400							
SQFPRM	-	[illegible]	[illegible]5	67=	[illegible]=				
SQLNG	-	[illegible]							
SQLP	-	[illegible]	271=	279	[illegible]=	149	579		
SQS[illegible]	-	[illegible]							
SQ[illegible]	-	[illegible]							
SQ[illegible]	-	[illegible]							
SQR[illegible]	-	[illegible]							
SQ[illegible]	-	[illegible]	[illegible]=	280	[illegible]1=	35[illegible]	[illegible]31		
SQ[illegible]TC	-	[illegible]	[illegible]4						
SQ[illegible]		[illegible]							

Figure G.6. (Continued)

SSWING	-	2400	277=	289=	364	356
SSZINL	-	1600				
SSZINR	-	1600				
STAILP	-	2400				
STAIRR	-	2400				
SUMIXX	-	800				
SUMIXZ	-	800				
SUMIYY	-	800				
SUMIZZ	-	800				
SVSTAB	-	1400				
SVSTAR	-	2400				
SVSTRL	-	2400				
SWLG	-	400	517			
SWLGZ	-	900				
SZINL	-	1600				
SZINR	-	1600				
* TAILVR	-	26*				
TAUAG	-	1400				
TAUBET	-	1500				
TAUCYR	-	1500				
TAUDB	-	1500				
TAUDR	-	1500				
TAUEE	-	1500				
TAUGIC	-	1500				
TAUGLS	-	1500				
TAUGST	-	1500				
TAUHT	-	1100	373			
TAUL	-	600				
TAULR	-	2400				
TAUP	-	1500				
TAUPDS	-	1500				
TAUPHI	-	1500				
TAUPR	-	1500				
TAUPR1	-	1500				
TAUPSI	-	1500				
TAUQ1	-	1500				
TAUQ2	-	1500				
TAUR01	-	1500				
TAUR02	-	1500				
TAURR	-	2400				
TAURT1	-	1100				
TAURT2	-	1100				
TAUR1	-	1500				
TAUR2	-	1500				
TAUR3	-	1500				
TAUSHP	-	1500				
TAUTH	-	1500				
TAUTHE	-	1500				
TAUVT	-	1100	450			
TAVAEP	-	2400				
TCDEF	-	300				
TDEGF	-	1800				
TEAL	-	1900				
TEAR	-	1800				
TERMP1	-	2700	544=	593		

Figure G.6. (Continued)

TERMD1	-	2700	545=	535					
TERMR1	-	2700	546=	537					
TERM1	-	2700							
TERM1L	-	2700	550=	592					
TERM1R	-	2700	547=	583					
TERM2	-	2700							
TERM2L	-	2700	551=	582					
TERM2R	-	2700	548=	583					
TERM3	-	2700							
TERM3L	-	2700	552=	582					
TERM3R	-	2700	549=	583					
TERM4	-	2700							
TERM5	-	2700							
TERM6	-	2700							
THCDEL	-	1900							
THE	-	900							
THETC	-	1300							
THOMLN	-	1500							
THOMLP	-	1500							
THRTLM	-	1500							
THTLAC	-	2500	236	[illegible]	217	537=	[illegible]		
THTRAC	-	2500	238	[illegible]	218	536=	594=		
THTWIN	-	2300	61[illegible]						
TH75L	-	900							
TH75LN	-	1500							
TH75LP	-	1500							
TH75R	-	900							
TIGFL	-	2100	211						
TIGFR	-	2100	212						
TL	-	2300	212=	247	249	270	271	283	285
TMHR10	-	266=	256						
TMHR11	-	582=	535	639					
TMHR12	-	583=	546	636					
TMWG10	-	2500							
TMWG11	-	2500							
TNAC1	-	2200							
TNAC2	-	2200							
TOMDLM	-	1500							
TOPOL	-	2300	217=	235					
TOROR	-	2300	224=	[illegible]					
TPSR	-	900							
TR	-	2300	219=	255	257	271	272	284	286
* TRACK	-	33*	661*						
TRIM	-	600							
TRIM2	-	600							
TRMAR1	-	2300	243=	247	249	252			
TRMAR2	-	2300	244=	255	257	261			
TRMAR3	-	2300	251=	251	254				
TRMAR4	-	2300	259=	259	262				
* TRMCON	-	28*							
TRMHR1	-	2300	232=	253	590				
TRMHR2	-	2300	241=	261	589				
TRMHR3	-	231=	236						
TRMHR4	-	232=	237						
TRMHR5	-	233=	230						

Figure G.6. (Continued)

TRMHB6	-	234=	240						
TRMHB7	-	241=	243						
TRMHB8	-	242=	244						
TRMHB9	-	245=	248						
TRMHT	-	26C0	495=	496=	497	498	499		
TRMHT2	-	26C0	404=	408	413	414	416		
TRMHT3	-	26C0	435=	435	436	437	439		
TRMH1S	-	564=	565	568	571	574			
TRMTL1	-	579=	590						
TRMTR1	-	581=	589						
TRMTTL	-	27C0							
TRMTTR	-	27C0							
TRMTTW	-	580=	589	590					
TRMVT	-	26C0	503=	504	505	506			
TRMVT2	-	26C0	455=	459	464	465	467		
TRMVT3	-	26C0	456=	486	487	488	490		
TRMWG1	-	24C0							
TRMWG4	-	25C0							
TRMWG5	-	24C0	337=	339	340	341			
TRMWG6	-	24C0	338=	342	343	344			
TRMWG7	-	24C0	349=	351	352	353	354		
TRMWG8	-	24C0	350=	355	356	357	358		
TRMWG9	-	25C0							
TSBASE	-	6C0							
TSREQD	-	6C0							
* TSTRTF	-	39*							
TTMSLN	-	15C0							
TTMSLP	-	15C0							
TZERO	-	3C0							
TZET1	-	24C0							
TZET2	-	24C0							
TZET3	-	24C0							
TZET4	-	24C0							
TZET5	-	24C0							
TZET6	-	24C0							
U	-	27C0	51=	57	61	79	385	605	621
UGUST	-	9C0	51						
UHT	-	19C0	126=	395					
ULW	-	19C0	109=	120	276	296			
ULWPR	-	19C0	106=	109	111				
ULWSQ	-	19C0	120=	121	271				
UP	-	19C0	79=	82	85	105	112	126	128
UPRIME	-	9C0	51	394	496				
URL	-	19C0	88=	94	102	133			
URLPR	-	19C0	82=	88	90				
URLURL	-	19C0	94=	101					
URR	-	19C0	91=	97	103	136			
URRPR	-	19C0	85=	91	93				
URRURR	-	19C0	97=	100					
URW	-	19C0	115=	122	278	298			
URWPR	-	19C0	112=	115	117				
URWSQ	-	19C0	122=	125	272				
* USEAIO	-	34*	658*						
USQ	-	19C0	57=	60	63	64			
UTRIM	-	28C0	600						

Figure G.6. (Continued)

```
    UVT      -   1900   128=   131
    V        -   2700    52=    58     62     90
    VALFLW   -   1900   121=   297
    VALFRW   -   1900   125=   299
    VALFS    -   1900    60=    62
    VALNCL   -   1900
    VALNCR   -   1900
    VBETVT   -   1900   131=   444
    VEAST    -   1700   623
*   VELVAR   -   19*
    VGUST    -    900    52
    VLW      -   1900   110=   118    297
    VLWPR    -   1900   107=   110
    VLWSQ    -   1900   118=   271
    VNORTH   -   1700   619
    VP       -   1900    80=    83     86    107    113    120
    VPRIME   -    900    52
    VRL      -   1900    89=    95    134
    VRLPR    -   1900    83=    89
    VRLVRL   -   1900    95=   101    164
    VRR      -   1900    92=    98    137
    VRRPR    -   1900    86=    92
    VRRVRR   -   1900    98=   100    105
    VRW      -   1900   116=   123    299
    VRWPR    -   1900   113=   116
    VRWSQ    -   1900   123=   272
    VSQ      -   1900    58=    63     64
    VSTAR    -   2400
    VSTARG   -   1400
    VSTARL   -   2400
    VTIPL    -   1900   155=   157
    VTIPR    -   1900   156=   158
    VTOTAL   -   1900    63=
    VTOTLR   -   1900   101=   157    607
    VTOTPR   -   1900   1[illegible]=   158    611
    VTRIM    -   2900   6[illegible]2
    VTSTLL   -    800   452    453
    VVT      -   1900   129=   444
    VZFTL    -   1900   104=   133
    VZFTR    -   1900   105=   136
    W        -   2700    53=    59     61     81
    WDOT     -    900   386
    WGUST    -    900    53
    WHT      -   1900   127=   [illegible]95
    WLW      -   1900   111=   119    296
    WLWPR    -   1900   108=   109    111
    WLWSQ    -   1900   119=   121    271
*   WNGVAR   -   24*
*   WNGVR2   -   25*
             THE VARIABLE- WORK    -IS USED BEFORE IT IS DEFINED
    WORK     -   60     63    100    101    104    105    121    125    131    605
    WP       -   1900   81=    84     87    108    114    127    130
    WPRIME   -    900   53
    WRL      -   1900   90=    96    102
    WRLPR    -   1900   94=    98     90
```

Figure G.6. (Continued)

```
     WRLWRL  -   1900   96=   101
     WROTL   -   1900  102=   104   134
     WROTR   -  103=    105    137
     WRR     -   1900   93=    99   103
     WRRPR   -   1900   87=    91    93
     WRRWRR  -   1900   99=   100
     WRW     -   1900  117=   124   298
     WRWPR   -   1900  114=   115   117
     WPWSQ   -   1900  124=   125   272
     WSQ     -   1900   59=    60    63    64
     WVT     -   1900  130=   131
     XAERF   -   2000  520=   526
     XAERLW  -   2400  279=   352=   354   361
     XAERNC  -   2300  263=   526   535
     XAERNL  -   2300  247=   263   537
     XAERNR  -   2300  255=   263   537
     XAERO   -   2700  526=   548   551   599
     XAERRW  -   2400  280=   356=   358   361
     XAERT   -   2600  510=   526
     XAERWG  -   2400  361=   365   526
*    XAIO    -    9*
     XAREP   -   2000  520
     XARHT   -   2600  497=   501   510
     XARVT   -   2600  504=   508   510
     XCG     -   1700   80    81   365   501   502   508   509   534   537   630
*    XCNTRL  -   15*
     XDTCG   -   1700   49=    79
     XF      -   2700
     XFAC    -   1100
     XFCON   -    800
     XFMFLF  -   2700
*    XFUNC   -   14*
     XHT     -   1100  127   501   502
     XL      -   2700
     XLCOS   -   2700  608
*    XLINTP  -   13*
     XLSIN   -   2700
*    XMAP    -   10*
*    XPAR1   -   11*
*    XPAR3   -   29*
     XR      -   2700
     XRCOS   -   2700  606
     XRLCON  -    800
     XRSIN   -   2700
     XVT     -   1100  129   130   503   509
     XW      -   2700
     XWAC    -   1100  107   108   113   114   354   358
     XWCON   -    800
     XWC2    -   1100  285   286
     XWMWLW  -   2700
     XXICON  -    800
     XXJCON  -    800
     XZICON  -    800
     YAERF   -   2000  521=   527
     YAERLW  -   2400  281=   353=   362
```

Figure G.6. (Continued)

YAERNC	-	2300	254=	527	533	537					
YAERNL	-	2300	248=	255	264						
YAERNR	-	2300	236=	258	264						
YAERO	-	2700	527=	531							
YAERRW	-	2400	232=	357=	362						
YAERT	-	2600	511=	527							
YAERWG	-	2400	352=	527							
YARFP	-	2000	521								
YARHT	-	2600	498=	500	502	511					
YARVT	-	2600	505=	507	509	511					
YN	-	1100	82	84	85	87	531	537			
YPA	-	1100									
YWAC	-	1100	106	108	112	114					
YYICON	-	800									
YYJCON	-	800									
ZAERF	-	2700	522=	529							
ZAERLW	-	2400	233=	285	287	351=	354	364	565	574	
ZAERNC	-	2300	265=	528	534						
ZAERNL	-	2300	249=	245	531	538	574				
ZAERNR	-	2300	257=	255	531	565	571				
ZAERO	-	2700	532=	543	551	564					
ZAERRW	-	2400	234=	236	287	355=	357	363	565	571	
ZAERT	-	2400	512=	525							
ZAERWG	-	2400	353=	355	528						
ZARFP	-	2300	522								
ZARHT	-	2600	499=	501	512						
ZARRG	-	529=	532	533							
ZARVT	-	528=	536	643							
ZARVT	-	2600	506=	508	512						
ZCG	-	1700	79	81	365	522	531	537	538	532	535
ZDTCG	-	1700	50=	81							
ZETHL	-	2300	134=	135A0							
ZETHR	-	2300	137=	134A0							
ZETR1	-	2400									
ZETR2	-	2400									
ZETR3	-	2400									
ZETR4	-	2400									
ZF	-	2700									
ZFAC	-	1100									
ZFCON	-	800									
ZFMFHF	-	2700									
ZHT	-	1100	126	500	521						
ZL	-	2700									
ZLCOS	-	2700									
ZLSIN	-	2700	538								
ZPA	-	1100									
ZR	-	2700									
ZRCOS	-	2700									
ZRLCON	-	800									
ZRSIN	-	2700	536								
ZVT	-	1100	128	129	537	538					
ZW	-	2700									
ZWAC	-	1100	106	107	112	113	354	358			
ZWCON	-	800									
ZWMWHW	-	2700									

Figure G.6. (Continued)

```
ZZICON  -     8C0
ZZJCON  -     8C0
```


Figure G.6. (Continued)

```
      SUBROUTINE RTSLOW
      COMMON/CONTRL/ ISCOPE,IFLAG(100),ICDSPC(4,4),MIECB(2),MICNT(2),
     *               NOSIM ,IPAN      ,PILMSK      ,NFRAME(2),KONFR(2)
      COMMON/HYBCON/PROJ  ,NCINSL,NPCS(2),NCHAIN(2),IFRAME(2),NADCS(2),
     *              PDNOS(4),NDACS(4),IRCX(4),IFC(4),NCON(4) ,LETR(4) ,
     *              IC(19)  ,ISTIC   ,HOLD(19),ISTHO,OPERA(19),
     *              ISTOC   ,DIGAN(19),ISTDA  ,ANDIG(19),ISTAD,
     *              IC2(19) ,ISTIC2  ,HOLD2(19),ISTHO2 ,OPERA2(19),
     *              ISTOC2  ,DIGAN2(19),ISTDA2  ,ANDIG2(19),ISTAD2, IGN,
     *              ISTPIT  ,IRUNIT,IAD,IDC,IDC21,ICLP,ITSC,ILEX,ISETC ,
     *              MONDIG  ,IDURC(4)  ,ISHRC(4) ,ISYNC(4) , NIOS  ,
     *              IHJR    ,IFCHAN    ,TSBASE(2),TSREQD(2), IRCTS(4),
     *               TAUL(4) ,IPSNDS(10,2),DTIM(2) ,TRIM(19) ,ISTRM ,
     *               TRIM2(19),ISTRM2
      COMMON/HYBRID/ KAR(200)
      COMMON/ENG/  NWDTID,NLIND ,NITHID,NZIND ,NQIND ,NRNDID ,
     *             EWDTMX,ENIMX ,ENITMX,EN2MX ,EQMX  ,SHPSTR
     *             EWDTPR,ENIDT2,RJEC  ,TZERO ,TCOEF
      COMMON/FLAGS/ IWARN1(16),IWARN2(16),ISENCE(2),IREVT(2),ICONDP,
     1 ITRIM,JTRIM,KTRIM,NPLOT,NPLOT2,IPHASE,ISLOW,SWLG,SRUTON,
     2 ISTA,ISTP,NOCE,NVP,NTWOT
      LOGICAL*1  IWARN1,IWARN2
      COMMON/XTRASS/ SIGLAM ,COSLAM,SIGLAM,COSLAM,SUMIKK,SUMIKT,SUMIYY,
     *               SUMIZZ,XRLCON,XRJCON,XKICON,XKJCON,XZICON,
     *               YYICON,YYJCON,ZRLCON,ZRJCON ,ZZICON,ZZJCON,
     *               SLAC  ,VTSTLL,VTSTLI,DOVASK,ARWING,CPHIP ,SPHIP ,
     *               DVDTIM,
     *               COEF1 ,COEF2 ,COEF3 ,COEF4 ,COEF5 ,COEF6 ,COEF7 ,
     *               COEF8 ,COEF9 ,COEF10,COEF11,COEF12,COEF13,COEF14,
     *               COEF15,COEF16,COEF17,COEF18,COEF19,COEF20,COEF21,
     *               COEF22,COEF23,COEF24,COEF25,COEF26,COEF27,COEF28,
     *               COEF29,COEF30,COEF31,COEF32,COEF33,COEF34,COEF35
     *             , COEF36,COEF37,COEF38,COEF39,COEF40,COEF41,COEF42
      COMMON/XAIC/ SCADC1(32),SCADC2(32),SCADC3(32),SCADC4(32),
     *             SCDAC1(32),SCDAC2(32),SCDAC3(32),SCDAC4(32),
     1        PPRIME,QPRIME,RPRIME,UPRIME,VPRIME,WPRIME,THE    ,PHI    ,   30  16
     *        PSI   ,HDOT  ,H     ,DUM12 ,DUM13 ,DUM14 ,DUM15 ,MDOT   ,
     *        DELAIL,DELAIR,DELSPR,DELSPL,CILPRM,CNFPL ,CSFPL ,CPMPL  ,
     *        CYMPL ,CPL   ,CLTPRM,CNFPR ,CSFPR ,CPMPR ,CYMPR ,CPR    ,
     *        AINDTP,AINDR  ,AINDTL,AINL  ,AICLPR,BICLPR,AICRPR,BICRPR,
     5        DELRUD,AINDRF,DUM43 ,DUM44 ,DUM45 ,DUM46 ,DUM47 ,DUM48 ,   80  85
     7        SWLGT ,UGUST ,VGUST ,WGUST ,PGUST ,QGUST ,RGUST ,DMDOT ,   33  35
     *        DMFCS ,TPSP  ,AMACRP,AMACLP,CNFL  ,CNFR  ,DELRIV,DELRLP
     *      , DELBT ,DELST ,DELPT ,DELTM ,DELBS ,DELSS ,DELRS ,THTSP ,
     *        THTSL ,ADC3(23)
      COMMON/XPAR1/ AIRHT ,AINH  ,ALAMDA,ALHTST,ALVTST,AREAHT,AREAW ,    1  TO  7
     *AREAVT,ARHT  ,ARVT  ,AVEYAC,AVEYCG,BLS   ,CDDF  ,CDDHT ,CDDVT ,    9  TO 16
     *CHORD ,CLALHT,CLALPH,CMDF  ,CMDN  ,CNDF  ,CNDLN ,CNDRN ,CYALVT,   17  TO 25
     *DDDLG ,DDMLG ,DIMPR ,DDVT  ,DSDBET,EFFHT ,EFFVT ,FIF   ,FINDEG,   26  TO 34
     *FIP   ,FIXXF ,FIXAPR,FIXXW ,FIXZF ,FIXZPR,FIXZW ,FIYYF ,FIYYPR,   35  TO 43
     *FIYYW ,FIZZF ,FIZZPR,FIZZW ,HP    ,OMPFF ,PC    ,PI    ,ROTRAD,   44  TO 52
     *SBFPR ,SRWPR ,SC    ,SHF   ,SHW   ,SK0   ,SK1   ,SK2   ,SK3   ,   53  TO 61
     *SK4   ,SK5   ,SK6   ,SK7   ,SK8   ,SK9   ,SK10  ,SK20  ,SK21  ,   62  TO 70
     *SK22  ,CDDNLD,SK31LD,SK31LD,SK32  ,CDDNHI,SK34  ,SK35  ,SK36  ,   71  TO 79
     *SK37  ,SK38  ,SK39  ,SK40  ,SK41  ,SK42  ,SK43  ,SK44  ,SK45  ,   80  TO 88
```

Figure G.6. (Continued)

```
                *SK46   ,SK47   ,SK48   ,SK49   ,SK50   ,SL     ,SLF    ,SLPA   ,SLW    ,    89 TO 97
                *SM     ,SMF    ,SMN    ,SMW    ,SPAN   ,TAUHT  ,TAUVT  ,XFAC   ,XHT    ,    98 TO106
                *XWAC   ,XVT    ,YN     ,YPA    ,YWAC   ,ZFAC   ,ZHT    ,ZPA    ,ZWAC   ,
                *ZVT    ,CLOAL  ,PHIPH  ,SK30HI,EN2REF,XWC2   ,BT1    ,BT2    ,BT3    ,
                *BKD1T  ,BKD2T  ,BKD3T  ,BKM1T  ,BKM2T  ,BKM3T  ,BKM4T  ,SK31HI,
                *FEU    ,CLMAX  ,ALBRK  ,BKLSW  ,BKNSW  ,SQFPRM,DEG20  ,DGTORD,HTVTKT,    133TO141
                *RIOV2  ,RDTODG,ROTFPS,SKFPS  ,ALNCBK,TAURT1,TAURT2
11               COMMON/SPIO/ RCB1(19),ISTRB1,IADC3(32)
12               COMMON/XLINTP/ AKEY(16),AMEM(2),BKEY(16),BMEM(2),GKEY(10),GMEM
13               COMMON/XFUNC / VSTARG(33), TAUAG(9),SVSTAB(33,9),SQFARG(35),
                1        GAATAB(35),GBATAB(35),ALFTAB(35)
14               COMMON/INITVR/
                1 AVFIN  ,CILAML,CILAMR,COSINL,COSINR,COSPSI,C2INL  ,C2INR  ,DLFPSQ,    1 -  9
                2 HSQ    ,SILAML,SILAMR,SININL,SININR,SINPSI,SSQINL,SSQINR,S2INL  ,   10 - 18
                3 S2INR                                                                 19
15               COMMON/CGGTVR/
                1 VEAST  ,VNORTH,XCG    ,XDTCG  ,ZCG    ,ZDTCG                          1 -  6
16               COMMON/ENGVAR/
                1 AMACH  ,AMACSQ,DEL    ,EMAXN1,EMAXN2,EMXWDT,EN2STR,FSMACH,OMEGEL,    1 -  9
                2 OMEGER,ONOVTC,OOVFSM,OVSQTH,OVTHDL,ROE    ,ROEOV2,SHPPRL,SHPPRR,   10 - 18
                3 SMA    ,SQN1MX,SQTHTC,SQWDTX,TDEGF  ,TEAL   ,TEAR   ,THCDEL,THETC    19 - 27
                4,PCTQL,PCTQR                                                           28 TO 29
17               COMMON/VELVAR/
                1 AMUL   ,AMULSQ,AMUR   ,AMURSQ,WROTL  ,OMDTL  ,OMDTR  ,OMEGAL,OMEGAR,    1 -  9
                2 OMSQL  ,OMSQR  ,UHT   ,ULW    ,ULWPR  ,ULWSQ  ,UP     ,URL    ,URLPR  ,   10 - 18
                3 URLURL,URP    ,URPRP  ,URRURR,URW    ,URWPR  ,URWSQ  ,USQ    ,UVT    ,   19 - 27
                4 VALFLW,VALFRW,VALFS  ,VALNCL,VALNCR,VBETVT,VLW    ,VLWPR  ,VLWSQ  ,   28 - 36
                5 VP     ,VRL    ,VRLPR  ,VRLVRL,VRR    ,VRRPR  ,VRRVRR,VRW    ,VRWPR  ,   37 - 45
                6 VRWSQ  ,VSQ    ,VTIPL  ,VTIPR  ,VTOTAL,VTOTLR,VTOTRR,VVT    ,VZETL  ,   46 - 54
                7 VZETR  ,WHT    ,WLW    ,WLWPR  ,WLWSQ  ,WP     ,WRL    ,WRLPR  ,WRLWRL,   55 - 63
                8 WRW    ,WRWPR  ,WRWSQ  ,WRR    ,WRRPR  ,WRRWRR,WSQ    ,WVT                64 - 71
18               COMMON/FUSVAR/
                1 ALARF  ,ALARFP,ALFSQ  ,ALPHF  ,AMARF  ,AMARFP,ANARF  ,ANARFP,BETAF  ,    1 -  9
                2 BETFSQ,CRCMF  ,CDF    ,CLF    ,CMF    ,CNF    ,COSALF,COSBTF,CYF    ,   10 - 18
                3 DLLG   ,DMLG   ,DNLG   ,DXLG   ,DYLG   ,DZLG   ,QFSW   ,SBFCAF,SBFSAF,   19 - 27
                4 SINALF,SINBTF,SQF    ,XAERF  ,XARFP  ,YAERF  ,YARFP  ,ZAERF  ,ZARFP     28 - 36
                *    ,SINTHF,COSTHF,SINPHI,COSPHI
19               COMMON/GEEVAR/
                1 AGOVAT,AGOVAW,BIGX   ,BK99   ,BMOVTL,BMOVTR,CDWCOR,CLTCOR,CLWCOR,    1 -  9
                2 DOVTL  ,DOVTR  ,EPPRM  ,GEF    ,HGEFLR,HGEFRR,HLHUB  ,HRHUB  ,HTC4   ,   10 - 18
                3 HWC4   ,RRI1   ,RRI2   ,SB1    ,TIGEL  ,TIGER                          19 - 24
20               COMMON/NACVAR/
                1 ALLNSQ,ALPHLN,ALPHRN,ALRNSQ,BETALN,BETARN,BTLNSQ,BTRNSQ,CALLN  ,    1 -  9
                2 CALRN  ,CBETLN,CBETRN,CDLN   ,CDOLN  ,CDORN  ,CDRN   ,CLLN   ,CLRN   ,   10 - 18
                3 CMLN   ,CMRN   ,CNLN   ,CNRN   ,CYLN   ,CYRN   ,DLLNC  ,DLRNC  ,DMLNC  ,   19 - 27
                4 DMRNC  ,DNLNC  ,DNRNC  ,DXLNC  ,DXRNC  ,DYLNC  ,DYRNC  ,DZLNC  ,DZRNC  ,   27 - 36
                5 SALLN  ,SALRN  ,SBETLN,SBETRN,SQLNC  ,SQRNC  ,TNAC1  ,TNAC2              36 - 44
21               COMMON/ROTVAR/
                1 AICL   ,AICLDP,AICR   ,AICRDP,ALARNC,ALLRH  ,ALARNL,ALARNR,ALRRH  ,    1 -  9
                2 ALPHLR,ALPHRR,AMARNC,AMARNL,AMARNR,AMLRH  ,AMRNLP,AMRNRP,AMROTL,   10 - 18
                3 AMROTR,AMRRH  ,ANARNC,ANARNL,ANARNR,ANLRH  ,ANROTL,ANROTR,ANRRH  ,   19 - 27
                4 BICL   ,BICLDP,BICR   ,BICRDP,CNFA1L,CNFA1R,CNFB1L,CNFB1R,CNFL   ,   28 - 36
                5 CNFR   ,COSZHL,COSZHR,CPMA1L,CPMA1R,CPMB1L,CPMB1R,CPML   ,CPMR   ,   37 - 45
                6 CSFA1L,CSFA1R,CSFB1L,CSFB1R,CSFL   ,CSFR   ,CTL    ,CTR    ,CYMA1L,   46 - 54
                7 CYMA1R,CYMB1L,CYMB1R,CYML   ,CYMR   ,FIPOML,FIPOMR,FNORML,FNORMR,   55 - 63
```

Figure G.6. (Continued)

```
     9 FSIDEL,FSIDER,PNLN  ,PNLR  ,PNRN  ,PNRR  ,QNLN  ,QNLR  ,QNRN  ,   64 - 72
     9 QNRR  ,RNLN  ,RNLP  ,RNRN  ,RNRP  ,ROPIR4,ROPIR5,SHPRQL,SHPRQR,   73 - 81
     1 SIRZHL,SIRZHR,TL    ,TORQL ,TORQR ,TR    ,TRMAR1,TRMAR2,TRMAR3,   82 - 90
     2 TRMH24,TRMH31,TRMH32,XAERNC,XAERNL,XAERNR,YAERNC,YAERNL,YAERNR,   91 - 99
     3 ZAERNC,ZAERNL,ZAERNR,ZETHL ,ZETHR                                100 - 107
22   COMMON/WNGVAR/
     1 ALARWG,ALLWPR,ALPHLW,ALPHRW,ALRGLW,ALRGRW,ALRWPR,ALWSSO,AMARLW,    1 -  9
     2 AMARRW,AMARWG,ANARWG,ARILW ,ARIRW ,ARWSSO,ATAULR,ATAURR,AVEALR,   10 - 18
     3 AVEALW,AVECLW,AVECTS,AVEEPP,AVEZET,BETALW,BETARW,BKALPR,BKARPR,   19 - 27
     4 CALLW ,CALRW ,CAVINW,CAVZET,CBETLW,CBETRW,CEPLW ,CEPRW ,CDCNTL,   28 - 36
     5 CDCNTR,CDDUM ,CDLWAD,CDLWPR,CDLWSS,CDRWAD,CDRWPR,CDRWSS,CDSLW ,   37 - 45
     6 CDSRW ,CLAVE ,CLCNTL,CLCNTR,CLDUM ,CLILW ,CLIRW ,CLLWAD,CLLWPR,   46 - 54
     7 CLLWSS,CLRWAD,CLRWPR,CLRWSS,CLSLW ,CLSRW ,CLSW  ,CLZERO,CMCNTL,   55 - 63
     8 CMCNTR,CMLWAD,CMLWSS,CMRWAD,CMRWSS,CMSLW ,CMSRW ,CNSW  ,CTAULR,   64 - 72
     9 CTAURR,CTSLR ,CTSRR ,DCDDF ,DCDLDA,DCDLSP,DCDRDA,DCDRSP,DCLDF ,   73 - 81
     1 DCLLDA,DCLLSP,DCLRDA,DCLRSP,DCLSPW,DCMDF ,DCMLDA,DCMLSP,DCMRDA,   82 - 90
     8 DCMRSP,DCRSPW,EPTLR ,EPTRL ,EPPLR ,EPPRR ,EPWFL ,EPWRR ,FESLR ,   91 - 99
     5 FESRR ,SALLW ,SALRW ,SAVINW,SAVZET,SBETLW,SBETRW,SEPLW ,SEPRW ,  100 - 108
     9 SGMUL ,SIDLW,SIL   ,SILR  ,SIR   ,SIRW  ,STT   ,STAULR,STAURR,  109 - 117
     6 SVSTSS,SVSTTL,SOLW  ,SOFESL,SOFESR,SORW  ,SOWING,TAULR ,TAURR ,  118 - 126
     8 TAVAER,TRMWG5,TRMWG6,TRMWG7,TRMWGR,TZETI ,TZETT2 ,TZETT3 ,  127 - 135
     0 TZETT4 ,TZETS ,TZETA ,VSTAR ,VSTARL,XAERLW,XAERRW,XAERWG,YAERLW,  136 - 144
     1 YAERRW,YAERWG,ZAERLW,ZAERRW,ZAERWG,ZETR1 ,ZETR2 ,ZETR3 ,ZETR4    145 - 153
23   COMMON/WNGVR2/
     1 TRMWG4,TRMWG5,TRMWG6,TRMWG7,HWACL ,HOTACL,HWACL ,HOTACL,HIR   ,  1 - 9
     2 HIOTR ,HIL   ,HIOTL ,AMACTL,AMACTR,THTLAC,THTRAC
24   COMMON/TAILVR/
     1 ALAFHT,ALAFT ,ALAFVT,ALPHHT,ALPHVT,AMAFHT,AMAFT ,AMAFVT,ANAFHT,    1 -  9
     2 ANAFT ,ANAFVT,BETVT ,CALIHT,CBETSS,CDHT  ,CDVT  ,CLHT  ,CYVT  ,   10 - 18
     3 EPTAIL,EPZERO,SALIHT,SBETSS,SIGMA ,TRMHT ,TRMVT ,XAERT ,XARHT ,   19 - 27
     4 XARVT ,YAERT ,YARHT ,YARVT ,ZAERT ,ZARHT ,ZARVT ,EPTL1 ,ALHTPR,   28 TO 36
     5ALHTE ,ALHTP ,ALHTM ,CLAT  ,TRMHT2,TRMHT3,CLHTST,CDHTST,ALVTPR,   37 TO 45
     6ALVTE ,ALVTP ,ALVTM ,CYAT  ,TRMVT2,TRMVT3,CYVTST,CDVTST           46 TO 53
25   COMMON/EOMVAR/
     1 ALAERO,AMAERO,ANAERO,CMDW  ,FIXX  ,FIXZP ,FIXZO ,FIXZR ,FIYY  ,    1 -  9
     2 FIZZ  ,FJXX  ,FJYY  ,FJZZ  ,DDVIXX,DDVIYY,DDVIZZ,PP    ,PQ    ,   10 - 18
     3 PR    ,PZ    ,PO    ,TERM1 ,TERM2 ,TERM3 ,TERM4 ,TERM5 ,TERM6 ,   19 - 27
     4 TERMG1,TERMG2,TERMG3,TERMG4,TERMG5,TERMG6,TERMG7,TERMG8,TERMG9,   28 - 36
     5 TRMTTP,TRMTTR,XAERO ,XF    ,XLAFEL,XL    ,XLCOS ,XLSIN ,X     ,   37 - 45
     6 XPCOS ,XPSIN ,XW    ,XWMFLN,YAERO ,ZAERO ,ZF    ,ZFMFHF,ZL    ,   46 - 54
     7 ZLCOS ,ZLSIN ,ZP    ,ZZCOS ,ZETIP ,ZW    ,ZWMFHW,P     ,Q     ,   55 - 63
     8 R     ,U     ,V     ,W
26   COMMON/XDATA/ CONS1 ,CONS2 ,CONS3 ,CONS4 ,CONS5 ,CONS6 ,CONS7 ,    1 TO 7
     1             CONS8 ,CONS9 ,CONS10,CONS11,CONS12,CONS13,CONS14,    8 TO 14
     2             CONS15,CONS16,CONS17,CONS18,CONS19,CONS20,CONS21,   15 TO 21
     3             CONS22,CONS23,CONS24,CONS25,CONS26,CONS27,CONS28,   22 TO 28
     4             CONS29,CONS30,CONS31,CONS32,CONS33,CONS34,CONS35,   29 TO 35
     5             CONS36,CONS37,CONS38,CONS39,CONS40,CONS41,CONS42,   36 TO 42
     6             CONS43,CONS44,CONS45,CONS46,CONS47,CONS48,CONS49,   43 TO 49
     7             CONS50,CONS51,CONS52,CONS53,CONS54,CONS55,CONS56,   50 TO 56
     8             CONS57,CONS58,CONS59,CONS60,CONS61,CONS62,CONS63,   57 TO 63
     9             CONS64,CONS65,CONS66,CONS67,CONS68,CONS69,CONS70,   64 TO 70
     A             DBRK1 ,DBRK2 ,DBRK3 ,DBRK4 ,DBRK5 ,DBRK6 ,DBRK7 ,   71 TO 77
     B             DBRK8 ,DBRK9 ,DBRK10,DBRK11,DBRK12,DBRK13,DBRK14,   78 TO 84
     *             DBRK15,DBRK16,DBRK17,DBRK18,DBRK19,DBRK20,DBRK21    85 TO 91
```

Figure G.6. (Continued)

```
     D              ,SFTL   ,SFNFL ,SFSFL ,SFPML ,SFYML ,SFQL   ,SFPL   ,
     E               SFTR   ,SFNFR ,SFSFR ,SFPMR ,SFYMR ,SFQR   ,SFPR
     F              ,CONS71,CONS72,CONS73,CONS74,CONS75,CONS76,CONS77     106TO112
     G              ,CONS78,CONS79,CONS80,CONS81                          113TO116
C        TABLE OF PRE-COOKED COEFFICIENTS DEFINITION O
C     XFCON =    SLF*(1.-SMF/SM) -SLW*SMW/SM
C     ZFCON =    SHF*(1.-SMF/SM) -SHW*SMW/SM
C     XWCON =    SLW*(1.-SMW/SM) -SLF*SMF/SM
C     ZWCON =    SHW*(1.-SMW/SM) -SHF*SMF/SM
C     XRLCON=   -(SMF*SLF +SMW*SLW)/SM
C     ZRLCON=   -(SMF*SHF +SMW*SHW)/SM
C     XXICON=    SUMIXX + 2.*SMN*YN*YN
C     YYICON=    SUMIYY
C     ZZICON=    SUMIZZ + 2.*SMN* YN*YN
C     XZICON=    FIXZF + FIXZW
C     XXJCON=    SUMIZZ -SUMIYY +2.*SMN*YN*YN
C     YYJCON=   (FIXXF -FIZZF)+(FIXXW-FIZZW)
C     ZZJCON=   (SUMIYY-SUMIXX) -2.*SMN* YN*YN
C     COEF1 =    SL*SMN/SM
C     COEF2 =    SL*(1. -SMN/SM)
C     COEF3 =    FIXXPR -FIZZPR
C     COEF4 =    SL*SMN
C     COEF5 =    SMF * SHF
C     COEF6 =    SMW * SHW
C     COEF7 =    SMF * SLF
C     COEF8 =    SMW * SLW
C     COEF9 =    SL*SMN*YN
C        COEF10=  1. / SM
C     COEF11= BKLSW*AVEYAC/2./SPAN
C     COEF12= BKNSW*AVEYAC/2./SPAN
C     COEF13 =       (FIYYPR+SL*SL*SMN*(1.-SMN/SM))
C     COEF16= AREAW*SPAN          (S * B )   .
C     COEF17= CHORD/SPAN          (C / B )    . WING CHARACTERISTICS
C        COEF18=  S / 2
C     COEF19 =  PI*ROTRAD*ROTRAD*ROTRAD*ROTRAD
C     COEF20 =  COEF19 * ROTRAD
C     COEF21 =  1./(0.5*PI * ARHT)
C     COEF22 =  1./(0.5*PI * ARVT)
C     COEF23 =  AREAHT * EFFHT
C     COEF24 =  AREAVT * EFFVT
C     COEF25 =   1./(2.*PI* ROTRAD*ROTRAD)
C     COEF26 =  CHORD /2.
C     COEF27 =  1./CHORD/CHORD
C     COEF28 =  1./(AREAW/2.)
C     COEF29 =   PI * ARWING
C        COEF30=  1./(PI*ARWING)
C        COEF31=  S * C /2
C        COEF32= S * C /2 *CLALPH*(DCMDCL+XWAC/C )
C        COEF33= S * C /2 *CLALPH*(DCMDCL+XWAC/C ) *4/3/PI *YN/YWAC
C        COEF34=  YWAC / YN / K TH TWIST
C     COEF35=  B * B
C        TABLE OF INTERMEDIATE CALCULATIONS
C     ZRSIN =  ZR* SIN(INR-LAMDA)
C     ZRCOS =  ZR* COS(INR-LAMDA)
C     XRSIN=   XR* SIN(INR-LAMDA)
```

Figure G.6. (Continued)

```
C       XRCOS=    XR* COS(INR-LAMDA)
C       ZLSIN =   ZL* SIN(INL-LAMDA)
C       ZLCOS =   ZL* COS(INL-LAMDA)
C       XLSIN =   XL* SIN(INL-LAMDA)
C       XLCOS =   XL* COS(INL-LAMDA)
C       ZFMFHF=    SMF* SHF * ZF
C       ZWMWHW=    SMW* SHW * ZW
C       XFMFLF=    SMF* SLF * XF
C       XWMWLW=    SMW* SLW * XW
C       TERM1 =   (IXXPR-IZZPR)*(SSQINR + SSQINL)
C       TERM2 =   (IXZPR)*( S2INR +S2INL)
C       TERM3 =   (SL *SMN)*(ZRSIN +ZLSIN)
C       TERM4 =   (IXXPR-IZZPR)*(S2INR +S2INL) * 0.5
C       TERM5 =    IXZPR *(C2INR+C2INL)
C       TERM6 =    (SL *SMN) *(XRCOS + XLCOS)
C       DDVIXX=    1./FIXX
C       DDVIYY=    1./FIYY
C       DDVIZZ=    1./FIZZ
C       RQ =       R*Q
C       PQ =       P*Q
C       RR =       R*R
C       PR =       P*R
C       PP =       P*P
C          FOR RTT CALC USE FOLLOWING TRIG IDENTITIES WHERE
C             A= INCIDENCE ANGLE INR,INL    B = LAMDA
C          COS(A-B) = COS(A)*COS(-B) -SIN(A)*SIN(-B)
C                   = COS(A)*COS(B)  +SIN(A)*SIN(B)
C          SIN(A-B) = SIN(A)*COS(-B) +COS(A)*SIN(-B)
C                   = SIN(A)*COS(B)  -COS(A)*SIN(B)
C
C          SIN(2A) = 2.*SIN(A)*COS(A)
C          COS(2A) = 1. - 2.*SIN(A)*SIN(A)
C
C
C          DISCRETE LINE  ALLOCATION
C
C              CONSOLE  1
C
C          BIT NUMBER    DGS NUMBER    FUNCTION
C             31            17          PANIC
C             30            16          TRIM
C             29            15          CONSOLE OPERATE
C
C          HORIZONTAL TAIL
C
C            1. IF HWG/4 GT 50 FT.   GEF = 0.
C            2. IF  V  LE  30 KT   TAIL AERO = 0.
C            3. IF  DEL FLAP GT  75 DEG    EPSILON TAIL = 0.
C            4. IF  CTS LT 0.5  EPSILON P = 0.
C            5. LIMIT RANGE OF ABS(ALPHHT) TO (ALHTSTALL - 2. DEG) AND
C                 PRINT WARNING
C          VERTICAL  TAIL
C            1. LIMIT THE RANGE OF ABS(ALPHVT) TO(ALVTSTALL -2 DEG) AND
C                 PRINT WARNING
C          READ DISCRETES FROM ANALOG
```

Figure G.6. (Continued)

```
27          CALL TRACK('RTSLOW  ',1)
28     10   CALL REVENT(IFC(1),NCON(1),ISENCE(1),IREVNT,0)
29          KPAN = 300
30          CALL GETBIT(ISENCE(2),ICONOP,29)
31          CALL GETBIT(ISENCE(2),KTRIM,30)
32          IF((JTRIM.EQ.0.AND.KTRIM.EQ.0).OR.ITRIM.NE.0) GO TO 36
33          CALL USEAIO(RCB1)
34          KPAN= 302
35          ITRIM= 1
36     35   GO TO(35,36,500),ISTRB1
37     36   CONTINUE
                                    ( B L A N K   C A R D )
                                    ( B L A N K   C A R D )
                                    ( B L A N K   C A R D )
                                    ( B L A N K   C A R D )
                                    ( B L A N K   C A R D )
                                    ( B L A N K   C A R D )
                                    ( B L A N K   C A R D )
                                    ( B L A N K   C A R D )
                                    ( B L A N K   C A R D )
                                    ( B L A N K   C A R D )
                                    ( B L A N K   C A R D )
                                    ( B L A N K   C A R D )
                                    ( B L A N K   C A R D )
                                    ( B L A N K   C A R D )
                                    ( B L A N K   C A R D )
                                    ( B L A N K   C A R D )
38          ENTRY TSTRTS
39          CALL SINCOS(PSI,SINPSI,COSPSI)
40           CALL SINCOS(THE,SINTHE,COSTHE)
41          CALL SINCOS(PHI,SINPHI,COSPHI)
42          SSQINR = SININR*SININR
43          SSQINL = SININL*SININL
44          C2INL  =  1.- 2.*SSQINL
45          C2INR  =  1.- 2.*SSQINR
46          S2INL  =  2.*SININL*COSINL
47          S2INR  =  2.*SININR*COSINR
48          HSQ=  H*H
49          SFSW= SQF*AREAW
50          VALNCR=  FSQRT(URRURR+WRRWRR,WORK)
51          VALNCL=    FSQRT(URLURL+WRLWRL,WORK)
      C
      C        CENTER OF GRAVITY CALCULATION
      C
      C        CG LOCATION W.R.T. PIVOT
52          XCG= -XRLCON +COEF1*(CILAML+CILAMR)
53          ZCG= -ZRLCON -COEF1*(SILAML+SILAMR)
      C
      C
      C        AIRCRAFT CONDITION CALCULATIONS
      C
      C        GROUND TRACK
      C        NORTHWARD VELOCITY
      C
54          VNORTH= UPRIME*COSTHE*COSPSI+VPRIME*(SINPHI*SINTHE*COSPSI-
```

Figure G.6. (Continued)

```
     * COSPHI*SINPSI)+WPRIME*(COSPHI*SINTHE*COSPSI+SINPHI*SINPSI)
C        EASTWARD  VELOCITY
 55   VEAST= UPRIME*COSTHE*SINPSI+VPRIME*(SINPHI*SINTHE*SINPSI+
     *COSPHI*COSPSI)+WPRIME*(COSPHI*SINTHE*SINPSI-SINPHI*COSPSI)
C        DOWNWARD VELOCITY ON ANALOG
C
 56                                  ( B L A N K   C A R D )
                                     ( B L A N K   C A R D )
                                     ( B L A N K   C A R D )
                                     ( B L A N K   C A R D )
                                     ( B L A N K   C A R D )
                                     ( B L A N K   C A R D )
                                     ( B L A N K   C A R D )
                                     ( B L A N K   C A R D )
                                     ( B L A N K   C A R D )
                                     ( B L A N K   C A R D )
                                     ( B L A N K   C A R D )
                                     ( B L A N K   C A R D )
                                     ( B L A N K   C A R D )
                                     ( B L A N K   C A R D )
                                     ( B L A N K   C A R D )
                                     ( B L A N K   C A R D )
                                     ( B L A N K   C A R D )
                                     ( B L A N K   C A R D )
                                     ( B L A N K   C A R D )
************************************ S Y N T A X   E R R O R ************************ E  ))
C
C        DENSITY CALCULATIONS
C        EQUATION FOR DEL FROM CURVE FIT PROGRAM
 57   DEL = .999538347 -.3023632996E-04 * H
     + +.5409991731E-09 *HSQ -.3722313804E-14 *HSQ * H
C
 58   TDEGF=  TZERO -TCOEF*H
 59   THETC=  .00192933*(TDEGF+459.69)
 60   SQTHTC=  ESQRT(THETC,WORK)
 61   DNOVTC = 1. / THETC
 62   ROE = ROEO*DEL*DNOVTC
 63   ROEOV2=  ROE * 0.5
 64   SMA=  1116.*SQTHTC
 65   AMACH=  VTOTAL /SMA
 66   AMACSQ= AMACH * AMACH
 67   ESMACH=  ESQRT(1.0-AMACSQ,WORK)
 68   DOVESM =  1./ESMACH
 69   THCDEL=  SQTHTC*DEL
 70   OVTHDL= 1./THCDEL
 71   OVSQTH=  1./SQTHTC
C
 72   TEAR= TPSP*DNOVTC
 73    EMXWDT = EWDTMX * EWDTPR * OVTHDL
 74   EMAXN1=  EN1MX*OVSQTH
 75   EMAXN2 = EN2REF*OMEGA /OMREF
 76   EN2STR=  EMAXN2*EN2MX
 77   SQWDTX = EMXWDT * EMXWDT
 78    SQN1MX=  EMAXN1 * EMAXN1
 79   CALL ENGINE(TEAR,SHPPRP,OMEGFR,PCTOR)
```

Figure G.6. (Continued)

```
          C
          C        DATE 7/10/72  GO FROM DUAL THROTTLE , DUAL ENGINE CALCULATION
          C                      TO SINGLE THROTTLE , SINGLE ENGINE ENGINE CALCULATION
          C
          C                      TO GET BACK TO DUAL  ADD EQS
          C      TEAL=  TPSL*ONOVTC
          C      CALL ENGINE (TEAL,SHPPRL,OMEGEL)
          C
          C
   80            SHPPRL= SHPPRR
   81            OMEGEL=  OMEGER*ENFL
   82            OMEGER = OMEGER*ENFR
          C
          C
          C
   83                                  ( B L A N K   C A R D )
                                       ( B L A N K   C A R D )
                                       ( B L A N K   C A R D )
                                       ( B L A N K   C A R D )
                                       ( B L A N K   C A R D )
                                       ( B L A N K   C A R D )
                                       ( B L A N K   C A R D )
                                       ( B L A N K   C A R D )
                                       ( B L A N K   C A R D )
                                       ( B L A N K   C A R D )
                                       ( B L A N K   C A R D )
                                       ( B L A N K   C A R D )
                                       ( B L A N K   C A R D )
                                       ( B L A N K   C A R D )
                                       ( B L A N K   C A R D )
                                       ( B L A N K   C A R D )
                                       ( B L A N K   C A R D )
                                       ( B L A N K   C A R D )
                                       ( B L A N K   C A R D )
                                       ( B L A N K   C A R D )
****|************************ S Y N T A X   E R R O R ************************                    E  *E
          C
          C        FUSELAGE AERODYNAMICS
          C             INPUT EQUATIONS
   84            CALL SINCOS(ALPHF,SINALF,COSALF)
   85            CALL SINCOS(BETAF,SINBTF,COSBTF)
          C
          C        FUSELAGE FORCES AND MOMENTS (AERODYN INCLUDING GEAR)
          C
          C        WIND AXIS COEFFICIENTS
          C           IF GEAR UP , SWLG = 0     THUS DCDLG,DCMLG = 0.
          C
   86             ALPHFP=  SINALF*COSALF
   87            BETAFP=  SINBTF*COSBTF
          C
   88            CLF= ALPHFP*(SK3+SK4*ABS(ALPHFP) ) +SK42
   89            CDF= CDOF*(1.+SK0*BETAFP*BETAFP*ABS(BETAFP))+SK2*ALPHFP*ALPHFP
                *  +SK1*ABS(ALPHFP)+DCDLG*SWLG2
   90            CYF=  BETAFP*(SK7+SK8*ABS(BETAFP))
```

Figure G.6. (Continued)

```
      CMF= CMOF+ALPHAFP*(SK5+SK6*ABS(ALPHAF2))+DCMLG*SWLG2
      CNF= CNOF+BETAFP*(SK7+SK8*ABS(BETAFP))
C
C        BODY AXIS FORCES AND MOMENTS (ABOUT CG)
      SBFSAF= SINBTF*SINALF
      SBFCAF= SINBTF*COSALF
      CBCMF= COEF17 * CMF
      ZAREP= QFSW*(-CLF*COSALF-CDF*COSBTF*SINALF-CYF*SBFSAF)
      XAREP= QFSW*(-CDF*COSALF+CLF*SINALF-CYF*SBFCAF)
      YAREP= QFSW*(CYF*COSBTF-CDF*SINBTF)
      AMAREP= QFSW*CHORD*CMF*COSBTF+ZAREP*(XCG-XFAC)-XAREP*(ZCG-ZFAC)
      ANAREP= QFSW*SPAN *(CNF*COSALF-CBCMF*SBFSAF) -YAREP*(XCG-XFAC)
      ALAREP= QFSW*SPAN *(-CBCMF*SBFCAF-CNF*SINALF)  +YAREP*(ZCG-ZFAC)
                                  ( B L A N K   C A R D )
                                  ( B L A N K   C A R D )
                                  ( B L A N K   C A R D )
                                  ( B L A N K   C A R D )
                                  ( B L A N K   C A R D )
                                  ( B L A N K   C A R D )
                                  ( B L A N K   C A R D )
                                  ( B L A N K   C A R D )
                                  ( B L A N K   C A R D )
                                  ( B L A N K   C A R D )
C          WING AND TAIL ALTITUDE FOR GROUND EFFECT
      HWC4 = H +(XWAC-XCG)*SINTHE +(ZCG-ZWAC)*COSTHE
      HTC4 = H +(XHT -XCG)*SINTHE +(ZCG-ZHT) *COSTHE
C
      AGOVAT =  1.0
      IF(NGEF.NE.1)  GO TO 630
      IF(HTC4 .GT. DBRK14 ) GO TO 620
      AGOVAT = CONS59 +HTC4*(CONS60 +CONS61*HTC4)
      GO TO 630
620   IF(HTC4 .GE. DBRK15) GO TO 63
      AGOVAT = CONS62 +HTC4*(CONS63 +CONS64*HTC4)
630   CONTINUE
      CLTCOR= AGOVAT*COVESM
      AGOVAW =  1.0
      BK99=  1.0
      IF(NGEF.NE.1) GO TO 650
      IF(HWC4.GT.DBRK10) GO TO 640
      AGOVAW= CONS44+HWC4*(CONS45+CONS46*HWC4)
      BK99= -1.0
      GO TO 650
640   IF(HWC4.GE.DBRK11) GO TO 650
      AGOVAW= CONS47+HWC4*(CONS48+CONS49*HWC4)
      BK99= -1.0
650   CONTINUE
      CLWCOR=    AGOVAW * COVESM
      CDWCOR=  BK99*COEF33
      HPHUB= H+(RLS*COSINR-XCG)*SINTHE+((BLS*SININR+ZCG)*COSPHI-
     *  YN *SINPHI)*COSTHE
      IF(AMUR.GE.DBRK12) GO TO 412
      IGEFR3 = HRHUB/(2.*ROTRAD*(CONS50+ABS(COSPHI*(SINTHE*COSINR +
     *  COSTHE*SININ*1)))
      IF(NGEF.NE.1)  GO TO 412
```

Figure G.6. (Continued)

```
130          IF(HGEFRR.GE.DBRK13) GO TO 412
131          TIGER  =(HGEFRR*HGEFRR*(CONS51+CONS52*AMUR)+HGEFRR*(CONS53*AMUR
            * +CONS54) +CONS55 +CONS56*AMUR )
132          DOVTR= BKD1T*HGEFRR*HGEFRR+BKD2T*HGEFRR+BKD3T
133          BMOVTR= BKM1T*HGEFRR*HGEFRR+BKM2T*HGEFRR+BKM3T
134          GO TO 413
135     412  TIGER= 1.0
136          DOVTR= DOVT
137          BMOVTR=  BKM4T
138     413  CONTINUE
139          IF(AMUL.GE.DBRK12 )  GO TO 414
140          HLHUB= HRHUB +2.0*YN*SINPHI*COSTHE
141          HGEFLR  = HLHUB/(2.*ROTRAD*(CONS50+ABS(COSPHI*(SINTHE*COSINL  +
            *  COSTHE*SININL))))
142          IF(NGEF.NE.1) GO TO 414
143          IF(HGEFLR.GE.DBRK13) GO TO 414
144          TIGEL  =(HGEFLR*HGEFLR*(CONS51+CONS52*AMUL)+HGEFLR*(CONS53*AMUL
            * + CONS54) +CONS55 +CONS56*AMUL )
145          DOVTL= BKD1T*HGEFLR*HGEFLR+BKD2T*HGEFLR+BKD3T
146          BMOVTL=  BKM1T*HGEFLR*HGEFLR+BKM2T*HGEFLR+BKM3T
147          GO TO 415
148     414  TIGEL= 1.0
149          DOVTL= DOVT
150          BMOVTL=  BKM4T
151     415  CONTINUE
                                        ( B L A N K   C A R D )
                                        ( B L A N K   C A R D )
                                        ( B L A N K   C A R D )
                                        ( B L A N K   C A R D )
                                        ( B L A N K   C A R D )
                                        ( B L A N K   C A R D )
                                        ( B L A N K   C A R D )
                                        ( B L A N K   C A R D )
                                        ( B L A N K   C A R D )
                                        ( B L A N K   C A R D )
                                        ( B L A N K   C A R D )
                                        ( B L A N K   C A R D )
                                        ( B L A N K   C A R D )
                                        ( B L A N K   C A R D )
C
C        NACELLE AERODYNAMICS
C
C
152          ALPHLN=  ATAN2(WRL,URL)
153          ALPHRN=  ATAN2(WRR,URR)
C
154          BETALN=  ATAN2(VRL,VALNCL)
155          BETARN=  ATAN2(VRR,VALNCR)
C
156          CALL SINCOS(ALPHLN,SALLN,CALLN)
157          CALL SINCOS(ALPHRN,SALRN,CALRN)
158          CALL SINCOS(BETALN,SBETLN,CBETLN)
159          CALL SINCOS(BETARN,SBETRN,CBETRN)
C
160          TRNNC1=  SALLN*CALLN
```

Figure G.6. (Continued)

```
      TRMNC2=  SALRN*CALRN
      TRMNC3= SBETLN*CBETLN
      TRMNC4= SBETRN*CBETRN
C
C        WIND AXES
      IF(ABS(ALPHLN).GT.ALNCBK) GO TO 720
      CDOLN=  CDONLO
      SK30L=  SK30LO
      SK31L=  SK31LO
      GO TO 730
  720 CDOLN=  CDONHI
      SK30L=  SK30HI
      SK31L=  SK31HI
  730 CONTINUE
      CDLN=  CDOLN+SK30L*ABS(ALPHLN)+SK31L*ALPHLN*ALPHLN
      CLLN=  SK32*TRMNC1
      CMLN=  CMOLN+TRMNC1*(SK34+SK35*ABS(TRMNC1))
      CYLN= TRMNC3*(SK43+SK44*ABS(TRMNC3))
      CNLN= CNOLN+TRMNC3*(SK40+SK41*ABS(TRMNC3))
C
C
      IF(ABS(ALPHRN).GT.ALNCBK)  GO TO 760
      CDORN=  CDONLO
      SK30R=  SK30LO
      SK31R=  SK31LO
      GO TO 770
  760 CDORN=  CDONHI
      SK30R=  SK30HI
      SK31R=  SK31HI
  770 CONTINUE
      CDRN=  CDORN+SK30R*ABS(ALPHRN)+SK31R*ALPHRN*ALPHRN
      CLRN=  SK32*TRMNC2
      CMRN=  CMON+TRMNC2*(SK34+SK35*ABS(TRMNC2))
      CYRN=  TRMNC4*(SK36+SK37*ABS(TRMNC4))
      CNRN=  CNORN+TRMNC4*(SK38+SK39*ABS(TRMNC4))
C
C        WITHOUT NACELLE AERO FORCES -  BODY AXES
C
      SOLNC=   RDEQV2*(UPLURL+VPLVPL+WRLWRL)
      SORNC=   RDEQV2*(URPURR+VRPVRR+WRRWRR)
      TNAC1 = SORNC * COEF18
      TNAC2  =  SOLNC  * COEF18
C
      DZRNC  = -TNAC1*( CLRN*CALRN +SALRN*(CDRN*CBETRN +CYRN*SBETRN ) )
      DXRNC  =  TNAC1*( CLRN*SALRN -CALRN*(CDRN +CYRN*SBETRN) )
      DYRNC  =  TNAC1*( CYRN*CBETRN -CDRN*SBETRN )
      DMRNC  =  TNAC1*CHORD * CMRN *CBETRN
      DNRNC  =  TNAC1*SPAN  *(CALRN*(CMRN -COEF17*CMRN*SBETRN )
      DLRNC  = -TNAC1*SPAN  *( COEF17*CMRN*SBETRN*CALRN +CNRN*SALRN )
C
C        LEFT  NACELL AERO FORCES  -  BODY AXES
C
C
      DZLNC  = -TNAC2*( CLLN*CALLN +SALLN*(CDLN*CBETLN +CYLN*SBETLN ) )
      DXLNC  =  TNAC2*(CLLN*SALLN -CALLN*(CDLN +CYLN* SBETLN ) )
```

Figure G.6. (Continued)

```
204          DYLNC =  TNAC2*(CYLN*CBETLN -CDLN* SBETLN )
205          DMLNC =  TNAC2*CHORD * CMLN * CBETLN
206          DNLNC =  TNAC2*SPAN  * CALLN*(CNLN -COEF17*CMLN* SBETLN )
207          DLLNC = -TNAC2*SPAN  *( COEF17*CMLN*SBETLN*CALLN +CNLN*SALLN )
       C
208                                  ( B L A N K   C A R D )
                                     ( B L A N K   C A R D )
                                     ( B L A N K   C A R D )
                                     ( B L A N K   C A R D )
                                     ( B L A N K   C A R D )
                                     ( B L A N K   C A R D )
                                     ( B L A N K   C A R D )
                                     ( B L A N K   C A R D )
                                     ( B L A N K   C A R D )
                                     ( B L A N K   C A R D )
                                     ( B L A N K   C A R D )
                                     ( B L A N K   C A R D )
                                     ( B L A N K   C A R D )
                                     ( B L A N K   C A R D )
                                     ( B L A N K   C A R D )
****I************************ S Y N T A X   E R R O R ************************  &  ))
       C
       C        WING AERODYNAMICS
       C
       C          PRELIMINARY CALCULATIONS
       C            RIGHT ROTOR
       C
209          TAURR =  ALPHRR  +  ATAN2(FNORMR,TR )
210          RESRR=  FSQRT(TR*TR+FNORMR*FNORMR+FSIDER*FSIDER,WORK)
211          TRMWG1 =  COEF25 / ROE
212          SQRESR=  FSQRT((RESRR+10.)*TRMWG1,WORK)
213          VSTAR = VTOTRR/SQRESR
       C
214          ATAURR =  ABS(TAURR)
215          CALL LINT (AKEY, AMEM,AMEM ,ISTA,VSTAR ,ATAURR,SVSTAB ,SVSTAR  )
216          KPAN = 320
217          IWARN1(11)=  .FALSE.
218          IF(ISTA.EQ.2) IWARN1(11)= .TRUE.
       C
       C
219          CALL SINCOS(TAURR,STAURR,CTAURR)
       C
220          TMWG10=  SVSTAR*STAURR
221          TMWG11=  VSTAR+SVSTAR*CTAURR
222          EPPRR=  ATAN2(TMWG10,TMWG11)
223          CTSPR= 4./(4.+      VSTAR*VSTAR)
       C
       C            LEFT ROTOR
224          TAULR =  ALPHLR  +  ATAN2(FNORML,TL )
225          RESLR=  FSQRT(TL*TL+FNORML*FNORML+FSIDEL*FSIDEL,WORK)
226          SQRESL=  FSQRT((RESLR+10.)*TRMWG1,WORK)
227          VSTARL=  VTOTLR/SQRESL
       C
228          CALL SINCOS(TAULR,STAULR,CTAULR)
       C
```

Figure G.6. (Continued)

```
229          STAULR = ABS(TAULR)
230          CALL LINT (BKEY, BMEM,BMEM ,ISTR,VSTARL,ATAULR,SVSTAB ,SVSTRL  )
231          IWARN1(12)=  .FALSE.
232          KPAN = 321
233           IF(ISTR.EQ.2) IWARN1(12)= .TRUE.
       C
       C
234          TRMWG4=  SVSTRL*STAULR
235          TRMWG9=  VSTARL+SVSTRL*CTAULR
236          EPPLR=  ATAN2(TRMWG4,TRMWG9)
237          CTSLR=  4./(4.+      VSTARL*VSTARL)
       C
       C        CALCULATION OF AMOUNT OF WING AREA IN DOWNWASH - USES AVERAGES
       C
238          AVEZET =    .5 *(ZETHR +ZETHL )
239          AVEALR =    .5 *(ALPHRR + ALPHLR)
240          AVEEPR =    .5 *(EPPRR + EPPLR )
241          AVECTS =    .5 *(CTSRR + CTSLR )
       C
       C
242          CALL SINCOS(AVEZET,SAVZET,CAVZET)
243          CALL SINCOS(AVEIN- AINW , SAVINW,CAVINW )
       C
244          TAVAER =  TAN(AVEALR -AVEEPR )
       C
245          TZETL = (BLS-PC*CAVINW+HP* SAVINW ) * TAVAER
246          TZETL2 =  TZETL*CAVZET +PC*SAVINW +HP*CAVINW
247          TZETL3 =  ROTRAD*ROTRAD  - TZETL2*TZETL2
       C
248          IF(TZETL3) 360,34 ,350
249     350  CONTINUE
250          ZETR2=  ESQRT(TZETL3,WORK)
251          ZETR1  =  TZETL * SAVZET
       C
252          TZETL4 = (BLS -(PC-CHORD)*CAVINW +HP*SAVINW )* TAVAER
253          TZETL5 =  TZETL4* CAVZET +(PC-CHORD)*SAVINW +HP*CAVINW
254          TZETL6 =  ROTRAD*ROTRAD - TZETL5*TZETL5
       C
255          ZETR3 =  TZETL4 * SAVZET
256          IF(TZETL6) 360,360,355
257     355  CONTINUE
258          ZETR4=  ESQRT(TZETL6,WORK)
       C
259          GO TO 37
260     360  ZETR1=  0.
261          ZETR2=  0.
262          ZETR3=  0.
263          ZETR4=  0.
264     37   CONTINUE
265          SIR =   COEF24*(ZETR1+ ZETR2 +ZETR3 +ZETR4 )
266          SIRW =  COEF23 * SIR
267          SIT  =  CHORD *(ZETR2 +ZETR4 )
268          SIL  =  SIT - SIR
269          SILW =  COEF28 * SIL
270          APILW= COEF27*SIL
```

Figure G.6. (Continued)

```
271          ARIRW=  COEF27*SIR
272          CLILW= COEF29*ARILW/(COEF29*ARILW+CLALPH*(ARWING-ARILW))
273          CLIRW= COEF29*ARIRW/(COEF29*ARIRW+CLALPH*(ARWING-ARIRW))
274          BKALPR= (VSTARL+CLILW*SVSTRL)/(VSTARL+SVSTRL)
275          BKARPR=  (VSTAR+CLIRW*SVSTAR)/(VSTAR+SVSTAR)
                                  ( B L A N K   C A R D )
                                  ( B L A N K   C A R D )
                                  ( B L A N K   C A R D )
                                  ( B L A N K   C A R D )
                                  ( B L A N K   C A R D )
                                  ( B L A N K   C A R D )
                                  ( B L A N K   C A R D )
                                  ( B L A N K   C A R D )
                                  ( B L A N K   C A R D )
                                  ( B L A N K   C A R D )
                                  ( B L A N K   C A R D )
                                  ( B L A N K   C A R D )
                                  ( B L A N K   C A R D )
                                  ( B L A N K   C A R D )
                                  ( B L A N K   C A R D )
                                  ( B L A N K   C A R D )
                                  ( B L A N K   C A R D )
      C
      C       ROTOR/ROTOR INTERFERENCE
276   380    IF(V) 400,400,390
277   390    BIGX = CONS57  -EPPRR
278          RRI1  =  BT1 + BT2* BIGX +BT3 * BIGX *BIGX
279          RRI2= RRI1*SVSTAR*SQRESR
280          EPPRM=  -ATAN2(RRI2,VTOTLR+1.0)
281          EPILR =  0.
282          EPIRL = ABS(BETAF)* AINL * EPPRM  * CONS58
283          GO TO 410
284   400    BIGX = CONS57  - EPPLR
285          RRI1  =  BT1 + BT2*BIGX +BT3 * BIGX*BIGX
286          RRI2  =  RRI1 *SVSTRL * SQRESL
287          EPPRM=  -ATAN2(RRI2,VTOTRR+1.0)
288          EPILR = ABS(BETAF)* AINR * EPPRM  * CONS58
289          EPIRL =    .
290   410    CONTINUE
291          GEF  =  0.
292          IF(NGEF.NE.1)  GO TO 200
293          IF(HWC4.GE.D9PK16) GO TO 200
294          GEF= (COEF35+4.*(HTC4-HWC4)*(HTC4-HWC4))/(COEF35+4.*(HTC4+
            *  HWC4)*(HTC4+HWC4))
295   200    CONTINUE
                                  ( B L A N K   C A R D )
                                  ( B L A N K   C A R D )
                                  ( B L A N K   C A R D )
                                  ( B L A N K   C A R D )
                                  ( B L A N K   C A R D )
                                  ( B L A N K   C A R D )
                                  ( B L A N K   C A R D )
                                  ( B L A N K   C A R D )
                                  ( B L A N K   C A R D )
                                  ( B L A N K   C A R D )
```

Figure G.6. (Continued)

```
                                        ( B L A N K   C A R D )
                                        ( B L A N K   C A R D )
                                        ( B L A N K   C A R D )
                                        ( B L A N K   C A R D )
                                        ( B L A N K   C A R D )
                                        ( B L A N K   C A R D )
                                        ( B L A N K   C A R D )
                                        ( B L A N K   C A R D )
                                        ( B L A N K   C A R D )
                                        ( B L A N K   C A R D )
                                        ( B L A N K   C A R D )
                                        ( B L A N K   C A R D )
C          FUSELAGE
296          XF = SLF - XCG
297          ZF = SHF - ZCG
C          WING
298          XW = SLW - XCG
299          ZW = SHW - ZCG
C          NACELLES
300          XR = SL* CILAMR -XCG
301          ZR = -SL* SILAMR -ZCG
C
302          XL =  SL* CILAML -XCG
303          ZL = - LS SILAML -ZCG
C
C          INTERMEDIATE CALCULATIONS
304          ZRSIN   =   ZR* SILAMR
305          ZRCOS   =   ZR* CILAMR
306          XRSIN   =   XR* SILAMR
307          XRCOS   =   XR* CILAMR
308          ZLSIN   =   ZL* SILAML
309          ZLCOS   =   ZL* CILAML
310          XLSIN   =   XL* SILAML
311          XLCOS   =   XL* CILAML
312          ZFMFLF  =   ZF* COEF6
313          ZWMWHW  =   ZW* COEF6
314          XFMFLF  =   XF* COEF7
315          XWMWLW  =   XW* COEF8
316          TERM1   =   COEF3 *(SSQINR+SSQINL)
317          TERM2   =   FIXZR *(S2INR + S2INL)
318          TERM3   =   COEF4 *(ZRSIN +ZLSIN)
319          TERM4   =   COEF3 *(S2INR +S2INL) + 0.5
320          TERM5   =   FIXZR*(C2INR +C2INL)
321          TERM6   =   COEF4 *(XRCOS + XLCOS )
C
C          INERTIAS
322          FIXX = XXICON -TERM1 -TERM2 +ZFMFLF+ZWMWHW -TERM3
323          FIXZP= XZICON +TERM4+ TERM5+ZF*COEF7+ZW*COEF8+COEF4*(ZRCOS+ZLCOS)
324          FIYY = YYICON+XFMFLF+ZFMFLF+XWMWLW+ZWMWHW+TERM6 -TERM3
325          FIXZN = FIXZP
326          FIZZ  = ZZICON +TERM1 +TERM2+XFMFLF+XWMWLW +TERM4
327          FJXX = FIZZ-FIYY
328          FJYY = FIXX-FIZZ
329          FJZZ = FIYY-FIXX
330          FIXZN = FIXZP
```

Figure G.6. (Continued)

```
331            DOVIXX=    1./FIXX
332            DOVIYY=    1./FIYY
333            DOVIZZ=    1./FIZZ
334            ISLOW= 0
335            CALL TRACK('RTSLOW  ',2)
336            RETURN
337      500   DO 510 J=1,32
338      510    CALL DISABL(J-1)
339      520   IPAN = KPAN
340            RETURN
341            END
```

Figure G.6. (Continued)

```
SYMBOL        +-+-+-+
```

ALAFNR	-	2100				
ALART	-	2400				
ALARVT	-	2400				
ALARWG	-	2200				
ALBRK	-	1000				
ALFSQ	-	1800				
ALFTAB	-	1300				
ALHTE	-	2400				
ALHTM	-	2400				
ALHTP	-	2400				
ALHTPR	-	2400				
ALHTST	-	1000				
ALLNSQ	-	2000				
ALLRH	-	2100				
ALLWPR	-	2200				
ALNCBK	-	1000	154	178		
ALPHF	-	1800	94AG			
ALPHFP	-	86=	38	89	91	
ALPHHT	-	2400				
ALPHLN	-	2000	152=	156AG	164	173
ALPHLR	-	2100	224	239		
ALPHLW	-	2200				
ALPHRN	-	2000	153=	157AG	179	137
ALPHRR	-	2100	2 9	239		
ALPHRW	-	2200				
ALPHVT	-	2400				
ALRGLW	-	2200				
ALRGRW	-	2200				
ALRNSQ	-	2000				
ALRRH	-	2100				
ALRWPR	-	2200				
ALVTE	-	2400				
ALVTM	-	2400				
ALVTP	-	2400				
ALVTPR	-	2400				
ALVTST	-	1000				
ALWSSQ	-	2200				
AMACH	-	1600	55=	56		
AMACLP	-	900				
AMACRP	-	900				
AMACSQ	-	1600	46=	47		
AMACTL	-	2300				
AMACTR	-	2300				
AMAERO	-	2500				
AMARF	-	1800				
AMARFP	-	1800	99=			
AMARHT	-	2400				
AMARLW	-	2200				
AMARNC	-	2100				
AMARNL	-	2100				
AMARNR	-	2100				
AMARRW	-	2200				
AMART	-	2400				
AMARVT	-	2400				
AMARWG	-	2200				

Figure G.6. (Continued)

AMEM	-	12C0	215AG								
AMLRH	-	21C0									
AMRNLP	-	21C0									
AMRNRP	-	21C0									
AMROTL	-	21C0									
AMROTR	-	21C0									
AMRRH	-	21C0									
AMUL	-	17C0	139	144							
AMULSQ	-	17C0									
AMUR	-	17C0	127	131							
AMURSQ	-	17C0									
ANAERO	-	25C0									
ANARF	-	18C0									
ANARFP	-	18C0	1[illegible]=								
ANARHT	-	24C0									
ANARNC	-	21C0									
ANARNL	-	21C0									
ANARNR	-	21C0									
ANART	-	24C0									
ANARVT	-	24C0									
ANARWC	-	22C0									
ANDIG	-	3C0									
ANDIG2	-	3C0									
ANLRH	-	21C0									
ANROTL	-	21C0									
ANROTR	-	21C0									
ANRRH	-	21C0									
AREAHT	-	10C0									
AREAVT	-	10C0									
AREAW	-	10C0	49								
ARHT	-	10C0									
ARILW	-	22C0	27[illegible]=	272							
ARIRW	-	22C0	271=	273							
ARVT	-	10C0									
ARWING	-	9C0	272	273							
ARWSSQ	-	22C0									
* ATAN2	-	152	153	154	155	2[illegible]	222	224	236	28[illegible]	287
ATAULP	-	22C0	229=	23[illegible]AG							
ATAURP	-	22C0	214=	215AG							
AVEALR	-	22C0	239=	244							
AVEALW	-	22C0									
AVECLW	-	22C0									
AVECTS	-	22C0	241=								
AVEEPP	-	22C0	24[illegible]=	244							
AVEIN	-	14C0	243AG								
AVEYAC	-	10C0									
AVEYCS	-	10C0									
AVEZET	-	22C0	23[illegible]=	242AG							
BDNOS	-	3C0									
BETAF	-	18C0	85AG	282	288						
BETAFP	-	87=	89	90	92						
BETALN	-	22C0	154=	158AG							
BETALW	-	22C0									
BETARN	-	22C0	155=	159AG							
BETARW	-	22C0									

Figure G.6. (Continued)

BETFSQ	-	18C0						
BETVT	-	24C0						
BICL	-	21C0						
BICLDP	-	21C0						
BICLPP	-	9C0						
BICR	-	21C0						
BICRDP	-	21C0						
BICRPR	-	9C0						
BIGX	-	19C0	277=	278	284=	285		
BKALPR	-	22C0	274=					
BKARPR	-	22C0	275=					
BKD1T	-	10C0	132	145				
BKD2T	-	10C0	132	145				
BKD3T	-	10C0	132	145				
BKEY	-	12C0	230AG					
BKLSW	-	10C0						
BKM1T	-	10C0	133	146				
BKM2T	-	10C0	133	146				
BKM3T	-	10C0	133	146				
BKM4T	-	10C0	137	150				
BKNSW	-	10C0						
BK99	-	19C0	114=	118=	122=	125		
BLS	-	10C0	126	245	252			
BMEM	-	12C0	230AG					
BMOVTL	-	19C0	146=	150=				
BMOVTR	-	19C0	133=	137=				
BTLNSQ	-	20C0						
BTRNSQ	-	20C0						
BT1	-	10C0	278	285				
BT2	-	10C0	278	285				
BT3	-	10C0	278	285				
CALIHT	-	24C0						
CALLN	-	20C0	156AG	160	202	203	206	207
CALLW	-	22C0						
CALRN	-	20C0	157AG	161	196	197	200	201
CALRW	-	22C0						
CAVINW	-	22C0	243AG	245	246	252	253	
CAVZET	-	22C0	242AG	246	253			
CBCMF	-	18C0	95=	100	101			
CBETLN	-	20C0	158AG	162	202	204	205	
CBETLW	-	22C0						
CBETRN	-	20C0	159AG	163	196	198	199	
CBETRW	-	22C0						
CBETSG	-	24C0						
CDCNTL	-	22C0						
CDCNTR	-	22C0						
CDDUM	-	22C0						
CDF	-	18C0	89=	96	97	98		
CDHT	-	24C0						
CDHTST	-	24C0						
CDLN	-	20C0	173=	202	203	204		
CDLWAD	-	22C0						
CDLWPR	-	22C0						
CDLWSS	-	22C0						
CDOF	-	10C0	89					

Figure G.6. (Continued)

```
CDOHT   -  1000
CDOLN   -  2000  165=   169=   173
CDONHI  -  1000  159    183
CDONLO  -  1000  165    179
CDORN   -  2000  179=   183=   187
CDOVT   -  1000
CDRN    -  2000  187=   196    197    198
CDRWAD  -  2200
CDRWPR  -  2200
CDRWSS  -  2200
CDSLW   -  2200
CDSRW   -  2200
CDVT    -  2400
CDVTST  -  2400
CDWCOP  -  1900  125=
CEPLW   -  2200
CEPRW   -  2200
*CGGTVP -  15*
CHORD   -  1000  39     139    205    252    253    267
CILAML  -  1400  52     302    309    311
CILAMR  -  1400  52     302    305    307
CLALHT  -  1000
CLALPH  -  1000  272    273
CLAT    -  2400
CLAVF   -  2200
CLCNTL  -  2200
CLCNTR  -  2200
CLDUM   -  2200
CLF     -  1800  38=    96     97
CLHT    -  2400
CLHTST  -  2400
CLILW   -  2200  272=   274
CLIRW   -  2200  273=   275
CLLN    -  2000  174=   202    203
CLLWAD  -  2200
CLLWPR  -  2200
CLLWSS  -  2200
CLMAX   -  1000
CLOAL   -  1000
CLRN    -  2000  198=   196    197
CLRWAD  -  2200
CLRWPR  -  2200
CLRWSS  -  2200
CLSLW   -  2200
CLSRW   -  2200
CLSW    -  2200
CLTCOR  -  1900  112=
CLWCOF  -  1900  124=
CLZERO  -  2200
CMCNTL  -  2200
CMCNTR  -  2200
CMF     -  1800  91=    95     99
CMLN    -  2000  175=   205    206    207
CMLWAD  -  2200
CMLWSS  -  2200
```

Figure G.6. (Continued)

CMOF	-	1000	91				
CMON	-	1000	175	189			
CMOW	-	2500					
CMRN	-	2000	189=	199	200	201	
CMRWAO	-	2200					
CMRWSS	-	2200					
CMSLW	-	2200					
CMSRW	-	2200					
CNF	-	1800	92=	100	101		
CNFA1L	-	2100					
CNFA1R	-	2100					
CNFB1L	-	2100					
CNFB1R	-	2100					
CNFL	-	2100					
CNFPL	-	900					
CNFPR	-	900					
CNFR	-	2100					
CNLN	-	2000	177=	206	207		
CNOF	-	1000	92				
CNOLN	-	1000	177				
CNORN	-	1000	191				
CNRN	-	2000	191=	200	201		
CNSW	-	2200					
COEF1	-	800	52	53			
COEF10	-	800					
COEF11	-	800					
COEF12	-	800					
COEF13	-	800					
COEF14	-	800					
COEF15	-	800					
COEF16	-	800					
COEF17	-	800	95	200	201	206	207
COEF18	-	800	194	195			
COEF19	-	800					
COEF2	-	800					
COEF20	-	800					
COEF21	-	800					
COEF22	-	800					
COEF23	-	800					
COEF24	-	800					
COEF25	-	800	211				
COEF26	-	800	265				
COEF27	-	800	270	271			
COEF28	-	800	266	269			
COEF29	-	800	272	273			
COEF3	-	800	316	319			
COEF30	-	800	125				
COEF31	-	800					
COEF32	-	800					
COEF33	-	800					
COEF34	-	800					
COEF35	-	800	294				
COEF36	-	800					
COEF37	-	800					
COEF38	-	800					

Figure G.6. (Continued)

COEF39	-	8C0			
COEF4	-	8C0	318	321	323
COEF40	-	8C0			
COEF41	-	8C0			
COEF42	-	8C0			
COEF5	-	8C0	312		
COEF6	-	8C0	313		
COEF7	-	8C0	314	323	
COEF8	-	8C0	315	323	
COEF9	-	8C0			
CONS1	-	26C0			
CONS10	-	26C0			
CONS11	-	26C0			
CONS12	-	26C0			
CONS13	-	26C0			
CONS14	-	26C0			
CONS15	-	26C0			
CONS16	-	26C0			
CONS17	-	26C0			
CONS18	-	26C0			
CONS19	-	26C0			
CONS2	-	26C0			
CONS20	-	26C0			
CONS21	-	26C0			
CONS22	-	26C0			
CONS23	-	26C0			
CONS24	-	26C0			
CONS25	-	26C0			
CONS26	-	26C0			
CONS27	-	26C0			
CONS28	-	26C0			
CONS29	-	26C0			
CONS3	-	26C0			
CONS30	-	26C0			
CONS31	-	26C0			
CONS32	-	26C0			
CONS33	-	26C0			
CONS34	-	26C0			
CONS35	-	26C0			
CONS36	-	26C0			
CONS37	-	26C0			
CONS38	-	26C0			
CONS39	-	26C0			
CONS4	-	26C0			
CONS40	-	26C0			
CONS41	-	26C0			
CONS42	-	26C0			
CONS43	-	26C0			
CONS44	-	26C0	117		
CONS45	-	26C0	117		
CONS46	-	26C0	117		
CONS47	-	26C0	121		
CONS48	-	26C0	121		
CONS49	-	26C0	121		
CONS5	-	26C0			

Figure G.6. (Continued)

CONS50	-	26C0	128	141							
CONS51	-	26C0	131	144							
CONS52	-	26C0	131	144							
CONS53	-	26C0	131	144							
CONS54	-	26C0	131	144							
CONS55	-	26C0	131	144							
CONS56	-	26C0	131	144							
CONS57	-	26C0	277	284							
CONS58	-	26C0	282	288							
CONS59	-	26C0	107								
CONS6	-	26C0									
CONS60	-	26C0	107								
CONS61	-	26C0	107								
CONS62	-	26C0	110								
CONS63	-	26C0	110								
CONS64	-	26C0	110								
CONS65	-	26C0									
CONS66	-	26C0									
CONS67	-	26C0									
CONS68	-	26C0									
CONS69	-	26C0									
CONS7	-	26C0									
CONS70	-	26C0									
CONS71	-	26C0									
CONS72	-	26C0									
CONS73	-	26C0									
CONS74	-	26C0									
CONS75	-	26C0									
CONS76	-	26C0									
CONS77	-	26C0									
CONS78	-	26C0									
CONS79	-	26C0									
CONS8	-	26C0									
CONS80	-	26C0									
CONS81	-	26C0									
CONS9	-	26C0									
* CONTRL	-	2*									
COSALF	-	18C0	94AG	86	94	96	97	100			
COSBTF	-	18C0	95AG	87	96	98	99				
COSINL	-	14C0	46	141							
COSINR	-	14C0	47	126	128						
COSIW	-	8C0									
COSLAM	-	8C0									
COSPHI	-	18C0	41AG	54	55	126	128	141			
COSPSI	-	14C0	39AG	54	55						
COSTHF	-	18C0	40AG	54	55	102	103	126	128	140	141
COSZHL	-	21C0									
COSZHR	-	21C0									
CPHIP	-	8C0									
CPL	-	9C0									
CPMA1L	-	21C0									
CPMA1R	-	21C0									
CPMB1L	-	21C0									
CPMB1R	-	21C0									
CPML	-	21C0									

Figure G.6. (Continued)

CPMPL	-	900				
CPMPR	-	900				
CPMR	-	2100				
CPR	-	900				
CSFAIL	-	2100				
CSFAIR	-	2100				
CSFBIL	-	2100				
CSFBIR	-	2100				
CSFL	-	2100				
CSFPL	-	900				
CSFPR	-	900				
CSFR	-	2100				
CTAULR	-	2200	229AG	235		
CTAURR	-	2200	219AG	221		
CTL	-	2100				
CTLPRM	-	900				
CTR	-	2100				
CTPPRM	-	900				
CTSLR	-	2200	237=	241		
CTSRR	-	2200	273=	241		
CYALVT	-	1000				
CYAT	-	2400				
CYF	-	1300	3[illegible]=	96	97	98
CYLN	-	2300	176=	202	203	204
CYMAIL	-	2100				
CYMAIR	-	2100				
CYMBIL	-	2100				
CYMBIR	-	2100				
CYML	-	2100				
CYMPL	-	900				
CYMPR	-	900				
CYMR	-	2100				
CYRN	-	2300	13[illegible]=	196	197	198
CYVT	-	2400				
CYVTST	-	2400				
C2INL	-	1400	44=	320		
C2INR	-	1400	45=	320		
DBRK1	-	2600				
DBRK10	-	2600	116			
DBRK11	-	2600	1[illegible]			
DBRK12	-	2600	1[illegible]7	139		
DBRK13	-	2600	13[illegible]	143		
DBRK14	-	2600	1[illegible]6			
DBRK15	-	2600	1[illegible]9			
DBRK16	-	2600	293			
DBRK17	-	2600				
DBRK18	-	2600				
DBRK19	-	2600				
DBRK2	-	2600				
DBRK20	-	2600				
DBRK21	-	2600				
DBRK3	-	2600				
DBRK4	-	2600				
DBRK5	-	2600				
DBRK6	-	2600				

Figure G.6. (Continued)

```
      DBRK7   -   26C0
      DBRK8   -   26C0
      DBRK9   -   26C0
      DCDDF   -   22C0
      DCDLDA  -   22C0
      DCDLG   -   10C0    89
      DCDLSP  -   22C0
      DCDRDA  -   22C0
      DCDRSP  -   22C0
      DCLDF   -   22C0
      DCLLDA  -   22C0
      DCLLSP  -   22C0
      DCLRDA  -   22C0
      DCLRSP  -   22C0
      DCLSPW  -   22C0
      DCMDF   -   22C0
      DCMLDA  -   22C0
      DCMLG   -   10C0    91
      DCMLSP  -   22C0
      DCMRDA  -   22C0
      DCMRSP  -   22C0
      DCNSPW  -   22C0
      DEG20   -   10C0
      DEL     -   16C0    57=     62      69
      DELBS   -    9C0
      DELBT   -    9C0
      DELELV  -    9C0
      DELFLP  -    9C0
      DELRS   -    9C0
      DELRT   -    9C0
      DELRUD  -    9C0
      DELSPL  -    9C0
      DELSPR  -    9C0
      DELSS   -    9C0
      DELST   -    9C0
      DELTH   -    9C0
      DFLAIL  -    9C0
      DFLAIR  -    9C0
      DGTORD  -   10C0
      DIGAN   -    3C0
      DIGAN2  -    3C0
*     DISABL  -  338*
      DLFPSQ  -   14C0
      DLLG    -   18C0
      DLLNC   -   20C0    207=
      DLRNC   -   20C0    201=
      DMLG    -   18C0
      DMLNC   -   20C0    205=
      DMRNC   -   20C0    199=
      DNLG    -   18C0
      DNLNC   -   20C0    206=
      DNRNC   -   20C0    200=
      DOVT    -   10C0    136     149
      DOVTL   -   19C0    145     149
      DOVTR   -   19C0    132     136
```

Figure G.6. (Continued)

	DSDBFT	-	1000				
	DTIM	-	300				
	DUM12	-	900				
	DUM13	-	900				
	DUM14	-	900				
	DUM15	-	900				
	DUM43	-	900				
	DUM44	-	900				
	DUM45	-	900				
	DUM46	-	900				
	DUM47	-	900				
	DUM48	-	900				
	DXLG	-	1800				
	DXLNC	-	2000	233=			
	DXRNC	-	2000	197=			
	DYLG	-	1800				
	DYLNC	-	2000	234=			
	DYRNC	-	2000	198=			
	DZLG	-	1800				
	DZLNC	-	2000	232=			
	DZRNC	-	2000	196=			
	EFFHT	-	1000				
	EFFVT	-	1000				
	EMAXN1	-	1500	74=	78		
	EMAXN2	-	1600	75=	76		
	EMXWDT	-	1600	72=	77		
	ENEL	-	900	31			
	ENER	-	900	32			
*	ENG	-	5*				
*	ENGINE	-	79*				
*	ENGVAR	-	16*				
	EN1MX	-	500	74			
	EN1STP	-	500				
	EN1TMX	-	500				
	EN2MX	-	500	76			
	EN2REF	-	1000	75			
	EN2STR	-	1600	76=			
*	EQMVAR	-	25*				
	EPILR	-	2200	291=	298=		
	EPIRL	-	2200	292=	299=		
	EPPLR	-	2200	235=	240	284	
	EPPRM	-	1900	297=	292	287=	299
	EPPRR	-	2200	293=	240	277	
	EPTAIL	-	2400				
	EPTL1	-	2400				
	EPWRL	-	2200				
	EPWPR	-	2200				
	EPZERO	-	2400				
	EQMX	-	500				
	FWDTMX	-	500	73			
	FWDTPP	-	500	73			
	FEU	-	1000				
	FIE	-	1000				
	FINDEG	-	1000				
	FINPR	-	1000				

Figure G.6. (Continued)

```
      FIP      -    10C0
      FIPOML   -    21C0
      FIPOMR   -    21C0
      FIXX     -    25C0   322=    328     329     331
      FIXXF    -    10C0
      FIXXPR   -    10C0
      FIXXW    -    10C0
      FIXZF    -    10C0
      FIXZP    -    25C0   323=    325     330
      FIXZPR   -    10C0   317     320
      FIXZQ    -    25C0   325=
      FIXZR    -    25C0   330=
      FIXZW    -    10C0
      FIYY     -    25C0   324=    327     329     332
      FIYYF    -    10C0
      FIYYPR   -    10C0
      FIYYW    -    10C0
      FIZZ     -    25C0   326=    327     328     333
      FIZZF    -    10C0
      FIZZPR   -    10C0
      FIZZW    -    10C0
      FJXX     -    25C0   327=
      FJYY     -    25C0   328=
      FJZZ     -    25C0   329=
*     FLAGS    -     6*
      FNORML   -    21C0   224     225
      FNORMR   -    21C0   209     210
      FSIDEL   -    21C0   225
      FSIDER   -    21C0   210
      FSMACH   -    16C0    67=     68
               THE VARIABLE- FSQRT   -IS USED BEFORE IT IS DEFINED
      FSQRT    -    50      51      60      67     210     212     225     226     250     258
*     FUSVAR   -    18*
      GAATAB   -    13C0
      GBATAB   -    13C0
      GBUTON   -     6C0
      GEF      -    19C0   291=    294=
*     GFFVAR   -    19*
*     GETBIT   -    30*     31*
      GKEY     -    12C0
      GMEM     -    12C0
      H        -     9C0    48      57      58     102     103     126
      HDOT     -     9C0
      HDTACL   -    23C0
      HDTACR   -    23C0
      HGEFLR   -    19C0   141=    143     144     145     146
      HGEFRR   -    19C0   128=    130     131     132     133
      HLHUB    -    19C0   140=    141
      HOLD     -     3C0
      HOLD2    -     3C0
      HP       -    10C0   245     246     252     253
      HRHUB    -    19C0   126=    128     140
      HSQ      -    14C0    48=     57
      HTC4     -    19C0   103=    106     107     109     110     294
      HTSTLL   -     8C0
```

Figure G.6. (Continued)

```
      HTVTKT  -    1CC0
      HWACL   -    23C0
      HWACR   -    23C0
      HWC4    -    19C0   1.2=   116    117    120    121    293    294
*     HYBCON  -     3*
*     HYBIO   -     4*
      H1OTL   -    23C0
      H1OTR   -    23C0
      H1L     -    23C0
      H1R     -    23C0
      IAD     -     3C0
      IADC3   -    11C0
      IC      -     3C0
      ICDSPC  -     2C0
      ICLR    -     3C0
      ICONOP  -     6C0    3CAG
      IC2     -     3C0
      IDUPC   -     3C0
      IFC     -     3C0    28AG
      IFCHAN  -     3C0
      IFLAG   -     2C0
      IFRAME  -     3C0
      IGN     -     3C0
      IHJB    -     3C0
      ILEX    -     3C0
*     INITVR  -    14*
      IOC     -     3C0
      IOC21   -     3C0
      IPAN    -     2C0    339=
      IPHASE  -     6C0
      IPSNOS  -     3C0
      IRCTS   -     3C0
      IRCX    -     3C0
      IREVNT  -    29AG
      IRUNIT  -     3C0
      ISCOPE  -     2C0
      ISENCE  -     4C0    29AG   30AG   31AG
      ISETC   -     3C0
      ISHPC   -     3C0
      ISLOW   -     6C0    334=
      ISTA    -     6C0    215AG  218
      ISTAD   -     3C0
      ISTAD2  -     3C0
      ISTR    -     6C0    230AG  23
      ISTDA   -     3C0
      ISTDA2  -     3C0
      ISTGO   -     3C0
      ISTGO2  -     3C0
      ISTHO   -     3C0
      ISTHO2  -     3C0
      ISTIC   -     3C0
      ISTIC2  -     3C0
      ISTPIT  -     3C0
      ISTRB1  -    11C0    36
      ISTRM   -     3C0
```

Figure G.6. (Continued)

```
  ISTRM2  -    3C0
  ISYNC   -    3C0
  ITRIM   -    6C0    32      35=
  ITSC    -    3C0
  IWARN1  -    6C0    7LG     217=    218=    231=    233=
  IWARN2  -    6C0    7LG
  IWREVT  -    6C0
  J       -   337D0   338AG
  JTRIM   -    6C0    32
  KAR     -    4C0
  KONFR   -    2C0
  KPAN    -   29=     34=     216=    232=    339
  KTRIM   -    6C0    31AG    32
  LETR    -    3C0
* LINT    -   215*    230*
  MICNT   -    2C0
  MIECR   -    2C0
  MONDIG  -    3C0
* NACVAR  -   20*
  NADCS   -    3C0
  NCHAIN  -    3C0
  NCON    -    3C0    28AG
  NCONSL  -    3C0
  NDACS   -    3C0
  NFRAME  -    2C0
  NGEF    -    6C0    105     115     129     142     292
  NIOS    -    3C0
  NOSIM   -    2C0
  NPCS    -    3C0
  NPLOT   -    6C0
  NPLOT2  -    6C0
  NQIND   -    5C0
  NRNOID  -    5C0
  NTWST   -    6C0
  NVB     -    6C0
  NWDTID  -    5C0
  N1IND   -    5C0
  N1THID  -    5C0
  N2IND   -    5C0
  OMDOT   -    9C0
  OMDTL   -   17C0
  OMDTR   -   17C0
  OMEGA   -    9C0    75
  OMEGAL  -   17C0
  OMEGAR  -   17C0
  OMEGEL  -   16C0    91=
  OMEGER  -   16C0    79AG    81      82=
  OMREF   -   10C0    75
  OMSQL   -   17C0
  OMSQR   -   17C0
  ONOVTC  -   16C0    61=     62      72
  OOVDSK  -    8C0
  OOVFSM  -   16C0    68=     112     124
  OOVIXX  -   25C0    331=
  OOVIYY  -   25C0    332=
```

Figure G.6. (Continued)

	OVIZZ	-	25C0	333=					
	OPERA	-	3C0						
	OPERA2	-	3C0						
	OVDTIM	-	9C0						
	OVSOTH	-	16C0	71=	74				
	OVTROL	-	15C0	72=	73				
	P	-	25C0						
	PC	-	10C0	245	246	252	253		
	PCTOL	-	16C0						
	PCTOR	-	16C0	79AG					
	PGUST	-	9C0						
	PHI	-	9C0	41AG					
	PHIPH	-	10C0						
	PI	-	10C0						
	PILMSK	-	2C0						
	PIOV2	-	10C0						
	PNLN	-	21C0						
	PNLR	-	21C0						
	PNRN	-	21C0						
	PNRR	-	21C0						
	PP	-	25C0						
	PPRIME	-	9C0						
	PQ	-	25C0						
	PR	-	25C0						
	PROJ	-	3C0						
	PSI	-	9C0	39AG					
	Q	-	25C0						
	QFSW	-	13C0	49=	96	97	98	99	100	101
	QGUST	-	9C0						
	QNLN	-	21C0						
	QNLR	-	21C0						
	QNRN	-	21C0						
	QNRR	-	21C0						
	QPRIME	-	9C0						
	R	-	25C0						
	RCPL	-	11C0	33AG					
	RDTODG	-	10C0						
	RESLR	-	22C0	225=	226				
	RESRR	-	22C0	211=	212				
*	RETURN	-	335*	34*					
*	REVENT	-	28*						
	RGUST	-	9C0						
	RNLN	-	21C0						
	RNLR	-	21C0						
	RNRN	-	21C0						
	RNRR	-	21C0						
	ROE	-	16C0	62=	63	211			
	ROEOV2	-	16C0	63=	192	193			
	ROSO	-	5C0	62					
	ROPIR4	-	21C0						
	ROPIR5	-	21C0						
	ROTFPS	-	10C0						
	ROTRAD	-	10C0	128	141	247	254		
*	ROTVAR	-	21*						
	RPRIME	-	9C0						

Figure G.6. (Continued)

```
      RC       -    25C0
      RR       -    25C0
      RRI1     -    19C0   278=    279     285=    286
      RRI2     -    19C0   279=    280     286=    287
*     RTPASS   -     8*
*     RTSLOW   -     1*
      SALIHT   -    24C0
      SALLN    -    20C0   156AG   160     202     203     207
      SALLW    -    22C0
      SALRN    -    20C0   157AG   161     196     197     201
      SALRW    -    22C0
      SAVINW   -    22C0   243AG   245     246     252     253
      SAVZET   -    22C0   242AG   251     255
      SBETLN   -    20C0   158AG   162     202     203     204     206     207
      SBETLW   -    22C0
      SBETRN   -    20C0   159AG   163     196     197     198     200     201
      SBETRW   -    22C0
      SBETSG   -    24C0
      SBFCAF   -    19C0    94=     97     101
      SBFPR    -    10C0
      SBFSAF   -    18C0    93=     96     100
      SBWPR    -    10C0
      SP1      -    19C0
      SCADC1   -     9C0
      SCADC2   -     9C0
      SCADC3   -     9C0
      SCADC4   -     9C0
      SCDAC1   -     9C0
      SCDAC2   -     9C0
      SCDAC3   -     9C0
      SCDAC4   -     9C0
      SEPLW    -    22C0
      SEPRW    -    22C0
      SFNFL    -    26C0
      SFNFR    -    26C0
      SFPL     -    26C0
      SFPML    -    26C0
      SFPMR    -    26C0
      SFPR     -    26C0
      SFQL     -    26C0
      SFQR     -    26C0
      SFSFL    -    26C0
      SFSFR    -    26C0
      SFTL     -    26C0
      SFTR     -    26C0
      SFYML    -    26C0
      SFYMR    -    26C0
      SG       -    10C0
      SGNULW   -    22C0
      SGNURW   -    22C0
      SHF      -    10C0   207
      SHPPRL   -    16C0    80=
      SHPPRR   -    16C0    79AG    80
      SHPROL   -    21C0
      SHPROR   -    21C0
```

Figure G.6. (Continued)

SHPSTR	-	500												
SHW	-	1000	239											
SIGMA	-	2400												
SIL	-	2200	268=	269	270									
SILAML	-	1400	53	303	308	310								
SILAMP	-	1400	53	301	304	306								
SILW	-	2200	269=											
SINALF	-	1800	84AG	86	93	96	97	101						
SINBTF	-	1800	85AG	87	93	94	98							
* SINCOS	-	39*	40*	41*	84*	85*	156*	157*	158*	159*	219*	228*	242*	243*
SININL	-	1400	43	46	141									
SININR	-	1400	42	47	126	128								
SINIW	-	800												
SINLAM	-	900												
SINPHI	-	1800	41AG	54	55	126	140							
SINPSI	-	1400	39AG	54	55									
SINTHE	-	1800	40AG	54	55	102	103	126	128	141				
SINZHL	-	2100												
SINZHR	-	2100												
SIR	-	2200	265=	266	268	271								
SIRW	-	2200	266=											
SIT	-	2200	267=	268										
SKEPS	-	1000												
SK0	-	1000	83											
SK1	-	1000	89											
SK10	-	1000	92											
SK2	-	1000	89											
SK20	-	1000												
SK21	-	1000												
SK22	-	1000												
SK3	-	1000	88											
SK30HI	-	1000	170	194										
SK30L	-	166=	170=	173										
SK30LO	-	1000	166	180										
SK30R	-	180=	134=	197										
SK31HI	-	1000	171	195										
SK31L	-	167=	171=	173										
SK31LO	-	1000	167	181										
SK31R	-	181=	195=	187										
SK32	-	1000	174	188										
SK34	-	1000	175	189										
SK35	-	1000	175	189										
SK36	-	1000	190											
SK37	-	1000	190											
SK38	-	1000	191											
SK39	-	1000	191											
SK4	-	1000	88											
SK40	-	1000	177											
SK41	-	1000	177											
SK42	-	1000	88											
SK43	-	1000	176											
SK44	-	1000	176											
SK45	-	1000												
SK46	-	1000												
SK47	-	1000												

Figure G.6. (Continued)

	SK48	-	10C0					
	SK49	-	10C0					
	SK5	-	10C0	91				
	SK50	-	10C0					
	SK6	-	10C0	91				
	SK7	-	10C0	90				
	SK8	-	10C0	90				
	SK9	-	10C0	92				
	SL	-	10C0	300	301	302	303	
	SLAC	-	8C0					
	SLF	-	10C0	296				
	SLPA	-	10C0					
	SLW	-	10C0	298				
	SM	-	10C0					
	SMA	-	16C0	64=	65			
	SMF	-	10C0					
	SMN	-	10C0					
	SMW	-	10C0					
	SPAN	-	10C0	100	101	200	201	206	207
	SPHIP	-	8C0					
*	SPID	-	11*					
	SQF	-	18C0	49				
	SQFARG	-	13C0					
	SQFPRM	-	10C0					
	SQLNC	-	20C0	192=	195			
	SQLW	-	22C0					
	SQN1MX	-	16C0	78=				
	SQRESL	-	22C0	226=	227	286		
	SQRESR	-	22C0	212=	213	279		
	SQRNC	-	20C0	193=	194			
	SQRW	-	22C0					
	SQTHTC	-	16C0	60=	64	69	71	
	SQWDTX	-	16C0	77=				
	SQWING	-	22C0					
	SSQINL	-	14C0	43=	44	315		
	SSQINR	-	14C0	42=	45	316		
	STAULR	-	22C0	228AG	234			
	STAURR	-	22C0	219AG	220			
	SUMIXX	-	8C0					
	SUMIXZ	-	8C0					
	SUMIYY	-	8C0					
	SUMIZZ	-	8C0					
	SVSTAB	-	13C0	215AG	230AG			
	SVSTAR	-	22C0	215AG	220	221	275	279
	SVSTRL	-	22C0	230AG	234	235	274	286
	SWLG	-	6C0					
	SWLG2	-	9C0	89	91			
	S2INL	-	14C0	46=	317	319		
	S2INR	-	14C0	47=	317	319		
*	TAILVR	-	24*					
*	TAN	-	244					
	TAUAG	-	13C0					
	TAUHT	-	10C0					
	TAUL	-	3C0					
	TAULR	-	22C0	224=	228AG	229		

Figure G.6. (Continued)

TAURR	-	22C0	209=	214	219AG			
TAURT1	-	10C0						
TAURT2	-	10C0						
TAUVT	-	10C0						
TAVAEP	-	22C0	244=	245	252			
TCDEF	-	5C0	58					
TDEGF	-	16C0	58=	59				
TEAL	-	16C0						
TEAR	-	16C0	72=	79AG				
TERMP1	-	25C0						
TERMQ1	-	25C0						
TERMR1	-	25C0						
TERM1	-	25C0	316=	322	326			
TERM1L	-	25C0						
TERM1R	-	25C0						
TERM2	-	25C0	317=	322	326			
TERM2L	-	25C0						
TERM2R	-	25C0						
TERM3	-	25C0	318=	322	324			
TERM3L	-	25C0						
TERM3R	-	25C0						
TERM4	-	25C0	319=	323				
TERM5	-	25C0	320=	323				
TERM6	-	25C0	321=	324	326			
THCDEL	-	16C0	69=	70				
THF	-	9C0	40AG					
THETC	-	16C0	59=	60	61			
THTLAC	-	23C0						
THTRAC	-	23C0						
TH75L	-	9C0						
TH75R	-	9C0						
TIGFL	-	19C0	144=	148=				
TIGER	-	19C0	131=	135=				
TL	-	21C0	224	225				
TMWG1C	-	23C0	220=	222				
TMWG11	-	23C0	221=	222				
TNAC1	-	20C0	194=	196	197	198	199	200	201
TNAC2	-	20C0	195=	202	203	204	205	206	207
TORQL	-	21C0						
TORQR	-	21C0						
TPSR	-	9C0	72					
TR	-	21C0	209	210				
* TRACK	-	27*	315*					
TRIM	-	3C0						
TRIM2	-	3C0						
TRMAR1	-	21C0						
TRMAR2	-	21C0						
TRMAR3	-	21C0						
TRMAR4	-	21C0						
TRMHR1	-	21C0						
TRMHR2	-	21C0						
TRMHT	-	24C0						
TRMHT2	-	24C0						
TRMHT3	-	24C0						
TRMNC1	-	160=	174	175				

Figure G.6. (Continued)

	TRMNC2	-	161=	188	189	
	TRMNC3	-	162=	176	177	
	TRMNC4	-	163=	190	191	
	TRMTTL	-	25C0			
	TRMTTR	-	25C0			
	TRMVT	-	24C0			
	TRMVT2	-	24C0			
	TRMVT3	-	24C0			
	TRMWG1	-	22C0	211=	212	226
	TRMWG4	-	23C0	234=	236	
	TRMWG5	-	22C0			
	TRMWG6	-	22C0			
	TRMWG7	-	22C0			
	TRMWG8	-	22C0			
	TRMWG9	-	23C0	235=	236	
	TSBASE	-	3C0			
	TSREQD	-	3C0			
*	TSTRTS	-	38*			
	TZERO	-	5C0	58		
	TZET1	-	22C0	245=	246	251
	TZET2	-	22C0	246=	247	
	TZET3	-	22C0	247=	248	250
	TZET4	-	22C0	252=	253	255
	TZET5	-	22C0	253=	254	
	TZET6	-	22C0	254=	256	258
	U	-	25C0			
	UGUST	-	9C0			
	UHT	-	17C0			
	ULW	-	17C0			
	ULWPR	-	17C0			
	ULWSQ	-	17C0			
	UP	-	17C0			
	UPRIME	-	9C0	54	55	
	URL	-	17C0	152		
	URLPR	-	17C0			
	URLURL	-	17C0	51	192	
	URR	-	17C0	153		
	URRPR	-	17C0			
	URRURR	-	17C0	50	193	
	URW	-	17C0			
	URWPR	-	17C0			
	URWSQ	-	17C0			
*	USEAIO	-	33*			
	USQ	-	17C0			
	UVT	-	17C0			
	V	-	25C0	276		
	VALFLW	-	17C0			
	VALFRW	-	17C0			
	VALFS	-	17C0			
	VALNCL	-	17C0	51=	154	
	VALNCR	-	17C0	50=	155	
	VBETVT	-	17C0			
	VEAST	-	15C0	55=		
*	VELVAR	-	17*			
	VGUST	-	9C0			

Figure G.6. (Continued)

```
      VLW      -    17C0
      VLWPR    -    17C0
      VLWSQ    -    17C0
      VNORTH   -    15C0    54=
      VP       -    17C0
      VPRIME   -     9C0    54      55
      VRL      -    17C0   154
      VRLPR    -    17C0
      VRLVRL   -    17C0   192
      VRR      -    17C0   155
      VRRPR    -    17C0
      VRRVRR   -    17C0   193
      VRW      -    17C0
      VRWPR    -    17C0
      VRWSQ    -    17C0
      VSQ      -    17C0
      VSTAR    -    22C0   213=    215AG   221     223     275
      VSTARG   -    13C0
      VSTARL   -    22C0   227=    23CAG   235     237     274
      VTIPL    -    17C0
      VTIPR    -    17C0
      VTOTAL   -    17C0    65
      VTOTLR   -    17C0   227     280
      VTOTRR   -    17C0   213     297
      VTSTLL   -     8C0
      VVT      -    17C0
      VZETL    -    17C0
      VZETR    -    17C0
      W        -    25C0
      WDOT     -     9C0
      WGUST    -     9C0
      WHT      -    17C0
      WLW      -    17C0
      WLWPR    -    17C0
      WLWSQ    -    17C0
*     WNGVAR   -    22*
*     WNGVR2   -    23*
            THE VARIABLE- WORK    -IS USED BEFORE IT IS DEFINED
      WORK     -    50      51      60      67      212     212     225     226     258     258
      WP       -    17C0
      WPRIME   -     9C0    54      55
      WRL      -    17C0   152
      WRLPR    -    17C0
      WRLWRL   -    17C0    51     192
      WROTL    -    17C0
      WRR      -    17C0   153
      WRRPR    -    17C0
      WRRWRR   -    17C0    50     193
      WRW      -    17C0
      WRWPR    -    17C0
      WRWSQ    -    17C0
      WSQ      -    17C0
      WVT      -    17C0
      XAERF    -    18C0
      XAERLW   -    22C0
```

Figure G.6. (Continued)

	XAERNC	-	21C0									
	XAERNL	-	21C0									
	XAERNR	-	21C0									
	XAERO	-	25C0									
	XAERRW	-	22C0									
	XAERT	-	24C0									
	XAERWG	-	22C0									
*	XAIO	-	9*									
	XARFP	-	18C0	97=	99							
	XARHT	-	24C0									
	XARVT	-	24C0									
	XCG	-	15C0	52=	99	100	102	103	126	296	298	300	302
	XDTCG	-	15C0									
	XF	-	25C0	296=	314							
	XFAC	-	10C0	99	100							
	XFCON	-	8C0									
	XFMFLF	-	25C0	314=	324	326						
*	XFUNC	-	13*									
	XHT	-	10C0	103								
	XL	-	25C0	302=	310	311						
	XLCOS	-	25C0	311=	321							
*	XLINTP	-	12*									
	XLSIN	-	25C0	310=								
*	XPAP1	-	10*									
*	XPAP3	-	26*									
	XR	-	25C0	306=	306	307						
	XRCOS	-	25C0	307=	321							
	XRLCON	-	8C0	52								
	XRSIN	-	25C0	306=								
	XVT	-	10C0									
	XW	-	25C0	298=	315							
	XWAC	-	10C0	102								
	XWCON	-	8C0									
	XWC2	-	10C0									
	XWMWLW	-	25C0	315=	324	326						
	XYICON	-	8C0	322								
	XXJCON	-	8C0									
	XZICON	-	8C0	323								
	YAERF	-	18C0									
	YAERLW	-	22C0									
	YAERNC	-	21C0									
	YAERNL	-	21C0									
	YAERNR	-	21C0									
	YAERO	-	25C0									
	YAERRW	-	22C0									
	YAERT	-	24C0									
	YAERWG	-	22C0									
	YARFP	-	18C0	98=	100	101						
	YARHT	-	24C0									
	YARVT	-	24C0									
	YN	-	10C0	126	140							
	YPA	-	10C0									
	YWAC	-	10C0									
	YYICON	-	8C0	324								
	YYJCON	-	8C0									

Figure G.6. (Continued)

ZAERF	-	18C0									
ZAERLW	-	22C0									
ZAERNC	-	21C0									
ZAERNL	-	21C0									
ZAERNR	-	21C0									
ZAERO	-	25C0									
ZAERRW	-	22C0									
ZAERT	-	24C0									
ZAERWG	-	22C0									
ZARFP	-	18C0	96=	99							
ZARHT	-	24C0									
ZARVT	-	24C0									
ZCG	-	15C0	53=	99	101	102	103	126	297	299	301	303
ZDTCG	-	15C0									
ZETHL	-	21C0	238								
ZETHR	-	21C0	238								
ZETR1	-	22C0	251=	260=	265						
ZETR2	-	22C0	252=	261=	265	267					
ZETR3	-	22C0	255=	262=	265						
ZETR4	-	22C0	258=	263=	265	267					
ZF	-	25C0	297=	312	323						
ZFAC	-	10C0	99	101							
ZFCON	-	8C0									
ZFMFHF	-	25C0	312=	322	324						
ZHT	-	10C0	103								
ZL	-	25C0	303=	308	309						
ZLCOS	-	25C0	309=	323							
ZLSIN	-	25C0	308=	318							
ZPA	-	10C0									
ZR	-	25C0	301=	304	305						
ZRCOS	-	25C0	305=	323							
ZRLCON	-	8C0	53								
ZRSIN	-	25C0	304=	318							
ZVT	-	10C0									
ZW	-	25C0	299=	313	323						
ZWAC	-	10C0	102								
ZWCON	-	8C0									
ZWMWHW	-	25C0	313=	322	324						
ZZICON	-	8C0	326								
ZZJCON	-	8C0									

Figure G.6. (Continued)

```
      SUBROUTINE ATLSP(DEL,SPOIL,DCLA,DCDA,DCMA,DCLS,DCDS,DCMS)
      COMMON/XPAR1/ XPAR(132),
     *FED   ,CLMAX ,ALPR  ,BKLSW ,BKSSW ,SCFPRM,DEG2D ,DGTORD,HTVTKT,    133TO141
     *PIOV2 ,RDTODG,RDTFPS,SKFPS ,ALNCBK,TAURT1,TAURT2
      COMMON/XPAR3/ CONS1 ,CONS2 ,CONS3 ,CONS4 ,CONS5 ,CONS6 ,CONS7 ,     1 TO  7
     1              CONS8 ,CONS9 ,CONS10,CONS11,CONS12,CONS13,CONS14,     8 TO 14
     2              CONS15,CONS16,CONS17,CONS18,CONS19,CONS20,CONS21,    15 TO 21
     3              CONS22,CONS23,CONS24,CONS25,CONS26,CONS27,CONS28,    22 TO 28
     4              CONS29,CONS30,CONS31,CONS32,CONS33,CONS34,CONS35,    29 TO 35
     5              CONS36,CONS37,CONS38,CONS39,CONS40,CONS41,CONS42,    36 TO 42
     6              CONS43,CONS44,CONS45,CONS46,CONS47,CONS48,CONS49,    43 TO 49
     7              CONS50,CONS51,CONS52,CONS53,CONS54,CONS55,CONS56,    50 TO 56
     8              CONS57,CONS58,CONS59,CONS60,CONS61,CONS62,CONS63,    57 TO 63
     9              CONS64,CONS65,CONS66,CONS67,CONS68,CONS69,CONS70,    64 TO 70
     A              DBRK1 ,DBRK2 ,DBRK3 ,DBRK4 ,DBRK5 ,DBRK6 ,DBRK7 ,    71 TO 77
     B              DBRK8 ,DBRK9 ,DBRK10,DBRK11,DBRK12,DBRK13,DBRK14,    78 TO 84
     *              DBRK15,DBRK16,DBRK17,DBRK18,DBRK19,DBRK20,DBRK21     85 TO 91
     D              ,SFTL  ,SFNFL ,SFSFL ,SFPML ,SFYML ,SFQL  ,SFPL  ,
     E              SFTR  ,SFNFR ,SFSFR ,SFPMR ,SFYMR ,SFQR  ,SFPR
     F              ,CONS71,CONS72,CONS73,CONS74,CONS75,CONS76,CONS77    106TO111
     G              ,CONS78,CONS79,CONS80,CONS81                         112TO 132
C
      NOPT= 0
      GO TO 5
      ENTRY CLF1(DEL,CLZ)
      NOPT= 1
    5 CONTINUE
C
       IF(DEL.GT.DBRK7) GO TO 30
      DCLA= CONS27*DEL
      GO TO 45
   30 IF(DEL.GT.DBRK8) GO TO 40
      DCLA= CONS28+DEL*(CONS29+CONS30*DEL)
      GO TO 45
   40 DCLA= CONS31+DEL*(CONS32+CONS33*DEL)
   45 CONTINUE
      IF(NOPT.NE.1) GO TO 48
      CLZ= DCLA
      RETURN
   48 CONTINUE
C
      DCDA= 0.
C
      IF(DEL.GT.DBRK21) GO TO 50
      DCMA= DEL*(CONS34*DEL+CONS35)
      GO TO 55
   50 DCMA= DEL*(CONS36*DEL+CONS37)  +CONS38
   55 CONTINUE
C
      IF(SPOIL.GT.DBRK20) GO TO 60
      DCLS= CONS39*SPOIL
      GO TO 65
   60 DCLS= CONS40+SPOIL*(CONS67+CONS68*SPOIL)
   65 CONTINUE
C
```

Figure G.6. (Continued)

```
      DCDS= CONS69+SPOIL*(CONS70+CONS71*SPOIL)
C
      DCMS= 0.
C
      RETURN
      END
```

Figure G.6. (Continued)

	SYMBOL		REFERENCES		
	5	-	5	8*	
	30	-	9	12*	
	40	-	12	15*	
	45	-	11	14	16*
	48	-	17	20*	
	50	-	22	25*	
	55	-	24	26*	
	60	-	27	30*	
	65	-	29	31*	
*	AILSP	-	1*		
	ALBRK	-	200		
	ALNCBK	-	200		
	BKLSW	-	200		
	BKNSW	-	200		
*	CLF1	-	6*		
	CLMAX	-	200		
	CLZ	-	445	18*	
	CONS1	-	300		
	CONS10	-	300		
	CONS11	-	300		
	CONS12	-	300		
	CONS13	-	300		
	CONS14	-	300		
	CONS15	-	300		
	CONS16	-	300		
	CONS17	-	300		
	CONS18	-	300		
	CONS19	-	300		
	CONS2	-	300		
	CONS20	-	300		
	CONS21	-	300		
	CONS22	-	300		
	CONS23	-	300		
	CONS24	-	300		
	CONS25	-	300		
	CONS26	-	300		
	CONS27	-	300	10	
	CONS28	-	300	13	
	CONS29	-	300	13	
	CONS3	-	300		
	CONS30	-	300	13	
	CONS31	-	300	15	
	CONS32	-	300	15	
	CONS33	-	300	15	
	CONS34	-	300	23	
	CONS35	-	300	23	
	CONS36	-	300	25	
	CONS37	-	300	25	
	CONS38	-	300	25	
	CONS39	-	300	28	
	CONS4	-	300		
	CONS40	-	300	30	
	CONS41	-	300		

Figure G.6. (Continued)

CONS42	-	3C0	
CONS43	-	3C0	
CONS44	-	3C0	
CONS45	-	3C0	
CONS46	-	3C0	
CONS47	-	3C0	
CONS48	-	3C0	
CONS49	-	3C0	
CONS5	-	3C0	
CONS50	-	3C0	
CONS51	-	3C0	
CONS52	-	3C0	
CONS53	-	3C0	
CONS54	-	3C0	
CONS55	-	3C0	
CONS56	-	3C0	
CONS57	-	3C0	
CONS58	-	3C0	
CONS59	-	3C0	
CONS6	-	3C0	
CONS60	-	3C0	
CONS61	-	3C0	
CONS62	-	3C0	
CONS63	-	3C0	
CONS64	-	3C0	
CONS65	-	3C0	
CONS66	-	3C0	
CONS67	-	3C0	30
CONS68	-	3C0	30
CONS69	-	3C0	32
CONS7	-	3C0	
CONS70	-	3C0	32
CONS71	-	3C0	32
CONS72	-	3C0	
CONS73	-	3C0	
CONS74	-	3C0	
CONS75	-	3C0	
CONS76	-	3C0	
CONS77	-	3C0	
CONS78	-	3C0	
CONS79	-	3C0	
CONS8	-	3C0	
CONS80	-	3C0	
CONS81	-	3C0	
CONS9	-	3C0	
DBRK1	-	3C0	
DBRK10	-	3C0	
DBRK11	-	3C0	
DBRK12	-	3C0	
DBRK13	-	3C0	
DBRK14	-	3C0	
DBRK15	-	3C0	
DBRK16	-	3C0	
DBRK17	-	3C0	
DBRK18	-	3C0	

Figure G.6. (Continued)

DBRK19	-	3C0									
DBRK2	-	3C0									
DBRK20	-	3C0	27								
DBRK21	-	3C0	22								
DBRK3	-	3C0									
DBRK4	-	3C0									
DBRK5	-	3C0									
DBRK6	-	3C0									
DBRK7	-	3C0	9								
DBRK8	-	3C0	12								
DBRK9	-	3C0									
DCDA	-	1AG	21=								
DCDS	-	1AG	32=								
DCLA	-	1AG	10=	13=	15=	18					
DCLS	-	1AG	28=	30=							
DCMA	-	1AG	23=	25=							
DCMS	-	1AG	33=								
DEG20	-	2C0									
DCL	-	1AG	6AG	9	1	12	13	15	22	23	25
DCTCRD	-	2C0									
EEH	-	2C0									
ETVTKT	-	2C0									
[illegible]	-	[illegible]	7=	17							
[illegible]	-	2C0									
[illegible]	-	2C0									
* RETURN	-	1[illegible]*	34*								
ROTERS	-	2C0									
SENEL	-	3C0									
SENER	-	3C0									
SEPL	-	3C0									
SEPML	-	3C0									
SEPMR	-	3C0									
SEPR	-	3C0									
SEQL	-	3C0									
SEQR	-	3C0									
SESEL	-	3C0									
SESER	-	3C0									
SETL	-	3C0									
SETR	-	3C0									
SEYML	-	3C0									
SEYMR	-	3C0									
SKEPS	-	2C0									
SPOIL	-	1AG	27	28	33	32					
SQEPRM	-	2C0									
TAURT1	-	2C0									
TAURT2	-	2C0									
XPAR	-	2C0									
* XPAR1	-	2*									
* XPAR3	-	3*									

Figure G.6. (Continued)

```
 1          SUBROUTINE CLCDCM(ALPHA,DEL,CLDEL,CLSP,CDFASP,CMFASP,CL,CD,CM,
           *  CLP,CDP)
 2          COMMON/XACOEF/ ACDW0 ,ACDW1 ,ACDW2 ,ACDW3 ,ACDW4 ,
           *               ACDW5 ,ACDW6 ,ACDW7 ,ACDW8 ,ACDW9 ,
           *               ACDW10,ACDW11,ACDW12,ACDW13,ACDW14,
           *               ACDW15,ACDW16,ACDW17,ACDW18,ACDW19,
           *               ACDW20,ACDW21,ACDW22,ACDW23,ACDW24
 3          COMMON/XPAR1/ AINHT ,AINW  ,ALAMDA,ALHTST,ALVTST,AREAHT,AREAW ,    1  TO  7
           *AREAVT,ARHT  ,ARVT  ,AVEYAC,AVEYCS,BLS   ,CDOF  ,CDOHT ,CDOVT ,    8  TO 16
           *CHORD ,CLALHT,CLALPH,CMOF  ,CMON  ,CNOF  ,CNOLN ,CNORN ,CYALVT,   17 TO 25
           3DCDLG ,DCMLG ,FINPR ,DOVT  ,DSDBET,EFFHT ,EFFVT ,FIE   ,FINDEG,   26 TO 34
           *FIP   ,FIXXF ,FIXXPR,FIXXW ,FIXZF ,FIXZPR,FIXZW ,FIYYF ,FIYYPR,   35 TO 43
           *FIYYW ,FIZZF ,FIZZPR,FIZZW ,HP    ,OMREF ,PC    ,PI    ,ROTRAD,   44 TO 52
           *SBFPR ,SBWPR ,SG    ,SHF   ,SHW   ,SK0   ,SK1   ,SK2   ,SK3   ,   53 TO 61
           *SK4   ,SK5   ,SK6   ,SK7   ,SK8   ,SK9   ,SK10  ,SK20  ,SK21  ,   62 TO 70
           *SK22  ,CDONLO,SK30LO,SK31LO,SK32  ,CDONHI,SK34  ,SK35  ,SK36  ,   71 TO 79
           *SK37  ,SK38  ,SK39  ,SK40  ,SK41  ,SK42  ,SK43  ,SK44  ,SK45  ,   80 TO 88
           *SK46  ,SK47  ,SK48  ,SK49  ,SK50  ,SL    ,SLF   ,SLPA  ,SLW   ,   89 TO 97
           *SM    ,SMF   ,SMN   ,SMW   ,SPAN  ,TAUHT ,TAUVT ,XFAC  ,XHT   ,   98 TO106
           *XWAC  ,XVT   ,YN    ,YPA   ,YWAC  ,ZFAC  ,ZHT   ,ZPA   ,ZWAC  ,
           *ZVT   ,CLOAL ,PHIPH ,SK30HI,EN2REF,XWC2  ,BT1   ,BT2   ,BT3   ,
           *BKD1T ,BKD2T ,BKD3T ,BKM1T ,BKM2T ,BKM3T ,BKM4T ,SK31HI,
           *EEU   ,CLMAX ,ALBRK ,PKLSW ,BKNSW ,SQFPRM,DEG20 ,DGTORD,HTVTKT,   133TO141
           *PIOV2 ,ROTDDG,ROTFPS,SKFPS ,ALNCRK,TAURT1,TAURT2
 4          COMMON/GEEVAR/
           1 AGOVAT,AGOVAW,BIGX  ,BK99  ,BMOVTL,BMOVTS,CDWCOR,CLTCOR,CLWCOR,    1 -  9
           2 DOVTL ,DOVTR ,EPPRM ,GEE   ,HGEFLR,HGEFRR,HLHUB ,HRHUB ,HTC4  ,   10 - 18
           3 HWC4  ,RRI1  ,RRI2  ,SB1   ,TIGEL ,TIGER                          19 - 24
 5          COMMON/FLAGS/ IWARN1(16),IWARN2(16),ISENCE(2),IWREVT(2),ICONDP,
           1 ITRIM,JTRIM,KTRIM,NPLOT,NPLOT2,IPHASE,ISLOW,SWLG,GBUTON,
           2 ISTA,ISTB,NGEF,NVB,NTWST
 6          LOGICAL*1  IWARN1,IWARN2
 7          COMMON/XPAR3/ CONS1 ,CONS2 ,CONS3 ,CONS4 ,CONS5 ,CONS6 ,CONS7 ,     1 TO  7
           1              CONS8 ,CONS9 ,CONS10,CONS11,CONS12,CONS13,CONS14,     8 TO 14
           2              CONS15,CONS16,CONS17,CONS18,CONS19,CONS20,CONS21,    15 TO 21
           3              CONS22,CONS23,CONS24,CONS25,CONS26,CONS27,CONS28,    22 TO 28
           4              CONS29,CONS30,CONS31,CONS32,CONS33,CONS34,CONS35,    29 TO 35
           5              CONS36,CONS37,CONS38,CONS39,CONS40,CONS41,CONS42,    36 TO 42
           6              CONS43,CONS44,CONS45,CONS46,CONS47,CONS48,CONS49,    43 TO 49
           7              CONS50,CONS51,CONS52,CONS53,CONS54,CONS55,CONS56,    50 TO 56
           8              CONS57,CONS58,CONS59,CONS60,CONS61,CONS62,CONS63,    57 TO 63
           9              CONS64,CONS65,CONS66,CONS67,CONS68,CONS69,CONS70,    64 TO 70
           A              DBRK1 ,DBRK2 ,DBRK3 ,DBRK4 ,DBRK5 ,DBRK6 ,DBRK7 ,    71 TO 77
           B              DBRK8 ,DBRK9 ,DBRK10,DBRK11,DBRK12,DBRK13,DBRK14,    78 TO 84
           *              DBRK15,DBRK16,DBRK17,DBRK18,DBRK19,DBRK20,DBRK21     85 TO 91
           D             ,SFTL  ,SFNFL ,SFSFL ,SFPML ,SFYML ,SFQL  ,SFPL  ,
           E              SFTR  ,SFNFR ,SFSFR ,SFPMR ,SFYMR ,SFQR  ,SFPR
           F             ,CONS71,CONS72,CONS73,CONS74,CONS75,CONS76,CONS77    106TO112
           G             ,CONS78,CONS79,CONS80,CONS81                         113TO116
 8          NOPT=  0
 9          GO TO 5
10          ENTRY CLF2(ALPHA,CLDEL,CLSP,CLZ)
11          NOPT= 1
12     5    CONTINUE
       C
```

Figure G.6. (Continued)

```
      ALDEG = ALPHA * RDTDG
      CLALDG= CLALPH*DGTDRD
C
      IF(DEL.GT.DBRK2) GO TO 1
      ALNLP= CONS1 +CONS2*DEL
      ALNLM=  CONS3+CONS4*DEL
      GO TO 20
1     ALNLP=  CONS5
      ALNLM=  CONS6
20    CONTINUE
      ALBRK1= ALNLP+DBRK3
      ALBRK2=  ALNLM-DBRK3
C
      IF(DEL.GT.DBRK6)  GO TO 112
      F=  CONS21+DEL*(CONS22+CONS23*DEL)
      GO TO 114
112   F=  CONS24+DEL*(CONS25+CONS26*DEL)
114   CONTINUE
      CL1=  CLBAL+CLDEL+CLSP*F
      IWARN1(4)=  .FALSE.
      IF(ALDEG.GE.ALBRK2) GO TO 100
      CLNLP=  CL1+CLALDG*ALNLM
      CLP= CLNLP*(CONS7+ALDEG)/(CONS7+ALBRK2)
      IWARN1(4)=  .TRUE.
      GO TO 140
100   IF(ALDEG.GE.ALNLM) GO TO 110
      CLNLP=  CL1+CLALDG*ALNLM
      ALDUM= ALNLM-ALDEG+CONS1
      DCLNL= ALDUM*(CONS8*ALDUM+CONS9) +CONS10
      CLP= CLNLP-DCLNL
      IWARN1(4)=  .TRUE.
      GO TO 140
110   IF(ALDEG.GT.ALNLP) GO TO 120
      CLP=  CLALDG*ALDEG+CL1
      GO TO 140
120   IF(ALDEG.GT.ALBRK1) GO TO 130
      CLNLP=  CL1+CLALDG*ALNLP
      ALDUM=  ALDEG-ALNLP+CONS1
      DCLNL = ALDUM*(CONS8*ALDUM+CONS9)+CONS10
      CLP=  CLNLP+DCLNL
      IWARN1(4)=  .TRUE.
      GO TO 140
130   CONTINUE
      CLNLP=  CL1+CLALDG*ALNLP
      CLP= CLNLP*(CONS7-ALDEG)/(CONS7-ALBRK1)
140   CONTINUE
      IF(NOPT.NE.1) GO TO 150
      CL7=  CLP*CLWCOR
      RETURN
150   CONTINUE
C
      CLPMX= CLMAX+CLDEL+CLSP
      CLIGE=  CLP*CLWCOR
      IF(CLIGE.LT.CLPMX) GO TO 160
      DCDIGE= 0.
```

Figure G.6. (Continued)

```
      CLIGE=  CLPMX
      GO TO 170
160   DCDIGE= CDWCOR*(CLIGE-CLP)*(CLIGE-CLP)
170   CONTINUE
C
      ALDUM=  DBRK5
      IF(ALDEG.LT.DBRK4) ALDUM=DBRK4
      IF(ALDEG.GE.DBRK4.AND.ALDEG.LE.DBRK5) ALDUM= ALDEG
C
      CD1=   ACDW0+DEL*(ACDW1+DEL*(ACDW2+DEL*(ACDW3+DEL*ACDW4))) +
     1ALDUM*(ACDW5+DEL*(ACDW6+DEL*(ACDW7+DEL*(ACDW8+DEL*ACDW9)))+
     2ALDUM*(ACDW10+DEL*(ACDW11+DEL*(ACDW12+DEL*(ACDW13+DEL*ACDW14)))+
     3ALDUM*(ACDW15+DEL*(ACDW16+DEL*(ACDW17+DEL*(ACDW18+DEL*ACDW19)))+
     4ALDUM*(ACDW20+DEL*(ACDW21+DEL*(ACDW22+DEL*(ACDW23+DEL*ACDW24)))))
     5)
      IF(ALDEG.GE.DBRK4) GO TO 180
      CDM= CONS11+CD1+CDFASP
      CDP= CDM-(1.-CDM)*(ALDEG-DBRK4)*CONS12
      CMP= (CONS17+CMFASP)*(CONS7+ALDEG)*CONS12
      GO TO 200
180   IF(ALDEG.GT.DBRK5) GO TO 190
      CDP= ALDEG*(CONS13*ALDEG+CONS14) +CONS15+CD1+CDFASP
      CMP= CONS18+CONS19*ALDEG+CMFASP
      GO TO 200
190   CDPLUS= CONS16+CD1+CDFASP
      CDP= CDPLUS+(1.-CDPLUS)*(ALDEG-DBRK5)*CONS12
      CMP= (CONS20+CMFASP)*(CONS7-ALDEG)*CONS12
200   CONTINUE
C
C
      CL= CLIGE
      CD= CDP+DCDIGE
      CM= CMP
C
      RETURN
      END
```

Figure G.6. (Continued)

SYMBOL		REFERENCES											
5	-	9	12*										
10	-	15	19*										
20	-	18	21*										
100	-	31	36*										
110	-	36	43*										
112	-	24	27*										
114	-	26	28*										
120	-	43	46*										
130	-	46	53*										
140	-	35	42	45	52	55*							
150	-	57	60*										
160	-	63	67*										
170	-	66	68*										
180	-	73	78*										
190	-	78	82*										
200	-	77	81	95*									
ACDW0	-	200	72										
ACDW1	-	200	72										
ACDW10	-	200	72										
ACDW11	-	200	72										
ACDW12	-	200	72										
ACDW13	-	200	72										
ACDW14	-	200	72										
ACDW15	-	200	72										
ACDW16	-	200	72										
ACDW17	-	200	72										
ACDW18	-	200	72										
ACDW19	-	200	72										
ACDW2	-	200	72										
ACDW20	-	200	72										
ACDW21	-	200	72										
ACDW22	-	200	72										
ACDW23	-	200	72										
ACDW24	-	200	72										
ACDW3	-	200	72										
ACDW4	-	200	72										
ACDW5	-	200	72										
ACDW6	-	200	72										
ACDW7	-	200	72										
ACDW8	-	200	72										
ACDW9	-	200	72										
AGOVAT	-	400											
AGOVAM	-	400											
AINHT	-	300											
AINW	-	300											
ALAMDA	-	300											
ALBRK	-	300											
ALBRK1	-	22=	46	55									
ALBRK2	-	23=	31	33									
ALDEG	-	13=	31	33	36	38	43	44	46	48	55	70	71	73
		75	76	78	79	80	83	84					
ALDUM	-	38=	39	48=	49	69=	70=	71=	72				
ALHTST	-	300											

Figure G.6. (Continued)

	ALNCBK	-	3CD							
	ALNLM	-	17=	20=	23	32	36	37	38	
	ALNLP	-	16=	19=	22	43	47	48	54	
	ALPHA	-	1AG	12AG	13					
	ALVTST	-	3CD							
	AREAHT	-	3CD							
	AREAVT	-	3CD							
	AREAW	-	3CD							
	ARHT	-	3CD							
	ARVT	-	3CD							
	AVEYAC	-	3CD							
	AVEYCS	-	3CD							
	BIGX	-	4CD							
	BKD1T	-	3CD							
	BKD2T	-	3CD							
	BKD3T	-	3CD							
	BKLSW	-	3CD							
	BKM1T	-	3CD							
	BKM2T	-	3CD							
	BKM3T	-	3CD							
	BKM4T	-	3CD							
	BKNSW	-	3CD							
	BK99	-	4CD							
	BLS	-	3CD							
	BMDVTL	-	4CD							
	BMDVTR	-	4CD							
	BT1	-	3CD							
	BT2	-	3CD							
	BT3	-	3CD							
	CD	-	1AG	37=						
	CDFASP	-	1AG	74	79	92				
	CDM	-	74=	75						
	CDOF	-	3CD							
	CDOHT	-	3CD							
	CDONHI	-	3CD							
	CDONLO	-	3CD							
	CDOVT	-	3CD							
	CDP	-	1AG	75=	79=	83=	97			
	CDPLUS	-	92=	93						
	CDWCOR	-	4CD	67						
	CD1	-	72=	74	79	82				
	CHORD	-	3CD							
	CL	-	1AG	86=						
	CLALDG	-	14=	32	37	44	47	54		
	CLALHT	-	3CD							
	CLALPH	-	3CD	14						
*	CLCDCM	-	1*							
	CLDEL	-	1AG	12AG	29	61				
*	CLF2	-	12*							
	CLIGE	-	62=	63	65=	67	86			
	CLMAX	-	3CD	51						
	CLNLP	-	32=	33	37=	43	47=	53	54=	55
	CLOAL	-	3CD	29						
	CLP	-	1AG	33=	40=	44=	50=	55=	58	62	67
	CLPMX	-	61=	63	65					

Figure G.6. (Continued)

CLCC	-	[illegible]	[illegible]				
CLTC	-	[illegible]					
CLUC	-	4	55				
CL2	-	[illegible]	[illegible]				
CL1	-	[illegible]	[illegible]	[illegible]	[illegible]	[illegible]	[illegible]
CM	-	145	38=				
CMEASD	-	145	[illegible]		[illegible]		
CMOF	-	300					
CMON	-	300					
CN	-	76=	[illegible]	34=	[illegible]		
CNOF	-	300					
CNOLN	-	300					
CNORN	-	300					
CONS1	-	700	16	[illegible]	4[illegible]		
CONS10	-	700	39	[illegible]			
CONS11	-	700	74				
CONS12	-	700	75	[illegible]	[illegible]	34	
CONS13	-	700	70				
CONS14	-	700	79				
CONS15	-	700	79				
CONS16	-	700	32				
CONS17	-	700	76				
CONS18	-	700	[illegible]				
CONS19	-	700	80				
CONS2	-	700	16				
CONS20	-	700	34				
CONS21	-	700	25				
CONS22	-	700	25				
CONS23	-	700	25				
CONS24	-	700	27				
CONS25	-	700	27				
CONS26	-	700	27				
CONS27	-	700					
CONS28	-	700					
CONS29	-	700					
CONS3	-	700	17				
CONS30	-	700					
CONS31	-	700					
CONS32	-	700					
CONS33	-	700					
CONS34	-	700					
CONS35	-	700					
CONS36	-	700					
CONS37	-	700					
CONS38	-	700					
CONS39	-	700					
CONS4	-	700	17				
CONS40	-	700					
CONS41	-	700					
CONS42	-	700					
CONS43	-	700					
CONS44	-	700					
CONS45	-	700					
CONS46	-	700					
CONS47	-	700					

Figure G.6. (Continued)

CONS48	-	7C0				
CONS49	-	7C0				
CONS5	-	7C0	19			
CONS50	-	7C0				
CONS51	-	7C0				
CONS52	-	7C0				
CONS53	-	7C0				
CONS54	-	7C0				
CONS55	-	7C0				
CONS56	-	7C0				
CONS57	-	7C0				
CONS58	-	7C0				
CONS59	-	7C0				
CONS6	-	7C0	20			
CONS60	-	7C0				
CONS61	-	7C0				
CONS62	-	7C0				
CONS63	-	7C0				
CONS64	-	7C0				
CONS65	-	7C0				
CONS66	-	7C0				
CONS67	-	7C0				
CONS68	-	7C0				
CONS69	-	7C0				
CONS7	-	7C0	33	55	76	84
CONS70	-	7C0				
CONS71	-	7C0				
CONS72	-	7C0				
CONS73	-	7C0				
CONS74	-	7C0				
CONS75	-	7C0				
CONS76	-	7C0				
CONS77	-	7C0				
CONS78	-	7C0				
CONS79	-	7C0				
CONS8	-	7C0	39	49		
CONS80	-	7C0				
CONS81	-	7C0				
CONS9	-	7C0	39	49		
CYALVT	-	3C0				
DBRK1	-	7C0				
DBRK10	-	7C0				
DBRK11	-	7C0				
DBRK12	-	7C0				
DBRK13	-	7C0				
DBRK14	-	7C0				
DBRK15	-	7C0				
DBRK16	-	7C0				
DBRK17	-	7C0				
DBRK18	-	7C0				
DBRK19	-	7C0				
DBRK2	-	7C0	15			
DBRK20	-	7C0				
DBRK21	-	7C0				
DBRK3	-	7C0	22	23		

Figure G.6. (Continued)

DBRK4	-	7C0	70	71	73	75			
DBRK5	-	7C0	69	71	78	83			
DBRK6	-	7C0	24						
DBRK7	-	7C0							
DBRK8	-	7C0							
DBRK9	-	7C0							
DCDIGE	-	64=	67=	87					
DCDLG	-	3C0							
DCLNL	-	39=	40	49=	50				
DCMLG	-	3C0							
DEG20	-	3C0							
DEL	-	1AG	15	16	17	24	25	27	72
DGTORD	-	3C0	14						
DOVT	-	3C0							
DOVTL	-	4C0							
DOVTR	-	4C0							
DSDBET	-	3C0							
EFFHT	-	3C0							
EFFVT	-	3C0							
EN2REF	-	3C0							
EPPRM	-	4C0							
F	-	25=	27=	29					
FEU	-	3C0							
FIE	-	3C0							
FINDEG	-	3C0							
FINPR	-	3C0							
FIP	-	3C0							
FIXXF	-	3C0							
FIXXPR	-	3C0							
FIXXW	-	3C0							
FIXZF	-	3C0							
FIXZPR	-	3C0							
FIXZW	-	3C0							
FIYYF	-	3C0							
FIYYPR	-	3C0							
FIYYW	-	3C0							
FIZZF	-	3C0							
FIZZPR	-	3C0							
FIZZW	-	3C0							
* FLAGS	-	5*							
GBUTON	-	5C0							
GEF	-	4C0							
* GEFVAR	-	4*							
HGEFLR	-	4C0							
HGEFRR	-	4C0							
HLHUB	-	4C0							
HP	-	3C0							
HRHUB	-	4C0							
HTC4	-	4C0							
HTVTKT	-	3C0							
HWC4	-	4C0							
ICONOP	-	5C0							
IPHASE	-	5C0							
ISENCE	-	5C0							
ISLOW	-	5C0							

Figure 6. (Continued)

```
  ISTA     -    5C0
  ISTB     -    5C0
  ITRIM    -    5C0
  IWARN1   -    5C0     6LG     3C=     34=     41=     51=
  IWARN2   -    5C0     6LG
  IWREVT   -    5C0
  JTRIM    -    5C0
  KTRIM    -    5C0
  NGEF     -    5C0
  NOPT     -    8=      11=     57
  NPLOT    -    5C0
  NPLOT2   -    5C0
  NTWST    -    5C0
  NVB      -    5C0
  OMREF    -    3C0
  PC       -    3C0
  PHIPH    -    3C0
  PI       -    3C0
  PIOV2    -    3C0
  ROTODG   -    3C0     13
* RETURN   -   59*     89*
  ROTFPS   -    3C0
  ROTRAD   -    3C0
  RRI1     -    4C0
  RRI2     -    4C0
  SBFPR    -    3C0
  SBWPR    -    3C0
  SB1      -    4C0
  SFNFL    -    7C0
  SFNFR    -    7C0
  SFPL     -    7C0
  SFPML    -    7C0
  SFPMR    -    7C0
  SFPR     -    7C0
  SFQL     -    7C0
  SFQR     -    7C0
  SFSFL    -    7C0
  SFSFR    -    7C0
  SFTL     -    7C0
  SFTR     -    7C0
  SFYML    -    7C0
  SFYMR    -    7C0
  SG       -    3C0
  SHF      -    3C0
  SHW      -    3C0
  SKFPS    -    3C0
  SK0      -    3C0
  SK1      -    3C0
  SK10     -    3C0
  SK2      -    3C0
  SK20     -    3C0
  SK21     -    3C0
  SK22     -    3C0
  SK3      -    3C0
  SK3DHI   -    3C0
```

Figure G.6. (Continued)

	SK30LO	-	3C0
	SK31HI	-	3C0
	SK31LO	-	3C0
	SK32	-	3C0
	SK34	-	3C0
	SK35	-	3C0
	SK36	-	3C0
	SK37	-	3C0
	SK38	-	3C0
	SK39	-	3C0
	SK4	-	3C0
	SK40	-	3C0
	SK41	-	3C0
	SK42	-	3C0
	SK43	-	3C0
	SK44	-	3C0
	SK45	-	3C0
	SK46	-	3C0
	SK47	-	3C0
	SK48	-	3C0
	SK49	-	3C0
	SK5	-	3C0
	SK50	-	3C0
	SK6	-	3C0
	SK7	-	3C0
	SK8	-	3C0
	SK9	-	3C0
	SL	-	3C0
	SLF	-	3C0
	SLPA	-	3C0
	SLW	-	3C0
	SM	-	3C0
	SMF	-	3C0
	SMN	-	3C0
	SMW	-	3C0
	SPAN	-	3C0
	SQFPRM	-	3C0
	SWLG	-	5C0
	TAUNT	-	3C0
	TAURT1	-	3C0
	TAURT2	-	3C0
	TAUVT	-	3C0
	TIGEL	-	4C0
	TIGER	-	4C0
*	XACDEF	-	2*
	XFAC	-	3C0
	XHT	-	3C0
*	XPAR1	-	3*
*	XPAR3	-	7*
	XVT	-	3C0
	XWAC	-	3C0
	XWC2	-	3C0
	YN	-	3C0
	YPA	-	3C0
	YWAC	-	3C0

Figure G.6. (Continued)

ZFAC - 300
ZHT - 300
ZPA - 300
ZVT - 300
ZWAC - 300

+-+-+-

```
 1          SUBROUTINE ENGINE(TEA,SHPOUT,OMENG,PCTORQ)
 2          COMMON/ENG/  NWDTID,N1IND ,N1THID,N2IND ,NQIND ,NRNOID ,
           *             EWDTMX,EN1MX ,EN1TMX,EN2MX ,EQMX  ,SHPSTR
           *            ,  EWDTPR,EN1STR,ROEO  ,TZERO ,TCDEF
 3          COMMON/ENGVAR/
           1 AMACH ,AMACSQ,DEL    ,EMAXN1,EMAXN2,EMXWDT,EN2STR,FSMACH,OMEGEL,    1 -  9
           2 OMEGER,ONOVTC,OOVFSM,OVSQTH,OVTHDL,ROE    ,ROEOV2,SHPPRL,SHPPRR,   10 - 18
           3 SMA   ,SQN1MX,SQTHTC,SQWDTX,TDEGF ,TEAL   ,TEAR  ,THCDEL,THETC     19 - 27
           4,PCTQL,PCTQR                                                        28 TO 29
 4          COMMON/FLAGS/ IWARN1(16),IWARN2(16),ISENCE(2),IWREVT(2),ICONOP,
           1 ITRIM,JTRIM,KTRIM,NPLOT,NPLOT2,IPHASE,ISLOW,SWLG,GBUTON,
           2 ISTA,ISTB,NGEF,NVB,NTWST
 5          LOGICAL*1  IWARN1,IWARN2
        C
        C       ENGINE CHARACTERISTICS USED
        C    NWDTID = 1      FUEL FLOW CUTOFF
        C    N1IND  = 1      N1 CUTOFF
        C    N1THID = 0      NO REFERRED N1 CUTOFF
        C    N2IND  = 2      N2 CUTOFF - NON-OPTIMUM N2 VARIATION
        C    NQIND  = 1      TORQUE CUTOFF
        C    NRNOID = 0      NO REYNOLDS NUMBER CORRECTIONS
        C
 6          TEASQ= TEA * TEA
 7          TEACUB=  TEASQ * TEA
 8          TEA4TH=  TEACUB* TEA
        C       NOTE TEA = TPS / THETC
 9          IF(NWDTID.EQ.0) GO TO 1000
        C       FIND (WDOT/SHP) AT TEA,M
        C
        C       W DOT = F(TEA)  EQUATION FROM CURVE FIT PROGRAM
        C         4TH ORDER IN TEA
10          EWDOT= -2.0503260368+.3531349130E-02*TEA-.2594440658E-05*TEASQ
           * +.1010425181E-08*TEACUB-.1444138415E-12*TEA4TH
        C
11          IWARN1( 1)=  .FALSE.
12          IF(EWDOT.LT.EMXWDT) GO TO 1000
13          IWARN1( 1)=  .TRUE.
        C       FIND TEA AT MAX WDOT,M
        C
        C       TEA = F(W DOTMX)  FROM CURVE FIT PROGRAM
        C         4TH ORDER IN W DOTMX
14          TEA = 1587.5624254398-1375.3423740741*EMXWDT+12872.89968281*
           *  SQWDTX-22742.78987105*SQWDTX*EMXWDT+13929.828136431*SQWDTX *
           *  SQWDTX
        C
15          TEASQ = TEA * TEA
16          TEACUB= TEASQ * TEA
17          TEA4TH= TEACUB * TEA
        C
18      1000 IF(N1IND.EQ.0) GO TO 2000
        C       FIND  N1/N1STAR  AT  TEA,M
        C
        C       N1 = F(TEA,M)  EQUATION FROM CURVE FIT PROGRAM
        C         3RD ORDER IN TEA , 2ND ORDER IN M
19          EN1 = -2.262254353 +1.251288659*AMACH+.9621240231*AMACSQ
```

Figure G.6. (Continued)

```
     * +(.3519585428E-02-.1539742133E-02*AMACH-.1308445977E-02*AMACSQ)*
     *  TEA +
     * (-.1316093319E-05+.6259888594E-06*AMACH+.6064941537E-06*AMACSQ)*
     *  TEASQ +
     * (.1765905983E-09-.8357285710E-10*AMACH-.9302102725E-10*AMACSQ)*
     *  TEACUB
C
      IWARN1( 2)=  .FALSE.
      IF(EN1.LT.EMAXN1)  GO TO 2000
      IWARN1( 2)=  .TRUE.
C        FIND TEA AT MAX N1,M
C
C        TEA = F(N1MAX,M)  EQUATION FROM CURVE FIT PROGRAM
C          3RD ORDER IN N1MAX , 2ND ORDER IN M
      TEA= 4555.7505996075+4266.6351807463*AMACH-10962.24966689*AMACSQ
     *+(-10591.306223561-14006.740644625*AMACH+34472.653759217*AMACSQ)*
     *  EMAXN1 +
     * (10876.686523447+15100.968811309 8*AMACH-36112.607870716*AMACSQ)*
     *  SQN1MX +
     * (-2601.662341542-5379.983822401*AMACH+12502.173136418*AMACSQ)*
     *  SQN1MX*EMAXN1
      TEASQ = TEA * TEA
      TEACUB = TEASQ * TEA
      TEA4TH = TEACUB * TEA
      EN1 = EMAXN1
2000  IF(N1THID.EQ.0) GO TO 3000
C        THIS OPTION WILL BE LEFT BLANK UNTIL NEEDED
3000  CONTINUE
C
C        THIS SECTION CORRESPONDS TO THE ENG 1 SUBR BLOCK IN FLOW DIAG
      SKPN= 1.
      IF(N2IND.NE.2)  GO TO 4000
C        FIND  N2/N2STAR  AT TEA,M
C
C        N2 = F(TEA,M)  EQUATION FROM CURVE FIT PROGRAM
C        3RD ORDER IN TEA , 2ND ORDER IN M
      EN2 = -5.5804780552-2.6637228923*AMACH+1.1263419372*AMACSQ
     *+(.7055066994E-02+.3351714914E-02*AMACH-.1238191608E-03*AMACSQ)*
     *  TEA +
     * (-.2593416699E-05-.1287659251E-05*AMACH-.4369359301E-06*AMACSQ)*
     *  TEASQ +
     * (.3385936162E-09+.1505373934E-09*AMACH+.1178189720E-09*AMACSQ)*
     *  TEACUB
C
      EN2OPT=  EN2STR/EN2* OVSQTH
      SKPN= 1.-(1.-EN2OPT)*(1.-EN2OPT)
4000  CONTINUE
      SKPR= 1.
      IF(NRNOID.EQ.0)  GO TO 5000
C        THIS OPTION WILL BE LEFT BLANK UNTIL NEEDED
5000  CONTINUE
C        FIND  SHP/SHPSTAR
C
C        SHP = F(TEA,M)  EQUATION FROM CURVE FIT PROGRAM
C          3RD ORDER IN TEA , 2ND ORDER IN M
```

Figure G.6. (Continued)

```
 39          ESHP   = 2.9433431215-.2571992618*AMACH+1.3604785868*AMACSQ
            **(-.6857620249E-02+.7364753970E-03*AMACH-.1979318276E-02*AMACSQ)*
            *  TEA +
            * (.4348718891E-05-.3926992714E-06*AMACH+.1001305662E-05*AMACSQ)*
            *  TEASQ +
            * (-.7438074668E-09+.6969538120E-10*AMACH-.1674167095E-09*AMACSQ)*
            *  TEACUB
      C
 40          ENGSHP= SKPN*SKPR*ESHP
      C         END OF ENG 1 SUBR BLOCK
 41          IF(N0IND.EQ.1) GO TO 6000
 42          IF(N2IND.NE.1)  GO TO 8000
      C         THIS OPTION WILL BE LEFT BLANK UNTIL NEEDED
 43          GO TO 8000
 44     6000 IF(N2IND.EQ.2) GO TO 7000
      C         THIS OPTION WILL BE LEFT BLANK UNTIL NEEDED
 45     7000 SHPMAX=  EOMX*EN2STR*OVTHOL
 46          IWARN1( 3)=  .FALSE.
 47          IF(ENGSHP.LT.SHPMAX)  GO TO 8000
 48          IWARN1( 3)=  .TRUE.
 49          ENGSHP= SHPMAX
      C
      C         FIND TEA AT MAX SHP , M
      C
      C         TEA = F(SHP,M) EQUATION FROM CURVE FIT PROGRAM
      C           3RD ORDER IN SHPMAX , 2ND ORDER IN M
      C
 50          TEA= 1550.0865704333-170.1403074663*AMACH-242.7678229176*AMACSQ
            **(1145.2371955474+149.9327819876*AMACH+706.5669321644*AMACSQ)*
            *  SHPMAX +
            * (-1125.4640744348+74.2324463353*AMACH-792.5722362991 6*AMACSQ)*
            *  SHPMAX * SHPMAX +
            * (656.3876664347 7-226.4415181282*AMACH+311.0686620534*AMACSQ)*
            *  SHPMAX*SHPMAX*SHPMAX
 51          TEASQ = TEA * TEA
 52          TEACUB = TEASQ * TEA
 53          TEA4TH = TEACUB * TEA
      C
      C         SINCE TORQUE LIMIT HIT CAUSING A LOWER TEA TO BE REQ , THE
      C           N1 CALCULATION MUST BE RE-CALCULATED
 54          EN1 = -2.242254353 +1.2512886559*AMACH+.9621240231*AMACSQ
            * *(.3519585428E-02-.1539742133E-02*AMACH-.1308445977E-02*AMACSQ)*
            *  TEA +
            * (-.1316093319E-05+.6259888594E-06*AMACH+.6364941537E-06*AMACSQ)*
            *  TEASQ +
            * (.1765905983E-09-.8357285710E-10*AMACH-.9302102725E-10*AMACSQ)*
            *  TEACUB
      C
 55     8000 IF(N2IND.NE.1) GO TO 9000
      C         THIS OPTION WILL BE LEFT BLANK UNTIL NEEDED
 56     9000 SHPOUT=  ENGSHP*SHPSTR*THCDEL
 57          OMENG= EN1*SQTHTC * EN1STR*0.10471966
 58          PCTORQ  =  100. *THCDEL *ENGSHP /EN2STR
 59          RETURN
 60          END
```

Figure G.6. (Continued)

	SYMBOL		REFERENCES							
	1000	-	9	12	18*					
	2000	-	19	21	28*					
	3000	-	28	29*						
	4000	-	31	35*						
	5000	-	37	38*						
	6000	-	41	44*						
	7000	-	44	45*						
	8000	-	42	43	47	55*				
	9000	-	55	56*						
	AMACH	-	3C0	19	23	32	39	50	54	
	AMACSQ	-	3C0	19	23	32	39	50	54	
	DEL	-	3C0							
	EMAXN1	-	3C0	21	23	27				
	EMAXN2	-	3C0							
	EMXWDT	-	3C0	12	14					
*	ENG	-	2*							
*	ENGINE	-	1*							
	ENGSHP	-	40=	47	49=	56	58			
*	ENGVAR	-	3*							
	EN1	-	19=	21	27=	54=	57			
	EN1MX	-	2C0							
	EN1STR	-	2C0	57						
	EN1TMX	-	2C0							
	EN2	-	32=	33						
	EN2MX	-	2C0							
	EN2OPT	-	33=	34						
	EN2STR	-	3C0	33	45	59				
	EQMX	-	2C0	45						
	ESHP	-	39=	40						
	EWDOT	-	10=	12						
	EWDTMX	-	2C0							
	EWDTPR	-	2C0							
*	FLAGS	-	4*							
	FSMACH	-	3C0							
	GBUTON	-	4C0							
	ICONGP	-	4C0							
	IPHASE	-	4C0							
	ISENCE	-	4C0							
	ISLOW	-	4C0							
	ISTA	-	4C0							
	ISTB	-	4C0							
	ITRIM	-	4C0							
	IWARN1	-	4C0	5LG	11=	13=	20=	22=	46=	48=
	IWARN2	-	4C0	5LG						
	IWREVT	-	4C0							
	JTRIM	-	4C0							
	KTRIM	-	4C0							
	NGEF	-	4C0							
	NPLOT	-	4C0							
	NPLOT2	-	4C0							
	NQIND	-	2C0	41						
	NRMDID	-	2C0	37						
	NTWST	-	4C0							

Figure G.6. (Continued)

```
NVB      -   4CD
NWOTID   -   2CD    9
N1IND    -   2CD   18
N1THID   -   2CD   28
N2IND    -   2CD   31    42    44    55
OMEGFL   -   3CD
OMEGER   -   3CD
OMENG    -   1AG   57=
ONOVTC   -   3CD
OOVFSM   -   3CD
OVSQTH   -   3CD   33
OVTHDL   -   3CD   45
PCTORQ   -   1AG   58=
PCTQL    -   3CD
PCTQR    -   3CD
*  RETURN   -   59*
ROE      -   3CD
ROEOV2   -   3CD
ROEO     -   2CD
SHPMAX   -   45=   47    49    53
SHPOUT   -   1AG   56=
SHPPRL   -   3CD
SHPPRR   -   3CD
SHPSTR   -   2CD   56
SKPN     -   35=   34=   40
SKPR     -   36=   40
SMA      -   3CD
SQN1MX   -   3CD   23
SQTHTC   -   3CD   57
SQWDTX   -   3CD   14
SWLG     -   4CD
TCOEF    -   2CD
TOFGF    -   3CD
TEA      -   1AG    6     7     8    10    14=   15    16    17    19    23=   24    25
             26    32    39    50=   51    52    53    54
TEACUB   -   7=     8    10    16=   17    19    25=   26    32    39    52=   53    54
TEAL     -   3CD
TEAR     -   3CD
TEASQ    -   6=     7    10    15=   16    19    24=   25    32    39    51=   52    54
TEA4TH   -   8=    10    17=   26=   53=
THCDEL   -   3CD   56    58
THETC    -   3CD
TZERO    -   2CD
```

Figure G.6. (Continued)

```
 1          SUBROUTINE GEAR
 2          COMMON/XAID/ SCADC1(32),SCADC2(32),SCADC3(32),SCADC4(32),
           *             SCDAC1(32),SCDAC2(32),SCDAC3(32),SCDAC4(32),
           1        PPRIME,QPRIME,RPRIME,UPRIME,VPRIME,WPRIME,THE    ,PHI    ,  BD  1E
           *        PSI    ,WDOT   ,H      ,DUM12  ,DUM13  ,DUM14  ,DUM15  ,HDOT   ,
           *        DELAIL,DELAIR,DELSPR,DELSPL,CTLPRM,CNFPL  ,CSFPL  ,CPMPL  ,
           *        CYMPL  ,CPL    ,CTRPRM,CNFPR  ,CSFPR  ,CPMPR  ,CYMPR  ,CPR    ,
           *  ADC(62) ,
           *  ADC3(62)
 3          COMMON/XGEAR/ XG1    ,XG2    ,XG3    ,XGDUM ,YG1    ,YG2    ,YG3    ,
           *              YGDUM ,ZG1    ,ZG2    ,ZG3    ,ZGDUM ,RAD1   ,RAD2   ,
           *              RAD3   ,RADDUM,SKST1 ,SKST2 ,SKST3 ,SKSTDM,SDST1 ,
           *              SDST2 ,SDST3 ,SDSTDM,FRICTO,FRICT1,FRICTS
           *            , BRK1   ,BRK2   ,BRK3   ,BRKDUM
 4          COMMON/CGGTVR/
           1 VEAST ,VNORTH,XCG    ,XDTCG ,ZCG    ,ZDTCG                          1 -  6
 5          COMMON/FUSVAR/
           1 ALARF ,ALARFP,ALFSQ ,ALPHF ,AMARF ,AMARFP,ANARF ,ANARFP,BETAF ,   1 -  9
           2 BETFSQ,CBCME ,CDF    ,CLF    ,CMF    ,CNF    ,COSALF,COSBTF,CYF    ,  10 - 18
           3 DLLG  ,DMLG  ,DNLG  ,DXLG  ,DYLG  ,DZLG  ,QFSW  ,SBFCAF,SBFSAF,  19 - 27
           4 SINALF,SINBTF,SQF    ,XAERF ,XAREP ,YAERF ,YAREP ,ZAERF ,ZAREP    28 - 36
           *   ,SINTHE,COSTHE,SINPHI,COSPHI
C             N= 1   LEFT MAIN GEAR
C             N= 2   RIGHT MAIN GEAR
C             N= 3   NOSE GEAR
C             N= 4   NOT USED
C
 6          DIMENSION DX(4),DY(4),DZ(4),DL(4),DM(4),DN(4)
 7          DIMENSION XG(4),YG(4),ZG(4),RAD(4),SKST(4) ,SDST(4)
 8          DIMENSION BG(4)
 9          EQUIVALENCE (XG(1),XG1),(YG(1),YG1),(ZG(1),ZG1  ),(RAD(1),RAD1  )
           *   ,(SKST(1),SKST1 ) ,(SDST(1),SDST1)
10          EQUIVALENCE (BG(1),BRK1)
11          N= 1
12          IF(UPRIME) 75,110,120
13     75   SIGNU= -1.0
14          GO TO 125
15    110   SIGNU= 0.0
16          GO TO 125
17    120   SIGNU= 1.0
18    125   CONTINUE
19          IF(VPRIME) 130,140,150
20    130   SIGNV= -1.0
21          GO TO 155
22    140   SIGNV=  0.0
23          GO TO 155
24    150   SIGNV= 1.0
25    155   CONTINUE
C             LANDING GEAR  - A/C LOCATION
26    50    XN= XG(N)-XCG
27          YN=  YG(N)
28          ZN= ZG(N)-ZCG
C
C             STRUT DEFLECTION
29          HGTHEN=  XN*SINTHE -ZN*COSTHE -RAD(N)
```

Figure G.6. (Continued)

```
30          HGPHIN=  COSTHE*(YN*SINPHI+(ZN+RAD(N))*(COSPHI-1.))
31          DDVCTP=  1./(COSTHE*COSPHI)
32          HTN=  (H+HGTHEN-HGPHIN) * DDVCTP
      C
33          IF(HTN.LT.0.) GO TO 100
34          DX(N)= 0.
35          DY(N)= 0.
36          DZ(N)= 0.
37          DL(N)= 0.
38          DM(N)= 0.
39          DN(N)= 0.
40          GO TO 200
      C        RATE OF STRUT DEFLECTION
41    100   HTDTN= HDOT*DDVCTP+QPRIME*XN-PPRIME*YN
      C
      C        VERTICAL FORCE
42          FGZN=  SKST(N)*HTN +SDST(N)*HTDTN
      C        LONGITUDINAL FORCE
43          FMUN=  (FRICTO+FRICTL*BG(N))*FGZN*SIGNU
      C
      C        SINCE FGZN IS ALWAYS NEGATIVE
      C              IF U GT 0.  FMUN IS NEGATIVE
      C              IF U LT 0.  FMUN IS POSITIVE
      C              IF U EQ 0.  FMUN IS ZERO
      C
      C        SIDE FORCE
44          FSN= FRICTS*FGZN*SIGNV
      C        SINCE FGZN IS ALWAYS NEGATIVE
      C              IF  V GT  0.   FSN IS NEGATIVE
      C              IF  V LT  0.   FSN IS POSITIVE
      C              IF  V EQ  0.   FSN IS ZERO
      C
      C        FORCE AND MOMENT CONTRIBUTION
45          DX(N) =  FMUN  - FGZN * THE
46          DY(N)= FSN+FGZN*PHI
47          DZ(N)= FMUN*THE-FSN*PHI+FGZN
48           DM(N)= -DZ(N)*XN+DX(N)*(ZN+RAD(N)+HTN )
49          DL(N)= DZ(N)*YN -DY(N)*(ZN+RAD(N)+HTN)
50          DN(N)= -DX(N)*YN +XN*DY(N)
51    200    N= N+1
52          IF(N.LE.3) GO TO 50
53          DXLG= DX(1)+DX(2)+DX(3)
54          DYLG= DY(1)+DY(2)+DY(3)
55          DZLG= DZ(1)+DZ(2)+DZ(3)
56          DLLG =  DL(1)+DL(2) +DL(3)
57          DMLG =  DM(1)+DM(2) +DM(3)
58          DNLG =  DN(1)+DN(2) +DN(3)
59          RETURN
60           END
```

Figure G.6. (Continued)

SYMBOL		REFERENCES			
5[illegible]	-	24*	52		
75	-	12	13*		
1	-	33	41*		
11	-	12	15*		
12	-	12	17*		
125	-	14	16	18*	
135	-	19	20*		
145	-	19	22*		
155	-	19	24*		
165	-	21	23	25*	
2[illegible]	-	4[illegible]	51*		
ADC	-	200			
ADC3	-	200			
ALARE	-	500			
ALARER	-	500			
ALESO	-	500			
ALPHE	-	500			
AMARE	-	500			
AMARER	-	500			
ANARE	-	500			
ANARER	-	500			
BETAE	-	500			
BETESO	-	500			
BG	-	301	1[illegible]	43	
BRKDUM	-	300			
BRK1	-	300	1[illegible]		
BRK[illegible]	-	300			
BRK3	-	300			
CBCAE	-	500			
CDF	-	500			
* CGGTVR	-	4*			
CLF	-	500			
CMF	-	500			
CNF	-	500			
CNFPL	-	200			
CNFPR	-	200			
COSALF	-	500			
COSBTF	-	500			
COSPHI	-	500	3[illegible]	31	
COSTHE	-	500	26	3[illegible]	31
CPL	-	200			
CPMPL	-	200			
CPMPR	-	200			
CPR	-	200			
CSFPL	-	200			
CSFPR	-	200			
CTLPRM	-	200			
CTRPRM	-	200			
CYF	-	500			
CYMPL	-	200			
CYMPR	-	200			
DELSPL	-	200			
DELSPR	-	200			

Figure G.6. (Continued)

	DFLAIL	-	2C0											
	DFLAIR	-	2C0											
	DL	-	6DI	37=	49=	56								
	DLLG	-	5C0	56=										
	DM	-	6DI	38=	48=	57								
	DMLG	-	5C0	57=										
	DN	-	6DI	39=	50=	58								
	DNLG	-	5C0	58=										
	DUM12	-	2C0											
	DUM13	-	2C0											
	DUM14	-	2C0											
	DUM15	-	2C0											
	DX	-	6DI	34=	45=	48	50	53						
	DXLG	-	5C0	53=										
	DY	-	6DI	35=	46=	49	50	54						
	DYLG	-	5C0	54=										
	DZ	-	6DI	36=	47=	49	49	55						
	DZLG	-	5C0	55=										
	FG7N	-	42=	43	44	45	46	47						
	FMUN	-	43=	45	47									
	FRICTO	-	3C0	43										
	FRICTS	-	3C0	44										
	FRICT1	-	3C0	43										
	FSN	-	44=	46	47									
*	FUSVAR	-	5*											
*	GEAR	-	1*											
	H	-	2C0	32										
	HDOT	-	2C0	41										
	HGPHIN	-	30=	32										
	HGTHEN	-	29=	32										
	HTDTN	-	41=	42										
	HTN	-	32=	33	42	48	49							
	N	-	11=	26	27	28	29	30	34	35	36	37	38	39	42
			43	45	46	47	48	49	50	51=	52			
	OOVCTP	-	31=	32	41									
	PHI	-	2C0	46	47									
	PPRIME	-	2C0	41										
	PSI	-	2C0											
	QFSW	-	5C0											
	QPRIME	-	2C0	41										
	RAD	-	7DI	9E0	29	30	48	49						
	RADDUM	-	3C0											
	RAD1	-	3C0	9E0										
	RAD2	-	3C0											
	RAD3	-	3C0											
*	RETURN	-	59*											
	RPRIME	-	2C0											
	SBFCAF	-	5C0											
	SBFSAF	-	5C0											
	SCADC1	-	2C0											
	SCADC2	-	2C0											
	SCADC3	-	2C0											
	SCADC4	-	2C0											
	SCDAC1	-	2C0											
	SCDAC2	-	2C0											

Figure G.6. (Continued)

SCDAC3	-	2C0					
SCDAC4	-	2C0					
SDST	-	7DI	9E0	42			
SDSTDM	-	3C0					
SDST1	-	3C0	9E0				
SDST2	-	3C0					
SDST3	-	3C0					
SIGNU	-	13=	15=	17=	43		
SIGNV	-	20=	22=	24=	44		
SINALF	-	5C0					
SINBTF	-	5C0					
SINPHI	-	5C0	30				
SINTHE	-	5C0	29				
SKST	-	7DI	9E0	42			
SKSTDM	-	3C0					
SKST1	-	3C0	9E0				
SKST2	-	3C0					
SKST3	-	3C0					
SQF	-	5C0					
THF	-	2C0	45	47			
UPRIMF	-	2C0	12				
VEAST	-	4C0					
VNORTH	-	4C0					
VPRIMF	-	2C0	19				
WDOT	-	2C0					
WPRIMF	-	2C0					
XAERF	-	5C0					
* XAIO	-	2*					
XAREF	-	5C0					
XCG	-	4C0	26				
XDTCG	-	4C0					
XG	-	7DI	9E0	26			
XGDUM	-	3C0					
* XGEAR	-	3*					
XG1	-	3C0	9E0				
XG2	-	3C0					
XG3	-	3C0					
XN	-	26=	28	41	49	50	
YAERF	-	5C0					
YAREF	-	5C0					
YG	-	7DI	9E0	27			
YGDUM	-	3C0					
YG1	-	3C0	9E0				
YG2	-	3C0					
YG3	-	3C0					
YN	-	27=	30	41	49	50	
ZAERF	-	5C0					
ZAREF	-	5C0					
ZCG	-	4C0	28				
ZDTCG	-	4C0					
ZG	-	7DI	9E0	28			
ZGDUM	-	3C0					
ZG1	-	3C0	9E0				
ZG2	-	3C0					
ZG3	-	3C0					

Figure G.6. (Continued)

```
ZN      -    28=     29      30      43      49

        +-+-+-+
```

ABS	-	RTSLOW	
ACDW0	-	CLCDCM	
ACDW1	-	CLCDCM	
ACDW10	-	CLCDCM	
ACDW11	-	CLCDCM	
ACDW12	-	CLCDCM	
ACDW13	-	CLCDCM	
ACDW14	-	CLCDCM	
ACDW15	-	CLCDCM	
ACDW16	-	CLCDCM	
ACDW17	-	CLCDCM	
ACDW18	-	CLCDCM	
ACDW19	-	CLCDCM	
ACDW2	-	CLCDCM	
ACDW20	-	CLCDCM	
ACDW21	-	CLCDCM	
ACDW22	-	CLCDCM	
ACDW23	-	CLCDCM	
ACDW24	-	CLCDCM	
ACDW3	-	CLCDCM	
ACDW4	-	CLCDCM	
ACDW5	-	CLCDCM	
ACDW6	-	CLCDCM	
ACDW7	-	CLCDCM	
ACDW8	-	CLCDCM	
ACDW9	-	CLCDCM	
ADC	-	RTFAST	
ADCFLT	-	RTFAST	
AGOVAT	-	RTSLOW	
AGOVAW	-	RTSLOW	
AICL	-	RTFAST	
AICLDP	-	RTFAST	
AICLGS	-	RTFAST	
AICLPP	-	RTFAST	
AICR	-	RTFAST	
AICRDP	-	RTFAST	
AICRGS	-	RTFAST	
AICRPP	-	RTFAST	
AILSP	-	RTFAST	
AINOTL	-	RTFAST	
AINOTR	-	RTFAST	
AINHT	-	RTFAST	
AINL	-	RTFAST	RTSLOW
AINR	-	RTFAST	RTSLOW
AINW	-	RTFAST	RTSLOW
AITRIM	-	RTFAST	
AKEY	-	RTSLOW	
ALAERO	-	RTFAST	
ALARF	-	RTFAST	
ALARFP	-	RTFAST	RTSLOW
ALARHT	-	RTFAST	
ALARNC	-	RTFAST	
ALARNL	-	RTFAST	
ALARNP	-	RTFAST	
ALARPG	-	RTFAST	

Figure G.6. (Continued)

ALART - RTFAST
ALARVB - RTFAST
ALARVT - RTFAST
ALARWG - RTFAST
ALBRK1 - CLCDCM
ALBRK2 - CLCDCM
ALDEG - CLCDCM
ALDUM. - CLCDCM
ALFGLS - RTFAST
ALFREF - RTFAST
ALFTAB - RTFAST
ALHTE - RTFAST
ALHTM - RTFAST
ALHTP - RTFAST
ALHTPR - RTFAST
ALLRH - RTFAST
ALLWPP - RTFAST
ALNCPK - RTSLOW
ALNLM - CLCDCM
ALNLP - CLCDCM
ALPHA - CLCDCM
ALPHF - RTFAST RTSLOW
ALPHFP - RTSLOW
ALPHHT - RTFAST
ALPHLN - RTSLOW
ALPHLP - RTFAST RTSLOW
ALPHLW - RTFAST
ALPHRN - RTSLOW
ALPHRP - RTFAST RTSLOW
ALPHRW - RTFAST
ALPHVT - RTFAST
ALRGLW - RTFAST
ALRGRW - RTFAST
ALRRH - RTFAST
ALRWPP - RTFAST
ALVTE - RTFAST
ALVTM - RTFAST
ALVTP - RTFAST
ALVTPP - RTFAST
ALWSSO - RTFAST
AMACH - ENGINE RTSLOW
AMACLP - RTFAST
AMACRP - RTFAST
AMACSC - ENGINE RTSLOW
AMACTL - RTFAST
AMACTR - RTFAST
AMAERO - RTFAST
AMARF - RTFAST
AMARFP - RTFAST RTSLOW
AMARHT - RTFAST
AMARLW - RTFAST
AMARNC - RTFAST
AMARNL - RTFAST
AMARNP - RTFAST
AMARRG - RTFAST

Figure G.6. (Continued)

```
AMARPW  -  RTFAST
AMART   -  RTFAST
AMARVB  -  RTFAST
AMARVT  -  RTFAST
AMARWG  -  RTFAST
AMEM    -  RTSLOW
AMLRH   -  RTFAST
AMRNLP  -  RTFAST
AMRNPP  -  RTFAST
AMROTL  -  RTFAST
AMROTR  -  RTFAST
AMRRH   -  RTFAST
AMUL    -  RTFAST    RTSLOW
AMULSQ  -  RTFAST
AMUR    -  RTFAST    RTSLOW
AMURSQ  -  RTFAST
ANAEPC  -  RTFAST
ANARF   -  RTFAST
ANARFP  -  RTFAST    RTSLOW
ANARHT  -  RTFAST
ANARNC  -  RTFAST
ANARNL  -  RTFAST
ANARNP  -  RTFAST
ANART   -  RTFAST
ANARVT  -  RTFAST
ANARWC  -  RTFAST
ANDTG   -  RTFAST
ANLRH   -  RTFAST
ANROTL  -  RTFAST
ANROTR  -  RTFAST
ANRRH   -  RTFAST
APEAW   -  RTSLOW
APILW   -  RTSLOW
APIRW   -  RTSLOW
APTEX   -  RTFAST
APWING  -  RTSLOW
APWSSO  -  RTFAST
ATAN2   -  RTFAST    RTSLOW
ATAULP  -  RTSLOW
ATAURP  -  RTSLOW
AVEALP  -  RTSLOW
AVEALW  -  RTFAST
AVECLW  -  RTFAST
AVECTS  -  RTFAST    RTSLOW
AVEEPP  -  RTFAST    RTSLOW
AVEIN   -  RTFAST    RTSLOW
AVEZET  -  RTSLOW
BETAF   -  RTFAST    RTSLOW
BETAFP  -  RTSLOW
BETALN  -  RTSLOW
BETALW  -  RTFAST
BETARN  -  RTSLOW
BETARW  -  RTFAST
BETGLS  -  RTFAST
BETVT   -  RTFAST
```

Figure G.6. (Continued)

```
BG       -  GEAR
BICGLS   -  RTFAST
BICL     -  RTFAST
BICLDP   -  RTFAST
BICLPP   -  RTFAST
BICR     -  RTFAST
BICRDP   -  RTFAST
BICRPR   -  RTFAST
BIGX     -  RTSLOW
BKALPR   -  RTFAST    RTSLOW
BKARPP   -  RTFAST    RTSLOW
BKD1T    -  RTSLOW
BKD2T    -  RTSLOW
BKD3T    -  RTSLOW
BKEY     -  RTSLOW
BKM1T    -  RTSLOW
BKM2T    -  RTSLOW
BKM3T    -  RTSLOW
BKM4T    -  RTSLOW
BK99     -  RTSLOW
BLS      -  RTFAST    RTSLOW
BMEM     -  RTSLOW
BMOVTL   -  RTFAST    RTSLOW
BMOVTR   -  RTFAST    RTSLOW
BRK1     -  GEAR
BT1      -  RTSLOW
BT2      -  RTSLOW
BT3      -  RTSLOW
CALIHT   -  RTFAST
CALLN    -  RTSLOW
CALLW    -  RTFAST
CALRN    -  RTSLOW
CALRW    -  RTFAST
CAVINW   -  RTSLOW
CAVZET   -  RTSLOW
CBCMF    -  RTSLOW
CBETLN   -  RTSLOW
CBETLW   -  RTFAST
CBETRN   -  RTSLOW
CBETRW   -  RTFAST
CBETSG   -  RTFAST
CD       -  CLCDCM
CDCNTL   -  RTFAST
CDCNTR   -  RTFAST
CDDUM    -  RTFAST
CDF      -  RTSLOW
CDFASP   -  CLCDCM
CDHT     -  RTFAST
CDHTST   -  RTFAST
CDLN     -  RTSLOW
CDLWAD   -  RTFAST
CDLWPR   -  RTFAST
CDLWSS   -  RTFAST
CDM      -  CLCDCM
CDOF     -  RTSLOW
```

Figure G.6. (Continued)

```
CDOHT    -  RTFAST
CDOLN    -  RTSLOW
CDONHI   -  RTSLOW
CDONLO   -  RTSLOW
CDORN    -  RTSLOW
CDOVT    -  RTFAST
CDP      -  CLCDCM
CDPLUS   -  CLCDCM
CDRN     -  RTSLOW
CDRWAD   -  RTFAST
CDRWPR   -  RTFAST
CDRWSS   -  RTFAST
CDSLW    -  RTFAST
CDSRW    -  RTFAST
CDVT     -  RTFAST
CDVTST   -  RTFAST
CDWCOR   -  CLCDCM     RTSLOW
CD1      -  CLCDCM
CEPLW    -  RTFAST
CEPRW    -  RTFAST
CGGTVR   -  GEAR       RTFAST     RTSLOW
CHORD    -  RTFAST     RTSLOW
CILAML   -  RTFAST     RTSLOW
CILAMF   -  RTFAST     RTSLOW
CL       -  CLCDCM
CLALDG   -  CLCDCM
CLALHT   -  RTFAST
CLALPH   -  CLCDCM     RTSLOW
CLAT     -  RTFAST
CLAVE    -  RTFAST
CLCDCM   -  RTFAST
CLDEL    -  CLCDCM
CLDUM    -  RTFAST
CLF      -  RTSLOW
CLF1     -  AILSP      RTFAST
CLF2     -  CLCDCM     RTFAST
CLHT     -  RTFAST
CLHTST   -  RTFAST
CLIGE    -  CLCDCM
CLILW    -  RTSLOW
CLIRW    -  RTSLOW
CLLN     -  RTSLOW
CLLWAD   -  RTFAST
CLLWPR   -  RTFAST
CLLWSS   -  RTFAST
CLMAX    -  CLCDCM
CLNLP    -  CLCDCM
CLOAL    -  CLCDCM
CLP      -  CLCDCM
CLPMX    -  CLCDCM
CLRN     -  RTSLOW
CLRWAD   -  RTFAST
CLRWPR   -  RTFAST
CLRWSS   -  RTFAST
CLSLW    -  RTFAST
```

Figure G.6. (Continued)

CLSP - CLCDCM
CLSRW - RTFAST
CLSW - RTFAST
CLYCOR - RTFAST RTSLOW
CLWCOR - CLCDCM RTSLOW
CLZ - AILSP CLCDCM
CLZERO - RTFAST
CL1 - CLCDCM
CM - CLCDCM
CMCNTL - RTFAST
CMCNTR - RTFAST
CMF - RTSLOW
CMFASP - CLCDCM
CMLN - RTSLOW
CMLWAD - RTFAST
CMLWSS - RTFAST
CMOF - RTSLOW
CMON - RTSLOW
CMOW - RTFAST
CMP - CLCDCM
CMRN - RTSLOW
CMRWAD - RTFAST
CMRWSS - RTFAST
CMSLW - RTFAST
CMSRW - RTFAST
CNF - RTSLOW
CNFA1L - RTFAST
CNFA1R - RTFAST
CNFB1L - RTFAST
CNFB1R - RTFAST
CNFL - RTFAST
CNFPL - RTFAST
CNFPR - RTFAST
CNFR - RTFAST
CNLN - RTSLOW
CNOF - RTSLOW
CNOLN - RTSLOW
CNORN - RTSLOW
CNRN - RTSLOW
CNSW - RTFAST
COEF1 - RTFAST RTSLOW
COEF10 - RTFAST
COEF11 - RTFAST
COEF12 - RTFAST
COEF13 - RTFAST
COEF16 - RTFAST
COEF17 - RTSLOW
COEF18 - RTFAST RTSLOW
COEF19 - RTFAST
COEF2 - RTFAST
COEF20 - RTFAST
COEF21 - RTFAST
COEF22 - RTFAST
COEF23 - RTFAST
COEF24 - RTFAST

Figure G.6. (Continued)

```
COEF25  -  RTSLOW
COEF26  -  RTSLOW
COEF27  -  RTSLOW
COEF28  -  RTSLOW
COEF29  -  RTSLOW
COEF3   -  RTSLOW
COEF30  -  RTSLOW
COEF31  -  RTFAST
COEF32  -  RTFAST
COEF33  -  RTFAST
COEF34  -  RTFAST
COEF35  -  RTSLOW
COEF4   -  RTFAST     RTSLOW
COEF5   -  RTSLOW
COEF6   -  RTSLOW
COEF7   -  RTSLOW
COEF8   -  RTSLOW
COEF9   -  RTFAST
CONS1   -  CLCDCM
CONS10  -  CLCDCM
CONS11  -  CLCDCM
CONS12  -  CLCDCM
CONS13  -  CLCDCM
CONS14  -  CLCDCM
CONS15  -  CLCDCM
CONS16  -  CLCDCM
CONS17  -  CLCDCM
CONS18  -  CLCDCM
CONS19  -  CLCDCM
CONS2   -  CLCDCM
CONS20  -  CLCDCM
CONS21  -  CLCDCM
CONS22  -  CLCDCM
CONS23  -  CLCDCM
CONS24  -  CLCDCM
CONS25  -  CLCDCM
CONS26  -  CLCDCM
CONS27  -  AILSP
CONS28  -  AILSP
CONS29  -  AILSP
CONS3   -  CLCDCM
CONS30  -  AILSP
CONS31  -  AILSP
CONS32  -  AILSP
CONS33  -  AILSP
CONS34  -  AILSP
CONS35  -  AILSP
CONS36  -  AILSP
CONS37  -  AILSP
CONS38  -  AILSP
CONS39  -  AILSP
CONS4   -  CLCDCM
CONS40  -  AILSP
CONS41  -  RTFAST
CONS42  -  RTFAST
```

Figure G.6. (Continued)

```
CONS43  -  RTFAST
CONS44  -  RTSLOW
CONS45  -  RTSLOW
CONS46  -  RTSLOW
CONS47  -  RTSLOW
CONS48  -  RTSLOW
CONS49  -  RTSLOW
CONS5   -  CLCDCM
CONS50  -  RTSLOW
CONS51  -  RTSLOW
CONS52  -  RTSLOW
CONS53  -  RTSLOW
CONS54  -  RTSLOW
CONS55  -  RTSLOW
CONS56  -  RTSLOW
CONS57  -  RTSLOW
CONS58  -  RTSLOW
CONS59  -  RTSLOW
CONS6   -  CLCDCM
CONS60  -  RTSLOW
CONS61  -  RTSLOW
CONS62  -  RTSLOW
CONS63  -  RTSLOW
CONS64  -  RTSLOW
CONS65  -  RTFAST
CONS66  -  RTFAST
CONS67  -  AILSP
CONS68  -  AILSP
CONS69  -  AILSP
CONS7   -  CLCDCM
CONS70  -  AILSP
CONS71  -  AILSP
CONS72  -  RTFAST
CONS73  -  RTFAST
CONS74  -  RTFAST
CONS75  -  RTFAST
CONS76  -  RTFAST
CONS77  -  RTFAST
CONS78  -  RTFAST
CONS79  -  RTFAST
CONS8   -  CLCDCM
CONS80  -  RTFAST
CONS81  -  RTFAST
CONS9   -  CLCDCM
CONTRL  -  RTFAST    RTSLOW
COSALF  -  RTSLOW
COSBTF  -  RTSLOW
COSINL  -  RTFAST    RTSLOW
COSINR  -  RTFAST    RTSLOW
COSIW   -  RTFAST
COSLAM  -  RTFAST
COSPHI  -  GEAR      RTSLOW
COSPSI  -  RTSLOW
COSTHF  -  GEAR      RTSLOW
COSZHL  -  RTFAST
```

Figure G.6. (Continued)

```
COSZHR  -  RTFAST
CPHIP   -  RTFAST
CPL     -  RTFAST
CPMA1L  -  RTFAST
CPMA1R  -  RTFAST
CPMB1L  -  RTFAST
CPMB1R  -  RTFAST
CPML    -  RTFAST
CPMPL   -  RTFAST
CPMPR   -  RTFAST
CPMR    -  RTFAST
CPR     -  RTFAST
CSFA1L  -  RTFAST
CSFA1R  -  RTFAST
CSFB1L  -  RTFAST
CSFB1R  -  RTFAST
CSFL    -  RTFAST
CSFPL   -  RTFAST
CSFPR   -  RTFAST
CSFR    -  RTFAST
CTAULR  -  RTSLOW
CTAURR  -  RTSLOW
CTL     -  RTFAST
CTLPPM  -  RTFAST
CTR     -  RTFAST
CTRPPM  -  RTFAST
CTSLP   -  RTFAST    RTSLOW
CTSRR   -  RTFAST    RTSLOW
CYALVT  -  RTFAST
CYAT    -  RTFAST
CYF     -  RTSLOW
CYLN    -  RTSLOW
CYMA1L  -  RTFAST
CYMA1R  -  RTFAST
CYMB1L  -  RTFAST
CYMB1R  -  RTFAST
CYML    -  RTFAST
CYMPL   -  RTFAST
CYMPR   -  RTFAST
CYMR    -  RTFAST
CYRN    -  RTSLOW
CYVT    -  RTFAST
CYVTST  -  RTFAST
C2INL   -  RTSLOW
C2INR   -  RTSLOW
DACFLT  -  RTFAST
DAC10   -  RTFAST
DAC1    -  RTFAST
DAC2    -  RTFAST
DBRK1   -  RTFAST
DBRK10  -  RTSLOW
DBRK11  -  RTSLOW
DBRK12  -  RTSLOW
DBRK13  -  RTSLOW
DBRK14  -  RTSLOW
```

Figure G.6. (Continued)

DBRK15 - RTSLOW
DBRK16 - RTSLOW
DBRK17 - RTFAST
DBRK18 - RTFAST
DBRK19 - RTFAST
DBRK2 - CLCDCM
DBRK20 - AILSP
DBRK21 - AILSP
DBRK3 - CLCDCM
DBRK4 - CLCDCM
DBRK5 - CLCDCM
DBRK6 - CLCDCM
DBRK7 - AILSP
DBRK8 - AILSP
DBRK9 - RTFAST
DCDA - AILSP
DCDIGE - CLCDCM
DCDLDA - RTFAST
DCDLG - RTSLOW
DCDLSP - RTFAST
DCDRDA - RTFAST
DCDRSP - RTFAST
DCDS - AILSP
DCLA - AILSP
DCLLDA - RTFAST
DCLLSP - RTFAST
DCLNL - CLCDCM
DCLRDA - RTFAST
DCLRSP - RTFAST
DCLS - AILSP
DCLSPW - RTFAST
DCMA - AILSP
DCMLDA - RTFAST
DCMLG - RTSLOW
DCMLSP - RTFAST
DCMRDA - RTFAST
DCMRSP - RTFAST
DCMS - AILSP
DCMSPW - RTFAST
DEG20 - RTFAST
DEL - AILSP CLCDCM RTFAST RTSLOW
DELELV - RTFAST
DELEPZ - RTFAST
DELFLP - RTFAST
DELRUD - RTFAST
DELSPL - RTFAST
DELSPR - RTFAST
DEPCAL - RTFAST
DFLAIL - RTFAST
DFLAIR - RTFAST
DGTORD - CLCDCM RTFAST
DIGAN - RTFAST
DISABL - RTFAST RTSLOW
DL - GEAR
DLFPSQ - RTFAST

DLLG	-	GEAR	RTFAST
DLLNC	-	RTFAST	RTSLOW
DLRNC	-	RTFAST	RTSLOW
DM	-	GEAR	
DMLG	-	GEAR	RTFAST
DMLNC	-	RTFAST	RTSLOW
DMRNC	-	RTFAST	RTSLOW
DN	-	GEAR	
DNF1	-	RTFAST	
DNF2	-	RTFAST	
DNF3	-	RTFAST	
DNF4	-	RTFAST	
DNLG	-	GEAR	RTFAST
DNLNC	-	RTFAST	RTSLOW
DNRNC	-	RTFAST	RTSLOW
DOVT	-	RTSLOW	
DOVTL	-	RTFAST	RTSLOW
DOVTR	-	RTFAST	RTSLOW
DPM1	-	RTFAST	
DPM2	-	RTFAST	
DPM3	-	RTFAST	
DPM4	-	RTFAST	
DPM5	-	RTFAST	
DPM6	-	RTFAST	
DPM7	-	RTFAST	
DSDRFT	-	RTFAST	
DSF1	-	RTFAST	
DSF2	-	RTFAST	
DSF3	-	RTFAST	
DSF4	-	RTFAST	
DX	-	GEAR	
DXLG	-	GEAR	RTFAST
DXLNC	-	RTFAST	RTSLOW
DXRNC	-	RTFAST	RTSLOW
DY	-	GEAR	
DYLG	-	GEAR	RTFAST
DYLNC	-	RTFAST	RTSLOW
DYM1	-	RTFAST	
DYM2	-	RTFAST	
DYM3	-	RTFAST	
DYM4	-	RTFAST	
DYM5	-	RTFAST	
DYM6	-	RTFAST	
DYM7	-	RTFAST	
DYRNC	-	RTFAST	RTSLOW
DZ	-	GEAR	
DZLG	-	GEAR	RTFAST
DZLNC	-	RTFAST	RTSLOW
DZRNC	-	RTFAST	RTSLOW
EMAXN1	-	ENGINE	RTSLOW
EMAXN2	-	RTSLOW	
EMXWDT	-	ENGINE	RTSLOW
ENFL	-	RTSLOW	
ENFR	-	RTSLOW	
ENF1	-	RTFAST	

```
ENF2     -  RTFAST
ENF3     -  RTFAST
ENF4     -  RTFAST
ENG      -  ENGINE    RTFAST    RTSLOW
ENGINE   -  RTSLOW
ENGSHP   -  ENGINE
ENGVAR   -  ENGINE    RTFAST    RTSLOW
EN1      -  ENGINE
EN1MX    -  RTSLOW
EN1STR   -  ENGINE
EN2      -  ENGINE
EN2MX    -  RTSLOW
EN2OPT   -  ENGINE
EN2REF   -  RTSLOW
EN2STR   -  ENGINE    RTSLOW
EOMVAR   -  RTFAST    RTSLOW
EPILR    -  RTFAST    RTSLOW
EPIRL    -  RTFAST    RTSLOW
EPM1     -  RTFAST
EPM2     -  RTFAST
EPM3     -  RTFAST
EPM4     -  RTFAST
EPM5     -  RTFAST
EPM6     -  RTFAST
EPM7     -  RTFAST
EPPLR    -  RTFAST    RTSLOW
EPPRM    -  RTSLOW
EPPRR    -  RTFAST    RTSLOW
EPTAIL   -  RTFAST
FPTL1    -  RTFAST
FPWRL    -  RTFAST
EPWRR    -  RTFAST
EPZERO   -  RTFAST
EQMX     -  ENGINE
ESF1     -  RTFAST
ESF2     -  RTFAST
ESF3     -  RTFAST
ESF4     -  RTFAST
ESHP     -  ENGINE
EWDOT    -  ENGINE
EWDTMX   -  RTSLOW
EWDTPR   -  RTSLOW
EYM1     -  RTFAST
EYM2     -  RTFAST
EYM3     -  RTFAST
EYM4     -  RTFAST
EYM5     -  RTFAST
EYM6     -  RTFAST
EYM7     -  RTFAST
F        -  CLCOCM
FEU      -  RTFAST
FGZN     -  GEAR
FIE      -  RTFAST
FINDEG   -  RTFAST
FINPR    -  RTFAST
```

Figure G.6. (Continued)

```
FIP      -  RTFAST
FIPOML   -  RTFAST
FIPOMP   -  RTFAST
FIXX     -  RTSLOW
FIXZP    -  RTFAST    RTSLOW
FIXZPP   -  RTSLOW
FIXZQ    -  RTFAST    RTSLOW
FIXZR    -  RTFAST    RTSLOW
FIYY     -  RTSLOW
FIYYPR   -  RTFAST
FIZZ     -  RTSLOW
FIZZPR   -  RTFAST
FJXX     -  RTFAST    RTSLOW
FJYY     -  RTFAST    RTSLOW
FJZZ     -  RTFAST    RTSLOW
FLAGS    -  CLCDCM    ENGINE    RTFAST    RTSLOW
FMUN     -  GEAR
FNORML   -  RTFAST    RTSLOW
FNORMP   -  RTFAST    RTSLOW
FRICTC   -  GEAR
FRICTS   -  GEAR
FRICT1   -  GEAR
FSIDEL   -  RTFAST    RTSLOW
FSIDER   -  RTFAST    RTSLOW
FSMACH   -  RTSLOW
FSN      -  GEAR
FSQRT    -  RTFAST    RTSLOW
FUSVAR   -  GEAR      RTFAST    RTSLOW
GAATAR   -  RTFAST
GA1ALF   -  RTFAST
GA1RET   -  RTFAST
GBATAR   -  RTFAST
GB1ALF   -  RTFAST
GEAR     -  RTFAST
GEF      -  RTFAST    RTSLOW
GEFVAR   -  CLCDCM    RTFAST    RTSLOW
GETBIT   -  RTSLOW
GKEY     -  RTFAST
GMEM     -  RTFAST
H        -  GEAR      RTSLOW
HACLOD   -  RTFAST
HACROD   -  RTFAST
HDOT     -  GEAR
HDTACL   -  RTFAST
HDTACR   -  RTFAST
HDTRIM   -  RTFAST
HGEFLR   -  RTSLOW
HGEFRR   -  RTSLOW
HGPHIN   -  GEAR
HGTHFN   -  GEAR
HLHUB    -  RTSLOW
HP       -  RTSLOW
HRHUB    -  RTSLOW
HSO      -  RTSLOW
HTC4     -  RTSLOW
```

Figure G.6. (Continued)

```
HTDTN    -  GEAR
HTN      -  GEAR
HTRIM    -  RTFAST
HTSTLL   -  RTFAST
HWACL    -  RTFAST
HWACR    -  RTFAST
HWC4     -  RTSLOW
HYBCON   -  RTFAST    RTSLOW
HYBIO    -  RTFAST    RTSLOW
H1DTL    -  RTFAST
H1DTR    -  RTFAST
H1L      -  RTFAST
H1LOLD   -  RTFAST
H1R      -  RTFAST
H1ROLD   -  RTFAST
ICONOP   -  RTSLOW
IFC      -  RTSLOW
INITVR   -  RTFAST    RTSLOW
IPAN     -  RTFAST    RTSLOW
IPSNOS   -  RTFAST
IREVNT   -  RTSLOW
ISENCE   -  RTSLOW
ISLOW    -  RTSLOW
ISTA     -  RTSLOW
ISTAD    -  RTFAST
ISTB     -  RTSLOW
ISTDA    -  RTFAST
ISTFLT   -  RTFAST
ISTG     -  RTFAST
ISTRB1   -  RTSLOW
ITRIM    -  RTSLOW
IWARN1   -  CLCDCM    ENGINE    RTFAST    RTSLOW
J        -  RTFAST    RTSLOW
JTRIM    -  RTSLOW
KAR      -  RTFAST
KONFR    -  RTFAST
KPAN     -  RTFAST    RTSLOW
KTRIM    -  RTSLOW
LINT     -  RTFAST    RTSLOW
N        -  GEAR
NACVAR   -  RTFAST    RTSLOW
NCLOSE   -  RTFAST
NCON     -  RTSLOW
NGEF     -  RTSLOW
NOPT     -  AILSP     CLCDCM
NQIND    -  ENGINE
NRNOID   -  ENGINE
NTWST    -  RTFAST
NVB      -  RTFAST
NWDTID   -  ENGINE
N1IND    -  ENGINE
N1THID   -  ENGINE
N2IND    -  ENGINE
OMDOT    -  RTFAST
OMDTL    -  RTFAST
```

Figure G.6. (Continued)

```
OMDTR   -  RTFAST
OMEGA   -  RTFAST    RTSLOW
OMEGAL  -  RTFAST
OMEGAR  -  RTFAST
OMEGEL  -  RTFAST    RTSLOW
OMEGEP  -  RTFAST    RTSLOW
OMENG   -  ENGINE
OMREF   -  RTSLOW
OMSOL   -  RTFAST
OMSOR   -  RTFAST
ONOVTC  -  RTSLOW
OOVCTP  -  GEAR
OOVDSK  -  RTFAST
OOVFSM  -  RTFAST    RTSLOW
OOVIXX  -  RTFAST    RTSLOW
OOVIYY  -  RTFAST    RTSLOW
OOVIZZ  -  RTFAST    RTSLOW
OVDTIM  -  RTFAST
OVSOTH  -  ENGINE    RTSLOW
OVTHDL  -  ENGINE    RTSLOW
P       -  RTFAST
PC      -  RTSLOW
PCTORO  -  ENGINE
PCTQR   -  RTFAST    RTSLOW
PGUST   -  RTFAST
PHI     -  GEAR      RTSLOW
PI      -  RTFAST
PIOV2   -  RTFAST
PNLN    -  RTFAST
PNLR    -  RTFAST
PNRN    -  RTFAST
PNRR    -  RTFAST
PP      -  RTFAST
PPRIME  -  GEAR      RTFAST
PQ      -  RTFAST
PR      -  RTFAST
PSI     -  RTSLOW
Q       -  RTFAST
QFSW    -  RTSLOW
QGUST   -  RTFAST
QNLN    -  RTFAST
QNLR    -  RTFAST
QNRN    -  RTFAST
QNRR    -  RTFAST
QPRIME  -  GEAR      RTFAST
R       -  RTFAST
RAD     -  GEAR
RAD1    -  GEAR
RCB1    -  RTSLOW
RDTODG  -  CLCDCM    RTFAST
RESLR   -  RTSLOW
RESRR   -  RTSLOW
RETURN  -  AILSP     CLCDCM    ENGINE    GEAR      RTFAST    RTSLOW
REVENT  -  RTSLOW
RGUST   -  RTFAST
```

Figure G.6. (Continued)

```
RMLN     -  RTFAST
RMLR     -  RTFAST
RMRN     -  RTFAST
RMRR     -  RTFAST
RDE      -  RTFAST    RTSLOW
RDEDV2   -  RTFAST    RTSLOW
RDEO     -  RTFAST    RTSLOW
RDPIB6   -  RTFAST
RDPIR5   -  RTFAST
RDTFPS   -  RTFAST
RDTRAD   -  RTFAST    RTSLOW
RDTVAR   -  RTFAST    RTSLOW
RPRIME   -  RTFAST
RO       -  RTFAST
RR       -  RTFAST
RRI1     -  RTSLOW
RRI2     -  RTSLOW
RTPASS   -  RTFAST    RTSLOW
SALIHT   -  RTFAST
SALLN    -  RTSLOW
SALLW    -  RTFAST
SALRN    -  RTSLOW
SALRW    -  RTFAST
SAVINW   -  RTSLOW
SAVZET   -  RTSLOW
SBETLN   -  RTSLOW
SBETLW   -  RTFAST
SBETRN   -  RTSLOW
SBETRW   -  RTFAST
SBETSG   -  RTFAST
SBFCAF   -  RTSLOW
SBFSAF   -  RTSLOW
SCADC1   -  RTFAST
SCCAC1   -  RTFAST
SC1      -  RTFAST
SC2      -  RTFAST
SDST     -  GEAR
SDST1    -  GEAR
SEPLW    -  RTFAST
SEPRW    -  RTFAST
SGNSQF   -  RTFAST
SGNULW   -  RTFAST
SGNURW   -  RTFAST
SHF      -  RTSLOW
SHPMAX   -  ENGINE
SHPOUT   -  ENGINE
SHPPRL   -  RTSLOW
SHPPRR   -  RTFAST    RTSLOW
SHPSTR   -  ENGINE
SHW      -  RTSLOW
SIGMA    -  RTFAST
SIGNU    -  GEAR
SIGNV    -  GEAR
SIL      -  RTSLOW
SILAML   -  RTFAST    RTSLOW
```

Figure G.6. (Continued)

```
SILAMP  -  RTFAST    RTSLOW
SILW    -  RTFAST    RTSLOW
SINALF  -  RTSLOW
SINBTF  -  RTSLOW
SINCOS  -  RTFAST    RTSLOW
SININL  -  RTFAST    RTSLOW
SININP  -  RTFAST    RTSLOW
SINTW   -  RTFAST
SINLAM  -  RTFAST
SINPHI  -  GEAR      RTSLOW
SINPSI  -  RTSLOW
SINTHE  -  GEAR      RTSLOW
SINZHL  -  RTFAST
SINZHP  -  RTFAST
SIR     -  RTSLOW
SIRW    -  RTFAST    RTSLOW
SIT     -  RTSLOW
SKPN    -  ENGINE
SKPR    -  ENGINE
SKST    -  GEAR
SKST1   -  GEAR
SKW1    -  RTFAST
SKW10   -  RTFAST
SKW2    -  RTFAST
SKW3    -  RTFAST
SKW4    -  RTFAST
SKW5    -  RTFAST
SKW6    -  RTFAST
SKW7    -  RTFAST
SKW8    -  RTFAST
SKW9    -  RTFAST
SK0     -  RTSLOW
SK1     -  RTSLOW
SK10    -  RTSLOW
SK2     -  RTSLOW
SK20    -  RTFAST
SK21    -  RTFAST
SK22    -  RTFAST
SK3     -  RTSLOW
SK30HI  -  RTSLOW
SK30L   -  RTSLOW
SK30LD  -  RTSLOW
SK30P   -  RTSLOW
SK31HI  -  RTSLOW
SK31L   -  RTSLOW
SK31LD  -  RTSLOW
SK31R   -  RTSLOW
SK32    -  RTSLOW
SK34    -  RTSLOW
SK35    -  RTSLOW
SK36    -  RTSLOW
SK37    -  RTSLOW
SK38    -  RTSLOW
SK39    -  RTSLOW
SK4     -  RTSLOW
```

Figure G.6. (Continued)

```
SK40     -  RTSLOW
SK41     -  RTSLOW
SK42     -  RTSLOW
SK43     -  RTSLOW
SK44     -  RTSLOW
SK5      -  RTSLOW
SK6      -  RTSLOW
SK7      -  RTSLOW
SK8      -  RTSLOW
SK9      -  RTSLOW
SL       -  RTSLOW
SLAC     -  RTFAST
SLF      -  RTSLOW
SLPA     -  RTFAST
SLW      -  RTSLOW
SMA      -  RTSLOW
SPAN     -  RTFAST    RTSLOW
SPHIP    -  RTFAST
SPIO     -  RTSLOW
SPOIL    -  AILSP
SQF      -  RTFAST    RTSLOW
SQFPRM   -  RTFAST
SQLNC    -  RTSLOW
SQLW     -  RTFAST
SQN1PX   -  ENGINE    RTSLOW
SQRESL   -  RTSLOW
SQRESR   -  RTSLOW
SQRNC    -  RTSLOW
SQRW     -  RTFAST
SQTHTC   -  ENGINE    RTFAST    RTSLOW
SQWDTX   -  ENGINE    RTSLOW
SQWING   -  RTFAST
SSQINL   -  RTSLOW
SSQINR   -  RTSLOW
STAULR   -  RTSLOW
STAURR   -  RTSLOW
SVSTAB   -  RTSLOW
SVSTAR   -  RTSLOW
SVSTRL   -  RTSLOW
SWLG     -  RTFAST
SWLG2    -  RTSLOW
S2INL    -  RTSLOW
S2INR    -  RTSLOW
TAILVR   -  RTFAST    RTSLOW
TAN      -  RTSLOW
TAUNT    -  RTFAST
TAULR    -  RTSLOW
TAURR    -  RTSLOW
TAUVT    -  RTFAST
TAVAEP   -  RTSLOW
TCOEF    -  RTSLOW
TDEGF    -  RTSLOW
TEA      -  ENGINE
TEACUB   -  ENGINE
TEAR     -  RTSLOW
```

Figure G.6. (Continued)

TEA5Q	-	ENGINE	
TEA4TH	-	ENGINE	
TERMP1	-	RTFAST	
TERMQ1	-	RTFAST	
TERMP1	-	RTFAST	
TERM1	-	RTSLOW	
TERM1L	-	RTFAST	
TERM1R	-	RTFAST	
TERM2	-	RTSLOW	
TERM2L	-	RTFAST	
TERM2R	-	RTFAST	
TERM3	-	RTSLOW	
TERM3L	-	RTFAST	
TERM3R	-	RTFAST	
TERM4	-	RTSLOW	
TERM5	-	RTSLOW	
TERM6	-	RTSLOW	
THCDEL	-	ENGINE	RTSLOW
THE	-	GEAR	RTSLOW
THETC	-	RTSLOW	
THTLAC	-	RTFAST	
THTRAC	-	RTFAST	
THTRIM	-	RTFAST	
TIGEL	-	RTFAST	RTSLOW
TIGER	-	RTFAST	RTSLOW
TL	-	RTFAST	RTSLOW
TMHB1C	-	RTFAST	
TMHB11	-	RTFAST	
TMHB12	-	RTFAST	
TMWG1C	-	RTSLOW	
TMWG11	-	RTSLOW	
TNAC1	-	RTSLOW	
TNAC2	-	RTSLOW	
TOROL	-	RTFAST	
TOROR	-	RTFAST	
TPSR	-	RTSLOW	
TP	-	RTFAST	RTSLOW
TRACK	-	RTFAST	RTSLOW
TRMAR1	-	RTFAST	
TRMAR2	-	RTFAST	
TRMAR3	-	RTFAST	
TRMAR4	-	RTFAST	
TRMCEN	-	RTFAST	
TRMHB1	-	RTFAST	
TRMHB2	-	RTFAST	
TRMHB3	-	RTFAST	
TRMHB4	-	RTFAST	
TRMHB5	-	RTFAST	
TRMHB6	-	RTFAST	
TRMHB7	-	RTFAST	
TRMHB8	-	RTFAST	
TRMHB9	-	RTFAST	
TRMHT	-	RTFAST	
TRMHT2	-	RTFAST	
TRMHT3	-	RTFAST	

Figure G.6. (Continued)

```
TRMH1S  -  RTFAST
TRMNC1  -  RTSLOW
TRMNC2  -  RTSLOW
TRMNC3  -  RTSLOW
TRMNC4  -  RTSLOW
TRMTL1  -  RTFAST
TRMTR1  -  RTFAST
TRMTTW  -  RTFAST
TRMVT   -  RTFAST
TRMVT2  -  RTFAST
TRMVT3  -  RTFAST
TRMWG1  -  RTSLOW
TRMWG4  -  RTSLOW
TRMWG5  -  RTFAST
TRMWG6  -  RTFAST
TRMWG7  -  RTFAST
TRMWG8  -  RTFAST
TRMWG9  -  RTSLOW
TSTRTF  -  RTFAST
TSTRTS  -  RTSLOW
TZERO   -  RTSLOW
TZET1   -  RTSLOW
TZET2   -  RTSLOW
TZET3   -  RTSLOW
TZET4   -  RTSLOW
TZET5   -  RTSLOW
TZET6   -  RTSLOW
U       -  RTFAST
UGUST   -  RTFAST
UHT     -  RTFAST
ULW     -  RTFAST
ULWPR   -  RTFAST
ULWSQ   -  RTFAST
UP      -  RTFAST
UPRIMF  -  GEAR     RTFAST    RTSLOW
URL     -  RTFAST   RTSLOW
URLPR   -  RTFAST
URLURL  -  RTFAST   RTSLOW
URR     -  RTFAST   RTSLOW
URRPR   -  RTFAST
URRURR  -  RTFAST   RTSLOW
URW     -  RTFAST
URWPR   -  RTFAST
URWSQ   -  RTFAST
USEATO  -  RTFAST   RTSLOW
USQ     -  RTFAST
UTRIM   -  RTFAST
UVT     -  RTFAST
V       -  RTFAST   RTSLOW
VALFLW  -  RTFAST
VALFRW  -  RTFAST
VALFS   -  RTFAST
VALNCL  -  RTSLOW
VALNCR  -  RTSLOW
VRETVT  -  RTFAST
```

Figure G.6. (Continued)

VEAST	-	RTFAST	RTSLOW	
VELVAR	-	RTFAST	RTSLOW	
VGUST	-	RTFAST		
VLW	-	RTFAST		
VLWPR	-	RTFAST		
VLWSO	-	RTFAST		
VNORTH	-	RTFAST	RTSLOW	
VP	-	RTFAST		
VPRIME	-	GEAR	RTFAST	RTSLOW
VRL	-	RTFAST	RTSLOW	
VRLPR	-	RTFAST		
VRLVRL	-	RTFAST	[redacted]	
VRR	-	RTFAST	[redacted]	
[redacted]	-	[redacted]		
[redacted]	-	[redacted]	[redacted]	
VRW	-	RTFAST		
VRWPR	-	RTFAST		
VRWSO	-	RTFAST		
VSQ	-	RTFAST		
VSTAR	-	RTSLOW		
VSTARL	-	RTSLOW		
VTIPL	-	RTFAST		
VTIPR	-	RTFAST		
VTOTAL	-	RTFAST	RTSLOW	
VTOTLR	-	RTFAST	RTSLOW	
VTOTRR	-	RTFAST	RTSLOW	
VTRIM	-	RTFAST		
VTSTLL	-	RTFAST		
VVT	-	RTFAST		
VZETL	-	RTFAST		
VZETP	-	RTFAST		
W	-	RTFAST		
WDOT	-	RTFAST		
WGUST	-	RTFAST		
WHT	-	RTFAST		
WLW	-	RTFAST		
WLWPR	-	RTFAST		
WLWSO	-	RTFAST		
WNGVAR	-	RTFAST	RTSLOW	
WNGVR2	-	RTFAST	RTSLOW	
WORK	-	RTFAST	RTSLOW	
WP	-	RTFAST		
WPRIME	-	RTFAST	RTSLOW	
WRL	-	RTFAST	RTSLOW	
WRLPR	-	RTFAST		
WRLWRL	-	RTFAST	RTSLOW	
WROTL	-	RTFAST		
WROTR	-	RTFAST		
WRR	-	RTFAST	RTSLOW	
WRRPR	-	RTFAST		
WRRWRP	-	RTFAST	RTSLOW	
WRW	-	RTFAST		
WRWPR	-	RTFAST		
WRWSO	-	RTFAST		
WSQ	-	RTFAST		

Figure G.6. (Continued)

WVT	-	RTFAST			
XACOEF	-	CLCOCM			
XAERF	-	RTFAST			
XAERLW	-	RTFAST			
XAERNC	-	RTFAST			
XAERNL	-	RTFAST			
XAERNR	-	RTFAST			
XAERO	-	RTFAST			
XAERRW	-	RTFAST			
XAERT	-	RTFAST			
XAERWG	-	RTFAST			
XAIO	-	GEAR	RTFAST	RTSLOW	
XARFP	-	RTFAST	RTSLOW		
XARHT	-	RTFAST			
XARVT	-	RTFAST			
XCG	-	GEAR	RTFAST	RTSLOW	
XCNTRL	-	RTFAST			
XDTCG	-	RTFAST			
XF	-	RTSLOW			
XFAC	-	RTSLOW			
XFNFLF	-	RTSLOW			
XFUNC	-	RTFAST	RTSLOW		
XG	-	GEAR			
XGEAR	-	GEAR			
XG1	-	GEAR			
XHT	-	RTFAST	RTSLOW		
XL	-	RTSLOW			
XLCOS	-	RTFAST	RTSLOW		
XLINTP	-	RTFAST	RTSLOW		
XLSIN	-	RTSLOW			
XMAP	-	RTFAST			
XN	-	GEAR			
XPAR1	-	AILSP	CLCOCM	RTFAST	RTSLOW
XPAR3	-	AILSP	CLCOCM	RTFAST	RTSLOW
XR	-	RTSLOW			
XRCOS	-	RTFAST	RTSLOW		
XRLCON	-	RTSLOW			
XRSIN	-	RTSLOW			
XVT	-	RTFAST			
XW	-	RTSLOW			
XWAC	-	RTFAST	RTSLOW		
XWC2	-	RTFAST			
XWNWLW	-	RTSLOW			
XXICON	-	RTSLOW			
XZICON	-	RTSLOW			
YAERF	-	RTFAST			
YAERLW	-	RTFAST			
YAERNC	-	RTFAST			
YAERNL	-	RTFAST			
YAERNR	-	RTFAST			
YAERO	-	RTFAST			
YAERRW	-	RTFAST			
YAERT	-	RTFAST			
YAERWG	-	RTFAST			
YARFP	-	RTFAST	RTSLOW		

Figure G.6. (Continued)

```
YARHT   -  RTFAST
YARVT   -  RTFAST
YG      -  GEAR
YG1     -  GEAR
YN      -  GEAR      RTFAST    RTSLOW
YWAC    -  RTFAST
YYICON  -  RTSLOW
ZAERF   -  RTFAST
ZAERLW  -  RTFAST
ZAERNC  -  RTFAST
ZAERNL  -  RTFAST
ZAERNR  -  RTFAST
ZAERO   -  RTFAST
ZAERRW  -  RTFAST
ZAERT   -  RTFAST
ZAERWG  -  RTFAST
ZARFP   -  RTFAST    RTSLOW
ZARHT   -  RTFAST
ZARRG   -  RTFAST
ZARVB   -  RTFAST
ZARVT   -  RTFAST
ZCG     -  GEAR      RTFAST    RTSLOW
ZDTCG   -  RTFAST
ZFTHL   -  RTFAST    RTSLOW
ZETHR   -  RTFAST    RTSLOW
ZETR1   -  RTSLOW
ZETR2   -  RTSLOW
ZETR3   -  RTSLOW
ZETR4   -  RTSLOW
ZF      -  RTSLOW
ZFAC    -  RTSLOW
ZFMFHF  -  RTSLOW
ZG      -  GEAR
ZG1     -  GEAR
ZHT     -  RTFAST    RTSLOW
ZL      -  RTSLOW
ZLCOS   -  RTSLOW
ZLSIN   -  RTFAST    RTSLOW
ZN      -  GEAR
ZR      -  RTSLOW
ZRCOS   -  RTSLOW
ZRLCOS  -  RTSLOW
ZRSIN   -  RTFAST    RTSLOW
ZVT     -  RTFAST
ZW      -  RTSLOW
ZWAC    -  RTFAST    RTSLOW
ZWMWHW  -  RTSLOW
ZZICON  -  RTSLOW
```

****

Figure G.6. (Continued)

********** TABLE OF CONTENTS **********

AILSP 94
CLCDCM 99
CLF1 ..... -94
CLF2 ..... -99
ENGINE 110
GEAR 115
RTFAST 1
RTSLOW 55
TSTRTF ..... -1
TSTRTS ..... -55
SUPER INDEX 120

Figure G.6. (Continued)

time tasks (RTFAST and RTSLOW), the aileron-spoiler subroutine (AILSP), the total lift, drag and moment subroutine (CLCDCM), the engine power subroutine (ENGINE), and the landing gear subroutine (GEAR) . The aileron spoiler subroutine calculates the lift, drag and pitching moment increments. The total wing lift,drag, and moment characteristics are computed in subroutine CLCDCM. Engine performance is computed in the engine subroutine and landing gear forces and moments in the gear subroutine. This listing contains an index of all the variables immediately following each subroutine. The index specifies by location number where the particular variable is defined and used in the subroutine. A master index is provided at the end which specifies the subroutine in which a particular variable is located.

In programming the analog portion of the simulation, size also was of prime concern, where in this case size implies an equipment limitation. From the beginning, equipment was allocated with maximum efficiency,but due to the complexity of the engine/governor, the phasing of the controls, the number of second order representations of actuators, and the number of functions needed to program these sections, the result was 1) three analogs used with a minimum of spare equipment and 2) 31 out of 32 BCA channels needed to program functions (includes

rotor). When the capability of using the nudge-base simulator is added, the simulation uses every piece of hardware available in the hybrid laboratory. Figure G.7 shows the definition of the symbols used on the analog diagrams for the Model 222 simulation presented in Figure G.8.

The scale factors for any of the elements shown in the analog diagrams may be determined by referring to Figure G.9 , which is the subroutine used to static check the analog boards. The subroutine shows all the equations on the analogs and all of the scale factors. This program is used for static check only, in the operate mode the real time task continuously updates the analog. As an example, if the scale factor (and value) for potentiometer 240, which is used in the pitch equation of motion on board 1E console 1 is required the following steps are taken. Refer to the potentiometer calculation section of Figure G.9. This lies between statement numbers 0416 and 0518. Look up the definition of pot 240 [P1(240)]. This appears in statement number 0444 and is P1(240)=P1C/PMX. P1C is contained in common |X1C|, statement number 0008 and PMX is contained in common |XMAX|, statement number 0013. Substituting numerical values and dividing would yield the scale factor for pot 240.

G.2 TRIM LOOPS

The Model 222 trim loops are on the analog. The aircraft accelerations are used in feedback loops to drive the aircraft into

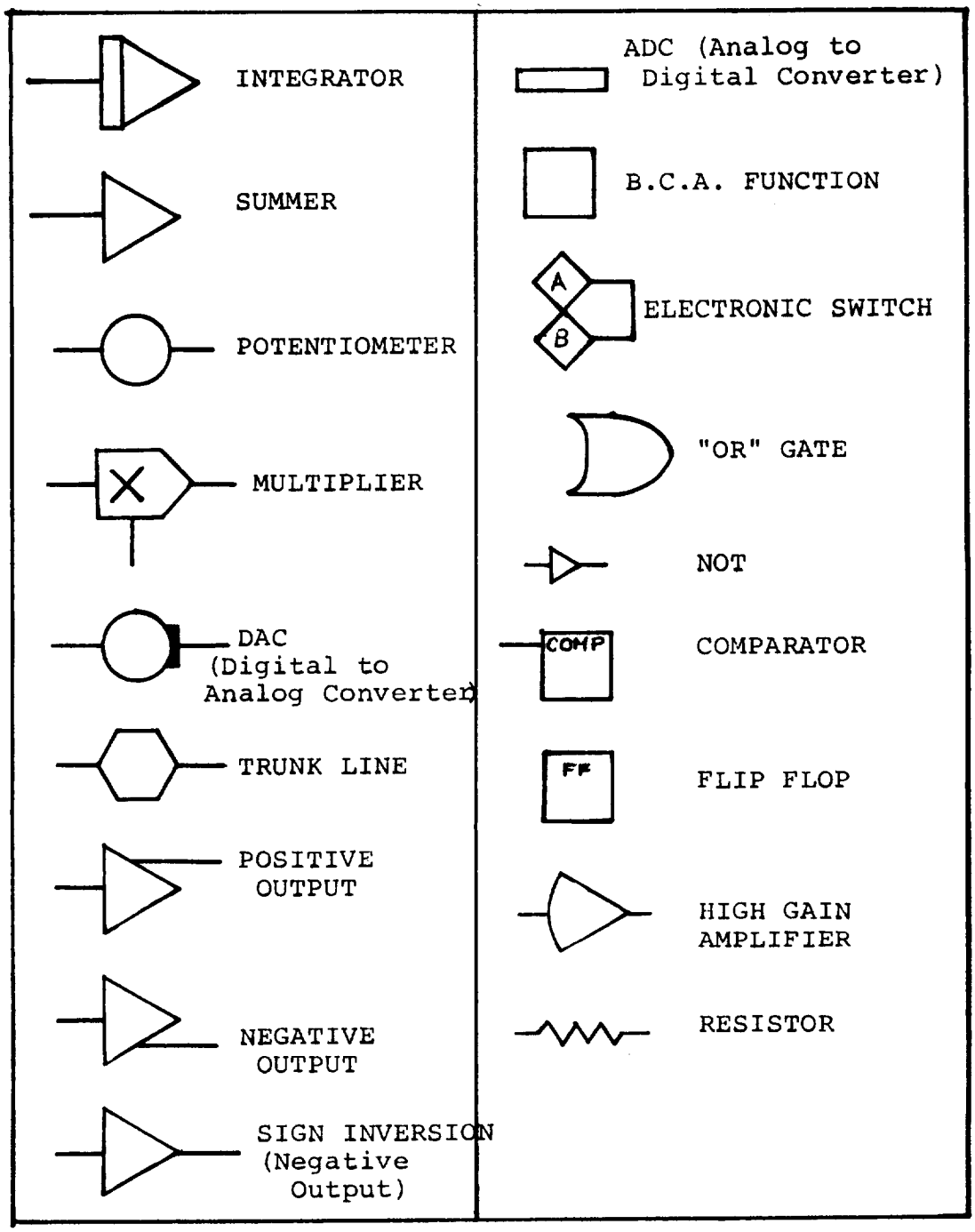

Figure G.7. Analog Symbols

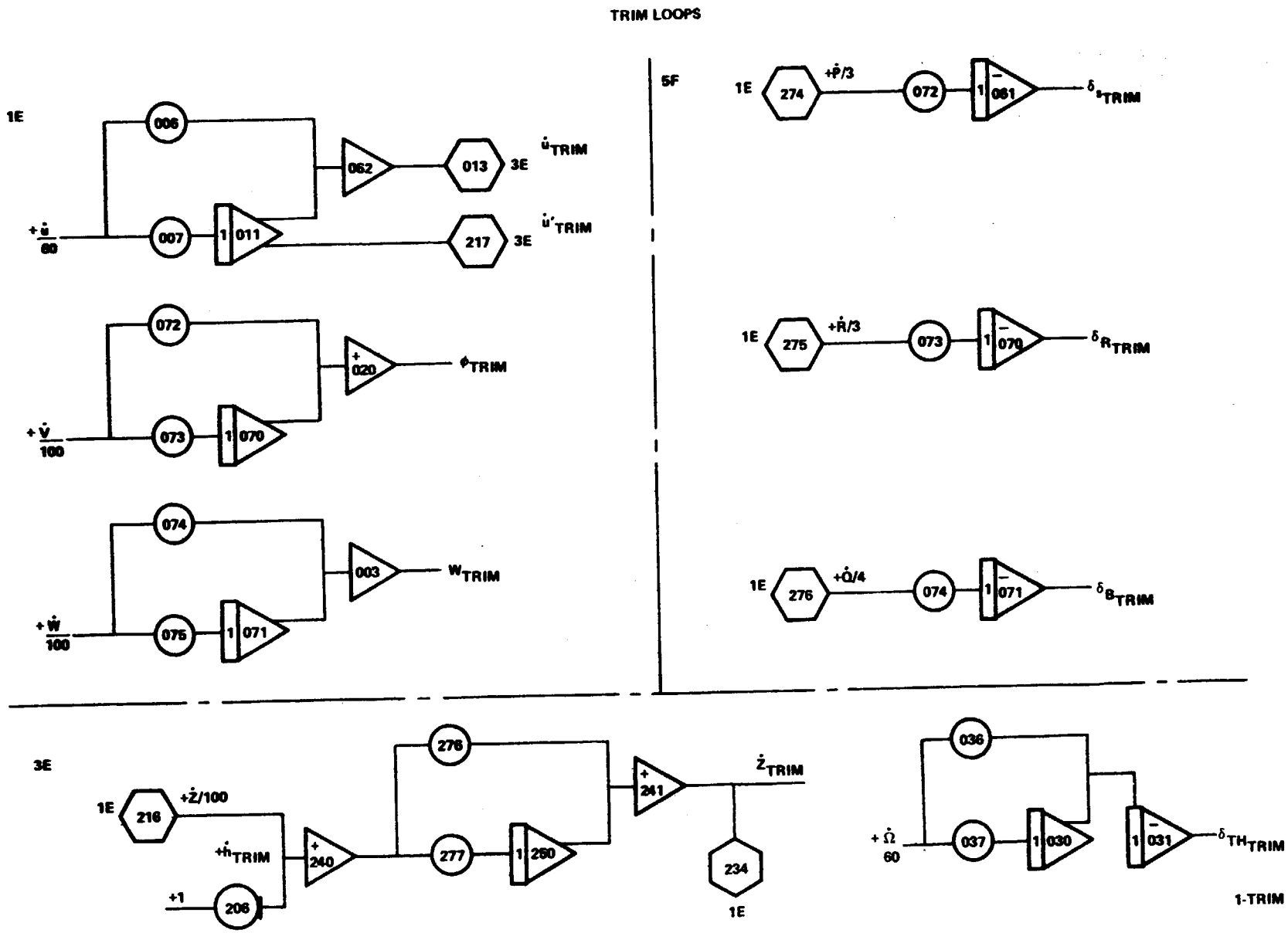

Figure G.8. Analog Diagrams for Model 222 Simulation

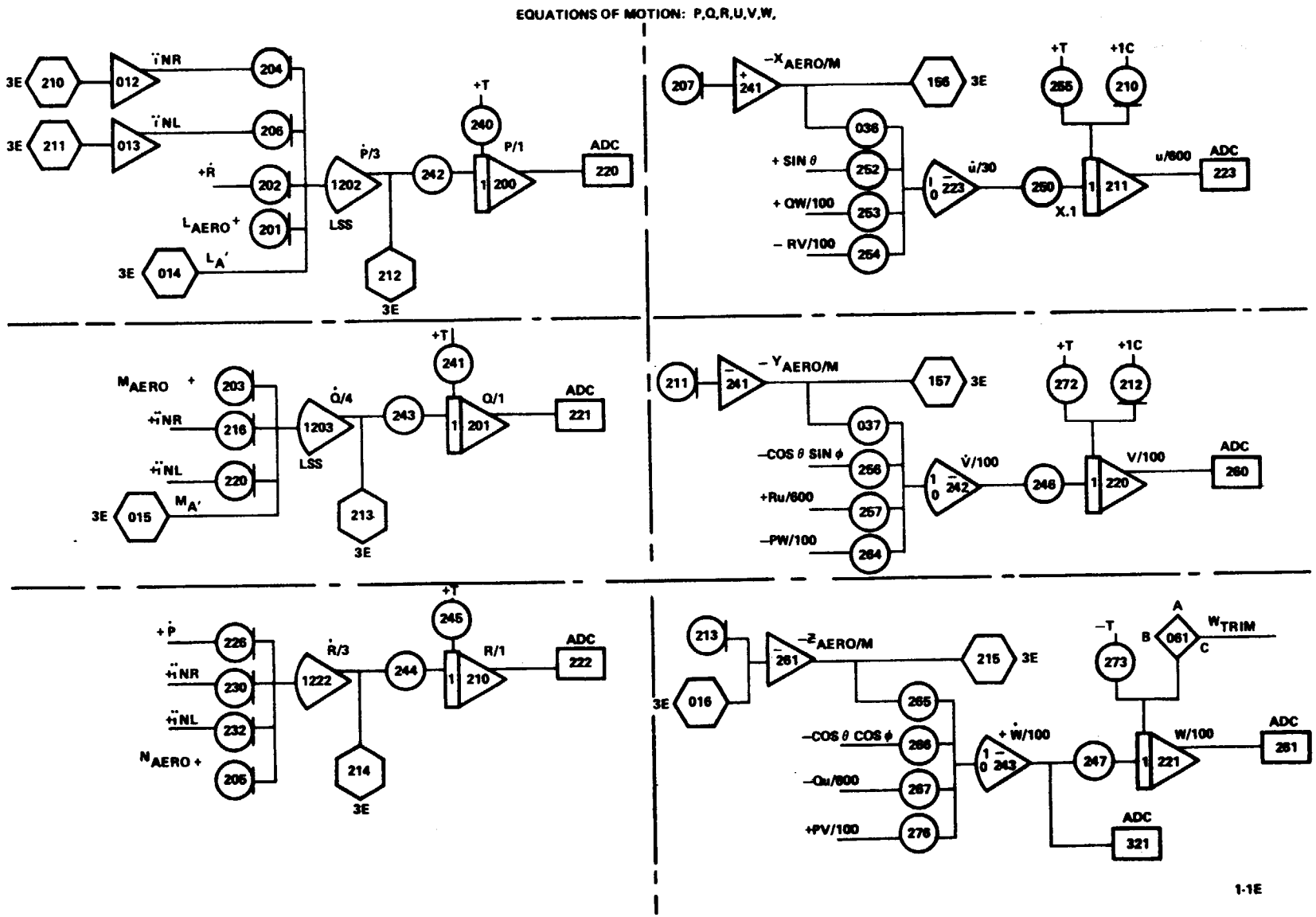

Figure G.8. (Continued)

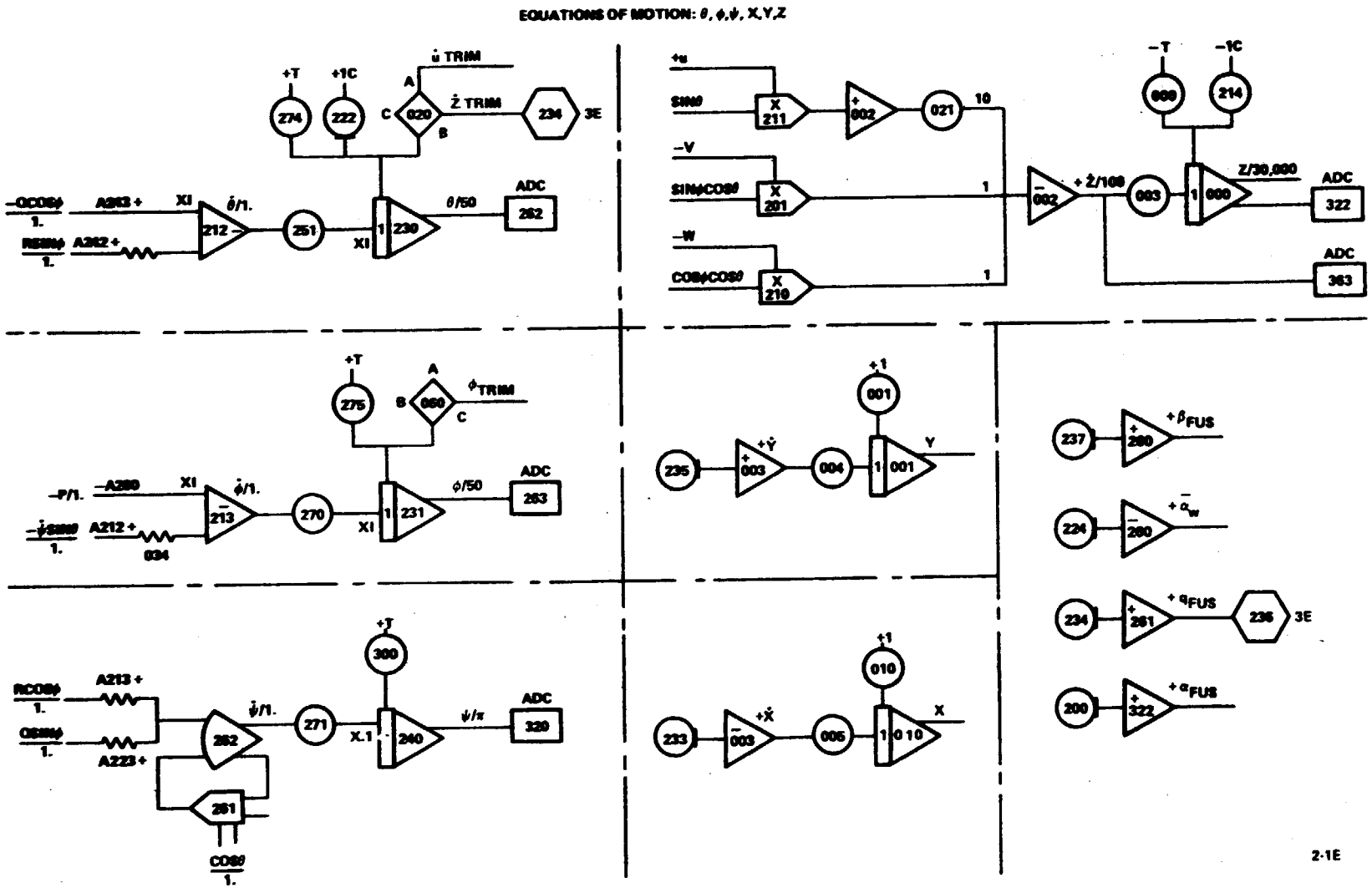

Figure G.8. (Continued)

EQUATIONS OF MOTION MULTIPLICATIONS

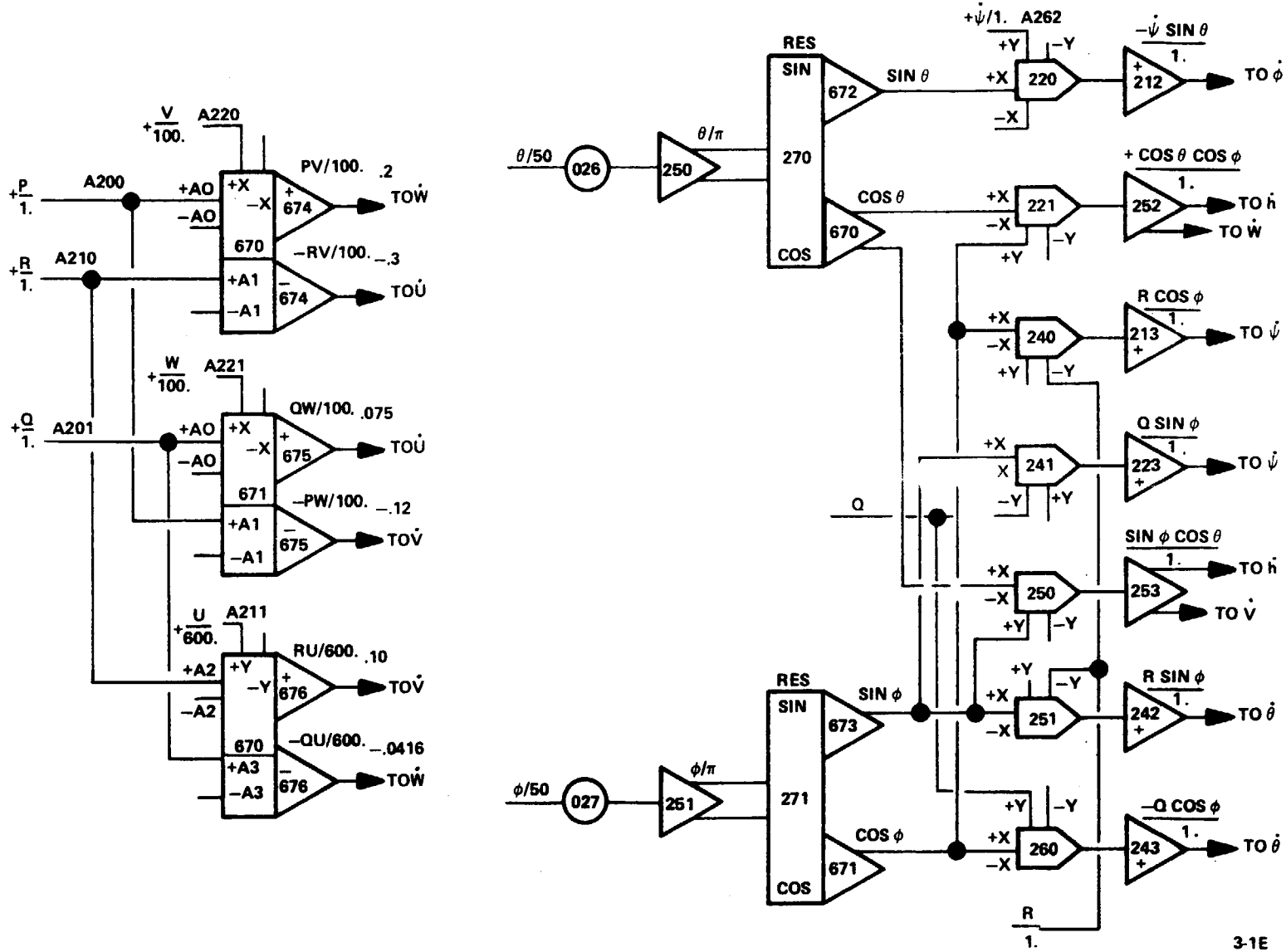

Figure G.8. (Continued)

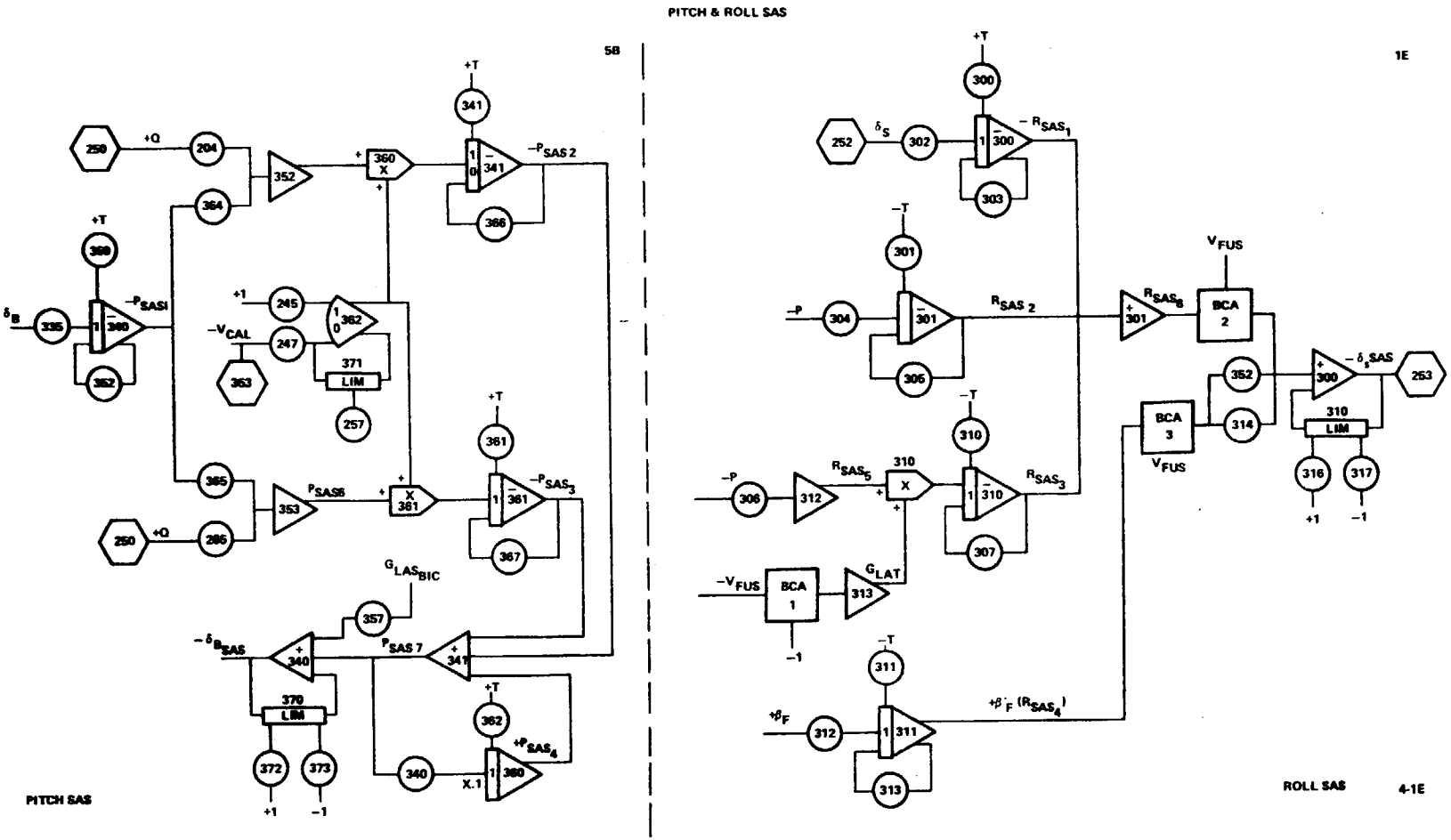

Figure G.8. (Continued)

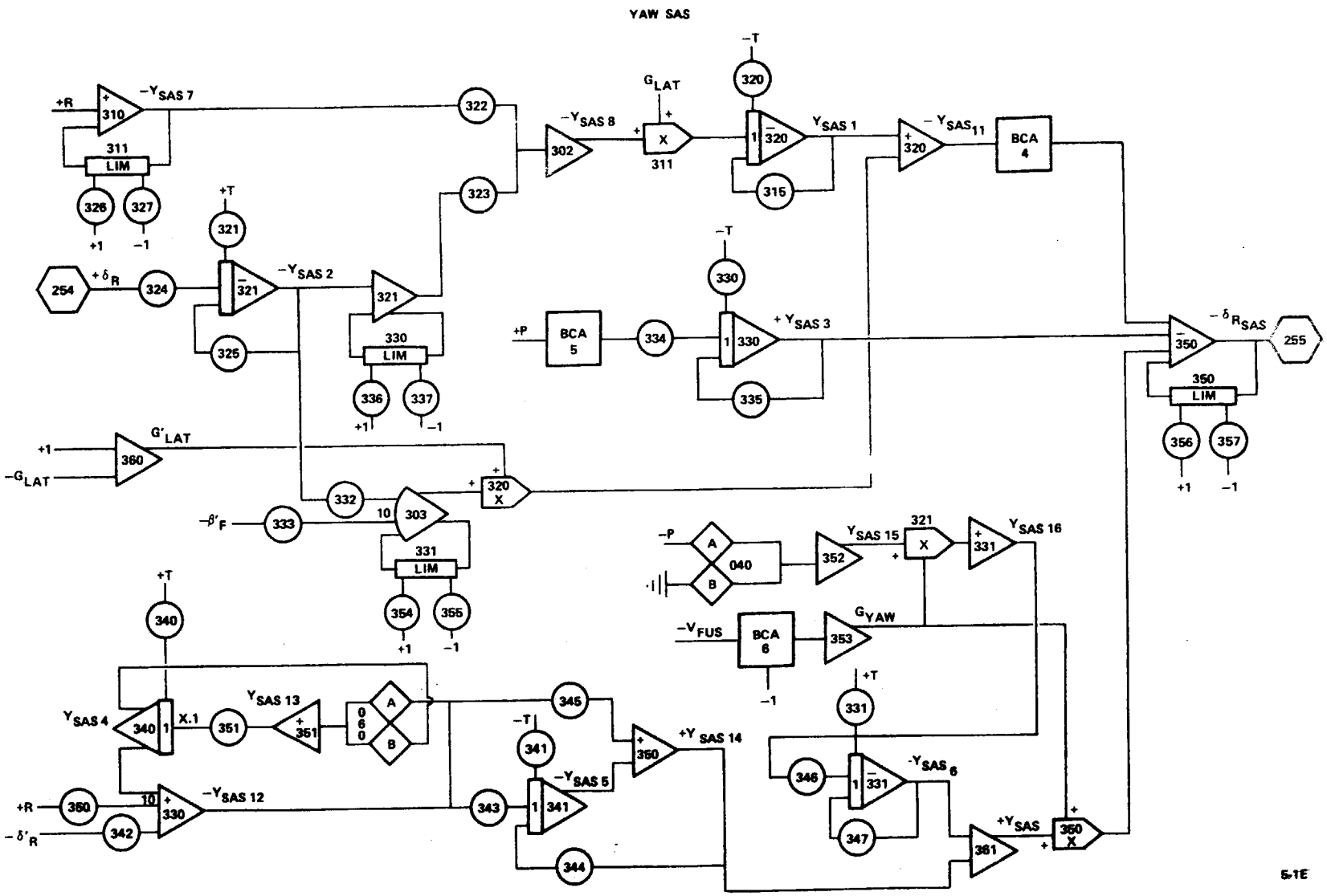

Figure G.8. (Continued)

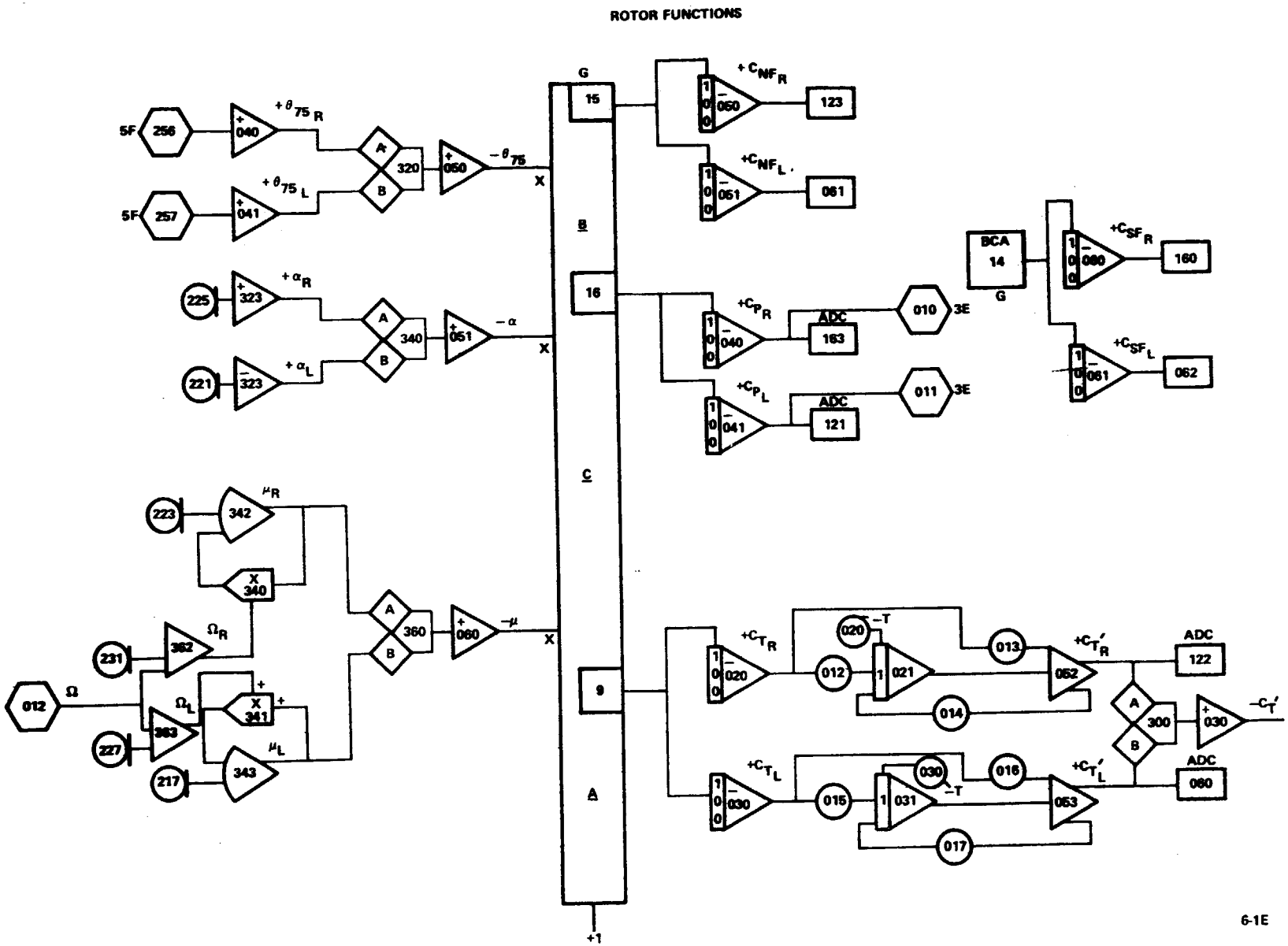

Figure G.8. (Continued)

ROTOR FUNCTION LOGIC

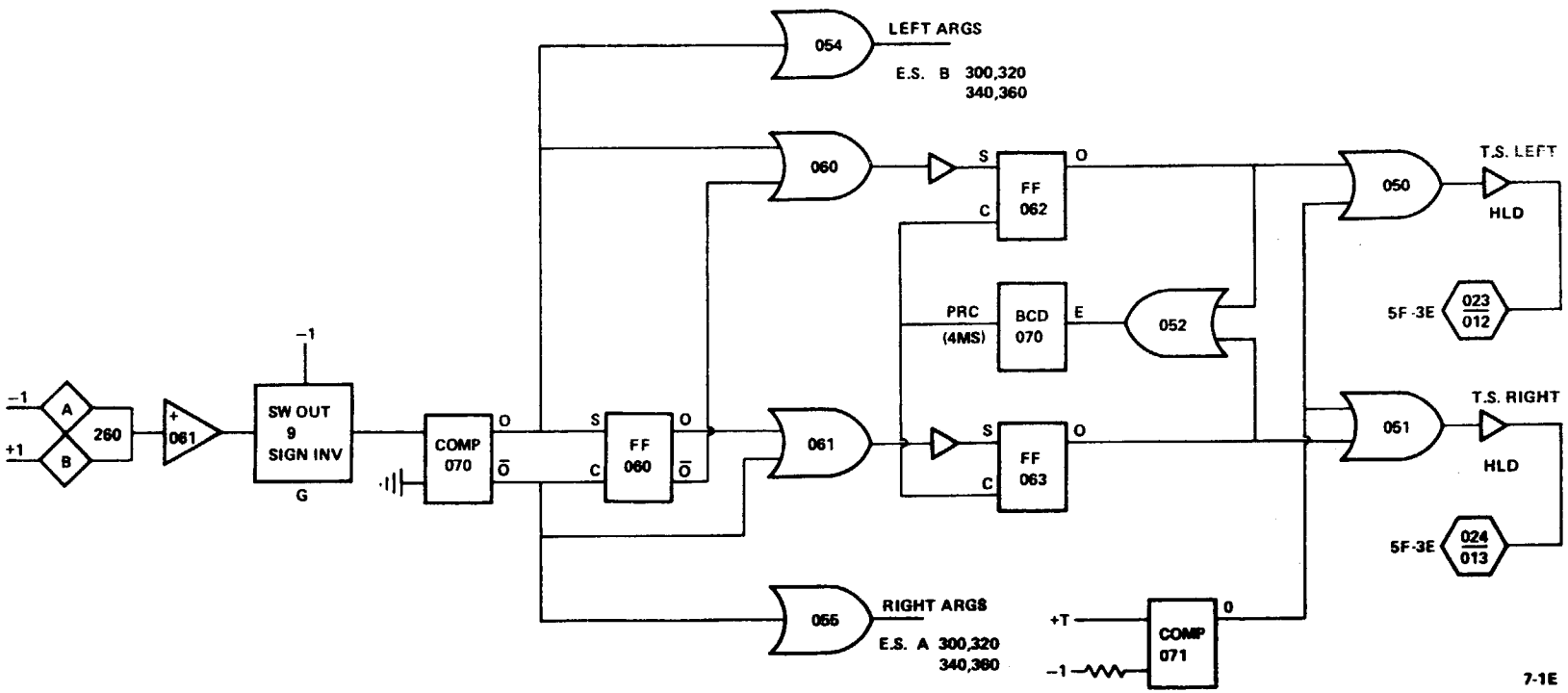

Figure G.8. (Continued)

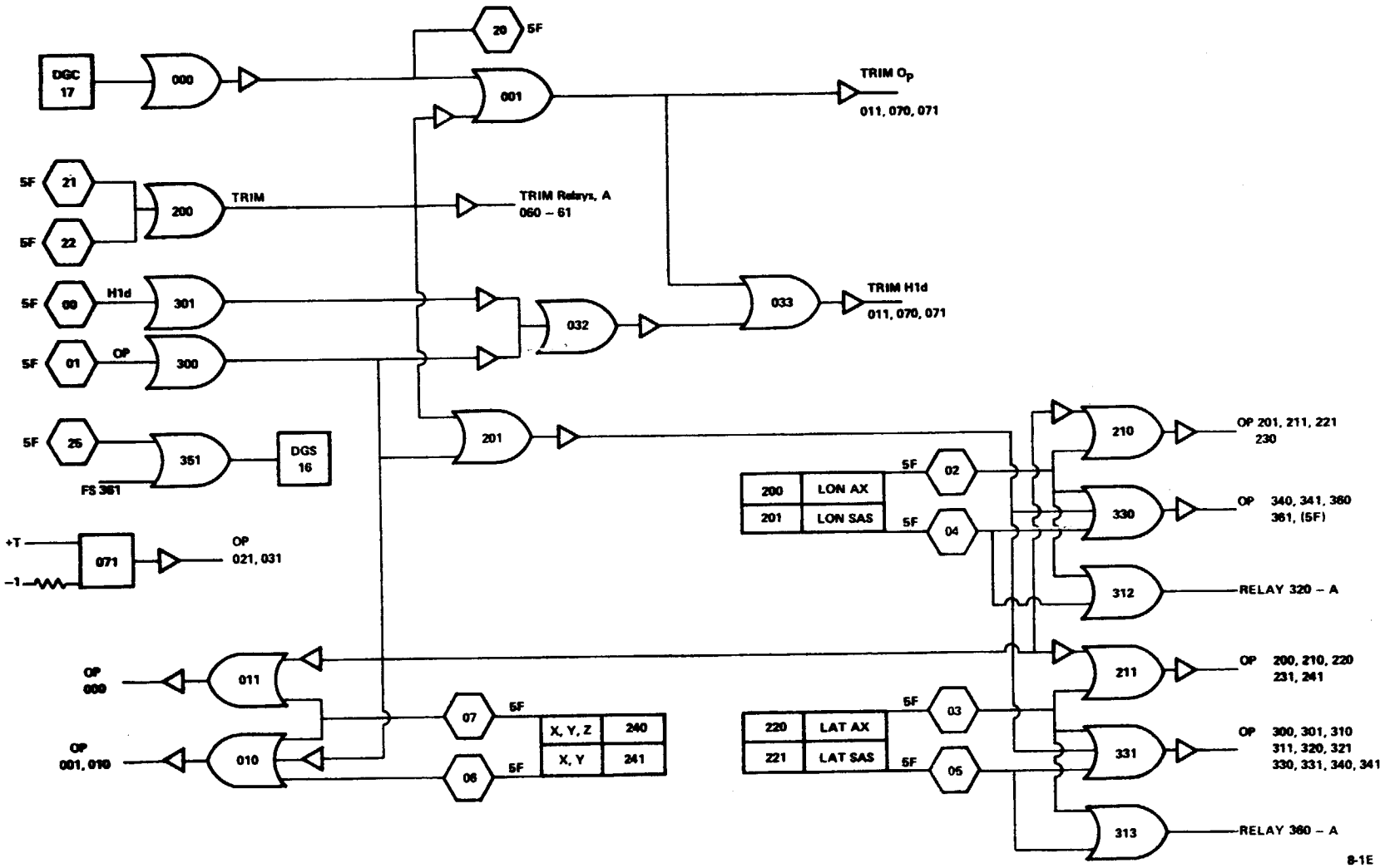

Figure G.8. (Continued)

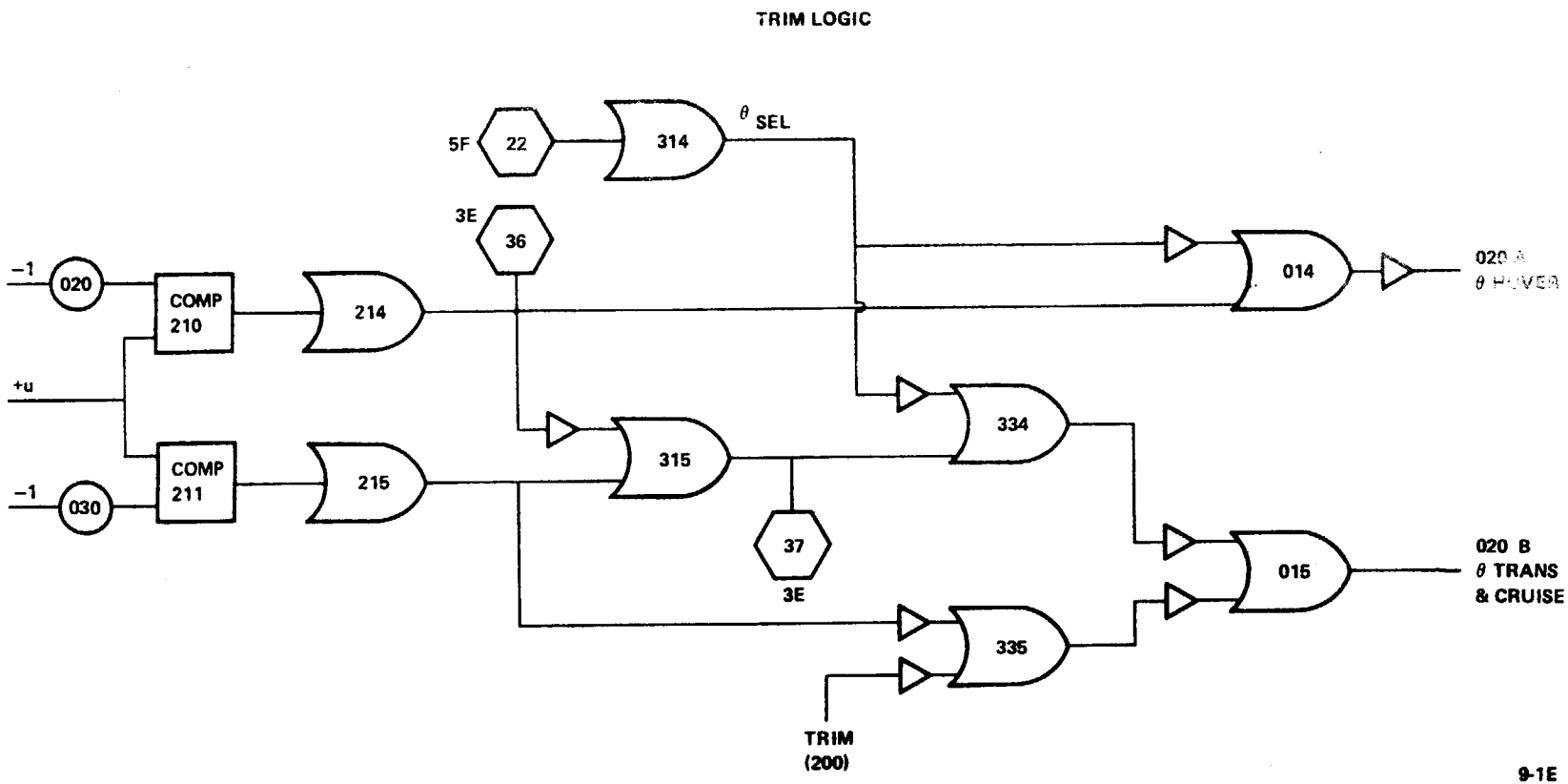

Figure G.8. (Continued)

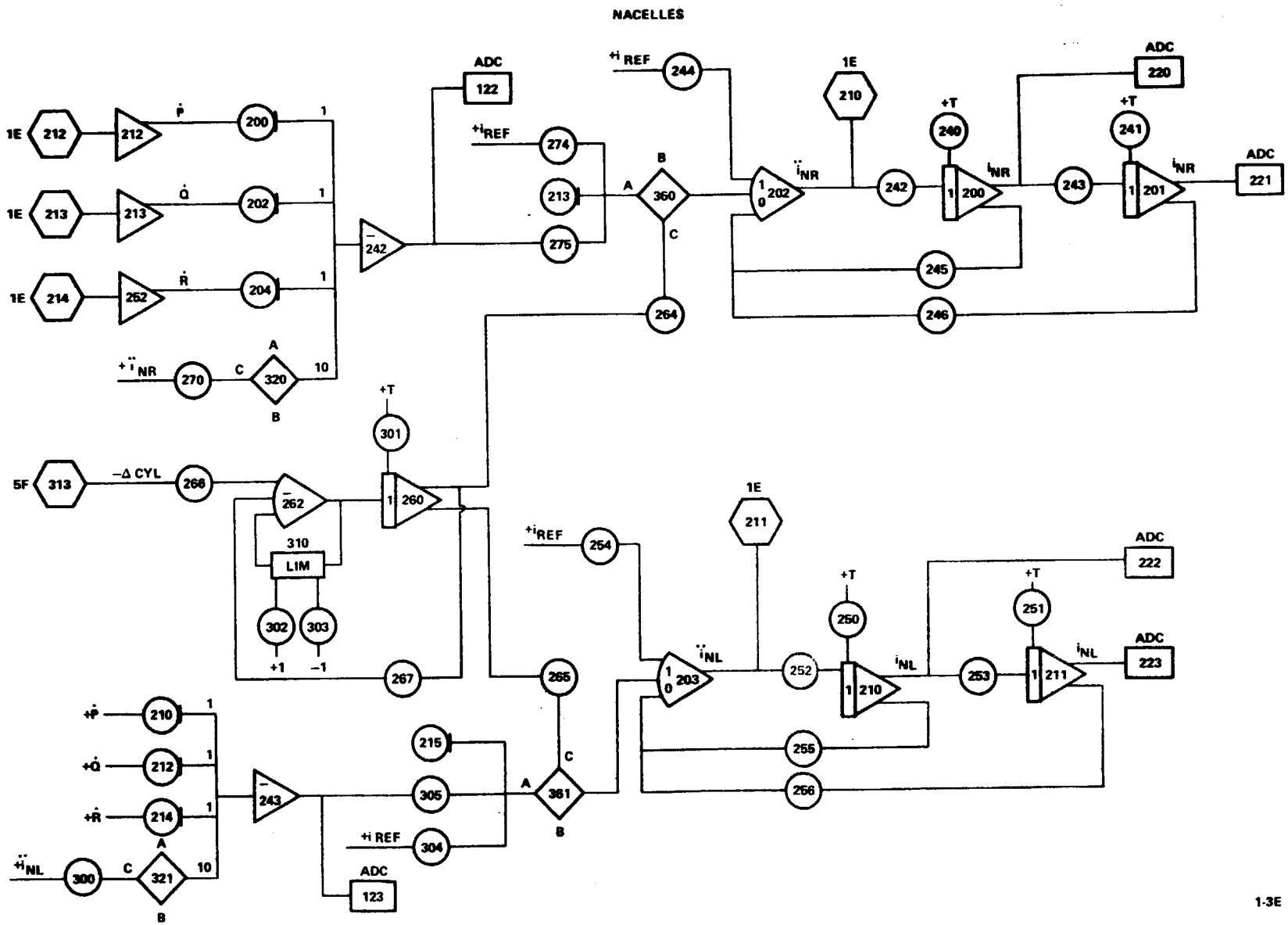

1-3E

Figure G.8. (Continued)

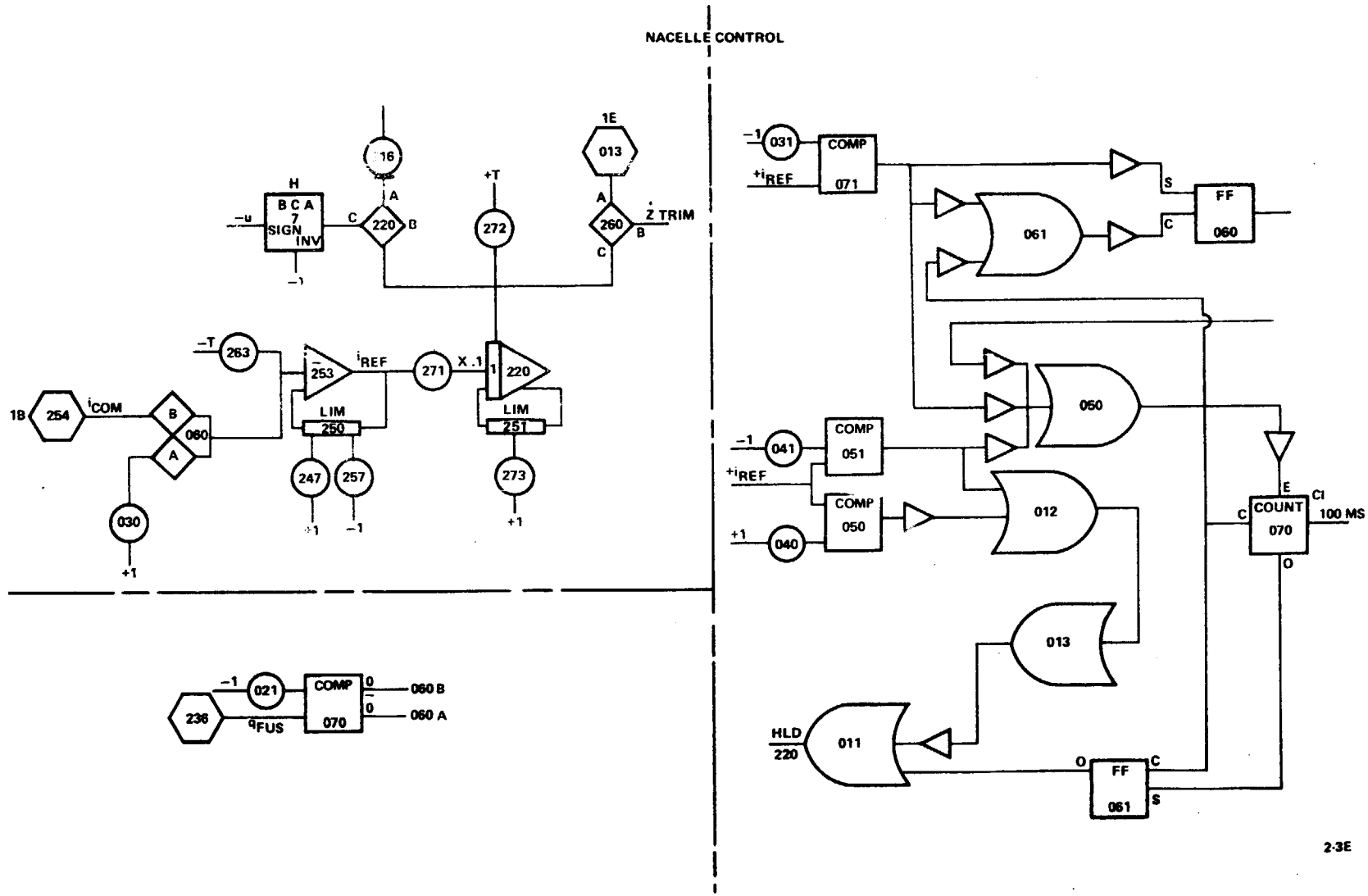

Figure G.8. (Continued)

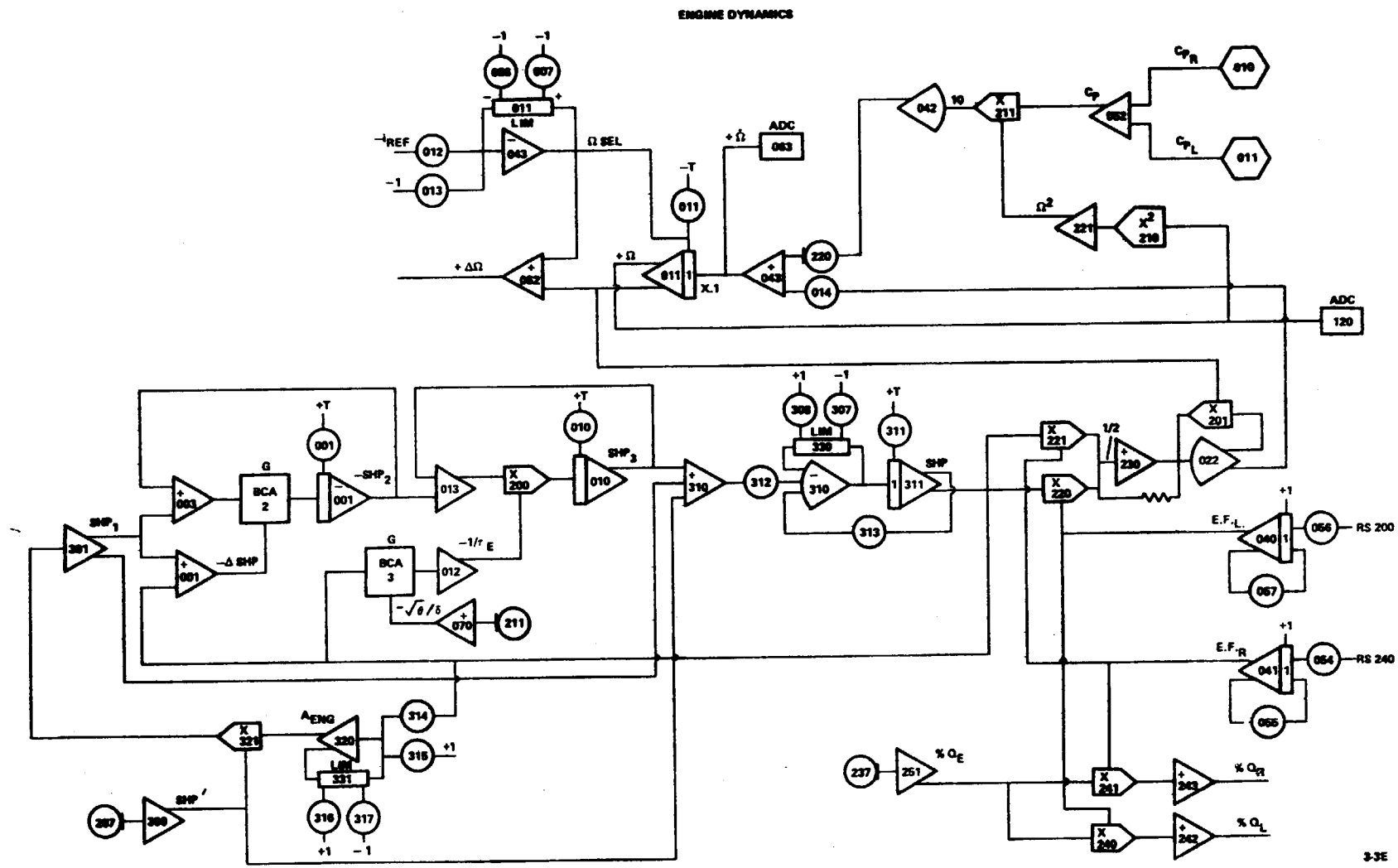

Figure G.8. (Continued)

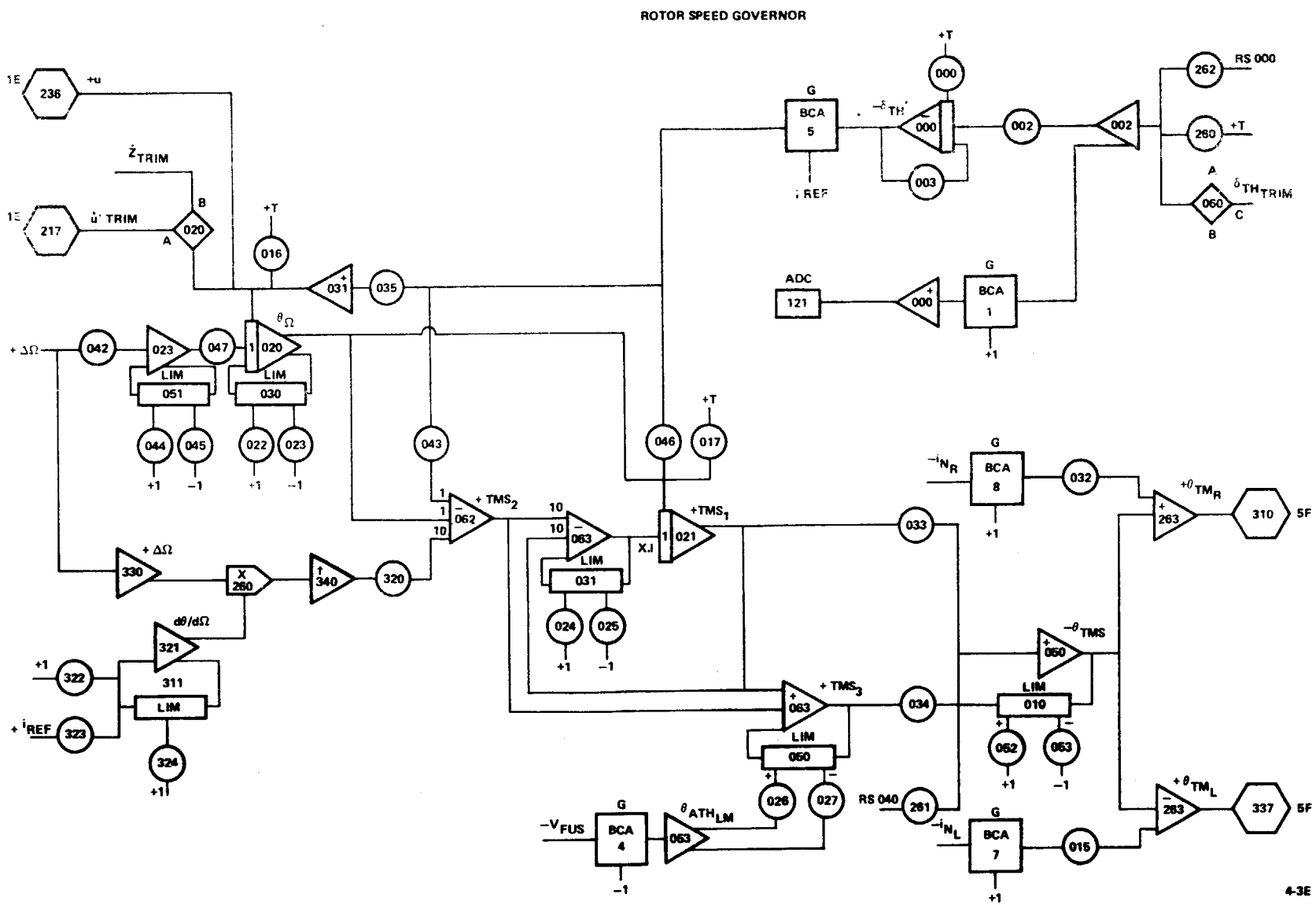

Figure G.8. (Continued)

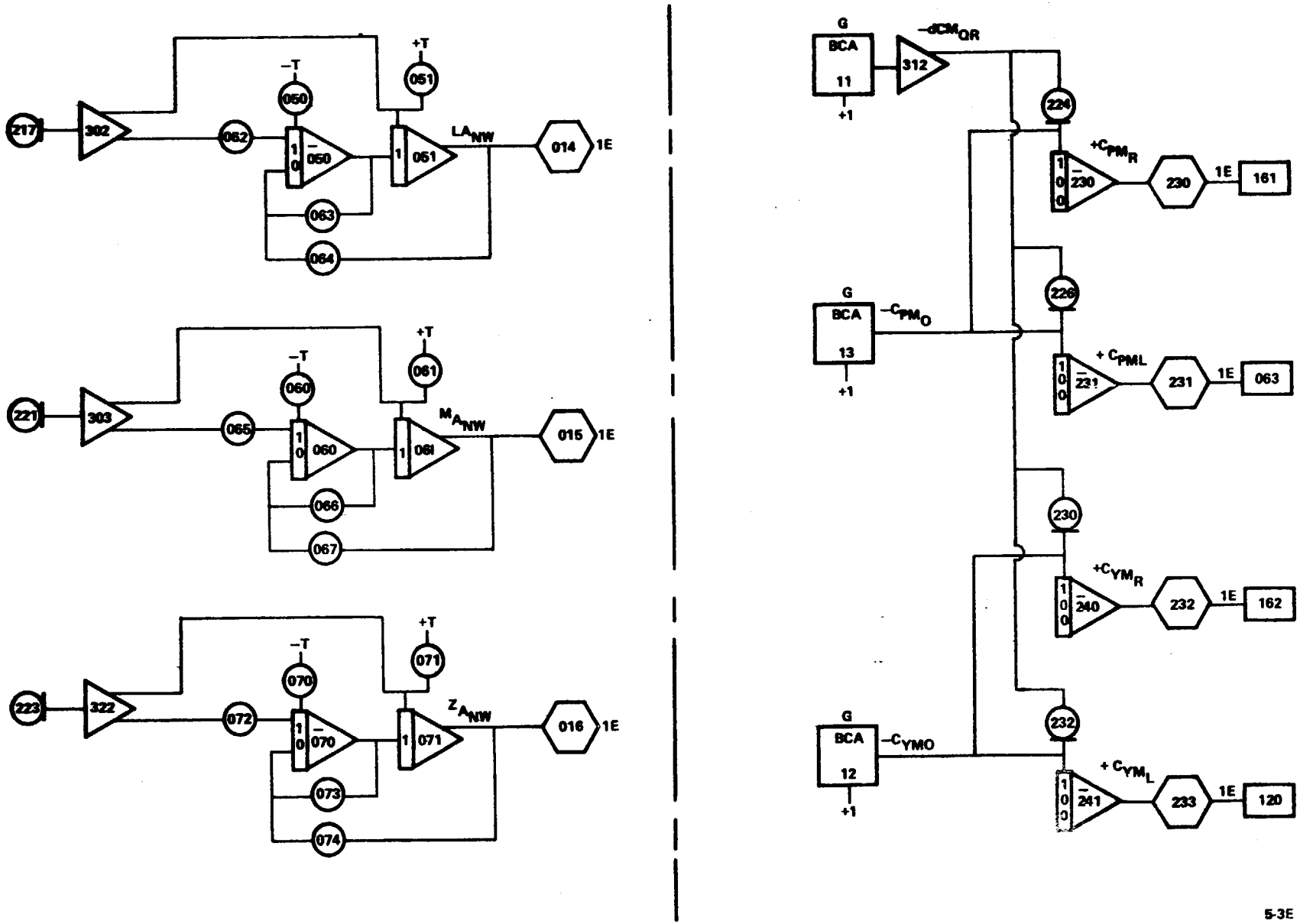

Figure G.8. (Continued)

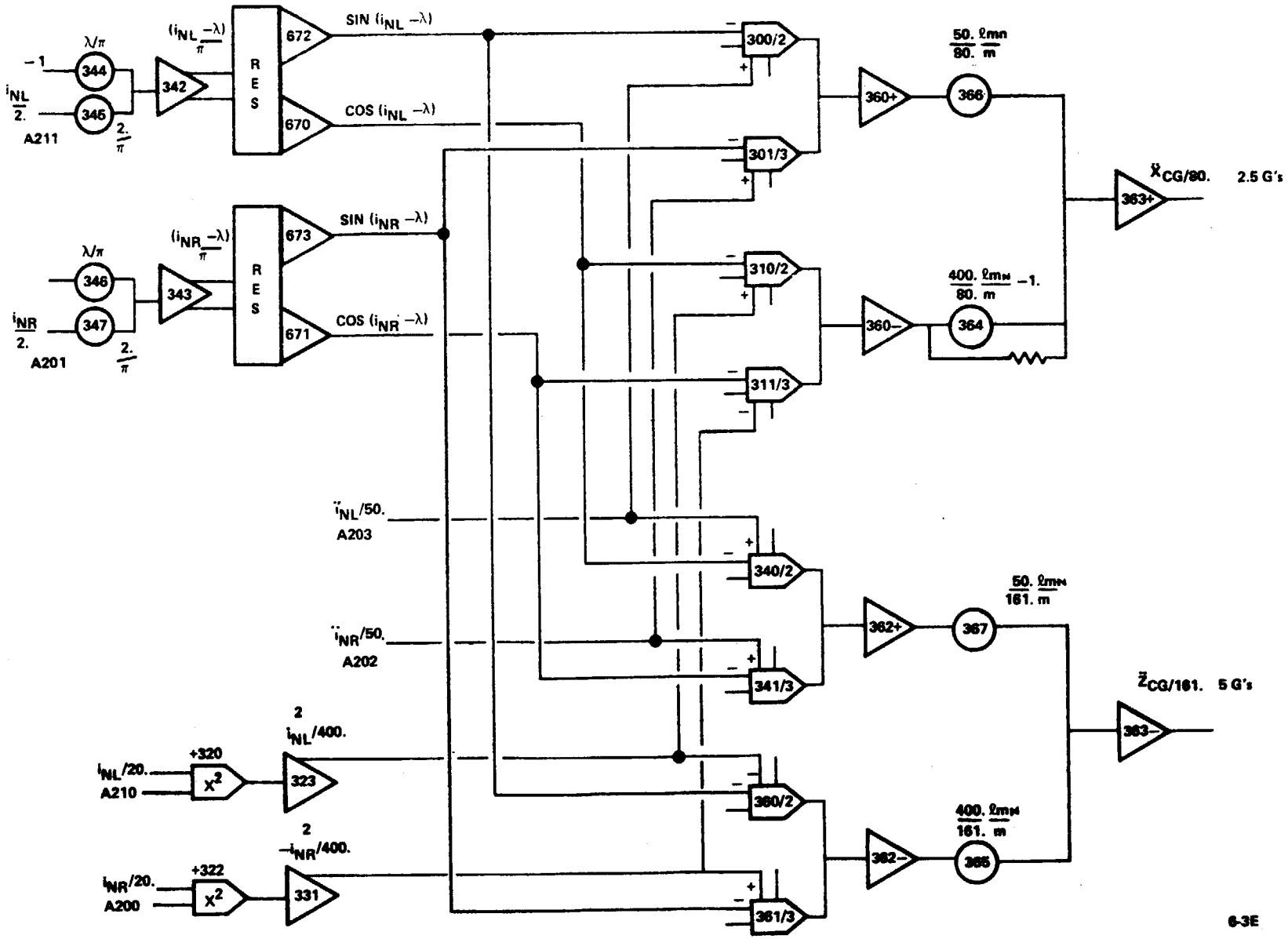

Figure G.8. (Continued)

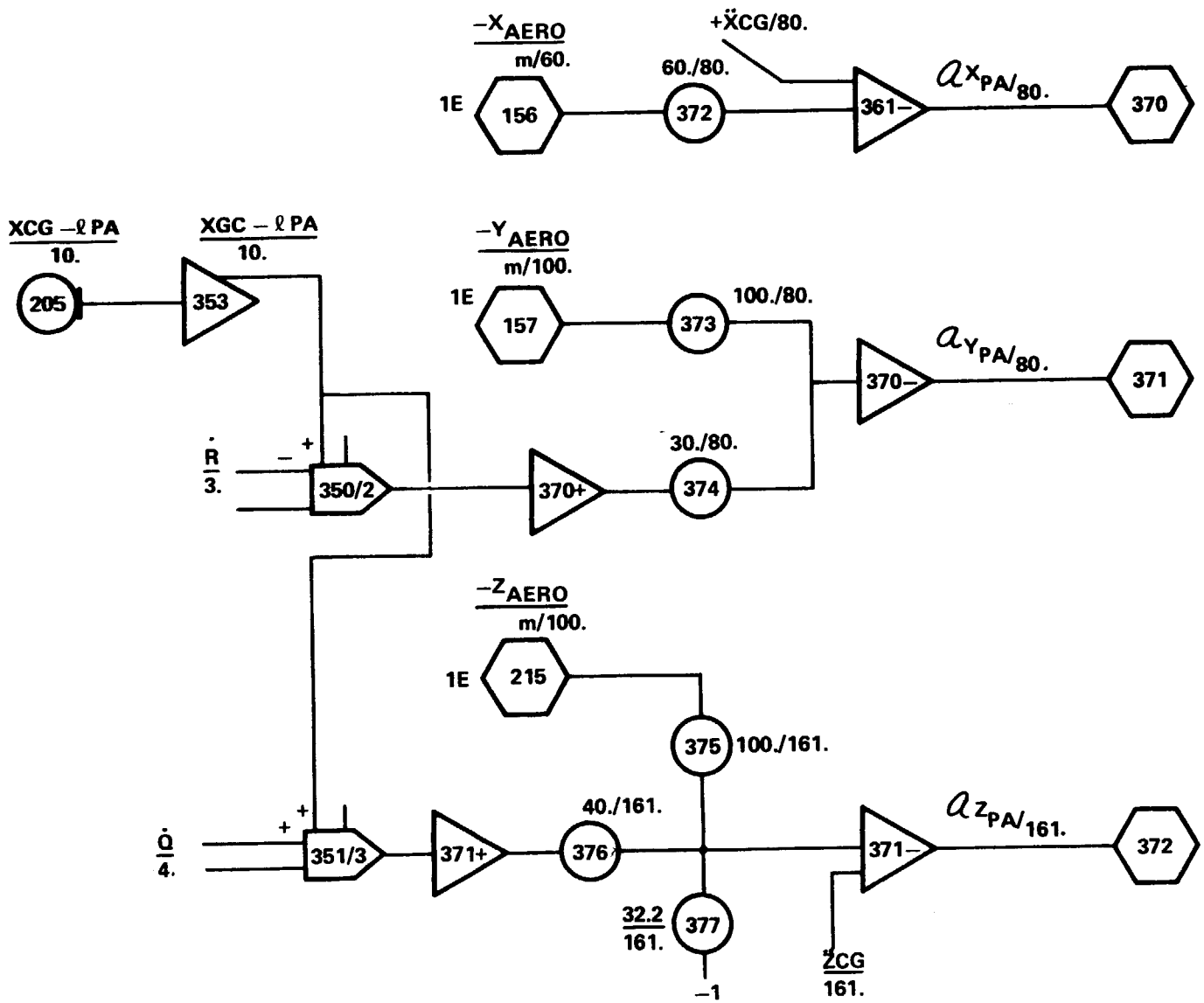

7-3E

Figure G.8. (Continued)

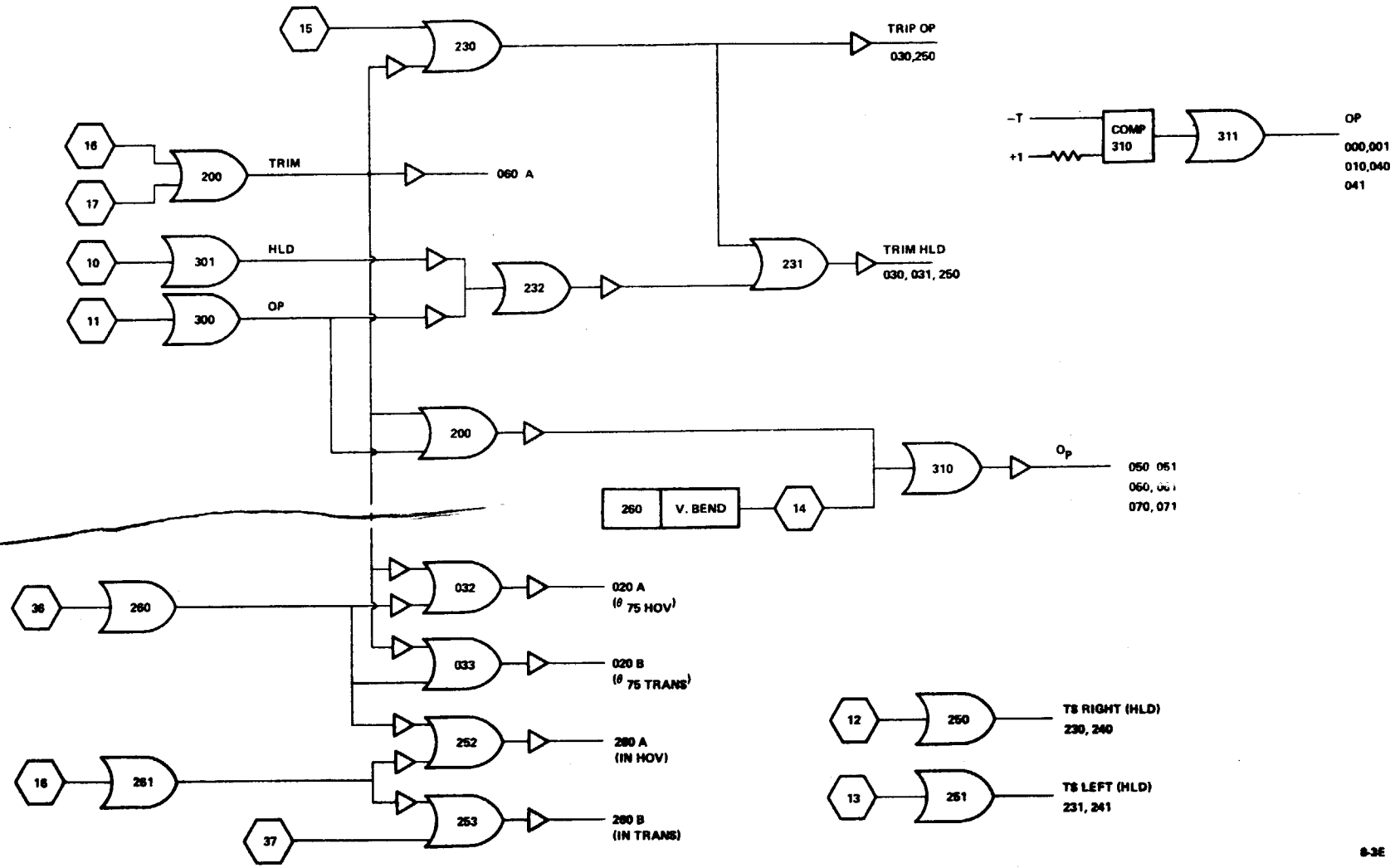

Figure G.8. (Continued)

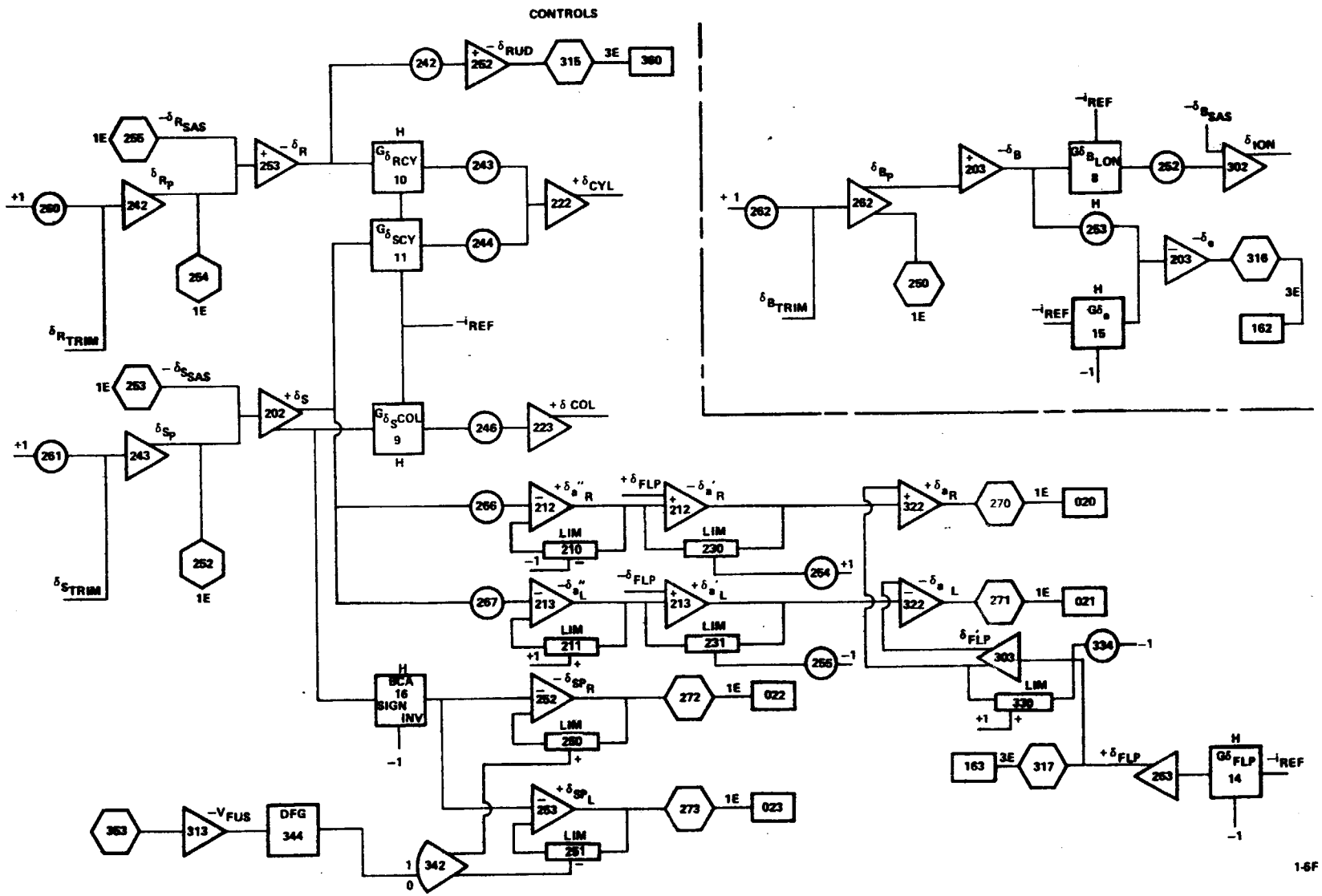

Figure G.8. (Continued)

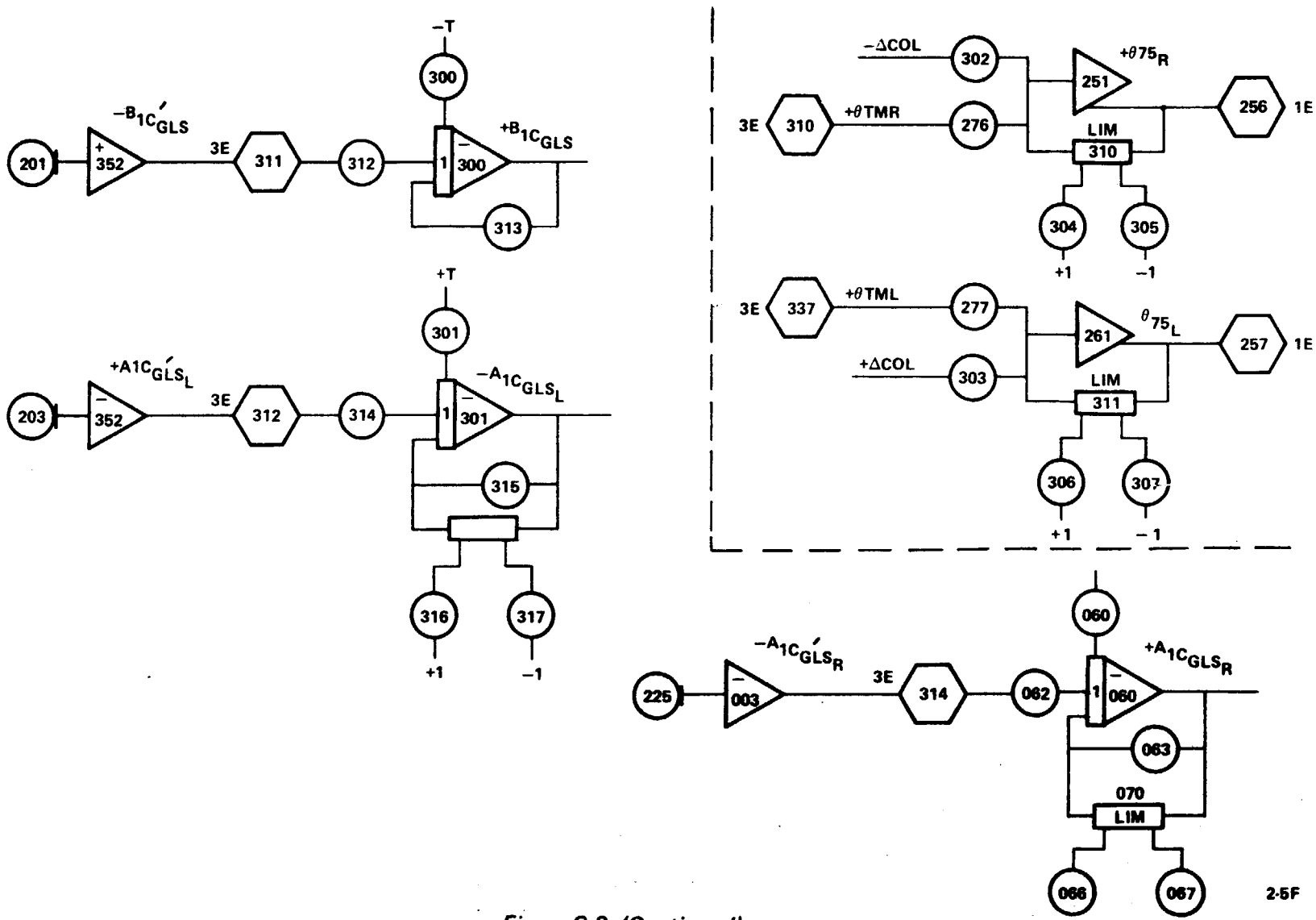

Figure G.8. (Continued)

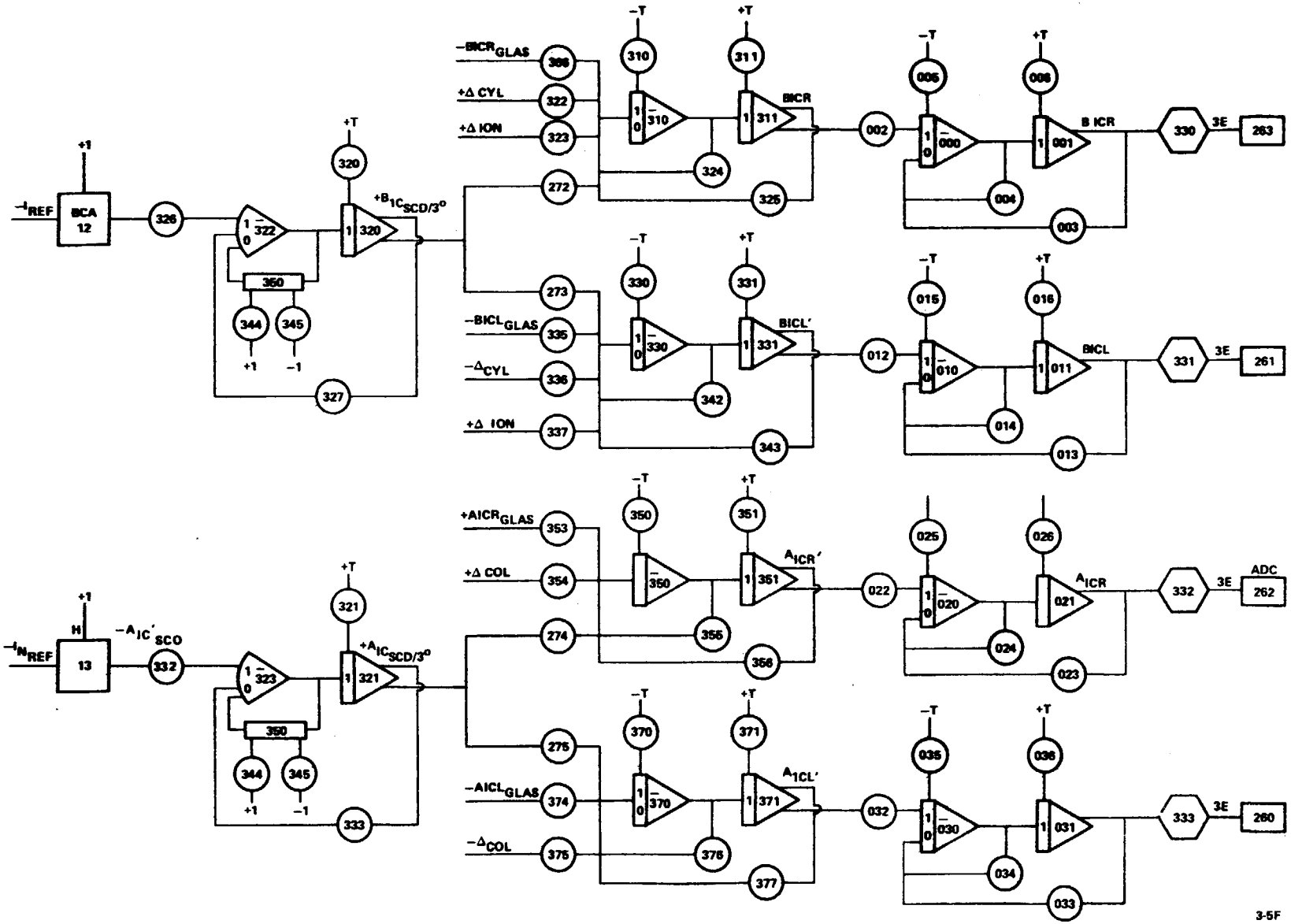
BCA 12
13
+1
H
+T
−T
BICR
BICL'
B ICR
BICL
A ICR'
A ICR
A ICL'
3E
ADC
263
261
262
260
3-5F

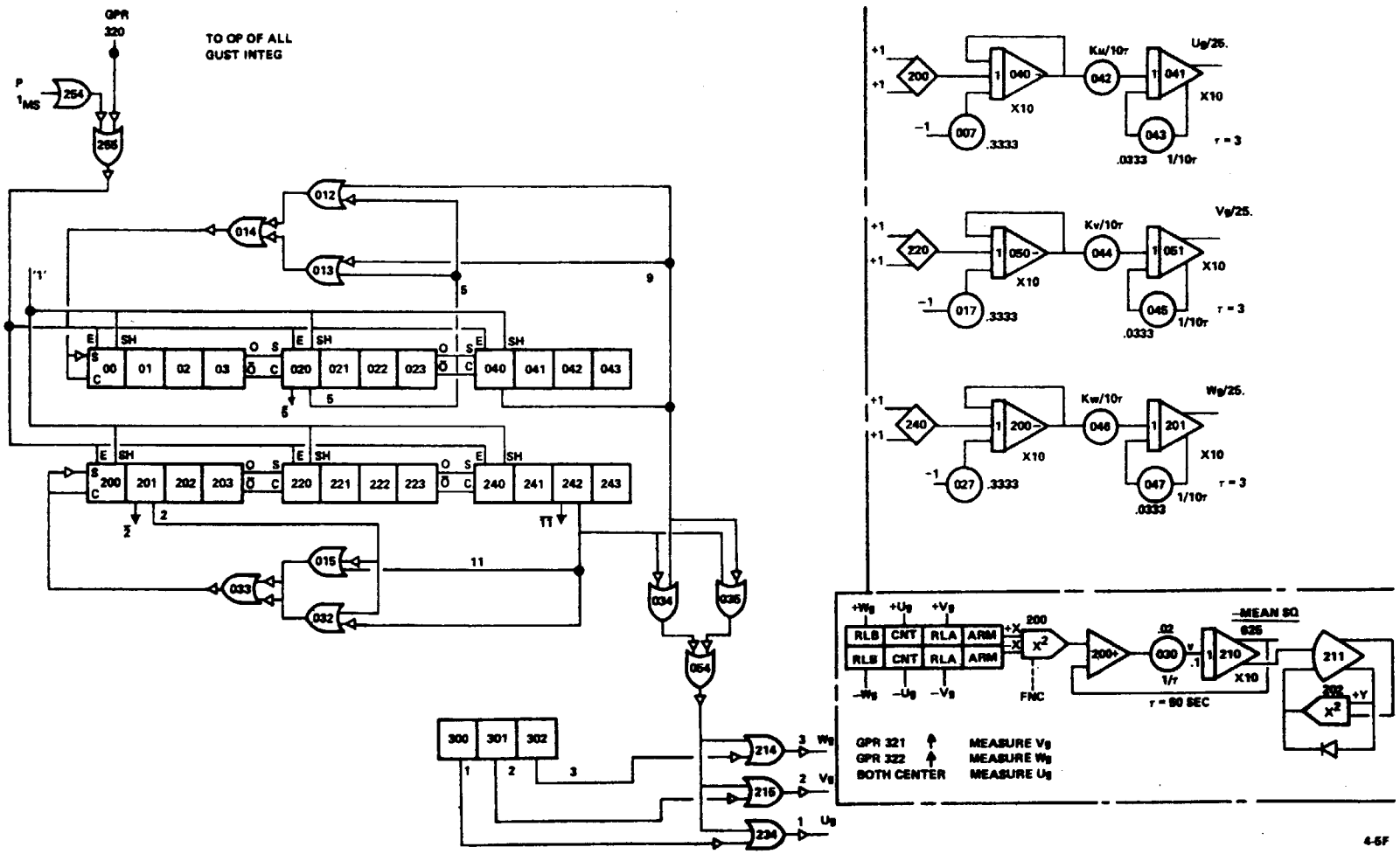

Figure G.8. (Continued)

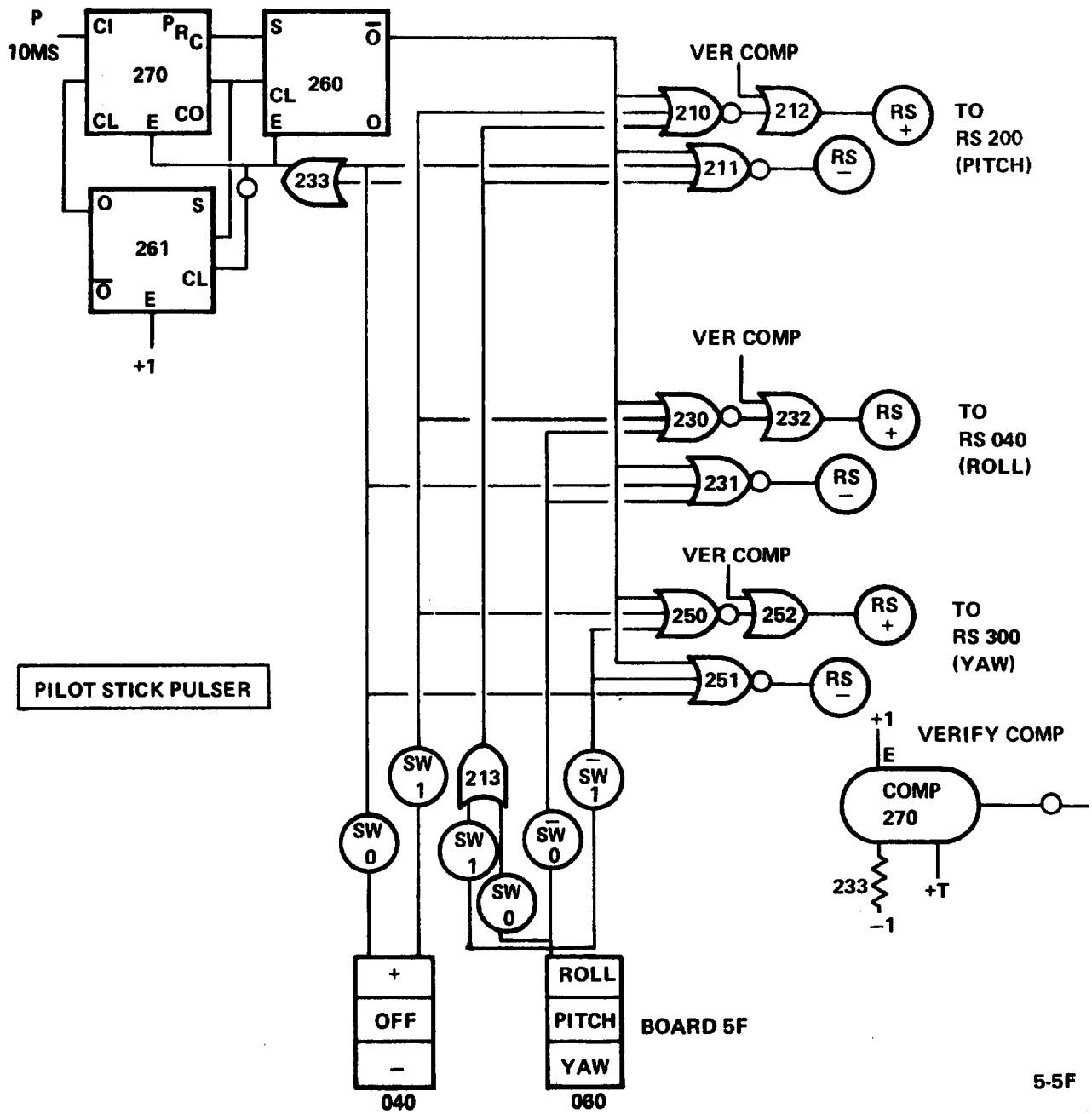

Figure G.8. (Continued)

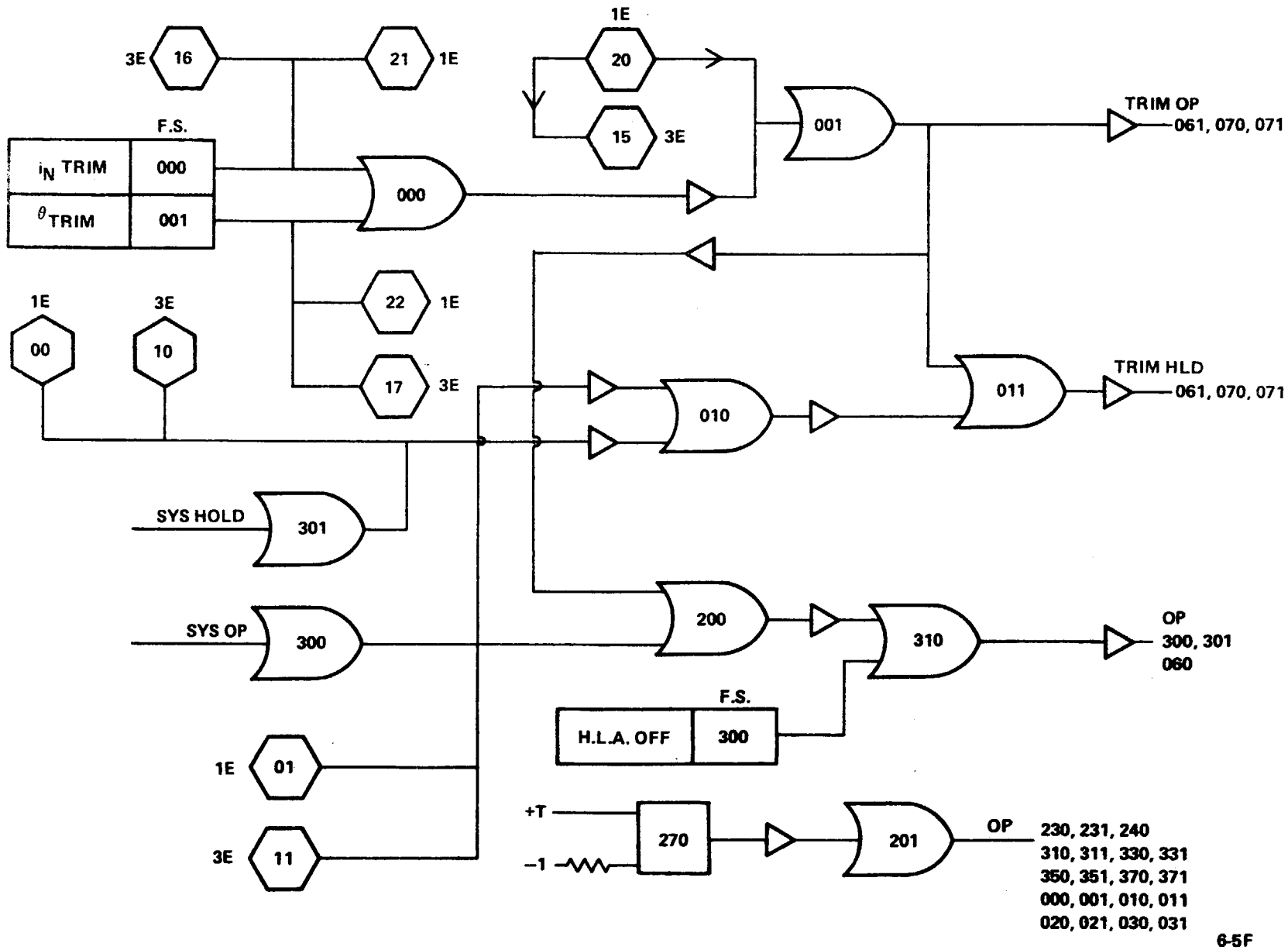

Figure G.8. (Continued)

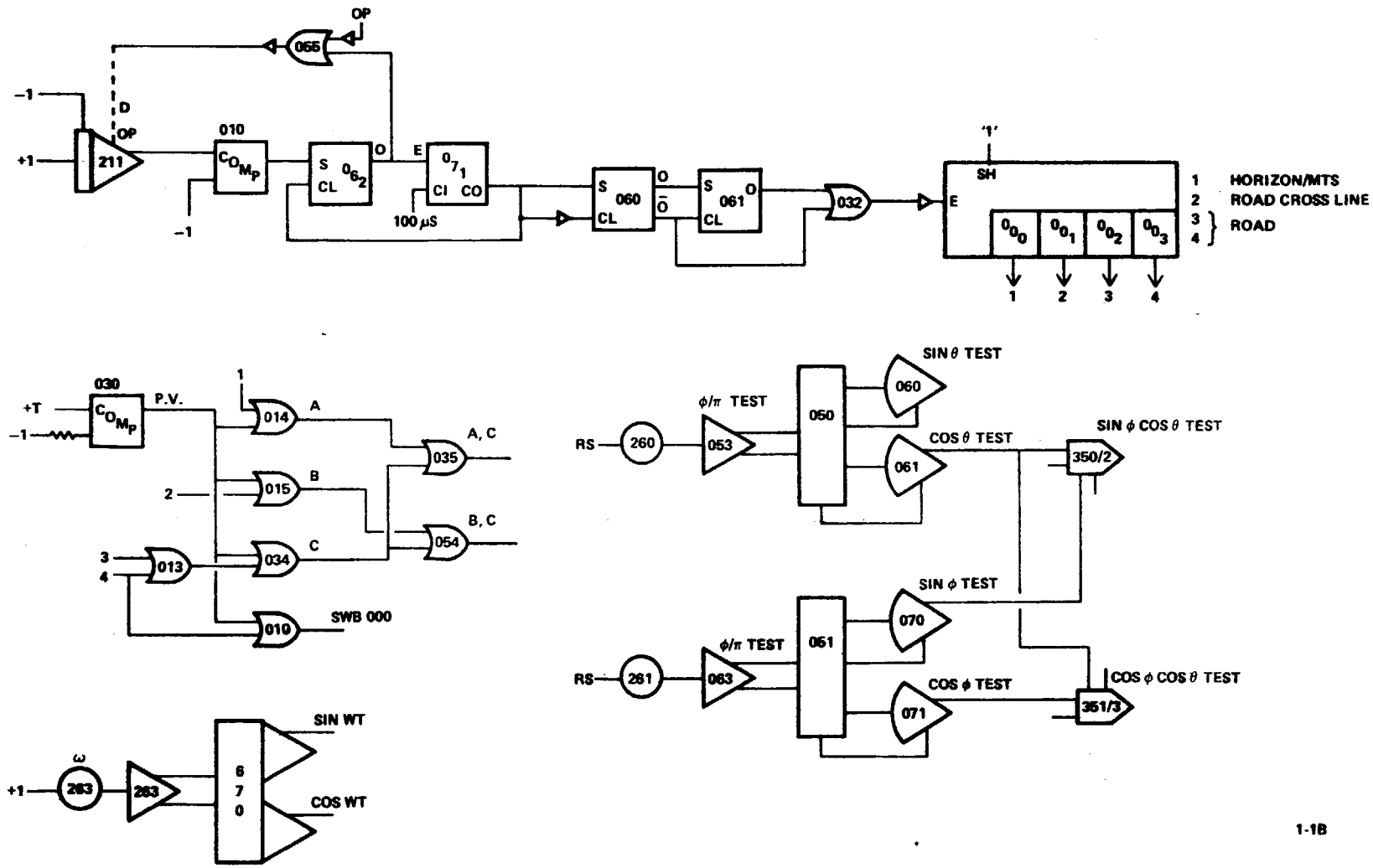

Figure G.8. (Continued)

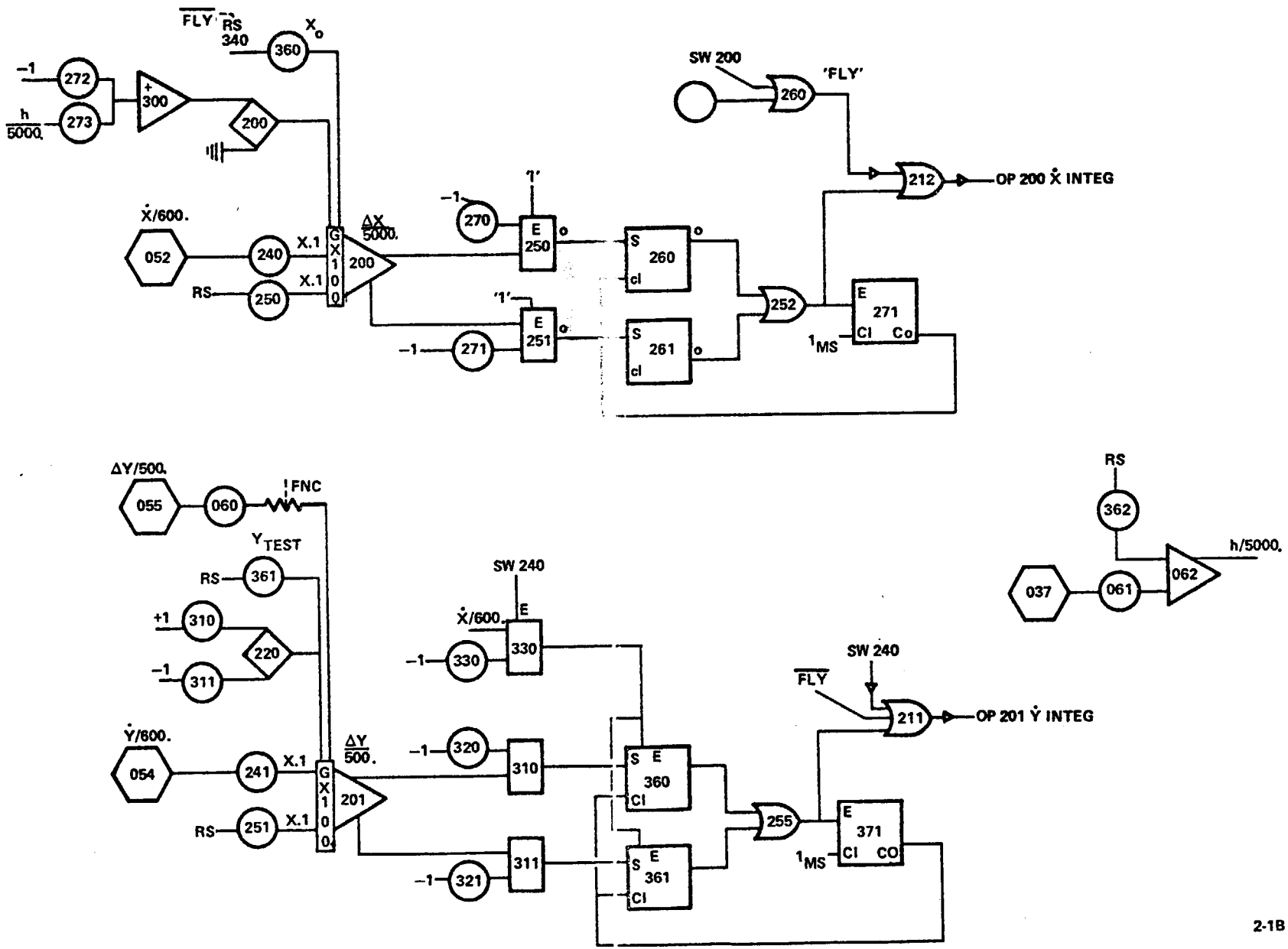

2-1B

Figure 3.8. (Continued)

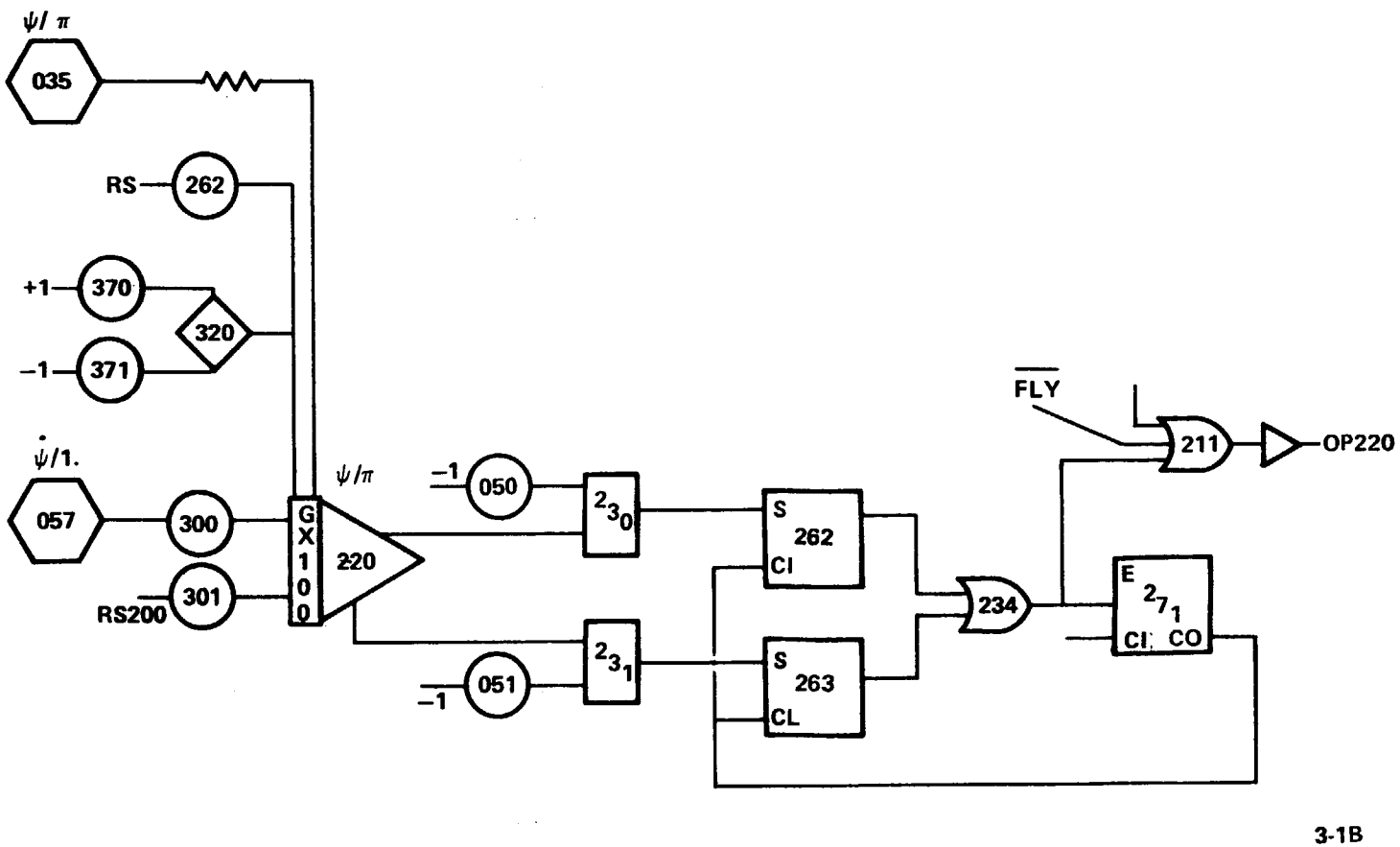

Figure G.8. (Continued)

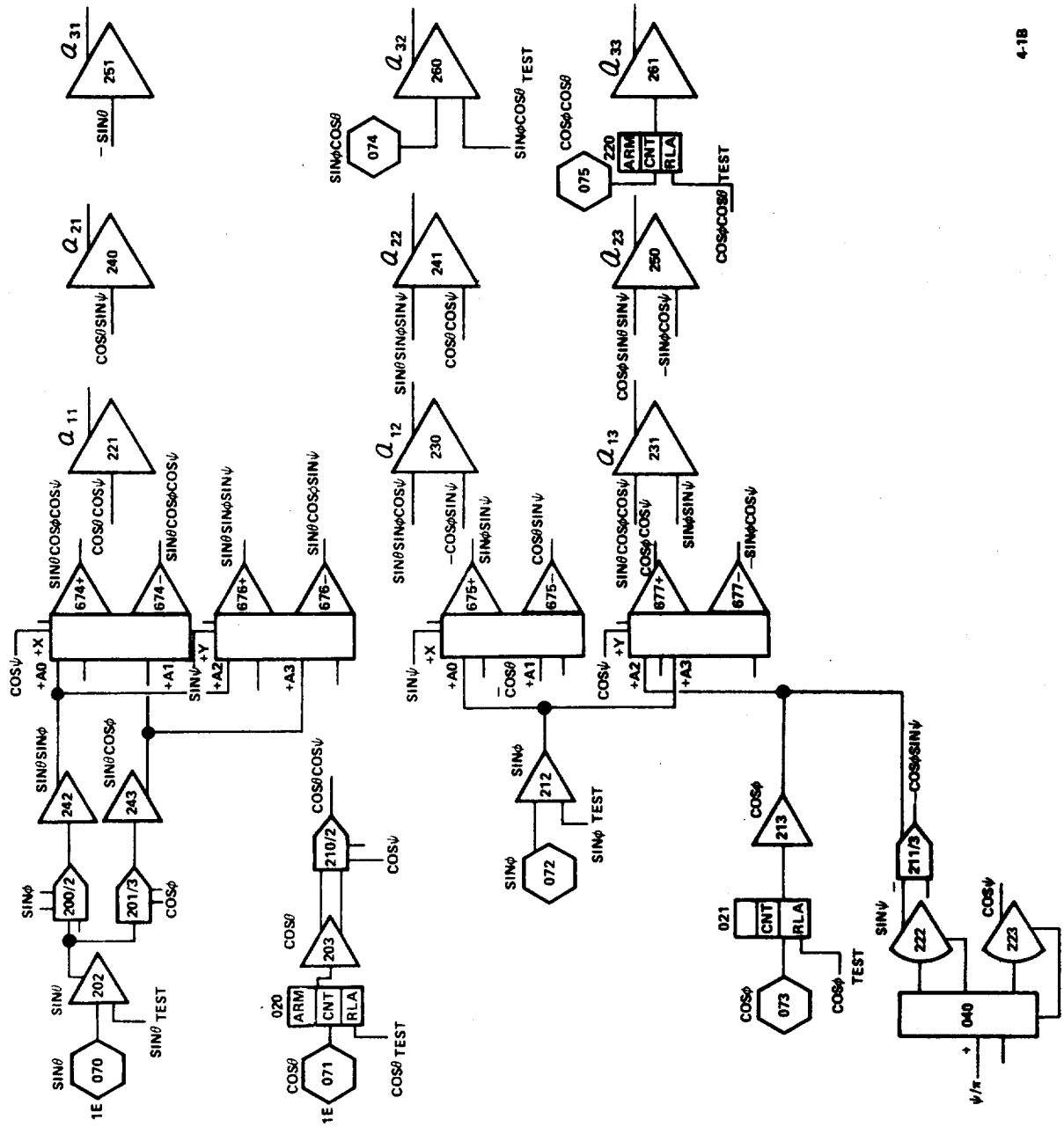

Figure G.8. (Continued)

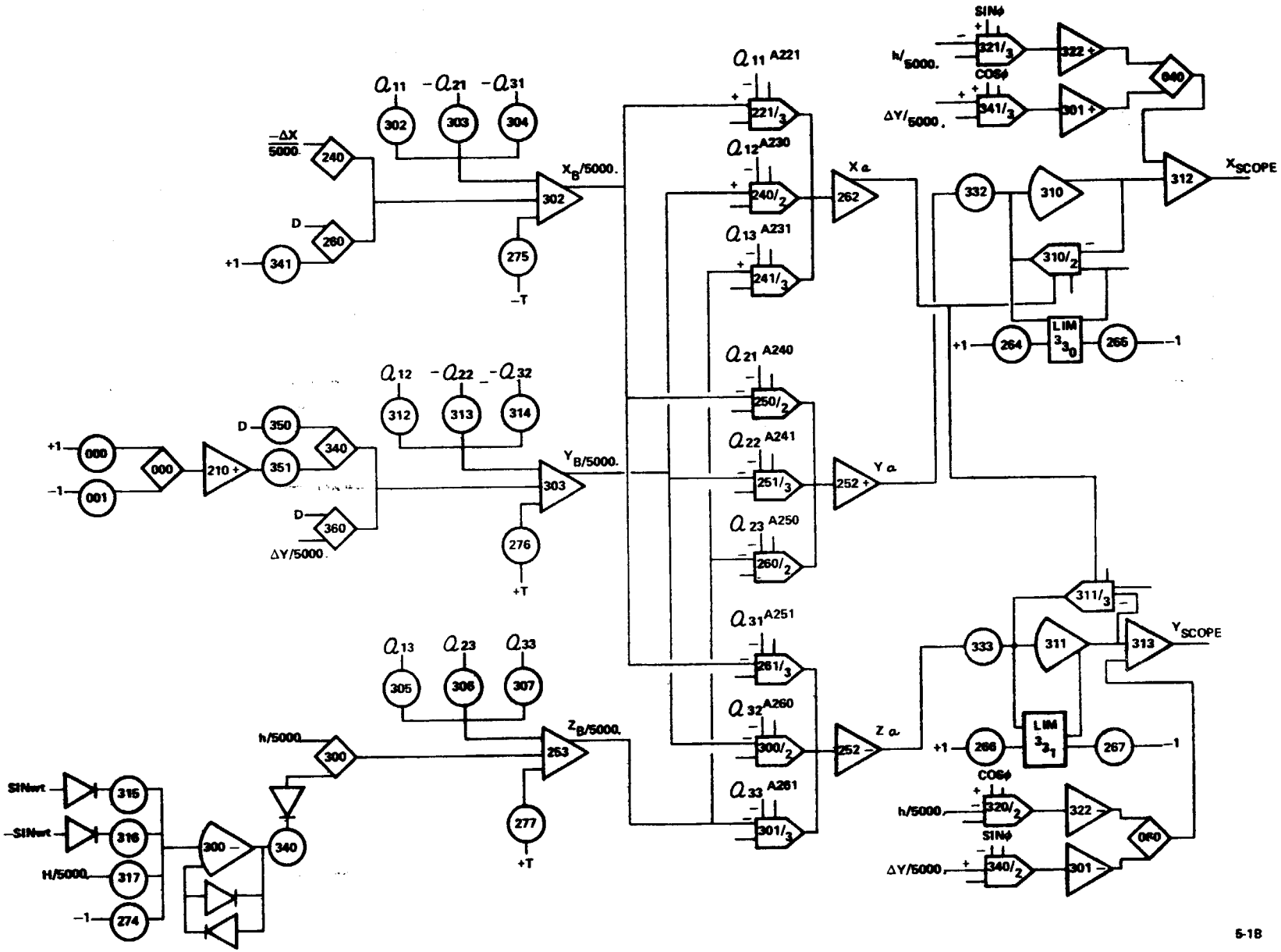

Figure G.8. (Continued)

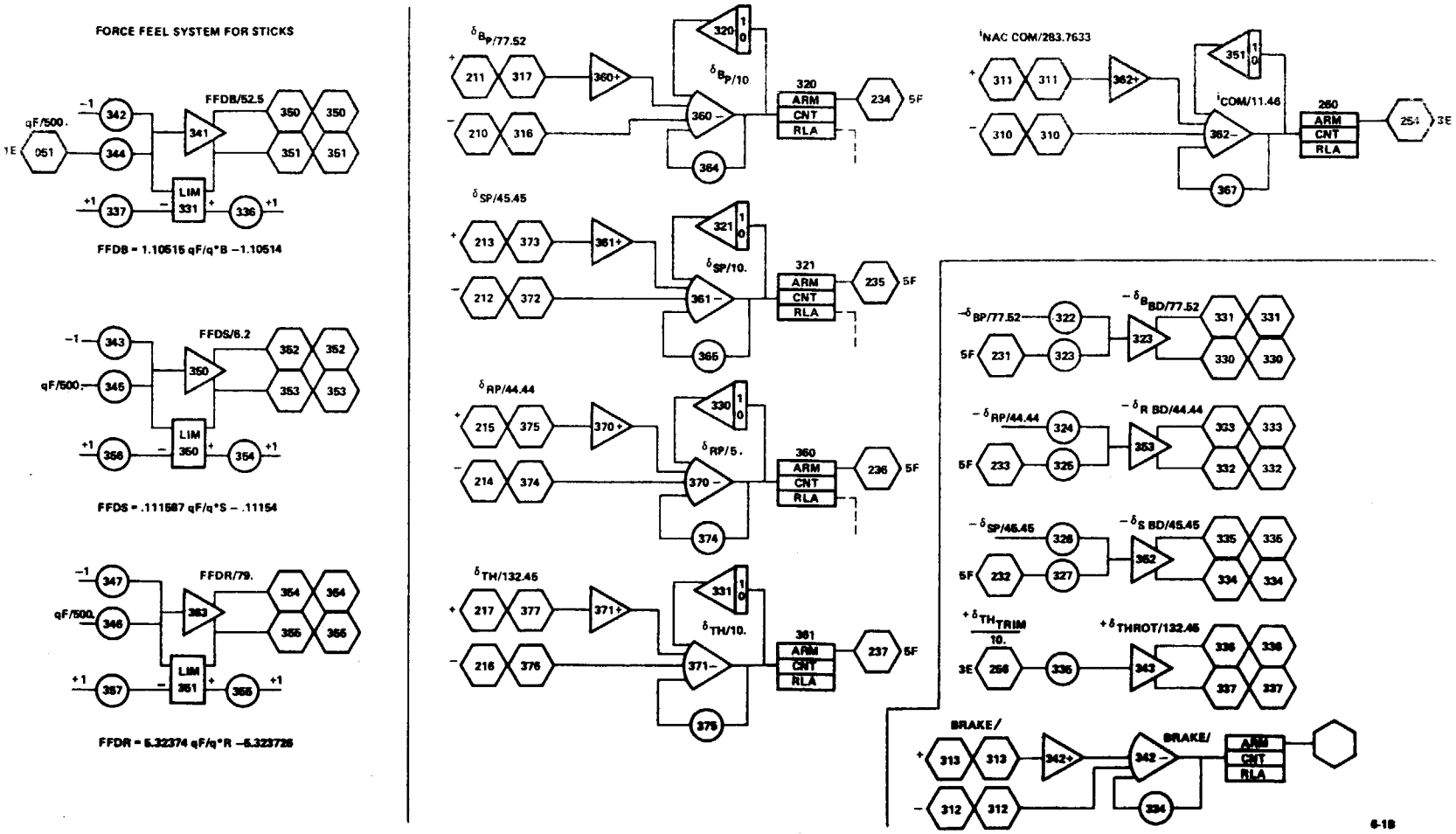

Figure G.8. (Continued)

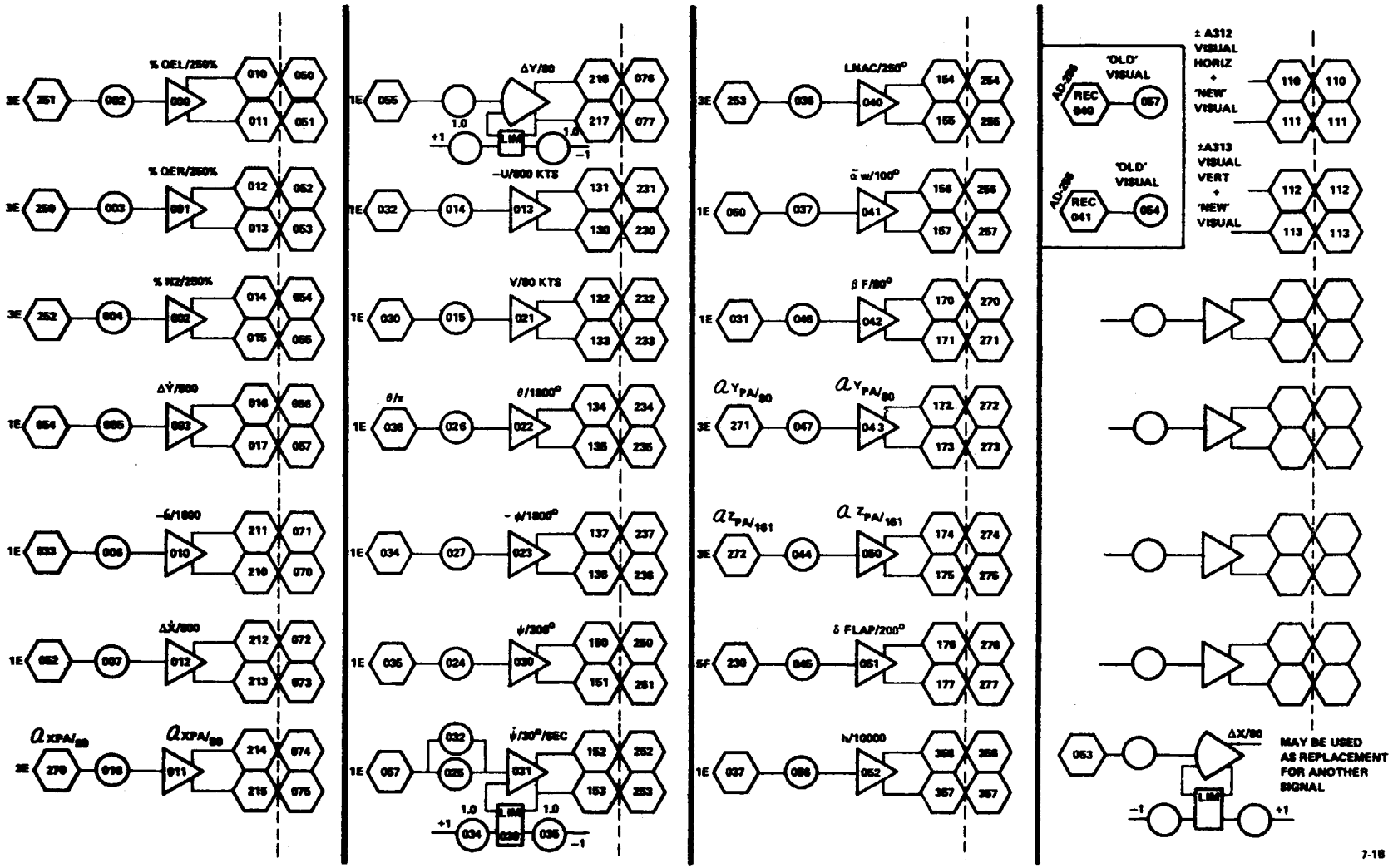

Figure G.8. (Continued)

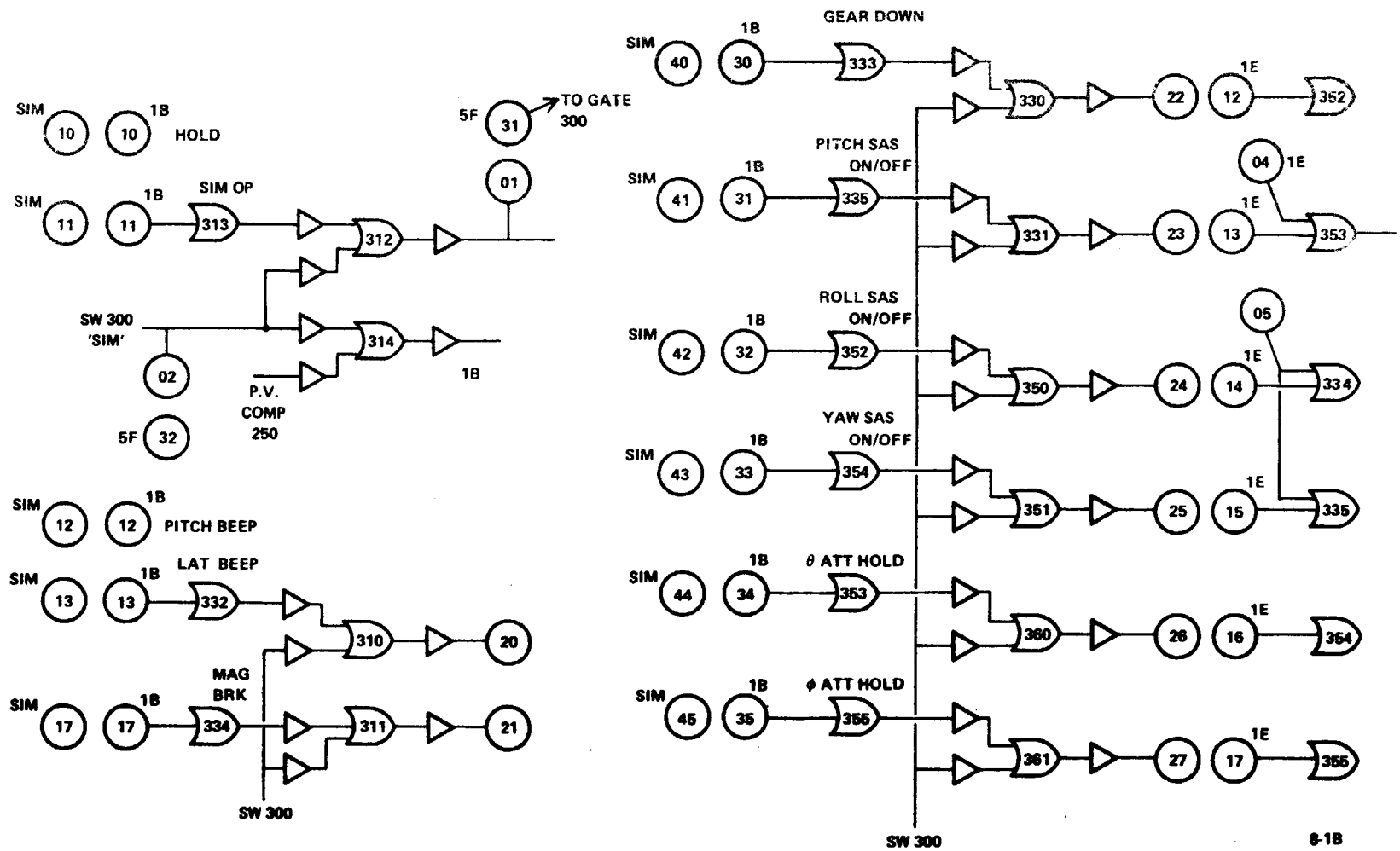

Figure G.8. (Continued)

```
0001          SUBROUTINE STATIC
0002          REAL *8 MATA(5,5),MATB(5),VCT
0003          REAL*8 MATSAV(5,5),MAESAV(5)
0004          COMMON/CDATA/ P1(380),P2(380),P3(380),P4(380),AIP(380),AIN(380),
             *              SJI(380),TRI(380)
0005          COMMON/FLAGS/ IWARN1(19),IWARN2(19),ISENCE(2),IWREVT(2),ICONDP,
             1 ITRIM,JTRIM,KTRIM,NPLOT,MPLOT2,IPHASE,ISLOW,SWLG,SOUTCN,
             2 ISTA,ISTB,NGEE,NVG,MTWST
0006          LOGICAL*1  IWARN1,IWARN2
0007          COMMON/HYBCON/PROJ   ,NCONSL,NPCS(2),NCHAIN(2),IFRAME(2),NADCS(2),
             *              BDNOS(4),NDACS(4),IRCX(4),IFC(4),NCON(4) ,LETR(4) ,
             *              IC(19)   ,ISTIC   ,HOLD(19),ISTHO,OPERA(19),
             *              ISTGO    ,DIGAN(19),ISTDA   ,ANDIG(19),ISTAD,
             *              IC2(19)  ,ISTIC2   ,HOLD2(19),ISTHO2 ,OPERA2(19),
             *              ISTGO2   ,DIGAN2(19),ISTDA2   ,ANDIG2(19),ISTAD2, IGN,
             *              ISTPLT   ,IPUNIT,IAD,IDC,IDC21,ICLR,ITSC,ILEX,ISETC ,
             *              MONDIG   ,IDUPC(4)   ,ISHRC(4) ,ISYNC(4) , NIOS   ,
             *              THJB     ,IFCHAN     ,TSBASE(2),TSREQD(2), IRCTS(4),
             *               TAUL(4) ,IPSNCS(10,2),DTIM(2) ,TRIM(19) ,ISTRM ,
             *               TRIM2(19),ISTRM2
C                                                                          STK00390
0008          COMMON/VIC/    PIC,QIC,RIC,UIC,VIC,WIC,THEIC,PHIIC,PSIIC,XIC,YIC,
             1       XIC,PSAS1,PSAS2,PSAS3,PSAS4,RSAS1,RSAS2,RSAS3,RSAS4,VSAS1,
             2       VSAS2,VSAS3,VSAS4,VSAS5,VSAS6,SASPL(2),
             3       TMS1,SHPBIC,SHRBIC,DLTHP,DMDGIC,
             3       THPBIC,AIRBIC,AINBDI,AIRBIC,AINLDI,AINLIC,RDT1,RDT2,GLSBIC,
             4       GLSAIC,GLSAIL,VICAL(2),GBICP,GAICP ,AICRDI,AICSIC,AICLDI,
             5       AICLIC,BICRDI,BICRIC,BICLDI,BICLIC,AICRPD,AICRP,AICLPD,
             6       AICLP,BICRPD,BICRP,BICLPD,BICLP,ALARDI,ALARIC,AMARDI,
             7       AMARIC,ZARDIC,ZARIC,DCVIC,SHPIC
0009          COMMON/DIGICS/ XAERPD,YAERPD,ZAERP,ZARP,ALAERP,ALARP,AMAERP,AMARP,
             1       AMAERD,GLSB,GLSAR,GLSAL,SHPRBR
0010          COMMON/XIC1/   DELR,DELS,DELR,DELTH,AINCOM,GMGSCL,
             1       GLATPH,GPDEL,GBETPH,GPSIPH,GPRPH,GYAW,AINREF,GPPLON,GDSCOL,
             2       GDRCYL,GDSCYL,GAIC,GBIC,GDELP,GDE,GDSP,TPS,DVTAUD,DVTAUE,
             3       THATLM,GDTHRT,RCABLK,THGDVL,THGDVR,SWDIT,CTC,CMDQR,CYMC,
             4       CPMC,CSEC,CNEC,CPD,DLSPLM
0011          COMMON/TRMCON/ UTRIM,VTRIM,WTRIM,HDTRIM,THTRIM,ATTRIM,
             1               SKTRIM(13)
0012          COMMON/XMAX/ ENF1   ,ENF2   ,ENF3   ,ENF4   ,DNF1   ,DNF2   ,DNF3   ,      1  TO  7
             *             DNF4   ,ESF1   ,ESF2   ,ESF3   ,ESF4   ,DSF1   ,DSF2   ,      8  TO 14
             *             DSF3   ,DSF4   ,EPM1   ,EPM2   ,EPM3   ,EPM4   ,EPM5   ,     15  TO 21
             *             EPM6   ,EPM7   ,DPM1   ,DPM2   ,DPM3   ,DPM4   ,DPM5   ,     22  TO 28
             *             DPM6   ,DPM7   ,EYM1   ,EYM2   ,EYM3   ,EYM4   ,EYM5   ,     29  TO 35
             *             EYM6   ,EYM7   ,DYM1   ,DYM2   ,DYM3   ,DYM4   ,DYM5   ,     36  TO 42
             *             DYM6   ,DYM7
0013          COMMON/XMAX/   PDOTMX,QDOTMX,RDOTMX,UDOTMX,VDOTMX,WDOTMX,UMX,VWMX,
             1       ZARMX,YDOTMX,XDOTMX,ZMX,YMX,XMX,DELBMX,DELSMX,DELRMX,
             2       DLRDMX,DELAMX,DELEMX,DLSPMX,DLTHMX,GLSMX ,TPSMX,THATMX,
```

Figure G.9. Analog Static Check Routine (Digital)

```
                3        SHPMX,THDMAX,TEMDMX,DMEGMX,TTGSMX,DCYLMX,DCOLMX,DLONMX,
                4        XMXDL,AICMX,BICMX,TH75MX,ALERMX,AMIDMX,CTMX,CPMX,CNFMX,
                5        CSFMX,CPMMX,CYMMX,CPMDMX,CYMRMX,ASFSMX,AIDDMX,AIMDMX,
                6        AIAMX,AINRMX,AMACMX,THEMX,PHIMX,PSIMX,GSCYMX,GECYMX,
                7        GSCDMX,GECDMX,TAUEMX,GICMX,ALWGMX,SOFMX,XCGMX,RCTDMX,
                8        DLFLMX,GUSTMX,
                9        PMX,QMX,RMX,THDMX,PHDMX,PSDMX
0014             COMMON/XPAR1/ AINHT ,AINW  ,ALAMDA,ALHTST,ALVTST,AREAHT,AREAW ,    1  TO  7
               *AREAVT,ARHT  ,ARVT  ,AVEYAC,AVEYCS,BLS   ,CDOF  ,CDOHT ,CDOVT ,    8  TO 16
               *CHORD ,CLALHT,CLALPH,CMOF  ,CMON  ,CNOF  ,CNOLN ,CNORN ,CYALVT,   17  TO 25
               3DCDLG ,DCMLG ,FINPR ,DOVT  ,DSDBET,EFFHT ,EFFVT ,FIE   ,FINDEG,   26  TO 34
               *FIP   ,FIXXF ,FIXXPR,FIXXW ,FIXZF ,FIXZPR,FIXZW ,FIYYF ,FIYYPR,   35  TO 43
               *FIYYW ,FIZZF ,FIZZPR,FIZZW ,HP    ,OMREF ,PC    ,PI    ,ROTRAD,   44  TO 52
               *SBFPR ,SBWPR ,SG    ,SHF   ,SHW   ,SK0   ,SK1   ,SK2   ,SK3   ,   53  TO 61
               *SK4   ,SK5   ,SK6   ,SK7   ,SK8   ,SK9   ,SK10  ,SK20  ,SK21  ,   62  TO 7.
               *SK22  ,CDONLO,SK30LO,SK31LO,SK32  ,CDONHI,SK34  ,SK35  ,SK36  ,   71  TO 79
               *SK37  ,SK38  ,SK39  ,SK40  ,SK41  ,SK42  ,SK43  ,SK44  ,SK45  ,   8.  TO 88
               *SK46  ,SK47  ,SK48  ,SK49  ,SK50  ,SL    ,SLF   ,SLPA  ,SLW   ,   89  TO 97
               *SM    ,SMF   ,SMN   ,SMW   ,SPAN  ,TAUHT ,TAUVT ,XFAC  ,XHT   ,   98  TO 1.6
               *XWAC  ,XVT   ,YN    ,YPA   ,YWAC  ,ZFAC  ,ZHT   ,ZPA   ,ZWAC  ,
               *ZVT   ,CLDAL ,PHIPH ,SK30HI,EN2REF,XWCP  ,BT1   ,BT2   ,BT3   ,
               *BKD1T ,BKD2T ,BKD3T ,BKM1T ,BKM2T ,BKM3T ,BKM4T ,SK31HI,
               *FEU   ,CLMAX ,ALBRK ,BKLSW ,BKNSW ,SOFRPM,DEG20 ,DGTORD,HTVTKT,   133TO141
               *PIOV2 ,ROTDOG,ROTFPS,SKFPS ,ALWGBW,TAURT1,TAURT2
0015             COMMON/XCNTRL/ SKDLP,SKDLS,SKDLB,SKDLE,SKDLRD,TH75LP,TH75LN,
                1        TAUDLS,GLSL4,TAUSIC,GICLM,TDMC,TDMSLP,TDMLM,GTEM,DMA,ETAA,
                2        SKDA ,GTH,TAUTH,DMGF,DMSLP,DMLM,GDMG,SKDCDL,THETLM,THDMLM,
                3        THDMLM,SHPL4,GTHGOV,DMRD,ETARD,TTMSLP,TTMSLN,GDR1,GDR2,
                4        TAUDR,GQ,GTHE,TAUQ1,TAUQ2,TAUTHE,GLPD,GLPSLP,GPDS,TAUPDS,
                5        GP,TAUP,GBETP,TAUBET,GPHI,TAUPHI,GPSIDR,GBETDR,GRDR,TAUDR,
                6        GPSI,TAUPSI,GBETR,TAUPR,GPR1,TAUPR1,GR,TAUR1,TAUR2,TAUR3,
                6        RLM,DRLM,DLBLM,DLSLM,DLPLM,
                7        TOMDLM,GDLTH,SKW1,SKW2,SKW3,SKW4,SKW5,
                8        SKW6,SKW7,SKW8,SKW9,SKW10,GGUST,TAUGST,DMWB,ETAWB,GIMPF,
                9        DMIPF,ETAIPF,SKTHTW,SC1,SC2,DCMDCL,AINRLM,TAUR01,TAUR02,
                A        TAUFF,TAUCYR,DCYRL4,A0,ASLP,ALTM,TAUSHP,DELALM,
                B        DLFLP0
0016             COMMON/SIMMAT/ AXPAMX,AYPAMX,AZPAMX,XDDMX ,ZDDMX ,FEBMX ,FESMX ,
                1                FERMX ,VSIMX ,BTSIMX,USIMX ,HDTSMX,PHISMX,PSISMX,
                2                THESMX,TQSIMX,RPMSMX,AINSMX,AIDSMX,ALWSMX,DEPSMX,
                3                DBBDMX,DSBDMX,DRBDMX,THBDMX,DBPSMX,DSPSMX,DRPSMX,
                4                DTPSMX,XDTSMX,YDTSMX,DXSIMX,DYSIMX,HSIMX ,PSDTSX
                5               ,BRKMX ,BRKSMX,XVISMX,YVISMX,ZVISMX,SCDPMX
0017             COMMON/SIMPAR/ VISIC ,VCALL ,VCAL2 ,XHORIZ,YRDAD ,QSTAR3,QSTAR5,
                1                QSTARB,BDB   ,BDS   ,BDR   ,BSLOPE,SSLOPE,RSLOPE
                2               , FELMLO,COMIDT,COMDTH,COMDLB,COMDLS,COMDLP,BRAKE ,
                3                VISVER,VISHOR,SCDPLM,FREQMT,BIASMT,PKMT1 ,PKMT2 ,
                4                GZMTS1,GZMTS2,SLX   ,SLY   ,SLZ   ,XBIC  ,YBIC  ,
                5                ZBIC  ,XDTEST,YDTEST
```

Figure G.9. (Continued)

```
0018          COMMON/XPARB3/ XP3(91)
             2              ,SFTL   ,SFJFL  ,SFSFL  ,SFPAL  ,SFYAL  ,SFQL   ,SFOL   ,
             3               SFTR   ,SFNFR  ,SFSFR  ,SFPAR  ,SFYAR  ,SFQR   ,SFOR
0019          DIMENSION A2P(38C),A2N(38C),SJ2(38C),TR2(38C),A3P(38C),A3N(38C),
             *          SJ3(38C),TR3(38C)
0020          DIMENSION A4P(38C),A4N(38C),SJ4(38C),TR4(38C)
0021          EQUIVALENCE (A1P,A2P),(A1N,A2N),(SJ1,SJ2),(TR1,TR2)
0022          EQUIVALENCE (A1P,A3P),(A1N,A3N),(SJ1,SJ3),(TR1,TR3)
0023          EQUIVALENCE (A1P,A4P),(A1N,A4N),(SJ1,SJ4),(TR1,TR4)
0024          DATA ED4/'IR  '/,LT4/'R   '/
        C
        C
0025          DATA VDETI/55./
0026          DATA THPCTU/0.6/
0027          DATA AINDET/0.25/
0028          DATA  QINRF/85.9/,ANRATE/2.2/
0029          DATA CBAIS/0.3333/,TAUGMN/50./
        C        DEFINE VALUES TO CERTAIN VARIABLES FOR CHECKOUT PURPOSES
0030          DATA RCTQ/64./,AVEALW/0.47/
0031          DATA RCFL/0.002378/
        C
        C                    COEFFICIENT
        C     PDOT     QDOT     RDOT     AINDDR   AINDDL
        C
        C     1,1      1,2      1,3      1,4      1,5      PDOT  .
        C                                                        .
        C     2,1      2,2      2,3      2,4      2,5      QDOT  .
        C                                                        .
        C     3,1      3,2      3,3      3,4      3,5      RDOT      EQUATION
        C                                                        .
        C     4,1      4,2      4,3      4,4      4,5      AINDDR .
        C                                                        .
        C     5,1      5,2      5,3      5,4      5,5      AINDDL.
        C
        C
        C
0032          P  =  PIC
0033          Q =  QIC
0034          R= RIC
0035          U=  UIC
0036          V=  VIC
0037          W =  WIC
0038          THE = THEIC
0039          PHI= PHIIC
0040          PSI=  PSIIC
0041          H= -ZIC
0042          AINRF = AIRFIC+AINREF
0043          AINR = AINRIC
0044          AINL = AINLIC
```

Figure G.9. (Continued)

```
0045          AINDTL  = AINLDI
0046          AINDTR  = AINRDI
0047          OMGCOM  = XLIM(OMLM,OMGS,OMGC+OMGSEL+OMGLP*AINRE)
0048          OMEGA   = OMEGIC+OMGCOM
0049          THOM    = THOMIC+UIC*THOMMX/OMX*THPCTU-GDTHRT*DLTH2*GDLTH
0050          CPMDD   = CMDOR
0051          CYMDR   = CMDOR
0052          CPL     = CPD
0053          CPR     = CPD
0054          CNFPL   = CNFD                                          STK 2480
0055          CNFPR   = CNFD                                          STK 2490
0056          CSFPL   = CSFD                                          STK 2500
0057          CSFPR   = CSFD                                          STK 2510
0058          CPMDL   = CPMD
0059          CPMDR   = CPMD
0060          CPMDL   = CPMDD
0061          CPMDR   = CPMDD
0062          CYMDL   = CYMD
0063          CYMDR   = CYMD
0064          CYMRL   = CYMDR
0065          CYMRR   = CYMDR
0066          PCTDR   = PCTD
0067          PCTDL   = PCTD
        C
0068          CONI    = SMN*SL*SL*(1.-SMN/SM)+FTXYZ
        C
0069          CALL SINCOS(PHGLS*DGTORD,SPHGLS,CPHGLS)
0070          CALL SINCOS(THE,SINTHE,COSTHE)
0071          CALL SINCOS(PHI,SINPHI,COSPHI)
0072          CALL SINCOS(PSI,SINPSI,COSPSI)
0073          CALL SINCOS(AINR,SININR,COSINR)
0074          CALL SINCOS(AINL,SININL,COSINL)
0075          CALL SINCOS(AINR-ALAMDA,SILAMR,CILAMR)
0076          CALL SINCOS(AINL-ALAMDA,SILAML,CILAML)
0077          CALL SINCOS(2.0*AINR,S2INR,C2INR)
0078          CALL SINCOS(2.0*AINL,S2INL,C2INL)
0079          CALL SINCOS(2.0*(AINR-ALAMDA),SNDUM1,C2LAMR)
0080          CALL SINCOS(2.0*(AINL-ALAMDA),SNDUM2,C2LAML)
0081          SSQINR =  SININR * SININR
0082          SSQINL =  SININL * SININL
0083          CALL SINCOS(AINW,SINIW,COSIW)
0084          AVEIN =  0.5 *(AINR +AINL)
0085          CALL SINCOS(PHIPH,SPHIP,CPHIP)
        C
        C        GROUND TRACK
        C
        C        NORTHWARD VELOCITY
0086          VNORTH= U*COSTHE*COSPSI+V*(SINPHI*SINTHE*COSPSI-COSPHI*SINPSI)
            *    +W*(COSPHI*SINTHE*COSPSI+SINPHI*SINPSI)
```

Figure G.9. (Continued)

```
C          EASTWARD VELOCITY
0087       VEAST= U*COSTHE*SINPSI+V*(SINPHI*SINTHE*SINPSI+COSPHI*COSPSI)
         =  +W*(COSPHI*SINTHE*SINPSI-SINPHI*COSPSI)
C          DOWNWARD VELOCITY
0088       VDOWN= -U*SINTHE+V*SINPHI*COSTHE+W*COSPHI*COSTHE
C
0089       XDOT=  VNORTH
0090       YDOT=  VEAST
0091       ZDOT=  VDOWN
0092       HDOT=  -VDOWN
0093       HSQ=  H*H
C
C          CENTER OF GRAVITY CALCULATION
C
C
C          CG LOCATION W.R.T. PIVOT
0094       XCG = (SMF*SLF+SMW*SLW)/SM+SL*SMN/SM*(CILAML+CILAMR)
0095       ZCG = (SMF*SHF+SMW*SHW)/SM-SL*SMN/SM*(SILAML +SILAMR )
C          CG VELOCITY W.R.T. PIVOT( NON-ROTATING AXES)
0096       XDTCG= -SL*SMN/SM*(AINDTL*SILAML+AINDTR*SILAMR )
0097       ZDTCG= -SL*SMN/SM*(AINDTL*CILAML+ AINDTR *CILAMR)
C
C          DENSITY CALCULATIONS
C          EQUATION FOR DEL FROM CURVE FIT PROGRAM
C
0098       DEL = .9995883407 -.3623432596E-04 * H
         + +.5429951710E-09 *HSQ -.3720813304E-14 *HSQ * H
C
0099       TDEGF=  TZERO -TGDEF*H
0100       THETC=  .00192793 3*(TDEGF+459.69)
0101       SQTHTC= SQRT(THETC)
0102       ONOVTC = 1. / THETC
0103       ROE = ROEO*DEL*ONOVTC
0104       ROPI45= ROE*PI*ROTRAD**5
0105       VTOTAL= SQRT(U*U+V*V+W*W)
0106       VCALIB = VTOTAL*SQRT(ROE/ROEO)
C
C          FUSELAGE- PIVOT VELOCITY
C
0107       UP =  U - Q*ZCG -XDTCG
0108       VP=  V + P*ZCG -R*XCG
0109       WP=  W + Q*XCG -ZDTCG
C
C
C
C          FUSELAGE AERODYNAMICS
C
C             INPUT EQUATIONS
0110       VALFS=  SQRT(U*U+W*W)
```

Figure G.9. (Continued)

```
0111          ALPHF=  ATAN2(W,U)
0112          BETAF=  ATAN2(V,VALFS)
0113          SQF= 0.5*RDE*VTOTAL*VTOTAL
        C        LEFT ROTOR HUB VELOCITY - BODY AXES
0114          URLPR = UP +R*YN -BLS*SININL*(Q+AINDTL) + Q*HIL
0115          VRLPR = VP +BLS*(R*COSINL+P*SININL ) -P* HIL
0116          WRLPR = WP -P*YN -BLS*(Q+AINDTL)*COSINL + HIDTL
        C        RIGHT ROTOR HUB VELOCITY - BODY AXES
0117          URRPR = UP- R*YN -BLS*SININR*(Q+AINDTR) +Q* HIR
0118          VRRPR = VP + BLS*(R*COSINR+P*SININR) -P* HIR
0119          WRRPR = WP +P*YN -BLS*(Q+AINDTR)*COSINR + HIDTR
        C        LEFT ROTOR HUB VELOCITY - SHAFT AXES
0120          URL =  URLPR*COSINL -WRLPR*SININL
0121          VRL =  VRLPR
0122          WRL =  URLPR*SININL +WRLPR*COSINL
        C        RIGHT ROTOR HUB VELOCITY - SHAFT AXES
0123          URR = URRPR*COSINR -WRRPR*SININR
0124          VRR = VRRPR
0125          WRR = URRPR*SININR +WRRPR*COSINR
        C
        C        ROTOR  INPUT EQUATIONS (AERO)
        C
        C        FREE STREAM VELOCITY
0126          VTOTRR = SQRT(URR*URR +VRR*VRR +WRR*WRR )
0127          VTOTLR = SQRT(URL*URL+ VRL*VRL +WRL*WRL )
0128          WROTL=  WRL+EPWRL*URL
0129          WROTR=  WRR + EPWRR*URR
0130          VZETL=  SQRT(VRLVRL+WROTL*WROTL)
0131          VZETR=  SQRT(VRRVRR+ WROTR*WROTR)
        C        ANGLE OF ATTACK
        C
        C
        C        NOTE  ALPHRR AND ALPHLR ARE DEFINED BETWEEN 0 AND 180 DEGREES
        C                    I.E.  90 +OR- 90  DEGREES
0132          ALPHLR=  ATAN2(VZETL,URL)  + EPIRL
0133          ZETHL=  ATAN2(VRL,WROTL)
0134          CALL SINCOS(ZETHL,SINZHL,COSZHL)
0135          ALPHRR=  ATAN2(VZETR,URR)  + EPILR
0136          ZETHR=  ATAN2(VRR,WROTR)
0137          CALL SINCOS(ZETHR,SINZHR,COSZHR)
        C
        C        ROTOR ANGULAR RATE TRANSFORMS
        C
        C        LEFT ROTOR - NACELLE AXES
0138          PNLN =  P*COSINL - R*SININL
0139          QNLN =  Q + AINDTL
0140          RNLN =  P*SININL + R*COSINL
        C        LEFT ROTOR -  WIND AXES
0141          PNLR  =  PNLN
```

Figure G.9. (Continued)

```
0142          QNLR  =  QNLN*COSZHL -RNLN*SINZHL
0143          RNLR  =  RNLN*COSZHL +QNLN*SINZHL
        C        RIGHT ROTOR - NACELLE AXES
0144          PNRN = -P*COSINR + R*SININR
0145          QNRN =   Q+ AINDTR
0146          RNRN = - P*SININR -R*COSINR
        C        RIGHT ROTOR - WIND AXES
0147          PNRR =  PNRN
0148          QNRR =  QNRN*COSZHR +RNRN*SINZHR
0149          RNRR = RNRN*COSZHR  -QNRN*SINZHR
        C
0150          OMEGAL=  OMEGA + PNLR
0151          OMEGAR=  OMEGA + PNRR
0152          VTIPL =   ROTRAD * OMEGAL
0153          VTIPR =   ROTRAD * OMEGAR
0154          AMUL  = VTOTLR/ VTIPL
0155          AMUR  = VTOTRR/ VTIPR
0156          CPMPR = CPMOR -CPMQR*QNRR                                  STK 661
0157          CYMPR = CYMOR +CYMRR*RNRR
0158          CPMPL = CPMOL -CPMQL *QNLR                                 STK 665
0159          CYMPL = CYMOL +CYMRL*RNLR
        C
        C
        C        BASIC EQUATIONS OF MOTION -- PRELIMINARY CALCULATIONS
        C
        C        FUSELAGE
        C
0160          XF =  SLF - XCG
0161          ZF =  SHF - ZCG
        C
        C        WING
0162          XW =  SLW - XCG
0163          ZW =  SHW - ZCG
        C
        C        NACELLES
        C
0164          XR =  SL * CILAMR  - XCG
0165          ZR = -SL  * SILAMR  - ZCG
        C
0166          XL =  SL  * CILAML  - XCG
0167          ZL = -SL  * SILAML  - ZCG
        C        INERTIA TERMS
0168          SUMIXX=  FIXXF + FIXXW + 2.* FIXXPR
0169          SUMIYY=  FIYYF + FIYYW + 2.* FIYYPR
0170          SUMIZZ=  FIZZF + FIZZW + 2.* FIZZPR
0171          SUMIXZ=  FIXZF + FIXZW + 2.* FIXZPR
        C
0172          FIXX = SUMIXX+(FIZZPR-FIXXPR)*(SSQINR+SSQINL)-FIXZPR*(S2INR+S2INL)
             *       +2.*SMN*YN*YN +SMF*SHF*ZF +SMW*SHW*ZW -SL*SMN*(ZR*SILAMR +
```

Figure G.9. (Continued)

```
                *       ZL* SILAML )
                C
0173             FJXX = (SUMIZZ-SUMIYY)+(FIXXPR-FIZZPR)*(SSQINR+SSQINL)-FIXZPR*(
                *        S2INR +S2INL )+2.*SMN*YN*YN -(SMF*SHF*ZF+SMW*SHW*ZW) +
                *        SL*SMN*(ZR * SILAMR +ZL*SILAML)
                C
0174             FIXZQ= FIXZF+FIXZW+0.5*(FIXXPR-FIZZPR)*(S2INR+S2INL)+FIXZPR*
                *       (C2INR+C2INL)+(SMF*SLF*ZF+SMW*SLW*ZW)+SMN*SL*(ZR*CILAMR +
                *        ZL* CILAML )
                C
0175             FIYY = SUMIYY+SMF*(SLF*XF+SHF*ZF)+SMW*(SLW*XW+SHW*ZW ) +SMN* SL*
                *       (XR *CILAMR -ZR*SILAMR)+SMN*SL*(XL*CILAML-ZL*SILAML)
                C
0176             FJYY = (FIXXF-FIZZF)+(FIXXW-FIZZW)+(FIXXPR-FIZZPR)*(C2INR+C2INL)
                *       -2.*FIXZPR*(S2INR+S2INL)+SMF*(-SLF*XF+SHF*ZF) +SMW*(-SLW*
                *       XW+SHW*ZW)-SMN*SL*(XR*CILAMR+ZR*SILAMR +XL*CILAML+ZL*SILAML)
                C
0177             FIXZQ = FIXZF+FIXZW+0.5*(FIXXPR-FIZZPR)*(S2INR+S2INL) +FIXZPR*
                *        (C2INR+C2INL)-SMN*SL*(XR*SILAMR +XL* SILAML )
                C
0178             FIZZ  = SUMIZZ +(FIXXPR-FIZZPR)*(SSQINR+SSQINL)+FIXZPR*(S2INR+
                *        S2INL)+2.*SMN* YN*YN+SMF*SLF*XF+SMW*SLW*XW+SMN*SL*(XR*
                *        CILAMR +XL*CILAML)
                C
0179             FJZZ = SUMIYY-SUMIXX +(FIXXPR-FIZZPR)*(SSQINR+SSQINL)+FIXZPR*(
                *        S2INR+S2INL) -2.*SMN* YN*YN+SMF*SLF*XF+SMW*SLW*XW +SMN*SL*
                *       (XR*CILAMR +XL*CILAML)
                C
0180             FIXZR = FIXZF+FIXZW+0.5*(FIXXPR-FIZZPR)*(S2INR+S2INL)+FIXZPR*
                *        (C2INR+C2INL) +SMF*SHF*XF +SMW*SHW*XW -SL*SMN*(XR*SILAMR+
                *        XL*SILAML )
                C
0181             ALARWN = ALARP+ALARIC*FIXX
0182             AMARWN = AMARP+AMARIC*FIYY
0183             ZARWN = ZARP+ZARIC*SM
0184             ALAERQ = ALAERP+ALARWN
0185             AMAERQ = AMAERP+AMARWN
0186             ZAERQ = ZAERP+ZARWN
                C
                C        ROOT EQUATION   CROSS TERMS
                C
0187             TERMP1 = -FJXX*R*Q+P*Q*FIXZP
                C
                C        ROOT EQUATION   CROSS TERMS
0188             TERMQ1 = -FJYY*P*R -FIXZQ*(P*P -R*R)
                C
                C
                C        ROOT EQUATION  CROSS TERMS
0189             TERMR1 = -FJZZ*P*Q -FIXZR*R*Q
```

Figure G.9. (Continued)

```
C
C        ROOT EQUATION   PDOT COEFFICIENT
0190          MATA(1,1) =   FIXX
C        ROOT EQUATION   QDOT COEFFICIENT
0191          MATA(1,2) =  0.
C        ROOT EQUATION   RDOT COEFFICIENT
0192          MATA(1,3) =    -FIXZP
C        ROOT EQUATION   AINDOR COEFFICIENT
0193          MATA(1,4) =  -SL*SMN* YN * CILAMR
C        ROOT EQUATION   AINDOL COEFFICIENT
0194          MATA(1,5) =   SL*SMN* YN * CILAML
C        ROOT EQUATION   FORCING FUNCTION
0195          MATB(1) =  TERMP1 + ALAERO
C
C
C        ROOT EQUATION   PDOT COEFFICIENT
0196          MATA(2,1) =  0.
C        ROOT EQUATION   QDOT COEFFICIENT
0197          MATA(2,2)=   FIYY
C        ROOT EQUATION   RDOT COEFFICIENT
0198          MATA(2,3) =  0.
C        ROOT EQUATION   AINDOR COEFFICIENT
0199          MATA(2,4)=  FIYYRR+SL*SMN*(-ZR*SILAMR +XR*CILAMR )
C        ROOT EQUATION   AINDOL COEFFICIENT
0200          MATA(2,5)=  FIYYRR+SL*SMN*(-ZL*SILAML +XL*CILAML )
C        ROOT EQUATION   FORCING FUNCTION
0201          MATB(2)    =  TERMP1  +  ANAERO
C
C
C        ROOT EQUATION   PDOT COEFFICIENT
0202          MATA(3,1)= - FIXZP
C        ROOT EQUATION   QDOT COEFFICIENT
0203          MATA(3,2) =  0.
C        ROOT EQUATION   RDOT COEFFICIENT
0204          MATA(3,3)=  FIZZ
C        ROOT EQUATION   AINDOR COEFFICIENT
0205          MATA(3,4)=  SMN*SL*YN* SILAMR
C        ROOT EQUATION   AINDOL COEFFICIENT
0206          MATA(3,5)=  -SMN*SL*YN*SILAML
C        ROOT EQUATION   FORCING FUNCTION
0207          MATB(3 )   =  TERMP1  + ANAERO
C
C        AINDOR EQUATION PDOT COEFFICIENT
0208          MATA(4,1)=  0.
C        AINDOR EQUATION QDOT COEFFICIENT
0209          MATA(4,2) = 0.
C        AINDOR EQUATION RDOT COEFFICIENT
0210          MATA(4,3)=  0.
C        AINDOR EQUATION AINDOR COEFFICIENT
```

Figure G.9. (Continued)

```
0211              MATA(4,4)=  1.0
            C        AINDDR EQUATION AINDDL COEFFICIENT
0212              MATA(4,5) =  0.
            C        AINDDR EQUATION FORCING FUNCTION
0213              MATB(4)= OMIRF**2*(AINRF*GINRF*DCYIC-AINP)-2.*ETAIRF*OMIRF*AINDTS
            C
            C        AINDDL EQUATION PDOT COEFFICIENT
0214              MATA(5,1) = 0.
            C        AINDDL EQUATION QDOT COEFFICIENT
0215              MATA(5,2) = 0.
            C        AINDDL EQUATION RDOT COEFFICIENT
0216              MATA(5,3) = 0.
            C        AINDDL EQUATION AINDDR COEFFICIENT
0217              MATA(5,4) =  0.
            C        AINDDL EQUATION AINDDL COEFFICIENT
0218              MATA(5,5)=  1.0
            C        AINDDL EQUATION FORCING FUNCTION
0219              MATB(5)= OMIRF**2*(AINRF-GINRF*DCYIC-AINL)-2.*ETAIRF*OMIRF*AINDTS
            C        SAVE MATA ARRAY
0220              DO 10 JJ=1,5
0221               MABSAV(JJ)=  MATB(JJ)
0222              DO 20 KK=1,5
0223              MATSAV(JJ,KK)= MATA(JJ,KK)
0224        20     CONTINUE
0225        10    CONTINUE
            C
0226              CALL MATINV(MATA,5,5,MATB,1,DET )
            C
0227              PDOT =  MATB(1)
0228              QDOT =  MATB(2)
0229              RDOT =  MATB(3)
0230              AINDDR= MATB(4)
0231              AINDDL= MATB(5)
            C        RESTORE MATA ARRAY
0232              DO 30 JJ=1,5
0233               MATB(JJ)= MABSAV(JJ)
0234              DO 40 KK=1,5
0235              MATA(JJ,KK)= MATSAV(JJ,KK)
0236        40     CONTINUE
0237        30     CONTINUE
            C
            C        AIRCRAFT CONDITION CALCULATIONS
            C
            C        LINEAR EQUATIONS OF MOTION (PSI,THETA,PHI EULER SYSTEM)
0238              UDOT =  XAERO /SM -SG*SINTHE -Q*W  + R* V
0239              VDOT =  YAERO /SM +SG*COSTHE*SINPHI -R*U + P*W
0240              WDOT =  ZAERO /SM +SG*COSTHE*COSPHI +Q*U - P* V
            C        EULER ANGLE CALCULATION  PSI,THETA,PHI  SYSTEM
0241              THEDOT =  Q*COSPHI - R* SINPHI
```

Figure G.9. (Continued)

```
0242          PHIDOT =  P +(Q*SINPHI + R*COSPHI) * SINTHE /COSTHE
0243          PSIDOT =  (Q* SINPHI +R* COSPHI) / COSTHE
        C
        C        C.G. ACCELERATION W.R.T. PIVOT (NON-ROTATING AXES)
0244          XDDCG= -SL*SMN/SM*(AINDDL*SILAML +AINDTL*AINDTL*CILAML +AINDDR*
             *     SILAMR +AINDTR*AINDTR*CILAMR )
0245          ZDDCG= -SL*SMN/SM*(AINDDL*CILAML-AINDTL*AINDTL*SILAML+AINDDR*
             *     CILAMR -AINDTR*AINDTR*SILAMR )
        C
        C        PILOT STATION ACCELERATIONS (BODY AXES)
        C
0246          AVAIL  =  12345678.
0247          ACCXPA=  XAERO/SM - XDDCG
0248          ACCYPA=  YAERO/SM -RDOT*(XCG-SLPA)
0249          ACCZPA=  ZAERO/SM +QDOT*(XCG-SLPA) - ZDDCG    + SG
        C
        C        PILOT STATION VELOCITIES  (BODY AXES)
0250          UPA= UP+Q*ZPA-R*YPA
0251          VPA= VP+ R*SLPA-P*ZPA
0252          WPA= WP +P*YPA-Q*SLPA
        C
0253          AMACRP = ( SMN*SL*YN*CILAMR*RDOT-(SMN*SL*SL*(1.-SMN/SM)+FIYYPR)
             1          *(QDOT+AINDDR)-SMN*SL*YN*SILAMR*RDOT)
0254          AMACLP = (-SMN*SL*YN*CILAML*RDOT-(SMN*SL*SL*(1.-SMN/SM)+FIYYPR)
             1          *(QDOT+AINDDL)+SMN*SL*YN*SILAML*RDOT)
0255          AIRED = XLIM(AINRLM,-AINRLM,AINCOM)
        C
        C        THRUST MANAGEMENT SYSTEM
        C
0256          DLTHPD = GTH/TAUTH*DELTH - DLTHP/TAUTH
0257          AENG = XLIM(ALIM,-1.0,A0-ASLP*SHPIC)
0258          SHP1 = SHPPRP*AENG
0259          DSHP = SHP1-SHPIC
0260          DSHPP = SHP1-SHP2IC
0261          SHP2D = CVTAUD*DSHPP
0262          DSHPPP = SHP2IC-SHP3IC
0263          SHP3D = CVTAUF*S2THTC/DEL*DSHPPP
0264          SHP4 = SHPPRP+SHP3IC-SHP1
0265          SHPD = XLIM(SHPLM,-SHPLM,(SHP4-SHPIC)/TAUSHP)
0266          QAVL = SHPIC/OMEGA
0267          CPRO = 0.5 *(CPL+CPR)
0268          QRQD = CPRO*OMEGA**2
0269          OMDOT = (550.*QAVL-RDPIR5*QRQD)/FIP
0270          DLOMG = OMEGA - OMGCOM
0271          TCMD = XLIM(TCMDLM,-TCMDLM,GOMG*DLOMG)
0272          DTHDOM = XLIM(TOMLM,-,TOMD+TCMSLP*AINRED)
0273          TMS2 = THDM + DTHDOM*GTOM*DLOMG+GDTHPT*DLTHP*GDLTH
0274          TMS10 = XLIM(THRTLM,-THRTLM,1./.1*(TMS2-TMS1-THDM-GDTHPT*DLTHP*
             1          GDLTH))
```

Figure G.9. (Continued)

```
0275          TMS3=  XLIM(THATL4,-THATLM,TMS2-TMS1-THDM-GDTHRT*DLTHP*GDLTH)
0276          THTMS  = XLIM(TTMSLP,TTMSLN,TMS1+THDM+TMS3+GDTHRT*DLTHP*GDLTH)
0277          THTMSR  = THTMS+GTHGDV*THGDVR
0278          THTMSL  = THTMS+GTHGDV*THGDVL
        C
        C
        C        ROTOR THRUST
        C
0279          CTRPRM = ROT1 + CT2*TAUROT1/TAUROT2*SETR
0280          ROT1D = CT2/TAUROT2*SETR-CTRPRM/TAUROT2
0281          CTLPRM = ROT2+CT2*TAUROT1/TAUROT2*SETL
0282          ROT2D = CT2/TAUROT2*SETL-CTLPRM/TAUROT2
        C
        C     SAS (LATERAL, LONGITUDINAL)
        C
        C        PITCH SAS
0283          PSAS1D = (DELB-PSAS1)/TAUDB
0284          PSAS5  = (GQ*Q-GDB2*PSAS1)/TAUQ1
0285          PSAS6  = (GTHE*Q-GDB1*PSAS1)*TAUTHE/TAUTHE
0286          GLONPH = XLIM(1.,0.,GLPE-GLPSLP*VCALTB)
0287          PSAS2D = PSAS5*GLONPH-PSAS2/TAUQ1
0288          PSAS3D = PSAS6*GLONPH-PSAS3/TAUTHE
0289          PSAS7  = PSAS2+PSAS3-PSAS4
0290          PSAS4D = PSAS7/TAUQ2
0291          DELBS  = XLIM(DLBLM,-DLBLM,PSAS7+GLSBIC)
        C        ROLL SAS
0292          RSAS1D = (GPDS*DELS-RSAS1)/TAUPDS
0293          RSAS2D = (GP*P-RSAS2)/TAUP
0294          RSAS4D = (BETAF-RSAS4)/TAUBET
0295          RSAS5=GPHI*P*TAUPHI/TAUPHI
0296          RSAS3D = RSAS5*GLATPH-RSAS3/TAUPHI
0297          RSAS6  = RSAS2+RSAS3-RSAS1
0298          DELSS  = XLIM(DLSLM,-DLSLM,RSAS6*GROLL-RSAS4*GBETP*GBETPH)
        C        YAW SAS
0299          YSAS2D = (DELR-YSAS2)/TAUDR
0300          YSAS7  = XLIM(RLM,-RLM,R)
0301          YSAS9  = XLIM(DRLM,-DRLM,YSAS7)
0302          YSAS8  = (GPSI*YSAS7-GPSIDR*YSAS9)*TAUPSI/TAUPSI
0303          YSAS1D = YSAS8*GLATPH-YSAS1/TAUPSI
0304          YSAS10 = XLIM(DELRMX,-DELRMX,-GBETR*RSAS4-GBETDR*YSAS2)
0305          GLATPR = 1.-GLATPH
0306          YSAS11 = YSAS1+YSAS10*GLATPR
0307          YSAS3D = (P*GPRPH-YSAS3)/TAUPR
0308          YSAS12 = GP*R-GPDR*YSAS2-YSAS4
0309          YSAS13 = YSAS12
0310          IF(VCALTB.LT.VDETI*SKERS) YSAS13 = -YSAS4
0311          YSAS4D = YSAS13/TAUR1
0312          YSAS14 = YSAS12*TAUR2/TAUR3+YSAS5
0313          YSAS5D = (YSAS12-YSAS14)/TAUR3
```

Figure G.9. (Continued)

```
0314          YSAS15 = P
0315          IF(VCALIP.LT.VDETI*SKERS) YSAS15 = 0.
0316          YSAS16 = YSAS15*GYAW
0317          YSAS17 = (GPRI*YSAS16*TAUPRI-YSAS6)/TAUPRI
0318          YSAS17 = YSAS14-YSAS6
0319          DELRS = XLIM(DLRLM,-DLRLM,YSASIL*GPSIPH+YSAS3+YSAS17*GYAW)
        C
        C        CONTROL EQUATIONS
        C
0320          DELBT = DELB
0321          DELST = DELS - DELSS
0322          DELRT = DELR - DELRS
0323          DELRJD = -SKDLRD*DELRT
0324          DELELV = -SKDLE*DELBT + GDE*DGTOR)
0325          DELELP  = GDELP
0326          DELAR2 =-XLIM(0.0,-DELAMX,SKDA*DELST)
0327          DELAL2 = XLIM(DELAMX,0.0,SKDA*DELST)
0328          DELAR1= XLIM(DELALM,0.,DELAR2+DELELP)
0329          DELAL1= XLIM(DELALM,0.,DELAL2+DELELP)
0330          DELAR = DELAR1 + DLELPP
0331          DELAL = DELAL1 + DLELPP
0332          DELSPR = XLIM(DLSPLM,0.0,GDSP)
0333          DELSPL = -XLIM(0.0,-DLSPLM,GDSP)
0334          DCYL =  DELRT*SKDLR*GDSCYL-DELST*SKDLS*GDSCYL
0335          DCOL = DELST*SKDLS*GDSCOL
0336          DLON = DELBT*SKDLB*GDBLON-DELRS
0337          DCYRD = XLIM(DCYRLM,-DCYRLM,(DCYL-DCYIC)/TAUCYR)
0338          GBICD = XLIM(GICLM,-GICLM,(GBIC-GBICP)/TAUGIC)
0339          GAICD = XLIM(GICLM,-GICLM,(GAIC-GAICP)/TAUGIC)
        C
0340          GLSBD = GLSB/TAUGLS-GLSBIC/TAUGLS
0341          GLSARD = GLSAR/TAUGLS-GLSARIC/TAUGLS
0342          GLSALD = GLSAL/TAUGLS-GLSAIL/TAUGLS
        C
0343          BIRPDD = OMA**2*(GBICP-DCYL-DLON)-2.*ETAA*OMA*BICRPD
             1      -   OMA**2*BICRP
0344          BILPDD = OMA**2*(GBICP+DCYL-DLON)-2.*ETAA*OMA*BICLPD
             1      -   OMA**2*BICLP
0345          AIRPDD = OMA**2*(-GLSARP-SKDCOL*DCOL+GAICP)-2.*ETAA*OMA*AICRPD-
             1         OMA**2*AICRP
0346          AILPDD = OMA**2*(GLSAIL+SKDCOL*DCOL+GAICP)-2.*ETAA*OMA*AICLPD-
             1         OMA**2*AICLP
0347          BICRDD = OMRD**2*BICRP-2.*ETARD*OMRD*BICRDI-OMRD**2*BICRIC
0348          BICLDD = OMRD**2*BICLP-2.*ETARD*OMRD*BICLDI-OMRD**2*BICLIC
0349          AICRDD = OMRD**2*AICRP-2.*ETARD*OMRD*AICRDI-OMRD**2*AICRIC
0350          AICLDD = OMRD**2*AICLP-2.*ETARD*OMRD*AICLDI-OMRD**2*AICLIC
0351          TH75R  = XLIM(TH75LP,TH75LN,THTMSR-DCOL)
0352          TH75L  = XLIM(TH75LP,TH75LN,THTMSL+DCOL)
        C
```

Figure G.9. (Continued)

```
C          WING VERTICAL BENDING
C
0353       ALARDD = DMWB**2*(ALARP-ALARWN)/EIXX-2.*ETAWB*DMWB*ALARDI
0354       AMARDD = DMWB**2*(AMARP-AMARWN)/EIYY-2.*ETAWB*DMWB*AMARDI
0355       ZARDD = DMWB**2*(ZARP-ZARWN)/SM-2.*ETAWB*DMWB*ZARDIC
C
0356       CALL ANDAIN(PROJ,BDNDS(1),LETR(1),IFC(1),NCON(1),P1,3,3)
0357       CALL ANDAIN(PROJ,BDNDS(2),LETR(2),IFC(2),NCON(2),P2,3,3)
0358       CALL ANDAIN(PROJ,BDNDS(3),LETR(3),IFC(3),NCON(3),P3,3,3)
0359       CALL ANDAIN(PROJ,'IF','B',IFC(1),3,P4,3,3)
C          DAC CALCULATION SECTION
0360       P1(200) = -ALPHF/ABESMX
0361       P1(201) = (ALARRP+TERMP1)/EIXX/RDOTMX
0362       P1(202)= -MATA(1,3)/EIXX*RDOTMX/RDOTMX
0363       P1(203) = (AMARRP+TERMQ1)/EIYY/RDOTMX
0364       P1(204)= -MATA(1,4)/EIXX*ATDDMX/RDOTMX
0365       P1(205) =  MATA(3) /EIZZ / RDOTMX
0366       P1(206)= -MATA(1,5)/EIXX*ATDDMX/RDOTMX
0367       P1(207) =  XARRD/ SM /UDOTMX
0368       P1(208) = UTRIM*SKERS/UMX
0369       P1(209) =  YARRD/ SM /VDOTMX
0370       P1(210)= VTRIM*SKERS/VMMX
0371       P1(211) =   ZARRD / SM / ZARMX
0372       P1(212)= -HTRIM/ZMX
0373       P1(213) = VCALIB/HMX
0374       P1(214)= -MATA(2,4)/EIYY*ATDDMX/RDOTMX
0375       P1(215) = VTOTLR/RDTRAD/AMURMX/OMEGMX
0376       P1(216)= -MATA(2,5)/EIYY*ATDDMX/RDOTMX
0377       P1(217) =  -ALPHLR / ALERMX
0378       P1(218) = THTRIM/THEMX/RDTODG
0379       P1(219) =  VTOTRR/RDTRAD/AMURMX/OMEGMX
0380       P1(220)  = -AVEALW/ ALWGMX
0381       P1(221) =  -ALPHRR / ALERMX
0382       P1(222)= -MATA(3,1)/EIZZ*RDOTMX/RDOTMX
0383       P1(223) = PNLN/OMEGMX
0384       P1(224)= -MATA(3,4)/EIZZ*ATDDMX/RDOTMX
0385       P1(225) = PNRN/OMEGMX
0386       P1(226)= -MATA(3,5)/EIZZ*ATDDMX/RDOTMX
0387       P1(227)=  -VNORTH/XDOTMX
0388       SGNSQF= 1.0
0389       IF(U.LT.0.) SGNSQF  = -1.
0390       P1(228)=  -SQF*SGNSQF/SQFMX
0391       P1(229)=  -VEAST/YDOTMX
0392       P1(230)  =- BETAF / ABESMX
0393       P2(200) =-SMN*SL*YN*CILAMR*RDOTMX/AMACMX
0394       P2(201) = GLSB/GLSMX
0395       P2(202) = (SMN*SL*SL*(1.-SMN/SM)+EIYYPR)*RDOTMX/AMACMX
0396       P2(203) =-GLSAL/GLSMX
0397       P2(204) = SMN*SL*YN*SILAMR*RDOTMX/AMACMX
```

Figure G.9. (Continued)

```
0398          P2(205)=  (XCG-SLPA)/XCG1X
0399          P2(206)= MDTRIM/VWMX/10.
0400          P2(207)  = SHDPPP/SHPMX
0401          P2(210)  = SMN*SL*YN*SILAML*PDDTMX/AMACMX
0402          P2(211)  =-SQTHTC/DEL*TAUEMX/GBUTON
0403          P2(212)  = (SMN*SL*SL*(1.-SMN/SM)+FIYYPP)*QDDTMX/AMACMX
0404          P2(214)  =-SMN*SL*YN*SILAML*PDDTMX/AMACMX
0405          P2(216)= MTRIM/ATNMX /PDTDDG
0406          P2(217)  =  ALARP/FIXX/PDDTMX
0407          P2(220)  = RDPIPS/FIP*OMEGMX*CPMX    /2.*/10.
0408          P2(221)  =  AMARP/FIYY/QDDTMX
0409          P2(223)  =  ZARP/SM/ZARMX
0410          P2(224)  = -QNRR / QMX * CPMDMX / CPMMX
0411          P2(225)  = GLSAR/GLSMX
0412          P2(226)  = -QNLR / QMX * CPMDMX / CPMMX
0413          P2(230)  =  RNRR / RMX * CYMPMX / CYMMX
0414          P2(232)  =  RNLR / RMX * CYMRMX / CYMMX
0415          P2(237)  =   PCTDR / PCTDMX
        C
        C     BOARD 1E    (CONSOLE 1)    POT. CALCULATION SECTION
        C
0416          P1(330)  =-ZIC/ZMX
0417          P1(031)  = YIC/YMX
0418          P1(033)  = VWMX/ZMX/GBUTON
0419          P1(034)  = YDDTMX/YMX/GBUTON
0420          P1(035)  = XDDTMX/XMX/GBUTON
0421          P1(036)  = SKTRIM(01)
0422          P1(037)  = SKTRIM(02)
0423          P1(010)  = XIC/XMX
0424          P1(012)  = 1./TAUR02/GBUTON*SETR
0425          P1(013)  = TAUR01/TAUR02*SETR
0426          P1(014)  = 1./TAUR02/GBUTON
0427          P1(015)  = 1./TAUR02/GBUTON*SETL
0428          P1(016)  = TAUR01/TAUR02*SETL
0429          P1(017)  = 1./TAUR02/GBUTON
0430          P1(020)  = 87.*SKEPS/UMX
0431          P1(021)  = UMX/VWMX/10.
0432          P1(026)  = THEMX/PI
0433          P1(027)  = PHIMX/PI
0434          P1(030)  = 141.*SKEPS/UMX
0435          P1(032)  =  ROT1 / CTMX
0436          P1(033)  =  ROT2 / CTMX
0437          P1 (036) =    1./ 10.
0438          P1 (037) =    1./ 10.
0439          P1(070)=      VDET1 *SKEPS  /  UMX
0440          P1(072)  = SKTRIM(03)
0441          P1(073)  = SKTRIM(04)
0442          P1(074)  = SKTRIM(05)
0443          P1(075)  = SKTRIM(06)
```

Figure G.9. (Continued)

```
0444          P1(240) = PIC/PMX
0445          P1(241) = QIC/QMX
0446          P1(242) = PDOTMX/PMX/GBUTON
0447          P1(243) = QDOTMX/QMX/GBUTON
0448          P1(244) = RDOTMX/RMX/GBUTON
0449          P1(245) = RIC/RMX
0450          P1(246) = VDOTMX/VWMX/GBUTON
0451          P1(247) = WDOTMX/VWMX/GBUTON
0452          P1(250) = UDOTMX/UMX/GBUTON*10.
0453          P1(251) = THDMX/THEMX/GBUTON
0454          P1(252) = SG*1.0/UDOTMX/10.
0455          P1(253) = QMX*VWMX/UDOTMX/10.
0456          P1(254) = RMX*VWMX/UDOTMX/10.
0457          P1(255) = UIC/UMX
0458          P1(256) = SG*1.0/VDOTMX/10.
0459          P1(257) = RMX*UMX/VDOTMX/10.
0460          P1(264) = PMX*VWMX/VDOTMX/10.
0461          P1(265) = ZARMX/WDOTMX/10.
0462          P1(266) = SG*1.0/WDOTMX/10.
0463          P1(267)=  QMX*UMX/WDOTMX/10.
0464          P1(270) = PHDMX/PHIMX/GBUTON
0465          P1(271) = PSDMX/PSIMX/GBUTON*10.
0466          P1(272) = VIC/VWMX
0467          P1(273) = WIC/VWMX
0468          P1(274) = THEIC/THEMX
0469          P1(275) = PHIIC/PHIMX
0470          P1(276) = RMX*VWMX/WDOTMX/10.
0471          P1(277) = PSIIC/PSIMX
0472          P1(300) = RSAS1/DELSMX
0473          P1(301) = RSAS2/DELSMX
0474          P1(302) = GPDS/TAUPDS*DELSMX/DELSMX/GBUTON
0475          P1(303) = 1./TAUPDS/GBUTON
0476          P1(304) = GP/TAUP*PMX/DELSMX/GBUTON
0477          P1(305) = 1./TAUP/GBUTON
0478          P1(306) = GPHI*PMX/DELSMX/GBUTON
0479          P1(307) = 1./TAUPHI/GBUTON
0480          P1(310) = RSAS3/DELSMX
0481          P1(311) = RSAS4/ABESMX
0482          P1(312) = 1./TAUBET/GBUTON
0483          P1(313) = 1./TAUBET/GBUTON
0484          P1(314) = GBETP*ABESMX/DELSMX-1.
0485          P1(315) = 1./TAUPSI/GBUTON
0486          P1(316) = DLSLM/DELSMX
0487          P1(317) = DLSLM/DELSMX
0488          P1(320) = YSAS1/DELRMX
0489          P1(321) = YSAS2/DELRMX
0490          P1(322) = GPSI*RMX/DELRMX/GBUTON
0491          P1(323) = GPSIDR/GBUTON
0492          P1(324) = 1./TAUDP*DELRMX/DELRMX/GBUTON
```

Figure G.9. (Continued)

```
0493          P1(325) = 1./TAUDR/GBUTON
0494          P1(326) = DLM/RMX
0495          P1(327) = RLM/RMX
0496          P1(330) = YSAS3/DELRMX
0497          P1(331) = YSAS6/DELRMX
0498          P1(332) = GBETDR/10.
0499          P1(333) = GBETR*ABESMX/DELRMX/10.
0500          P1(334) = 2./TAUPR*RMX/DELRMX/GBUTON
0501          P1(335) = 1./TAUPR/GBUTON
0502          P1(336) = DRLM/DELRMX
0503          P1(337) = DRLM/DELRMX
0504          P1(340) = YSAS4/DELRMX
0505          P1(341) = YSAS5/DELRMX
0506          P1(342) = GRDR
0507          P1(343) = 1./TAUR3/GBUTON
0508          P1(344) = 1./TAUP3/GBUTON
0509          P1(345) = TAUP2/TAUR3
0510          P1(346) = GPR1*RMX/DELRMX/GBUTON
0511          P1(347) = 1./TAUPR1/GBUTON
0512          P1(350) = GR*RMX/DELRMX/10.
0513          P1(351) = 1./TAUR1/GBUTON/0.1
0514          P1(352) = GBETR*0.+1.
0515          P1(354) = 1.0
0516          P1(355) = 1.0
0517          P1(356) = DLRLM/DELRMX
0518          P1(357) = DLRLM/DELRMX
C
C     BOARD 3A      (CONSOLE 2)      POT. CALCULATION SECTION
C
0519          P2(330) = DLTHP/DLTHMX
0520          P2(001) = SHP2IC/SHPMX
0521          P2(002) = GTH/TAUTH/GBUTON
0522          P2(003) = 1.0/TAUTH/GBUTON
0523          P2(006) = OMLM/OMEGMX
0524          P2(007) = OMGO/OMEGMX
0525          P2(010) = SHP3IC/SHPMX
0526          P2(011)=  -OMEGIC/OMEGMX
0527          P2(012) = OMSLP*AINMX /OMEGMX
0528          P2(013) = OMGO/OMEGMX
0529          P2(014) = 550./ETP*SHPMX/OMEGMX/TMEGMX
0530          P2(015) = GTHGOV/TTMSMX
0531          P2(016) = THOMIC/THOMMX
0532          P2(017) = TMS1/THOMMX
0533          P2(020) = THPCTU
0534          P2(021) = OINRE/SOEMX
0535          P2(022) = THOMLP/THOMMX
0536          P2(023)=  -THOMLN/THOMMX
0537          P2(024) = THRTLM/THOMMX
0538          P2(025) = THRTLM/THOMMX
```

Figure G.9. (Continued)

```
P2(026) = THATMX/THOMMX
P2(027) = THATMX/THOMMX
P2(028) = ANRATE/AINRMX*DGTORD
P2(031) = 89.5*DGTORD/AINMX
P2(032) = GTHGOV/TTMSMX
P2(033) = THOMMX/TTMSMX
P2(034) = THOMMX/TTMSMX
P2(035) = GDLTH *DLTHMX/THOMMX
P2(036) = SKTRIM(12)
P2(037) = SKTRIM(13)
P2(040) = AINDET*DGTORD/AINRMX
P2(041) = AINDET*DGTORD/AINRMX
P2(042) = GDLTH *DLTHMX/THOMMX
P2(043) = GOMG*OMEGMX/TOMDMX
P2(044) = TOMDLM/TOMDMX
P2(045) = TOMDLM/TOMDMX
P2(046) = GDLTH *DLTHMX/THOMMX
P2(047) = TOMDMX/THOMMX/GBUTON
P2(050) = ALARDI/PDOTMX/10.
P2(051) = ALARIC/PDOTMX
P2(052) = TTMSLP/TTMSMX
P2(053) =-TTMSLN/TTMSMX
P2(054) = 1./TAUEF/GBUTON
P2(055) = 1./TAUEF/GBUTON
P2(056) = 1./TAUEF/GBUTON
P2(057) = 1./TAUEF/GBUTON
P2(058) = AMARDI/PDOTMX/10.
P2(061) = AMARIC/PDOTMX
P2(062) = OMWB**2/10./GBUTON/10.
P2(063) = 2.*ETAWB*OMWB/GBUTON /10.
P2(064) = OMWB**2/10./GBUTON/10.
P2(065) = OMWB**2/10./GBUTON/10.
P2(066) = 2.*ETAWB*OMWB/GBUTON /10.
P2(067) = OMWB**2/10./GBUTON/10.
P2(070) = ZARDIC/ZARMX/10.
P2(071) = ZARIC/ZARMX
P2(072) = OMWB**2/10./GBUTON/10.
P2(073) = 2.*ETAWB*OMWB/GBUTON /10.
P2(074) = OMWB**2/10./GBUTON/10.
P2(240) = AINRDI/AINDMX
P2(241) = AINRIC/AINMX
P2(242) = AIDDMX/AINDMX/GBUTON
P2(243) = AINDMX/AINMX/GBUTON
P2(244) = OMIRF**2*AINMX/AIDDMX/10.
P2(245) = 2.*ETAIRF*OMIRF*AINDMX/AIDDMX/10.
P2(246) = OMIRF**2*AINMX/AIDDMX/10.
P2(247) = AINRLM/AINRMX
P2(250) = AINLDI/AINDMX
P2(251) = AINLIC/AINMX
```

Figure G.9. (Continued)

```
P2(252) = AIDDMX/AINDMX /GBUTON
P2(253) = AINDMX/AINMX/GBUTON
P2(254) = GMIRE**2*AINMX/AIDDMX/10.
P2(255) = 2.*ETAIRE*GMIRE*AINDMX/AIDDMX/10.
P2(256) = GMIRE**2*AINMX/AIDDMX/10.
P2(257) = AINRLM/AINRMX
P2(258) = DELTM /DLTHMX
P2(261) = 0.
P2(262) = 0.
P2(263) = AINCOM/AINRMX
P2(264) = GINRE*GMIRE**2*DCYLMX/AIDDMX/10.
P2(265) = GINRE*GMIRE**2*DCYLMX/AIDDMX/10.
P2(266) = 1./TAUCYR/10./GBUTON
P2(267) = 1./TAUCYR/10./GBUTON
P2(270) = CON1*AIDDMX/AMACMX  /10.
P2(271) = AINRMX/AINMX
P2(272) = AIREIC/AINMX
P2(273) = 105.*DGTORD/AINMX
P2(274) = 2.*ETAIRE*GMIRE*AINRMX/AIDDMX/10.
P2(275) = AMACMX/CON1/AIDDMX/10.
P2(276) = SKTRIM(17)
P2(277) = SKTRIM( 8)
P2(300) = CON1*AIDDMX/AMACMX /10.
P2(301) = DCYIC/DCYLMX
P2(302) = DCYRLM/DCYLMX/GBUTON
P2(303) = DCYRLM/DCYLMX/GBUTON
P2(304) = 2.*ETAIRE*GMIRE*AINDMX/AIDDMX/10.
P2(305) = AMACMX/CON1/AIDDMX/10.
P2(306) = SHPLM/SHPMX/GBUTON
P2(307) = SHPLM/SHPMX/GBUTON
P2(311) = SHPIC/SHPMX
P2(312) = 1./TAUSHP/GBUTON/1 .
P2(313) = 1./TAUSHP/GBUTON/1 .
P2(314) = ASLP*SHPMX
P2(315) = AC
P2(316) = ALIM
P2(317) = 1.0
P2(320) = STDM*GMGMX/TTMSMX/10.
P2(322) = TOMC/1.
P2(323) = TOMSLP*AINMX/1.
P2(324) = TOMLM/1.
P2(344)=  ALAMDA/PI
P2(345)=  AINMX/PI
P2(346)=  ALAMDA/PI
P2(347)=  AINMX/PI
P2(364)=  AINDMX**2/XDDMX*SL*SMN/SM -1.0
P2(365)=  AINDMX**2/ZDDMX*SL*SMN/SM
P2(366)=  AIDDMX/XDDMX*SL*SMN/SM
P2(367)=  AIDDMX/ZDDMX*SL*SMN/SM
```

Figure G.9. (Continued)

```
0637          P2(372)=  UDOTMX/AXPAMX
0638          P2(373)=  VDOTMX/AYPAMX
0639          P2(374)=  RDOTMX*XCGMX/AYPAMX
0640          P2(375)=  WDOTMX/AZPAMX
0641          P2(376)=  QDOTMX*XCGMX/AZPAMX
0642          P2(377)=  SG/AZPAMX
        C
        C     BOARD 5F      (CONSOLE 3)        POT. CALCULATION SECTION
        C
0643          P3(002) = OMRD**2/10./GBUTON/10.
0644          P3(003) = OMRD**2/10./GBUTON/10.
0645          P3(004) = 2.0*ETARD*OMRD/GBUTON/10.
0646          P3(005) = BICRDI/BICMX/10.
0647          P3(006) = BICRIC/BICMX
0648          P3(007) = GBAIS
0649          P3(012) = OMRD**2/10./GBUTON/10.
0650          P3(013) = OMRD**2/10./GBUTON/10.
0651          P3(014) = 2.0*ETARD*OMRD/GBUTON/10.
0652          P3(015) = BICLDI/BICMX/10.
0653          P3(016) = BICLIC/BICMX
0654          P3(017) = GBAIS
0655          P3(022) = OMRD**2/10./GBUTON/10.
0656          P3(023) = OMRD**2/10./GBUTON/10.
0657          P3(024) = 2.0*ETARD*OMRD/GBUTON/10.
0658          P3(025) = AICRDI/AICMX/10.
0659          P3(026) = AICRIC/AICMX
0660          P3(027) = GBAIS
0661          P3(031) = 1./TAUGMN
0662          P3(032) = OMRD**2/10./GBUTON/10.
0663          P3(033) = OMRD**2/10./GBUTON/10.
0664          P3(034) = 2.0*ETARD*OMRD/GBUTON/10.
0665          P3(035) = AICLDI/AICMX/10.
0666          P3(036) = AICLIC/AICMX
0667          P3(042) = GGUST/TAUGST/GBUTON/GUSTMX
0668          P3(043) = 1./TAUGST/GBUTON
0669          P3(044) = GGUST/TAUGST/GBUTON/GUSTMX
0670          P3(045) = 1./TAUGST/GBUTON
0671          P3(046) = GGUST/TAUGST/GBUTON/GUSTMX
0672          P3(047) = 1./TAUGST/GBUTON
0673          P3(061) = GLSATR/GLSMX
0674          P3(062) = 1./TAUGLS/GBUTON
0675          P3(063) = 1./TAUGLS/GBUTON
0676          P3(066) = GLSLM/GLSMX
0677          P3(067) = GLSLM/GLSMX
0678          P3(072) = SKTRIM(09)
0679          P3(073) = SKTRIM(10)
0680          P3(074) = SKTRIM(11)
0681          P3(242) = SKDLRD*DELRMX/DLRDMX
0682          P3(243) = SKDLR*DELRMX/DCYLMX*GRCYMX
```

Figure G.9. (Continued)

```
P3(244) = SKDLS*DELSMX/DCYLMX*GSCYMX
P3(245) = GLPS/10.
P3(246) = SKDLS*DELSMX/DCOLMX*GSCOMX
P3(247) = GLPSLP*QMX/10.
P3(252) = SKDLR*DELRMX/DLONMX
P3(253) = SKDLR*DELRMX/DELEMX
P3(254) = DELALM/DELAMX
P3(255) = DELALM/DELAMX
P3(257) = 1.0
P3(260) = DELR  /DELRMX
P3(261) = DELS  /DELSMX
P3(262) = DELR  /DELRMX
P3(264) = GQ/TAUQ1*QMX/DLONMX/GBUTON/10.
P3(265) = GTHE*QMX/DLONMX/GBUTON
P3(266) = SKDA*DELSMX/DELAMX
P3(267) = SKDA*DELSMX/DELAMX
P3(272) = DMA**2*GICMX/BICMX/10./GBUTON/10.
P3(273) = DMA**2*GICMX/BICMX/10./GBUTON/10.
P3(274) = DMA**2*GICMX/AICMX/10./GBUTON/10.
P3(275) = DMA**2*GICMX/AICMX/10./GBUTON/10.
P3(276) = TTMSMX/TH75MX
P3(277) = TTMSMX/TH75MX
P3(300) = GLSBIC/GLSMX
P3(301) = GLSAIL/GLSMX
P3(302) = DCOLMX/TH75MX
P3(303) = DCOLMX/TH75MX
P3(304) = TH75LP/TH75MX
P3(305) =-TH75LN/TH75MX
P3(306) = TH75LP/TH75MX
P3(307) =-TH75LN/TH75MX
P3(310) = BICRPD/BICMX/10.
P3(311) = BICRP /BICMX
P3(312) = 1./TAUGLS/GBUTON
P3(313) = 1./TAUGLS/GBUTON
P3(314) = 1./TAUGLS/GBUTON
P3(315) = 1./TAUGLS/GBUTON
P3(316) = GLSLM/GLSMX
P3(317) = GLSLM/GLSMX
P3(320) =-GBICP/GICMX
P3(321) =-GAICP/GICMX
P3(322) = DMA**2*DCYLMX/BICMX/10./GBUTON/10.
P3(323) = DMA**2*DLONMX/BICMX/10./GBUTON/10.
P3(324) = 2.0*ETAA*DMA/GBUTON/10.
P3(325) = DMA**2/10./GBUTON/10.
P3(326) = 1./TAUGIC/GBUTON/10.
P3(327) = 1./TAUGIC/GBUTON/10.
P3(330) = BICLPD/BICMX/10.
P3(331) = BICLP /BICMX
P3(332) = 1./TAUGIC/GBUTON/10.
```

Figure G.9. (Continued)

```
0732          P3(333) = 1./TAUGIC/GBUTON/10.
0733          P3(334) = DLELPC/DLELMX
0734          P3(335) = 1./TAUDR*DELBMX/DLONMX/GBUTON
0735          P3(336) = OMA**2*DCYLMX/BICMX/10./GBUTON/10.
0736          P3(337) = OMA**2*DLONMX/BICMX/10./GBUTON/10.
0737          P3(340) = 1./TAUQ2/GBUTON/0.1
0738          P3(341) = PSAS2/DLONMX
0739          P3(342) = 2.0*ETAA*OMA/GBUTON/10.
0740          P3(343) = OMA**2/10./GBUTON/10.
0741          P3(344) = GICLM/GICMX/GBUTON
0742          P3(345) = GICLM/GICMX/GBUTON
0743          P3(346) = GICLM/GICMX/GBUTON
0744          P3(347) = GICLM/GICMX/GBUTON
0745          P3(350) = AICRPD/ AICMX/10.
0746          P3(351) = AICRP /AICMX
0747          P3(352) = 1./TAUDR/GBUTON
0748          P3(353) = OMA**2*GLSMX/AICMX/GBUTON/10./10.
0749          P3(354) =SKDCOL*OMA**2*DCOLMX/AICMX/10./GBUTON/10.
0750          P3(355) = 2.0*ETAA*OMA/GBUTON/10.
0751          P3(356) = OMA**2/10./GBUTON/10.
0752          P3(357) = GLSMX/DLONMX
0753          P3(360) = PSAS1/DLONMX
0754          P3(361) = PSAS3/DLONMX
0755          P3(362) = PSAS4/DLONMX
0756          P3(364) = GDB2/TAUQ1/GBUTON/1 .
0757          P3(365) = GDB1/GBUTON
0758          P3(366) = 1./TAUQ1/GBUTON/10.
0759          P3(367) = 1./TAUTHE/GBUTON
0760          P3(370) = AICLPD/AICMX/10.
0761          P3(371) = AICLP /AICMX
0762          P3(372) = DLBLM/DLONMX
0763          P3(373) = DLBLM/DLONMX
0764          P3(374) = OMA**2*GLSMX/AICMX/GBUTON/10./10.
0765          P3(375) =SKDCOL*OMA**2*DCOLMX/AICMX/10./GBUTON/10.
0766          P3(376) = 2.0*ETAA*OMA/GBUTON/10.
0767          P3(377) = OMA**2/10./GBUTON/10.
        C
        C
0768          XBODY= -XIC+VISIC+XHORIZ+XBIC
0769          YBODY= YROAD+YROAD+VISIC+YIC+YBIC
0770          ZBODY=  H+ZBIC
        C
0771          SA11 =  COSTHE * COSPSI
0772          SA12 =  SINPHI *SINTHE *COSPSI - COSPHI * SINPSI
0773          SA13 =  COSPHI *SINTHE *COSPSI + SINPHI * SINPSI
        C
0774          SA21 =  COSTHE * SINPSI
0775          SA22 =  SINPHI *SINTHE*SINPSI + COSPHI * COSPSI
0776          SA23 =  COSPHI *SINTHE *SINPSI -SINPHI * COSPSI
```

Figure G.9. (Continued)

```
      C
      SA31 =   - SINTHE
      SA32 =    SINPHI * COSTHE
      SA33 =   COSPHI * COSTHE
      C
      XACVIS =  -(SA11*XBODY +SA12*YBODY +SA13 *ZBODY)
      YACVIS =  -(SA21*XBODY +SA22*YBODY +SA23 *ZBODY)
      ZACVIS= -(-SA31*XBODY+SA32*YBODY+SA33*ZBODY)
      C
      YSCOPE= ZACVIS/XACVIS*VCAL1*XVISMX/ZVISMX
      XSCOPE= YACVIS/XACVIS*VCAL2*XVISMX/YVISMX
      C
      FFDR=  XLIM(FFBMX,FFLMLO,BSLOPE*SQF/QSTARB +BOB)
      FFDS=  XLIM(FFSMX,FFLMLO,SSLOPE*SQF/QSTARS + BOS)
      FFDR=  XLIM(FFRMX,FFLMLO,RSLOPE*SQF/QSTARR + BOR)
      PCM2=  OMEGA/OMREF*100.
      DRBKDR=  COMDLB-DELB
      DRBKDR=  COMDLR-DELR
      DSBKDR=  COMDLS-DELS
      THBKDR =  -SKTRIM(12)*COMDOT/OMEGMX*DLTHMX
      PSDSIM= XLIM(PSDTSX,-PSDTSX,PSIDOT*RDTDEG)
      XSIM=  XLIM(DXSIMX,-DXSIMX,XIC)
      YSIM=  XLIM(DYSIMX,-DYSIMX,YIC)
      IF(NPLOT.EQ.2) GO TO 975
      COMDLB= 0.0
      COMDLS= 0.0
      COMDLR= 0.0
      COMDOT= 0.0
      BRAKE= 0.0
975   CONTINUE
```

BOARD 1B (CONSOLE 4) SIMULATOR BOARD

```
      C
      P4(330) =   1.0000
      P4(331) =   1.0000
      P4(332)=  PCTQMX/TQSIMX
      P4(333)=  PCTQMX/TQSIMX
      P4(334)=  CAFGMX/OMREF*100./PPMS4X
      P4(335)= YDDTMX/YDTSMX
      P4(336)=  VWMX/HDTSMX
      P4(337)=  XDDTMX/XDTSMX
      P4(014)=  UMX/SKFPS/USIMX
      P4(015)=  VMMX/SKFPS/VSIMX
      P4(016)=  AXPAMX/AXPA4X
      P4(024)=  PSIMX*RDTDDG/PSISMX
      P4(025)=  PSDMX*RDTDDG/PSDTSX/2.0
      P4(026)= PI*RDTDDG/THESMX
      P4(027)=  PI*RDTDDG/PHISMX
      P4(032)=  PSDMX*RDTDDG/PSDTSX/2.0
      P4(034)=  PSDTSX/PSDTSX
      P4(035)=  PSDTSX/PSDTSX
```

Figure G.9. (Continued)

```
P4(236)=  AINMX*RDTODG/AINSMX
P4(237)=  ALWGMX*RDTODG/ALWSMX
P4(244)=  AZPAMX/AZPAMX
P4(245)=  DLFLMX/DFPSMX
P4(246)=  ABFSMX*RDTODG/RTSIMX
P4(247)=  AYPAMX/AYPAMX
P4(250)=  0.1475
P4(251)=  0.1475
P4(252)=  DXSIMX/DXSIMX
P4(253)=  DXSIMX/DXSIMX
P4(254)=  1.0000
P4(255)=  XMX/DXSIMX/10.
P4(256)=  ZMX/HSIMX
P4(257)=  1.0000
P4(258)=  YMX/YVISMX
P4(261)=  ZMX/ZVISMX
P4(240) =   XDOTMX / XVISMX  /10.
P4(241) =   YDOTMX / YVISMX / 10.
P4(250)=  XDTEST/XVISMX/10.
P4(251)=  YDTEST/YVISMX/10.
P4(260) =   THE / PI
P4(261) =   PHI / PI
P4(262) =   PSI / PI
P4(263) =   FREQMT / 100.
P4(264) =   SCOPLM
P4(265) =   SCOPLM
P4(266) =   SCOPLM
P4(267) =   SCOPLM
P4(270) =   1.0000
P4(271) =    .0100
P4(272) =  XHORIZ / XVISMX
P4(273) =   ZMX / ZVISMX
P4(274)=  PIASMT/ZVISMX
P4(275) =    XBIC / XVISMX
P4(276) =    YBIC / YVISMX
P4(277) =    ZBIC / ZVISMX
P4(300)=  PSDMX/PI/10.
P4(301)=  0.1500/PI/10.
P4(302) =    SLX / XVISMX
P4(303) =    SLY / XVISMX
P4(304) =    SLZ / XVISMX
P4(305) =    SLX / ZVISMX
P4(306) =    SLY / ZVISMX
P4(307) =    SLZ / ZVISMX
P4(310) =    0.6000
P4(311) =    0.6000
P4(312) =    SLX / YVISMX
P4(313) =    SLY / YVISMX
P4(314) =    SLZ / YVISMX
```

Figure G.9. (Continued)

```
0870          P4(315) =    PKMT1 / ZVISMX
0871          P4(316) =    PKMT2 / ZVISMX
0872          P4(317) =    GZMTS1
0873          P4(320) =    0.6500
0874          P4(321) =    0.6500
0875          P4(322)=  DBPSMX/DBBDMX
0876          P4(323)=  DELBMX/DBBDMX
0877          P4(324)=  DBPSMX/DBBDMX
0878          P4(325)=  DELBMX/DBBDMX
0879          P4(326)=  DSPSMX/DSBDMX
0880          P4(327)=  DELSMX/DSBDMX
0881          P4(330) =    10.* SKEPS / XDOTMX
0882          P4(332) =    VCAL1 * XVISMX / YVISMX
0883          P4(333) =    VCAL2 * XVISMX / ZVISMX
0884          P4(334)=  2.0*BRKMX/BRKSMX
0885          P4(335)=  DLTHMX/THBDMX
0886          P4(336)=  FEBMX/FEBMX
0887          P4(337)=  FELMLO/FEBMX
0888          P4(340) =    GZMTS2
0889          P4(341) =    XHORIZ / XVISMX
0890          P4(342)=  -BOB/FEBMX
0891          P4(343)=  -BOS/FESMX
0892          P4(344)=  BSLOPE/QSTARB*SQFMX/FEBMX
0893          P4(345)=  SSLOPE/QSTARS*SQFMX/FESMX
0894          P4(346)=  BSLOPE/QSTARB*SQFMX/FEBMX
0895          P4(347)=  -BOR/FERMX
0896          P4(350) =    YROAD / YVISMX
0897          P4(351) =    YROAD / YVISMX
0898          P4(354)=  FESMX/FESMX
0899          P4(355)=  FERMX/FERMX
0900          P4(356)=  FELMLO/FESMX
0901          P4(357)=  FELMLO/FERMX
0902          P4(360) =    XIC    / XVISMX
0903          P4(361) =    YIC    / YVISMX
0904          P4(362)=  H/ZMX
0905          P4(364)=  2.0*DELBMX/DBPSMX
0906          P4(365)=  2.0*DELSMX/DSPSMX
0907          P4(367)=  2.0*AINPMX/AIDSMX*RDTDDG
0908          P4(370)=  0.1400
0909          P4(371)=  0.1400
0910          P4(374)=  2.0*DELRMX/DRPSMX
0911          P4(375)=  2.0*DLTHMX/DTPSMX
      C
0912          RETURN
0913          ENTRY STCON1
0914          CALL ANDAIN(PROJ,BONDS(1),LETR(1),TEC(1),NCOIN(1),AIP,1,5,AIN,1,5,
     *                SJ1,4,5,TR1,6,5)
      C
0915          AIP(380) = ZIC/ZMX
```

BOARD 1E (CONSOLE 1) AMPLIFIER SCALE FACTOR CALCULATION; P DENOTES POSITIVE OUTPUT, N DENOTES NEGATIVE OUTPUT

Figure G.9. (Continued)

```
      A1P(201) = YIC/YMX
      A1P(202) = UIC*SINTHE/UMX
      A1N(202) = ZDOT/VMX
      A1P(203) = YDOT/YDOTMX
      A1N(203) = XDOT/XDOTMX
      A1P(210) = XIC/XMX
      A1P( 11) = 0.0
      A1P( 12) = AINDER/AIDDMX
      A1P( 13) = AINDDL/AIDDMX
      A1P(220) = -SKTRIM(03)*VDOT/VDOTMX
      A1N(220) = CTO/CTMX
      A1P(221) = ROTI/CTMX
      A1P(230) = -CTRPRM/CTMX
      A1N(230) = CTC/CTMX
      A1P(231) = ROT2/CTMX
      A1P( 40) = TH75R/TH75MX
      A1N( 40) = CPR/CPMX
      A1P( 41) = TH75L/TH75MX
      A1N( 41) = CPL/CPMX
      A1P( 50) = -TH75R/TH75MX
      A1N( 50) = CNFPL/CNFMX
      A1P( 51) = -ALPHAR/ALFMX
      A1N( 51) = CNFPR/CNFMX
      A1P( 52) = CTRPRM/CTMX
      A1P( 53) = CTLPRM/CTMX
      A1P( 60) = -AMUR/AMUMX
      A1N( 60) = CSFPR/CSFMX
      A1P( 61) = -1.0
      A1N( 61) = CSFPL/CSFMX
      A1P( 62) = SKTRIM(01)*UDOT/UDOTMX
      A1P( 63) = SKTRIM(05)*WDOT/WDOTMX
      A1P( 70) = 0.0
      A1P( 71) = 0.0
      A1P( 200) = PIC/PMX
      A1P( 201) = QIC/QMX
      A1P( 202) = PDOT/PDOTMX
      A1P( 203) = QDOT/QDOTMX
      A1P( 210) = RIC/RMX
      A1P( 211) = UIC/UMX
      A1P( 212) =  -PSIDOT*SINTHE/PSIMX
      A1N( 212) = THEDOT/THDMX
      A1P( 213) = R*COSPHI/RMX
      A1N( 213) = PHIDOT/PHDMX
      A1P( 220) = VIC/VMX
      A1P( 221) = WIC/VMX
      A1P( 222) = RDOT/RDOTMX
      A1P( 223) = Q*SINPHI/QMX
      A1N( 223) = UDOT/UDOTMX
      A1P( 230) = THEIC/THEMX
```

Figure G.9. (Continued)

```
A1P(231) = PHIIC/PHIMX
A1P(240) = PSIIC/PSIMX
A1P(241) =  -XAERO /SM / UDOTMX
A1N(241) =  -YAERO /SM / VDOTMX
A1P(242) = R*SINPHI/RMX
A1N(242) = VDOT/VDOTMX
A1P(243) =-Q*COSPHI/QMX
A1N(243) = WDOT/WDOTMX
A1P(250) = THE/PI
A1P(251) = PHI/PI
A1P(252) = COSTHE*COSPHI
A1P(253) = COSTHE*SINPHI
A1P(260) =  BETAF / ABFSMX
A1N(260) =  AVFALW / ALWGMX
A1P(261) =  SOF     / SOFMX
A1N(261)= -ZAERO/SM/ZAOMX
A1P(262) = PSIDOT/PSDMX
A1P(300) =-DELSS/DELSMX
A1N(300) =-RSAS1/DELSMX
A1P(301) =-RSAS6/DELSMX
A1N(301) = RSAS2/DELSMX
A1P(302) =-YSAS8/DELRMX/GRUTOP
A1P(303) = YSAS10/DELRMX
A1P(310) =-YSAS7/RMX
A1N(310) = RSAS3/DELSMX
A1P(311) = RSAS4/ABFSMX
A1P(312) =-RSAS5/DELSMX/GRUTOP
A1P(313) =GLATPH/1.
A1P(320) =-YSAS11/DELRMX
A1N(320) = YSAS1/DELRMX
A1P(321) = YSAS9/DELRMX
A1N(321) =-YSAS2/DELRMX
A1P(322) = ALPHF/ABFSMX
A1N(322) =-VCALIB/UMX
A1P(323) = ALPHRB/ALFRMX
A1N(323) = ALPHLB/ALFRMX
A1P(330) =-YSAS12/DELRMX
A1N(330) = YSAS3/DELRMX
A1P(331) = YSAS16/RMX
A1N(331) =-YSAS6/DELRMX
A1P(340) = YSAS4/DELRMX
A1P(341) =-YSAS5/DELRMX
A1P(342) = AMUP/AMURMX
A1P(343) = AMUL/AMURMX
A1P(350) = YSAS14/DELRMX
A1N(350) =-DELRS/DELRMX
A1P(351) = YSAS13/DELRMX
A1P(352) =-YSAS15/RMX
A1P(353) = GYAW/1.
```

Figure G.9. (Continued)

```
      XIP(3[illegible]) = GLATDS/1.
      XIP(361) = YSAS17/[illegible]MX
      XIP(362) = OMEGAR/OMEGMX
      XIP(363) = OMEGAL/OMEGMX
C     VALUES AT SUMMING JUNCTIONS OF AMPLIFIERS:  BOARD 1E (CONSOLE 1)
      SJ1(3[illegible]) = ZDOT/ZMX/GBUTON
      SJ1([illegible]1) = YDOT/YMX/GBUTON
      SJ1([illegible]) = XDOT/XMX/GBUTON
      SJ1([illegible]) = SKTRIM(0.2)*UDOT/UDOTMX
      SJ1(3[illegible]) = 0.0
      SJ1(321) = ROT1D/CTMX/GBUTON
      SJ1(330) = 0.0
      SJ1(331) = ROT2D/CTMX/GBUTON
      SJ2(340) = 0.0
      SJ2(341) = 0.0
      SJ1(350) = 0.0
      SJ1(351) = 0.0
      SJ1(360) = 0.0
      SJ1(361) = 0.0
      SJ1(370) = SKTRIM(0.4)*VDOT/VDOTMX
      SJ1(371) = SKTRIM(0.4)*WDOT/WDOTMX
      SJ1(200) = PDOT/PMX/GBUTON
      SJ1(201) = QDOT/QMX/GBUTON
      SJ1(210) = RDOT/RMX/GBUTON
      SJ1(211) = UDOT/UMX/GBUTON
      SJ1(220) = VDOT/VMX/GBUTON
      SJ1(221) = WDOT/VWMX/GBUTON
      SJ1(230) = THEDOT/THEMX/GBUTON
      SJ1(231) = PHIDOT/PHIMX/GBUTON
      SJ1(240) = PSIDOT/PSIMX/GBUTON
      SJ1([illegible]) = RSAS1D/DELSMX/GBUTON
      SJ1(301) =-RSAS2D/DELSMX/GBUTON
      SJ1(31[illegible]) =-RSAS3D/DELSMX/GBUTON
      SJ1(311) = RSAS4D/DELSMX/GBUTON
      SJ1(320) =-YSAS1D/DELRMX/GBUTON
      SJ1(321) = YSAS2D/DELRMX/GBUTON
      SJ1(330) =-YSAS3D/DELRMX/GBUTON
      SJ1(331) = YSAS4D/DELRMX/GBUTON
      SJ1(340) = YSAS5D/DELRMX/GBUTON
      SJ1(341) =-YSAS5D/DELRMX/GBUTON
C     BOARD 1E (CONSOLE 1) VALUES OF TRUNK LINES AND ADC'S (FIRST 32 TR'S ARE ADC'S)
      TR1(220) = P/PMX
      TR1(221) = Q/QMX
      TR1(222) = R/RMX
      TR1(223) = U/UMX
      TR1(260) = V/VWMX
      TR1(261) = W/VWMX
      TR1(262) = THE/THEMX
      TR1(263) = PHI/PHIMX
```

Figure G.9. (Continued)

```
      TR1(320) = PSI/PSIMX
      TR1(321) = WDOT/WDOTMX
      TR1(322) = -ZTC/ZMX
      TR1(363) = ZDOT/VWMX
      TR1(320) =-DELAL/DELAMX
      TR1(321) =  DELAR/DELAMX
      TR1(322) = -DELSPR/DLSPMX
      TR1(323) = DELSPL/DLSPMX
      TR1(362) = CTLPSM/CTMX
      TR1(361) = CNEPL/CNEMX
      TR1(362) = CSEPL/CSEMX
      TR1(363) = CPMPL/CPMMX
      TR1(370)=  SINTHE
      TR1(371)=  COSTHE
      TR1(372)=  SINPHI
      TR1(373)=  COSPHI
      TR1(374)=  SINPHI*COSTHE
      TR1(375)=  COSPHI*COSTHE
      TR1(120) = CYMPL/CYMMX
      TR1(121) = CPL/CPMX
      TR1(122) = CTRPRM/CTMX
      TR1(123) = CNEPR/CNEMX
      TR1(160) = CSEPR/CSEMX
      TR1(161) =  CPMPR/CPMMX
      TR1(162) = CYMPR/CYMMX
      TR1(163) = CPR/CPMX
C
      TR1(310) = CPR/CPMX
      TR1(311) = CPL/CPMX
      TR1(312) = OMEGA/OMEGMX
      TR1(313) = SKTRIM(21)*UDOT/UDOTMX
      TR1(314) = ALARWN/FIXX/PDOTMX
      TR1(315) = AMAERN/CTYY/QDOTMX
      TR1(316) = ZARWN/SM/ZARMX
      TR1(110) =-DELTH/DLTHMX
      TR1(111) = -DSHP/SHPMX
      TR1(112) =-SHPTC/SHPMX
      TR1(113) =-AINRF/AINMX
      TR1(114) =-TPS/TPSMX
      TR1(115) = SHPPD/SHPMX/GRUTON
      TR1(116) =-DSHPP/SHPMX
      TR1(117) =-DVTAUE*SQTHTC/DEL/GRUTON
      TR1(130) = SQTHTC/DEL*TAUEMX/GRUTON
      TR1(131) = THATLM/THATMX
      TR1(132) = SQTHRT*DLTHP/DLTHMX
      TR1(133) =-DLTHP/DLTHMX
      TR1(134) = DTHDOM*DLOMG/THDMMX/10.
      TR1(135) = DLOMG/OMEGMX
      TR1(136) =-THGOVL/1.
```

Figure G.9. (Continued)

```
TR1(150) =-CMOOR/CMOMX
TR1(151) =-CYM /CYMMX
TR1(152) =-CRMR/CRMMX
TR1(153) = AINRFF/AIRMX
TR1(154)=  ACCZRA/AZRAMX
TR1(155)=  ACCYRA/AYRAMX
TR1(156)=  -XAERO/SM/UDOTMX
TR1(157)=  -YAERO/SM/VDOTMX
TR1(170) =-AINR/AINMX
TR1(171) =-AINL/AINMX
TR1(172) =-THGOVR/1.
TR1(210) = AINDOR/AIDOMX
TR1(211) = AINDOL/AIDOMX
TR1(212) = RDOT/RDOTMX
TR1(213) = QDOT/QDOTMX
TR1(214) = PDOT/PDOTMX
TR1(215)= -ZAERO/SM/WDOTMX
TR1(216) = ZDOT/VWMX
TR1(217) = 1.
TR1(218) = CRMOR/CRMMX
TR1(219) = CRMOL/CRMMX
TR1(232) = CYMOR/CYMMX
TR1(233) = CYMOL/CYMMX
TR1(234) =-SKTRIM(7)*(HDOT-HOTRIM)/VWMX
TR1(235) = RIC/RMD
TR1(250) = Q/QMX
TR1(251) = DELR/DELRMX
TR1(252) =  DELS/DELSMX
TR1(253) =-DELS/DELSMX
TR1(254) = DELR/DELRMX
TR1(255) =-DELRS/DELRMX
TR1(256) = -TH75R/TH75MX
TR1(257) = -TH75L/TH75MX
TR1(270) =  DELAR/DELAMX
TR1(271) =-DELAL/DELAMX
TR1(272) = -DELSR/DELSRMX
TR1(273) = DELSL/DELSRMX
TR1(274) = RDOT/RDOTMX
TR1(275) = PDOT/PDOTMX
TR1(276) = QDOT/QDOTMX
TR1(350) =-DELST/DELSMX
TR1(351) = GDRLDN*DELST/DELSMX
TR1(352) =-DELRT/DELRMX
TR1(353) =-VCALT/VMX
TR1(354) =-DELRT/DELRMX
TR1(355) = GDSCUL*DELST/GSCEMX/DELSMX
TR1(356) = GDRCYL*DELRT/GRCYMX/DELRMX
TR1(357) =-GDSCYL*DELST/GSCY4X/DELSMX
TR1(370) = DELST/DELSMX
```

Figure G.9. (Continued)

```
      TR1(371) =-GAIC/GICMX
      TR1(372) =-GBIC/GICMX
      TR1(373) = GDELP/DLELMX
      TR1(374) = GDE/DELEMX*EGTHR)
      TR1(375) = GDSP/DLSPMX
C
      TR1(330) =   V  / VWMX
      TR1(331) =   BETAB/ ABESMX
      TR1(332) =  -VCALIB / LMX
      TR1(333) =  - HDOT / VWMX
      TR1(334) =  - PHI / PI
      TR1(335) =    PSI / PSIMX
      TR1(336) =    THE / PI
      TR1(337) =    H / ZMX
      TR1(350) =    AVEALW / ALNGMX
      TR1(351) =    SOE / SOEMX
      TR1(352) =    XDOT / XDOTMX
      TR1(353) =    XIC  / XMX
      TR1(354) =    YDOT / YDOTMX
      TR1(355) =    YIC  / YMX
      TR1(357)=  PSIDOT/PSDMX
      TR1(310) =   THE / THEMX
      TR1(311) =   PHI / PI
      TR1(312) =   PSI / PSIMX
      TR1(313) =   XIC / XMX
      TR1(314) =   YIC / YMX
      TR1(315) =   H   / ZMX
      TR1(316) =   XDOT / XDOTMX
      TR1(317) =  AVAIL
C     BOARD 3E (CONSOLE 2) AMPLIFIERS SCALE FACTOR CALCULATION; P DENOTES POSITIVE OUTPUT
      RETURN                                                    N DENOTES NEGATIVE OUTPUT
      ENTRY STCON2
      CALL ANDAIN(PRDJ,BDNOS(2),LETP(2),TFC(2),NCON(2),A2P,  ,5,A2N,1,2,
     *            SJ2,4,5,TR2,6,5)
C
      A2P(380) = TPS/TPSMX
      A2N(380) =-DLTHP/DLTHMX
      A2P(301) =  -DSHP/SHPMX
      A2N(301) = -SHP2IC/SHPMX
      A2P(302) = DELTH/DLTHMX
      A2P(303) =-DSHPP/SHPMX
      A2N(303) = -GLSAP/GLSMX
      A2P(310) = SHP3IC/SHPMX
      A2P(311) = OMEGA/OMEGMX
      A2P(312) =-SQTHTC/DEL*CVTAUE/GBJTON
      A2P(313) =-DSHPPP/SHPMX
      A2P(320) =  THOM/THCMX
      A2P(321) = (THOM+TMS1+GDTHRT*DLTHP*GDLTH)/THCMX
      A2P(322) = QAVL*OMEGMX/SHPMX
```

Figure G.9. (Continued)

```
A2P( 23) = THUMD/TCMDMX
A2P( 30) = 0.
A2P( 31) = -GDTHET*(LTHP*.DLTH/TH[illegible]
A2P( 31) =-SKTRIM(12)*DADOT/[illegible]
A2P( 40) = 1.0
A2P(241) = 1.
A2P(242) =  [illegible]/CP[illegible]X/OMEG[illegible]X**2  *1[illegible].*2.
A2P( 43) = DYDOT/OMEGMX
A2P( 43) = OMGDM/OMEGMX
A2P(250) =  -THTMS/TT[illegible]SMX
A2P(250) = ALARDI/PDCTMX/1[illegible].
A2P(251) = ALARWN/FIXX/PDCTMX
A2P(252) = CPRQ/CPMX      *2.0                                    STK2381.
A2P(253) = THATLM/THATMX
A2P(260) = AMARDI/DDCTMX/1[illegible].
A2P(261) = AMARWN/FIYY/DDCTMX
A2P(262) = DLOMG/OMEGMX
A2P(262) =-TMS2/THDOMX
A2P(263) = TMS2/THDOMX
A2P(263) = TMS1P/THDOMX
A2P(270) =  SDTHT/ [illegible]MX/[illegible]
A2P(270) = ZARDIC/[illegible]MX/1[illegible].
A2P( 71) = ZARWN/CM/ZA[illegible]MX
A2P(2[illegible]) = AINRDI/AINDMX
A2P(2[illegible]) = AINR[illegible]/AIMMX
A2P(2[illegible]) = AINDD[illegible]/AIDDMX
A2P(2[illegible]) = AINDDL/AIDDMX
A2P(21[illegible]) = AINLDI/AISDMX
A2P(211) = AINL[illegible]/AIMMX
A2P(212) = PDDT/PDDTMX
A2P(213) = QDDT/DDDTMX
A2P(220) = AINRE[illegible]/AIMMX
A2P(221) = OMEGA**2/OMEG[illegible]**2
A2P(230) = SHPIC/SHPMX
A2P(230) = CPMPR/CPMMX
A2P(231) = CPMPL/[illegible]MX
A2P(240) = (HDOT-HOTRIM)/VWMX
A2P(240) = CYMPR/CYMMX
A2P(241) =-SKTRIM( 7)*(H[illegible]T-HOTRIM)/VWMX
A2P(241) = CYMPL/CYMMX
A2P(242) = PCTOL/PCTQMX
A2P(242) = AMACPR/AMACMX
A2P(243) = PCTOR/PCTQMX
A2P(243) = AMACLR/AMACMX
A2P(250) = 0.0
A2P(251) =  PCTQR / PCTQMX
A2P(252) = RDOT/RDOTMX
A2P(253) = AIRFD/AI[illegible]MX
A2P(260) = DCYIC/DCYL[illegible]MX
```

Figure G.9. (Continued)

```
      A2N(262) = DCYPD/DCYLMX/GBUTON
      A2P(263) = THTMSP/TTMSMX
      A2N(263) = THTMSL/TTMSMX
      A2P(300) = SHPPRR/SHPMX
      A2P(301) = SHP1/SHPMX
      A2P(302) = ALARP/FIXX/PDOTMX
      A2P(303) = AMARP/FIYY/QDOTMX
      A2P(310) =-SHP4/SHPMX
      A2N(310) = SHPD/SHPMX/GBUTON
      A2P(311) = SHPIC/SHPMX
      A2P(312) = -CMDQR/CPMQMX
      A2P(320) = AENG
      A2P(321) = DTHDOM/1.
      A2P(322) = ZARP/SM/ZARMX
      A2P(323) =  AINLDI**2/AINDMX**2
      A2P(330) = DLOMG/OMEGMX
      A2P(331) =  -AINRDI**2/AINDMX**2
      A2P(340) = DTHDOM*DLOMG/OMEGMX
      A2P(342) =  (AINL-ALAMDA)/PI
      A2P(343) =  (AINR-ALAMDA)/PI
      A2P(352) = -GLSB/GLSMX
      A2N(352) = GLSAL/GLSMX
      A2P(353) =  (XCG-SLPA)/XCGMX
      A2P(360) =  (AINDDL*CILAML+AINDDR*CILAMR)/AI[illegible]MX
      A2N(360) =  (AINLDI**2*CILAML+AINRDI**2*CILA[illegible])/AINDMX**2
      A2N(361) =  ACCXPA/AXPAMX
      A2P(362) =  (AINDDL*CILAML+AINDDR*CILAMR)/AI[illegible]MX
      A2N(362) =  (-AINLDI**2*SILAML-AINRDI**2*SIL[illegible])/AINDMX**2
      A2P(363) =  XDDCG/XDDMX
      A2N(363) =  ZDDCG/ZDDMX
      A2P(370) =  RDOT*(XCG-SLPA)/(RDOTMX*XCGMX)
      A2N(370) =  ACCYPA/AYPAMX
      A2P(371) =  -QDOT*(XCG-SLPA)/(QDOTMX*XCGMX)
      A2N(371) =  ACCZPA/AZPAMX
C BOARD 3E (CONSOLE 2) VALUES AT SUMMING JUNCTIONS OF AMPLIFIERS
      SJ2(300) = DLTHPD/DLTHMX/GBUTON
      SJ2(301) = SHPPD/SHPMX/GBUTON
      SJ2(310) = SHP3D/SHPMX/GBUTON
      SJ2(311) = CMDOT/CMEGMX/GBUTON
      SJ2(320) = THDMD/THDMX/GBUTON
      SJ2(321) = TMS1D/THDMX/GBUTON
      SJ2(330) = SKTRIM(13)*CMDOT/OMEGMX
      SJ2(331) = 0.
      SJ2(340) = 0.0
      SJ2(341) = 0.
      SJ2(350) =-ALARDD/PDOTMX/10./GBUTON/10.
      SJ2(351) = ALARDI/PDOTMX/GBUTON
      SJ2(360) =-AMARDD/QDOTMX/10./GBUTON/10.
      SJ2(361) = AMARDI/QDOTMX/GBUTON
```

Figure G.9. (Continued)

```
      SJ2(270) =-ZARDD/ZARMX/1[illegible]./GBUTON/1[illegible].
      SJ2(271) = ZARDIC/ZARMX/GBUTON
      SJ2(2[illegible]) = AINDDI/AINDMX/GBUTON
      SJ2(2[illegible]1) = AINDDI/AINMX/GBUTON
      SJ2(210) = AINDDL/AINDMX/GBUTON
      SJ2(211) = AINLDI/AINMX/GBUTON
      SJ2(2[illegible]) = AINFD/AINMX/GBUTON
      SJ2(23[illegible]) = 0.
      SJ2(231) = 0.
      SJ2(240) = 0.
      SJ2(241) = 0.
      SJ2(250) = -(ZDDT+HDTPIM)*SKTRIM(8)/VVMX
      SJ2(260) = DCYRD/DCYLMX/GBUTON
      SJ2(311) = SHPD/SHPMX/GBUTON
C     BOARD 3E (CONSOLE 2) VALUES OF TRUNK LINES AND ADC'S (FIRST 32 TR'S ARE ADC'S)
      TR2(2[illegible]) = AINDDI/AINDMX
      TR2(221) = AIN[illegible]/AINMX
      TR2(222) = AINLDI/AINDMX
      TR2(223) = AIN[illegible]/AINMX
      TR2(260) = AICLIC/AICMX
      TR2(261) = AICLIC/AICMX
      TR2(262) = AICRIC/AICMX
      TR2(263) = AICRIC/AICMX
      TR2(320)=-DELRDD/DLRDMX
      TR2(321) = AINRF/AINMX
      TR2(221) = 0.
      TR2(222) = 0.
      TR2(223) = 0.
      TR2(260) = 0.
      TR2(261) = 0.
      TR2(262) = 0.
      TR2(263) = DMDCT/DMEGMX
      TR2(120) = DMEGA/DMEGMX
      TR2(121) = TPS/TPSMX
      TR2(122) = AMACRP/AMACMX
      TR2(123) = AMACLP/AMACMX
      TR2(160) = 1.
      TR2(161) = 1.
      TR2(162) =-DLELV/DLEMX
      TR2(163) = DLELD/DLELMX
C
      TR2(110) = CPC/CPMX
      TR2(111) = CPL/CPMX
      TR2(112) = DMEGA/DMEGMX
      TR2(113) = SKTRIM(11)*DDCT/DDCTMX
      TR2(114) = AMARWN/FIXX/DDCTMX
      TR2(115) = AMARWN/FIXX/DDCTMX
      TR2(116) = ZARWN/SM/ZARMX
      TR2(230) = 0.
```

Figure G.9. (Continued)

```
TR2(031) = 0.
TR2(032) = 0.
TR2(110) =-DELTH/DLTHMX
TR2(111) = -DSHP/SHPMX
TR2(112) =-SHPIC/SHPMX
TR2(113) =-AINRF/AINMX
TR2(114) =-TPS/TPSMX
TR2(115) = SHPPD/SHPMX/GBUTON
TR2(116) =-DSHPP/SHPMX
TR2(117) =-QVTAUE*SQTHTC/DEL/GBUTON
TR2(130) = SQTHTC/DEL*TAUEMX/GBUTON
TR2(131) = THATLM/THATMX
TR2(132) = GDTHRT*DLTHP/DLTHMX
TR2(133) =-DLTHP/DLTHMX
TR2(134) = DTHDOM*DLOMG/THOMMX/10.
TR2(135) = DLOMG/OMEGMX
TR2(136) =-THGOVL/1.
TR2(150) =-CMDOR/CPMGMX
TR2(151) =-CYMD/CYMMX
TR2(152) =-CPMD/CPMMX
TR2(153) = AINSEE/AINMX
TR2(154)=  ACC/PA/AZPAMX
TR2(155)=  ACCYPA/AYPAMX
TR2(156)=  -XAERO/SM/UDOTMX
TR2(157)=  -YAERO/SM/VDOTMX
TR2(170) =-AINR/AINMX
TR2(171) =-AINL/AINMX
TR2(172) =-THGOVR/1.
TR2(210) = AINDDR/AIDDMX
TR2(211) = AINDDL/AIDDMX
TR2(212) = PDOT/PDOTMX
TR2(213) = QDOT/QDOTMX
TR2(214) = RDOT/RDOTMX
TR2(215)= -ZAERO/SM/WDOTMX
TR2(216) = ZDOT/VWMX
TR2(217) = 0.0
TR2(230) = CPMPR/CPMMX
TR2(231) = CPMPL/CPMMX
TR2(232) = CYMPR/CYMMX
TR2(233) = CYMPL/CYMMX
TR2(234) =-SKTRIM(7)*(HDOT-HDTRIM)/VWMX
TR2(235) = HIC/OMX
TR2(310) = THTMSR/TTMSMX
TR2(311) =-GLSB/GLSMX
TR2(312) = GLSAL/GLSMX
TR2(313) =-DCYL/DCYLMX
TR2(314) = -GLSAR/GLSMX
TR2(315) =-DELRUD/DLRDMX
TR2(316) =-DELELV/DELEMX
```

Figure G.9. (Continued)

```
      TR2(317) = DELELP/DELEMX
      TR2(330) = AICPIC/AICMX
      TR2(331) = AICLIC/AICMX
      TR2(332) = AICPIC/AICMX
      TR2(333) = AICLIC/AICMX
      TR2(334) = DELTH/DLTHMX
      TR2(337) = THTMSL/TTMSMX
C
      TR2(250) =  PCTOL/PCTOMX
      TR2(251) =  PCTOR/PCTOMX
      TR2(252) =  OMEGA/ OMEGMX
      TR2(253) =  AINPE / AINMX
      TR2(254) =  COMIDT/AINPMX
      TR2(255) =  COMDTH/ DLTHMX
      TR2(256) = -SKTRIM(12)*COMDOT/OMEGMX
      TR2(257) =  AVAIL
      TR2(370) =  ACCXPA/AXPAMX
      TR2(371) =  ACCYPA/AYPAMX
      TR2(372) =  ACCZPA/AZPAMX
C BOARD 5F (CONSOLE 3); AMPLIFIER SCALE FACTOR CALCULATION; P DENOTES POSITIVE OUTPUT
      RETURN                                                N DENOTES NEGATIVE OUTPUT
      ENTRY STCOM3
      CALL ANDAIN(PROJ,PDMCS(3),LETH(3),IFC(3),NCON(3),A3P,1,5,A3N,1,5,
     *            SJ3,4,5,T23,4,5)
C
      A3N(340) = AICPDI/AICMX/1 .
      A3P(341) = AICPIC/AICMX
      A3N(310) = AICLDI/AICMX/1 .
      A3P(311) = AICLIC/AICMX
      A3N(320) = AICPDI/AICMX/1 .
      A3P(321) = AICPIC/AICMX
      A3N(330) = AICLDI/AICMX/1 .
      A3P(331) = AICLIC/AICMX
      A3N(340) = 0.
      A3P(341) = 0.
      A3N(350) = 0.
      A3P(351) = 0.
      A3N(360) = DLSMIN/DLSMX
      A3N(361) = 0.
      A3N(370) = 0.
      A3N(371) = 0.
      A3P(200) = 0.
      A3N(201) = 0.
      A3P(201) = 0.
      A3P(202) = DELST/DELSMX
      A3P(203) = -DELDT/DELDMX
      A3N(203) = -DELELV/DELEMX
      A3P(210) = 0.
      A3P(211) = 0.
```

Figure G.9. (Continued)

```
      A3P(212) = -DELAR1/DELAMX
      A3N(212) =  DELAR2/DELAMX
      A3P(213) =  DELAL1/DELAMX
      A3N(213) = -DELAL2/DELAMX
      A3P(222) =  DCYL/DCYLMX
      A3P(223) =  DCDL/DCDLMX
      A3P(242) = DELR/DELRMX
      A3P(243) = DELS/DELSMX
      A3P(251) = TH75R/TH75MX
      A3P(252) = -DELRUD/DLRDMX
      A3N(252) = -DELSPR/DLSPMX
      A3P(253) = -DELRT/DELRMX
      A3N(253) =  DELSPL/DLSPMX
      A3P(261) = TH75L/TH75MX
      A3P(262) = DELR/DELRMX
      A3P(263) = DELFLP/DLFLMX
      A3N(300) = GLSBIC/GLSMX
      A3N(301) =-GLSAIL/GLSMX
      A3P(302) = DLON/DLONMX
      A3P(303) = DLFLPP/DLFLMX
      A3N(310) = BICRPD/BICMX/10.
      A3P(311) = BICRP /BICMX
      A3P(312) = DELAR/DELAMX
      A3N(312) =-DELAL/DELAMX
      A3P(313) = -VCALIB/UMX
      A3P(320) = GBICP/GICMX
      A3P(321) = GAICP/GICMX
      A3N(322) = GBICD/GICMX/GBUTON
      A3N(323) = GAICD/GICMX/GBUTON
      A3N(330) = BICLPD/BICMX/10.
      A3P(331) = BICLP /BICMX
      A3P(340) =-DELBS/DLONMX
      A3N(340) =-PSAS1/DLONMX
      A3N(341) = PSAS7/DLONMX
      A3N(341) =-PSAS2/DLONMX
      A3P(342) = DLSPLM/DLSPMX
      A3N(350) = AICRPD/AICMX/10.
      A3P(351) = AICRP /AICMX
      A3P(352) = PSAS5/DLONMX/GBUTON/10.
      A3P(353) = PSAS6/DLONMX/GBUTON
      A3P(360) = PSAS4/DLONMX
      A3N(361) =-PSAS3/DLONMX
      A3P(362) = GLONPH/1.
      A3N(370) = AICLPD/AICMX/10.
      A3P(371) = AICLP /AICMX
C     BOARD 5F (CONSOLE 3) VALUES AT SUMMING JUNCTIONS OF AMPLIFIERS
      SJ3(380) =-BICRPD/BICMX/10./GBUTON/10.
      SJ3(381) = BICRDI/BICMX/GBUTON
      SJ3(390) =-BICLDD/BICMX/10./GBUTON/10.
```

Figure G.9. (Continued)

```
      SJ3(311) = BICLPD/BICMX/GBUTON
      SJ3(320) =-AICRPD/AICMX/1 .  /GBUTON/1 .
      SJ3(321) = AICRPD/AICMX/GBUTON
      SJ3(330) =-AICLPD/AICMX/1 .  /GBUTON/1 .
      SJ3(331) = AICLPD/AICMX/GBUTON
      SJ3(360) =-GLSARD/GLSMX/GBUTON
      SJ3(361) = RDDT*STRIM(29)/RDDTMX
      SJ3(370) = RDDT*STRIM(10)/RDDTMX
      SJ3(371) =RDDT*STRIM(11)/RDDTMX
      SJ3(300) = -GLSRD/GLSMX/GBUTON
      SJ3(301) =  GLSALD/GLSMX/GBUTON
      SJ3(310) =-BIRPDD/BICMX/1 .  /GBUTON/1 .
      SJ3(311) = BICRPD/BICMX/GBUTON
      SJ3(320) = GAICD/GICMX/GBUTON
      SJ3(321) = GAICD/GICMX/GBUTON
      SJ3(330) =-BILPDD/BICMX/1 .  /GBUTON/1 .
      SJ3(331) = BICLPD/BICMX/GBUTON
      SJ3(340) = PSAS1D/DLDNMX/GBUTON
      SJ3(341) = PSAS2D/DLDNMX/GBUTON/1 .
      SJ3(350) =-AIRPDD/AICMX/1 .  /GBUTON/1 .
      SJ3(351) = AICRPD/AICMX/GBUTON
      SJ3(360) = PSAS4D/DLDNMX/GBUTON
      SJ3(361) = PSAS3D/DLDNMX/GBUTON
      SJ3(370) =-AILPDD/AICMX/1 .  /GBUTON/1 .
      SJ3(371) = AICLPD/AICMX/GBUTON
C
```

BOARD 5F (CONSOLE 3) VALUES OF TRUNK LINES AND ADC'S (FIRST 32 TR'S ARE ADC'S)

```
      TR3(220) =-DELRT/DELRMX
      TR3(221) = DELST/DELSMX
      TR3(222) =-DELRT/DELRMX
      TR3(223) = DELTH/DELTHMX
      TR3(250) =-DELRS/DELRMX
      TR3(261) =-DELSS/DELSMX
      TR3(262) =-DELAS/DELAMX
      TR3(263) = TH75R/TH75MX
      TR3(320) = TH75L/TH75MX
C
      TR3(330) = 0.
      TR3(331) = 0.
      TR3(332) = 0.
      TR3(250) = 0/0MX
      TR3(251) = DELR/DELRMX
      TR3(252) =  DELS/DELSMX
      TR3(253) =-DELSS/DELSMX
      TR3(254) = DELR/DELRMX
      TR3(255) =-DELSS/DELSMX
      TR3(256) = -TH75R/TH75MX
      TR3(257) = -TH75L/TH75MX
      TR3(270) =  DELAR/DELAMX
      TR3(271) =-DELAL/DELAMX
```

Figure G.9. (Continued)

```
      TR3(272) = -DELSPR/DLSPMX
      TR3(273) = DELSPL/DLSPMX
      TR3(274) = RDOT/RDOTMX
      TR3(275) = RDOT/RDOTMX
      TR3(276) = QDOT/QDOTMX
      TR3(310) = THTMSR/TTMSMX
      TR3(311) =-GLSB/GLSMX
      TR3(312) = GLSAL/GLSMX
      TR3(313) =-DCYL/DCYLMX
      TR3(314) = -GLSAR/GLSMX
      TR3(315) =-DELRUD/DLRDMX
      TR3(316) =-DELFLV/DELEMX
      TR3(317) = DELFLP/DLFLMX
      TR3(330) = BICRIC/BICMX
      TR3(331) = BICLIC/BICMX
      TR3(332) = AICRIC/AICMX
      TR3(333) = AICLIC/AICMX
      TR3(334) = DELTH/DLTHMX
      TR3(337) = THTMSL/TTMSMX
      TR3(350) =-DELST/DELSMX
      TR3(351) = GDRLCN*DELRT/DELRMX
      TR3(352) =-DELBT/DELBMX
      TR3(353) =-VCALIB/UMX
      TR3(354) =-DELRT/DELRMX
      TR3(355) = GDSCOL*DELST/GSCOMX/DELSMX
      TR3(356) = GDRCYL*DELRT/GRCYMX/DELRMX
      TR3(357) =-GDSCYL*DELST/GSCYMX/DELSMX
      TR3(370) = DELST/DELSMX
      TR3(371) =-GAIC/GICMX
      TR3(372) =-GBIC/GICMX
      TR3(373) = GDFLP/DLFLMX
      TR3(374) = GDE/DELEMX*DGTORD
      TR3(375) = GDSP/DLSPMX
C
      TR3(230)=  DELFLP/DLFLMX
      TR3(231) =   DELB / DELBMX
      TR3(232) =   DELS / DELSMX
      TR3(233) =   DELR / DELRMX
      TR3(234) =   COMDLB / DELBMX
      TR3(235) =   COMDLS / DELSMX
      TR3(236) =   COMDLR / DELRMX
      TR3(237) =   AVAIL
C     BOARD 1B (CONSOLE 4) AMPLIFIER SCALE FACTOR CALCULATION; P DENOTES POSITIVE OUTPUT
      RETURN                                                   N DENOTES NEGATIVE OUTPUT
      ENTRY STCON4
      BDNOS(4) = BD4
      LETR(4) = LT4
      CALL ANDAIN(PROJ,'1B','8',IFC(1),3,A4P,1,5,A4N,1,5,SJ4,4,5,TR4,5,
     *5)
```

Figure G.9. (Continued)

```
C
      A4P(390)=  PCTOL/TQSIMX
      A4P(201)=  PCTOR/TQSIMX
      A4P(202)=  PCM2/RPMSMX
      A4P(203)=  YDOT/YDTSMX
      A4P(210)=  -HDOT/HDTSMX
      A4P(211)=  ACCXPA/AXPAMX
      A4P(212)=  XDOT/XDTSMX
      A4P(213)=  -VCALTR/SKEPS/USIMX
      A4P(221)=  V/SKEPS/VSIMX
      A4P(222)=  THE*RDTODG/THESMX
      A4P(223)=  -PHI*RDTODG/PHISMX
      A4P(230)=  PSI*RDTODG/PSISMX
      A4P(231)=  PSDSIM/PSDTSX
      A4P(240)=  AINREF*RDTODG/AINSMX
      A4P(241)=  AVEALW*RDTODG/ALWSMX
      A4P(242)=  RETAF*RDTODG/RTSIMX
      A4P(243)=  ACCYPA/AYPAMX
      A4P(250)=  ACCZPA/AZPAMX
      A4P(251)=  DELELR/DCRSMX
      A4P(252)=  H/HSIMX
      A4P(253)=  0.
      A4P(260)=  0.
      A4P(261)=  1.0000
      A4P(262)=  H/ZMX
      A4P(263)=  0.
      A4P(270)=  0.
      A4P(271)=  1.0000
      A4P(200) =  XIC    / XVISMX
      A4P(201) =  YIC    / YVISMX
      A4P(202) =   SINTHE
      A4P(203) =   COSTHE
      A4P(210) =   1.0000
      A4P(211) =   VISIC /  XVISMX
      A4P(212) =   SINPHI
      A4P(213) =   COSPHI
      A4P(220) =   PSI / PI
      A4P(221) =   SA11
      A4P(222) =   SINPSI
      A4P(223) =   COSPSI
      A4P(230) =   SA12
      A4P(231) =   SA13
      A4P(240) =   SA21
      A4P(241) =   SA22
      A4P(242) =   SINTHE *SINPHI
      A4P(243) =   SINTHE *COSPHI
      A4P(250) =   SA23
      A4P(251) =   SA31
      A4P(252) =   YACVIS / YVISMX
```

Figure G.9. (Continued)

```
      A4N(252) =   ZACVIS / ZVISMX
      A4P(253) =   ZBODY / ZVISMX
      A4P(260) =   SA32
      A4P(261) =   SA33
      A4P(262) =   XACVIS / XVISMX
      A4P(263) =   FREQMT / 100.
      A4P(300)= (XHOPI(Z-H)/XVISMX
      A4N(300)=  (RIASMT-H*GZMTSI)/ZVISMX
      A4P(302) =   XBODY / XVISMX
      A4P(303) =   YBODY / YVISMX
      A4P(310)=  XSCOPE/SCOPMX
      A4P(311)=  YSCOPE/SCOPMX
      A4P(312)= -XSCOPE/SCOPMX-YIC*COSPHI/XVISMX+H*SINPHI/XVISMX
      A4P(313)= YSCOPE/SCOPMX+H*COSPHI/YVISMX+YIC*SINPHI/YVISMX
      A4P(320)=  0.0000
      A4P(321)=  0.0000
      A4P(323)=  -DBBKDR/DBBDMX
      A4P(330)=  0.0000
      A4P(331)=  0.0000
      A4P(341)=   FEDS   / FERMX
      A4P(342)=  -BRAKE/BRKSMX
      A4N(342)=   BRAKE/BRKMX
      A4P(343)=   THBKDR/THBDMX
      A4P(350)=   FEDS   / FESMX
      A4P(351) = 0.0
      A4P(352)=  -DSBKDR/DSBDMX
      A4P(353)=  -DRBKDR/DRBDMX
      A4P(360)=  -COMDL3/DBPSMX
      A4N(360)=   COMDL3/DELBMX
      A4P(361)=   -COMDLS/DSPSMX
      A4N(361)=  COMDLS/DELSMX
      A4P(362)=  -COMIDT/AIDSMX
      A4N(362)=  COMIDT/AINRMX
      A4P(363)=  FEDR/FERMX
      A4P(370)= -COMDLR/DRPSMX
      A4N(370)=  COMDLR/DELRMX
      A4P(371)=  -COMDTH/DTPSMX
      A4N(371)=   COMDTH/DLTHMX
C
C     BOARD 1B (CONSOLE 4) VALUES OF TRUNK LINES (NO ADC'S ON THIS BOARD)
      TR4(010)=  PCTQL / TQSIMX
      TR4(011)=  -TR4(010)
      TR4(012)=  PCTQR/TQSIMX
      TR4(013)=  -TR4(012)
      TR4(014)=  PCN2/RPMSMX
      TR4(015)=  -TR4(014)
      TR4(016)=  YDOT/YDTSMX
      TR4(017)=  -TR4(016)
      TR4(030) =   V / VWMX
```

Figure G.9. (Continued)

```
TR4(031) =  BETAF/ ABFSMX
TR4(032) = -VCALIB / LMX
TR4(033) = -HDOT / VWMX
TR4(034) = -PHI  / PI
TR4(035) =  PSI  / PSIMX
TR4(036) =  THE  / PI
TR4(037) =  H / ZMX
TR4(050) = AVEALW /ALWGMX
TR4(051) = SQF  / SQFMX
TR4(052) = XDOT / XDOTMX
TR4(053) = XIC  / XMX
TR4(054) = YDOT / YDOTMX
TR4(055) = YIC  / YMX
TR4(057)= PSIDOT/PSDMX
TR4(070)= SINTHE
TR4(071)= COSTHE
TR4(072)= SINPHI
TR4(073)= COSPHI
TR4(074)= SINPHI*COSTHE
TR4(075)= COSPHI*COSTHE
TR4(110)= VISHOR
TR4(111)= -TR4(110)
TR4(112)= VISVER
TR4(113)= -TR4(112)
TR4(130)= VCALIB/SKEPS/LSIMX
TR4(131)= -TR4(130)
TR4(132)= V/SKEPS/VSIMX
TR4(133)= -TR4(132)
TR4(134)= THE*RDTODG/THESMX
TR4(135)= -TR4(134)
TR4(136)= PHI*RDTODG/PHISMX
TR4(137)= -TR4(136)
TR4(150)= PSI*RDTODG/PSISMX
TR4(151)= -TR4(150)
TR4(152)= PSDSIM/PSDTSX
TR4(153)= -TR4(152)
TR4(154)= AINRF*RDTODG/AINSMX
TR4(155)= -TR4(154)
TR4(156)= AVEALW*RDTODG/ALWSMX
TR4(157)= -TR4(156)
TR4(170)= BETAF*RDTODG/BTSIMX
TR4(171)= -TR4(170)
TR4(172)= ACCYPA/AYPAMX
TR4(173)= -TR4(172)
TR4(174)= ACCZPA/AZPAMX
TR4(175)= -TR4(174)
TR4(176)= DELFLP/DFPSMX
TR4(177)= -TR4(176)
TR4(210)= HDOT/HDTSMX
```

Figure G.9. (Continued)

```
TR4(211)=  -TR4(210)
TR4(212)=  XDOT/XDTSMX
TR4(213)=  -TR4(212)
TR4(214)=  ACCXPA/AXPAMX
TR4(215)=  -TR4(214)
TR4(230)=  DELFLP/DLFLMX
TR4(231) =   DELB / DELBMX
TR4(232) =   DELS / DELSMX
TR4(233) =   DELR / DELRMX
TR4(234) =   COMDLB / DELBMX
TR4(235) =   COMDLS / DELSMX
TR4(236) =  COMDLR / DELRMX
TR4(237) =  AVAIL
TR4(250)=  PCTOL/PCTQMX
TR4(251)=  PCTQR/PCTQMX
TR4(252) =   OMEGA / OMEGMX
TR4(253)=  AINRF/AINMX
TR4(254)=  COMIDT/AINRMX
TR4(255) =   COMDTH / DLTHMX
TR4(256)= -SKTRIM(12)*OMDOT/OMEGMX
TR4(257) =   AVAIL
TR4(270)=  ACCXPA/AXPAMX
TR4(271)=  ACCYPA/AYPAMX
TR4(272)=  ACCZPA/AZPAMX
TR4(310)=  -COMIDT/AIDSMX
TR4(311)=  -TR4(310)
TR4(312)=  -BRAKE/BRKSMX
TR4(313)=  -TR4(312)
TR4(330)=  DBBKDR/DBBDMX
TR4(331)=  -TR4(330)
TR4(332)=  DRBKDR/DRBDMX
TR4(333)=  -TR4(332)
TR4(334)=  DSBKDR/DSBDMX
TR4(335)=  -TR4(334)
TR4(336)=  THBKDR/THBDMX
TR4(337)=  -TR4(336)
TR4(350)=  FFDB/FFBMX
TR4(351)=  -TR4(350)
TR4(352)=  FFDS/FFSMX
TR4(353)=  -TR4(352)
TR4(354)=  FFDR/FFRMX
TR4(355)=  -TR4(354)
TR4(356)=  H/HSIMX
TR4(357)=  -TR4(356)
TR4(370)=  -COMDLB/DBPSMX
TR4(371)=  -TR4(370)
TR4(372)=  -COMDLS/DSPSMX
TR4(373)=  -TR4(372)
TR4(374)=  -COMDLR/DRPSMX
```

Figure G.9. (Continued)

```
      TR4(375) = -TR4(374)
      TR4(376) = -COMMON/CTRSMX
      TR4(377) = -TR4(376)
C
      RETURN
      END
```


Figure G.9. (Continued)

equilibrium. The equations for these feedback loops are shown in Appendix E. Several trim options are available: for a given initial condition of altitude, u and v components of velocity, rotor RPM and initial rates (p,q,r) the aircraft can be trimmed with attitude for specified nacelle angle or with nacelle angle for specified attitude. In addition, the aircraft can be trimmed in backwards or sidewards flight. The trim gains used vary with the flight condition. Trim is generally attained in 5-10 seconds for any flight condition using this technique.

G.3 SIMULATION PROGRAM OUTPUT

The primary output of the mathematical model are:

- Trim sheet information
- Dynamic time histories of aircraft response

Figure G.10 shows a typical trim sheet with 180 aircraft parameters printed out and Figure G.11 contains the definitions of all the parameters. Four brush recorders with eight channels of output each are available for recording of the aircraft real time response. Figure G.12 shows a typical example of the output from one recorder. These data are extremely useful in analyzing aircraft responses and in optimizing stability augmentation and control systems.

T I L T R O T O R T R I M D A T A

DATE 03/23/73 TIME 11 HR 2 MIN 40 SEC FLIGHT NO.= RUN NO.= TAPE SEQ. NO.= 0

VTOT= 250.0 KT U = 250.0 KT V = -0.0 KT W = -2.0 KT G.W.= 12320.5 LBS RPM= 385.8 H = 51.5 FT XCG= 9.2 IN ZCG= 21.9 IN

THETA	PHI	PSI	IN REF	TWIST LW	TWIST RW	RDE	TH75 L	TH75 R
-0.44000E 00	0.24500E 00	0.0	-0.22918E-01	0.0	0.0	0.23723E-02	0.47136E 02	0.47192E 02
DELB TOT	DELS TOT	DELR TOT	THROTTLE	DELB SAS	DELS SAS	DELR SAS	A1CL	A1CR
-0.12590E 01	-0.70000E-02	0.11000E-01	0.20350E 01	0.0	-0.10000E-02	0.10000E-02	0.73893E-02	0.0
ELEVATOR	RUDDER	DEL L	DEL R	DELSPL	DELSPR	FLAP	B1CL	B1CR
0.23835E 01	0.0	0.63000E-01	0.11700E 00	0.85500E-01	-0.90000E-02	0.90000E-01	0.36629E-02	0.0
TPS	OM ENG	SHP AV	SHP RQL	SHP RQR	IXX	IYY	IZZ	D.PRES F
0.18870E 04	0.23582E 04	0.82417E 03	0.85759E 03	0.88021E 03	0.50275E 05	0.14168E 05	0.60628E 05	0.21152E 03
MU L	THRUST L	NORMAL L	SIDE L	M ROT L	N ROT L	L HUB L	M HUB L	N HUB L
0.80349E 00	0.79523E 03	0.62197E 02	-0.22239E 02	-0.13081E 03	0.29939E 03	-0.11038E 05	0.10502E 03	0.43560E 03
MU R	THRUST R	NORMAL R	SIDE R	M ROT R	N ROT R	L HUB R	M HUB R	N HUB R
0.80389E 00	0.82572E 03	0.13206E 03	-0.50044E 02	-0.35239E 03	0.66683E 03	0.11352E 05	0.34573E 03	-0.71457E 03
X FUSE	X TAIL	X WING L	X WING R	X NAC L	X NAC R	X TIP L	X TIP R	X/M
-0.32474E 03	-0.16235E 03	-0.54087E 03	-0.54383E 03	-0.47215E 02	-0.47178E 02	0.74795E 03	0.77836E 03	-0.11876E 00
Y FUSE	Y TAIL	Y WING L	Y WING R	Y NAC L	Y NAC R	Y TIP L	Y TIP R	Y/M
0.19445E 01	0.78296E 00	0.30284E-01	0.30555E-01	0.12310E 00	0.12332E 00	0.22726E 02	-0.49107E 02	-0.61603E-01
Z FUSE	Z TAIL	Z WING L	Z WING R	Z NAC L	Z NAC R	Z TIP L	Z TIP R	Z/M
-0.19685E 04	0.52210E 03	-0.55187E 04	-0.56095E 04	0.20065E 02	0.19979E 02	0.82729E 02	0.15328E 03	-0.32217E 02
L FUSE	L TAIL	L WING	M ACT L	L NAC L	L NAC R	L TIP L	L TIP R	L/IXX
-0.35475E 01	0.22225E 01	-0.58618E 03	-0.49072E 04	0.0	0.0	-0.11039E 05	0.11353E 05	0.16997E-01
M FUSE	M TAIL	M WING	M ACT R	M NAC L	M NAC R	M TIP L	M TIP R	M/IYY
-0.17206E 04	0.10696E 05	-0.56448E 04	-0.51483E 04	0.0	0.0	-0.30036E 03	-0.40651E 03	0.10087E-02
N FUSE	N TAIL	N WING	Z WING	N NAC LN	NAC R	N TIP L	N TIP R	N/IZZ
0.17683E 02	-0.14728E 02	0.20164E 02	-0.11128E 05	0.0	0.0	0.57371E 03	-0.90887E 03	-0.13173E-01
ALPH FUS	ALPH HT	ALPHLWSS	ALPHRWSS	AL NAC L	AL NAC R	AL ROT L	AL ROT R	H1 L
-0.44233E 00	-0.18750E 01	0.15366E 01	0.15543E 01	-0.49013E 00	-0.48805E 00	0.51441E 00	0.48941E 00	0.0
BETA FUS	ALPH VT	ALPHA LW	ALPHA RW	CY NAC L	CY NAC R	ZETA L	ZETA R	H1 R
-0.54272E-02	0.14400E-02	0.15458E 01	0.15684E 01	0.57043E-05	0.57144E-05	-0.17966E 03	-0.17965E 03	0.0
CL FUSE	CL HT	CL WNG L	CL WNG R	CL NAC L	CL NAC R	CP L	CT L	CNF L
0.46603E-01	-0.41885E-01	0.25928E 00	0.26346E 00	-0.92982E-03	-0.92587E-03	0.25800E-02	0.22860E-02	0.17879E-03
CD FUSE	CD HT	CD WNG L	CD WNG R	CD NAC L	CD NAC R	CSF L	CPM L	CYM L
0.73200E-02	0.86827E-02	0.23336E-01	0.23539E-01	0.22411E-02	0.22392E-02	-0.63930E-04	-0.22291E-04	0.66203E-04
CM FUSE	CY VT	CM WNG L	CM WNG R	CM NAC L	CM NAC R	CP R	CT R	CNF R
-0.50233E-02	0.84995E-04	-0.31167E-01	-0.31720E-01	0.0	0.0	0.26520E-02	0.23760E-02	0.38000E-03
CN FUSE	CD VT	CL(ROLL)	CN WING	CN NAC L	CN NAC R	CSF R	CPM R	CYM R
0.12411E-04	0.78915E-02	-0.41168E-03	0.14161E-04	0.0	0.0	-0.14400E-03	-0.78000E-04	0.14760E-03
EP ZERO	EP TAIL	EP PRR	EP PLR	EP ILR	EP IRL	EP WRR	EP WRL	OMDOT
0.71116E 00	0.14595E 01	0.14267E-01	0.92668E-02	0.42248E-08	0.0	0.0	0.0	-0.11160E 01

Figure G.10. Typical Model 222 Trim Sheet

TOTAL VELOCITY ~ KTS.	"U" COMPONENT OF VELOCITY ~KTS.	"V" COMPONENT OF VELOCITY ~ KTS.	"W" COMPONENT OF VELOCITY ~ KTS	GROSS WEIGHT ~LBS ~	ROTOR RPM	ALTITUDE (h) ~ FT.	LONG. LOCATION OF C.G WITH RESPECT TO PIVOT ~ IN.	VERTICAL LOCATION OF CG WITH RESPECT TO PIVOT ~ IN
PITCH ATTITUDE (θ) ~ DEG.	ROLL ATTITUDE ϕ ~ DEG.	YAW ANGLE (ψ) DEG	REFERENCE NACELLE ANGLE ($i_{N_{REF}}$) ~ DEG.	LEFT WING TWIST AT TIP ~ ($\theta_{T_{LW}}$) ~ DEG ~	RIGHT WING TWIST AT TIP ~ ($\theta_{T_{RW}}$) ~ ~ DEG ~	ATMOSPHERIC DENSITY (ρ) ~SLUGS/FT³ ~	LEFT ROTOR COLL. PITCH AT .75 R. ($\theta_{.75L}$) ~DEG ~	RIGHT ROTOR COLL. PITCH AT .75 R ($\theta_{.75R}$) ~ DEG ~
TOTAL LONG. STICK POSITION (δ_a) ~ IN.	TOTAL LATERAL STICK POSITION (δ_s) ~ IN.	TOTAL RUDDER PEDAL POSITION (δ_r) ~ IN. ~	THROTTLE POSITION (δ_{TH}) ~ IN. ~	LONG. SAS INPUT (δ_{SLSAS}) ~ IN ~	LATERAL SAS INPUT (δ_{SSAS}) ~ IN ~	DIRECTIONAL SAS INPUT (δ_{rSAS}) ~ IN. ~	LEFT ROTOR LATERAL CYCLIC PITCH (A_{1L}) ~ DEG ~	RIGHT ROTOR LATERAL CYCLIC PITCH (A_{1R}) ~ DEG ~
ELEVATOR DEFLECTION (δ_e) ~ DEG	RUDDER DEFLECTION (δ_{RUD}) ~ DEG	LEFT WING FLAPERON DEFLECTION (δ_{fL}) ~ DEG	RIGHT WING FLAPERON DEFLECTION (δ_{fR}) ~ DEG.	LEFT WING SPOILER DEFLECTION (δ_{SOL}) ~ DEG	RIGHT WING SPOILER DEFLECTION (δ_{SSR}) ~ DEG.	FLAP DEFLECTION (δ_F) ~ DEG.	LEFT ROTOR LONG. CYCLIC PITCH (B_{1C_L}) ~ DEG ~	RIGHT ROTOR LONG CYCLIC PITCH (B_{1C_R}) ~ DEG ~
ENGINE TURBINE INLET TEMP. (T_{OS}) ~ DEG. ~	ENGINE SPEED (Ω_E) ~ RPM	ENGINE SHAFT POWER AVAILABLE (SHP_A)	LEFT ROTOR POWER REQUIRED (SHP_{RLR})	RIGHT ROTOR POWER REQUIRED (SHP_{RRR})	TOTAL ROLL INERTIA (I_{xx}) ~ SLUG-FT² ~	TOTAL PITCH INERTIA (I_{yy}) ~ SLUG-FT²	TOTAL YAW INERTIA (I_{zz}) ~ SLUG-FT² ~	DYNAMIC PRESSURE (q_0) ~ LB/FT²
LEFT ROTOR ADVANCE RATIO (μ_{LR})	RIGHT ROTOR THRUST (T_R) ~ LB	LEFT ROTOR NORMAL FORCE (NF_L) ~ LB	LEFT ROTOR SIDE FORCE (SF_L) ~ LB	LEFT ROTOR PITCHING MOMENT (M_L) ~ FT-LB	LEFT ROTOR YAWING MOMENT (N_L) ~ FT-LB	TOTAL ROLL MOMENT AT LEFT HUB ($\mathcal{L}_{LRH}$) ~ FT-LB ~	TOTAL PITCH MOMENT AT LEFT HUB ($\mathcal{M}_{LRH}$) ~ FT-LB ~	TOTAL YAW MOMENT AT LEFT HUB ($\mathcal{N}_{LRH}$) ~ FT-LB ~
RIGHT ROTOR ADVANCE RATIO (μ_{RR})	LEFT ROTOR THRUST (T_L) ~ LB	RIGHT ROTOR NORMAL FORCE (NF_R) ~ LB	RIGHT ROTOR SIDE FORCE (SF_R) ~ LB	RIGHT ROTOR PITCHING MOMENT (M_R) ~ FT-LB	RIGHT ROTOR YAWING MOMENT (N_R) ~ FT-LB	TOTAL ROLL MOMENT AT RIGHT HUB ($\mathcal{L}_{RRH}$) ~ FT-LB ~	TOTAL PITCH MOMENT AT RIGHT HUB ($\mathcal{M}_{RRH}$) ~ FT-LB ~	TOTAL YAW MOMENT AT RIGHT HUB ($\mathcal{N}_{RRH}$) ~ FT-LB ~
FUSELAGE LONG. FORCE (X^F_{Aero}) ~ LB ~	EMPENNAGE LONG. FORCE (X^T_{Aero}) ~ LB ~	LONG. FORCE ON LEFT WING (X^{LW}_{Aero}) ~ LB ~	LONG. FORCE ON RIGHT WING (X^{RW}_{Aero}) ~ LB ~	LEFT NACELLE LONG. FORCE ($\Delta X'_{LN}$) ~ LB ~	RIGHT NACELLE LONG. FORCE ($\Delta X'_{RN}$) ~ LB ~	LEFT TIP PIVOT LONG. FORCE (X^{NL}_{ARLL}) ~ LB ~	RIGHT TIP PIVOT LONG FORCE (X^{NR}_{ARRL})	LONG. ACCELERATION AT C.G (X_{Aero}/m) ~ FT/SEC² ~
FUSELAGE SIDE FORCE (Y^F_{Aero}) ~ LB ~	EMPENNAGE SIDE FORCE (Y^T_{Aero}) ~ LB ~	SIDE FORCE ON LEFT WING (Y^{LW}_{Aero}) ~ LB ~	SIDE FORCE ON RIGHT WING (Y^{RW}_{Aero}) ~ LB ~	LEFT NACELLE SIDE FORCE ($\Delta Y'_{LN}$) ~ LB ~	RIGHT NACELLE SIDE FORCE ($\Delta Y'_{RN}$) ~ LB ~	LEFT TIP PIVOT SIDE FORCE (Y^{NL}_{ARLL}) ~ LB ~	RIGHT TIP PIVOT SIDE FORCE (Y^{NR}_{ARRL}) ~ LB ~	LATERAL ACCELERATION AT CG (Y_{Aero}/m) ~ FT/SEC² ~
FUSELAGE VERTICAL FORCE (Z^F_{Aero}) ~ LB. ~	EMPENNAGE VERTICAL FORCE (Z^T_{Aero}) ~ LB	VERTICAL FORCE ON LEFT WING (Z^{LW}_{Aero}) ~ LB ~	VERTICAL FORCE ON RIGHT WING (Z^{RW}_{Aero}) ~ LB ~	LEFT NACELLE VERTICAL FORCE ($\Delta Z'_{LN}$) ~ LB ~	RIGHT NACELLE VERTICAL FORCE ($\Delta Z'_{RN}$) ~ LB ~	LEFT TIP PIVOT VERTICAL FORCE ($Z^{NL'}_{ARLL}$) ~ LB ~	RIGHT TIP PIVOT VERTICAL FORCE ($Z^{NR'}_{ARRL}$) ~ LB ~	VERTICAL ACCELERATION AT CG. (Z_{Aero}/m) ~ FT/SEC² ~
FUSELAGE ROLLING MOMENT ($\mathcal{L}^F_{Aero}$) ~ FT-LB ~	EMPENNAGE ROLLING MOMENT ($\mathcal{L}^T_{Aero}$) ~ FT-LB ~	WING ROLLING MOMENT ($\mathcal{L}^W_{Aero}$) ~ FT-LB ~	LEFT NACELLE ACTUATOR PITCHING MOMENT (M_{ACT}) ~ FT-LB ~	LEFT NACELLE ROLLING MOMENT ($\Delta \mathcal{L}'_{LN}$) ~ FT-LB ~	RIGHT NACELLE ROLLING MOMENT ($\Delta \mathcal{L}'_{RN}$) ~ FT-LB ~	LEFT TIP PIVOT ROLLING MOMENT ($\mathcal{L}^{NL'}_{ARLL}$) ~ FT-LB ~	RIGHT TIP PIVOT ROLLING MOMENT ($\mathcal{L}^{NR'}_{ARRL}$) ~ FT-LB ~	ROLL ACCELERATION AT CG. ($\mathcal{L}_{Aero}/I_{xx}$) ~ RAD/SEC² ~
FUSELAGE PITCHING MOMENT ($\mathcal{M}^F_{Aero}$) ~ FT-LB ~	EMPENNAGE PITCHING MOMENT ($\mathcal{M}^T_{Aero}$) ~ FT-LB ~	TOTAL WING PITCHING MOMENT ($\mathcal{M}^W_{Aero}$) ~ FT-LB ~	RIGHT NACELLE ACTUATOR PITCHING MOMENT (M_{ACT}) ~ FT-LB ~	LEFT NACELLE PITCHING MOMENT ($\Delta \mathcal{M}'_{LN}$) ~ FT-LB ~	RIGHT NACELLE PITCHING MOMENT ($\Delta \mathcal{M}'_{RN}$) ~ FT-LB ~	LEFT TIP PIVOT PITCHING MOMENT ($\mathcal{M}^{NL}_{ARLL}$) ~ FT-LB ~	RIGHT TIP PIVOT PITCHING MOMENT ($\mathcal{M}^{NR}_{ARRL}$) ~ FT-LB ~	PITCH ACCELERATION AT CG ($\mathcal{M}_{Aero}/I_{yy}$) ~ RAD/SEC² ~
FUSELAGE YAWING MOMENT ($\mathcal{N}^F_{Aero}$) ~ FT-LB	EMPENNAGE YAWING MOMENT ($\mathcal{N}^T_{Aero}$) ~ FT-LB	WING YAWING MOMENT ($\mathcal{N}^W_{Aero}$) ~ FT-LB ~	TOTAL WING VERTICAL FORCE (Z^W_{Aero}) ~ LB ~	LEFT NACELLE YAWING MOMENT ($\Delta \mathcal{N}'_{LN}$) ~ FT-LB ~	RIGHT NACELLE YAWING MOMENT ($\Delta \mathcal{N}'_{RN}$) ~ FT-LB ~	LEFT TIP PIVOT YAWING MOMENT ($\mathcal{N}^{NL}_{ARLL}$) ~ FT-LB ~	RIGHT TIP PIVOT YAWING MOMENT ($\mathcal{N}^{NR}_{ARRL}$) ~ FT-LB	YAW ACCELERATION AT CG ($\mathcal{N}_{Aero}/I_{zz}$) ~ RAD/SEC² ~
FUSELAGE ANGLE OF ATTACK (α_{FP}) ~ DEG. ~	HORIZONTAL TAIL ANGLE OF ATTACK (α_{HT}) ~ DEG.	LEFT WING SLIPSTREAM ANGLE OF ATTACK ($\alpha_{LW_{SLS}}$) ~ DEG ~	RIGHT WING SLIPSTREAM ANGLE OF ATTACK ($\alpha_{RW_{SLS}}$) ~ DEG	LEFT NACELLE ANGLE OF ATTACK (α_{LN}) ~ DEG.	RIGHT NACELLE ANGLE OF ATTACK (α_{RN}) ~ DEG.	LEFT ROTOR RESOLVED ANGLE OF ATTACK (α_{LR}) ~ DEG ~	RIGHT ROTOR RESOLVED ANGLE OF ATTACK (α_{LR}) ~ DEG ~	LEFT TIP DEFLECTION (h_{iL}) ~ IN. ~
FUSELAGE ATTITUDE (θ_F) ~ DEG ~	VERTICAL TAIL ANGLE OF ATTACK (α_{VT}) ~ DEG.	LEFT WING ANGLE OF ATTACK (α_{LW_S}) ~ DEG ~	RIGHT WING ANGLE OF ATTACK (α_{RW_S}) ~ DEG ~	LEFT NACELLE SIDEFORCE COEFF (C_{YLR})	RIGHT NACELLE SIDEFORCE COEFF. (C_{YRN})	LEFT ROTOR SIDESLIP ANGLE (β_{HL}) ~ DEG	RIGHT ROTOR SIDESLIP ANGLE (β_{HR}) ~ DEG ~	RIGHT TIP DEFLECTION (h_{iR}) ~ IN. ~
FUSELAGE LIFT COEFF. (C_{LF})	HORIZONTAL TAIL LIFT COEFF. (C_{LHT})	LEFT WING SLIPSTREAM LIFT COEFF. ($C_{LS_{LW}}$)	RIGHT WING SLIPSTREAM LIFT COEFF. ($C_{LS_{RW}}$)	LEFT NACELLE LIFT COEFF (C_{LLN})	RIGHT NACELLE LIFT COEFF. (C_{LRN})	LEFT ROTOR POWER COEFF. (C_{PLR})	LEFT ROTOR THRUST COEFF (C_{TLR})	LEFT ROTOR NORMAL FORCE COEFF. (C_{NFLR})
FUSELAGE DRAG COEFF. (C_{DF})	HORIZONTAL TAIL DRAG COEFF (C_{DHT})	LEFT WING SLIPSTREAM DRAG COEFF. ($C_{D_{LW}}$)	RIGHT WING SLIPSTREAM DRAG COEFFICIENT ($C_{D_{RW}}$)	LEFT NACELLE DRAG COEFF (C_{DLN})	RIGHT NACELLE DRAG COEFF (C_{DRN})	LEFT ROTOR SIDE-FORCE COEFF. (C_{SFLR})	LEFT ROTOR PITCHING MOMENT COEFF. (C_{PMLR})	LEFT ROTOR YAWING MOMENT COEFF. (C_{YMLR})
FUSELAGE PITCHING MOMENT COEFF. (C_{MF})	VERTICAL TAIL LIFT COEFF. (C_{LVT})	LEFT WING SLIPSTREAM PITCHING MOMENT COEFF. ($C_{M_{SLW}}$)	RIGHT WING SLIPSTREAM PITCHING MOMENT COEFF. ($C_{M_{SRW}}$)	LEFT NACELLE PITCHING MOMENT COEFF. (C_{MLN})	RIGHT NACELLE PITCHING MOMENT COEFF. (C_{MRN})	RIGHT ROTOR POWER COEFF. (C_{PRR})	RIGHT ROTOR THRUST COEFF. (C_{TRR})	RIGHT ROTOR NORMAL FORCE COEFF. (C_{NFRR})
FUSELAGE YAWING MOMENT COEFF. (C_{NF})	VERTICAL TAIL DRAG COEFF. (C_{DVT})	WING SLIPSTREAM ROLLING MOMENT COEFF. (C_{R_W})	WING SLIPSTREAM YAWING MOMENT COEFF. ($C_{N_{SW}}$)	LEFT NACELLE YAWING MOMENT COEFF. (C_{YLN})	RIGHT NACELLE YAWING MOMENT COEFF. (C_{YRN})	RIGHT ROTOR SIDE-FORCE COEFF. (C_{SFRR})	RIGHT ROTOR PITCHING MOMENT COEFF. (C_{PMRR})	LEFT ROTOR YAWING MOMENT COEFF. (C_{YMRR})
HOR. TAIL DOWNWASH AT α = ZERO. (ϵ_0) ~ DEG. ~	HORIZONTAL TAIL DOWNWASH ANGLE (ϵ) ~ DEG.	LEFT ROTOR DOWNWASH ANGLE (ϵ_{PRQ}) ~ DEG.	RIGHT ROTOR DOWNWASH ANGLE (ϵ_{PLR}) ~ DEG.	INTERFERENCE ANGLE, LEFT ROTOR ON RIGHT (ϵ_{iLR}) ~ DEG	INTERFERENCE ANGLE RIGHT ROTOR ON LEFT. (ϵ_{iRL}) ~ DEG ~	INTERFERENCE ANGLE RIGHT WING ON ROTOR (ϵ_{WRL}) ~ DEG. ~	INTERFERENCE ANGLE LEFT WING ON ROTOR (ϵ_{WRL}) ~ DEG.	ROTOR ACCEL. ($\dot{\Omega}$) ~ RAD/SEC²

Figure G.11. Definition of Trim Sheet Parameters

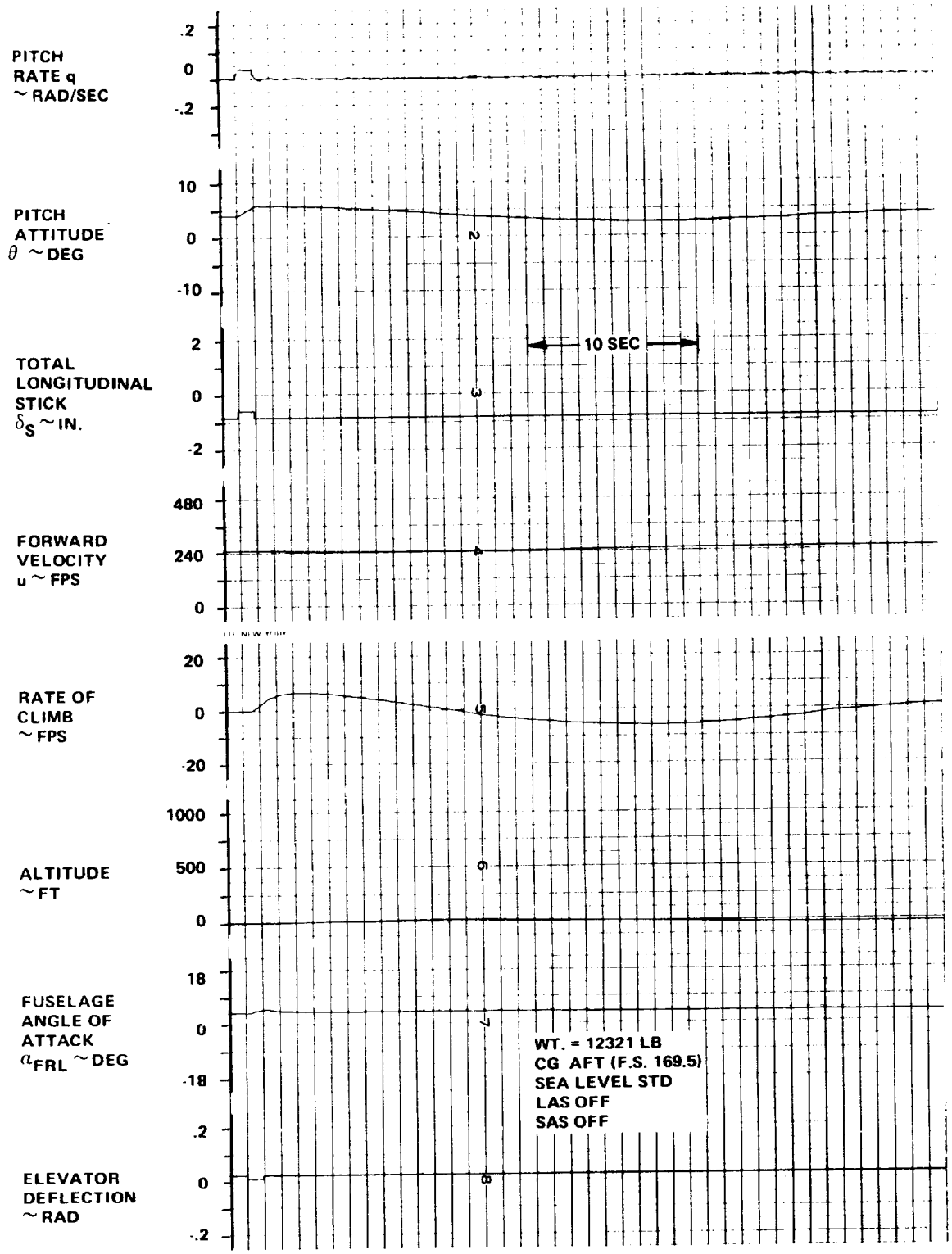

Figure G.12. Typical Time History Response to A .25 Inch Longitudinal Stick Pulse at 150 Knots

APPENDIX H VALIDATION OF THE MODEL 222 SIMULATION AT AMES RESEARCH CENTER

This section presents the validation plan which was submitted to NASA prior to the checkout and validation period at the Ames Research Center, and the simulation acceptance and pilot operating instructions and limitations submitted after the checkout period.

H.1 VALIDATION PLAN AND CRITERIA

Validation of large scale hybrid math model is an extremely time consuming and difficult process. The validation plan and criteria to be used by Boeing Vertol personnel in checking out and validating the NASA Model 222 simulation is developed in the following section. The following items will be considered in this validation:

- Trim Checks
  - Range of data: 25 kt increments from minimum to maximum speed. (including backward and sideward flight).
  - Accuracy (when compared against Boeing Vertol check cases)

Trim Data	Tolerance
Pilot control position	±0.25 in.
Stick and pedal position slope with speed	±10%
Thrust or wing lift	∓2 1/2%
Pitch, roll, yaw angles	∓1.0°
Collective pitch	∓.5°

These requirements are subject to change pending a detailed selection of the trim conditions.

- Dynamic Responses (Response to control pulses)

  - Range of data: An axis by axis check with SAS and LAS systems on and off. Same speeds as for trim data.

  - Accuracy (when compared against Boeing Vertol check cases)

    Period $\pm 10\%$

    Time to double (or half) amplitude $\pm 10\%$

  - Stability Derivative Checks

    - Range of data: Selected stability and control derivatives will be obtained at no more than five conditions.

  - Accuracy when compared against Boeing Vertol check cases)

    Selected major stability and control derivatives

    (L_v, N_v, L_p, N_p, L_r, N_r, X_u, M_w, M_w, M_q, Z_w,

    L_{δ_s}, N_{δ_s}, L_{δ_r}, N_{δ_r}, M_{δ_B}, M_{i_N}, $Z_{\delta_{TH}}$) $\pm 10\%$

  - Validation of Time Frame

    Run selected dynamic response checks at hover and cruise in real time and 1/10 real time i.e. reduced interval of integration. Damping of predominant modes shall not change by more than $\pm 10\%$.

  - Transport Lag Checks

    The transport lag i.e. aircraft response following control input shall not be greater than one to two time frames (average 1 1/2 time frames)

  - Pilot acceptance will be based on a subjective comparison between the results obtained in the Boeing nudge base simulator and those obtained on the FSAA.

H.2 SIMULATION ACCEPTANCE

Following the checkout period at Ames, the following simulation acceptance document was submitted.

The math model, as programmed, is considered acceptable for initial evaluations.

The following differences exist between the math model and the aircraft described in Boeing's proposal for Phase II.

1. The data bank in the math model gives very conservative values of power around the autorotation region. The math model uses data from computer program D-88. Boeing's proposal uses data from wind tunnel model tests which were compared with D-88 predictions. The wind tunnel data showed consistently lower power required in and near autorotation. Revision of the rotor data bank to incorporate the wind tunnel data was not practicable within the time available. The extent of the difference is indicated by a minimum rate of descent at 80 knots from the math model of 2600 feet per minute compared to about 2000 feet per minute from the wind tunnel model data as reported in Volume I, Appendix G.

2. There is no autopilot in the math model. This was not required by the contract Statement of Work.

3. The landing gear dynamics in the model are an existing CSC program and do not represent the Model 222. There is some

indication that the CSC gear causes lateral instability on the ground at less than 25% power.

4. The wing bending and torsion modes were not checked out due to lack of time. Data obtained at Vertol indicate that these have no measurable effect on performance or flying qualities.

5. The representation of the SAS gives proper dynamic characteristics in the SAS on and SAS off modes. Individual component failures are not represented because of mechanization differences between the aircraft and the math model.

6. The actuator dynamics, which were included in the math model used on Boeing's nudge base simulator, were removed from the FSAA simultion in order to keep the time frame to a minimum. Evaluation on the Sigma 8 Computer at NASA showed no measurable difference as a result of removing the actuator dynamics. (The actuators have time constants less than the 50 millisecond time frame of the FSAA simulation.)

7. Boeing's proposed aircraft provides a pilot override for flap position and for rpm selection. These are not included in the math model. The chekcout and validation of the tilt rotor math model was accomplished in two phases. These were the math model aceptance and the simulator acceptance.

A. <u>Math Model Acceptance</u>:

1. Trim checks were calculated for a range of speeds from hover to 250 knots in 25 knot intervals. These were checked against previously computed trim conditions.

The results agreed within the tolerances specified in the reference.

2. Due to the limited time available for validation, dynamic responses were not checked over the full range of condition noted in the reference. However, dynamic responses were computed for a representative sample of condition. These compared favorably with those generated at Boeing and were generally within the specified tolerances. Differences could be explained by the different methods which were used to mechanize the equations; e.g., ---in the Boeing hybrid mechanization, rotor data were interpolated parabolicly for angle of attack and linearly for advance ratio. In the NASA mechanization, curve fit equations were solved at each angle of attack and linearly interpolated for advance ratio. This tends to produce differences in areas where the data is highly non-linear such as in transition.

3. Stability derivative checks were made at four speeds; 0, 75, 150 and 250 knots. These were generally within the $\pm 10\%$ accuracy specified by Boeing. Differences between the results are explainable and primarily due to the differenct ways the equations were mechanized.

4. Time frame studies and transport lag checks were made. Neither proved to be problem areas even though the NASA

simulation has a frame time in excess of 50 milliseconds. No lags were apparent in the simulation cab due to transport lag.

B. Boeing Pilot Acceptance:

The simulation is considered acceptable for initial evaluation however, Boeing's evaluation pilot made the following comments:

1. Controls:

- Power lever location not optimum but acceptable for evaluation using seat arm rest for support.

- Nacelle tilt switch - spring gradient slightly weak, 5° detents appear to be not in center of available travel. Switch occasionally sticks producing uncommanded nacelle actuation. Suitable for evaluation.

- Stick forces - breakout and damping poor- difficult to achieve positive trim detent. Occasional shift in stick trim from one run to the next. (Simulator equipment problem)

2. Motion:

- B V pilot considered motion cues unsatisfactory.

- Lateral motion washouts and/or recentering produced spurious jerks and pulses which were disorienting.

- Roll angular acceleration cues weak.
- Pitch, yaw and heave satisfactory.
- Longitudinal acceleration cues - long period cab tilt ok, short period were jerky and disconcerting with recentering reversals apparent.

- Summary: There was enough spurious motion that overall the tilt/motion cues were detrimental and the pilot preferred fixed base.

3. Model Flying Qualities:

   Generally similar to B V in-house simulation except for:

   - Vertical response slightly overdamped.
   - Unable to cut engine(s) until last day. As a result, not able to properly check out power lever governor override.

   - Pedal fixed turns in prop mode not as well coordinated - 30° banked turns show 1/2 to 3/4 ball slip to T & S indicator, with S/S ind. reading 1° - 2°.

4. Boeing was not able to evaluate the Model 222's response to gusts, since the gust model has not been defined. Response to random turbulence was evaluated.

C. General:

The original time alloted for the checkout and validation of this model was extremely short, particularly in view of the computer software problems and the difficulties encountered in establishing the gains for the FSAA motion drive equations. As a result, the checkout period had to be extended by NASA for two weeks.

H.3 OPERATING INSTRUCTIONS AND LIMITATIONS

As part of the simulation checkout, a set of operating instructions and limitations were prepared. For the most part these refer to the piloted simulation and the mathematical model and do not imply limitations on the Model 222 aircraft.

General:

1. I.C. - Set power lever trim to "0". (suggest using left-hand arm rest)

2. Stick grip has both Mag. brake and vernier "beep" force retrim. If Mag. braking is desired, use only in hover -- advise beep retrimming for transition and prop mode. (In real A/C, Mag. brake will deactivate above 150 KIAS)

3. Flaps and RPM are programmed automatically as a function of nacelle angle. In the Model 222 there will be manual flap and RPM override controls.

4. Nacelle angle has "q" interlock. Nacelles cannot be programmed "up" above 160 KIAS. IF 160 KIAS is exceeded with nacelle angle greater than 0°, they will automatically program to 0° at a rate of 2°/sec.

5. Nacelle angle switch gives nacelle rate proportional to displacement. Switch is spring loaded to center off position and has a detent either side of center, corresponding to approximately ±5°/sec rate. Full displacement will give approximately ±10°/sec. For smoothest nacelle operation, use proportional feature; avoid "flick" type beep inputs.

6. Wing leading edge umbrellas automatically open or close at 50 KIAS.

7. Normal power lever travel is 8". This range represents flight idle to maximum power. There is a soft detent at 8 inches of travel which, when exceeded, overrides the governor. In this condition, the power lever controls collective pitch directly. This is provided for use as desired in autorotation and single engine landings.

8. The Model 222 is designed to go through transition at speeds between zero and 160 knots. Typical trimmed nacelle incidences at various speeds are:

i_N - DEG	90	75	60	30	0
Speed - KEAS	0	52	71	95	150

In investigating handling characteristics in the transition mode, it is recommended that these values be used as initial conditions.

In performing normal transitions to and from hover, it is recommended that the nacelle tilt be used as the primary speed control rather than flying at fixed tilt and using the stick for speed control.

Limitations:

1. Observe torque limits:

   75% twin engine
   100% single engine

2. Autorotation:

   Engines must be failed from console to achieve zero torque. Transitions can be made from airplane to helo mode with power lever full back, but some residual torque remains (10% total) and N_R trims out nominally at 70%.

   - Autorotative sink rate at i_N=90° approximately 3500 ft/min. Minimum rate of sink is about 2600 ft/min at 80 knots at i_N=60° (70% RPM). Model gives higher descent rates than airplane.

   - Power lever has detent at approximately 8". Pushing through detent will override governor (single engine failure or auto collective) and give direct control of collective pitch.

. Technique on engine cut in hover - advance power lever to detent, remaining engine will go to 100% torque. Use override as required, but once into direct C.P. control N_R will bleed off in same manner as turbine helo with one engine over-pitched. At topping power, model gross weight is too high for single engine hover. At max single engine power, vertical speed is -300 FPM.

3. At speeds above the normal flight envelope with nacelles tilted, the math model data bank is extrapolated from a curve fit and is not representative of the full scale aircraft. Speed and nacelle incidence limits for valid simulation are shown in the following table:

i_N - DEG	90	60	45	30
Speed - KEAS	100	125	125	140

These speeds should not be exceeded.

4. Aircraft oscillates if power is reduced below approximately 25% on the ground.

5. The math model is not set up to readily perform SAS or governor hardover studies. These may be approximated by setting the appropriate authority limits.

6. The Model 222 autopilot has not been incorporated into the simulation.