ASR 72-188

ADVANCED SPACE ENGINE
PRELIMINARY DESIGN
NAS3-16751

1st Monthly Technical
Progress Narrative

July 1972

Prepared for NASA-Lewis Research Center
Cleveland, Ohio 44135

23 August 1972

Prepared by

A. T. Zachary
Principal Engineer

Approved by

H. G. Diem
Program Manager
Advanced Technology Programs

Rocketdyne, A Division of North American Rockwell Corporation
6633 Canoga Avenue
Canoga Park, California

1. INTRODUCTION

System studies have been conducted to determine the feasibility of developing a reusable vehicle for performing future Air Force and NASA space maneuvering missions. These studies have shown that over the thrust range of interest high-pressure, staged-combustion cycle engines offer the highest specific impulse and payload capability. A review of the vehicle and engine system study results indicates that a single bell nozzle, staged-combustion cycle engine at a 20,000-pound-thrust level is near optimum for the DOD and NASA mission requirements. Further, it is clear that some of the advanced features, e.g., pressurized-idle operation and very low NPSH, are attractive from the mission and/or vehicle standpoint.

The objective of this program is to provide the preliminary design of a high-performance, staged-combustion cycle rocket engine with a nominal vacuum thrust of 20,000 pounds using hydrogen-oxygen as propellants.

The purpose of this effort is twofold: (1) to resolve the best approach among the several technical choices made by previous study contracts so that component research may be properly focused and (2) provide a preliminary design for a 20,000-pound-thrust, staged-combustion cycle research engine which will allow studies of component interaction problems and engine dynamics problems prior to the beginning of any effort on a development engine. The program is divided into five technical tasks and one reporting task. The tasks and the scheduling of the effort in these tasks are shown in Fig. 1. Also shown in Fig. 1 are the specific NASA/LeRC approval milestones required for each task.

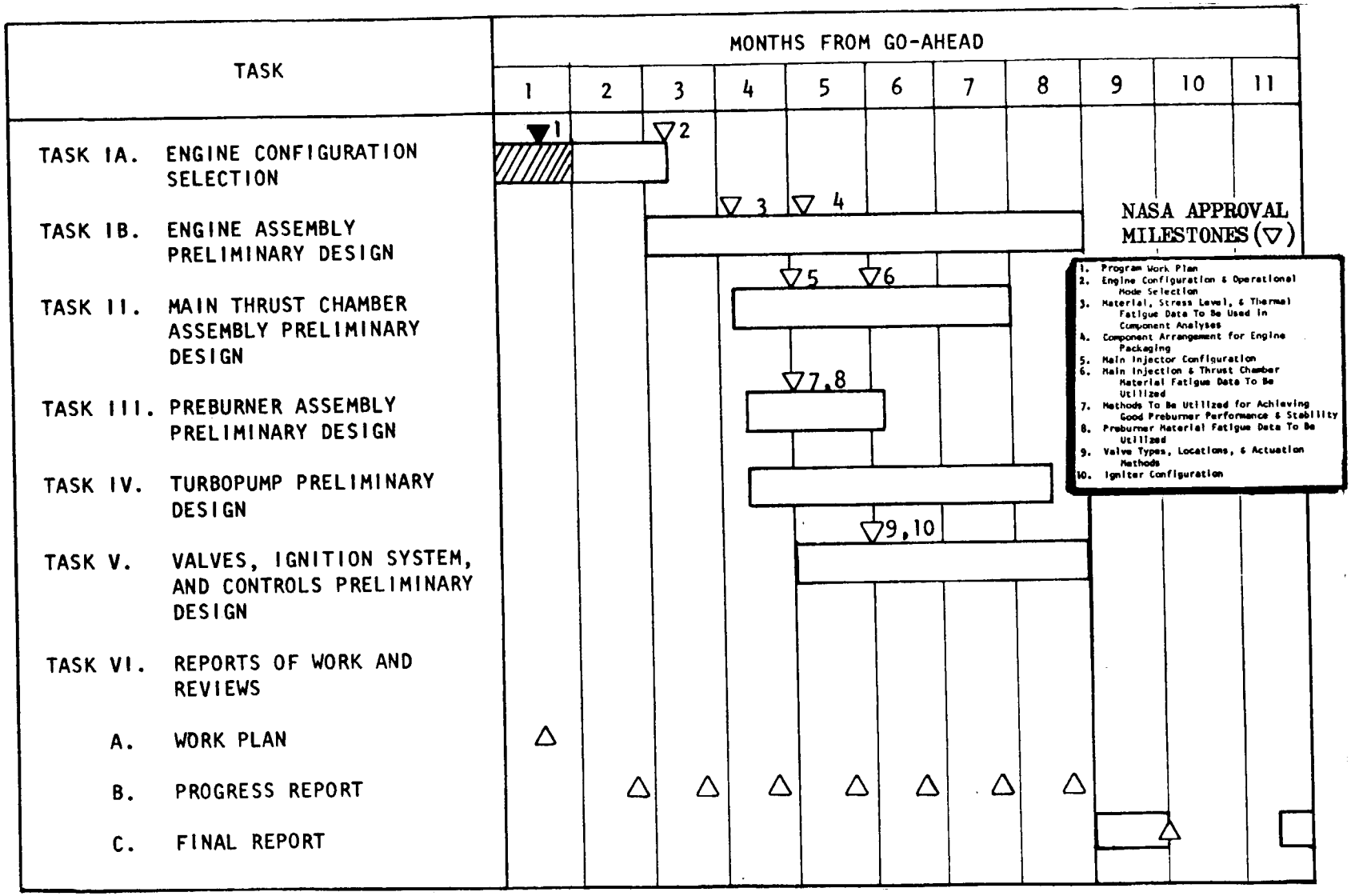

Figure 1. Advanced Space Engine Preliminary Design Program Schedule

II. TECHNICAL PROGRESS SUMMARY

As shown in the Program Schedule, the effort during the initial portion of the program is devoted to the selection of the specific configuration (and associated operational modes) to be designed during the remainder of the program. This effort has been completed and a recommended configuration presented to NASA for approval. The effort conducted and the conclusions derived are subsequently summarized.

Also during this period, the Program Work Plan was prepared and submitted for approval, as scheduled. The document (ASR 72-144, dated 12 July 1972) has been approved and implemented as the work plan for the remainder of the program.

TASK IA - CONFIGURATION SELECTION

The Task IA study was conducted based on the results of previous vehicle and engine studies. Major emphasis was placed on utilizing the results of effort conducted under Air Force Contracts F04611-67-C-0016, F04611-71-C-0039, and F04611-71-C-0040.

The specific design configurations and operational mode alternatives studied are presented in Table 1. These configurations encompass the results of the three previous Air Force contracts. Also, as stipulated in the Work Statement, the non-throttling engine configuration tradeoff was conducted first, followed by an assessment of the impact of throttling. The NPSH alternatives were

TABLE I

DESIGN ALTERNATIVES

- DESIGN CONFIGURATION
  - BOOST PUMP DRIVE METHODS
    - GEARS
    - HYDRAULIC TURBINE
    - HYDROGEN GAS TURBINES
  - REGENERATIVE COOLING SCHEME
    - PASS AND A HALF
    - SPLIT
  - PREBURNER CONFIGURATION
    - SINGLE PREBURNER
    - DUAL PREBURNER SEPARATELY SUPPLYING COMBUSTION PRODUCTS TO EACH TURBINE

- OPERATIONAL MODE
  - THROTTLING REQUIREMENTS
    - NO THROTTLING
    - 6:1 THROTTLING*
  - DESIGN POINT NET POSITIVE SUCTION HEAD (FEET)

LO_2:	0**	2	16
LH_2:	0**	15	60

  - START MODE
    - NORMAL
    - PRESSURIZED-IDLE
    - TANK-HEAD-IDLE

* Perturbation of Baseline Design Only
** -Tank Head Idle Mode Start Only

considered for start only with mainstage operation baselined at 2 feet LO_2 and 15 feet LH_2, respectively. The analysis of 0/0 NPSH was limited to the tank-head-idle mode start. An overview of the previous contract results as related to the aforementioned design configuration and operational mode alternatives is presented in Table 2.

To assure that the study was conducted consistent with reasonable design criteria, the preliminary conceptual design ground rules were identified and are presented in Table 3.

Alternative Engine Configurations

The study was conducted by performing a preliminary tradeoff of the boost pump drive, thrust chamber cooling, and preburner alternatives to select the engine configurations to be subsequently assessed for final selection of an engine configuration.

Boost Pump Drive Methods. The boost pump drive methods considered during the preliminary tradeoff were gear, hydraulic (both full flow and partial flow), and gaseous hydrogen (GH_2) drives, as typically shown in Figs. 2 through 5. As shown, the gear drive method is directly coupled to the main LO_2 pump shaft. The gears are dry-film lubricated and hydrogen cooled. This arrangement necessitates a dynamic seal package in the LO_2 boost pump.

The full-flow hydraulic boost pump is located directly in line with its respective main pump and the boost pump turbine is located between the main pump inducer and first impeller. The turbine derives its power from the discharge of the main pump inducer.

TABLE 2. FINAL REPORT REVIEW
(OVERALL SUMMARY)

PRATT & WHITNEY	AEROJET	ROCKETDYNE
F = 25K P_c = 1900 psia MR = 6.0 ϵ = 250 W_T = 375.2 pounds	F = 25K P_c = 1800 psia MR = 6.0 ϵ = 290 W_T = 459.3 pounds	F = 25K P_c = 2200 psia MR = 6.0 ϵ = 350 W_T = 367 pounds
• Gear Driven Boost Pumps (Off LO_2 Main Pump Shaft)	• Full Flow Hydraulic Driven Boost Pumps	• GH_2 Turbine Driven Boost Pumps
• 1 - 1/2 Pass T/C Cooling to ϵ = 100 (Dump Cooled Nozzle)	• 1 - 1/2 Pass T/C Cooling to ϵ = 290 (Full Regen T/C	• Split Flow T/C Cooling to ϵ = 350 (Full Regen T/C)
• Single Preburner	• Single Preburner	• Dual Preburner
• 5:1 Throttling	• 5:1 Throttling	• 5:1 Throttling
• 16/60 npsh (0 npsh LO_2 Pumping, a Technology Problem)	• 16/60 npsh (0 npsh LO_2 Pumping Feasible)	• 16/60 npsh (0 npsh LO_2 Pumping Feasible)
• Propellant Bleed, Normal Start	• Propellant Bleed, Normal Start	• Idle Mode

TABLE 3. CONCEPTUAL DESIGN GROUNDRULES (PRELIMINARY) FOR SELECTION STUDY

Thrust Chamber	
Thermal Fatigue Life Data	To be specified
Injector Efficiency	0.995
Curvature Enhancement Factor	1.4
Minimum Injector Pressure Drop	10% of chamber pressure
Preburners	
Temperature Uniformity	±50 R
Thermal Fatigue Life Data	To be specified
Minimum Injector Pressure Drop	10% of chamber pressure
Pumps	
Bearing DN	Less than 2×10^6
Tip Width	Greater than 0.03 inch
Diameter Ratio (hub/tip)	Less than 0.8
Specific Speed	From 600 to 2000
Seal Leakage	To be determined
Tip Speed	Less than 1650 ft/sec
Turbines	
Tip Speed	Less than 1500 ft/sec
Blade Height	Greater than 0.15 inch
AAN^2	Less than 4×10^{10} in^2-rmp^2
Pitch Diameter	Greater than 2 inches
Inlet Temperature	Less than 2000 R
Pressure Ratio	Less than 1.8:1
HUB/TIP Diameter Ratio	Less than 0.9:1
Turbine Pitch/Impeller Diameter Ratio	Less than 3:1
Control Valves	
Pressure Drop	15% of controlled pressure difference minimum
Leakage	To be determined

GEAR DRIVEN LO_2 BOOST PUMP DESIGN

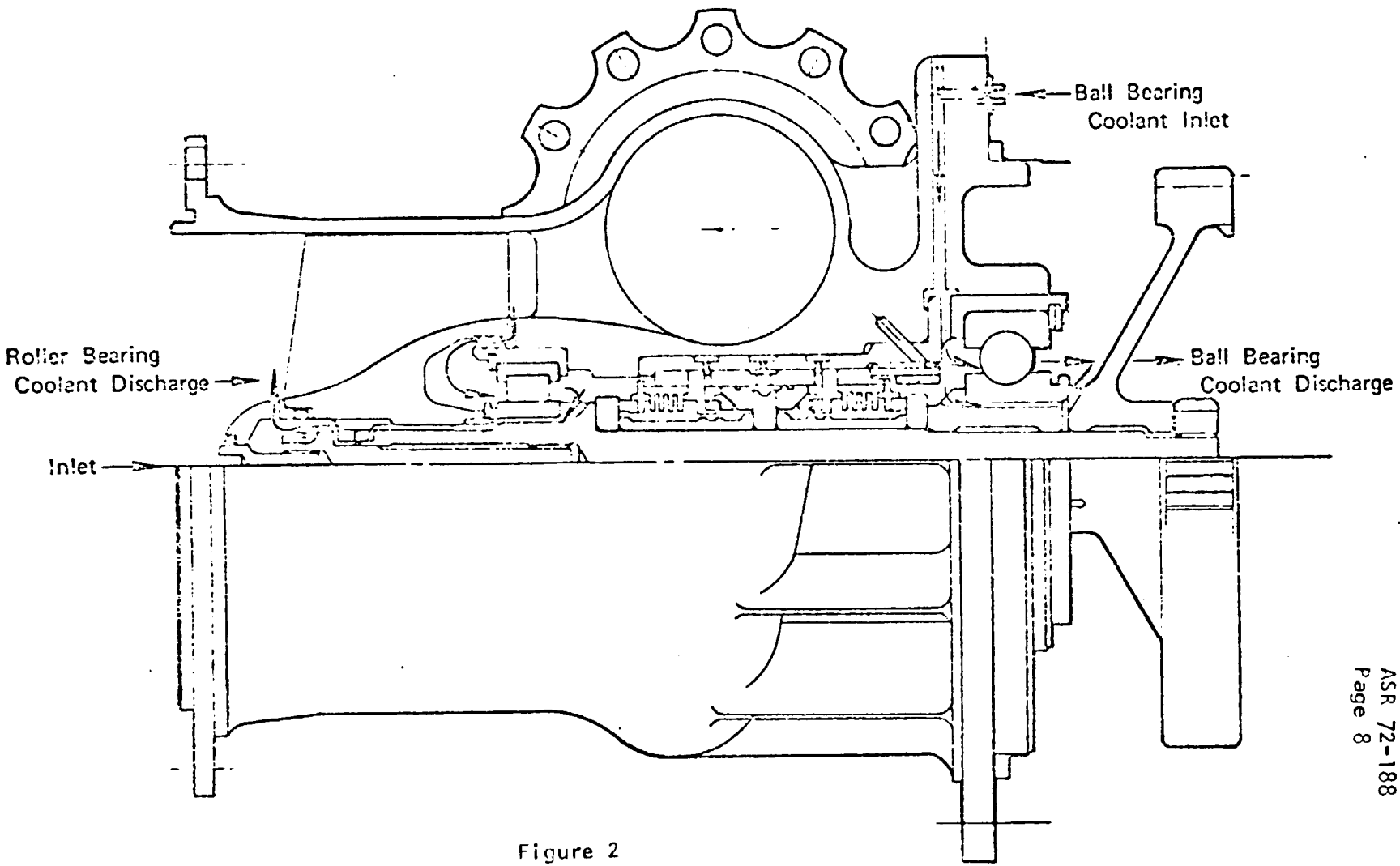

Figure 2

OXIDIZER TURBOPUMP CONCEPT
(FULL FLOW HYDRAULIC BOOST PUMP DRIVE)

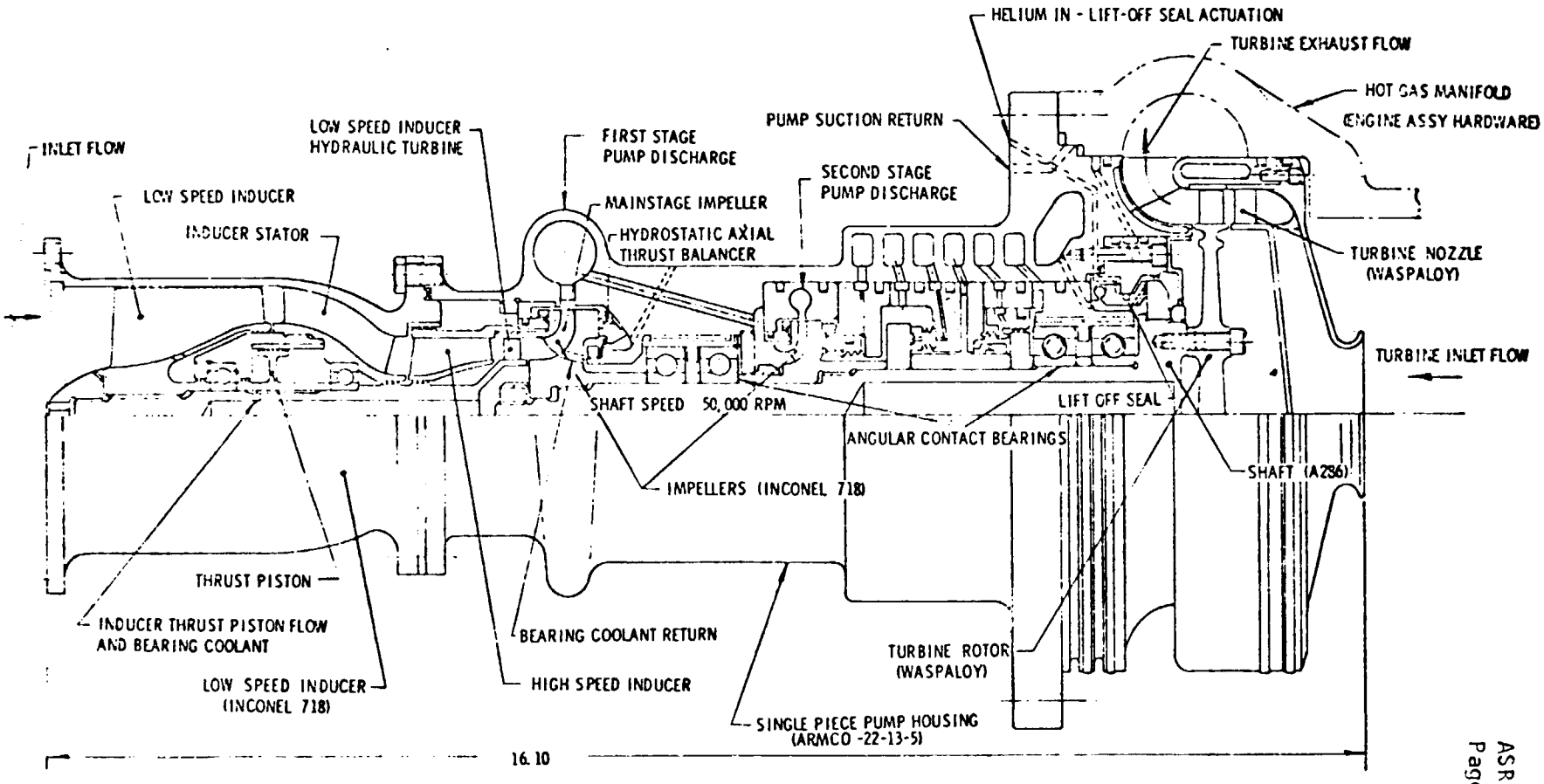

Figure 3

PARTIAL FLOW HYDRAULIC BOOST PUMP DRIVE

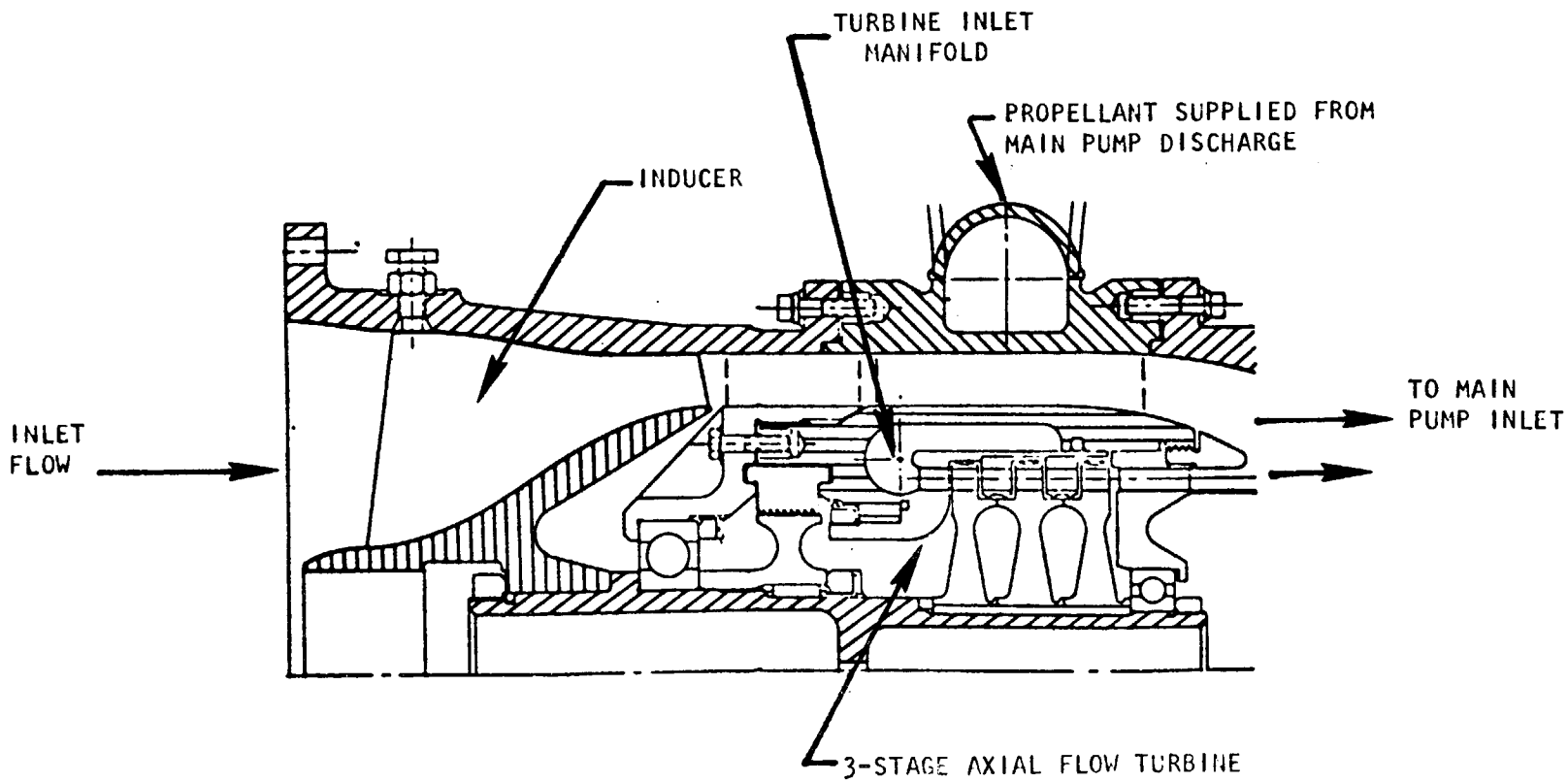

Figure 4

Figure 5. LO_2 BOOST PUMP

(GH_2 TURBINE DRIVE)

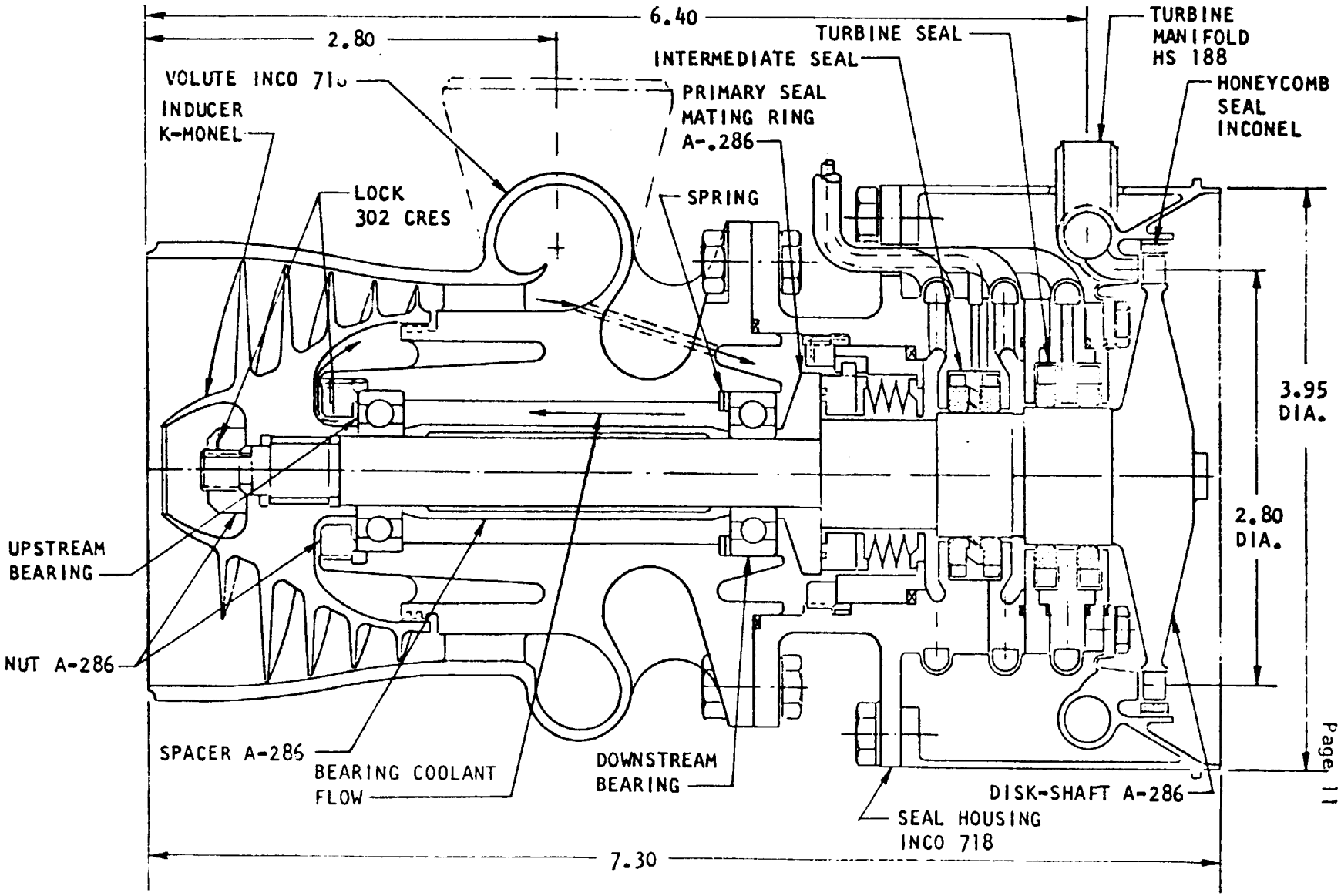

The partial-flow hydraulic approach utilizes a small portion of the main pump discharge flow to drive the boost pump turbine after which this flow is returned to the inlet of the main pump.

The GH_2 drive method consists of a gas turbine driven by gaseous hydrogen heated in the thrust chamber cooling jacket. A small portion of the cooling jacket flow is diverted to drive the boost pumps prior to being routed to the preburner. The boost pump turbine inlet pressure and temperature are approximately 4000 psi and 400°R, respectively.

The tradeoff considered operation during start, maintenance of main pump NPSH (start, mainstage, and off design), life, non-propulsive propellant losses, mechanical design, and impact on the power cycle. It was concluded that due to the early benefit to the engine start process, packaging flexibility, flexibility for off-design operation, and good life potential, the GH_2 drive method was the most desirable even though seal leakage (LO_2 boost pump) and potential high axial load problems are design drawbacks. The gear-driven boost pump method was concluded to be life-limited unless a significant reduction in main pump speed is implemented to limit the pitch line velocity to within tolerable limits. The lower main pump speed would compromise the system cycle efficiency. In addition, the lack of packaging flexibility and late start during the start sequency further limited its applicability. The full-flow hydraulic drive mechanical complexity, delayed startup, and limited boost pump horsepower (low NPSH and limited turbine diameter) made it less desirable than the GH_2 boost pump drive method. The partial-flow hydraulic drive method for the fuel boost pump was rejected because the high probability of two-phase flow would make the turbine design difficult. However, the application of the partial-flow hydraulic drive to the oxidizer boost pump only lacked the early startup capability but would eliminate the need for

a seal package (minimizes non-propulsive propellant loss) and therefore was considered very attractive. Thus, the GH_2 turbine drive for the fuel boost pump and alternates of GH_2 turbine or partial-flow hydraulic turbine drive for the oxidizer boost pump were adopted for further tradeoff as part of the alternative engine configurations to be studied.

Thrust Chamber Cooling Methods. Both thrust chamber cooling methods consisting of one-and-a-half pass or split-flow cooling (as shown in Fig. 6) to an area ratio of 100:1 and dump cooling from ϵ = 100:1 to ϵ = 400:1 were adopted for alternative engine configurations to be assessed in the final tradeoff. Full regenerative cooling is potentially advantageous and will be further considered as part of the preliminary design effort following selection of the baseline configuration.

Preburner Configurations. The single- and dual-preburner configurations used in the alternative engine configuration tradeoffs are presented in Figs. 7, 8, and 9. The side-mounted air-gap spark igniter was adopted for the engine configuration tradeoff study in lieu of injector mounting to minimize preburner assembly weight. The injector is a non-throttling, concentric orifice configuration.

Alternative Engine Configurations. Based on the component alternatives selected, eight (8) non-throttling engine configurations (as listed in Table 4) were selected for engine assembly level tradeoff studies culminating in a single recommended design.

THRUST CHAMBER CONFIGURATIONS

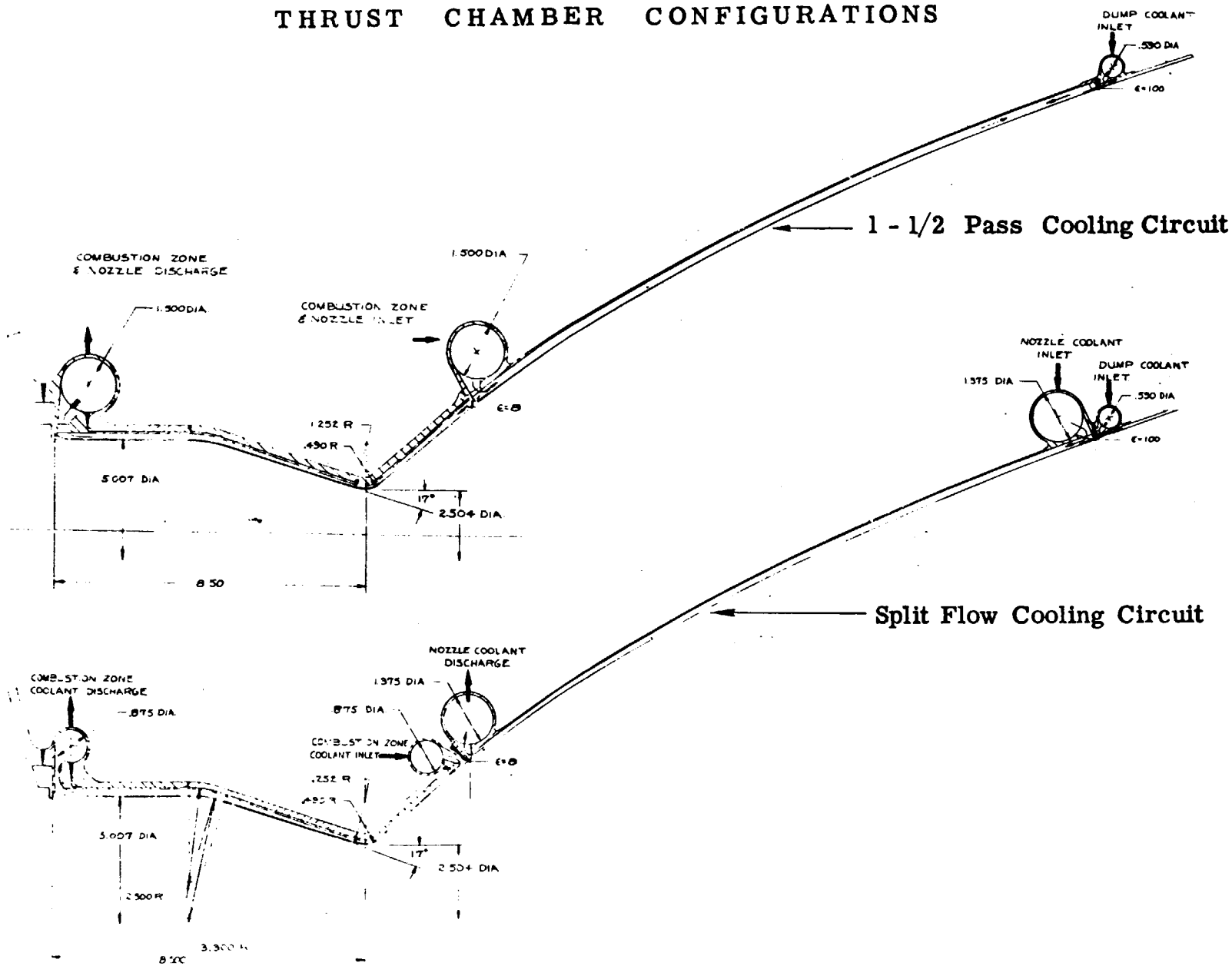

Figure 6

SINGLE PREBURNER CONFIGURATIONS

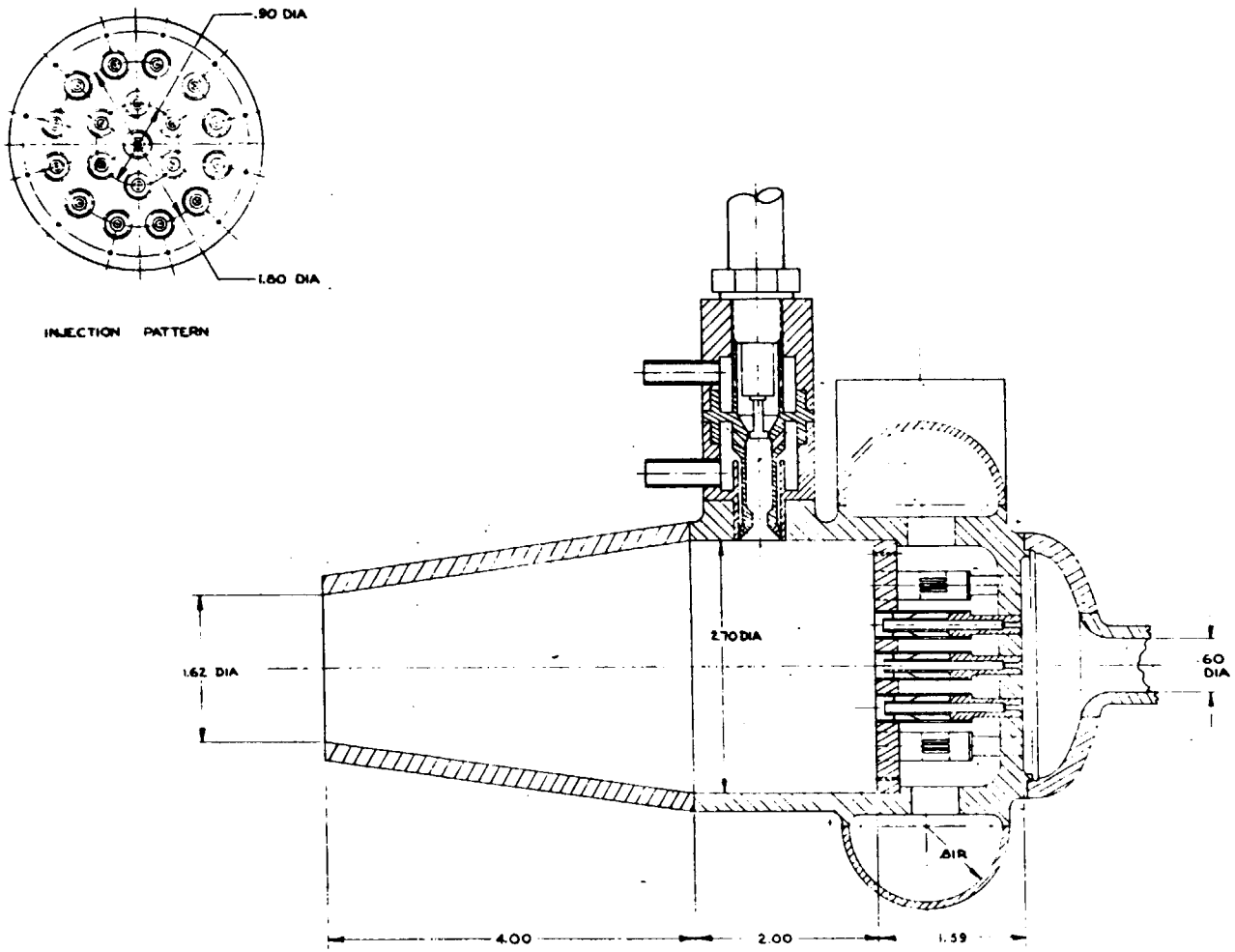

Figure 7

FUEL PREBURNER
(DUAL CONFIGURATION)

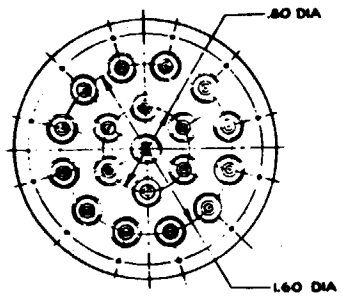

INJECTION PATTERN

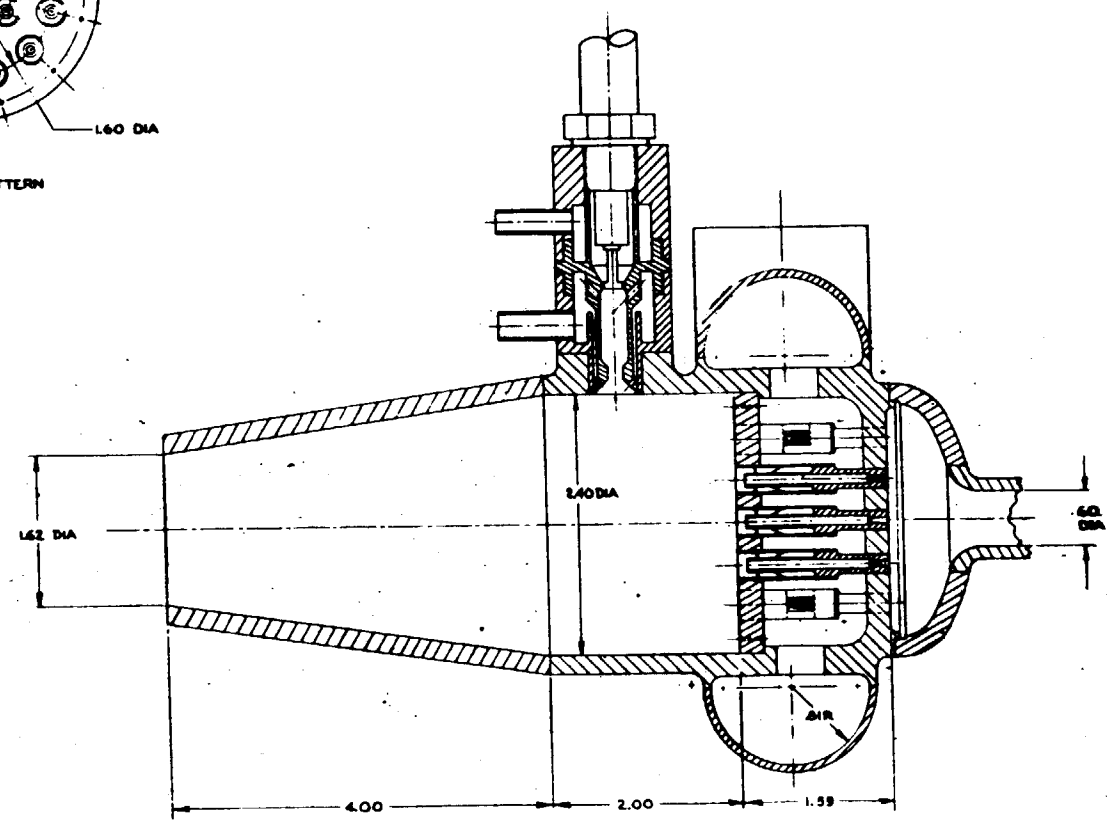

Figure 8

OXIDIZER PREBURNER
(DUAL CONFIGURATION)

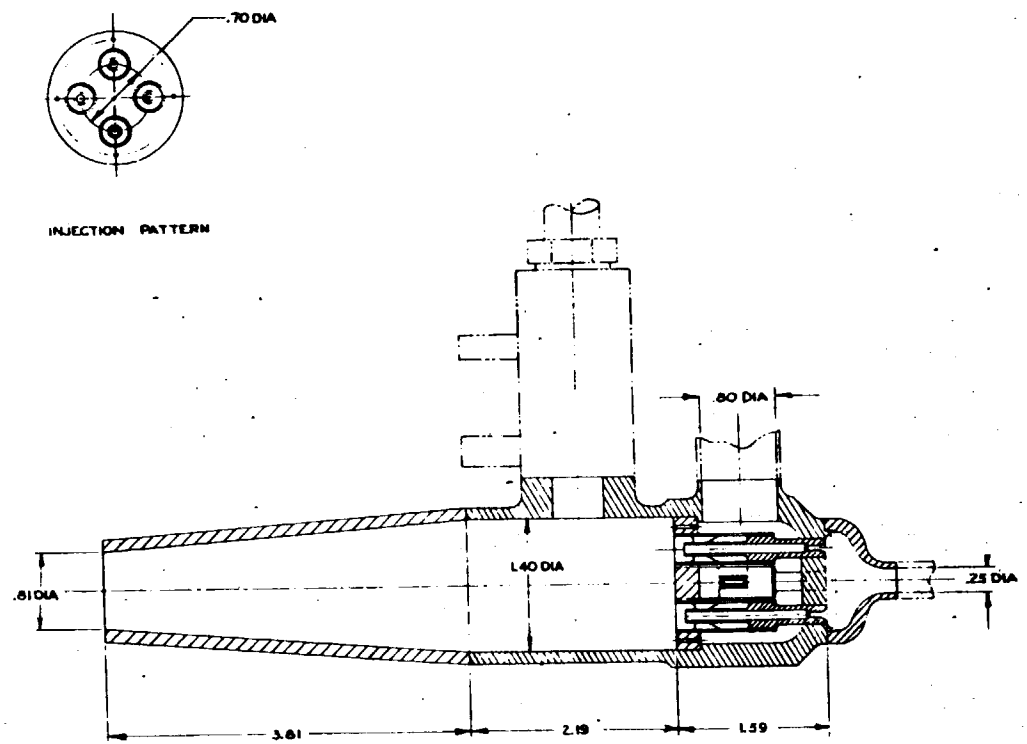

Figure 9

TABLE 4

PRELIMINARY SELECTION OF ENGINE ALTERNATIVES

	THROTTLING	PREBURNERS	T/C COOLING	BOOST PUMP DRIVE
1.	None	1	1-1/2 Pass	O_2-Hyd/H_2-Gas
2.	None	1	1-1/2 Pass	O_2-Gas/H_2-Gas
3.	None	1	Split	O_2-Hyd/H_2-Gas
4.	None	1	Split	O_2-Gas/H_2-Gas
5.	None	2	1-1/2 Pass	O_2-Hyd/H_2-Gas
6.	None	2	1-1/2 Pass	O_2-Gas/H_2-Gas
7.	None	2	Split	O_2-Hyd/H_2-Gas
8.	None	2	Split	O_2-Gas/H_2-Gas

Non-Throttling Engine Configuration Selection

The eight (8) alternative engine configurations are diagrammatically presented in Figs. 10 and 11. Only the primary on/off and modulating valves are shown for tradeoff purposes. The valve locations were selected utilizing non-linear model data that indicated locations requiring major pressure drop changes for off-design operation. Additional valve requirements will be identified during the design of the selected configuration.

Steady-state and dynamic models were utilized in establishing the nominal design points, off design, and start transient analyses. In establishing the nominal chamber pressure for each configuration, a contingency margin of 60°F in preburner temperature, in addition to the temperature reduction required to compensate for engine hardware and mixture ratio variations and preburner temperature striation, was included, thus establishing the nominal preburner temperatures at 1860 °R. The nominal chamber pressures, engine length, and specific impulse (I_s) for each configuration is presented in Table 5. The I_s values are based on parametric data and contain no contingency considerations and therefore are presented for relative comparison. Once the baseline configuration is selected, a detailed performance analysis (requiring a more rigorous thrust chamber heat transfer analysis) will be conducted.

Start transient analysis of the alternative configurations was conducted, and it was determined that all configurations would start satisfactorily with minor variations in valve sequencing. Idle-mode start was adopted because it is the only method of chilling the engine down and simultaneously efficiently utilizing the expelled chilldown propellant. A typical start sequence and transient conditions are presented in Figs. 12 and 13. The typical start transient flowrates

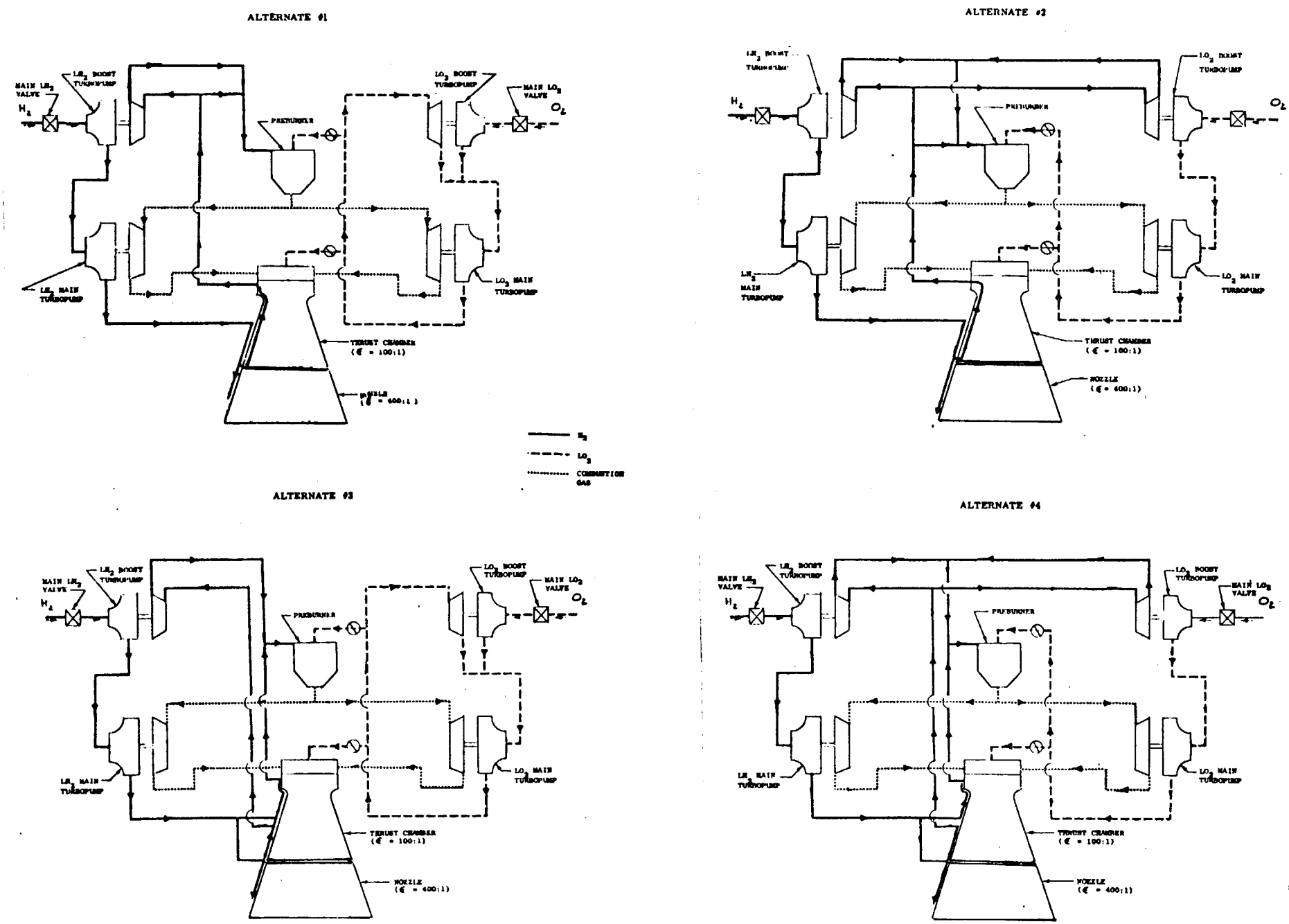

Fig. 10. Non-Throttling Single Preburner Configurations

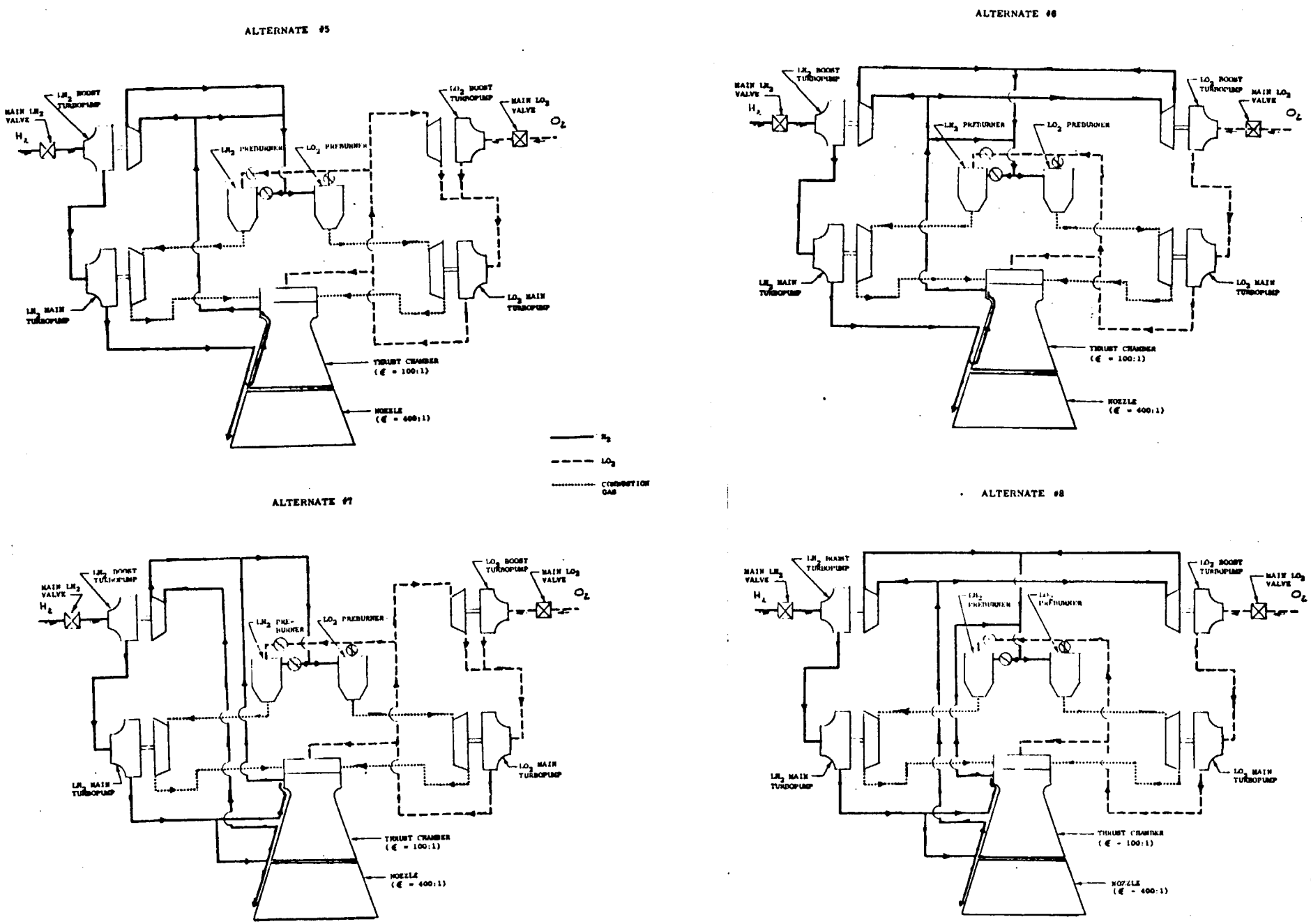

Fig. 11. Non-Throttling Dual Preburner Configurations

TABLE 5

PERFORMANCE SUMMARY

(ϵ = 400, 90% T/C LENGTH, INCLUDES DYNAMIC SEAL LEAKAGE)

ALTERNATIVE (Pc, PSIA)	ENGINE LENGTH (IN.)	SPECIFIC IMPULSE (SEC)
1 (1875)	100.1	475.1
2 (1900)	99.5	474.8
3 (2135)	94.8	475.3
4 (2170)	94.0	475.0
5 (1825)	101.3	475.0
6 (1850)	100.6	474.7
7 (2050)	96.4	475.3
8 (2075)	95.9	474.9

START TRANSIENT SEQUENCE
SINGLE PREBURNER, NO THROTTLING

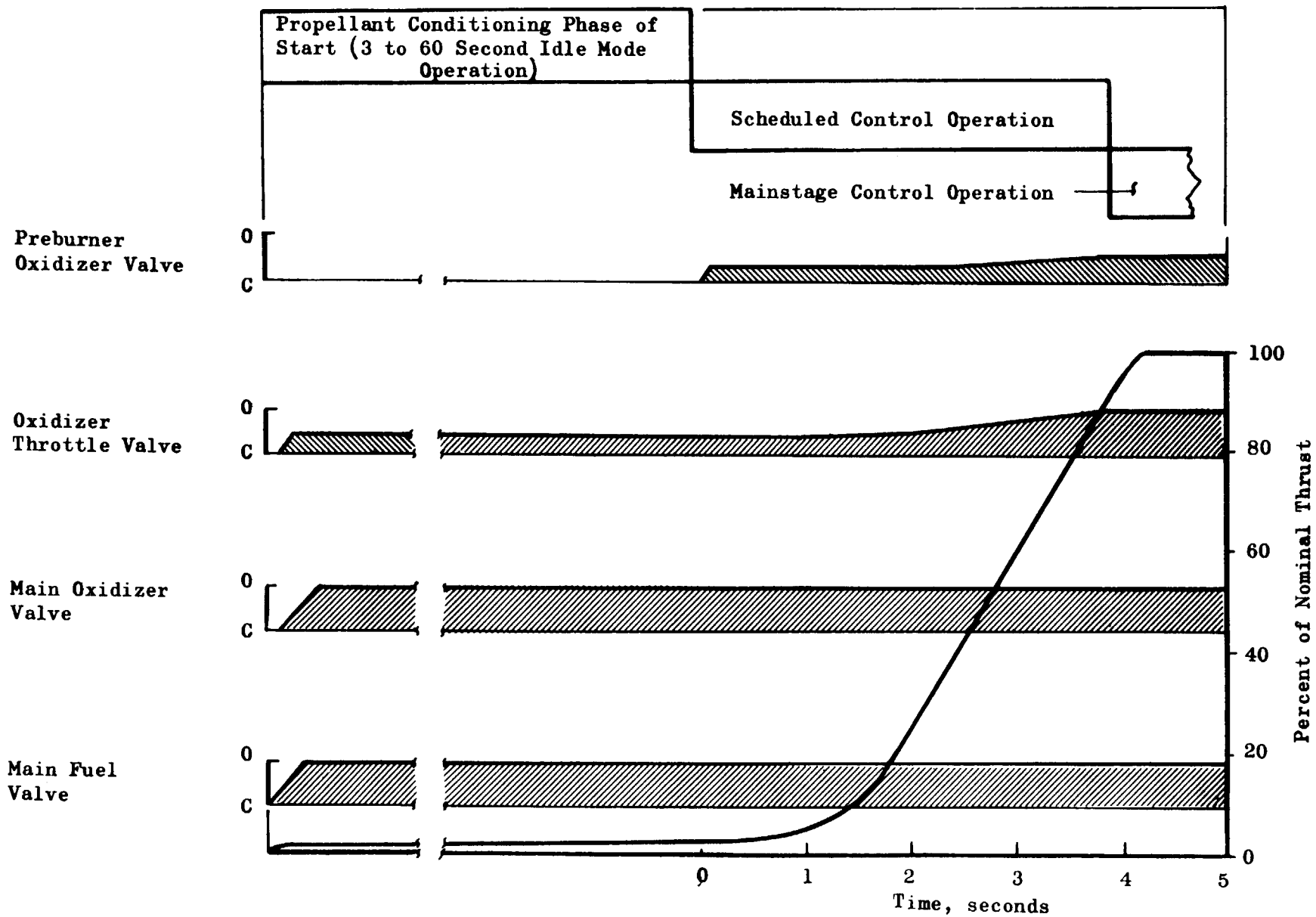

Figure 12

ENGINE START CHARACTERISTICS
(SINGLE PREBURNER, GH_2 BOOST PUMP DRIVE, NONTHROTTLING)

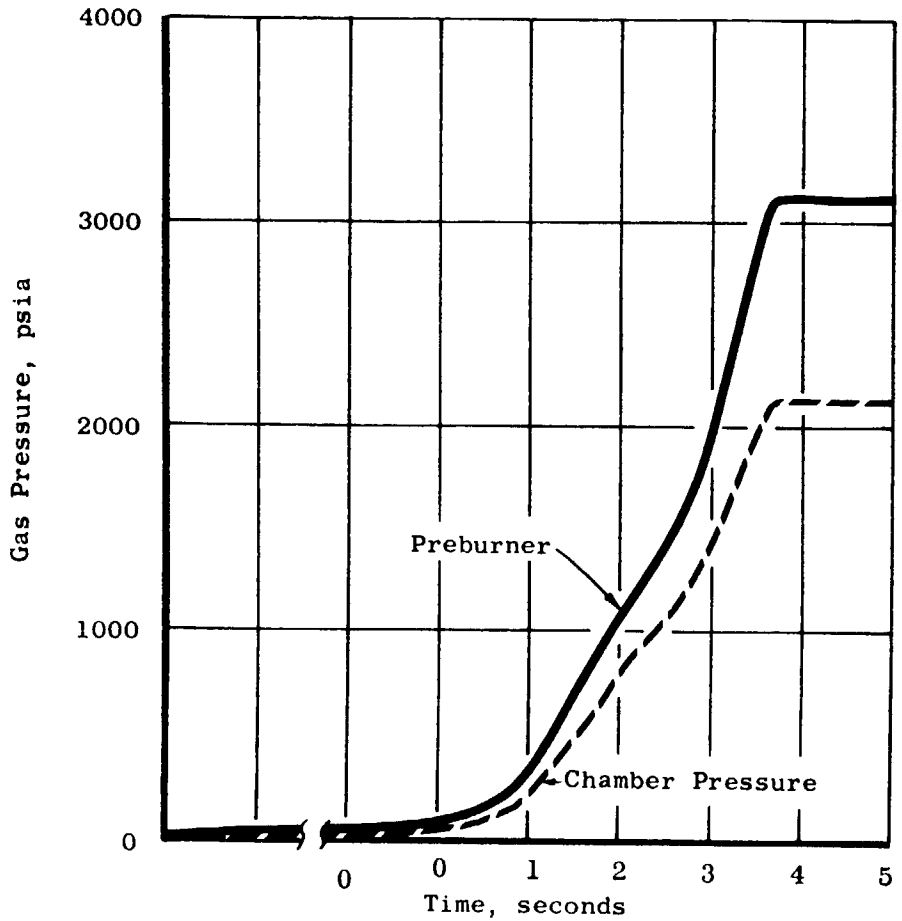

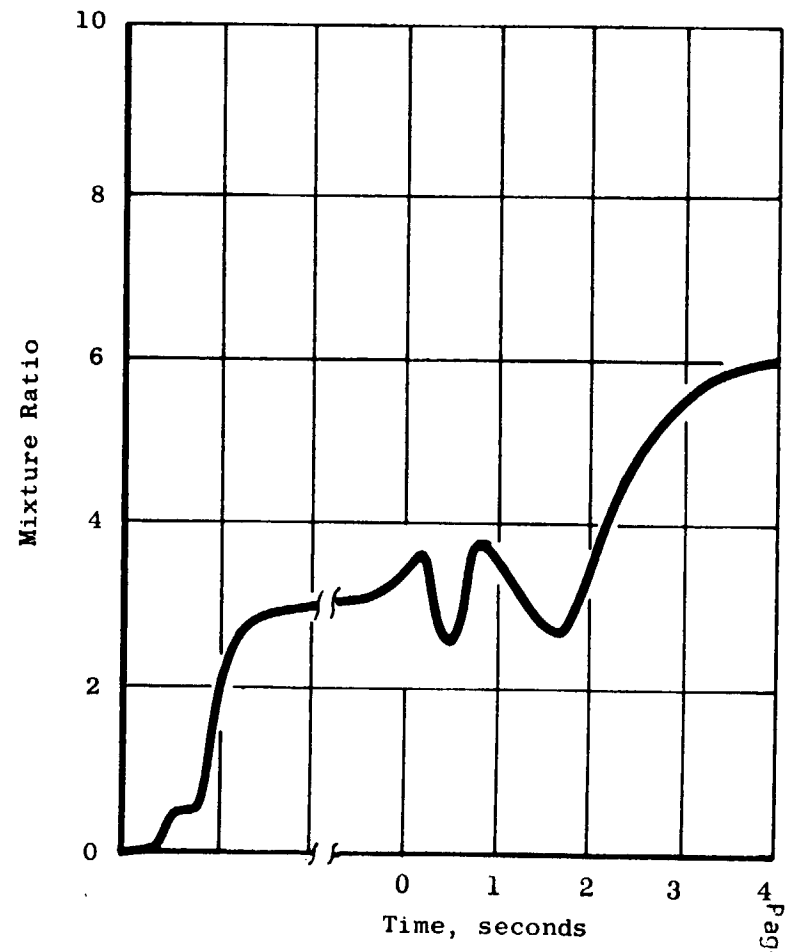

Figure 13

vs time are presented in Fig. 14. As shown, the starting NPSH is provided to the engine, start of the engine is initiated to idle-mode conditions and concurrently autogenous pressurization of the vehicle main propellant tanks is conducted. When the required NPSH of 2/15 feet is achieved and the engine is thermally conditioned, the engine is ramped to mainstage. Start under 0/0 feet NPSH conditions was considered, and it was concluded that since 0/0 feet NPSH would occur at the start of idle-mode operation, the boost pumps could be sized for 2/15 feet NPSH operation required for mainstage conditions and also pump under 0/0 feet NPSH at idle-mode flowrates. To design for 0/0 feet NPSH at mainstage would result in a prohibitive size for the oxidizer boost pump, as shown in Table 6. It should be pointed out that ability to start by pumping saturated propellants is strongly influenced by the inlet line dynamics and inertia and therefore this area requires definition.

A summary of the engine configuration tradeoffs is presented in Table 7. Both quantitative factors, such as maximum chamber pressure, I_s , weight, and cost and qualitative judgments (ranked in order of preference) such as start characteristics, flexibility, and complexity, were considered. The maximization of chamber pressure is desirable since for a given percent thrust chamber length, it will result in a shorter engine. The I_s values reflect the performance loss as a result of dynamic seal leakage from the turbopumps as well as thrust chamber performance. The early start capability of the GH_2-driven boost pumps resulted in their higher order of preference. The flexibility ranking was directed towards those configurations with greatest adaptability to change during the development cycle while the complexity ranking primarily considered the number of components or functions, stress level, and state of the art as indicators of development risk. The weights listed include a 10-percent contingency and the costs are presented in terms of 1972 dollars. It was concluded that the alternative number 4 represents the most reasonable compromise of all factors and therefore is the recommended

TYPICAL START TRANSIENT MAIN PROPELLANT FLOWRATES

(TANK HEAD/PUMP IDLE MODE)

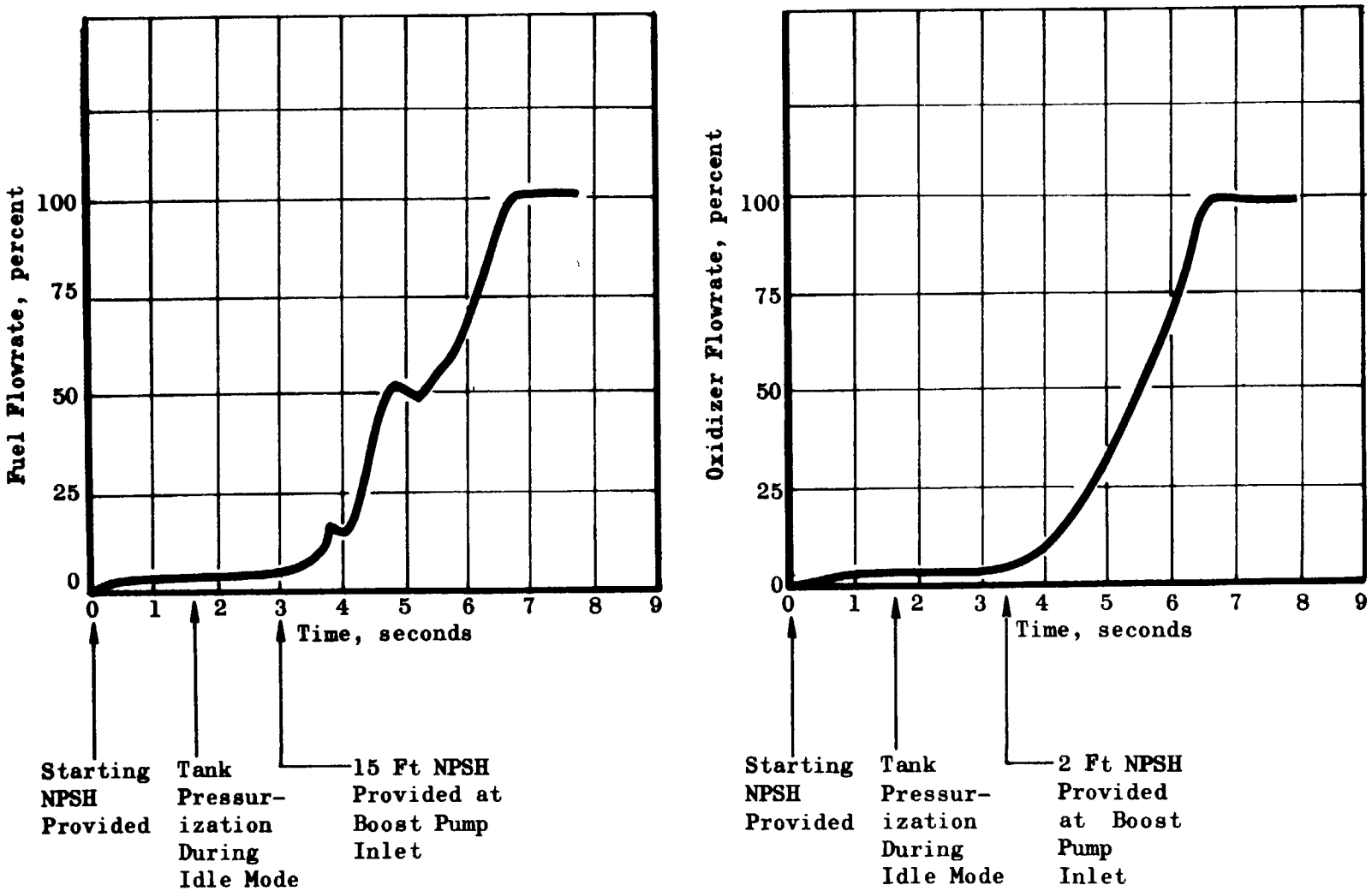

Figure 14

TABLE 6

BOOST PUMPS CONFIGURATIONS FOR SPECIFIED MAINSTAGE NPSH VALUES

(ASSUMED INLET LINE LENGTHS OF 60" - LO_2 AND 200" - LH_2)

TYPE	NPSH	P_1 PSIA	P_2 PSIA	$\dot{W}$ LB/SEC	N RPM	TIP D-in	EYE D-in	HUB D-in
O_2	16	15.7	115.7	36.32	14,566	2.128	2.128	0.638
	2	↓	↓	↓	7,300	3.595	3.585	1.076
	0	↓	↓	↓	2,068	12.641	6.031	1.809
H_2	60	16.6	76.6	6.053	87,663	2.112	2.112	0.634
	15	↓	↓	↓	27,250	3.217	3.217	0.965
	0	↓	↓	↓	27,250	3.217	3.217	0.965

- 0 NPSH LO_2 IS CENTRIFUGAL - ALL OTHERS ARE INDUCERS
- 0 NPSH LO_2 NEEDS A SIX INCH LINE
- 2 NPSH LO_2 IS SUITABLE FOR 0 NPSH IDLE MODE START (TANKS PRESSURIZED DURING IDLE MODE

TABLE 7

ENGINE CONFIGURATION TRADEOFF

MATRIX SUMMARY
(NON-THROTTLING ENGINES)

ALTERNATE ENGINE CONFIG.	CYCLE BALANCE	* PERFORMANCE	** START TRANS. CHAR.	** FLEXIBILITY	** COMPLEXITY	* WEIGHT	ENGINE DDT&E AND PROD. COST
1	1875	475.1	B	D	A	325.4	114.3 M 787.5 K
2	1900	474.8	A	C	B	323.2	112.9 M 772.6 K
3	2135	475.3	B	C	C	326.8	114.2 M 785.2 K
4	2170	475.0	A	B	D	325.7	112.8 M 771.2 K
5	1825	475.0	B	C	B	334.8	117.1 M 833.9 K
6	1850	474.7	A	B	C	333.6	115.8 M 820.2 K
7	2050	475.3	B	B	D	336.9	117.2 M 834.6 K
8	2075	474.9	A	A	D	337.3	115.8 M 820.6 K

* PREDICATED ON 400:1 AREA RATIO NOZZLE AND NO LENGTH LIMIT

** LETTER DESIGNATION INDICATES ORDER OF PREFERENCE

non-throttling engine configuration. Several pertinent characteristics of the selected configuration are presented in Table 8.

Impact of Throttling

The impact of throttling on three (3) configurations selected from the non-throttling case was assessed. Schematics of number 4T and number 8T are presented as typical in Fig. 15. As in the non-throttling configuration, valve locations are of particular importance. Though other control points could be selected, those shown represent a consensus of previous studies and are considered suitable for meeting the engine throttling and mixture ratio control requirements. A summary of the throttling assessment is presented in Table 9. The same approach was utilized in evaluation of each throttling engine configuration, as previously discussed, for the non-throttling engine design. As is apparent from Table 9, there was little difference between the alternative configurations.

Conclusions

Engine configuration number 4 is recommended for fulfilling the non-throttling engine requirements. The engine should incorporate idle-mode start and autogenous tank pressurization (pressurization flowrates to be defined). It is also recommended that the capability of 0/0 feet NPSH be pursued.

In addition, it was concluded that for meeting a firm throttling requirement, configuration number 8T would be desirable. However, if throttling is not a firm requirement, configuration number 4 can be adapted with minimum penalty. Therefore, it was recommended that configuration number 4 be baselined for the remainder of the program.

TABLE 8. ALTERNATE #4

P_C, PSIA	2170
P_{PB}, PSIA	3189
T_{PB}, R	1860

	FUEL BOOST PUMP	FUEL MAIN PUMP	OXIDIZER MAIN PUMP	OXIDIZER BOOST PUMP
P_D, PSIA	76.6	4470	3743	115.7
$\dot{W}$, LB/SEC	6.05	6.05	36.3	36.3
HP	27.5	2103	631	17.9
SPEED, RPM	27,250	114,845	92,160	7300

THROTTLING ENGINE SCHEMATICS

ALTERNATE #4T

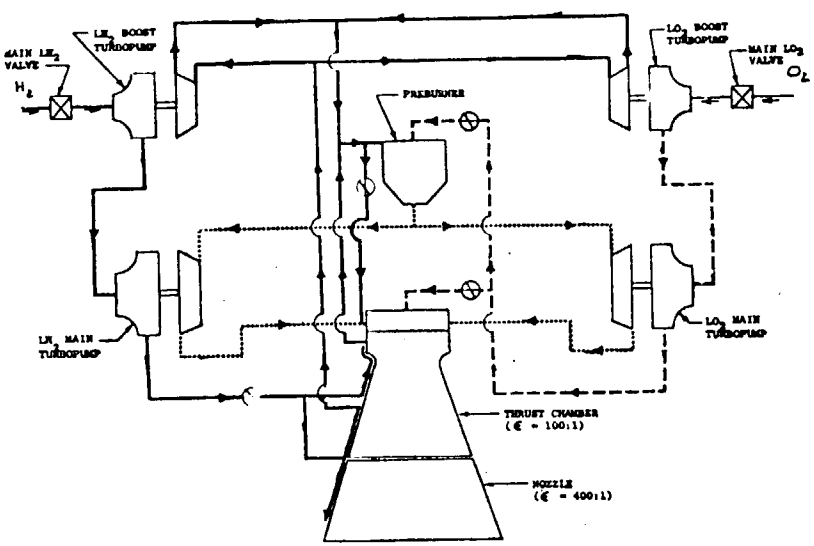

ALTERNATE #8T

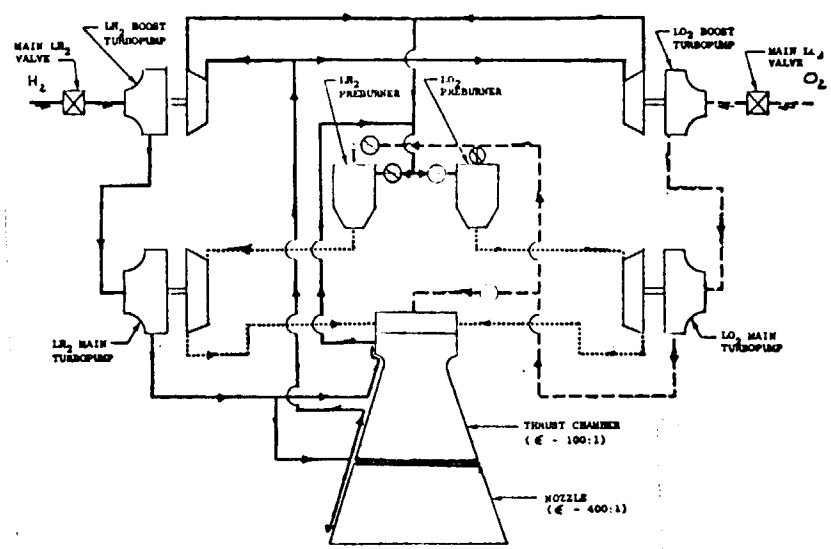

H_2

LO_2

COMBUSTION GAS

Figure 15

TABLE 9. THROTTLING
ENGINE CONFIGURATION TRADEOFF
MATRIX

ALTERNATE ENGINE CONFIG.	CYCLE BALANCE	* PERFORMANCE	** START TRANS. CHAR.	** FLEXIBILITY	** COMPLEXITY	* WEIGHT	ENGINE DDT&E AND PROD. COST
3T	1825	475.0	B	C	A	361.0	122.5 M 871.4 K
4T	1850	474.7	A	B	B	359.3	121.0 M 855.8 K
8T	1950	474.9	A	A	B	361.1	123.0 M 898.7 K

* PREDICATED ON 400:1 AREA RATIO NOZZLE AND NO LENGTH LIMIT
** LETTER DESIGNATION INDICATES ORDER OF PREFERENCE

III. CURRENT PROBLEMS

There are no problems at this time.

IV. WORK PLANNED

The following subtasks are planned to be initiated during the next report period:

- Cycle and component design parameter optimization
- Detail component identification
- Pneumatic and electrical system identification
- Engine sequencing
- Engine chilldown and propellant dump analyses
- Assimilation of material, stress level, and thermal fatigue data to be used in component analysis

NATIONAL AERONAUTICS AND SPACE ADMINISTRATION

CONTRACT PROGRESS SCHEDULE REPORT
(See Instructions on reverse side)

1. REPORT FOR MONTH ENDING: July 29, 1972

FORM APPROVED. BUDGET BUREAU NO. 104-R0007

10. NASA Use Only
a. NASA CODE
b. PROJECT MGR.
c. EVALUATION DATE
d. EXCEPTION CATEGORY
e. f. g.

2. CONTRACT TITLE: ADVANCED SPACE ENGINE PRELIMINARY DESIGN

3. CONTRACTOR (Name and address): Rocketdyne, a Division of North American Rockwell Corp. 6633 Canoga Avenue, Canoga Park, California

4. APPROVED (Contractor's Project Manager): H. G. Diem, Program Manager — DATE: Aug. 23, 1972

5. CONTRACT NO.: NAS3-16751

6. NASA APPROVED SCHEDULE DATE: Aug. 3, 1972

7. REPORTING CATEGORY	9. TECH. OBJECTIVE % COMP.
TASK IA: Engine Configuration Selection	100
TASK IB: Engine Assembly Preliminary Design	0
TASK II: Main Thrust Chamber Assembly Preliminary Design	0
TASK III: Preburner Assembly Preliminary Design	0
TASK IV: Turbopump Preliminary Design	0
TASK V: Valves, Ignition System & Controls Preliminary Design	0
TASK VI: Reports of Work	

8. SCHEDULE AND STATUS

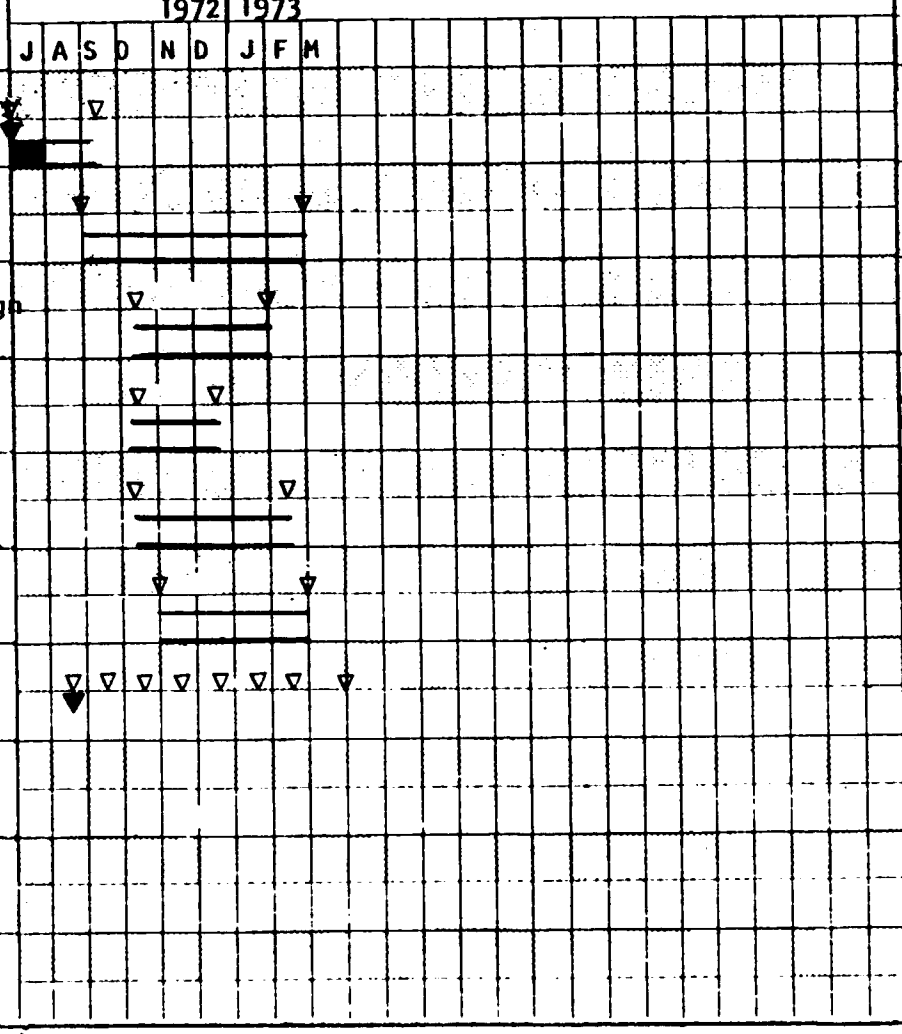

NASA-C-63 (Rev. 7-71) (Previous editions are obsolete)

NASA APPROVED SCHEDULE

CONTRACTOR'S WORKING SCHEDULE

(Over)