SM3A-309

SM3A-309

Technical Library, Bellcomm, Inc.

NASA
SUPPORT MANUAL

APOLLO SUPPORT EQUIPMENT MAINTENANCE HANDBOOK

AUG 14 1969

ENVIRONMENTAL CONTROL SYSTEM WATER-GLYCOL SERVICE SET REFRIGERATION UNIT MODEL S14-121

CONTRACT NAS 9-150

EXHIBIT I: PARAGRAPH 10.5

THIS PUBLICATION REPLACES SM3A-309 DATED 15 FEBRUARY 1966
CHANGED AUGUST 1967

(NASA-CR-129874) APOLLO SUPPORT EQUIPMENT MAINTENANCE HANDBOOK. ENVIRONMENTAL CONTROL SYSTEM WATER-GLYCOL SERVICE SET REFRIGERATION UNIT MODEL (North American Rockwell Corp.) 15 Jun. 1969 392 p 00/99 N73-70279 Unclas 37156

PUBLISHED UNDER AUTHORITY OF THE NATIONAL AERONAUTICS AND SPACE ADMINISTRATION

15 JUNE 1969

SM3A-309

NASA
SUPPORT MANUAL

APOLLO SUPPORT EQUIPMENT MAINTENANCE HANDBOOK

ENVIRONMENTAL CONTROL SYSTEM WATER-GLYCOL SERVICE SET REFRIGERATION UNIT MODEL S14-121

CONTRACT NAS 9-150

EXHIBIT I: PARAGRAPH 10.5

THIS PUBLICATION REPLACES SM3A-309 DATED 15 FEBRUARY 1966
CHANGED AUGUST 1967

PUBLISHED UNDER AUTHORITY OF THE NATIONAL AERONAUTICS AND SPACE ADMINISTRATION

15 JUNE 1969

LIST OF EFFECTIVE PAGES

INSERT LATEST CHANGED PAGES, DESTROY SUPERSEDED PAGES.

Note: The portion of the text affected by the changes is indicated by a vertical line in the outer margins of the page.

TOTAL NUMBER OF PAGES IN THIS PUBLICATION IS 320, CONSISTING OF THE FOLLOWING:

Page No.	Issue
Title	Original
A thru C	Original
i thru vi	Original
1-1 thru 1-5	Original
1-6 Blank	Original
2-1 thru 2-53	Original
2-54 Blank	Original
2-55 thru 2-70	Original
3-1 thru 3-22	Original
4-1 thru 4-2	Original
5-1	Original
5-2 Blank	Original
6-1 thru 6-3	Original
6-4 Blank	Original
6-5	Original
6-6 Blank	Original
6-7	Original
6-8 Blank	Original
6-9	Original
6-10 Blank	Original
6-11 thru 6-13	Original
6-14 Blank	Original
7-1 thru 7-6	Original
8-1	Original
8-2 Blank	Original
8-3	Original
8-4 Blank	Original
8-5	Original
8-6 Blank	Original
8-7 thru 8-9	Original
8-10 Blank	Original
8-11	Original
8-12 Blank	Original
8-13	Original
8-14 Blank	Original
8-15	Original
8-16 Blank	Original
8-17	Original
8-18 Blank	Original
8-19	Original
8-20 Blank	Original
8-21	Original
8-22 Blank	Original
8-23	Original
8-24 Blank	Original
8-25	Original
8-26 Blank	Original
8-27 thru 8-45	Original
8-46 Blank	Original
A-1 thru A-2	Original
B-1 thru B-5	Original
B-6 Blank	Original
B-7	Original
B-8 Blank	Original
B-9	Original
B-10 Blank	Original
B-11	Original
B-12 Blank	Original
B-13	Original
B-14 Blank	Original
B-15	Original
B-16 Blank	Original
B-17 thru B-19	Original
B-20 Blank	Original
B-21 thru B-23	Original
B-24 Blank	Original
B-25 thru B-27	Original
B-28 Blank	Original
B-29	Original
B-30 Blank	Original
B-31	Original
B-32 Blank	Original
B-33	Original
B-34 Blank	Original
B-35	Original

* The asterisk indicates pages changed, added, or deleted by the current change.

LIST OF EFFECTIVE PAGES

INSERT LATEST CHANGED PAGES, DESTROY SUPERSEDED PAGES.

Note: The portion of the text affected by the changes is indicated by a vertical line in the outer margins of the page.

Page No.	Issue
B-36 Blank	Original
B-37	Original
B-38 Blank	Original
B-39 thru B-41	Original
B-42 Blank	Original
B-43	Original
B-44 Blank	Original
B-45	Original
B-46 Blank	Original
B-47	Original
B-48 Blank	Original
B-49 thru B-51	Original
B-52 Blank	Original
B-53	Original
B-54 Blank	Original
B-55	Original
B-56 Blank	Original
B-57	Original
B-58 Blank	Original
B-59 thru B-61	Original
B-62 Blank	Original
B-63	Original
B-64 Blank	Original
B-65	Original
B-66 Blank	Original
B-67	Original
B-68 Blank	Original
B-69	Original
B-70 Blank	Original
B-71 thru B-73	Original
B-74 Blank	Original
B-75	Original
B-76 Blank	Original
B-77	Original
B-78 Blank	Original
B-79	Original
B-80 Blank	Original
B-81 thru B-83	Original
B-84 Blank	Original
B-85	Original
B-86 Blank	Original
B-87	Original
B-88 Blank	Original
B-89	Original
B-90 Blank	Original
B-91	Original
B-92 Blank	Original
B-93	Original
B-94 Blank	Original
B-95 thru B-97	Original
B-98 Blank	Original
B-99	Original
B-100 Blank	Original
B-101	Original
B-102 Blank	Original
B-103	Original
B-104 Blank	Original
B-105 thru 107	Original
B-108 Blank	Original
B-109	Original
B-110 Blank	Original
B-111	Original
B-112 Blank	Original
B-113	Original
B-114 Blank	Original
B-115	Original
B-116 Blank	Original
B-117	Original
B-118 Blank	Original
B-119 thru B-121	Original
B-122 Blank	Original
B-123	Original
B-124 Blank	Original
B-125	Original
B-126 Blank	Original
B-127	Original
B-128 Blank	Original
B-129	Original
B-130 Blank	Original
B-131	Original
B-132 Blank	Original
B-133	Original

* The asterisk indicates pages changed, added, or deleted by the current change.

LIST OF EFFECTIVE PAGES

INSERT LATEST CHANGED PAGES, DESTROY SUPERSEDED PAGES.

Note: The portion of the text affected by the changes is indicated by a vertical line in the outer margins of the page.

Page No.	Issue
B-134 Blank	Original
B-135	Original
B-136 Blank	Original
B-137	Original
B-138 Blank	Original
B-139 thru B-140	Original

* The asterisk indicates pages changed, added, or deleted by the current change.

TABLE OF CONTENTS

Section	Title	Page
I	DESCRIPTION	1-1
	1-1. General Description	1-1
	1-6. Leading Particulars	1-2
	1-8. Detailed Description	1-2
	1-13. Control and Instrumentation Panel	1-3
	1-17. Fluid Control Module Panel	1-3
	1-21. Circuit Breaker Panel	1-3
	1-28. Input Power Panel	1-3
	1-32. Connector Panel	1-4
	1-36. Frequency Converter and Calibration Oscillator Meter Set	1-4
	1-41. Universal Controller	1-4
	1-46. Water-Glycol Flow Controller	1-5
	1-50. Refrigerator (Chilling Unit)	1-5
	1-53 Supplementary Documentation	1-5
II	FUNCTIONAL TEST	2-1
	2-1. General	2-1
	2-6. Related Equipment Required	2-1
	2-8. Power and Facility Requirements	2-1
	2-10. Electrical Power	2-1
	2-12. Gaseous Nitrogen	2-2
	2-14. Water-Glycol	2-2
	2-16. Vents and Drains	2-2
	2-21. Preparation for Use	2-2
	2-22. Inventory Check	2-2
	2-24. Inspection	2-3
	2-26. Facility Connection	2-3
	2-28. Operating Controls and Indicators	2-4
	2-30. Preactivation Test	2-4
	2-31. Enclosure Purge Circuit Test	2-4
	2-33. Refrigeration Unit Activating Procedure	2-30
	2-35. Functional Test Procedures	2-38
	2-36. Test Equipment Required	2-38
	2-38. Preparation for Testing	2-38
	2-42. Refrigeration Unit Tests	2-49
	2-53. Refrigeration Unit Shutdown Procedure	2-70
III	TROUBLE ANALYSIS	3-1
	3-1. General	3-1
	3-4 Trouble Analysis Tables	3-1

Section	Title	Page
IV	REMOVAL AND INSTALLATION	4-1
	4-1. General	4-1
	4-3. Removal of Components	4-1
	4-6. Installation of Components	4-2
V	REPAIR INSTRUCTION	5-1
VI	CALIBRATION AND ADJUSTMENT	6-1
	6-1. General	6-1
	6-3. Meter Calibration	6-1
	6-6. Flow Control Loop Calibration	6-2
	6-9. Calibration Data	6-3
	6-11. Solenoid Valve Adjustment	6-11
VII	PERIODIC INSPECTION AND SERVICE	7-1
	7-1. Periodic Inspections	7-1
	7-4. Preventive Maintenance	7-1
	7-6. Operation of Refrigeration Unit Flowmeters	7-1
	7-8. Corrective Maintenance	7-2
	7-9. Maintenance of Flowmeters	7-2
	7-14. Removal of Filters	7-5
	7-16. Lubrication	7-6
	7-18. Refinishing Instructions	7-6
	7-22. Preparation for Shipping	7-6
	7-24. Storage Instructions	7-6
VIII	DIAGRAMS	8-1
	8-1. General Information	8-1
Appendix A - Source Data		A-1
	A-1. General	A-1
	A-3. Engineering Drawings	A-1
	A-5. Specifications	A-2
	A-7. Engineering Orders	A-2
Appendix B - Difference Data Sheets		B-1
	B-1. General	B-1
	B-3. Index to Difference Data Sheets	B-1

LIST OF ILLUSTRATIONS

Figure No.	Title	Page
1-1.	Environmental Control System Water-Glycol Service Set Refrigeration Unit Model No. S14-121	1-1
2-1.	Refrigeration Unit, Panel Locations	2-5
2-2.	Control and Instrumentation Panel	2-6
2-3.	Fluid Control Module Panel	2-20
2-4.	Circuit Breaker Panel	2-24
2-5.	Input Power Panel	2-26
2-6.	Connector Panel	2-28
2-7.	Frequency Converter and Calibration Oscillator Meter Set	2-30
2-8.	Universal Controller	2-35
2-9.	Water-Glycol Flow Controller	2-38
2-10.	Enclosure Purge Controls and Indicators	2-40
2-11.	Refrigerator Controls and Indicators	2-43
2-12.	Basic Test Equipment Setup for Enclosure Purge Circuit Test and for Test No. 1, 2, 3, 4, 5, 8, 9, and 10	2-53
2-13.	Test Equipment Setup for Test No. 6 and 7	2-63
6-1	Solenoid Valve V40 Identification	6-11
6-2.	Solenoid Valve V10, V14, V33 and V38 Identification	6-13
8-1.	Fluid Schematic Diagram	8-3
8-2.	Control and Instrumentation Panel Electrical Schematic	8-5
8-3.	Circuit Breaker Panel Electrical Schematic	8-7
8-4.	Input Power Panel Electrical Schematic	8-8
8-5.	Relay Panel Electrical Schematic	8-9
8-6.	Refrigeration Unit Wiring Diagram	8-11
8-7.	Control and Instrumentation Panel Wiring Diagram	8-13
8-8.	Circuit Breaker Panel Wiring Diagram	8-17
8-9.	Input Power Panel Wiring Diagram	8-19
8-10.	Refrigeration System Fluid Schematic Diagram	8-21
8-11.	Refrigeration System Electrical Schematic Diagram	8-23
8-12.	Interconnecting Cable Diagram	8-25
8-13.	Cable Assembly W1	8-27
8-14.	Cable Assembly W2	8-27
8-15.	Cable Assembly W3	8-27
8-16.	Cable Assembly W4	8-28
8-17.	Cable Assembly W5	8-28
8-18.	Cable Assembly W6	8-28
8-19.	Cable Assembly W7	8-29
8-20.	Cable Assembly W8	8-29
8-21.	Cable Assembly W9	8-30
8-22.	Cable Assembly W10	8-31
8-23.	Cable Assembly W11	8-31
8-24.	Cable Assembly W12	8-32
8-25.	Cable Assembly W13	8-32
8-26.	Cable Assembly W14	8-32
8-27.	Cable Assembly W15	8-33
8-28.	Cable Assembly W16	8-33

Figure No.	Title	Page
8-29.	Cable Assembly W17	8-34
8-30.	Cable Assembly W18	8-34
8-31.	Cable Assembly W19	8-35
8-32.	Cable Assembly W20	8-35
8-33.	Cable Assembly W21	8-36
8-34.	Cable Assembly W22	8-37
8-35.	Cable Assembly W23	8-38
8-36.	Cable Assembly W24	8-38
8-37.	Cable Assembly W25	8-39
8-38.	Cable Assembly W26	8-39
8-39.	Cable Assembly W27	8-40
8-40.	Cable Assembly W28	8-41
8-41.	Cable Assembly W29	8-42
8-42.	Cable Assembly W30	8-43
8-43.	Cable Assembly W31	8-43
8-44.	Cable Assembly W32	8-43
8-45.	Cable Assembly W33	8-44
8-46.	Cable Assembly W34	8-44
8-47.	Cable Assembly W35	8-45
8-48.	Cable Assembly W36	8-45
B-1.	Control and Instrumentation Panel Electrical Schematic	B-7
B-2.	Relay Panel Electrical Schematic	B-9
B-3.	Refrigeration Unit Wiring Diagram	B-11
B-4.	Control and Instrumentation Panel Wiring Diagram	B-13
B-5.	Refrigeration System Fluid Schematic Diagram	B-17
B-6.	Refrigeration System Electrical Schematic Diagram	B-18
B-7.	Interconnecting Cable Diagram	B-19
B-8.	Cable Assembly W18	B-21
B-9.	Cable Assembly W19	B-22
B-10.	Cable Assembly W29	B-23
B-11.	Control and Instrumentation Panel Electrical Schematic	B-29
B-12.	Relay Panel Electrical Schematic	B-31
B-13.	Refrigeration Unit Wiring Diagram	B-33
B-14.	Control and Instrumentation Panel Wiring Diagram	B-35
B-15.	Refrigeration Unit Wiring Diagram	B-43
B-16.	Control and Instrumentation Panel Wiring Diagram	B-45
B-17.	Refrigeration Unit Wiring Diagram	B-53
B-18.	Control and Instrumentation Panel Wiring Diagram	B-55
B-19.	Relay Panel Electrical Schematic	B-63
B-20.	Refrigeration Unit Wiring Diagram	B-65
B-21.	Control and Instrumentation Panel Wiring Diagram	B-67
B-22.	Refrigeration Unit Wiring Diagram	B-75
B-23.	Control and Instrumentation Panel Wiring Diagram	B-77
B-24.	Control and Instrumentation Panel Electrical Schematic	B-85
B-25.	Relay Panel Electrical	B-87

Figure No.	Title	Page
B-26.	Refrigeration Unit Wiring Diagram	B-89
B-27.	Control and Instrumentation Panel Wiring Diagram	B-91
B-28.	Refrigeration Unit Wiring Diagram	B-99
B-29.	Control and Instrumentation Panel Wiring Diagram	B-101
B-30.	Relay Panel Electrical Schematic	B-109
B-31.	Refrigeration Unit Wiring Diagram	B-111
B-32.	Control and Instrumentation Panel Wiring Diagram	B-113
B-33.	Refrigeration System Fluid Schematic Diagram	B-117
B-34.	Refrigeration System Electrical Schemtic Diagram	
B-35.	Control and Instrumentation Panel Electrical Schematic	B-125
B-36.	Input Power Panel Electrical Schematic	B-127
B-37.	Relay Panel Electrical Schematic	B-129
B-38.	Refrigeration Unit Wiring Diagram	B-131
B-39.	Control and Instrumentation Panel Wiring Diagram	B-133
B-40.	Input Power Panel Wiring Diagram	B-137
B-41.	Refrigeration System Fluid Schematic Diagram	B-139
B-42.	Refrigeration System Electrical Schematic Diagram	B-140

LIST OF TABLES

Table No.	Title	Page
2-1.	Control and Instrumentation Panel	2-7
2-2.	Fluid Control Module Panel	2-21
2-3.	Circuit Breaker Panel	2-25
2-4.	Input Power Panel	2-27
2-5.	Connector Panel	2-29
2-6.	Frequency Converter and Calibration Oscillator Meter Set	2-31
2-7.	Universal Controller	2-36
2-8.	Water-Glycol Flow Controller	2-39
2-9.	Enclosure Purge Controls and Indicators . . .	2-41
2-10.	Refrigerator Controls and Indicators	2-44
2-11.	Test Equipment	2-46
2-12.	Preliminary Control Settings	2-50
2-13.	Meter Indications	2-56
3-1.	Trouble Analysis for Enclosure Purge Circuit Test	3-1
3-2.	Trouble Analysis for Test No. 1	3-3
3-3.	Trouble Analysis for Test No. 2	3-6
3-4.	Trouble Analysis for Test No. 3	3-7
3-5.	Trouble Analysis for Test No. 4	3-8
3-6.	Trouble Analysis for Test No. 5	3-10
3-7.	Trouble Analysis for Test No. 6	3-15
3-8.	Trouble Analysis for Test No. 7	3-17

Table No.	Title	Page
3-9.	Trouble Analysis for Test No. 8	3-19
3-10.	Trouble Analysis for Test No. 9	3-20
3-11.	Trouble Analysis for Test No. 10	3-22
4-1.	Allowable Wrench Torque for AN Tube Fittings	4-2
6-1.	Calibration Data	6-5
7-1.	Periodic Inspection Requirements	7-1
7-2.	General Preventive Maintenance Requirements . .	7-5

SECTION I

DESCRIPTION

1-1. GENERAL DESCRIPTION.

1-2. This publication provides maintenance instructions for the Environmental Control System Water-Glycol Service Set Refrigeration Unit Model S14-121, AiResearch Part No. 847250-3-1, NR Part No. G14-854025-301, NR Serial No. 008 (ME 901-0319-0001) manufactured by AiResearch Manufacturing Company, Division of The Garrett Corporation, Los Angeles, California for North American Rockwell Corporation, Space Division, Downey, California. (See figure 1-1.)

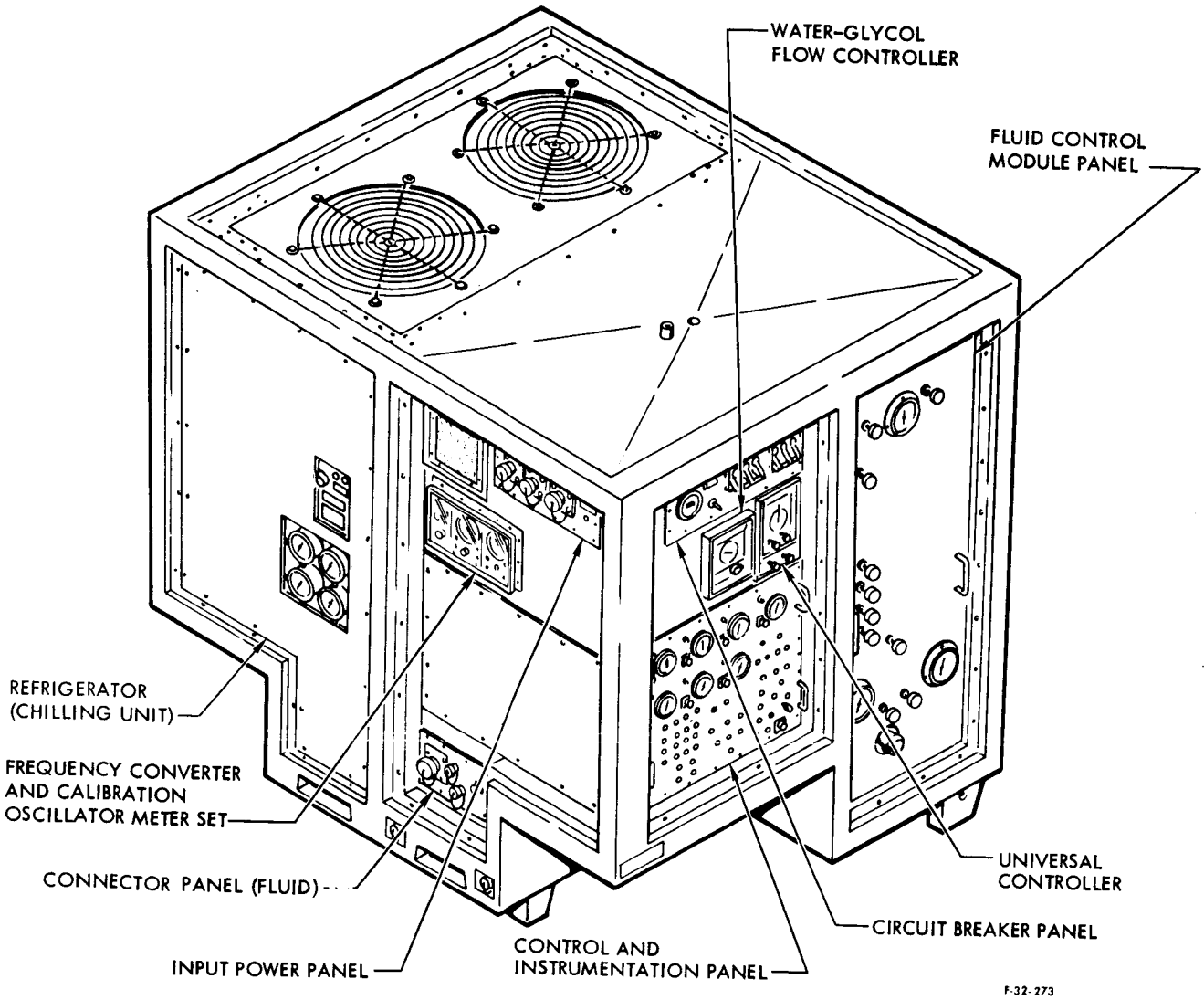

Figure 1-1. Environmental Control System Water-Glycol Service Set Refrigeration Unit Model No. S14-121

1-3. Appendix B contains maintenance instructions for additional refrigeration units, identified by NR serial numbers, in the form of difference data sheets. Maintenance procedures for refrigeration units included in Appendix B are the same as procedures given in sections I through VIII, except for specific differences noted in the applicable difference data sheet.

1-4. The refrigeration unit provides chilled coolant for the Apollo space vehicle command module trim control set.

1-5. The refrigeration unit is used during ground-cooling operation of the Apollo Environmental Control System (ECS).

1-6. LEADING PARTICULARS.

1-7. Physical characteristics and environmental conditions for the refrigeration unit are as follows:

Dimensions:
- Height: 57 inches
- Width: 72 inches
- Depth: 60 inches
- Weight: 4600 pounds

Environmental Conditions:
- Temperature (controlled): +75±5°F (+23.9±2.8°C)
- Temperature (uncontrolled for two weeks): -20°F to 140°F (-28.9° to +60°C)
- Altitude: sea level to 2500 feet
- Humidity: 45% to 75% relative

Power Requirements:
- 480 vac, 60 cps, 3 phase at 90 amps per phase
- 120 vac, 60 cps, single phase at 10 amps
- 28 vdc at 15 amps

1-8. DETAILED DESCRIPTION.

1-9. Components of the refrigeration unit are identified and described in the illustrations and tables of section II.

1-10. The unit consists of a fluid control module, a refrigerator, coolant storage facilities, a control and instrumentation panel, various connector panels, and flow and temperature control units, and includes Service Set Modification Kit AiResearch Part No. 252684, NR Control Specification No. ME 431-0061-0001. (See figure 2-1.)

1-11. The refrigeration unit provides chilled coolant to the trim unit. Refrigerator output temperature can be varied between -5°F and +50°F.

1-12. Forklift pads with access slots are provided at the rear of the unit. Removable hoisting eye-bolts are also provided. The eye-bolts are designed to be screwed into threaded bolt-holes located on the top of the unit at each corner. When not in use, the hoisting eye-bolts are replaced by standard bolts.

1-13. CONTROL AND INSTRUMENTATION PANEL.

1-14. The panel contains indicating lights, meters, and controls for monitor and control functions concerned with electrical power, temperature, pressure and flow control. (See figure 2-2.)

1-15. Mode selection (remote or local) and operational (auto or manual) switches are located on the panel. Two test-point receptacles are also provided for test and calibration of meter signal voltages.

1-16. Refer to table 2-1 for further description, schematic references, and other information on components of the panel.

1-17. FLUID CONTROL MODULE PANEL.

1-18. The panel contains three gages (main regulated pressure, source pressure, and discharge pressure) and the main pressure regulator control. Gage shutoff valves are provided for each gauge. (See figure 2-3.)

1-19. Valves controls are also provided for the trim supply, bypass, and return valves; the reservoir return and fill valves; the system-fill direct and reservoir valves; and the pump discharge valve.

1-20. Refer to table 2-2 for further description, schematic references, and other information on components of the panel.

1-21. CIRCUIT BREAKER PANEL.

1-22. The panel contains two 480 vac, 3 phase, 60 cps circuit breakers, one 120 vac, single phase, 60 cps circuit breaker, one 28 vdc circuit breaker, and one timer. (See figure 2-4.)

1-23. One 480 vac circuit breaker provides protection for compressor motor circuits; the other 480 vac breaker provides protection for pump and fan motor circuits.

1-24. The 120 vac circuit breaker provides protection for controller circuits, solenoid circuits, and certain components dependent upon 120 vac for operating voltage.

1-25. The 28 vdc circuit breaker provides protection for relay coil circuits and indicating lamp circuits.

1-26. The timer operates from the 120 vac supply, and indicates running time for the refrigeration unit.

1-27. Refer to table 2-3 for further description, schematic references, and other information on components of the panel.

1-28. INPUT POWER PANEL.

1-29. The panel contains three receptacles for connections to external electrical power sources, a ground reference stud, and a ground static connection. (See figure 2-5.)

1-30. One receptacle is for 480 vac, 60 cps, 3 phase power; one for 120 vac, 60 cps, single phase power; and one for 28 vdc power. The round reference stud provides a single ground connection for instrumentation, and so eliminates ground loops. The static ground connection provides an adequate connection for grounding the unit.

1-31. Refer to table 2-4 for further description, schematic references, and other information on components of the panel.

1-32. CONNECTOR PANEL.

1-33. The panel contains receptacles for connection to external fluid loops. (See figure 2-6.)

1-34. Quick disconnects are provided for lines to and from the trim unit. One electrical connector is provided for the remote control equipment. Two bulkhead unions are provided for the gaseous nitrogen supply and water-glycol fill lines.

1-35. Refer to table 2-5 for further description, schematic references, and other information on components of the panel.

1-36. FREQUENCY CONVERTER AND CALIBRATION OSCILLATOR METER SET.

1-37. The meter set consists of an oscillator and two frequency converters. All three units are recessed into a purged assembly fitted with a transparent front cover. Control and indicating devices are visible through the cover. (See figure 2-7.)

1-38. Frequency converter No. 1 provides a dc control voltage that is an analog of the variable ac output of the main flowmeter. The control voltage then positions the mixing valve to provide a preset fluid ration and flow. Frequency converter No. 2 performs the same function as No. 1, except that ists input voltage is received from the auxiliary flowmeter.

1-39. The calibration oscillator provides fixed frequencies for calibration of both converters.

1-40. Refer to table 2-6 for further description, schematic references, and other information on components of the assembly.

1-41. UNIVERSAL CONTROLLER.

1-42. The unit is recessed into a purged assembly fitted with a transparent front cover. Controls and indicating devices are visible through the cover. (See figure 2-8.)

1-43. The controller sets and monitors water-glycol temperature, and minimizes systemic imbalance when transfer is made from manual to automatic mode.

1-44. The valve positioning control determines the percentage of full-open to chich the bypass valve and mixing valve will be positioned.

1-45. Refer to table 2-7 for further description, schematic references, and other information on components of the assembly.

1-46. WATER-GLYCOL FLOW CONTROLLER.

1-47. The assembly consists of two controls, two indicators, and associated mechanisms. The controls and indicators are recessed behind a transparent cover, equipped with a catch and hinges for access. (See fiture 2-9.)

1-48. The controller acts in concert with the universal controller to determine rate of water-glycol flow. Rate is selected by positioning the flow control tab. Gallons-per-minute flow indication is provided by a flow gage, and pressure at flow control valves is indicated at the valve pressure scale tab. A mode control switch selects manual or automatic operation.

1-49. Refer to table 2-8 for further description, schematic references, and other information on components of the assembly.

1-50. REFRIGERATOR (CHILLING UNIT).

1-51. The refrigerator assembly consists of a closed-loop refrigerator, chilling coils, pressure gages, temperature control switch, cooling fans and indicator lights. (See figure 2-11.)

1-52. Refer to table 2-10 for further description, schematic references, and other information on components of the assembly.

1-53. SUPPLEMENTARY DOCUMENTATION.

1-54. Maintenance instructions for standard equipment contained in the refrigeration unit are in the following listed vendor commercial off-the-shelf manuals.

Instruction Manual for Frequency Converter and Calibration Oscillator Meter Set (Model 581-SP377-2, Potter Aeronautical Corp, Union, N. J.)

Operation and Instruction Manual for Refrigeration System (Part No. 4512, Auto Controls Labs, Los Angeles, California)

Instruction Manual for Universal Controller (Part No. 921-24025-1DRA, Manual No. 810-66 Issue No. 1 and 333-2, Honeywell Regulator Co, Los Angeles, California)

Instruction Manual for I/P Transducer (Part No. 1BA2G1, Honeywell Regulator Co, Los Angeles, California)

Instruction Manual for Flow Controller (Pneumatic Tel-O-Set Controller, Part No. E-7089-349, Honeywell Regulator Co, Los Angeles, California)

Instruction Manual for Flow Controller (Pneumatic Tel-O-Set Controller, Part No. 52201-14-72, Honeywell Regulator Co, Los Angeles, California)

Instruction Manual for Flow Controller (Concentric Scale Indicator Part No. 51711-2-2-10-3-0, Honeywell Regulator Co, Los Angeles, California)

SECTION II

FUNCTIONAL TEST

2-1. GENERAL.

2-2. Functional testing of the refrigeration unit consists of performing those tests necessary to confirm the operational status of the unit. These tests are to be performed by authorized personnel only.

2-3. The tests are arranged in a sequence that progressively validates the electrical and refrigeration functions of the refrigeration unit.

2-4. Malfunctions encountered during test procedures are referenced to trouble analysis procedures of section III by test number and subparagraph letter. Test diagrams referenced in the test procedures appear in section II.

2-5. Tables 2-1 through 2-10 list the controls and indicators used during testing.

2-6. RELATED EQUIPMENT REQUIRED.

2-7. Related equipment is defined as additional Ground Support Equipment (GSE) required in association with the refrigeration unit for performance of functional tests of the Apollo ECS. The refrigeration unit is designed to operate in conjunction with a standard water-glycol portable fill unit and the Water-Glycol Trim Control Set, Model No. S14-053, AiResearch Part No. 847300, NR Part No. G16-855157, (ME 901-0098-0001). For testing purposes, simulators are used as necessary for these and other items of equipment. Refer to table 2-11 for a complete list of test equipment.

2-8. POWER AND FACILITY REQUIREMENTS.

2-9. Operation and testing of the refrigeration unit requires that electrical power, gaseous nitrogen, and water-glycol be provided as described in the following paragraphs. Refer to paragraph 2-26 for procedures used to connect the required facility supply sources to the refrigeration unit.

2-10. ELECTRICAL POWER.

2-11. The following electrical power sources, and interconnecting cables with connectors as specified, are required for operation and testing of the refrigeration unit:

a. A 3 phase 480 vac at 60 cps power source rated at 90 amps per phase. The interconnecting cable must terminate with a Crouse-Hinds APJ 6475-S4-S22 connector to mate with the RPX233-914-P08AR connector (3, figure 2-5) on the input power panel.

b. A single phase 120 vac at 60 cps power source rated at 10 amps. The interconnecting cable must terminate with a Crouse-Hinds APJ 3383-S31-S22 connector to mate with RPX221-914-P04BR connector (2) on the input power panel.

c. A 28 vdc power source rated at 15 amps. The interconnecting cable must terminate with a Crouse-Hinds APJ 3385-S4-S22 connector to mate with the RPX221-914-P04AR connector (1) on the input power panel.

2-12. GASEOUS NITROGEN.

2-13. A source of clean, dry, gaseous nitrogen (NAA Specification MB 0110-002 Type I Grade A) at 1500 to 2200 psig and a flow rate of 4 standard cubic feet per minute is required. The facility nitrogen supply line must terminate with an MS28760-8 fitting to mate with the GN_2 SUPPLY union (4, figure 2-6) on the connector panel.

2-14. WATER GLYCOL.

2-15. Water-glycol, in a 62.5 percent inhibited ethylene glycol and 37.5 percent clean distilled water solution, in accordance with AiResearch Specification RS89, at 20 psig and a flow rate of 5 gpm is required. The water-glycol supply line must terminate with an MS28740-10 fitting to mate with the W/G FILL union (5) on the connector panel.

2-16. VENTS AND DRAINS.

2-17. A gaseous nitrogen vent and fluid drain unions are provided on the refrigeration unit at the locations specified in the following paragraphs. Facility vent and drain lines equipped with the specified fittings may be connected to the unions on the refrigeration unit as required.

2-18. The facility vent line may be connected to the NITROGEN VENT nipple on the roof of the refrigeration unit by a line terminated with a 3/8 inch male fitting. The facility refrigeration fluid drain line may be connected to the REFR DRAIN union by a line terminated with an MS28740-10 fitting.

2-19. The facility water-glycol drain line may be connected to the SYSTEM DRAIN union at the base of the refrigeration unit by a line terminated with an MS28740-10 fitting.

2-20. The facility waste water drain line may be connected to the ROOF DRAIN union and the CNDS. DRAIN unions at the base of the refrigeration unit by a line terminated with an MS28740-10 fitting.

2-21. <u>PREPARATION FOR USE</u>.

2-22. INVENTORY CHECK.

2-23. Upon initial receipt of the refrigeration unit, after moving or after periods of storage, perform an inventory check to determine that the unit is complete as shown in figure 1-1.

2-24. INSPECTION.

2-25. Examine hoses, cables, fittings and connectors for possible damage. Inspect exterior of refrigeration unit for signs of damage such as broken glass in meters and gages. Open access doors and panel assemblies and inspect internal equipment for broken connections, damaged cables, and other physical defects that could adversely affect the operation of the refrigeration unit.

2-26. FACILITY CONNECTIONS.

2-27. The connections between the refrigeration unit and the facility supplied sources of electrical power, gaseous nitrogen, and water-glycol, must be made in accordance with the following procedure. Also described are the facility interface connections for the vent and drain functions. The cables and hoses required, with appropriate terminations are described in paragraphs 2-10 through 2-20. The following procedure details the facility connections required to operate the refrigeration unit. However, during functional tests, precision test equipment is interposed between the facility supplied sources and the refrigeration unit. Facility and test equipment connections required for functional tests must be made in accordance with the applicable test setup diagram for the desired test.

WARNING

Make certain that all electrical power and fluid pressures have been removed from the facility cables and lines before attempting to make any connections. Ensure that all circuit breakers on the refrigeration unit circuit breaker panel (figure 2-4) are set to the OFF position. Failure to comply with this warning could result in injury to personnel or damage to the equipment.

a. Connect the power cable from the facility 3 phase 480 vac at 60 cps power supply to the 480 VAC 60~ 3Ø connector (3, figure 2-5) on the input power panel.

b. Connect the power cable from the facility single phase 120 vac at 60 cps power supply to the 120 VAC 60~ 1Ø connector (2) on the input power panel.

c. Connect the power cable from the facility 28 vdc power supply to the 28 VDC connector (1) on the input power panel.

d. Connect the facility gaseous nitrogen supply line to the GN_2 SUPPLY union (4, figure 2-6) on the connector panel.

e. Connect the facility water-glycol supply line to the W/G FILL union (5) on the connector panel.

f. A gaseous nitrogen vent line may be connected to the NITROGEN VENT nipple on the roof of the refrigeration unit.

g. A refrigeration fluid drain line may be connected to the REFR DRAIN union on the refrigeration unit.

h. A water-glycol drain line may be connected to the SYSTEM DRAIN union at the base of the refrigeration unit.

i. A water drain line may be connected to the ROOF DRAIN union and the CNDS. DRAIN unions at the base of the refrigeration unit.

2-28. OPERATING CONTROLS AND INDICATORS.

2-29. Operating controls and indicators utilized during functional testing of the refrigeration unit are illustrated in figures 2-1 through 2-11. Tables 2-1 through 2-10 identify the controls, indicators, and connectors of the refrigeration unit and state the range, accuracy, schematic identification, panel placarding, and specific function of each.

2-30. PREACTIVATION TEST.

WARNING

The refrigeration unit enclosure purge circuit test does not have to be performed unless any of the electrical enclosures has been opened. To open the enclosures and perform any electrical tests, the equipment must be moved to an atmosphere free of hydrogen and liquid oxygen. Prior to performing activating procedures, purge the refrigeration unit as outlined in paragraph 2-32.t.

2-31. ENCLOSURE PURGE CIRCUIT TEST.

2-32. This test checks the operation of the refrigeration unit enclosure purge circuit. Activate the refrigeration unit in accordance with paragraph 2-33.a through 2-33.k. Connect the test equipment as shown in figure 2-12. Connect the test equipment shown in view A to the GN_2 SUPPLY bulkhead union (4, figure 2-6) of the refrigeration unit. Proceed as follows:

a. Place switch SX2 on test adapter No. 4 in ON position.

b. Disconnect and cap the gage lines between each gage (GA4 through GA10) and the associated purge enclosure. Disconnect and cap line to GN_2 INLET FROM REFR bulkhead union CP10.

c. Open test valves VS5, VS6, VS7, and VS8.

d. By adjusting test regulator RS2 and test valve VS8, increase the pressure indicated at test gage PS3 until ENCLOSURE PURGE PRESSURE LO (14, figure 2-2) indicator lamp goes off. This must occur when the test gage indicates 2.25±0.25 inches H_2O. If necessary, readjust test regulator RS2 and test valve VS8 to maintain the pressure at which the lamp goes off.

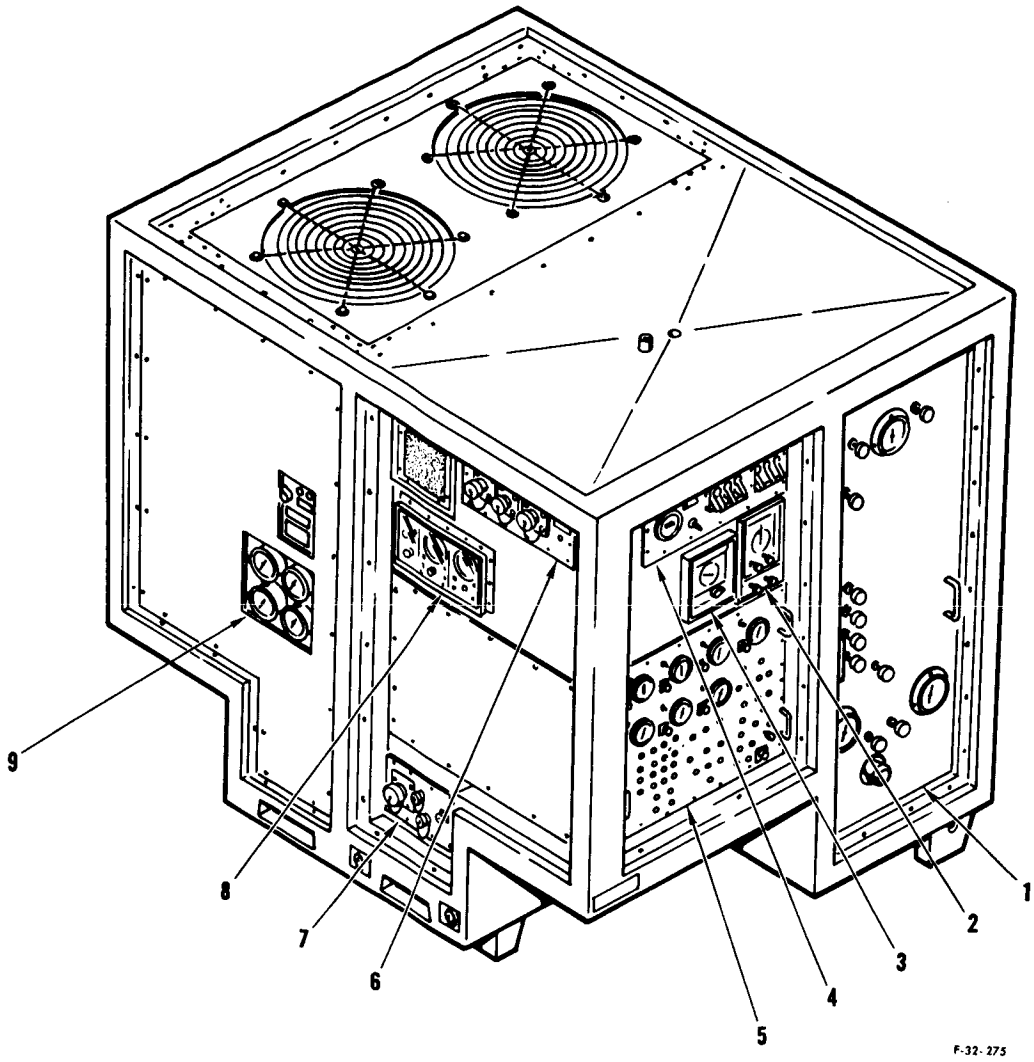

1. Fluid Control Module Panel (See figure 2-3.)
2. Universal Controller (See figure 2-8.)
3. Water-Glycol Flow Controller (See figure 2-9.)
4. Circuit Breaker Panel (See figure 2-4.)
5. Control and Instrumentation Panel (See figure 2-2.)
6. Input Power Panel (See figure 2-5.)
7. Connector Panel (Fluid) (See figure 2-6.)
8. Frequency Converter and Calibration Oscillator Meter Set (See figure 2-7.)
9. Refrigeration Controls and Indicators (See figure 2-11.)

Figure 2-1. Refrigeration Unit, Panel Locations

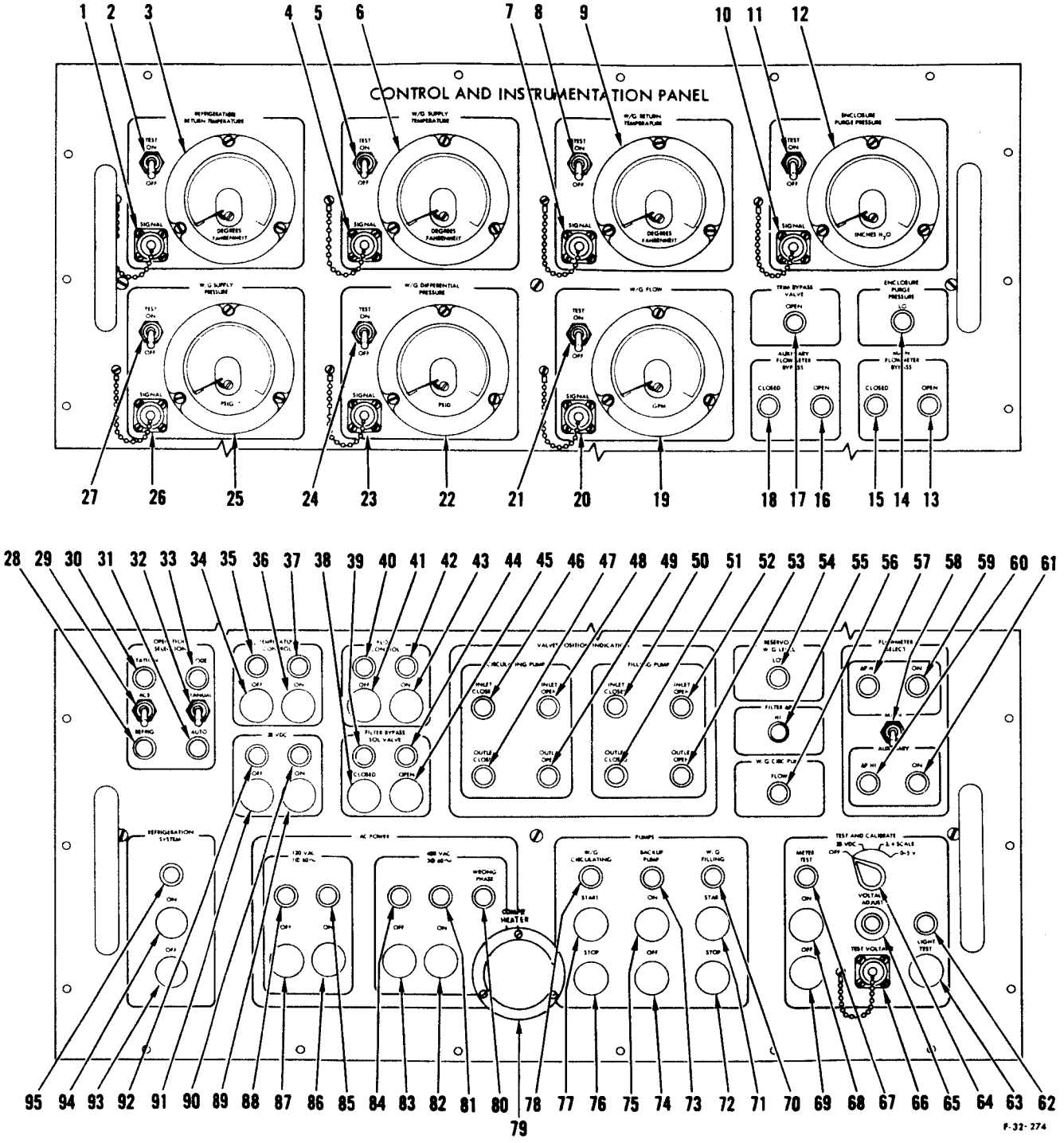

Figure 2-2. Control and Instrumentation Panel

Table 2-1. Control and Instrumentation Panel

Figure and Item No.	Description	Figure No. and Schematic Identification	Panel Marking	Function
2-2-1	Electrical receptacle	8-2 TP3	REFRIGERATION RETURN TEMPERATURE SIGNAL	Provides test point for test and calibration of meter M3 signal voltage.
-2	Toggle switch	8-2 S3	REFRIGERATION RETURN TEMPERATURE TEST ON OFF	Energizes (ON), deenergizes (OFF) 5 vdc test voltage circuit to meter M3.
-3	Temperature meter range: -30° to +70°F scale div: 1°F accuracy: ±1% of full scale	8-2 M3	REFRIGERATION RETURN TEMPERATURE	Indicates temperature in degrees F of refrigerated water-glycol returned from refrigeration package to coolant line.
-4	Electrical receptacle	8-2 TP1	W/G SUPPLY TEMPERATURE SIGNAL	Provides test point for test and calibration of meter M1 signal voltage.
-5	Toggle switch	8-2 S1	W/G SUPPLY TEMPERATURE TEST ON OFF	Energizes (ON), deenergizes (OFF) 5 vdc test voltage circuit to meter M1.
-6	Temperature meter range: -30° to +70°F scale div: 1°F accuracy: ±1% of full scale	8-2 M1	W/G SUPPLY TEMPERATURE	Indicates temperature in degrees F of water-glycol supply to trim unit.

Table 2-1. Control and Instrumentation Panel (Cont)

Figure and Item No.	Description	Figure No. and Schematic Identification	Panel Marking	Function
2-2-7	Electrical receptacle	8-2 TP2	W/G RETURN TEMPERATURE SIGNAL	Provides test point for test and calibration of meter M2 signal voltage.
-8	Toggle switch	8-2 S2	W/G RETURN TEMPERATURE TEST ON OFF	Energizes (ON), deenergizes (OFF) 5 vdc test voltage circuit to meter M2.
-9	Temperature meter range: 25° to 125°F scale div: 1°F accuracy: ±1% of full scale	8-2 M2	W/G RETURN TEMPERATURE	Indicates temperature in degrees F of water-glycol returned from trim unit.
-10	Electrical receptacle	8-2 TP6	ENCLOSURE PURGE PRESSURE SIGNAL	Provides test point for test and calibration of meter M6 signal voltage.
-11	Toggle switch	8-2 S6	ENCLOSURE PURGE PRESSURE TEST ON OFF	Energizes (ON), deenergizes (OFF) 5 vdc test voltage circuit to meter M6.
-12	Pressure meter range: 0 to 10 in. H_2O	8-2 M6	ENCLOSURE PURGE PRESSURE	Indicates pressure of gaseous nitrogen discharge sensed by transducer MT13 (figure 8-1).

	scale div: 0.1 in. H_2O accuracy: ±1% of full scale			
-13	Indicator lamp	8-2 DS38	MAIN FLOWMETER BYPASS OPEN	Indicates that 3-way solenoid valve V33 (figure 8-1) has port to main flowmeter bypass line open.
-14	Indicator lamp	8-2 DS12	ENCLOSURE PURGE PRESSURE LO	Indicates pressure of gaseous nitrogen for purging enclosures is low.
-15	Indicator lamp	8-2 DS41	MAIN FLOWMETER BYPASS CLOSED	Indicates that 3-way solenoid valve V33 (figure 8-1) has port to main flowmeter bypass line closed.
-16	Indicator lamp	8-2 DS36	AUXILIARY FLOWMETER BYPASS OPEN	Indicates that 3-way solenoid valve V10 (figure 8-1) has port to auxiliary flowmeter bypass line open.
-17	Indicator lamp	8-2 DS14	TRIM BYPASS VALVE OPEN	Indicates trim bypass valve V4 (figure 8-1) is open.
-18	Indicator lamp	8-2 DS37	AUXILIARY FLOWMETER BYPASS CLOSED	Indicates 3-way solenoid valve V10 (figure 8-1) has port to auxiliary flowmeter bypass line closed.
-19	Flowmeter range: 0 to 5 gpm scale div: 0.04 gpm accuracy: ±1% of full scale	8-2 M7	W/G FLOW	Indicates water-glycol flow rate sensed at either main flow transducer MT8 (figure 8-1) or auxiliary flow transducer MT4 (figure 8-1).

Table 2-1. Control and Instrumentation Panel (Cont)

Figure and Item No.	Description	Figure No. and Schematic Identification	Panel Marking	Function
2-2-20	Electrical receptacle	8-2 TP7	W/G FLOW SIGNAL	Provides test point for test and calibration of meter M7 signal voltage.
-21	Toggle switch	8-2 S7	W/G FLOW TEST ON OFF	Energizes (ON), deenergizes (OFF) 5 vdc test voltage circuit to meter M7.
-22	Differential pressure meter range: 0 to 200 psi scale div: 2 psi accuracy: ±1% of full scale	8-2 M5	W/G DIFFERENTIAL PRESSURE	Indicates differential pressure sensed by pressure transducer MT2 (figure 8-1) between water-glycol supply and return pressures to trim unit.
-23	Electrical receptacle	8-2 TP5	W/G DIFFERENTIAL PRESSURE SIGNAL	Provides test point for test and calibration of meter M5 signal voltage.
-24	Toggle switch	8-2 S5	W/G DIFFERENTIAL PRESSURE TEST ON OFF	Energizes (ON), deenergizes (OFF) 5 vdc test voltage circuit to meter M5.
-25	Pressure meter range: 0 to 500 psig scale div: 5 psi accuracy: ±1% of full scale	8-2 M4	W/G SUPPLY PRESSURE	Indicates pressure of water-glycol supply to trim control as sensed by pressure transducer MT5 (figure 8-1).

-26	Electrical receptacle	8-2 TP4	W/G SUPPLY PRESSURE SIGNAL	Provides test point for test and calibration of meter M4 signal voltage.
-27	Toggle switch	8-2 S4	W/G SUPPLY PRESSURE TEST ON OFF	Energizes (ON), deenergizes (OFF) 5 vdc test voltage circuit to meter M4.
-28	Indicator lamp	8-2 DS16	OPERATION SELECTION STATION REFRIG	Indicates toggle switch S9 is in REFRIG position.
-29	Toggle switch	8-2 S9	OPERATION SELECTION STATION ACE REFRIG	Selects either local (REFRIG) or remote (ACE) operation of refrigeration unit.
-30	Indicator lamp	8-2 DS15	OPERATION SELECTION STATION ACE	Indicates toggle switch S9 is in ACE position.
-31	Indicator lamp	8-2 DS7	OPERATION SELECTION MODE AUTO	Indicates toggle switch S10 is in AUTO position.
-32	Toggle switch	8-2 S10	OPERATION SELECTION MODE MANUAL AUTO	Selects either manual mode (MANUAL) or automatic mode (AUTO) of operation for refrigeration unit.
-33	Indicator lamp	8-2 DS5	OPERATION SELECTION MODE MANUAL	Indicates toggle switch S10 is in MANUAL position.

Table 2-1. Control and Instrumentation Panel (Cont)

Figure and Item No.	Description	Figure No. and Schematic Identification	Panel Marking	Function
2-2-34	Switch	8-2 S19	TEMPERATURE CONTROL OFF	Deenergizes water-glycol temperature control electrical circuit.
-35	Indicator lamp	8-2 DS24	TEMPERATURE CONTROL OFF	Indicates snap switch S19 is in OFF position.
-36	Switch	8-2 S20	TEMPERATURE CONTROL ON	Energizes water-glycol temperature control electrical circuit.
-37	Indicator lamp	8-2 DS20	TEMPERATURE CONTROL ON	Indicates water-glycol temperature control electrical circuit is energized.
-38	Switch	8-2 S31	FILTER BYPASS SOL VALVE CLOSED	Closes 3-way solenoid valve V14 (figure 8-1) port to filter bypass line.
-39	Indicator lamp	8-2 DS29	FILTER BYPASS SOL VALVE CLOSED	Indicates FILTER BYPASS SOL VALVE is in CLOSED position.
-40	Indicator lamp	8-2 DS25	FLOW CONTROL OFF	Indicates water-glycol flow control electrical circuit is deenergized.
-41	Switch	8-2 S21	FLOW CONTROL OFF	Deenergizes water-glycol flow control electrical circuit.

-42	Indicator lamp	8-2 DS21	FLOW CONTROL ON	Indicates water-glycol flow control electrical circuit is energized.
-43	Switch	8-2 S22	FLOW CONTROL ON	Energizes water-glycol flow control electrical circuit.
-44	Indicator lamp	8-2 DS23	FILTER BYPASS SOL VALVE OPEN	Indicates FILTER BYPASS SOL VALVE is in OPEN position.
-45	Switch	8-2 S32	FILTER BYPASS SOL VALVE OPEN	Opens 3-way solenoid valve V14 (figure 8-1) port to filter bypass line.
-46	Indicator lamp	8-2 DS18	CIRCULATING PUMP INLET CLOSED	Indicates solenoid valve V39 (figure 8-1) in water-glycol line to circulating pump P1 (figure 8-1) is closed.
-47	Indicator lamp	8-2 DS8	CIRCULATING PUMP OUTLET CLOSED	Indicates 3-way solenoid valve V38 (figure 8-1) has inlet port to circulating pump P1 discharge closed.
-48	Indicator lamp	8-2 DS26	CIRCULATING PUMP INLET OPEN	Indicates solenoid valve V39 (figure 8-1) in water-glycol line to circulating pump P1 is open.
-49	Indicator lamp	8-2 DS6	CIRCULATING PUMP OUTLET OPEN	Indicates 3-way solenoid valve V38 (figure 8-1) has inlet port to circulating pump P1 discharge open.
-50	Indicator lamp	8-2 DS35	FILLING PUMP INLET CLOSED	Indicates solenoid valve V40 (figure 8-1) in water-glycol line to fill pump P2 is closed.

Table 2-1. Control and Instrumentation Panel (Cont)

Figure and Item No.	Description	Figure No. and Schematic Identification	Panel Marking	Function
2-2-51	Indicator lamp	8-2 DS3	FILLING PUMP OUTPUT CLOSED	Indicates 3-way solenoid valve V38 (figure 8-1) has inlet port to fill pump Ps discharge closed.
-52	Indicator lamp	8-2 DS34	FILLING PUMP INLET OPEN	Indicates solenoid valve V40 (figure 8-1) in water-glycol line to fill pump P2 is open.
-53	Indicator lamp	8-2 DS11	FILLING PUMP OUTLET OPEN	Indicates 3-way solenoid valve V38 (figure 8-1) has inlet port to fill pump P2 discharge open.
-54	Indicator lamp	8-2 DS44	RESERVOIR W/G LEVEL LOW	Indicates water-glycol level in fluid reservoir is low.
-55	Indicator lamp	8-2 DS13	FILTER ΔP HI	Indicates differential pressure across filter FL1 (figure 8-1) is high.
-56	Indicator lamp	8-2 DS9	W/G CIRC PUMP FLOW	Indicates water-glycol is flowing in circulating pump P1 discharge line.
-57	Indicator lamp	8-2 DS42	FLOWMETER SELECT MAIN ΔP HI	Indicates differential pressure across main flow transducer MT8 (figure 8-1) is high.
-58	Toggle switch	8-2 S33	FLOWMETER SELECT MAIN AUXILIARY	Energizes either electrical circuit to main flowmeter (MAIN) or auxiliary flowmeter (AUXILIARY).

-59	Indicator lamp	8-2 DS39	FLOWMETER SELECT MAIN ON	Indicates flowmeter select toggle switch S33 is in MAIN position.
-60	Indicator lamp	8-2 DS43	FLOWMETER SELECT AUXILIARY ΔP HI	Indicates differential pressure across auxiliary flow transducer MT4 (figure 8-1) is high.
-61	Indicator lamp	8-2 DS40	FLOWMETER SELECT AUXILIARY ON	Indicates flowmeter select toggle switch S33 is in AUXILIARY position.
-62	Indicator lamp	8-2 DS2	TEST AND CALIBRATE LIGHT TEST	Indicates light test circuit is energized.
-63	Switch	8-2 S8	TEST AND CALIBRATE LIGHT TEST	Energizes light test circuit.
-64	Switch	8-2 S34	TEST AND CALIBRATE OFF 28 VDC 3/4 SCALE 0-5V	Selects and routes 0-5, 3.750, and 28 vdc to test point receptacle TP8 and to meter test circuit.
-65	Potentiometer	8-2 R8	TEST AND CALIBRATE VOLTAGE ADJUST	Adjusts 5 vdc output from power supply.
-66	Electrical receptacle	8-2 TP8	TEST AND CALIBRATE TEST VOLTAGE	Provides test point for test and calibration of dc voltages.

Table 2-1. Control and Instrumentation Panel (Cont)

Figure and Item No.	Description	Figure No. and Schematic Identification	Panel Marking	Function
2-2-67	Indicator lamp	8-2 DS10	TEST AND CALIBRATE METER TEST ON	Indicates meter test circuit is energized.
-68	Switch	8-2 S12	TEST AND CALIBRATE METER TEST ON	Energizes meter test circuit.
-69	Switch	8-2 S11	TEST AND CALIBRATE METER TEST OFF	Deenergizes meter test circuit.
-70	Indicator lamp	8-2 DS33	PUMPS W/G FILLING START	Indicates 480 vac power circuit to fill pump P2 motor is energized.
-71	Switch	8-2 S30	PUMPS W/G FILLING START	Applies 480 vac power to fill pump P2 motor.
-72	Switch	8-2 S29	PUMPS W/G FILLING STOP	Removes 480 vac power from fill pump P2 motor.
-73	Indicator lamp	8-2 DS31	PUMPS BACKUP PUMP ON	Indicates 480 vac power circuit to fill pump P2 motor (used for backup function) is energized.

-74	Switch	8-2 S25	PUMPS BACKUP PUMP OFF	Removes 480 vac power from fill pump P2 motor (used for backup function).
-75	Switch	8-2 S26	PUMPS BACKUP PUMP ON	Applies 480 vac power to fill pump P2 motor (used for back-up function).
-76	Switch	8-2 S27	PUMPS W/G CIRCULATING STOP	Removes 480 vac power from circulating pump P1 motor.
-77	Switch	8-2 S28	PUMPS W/G CIRCULATING START	Applies 480 power to circu-lating pump P1 motor.
-78	Indicator lamp	8-2 DS32	PUMPS W/G CIRCULATING START	Indicates 480 vac power circuit to circulating pump P1 motor is energized.
-79	Ammeter	8-2 M8	COMPR HEATER	Indicates compressor crankcase heater current.
-80	Indicator lamp	8-2 DS27	480 VAC 3Ø60~ WRONG PHASE	Indicates 480 vac power to refrigeration unit components is incorrectly phased.
-81	Indicator lamp	8-2 DS28	480 VAC 3Ø60~ ON	Indicates 480 vac power to refrigeration unit components is on.
-82	Switch	8-2 S-24	480 VAC 3Ø60~ ON	Applies 480 vac power to refrigeration unit components
-83	Switch	8-2 S23	480 VAC 3Ø60~ OFF	Removes 480 vac power from refrigeration unit components.
-84	Indicator lamp	8-2 DS30	480 VAC 3Ø 60~ OFF	Indicates 480 vac power to re-frigeration unit components is off.

Table 2-1. Control and Instrumentation Panel (Cont)

Figure and Item No.	Description	Figure No. and Schematic Identification	Panel Marking	Function
2-2-85	Indicator lamp	8-2 DS19	120 VAC 1Ø 60~ ON	Indicates 120 vac power to refrigeration unit components is on.
-86	Switch	8-2 S18	120 VAC 1Ø 60~ ON	Applies 120 vac power to refrigeration unit components.
-87	Switch	8-2 S17	120 VAC 1Ø 60~ OFF	Removes 120 vac power from refrigeration unit components.
-88	Indicator lamp	8-2 DS22	120 VAC 1Ø 60~ OFF	Indicates 120 vac power to refrigeration unit components is off.
-89	Switch	8-2 S14	28 VDC ON	Applies 28 vdc power to refrigeration unit components.
-90	Indicator lamp	8-2 DS1	28 VDC ON	Indicates 28 vdc power to refrigeration unit components is on.
-91	Switch	8-2 S13	28 VDC OFF	Removes 28 vdc power from refrigeration unit components.
-92	Indicator lamp	8-2 DS4	28 VDC OFF	Indicates 28 vdc power to refrigeration unit components is off.
-93	Switch	8-2 S15	REFRIGERATION SYSTEM OFF	Deenergizes electrical circuit to refrigeration compressor motor.

-94	Switch	8-2 S16	REFRIGERATION SYSTEM ON	Energizes electrical circuit to refrigerator compressor motor.
-95	Indicator lamp	8-2 DS17	REFRIGERATION SYSTEM ON	Indicates electrical circuit to refrigerator compressor motor is energized.

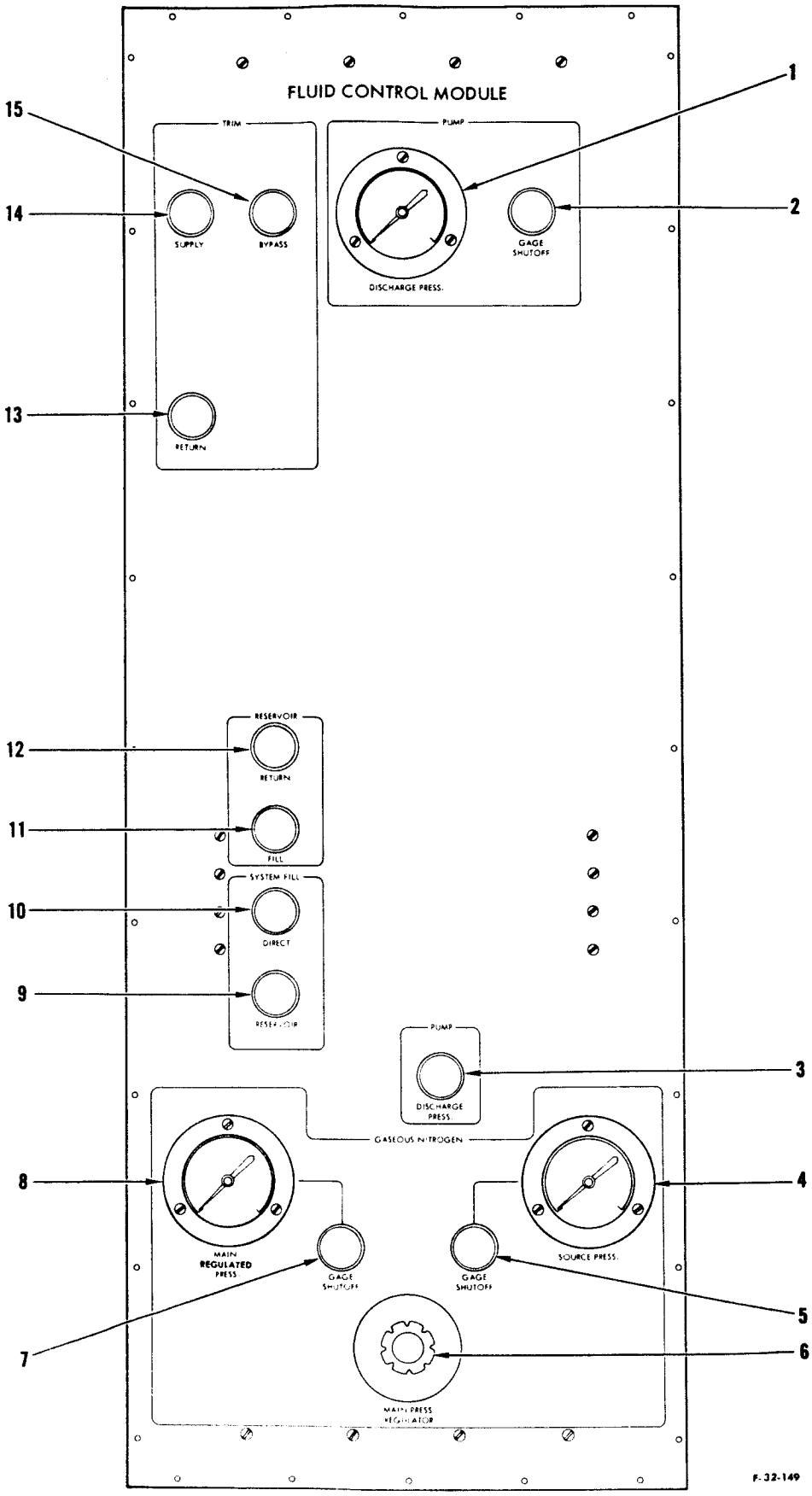

Figure 2-3. Fluid Control Module Panel

Table 2-2. Fluid Control Module Panel

Figure and Item No.	Description	Figure No. and Schematic Identification	Panel Marking	Function
2-3-1	Pressure gage range: 0 to 600 psig scale div: 10 psi accuracy: ±2% of full scale	8-1 GA3	PUMP DISCHARGE PRESS.	Indicates water-glycol discharge pressure downstream of pump P1 (figure 8-1) or pump P2 (figure 8-1) when valve V34 is open.
-2	Valve	8-1 V34	PUMP DISCHARGE PRESS. GAGE SHUTOFF	Isolates pressure gage GA3 from system when closed.
-3	Valve	8-1 V36	PUMP DISCHARGE PRESS.	Opens or closes main water-glycol supply line downstream of pumps P1, P2.
-4	Pressure gage range: 0 to 5000 psig scale div: 100 psi accuracy: ±3% of full scale	8-1 GA2	GASEOUS NITROGEN SOURCE PRESS.	Indicates pressure of facility-furnished gaseous nitrogen upstream of pressure regulator R4 when valve V20 is open.
-5	Valve	8-1 V20	GASEOUS NITROGEN SOURCE PRESS. GAGE SHUTOFF	Isolates pressure gage GA2 from system when closed.
-6	Pressure regulator range: 0 to 350 psi	8-1 R4	GASEOUS NITROGEN MAIN PRESS. REGULATOR	Regulates gaseous nitrogen main pressure upstream of filter FL2 (figure 8-1).

Table 2-2. Fluid Control Module Panel (Cont)

Figure and Item No.	Description	Figure No. and Schematic Identification	Panel Marking	Function
2-3-7	Valve	8-1 V19	GASEOUS NITROGEN MAIN REGULATED PRESS. GAGE SHUTOFF	Isolates pressure gage GA1 from system when closed.
-8	Pressure gage range: 0 to 400 psig scale div: 10 psi accuracy: ±2% of full scale	8-1 GA1	GASEOUS NITROGEN MAIN REGULATED PRESS.	Indicates pressure of gaseous nitrogen main regulated pressure downstream of pressure regulator R4 when valve V19 is open.
-9	Valve	8-1 V28	SYSTEM FILL RESERVOIR	Opens or closes water-glycol supply line from water-glycol reservoir to pumps P1 and P2.
-10	Valve	8-1 V30	SYSTEM FILL DIRECT	Opens or closes water-glycol supply line connected directly to water-glycol fill at bulkhead connector CP4 (figure 8-1).
-11	Valve	8-1 V25	RESERVOIR FILL	Opens or closes water-glycol fill line to reservoir (figure 8-1).
-12	Valve	8-1 V23	RESERVOIR RETURN	Opens or closes water-glycol return line to reservoir.
-13	Valve	8-1 V1	TRIM RETURN	Opens or closes water-glycol return line from trim control unit.

-14	Valve	8-1 V6	TRIM SUPPLY	Opens or closes water-glycol supply line to trim control unit.
-15	Valve	8-1 V4	TRIM BYPASS	Opens or closes bypass line connected between water-glycol supply line to trim control unit and water-glycol return line from trim control unit.

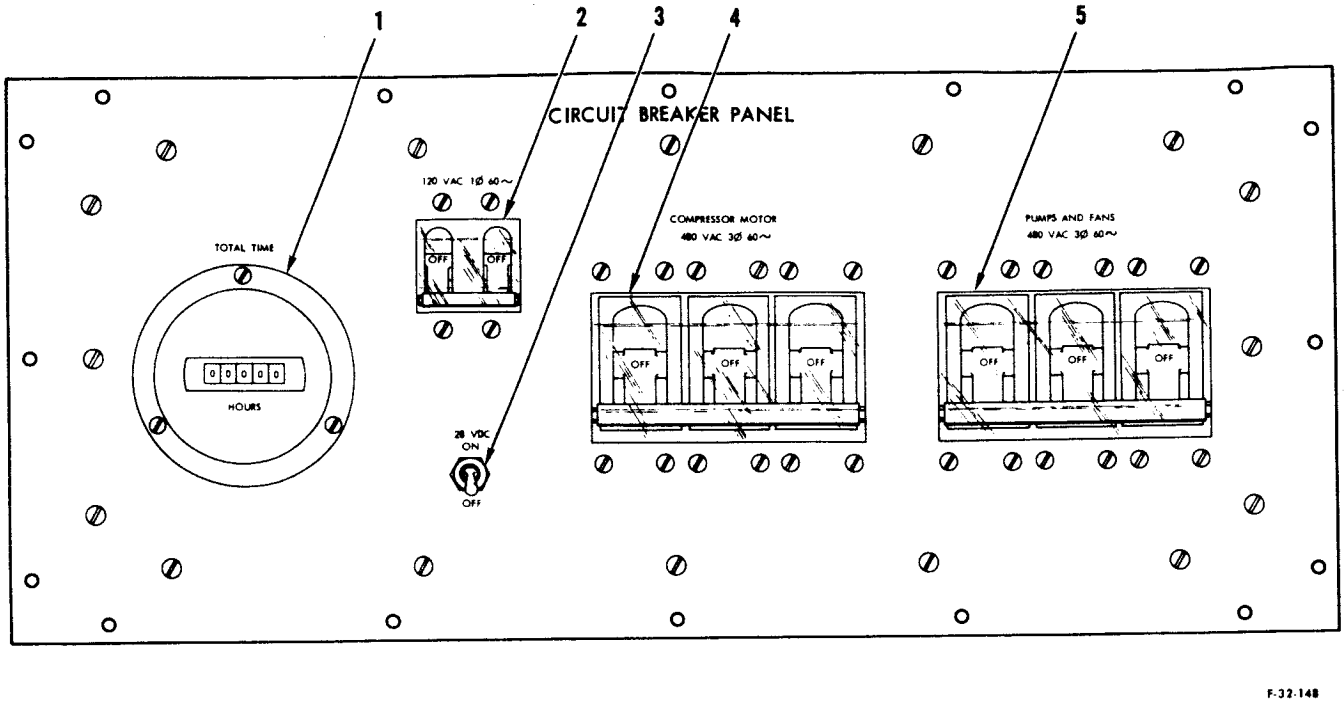

Figure 2-4. Circuit Breaker Panel

e. Adjust test regulator RS2 and test valve VS8 until ENCLOSURE PURGE PRESSURE meter (12) indicates 2.5 inches H_2O. Test gage PS3 must indicate 2.50±0.10 inches H_2O.

f. Adjust test regulator RS2 and test valve VS8 until test gage PS3 indicates 2.50 inches H_2O. Purge pressure gages GA4 through GA10 (1 through 6, figure 2-10) must indicate 2.50±0.5 inches H_2O.

g. Adjust test regulator RS2 and test valve VS8 until ENCLOSURE PURGE PRESSURE meter indicates 4.0 inches H_2O. Test gage PS3 must indicate 4.00 ±0.10 inches H_2O.

h. Disconnect test cable W11 from TEST AND CALIBRATE TEST VOLTAGE receptacle (66, figure 2-2) and connect to ENCLOSURE PURGE PRESSURE meter SIGNAL receptacle (10).

i. Set selector switch SX1 on test adapter No. 4 to position 3. Test voltmeter VX2 must indicate 2.000±0.075 volts dc.

j. Place OPERATION SELECTION STATION switch (29) in ACE position.

k. Set selector switch SX1 on test adapter No. 4 to position 9. Test voltmeter VX2 must indicate 2.000±0.075 volts dc.

l. Place 28 VDC circuit breaker (3, figure 2-4) to OFF position; disconnect test cable W12; jumper pins 1 and 2 of REMOTE & CONTROL MONITOR connector (1, figure 2-6); connect test oscilloscope OX1 to pins 55 and 56 of REMOTE &

Table 2-3. Circuit Breaker Panel

Figure and Item No.	Description	Figure No. and Schematic Identification	Panel Marking	Function
2-4-1	Timer	8-3 M1	TOTAL TIME	Records elapsed operating time of refrigeration unit by means of digital indication.
-2	Circuit breaker	8-3 CB2	120 VAC 1Ø 60~	Provides overload protection for 120 vac, single-phase, 60-cycle refrigeration unit circuits.
-3	Circuit breaker	8-3 CB1	28 VDC ON OFF	Provides switching control and overload protection for 28 vdc refrigeration unit circuits.
-4	Circuit breaker	8-3 CB3	COMPRESSOR MOTOR 480 VAC 3Ø 60~	Provides overload protection for 480 vac compressor motor circuits.
-5	Circuit breaker	8-3 CB4	PUMP AND FANS 480 VAC 3Ø 60~	Provides overload protection for 480 vac pump and fan circuits.

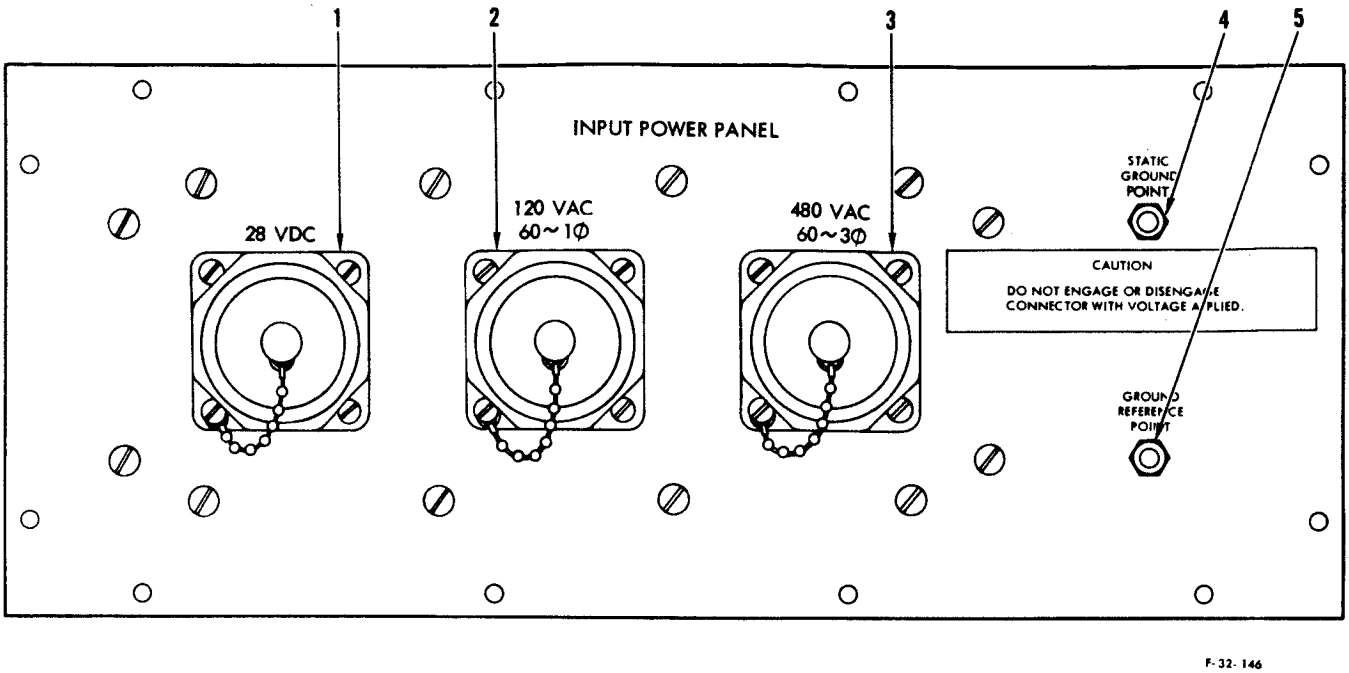

Figure 2-5. Input Power Panel

CONTROL MONITOR connector. Place 28 VDC circuit breaker to ON position. The output ripple voltage must not exceed 10 millivolts peak-to-peak.

m. Reconnect test cable W12. Set selector switch SX1 on test adapter No. 4 to position 10. Test voltmeter VX2 must indicate 0.0 (+0.5, -0.0) volts dc.

n. Reduce pressure indicated at test gage PS3 by adjusting test regulator RS2 and test valve VS8 until ENCLOSURE PURGE PRESSURE LO indicator lamp comes on. This must occur when test gage PS3 indicates not less than 1.25 inches H_2O and test voltmeter VX2 indicates 5.0±1.5 volts dc.

o. Close test valve VS7 and open test valve VS8. Remove caps and reconnect the gage lines between each gage (GA4 through GA10) and the associated purge enclosure.

p. Turn pressure regulator R1 to the full counterclockwise position, and pressure regulator R4 to the full clockwise position.

q. Adjust test regulator RS2 until test gage PS1 indicates 100±2 psig. Record pressure.

r. Adjust pressure regulator R2 until reference pressure gage indicates 20±1 psig. Record pressure.

s. Adjust pressure regulator R3 until reference pressure gage indicates 20±1 psig. Record pressure.

Table 2-4. Input Power Panel

Figure and Item No.	Description	Figure No. and Schematic Identification	Panel Marking	Function
2-5-1	Electrical connector	8-4 J1	28 VDC	Connects external 28 vdc source to refrigeration unit.
-2	Electrical connector	8-4 J2	120 VAC 60~ 1Ø	Connects external 120 vac source to refrigeration unit.
-3	Electrical connector	8-4 J3	480 VAC 60~ 3Ø	Connects external 480 vac source to refrigeration unit.
-4	Terminal stud	8-4 E1	STATIC GROUND POINT	Provides a discharge point for static voltage or ground loops.
-5	Ground stud	8-4 E2	GROUND REFERENCE POINT	Provides a zero voltage reference for electrical measurements.

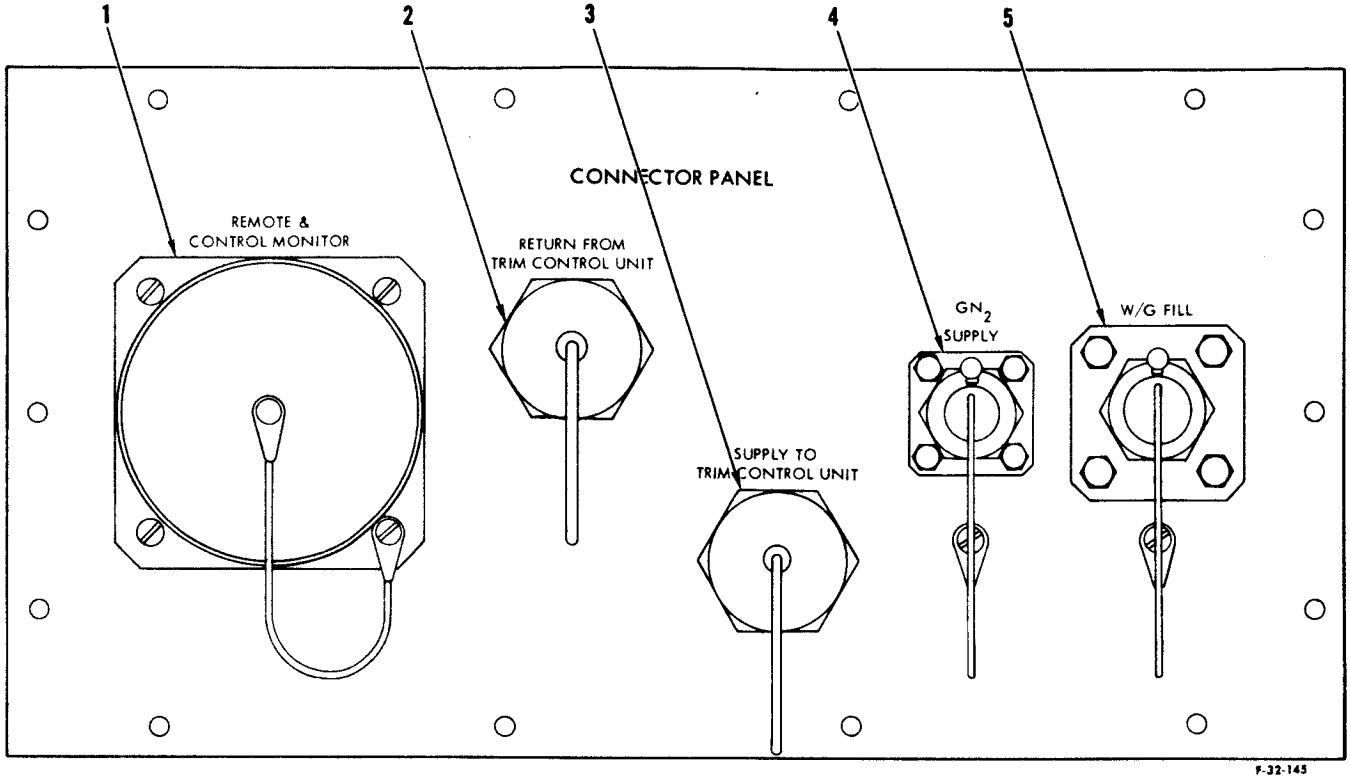

Figure 2-6. Connector Panel

t. Open valve V44 and adjust pressure regulator R5, nitrogen purge supply valves V56 and V57, and purge needle valves V49 through V54, in turn, to obtain indication of 2.5±0.2 inches H_2O at gage associated with each needle valve. Note the indicated pressure.

u. The flow at test orifice OR1 required to maintain the pressure of 2.5±0.2 inches H_2O must not exceed 4 standard cfm.

NOTE

The flow at test orifice OR1 is determined as follows:

(1) Close test valve VS6

(2) Note differential pressure at test gage DX1

(3) Note pressure at test gage PS1

(4) Note temperature at test thermocouple TC1.

(5) Convert differential pressure to indicated flow by using calibration chart for test orifice OR1

Table 2-5. Connector Panel

Figure and Item No.	Description	Figure No. and Schematic Identification	Panel Marking	Function
2-6-1	Electrical connector	8-12 P1 (To ACE)	REMOTE & CONTROL MONITOR	Provides connect point for facility furnished electrical cable connecting refrigeration unit to remote control equipment.
-2	Quick-disconnect coupling	8-1 CP1	RETURN FROM TRIM CONTROL UNIT	Provides connect point for facility furnished fluid line connecting refrigeration unit to trim control unit fluid return.
-3	Quick-disconnect coupling	8-1 CP2	SUPPLY TO TRIM CONTROL UNIT	Provides connect point for facility furnished fluid line connecting refrigeration unit to trim control fluid supply.
-4	Bulkhead union	8-1 CP3	GN_2 SUPPLY	Provides connect point for facility furnished line connecting refrigeration unit to facility gaseous nitrogen supply.
-5	Bulkhead union	8-1 CP4	W/G FILL	Provides connect point for facility furnished line connecting refrigeration unit to facility water-glycol supply.

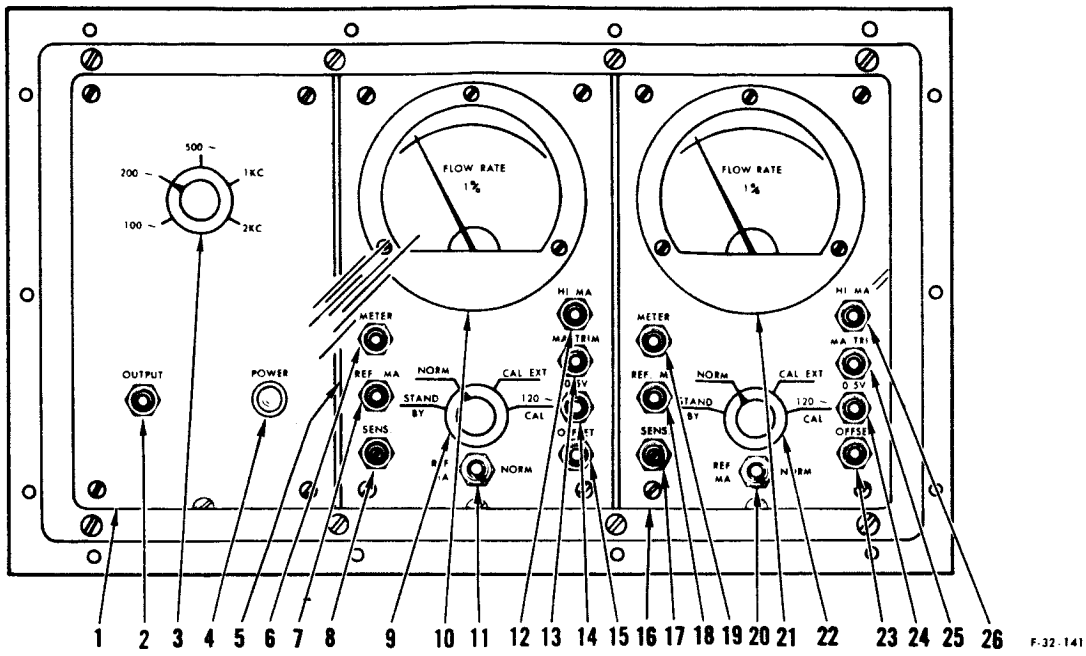

Figure 2-7. Frequency Converter and Calibration Oscillator Meter Set

(6) Correct the indicated flow for temperature and pressure

(7) Note the corrected flow in standard cfm.

v. Adjust test regulator RS2 until test gage PS1 indicates zero.

w. Disconnect the test setup from GN_2 SUPPLY bulkhead union CP3 and GN_2 VENT bulkhead union CP7.

x. Place OPERATION SELECTION STATION switch (29, figure 2-2) in REFRIG position.

y. Place switch SX2 on test adapter No. 4 to OFF position.

z. Proceed directly to the next test or shut down the refrigeration unit in accordance with paragraph 2-53.a through 2-53.e.

2-33. REFRIGERATION UNIT ACTIVATING PROCEDURE.

2-34. The procedure for activating the refrigeration unit is performed as follows:

a. Place all circuit breakers (2, 3, 4, 5, figure 2-4) in the OFF position.

b. Set all meter TEST switches (2, 5, 8, 11, 21, 24, 27, figure 2-2) to OFF.

c. Set OPERATION SELECTION STATION switch (29) to REFRIG.

Table 2-6. Frequency Converter and Calibration Oscillator Meter Set

Figure and Item No.	Description	Figure No. and Schematic Identification	Panel Marking	Function
2-7-1	Calibration oscillator			Provides fixed frequencies for calibration of main and auxiliary flowmeters and frequency converters.
-2	Test jack		OUTPUT	Provides connecting point for test oscillator.
-3	Selector switch		100~ 200~ 500~ 1KC 2KC	Selects desired output frequency.
-4	Indicator lamp		POWER	Indicates that circuitry is energized.
-5	Frequency converter No. 1			Provides a dc control voltage which is an analog of the varying ac output of the main flowmeter.
-6	Potentiometer adjustment		METER	Adjusts meter circuit to calibration unit for flow system calibration.
-7	Potentiometer adjustment		REF MA	Adjusts meter circuit to flow controller circuit.
-8	Potentiometer adjustment		SENS	Adjusts sensitivity of unit.
-9	Selector switch		STANDBY NORM CAL EXT 120~ CAL	Selects mode of operation.

Table 2-6. Frequency Converter and Calibration Oscillator Meter Set (Cont)

Figure and Item No.	Description	Figure No. and Schematic Identification	Panel Marking	Function
2-7-10	Flow rate meter		FLOW RATE 1%	Indicates rate of flow in gallons per minute.
-11	Selector switch		REF MA NORM	Selects external or normal mode of operation.
-12	Potentiometer adjustment		HI MA	Provides coarse adjustment for high side of main flow system controller meter. Works in conjunction with the MA TRIM adjustment for calibration.
-13	Potentiometer adjustment		MA TRIM	Provides fine adjustment for high side of main flow system controller meter. Works in conjunction with the HI MA adjustment for calibration.
-14	Potentiometer adjustment		0-5V	Adjusts W/G FLOW meter (19, figure 2-2) to coincide with the flow system controller meter and the converter meter indications.
-15	Potentiometer adjustment		OFFSET	Adjusts low side of the flow system controller meter. Works in conjunction with the HI MA and MA TRIM adjustments for calibration.

-16	Frequency converter No. 2			Provides a dc control voltage which is an analog of the varying ac output of the auxiliary flowmeter.
-17	Potentiometer adjustment		SENS	Adjusts sensitivity of unit.
-18	Potentiometer adjustment		REF MA	Adjusts meter circuit to flow controller circuit.
-19	Potentiometer adjustment		METER	Adjusts meter circuit to calibration unit for flow system calibration.
-20	Selector switch		REF MA NORM	Selects flowmeter external or normal mode of operation.
-21	Flow rate meter		FLOW RATE 1%	Indicates rate of flow in gallons per minute.
-22	Selector switch		STAND BY NORM CAL EXT 120~ CAL	Selects mode of operation
-23	Potentiometer adjustment		OFFSET	Adjusts low side of auxiliary flow system controller meter. works in conjunction with HI MA and MA TRIM adjustments for calibration.
-24	Potentiometer adjustment		0-5V	Adjusts W/G FLOW meter (19, figure 2-2) to coincide with the auxiliary flow system controller meter and the converter meter indications.

Table 2-6. Frequency Converter and Calibration Oscillator Meter Set (Cont)

Figure and Item No.	Description	Figure No. and Schematic Identification	Panel Marking	Function
2-7-25	Potentiometer adjustment		MA TRIM	Provides fine adjustment for high side of the auxiliary flow system controller meter. Works in conjunction with the HI MA adjustment for calibration.
-26	Potentiometer adjustment		HI MA	Provides coarse adjustment for high side of auxiliary flow system controller meter. Works in conjunction with the MA TRIM adjustment for calibration.

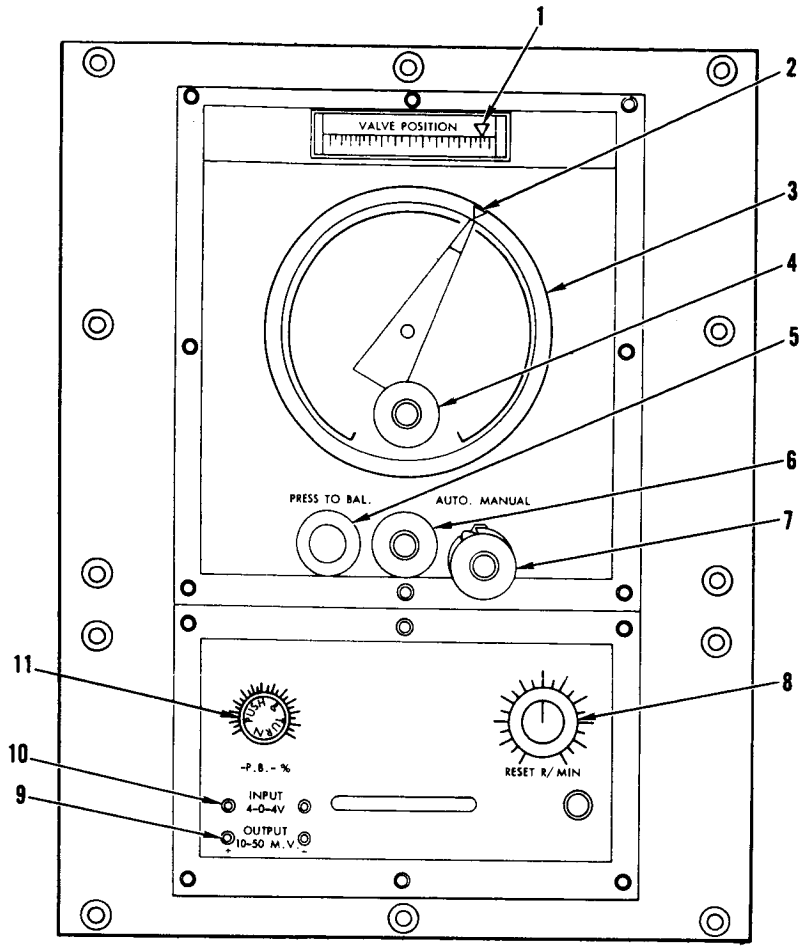

F-32-163

Figure 2-8. Universal Controller

d. Set OPERATION SELECTION MODE switch (32) to MANUAL.

e. Set FLOWMETER SELECT switch (58) to MAIN.

f. Set TEST AND CALIBRATE selector switch (64) to OFF.

g. Rotate TEST AND CALIBRATE VOLTAGE ADJUST potentiometer (65) to the left-hand stop position.

h. Press all OFF, STOP or CLOSED pushbutton switches on the refrigeration unit control and instrument panel.

i. Make the required external power connections in accordance with the procedures outlined in paragraph 2-26.

j. Place the 120 VAC 1Ø 60~ and 28 VDC circuit breakers (2, 3, figure 2-4) in the ON position.

Table 2-7. Universal Controller

Figure and Item No.	Description	Figure No. and Schematic Identification	Panel Marking	Function
2-8-1	Valve position scale range: 0 to 100% scale div: 5% accuracy: ±0.5% of full scale		VALVE POSITION	Indicates the percent of full-open position of the mixing valve.
-2	Set point tab			Indicates temperature at which controller is set.
-3	Temperature gage range: -20° to +50°F scale div: 0.5°F accuracy: ±0.5% of full scale			Indicates temperature of water-glycol downstream from bypass valve and mixing valve.
-4	Set point control knob			Selects temperature to be controlled with controller in automatic mode.
-5	Balance switch		PRESS TO BAL.	Minimizes upset to system when transfer is made from manual to automatic mode.
-6	Valve positioning control			Selects the percent of full-open position of the mixing valve with controller in manual mode.
-7	Mode switch		AUTO. MANUAL	Selects either manual or automatic mode of operation.
-8	Reset control knob		RESET R/MIN	Selects rate at which automatic reset takes place.

-9	Test points		OUTPUT 10-50 M.V.	Test point for measuring controller output voltage.
-10	Test points		INPUT 4-0-4V	Test point for measuring controller input voltage.
-11	Proportional band control		PUSH & TURN -P.B.-%	Selects percent of proportional band to be used.

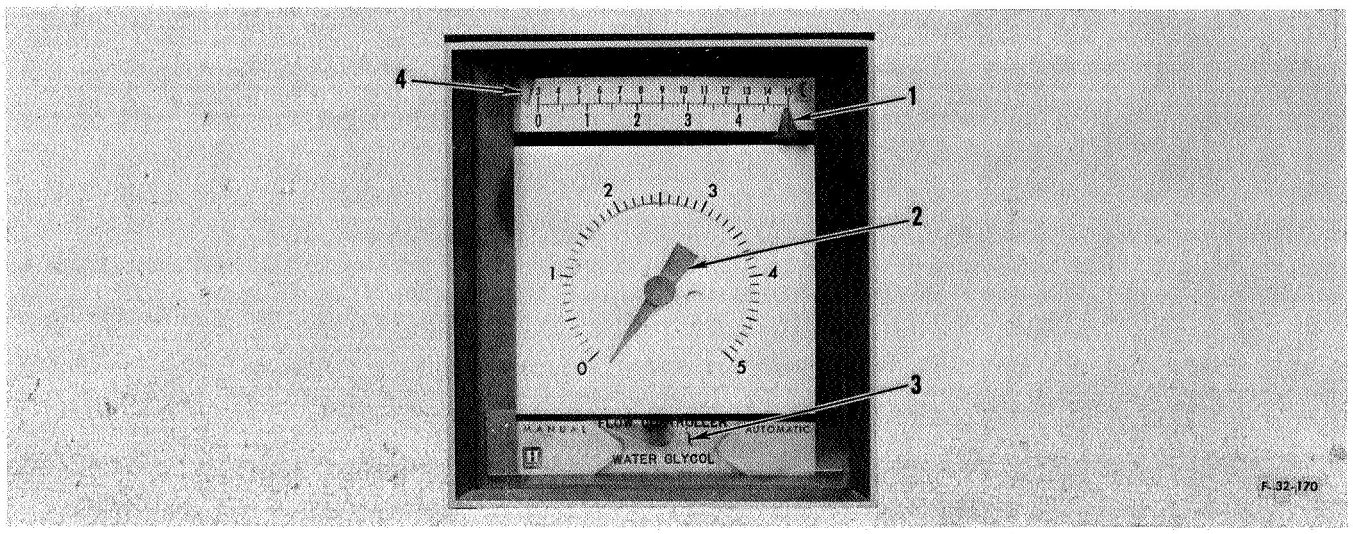

Figure 2-9. Water-Glycol Flow Controller

k. Press the 28 VDC ON switch (89, figure 2-2). The following indicator lamps must come on:

28 VDC ON (90)
MAIN FLOWMETER BYPASS CLOSED (15)
AUXILIARY FLOWMETER BYPASS OPEN (16)
OPERATION SELECTION STATION REFRIG (28)
OPERATION SELECTION MODE MANUAL (33)
CIRCULATING PUMP INLET OPEN (48)
CIRCULATING PUMP OUTLET OPEN (49)
FILLING PUMP INLET CLOSED (50)
FILLING PUMP OUTLET CLOSED (51)
RESERVOIR W/G LEVEL LO (54)
FLOWMETER SELECT MAIN ON (59)
All OFF, STOP or CLOSED indicator lamps except 28 VDC OFF lamp.

2-35. FUNCTIONAL TEST PROCEDURES.

2-36. TEST EQUIPMENT REQUIRED.

2-37. The test equipment required to perform the various tests described in this section is listed in table 2-11. Each item is referenced to the test or tests in which it is used. The ranges and accuracies required are also listed.

2-38. PREPARATION FOR TESTING.

2-39. The preliminary switch and valve settings prior to energizing the refrigeration unit equipment are given in table 2-12. Individual tests requiring different settings will so state. Pressure regulators R1, R2, R3, and R5; drain valves V2, V12, V15,V22, and V43; and shutoff valves V3, V5, V8, V9, V16, V17, V21, V24, V31, V32, V45, V46, V47, and V48 are located in the interior of the flow control module.

Table 2-8. Water-Glycol Flow Controller

Figure and Item No.	Description	Figure No. and Schematic Identification	Panel Marking	Function
2-9-1	Flow control tab			Selects rate at which water-glycol is to flow.
-2	Flow gage			Indicates water-glycol flow rate in gallons per minute.
-3	Mode control			Selects either manual or automatic mode of operation.
-4	Valve pressure scale tab			Indicates approximate position of flow control valve.

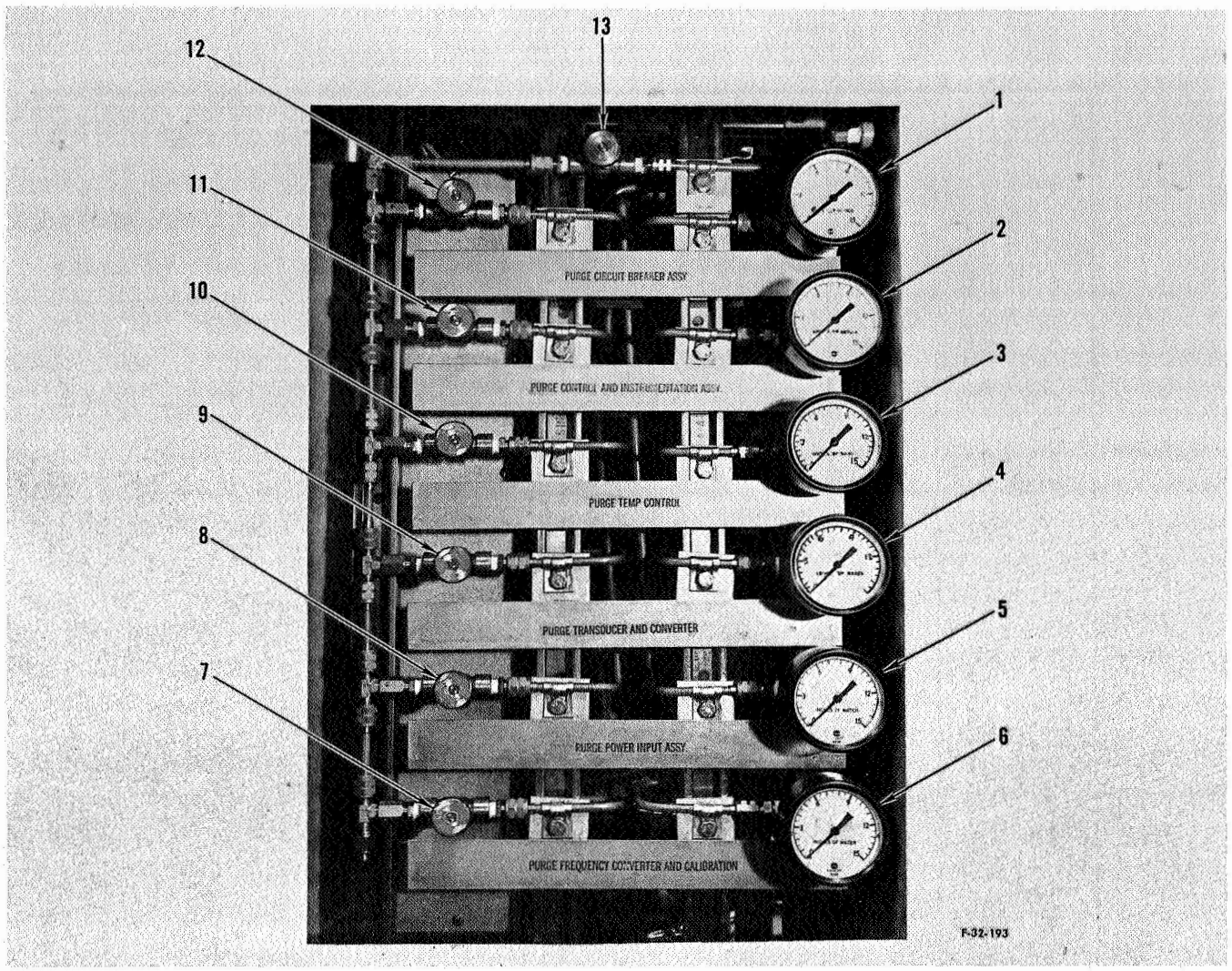

Figure 2-10. Enclosure Purge Controls and Indicators

CAUTION

Remove 28 holding screws from flow control module panel and carefully slide module out only enough to provide access to drain line quick-disconnect coupling located behind lower left side of flow control module panel. Disconnect fluid drain line at quick-disconnect coupling and slide flow control module out to desired position.

CAUTION

Slide flow control module a few inches inward and reconnect fluid drain line at quick-disconnect coupling, located behind lower left side of flow control module panel.

Table 2-9. Enclosure Purge Controls and Indicators

Figure and Item No.	Description	Figure No. and Schematic Identification	Panel Marking	Function
2-10-1	Pressure gage range: 0 to 15 in. H_2O scale div: 1 in. H_2O accuracy: ±0.5% of full scale	8-1 GA10		Indicates gaseous nitrogen purge pressure in circuit breaker enclosure assembly.
-2	Pressure gage range: 0 to 15 in. H_2O scale div: 1 in. H_2O accuracy: ±0.5% of full scale	8-1 GA9		Indicates gaseous nitrogen purge pressure in control and instrumentation enclosure assembly.
-3	Pressure gage range: 0 to 15 in. H_2O scale div: 1 in. H_2O accuracy: ±0.5% of full scale	8-1 GA8		Indicates gaseous nitrogen purge pressure in temperature controller enclosure assembly.
-4	Pressure gage range: 0 to 15 in. H_2O scale div: 1 in. H_2O accuracy: ±0.5% of full scale	8-1 GA7		Indicates gaseous nitrogen purge pressure in transducer-transmitter-controller enclosure assembly.
-5	Pressure gage range: 0 to 15 in. H_2O scale div: 1 in. H_2O accuracy: ±0.5% of full scale	8-1 GA6		Indicates gaseous nitrogen purge pressure in power input enclosure assembly.

Table 2-9. Enclosure Purge Controls and Indicators (Cont)

Figure and Item No.	Description	Figure No. and Schematic Identification	Panel Marking	Function
2-10-6	Pressure gage range: 0 to 15 in. H_2O scale div: 1 in. H_2O accuracy: ±0.5% of full scale	8-1 GA5		Indicates gaseous nitrogen purge pressure in frequency converter and calibration oscillator meter set enclosure assembly.
-7	Needle valve	8-1 V58		Adjusts flow of gaseous nitrogen for purge of frequency converter and calibration oscillator meter set enclosure assembly.
-8	Needle valve	8-1 V50		Adjusts flow of gaseous nitrogen for purge of power input enclosure assembly.
-9	Needle valve	8-1 V51		Adjusts flow of gaseous nitrogen for purge of transducer-transmitter-controller enclosure assembly.
-10	Needle valve	8-1 V52		Adjusts flow of gaseous nitrogen for purge of temperature controller enclosure assembly.
-11	Needle valve	8-1 V53		Adjusts flow of gaseous nitrogen for purge of control and instrumentation enclosure assembly.
-12	Needle valve	8-1 V54		Adjusts flow of gaseous nitrogen for purge of circuit breaker enclosure assembly.
-13	Needle valve	8-1 V56		Adjusts flow of gaseous nitrogen to enclosure purge lines of refrigeration system.

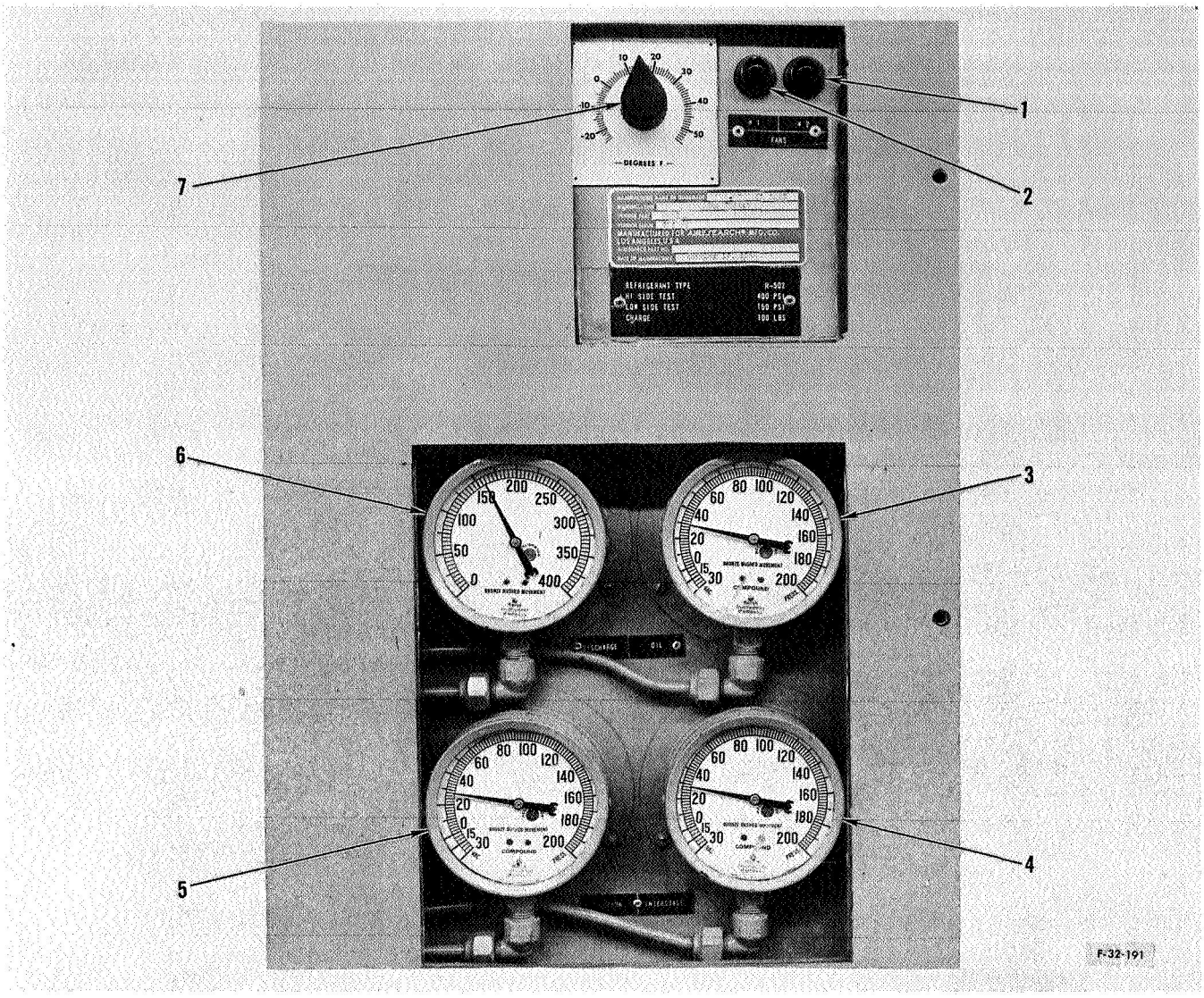

Figure 2-11. Refrigerator Controls and Indicators

2-40. Many tests utilize identical or similar test setups and some are extensions of previous tests, requiring no additional setup or switch manipulations to initiate. The tests have been written to allow any specific test to be performed without the need for performing preceding or succeeding tests. However, when one test is a natural adjunct to a preceding or succeeding test, the text will so indicate to prevent needless teardown and setup time for the test equipment.

2-41. The normal procedure for beginning a functional test on the refrigeration unit is as follows:

a. Examine the test setup diagram referenced in the test to be performed. Determine what facility and refrigeration unit interconnections are required. Make the necessary service set interconnections. Make the necessary facility connections as described in paragraph 2-26.

b. Obtain and connect the test equipment called for in the particular test procedure. Item numbers in parentheses on test setup diagrams refer to the items listed in table 2-11.

-5	Compound pressure gage range: vacuum, 0 to 30 in. Hg pressure, 0 to 200 psig scale div: vacuum, 5 in. Hg pressure, 2 psi		SUCTION	Indicates either pressure or vacuum at compressor suction.
-6	Pressure gage range: 0 to 400 psig scale div: 5 psi accuracy: ±2% of full scale		DISCHARGE	Indicates pressure at discharge side of compressor.
-7	Temperature selector range: -25°F to +55°F scale div: 1°F		DEGREES F	Selects temperature to which water-glycol is chilled by refrigerator.

Table 2-11. Test Equipment

Item No.	Ref Des	Nomenclature	Specification	Qty	Used on Test No.
1	VX1	Voltmeter, DC John Fluke Model 801B, or equivalent	0-500 vdc	1	All tests except 6 and 7
2	VX2	Voltmeter Hewlett-Packard Model 400H, or equivalent		1	All tests except 6 and 7
3	PS1	Pressure gage Wallace and Tiernan FA234, or equivalent	Range: 0 to 150 psig Accuracy: ±0.15 psig	1	Enclosure purge circuit test
4	PS2	Pressure gage AiResearch Part No. 847631-1, or equivalent	Range: 0 to 300 psig Accuracy: ±0.3 psig	1	8, 10
5	PS3	Pressure gage Barton Model 200, or equivalent	Range: 0 to 10 in. H_2O Accuracy: ±0.01 in. H_2O	1	Enclosure purge circuit test
6	PS4	Pressure gage Wallace and Tiernan FA234, or equivalent	Range: 0 to 600 psig Accuracy: ±0.6 psig	1	8
7	PS5	Pressure gage AiResearch Part No. 846293-12, or equivalent	Range: 0 to 30 psig Accuracy: ±0.03 psig	1	9
8	RS1	Regulator	0 to 3000 psig	1	6, 7; enclosure purge test
9	RS2	Regulator Fairchild Speed Control 30132-6, or equivalent	0 to 30 psig	1	Enclosure purge circuit test

Table 2-11. Test Equipment (Cont)

Item No.	Ref Des	Nomenclature	Specification	Qty	Used on Test No.
10	RS3	Regulator	0 to 500 psig	1	8, 9, 10
11	VS1 VS2	Valve	3000 psig capacity	2	6, 7
12	VS3 VS4	Valve	500 psig capacity	2	8, 9
13	VS5 VS6	Valve	30 psig capacity	2	Enclosure purge circuit test
14	VS7 VS8	Valve	30 psig capacity	2	Enclosure purge circuit test
15	TC1	Temperature probe Rosemount 104 BW, or equivalent		1	Enclosure purge circuit test
16		Readout potentiometer Leeds and Northrup Model 8692-168, or equivalent		1	Enclosure purge circuit test
17	DX1	Differential pressure gage Meriam Model 30EF25, or equivalent	Range: 0 to 30 in. H_2O Accuracy: ±0.01 in. H_2O	1	Enclosure purge circuit test
18	OR1	Orifice HT143T, Daniels or equivalent	1/8 inch diameter	1	Enclosure purge circuit test
19	FX1	Electronic Counter Hewlett-Packard Model S212A, or equivalent		1	4

Table 2-11. Test Equipment (Cont)

Item No.	Ref Des	Nomenclature	Specification	Qty	Used on Test No.
20		Test adapter No. 3 AiResearch Part No. T-602696-3		1	All tests except 6 and 7
21		Test Adapter No. 4 AiResearch Part No. T-602696-4		1	All tests
22	OX1	Oscilloscope Hewlett-Packard Model 120B, or equivalent		1	4, 8; enclosure purge circuit test
23		Water-glycol Fill Unit AiResearch Part No. T-602692-2		1	6, 7
24		Simulated W/G Trim Unit AiResearch Part No. T-602697-1		1	6, 7
25	W8	Test cable	PA 57166 (Facility)	1	All tests
26	W9	Test cable	PA 57167 (Facility)	1	All tests
27	W10	Test cable	PA 57160 (Test adapter No. 3)	1	All tests except 6 and 7
28	W11	Test cable	PA 57161 (Test adapter No. 4)	1	All tests except 6 and 7
29	W12	Test cable	PA 57161 (Test adapter No. 4)	1	All tests
30	W13	Test cable	PA 57168 (Electronic Counter)	1	4
31	W14	Test cable	PA 57169 (Facility)	1	6, 7
32		Oscillator Model 201C Hewlett-Packard, or equivalent		1	See paragraph 6-7 and 6-8

Table 2-11. Test Equipment (Cont)

Item No.	Ref Des	Nomenclature	Specification	Qty	Used on Test No.
33		Electronic counter Model 5212A, Hewlett-Packard, or equivalent	Range: 300 kc (max counting rate)	1	See paragraph 6-7 and 6-8

c. Make all preliminary switch settings in accordance with table 2-12 as modified by the particular test procedure.

d. Apply power to the refrigeration unit as described in paragraph 2-33.a through 2-33.k.

e. Proceed with specified test procedures.

NOTE

If a test result or a tolerance specified in a test procedure is not obtained during the performance of a functional test, refer to the applicable portion of section III for possible cause and remedy.

2-42. REFRIGERATION UNIT TESTS.

2-43. TEST NO. 1 - CONTROL AND INSTRUMENTATION PANEL SWITCHES AND LAMPS. This test determines availability of input power at the refrigeration unit and checks the operation of the switches and lamps. Establish nitrogen purge conditions as outlined in paragraph 2-32.t. Connect the test equipment as shown in figure 2-12. Proceed as follows:

a. Connect facility power to input power panel (figure 2-5). All lamps must remain off.

b. Place 120 VAC 1Ø 60~ and 28 VDC circuit breakers (2, 3, figure 2-4) in ON position.

c. The 28 VDC OFF indicator lamp (92, figure 2-2) must come on and the cabinet fan must operate.

d. Press 28 VDC ON switch (89). The following indicator lamps must come on:

28 VDC ON (90)
OPERATION SELECTION STATION REFRIG (28)
OPERATION SELECTION MODE MANUAL (33)
FILTER BYPASS SOL VALVE CLOSED (39)
AUXILIARY FLOWMETER BYPASS OPEN (16)
MAIN FLOWMETER BYPASS CLOSED (15)
RESERVOIR W/G LEVEL LOW (54)
FLOWMETER SELECT MAIN ON (59)
CIRCULATING PUMP INLET OPEN (48)

Table 2-12. Preliminary Control Settings

Figure and Item No.	Nomenclature	Panel Marking	Preliminary Setting
2-4, 2	Circuit breaker	120 VAC 1Ø 60~	OFF
3	Circuit breaker	28 VDC	OFF
4	Circuit breaker	COMPRESSOR MOTOR 480 VAC 3Ø 60~	OFF
5	Circuit breaker	PUMPS AND FANS 480 VAC 3Ø 60~	OFF
2-2, 2, 5, 8, 11, 21, 24, 27	Toggle switch (meter test)	TEST ON OFF	OFF
29	Toggle switch	OPERATION SELECTION STATION ACE REFRIG	REFRIG
32	Toggle switch	OPERATION SELECTION MODE MANUAL AUTO	MANUAL
34	Switch	TEMPERATURE CONTROL OFF	Press
38	Switch	FILTER BYPASS SOL VALVE OFF	Press
41	Switch	FLOW CONTROL OFF	Press
58	Toggle switch	FLOWMETER SELECT MAIN AUXILIARY	MAIN
64	Selector switch	TEST AND CALIBRATE 28 VDC 3/4 SCALE 0-5V	OFF
65	Potentiometer	TEST AND CALIBRATE VOLTAGE ADJUST	Rotate to left-hand stop
69	Switch	TEST AND CALIBRATE METER TEST OFF	Press
72	Switch	PUMPS W/G FILLING STOP	Press

Table 2-12. Preliminary Control Settings (Cont)

Figure and Item No.	Nomenclature	Panel Marking	Preliminary Setting
2-2, 74	Switch	PUMPS BACKUP PUMP OFF	Press
76	Switch	PUMPS W/ CIRCULATING STOP	Press
83	Switch	480 VAC 3Ø 60~ OFF	Press
87	Switch	120 VAC 1Ø 60~ OFF	Press
91	Switch	28 VDC OFF	Press
93	Switch	REFRIGERATION SYSTEM OFF	Press
2-3, 2	Valve	PUMP DISCHARGE PRESS. GAGE SHUTOFF	Open
3	Valve	PUMP DISCHARGE PRESS.	Open
5	Valve	GASEOUS NITROGEN SOURCE PRESS. GAGE SHUTOFF	Open
6	Pressure regulator	GASEOUS NITROGEN MAIN PRESS. REGULATOR	Close
7	Valve	GASEOUS NITROGEN MAIN REGULATOR PRESS. GAGE SHUTOFF	Open
9	Valve	SYSTEM FILL RESERVOIR	Open
10	Valve	SYSTEM FILL DIRECT	Open
11	Valve	RESERVOIR FILL	Open

Table 2-12. Preliminary Control Settings (Cont)

Figure and Item No.	Nomenclature	Panel Markings	Preliminary Setting
2-3, 12	Valve	RESERVOIR RETURN	Open
13	Valve	TRIM RETURN	Open
14	Valve	TRIM SUPPLY	Open
15	Valve	TRIM BYPASS	Open
2-8, 7	Mode switch	AUTO MANUAL	MANUAL
2-9, 3	Mode control	MANUAL AUTOMATIC	MANUAL
	Pressure regulators	R1, R2, R3, R5	Close
	Needle valves	V49, V50, V51, V52, V53, V54, V56, V57	Close
	Drain valves	V2, V12, V15, V22, V27, V29, V43, V45, V46, V47, V48	Close
	Shutoff valves	V3, V5, V8, V9, V11, V16, V17, V21, V24, V31, V32, V39, V40	Open

CIRCULATING PUMP OUTLET OPEN (49)
FILLING PUMP INLET CLOSED (50)
FILLING PUMP OUTLET CLOSED (51)
ALL OFF (except 28 VDC OFF) and STOP indicator lamps.

e. Place FLOWMETER SELECT switch (58) in AUXILIARY position. FLOWMETER SELECT AUXILIARY ON indicator light (61) must come on.

f. Press 28 VDC OFF switch (91), and then press 28 VDC ON switch (89).

g. Press TEST AND CALIBRATE LIGHT TEST switch (63) and hold. All indicator lamps must be on. Release TEST AND CALIBRATE LIGHT TEST switch.

h. Set selector switch SX1 on test adapter No. 4 to position 3.

i. Press 120 VAC 1Ø 60~ ON switch (86). TOTAL TIME meter (1, figure 2-4) must operate.

j. Test voltmeter VX1 must indicate 0 volts dc.

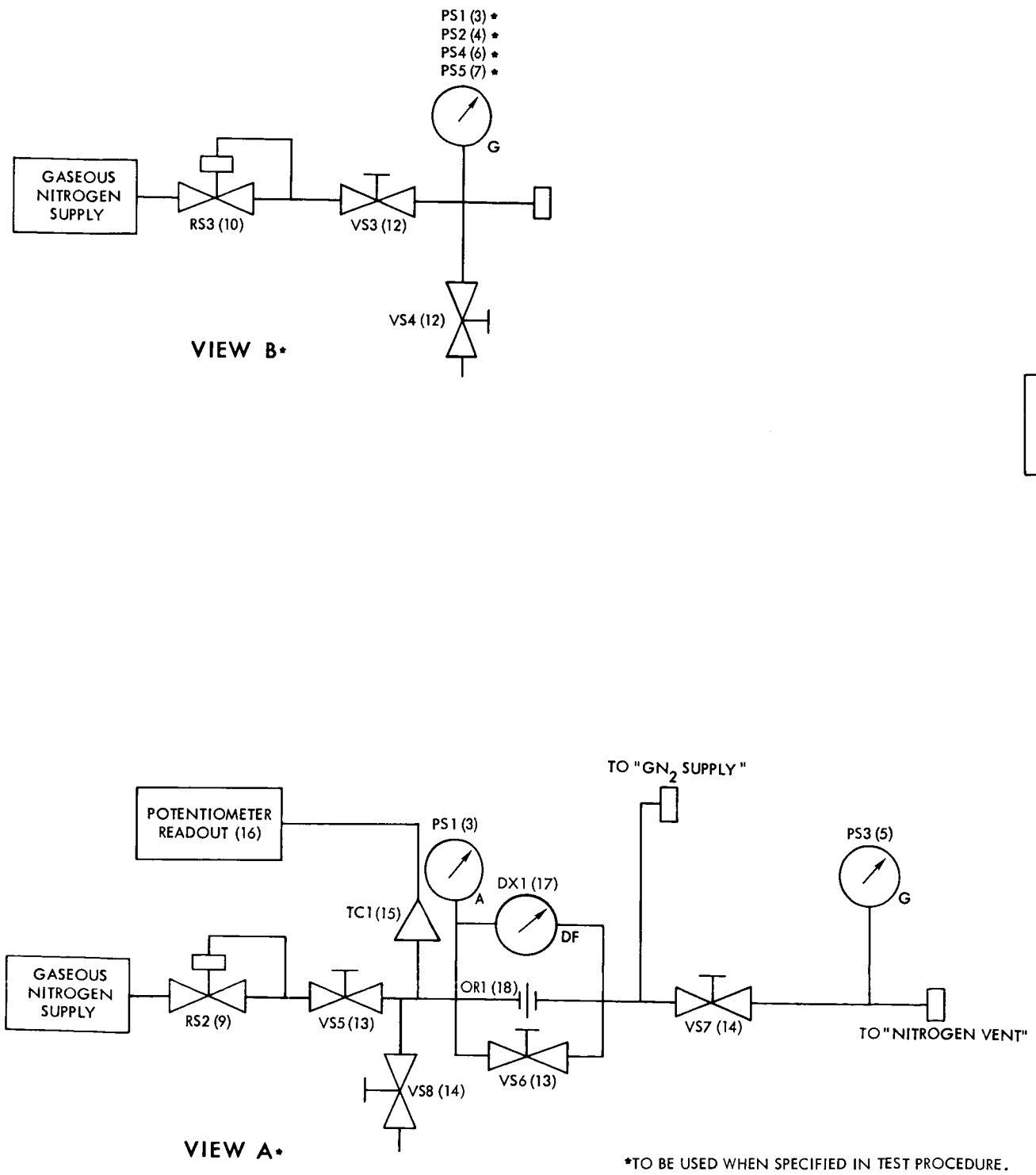

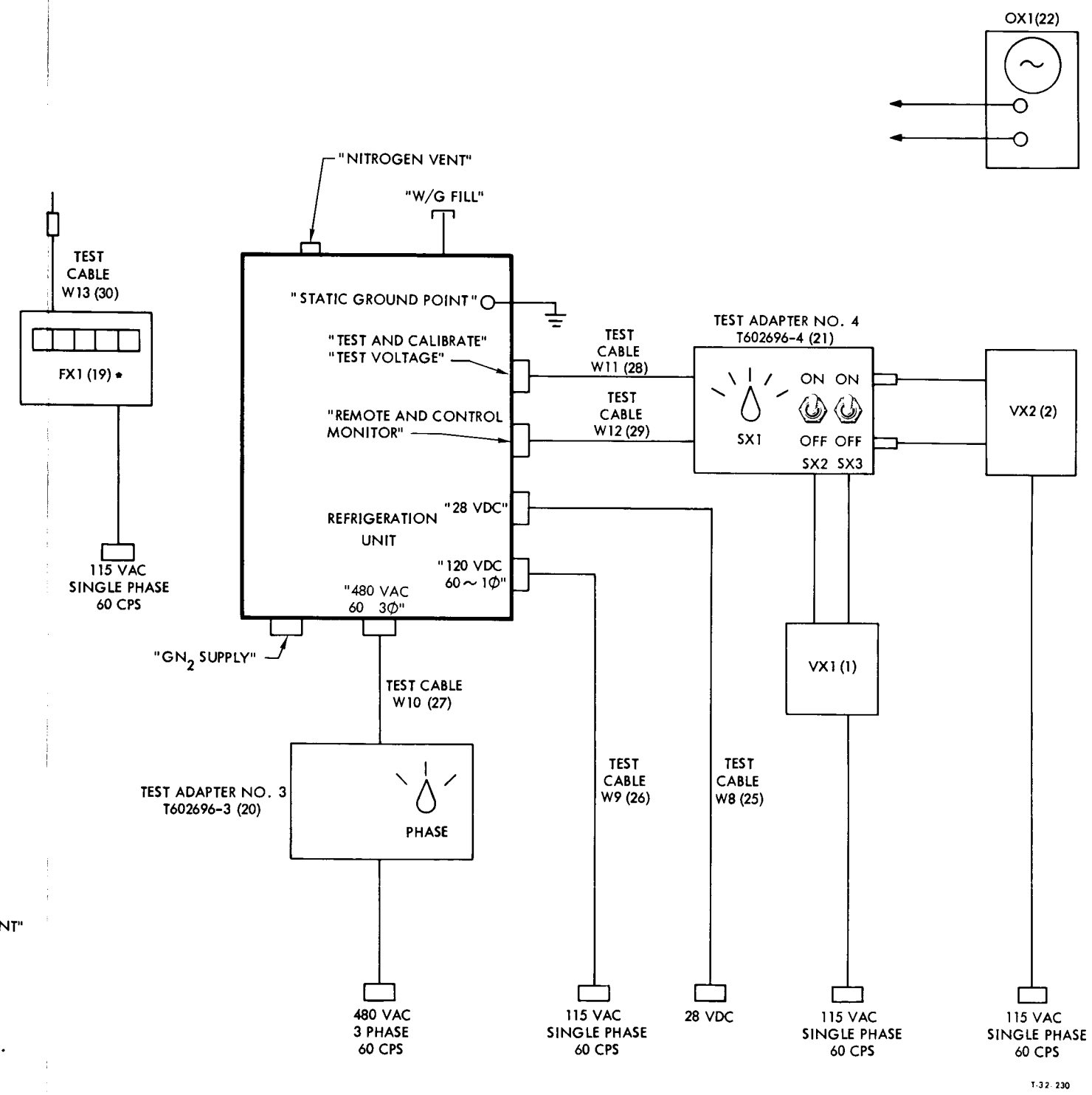

Figure 2-12. Basic Test Equipment Setup for Enclosure Purge Circuit Test and for Test No. 1, 2, 3, 4, 5, 8, 9, and 10

k. Set TEST AND CALIBRATE selector switch (64, figure 2-2) to 28 VDC position. Test voltmeter VX1 must indicate 28±4 volts dc.

l. Set TEST AND CALIBRATE selector switch to 3/4 SCALE position and press TEST AND CALIBRATE METER TEST ON switch (68). Test voltmeter VX1 must indicate 3.750±0.010 volts dc and the TEST AND CALIBRATE METER TEST ON indicator lamp (67) must come on.

m. Set TEST AND CALIBRATE selector switch to 0-5V position. The voltage indicated on test voltmeter VX1 must be adjustable over a range from 0 to 5.000 volts dc by means of TEST AND CALIBRATE VOLTAGE ADJUST potentiometer (65).

n. Set TEST AND CALIBRATE selector switch to OFF position and press TEST AND CALIBRATE METER TEST OFF switch (69).

o. Proceed directly to the next test or shut down the refrigeration unit in accordance with paragraph 2-53.a through 2-53.e.

2-44. TEST NO. 2 - CONTROL AND INSTRUMENTATION PANEL METERS. This test checks the accuracy and operation of the panel meters. Establish nitrogen purge conditions as outlined in paragraph 2-32.t. Continue directly from the previous test or activate the refrigeration unit in accordance with paragraph 2-33.a through 2-33.k. Connect the test equipment as shown in figure 2-12 and proceed as follows:

a. Press 28 VDC OFF switch (91, figure 2-2). Place each of the meter TEST switches (2, 5, 8, 11, 21, 24, 27) in ON position. Verify that meters (3, 6, 9, 12, 19, 22, 25) are mechanically zeroed.

b. Press 28 VDC ON (89) and 120 VAC 1Ø 60~ ON (86) switches. Place each meter TEST switch in OFF position.

c. Set TEST AND CALIBRATE selector switch (64) to 0-5V position.

d. By means of TEST AND CALIBRATE VOLTAGE ADJUST potentiometer (65) adjust dc voltage to read 1.250±0.010 volts dc (one-quarter scale) on test voltmeter VX1.

e. Place REFRIGERATION RETURN TEMPERATURE meter TEST switch (2) in ON position and note reading.

f. Place REFRIGERATION RETURN TEMPERATURE meter TEST switch in OFF position. Note that reading differs from that obtained in paragraph 2-44.e.

g. Repeat paragraph 2-44.e and 2-44.f for W/G SUPPLY TEMPERATURE meter (6), W/G RETURN TEMPERATURE meter (9), W/G SUPPLY PRESSURE meter (25), and W/G FLOW meter (19).

h. Set TEST AND CALIBRATE selector switch to 3/4 SCALE position.

i. Press TEST AND CALIBRATE METER TEST ON switch (68). TEST AND CALIBRATE METER TEST ON indicator lamp (67) must come on.

j. All meters must indicate 3/4 scale (green index) and be within the tolerance specified in table 2-13.

Table 2-13. Meter Indications

Meter	Ref. Desig.	3/4 Scale
REFRIGERATION RETURN TEMPERATURE	M3	45±1°F
W/G SUPPLY TEMPERATURE	M1	45±1°F
W/G RETURN TEMPERATURE	M2	100±1°F
ENCLOSURE PURGE PRESSURE	M6	7.5±0.1 in. H_2O
W/G SUPPLY PRESSURE	M4	375±5 psig
W/G DIFFERENTIAL PRESSURE	M5	150±2 psi
W/G FLOW	M7	3.75±0.05 gpm

k. Set TEST AND CALIBRATE selector switch to 0-5V position.

l. By means of TEST AND CALIBRATE VOLTAGE ADJUST potentiometer, adjust dc voltage to read 5.000±0.010 volts dc on test voltmeter VX1.

m. Press TEST AND CALIBRATE METER TEST OFF switch (69) and set TEST AND CALIBRATE selector switch to the OFF position.

n. Proceed directly to the next test or shut down the refrigeration unit in accordance with paragraph 2-53.a through 2-53.e.

2-45. TEST NO. 3 - 480 VAC 3Ø 60~ PUMP AND FAN CIRCUITS. This test checks the operation of the refrigeration unit pump and fan circuits. Establish nitrogen purge conditions as outlined in paragraph 2-32.t. Continue directly from the previous test or activate the refrigeration unit in accordance with paragraph 2-33.a through 2-33.h. Connect the test equipment as shown in figure 2-12 except do not connect facility 3 phase 480 vac 60 cps power. Proceed as follows:

WARNING

Disconnect facility 3 phase 480 vac 60 cps power at source before changing test adapter No. 3 switch positions. Failure to comply with this warning could result in damage to equipment or injury to personnel.

a. Set PHASE switch on test adapter No. 3 to CBA position.

b. Connect facility 3 phase 480 vac 60 cps power. Place PUMPS AND FANS 480 VAC 3Ø 60~ circuit breaker (5, figure 2-4) in ON position. WRONG PHASE indicator lamp (80, figure 2-2) must come on.

c. Place PUMPS AND FANS 480 VAC 3Ø 60~ circuit breaker in OFF position. Disconnect facility 3 phase 480 vac 60 cps power.

d. Set PHASE switch on test adapter No. 3 to ACB position. Repeat paragraph 2-45.b and 2-45.c.

e. Set PHASE switch on test adapter No. 3 to BAC position. Repeat paragraph 2-45.b and 2-45.c.

f. Press 480 VAC 3Ø 60~ ON switch (82). 480 VAC 3Ø 60~ ON indicator lamp (81) must not come on.

g. Set PHASE switch on test adapter No. 3 to ABC position.

h. Place PUMPS AND FANS 480 VAC 3Ø 60~ circuit breaker to ON position. WRONG PHASE indicator lamp must not be on.

i. Press 480 VAC 3Ø 60~ ON switch. 480 VAC 3Ø 60~ ON indicator lamp must come on. Place PUMPS AND FANS 480 VAC 3Ø 60~ circuit breaker in OFF position.

j. Proceed directly to the next test or shut down the refrigeration unit in accordance with paragraph 2-53.a through 2-53.e.

2-46. TEST NO. 4 - FREQUENCY CONVERTER, CALIBRATION OSCILLATOR METER SET AND FLOWMETER INDICATING CIRCUIT. This test checks the operation and accuracy of the frequency converter, calibration oscillator, and the flowmeter indicating circuit. Establish nitrogen purge conditions as outlined in paragraph 2-32.t. Continue directly from the previous test or activate the refrigeration unit in accordance with paragraph 2-33.a through 2-33.k. Connect the test equipment as shown in figure 2-12 and proceed as follows:

a. Loosen the eight holding screws and remove the transparent panel cover from the frequency converter, calibration oscillator meter set.

CAUTION

During performance of these tests, do not change position of any switch or control unless specifically directed to do so.

b. Press FLOW CONTROL ON switch (43, figure 2-2). FLOW CONTROL ON indicator lamp (42) and POWER indicator lamp (4, figure 2-7) on calibration oscillator (1) must come on.

c. Allow meter set to warm up for 15 minutes.

d. Connect OUTPUT jack (2, figure 2-7) of calibration oscillator to INPUT jack of test electronic counter FX1 with test cable W13.

e. Set selector switch on test electronic counter FX1 to PERIOD 10 MILLI-SEC. position. Set selector switch (3) on calibration oscillator to 100~ position. The test electronic counter FX1 must indicate between 9.995 and 10.005 milliseconds.

f. Disconnect test cable W13 from calibration oscillator OUTPUT jack and set selector switch (9, 20) on each frequence converter to CAL EXT position.

g. Place FLOWMETER SELECT switch (58, figure 2-2) in MAIN position. FLOWMETER SELECT MAIN ON (59), MAIN FLOWMETER BYPASS CLOSED (15), and AUXILIARY FLOWMETER BYPASS OPEN (16) indicator lamps must come on.

h. The W/G FLOW meter (19) must indicate within 0.3 gpm of the flow value that corresponds to a frequency of 100 cps on the calibration curve provided for the main flowmeter.

i. Set selector switch SX1 on test adapter No. 4 to position 1. Test voltmeter VX2 must indicate 5.0±1.5 volts dc.

j. Set selector switch SX1 on test adapter No. 4 to position 2. Test voltmeter VX2 must indicate 0.0 (+0.5, -0.0) volts dc.

k. Disconnect test cable W11 from TEST AND CALIBRATE TEST VOLTAGE receptacle (66, figure 2-2) and connect to W/G FLOW SIGNAL receptacle (20).

l. Place OPERATION SELECTION STATION switch (29) in ACE position.

m. Place switch SX2 on test adapter No. 4 in ON position.

n. Set selector switch SX1 on test adapter No. 4 to position 3. Test voltmeter VX2 must indicate a voltage that signifies a flow rate within 0.225 gpm of that in paragraph 2-46.h. (A 1-to-1 numerical correspondence exists between the voltage indication of test voltmeter VX2 and the flow rate indication of the W/G FLOW meter; i.e., one volt dc equals one gallon per minute.)

o. Set selector switch SX1 on test adapter No. 4 to position 4. Test voltmeter VX2 must indicate a voltage that signifies a flow rate within 0.225 gpm of that in paragraph 2-46.h.

p. Place 28 VDC circuit breaker (3, figure 2-4) to OFF position; disconnect test cable W12; jumper pins 1 and 2 of REMOTE & CONTROL MONITOR connector (1, figure 2-6); connect test oscilloscope OX1 to pins 40 and 41 of REMOTE & CONTROL MONITOR connector. Place 28 VDC circuit breaker to ON position. The output ripple voltage must not exceed 10 millivolts peak-to-peak.

q. Place the W/G FLOW TEST switch (21, figure 2-2) to ON position.

r. Reconnect test cable W12. Set selector switch (3, figure 2-7) on calibration oscillator to 500~ position. Test voltmeter VX2 must not indicate more than 6.5 volts dc.

s. Set W/G FLOW TEST switch to OFF position.

t. Set selector switch (9, figure 2-7) on frequency converter No. 1 to 120~ CAL position. The W/G FLOW meter (19, figure 2-2) must indicate within 0.3 gpm of the flow value that corresponds to a frequency of 120 cps on the calibration curve provided for the main flowmeter.

u. Place FLOWMETER SELECT switch (58, figure 2-2) in AUXILIARY position and OPERATION SELECTION STATION switch (29) in REFRIG position.

v. Press 28 VDC ON (89), 120 VAC 1Ø 60~ ON (86) and FLOW CONTROL ON (43) switches. Indicator lamps FLOWMETER SELECT AUXILIARY ON (61), MAIN FLOWMETER BYPASS OPEN (13), and AUXILIARY FLOWMETER BYPASS CLOSED (18) must come on.

w. Set selector switch SX1 on test adapter No. 4 to position 2. Test voltmeter VX2 must indicate 5.0±1.5 volts dc.

x. Set selector switch SX1 on test adapter No. 4 to position 1. Test voltmeter VX2 must indicate 0.0(+0.5, -0.0) volts dc.

y. Set selector switch (3, figure 2-7) on calibration oscillator to 100~ position.

z. Repeat paragraph 2-46.i. Repeat paragraphs 2-46.p through 2-46.t; in paragraph 2-46.p, jumper pins 13 and 14 of REMOTE AND CONTROL MONITOR connector (1, figure 2-6) (in addition to pins 1 and 2).

aa. Set selector switch (22, figure 2-7) on frequency converter No. 2 (16) to 120~ CAL position. The W/G FLOW meter (19, figure 2-2) must indicate within 0.3 gpm of the flow value that corresponds to a frequency of 120 cps on the calibration curve provided for the auxiliary flowmeter.

ab. Set selector switches (9, 22) on frequency converters No. 1 and No. 2 to NORM positions.

ac. Proceed directly to the next test or shut down the refrigeration unit in accordance with paragraph 2-53.a through 2-53.e.

2-47. TEST NO. 5 - PUMPS AND FLOWMETERS CIRCUIT. This test checks the operation of the pumps and flowmeters circuit. Establish nitrogen purge conditions as outlined in paragraph 2-32.t. Continue directly from the previous test or activate the refrigeration unit in accordance with paragraph 2-33.a through 2-33.k. Connect the test equipment as shown in figure 2-12 and proceed as follows:

NOTE

To avoid excessive solenoid heating, perform steps which require the PUMPS START switches to be in the ON position as quickly as possible.

a. Press PUMPS W/G CIRCULATING START switch (77, figure 2-2). PUMPS W/G CIRCULATING START indicator lamp (78) must come on and solenoid valves V38, V39, and V40 (figure 8-1) must be deenergized. CIRCULATING PUMP INLET OPEN (48), CIRCULATING PUMP OUTLET OPEN (49), FILLING PUMP INLET CLOSED (50), and FILLING PUMP OUTLET CLOSED (51) indicator lamps must remain on.

b. Set selector switch SX1 on test adapter No. 4 to position 11. Test voltmeter VX2 must indicate 5.0±1.5 volts dc.

c. Press PUMPS W/G CIRCULATING STOP switch (76). Test voltmeter VX2 must indicate 0.0 (+0.5, -0.0) volts dc.

d. Place OPERATION SELECTION MODE switch (32) in AUTO position, and press PUMPS BACKUP PUMP ON switch (75). PUMPS BACKUP PUMP ON indicator lamp (73) must come on and solenoid valves V38, V39, and V40 (figure 8-1) must be energized. CIRCULATING PUMP INLET CLOSED (46), CIRCULATING PUMP OUTLET CLOSED (47), FILLING PUMP INLET OPEN (52), and FILLING PUMP OUTLET OPEN (53) indicator lamps must be on.

e. Set selector switch SX1 on test adapter No. 4 to position 12. Test voltmeter VX2 must indicate 5.0±1.5 volts dc.

f. Press PUMPS BACKUP PUMP OFF switch (74). Test voltmeter VX2 must indicate 0.0 (+0.5, -0) volts dc.

g. Place switch SX2 on test adapter No. 4 in ON position.

h. Place OPERATION SELECTION STATION switch (29) in ACE position.

i. Set switch SX4 on test adapter No. 4 to ON position. PUMPS BACKUP PUMP ON indicator lamp (73) must come on.

j. Place switch SX2 on test adapter No. 4 in OFF position.

k. Place OPERATION SELECTION STATION switch (29) in REFRIG position, and OPERATION SELECTION MODE switch (32) in MANUAL position. Press 28 VDC ON switch (89) and 120 VAC 1Ø 60~ ON switch (86).

l. Press PUMPS W/G FILLING START switch (71). PUMPS W/G FILLING START indicator lamp (70) must come on and solenoid valves V38, V39, and V40 (figure 8-1) must be energized.

m. FILLING PUMP INLET OPEN (52), FILLING PUMP OUTLET OPEN (53), CIRCULATING PUMP INLET CLOSED (46), and CIRCULATING PUMP OUTLET CLOSED (47) indicator lamps must be on.

n. FILLING PUMP INLET CLOSED (50), FILLING PUMP OUTLET CLOSED (51), CIRCULATING PUMP INLET OPEN (48), and CIRCULATING PUMP OUTLET OPEN (49) indicator lamps must be off.

o. Press PUMPS W/G FILLING PUMP STOP switch (72).

p. Place FLOWMETER SELECT switch (58) in AUXILIARY position. Solenoid valve V10 must be deenergized and solenoid valve V33 must be energized.

q. FLOWMETER SELECT MAIN ON (59), MAIN FLOWMETER BYPASS CLOSED (15), and AUXILIARY FLOWMETER BYPASS OPEN (16) indicator lamps must be off.

r. FLOWMETER SELECT AUXILIARY ON (61), MAIN FLOWMETER BYPASS OPEN (13), and AUXILIARY FLOWMETER BYPASS CLOSED (18) indicator lamps must be on.

s. Set selector switch SX1 on test adapter No. 4 to position 14. Test voltmeter VX2 must indicate 5.0±1.5 volts dc.

t. Set selector switch SX1 on test adapter No. 4 to position 15. Test voltmeter VX2 must indicate 0.0 (+0.5, -0.0) volts dc.

u. Place all circuit breakers in OFF position.

v. Place the 28 VDC and 120 VAC 1Ø 60~ circuit breakers (3, 2, figure 2-4) in ON position.

w. Press the 28 VDC ON and 120 VAC 1Ø 60~ ON switches (89, 86, figure 2-2).

x. Place FLOWMETER SELECT switch in MAIN position. Solenoid valve V33 must be deenergized and solenoid valve V10 must be energized.

y. The indicator lamps in paragraph 2-47.q must be on, and the indicator lamps in paragraph 2-47.r must be off.

z. Set selector switch SX1 on test adapter No. 4 to position 14. Test voltmeter VX2 must indicate 5.0±1.5 volts dc.

aa. Set selector switch SX1 on test adapter No. 4 to position 15. Test voltmeter VX2 must indicate 0.0 (+0.5, -0) volts dc.

ab. Set selector switch SX1 on test adapter No. 4 to position 16. Test voltmeter VX2 must indicate 5.0±1.5 volts dc.

ac. Press 28 VDC OFF switch (91).

ad. Place OPERATION SELECTION MODE switch (32) in AUTO position.

ae. Press 28 VDC ON switch (89). OPERATION SELECTION MODE AUTO indicator lamp (31) must come on.

af. Press the 28 VDC OFF switch (91).

ag. Place OPERATION SELECTION STATION switch (29) in ACE position.

ah. Place SX2 switch on test adapter No. 4 in ON position. OPERATION SELECTION STATION ACE indicator lamp (30) and 28 VDC ON indicator lamp (90) must come on.

ai. Set selector switch SX1 on test adapter No. 4 to position 16. Test voltmeter VX2 must indicate 5.0±1.5 volts dc.

NOTE

The RESERVOIR W/G LEVEL LOW indicator lamp (54) must be on, indicating a low level condition for the reservoir

aj. Set selector switch SX1 on test adapter No. 4 to position 14. Test voltmeter VX2 must indicate 5.0±1.5 volts dc.

ak. Set selector switch SX3 on test adapter No. 4 to ON position. FLOWMETER SELECT AUXILIARY ON indicator lamp must come on.

al. Place switch SX2 on test adapter No. 4 in OFF position.

am. Proceed directly to the next test or shut down the refrigeration unit in accordance with paragraph 2-53.a through 2-53.e.

2-48. TEST NO. 6 - WATER-GLYCOL FILLING AND CIRCULATING CIRCUITS. This test checks the operation of the water-glycol filling and circulating circuits. Establish nitrogen purge conditions as outlined in paragraph 2-32.t. Continue directly from the previous test or activate the refrigeration unit in accordance with paragraph 2-33.a through 2-33.j. Connect the test equipment as shown in figure 2-13 then proceed as follows:

a. Turn pressure regulators R1, R2, R3, and R5 and MAIN PRESS. REGULATOR (6, figure 2-3) to the fully closed position. Close valves V2, V12, V15, V27, V29, V43, V45, V46, V47, and V48.

b. Open valves V1, V3, V4, V5, V6, V8, V9, V11, V16, V17, V19, V20, V21, V22, V23, V24, V25, V28, V30, V31, V32, V34, and V36.

c. Turn test pressure regulator RS1 to the fully closed position.

d. Close all test valves.

e. Place switch SX2 on test adapter No. 4 in OFF position.

f. Open test valve VS1.

g. Adjust test pressure regulator RS1 until GASEOUS NITROGEN SOURCE PRESS. gage (4, figure 2-3) indicates 1500±50 psig.

h. Adjust GASEOUS NITROGEN MAIN PRESS. REGULATOR (6) until GASEOUS NITROGEN MAIN REGULATED PRESS. gage (8) indicates 200±5 psig.

i. Adjust pressure regulators R2 and R3 (figure 8-1) until their respective reference gages indicate 20±2 psig.

j. Set refrigeration unit water-glycol flow controller (1, figure 2-9) to 1 gpm and AUTO/MANUAL switch (3) to MANUAL position.

k. Open valve VS6 on water-glycol fill unit and test valve VS2.

l. Open vent valve V46 on circulating pump P1 and vent valve V48 on fill pump P2.

m. Slowly open valve VS5 on water-glycol fill unit allowing water-glycol to flow into fluid module. When fluid is observed at vent valve V46, close valve VS5 and V46.

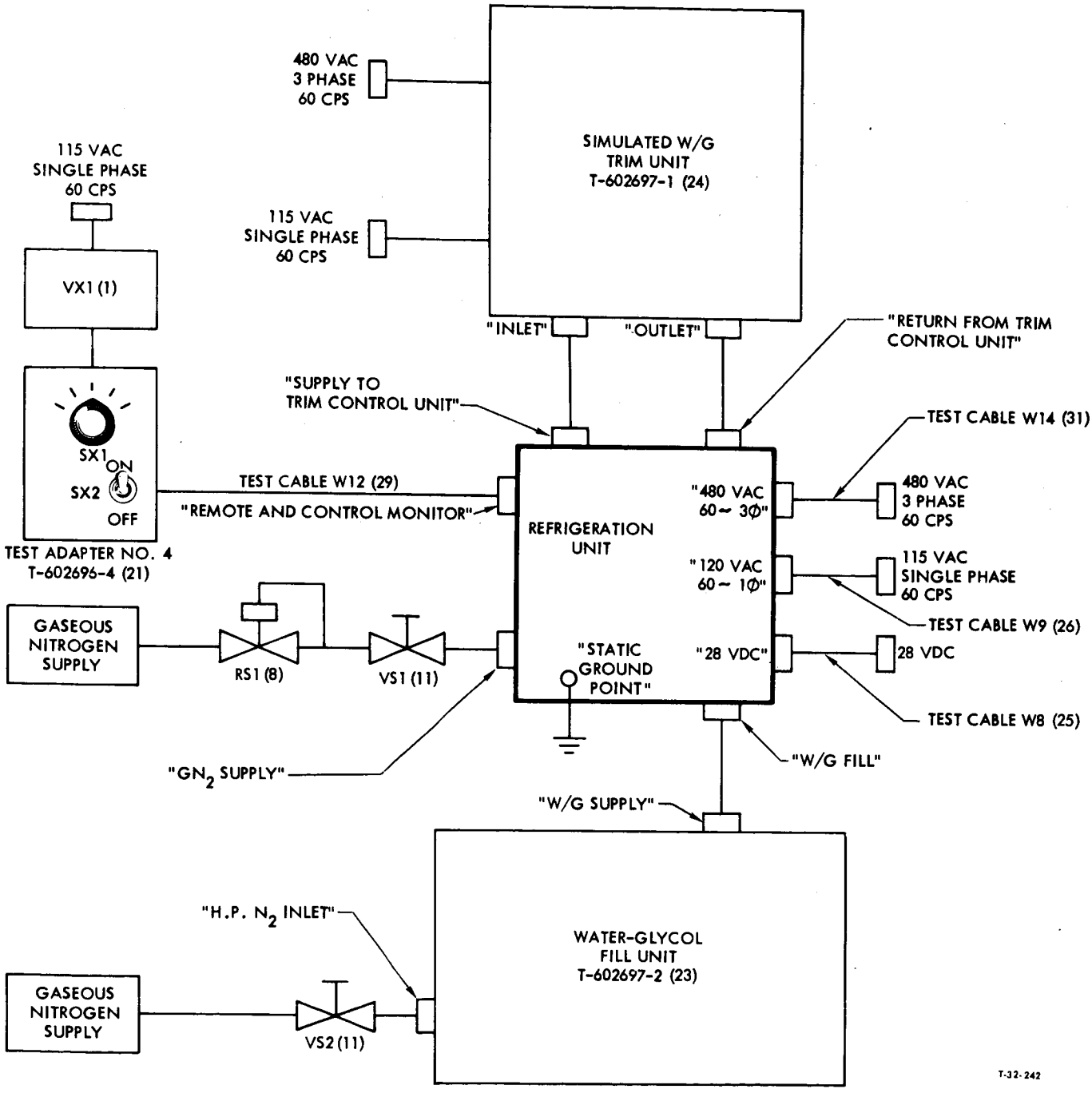

Figure 2-13. Test Equipment Setup for Tests No. 6 and 7

n. Place 28 VDC circuit breaker (3, figure 2-4) to ON position and press 28 VDC ON switch (89, figure 2-2). Press FLOW CONTROL ON switch (43, figure 2-2). Press PUMPS W/G FILLING START switch (71, figure 2-2).

o. Close RESERVOIR FILL valve (11, figure 2-3) and SYSTEM FILL RESERVOIR valve (9, figure 2-3). Slowly open valve VS5 allowing water-glycol to flow into fill pump P2. When fluid is observed at vent valve V48, close valves VS5 and V48.

p. Open valve VS5 and fill water-glycol reservoir noting when RESERVOIR W/G LEVEL LOW indicator lamp (54, figure 2-2) goes off. Continue filling until water-glycol appears at SYSTEM DRAIN bulkhead union, then close valve VS5.

q. Place suitable container at SYSTEM DRAIN bulkhead union. Open reservoir drain valve V29 and drain one gallon from reservoir. Close valve V29.

r. Close valves V22 and V30. Adjust pressure regulator R1 to 20±2 psig to pressurize reservoir, and open SYSTEM FILL RESERVOIR valve.

s. Check that the trim unit simulator heaters are filled with water-glycol and press PUMPS W/G FILLING STOP switch (72, figure 2-2).

t. Adjust pressure regulator R5, valves V49 through V54, and valves V56 and V57, if necessary, to obtain indication of approximately 2.5 inches H_2O at pressure gages at GA4 through GA10.

u. Place refrigeration unit circuit breakers (2, 3, 5, figure 2-4) to ON position.

v. Press 120 VAC 1Ø 60~ ON and 480 VAC 3Ø 60~ ON switches (86, 82, figure 2-2).

w. Open SYSTEM PRESSURE VALVE VS1, INLET SHUTOFF VALVE VS2, and OUTLET SHUTOFF VALVE VS3 on trim unit simulator.

x. Close TRIM BYPASS valve (15, figure 2-3).

y. Press PUMPS W/G FILLING START switch (71, figure 2-2). Fill pump P2 must start.

z. Adjust valve VS1 until PUMP DISCHARGE PRESS. gage (1, figure 2-3) indicates 230±5 psig.

aa. Open TRIM BYPASS valve (15, figure 2-3). TRIM BYPASS VALVE OPEN indicator lamp (17, figure 2-2) must be on.

ab. Close the TRIM BYPASS valve.

ac. Place FLOWMETER SELECT switch (58, figure 2-2) in MAIN position.

ad. Perform the following steps on the control and instrumentation panel:

1. Press FILTER BYPASS SOL VALVE OPEN switch (45, figure 2-2). FILTER BYPASS SOL VALVE OPEN indicator lamp (44) must come on.

2. Press FILTER BYPASS SOL VALVE CLOSED switch (38). FILTER BYPASS SOL VALVE CLOSED indicator lamp (39) must come on.

3. Press PUMPS W/G FILLING STOP switch (72). W/G FLOW meter (19) must indicate no flow.

4. Press PUMPS W/G CIRCULATING START switch (77). PUMPS W/G CIRCULATING START (78) and the W/G CIRC PUMP FLOW (56) indicator lamps must come on and the W/G FLOW meter (19) must indicate flow.

ae. Adjust SYSTEM PRESSURE valve VS1 on trim unit simulator until W/G DIFFERENTIAL PRESSURE meter (22) indicates 95±5 psig.

af. REFRIGERATION RETURN TEMPERATURE (3), W/G SUPPLY TEMPERATURE (6), W/G RETURN TEMPERATURE (9), W/G SUPPLY PRESSURE (25), and W/G DIFFERENTIAL PRESSURE (22) meters must be functioning.

ag. Press PUMPS W/G CIRCULATING STOP switch (76).

ah. Place switch SX2 on test adapter No. 4 in OFF position.

ai. Place all circuit breakers in OFF position.

aj. Close INLET SHUTOFF VALVE VS2 and OUTLET SHUTOFF VALVE VS3 on trim unit simulator.

ak. Adjust test regulator RS1 until GASEOUS NITROGEN SOURCE PRESS. gage (4, figure 2-3) indicates zero.

al. Adjust regulator RS2 on water-glycol fill unit until gage PS1 on water-glycol fill unit indicates zero.

am. Proceed directly to the next test or shut down the refrigeration unit in accordance with paragraph 2-53.a through 2-53.e.

2-49. TEST NO. 7 - REFRIGERATION (CHILLING) SYSTEM. This test checks the operation of the refrigeration system. Establish nitrogen purge conditions as outlined in paragraph 2-32.t. Continue directly from the previous test or activate the refrigeration unit in accordance with paragraph 2-33.a through 2-33.k. Connect the test equipment as shown in figure 2-13. Proceed as follows:

a. If necessary, fill the refrigeration unit with water-glycol as described in paragraph 2-48.a through 2-48.q.

b. Open valves VS1, VS2, and VS3 on trim unit simulator.

c. Set all circuit breakers to ON position. Close TRIM BYPASS valve (15, figure 2-3).

d. Press 28 VDC ON (89, figure 2-2), 120 VAC 1Ø 60~ ON (86), and 480 VAC 3Ø 60~ ON (82) switches. Press FLOW CONTROL ON (43) and TEMPERATURE CONTROL ON (36) switches. Place FLOWMETER SELECT switch (58) in MAIN position.

e. Press PUMPS W/G CIRCULATING START switch (77) and adjust flow to 3.0 gpm.

f. Adjust valve VS1 until W/G DIFFERENTIAL PRESSURE meter (22) indicates 70±2 psig.

g. Set refrigerator temperature selection switch (7, figure 2-11) to -20°F.

h. Press REFRIGERATION SYSTEM ON switch (94, figure 2-2). The REFRIGERATION SYSTEM ON indicator lamp (95, figure 2-2) must come on, the refrigerator compressor motor must start, and refrigerator FANS No. 1 and No. 2 indicator lamps (2, 1, figure 2-11) must be on.

i. Adjust temperature controller (6, figure 2-8) until W/G SUPPLY TEMPERATURE meter (6, figure 2-2) indicates -15±2°F.

j. Adjust water-glycol flow controller (1, figure 2-9) until W/G FLOW meter (19, figure 2-2) indicates 3.0±0.5 gpm.

k. Adjust valve VS1 until W/G DIFFERENTIAL PRESSURE meter (22, figure 2-2) indicates 70±2 psi.

l. Repeat paragraph 2-49.h through 2-49.k, if necessary, then operate refrigeration system for one hour to ensure that system stabilizes.

m. Press 28 VDC OFF switch (91, figure 2-2).

n. Place OPERATION SELECTION MODE switch (32, figure 2-2) in AUTO position.

o. Wait five minutes, then press 28 VDC ON switch (89, figure 2-2). W/G SUPPLY TEMPERATURE meter (6) must attempt to stabilize at -15°F, and W/G FLOW meter (19) must attempt to stabilize at 3.5 gpm.

p. Press the 28 VDC OFF switch (91, figure 2-2).

q. Place OPERATION SELECTION STATION switch (29, figure 2-2) in ACE position.

r. Wait five minutes, then place SX2 switch on test adapter No. 4 in the ON position. W/G SUPPLY TEMPERATURE meter (6, figure 2-2) must attempt to stabilize at -15°F, and the W/G FLOW meter (19) must attempt to stabilize at 3.5 gpm.

NOTE

The RESERVOIR W/G LEVEL LOW indicator lamp (54) must be off, indicating that a low level condition for the reservoir does not exist.

s. Set selector switch SX1 on test adapter No. 4 to position 14. Test voltmeter VX1 must indicate 0.0 (+0.5, -0.0) volts dc.

t. Repeat paragraph 2-48.ah through 2-48.al.

u. Proceed directly to the next test or shut down the refrigeration unit in accordance with paragraph 2-53.a through 2-53.e.

2-50. TEST NO. 8 - PRESSURE TRANSDUCERS MT5 AND MT2. This test checks the operation and accuracy of pressure transducers MT5 and MT2. Establish nitrogen purge conditions as outlined in paragraph 2-32.t. Continue directly from the previous test or activate the refrigeration unit in accordance with paragraph 2-33.a through 2-33.k. Connect the test equipment as shown in figure 2-12 and proceed as follows:

a. To test pressure transducer MT5, remove cap from test port TP9 (figure 8-1) and connect test equipment shown in view B of figure 2-12. Use test gage PS4.

b. W/G SUPPLY PRESSURE meter (25, figure 2-2) must indicate 0 (+5, -0) psig.

c. Open test valve VS3 and close pressure transducer shutoff valve V11.

d. Adjust test regulator RS3 and test valve VS4 until W/G SUPPLY PRESSURE meter indicates 150.0 psig. Test gage PS4 must indicate 150±5 psig.

e. Adjust regulator RS3 and test valve VS4 until W/G SUPPLY PRESSURE meter indicates 300.0 psig. Test gage PS4 must indicate 300±5 psig.

f. Adjust test regulator RS3 and test valve VS4 until W/G SUPPLY PRESSURE meter indicates 495.0 psig. Test gage PS4 must indicate 495±5 psig.

g. Disconnect cable W11 from TEST AND CALIBRATE TEST VOLTAGE receptacle (66, figure 2-2) and connect to W/G SUPPLY PRESSURE meter SIGNAL receptacle (26, figure 2-2).

h. Set selector switch SX1 on test adapter No. 4 to position 3. Test voltmeter VX2 must indicate 4.950±0.038 volts dc.

i. Place OPERATION SELECTION STATION switch (29, figure 2-2) in ACE position. Place selector switch SX2 on test adapter No. 4 in ON position.

j. Set selector switch SX1 on test adapter No. 4 to position 7. Test voltmeter VX2 must indicate 4.950±0.038 volts dc.

k. Disconnect test cable W12; jumper pins 1 and 2 of REMOTE & CONTROL MONITOR connector (1, figure 2-6); connect test oscilloscope OX1 to pins 43 and 44 of REMOTE & CONTROL MONITOR connector. The output ripple voltage must not exceed 10 millivolts peak-to-peak.

l. Place W/G SUPPLY PRESSURE meter TEST switch (27, figure 2-2) in ON position. Reconnect test cable W12.

m. Adjust test regulator RS3 and test valve VS4 until test gage PS4 indicates 550±3 psig. Test voltmeter VX2 must not indicate more than 6.5 volts dc.

n. Adjust test regulator RS3 until test gage PS4 indicates zero.

o. Place W/G SUPPLY PRESSURE meter TEST switch in OFF position.

p. Disconnect test equipment from test port TP9 and replace cap. Disconnect test cable W11 from W/G SUPPLY PRESSURE meter SIGNAL receptacle and connect to TEST AND CALIBRATE TEST VOLTAGE receptacle. Open pressure transducer shutoff valve V11.

q. To test differential pressure transducer MT2, remove caps from test ports TP3 and TP6 and connect test equipment shown in view B of figure 2-12 to test port TP6. Use test gage PS2.

r. Open test valve VS3. Close differential pressure transducer shutoff valve V5. The W/G DIFFERENTIAL PRESSURE meter (22, figure 2-2) must indicate 0 (+2, -0) psi.

s. Adjust test regulator RS3 and test valve VS4 until W/G DIFFERENTIAL PRESSURE meter indicates 60.0 psi. Test gage PS2 must indicate 60±2 psig.

t. Adjust test regulator RS3 and test valve VS4 until W/G DIFFERENTIAL PRESSURE meter indicates 140.0 psi. Test gage PS2 must indicate 140±2 psig.

u. Adjust test regulator RS3 and test valve VS4 until W/G DIFFERENTIAL PRESSURE meter indicates 198.0 psi. Test gage PS2 must indicate 198±2 psig.

v. Disconnect cable W11 from TEST AND CALIBRATE TEST VOLTAGE receptacle and connect to W/G DIFFERENTIAL PRESSURE meter SIGNAL receptacle (23, figure 2-2).

w. Set selector switch SX1 on test adapter No. 4 to position 3. Test voltmeter VX2 must indicate 4.950±0.038 volts dc.

x. Set selector switch SX1 on test adapter No. 4 to position 8.

y. Disconnect test cable W12; jumper pins 1 and 2 of REMOTE & CONTROL MONITOR connector (1, figure 2-6); connect test oscilloscope OX1 to pins 49 and 50 of REMOTE & CONTROL MONITOR connector. The output ripple voltage must not exceed 10 millivolts peak-to-peak.

z. Place W/G DIFFERENTIAL PRESSURE meter TEST switch (24, figure 2-2) in ON position.

aa. Adjust test regulator RS3 and test valve VS4 until test gage PS2 indicates 250±3 psig. Test voltmeter VX2 must not indicate more than 6.5 volts dc.

ab. Adjust test regulator RS3 until test gage PS2 indicates zero.

ac. Place W/G DIFFERENTIAL PRESSURE meter TEST switch in OFF position.

ad. Disconnect test equipment from test port TP6. Replace caps on test ports TP3 and TP6. Open differential pressure transducer shutoff valve V5.

ae. Proceed directly to the next test or shut down the refrigeration unit in accordance with paragraph 2-53.a through 2-53.e.

2-51. TEST NO. 9 - DIFFERENTIAL PRESSURE SWITCHES S2, S3, AND S4. This tect checks the operation and accuracy of differential pressure switches S2, S3, and S4. Establish nitrogen purge conditions as outlined in paragraph 2-32.t. Continue directly from the previous test or activate the refrigeration unit in accordance with paragraph 2-33.a through 2-33.k. Connect the test equipment as shown in figure 2-12 and proceed as follows:

a. To test differential pressure switch S2, close shutoff valves V8 and V9 and remove caps from test ports TP4 and TP5. Connect test equipment shown in view B of figure 2-12 to TP5. Use test gage PS5.

b. Open test valve VS3.

c. Slowly increase pressure by adjusting test regulator RS3 and test valve VS4. When test gage PS5 indicates 10±1 psig, the FLOWMETER SELECT AUXILIARY ΔP HI indicator lamp (60, figure 2-2) must come on. Note pressure.

d. Adjust test regulator RS3 until test gage PS5 indicates approximately 14 psig.

e. Reduce pressure by adjusting test regulator RS3 and test valve VS4 until FLOWMETER SELECT AUXILIARY ΔP HI indicator lamp goes off. This must occur when test gage PS5 indicates within 3 psig of the pressure noted in paragraph 2-51.c.

f. Adjust test regulator RS3 until test gage PS5 indicates zero.

g. Disconnect test equipment from TP5. Replace caps on test ports TP4 and TP5, and open shutoff valves V8 and V9.

h. To test differential pressure switch S3, close shutoff valves V16 and V24, and remove caps from test ports TP10 and TP11. Connect test equipment shown in view B of figure 2-12 to test port TP11 and repeat paragraph 2-51.c through 2-51.g, but use FILTER ΔP HI indicator lamp (55, figure 2-2) and 16±1 psig.

i. To test differential pressure switch S4, close shutoff valves V31 and V32, and remove caps from test ports TP16 and TP17. Connect test equipment shown in view B of figure 2-12 to test port TP17 and repeat pargraph 2-51.c through 2-51.g, but use FLOWMETER SELECT MAIN ΔP HI indicator lamp (57, figure 2-2).

j. Proceed directly to the next test or shut down the refrigeration unit in accordance with paragraph 2-53.a through 2-53.e.

2-52. TEST NO. 10 - RELIEF VALVES V42 AND V35. This test checks the operation and accuracy of relief valves V42 and V35. Establish nitrogen purge conditions as outlined in paragraph 2-32.t. Continue directly from the previous test or activate the refrigeration unit in accordance with paragraph 2-33.a through 2-33.k. Connect test equipment as shown in figure 2-12 and proceed as follows:

a. To test relief valve V42, remove cap from W/G FILL bulkhead union (5, figure 2-6) and connect test equipment shown in view B of figure 2-12. Use test gage PS2.

b. Close RESERVOIR RETURN (12, figure 2-3), SYSTEM FILL RESERVOIR (9), and SYSTEM FILL DIRECT (10) valves.

c. Slowly increase pressure, indicated by test gage PS2, by adjusting test regulator RS3 and test valve VS4 until relief valve V42 relieves. This must occur when the pressure reaches 250 (+5, -10) psig.

d. Slowly reduce pressure, indicated by test gage PS2, by adjusting test regulator RS3 and test valve VS4 until relief valve V42 stops relieving. This must occur when the pressure reaches 220 psig minimum.

e. Adjust test regulator RS3 until test gage PS2 indicates zero. Disconnect test equipment from W/G FILL bulkhead union.

f. To test relief valve V35, remove cap from test port TP17 and connect test equipment shown in view B of figure 2-12 to TP17 and repeat paragraph 2-52.c through 2-52.e.

g. Disconnect test equipment. Replace caps on W/G FILL bulkhead union and test port TP17.

h. Open RESERVOIR RETURN (12), SYSTEM FILL RESERVOIR (9), and SYSTEM FILL DIRECT (10) valves.

i. Shut down the refrigeration unit in accordance with paragraph 2-53.a through 2-53.e.

2-53. REFRIGERATION UNIT SHUTDOWN PROCEDURE.

2-54. The procedure for deactivating the refrigeration unit is performed as follows:

a. Deenergize and disconnect test equipment from the refrigeration unit if desired.

b. Place all circuit breakers in the OFF position.

c. Place all switches and controls in the off or deenergized positions.

d. Remove facility interface connections if desired.

e. Bring all pressure lines to ambient.

SECTION III

TROUBLE ANALYSIS

3-1. GENERAL.

3-2. Analysis of malfunctions or discrepancies indicated by performance of section II functional test procedures will serve to isolate probable cause to specific component assemblies. In accordance with the prevailing maintenance concept, the applicable remedy will generally prescribe removal and replacement of the malfunctioning component.

3-3. To eliminate repetitious procedures and causes, the tables in this section have been compiled assuming that the functional tests of section II will be performed in sequence. Should a specific test be performed and a faulty indication observed, reference to previous tests should be made to cover all probable causes.

3-4. TROUBLE ANALYSIS TABLES.

3-5. Tables 3-1 through 3-11 contain the trouble analysis procedures pertinent to the test procedures described in section II.

3-6. TROUBLE ANALYSIS FOR ENCLOSURE PURGE CIRCUIT TEST. Table 3-1 contains a list and analysis of equipment "troubles" which may be indicated by performance of the enclosure purge circuit test, described in paragraph 2-31.

Table 3-1. Trouble Analysis for Enclosure Purge Circuit Test

Related Paragraph	Trouble	Probable Cause	Remedy
2-32.d	Lamp does not go out when test gage indicates 2.25±0.25 inches H_2O.	Defective pressure switch S9 (figure 8-1).	Replace.
		Leak in purge line.	Locate leak by applying leak test solution (Specification MIL-L-25567) to purge line fittings. Repair leak (refer to figure 8-1).

Table 3-1. Trouble Analysis for Enclosure Purge Circuit Test (Cont)

Related Paragraph	Trouble	Probable Cause	Remedy
2-32.e	Test gate indicates 2.50±0.10 inches H_2O but ENCLOSURE PURGE PRESSURE meter does not indicate 2.5 inches H_2O.	Defective meter M6 (figure 8-2).	Replace (see table 3-3).
		Defective transducer MT13 (figure 8-2).	Calibrate or replace.
		Leak in purge line.	Locate leak by applying leak test solution (Specification MIL-L-25567) to purge line fittings. Repair leak (refer to figure 8-2).
2-32.f	Purge pressure gages do not indicate 2.5 ±0.5 inches H_2O.	Defective gage.	Replace.
		Leak in purge line.	Locate leak by applying leak test solution (Specification MIL-L-25567) to purge line fittings. Repair leak (refer to figure 8-1).
		Transducer MT13 out of calibration.	Recalibrate.
2-32.g	Test gage indicates 4.00±0.10 inches H_2O but ENCLOSURE PURGE PRESSURE meter does not indicate 4.0 inches H_2O.	Defective meter M6.	Replace (see table 3-3).
		Defective transducer MT13.	Replace.
		Leak in purge line.	Locate leak by applying leak test solution (Specification MIL-L-25567) to purge line fittings and connectors.
		MT13 out of calibration.	Recalibrate.

Table 3-1. Trouble Analysis for Enclosure Purge Circuit Test (Cont)

Related Paragraph	Trouble	Probable Cause	Remedy
2-32.i	Test voltmeter does not indicate 2.000 ±0.075 volts dc.	Defective transducer MT13.	Replace.
2-32.k	Test voltmeter does not indicate 2.000 ±0.075 volts dc.	Defective transducer MT13.	Replace.
2-32.l	Output ripple voltage exceeds 10 millivolts peak-to-peak.	Defective transducer MT13.	Replace.
2-32.m	Test voltmeter does not indicate 0.0 (+0.5, -0.0) volts dc.	Defective transducer MT13.	Replace.
2-32.n	ENCLOSURE PURGE PRESSURE LO lamp does not go on.	Defective pressure switch S9.	Replace.
2-32.u	Flow at test orifice exceeds 4 standard cfm.	Defective purge pressure gage.	Replace.
		Extensive leakage in purged boxes.	Tighten purge box line-fittings (refer to figure 8-1).

3-7. TROUBLE ANALYSIS FOR TEST NO. 1. Table 3-2 contains a list and analysis of equipment "troubles" which may be indicated by performance of Test No. 1, described in paragraph 2-43.

Table 3-2. Trouble Analysis for Test No. 1

Related Paragraph	Trouble	Probable Cause	Remedy
2-43.a	Any lamp goes on.	Defective circuit breaker CB1 (figure 8-3).	Replace.
		Defective wiring.	Repair (refer to figures 8-6 through 8-9).

Table 3-2. Trouble Analysis for Test No. 1 (Cont)

Related Paragraph	Trouble	Probable Cause	Remedy
2-43.c	28 VDC OFF lamp does not go on.	Defective lamp DS4 (figure 8-2).	Replace.
		Defective diode CR13.	Replace.
		Defective circuit breaker CB1 (figure 8-3).	Replace.
		Defective wiring.	Repair (refer to figures 8-6 through 8-9).
	Cabinet fan does not operate.	Defective fan.	Replace.
		Defective wiring.	Repair (refer to figures 8-6 through 8-9).
2-43.d	Individual lamp does not go on.	Defective lamp (figure 8-2).	Replace.
		Defective associated lamp diode.	Replace.
		Defective circuit breaker CB1 or CB2 (figure 8-3).	Replace.
	Indicator lights do not go on.	Defective wiring.	Repair (refer to figures 8-6 through 8-9).
2-43.e	FLOWMETER SELECT ON lamp does not go on.	Defective lamp DS40 (figure 8-2).	Replace.
		Defective diode CR38.	Replace.
		Defective wiring.	Repair (refer to figures 8-6 through 8-9).
2-43.g	Lamps do not go on.	Defective lamp.	Replace.
		Defective associated lamp diode.	Replace.

Table 3-2. Trouble Analysis for Test No. 1 (Cont)

Related Paragraph	Trouble	Probable Cause	Remedy
2-43.g (Cont)		Defective switch S8 (figure 8-2).	Replace.
		Defective wiring.	Repair (refer to figures 8-6 through 8-9).
2-43.i	TOTAL TIME meter does not operate.	Defective switch S18 (figure 8-2).	Replace.
		Defective relay K24 (figure 8-2).	Replace.
		Defective meter M1 (figure 8-3).	Replace.
		Defective wiring.	Repair (refer to figures 8-6 through 8-9).
2-43.j	Test voltmeter indicates dc voltage.	Defective switch S34 (figure 8-2).	Replace.
		Defective wiring.	Repair (refer to figures 8-6 through 8-9).
2-43.k	Test voltmeter does not indicate 28 ±4 volts dc.	Defective switch S34 (figure 8-2).	Replace.
		Defective wiring.	Repair (refer to figures 8-6 through 8-9).
2-43.l	Test voltmeter does not indicate 3.750 ±0.010 volts dc.	Defective switch S34 (figure 8-2).	Replace.
		Defective 5 vdc power supply.	Replace.
		Defective wiring.	Repair (refer to figures 8-6 through 8-9).
2-43.m	Voltage not adjustable over 0 to 5.000 volts dc range.	Defective potentiometer R8 (figure 8-2).	Replace.

Table 3-2. Trouble Analysis for Test No. 1 (Cont)

Related Paragraph	Trouble	Probable Cause	Remedy
2-43.m (Cont)		Defective switch S34.	Replace.
		Defective wiring.	Repair (refer to figures 8-6 through 8-9).

3-8. TROUBLE ANALYSIS FOR TEST NO. 2. Table 3-3 contains a list and analysis of equipment "troubles" which may be indicated by performance of Test No. 2, described in paragraph 2-44.

Table 3-3. Trouble Analysis for Test No. 2

Related Paragraph	Trouble	Probable Cause	Remedy
2-44.f	REFRIGERATION RETURN TEMPERATURE meter indicates same reading.	Defective switch S3 (figure 8-2).	Replace.
		Defective meter M3.	Replace.
		Defective wiring.	Repair (refer to figures 8-6 through 8-9).
2-44.i	TEST AND CALIBRATE METER TEST lamp does not go on.	Defective lamp DS10 (figure 8-2).	Replace.
		Defective switch S12.	Replace.
		Defective diode CR20.	Replace.
		Defective wiring.	Repair (refer to figures 8-6 through 8-9).
2-44.j	Individual meter does not indicate 3/4 scale, and not within tolerance.	Defective meter.	Replace.
		Defective wiring.	Repair (refer to figures 8-6 through 8-9).

3-9. TROUBLE ANALYSIS FOR TEST NO. 3. Table 3-4 contains a list and analysis of equipment "troubles" which may be indicated by performance of Test No. 3, described in paragraph 2-45.

Table 3-4. Trouble Analysis for Test No. 3

Related Paragraph	Trouble	Probable Cause	Remedy
2-45.b	WRONG PHASE lamp does not go on.	Defective lamp DS27 (figure 8-2).	Replace.
		Defective diode CR64.	Replace.
		Defective circuit breaker CB4 (figure 8-3).	Replace.
		Defective wiring.	Repair (refer to figures 8-6 through 8-9).
2-45.f	480 VAC 3Ø 60~ ON lamp goes on.	Defective switch S24 (figure 8-2).	Replace.
		Defective wiring.	Repair (refer to figures 8-6 through 8-9).
2-45.h	WRONG PHASE lamp goes on.	Defective circuit breaker CB4. (figure 8-3).	Replace.
		Defective wiring.	Repair (refer to figures 8-6 through 8-9).
2-45.i	480 VAC 3Ø 60 ~ ON lamp does not go on.	Defective lamp DS28 (figure 8-2).	Replace.
		Defective diode CR74.	Replace.
		Defective switch S24.	Replace.
		Defective wiring.	Repair (refer to figures 8-6 through 8-9).

3-10. TROUBLE ANALYSIS FOR TEST NO. 4. Table 3-5 contains a list and analysis of equipment "troubles" which may be indicated by performance of Test No. 4, described in paragraph 2-46.

Table 3-5. Trouble Analysis for Test No. 4

Related Paragraph	Trouble	Probable Cause	Remedy
2-46.b	FLOW CONTROL ON lamp or calibration oscillator POWER lamp do not go on.	Defective lamp DS21 or POWER lamp.	Replace.
		Defective diode CR53 (figure 8-2).	Replace.
		Defective switch S22.	Replace.
		Defective wiring.	Repair (refer to figures 8-6 through 8-9, or see section I for applicable vendor manual).
2-46.e	Oscillator frequency is not within 9.995 to 10.005 millisecond count.	Defective oscillator.	Calibrate (refer to section VI) or replace.
2-46.g	FLOWMETER SELECT MAIN ON, MAIN FLOWMETER BYPASS CLOSED, and AUXILIARY FLOWMETER BYPASS OPEN lamps do not go on.	Defective lamp DS39, DS41, or DS37 (figure 8-2).	Replace.
		Defective associated lamp diode.	Replace.
		Defective switch S33.	Replace.
		Defective wiring.	Repair (refer to figures 8-6 through 8-9).
2-46.h	W/G FLOW meter does not indicate within 0.3 gpm of flow value corresponding to 100 cps on main flowmeter calibration curve.	Defective meter M7 (figure 8-2).	Replace (see table 3-3).
		Frequency converter No. 1 out of calibration.	Calibrate (refer to section VI).

Table 3-5. Trouble Analysis for Test No. 4 (Cont)

Related Paragraph	Trouble	Probable Cause	Remedy
2-46.h (Cont)		Defective frequency converter No. 1.	Replace.
2-46.i	Test voltmeter does not indicate 5.0±1.5 volts dc.	Frequency converter No. 1 out of calibration.	Calibrate (refer to section VI).
		Defective frequency converter No. 1.	Replace.
2-46.j	Test voltmeter does not indicate 0.0 (+0.5, -0.0) volts dc.	Defective wiring.	Repair (refer to figures 8-6 through 8-9).
2-46.n	Test voltmeter does not indicate a voltage that signifies a flow rate within 0.225 gpm of that in paragraph 2-46.h.	Frequency converter No. 1 out of calibration.	Calibrate (refer to section VI).
		Defective frequency converter No. 1.	Replace.
2-46.p	Output ripple voltage exceeds 10 millivolts peak-to-peak.	Defective frequency converter No. 1.	Replace.
2-46.r	Test voltmeter indicates more than 6.5 volts dc.	Defective frequency converter No. 1.	Replace.
2-46.t	W/G FLOW meter does not indicate within 0.3 gpm of flow value corresponding to 120 cps on main flowmeter calibration curve.	Defective meter M7 (figure 8-2).	Replace (see table 3-3).
		Frequency converter No. 1 out of calibration.	Calibrate (refer to section VI).
		Defective frequency converter No. 1.	Replace.
2-46.v	FLOWMETER SELECT AUXILIARY ON, MAIN FLOWMETER BYPASS OPEN, and AUXILIARY FLOWMETER BYPASS CLOSED lamps do not go on.	Defective lamp DS40, DS38 or DS37 (figure 8-2).	Replace.
		Defective associated lamp diode.	Replace.
		Defective switch S33.	Replace

Table 3-5. Trouble Analysis for Test No. 4 (Cont)

Related Paragraph	Trouble	Probable Cause	Remedy
2-46.v (Cont)		Defective wiring.	Repair (refer to figures 8-6 through 8-9).
2-46.w	Test voltmeter does not indicate 5.0±1.5 volts dc.	Frequency converter out of calibration.	Calibrate (refer to section VI).
		Defective frequency converter.	Replace.
2-46.x	Test voltmeter does not indicate 0.0 (+0.5, -0.0) volts dc.	Defective wiring.	Repair (refer to figures 8-6 through 8-9).
2-46.aa	W/G FLOW meter does not indicate within 0.3 gpm at flow value corresponding to 120 cps on auxiliary flowmeter calibration curve.	Defective meter M7.	Replace (see table 3-3).
		Frequency converter out of calibration.	Calibrate (refer to section VI).
		Defective frequency converter.	Replace.

3-11. TROUBLE ANALYSIS FOR TEST NO. 5. Table 3-6 contains a list and analysis of equipment "troubles" which may be indicated by performance of Test No. 5, described in paragraph 2-47.

Table 3-6. Trouble Analysis for Test No. 5

Related Paragraph	Trouble	Probable Cause	Remedy
2-47.a	Lamps do not go on.	Defective lamp (figure 8-2).	Replace.
		Defective associated diode.	Replace.
		Defective associated switch.	Replace.

Table 3-6. Trouble Analysis for Test No. 5 (Cont)

Related Paragraph	Trouble	Probable Cause	Remedy
2-47.a (Cont)		Defective wiring.	Repair (refer to figures 8-6 through 8-9).
2-47.b	Test voltmeter does not indicate 5.0±1.5 volts dc.	Defective 5 vdc power supply.	Replace.
2-47.c	Test voltmeter does not indicate 0.0 (+0.5, -0.0) volts dc.	Defective switch S27 (figure 8-2).	Replace.
		Defective wiring.	Repair (refer to figures 8-6 through 8-9).
2-47.d	Lamps do not go on.	Defective lamp.	Replace.
		Defective associated diode.	Replace.
		Defective associated switch.	Replace.
		Defective wiring.	Repair (refer to figures 8-6 through 8-9).
2-47.e	Test voltmeter does not indicate 5.0±1.5 volts dc.	Defective 5 vdc power supply.	Replace.
2-47.f	Test voltmeter does not indicate 0.0 (+0.5, -0.0) volts dc.	Defective switch S25 (figure 8-2).	Replace.
		Defective wiring.	Repair (refer to figures 8-6 through 8-9).
2-47.i	PUMPS BACKUP PUMP ON lamp does not go on.	Defective lamp DS31 (figure 8-2).	Replace.
		Defective diode CR81.	Replace.
		Defective switch S26.	Replace.

Table 3-6. Trouble Analysis for Test No. 5 (Cont)

Related Paragraph	Trouble	Probable Cause	Remedy
2-47.i (Cont)		Defective wiring.	Repair (refer to figures 8-6 through 8-9).
2-47.l	PUMPS W/G FILLING START lamp does not go on.	Defective lamp DS33 (figure 8-2).	Replace.
		Defective diode CR68.	Replace.
		Defective switch S30.	Replace.
		Defective wiring.	Repair (refer to figures 8-6 through 8-9).
2-47.m	Lamps do not go on.	Defective lamp.	Replace.
		Defective associated lamp diode.	Replace.
		Defective wiring.	Repair (refer to figures 8-6 through 8-9).
2-47.n	Lamps do not go off.	Defective associated solenoid diode.	Replace.
		Defective wiring.	Repair (refer to figures 8-6 through 8-9).
2-47.p	Solenoid valves do not energize or deenergize.	Defective solenoid valve.	Replace.
		Defective wiring.	Repair (refer to figures 8-6 through 8-9).
2-47.q	Lamps do not go off.	Defective associated solenoid valve.	Replace.
		Defective wiring.	Repair (refer to figures 8-6 through 8-9).

Table 3-6. Trouble Analysis for Test No. 5 (Cont)

Related Paragraph	Trouble	Probable Cause	Remedy
2-47.r	Lamps do not go on.	Defective associated solenoid valve.	Replace.
		Defective wiring.	Repair (refer to figures 8-6 through 8-9).
2-47.s	Test voltmeter does not indicate 5.0±1.5 volts dc.	Defective 5 vdc power supply.	Replace.
2-47.t	Test voltmeter does not indicate 0.0 (+0.5 -0.0) volts dc.	Defective associated solenoid valve.	Replace.
		Defective wiring.	Repair (refer to figures 8-6 through 8-9).
2-47.x	Solenoid valves do not energize or deenergize.	Defective solenoid valve.	Replace.
		Defective wiring.	Repair (refer to figures 8-6 through 8-9).
2-47.y	Lamps specified in paragraph 2-47.q do not go on.	Defective associated solenoid valve.	Replace.
		Defective wiring.	Repair (refer to figures 8-6 through 8-9).
	Lamps specified in paragraph 2-47.v do not go off.	Defective associated solenoid valve.	Replace.
		Defective wiring.	Repair (refer to figures 8-6 through 8-9).
2-47.z	Test voltmeter does not indicate 5.0±1.5 volts dc.	Defective switch S33 (figure 8-2).	Replace
		Defective wiring.	Repair (refer to figures 8-6 through 8-9).

Table 3-6. Trouble Analysis for Test No. 5 (Cont)

Related Paragraph	Trouble	Probable Cause	Remedy
2-47.aa	Test voltmeter does not indicate 0.0 (+0.5, -0) volts dc.	Defective 5 vdc power supply.	Replace.
2-47. ab	Test voltmeter does not indicate 5.0±1.5 volts dc.	Defective switch S33 (figure 8-2).	Replace.
		Defective wiring.	Repair (refer to figures 8-6 through 8-9).
2-47.ae	OPERATION SELECTION MODE AUTO lamp does not go on.	Defective lamp DS7 (figure 8-2).	Replace.
		Defective diode CR18.	Replace.
		Defective switch S14.	Replace.
		Defective wiring.	Repair (refer to figures 8-6 through 8-9).
2-47.ah	OPERATION SELECTION STATION ACE lamp does not go on.	Defective lamp DS15 (figure 8-2).	Replace.
		Defective diode CR26.	Replace.
		Defective switch S9.	Replace.
		Defective wiring.	Repair (refer to figures 8-6 through 8-9).
2-47.ai	Test voltmeter does not indicate 5.0±1.5 volts dc.	Defective 5 vdc power supply.	Replace.
2-47.aj	Test voltmeter does not indicate 5.0±1.5 volts dc.	Defective 5 vdc power supply.	Replace.
		Defective wiring.	Repair (refer to figures 8-6 through 8-9).
2-47.ak	FLOWMETER SELECT AUXILIARY ON lamp does not go on.	Defective lamp DS40 (figure 8-2).	Replace.
		Defective diode CR87.	Replace.

Table 3-6. Trouble Analysis for Test No. 5 (Cont)

Related Paragraph	Trouble	Probable Cause	Remedy
2-47.ak (Cont)		Defective relay K46.	Replace.
		Defective wiring.	Repair (refer to figures 8-6 through 8-9).

3-12. TROUBLE ANALYSIS FOR TEST NO. 6. Table 3-7 contains a list and analysis of equipment "troubles" which may be indicated by performance of Test No. 6, described in paragraph 2-48.

Table 3-7. Trouble Analysis for Test No. 6

Related Paragraph	Trouble	Probable Cause	Remedy
2-48.y	Fill pump P2 does not start.	Defective switch S30 (figure 8-2).	Replace.
		Defective wiring.	Repair (refer to figures 8-6 through 8-9).
		Defective pump.	Replace.
2-48.aa	TRIM BYPASS VALVE OPEN lamp does not go on.	Defective lamp DS14 (figure 8-2).	Replace.
		Defective flow switch S1 (figure 8-1).	Replace.
		Defective wiring.	Repair (refer to figures 8-6 through 8-9).
2-48.ad.1	FILTER BYPASS SOL VALVE OPEN lamp does not go on.	Defective lamp DS23 (figure 8-2).	Replace.
		Defective diode CR47.	Replace.
		Defective switch S32.	Replace.

Table 3-7. Trouble Analysis for Test No. 6 (Cont)

Related Paragraph	Trouble	Probable Cause	Remedy
2-48.ad.1 (Cont)		Defective relay K34.	Replace.
		Defective solenoid V14.	Replace.
		Defective wiring.	Repair (refer to figures 8-6 through 8-9).
2-48.ad.2	FILTER BYPASS SOL VALVE CLOSED lamp does not go on.	Defective lamp DS12 (figure 8-2).	Replace.
		Defective diode CR57.	Replace.
		Defective switch S31.	Replace
		Defective solenoid V14.	Replace.
		Defective wiring.	Repair (refer to figures 8-6 through 8-9).
2-48.ad.3	W/G FLOW meter indicates flow.	Defective switch S29 (figure 8-2).	Replace.
		Defective diode CR110.	Replace.
		Defective meter M7.	Replace (see table 3-3).
		Defective wiring.	Repair (refer to figures 8-6 through 8-9).
2-48.ad.4	Lamps do not go on.	Defective lamp DS32 or DS29.	Replace.
		Defective diode CR67.	Replace.
		Defective switch S28.	Replace.

Table 3-7. Trouble Analysis for Test No. 6 (Cont)

Related Paragraph	Trouble	Probable Cause	Remedy
2-48.ad.4 (Cont)		Defective flow switch S5.	Replace.
		Defective wiring.	Repair (refer to figures 8-6 through 8-9).
		Defective meter M7.	Replace (see table 3-3).
2-48.af	Meters do not function.	Defective meter M1, M2, M4, M5.	Replace (see table 3-3).

3-13. TROUBLE ANALYSIS FOR TEST NO. 7. Table 3-8 contains a list and analysis of equipment "troubles" which may be indicated by performance of Test No. 7, described in paragraph 2-49.

Table 3-8. Trouble Analysis for Test No. 7

Related Paragraph	Trouble	Probable Cause	Remedy
2-49.h	REFRIGERATION SYSTEM ON lamp does not go on.	Defective lamp DS17 (figure 8-11).	Replace.
		Defective diode CR29.	Replace.
		Defective switch S16.	Replace.
		Defective wiring.	Repair (refer to figures 8-6 through 8-11).
	Compressor motor does not start.	Defective wiring.	Repair (refer to figures 8-6 through 8-11).
		Defective compressor.	See section I for applicable vendor manual.

Table 3-8. Trouble Analysis for Test No. 7 (Cont)

Related Paragraph	Trouble	Probable Cause	Remedy
2-49.h	Refrigeration fan lights do not go on.	Defective wiring.	Repair (refer to figures 8-6 through 8-11).
2-49.o	Refrigeration system does not stabilize.	Defective temperature controller.	See section I for applicable vendor manual.
		Defective flow controller.	See section I for applicable vendor manual.
		Defective frequency converter and calibration oscillator meter set.	See section I for applicable vendor manual.
		Defective bypass valve V41.	Replace.
		Defective mixing valve V18.	Replace.
		Defective circulating pump P1.	Replace.
		Contaminated filter FL1.	Clean or replace filter element.
		Defective 1/P transducer.	See section I for applicable vendor manual.
2-49.r	Refrigeration system does not stabilize.	See preceding cause.	See preceding remedy.
2-49.s	Test voltmeter does not indicate 0.0 (+0.5, -0.0) volts dc.	Defective wiring.	Repair (refer to figures 8-6 through 8-11).

3-14. TROUBLE ANALYSIS FOR TEST NO. 8. Table 3-9 contains a list and analysis of equipment "troubles" which may be indicated by performance of Test No. 8, described in paragraph 2-50.

Table 3-9. Trouble Analysis for Test No. 8

Related Paragraph	Trouble	Probable Cause	Remedy
2-50.b	W/G SUPPLY PRESSURE meter does not indicate 0 (+5, -0) psig.	Defective meter M4 (figure 8-2).	Replace (see table 3-3).
2-50.d	W/G SUPPLY PRESSURE meter and test gage readings do not correlate.	Defective transducer.	Replace.
2-50.e	W/G SUPPLY PRESSURE meter and test gage readings do not correlate.	Defective transducer.	Replace.
2-50.f	W/G SUPPLY PRESSURE meter and test gage readings do not correlate.	Defective transducer.	Replace.
2-50.h	Test voltmeter does not indicate 4.950 ±0.038 volts.	Defective 5 vdc power supply.	Replace.
2-50.j	Test voltmeter does not indicate 4.950 ±0.038 volts dc.	Defective 5 vdc power supply.	Replace.
2-50.k	Output ripple voltage exceeds 10 millivolts peak-to-peak.	Defective 5 vdc power supply.	Replace.
2-50.m	Test gage and test voltmeter readings do not correlate.	Defective transducer.	Replace.
2-50.r	W/G DIFFERENTIAL PRESSURE meter does not indicate 0 (+2, -0) psi.	Defective meter M5.	Replace (see table 3-3).
2-50.s	W/G DIFFERENTIAL PRESSURE meter and test gage readings do not correlate.	Defective transducer.	Replace.

Table 3-9. Trouble Analysis for Test No. 8 (Cont)

Related Paragraph	Trouble	Probable Cause	Remedy
2-50.t	W/G DIFFERENTIAL PRESSURE meter and test gage readings do not correlate.	Defective transducer.	Replace.
2-50.u	W/G DIFFERENTIAL PRESSURE meter and test gage readings do not correlate.	Defective transducer.	Replace.
2-50.w	Test voltmeter does not indicate 4.950 ±0.038 volts.	Defective 5 vdc power supply.	Replace
2-50.y	Output ripple voltage exceeds 10 millivolts peak-to-peak.	Defective 5 vdc power supply.	Replace.
2-50.aa	Test gage and test voltmeter do not correlate.	Defective transducer.	Replace.

3-15. TROUBLE ANALYSIS FOR TEST NO. 9. Table 3-10 contains a list and analysis of equipment "troubles" which may be indicated by performance of Test No. 9, described in paragraph 2-51.

Table 3-10. Trouble Analysis for Test No. 9

Related Paragraph	Trouble	Probable Cause	Remedy
2-51.c	FLOWMETER SELECT AUXILIARY ΔP HI lamp does not go on.	Defective lamp DS43 (figure 8-2).	Replace.
		Defective diode CR97.	Replace.
		Defective pressure switch S2 (figure 8-1).	Replace.

Table 3-10. Trouble Analysis for Test No. 9 (Cont)

Related Paragraph	Trouble	Probable Cause	Remedy
2-51.c (Cont)		Defective wiring.	Repair (refer to figures 8-6 through 8-9).
2-51.e	FLOWMETER SELECT AUXILIARY ΔP HI lamp does not go off.	Defective pressure switch S2 (figure 8-1).	Replace.
2-51.h	FILTER ΔP HI lamp does not go on.	Defective lamp DS13 (figure 8-2).	Replace.
		Defective pressure switch S3 (figure 8-1).	Replace.
		Defective wiring.	Repair (refer to figures 8-6 through 8-9).
	FILTER ΔP HI lamp does not go off.	Defective pressure switch S3 (figure 8-1).	Replace.
2-51.i	FLOWMETER SELECT MAIN ΔP HI lamp does not go on.	Defective lamp DS42 (figure 8-2).	Replace.
		Defective diode CR94.	Replace.
		Defective pressure switch S4 (figure 8-1).	Replace.
		Defective wiring.	Repair (refer to figures 8-6 through 8-9).
	FLOWMETER SELECT MAIN ΔP HI lamp does not go off.	Defective pressure switch S4 (figure 8-2).	Replace.

3-16. TROUBLE ANALYSIS FOR TEST NO. 10. Table 3-11 contains a list and analysis of equipment "troubles" which may be indicated by performance of Test No. 10, described in paragraph 2-52.

Table 3-11. Trouble Analysis for Test No. 10

Related Paragraph	Trouble	Probable Cause	Remedy
2-52.c	Relief valve does not open.	Defective relief valve V42 (figure 8-1).	Replace.
2-52.d	Relief valve does not close.	Defective relief valve V42 (figure 8-1).	Replace.
2-52.f	Relief valve does not open.	Defective relief valve V35 (figure 8-1).	Replace.
	Relief valve does not close.	Defective relief valve V35 (figure 8-1).	Replace.

SECTION IV

REMOVAL AND INSTALLATION

4-1. GENERAL.

4-2. The removal and installation procedures described in this section are applicable to those items designated as the possible cause of equipment malfunction defined in section III, trouble analysis. Coverage is limited to those items that are obscure or such complexity as to require special knowledge or technique.

4-3. REMOVAL OF COMPONENTS.

WARNING

Disconnect all electrical and pneumatic power prior to removal of any component from the refrigeration unit. Be sure to depressurize the refrigeration unit enclosures and any necessary panel assembly before proceeding with removal. Failure to comply could result in injury to personnel or damage to the equipment.

CAUTION

Observe extreme care when removing universal controller (figure 2-8). Hat section on top of controller is sealed and covers delicate electronic components. Seal may be broken and components damaged if hat is struck sharply. After removing retaining hardware, slide controller forward carefully and slowly, then cant downward to remove, to avoid striking hat against cabinet panel.

4-4. Removal of electrical and electronic components from the service set is accomplished using normal precautions and procedures. Cap connectors or receptacles for protection and tag all wires removed to facilitate reinstallation of components. Cap all disconnected lines and follow standard procedures for disassembly of pneumatic and mechanical assemblies for removal of these components from the unit.

4-5. Access to the components of the refrigeration unit is gained by removal of the access panels at the sides and ends of the unit and by removal of the control panel assemblies. The fluid control module is mounted on metal drawer slides which permit the module to be extended from the refrigeration unit to facilitate component access.

4-6. INSTALLATION OF COMPONENTS.

4-7. Installation of all refrigeration unit components is accomplished by following the reverse of the procedure used in removal. Normal precautions should be taken in the handling of electrical and electronic equipment and the pneumatic components and assemblies must be kept clean and free of foreign matter. Torque values for tube fittings are shown in table 4-1.

4-8. After installing a new part in the refrigeration unit, perform the applicable functional test procedures as detailed in section II. If installation of a new part creates a requirement for performance of a related calibration procedure prior to placing the refrigeration unit in operation, perform the applicable calibration procedure in accordance with section VI.

Table 4-1. Allowable Wrench Torque For AN Tube Fittings

Tubing OD	Wrench Size (818 Nut)		Corrosion Resistant Steel	
Inches	Dash No.	Size	Min (Pounds-Inches)	Max
1/8	-2	3/8	70	80
3/16	-3	7/16	90	100
1/4	-4	9/16	135	150
5/16	-5	5/8	180	200
3/8	-6	11/16	270	300
7/16	-7	3/4	360	400
1/2	-8	7/8	450	500
5/8	-10	1	650	700
3/4	-12	1-1/4	900	1000
7/8	-14	1-3/8	1050	1200
1	-16	1-1/2	1200	1400
1-1/4	-20	2		
1-3/8	-22	2-1/8		
1-1/2	-24	2-1/4		
1-3/4	-28	2-5/8		
2	-32	2-7/8		
3	-48	4		

HF-221

SECTION V

REPAIR INSTRUCTIONS

NOTE

The existing maintenance concept provides that, in the field, any malfunctioning component as-assembly will be removed from the complete test stand, and that a spare, serviceable component will be installed to replace it. Appropriate information and instructions are contained in other sections of this handbook to cover these maintenance functions.

SECTION VI

CALIBRATION AND ADJUSTMENT

6-1. GENERAL.

6-2. This section includes the calibration procedures for the panel mounted meters on the refrigeration unit and the main and auxiliary flow control loops of the refrigeration unit. It includes a list of the components subject to periodic calibration and service as shown in table 6-1.

6-3. METER CALIBRATION.

6-4. The refrigeration unit meters must be calibrated if they do not conform to the requirements of the specification or perform within the tolerances prescribed for the meter in accordance with the functional test for a particular meter circuit.

6-5. Perform the calibration in accordance with the following procedure:

a. Fabricate a jumper cable to enable the output of the TEST AND CALIBRATE TEST VOLTAGE receptacle (66, figure 2-2) to be connected to the SIGNAL receptacle associated with the meter to be calibrated.

b. Connect a digital voltmeter (item 2, table 11) to the TEST AND CALIBRATE panel and set the TEST AND CALIBRATE VOLTAGE ADJUST potentiometer (65) for 5 vdc.

c. With no input to the meter, set the mechanical zero adjustment on the face of the meter for zero indication on the meter.

d. Using the fabricated jumper cable, connect the output of the TEST AND CALIBRATE TEST VOLTAGE receptacle (66) to the SIGNAL receptacle associated with the meter to be calibrated.

e. Adjust the associated meter trim potentiometer until the meter indicates full scale reading.

f. Remove the jumper cable and reset the TEST AND CALIBRATE VOLTAGE ADJUST potentiometer (65) for 2.5 vdc at the TEST AND CALIBRATE TEST VOLTAGE receptacle (66).

g. Reconnect the jumper cable and note that the meter now reads one-half of full scale. If necessary, readjust the trim potentiometer slightly. Repeat the procedure, readjusting the trim potentiometer as required to obtain the best setting. If the meter cannot be calibrated to fall within the tolerances ascribed to the meter, it should be replaced and the new meter calibrated in accordance with this procedure.

6-6. FLOW CONTROL LOOP CALIBRATION.

6-7. The main flow control loop is calibrated in accordance with the following procedure:

a. Activate the refrigeration unit in accordance with the procedure described in paragraph 2-33.a through 2-33.e.

b. Connect a facility nitrogen source with a minimum of 40 psig capacity to the refrigeration unit GN_2 SUPPLY connector (4, figure 2-6) and open the MAIN PRESS. REGULATOR (6, figure 2-3).

c. Adjust regulators R2 and R3 for 20 psig.

d. Press FLOW CONTROL ON switch (43, figure 2-2).

e. Place FLOWMETER SELECT switch (58) to MAIN position.

f. Use the calibration curve supplied with the main flowmeter MT8 to determine the frequency required to simulate 5 gallons per minute flow.

g. Connect an oscillator (item 32, table 2-11) and electronic counter (item 33, table 2-11) to pins a and b of the main flowmeter connector and adjust the oscillator for the frequency determined in paragraph 6-7.f.

h. Set frequency converter SENS. control (8, figure 2-7) fully clockwise.

i. Hold REF. MA/NORM switch (11) in the REF. MA position and adjust REF. MA control (7) for 5 gpm indication on the frequency converter meter (10).

j. Release the REF. MA/NORM switch (11) and adjust METER control (6) for 5 gpm on the frequency converter meter (10).

k. Note flow controller (figure 2-9) and adjust frequency converter HI MA control (12, figure 2-7) for approximately 5 gpm on the flow controller meter.

l. Adjust frequency converter MA TRIM control (13) for exactly 5 gpm indication on the flow controller meter.

m. Note W/G FLOW meter (19, figure 2-2) and adjust frequency converter 0-5V control (14, figure 2-7) for 5 gpm on the meter.

n. Disconnect the oscillator (item 32, table 2-11) and adjust the frequency converter OFFSET control (15) for zero indication on the W/G FLOW meter (19, figure 2-2).

o. Check the flow controller for zero indication. If meter does not read zero, remove the panel covering the I/P transducers and set the upper transducer ZERO control for zero on the flow controller meter.

p. Replace the access covers and deactivate the refrigeration unit or proceed with the auxiliary flowmeter calibration as described in paragraph 6-8.

6-8. The refrigeration auxiliary flow control loop should be calibrated in accordance with the following procedure:

a. Proceed directly from the main flowmeter calibration procedure or activate the refrigeration unit in accordance with the procedure described in paragraph 2-33.a through 2-33.e.

b. Connect a facility nitrogen source with a minimum of 40 psig capacity to the refrigeration unit GN_2 SUPPLY connector (4, figure 2-6) and open the MAIN PRESS. REGULATOR (6, figure 2-3).

c. Adjust regulators R2 and R3 for 20 psig.

d. Press FLOW CONTROL ON switch (43, figure 2-2).

e. Place FLOWMETER SELECT switch (58) to AUXILIARY position.

f. Use the calibration curve supplied with the auxiliary flowmeter MT4 to determine the frequency required to simulate 5 gallons per minute flow.

g. Connect an oscillator (item 32, table 2-11) and electronic counter (item 33, table 2-11) to pins a and b of the auxiliary flowmeter connector and adjust the oscillator for the frequency determined in paragraph 6-8.f.

h. Set frequency converter SENS. control (17, figure 2-7) fully clockwise.

i. Hold REF. MA/NORM switch (20) in the REF. MA position and adjust REF. MA control (18) for 5 gpm indication on the frequency converter meter (21).

j. Release the REF. MA/NORM switch (20) and adjust METER control (19) for 5 gpm on the frequency converter meter.

k. Note flow controller (figure 2-9) and adjust frequency converter HI MA control (26, figure 2-7) for approximately 5 gpm on the flow controller meter.

l. Adjust frequency converter MA TRIM control (25) for exactly 5 gpm indication on the flow controller meter.

m. Note W/G FLOW meter (19, figure 2-2) and adjust frequency converter 0-5V control (24, figure 2-7) for 5 gpm on the meter.

n. Disconnect the oscillator (item 32, table 2-11) and adjust the frequency converter OFFSET control (23, figure 2-7) for zero indication on the W/G FLOW meter (19, figure 2-2).

o. Check the flow controller meter for zero indication. This will already have been set in the main flowmeter calibration.

p. Replace the access covers and deactivate the refrigeration unit in accordance with the procedure described in paragraph 2-53.a through 2-53.e.

6-9. CALIBRATION DATA.

6-10. The components of the refrigeration unit which are subject to periodic calibration or adjustment and the applicable parameters are listed in table 6-1.

Table 6-1. Calibration Data

NAME AND REF DESIG	MODEL AND/OR PART NUMBER	MFG CODE	SUGGESTED CALIBRATION FREQUENCY	PARAMETERS			OPERATING RANGE
				RANGE	ACCURACY	SOURCE OF DATA	
Dial indicating electrical meter M6	Model 20-320 AIR 847120-28	06117	90 days	Scale: 0-10 in. H_2O Input: 0-4 vdc	±1.0%	SCD 847120	Full
Dial indicating electrical meter M1, M3	Model 20-320 AIR 847120-37	06117	90 days	Scale: -30 to +70°F Input: 0-4 vdc	±1.0%	SCD 847120	Full
Dial indicating electrical meter M2	Model 20-320 AIR 847120-36	06117	90 days	Scale: +25 to +125°F Input: 0-4 vdc	±1.0%	SCD 847120	Full
Dial indicating electrical meter M4	Model 20-320 AIR 847120-44	06117	90 days	Scale: 0-500 psig Input: 0-4 vdc	±1.0%	SCD 847120	Full
Dial indicating electrical meter M5	Model 20-320 AIR 847120-45	06117	90 days	Scale: 0-200 psid Input: 0-4 vdc	±1.0%	SCD 847120	Full
Dial indicating electrical meter M7	Model 20-320 AIR 847120-40	06117	90 days	Scale: 0-5 gpm Input: 0-4 vdc	±1.0%	SCD 847120	Full
Pressure gage GA2	Model P524FF AIR 846293-17	61349	90 days	0-5000 psig	±3.0%	SCD 846293	
Pressure gage GA1	Model P524FF AIR 846293-18	61349	90 days	0-400 psig	±2.0%	SCD 846293	
Pressure gage GA3	Model P524FF AIR 846293-23	61349	90 days	0-600 psig	±2.0%	SCD 846293	
Pressure gage GA4 thru GA10	Model P-633	61349	90 days	0-15 in. H_2O		AIR 845567 AIR 847208	
Flow transducer MT4, MT8	Model 3/4-5550 AIR 847268-19	83475	90 days	0-5 gpm 0-5 vdc	±0.5%	SCD 847268	Full
Temperature transducer MT6	2909-3 AIR 847269-3	13946	90 days	-20 to +50°F 0-5 vdc	±0.5%	SCD 847269	Full
Pressure transducer MT13	4-500-3 AIR 847342-3	00153	90 days	0-10 in. H_2O 0-5 vdc	±0.5%	SCD 847342	Full

Table 6-1. Calibration Data (Cont)

NAME AND REF DESIG	MODEL AND/OR PART NUMBER	MFG CODE	SUGGESTED CALIBRATION FREQUENCY	PARAMETERS			OPERATING RANGE
				RANGE	ACCURACY	SOURCE OF DATA	
Pressure transducer MT2	AIR 847342-119	00153	90 days	0-200 psid 0-5 vdc	±0.5%	SCD 847342	Full
Pressure transducer MT5	AIR 847342-109	00153	90 days	0-500 psig 0-5 vdc	±0.5%	SCD 847342	Full
Temperature transducer MT1	1844-2 AIR 847280-2	18123	90 days	+25 to +125°F 0-5 vdc	±0.5%	SCD 847280	Full
Temperature transducer MT3, MT7	1844-4 AIR 847280-4	18123	90 days	-30 to +70°F 0-5 vdc	±0.5%	SCD 847280	Full
Liquid level switch S6	LS800 AIR 847293-1	04034	N.A.			SCD 847293 AIR 847208	
Pressure switch S9	675DH84S AIR 847297-1	09049	N.A.	2.0-2.5 in. H_2O		SCD 847297	
Flow switch S1, S5	17870 AIR 847285-29	04034	N.A.	0.10 ±20% flow at 68±5°F		SCD 847285	5 gpm flow 5 psid 100°F
Pressure switch S2, S3, S4	642DHC50S AIR 847271-1	09049	N.A.	5-15 psid	±1 psid	SCD 847271	
Relief valve V42	RV4-30057-2 AIR 847288-2	99517	N.A.			SCD 847288	
Relief valve V35	RV4-30057-10 AIR 847288-3	99517	N.A.			SCD 847288	
Pressure regulator R2, R3	845405-1	70210	N.A.	0-160 psig		AIR 845405	
Pressure regulator R1	845405-2	70210	N.A.	0-300 psig		AIR 845405	
Pressure regulator R4	LC350-PM AIR 845404-1	23127	N.A.				
Pressure regulator R5	845401-1	70210	N. A.			AIR 845401	

Table 6-1. Calibration Data (Cont)

NAME AND REF DESIG	MODEL AND/OR PART NUMBER	MFG CODE	SUGGESTED CALIBRATION FREQUENCY	PARAMETERS			OPERATING RANGE
				RANGE	ACCURACY	SOURCE OF DATA	
Frequency converter and calibration oscillator A7	SP375-7 SET AIR 847255-2	83475					
Universal controller A5	921-240251DRA AIR 847254-2	70210					
Water-glycol flow controller	51711-2-2-10-3-0	40931					
Flow controller	52201-14-72	40931					
I/P transducer A6	1BA2G1	40931					
Power supply PS1	847119-1	70210		4-6 vdc		AIR 847119	+5.0±0.1 vdc
Temperature amplifier AR1. AR2, AR3	10401 AIR 847281-1	18123		28±4 vdc input 0-5 vdc linear output		SCD 847281	
Refrigeration system	4631 AIR 847247-3					SCD 847247	
Refrigeration system	4512 AIR 847247-2	05172		-15±5 to +50°F		SCD 847247	

6-11. SOLENOID VALVE ADJUSTMENT.

6-12. Inspect and adjust solenoid travel of valve V40 (figure 8-1) as follows:

a. Disconnect connector P4 of cable assembly W19 (figure 8-12) from valve V40 (figure 8-1).

b. Remove cap (1, figure 6-1) from coil housing (2).

c. Determine and record dimension between top of coil housing (2) and top of armature (3).

d. Using a variable 28 vdc power supply equipped with a dc voltmeter, apply voltage to pins A and B of connector (4). Required pull-in voltage must not exceed 18 volts dc. If pull-in voltage exceeds 18 volts dc, valve is defective and must be replaced.

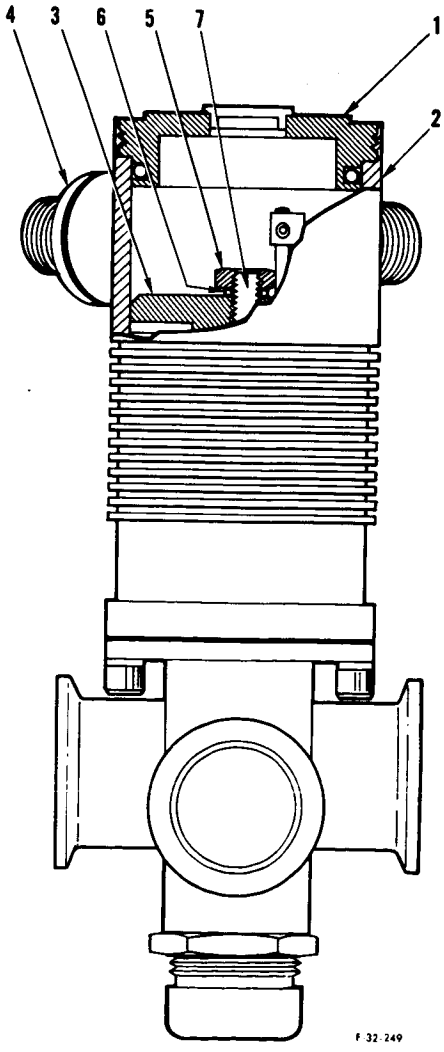

1. Cap
2. Coil housing
3. Armature
4. Connector
5. Nut
6. Washer
7. Screw

Figure 6-1. Solenoid Valve V40 Identification

e. With solenoid valve energized, determine and record dimension between top of coil housing (2) and top of armature (3).

f. Determine difference between dimensions obtained in paragraph 6-12.c and 6-12.e. Length of stroke, which is the difference between dimensions, must be 0.035 to 0.050 inch.

g. Adjust length of stroke, as required, by loosening nust (5) and washer (6), and rotating screw (7). Clockwise rotation of screw (7) increases length of stroke.

h. Repeat procedures of paragraphs 6-12.c through 6-12.g to verify correct stroke adjustment. Tighten washer (6) and nut (5), and reinstall cap (1) in coil housing (2) when correct stroke is obtained.

i. Install connector P4 of cable assembly W19 (figure 8-12) on connector (4, figure 6-1).

6-13. Inspect and adjust solenoid travel of valves V10 (figure 8-1), V 14, V33, and V38 as follows:

a. Disconnect connector P2 of cable assembly W18 from valve V10, connector P3 of cable assembly W18 from valve V14, connector P2 of cable assembly W19 from valve V38, and connector P4 of cable assembly W19 from valve V33.

b. Remove plug (1, figure 6-2) from body (2).

c. Determine and record dimension from bottom of body (2) to bottom of poppet (3).

d. Using a variable 28 volts dc power supply equipped with a dc voltmeter, apply voltage to pins A and B of connector (4). Required pull-in voltage must not exceed 18 volts dc. If pull-in voltage exceeds 18 volts dc, valve is defective and must be replaced.

e. With solenoid valve energized, determine and record dimension between bottom of body (2) and bottom of poppet (3).

f. Determine difference between dimensions obtained in paragraphs 6-13.c and 6-13.e. Length of stroke, which is the difference between dimensions, must be 0.035 to 0.050 inch.

g. To adjust length of stroke, remove cover (5), loosen nut (6) and washer (7), and rotate screw (8). Clockwise rotation of screw (8) increases length of stroke.

h. Repeat procedures of paragraphs 6-12.c through 6-12.g to verify correct stroke length. Tighten washer (7), nut (6), and replace cover (5) and plug (1) when correct stroke is obtained.

i. Install connectors removed by procedures of paragraph 6-12.a.

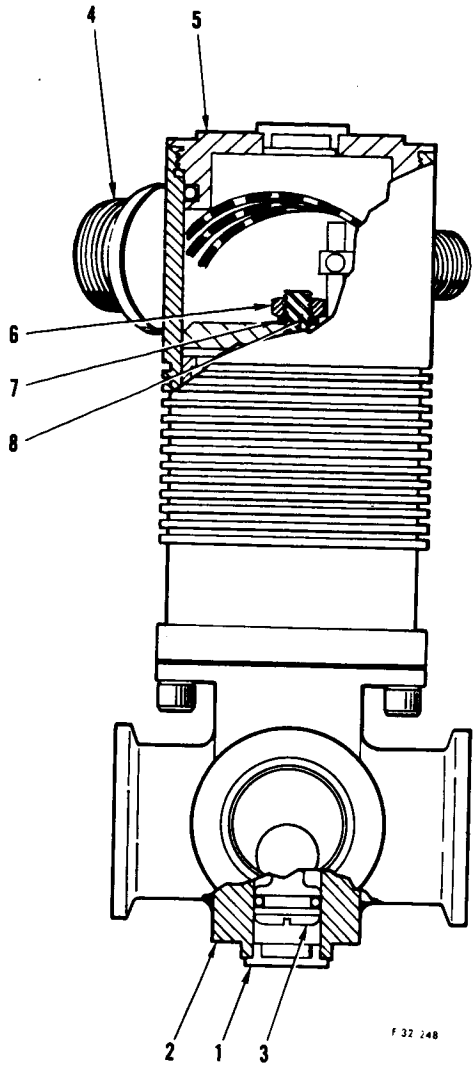

1. Plug
2. Body
3. Poppet
4. Connector
5. Cover
6. Nut
7. Washer
8. Screw

Figure 6-2. Solenoid Valve V10, V14, V33, and V38 Identification

SECTION VII

PERIODIC INSPECTION AND SERVICE

7-1. PERIODIC INSPECTIONS.

NOTE

The following inspection periods are recommendations only. Experience will dictate actual inspection periods to be used.

7-2. Periodic inspection consists of performing regularly scheduled operations, test inspections, and checks to make certain that the operational capabilities of the service set have not been reduced.

7-3. Prior to performing periodic inspections, perform the following visual inspections. Refer to table 7-1 for periodic inspection requirements.

a. Inspect interior and exterior of unit for leaks, insecurity of component mounting, corrosion, deterioration, foreign objects, and other damage.

b. Inspect equipment and records to make certain the equipment agrees with the latest inventory and status records.

Table 7-1. Periodic Inspection Requirements

Step	Requirements	Frequency
1	Check certification of all instruments.	90 days
2	Perform test procedures outlined in paragraphs 2-43 through 2-52 of section II.	90 days

7-4. PREVENTIVE MAINTENANCE.

7-5. Preventive maintenance is to be performed at regular intervals to maintain the equipment in optimum operable condition. Refer to table 7-2 for preventive maintenance requirements.

7-6. OPERATION OF REFRIGERATION UNIT FLOWMETERS.

7-7. To operate refrigeration unit flowmeters MT4 and MT8 (figure 8-1), establish nitrogen purge conditions as outlined in paragraph 2-32.t, and activate

the refrigeration unit in accordance with paragraphs 2-34.a through 2-34.k. Proceed as follows:

a. Turn pressure regulators R1, R2, R3, R5, and GASEOUS NITROGEN MAIN PRESS. REGULATOR (6, figure 2-3) to the fully closed position. Close valves V2, V12, V15, V27, V29, V43, V45, V46, V47, and V48.

b. Open valves V4, V28, V34, and V36.

c. Open GASEOUS NITROGEN GAGE SHUTOFF valve V20 and apply facility nitrogen pressure to establish 1500±50 psig pressure at GASEOUS NITROGEN SOURCE PRESS. gage (4, figure 2-3).

d. Open GASEOUS NITROGEN GAGE SHUTOFF valve V19 and adjust GASEOUS NITROGEN MAIN PRESS. REGULATOR (6) until GASEOUS NITROGEN MAIN REGULATED PRESS. gage (8) indicates 200±5 psig.

e. Adjust pressure regulators R2 and R3 (figure 8-1) until regulator reference gages indicate 20±2 psig.

f. Set refrigeration unit water-glycol flow control tab (1, figure 2-9) to 1 gpm, and set mode control (3) to MANUAL position.

g. Press FLOW CONTROL ON switch (43, figure 2-2).

h. Adjust pressure regulator R1 to 20±2 psig to pressurize reservoir.

i. Adjust pressure regulator R5, valves V44, V58, V50 through V54, and valves V55, V56 and V57 if necessary, to obtain an indication of approximately 2.5 inches of H_2O at pressure gages GA4 through GA10.

j. Place refrigeration unit circuit breakers (2, 3, 5, figure 2-4) to ON position.

k. Press 480 VAC 3Ø 60~ ON and 120 VAC 1Ø 60~ ON switches (82, 86, figure 2-2).

l. Press PUMPS W/G CIRCULATING START switch (77, figure 2-2).

m. Set flow controller mode control (3, figure 2-9) to AUTOMATIC, and allow unit to operate for one hour or more.

n. Press PUMPS W/G CIRCULATING STOP switch (76, figure 2-2).

o. Shut down refrigeration unit in accordance with paragraph 2-54.a through 2-54.e.

7-8. CORRECTIVE MAINTENANCE.

7-9. MAINTENANCE OF FLOWMETERS.

7-10. Refrigeration unit main flowmeter MT8 (figure 8-1), and refrigeration unit auxiliary flowmeter MT4 (figure 8-1) require servicing by removal, disassembly, cleaning, reassembly, and reinstallation.

7-11. Flowmeters MT4, and MT8 are to be serviced regularly at intervals to be determined by experience; however, if a flowmeter is not operated for five days or more it must be serviced before use. Ordinarily, if the preventive maintenance requirements of table 7-2, step 10 is observed, flowmeters will require service only every 60 to 90 days.

7-12. SERVICING OF REFRIGERATION UNIT MAIN FLOWMETER. To service refrigeration unit main flowmeter MT8 (figure 8-1), proceed as follows:

a. Remove retaining screws from periphery of fluid control module panel (figure 2-3). Extend fluid control module assembly fully by disconnecting drain line at lower left side of module assembly after extending the module assembly far enough to obtain access to the drain line.

NOTE

Flowmeter MT8 is located on the rear side of the fluid control module assembly near the upper left corner.

b. Disconnect refrigeration unit electrical cable W32 (figure 8-12) from flowmeter MT8.

c. Disconnect and remove flowmeter MT8 from its associated plumbing.

CAUTION

Internal flowmeter parts must be handled with care. The force necessary to extract spring clip assembly should not exceed 12 to 15 pounds. Do not apply excessive force.

d. Insert GS358 Pottermeter Extractor Tool 3/8 & 1/2 Inch into spring clip assembly in upstream port of flowmeter, and rotate tool one-quarter turn in either direction to align spring clip assembly with loading grooves. Extract spring clip assembly with a steady pulling motion as parallel as possible to axis of housing. Journal support rod and rotor may come out with spring clip assembly.

e. If journal support rod and rotor do not come out with spring clip assembly, carefully remove journal support rod and rotor from housing, using a smooth, long-nose, parallel-jaw pliers.

f. Remove rotor and bearing from journal and remove journal from journal support rod, being careful not to damage rotor. Do not remove bearing from rotor.

g. Remove journal support rod from spring clip assembly.

h. Extract remaining spring clip assembly from downstream port of housing, using GS358 Pottermeter Extractor Tool 3/8 & 1/2 Inch.

i. Clean rotor, bearing, journal, journal support rod, and spring clip assemblies, using L & R No Foam Waterbest No. 1 Watch Cleaning Solution (Galleon and Sons, Distributors, Los Angeles, California, or equivalent) and a piece of soft string. Rinse with 1.1.1- trichloroethane (Specification O-T-620a).

j. Inspect bearing and journal surfaces under a magnifying glass (10 power or greater). Check surface for cleanliness and for cracks, chips, and scoring. Replace journal if cracked, chipped, or scored. Bearing must protrude an equal amount at each side of rotor. Do not replace bearing or rotor. If either bearing or rotor is defective, replace entire unit.

k. Inspect journal support rod for visible wear in center. If wear is apparent to the unaided eye, replace journal support rod.

l. Press journal support rod into spring clip assembly, either upstream or downstream.

m. Assemble journal to journal support rod.

CAUTION

Do not use metal or other hard substance to press clip assembly into housing.

n. Insert spring clip assembly into housing as far as it will go. If necessary, use a piece of hard wood to press clip assembly into position. Insert GS358 Pottermeter Extractor Tool 3/8 & 1/2 Inch into clip assembly and rotate clip assembly until it locates in the center detents.

o. Install rotor and bearing on journal support rod. Hub of rotor marked "in" (if marked) must face upstream.

p. Insert remaining spring clip assembly as in paragraph 7-12n.

q. Place flowmeter in horizontal position and blow into inlet port. Rotor must turn freely without roughness or binding.

r. Reinstall flowmeter by following the reverse of the procedure used in removal. Refer to table 4-1 for proper wrench torque values.

s. Roll fluid control module assembly back into refrigeration unit, connect drain line, and install retaining screws.

7-13. SERVICING OF REFRIGERATION UNIT AUXILIARY FLOWMETER. To service refrigeration unit auxiliary flowmeter MT4 (figure 3-1), proceed as follows:

a. Remove retaining screws from periphery of fluid control module assembly. Extend module assembly as required to obtain access to drain line at lower left side, and disconnect drain line. Extend module assembly as far as it will extend.

NOTE

Flowmeter MT4 is located on the right side of the fluid control module assembly below solenoid valve V10.

b. Disconnect refrigeration unit electrical cable W31 (figure 8-12) from flowmeter MT4.

c. Disconnect and remove as a unit the section of refrigeration unit plumbing containing (top to bottom) filter FL1, check valve V13, solenoid valve V10, and flowmeter MT4.

d. Disconnect flowmeter MT4 from its associated plumbing.

e. Perform procedures in paragraph 7-12.d through 7-12.s.

7-14. REMOVAL OF FILTERS.

7-15. To isolate a particular filter for removal, the following controls must be shut off.

Filter	Controls
FL1	V2, V24
FL2	R4

Table 7-2. General Preventive Maintenance Requirements

Step	Requirements	Frequency
1	Check condition of facility power cable and connectors.	Weekly
2	Check condition of threads on all connectors and protective caps.	Weekly
3	Clean interior and exterior of cabinet; remove all rust, dirt, corrosion, and foreign particles from units.	Weekly
4	Check operation of all manually operated valves, with power off and pressures at zero.	Weekly
5	Check manual operation of all switches and circuit breakers, with power off.	Weekly
6	Check and correct level of water-glycol in reservoir.	Weekly
7	Inspect all visible contacts of electrical components for evidence of arcing and chipped or frayed insulation.	Daily
8	Inspect and clean interiors of all fluid pumps and reservoir.	See note
9	Inspect all visible fluids and pneumatic connections for evidence of leakage.	Daily
10	Inspect and clean fluid filters (refer to paragraph 7-15).	See note
NOTE: As service and experience requires.		

7-16. LUBRICATION.

7-17. There are no lubrication requirements for the refrigeration unit.

7-18. REFINISHING INSTRUCTIONS.

7-19. Minor scratches or imperfections may be removed from the surface finishes of the cabinet with fine aluminum oxide or silicon carbide abrasive cloth (Specification P-C-451, Grit No. 320).

7-20. If protective finish on the top and sides of the cabinets is penetrated, apply one coat of zinc-chromate primer 0.4 to 0.6 mil-inch (dry film) thick, or one coat of synthetic paint primer, 0.8 mil-inch (dry film) thick, per Specification TT-P-636 or TT-P-664. Allow primer to air dry for eight hours, and apply two coats of enamel conforming to Specification MIL-E-7729, Type I, color blue-tone white, equivalent to Dupont No. 93-21667. Allow first enamel coat to air dry for eight hours before applying final coat.

7-21. If protective finish on the control panel surfaces is penetrated, apply one coat of zinc-chromate primer conforming to Specification MIL-P-8585, and allow primer to dry. Cover primer with two coats of enamel conforming to Specification TT-E-529, Color No. 26440 (light gray semi-gloss), Standard Fed. Std. 595. Allow first enamel coat to air dry for eight hours before applying final coat.

7-22. PREPARATION FOR SHIPPING.

7-23. The following procedures are for the purpose of preparing the refrigeration unit for shipment from the supply source to the first receiving activity for immediate use or for subsequent indoor storage not to exceed 90 days. These preparations should proceed in an uninterrupted series of operations. When periods of interruption are unavoidable, temporary protection should be provided to insure against contamination.

a. Deactivate the refrigeration unit in accordance with the procedures of paragraph 2-53.

b. Clean all assemblies to remove any corrosion and all residues foreign to the unit. Use any process or combination of processes which will accomplish thorough cleaning without damage to the unit.

c. Immediately after cleaning, thoroughly dry the unit by draining and wiping or subjecting to a blast of prepared, dry and clean, compressed air.

d. Using clean, lint-free nylon cloth, completely cover the unit.

e. Place in a shock-controlled, padded van and secure at tiedown rings.

7-24. STORAGE INSTRUCTIONS.

7-25. When the unit is stored uncovered and in an open area, remove the caps from the lower ends of the roof drain and condensation drain lines.

SECTION VIII

DIAGRAMS

8-1. GENERAL INFORMATION.

8-2. This section contains the electrical, pneumatic, and hydraulic schematics and diagrams necessary for field maintenance personnel to understand the function of components and their relationship to each other in the refrigeration unit. They may be used to trace electrical and pneumatic circuits, perform troubleshooting on inoperative systems or components, and reconnect or replace any disconnected or faulty wiring.

8-3. Figure 8-1 is the fluid schematic for the refrigeration unit.

8-4. Electrical schematics for the refrigeration unit components are provided in figures 8-2 through 8-5.

8-5. Wiring diagrams for the refrigeration unit components are provided in figures 8-6 through 8-9.

8-6. Figure 8-10 is a fluid schematic for the refrigeration system and figure 8-11 the electrical schematic for that system.

8-7. Figure 8-12 is the interconnecting cable diagram for the refrigeration unit and figures 8-13 through 8-48 are the cable assembly diagrams for the cable depicted in figure 8-12.

8-8. Components called out in other sections of this handbook have been referenced to a specific figure in this section to allow maintenance personnel to readily identify the particular component and ascertain its specific function within the circuit.

8-9. Each of the schematic diagrams in this section contains a legend to identify the type of component symbolized on that diagram.

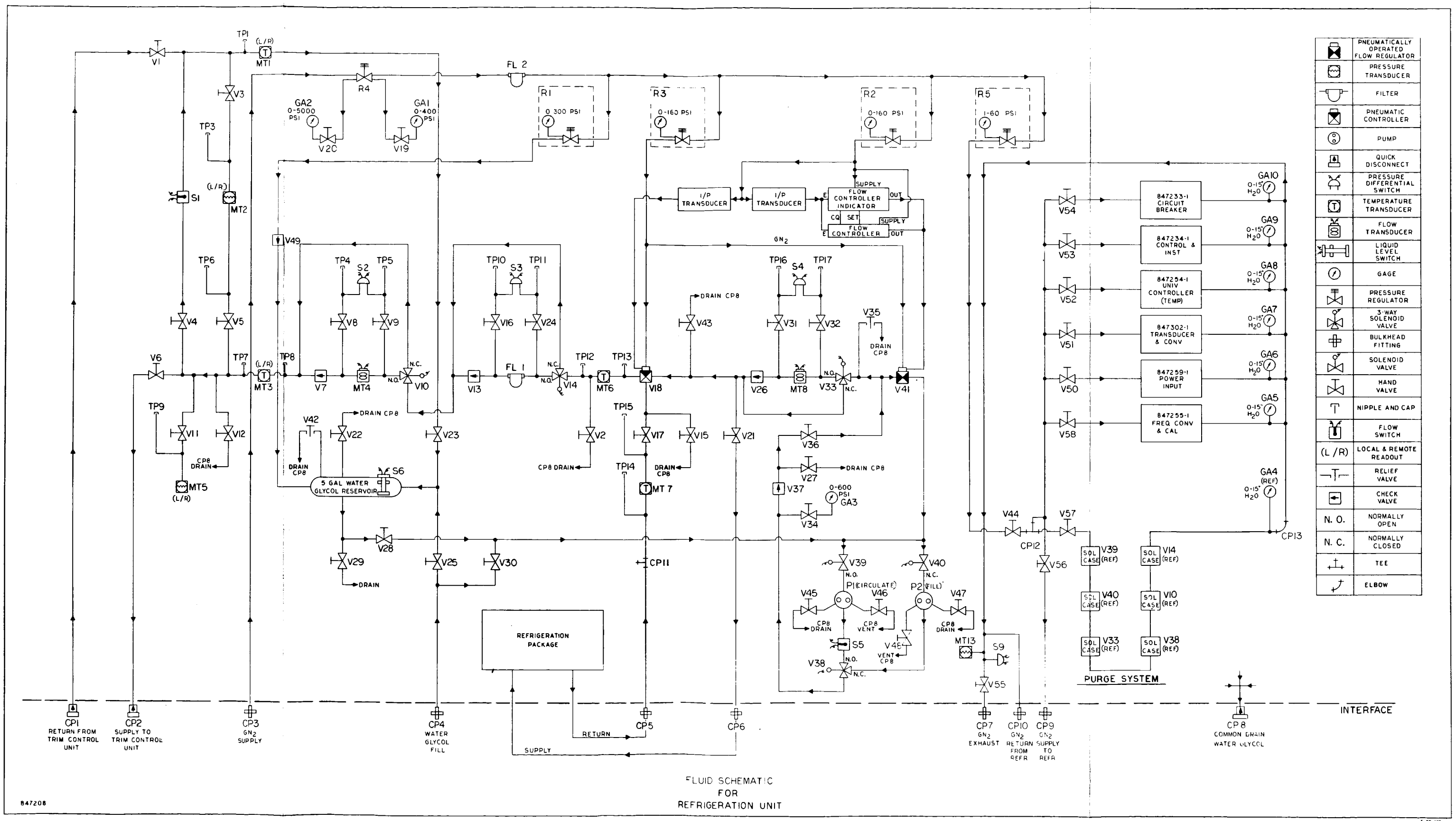

FLUID SCHEMATIC
FOR
REFRIGERATION UNIT

Figure 8-1. Fluid Schematic Diagram

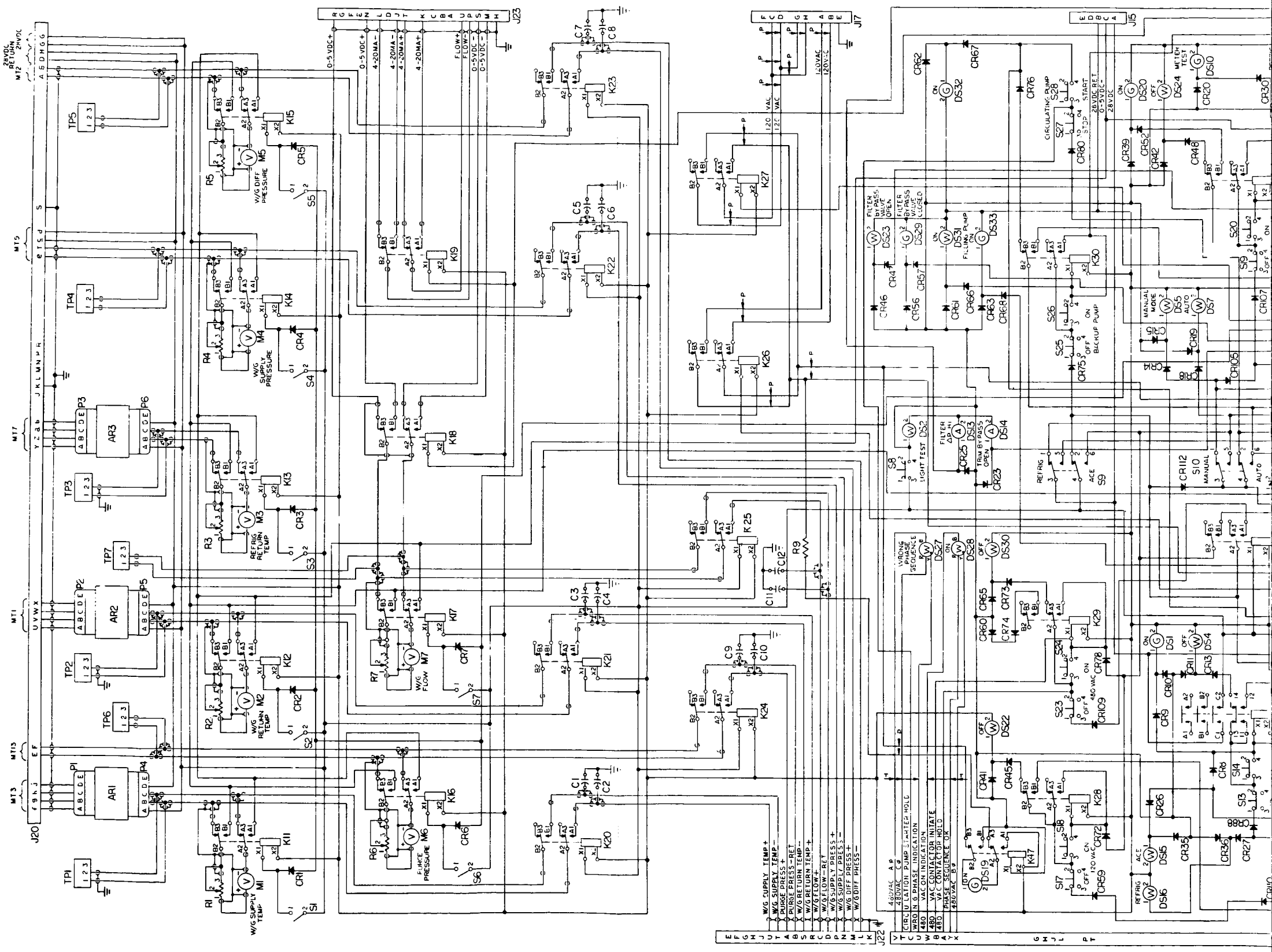
J20
J23
J17
J15
J22
W/G SUPPLY TEMP
W/G RETURN TEMP
REFRIG RETURN TEMP
W/G SUPPLY PRESSURE
W/G DIFF PRESSURE
W/G FLOW
FURNACE PRESSURE
W/G SUPPLY TEMP+
W/G SUPPLY TEMP−
PURGE PRESS+
PURGE PRESS−RET
W/G RETURN TEMP−
W/G RETURN TEMP+
W/G FLOW+
W/G FLOW−RET
W/G SUPPLY PRESS+
W/G SUPPLY PRESS−
W/G DIFF PRESS+
W/G DIFF PRESS−
CIRCULATION PUMP STARTER HOLD
WRONG PHASE INDICATION
VAC ON INDICATION
VAC CONTACTOR INITIATE
VAC CONTACTOR HOLD
PHASE SEQUENCE OK
CIRCULATING PUMP
FILTER BY PASS VALVE OPEN
FILTER BY PASS VALVE CLOSED
FILTING PUMP ON
BACKUP PUMP
TRIM BY PASS OPEN
LIGHT TEST
WRONG PHASE SEQUENCE
METER TEST
MANUAL MODE
AUTO MODE
REFRIG
ACE

FOLD-OUT #1

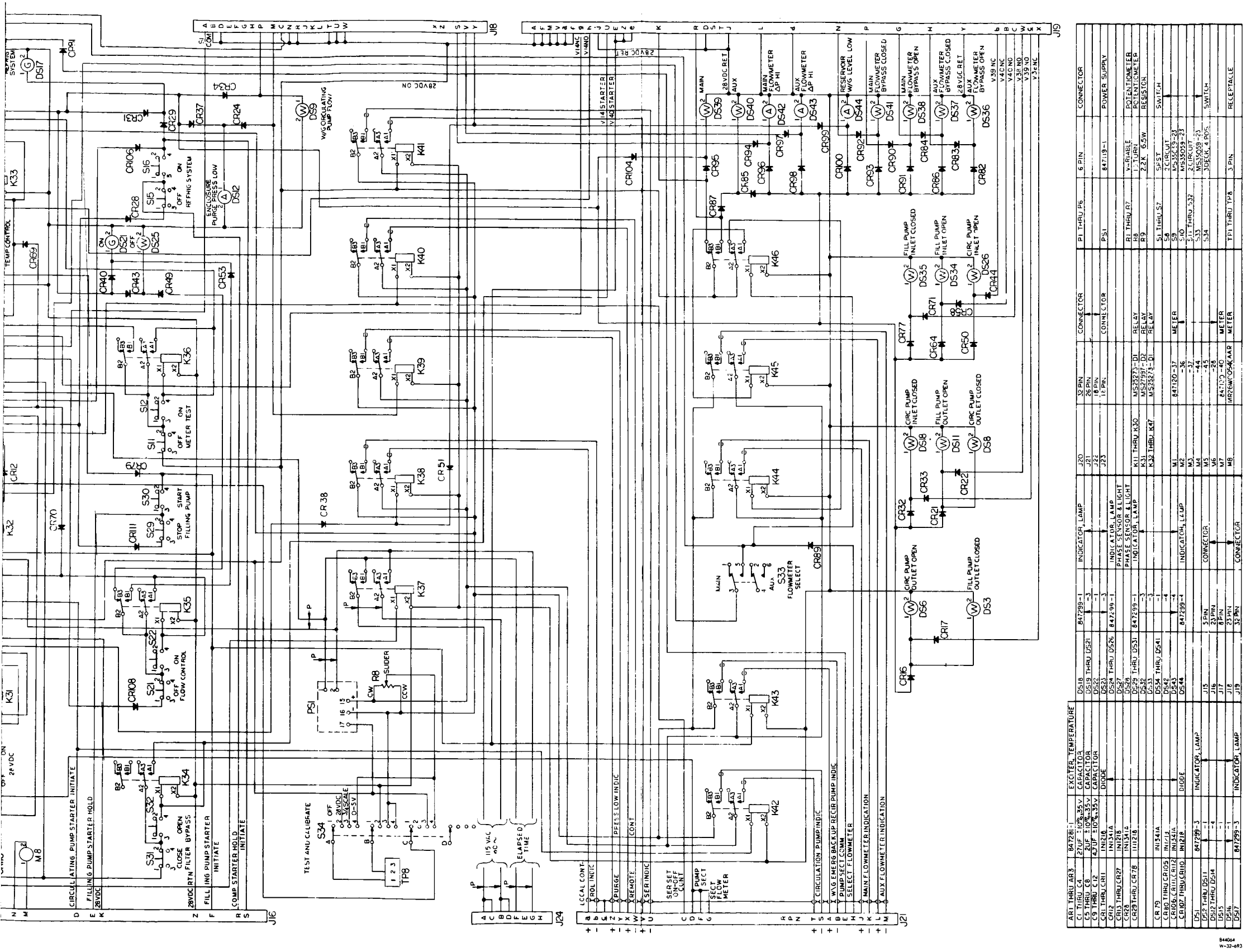

FOLD-OUT #2

Figure 8-2. Control and Instrumentation Panel Electrical Schematic

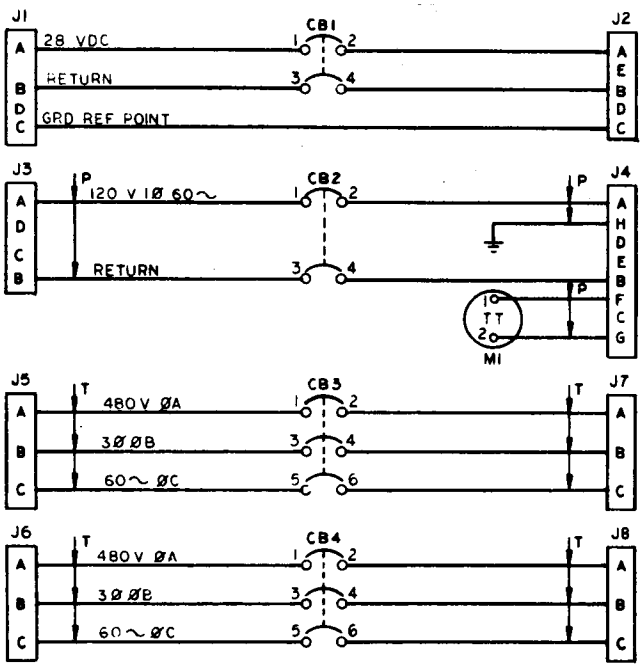

CB1	28 VDC 15 AMP	CIRCUIT BREAKER
CB2	120 VAC 10 AMP	CIRCUIT BREAKER
CB3	480 VAC 60 AMP	CIRCUIT BREAKER
CB4	480 VAC 30 AMP	CIRCUIT BREAKER
J1	MS3102R-14S-10P	CONNECTOR
J2	5 PINS	
J3	MS3102R-14S-2P	
J4	8 PINS	
J5	MS3102R-28-6P	
J6	MS3102R-20-19P	
J7	MS3102R-28-6S	
J8	MS3102R-20-19S	CONNECTOR
M1	ELAPSED TIME	METER

W-32-538

Figure 8-3. Circuit Breaker Panel Electrical Schematic

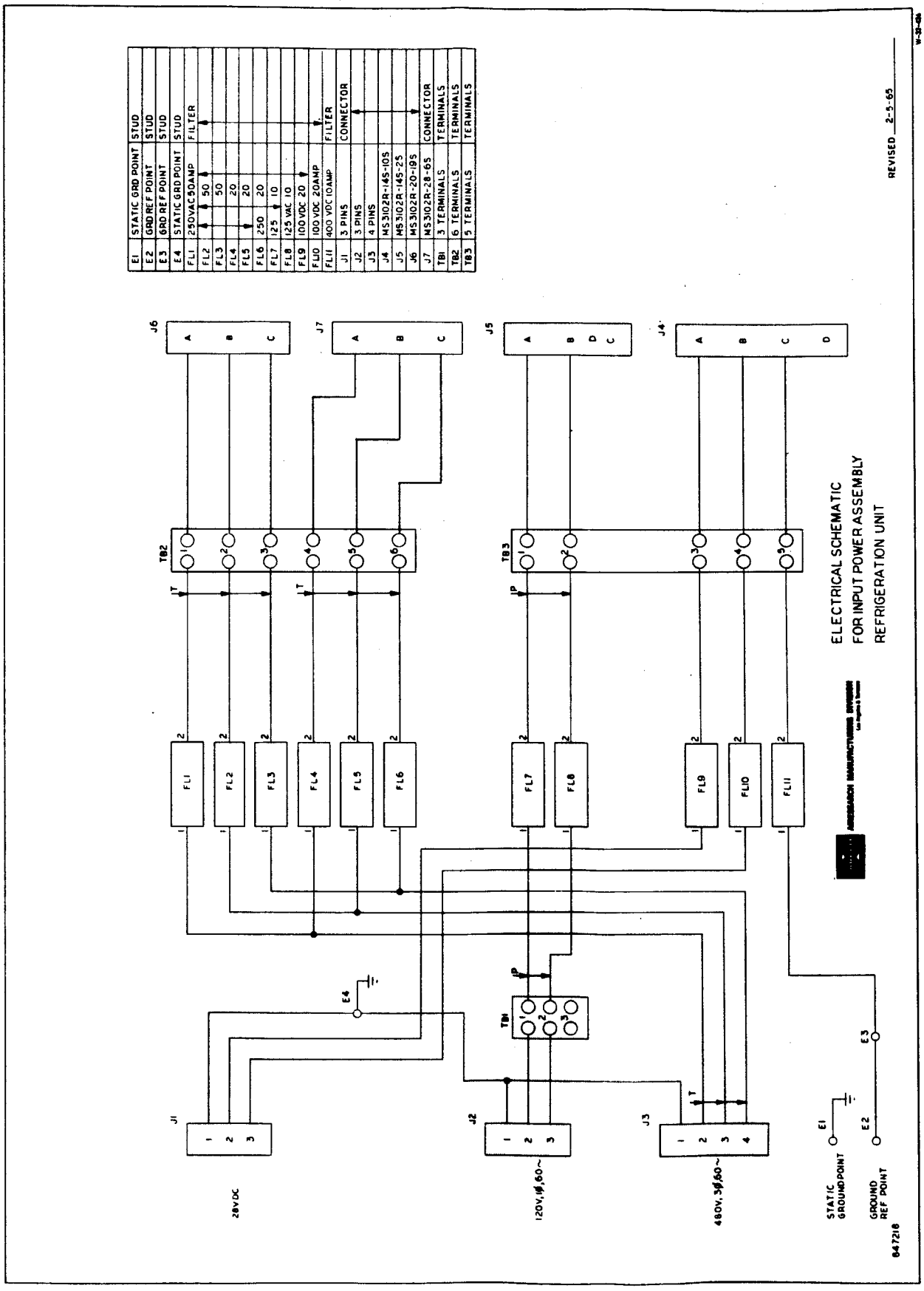

Figure 8-4. Input Power Panel Electrical Schematic

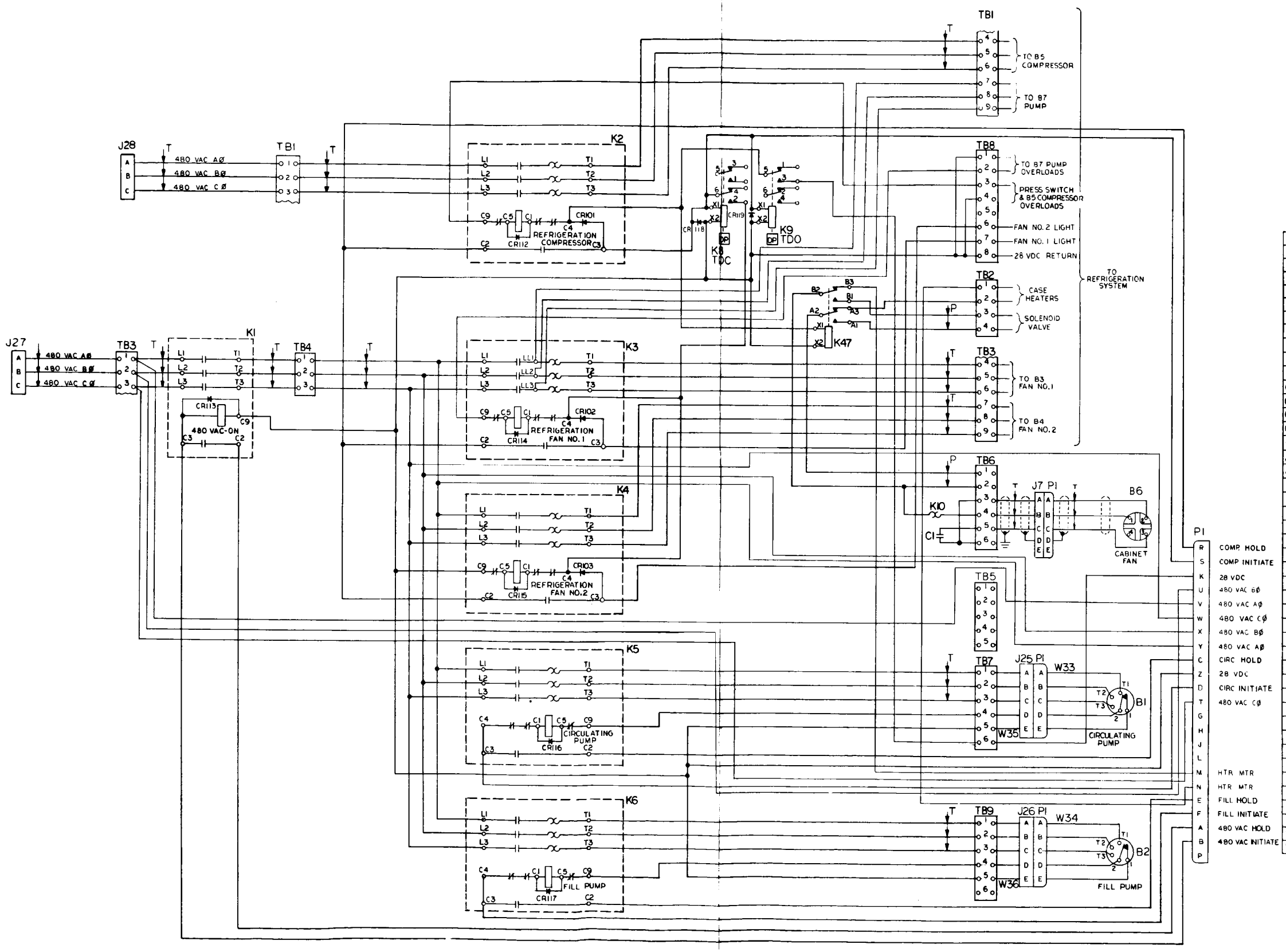

B1	847276-1	PUMP
B2	847275-1	PUMP
B6	115 VAC 60 ~ 1 Ø	FAN
CR101	1N5201	DIODE
CR102	1N1218	
CR103	1N1218	
CR112	1N1341	
CR113		
CR114		
CR115		
CR116		
CR117	1N1341	
CR118	1N649	
CR119	1N649	DIODE
C1	25 MFD 200 VAC	CAPACITOR
J27	MS3106A-20-19S	CONNECTOR
J28	MS3106A-28-6S	CONNECTOR
K1	28 VDC CONTROL 480 VAC 3Ø POWER	CONTACTOR
K2		
K3		
K4		
K5		
K6		
K8		
K9		
K10	28 VDC CONTROL 480 VAC 3Ø POWER	CONTACTOR
K47	MS25273-D1	RELAY
P1	23 PIN	CONNECTOR
TB1	9 TERMINAL	TERMINAL BOARD
TB2	4	
TB3	9	
TB4	3	
TB5	5	
TB6	6	
TB7	6	
TB8	8	
TB9	6 TERMINAL	TERMINAL BOARD
W33	845237-1	CABLE ASSEMBLY
W34	845238-1	CABLE ASSEMBLY
W35	845240-1	CABLE ASSEMBLY
W36	845241-1	CABLE ASSEMBLY

Figure 8-5. Relay Panel Electrical Schematic

Fold-out #1

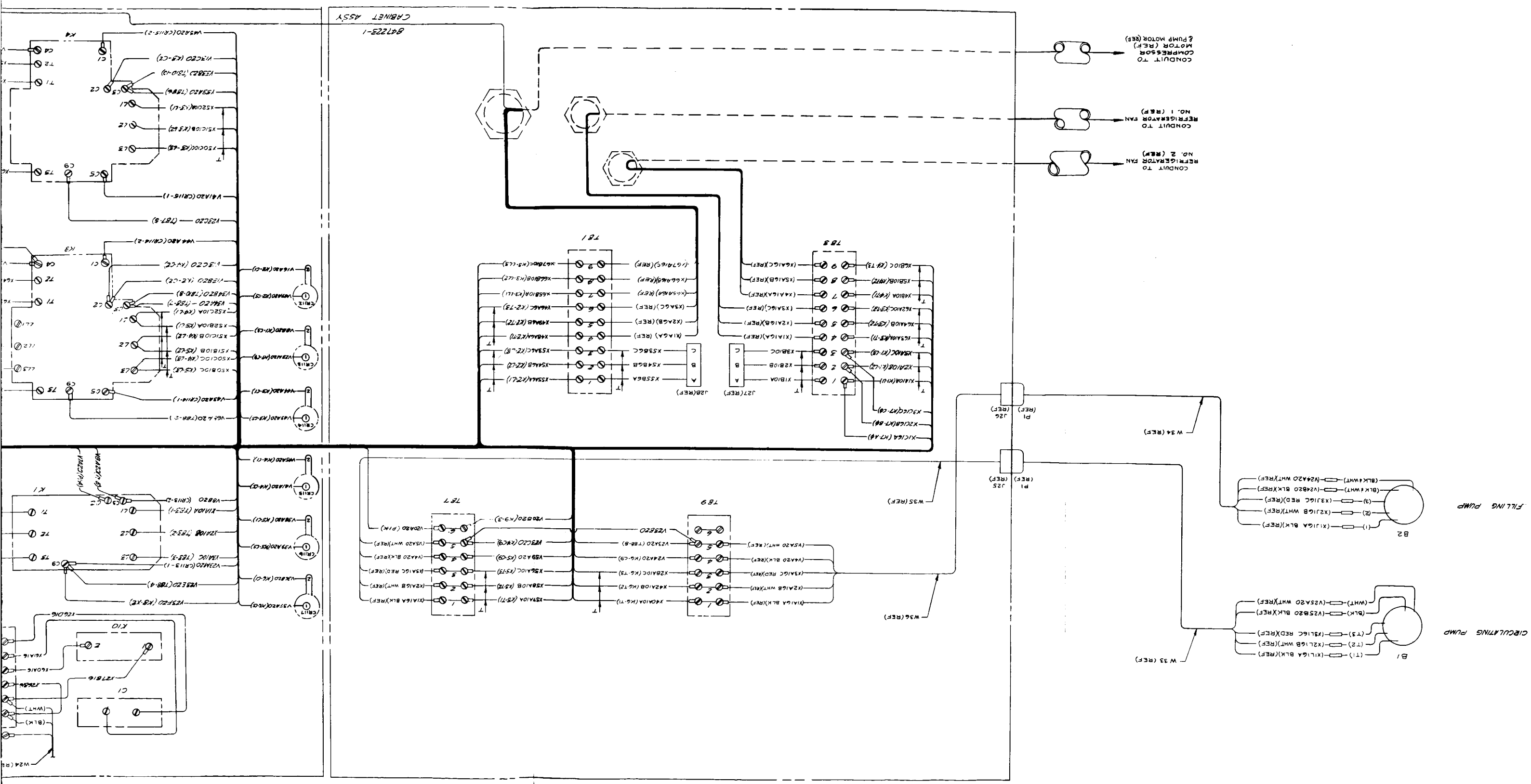
847223-1
CABINET ASSY
CONDUIT TO REFRIGERATOR FAN NO. 2 (REF)
CONDUIT TO REFRIGERATOR FAN NO. 1 (REF)
CONDUIT TO COMPRESSOR MOTOR (REF) & PUMP MOTOR (REF)
TB3
TB1
TB9
TB7
J27(REF)
J28(REF)
P1 (REF)
J26 (REF)
P1 (REF)
J25 (REF)
W34 (REF)
W35 (REF)
W36 (REF)
W33 (REF)
B1
CIRCULATING PUMP
B2
FILLING PUMP
K10
K1
K4

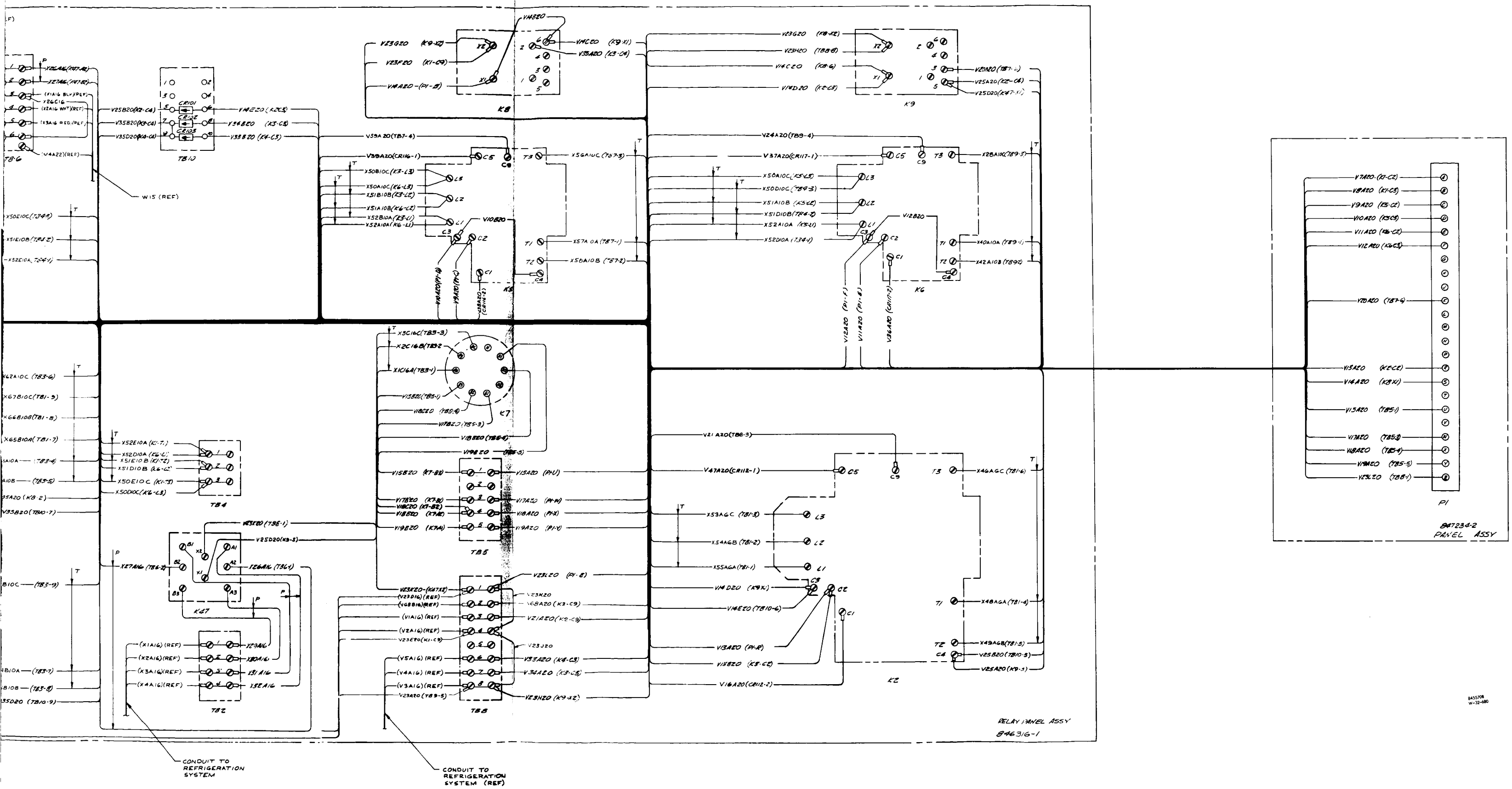

FOLD-OUT #2

Figure 8-6. Refrigeration Unit Wiring Diagram

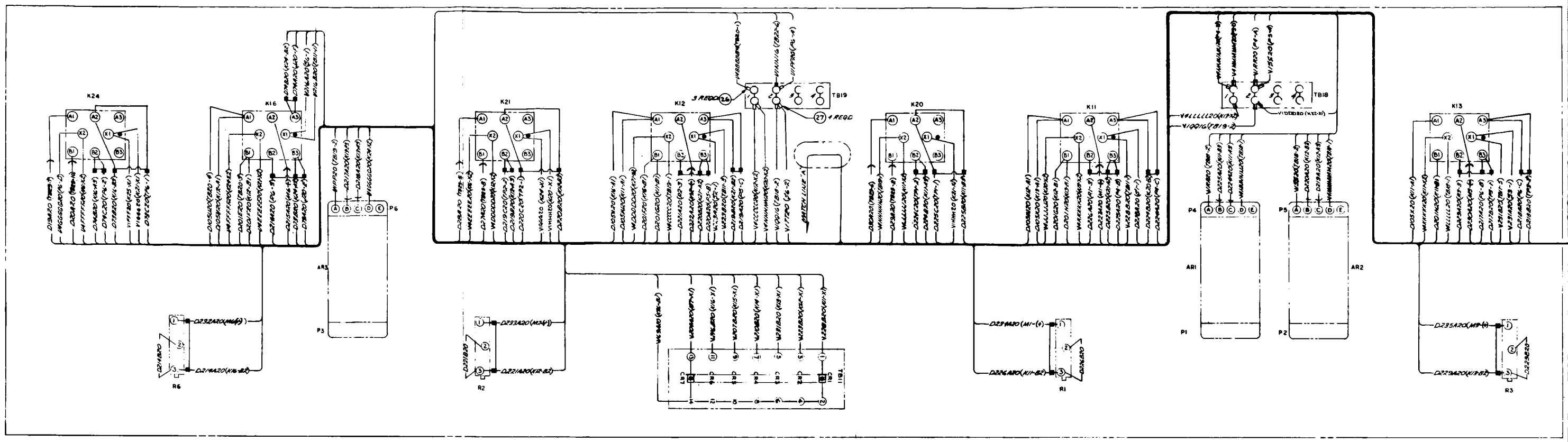
K24
K16
K21
K12
K20
K11
K13
TB19
TB18
P6
P3
P4
P5
P1
P2
AR1
AR2
AR3
R6
R2
R1
R3
TB11

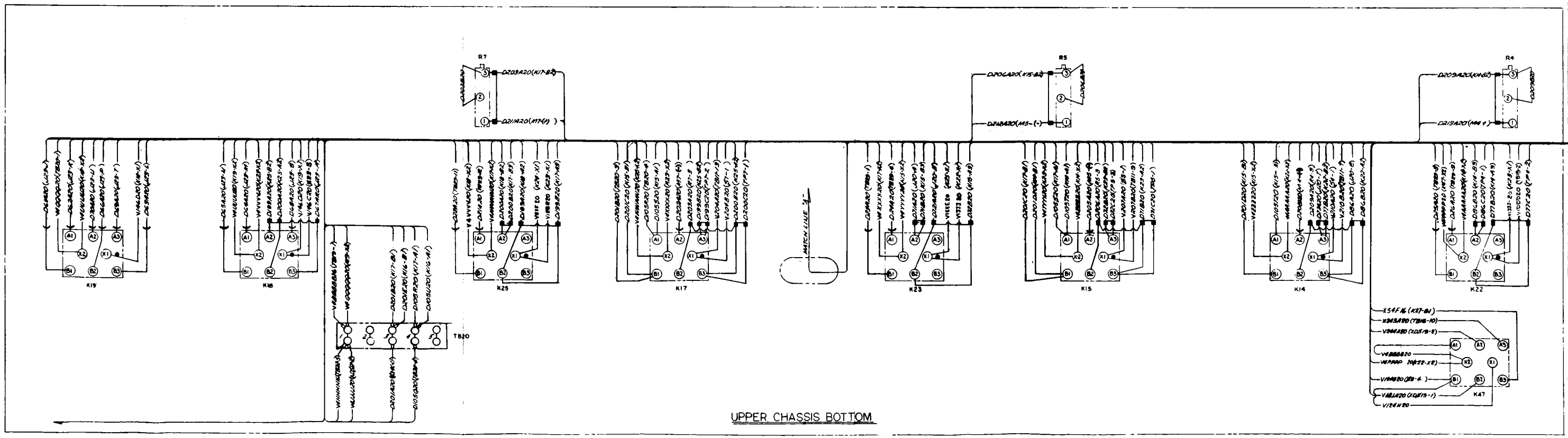
R7
R5
R4
K19
K18
K25
K17
K23
K15
K14
K22
K47
TB20
UPPER CHASSIS BOTTOM

FOLD-OUT #1

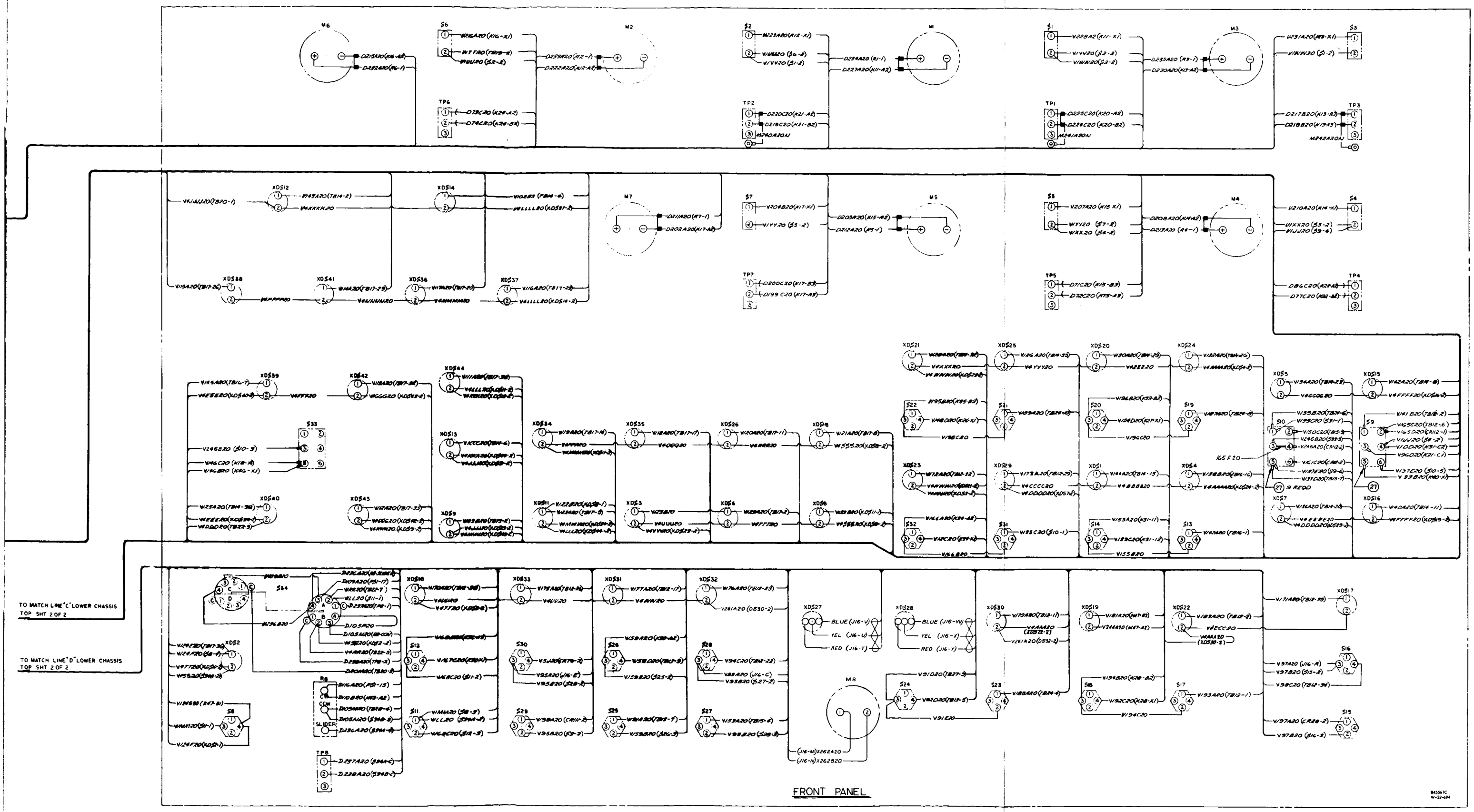

FOLD-OUT #2

Figure 8-7. Control and Instrumentation Panel Wiring Diagram (Sheet 1 of 2)

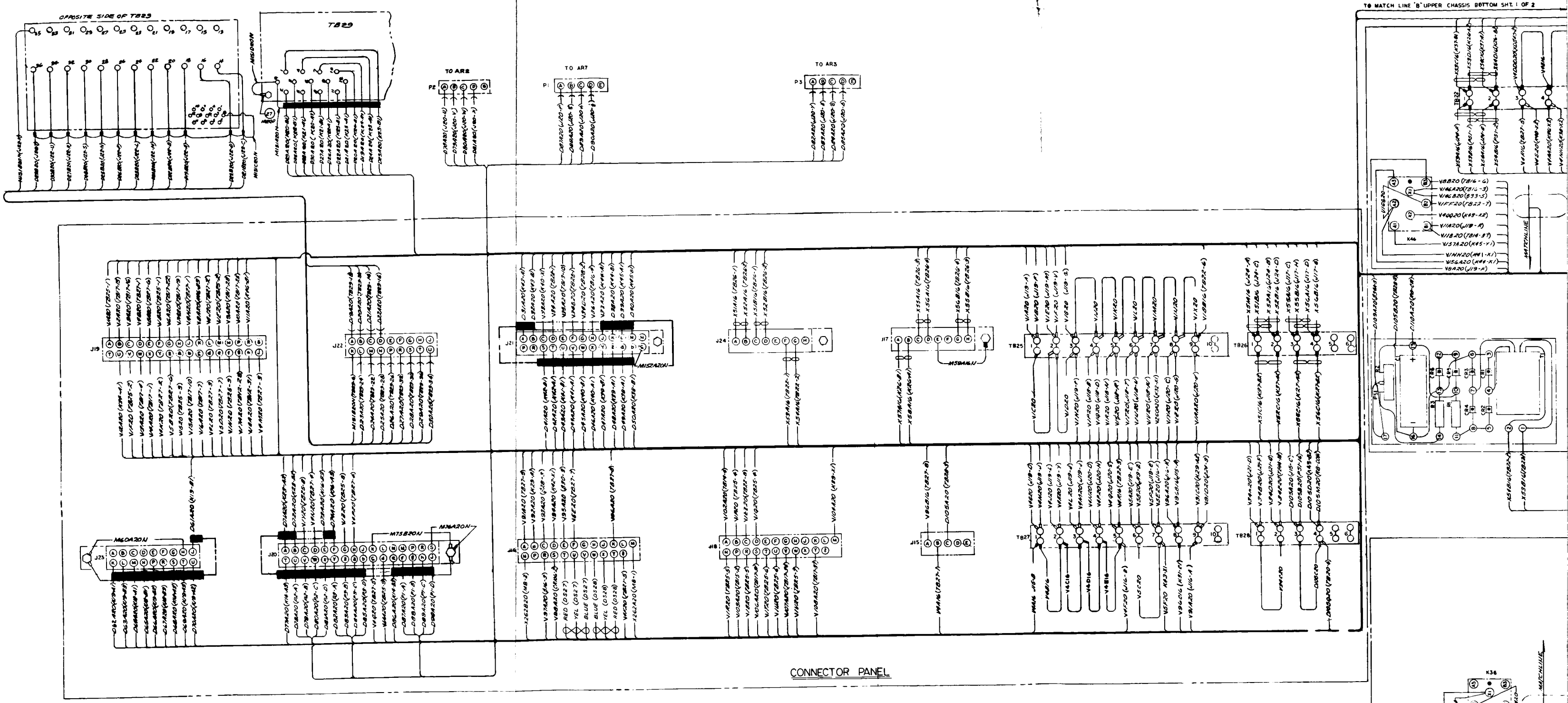
OPPOSITE SIDE OF TB29
TB29
TO AR2
TO AR7
TO AR3
TO MATCH LINE 'B' UPPER CHASSIS BOTTOM SHT. 1 OF 2
MATCHLINE
J19
J22
J21
J24
J17
TB25
TB26
J23
J20
J16
J18
J15
TB27
TB28
K46
K36
CONNECTOR PANEL

FOLD-OUT #1

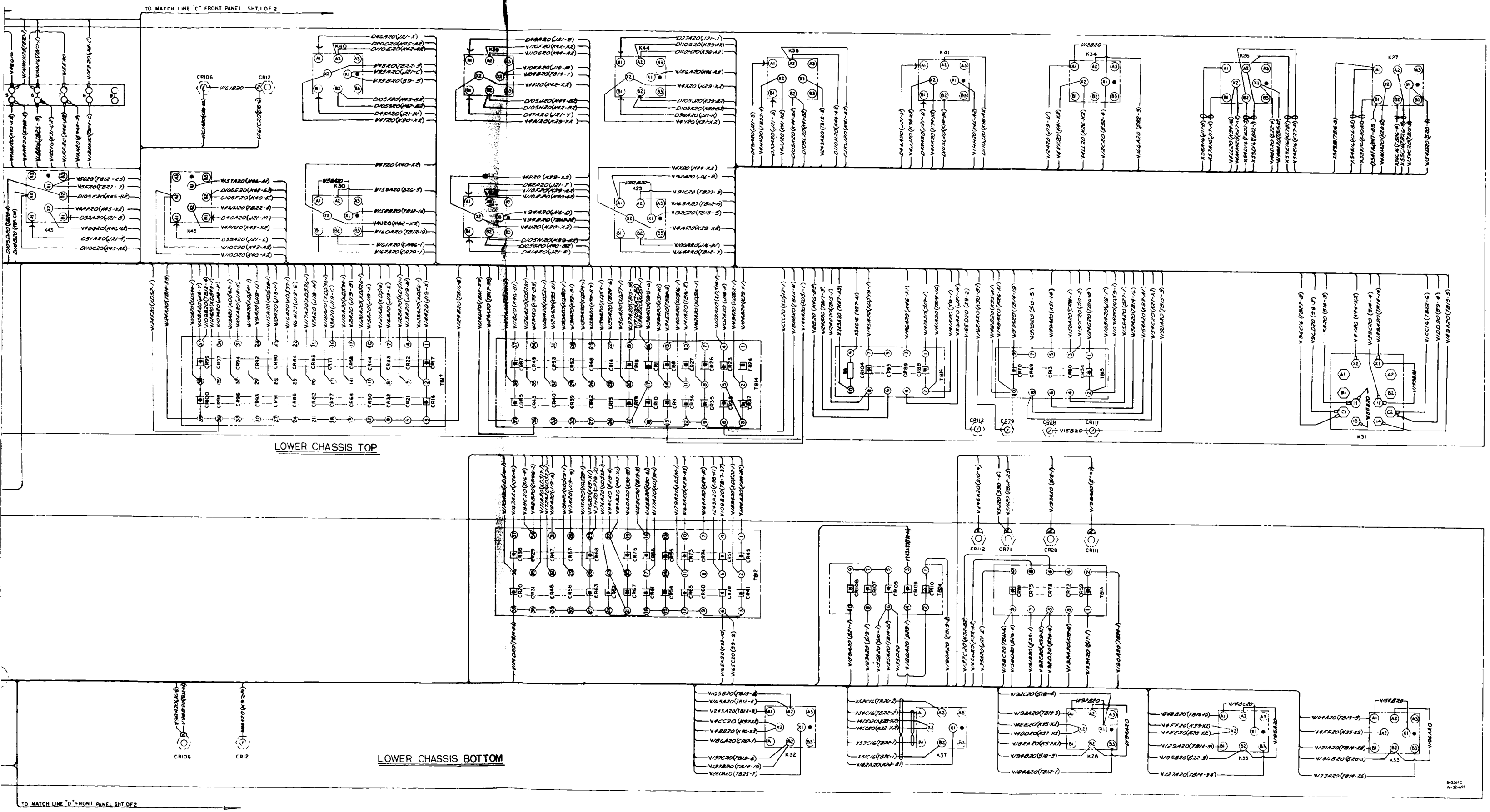

FOLD-OUT #2

Figure 8-7. Control and Instrumentation Panel Wiring Diagram (Sheet 2 of 2)

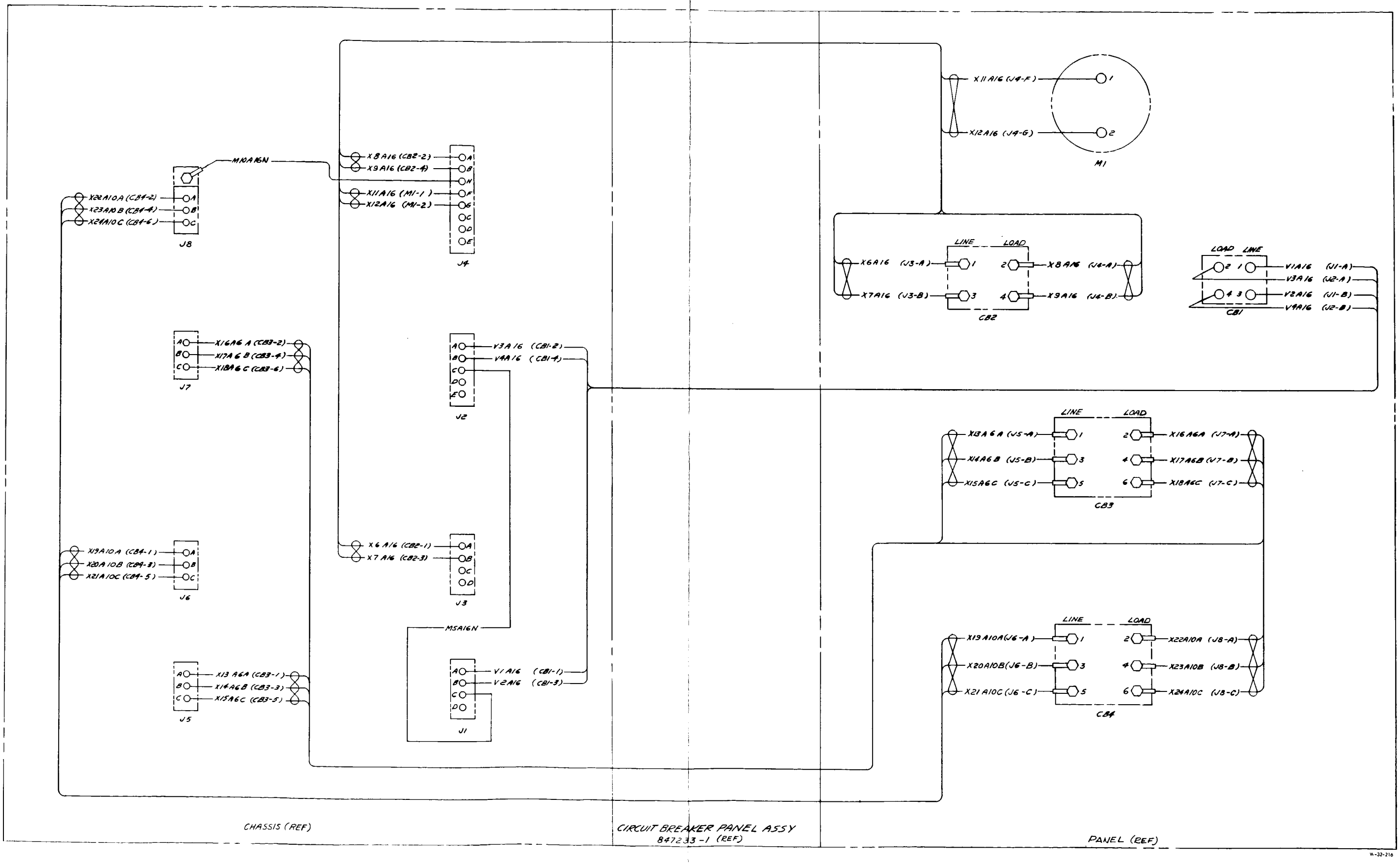

Figure 8-8. Circuit Breaker Panel Wiring Diagram

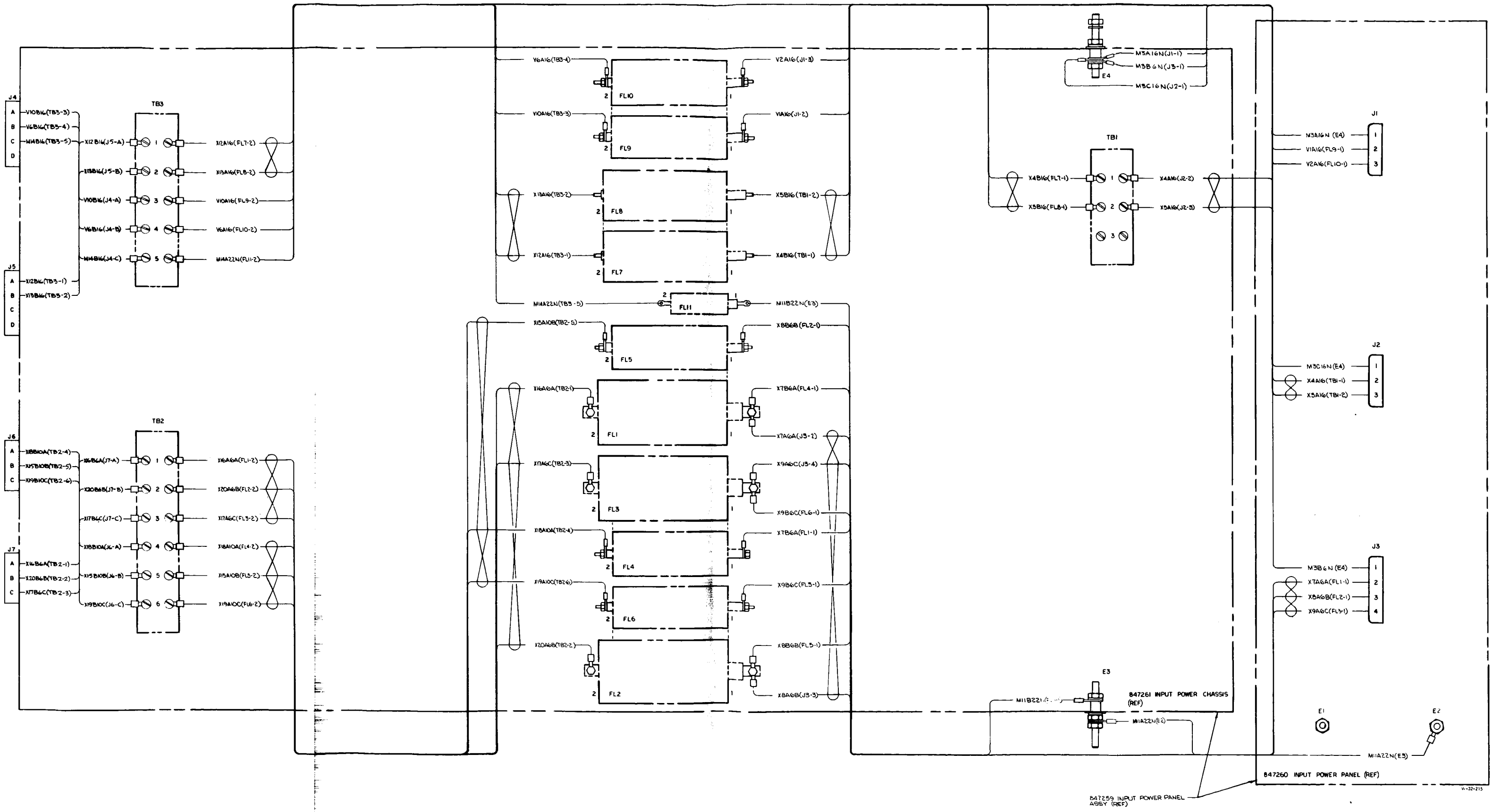

Figure 8-9. Input Power Panel Wiring Diagram

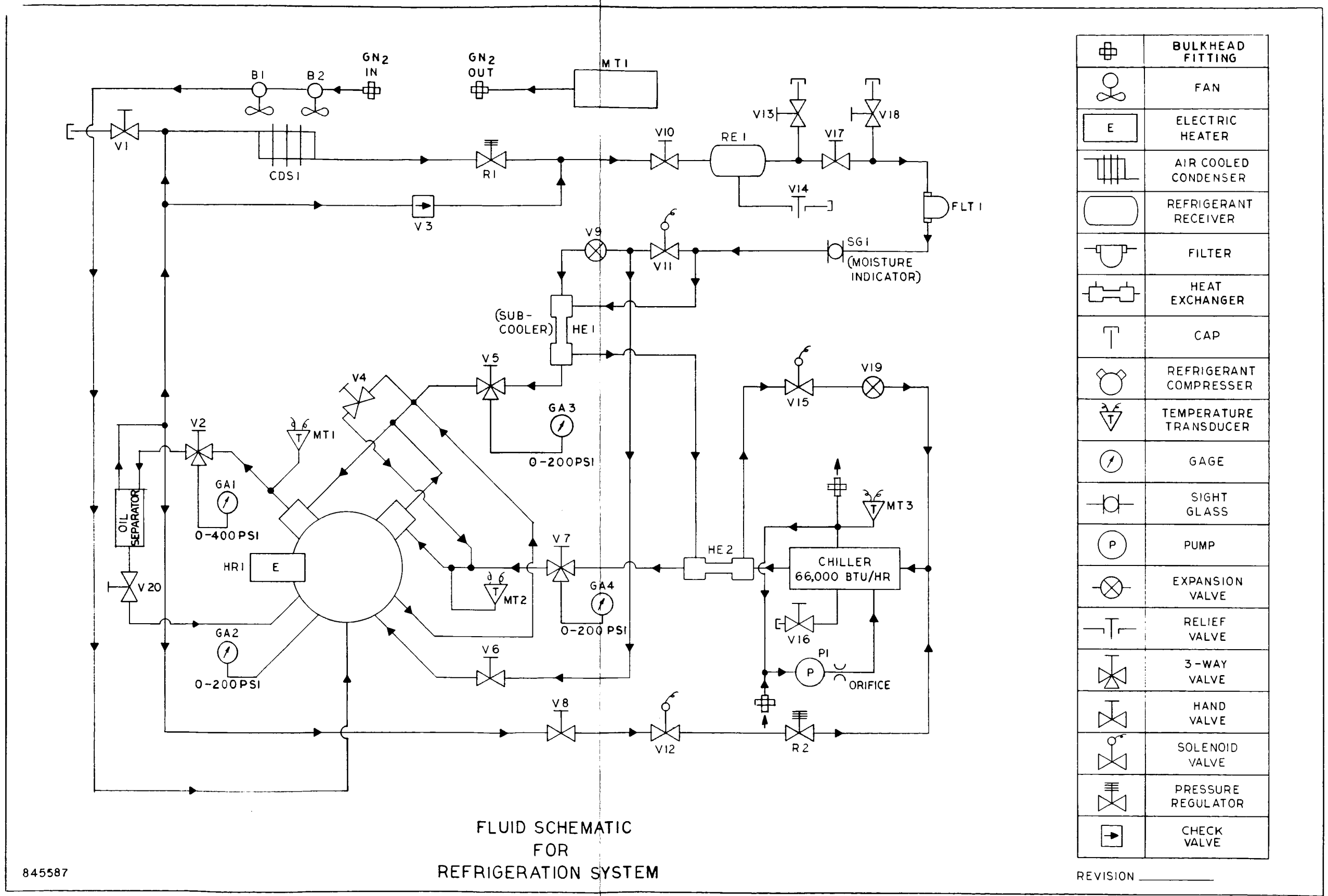

Figure 8-10. Refrigeration System Fluid Schematic Diagram

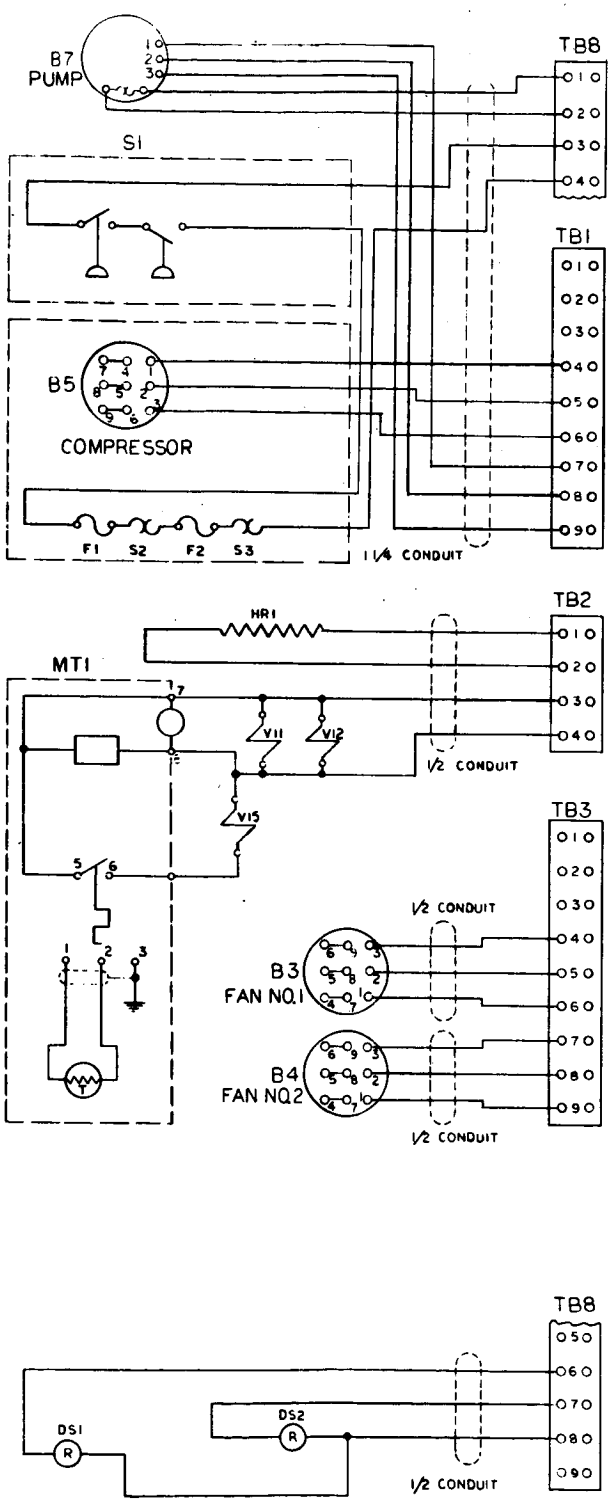

B3	440VAC 3Ø60~	MOTOR
B4	440VAC 3Ø60~	MOTOR
B5	440VAC 3Ø60~	MOTOR
B7	440VAC 3Ø 60~	MOTOR
F1	1 1 4 AMP	FUSE
F2	1 1 4 AMP	FUSE
HR1	115 VAC 250 W	HEATER
MT1	-25°F TO +55°F	CONTROLLER
S1	15" Hg 360 PSI	HI-LO PRESS SWITCH
S2	OVERTEMP	THERMOSWITCH
S3	OVERTEMP	THERMOSTAT
V11	115 VAC	SOLENOID VALVE
V12	115 VAC	SOLENOID VALVE
V15	115 VAC	SOLENOID VALVE

Figure 8-11. Refrigeration System Electrical Schematic Diagram

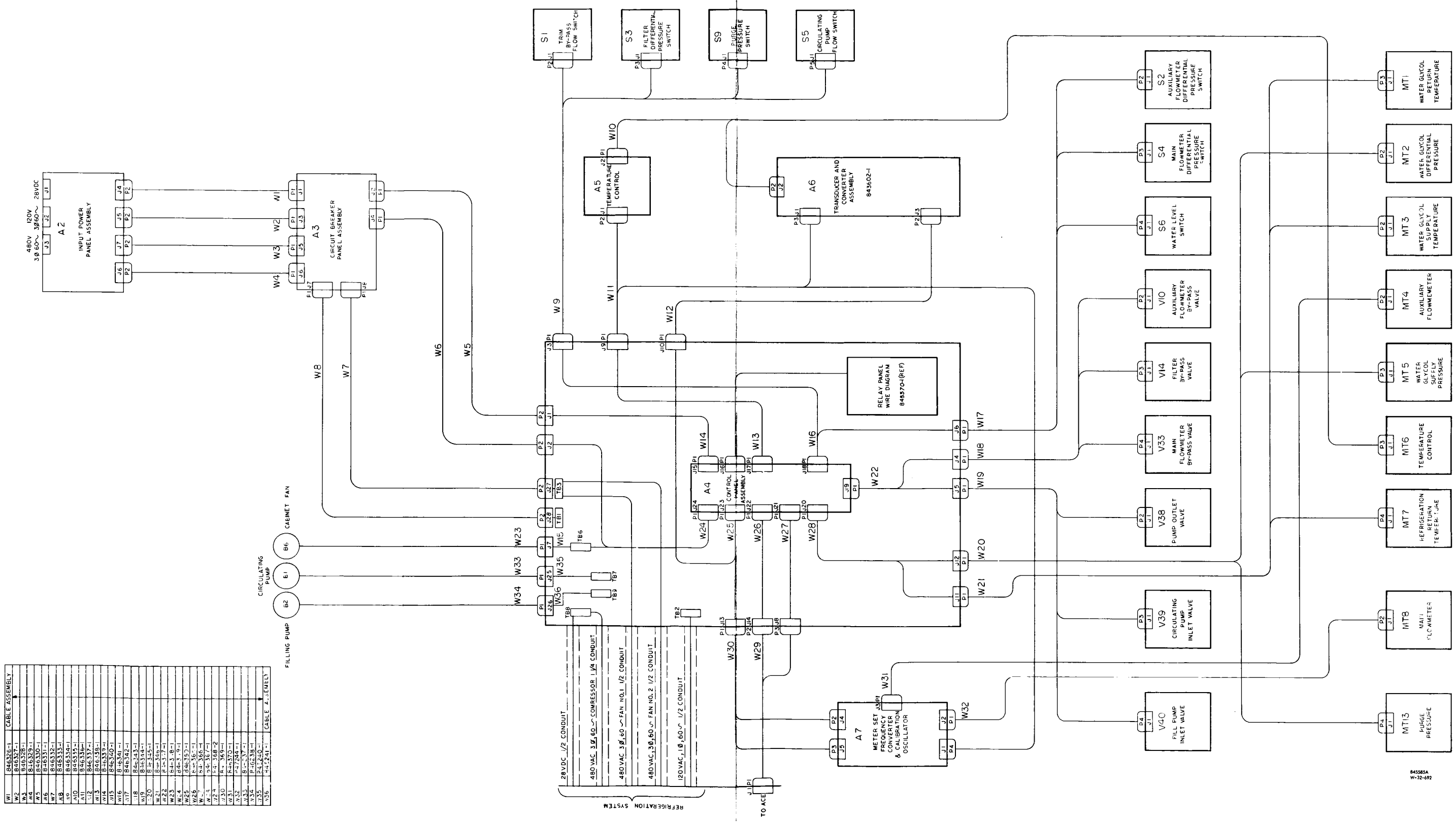

W1	846326-1	CABLE ASSEMBLY
W2	846327-1	
W3	846328-1	
W4	846329-1	
W5	846330-1	
W6	846331-1	
W7	846332-1	
W8	846333-1	
W9	846334-1	
W10	846335-1	
W11	846336-1	
W12	846337-1	
W13	846338-1	
W14	846339-1	
W15	846340-1	
W16	846341-1	
W17	846342-1	
W18	846343-1	
W19	846344-1	
W20	846345-1	
W21	846349-1	
W22	846347-1	
W23	846348-1	
W24	846349-1	
W25	846350-1	
W26	846367-1	
W27	846366-1	
W28	846367-1	
W29	846368-2	
W30	846369-1	
W31	846370-1	
W32	846371-1	
W33	846372-1	
W34	846238-1	
W35	846240-1	
W36	846241-1	CABLE ASSEMBLY

Figure 8-12. Interconnecting Cable Diagram

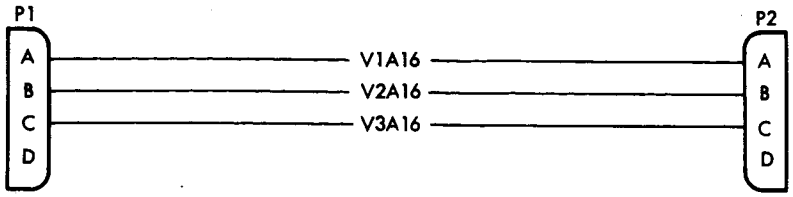

WIRE SPECIFICATIONS

MIL-W-16878, TYPE E

MIL-W-8160

16-GAUGE, 19-STRAND, WHITE TEFLON INSULATED WIRE.

W-32-250

Figure 8-13. Cable Assembly W1

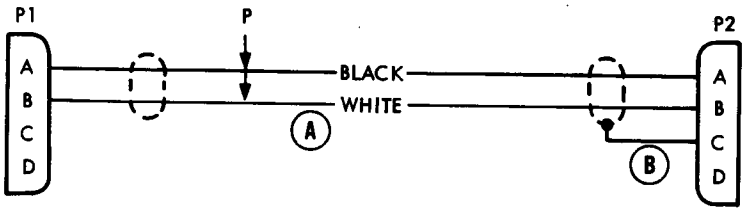

WIRE SPECIFICATIONS

MIL-W-16878, TYPE E

(A) 2-CONDUCTOR, 16-GAUGE, 19-STRAND, SHIELDED, TEFLON WRAPPED JACKETED CABLE.

(B) 22-GAUGE, 19-STRAND, WHITE TEFLON INSULATED WIRE.

W-32-251

Figure 8-14. Cable Assembly W2

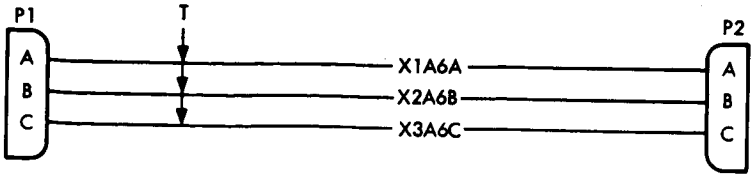

WIRE SPECIFICATIONS

MIL-W-5086, TYPE II

MIL-W-8160

AN-6, 133-STRAND, WHITE NYLON INSULATED WIRE.

W-32-281

Figure 8-15. Cable Assembly W3

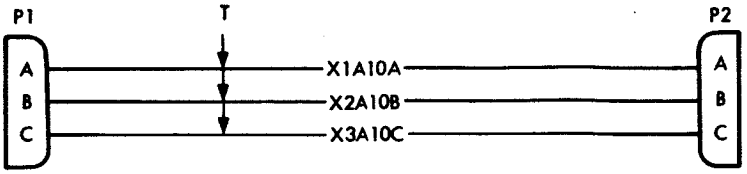

WIRE SPECIFICATIONS

MIL-W-16878, TYPE E

MIL-W-8160

10-GAUGE, 37-STRAND, WHITE TEFLON INSULATED WIRE.

W-32-252

Figure 8-16. Cable Assembly W4

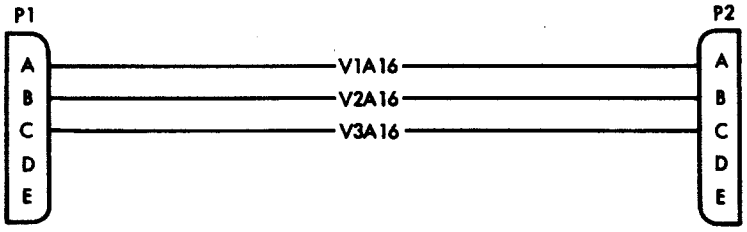

WIRE SPECIFICATIONS

MIL-W-16878, TYPE E

MIL-W-8160

16-GAUGE, 19-STRAND, WHITE TEFLON INSULATED WIRE.

W-32-253

Figure 8-17. Cable Assembly W5

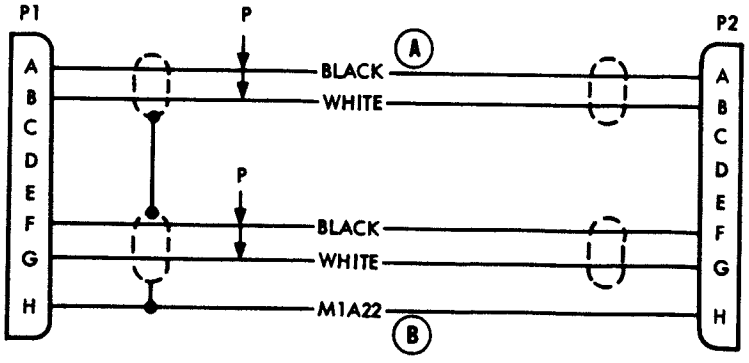

WIRE SPECIFICATIONS

MIL-W-16878, TYPE E

MIL-W-8160

(A) 2-CONDUCTOR, 16-GAUGE, 19-STRAND SHIELDED, TEFLON WRAPPED JACKETED CABLE (TYPICAL, 2 PLACES).

(B) 22-GAUGE, 19-STRAND, WHITE TEFLON INSULATED WIRE.

W-32-254

Figure 8-18. Cable Assembly W6

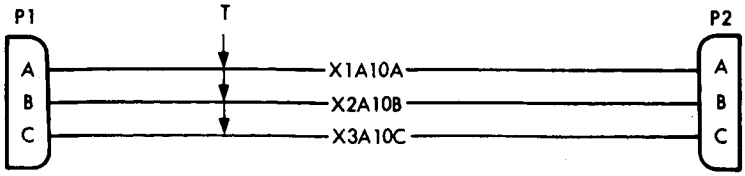

WIRE SPECIFICATIONS

MIL-W-16878, TYPE E

MIL-W-8160

10-GAUGE, 37-STRAND, WHITE TEFLON INSULATED WIRE.

W-32-252

Figure 8-19. Cable Assembly W7

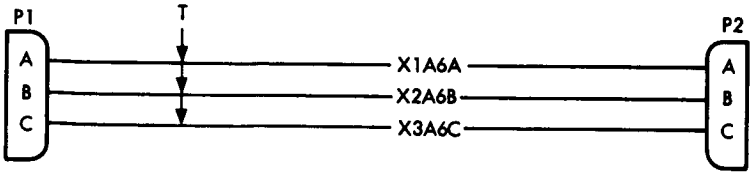

WIRE SPECIFICATIONS

MIL-W-5086, TYPE II

MIL-W-8160

AN-6, 133-STRAND, WHITE NYLON INSULATED WIRE.

W-32-281

Figure 8-20. Cable Assembly W8

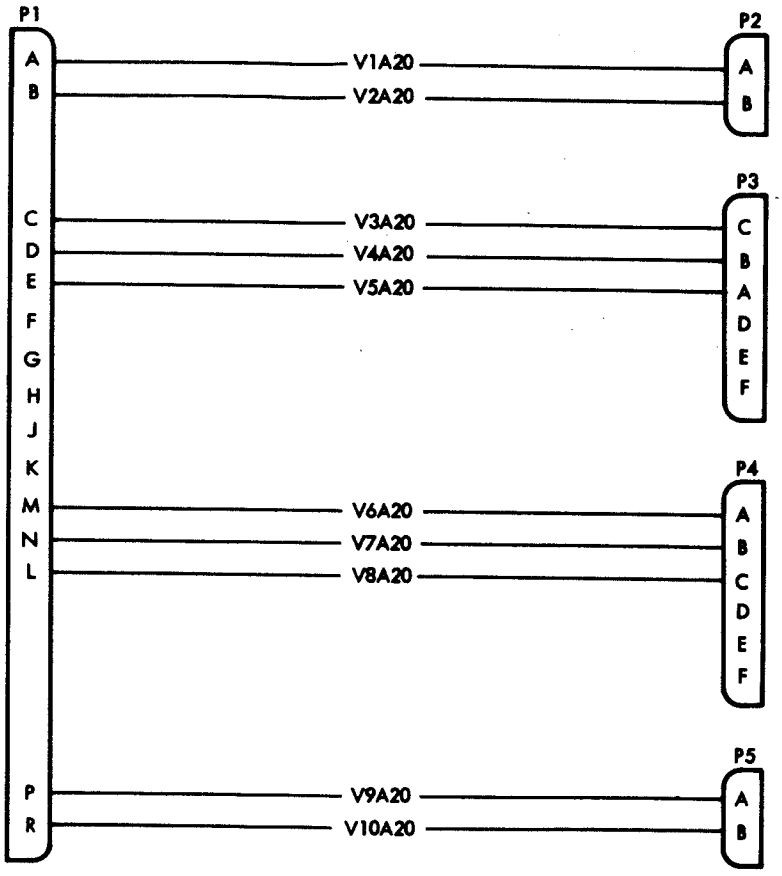

WIRE SPECIFICATIONS

MIL-W-16878, TYPE E

MIL-W-8160

20-GAUGE, 19-STRAND, WHITE TEFLON INSULATED WIRE.

W-32-256

Figure 8-21. Cable Assembly W9

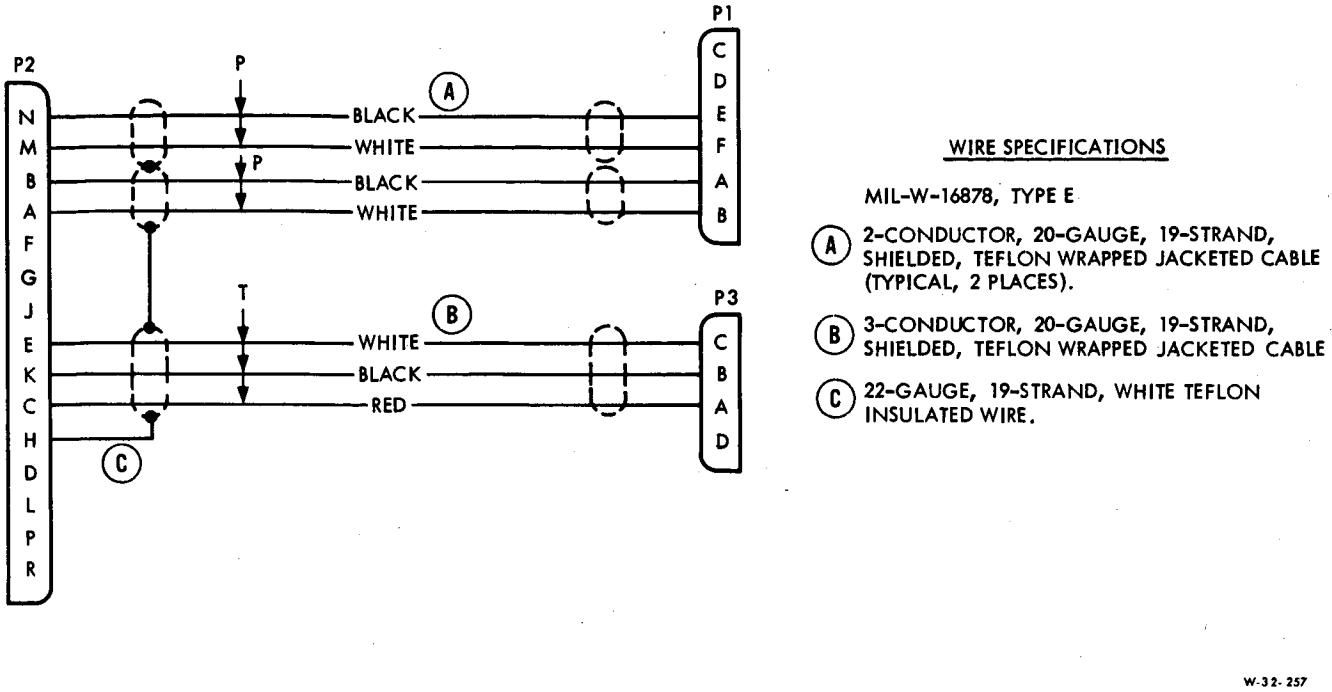

Figure 8-22. Cable Assembly W10

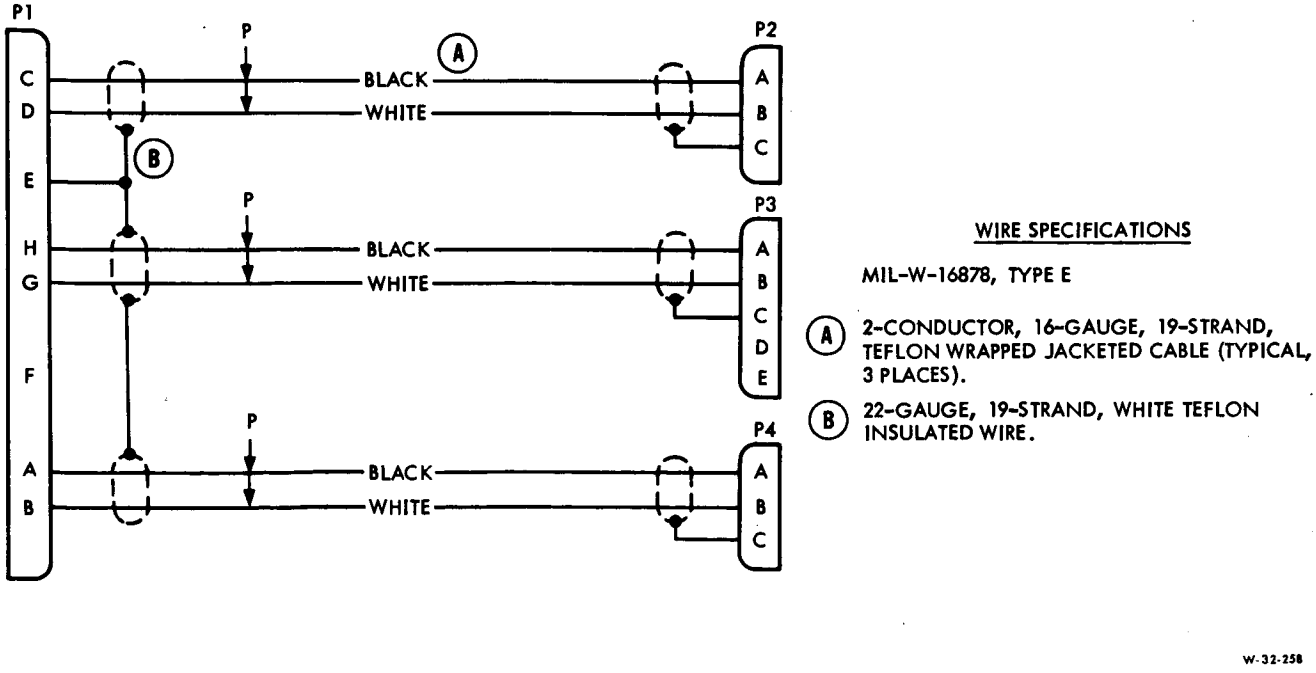

Figure 8-23. Cable Assembly W11

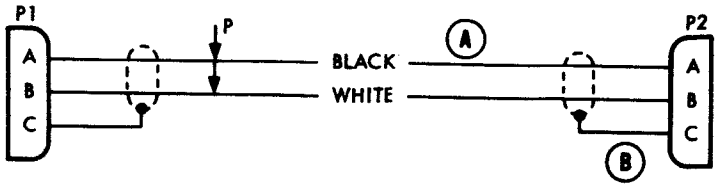

WIRE SPECIFICATIONS

MIL-W-16878 TYPE E

(A) 2-CONDUCTOR, 20-GAUGE, 19-STRAND, SHIELDED, TEFLON WRAPPED JACKETED CABLE.

(B) 22-GAUGE, 19-STRAND, WHITE TEFLON INSULATED WIRE.

W-32-220

Figure 8-24. Cable Assembly W12

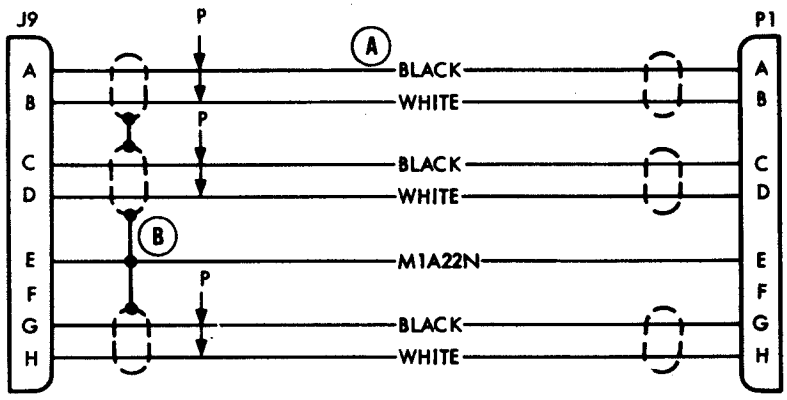

WIRE SPECIFICATIONS

MIL-W-16878, TYPE E

MIL-W-8160

(A) 2-CONDUCTOR, 16-GAUGE, 19-STRAND, SHIELDED, TEFLON WRAPPED JACKETED CABLE (TYPICAL, 3 PLACES).

(B) 22-GAUGE, 19-STRAND, WHITE TEFLON INSULATED WIRE.

W-32-221

Figure 8-25. Cable Assembly W13

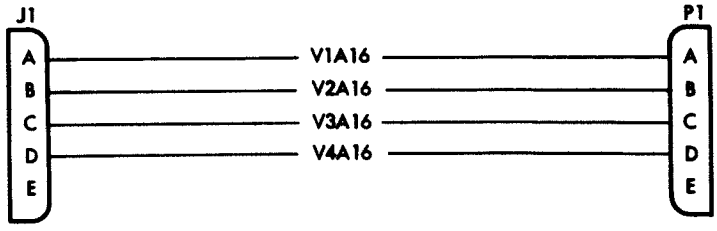

WIRE SPECIFICATIONS

MIL-W-16878, TYPE E

MIL-W-8160

16-GAUGE, 19-STRAND, WHITE TEFLON INSULATED WIRE.

W-32-222

Figure 8-26. Cable Assembly W14

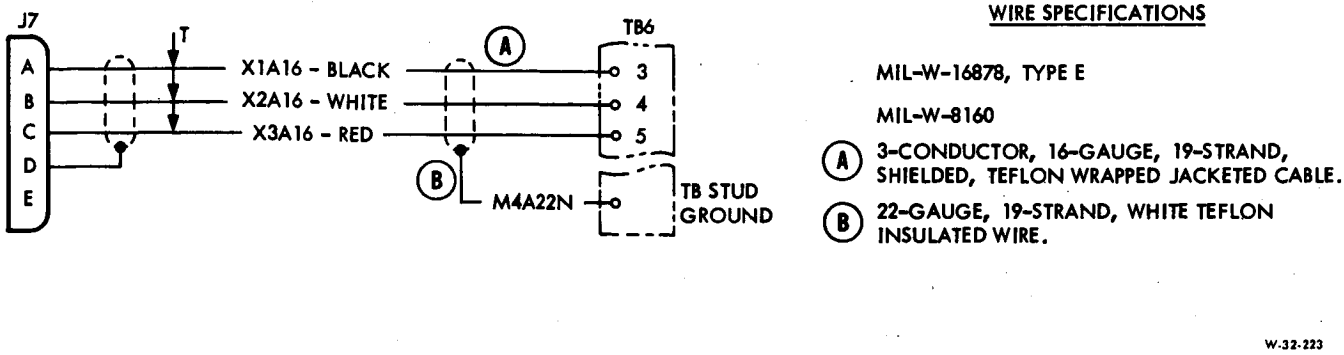

Figure 8-27. Cable Assembly W15

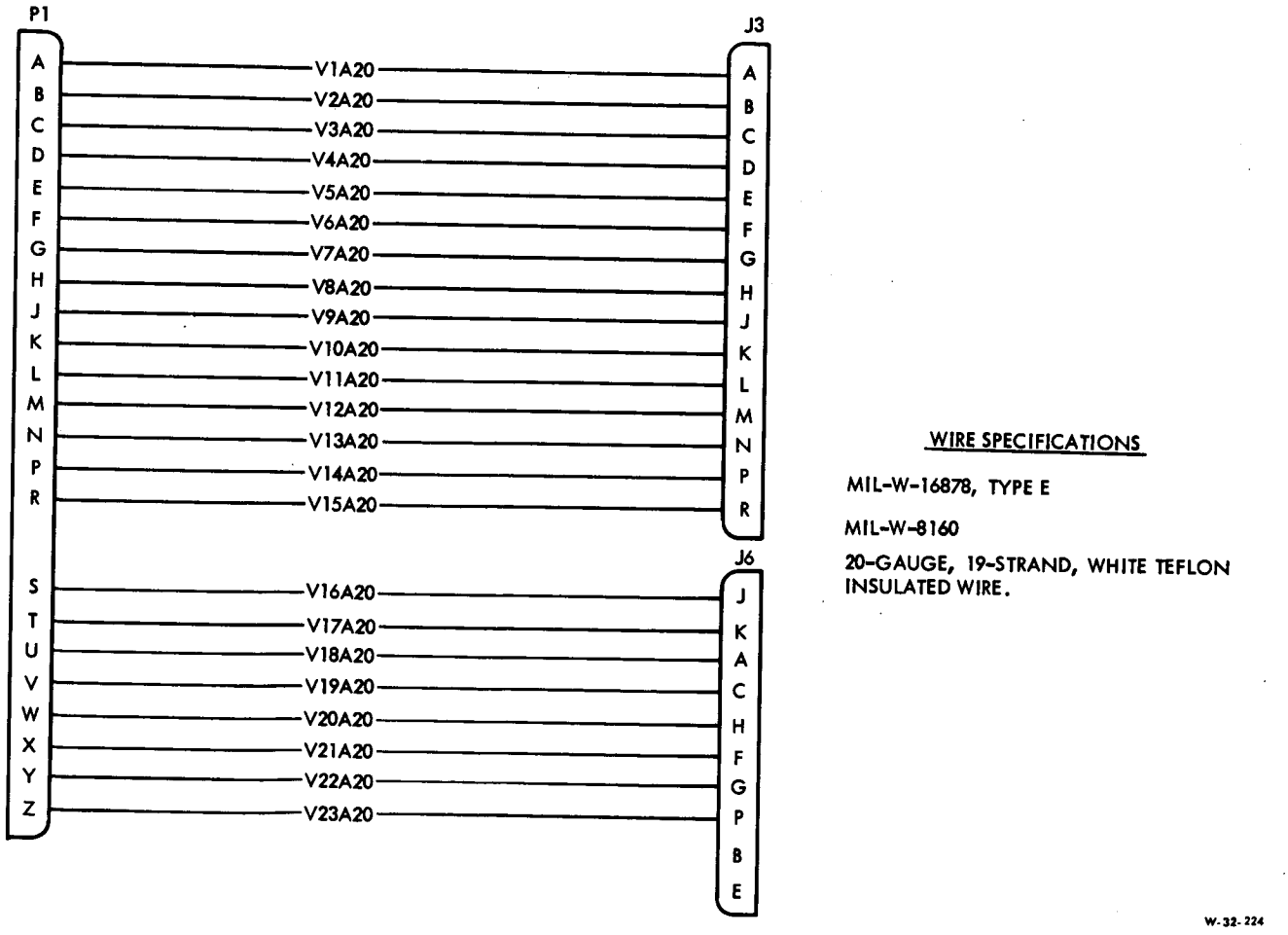

Figure 8-28. Cable Assembly W16

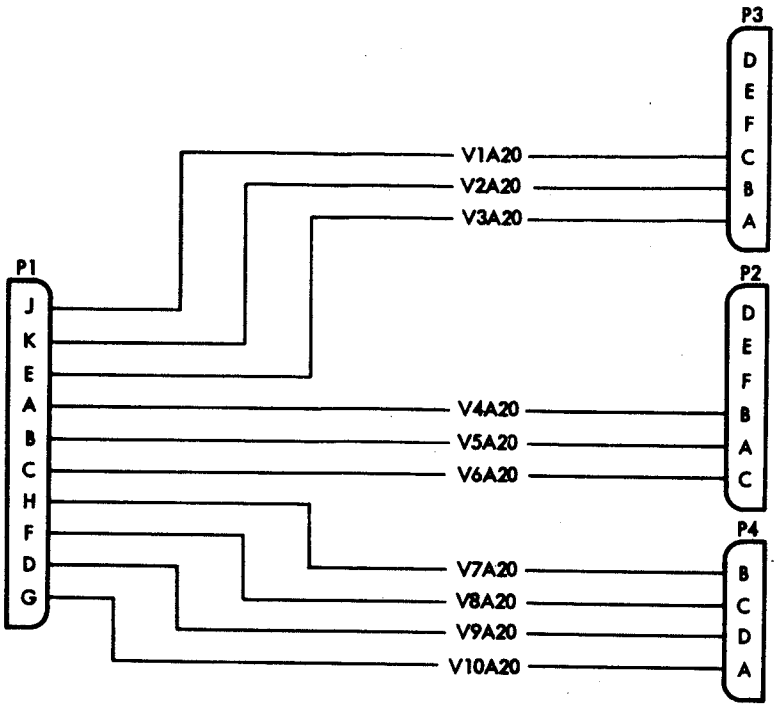

WIRE SPECIFICATIONS

MIL-W-16878, TYPE E

MIL-W-8160

20-GAUGE, 19-STRAND, WHITE TEFLON INSULATED WIRE.

W-32-225

Figure 8-29. Cable Assembly W17

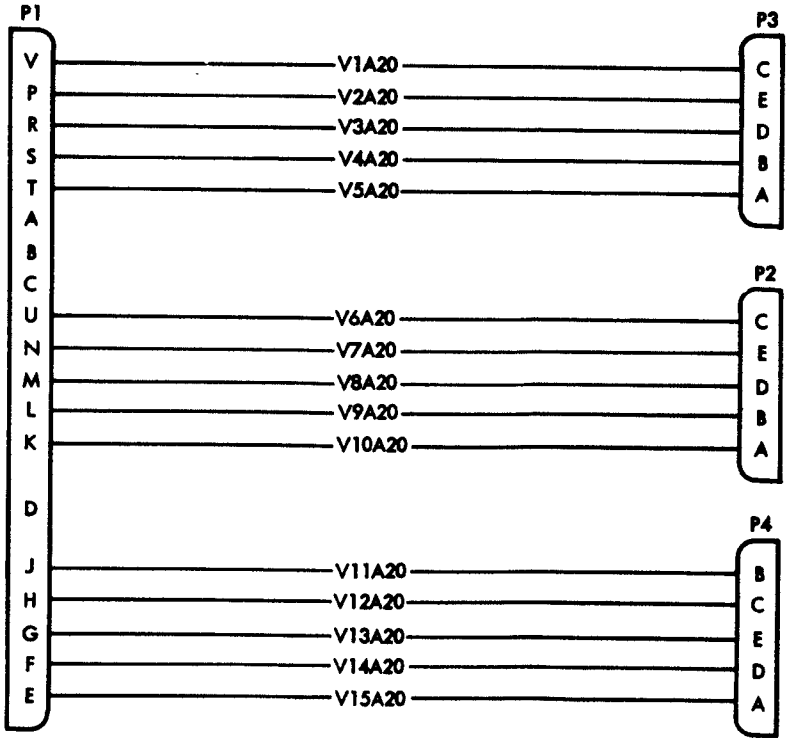

WIRE SPECIFICATIONS

MIL-W-16878, TYPE E

MIL-W-8160

20-GAUGE, 19-STRAND, WHITE TEFLON INSULATED WIRE.

W-32-226

Figure 8-30. Cable Assembly W18

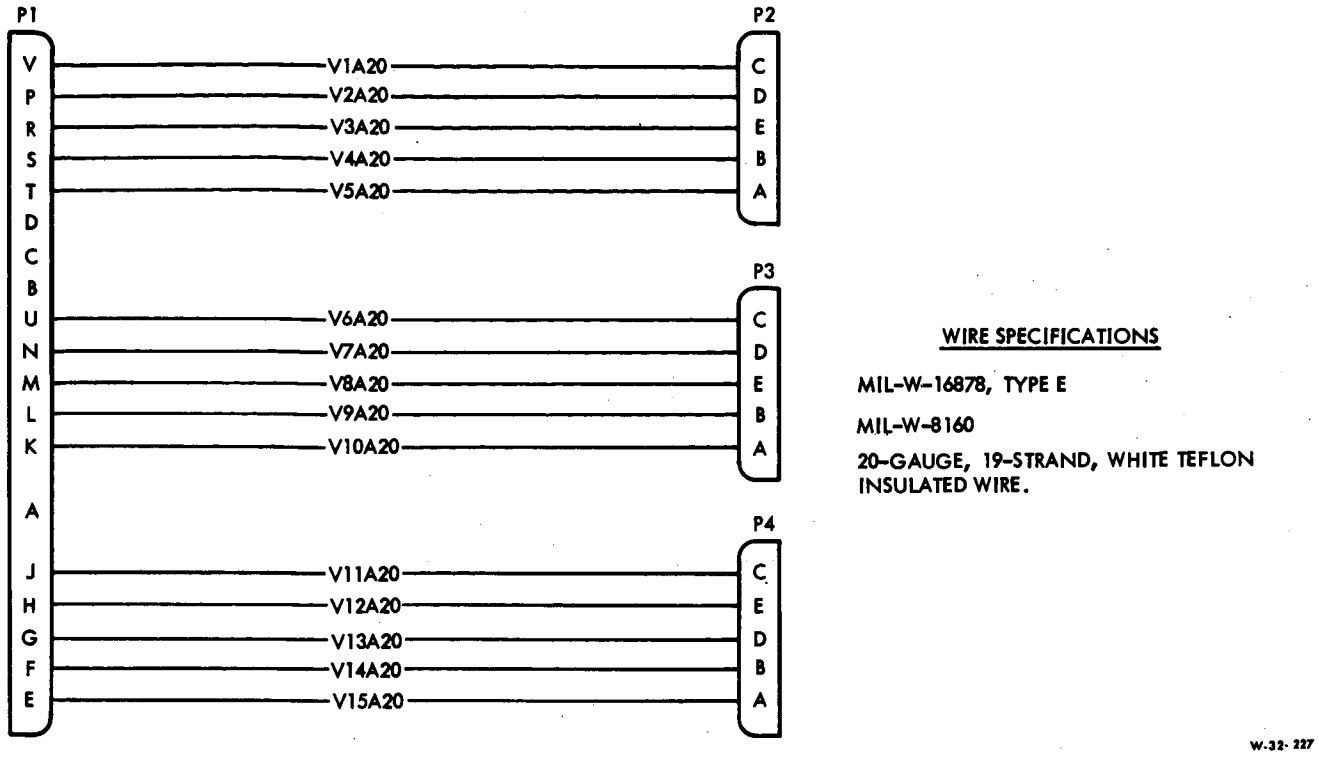

Figure 8-31. Cable Assembly W19

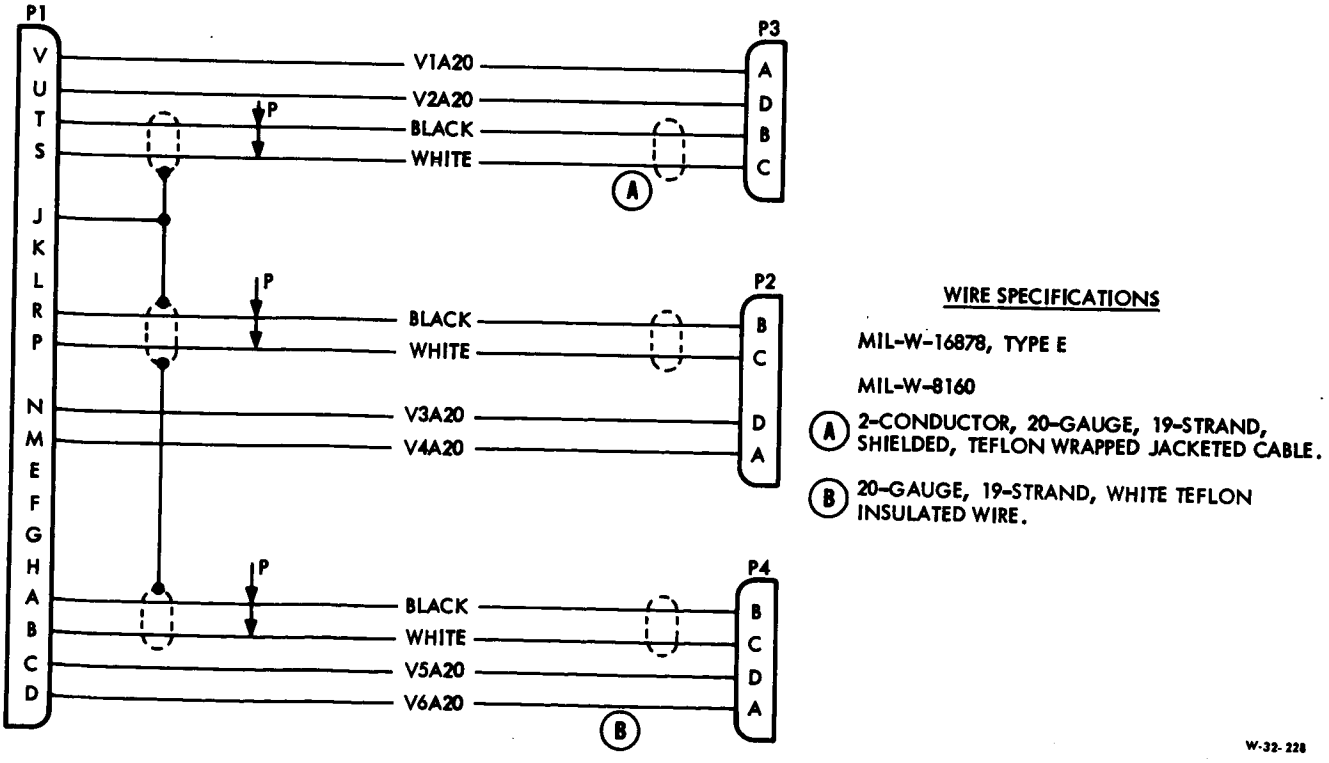

Figure 8-32. Cable Assembly W20

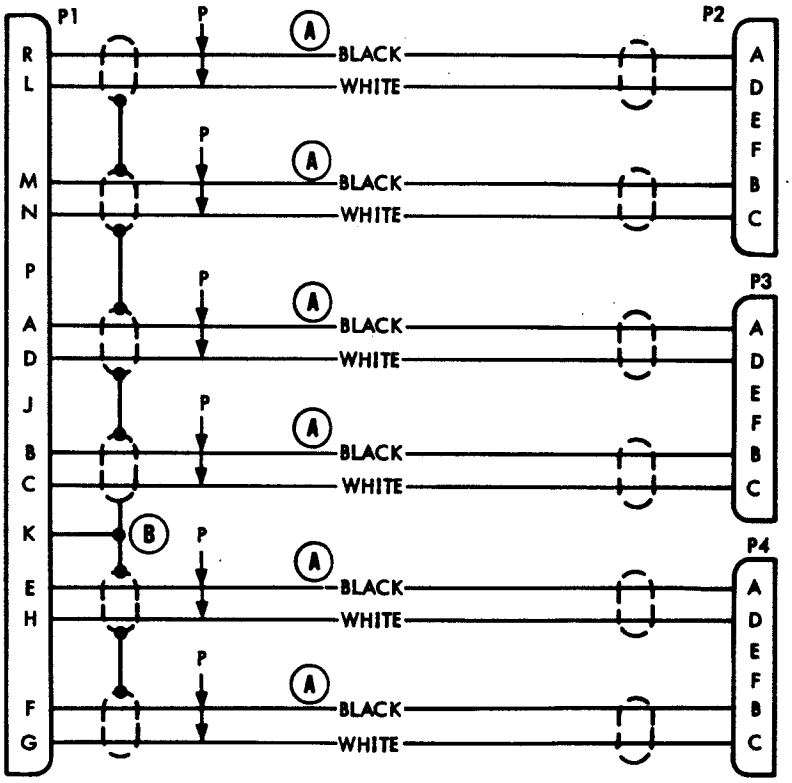

WIRE SPECIFICATIONS

MIL-W-16878, TYPE E

(A) 2-CONDUCTOR, 20-GAUGE, 19-STRAND, SHIELDED, TEFLON WRAPPED JACKETED CABLE (TYPICAL, 6 PLACES).

(B) 22-GAUGE, 19-STRAND, WHITE TEFLON INSULATED WIRE.

W-32-229

Figure 8-33. Cable Assembly W21

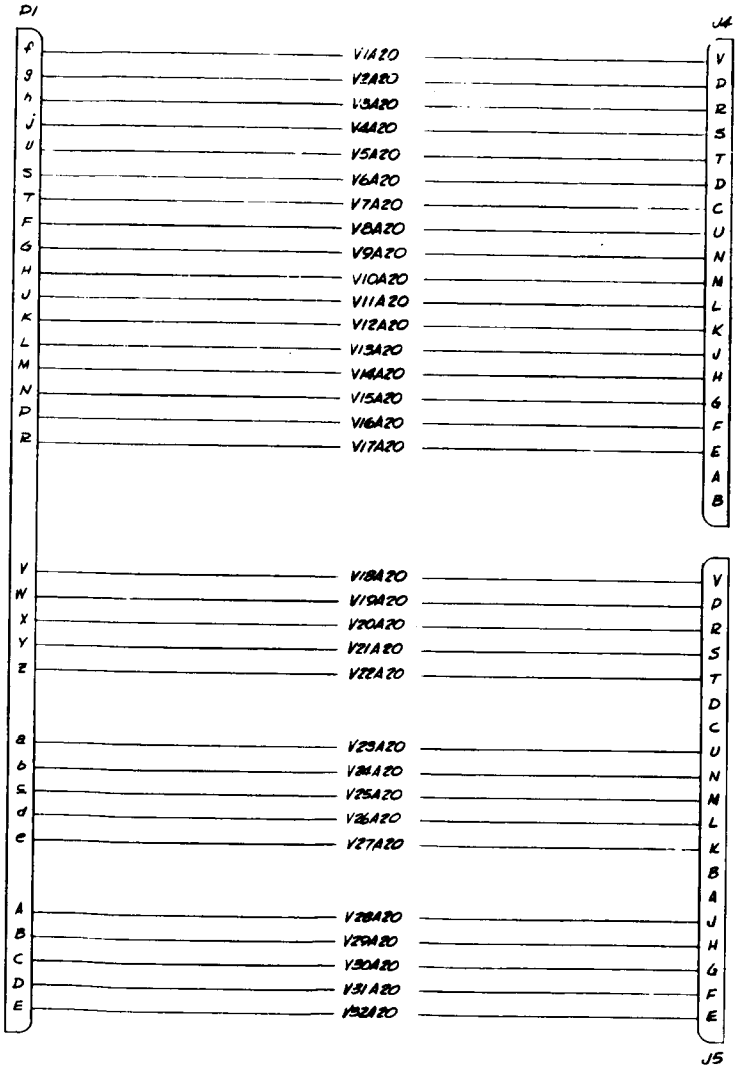

WIRE SPECIFICATIONS

MIL-W-16878, TYPE E

MIL-W-8160

20-GAUGE, 19-STRAND, WHITE TEFLON INSULATED WIRE.

W-32-217

Figure 8-34. Cable Assembly W22

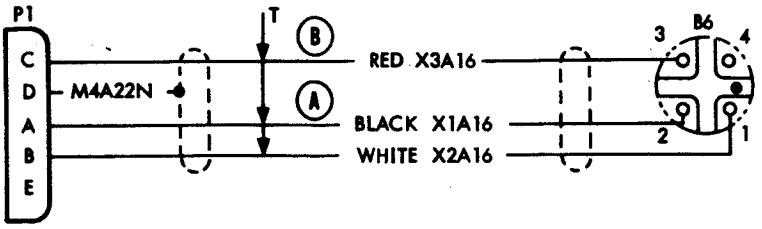

WIRE SPECIFICATIONS

MIL-W-16878, TYPE E

MIL-W-8160

(A) 3-CONDUCTOR, 16-GAUGE, 19-STRAND, SHIELDED, TEFLON WRAPPED JACKETED CABLE.

(B) 22-GAUGE, 19-STRAND, WHITE TEFLON INSULATED WIRE.

W-32-230

Figure 8-35. Cable Assembly W23

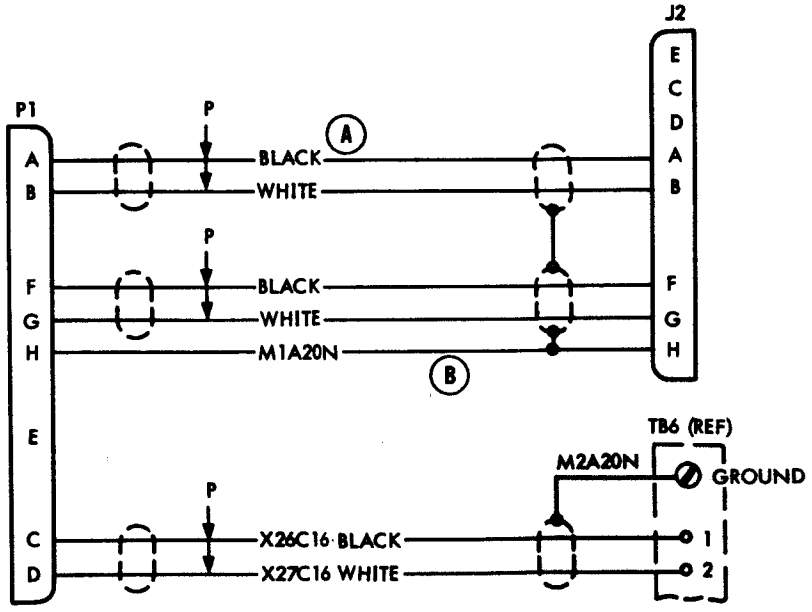

WIRE SPECIFICATIONS

MIL-W-16878, TYPE E

MIL-W-8160

(A) 2-CONDUCTOR, 16-GAUGE, 19-STRAND, SHIELDED, TEFLON WRAPPED JACKETED CABLE (TYPICAL, 3 PLACES).

(B) 20-GAUGE, 19-STRAND, WHITE TEFLON INSULATED WIRE.

W-32-231

Figure 8-36. Cable Assembly W24

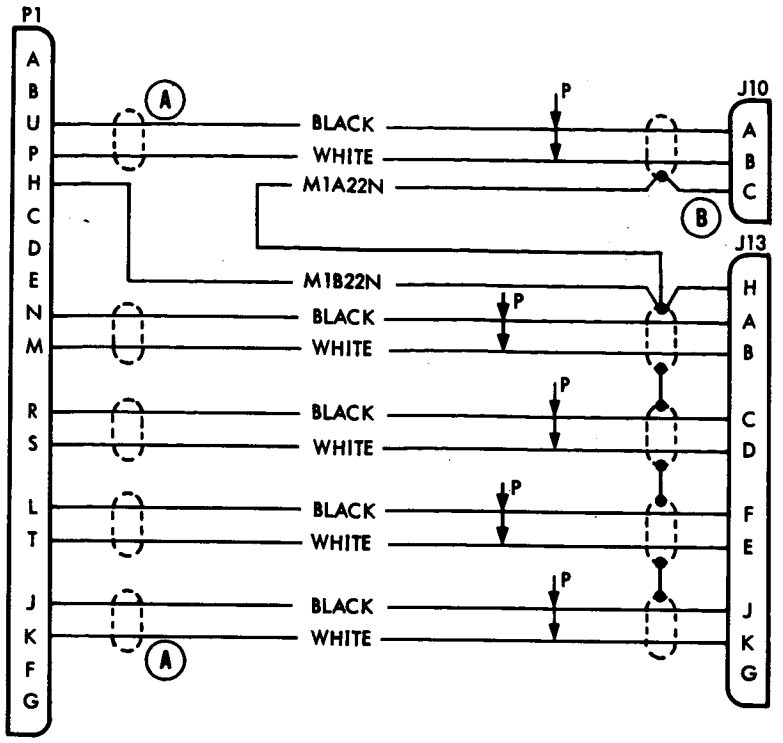

WIRE SPECIFICATIONS

MIL-W-16878, TYPE E

MIL-W-8160

(A) 2-CONDUCTOR, 20-GAUGE, 19-STRAND, SHIELDED, TEFLON WRAPPED JACKETED CABLE (TYPICAL, 5 PLACES).

(B) 22-GAUGE, 19-STRAND, WHITE TEFLON INSULATED WIRE.

W-32-232

Figure 8-37. Cable Assembly W25

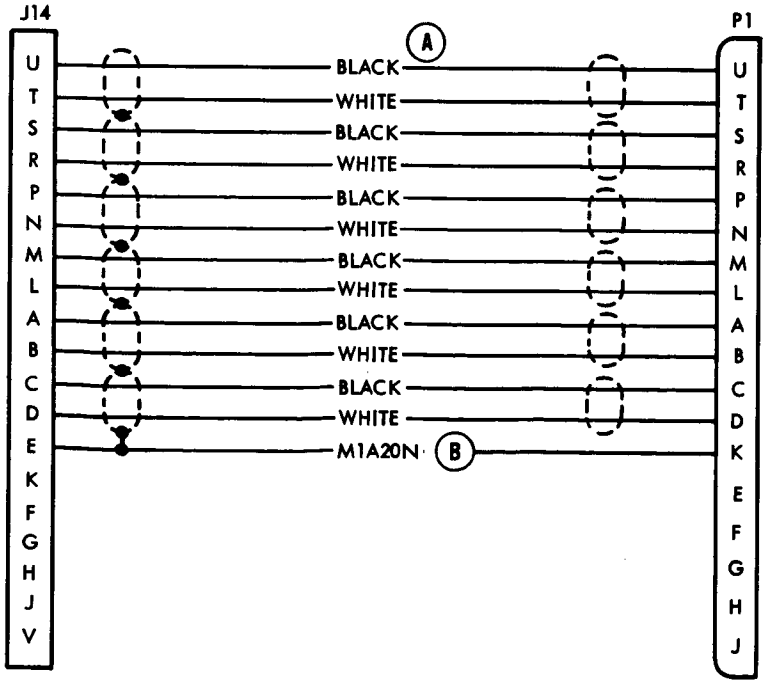

WIRE SPECIFICATIONS

MIL-W-16878, TYPE E

MIL-W-8160

(A) 2-CONDUCTOR, 20-GAUGE, 19-STRAND, SHIELDED, TEFLON WRAPPED JACKETED CABLE (TYPICAL, 6 PLACES).

(B) 20-GAUGE, 19-STRAND, WHITE TEFLON INSULATED WIRE.

W-32-233

Figure 8-38. Cable Assembly W26

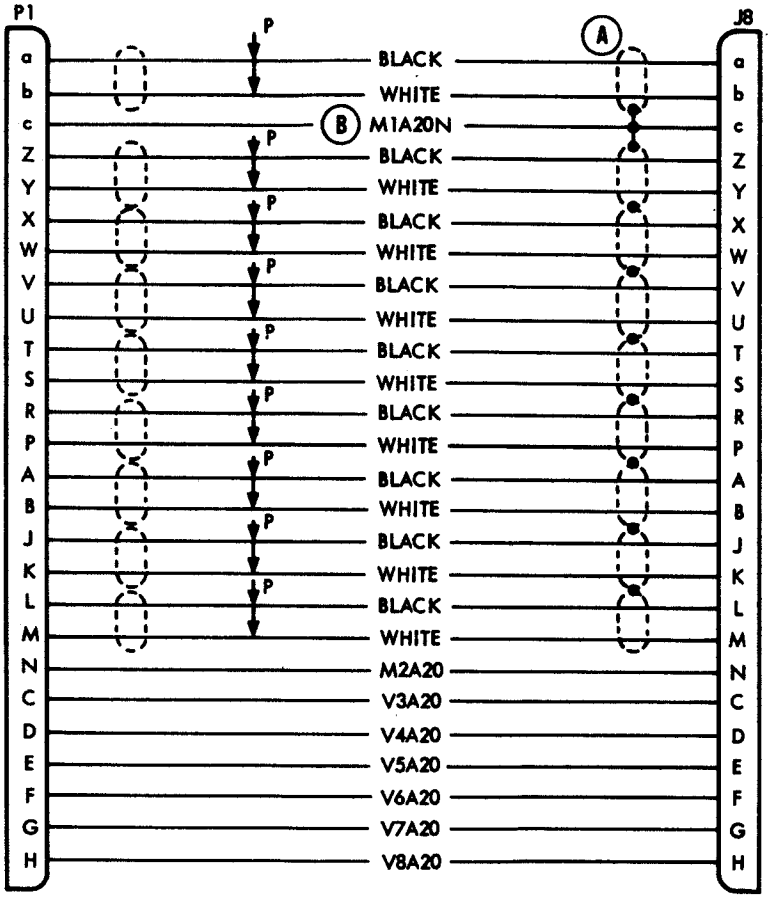

WIRE SPECIFICATIONS

MIL-W-16878, TYPE E

MIL-W-8160

(A) 2-CONDUCTOR, 20-GAUGE, 19-STRAND, SHIELDED, TEFLON WRAPPED JACKETED CABLE (TYPICAL, 9 PLACES).

(B) 20-GAUGE, 19-STRAND WHITE TEFLON INSULATED WIRE.

W-32-234

Figure 8-39. Cable Assembly W27

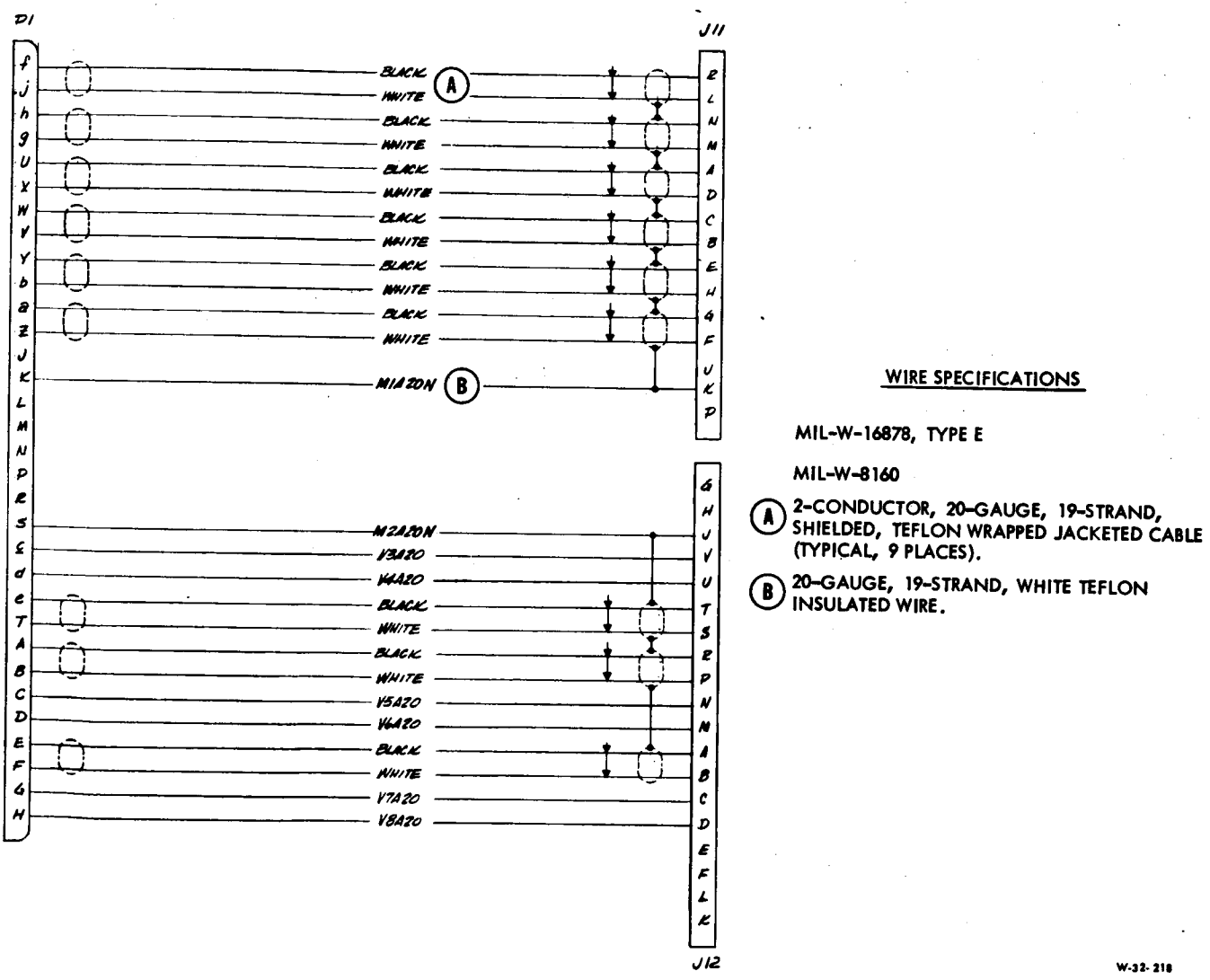

Figure 8-40. Cable Assembly W28

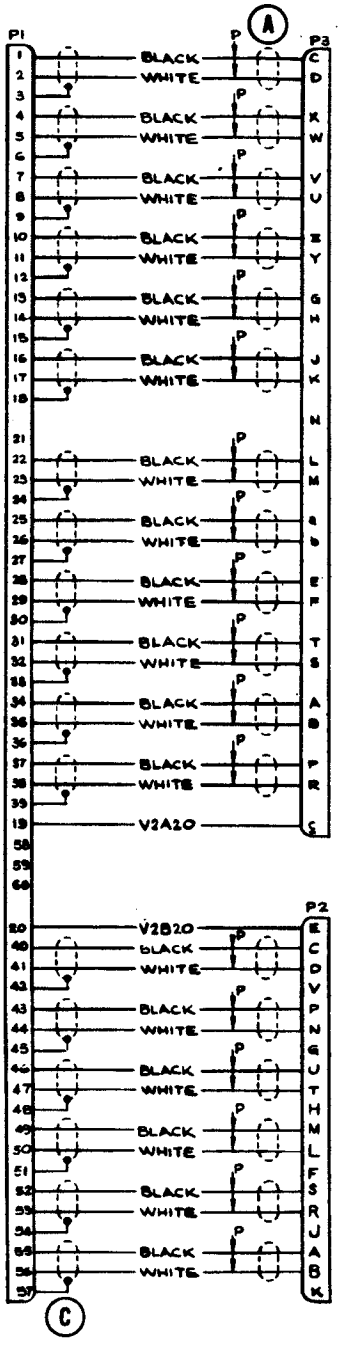

WIRE SPECIFICATIONS

MIL-W-16878, TYPE E

MIL-W-8160

(A) 2-CONDUCTOR, 20-GAUGE, 19-STRAND, SHIELDED, TEFLON WRAPPED JACKETED CABLE (TYPICAL, 18 PLACES).

(B) 20-GAUGE, 19-STRAND, WHITE TEFLON INSULATED WIRE.

(C) 22-GAUGE, 19-STRAND, WHITE TEFLON INSULATED WIRE.

W-32-219

Figure 8-41. Cable Assembly W29

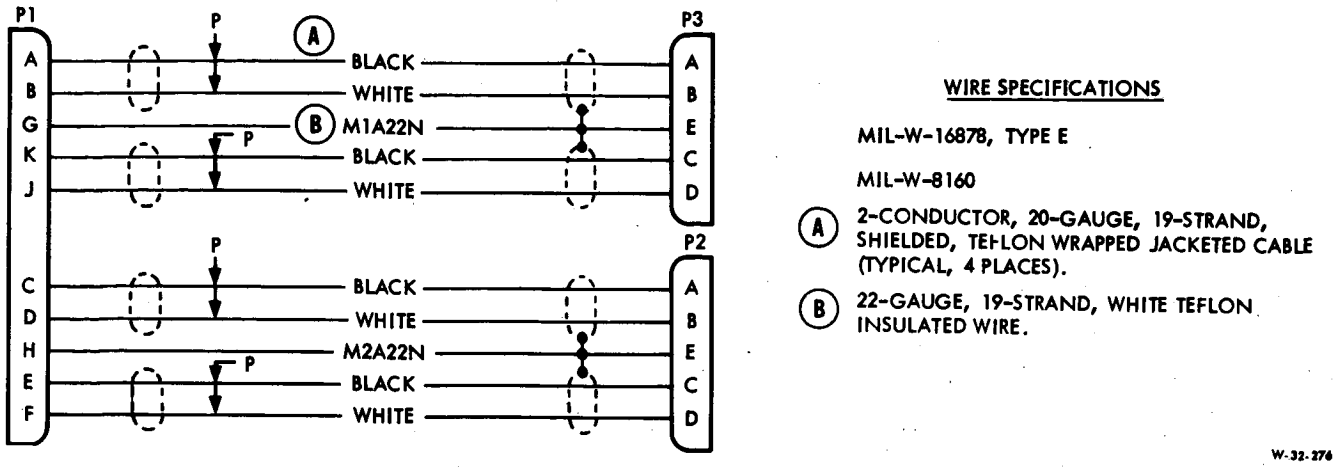

Figure 8-42. Cable Assembly W30

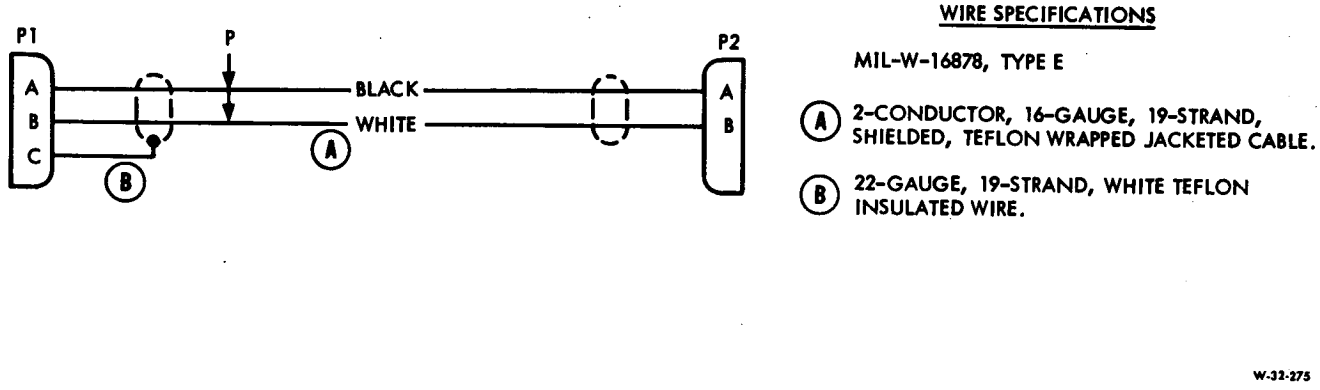

Figure 8-43. Cable Assembly W31

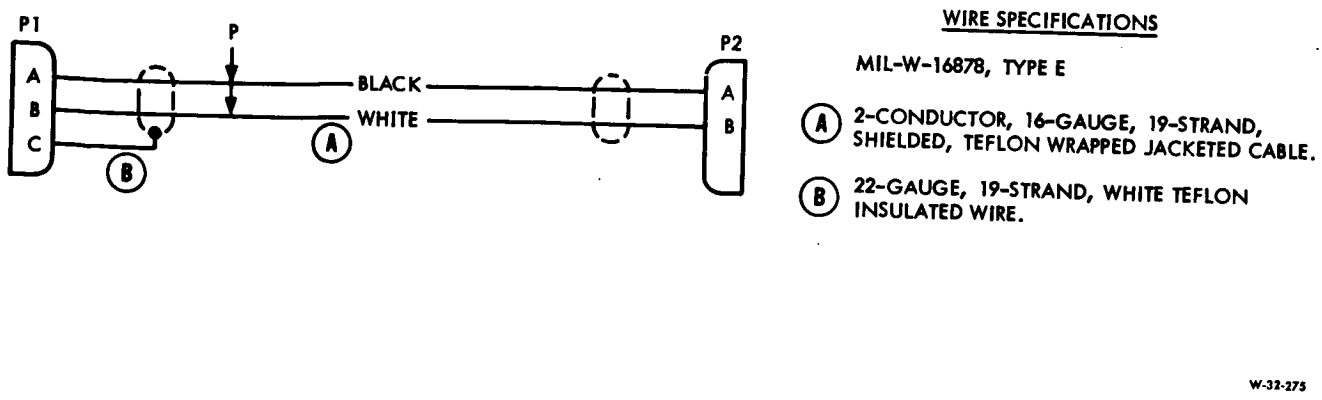

Figure 8-44. Cable Assembly W32

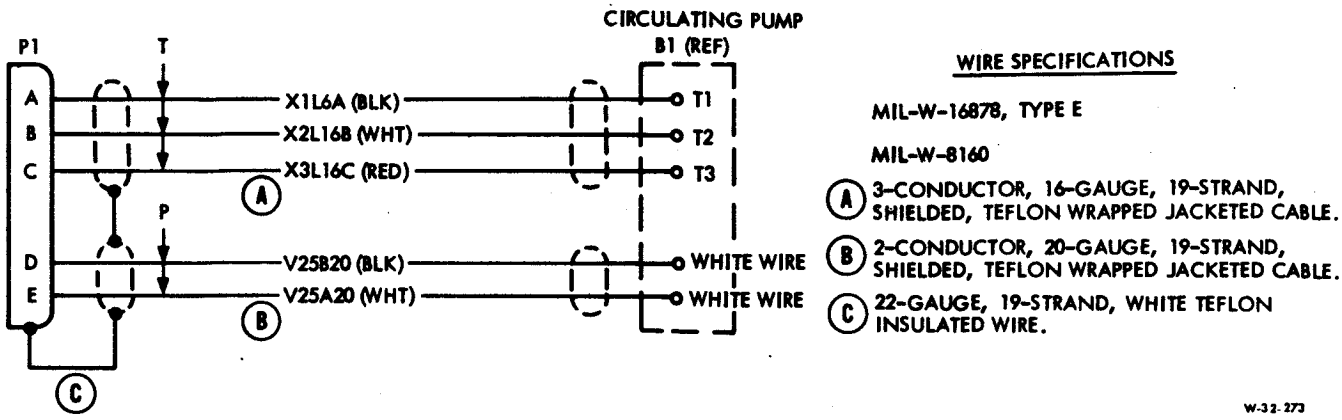

Figure 8-45. Cable Assembly W33

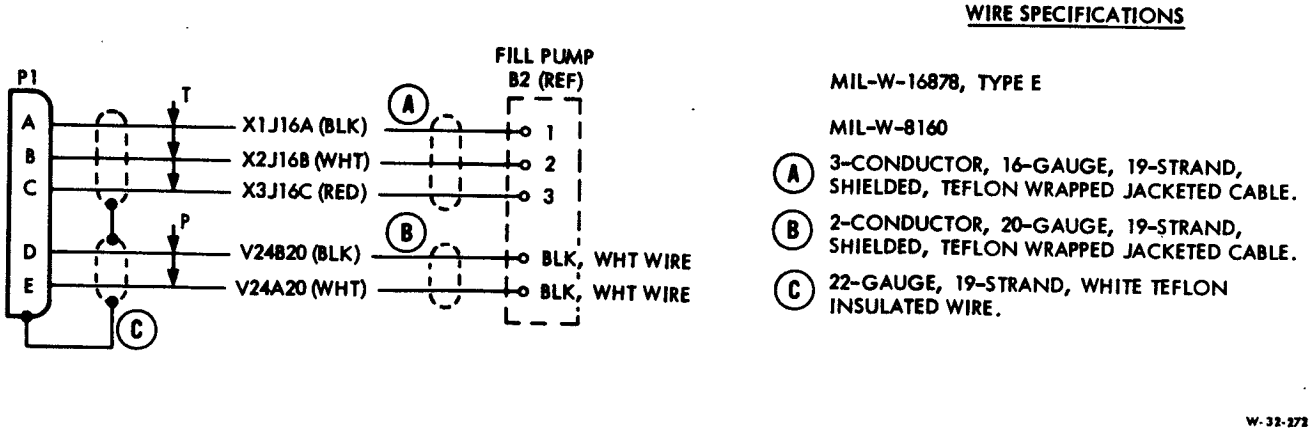

Figure 8-46. Cable Assembly W34

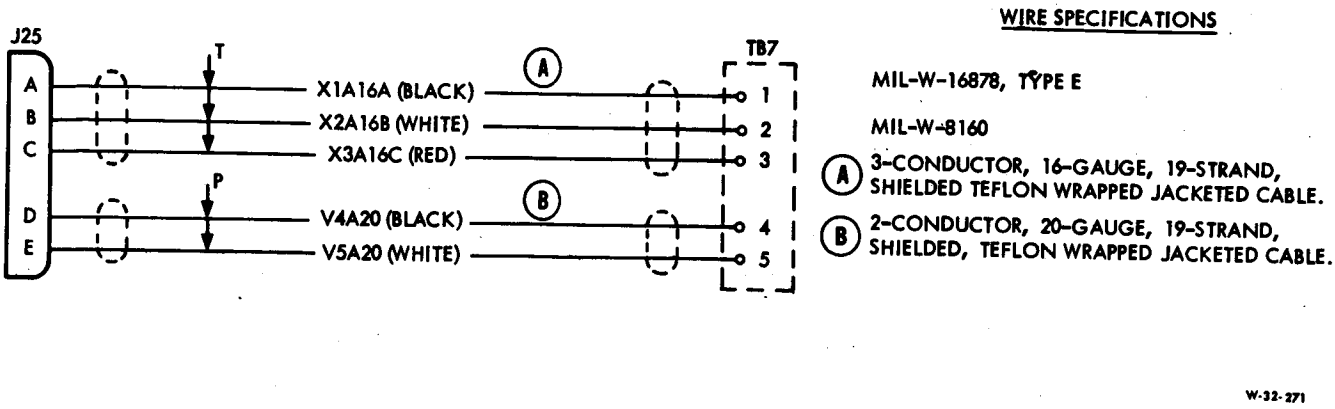

Figure 8-47. Cable Assembly W35

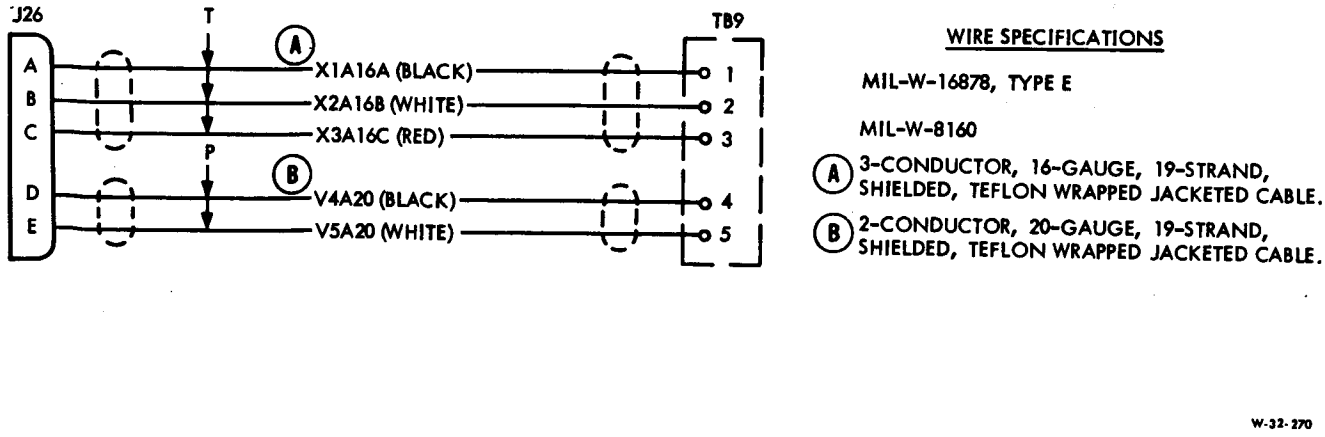

Figure 8-48. Cable Assembly W36

APPENDIX A

SOURCE DATA

A-1. GENERAL.

A-2. This appendix provides a complete listing of source data used during the preparation of this manual.

A-3. ENGINEERING DRAWINGS.

A-4. The following is a list of top assembly drawings for major items of the ECS Refrigeration Unit.

Drawing No.	Change Letter	Title
844061	N/C	Control and Instrumentation Panel Assembly
844064	N/C	Control and Instrumentation Panel Electrical (Schematic) Instruction Plate
845179	N/C	Relay Panel Electrical (Schematic) Instruction Plate
845566	C	Refrigeration Unit Plumbing Installation
845572	N/C	Circuit Breaker Panel Electrical (Schematic) Instruction Plate
845573	N/C	Refrigeration System Electrical (Schematic) Instruction Plate
845585	A	Interconnecting Cable (Schematic) Diagram
845587	N/C	Refrigeration System Fluid (Schematic) Instruction Plate
845886	N/C	Refrigeration Unit Assembly
846357	C	Connector Panel Assembly
847204	T	Fluid Control Module Assembly
847208	B	Refrigeration Unit Fluid (Schematic) Instruction Plate

Drawing No.	Change Letter	Title
847218	A	Input Power Electrical (Schematic) Instruction Plate
847233	F	Circuit Breaker Panel Assembly
847250	H	Refrigeration Unit (Outline Drawing)
847254	B	Universal Controller
847255	D	Frequency Converter and Calibration Oscillator Meter Set
847259	J	Input Power Panel Assembly

A-5. SPECIFICATIONS.

A-6. The following is a list of process specifications applicable to the ECS Refrigeration Unit.

Specification No. /Date	Revision	Title
SS-1378-R/30 Aug 1965	Rev. 1	Acceptance Test Procedure

A-7. ENGINEERING ORDERS.

A-8. The following is a list of NAR Engineering Orders applicable to the ECS Refrigeration Unit.

Engineering Orders				
M 522667	M 531525	M 624404	M 624575	M 633889
M 526065	M 531692	M 624409	M 631390	M 633293
M 527374	M 562074	M 624537	M 631397	M 652577
M 530757	M 562092	M 624555	M 631400	M 659637

APPENDIX B

DIFFERENCE DATA SHEETS

B-1. GENERAL.

B-2. Maintenance procedures for refrigeration units included in this section are the same as procedures for Environmental Control System Water-Glycol Service Set Refrigeration Unit Model No. S14-121, AiResearch Part No. 847250-3-1, NR Part No. G14-854025-301, NR Serial No. 008 (ME 901-0319-0001) except for the specific differences noted by the applicable Difference Data Sheet. Sections I through VIII include maintenance data for Environmental Control System Water-Glycol Service Set Refrigeration Unit Model No. S14-121, AiResearch Part No. 847250-3-1, NR Part No. G14-854025-301, NR Serial No. 008 (ME 901-0319-0001).

B-3. INDEX TO DIFFERENCE DATA SHEETS.

B-4. The following index lists units covered by Difference Data Sheets.

Part No.	Nomenclature	Page
Model No. S14-121 AiResearch Part No. 847250-2-1, NR Part No. G14-854025-201, NR Serial No. 015 (ME 901-0319-0001)	Environmental Control System Water-Glycol Service Set Refrigeration Unit . . .	B-3
Model No. S14-121 AiResearch Part No. 847250-4-1, NR Part No. G14-854025-401, NR Serial No. 005 and 006 (ME 901-0319-0001)	Environmental Control System Water-Glycol Service Set Refrigeration Unit . . .	B-25
Model No. S14-121 AiResearch Part No. 847250-5-1, NR Part No. G14-854025-501, NR Serial No. 016 (ME 901-0319-0001)	Environmental Control System Water-Glycol Service Set Refrigeration Unit . . .	B-39

Part No.	Nomenclature	Page
Model No. S14-121 AiResearch Part No. 847250-6-1, NR Part No. G14-854025-601, NR Serial No. 003 (ME 901-0319-0001)	Environmental Control System Water-Glycol Service Set Refrigeration Unit . . .	B-49
Model No. S14-121 AiResearch Part No. 847250-7-1, NR Part No. G14-854025-701, NR Serial No. 004 and 007 (ME 901-0319-0001)	Environmental Control System Water-Glycol Service Set Refrigeration Unit . . .	B-59
Model No. S14-121 AiResearch Part No. No. G14-854025-801, NR Serial No. 009 and 010 (ME 901-0319-0001)	Environmental Control System Water-Glycol Service Set Refrigeration Unit . . .	B-71
Model No. S14-121 AiResearch Part No. 847250-9-1, NR Part No. G14-854025-111, NR Serial No. 018 (ME 901-0319-0001)	Environmental Control System Water-Glycol Service Set Refrigeration Unit . . .	B-81
Model No. S14-121 AiResearch Part No. 847250-10-1, NR Part No. G14-854025-121, NR Serial No. 012 (ME 901-0319-0001)	Environmental Control System Water-Glycol Service Set Refrigeration Unit . . .	B-95
Model No. S14-121 AiResearch Part No. 847250-11-1, NR Part No. G14-854025-131, NR Serial No. 017 (ME 901-0319-0001)	Environmental Control System Water-Glycol Service Set Refrigeration Unit . . .	B-105
Model No. S14-121 AiResearch Part No. 847250-12-1, NR Part No. G14-854025-141, NR Serial No. 013 and 014 (ME 901-0319-0001)	Environmental Control System Water-Glycol Service Set Refrigeration Unit . . .	B-119

Difference Data Sheet

ENVIRONMENTAL CONTROL SYSTEM WATER-GLYCOL SERVICE SET REFRIGERATION UNIT	Model No. S14-121 AiResearch Part No. 847250-2-1; NR Part No. G14-854025-201, NR Serial No. 015 (ME 901-0319-0001)

THE INSTRUCTIONS CONTAINED IN PRECEDING SECTIONS OF THIS PUBLICATION APPLY EXCEPT FOR THE DIFFERENCES LISTED IN THIS DATA SHEET.

CHARACTERISTIC DIFFERENCES. Same as Refrigeration Unit Model No. S14-121, Airesearch Part No. 847250-3-1, NR Part No. G14-854025-301, NR Serial No. 008 (ME 901-0319-0001) except this unit has a different refrigeration system.

DESCRIPTION. Same as Refrigeration Unit Model No. S14-121, AiResearch Part No. 847250-3-1, NR Part No. G14-854025-301, NR Serial No. 008 (ME 901-0319-0001) except in paragraph 1-54 use Operation and Instruction Manual for Refrigeration System (Part No. 4441, Auto Control Labs, Los Angeles, California) in place of Operation and Instruction Manual for Refrigeration System (Part No. 4512, Auto Control Labs, Los Angeles, California).

FUNCTIONAL TEST. Same as Refrigeration Unit Model No. S14-121, AiResearch Part No. 847250-3-1, NR Part No. G14-854025-301, NR Serial No. 008 (ME 901-0319-0001).

TROUBLE ANALYSIS. Same as Refrigeration Unit Model No. S14-121, AiResearch Part No. 847250-3-1, NR Part No. G14-854025-301, NR Serial No. 008 (ME 901-0319-0001).

REMOVAL AND INSTALLATION. Same as Refrigeration Unit Model No. S14-121, AiResearch Part No. 847250-3-1, NR Part No. G14-854025-301, NR Serial No. 008 (ME 901-0319-0001).

REPAIR INSTRUCTIONS. Same as Refrigeration Unit Model No. S14-121, AiResearch Part No. 847250-3-1, NR Part No. G14-854025-301, NR Serial No. 008 (ME 901-0319-0001).

CALIBRATION AND ADJUSTMENT. Same as Refrigeration Unit Model No. S14-121, AiResearch Part No. 847250-3-1, NR Part No. G14-854025-301, NR Serial No. 008 (ME 901-0319-0001) except in table 6-1, the part number for meter M4 is 847120-38 instead of 847120-44; the scale range is 0 to 300 psig. The part number for meter M5 is 847120-39 instead of 847120-45; the scale range is 0 to 100 psid. The part number for pressure gage GA3 is 846293-16 instead of 846293-23; range is 0 to 300 psig. Pressure transducer MT13 part number is 847342-39 instead of 847342-3. Pressure transducer MT2 part number is 847342-6 instead of 847342-119; range is 0 to 100 psid. Pressure transducer MT5 part number is 847342-5 instead of 847342-109; range is 0 to 300 psig. The refrigeration system part number is 847247-1 (ACL 4441) with a range of -20 to +50°F.

PERIODIC INSPECTION AND SERVICE. Same as Refrigeration Unit Model No. S14-121, AiResearch Part No. 847250-3-1, NR Part No. G14-854025-301, NR Serial No. 008 (ME 901-0319-0001).

Difference Data Sheet

DIAGRAMS. Same as Refrigeration Unit Model No. S14-121, AiResearch Part No. 847250-3-1, NR Part No. G14-854025-301, NR Serial No. 008 (ME 901-0319-0001) except use figure B-1 in place of figure 8-2, figure B-2 in place of figure 8-5, figure B-3 in place of figure 8-6, figure B-4 (sheets 1 and 2) in place of figure 8-7 (sheets 1 and 2), figure B-5 in place of figure 8-10, figure B-6 in place of figure 8-11, figure B-7 in place of figure 8-12, figure B-8 in place of figure 8-30, figure B-9 in place of figure 8-31 and figure B-10 in place of figure 8-41.

APPENDIX A. Same as Refrigeration Unit Model No. S14-121, AiResearch Part No. 847250-3-1, NR Part No. G14-854025-301, NR Serial No. 008 (ME 901-0319-0001) except use the following source data information instead of that listed in Appendix A.

Drawing No.	Change Letter	Title
845197	N/C	Control and Instrumentation Panel Electrical (Schematic) Instruction Plate
845198	N/C	Control and Instrumentation Panel Assembly
845221	A	Refrigeration Unit Plumbing Installation
845236	B	Relay Panel Electrical (Schematic) Instruction Plate
845243	A	Refrigeration System Fluid (Schematic) Instruction Plate
845572	N/C	Circuit Breaker Panel Electrical (Schematic) Instruction Plate
845885	N/C	Refrigeration Unit Assembly
846301	N/C	Refrigeration System Electrical (Schematic) Instruction Plate
846357	C	Connector Panel Assembly
847204	T	Fluid Control Module Assembly
847208	B	Refrigeration Unit Fluid (Schematic) Instruction Plate
847218	A	Input Power Electrical (Schematic) Instruction Plate
847220	C	Interconnecting Cable (Schematic) Diagram
847233	C	Circuit Breaker Panel Assembly

Difference Data Sheet

Drawing No.	Change Letter	Title
847250	H	Refrigeration Unit (Outline Drawing)
847254	A	Universal Controller
847255	C	Frequency Converter and Calibration Oscillator Meter Set
847259	J	Input Power Panel Assembly

Specification No. /Date	Revision	Title
SS-1378-R/30 Aug 1965	Rev. 1	Acceptance Test Procedure

	Engineering Orders	
M 522667 M 624536 M 624566 M 624575 M 631389	M 631391 M 631394 M 631395 M 631398 M 633885	M 636293 M 656100 M 659636

Fold-out #1

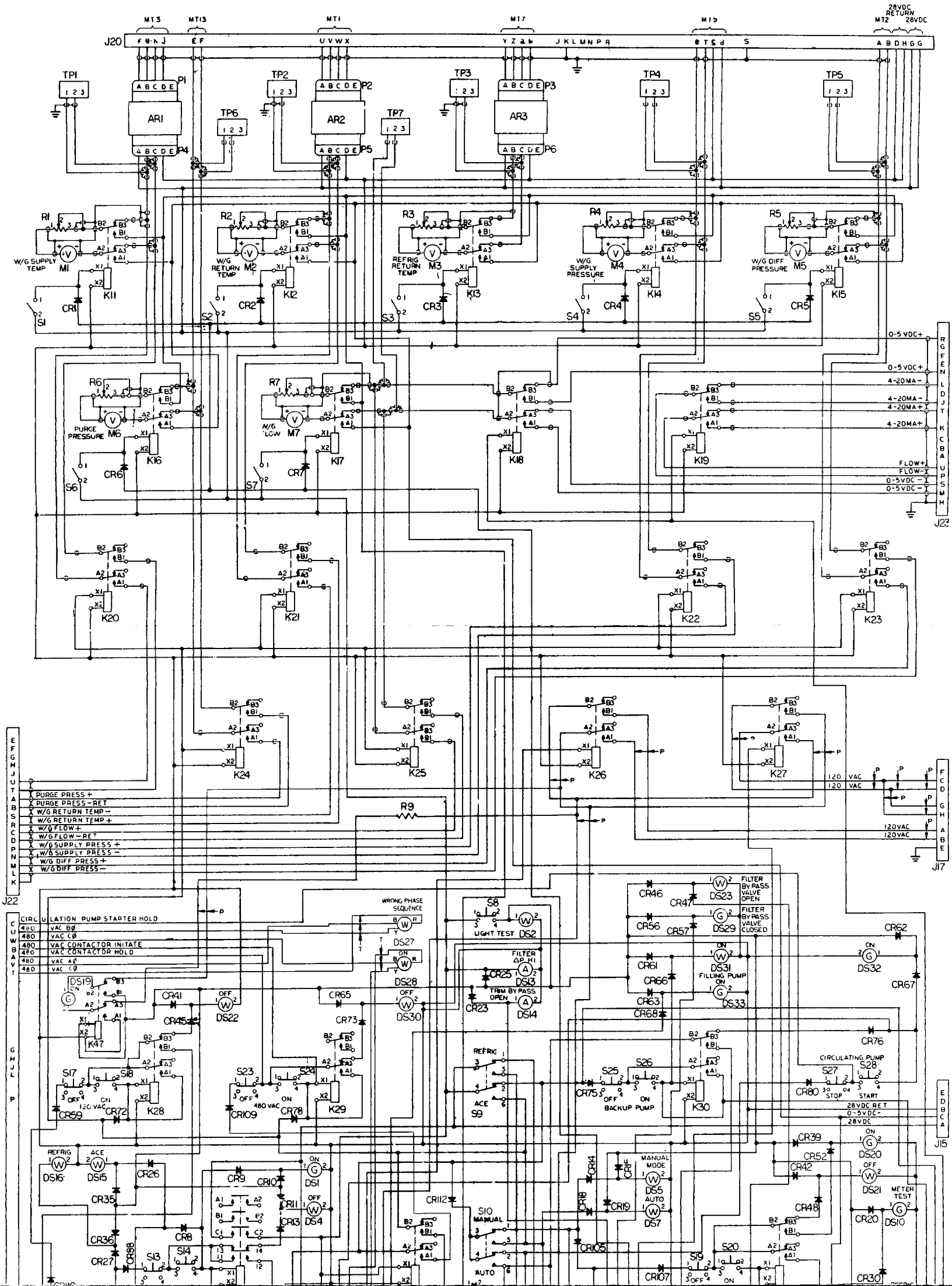
J20
MT3
MT13
MT1
MT7
MT5
MT2
28VDC RETURN
28VDC
TP1
TP2
TP3
TP4
TP5
TP6
TP7
AR1
AR2
AR3
P1
P2
P3
P4
P5
P6
R1
R2
R3
R4
R5
R6
R7
W/G SUPPLY TEMP
M1
W/G RETURN TEMP
M2
REFRIG RETURN TEMP
M3
W/G SUPPLY PRESSURE
M4
W/G DIFF PRESSURE
M5
PURGE PRESSURE
M6
W/G FLOW
M7
K11
K12
K13
K14
K15
K16
K17
K18
K19
K20
K21
K22
K23
K24
K25
K26
K27
K28
K29
K30
K47
CR1
CR2
CR3
CR4
CR5
CR6
CR7
S1
S2
S3
S4
S5
S6
S7
0-5 VDC+
4-20MA-
4-20MA+
FLOW+
FLOW-
0-5VDC-
J23
PURGE PRESS +
PURGE PRESS-RET
W/G RETURN TEMP-
W/G RETURN TEMP +
W/G FLOW+
W/G FLOW-RET
W/G SUPPLY PRESS +
W/G SUPPLY PRESS -
W/G DIFF PRESS +
W/G DIFF PRESS-
J22
R9
120 VAC
120 VAC
120VAC
120VAC
J17
CIRCULATION PUMP STARTER HOLD
480 VAC BØ
480 VAC CØ
480 VAC CONTACTOR INITATE
480 VAC CONTACTOR HOLD
480 VAC AØ
480 VAC CØ
WRONG PHASE SEQUENCE
DS27
DS28
DS19
DS22
DS30
S8
LIGHT TEST
DS2
FILTER ΔP HI
DS13
TRIM BY PASS OPEN
DS14
CR25
CR23
CR41
CR45
CR65
CR73
CR46
CR47
CR56
CR57
CR61
CR66
CR63
CR68
CR62
CR67
CR76
DS23
FILTER BY PASS VALVE OPEN
DS29
FILTER BY PASS VALVE CLOSED
DS31
FILLING PUMP
DS32
DS33
K47
S17
S18
S23
S24
S25
S26
S27
S28
CR59
CR72
CR109
CR78
CR75
CR80
K28
K29
K30
REFRIG
ACE
S9
CIRCULATING PUMP
STOP
START
28VDC RET
0-5VDC-
28VDC
J15
DS16
DS15
CR26
CR35
CR36
CR27
CR88
CR9
CR10
CR11
CR13
CR8
DS1
DS4
S14
S13
CR112
S10
MANUAL
AUTO
CR14
CR15
CR18
CR19
CR105
MANUAL MODE
DS5
AUTO
DS7
CR39
CR52
CR42
CR48
CR20
CR30
DS20
DS21
METER TEST
DS10
S19
S20
CR107
J22

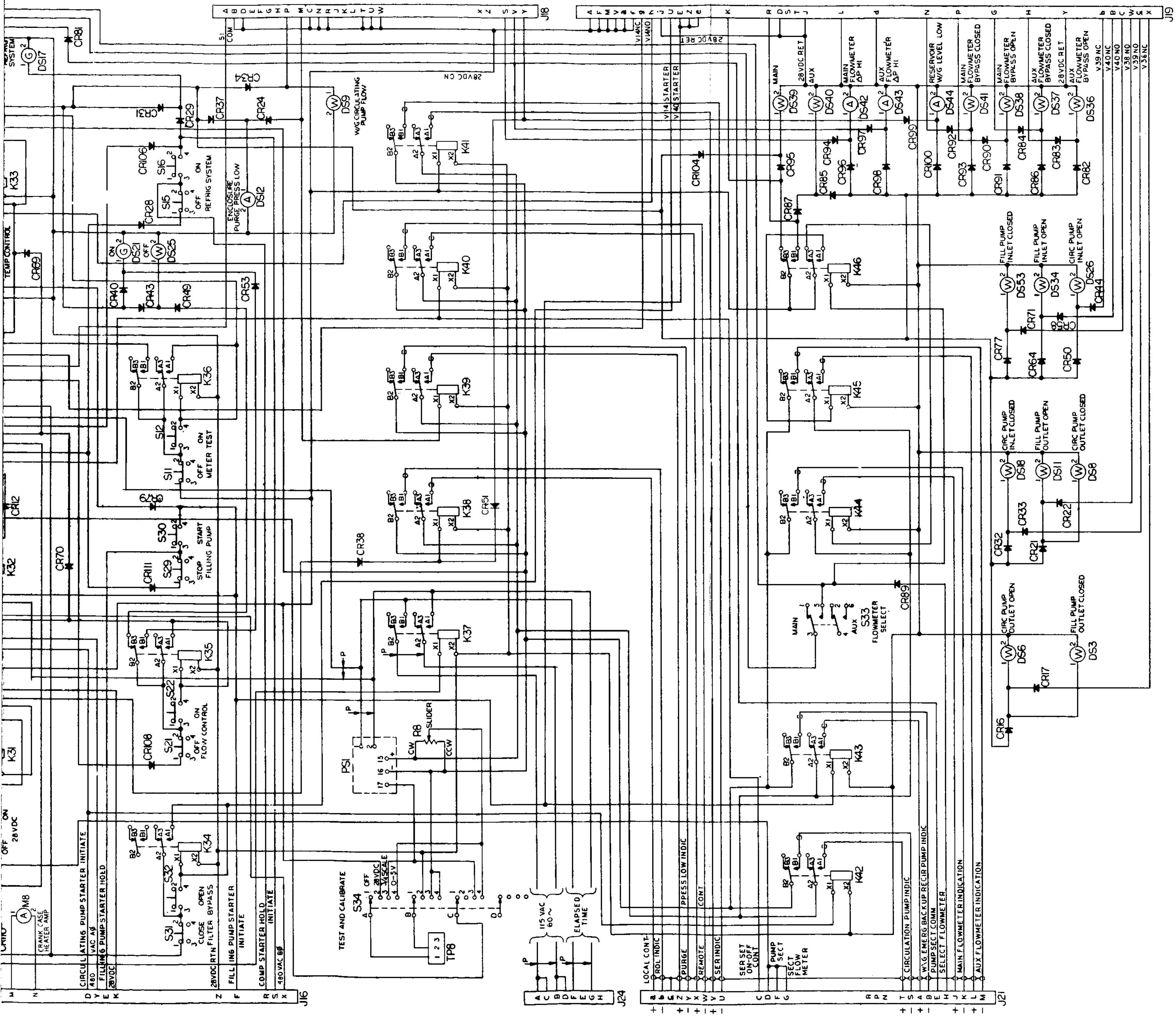

AR1 THRU AR3	847281-1	EXCITER, TEMPERATURE	DS18	847299-1	INDICATOR, LAMP	J20	32 PIN	CONNECTOR	P1 THRU P6	6 PIN	CONNECTOR
			DS19 THRU DS21	-3		J21	26 PIN				
			DS22	-1		J22	18 PIN				
CR1 THRU CR11	1N1218	DIODE	DS23	-3		J23	18 PIN	CONNECTOR	PS1	847119-1	POWER SUPPLY
CR12	1N1341A		DS24 THRU DS26	847299-1	INDICATOR LAMP						
CR13 THRU CR27	1N1218		DS27		PHASE SENSOR & LIGHT						
CR28	1N1341A		DS28		PHASE SENSOR & LIGHT				R1 THRU R7	VARIABLE	POTENTIOMETER
CR29 THRU CR78	1N1218		DS29 THRU DS31	847299-1	INDICATOR LAMP	K11 THRU K30	MS25273-D1	RELAY	R8	10 TURN	POTENTIOMETER
			DS32	-3		K31	MS27997-D2	RELAY	R9	2500Ω 1/2W	RESISTOR
			DS33	-3		K32 THRU K47	MS25273-D1	RELAY			
CR 79	1N1341A		DS34 THRU DS41	-1					S1 THRU S7	SPST	SWITCH
CR80 THRU CR105	1N1218		DS42	-4					S8	2 CIRCUIT	
CR106	1N1341A		DS43	-4		M1	847120-37	METER	S9	MS35059-23	
CR107 THRU CR110	1N1218		DS44	847299-4	INDICATOR, LAMP	M2	-36		S10	MS35059-23	
CR111, CR112	1N314A	DIODE				M3	-37		S11 THRU S32	2 CIRCUIT	
DS1	847299-3	INDICATOR, LAMP				M4	-38		S33	MS35059-23	
DS2 THRU DS11	-1		J15	5 PIN	CONNECTOR	M5	-39		S34	3DECK, 4 POS	SWITCH
DS12 THRU DS14	-4		J16	23 PIN		M6	-28				
DS15	-1		J17	8 PIN		M7	847120-40	METER			
DS16	-1		J18	23 PIN		M8		METER	TP1 THRU TP8	3 PIN	RECEPTACLE
DS17	847299-3	INDICATOR, LAMP	J19	32 PIN	CONNECTOR						

845197A
W-32-690

FOLD-OUT #2

Figure B-1. Control and Instrumentation Panel Electrical Schematic

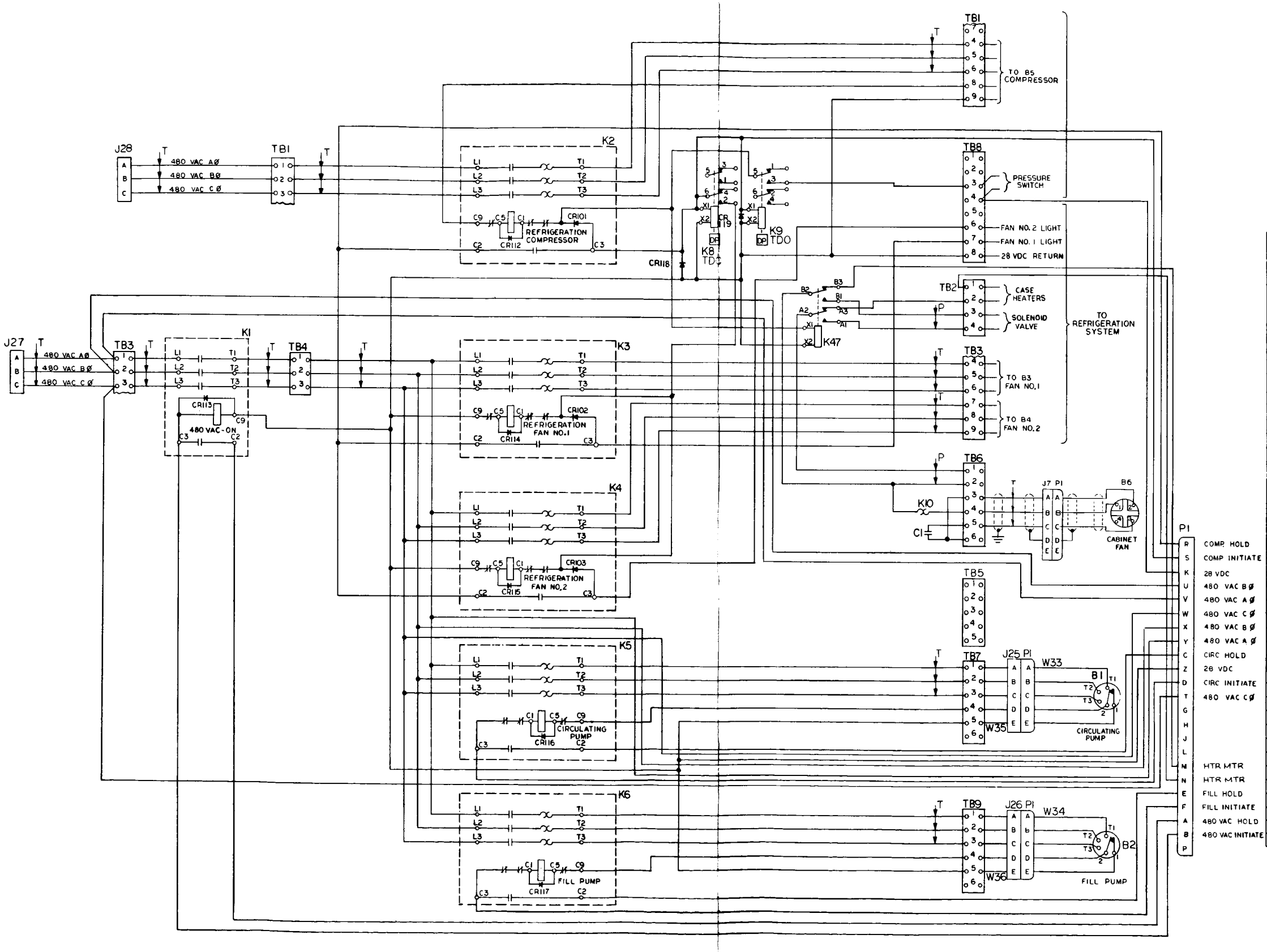

B1	847276-1	PUMP
B2	847275-1	PUMP
B6	115 VAC 60~ 1Ø	FAN
CR101	IN5201	DIODE
CR102	IN1218	
CR103	IN1218	
CR112	IN1341	
CR113		
CR114		
CR115		
CR116		
CR117	IN1341	
CR118	IN649	
CR119	IN649	DIODE
C1	25MFD 200VAC	CAPACITOR
J27	MS3106A-20-19S	CONNECTOR
J28	MS3106A-28-6S	CONNECTOR
K1	28VDC CONTROL 480 VAC 3Ø POWER	CONTACTOR
K2		
K3		
K4		
K5		
K6		
K8		
K9		
K10	28 VDC CONTROL 480 VAC 3Ø POWER	CONTACTOR
K47	MS25273-D1	RELAY
P1	23 PIN	CONNECTOR
TB1	9 TERMINAL	TERMINAL BOARD
TB2	4	
TB3	9	
TB4	3	
TB5	5	
TB6	6	
TB7	6	
TB8	8	
TB9	6 TERMINAL	TERMINAL BOARD
W33	845237-1	CABLE ASSEMBLY
W34	845238-1	CABLE ASSEMBLY
W35	845240-1	CABLE ASSEMBLY
W36	845241-1	CABLE ASSEMBLY

Figure B-2. Relay Panel Electrical Schematic

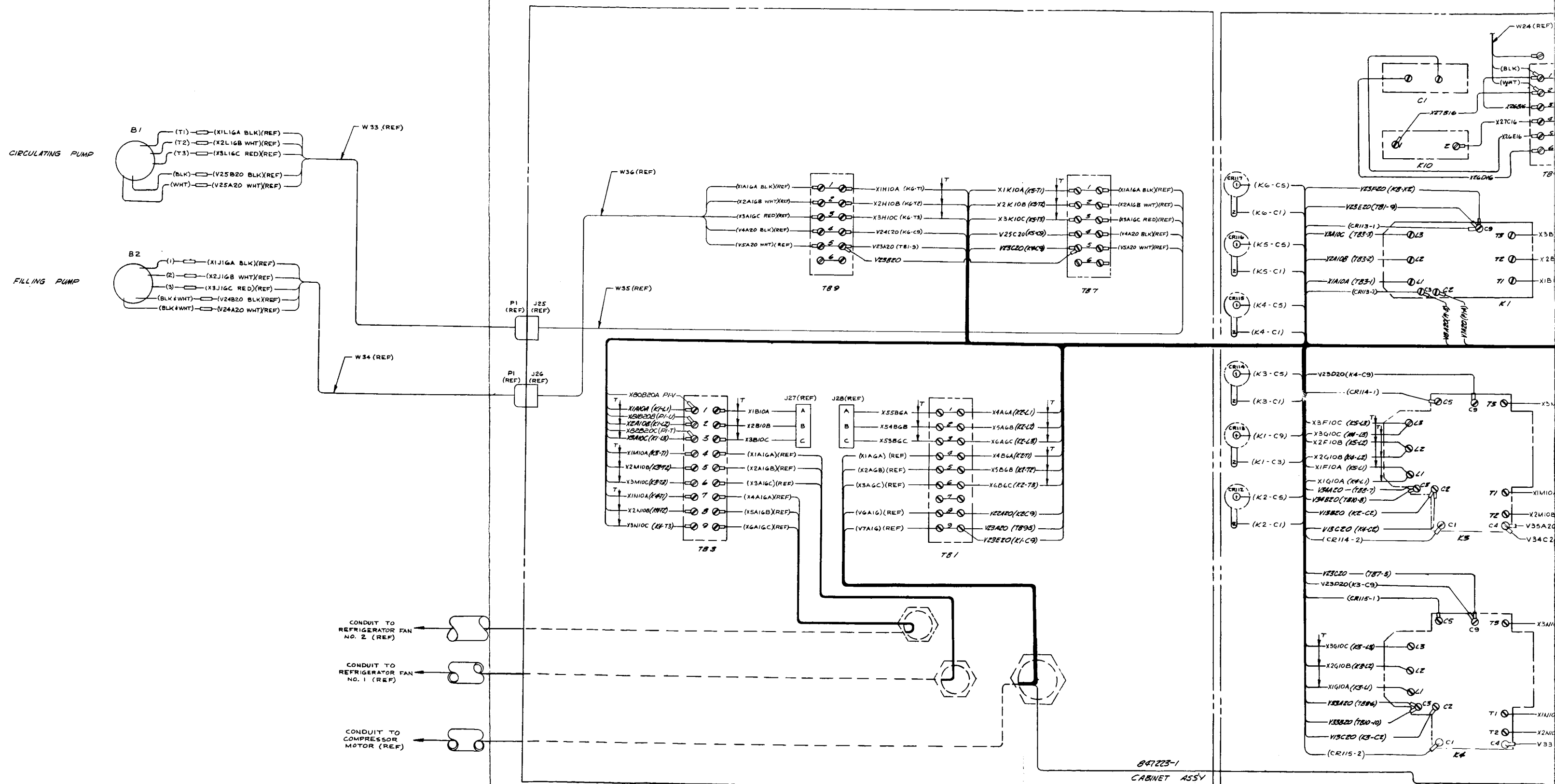
CIRCULATING PUMP
FILLING PUMP
B1
B2
W33 (REF)
W34 (REF)
W35 (REF)
W36 (REF)
W24 (REF)
P1 (REF)
J25 (REF)
J26 (REF)
J27 (REF)
J28 (REF)
TB1
TB3
TB7
TB9
K1
K3
K4
K10
C1
CONDUIT TO REFRIGERATOR FAN NO. 2 (REF)
CONDUIT TO REFRIGERATOR FAN NO. 1 (REF)
CONDUIT TO COMPRESSOR MOTOR (REF)
847223-1
CABINET ASS'Y

FOLD-OUT #1

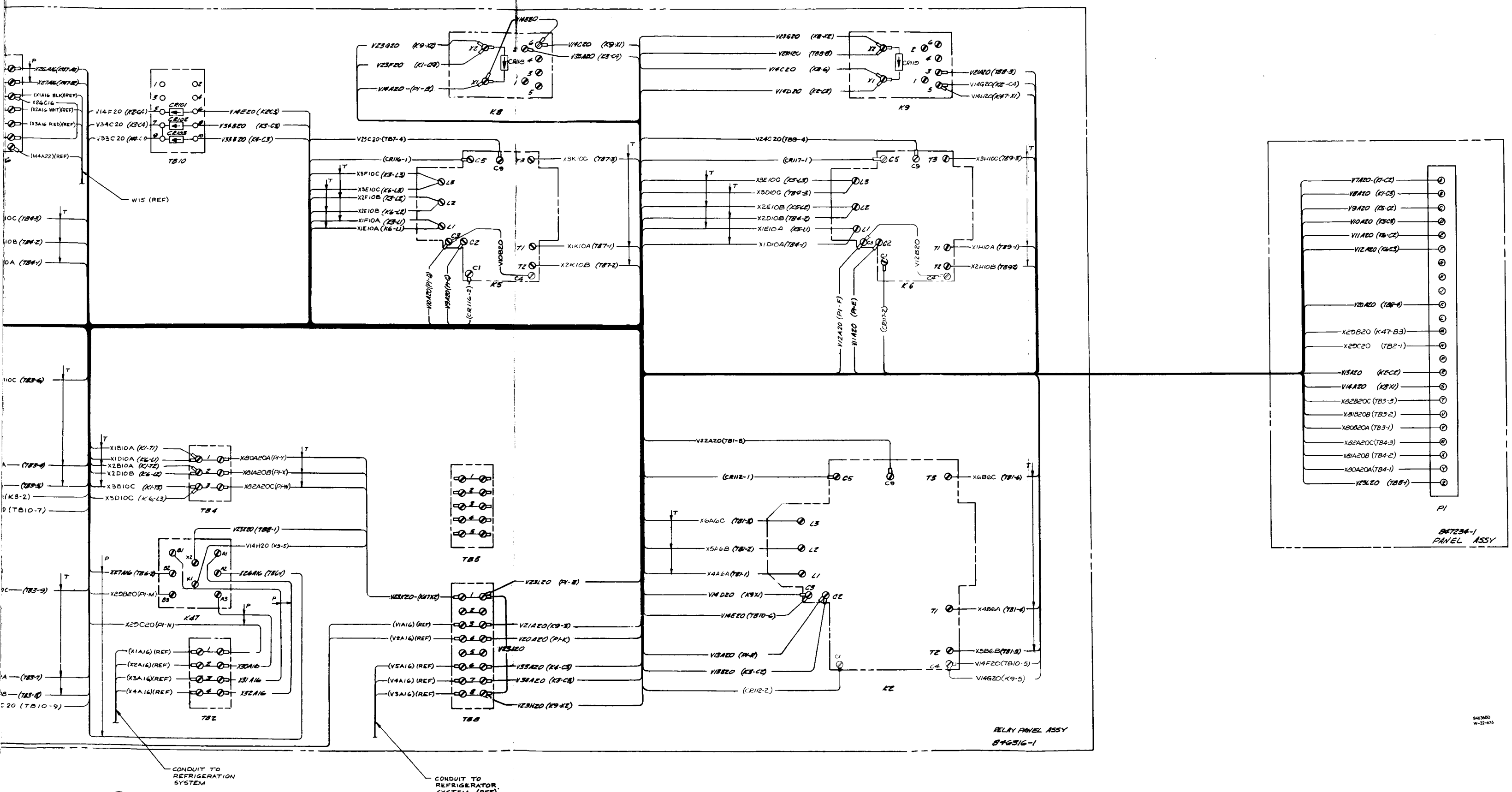

FOLD-OUT #2

Figure B-3. Refrigeration Unit Wiring Diagram

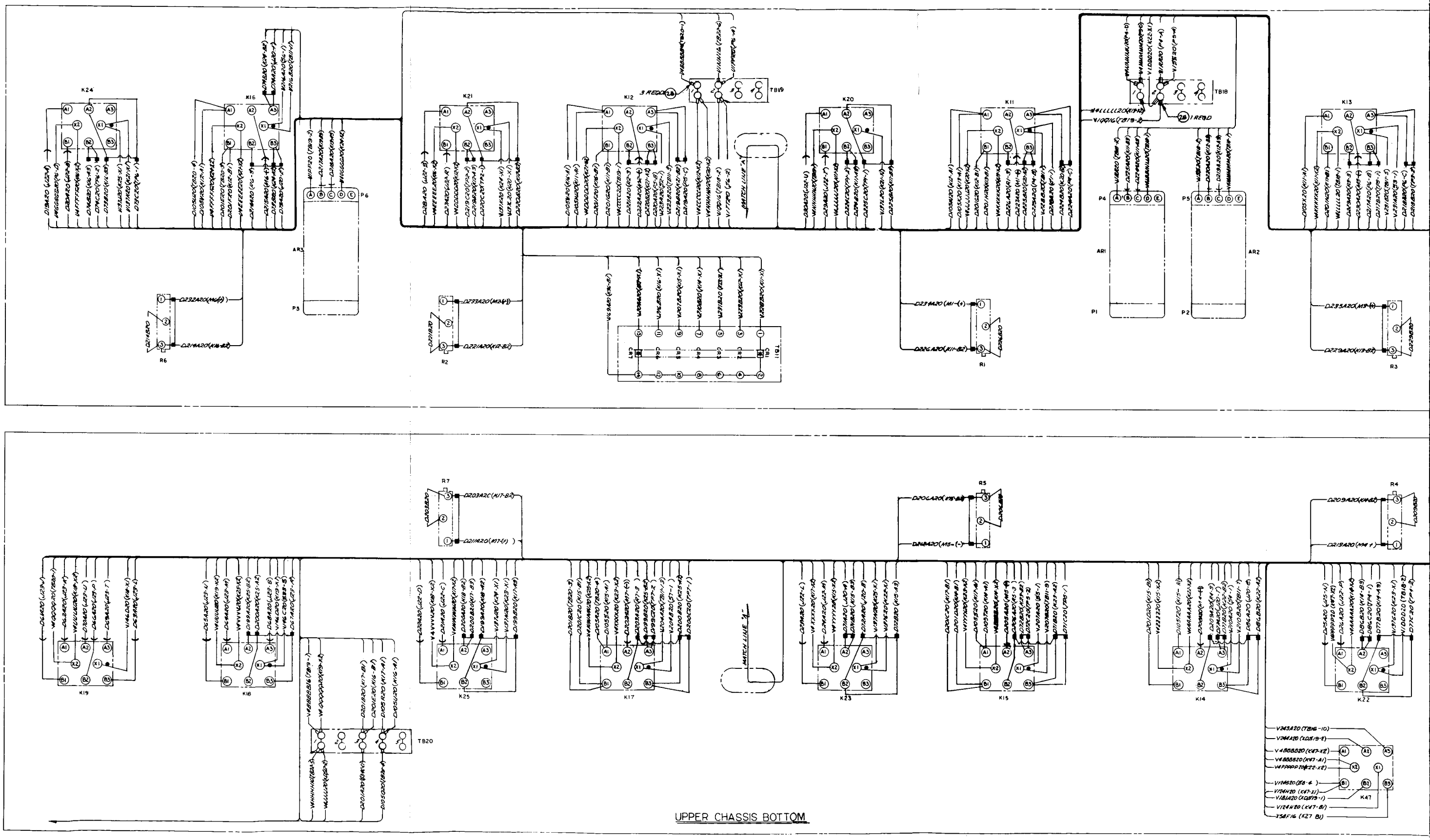
K24
K16
K21
K12
K20
K11
K13
K19
K18
K25
K17
K23
K15
K14
K22
K47
TB19
TB18
TB11
TB20
R1
R2
R3
R4
R5
R6
R7
P1
P2
P3
P4
P5
P6
AR1
AR2
AR3
MATCH LINE "A"
MATCH LINE "B"
UPPER CHASSIS BOTTOM

FOLD-OUT #1

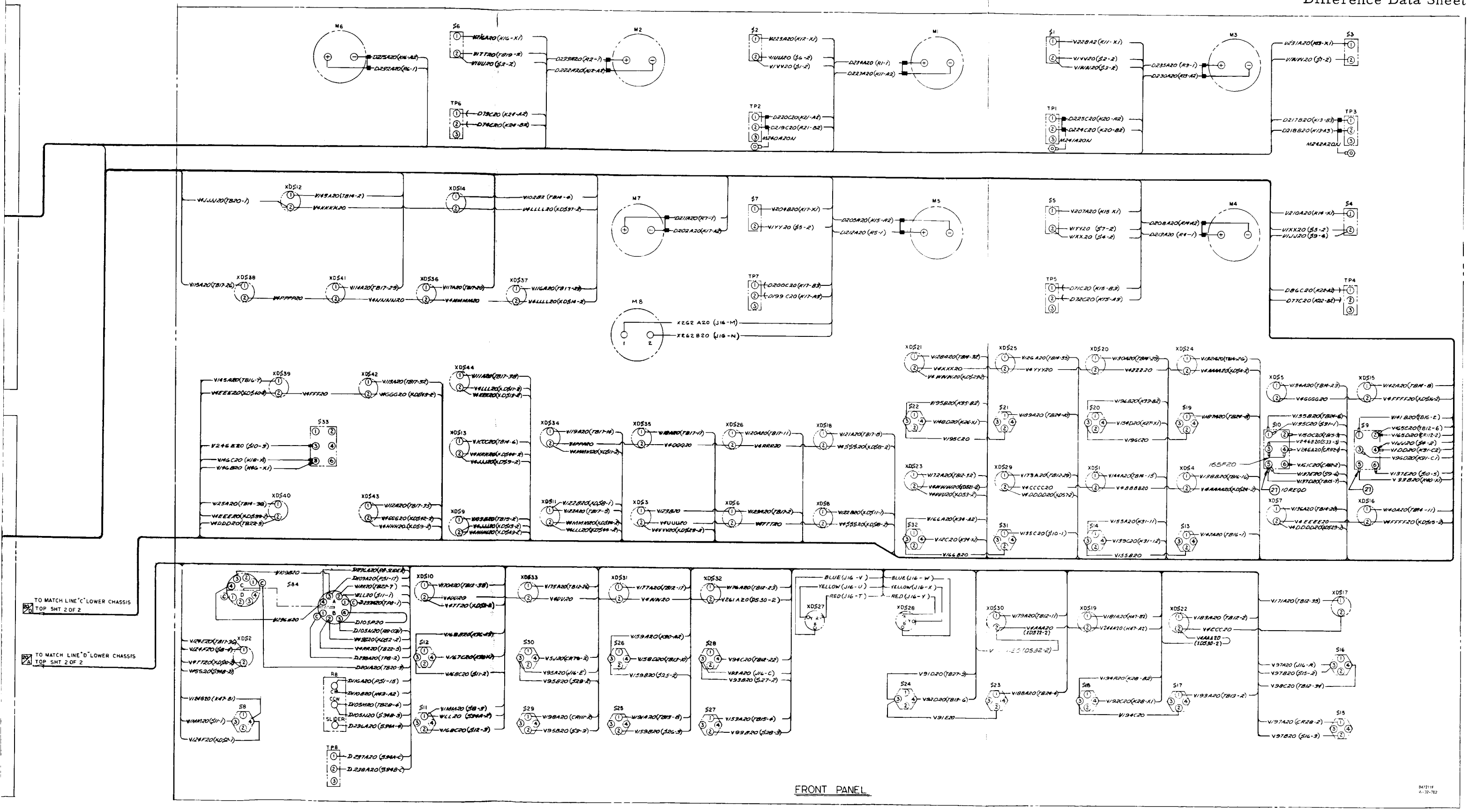

FOLD-OUT #2

Figure B-4. Control and Instrumentation Panel Wiring Diagram (Sheet 1 of 2)

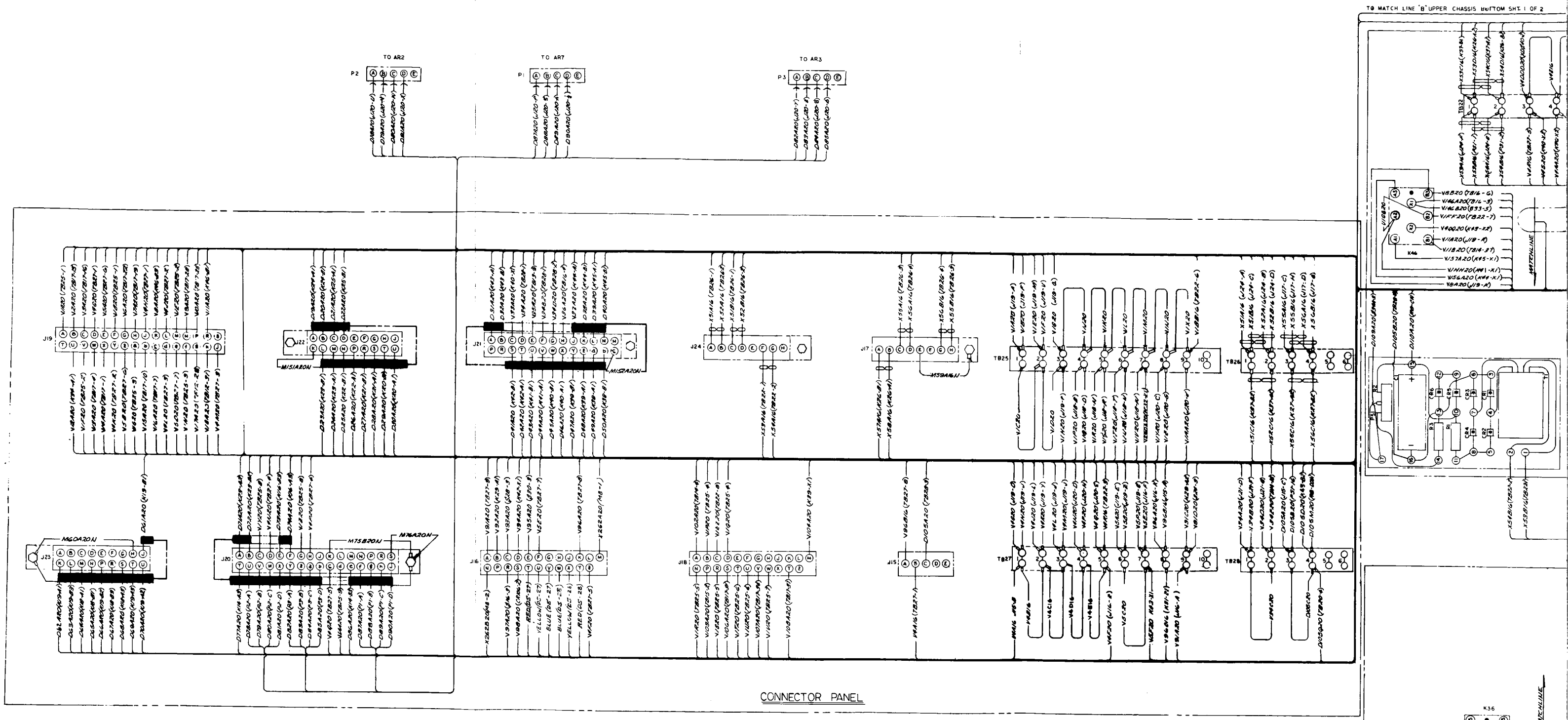
TO MATCH LINE 'B' UPPER CHASSIS BOTTOM SHT 1 OF 2
TO AR2
TO AR7
TO AR3
CONNECTOR PANEL

FOLD-OUT #1

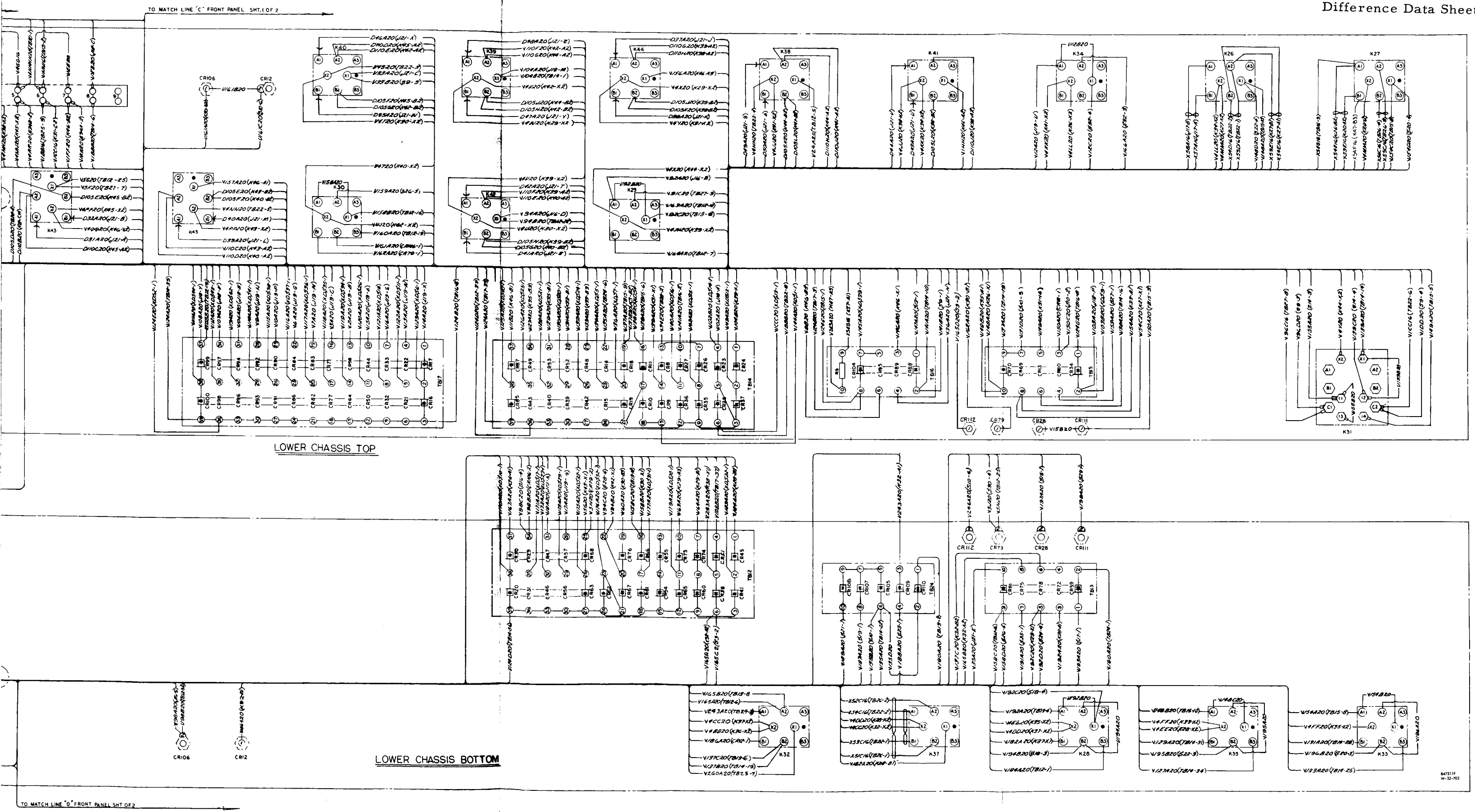

FOLD-OUT #2

Figure B-4. Control and Instrumentation Panel Wiring Diagram (Sheet 2 of 2)

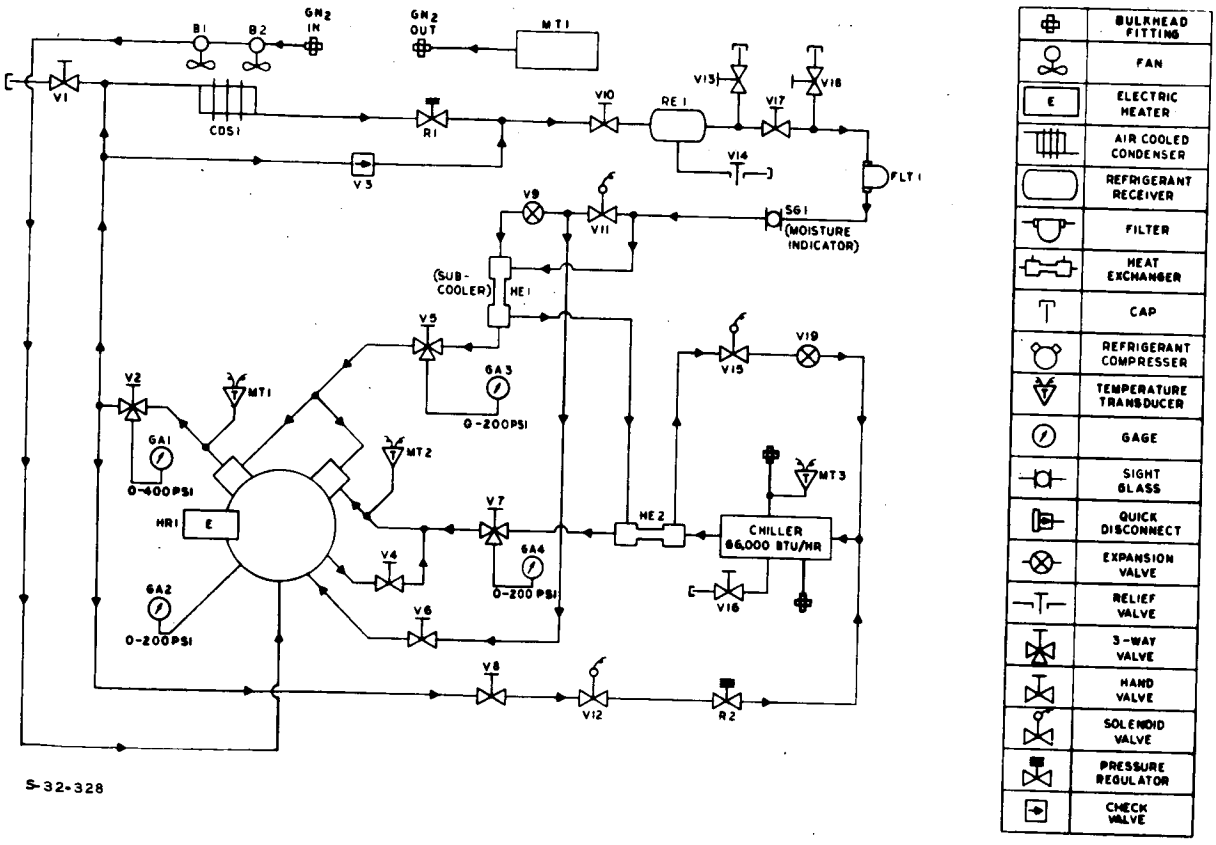

Figure B-5. Refrigeration System Fluid Schematic Diagram

Difference Data Sheet

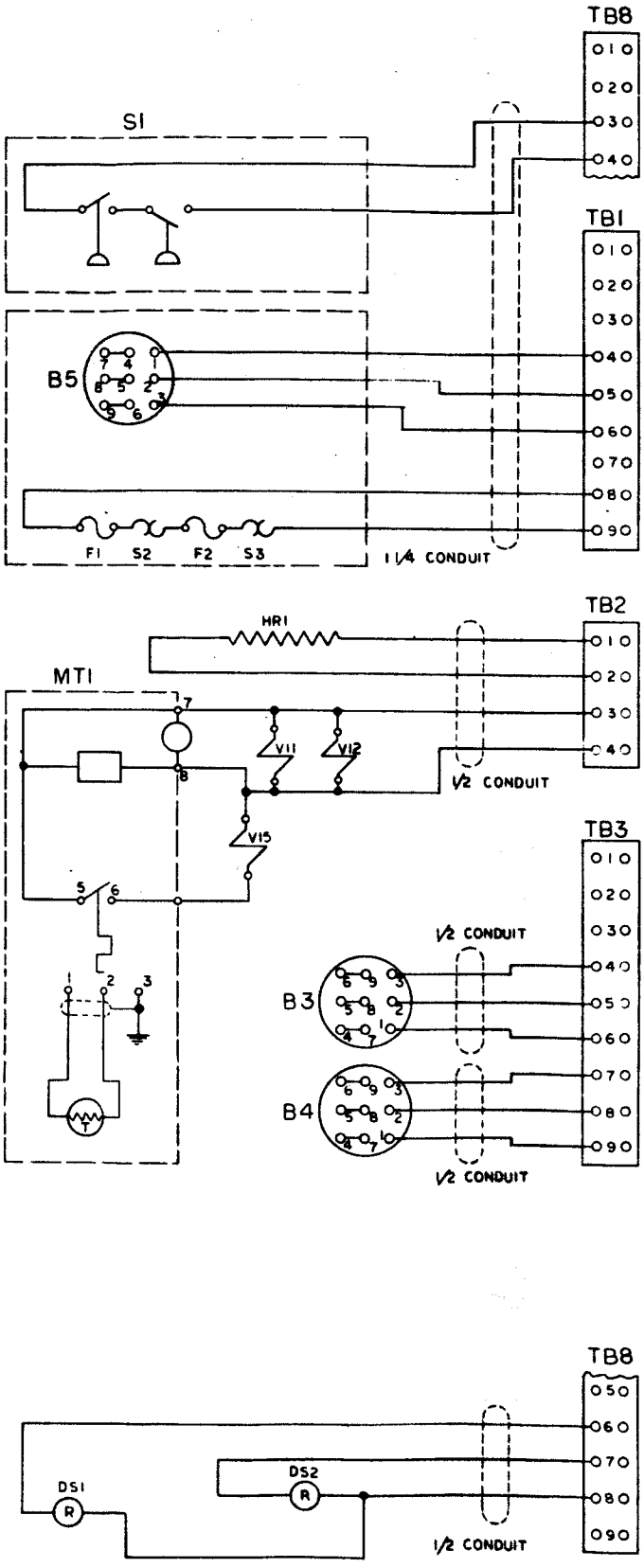

B3	440VAC 3Ø60~	MOTOR
B4	440VAC 3Ø60~	MOTOR
B5	440VAC 3Ø60~	MOTOR
F1	1 1 4 AMP	FUSE
F2	1 1 4 AMP	FUSE
HR1	115 VAC 250 W	HEATER
MT1	-25°F TO +55°F	CONTROLLER
S1	15" Hg 360 PSI	HI-LO PRESS SWITCH
S2	OVERTEMP	THERMOSWITCH
S3	OVERTEMP	THERMOSTAT
V11	115 VAC	SOLENOID VALVE
V12	116 VAC	SOLENOID VALVE
V15	115 VAC	SOLENOID VALVE

Figure B-6. Refrigeration System Electrical Schematic Diagram

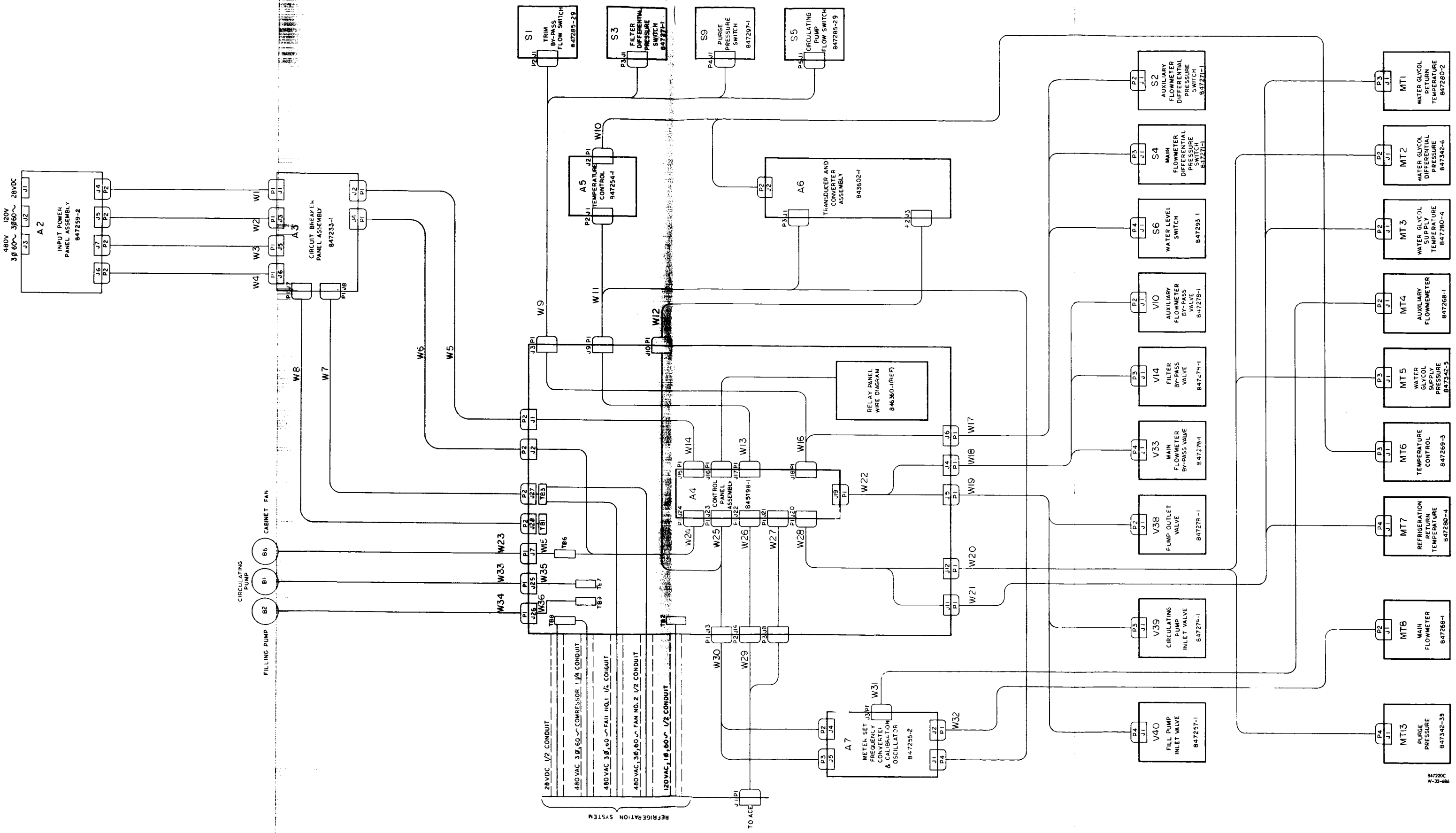

Figure B-7. Interconnecting Cable Diagram

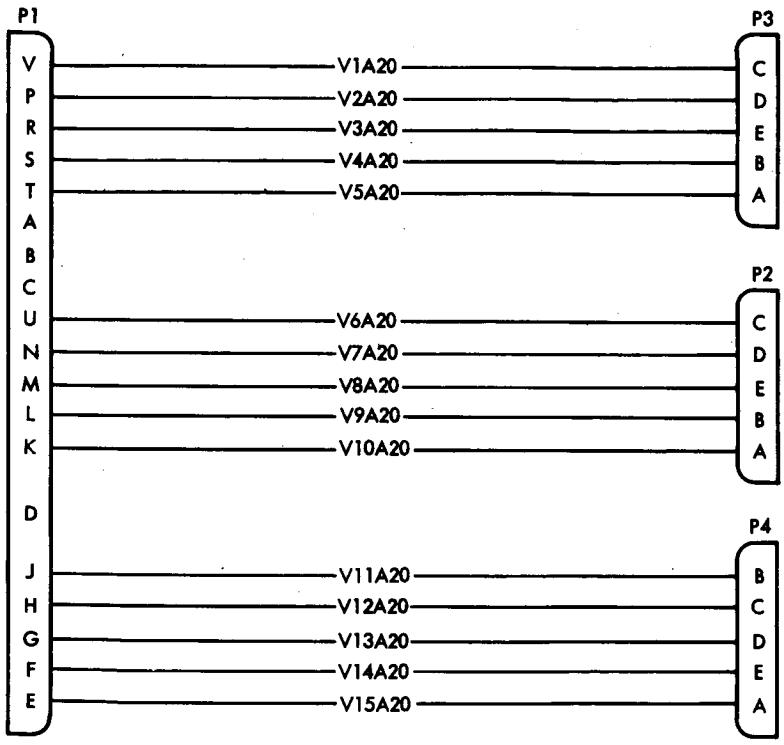

WIRE SPECIFICATIONS

MIL-W-16878, TYPE E

MIL-W-8160

20-GAUGE, 19-STRAND, WHITE TEFLON INSULATED WIRE.

W-32-667

Figure B-8. Cable Assembly W18

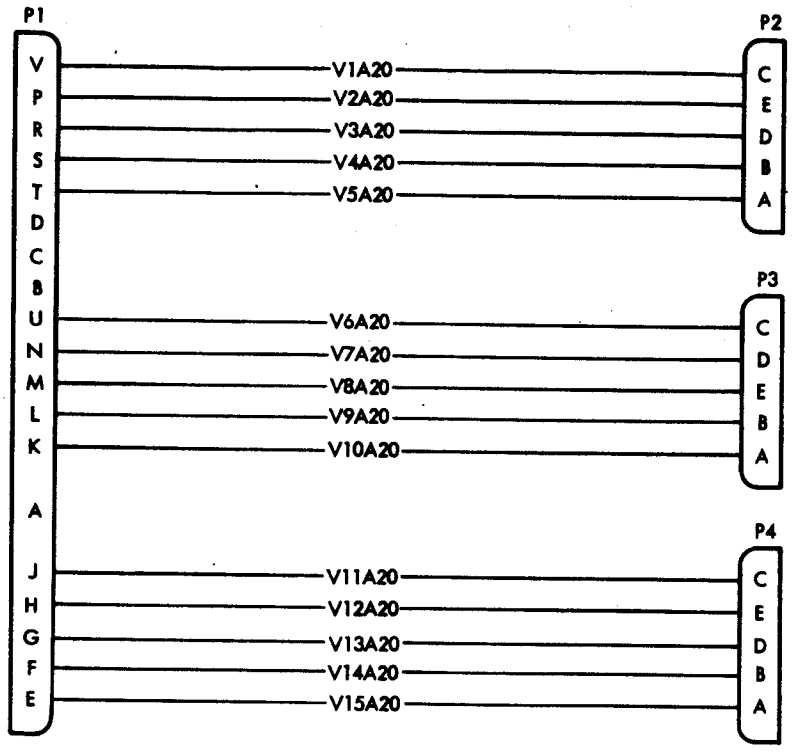

WIRE SPECIFICATIONS

MIL-W-16878, TYPE E

MIL-W-8160

20-GAUGE, 19-STRAND, WHITE TEFLON INSULATED WIRE.

W-32-668

Figure B-9. Cable Assembly W19

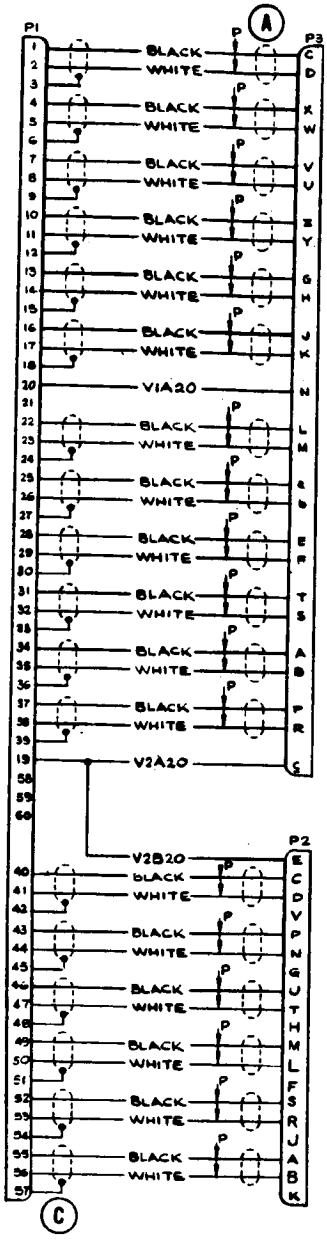

WIRE SPECIFICATIONS

MIL-W-16878, TYPE E

MIL-W-8160

(A) 2-CONDUCTOR, 20-GAUGE, 19-STRAND, SHIELDED, TEFLON WRAPPED JACKETED CABLE (TYPICAL, 18 PLACES).

(B) 20-GAUGE, 19-STRAND, WHITE TEFLON INSULATED WIRE.

(C) 22-GAUGE, 19-STRAND, WHITE TEFLON INSULATED WIRE.

W-32-669

Figure B-10. Cable Assembly W29

Difference Data Sheet

ENVIRONMENTAL CONTROL SYSTEM WATER-GLYCOL SERVICE SET REFRIGERATION UNIT	Model No. S14-121 AiResearch Part No. 847250-4-1; NR Part No. G14-854025-401, NR Serial No. 005 and 006 (ME 901-0319-0001)

THE INSTRUCTIONS CONTAINED IN PRECEDING SECTIONS OF THIS PUBLICATION APPLY EXCEPT FOR THE DIFFERENCES LISTED IN THIS DATA SHEET

CHARACTERISTIC DIFFERENCES. Same as Refrigeration Unit Model No. S14-121, AiResearch Part No. 847250-3-1, NR Part No. G14-854025-301, NR Serial No. 008 (ME 901-0319-0001) except for minor component and circuit wiring differences.

DESCRIPTION. Same as Refrigeration Unit Model No. S14-121, AiResearch Part No. 847250-3-1, NR Part No. G14-854025-301, NR Serial No. 008 (ME 901-0319-0001).

FUNCTIONAL TEST. Same as Refrigeration Unit Model No. S14-121, AiResearch Part No. 847250-3-1, NR Part No. G14-854025-301, NR Serial No. 008 (ME 901-0319-0001).

TROUBLE ANALYSIS. Same as Refrigeration Unit Model No. S14-121, AiResearch Part No. 847250-3-1, NR Part No. G14-854025-301, NR Serial No. 008 (ME 901-0319-0001).

REMOVAL AND INSTALLATION. Same as Refrigeration Unit Model No. S14-121, AiResearch Part No. 847250-3-1, NR Part No. G14-854025-301, NR Serial No. 008 (ME 901-0319-0001).

REPAIR INSTRUCTIONS. Same as Refrigeration Unit Model No. S14-121, AiResearch Part No. 847250-3-1, NR Serial No. 008 (ME 901-0319-0001).

CALIBRATION AND ADJUSTMENT. Same as Refrigeration Unit Model No. S14-121, AiResearch Part No. 847250-3-1, NR Part No. G14-854025-301, NR Serial No. 008 (ME 901-0319-0001).

PERIODIC INSPECTION AND SERVICE. Same as Refrigeration Unit Model No. S14-121, AiResearch Part No. 847250-3-1, NR Part No. G14-854025-301, NR Serial No. 008 (ME 901-0319-0001).

DIAGRAMS. Same as Refrigeration Unit Model No. S14-121, AiResearch Part No. 847250-3-1, NR Part No. G14-854025-301, NR Serial No. 008 (ME 901-0319-0001) except use figure B-11 in place of figure 8-2, figure B-12 in place of figure 8-5, figure B-13 in place of figure 8-6 and figure B-14 (sheets 1 and 2) in place of figure 8-7 (sheets 1 and 2).

APPENDIX A. Same as Refrigeration Unit Model No. S14-121, AiResearch Part No. 847250-3-1, NR Part No. G14-854025-301, NR Serial No. 008 (ME 901-0319-0001) except use the following source data information instead of that listed in Appendix A.

Difference Data Sheet

Drawing No.	Change Letter	Title
844059	N/C	Control and Instrumentation Panel Electrical (Schematic) Instruction Plate
845192	N/C	Control and Instrumentation Panel Assembly
845195	N/C	Relay Panel Electrical (Schematic) Instruction Plate
845566	E	Refrigeration Unit Plumbing Installation
845572	N/C	Circuit Breaker Panel Electrical (Schematic) Instruction Plate
845573	N/C	Refrigeration System Electrical (Schematic) Instruction Plate
845585	A	Interconnecting Cable (Schematic) Diagram
845587	N/C	Refrigeration System Fluid (Schematic) Instruction Plate
845887	N/C	Refrigeration Unit Assembly
846357	D	Connector Panel Assembly
847204	T	Fluid Control Module Assembly
847208	F	Refrigeration Unit Fluid (Schematic) Instruction Plate
847218	A	Input Power Electrical (Schematic) Instruction Plate
847233	F	Circuit Breaker Panel Assembly
847250	H	Refrigeration Unit (Outline Drawing)
847254	B	Universal Controller
847255	D	Frequency Converter and Calibration Oscillator Meter Set
847259	J	Input Power Panel Assembly

Difference Data Sheet

Specification No. /Date	Revision	Title
SS-1378-R/30 Aug 1965	Rev. 1	Acceptance Test Procedure

Engineering Orders		
M 522667	M 652577	M 656330

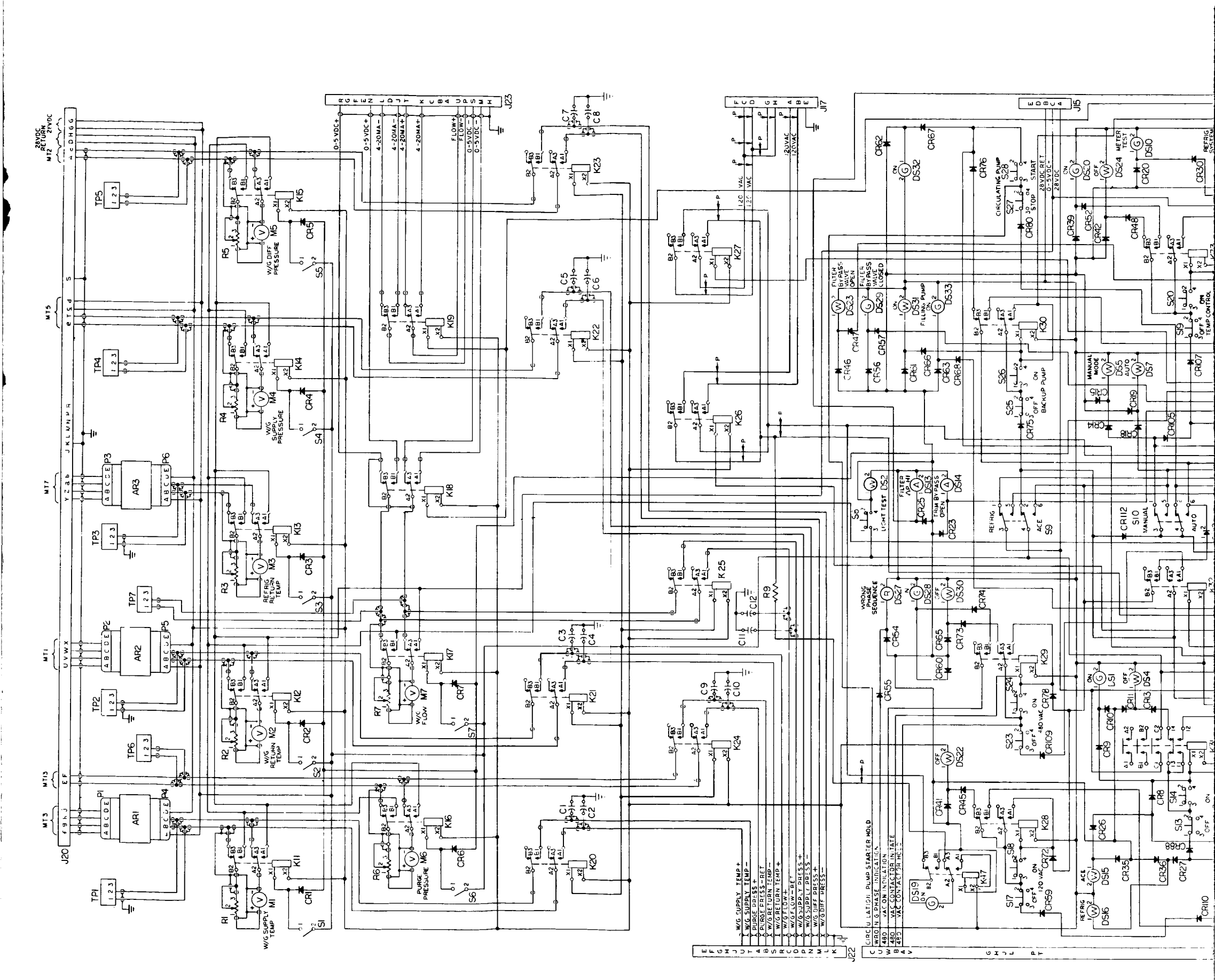
28VDC RETURN 28VDC
W/G SUPPLY TEMP
W/G DIFF PRESSURE
W/G SUPPLY PRESSURE
REFRIG RETURN TEMP
W/G RETURN TEMP
W/G FLOW
PURGE PRESSURE
0-5VDC+
0-5VDC+
4-20MA-
4-20MA-
4-20MA+
4-20MA+
FLOW+
FLOW-
0-5VDC-
0-5VDC-
120VAC
120VAC
W/G SUPPLY TEMP+
W/G SUPPLY TEMP-
PURGE PRESS+
PURGE PRESS-RET
W/G RETURN TEMP-
W/G RETURN TEMP+
W/G FLOW+
W/G FLOW-RET
W/G SUPPLY PRESS+
W/G SUPPLY PRESS-
W/G DIFF PRESS+
W/G DIFF PRESS-
CIRCULATION PUMP STARTER HOLD
WRONG PHASE INDICATION
VAC ON INDICATION
VAC CONTACTOR INTIATE
VAC CONTACTOR HOLD
FILTER BYPASS VALVE OPEN
FILTER BYPASS VALVE CLOSED
FILLING PUMP ON
CIRCULATING PUMP
START
STOP
28VDC RET
0-5VDC-
28VDC
METER TEST
REFRIG SYSTEM
TEMP CONTROL
MANUAL MODE
AUTO
ON BACKUP PUMP
LIGHT TEST
FILTER ΔP HI
TRIM BYPASS OPEN
REFRIG
ACE
MANUAL
AUTO
WRONG PHASE SEQUENCE
480 VAC
120 VAC

FOLD-OUT #1

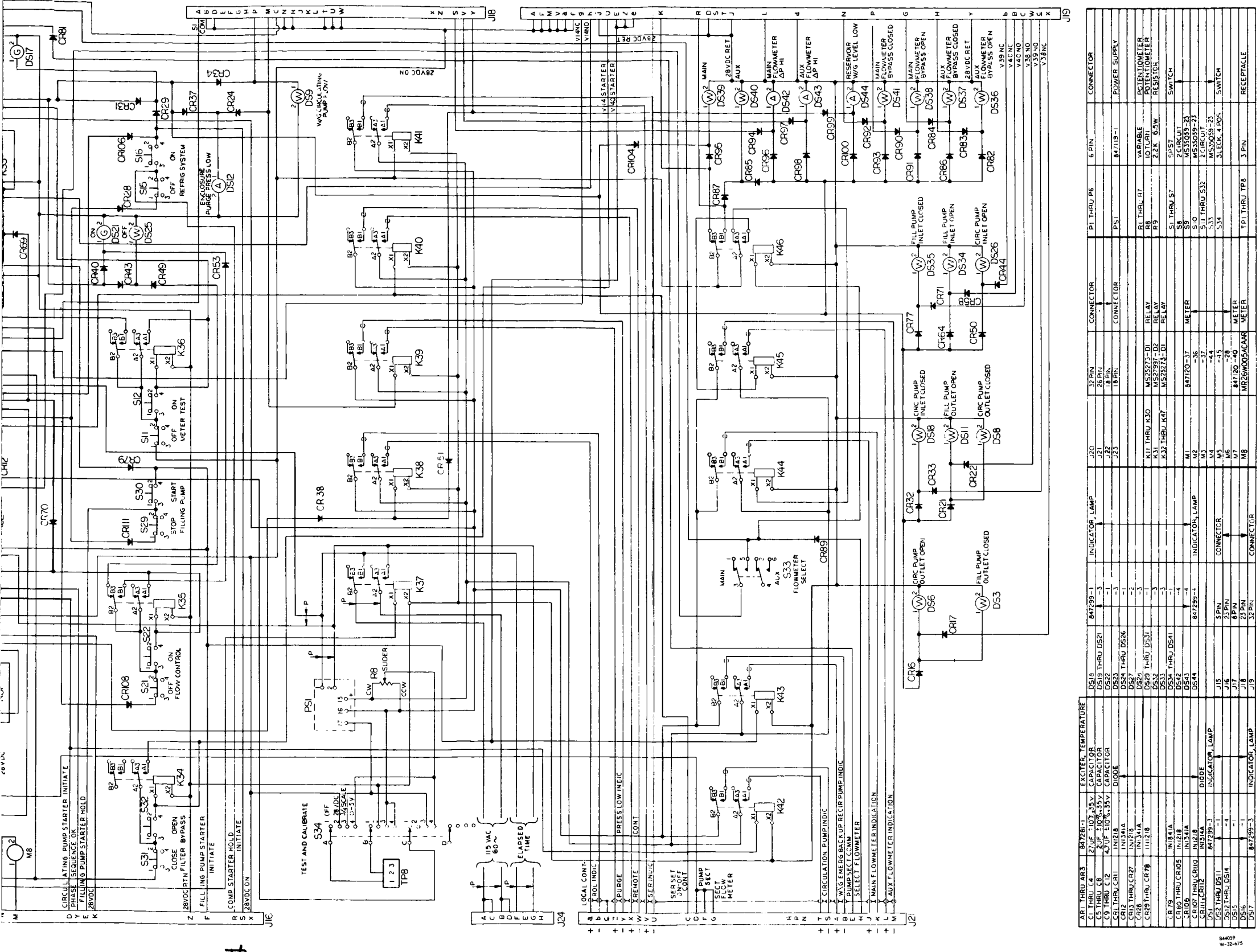

A1 THRU A3	847261-1	EXCITER, TEMPERATURE	DS18	847299-1	INDICATOR, LAMP
C1 THRU C4	27UF ±10% 35V	CAPACITOR	DS19 THRU DS21	-3	
C5 THRU C8	2UF ±10% 35V	CAPACITOR	DS22	-1	
C9 THRU C12	47UF ±10% 35V	CAPACITOR	DS23	-3	
CR1 THRU CR11	1N1218	DIODE	DS24 THRU DS26	-1	
CR12 THRU CR27	1N3414		DS27	-2	
CR28 THRU CR78	1N1218		DS28	-3	
			DS29 THRU DS31	-3	
CR79	1N1841A		DS32	-3	
CR80 THRU CR105	1N1218		DS33	-3	
CR106	1N3414A		DS34 THRU DS41	-3	
CR107 THRU CR110	1N1218		DS42	-4	
CR111, CR112	1N3414A	DIODE	DS43	-4	
DS1	847299-3	INDICATOR, LAMP	DS44	847299-4	INDICATOR, LAMP
DS2 THRU DS11	-1		J15	5 PIN	CONNECTOR
DS12 THRU DS14	-4		J16	23 PIN	
DS15	-1		J17	8 PIN	
DS16	-1		J18	23 PIN	
DS17	847299-3	INDICATOR, LAMP	J19	32 PIN	CONNECTOR

J20	32 PIN	CONNECTOR	P1 THRU P6	6 PIN	CONNECTOR
J21	26 PIN				
J22	8 PIN				
J23	16 PIN	CONNECTOR	PS1	847119-1	POWER SUPPLY
K11 THRU K30	MS25275-D1	RELAY	R1 THRU R7	VARIABLE	POTENTIOMETER
K31	MS27997-D2	RELAY	R8	10 TURN	POTENTIOMETER
K32 THRU K47	MS25274-D1	RELAY	R9	2.2K 6.5W	RESISTOR
M1	847120-37	METER	S1 THRU S7	SPST	SWITCH
M2	-36		S8	2 CIRCUIT	
M3	-37		S9	MS35059-23	
M4	-44		S10	MS35059-23	
M5	-45		S11 THRU S32	2 CIRCUIT	
M6	-28		S33	MS35059-23	SWITCH
M7	-29		S34	3 LECK, 4 POS.	
M8	847120-40	METER	TP1 THRU TP8	3 PIN	RECEPTACLE
	MR26W005ACAAR	METER			

844059
W-32-675

FOLD-OUT #2

Figure B-11. Control and Instrumentation Panel Electrical Schematic

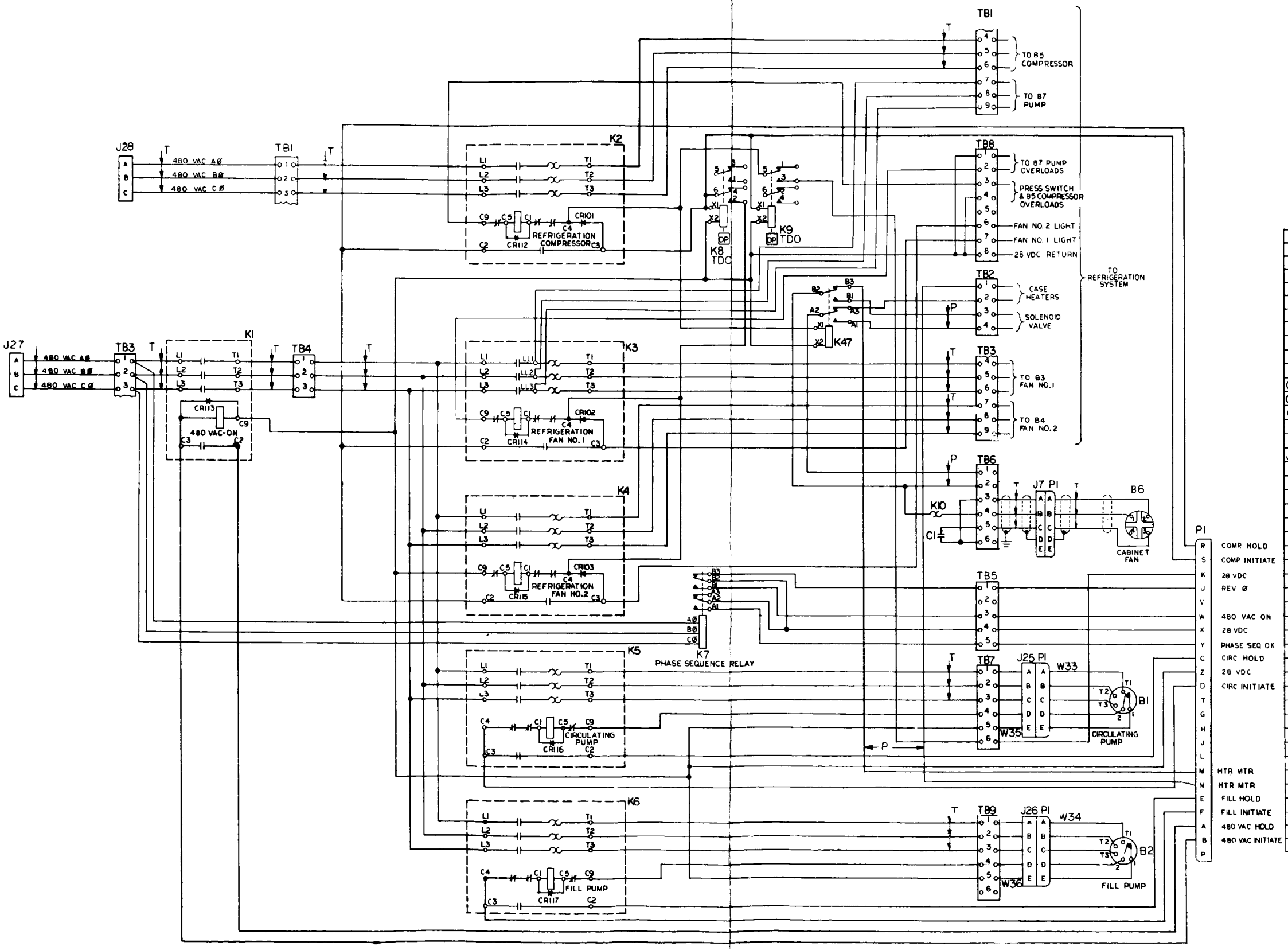

B1	847276-1	PUMP
B2	847275-1	PUMP
B6	115 VAC 60 ~ 1 Ø	FAN
CR101	IN1218	DIODE
CR102	IN1218	
CR103	IN1218	
CR112	IN1341	
CR113		
CR114		
CR115		
CR116		
CR117	IN1341	DIODE
C1	25 MFD 200 VAC	
J27	MS3106A-20-19S	CONNECTOR
J28	MS3106A-28-6S	CONNECTOR
K1	28VDC CONTROL 480 VAC 3Ø POWER	CONTACTOR
K2		
K3		
K4		
K5		
K6		
K7		
K8		
K9		
K10	28 VDC CONTROL 480 VAC 3Ø POWER	CONTACTOR
K47	MS25273-D1	RELAY
P1	23 PIN	CONNECTOR
TB1	9 TERMINAL	TERMINAL BOARD
TB2	4	
TB3	9	
TB4	3	
TB5	5	
TB6	6	
TB7	6	
TB8	8	
TB9	6 TERMINAL	TERMINAL BOARD
W33	845237-1	CABLE ASSEMBLY
W34	845238-1	CABLE ASSEMBLY
W35	845240-1	CABLE ASSEMBLY
W36	845241-1	CABLE ASSEMBLY

Figure B-12. Relay Panel Electrical Schematic

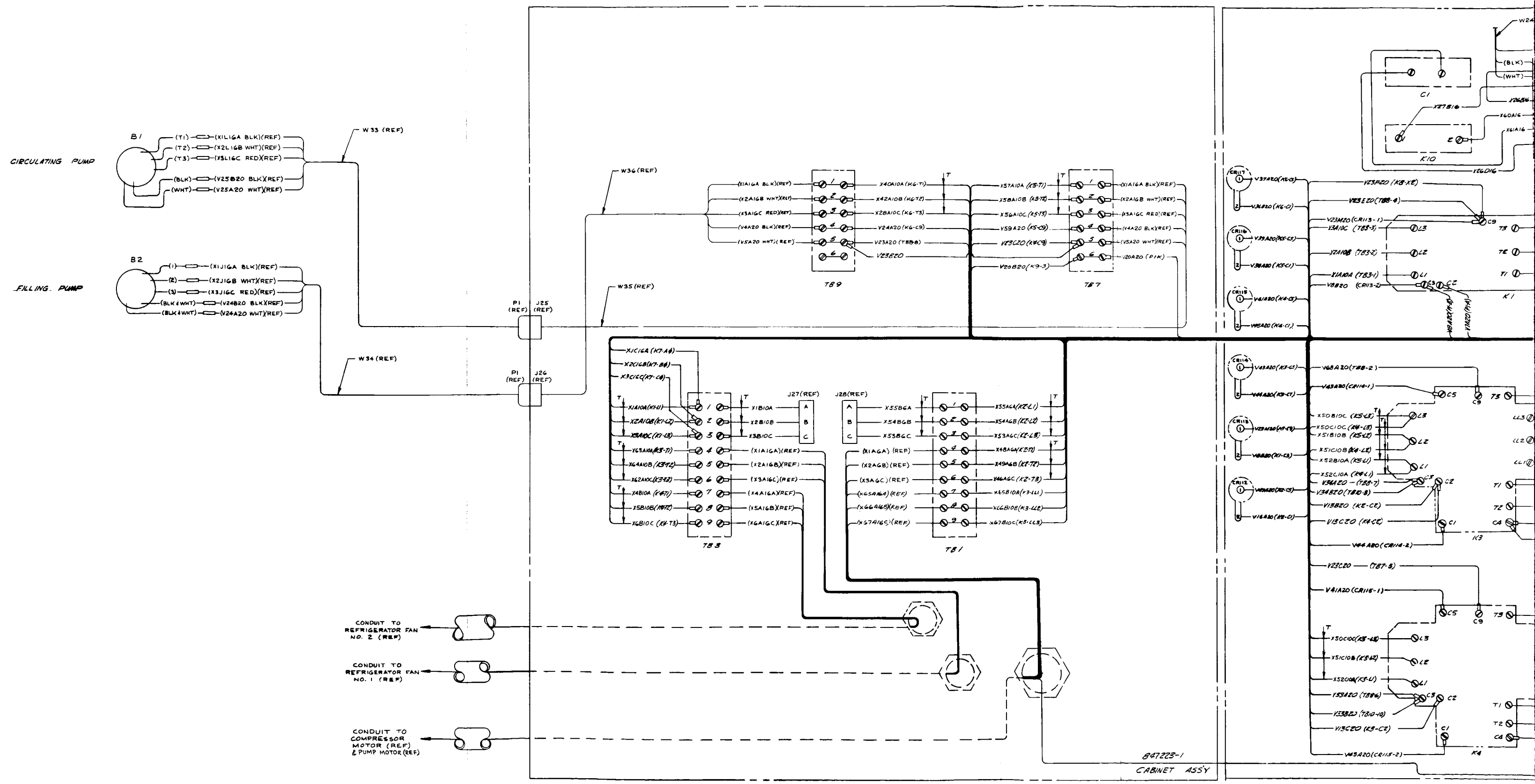
CIRCULATING PUMP
B1
(T1) (X1L16A BLK)(REF)
(T2) (X2L16B WHT)(REF)
(T3) (X3L16C RED)(REF)
(BLK) (V25B20 BLK)(REF)
(WHT) (V25A20 WHT)(REF)
FILLING PUMP
B2
(1) (X1J16A BLK)(REF)
(2) (X2J16B WHT)(REF)
(3) (X3J16C RED)(REF)
(BLK & WHT) (V24B20 BLK)(REF)
(BLK & WHT) (V24A20 WHT)(REF)
W33 (REF)
W34 (REF)
W36 (REF)
W35 (REF)
P1 (REF)
J25 (REF)
P1 (REF)
J26 (REF)
TB9
TB7
TB3
TB1
J27 (REF)
J28 (REF)
CONDUIT TO REFRIGERATOR FAN NO. 2 (REF)
CONDUIT TO REFRIGERATOR FAN NO. 1 (REF)
CONDUIT TO COMPRESSOR MOTOR (REF) & PUMP MOTOR (REF)
847223-1
CABINET ASS'Y
C1
K10
K1
K3
K4

FOLD-OUT #1

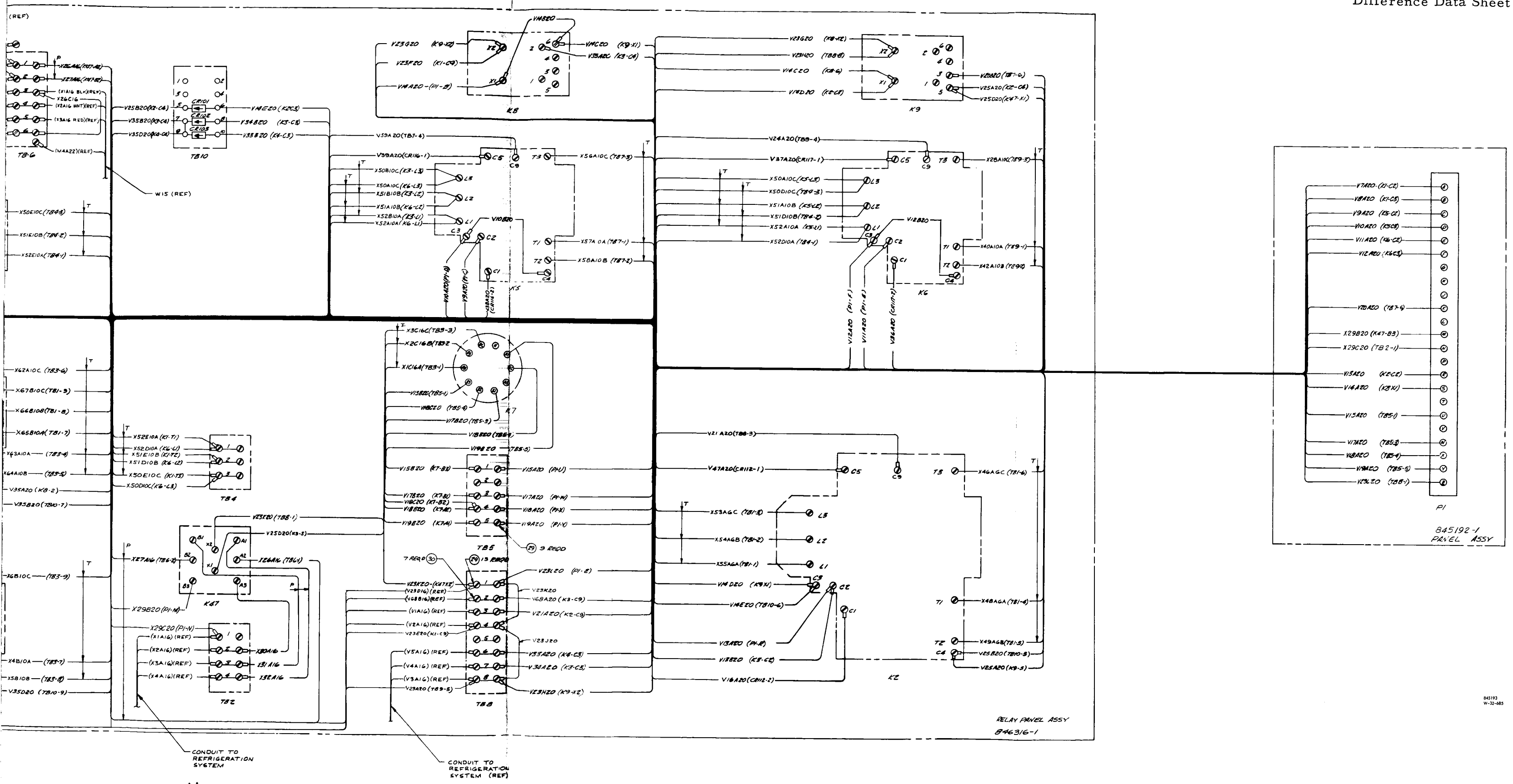

FOLD-OUT #2

Figure B-13. Refrigeration Unit Wiring Diagram

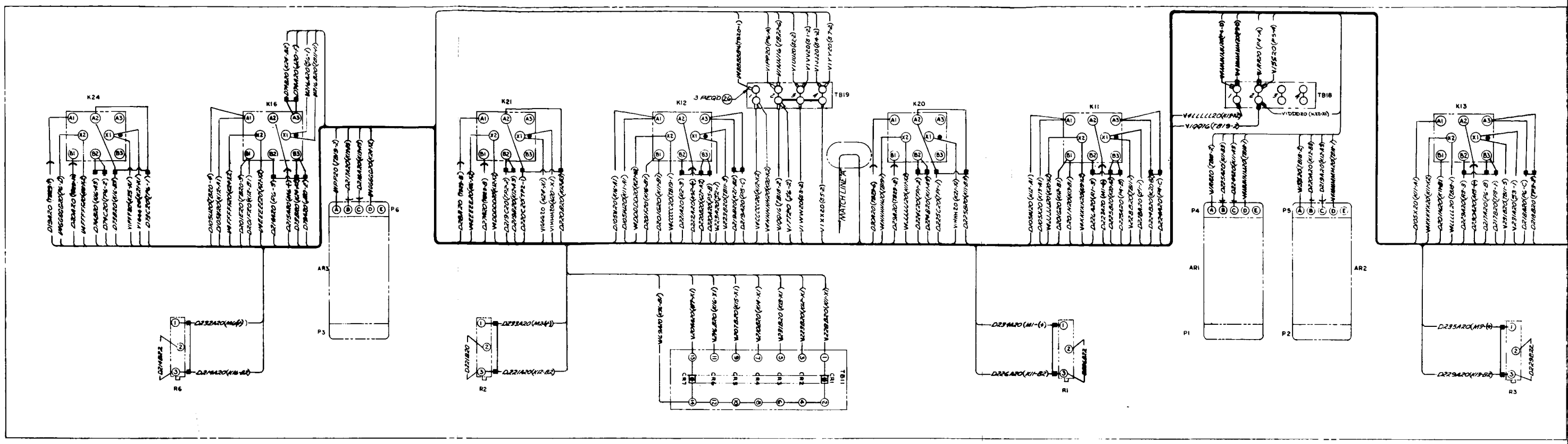
K24
K16
K21
K12
K20
K11
K13
TB19
TB18
3 REQD
MATCH LINE
P6
P3
P4
P5
P1
P2
AR1
AR2
AR3
R6
R2
R1
R3

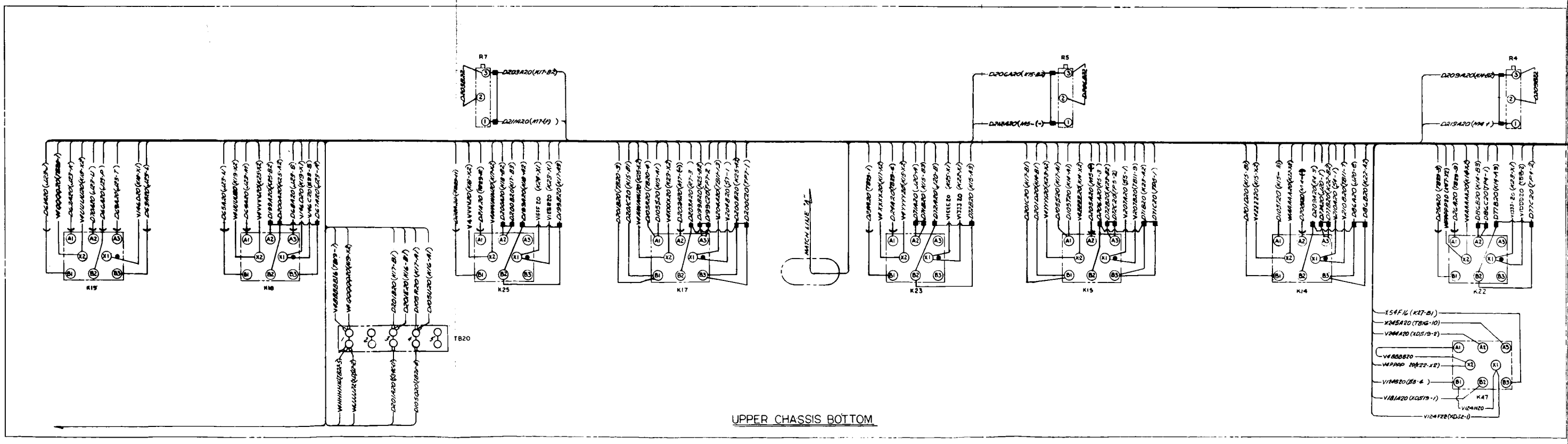
R7
R5
R4
K19
K18
K25
K17
K23
K15
K14
K22
K47
TB20
MATCH LINE
UPPER CHASSIS BOTTOM

FOLD-OUT #1

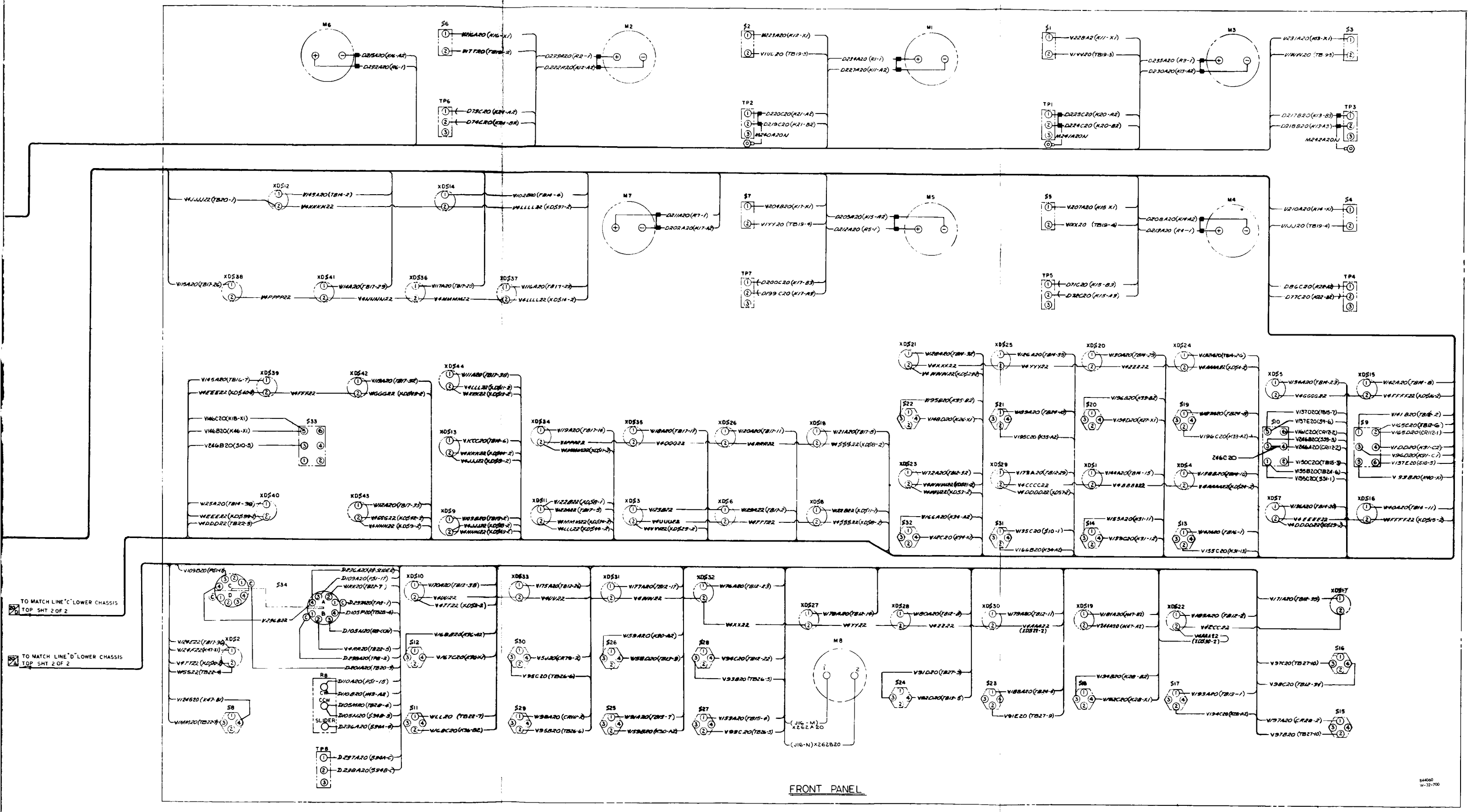

FOLD-OUT #2

Figure B-14. Control and Instrumentation Panel Wiring Diagram (Sheet 1 of 2)

Difference Data Sheet

ENVIRONMENTAL CONTROL SYSTEM WATER-GLYCOL SERVICE SET REFRIGERATION UNIT	Model No. S14-121 AiResearch Part No. 847250-5-1; NR Part No. G14-854025-501, NR Serial No. 016 (ME 901-0319-0001)

THE INSTRUCTIONS CONTAINED IN PRECEDING SECTIONS OF THIS PUBLICATION APPLY EXCEPT FOR THE DIFFERENCES LISTED IN THIS DATA SHEET.

CHARACTERISTIC DIFFERENCES. Same as Refrigeration Unit Model No. S14-121, AiResearch Part No. 847250-3-1, NR Part No. G14-854025-301, NR Serial No. 008 (ME 901-0319-0001) except for minor component and circuit wiring differences.

DESCRIPTION. Same as Refrigeration Unit Model No. S14-121, AiResearch Part No. 847250-3-1, NR Part No. G14-854025-301, NR Serial No. 008 (ME 901-0319-0001).

FUNCTIONAL TEST. Same as Refrigeration Unit Model No. S14-121, AiResearch Part No. 847250-3-1, NR Part No. G14-854025-301, NR Serial No. 008 (ME 901-0319-0001).

TROUBLE ANALYSIS. Same as Refrigeration Unit Model No. S14-121, AiResearch Part No. 847250-3-1, NR Part No. G14-854025-301, NR Serial No. 008 (ME 901-0319-0001).

REMOVAL AND INSTALLATION. Same as Refrigeration Unit Model No. S14-121, AiResearch Part No. 847250-3-1, NR Part No. G14-854025-301, NR Serial No. 008 (ME 901-0319-0001).

REPAIR INSTRUCTIONS. Same as Refrigeration Unit Model No. S14-121, AiResearch Part No. 847250-3-1, NR Part No. G14-854025-301, NR Serial No. 008 (ME 901-0319-0001).

CALIBRATION AND ADJUSTMENT. Same as Refrigeration Unit Model No. S14-121, AiResearch Part No. 847250-3-1, NR Part No. G14-854025-301, NR Serial No. 008 (ME 901-0319-0001) except in table 6-1, the part number for pressure transducer MT13 is 847342-39 instead of 847342-3.

PERIODIC INSPECTION AND SERVICE. Same as Refrigeration Unit Model No. S14-121, AiResearch Part No. 847250-3-1, NR Part No. G14-854025-301, NR Serial No. 008 (ME 901-0319-0001).

DIAGRAMS. Same as Refrigeration Unit Model No. S14-121, AiResearch Part No. 847250-3-1, NR Part No. G14-854025-301, NR Serial No. 008 (ME 901-0319-0001) except use figure B-15 in place of figure 8-6 and figure B-16 (sheets 1 and 2) in place of figure 8-7 (sheets 1 and 2).

APPENDIX A. Same as Refrigeration Unit Model No. S14-121, AiResearch Part No. 847250-3-1, NR Part No. G14-854025-301, NR Serial No. 008 (ME 901-0319-0001) except use the following source data information instead of that listed in Appendix A.

Difference Data Sheet

Drawing No.	Change Letter	Title
844064	N/C	Control and Instrumentation Panel Electrical (Schematic) Instruction Plate
844065	N/C	Control and Instrumentation Panel Assembly
845179	N/C	Relay Panel Electrical (Schematic) Instruction Plate
845566	E	Refrigeration Unit Plumbing Installation
845572	N/C	Circuit Breaker Panel Electrical (Schematic) Instruction Plate
845573	N/C	Refrigeration System Electrical (Schematic) Instruction Plate
845585	A	Interconnecting Cable (Schematic) Diagram
845587	N/C	Refrigeration System Fluid (Schematic) Instruction Plate
845888	N/C	Refrigeration Unit Assembly
846357	D	Connector Panel Assembly
847204	T	Fluid Control Module Assembly
847208	F	Refrigeration Unit Fluid (Schematic) Instruction Plate
847218	A	Input Power Electrical (Schematic) Instruction Plate
847233	F	Circuit Breaker Panel Assembly
847250	H	Refrigeration Unit (Outline Drawing)
847254	B	Universal Controller
847255	D	Frequency Converter and Calibration Oscillator Meter Set
847259	J	Input Power Panel Assembly

Difference Data Sheet

Specification No. /Date	Revision	Title
SS-1378-R/30 Aug 1965	Rev. 1	Acceptance Test Procedure

Engineering Orders		
M 342408 M 417941 M 522667 M 562092 M 624536 M 624555	M 624566 M 624575 M 631387 M 631388 M 631394 M 631395	M 633885 M 633895 M 652577 M 656100 M 659636

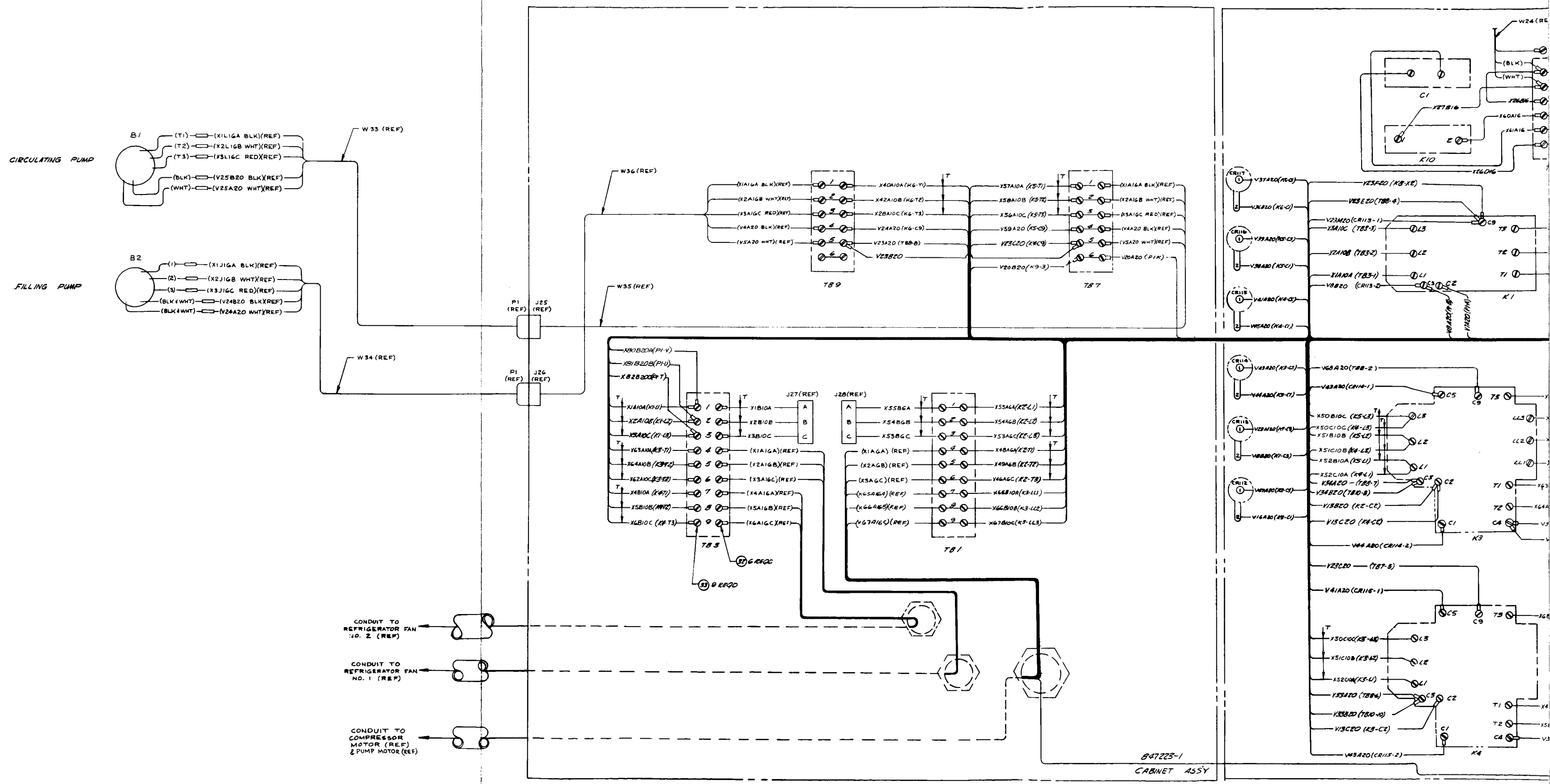
CIRCULATING PUMP
B1
(T1) (X1L1GA BLK)(REF)
(T2) (X2L1GB WHT)(REF)
(T3) (X3L1GC RED)(REF)
(BLK) (V25B20 BLK)(REF)
(WHT) (V25A20 WHT)(REF)
FILLING PUMP
B2
(1) (X1J1GA BLK)(REF)
(2) (X2J1GB WHT)(REF)
(3) (X3J1GC RED)(REF)
(BLK & WHT) (V24B20 BLK)(REF)
(BLK & WHT) (V24A20 WHT)(REF)
W33 (REF)
W34 (REF)
W35 (REF)
W36 (REF)
P1 (REF)
J25 (REF)
J26 (REF)
TB9
TB7
TB3
TB1
J27 (REF)
J28 (REF)
CONDUIT TO REFRIGERATOR FAN NO. 2 (REF)
CONDUIT TO REFRIGERATOR FAN NO. 1 (REF)
CONDUIT TO COMPRESSOR MOTOR (REF) & PUMP MOTOR (REF)
847223-1
CABINET ASSY
C1
K10
K1
K3
K4

FOLD-OUT #1

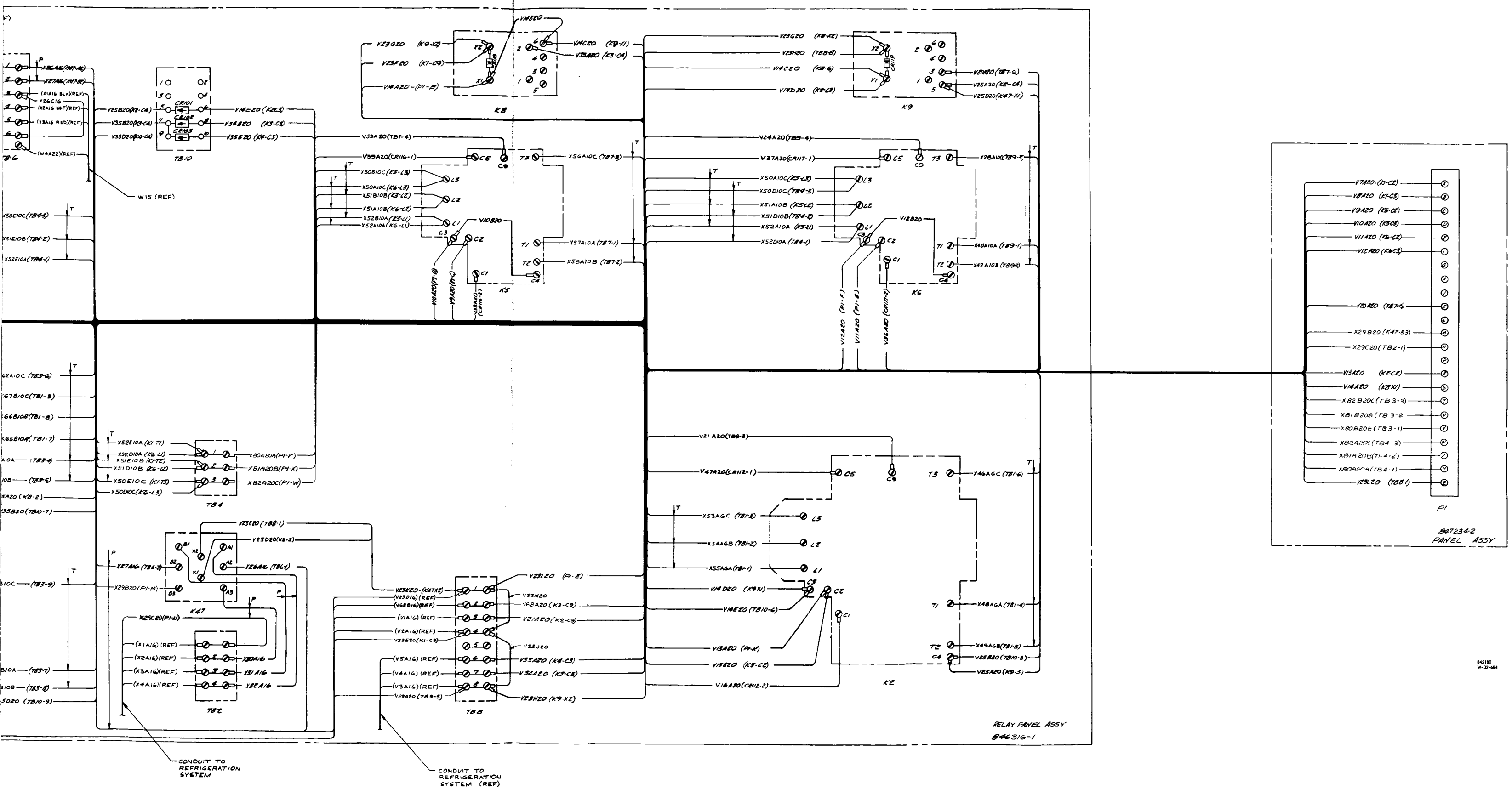

FOLD-OUT #2

Figure B-15. Refrigeration Unit Wiring Diagram

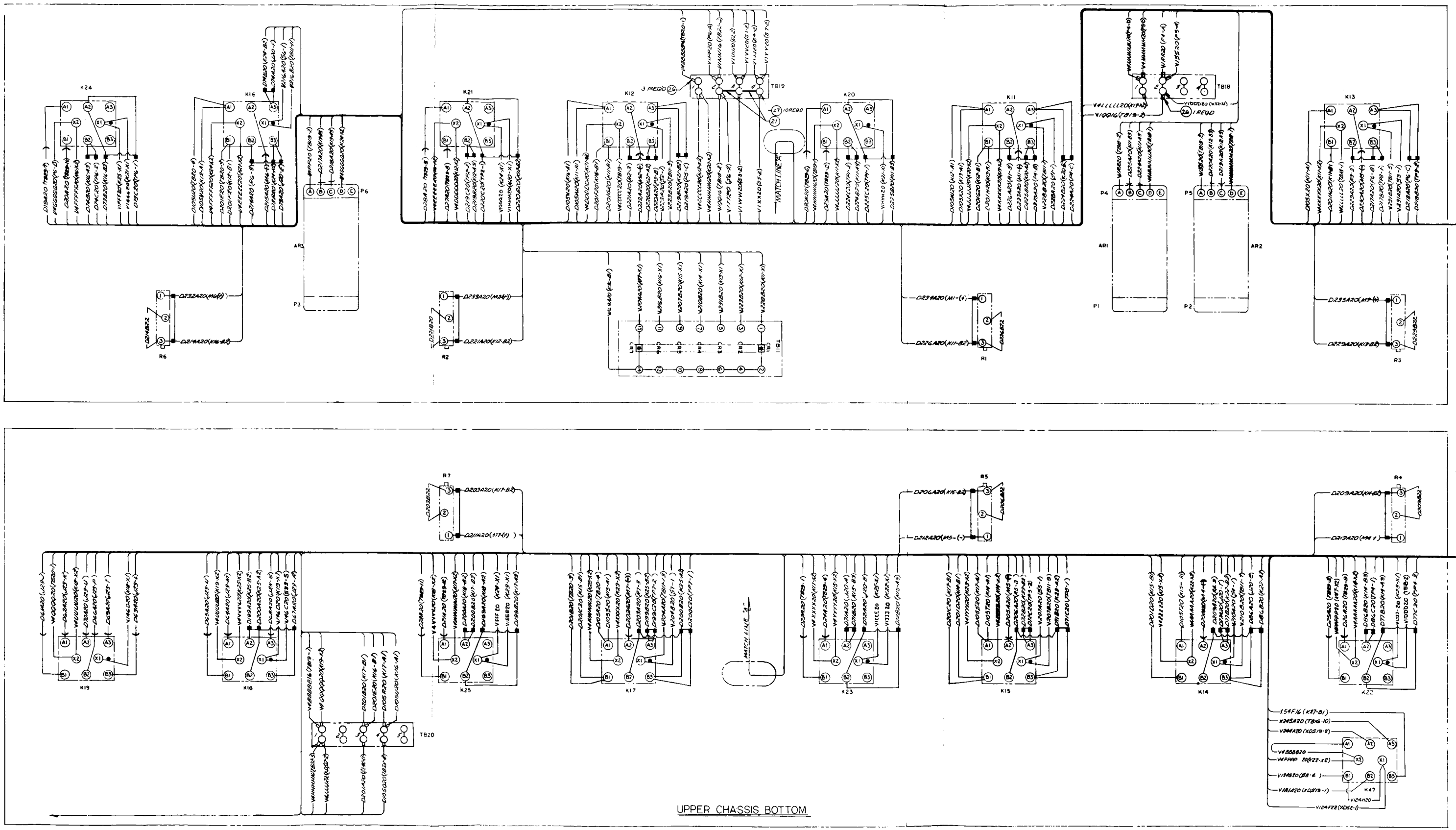

UPPER CHASSIS BOTTOM

FOLD-OUT #1

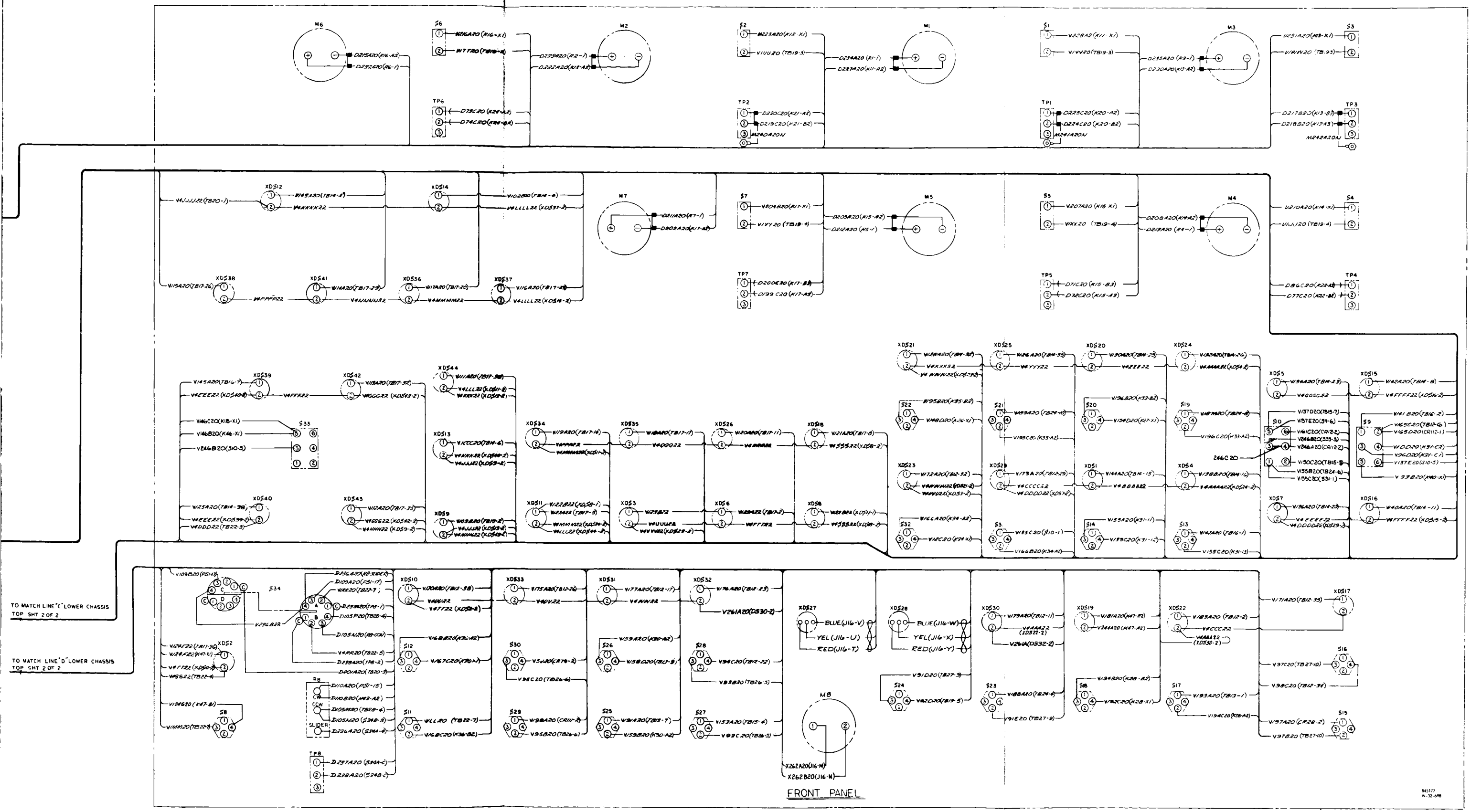

FOLD-OUT #2

Figure B-16. Control and Instrumentation Panel Wiring Diagram (Sheet 1 of 2)

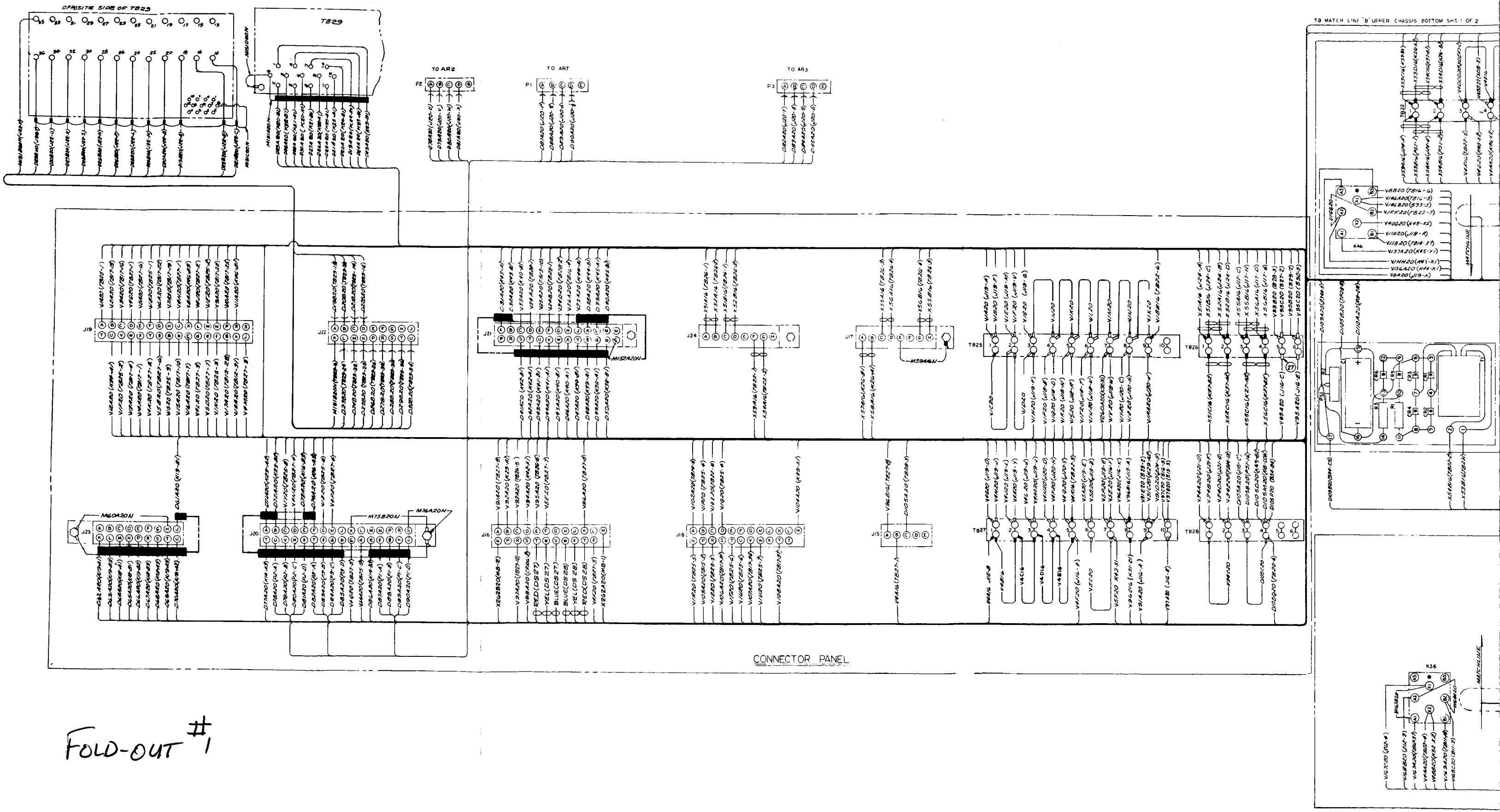
OPPOSITE SIDE OF TB23
TB29
TO AR2
TO AR7
TO AR5
TO MATCH LINE 'B' UPPER CHASSIS BOTTOM SHT 1 OF 2
MATCHLINE
CONNECTOR PANEL

FOLD-OUT #1

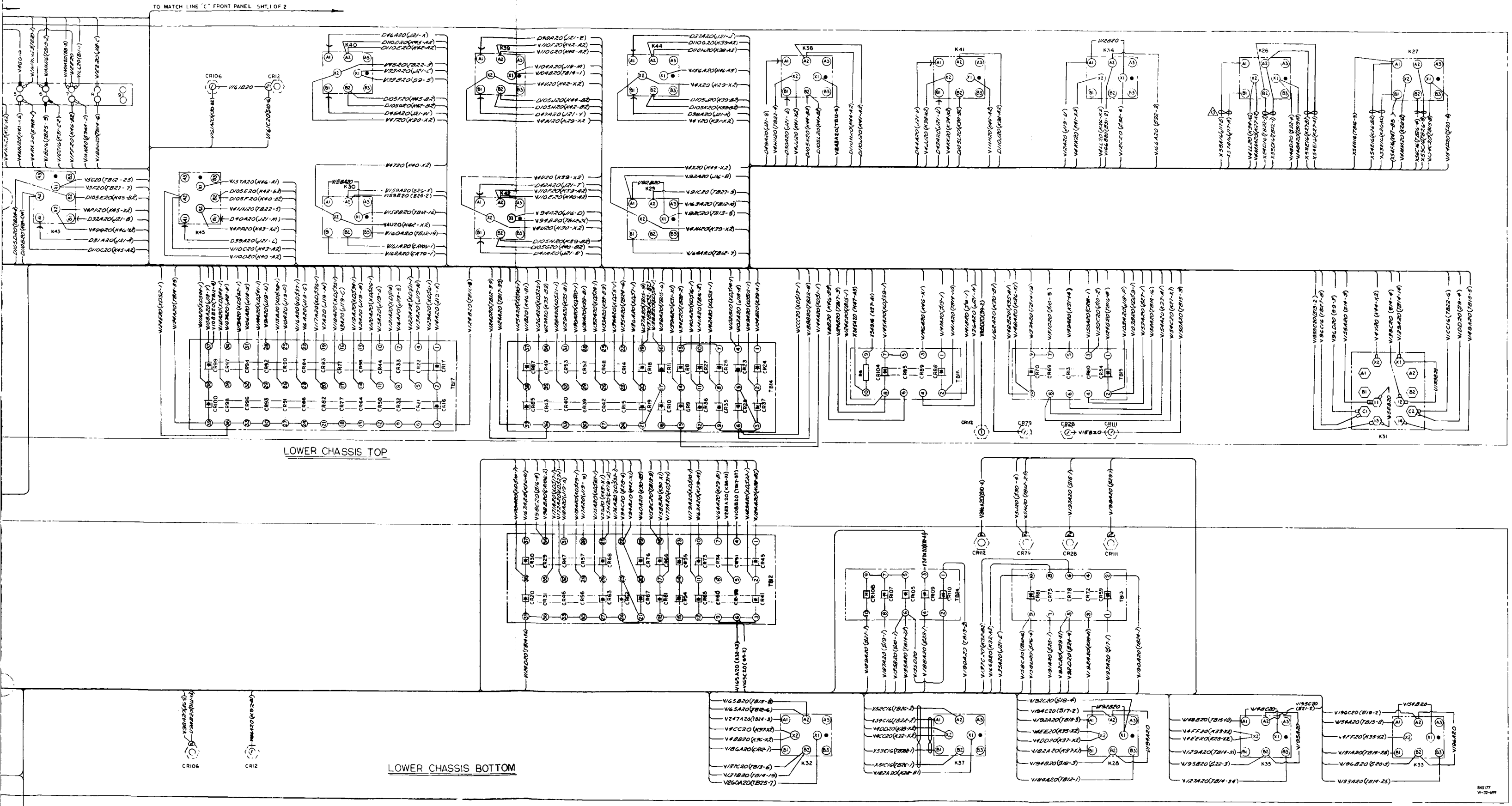

FOLD-OUT #2

Figure B-16. Control and Instrumentation Panel Wiring Diagram (Sheet 2 of 2)

Difference Data Sheet

ENVIRONMENTAL CONTROL SYSTEM WATER-GLYCOL SERVICE SET REFRIGERATION UNIT	Model No. S14-121 AiResearch Part No. 847250-6-1; NR Part No. G14-854025-601, NR Serial No. 003 (ME 901-0319-0001)

THE INSTRUCTIONS CONTAINED IN PRECEDING SECTIONS OF THIS PUBLICATION APPLY EXCEPT FOR THE DIFFERENCES LISTED IN THIS DATA SHEET.

CHARACTERISTIC DIFFERENCES. Same as Refrigeration Unit Model No. S14-121, AiResearch Part No. 847250-3-1, NR Part No. G14-854025-301, NR Serial No. 008 (ME 901-0319-0001) except for minor component and circuit wiring differences.

DESCRIPTION. Same as Refrigeration Unit Model No. S14-121, AiResearch Part No. 847250-3-1, NR Part No. G14-854025-301, NR Serial No. 008 (ME 901-0319-0001).

FUNCTIONAL TEST. Same as Refrigeration Unit Model No. S14-121, AiResearch Part No. 847250-3-1, NR Part No. G14-854025-301, NR Serial No. 008 (ME 901-0319-0001).

TROUBLE ANALYSIS. Same as Refrigeration Unit Model No. S14-121, AiResearch Part No. 847250-3-1, NR Part No. G14-854025-301, NR Serial No. 008 (ME 901-0319-0001).

REMOVAL AND INSTALLATION. Same as Refrigeration Unit Model No. S14-121, AiResearch Part No. 847250-3-1, NR Part No. G14-854025-301, NR Serial No. 008 (ME 901-0319-0001).

REPAIR INSTRUCTIONS. Same as Refrigeration Unit Model No. S14-121, AiResearch Part No. 847250-3-1, NR Part No. G14-854025-301, NR Serial No. 008 (ME 901-0319-0001).

CALIBRATION AND ADJUSTMENT. Same as Refrigeration Unit Model No. S14-121, AiResearch Part No. 847250-3-1, NR Part No. G14-854025-301, NR Serial No. 008 (ME 901-0319-0001) except in table 6-1, the part number for pressure transducer MT13 is 847342-39 instead of 847342-3.

PERIODIC INSPECTION AND SERVICE. Same as Refrigeration Unit Model No. S14-121, AiResearch Part No. 847250-3-1, NR Part No. G14-854025-301, NR Serial No. 008 (ME 901-0319-0001).

DIAGRAMS. Same as Refrigeration Unit Model No. S14-121, AiResearch Part No. 847250-3-1, NR Part No. G14-854025-301, NR Serial No. 008 (ME 901-0319-0001) except use figure B-17 in place of figure 8-6 and figure B-18 (sheets 1 and 2) in place of figure 8-7 (sheets 1 and 2).

APPENDIX A. Same as Refrigeration Unit Model No. S14-121, AiResearch Part No. 847250-3-1, NR Part No. G14-854025-3-1, NR Serial No. 008 (ME 901-0319-0001) except use the following source data information instead of that listed in Appendix A.

Difference Data Sheet

Drawing No.	Change Letter	Title
844064	N/C	Control and Instrumentation Panel Electrical (Schematic) Instruction Plate
844065	N/C	Control and Instrumentation Panel Assembly
845179	N/C	Relay Panel Electrical (Schematic) Instruction Plate
845566	E	Refrigeration Unit Plumbing Installation
845572	N/C	Circuit Breaker Panel Electrical (Schematic) Instruction Plate
845573	N/C	Refrigeration System Electrical (Schematic) Instruction Plate
845585	A	Interconnecting Cable (Schematic) Diagram
845587	N/C	Refrigeration System Fluid (Schematic) Instruction Plate
845889	N/C	Refrigeration Unit Assembly
846357	D	Connector Panel Assembly
847204	T	Fluid Control Module Assembly
847208	F	Refrigeration Unit Fluid (Schematic) Instruction Plate
847218	A	Input Power Electrical (Schematic) Instruction Plate
847233	F	Circuit Breaker Panel Assembly
847250	H	Refrigeration Unit (Outline Drawing)
847254	B	Universal Controller
847255	D	Frequency Converter and Calibration Oscillator Meter Set
847259	J	Input Power Panel Assembly

Difference Data Sheet

Specification No. /Date	Revision	Title
SS-1378-R/30 Aug 1965	Rev. 1	Acceptance Test Procedure

Engineering Orders		
M 417934 M 522667 M 526065 M 527374 M 531525 M 531692 M 562074 M 562092	M 624404 M 624409 M 624537 M 624555 M 624565 M 624575 M 631390 M 631392	M 631397 M 632789 M 631400 M 633889 M 652577 M 659637

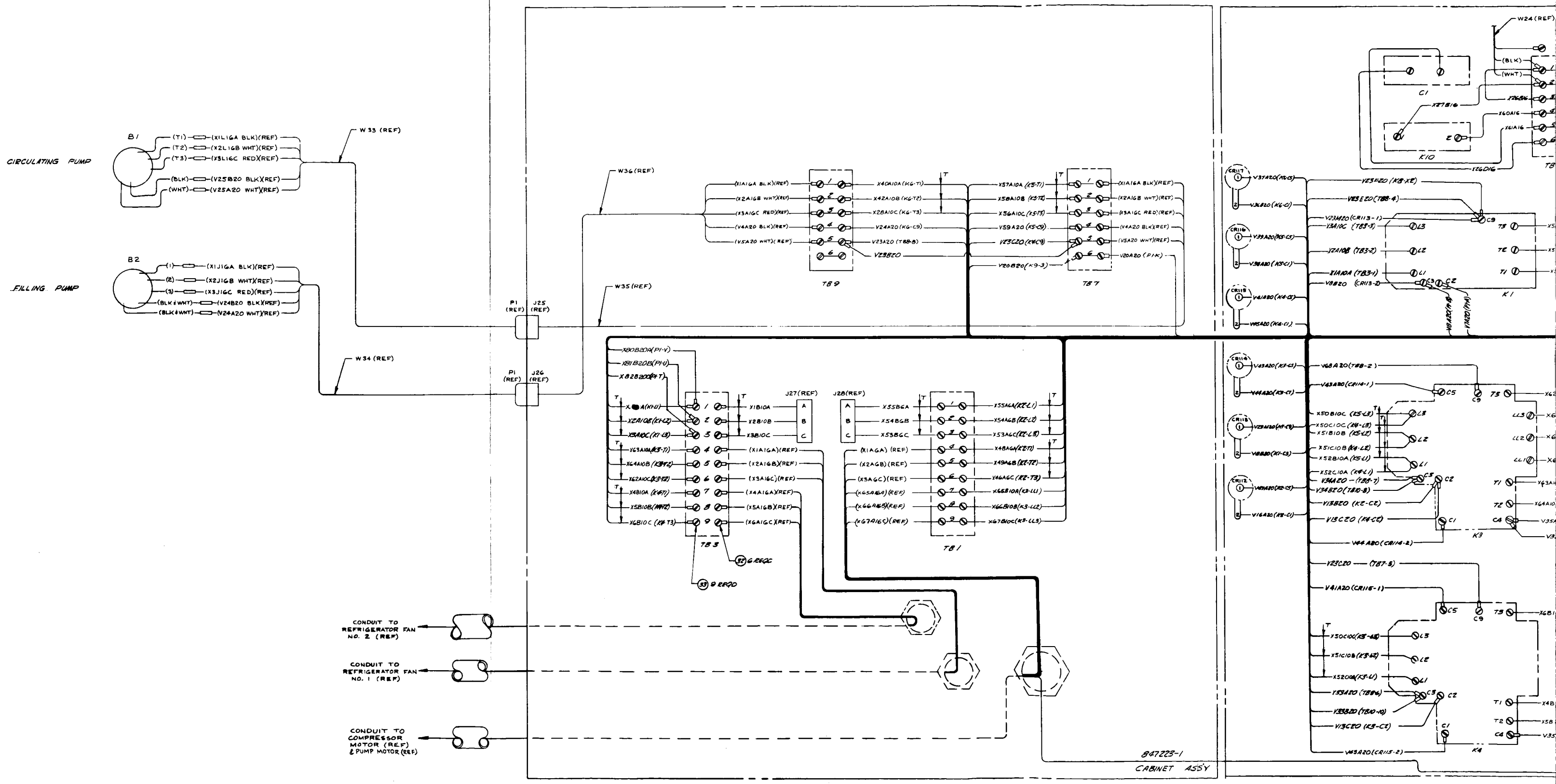
CIRCULATING PUMP
B1
(T1) (X1L1GA BLK)(REF)
(T2) (X2L1GB WHT)(REF)
(T3) (X3L1GC RED)(REF)
(BLK) (V25B20 BLK)(REF)
(WHT) (V25A20 WHT)(REF)
FILLING PUMP
B2
(1) (X1J1GA BLK)(REF)
(2) (X2J1GB WHT)(REF)
(3) (X3J1GC RED)(REF)
(BLK & WHT) (V24B20 BLK)(REF)
(BLK & WHT) (V24A20 WHT)(REF)
W33 (REF)
W34 (REF)
W36 (REF)
W35 (REF)
P1 (REF)
J25 (REF)
J26 (REF)
J27 (REF)
J28 (REF)
TB9
TB7
TB3
TB1
K10
K1
K3
K4
C1
CONDUIT TO REFRIGERATOR FAN NO. 2 (REF)
CONDUIT TO REFRIGERATOR FAN NO. 1 (REF)
CONDUIT TO COMPRESSOR MOTOR (REF) & PUMP MOTOR (REF)
847223-1
CABINET ASSY

FOLD-OUT #1

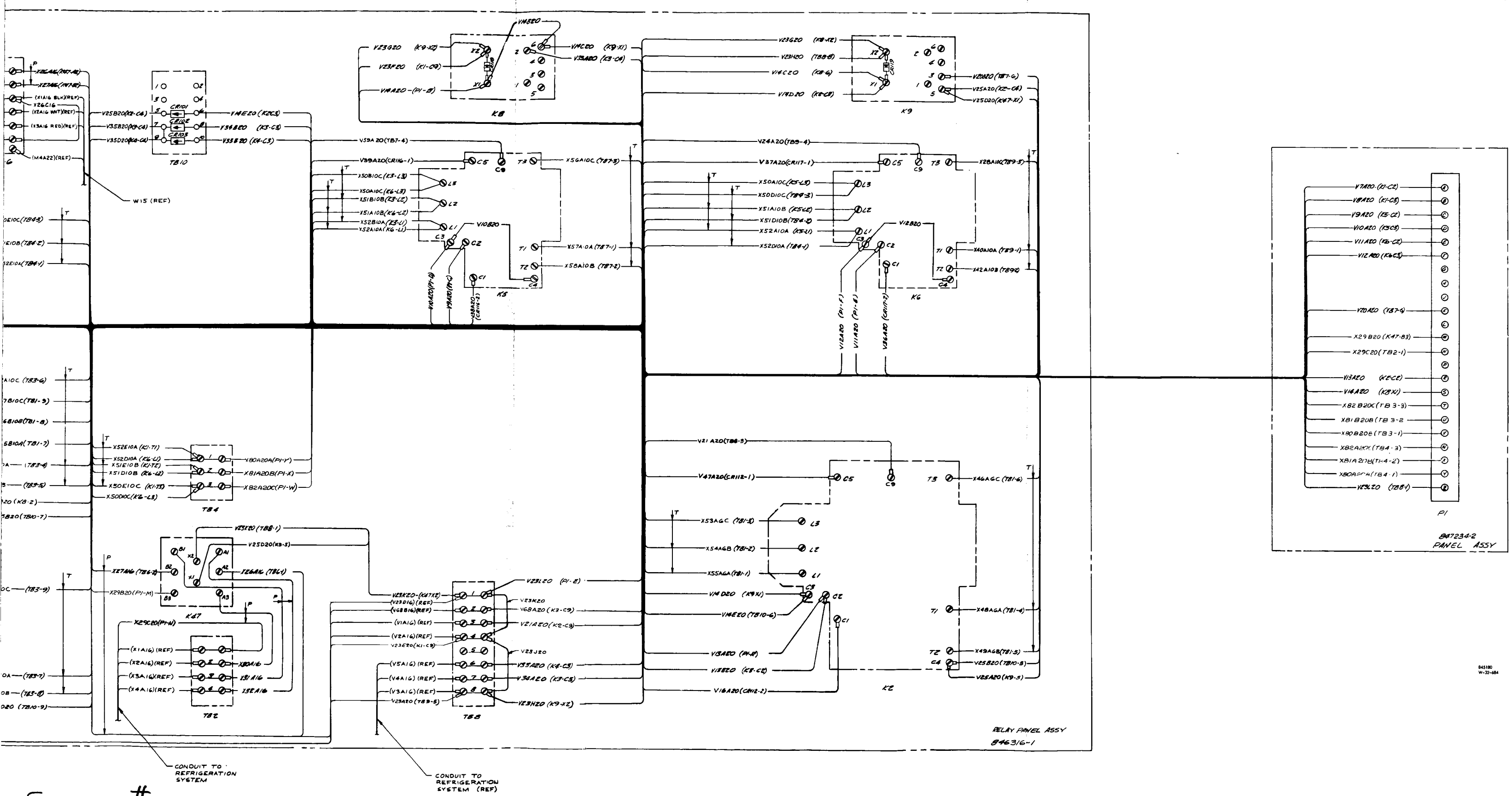

FOLD-OUT #2

Figure B-17. Refrigeration Unit Wiring Diagram

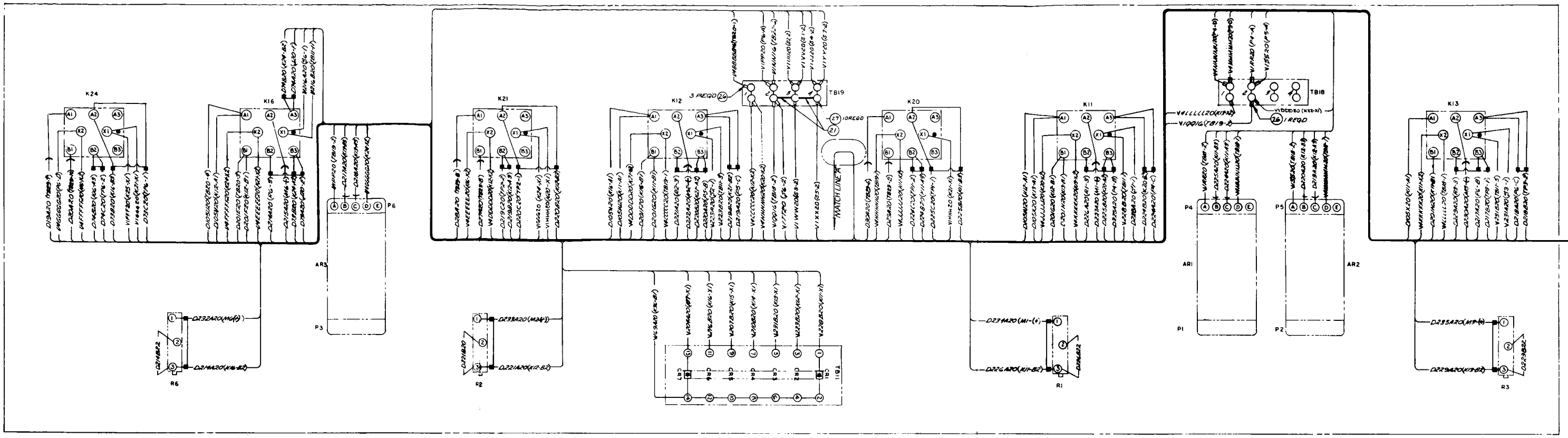

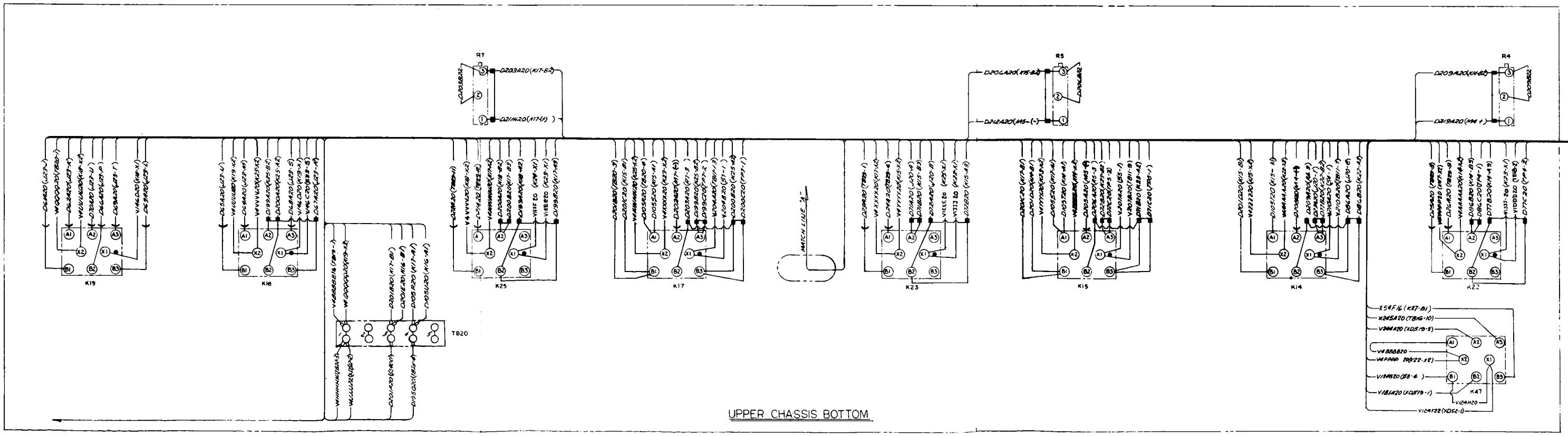

UPPER CHASSIS BOTTOM

FOLD-OUT #1

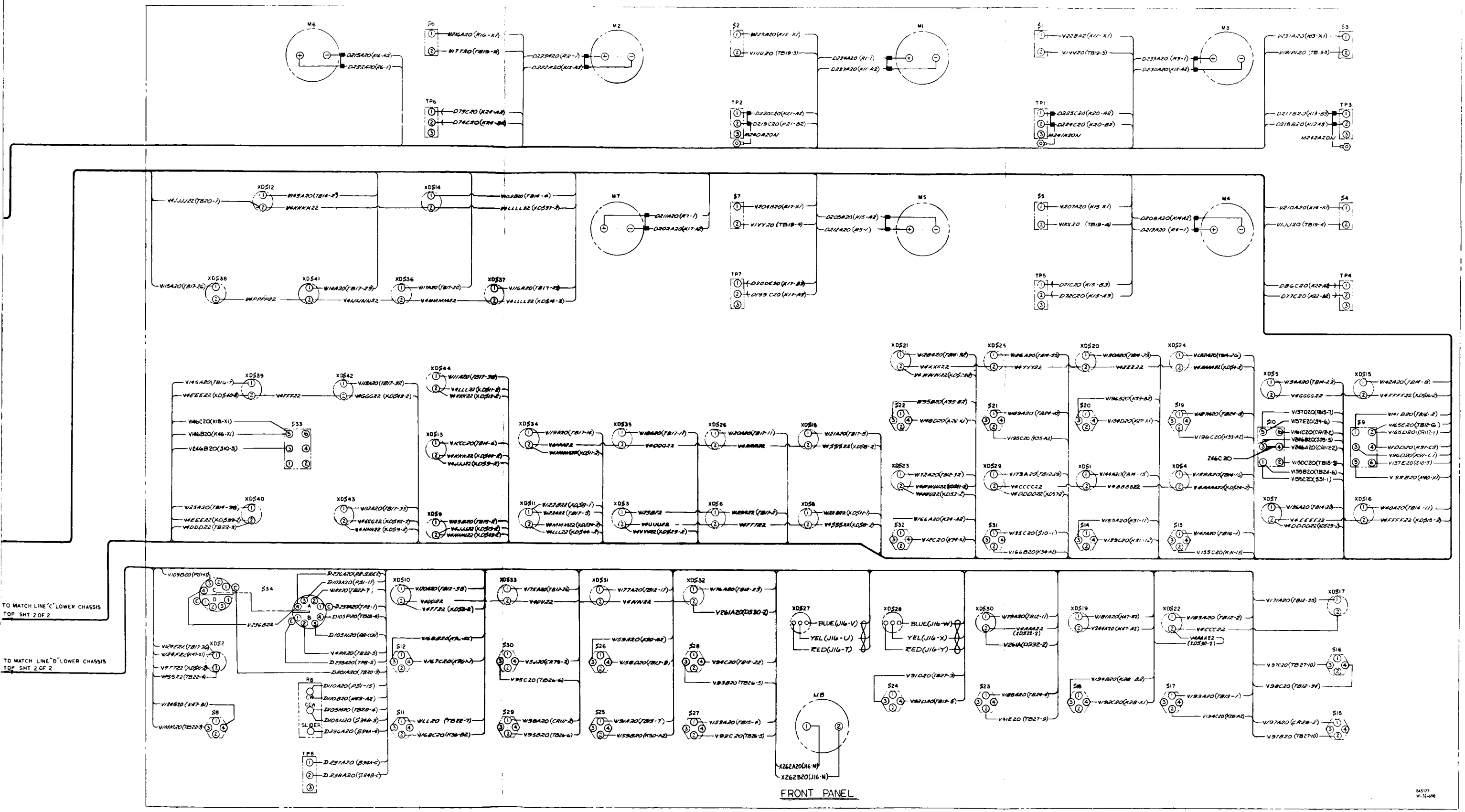

FOLD-OUT #2

Figure B-18. Control and Instrumentation Panel Wiring Diagram (Sheet 1 of 2)

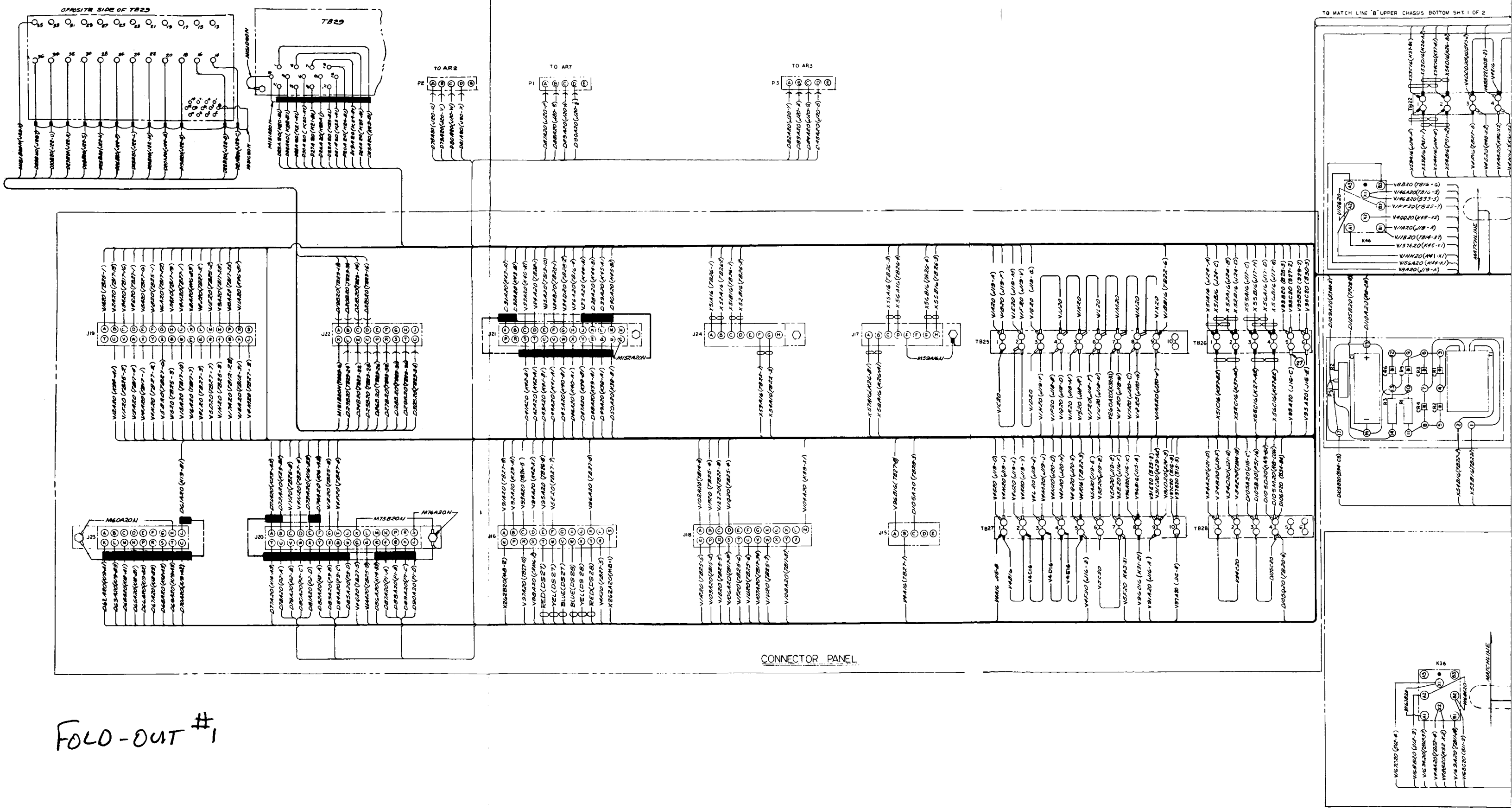
OPPOSITE SIDE OF TB29
TB29
TO AR2
TO AR7
TO AR3
TO MATCH LINE 'B' UPPER CHASSIS BOTTOM SHT. 1 OF 2
MATCHLINE
CONNECTOR PANEL

FOLD-OUT #1

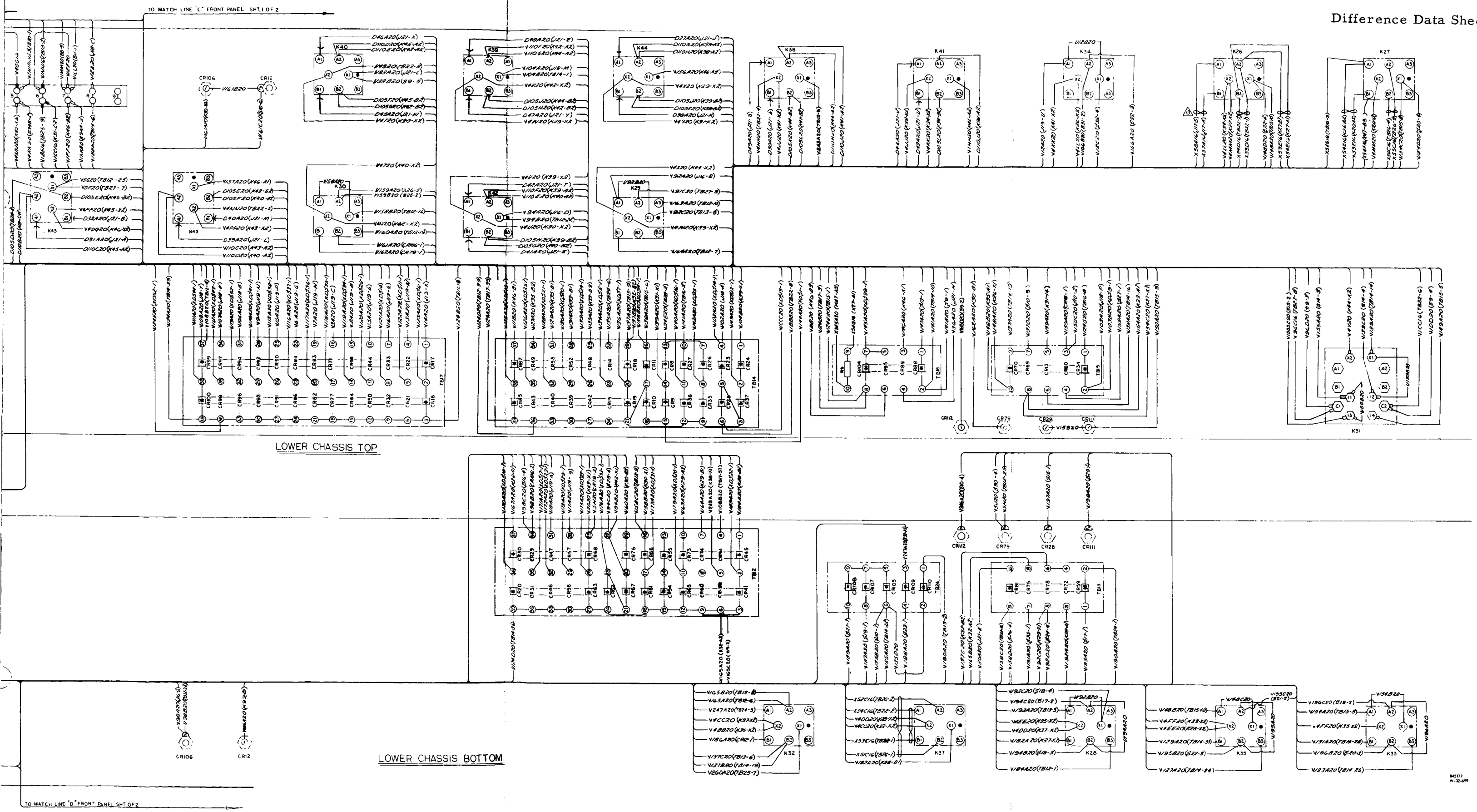

FOLD-OUT #2

Figure B-18. Control and Instrumentation Panel Wiring Diagram (Sheet 2 of 2)

Difference Data Sheet

ENVIRONMENTAL CONTROL SYSTEM WATER-GLYCOL SERVICE SET REFRIGERATION UNIT	Model No. S14-121 AiResearch Part No. 847250-7-1; NR Part No. G14-854025-701, NR Serial No. 004 and 007 (ME 901-0319-0001)

THE INSTRUCTIONS CONTAINED IN PRECEDING SECTIONS OF THIS PUBLICATION APPLY EXCEPT FOR THE DIFFERENCES LISTED IN THIS DATA SHEET.

CHARACTERISTIC DIFFERENCES. Same as Refrigeration Unit Model No. S14-121, AiResearch Part No. 847250-3-1, NR Part No. G14-854025-301, NR Serial No. 008 (ME 901-0319-0001) except for minor component and circuit wiring differences.

DESCRIPTION. Same as Refrigeration Unit Model No. S14-121, AiResearch Part No. 847250-3-1, NR Part No. G14-854025-301, NR Serial No. 008 (ME 901-0319-0001).

FUNCTIONAL TEST. Same as Refrigeration Unit Model No. S14-121, AiResearch Part No. 847250-3-1, NR Part No. G14-854025-301, NR Serial No. 008 (ME 901-0319-0001).

TROUBLE ANALYSIS. Same as Refrigeration Unit Model No. S14-121, AiResearch Part No. 847250-3-1, NR Part No. G14-854025-301, NR Serial No. 008 (ME 901-0319-0001).

REMOVAL AND INSTALLATION. Same as Refrigeration Unit Model No. S14-121, AiResearch Part No. 847250-3-1, NR Part No. G14-854025-301, NR Serial No. 008 (ME 901-0319-0001).

REPAIR INSTRUCTIONS. Same as Refrigeration Unit Model No. S14-121, AiResearch Part No. 847250-3-1, NR Part No. G14-854025-301, NR Serial No. 008 (ME 901-0319-0001).

CALIBRATION AND ADJUSTMENT. Same as Refrigeration Unit Model No. S14-121, AiResearch Part No. 847250-3-1, NR Part No. G14-854025-301, NR Serial No. 008 (ME 901-0319-0001) except in table 6-1, the part number for pressure transducer MT13 is 847342-39 instead of 847342-3.

PERIODIC INSPECTION AND SERVICE. Same as Refrigeration Unit Model No. S14-121, AiResearch Part No. 847250-3-1, NR Part No. G14-854025-301, NR Serial No. 008 (ME 901-0319-0001).

DIAGRAMS. Same as Refrigeration Unit Model No. S14-121, AiResearch Part No. 847250-3-1, NR Part No. G14-854025-301, NR Serial No. 008 (ME 901-0319-0001) except use figure B-19 in place of figure 8-5, figure B-20 in place of figure 8-6 and figure B-21 (sheets 1 and 2) in place of figure 8-7 (sheets 1 and 2).

APPENDIX A. Same as Refrigeration Unit Model No. S14-121, AiResearch Part No. 847250-3-1, NR Part No. G14-854025-301, NR Serial No. 008 (ME 901-0319-0001) except use the following source data information instead of that listed in Appendix A.

Difference Data Sheet

Drawing No.	Change Letter	Title
844064	N/C	Control and Instrumentation Panel Electrical (Schematic) Instruction Plate
844065	N/C	Control and Instrumentation Panel Assembly
845178	N/C	Relay Panel Electrical (Schematic) Instruction Plate
845566	E	Refrigeration Unit Plumbing Installation
845572	N/C	Circuit Breaker Panel Electrical (Schematic) Instruction Plate
845573	N/C	Refrigeration System Electrical (Schematic) Instruction Plate
845585	A	Interconnecting Cable (Schematic) Diagram
845587	N/C	Refrigeration System Fluid (Schematic) Instruction Plate
845890	N/C	Refrigeration Unit Assembly
846357	D	Connector Panel Assembly
847204	T	Fluid Control Module Assembly
847208	F	Refrigeration Unit Fluid (Schematic) Instruction Plate
847218	A	Input Power Electrical (Schematic) Instruction Plate
847233	D	Circuit Breaker Panel Assembly
847250	H	Refrigeration Unit (Outline Drawing)
847254	B	Universal Controller
847255	D	Frequency Converter and Calibration Oscillator Meter Set
847259	J	Input Power Panel Assembly

Difference Data Sheet

Specification No. /Date	Revision	Title
SS-1378-R/30 Aug 1965	Rev. 1	Acceptance Test Procedure

Engineering Orders		
M 522667 M 527374 M 531525 M 531692 M 562092 M 624537	M 624565 M 624575 M 631390 M 631392 M 631393 M 631397	M 631400 M 632789 M 633889 M 636293 M 652577 M 659637

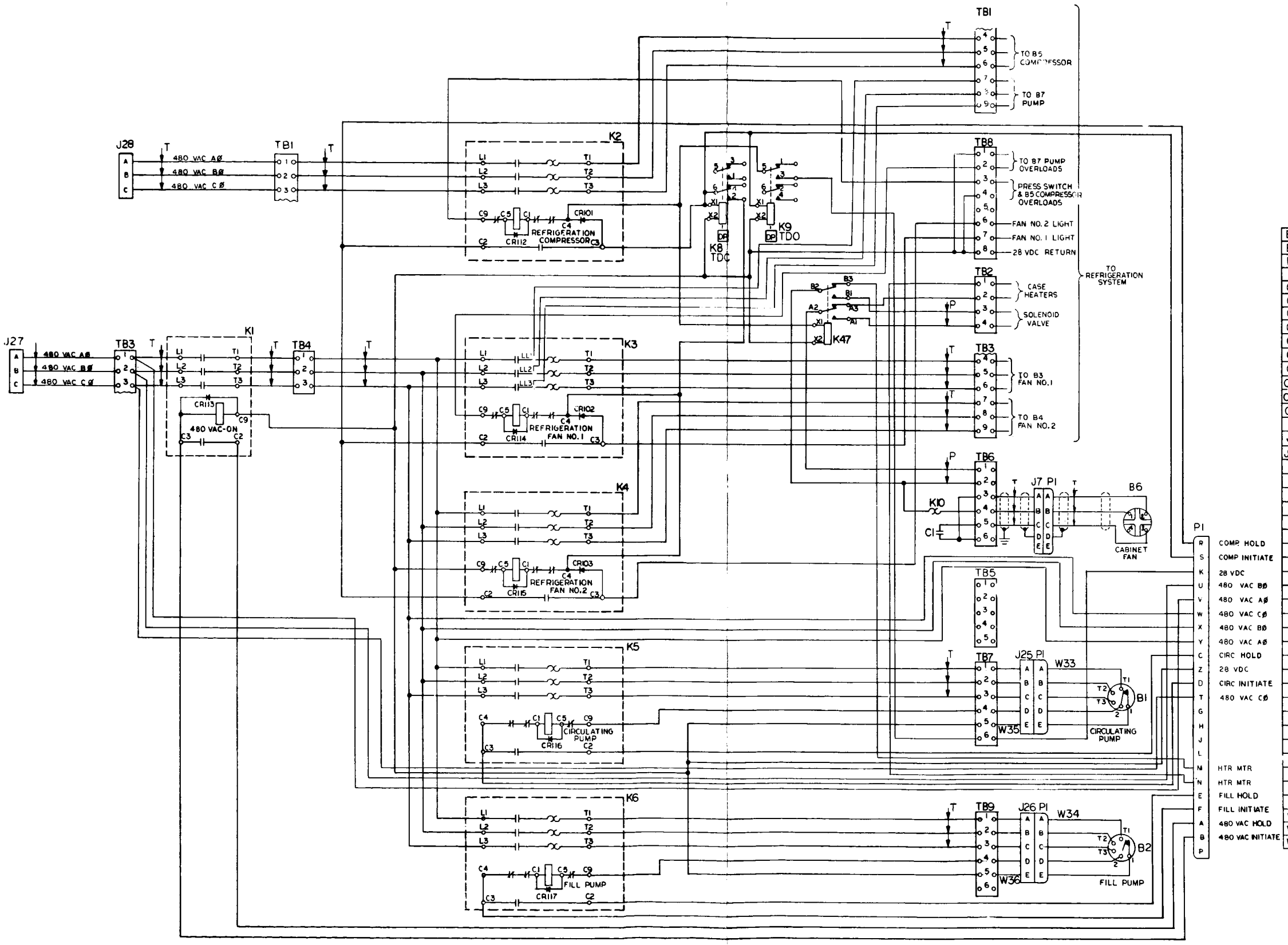

B1	847276-1	PUMP
B2	847275-1	PUMP
B6	115 VAC 60 ~ 1Ø	FAN
CR101	1N1218	DIODE
CR102	1N1218	
CR103	1N1218	
CR112	1N1341	
CR113		
CR114		
CR115		
CR116		
CR117	1N1341	DIODE
C1	25 MFD 200 VAC	
J27	MS3106A-20-19S	CONNECTOR
J28	MS3106A-28-6S	CONNECTOR
K1	28VDC CONTROL 480 VAC 3Ø POWER	CONTACTOR
K2		
K3		
K4		
K5		
K6		
K8		
K9		
K10	28 VDC CONTROL 480 VAC 3Ø POWER	CONTACTOR
K47	MS25273-D1	RELAY
PI	23 PIN	CONNECTOR
TB1	9 TERMINAL	TERMINAL BOARD
TB2	4	
TB3	9	
TB4	3	
TB5	5	
TB6	6	
TB7	6	
TB8	8	
TB9	6 TERMINAL	TERMINAL BOARD
W33	845237-1	CABLE ASSEMBLY
W34	845238-1	CABLE ASSEMBLY
W35	845240-1	CABLE ASSEMBLY
W36	845241-1	CABLE ASSEMBLY

Figure B-19. Relay Panel Electrical Schematic

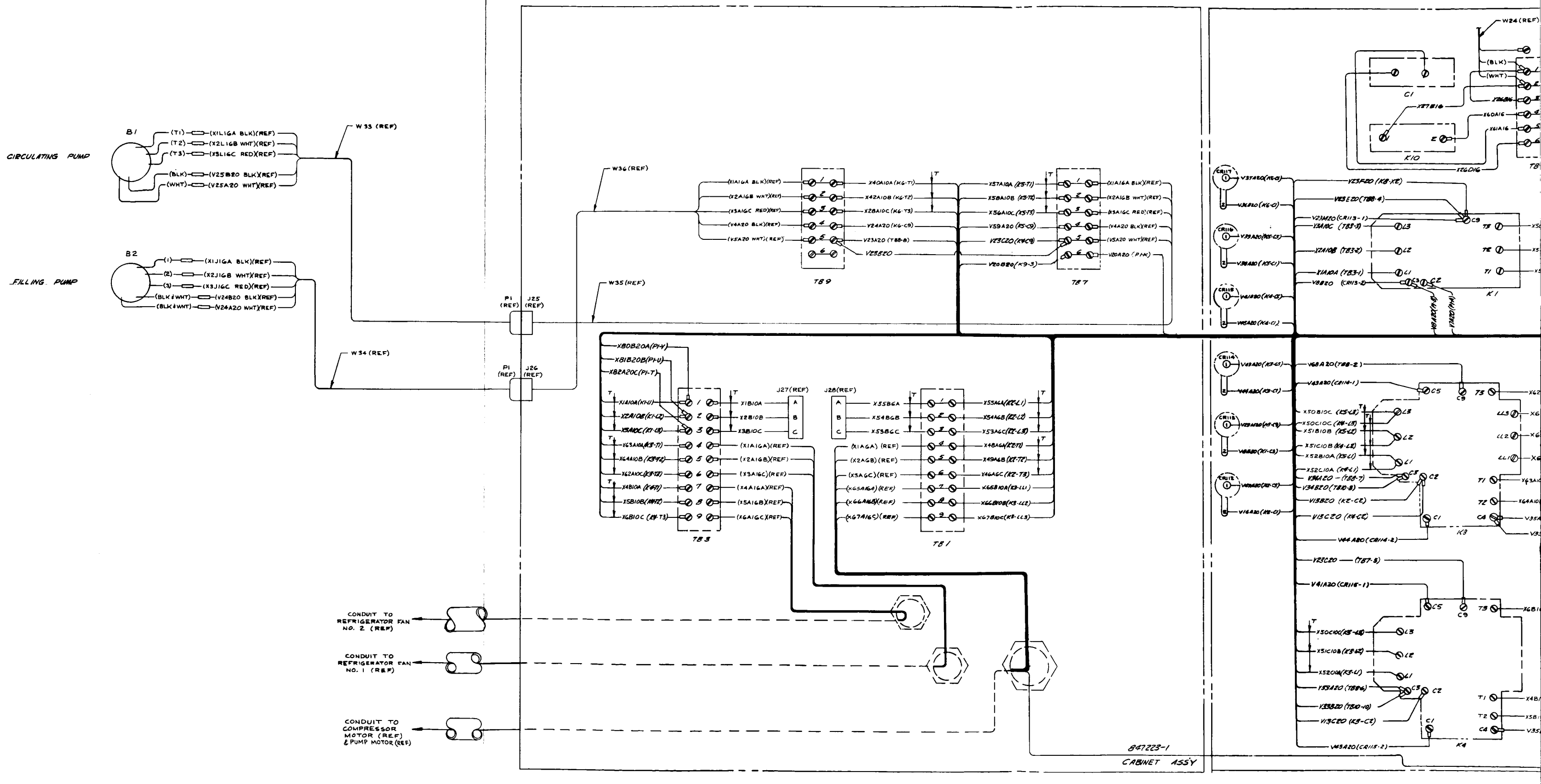
CIRCULATING PUMP
B1
(T1) (X1L1GA BLK)(REF)
(T2) (X2L1GB WHT)(REF)
(T3) (X3L1GC RED)(REF)
(BLK) (V25B20 BLK)(REF)
(WHT) (V25A20 WHT)(REF)
FILLING PUMP
B2
(1) (X1J1GA BLK)(REF)
(2) (X2J1GB WHT)(REF)
(3) (X3J1GC RED)(REF)
(BLK & WHT) (V24B20 BLK)(REF)
(BLK & WHT) (V24A20 WHT)(REF)
W33 (REF)
W34 (REF)
W35 (REF)
W36 (REF)
P1 (REF)
J25 (REF)
J26 (REF)
J27 (REF)
J28 (REF)
TB9
TB7
TB3
TB1
K10
K1
K3
K4
C1
CONDUIT TO REFRIGERATOR FAN NO. 2 (REF)
CONDUIT TO REFRIGERATOR FAN NO. 1 (REF)
CONDUIT TO COMPRESSOR MOTOR (REF) & PUMP MOTOR (REF)
847223-1
CABINET ASSY

FOLD-OUT #1

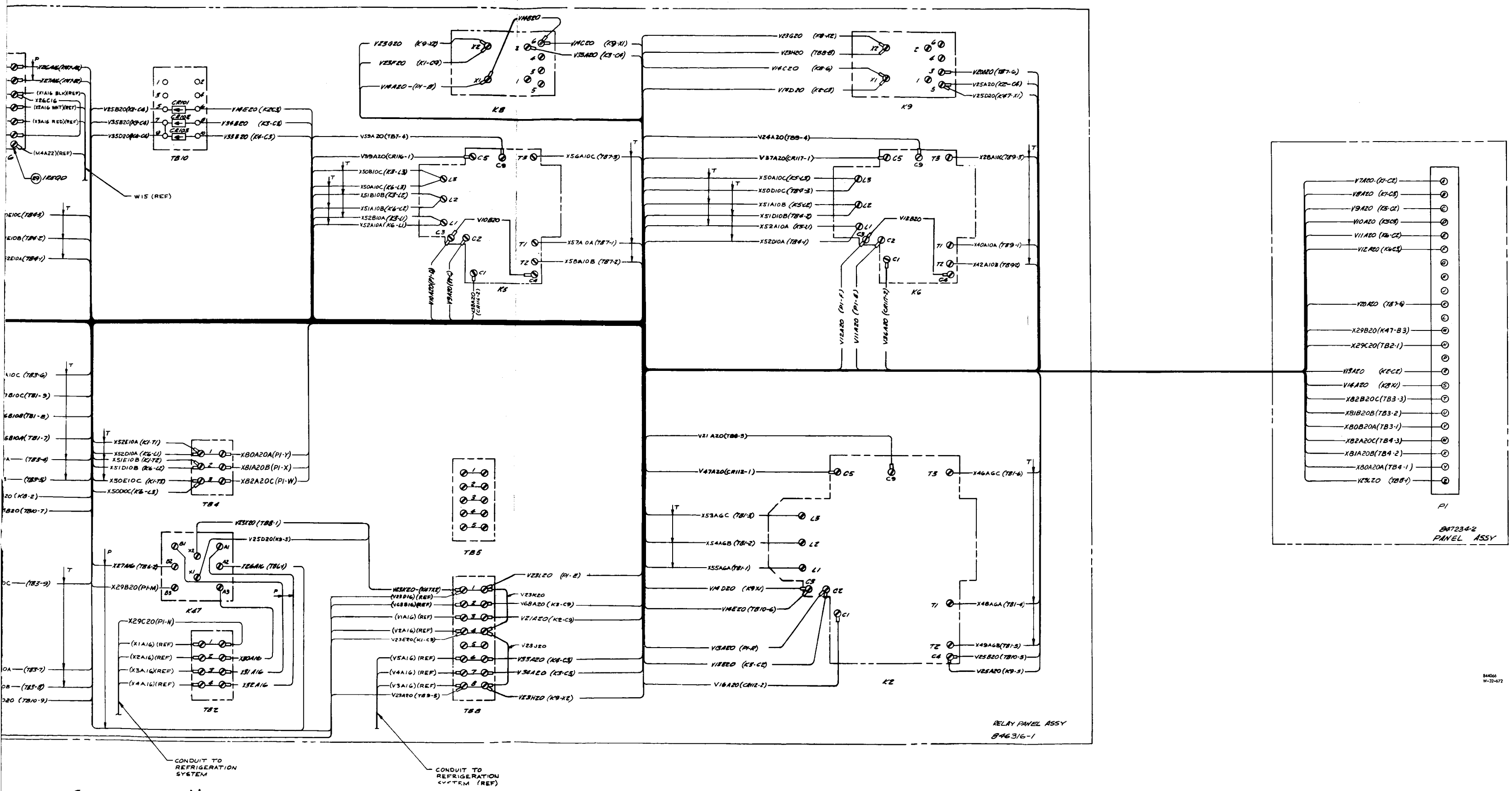

FOLD-OUT #2

Figure B-20. Refrigeration Unit Wiring Diagram

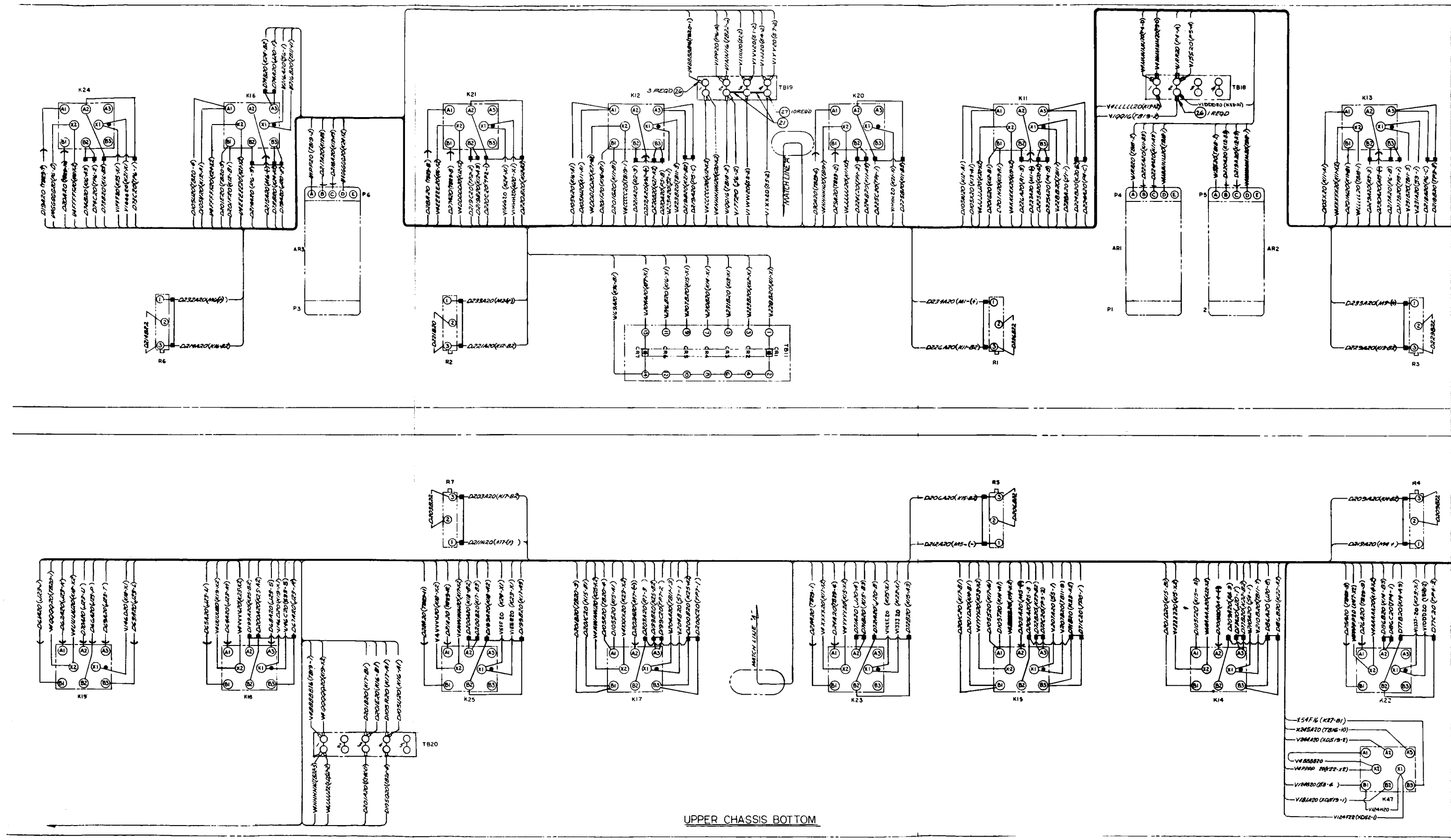

UPPER CHASSIS BOTTOM

FOLD-OUT #1

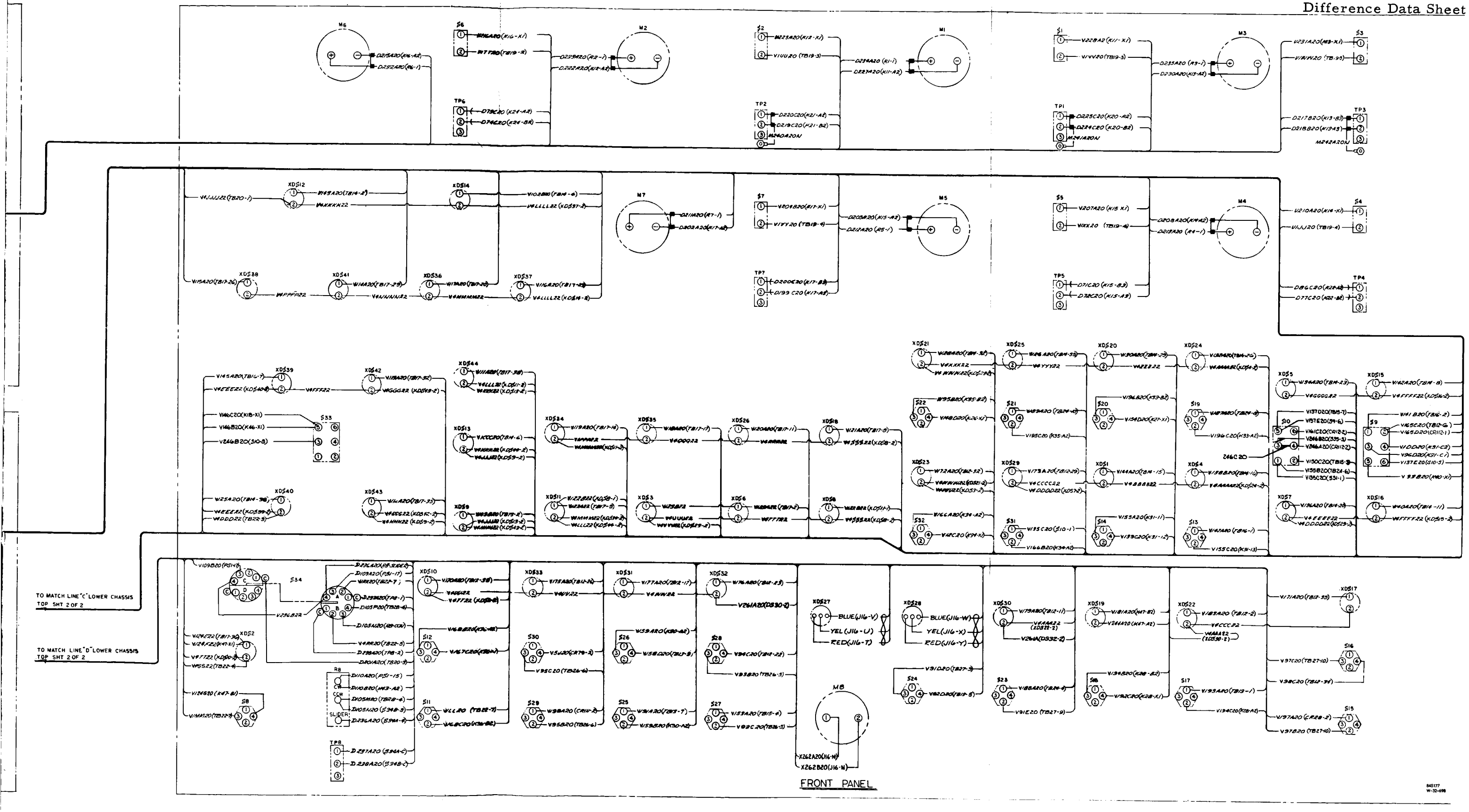

FOLD-OUT #2

Figure B-21. Control and Instrumentation Panel Wiring Diagram (Sheet 1 of 2)

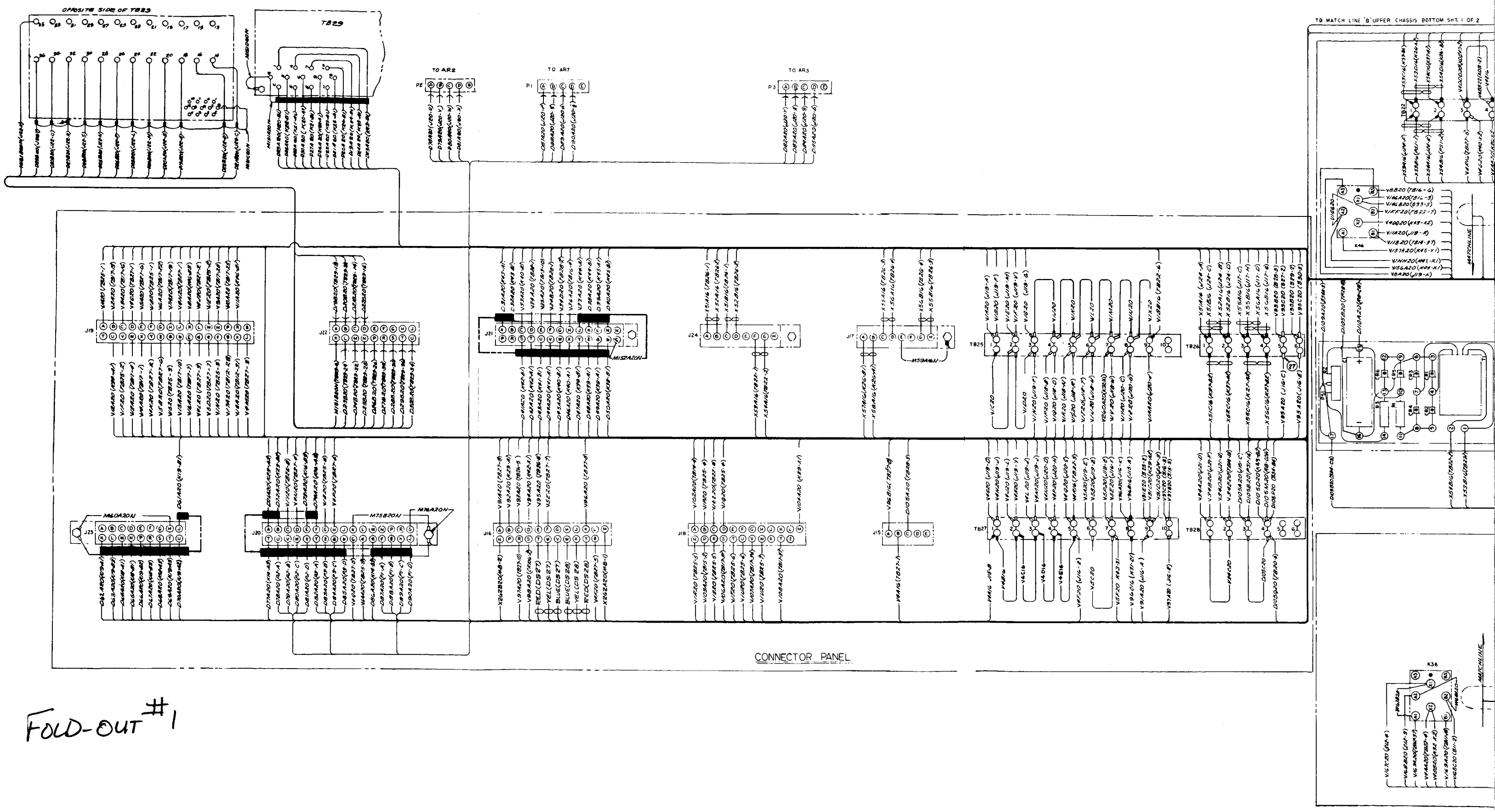
OPPOSITE SIDE OF TB29
TB29
TO AR2
TO AR7
TO AR3
TO MATCH LINE 'B' UPPER CHASSIS BOTTOM SHT. 1 OF 2
MATCHLINE
CONNECTOR PANEL

FOLD-OUT #1

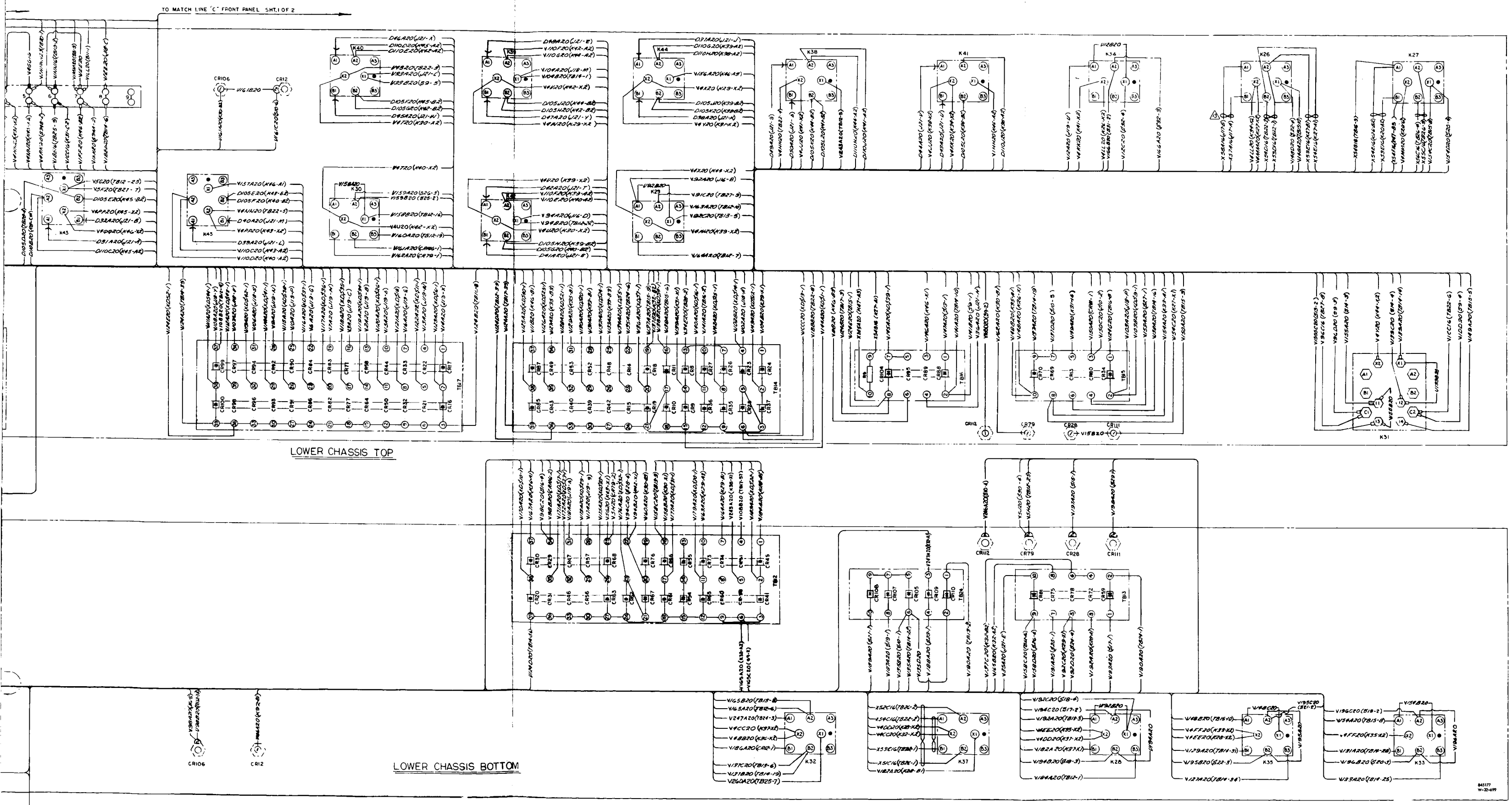

Figure B-21. Control and Instrumentation Panel Wiring Diagram (Sheet 2 of 2)

FOLD-OUT #2

Difference Data Sheet

ENVIRONMENTAL CONTROL SYSTEM WATER-GLYCOL SERVICE SET REFRIGERATION UNIT	Model No. S14-121 AiResearch Part No. 847250-8-1; NR Part No. G14-854025-801, NR Serial No. 009 and 010 (ME 901-0319-0001)

THE INSTRUCTIONS CONTAINED IN PRECEDING SECTIONS OF THIS PUBLICATION APPLY EXCEPT FOR THE DIFFERENCES LISTED IN THIS DATA SHEET.

CHARACTERISTIC DIFFERENCES. Same as Refrigeration Unit Model No. S14-121, AiResearch Part No. 847250-3-1, NR Part No. G14-854025-301, NR Serial No. 008 (ME 901-0319-0001) except for minor component and circuit wiring differences.

DESCRIPTION. Same as Refrigeration Unit Model No. S14-121, AiResearch Part No. 847250-3-1, NR Part No. G14-854025-301, NR Serial No. 008 (ME 901-0319-0001).

FUNCTIONAL TEST. Same as Refrigeration Unit Model No. S14-121, AiResearch Part No. 847250-3-1, NR Part No. G14-854025-301, NR Serial No. 008 (ME 901-0319-0001).

TROUBLE ANALYSIS. Same as Refrigeration Unit Model No. S14-121, AiResearch Part No. 847250-3-1, NR Part No. G14-854025-301, NR Serial No. 008 (ME 901-0319-0001).

REMOVAL AND INSTALLATION. Same as Refrigeration Unit Model No. S14-121, AiResearch Part No. 847250-3-1, NR Part No. G14-854025-301, NR Serial No. 008 (ME 901-0319-0001).

REPAIR INSTRUCTIONS. Same as Refrigeration Unit Model No. S14-121, AiResearch Part No. 847250-3-1, NR Part No. G14-854025-301, NR Serial No. 008 (ME 901-0319-0001).

CALIBRATION AND ADJUSTMENT. Same as Refrigeration Unit Model No. S14-121, AiResearch Part No. 847250-3-1, NR Part No. G14-854025-301, NR Serial No. 008 (ME 901-0319-0001).

PERIODIC INSPECTION AND SERVICE. Same as Refrigeration Unit Model No. S14-121, AiResearch Part No. 847250-3-1, NR Part No. G14-854025-301, NR Serial No. 008 (ME 901-0319-0001).

DIAGRAMS. Same as Refrigeration Unit Model No. S14-121, AiResearch Part No. 847250-3-1, NR Part No. G14-854025-301, NR Serial No. 008 (ME 901-0319-0001) except use figure B-22 in place of figure 8-6 and figure B-23 (sheets 1 and 2) in place of figure 8-7 (sheets 1 and 2).

APPENDIX A. Same as Refrigeration Unit Model No. S14-121, AiResearch Part No. 847250-3-1, NR Part No. G14-854025-301, NR Serial No. 008 (ME 901-0319-0001) except use the following source data information instead of that listed in Appendix A.

Difference Data Sheet

Drawing No.	Change Letter	Title
844064	N/C	Control and Instrumentation Panel Electrical (Schematic) Instruction Plate
844065	N/C	Control and Instrumentation Panel Assembly
845179	N/C	Relay Panel Electrical (Schematic) Instruction Plate
845566	F	Refrigeration Unit Plumbing Installation
845572	N/C	Circuit Breaker Panel Electrical (Schematic) Instruction Plate
845573	N/C	Refrigeration System Electrical (Schematic) Instruction Plate
845585	A	Interconnecting Cable (Schematic) Diagram
845587	N/C	Refrigeration System Fluid (Schematic) Instruction Plate
845891	N/C	Refrigeration Unit Assembly
846357	D	Connector Panel Assembly
847204	T	Fluid Control Module Assembly
847208	F	Refrigeration Unit Fluid (Schematic) Instruction Plate
847218	A	Input Power Electrical (Schematic) Instruction Plate
847233	F	Circuit Breaker Panel Assembly
847250	H	Refrigeration Unit (Outline Drawing)
847254	B	Universal Controller
847255	D	Frequency Converter and Calibration Oscillator Meter Set
847259	J	Input Power Panel Assembly

Difference Data Sheet

Specification No. /Date	Revision	Title
SS-1378-R/30 Aug 1965	Rev. 1	Acceptance Test Procedure

Engineering Orders		
M 417934	M 624404	M 631397
M 417941	M 624409	M 631400
M 522667	M 624537	M 632789
M 526065	M 624555	M 633889
M 527374	M 624565	M 652577
M 531525	M 624566	M 656330
M 531692	M 624575	M 659636
M 562074	M 631390	M 659637
M 562092	M 631392	

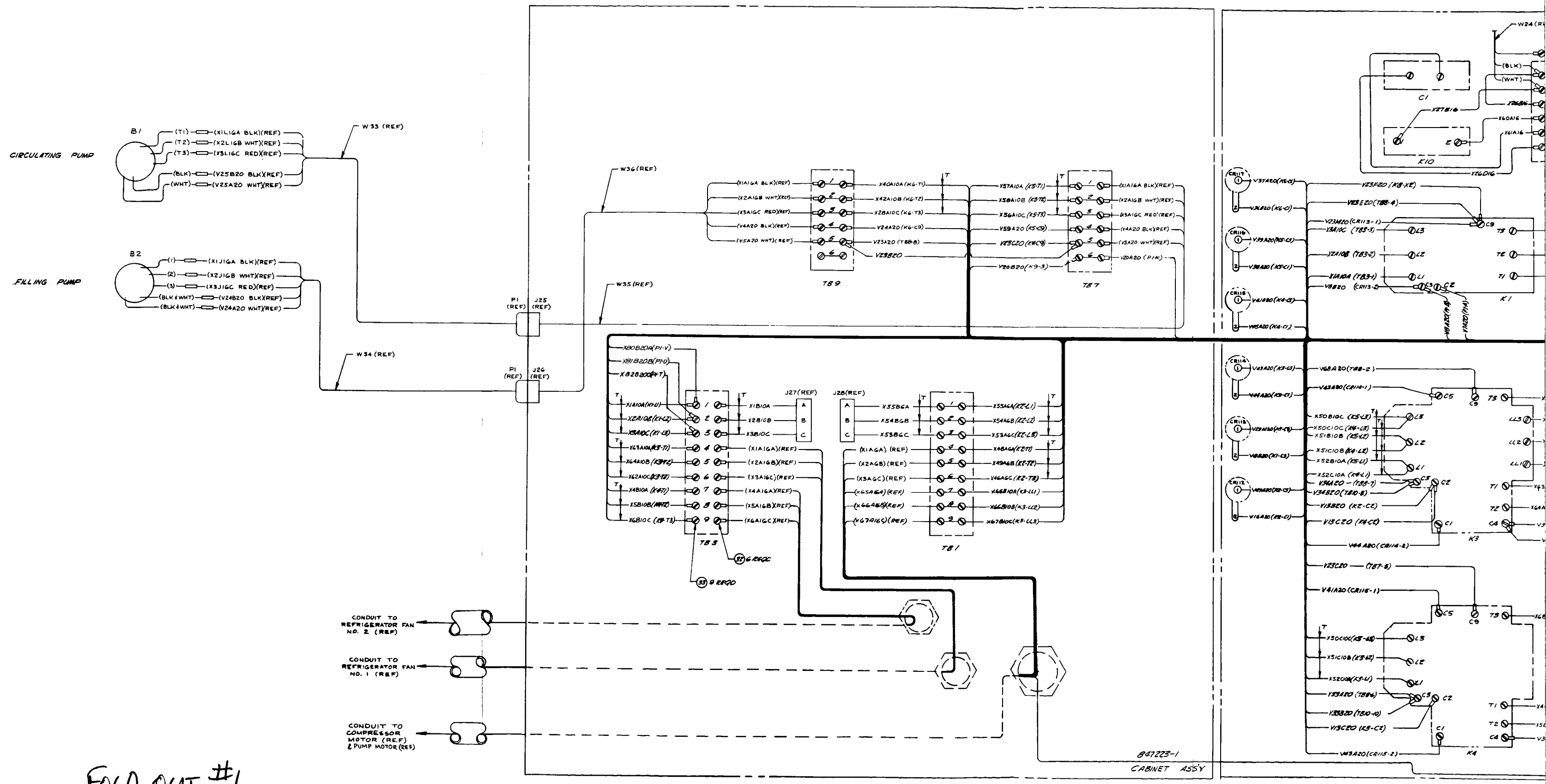
CIRCULATING PUMP
B1
(T1) (X1L1GA BLK)(REF)
(T2) (X2L1GB WHT)(REF)
(T3) (X3L1GC RED)(REF)
(BLK) (V25B20 BLK)(REF)
(WHT) (V25A20 WHT)(REF)
FILLING PUMP
B2
(1) (X1J1GA BLK)(REF)
(2) (X2J1GB WHT)(REF)
(3) (X3J1GC RED)(REF)
(BLK & WHT) (V24B20 BLK)(REF)
(BLK & WHT) (V24A20 WHT)(REF)
W33 (REF)
W34 (REF)
W35 (REF)
W36 (REF)
P1 (REF)
J25 (REF)
J26 (REF)
TB9
TB7
TB3
TB1
J27 (REF)
J28 (REF)
CONDUIT TO REFRIGERATOR FAN NO. 2 (REF)
CONDUIT TO REFRIGERATOR FAN NO. 1 (REF)
CONDUIT TO COMPRESSOR MOTOR (REF) & PUMP MOTOR (REF)
847223-1
CABINET ASSY
K10
K1
K3
K4

FOLD-OUT #1

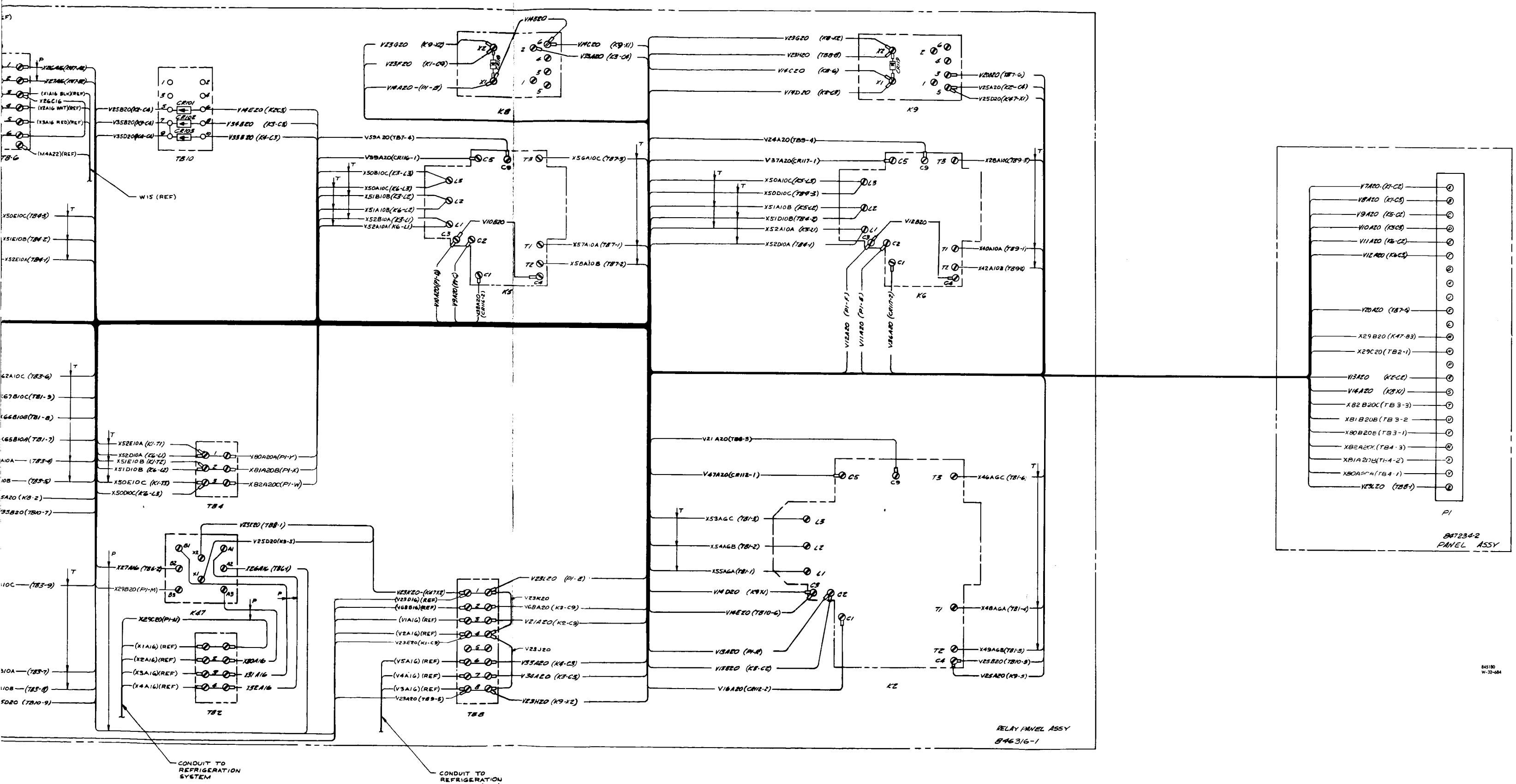

FOLD-OUT #2

Figure B-22. Refrigeration Unit Wiring Diagram

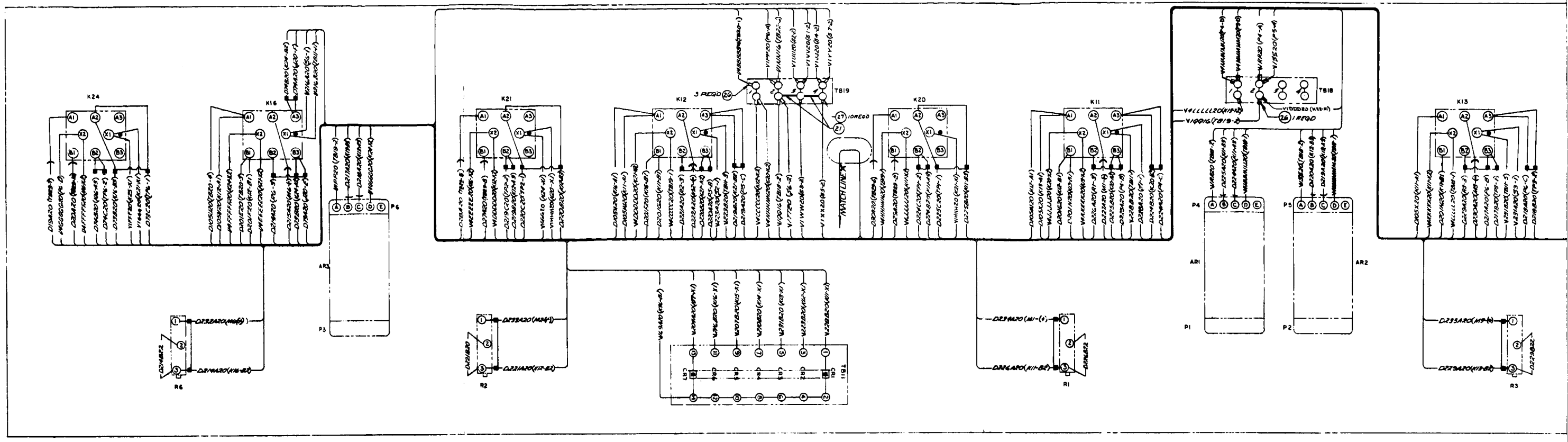

UPPER CHASSIS BOTTOM

FOLD-OUT #1

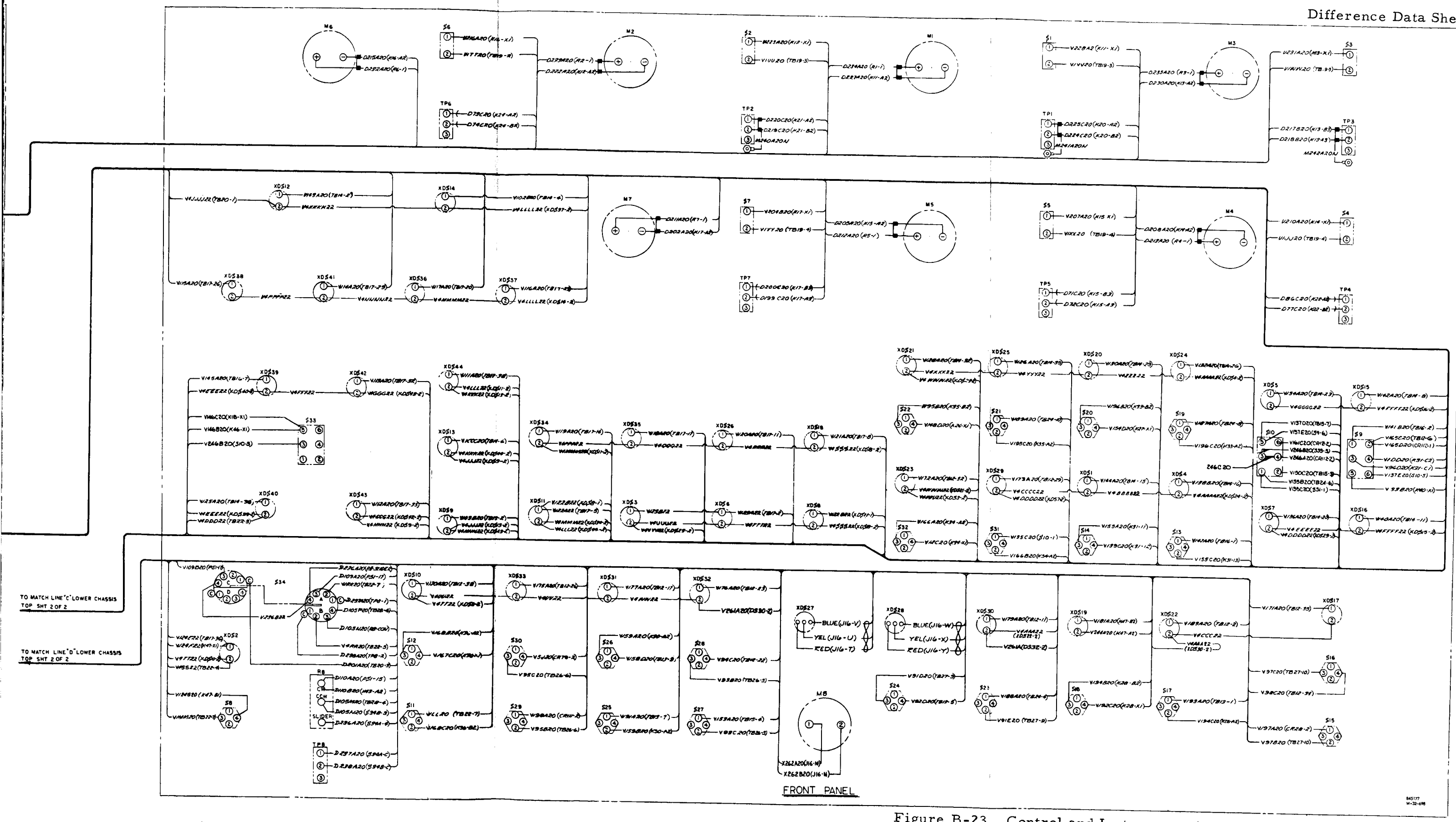

Figure B-23. Control and Instrumentation Panel Wiring Diagram (Sheet 1 of 2)

FOLD-OUT #2

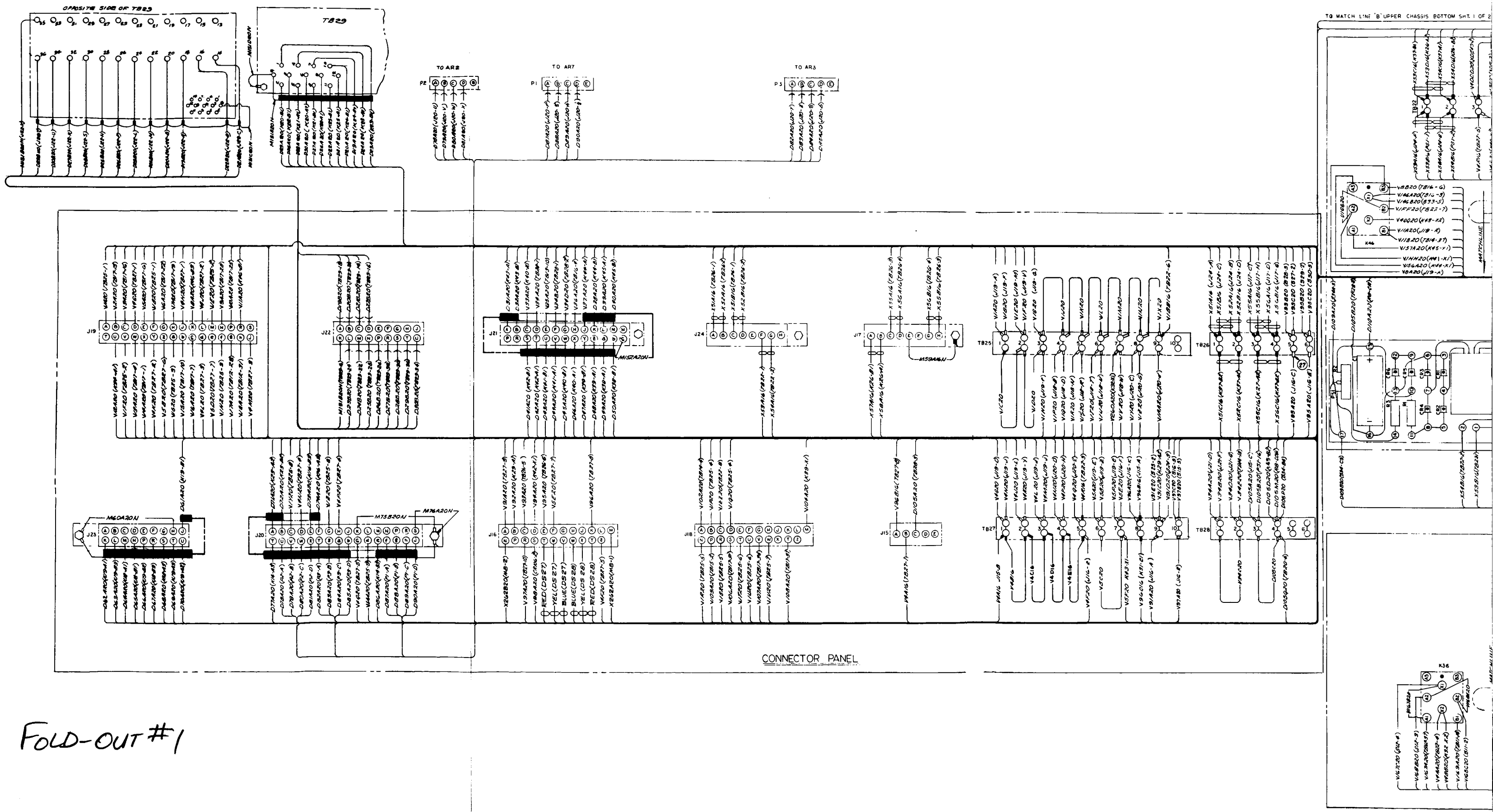
OPPOSITE SIDE OF TB29
TB29
TO AR2
TO AR7
TO AR3
TO MATCH LINE 'B' UPPER CHASSIS BOTTOM SHT. 1 OF 2
MATCH LINE
CONNECTOR PANEL

FOLD-OUT #1

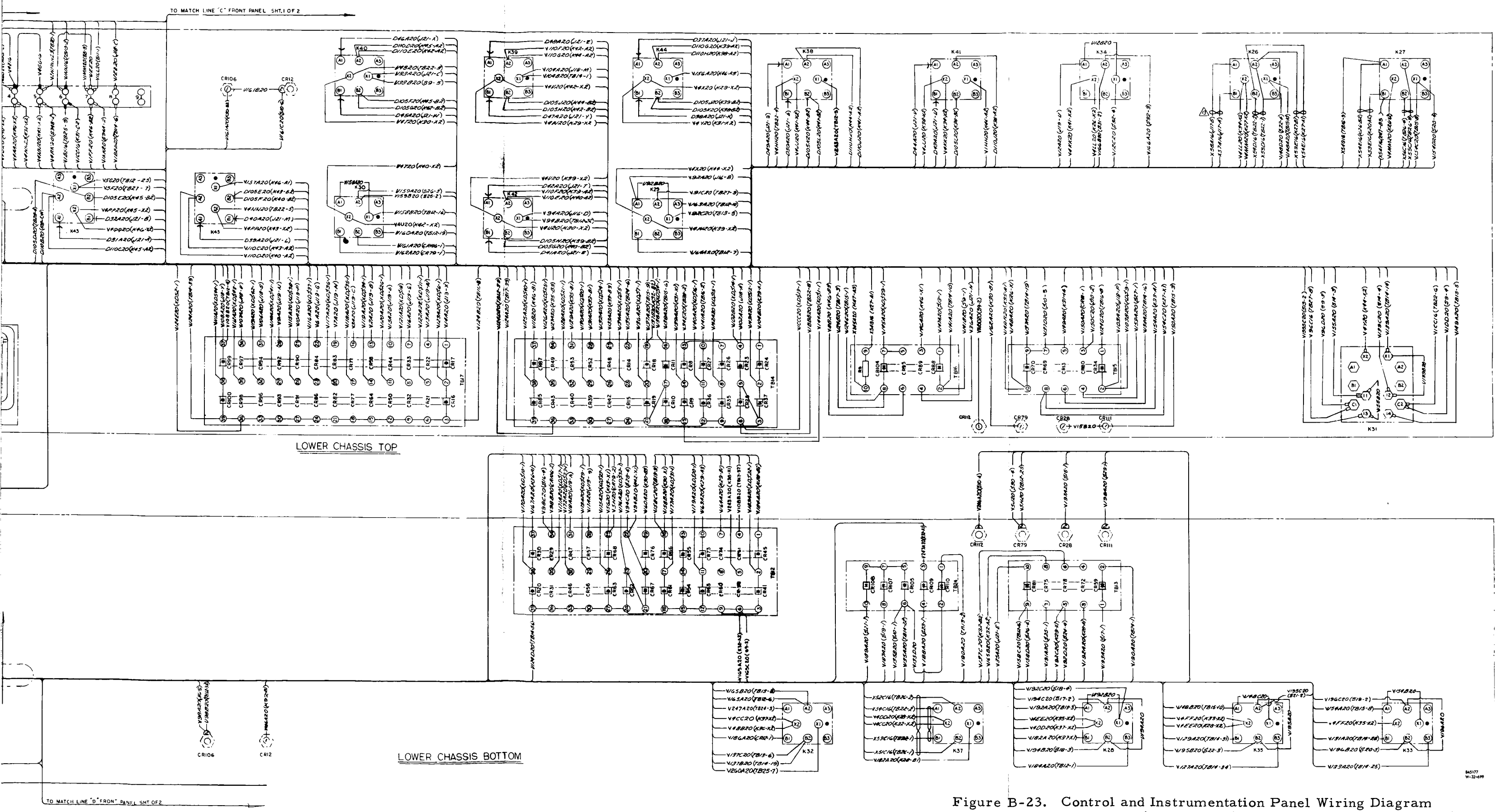

Figure B-23. Control and Instrumentation Panel Wiring Diagram (Sheet 2 of 2)

FOLD-OUT #2

Difference Data Sheet

ENVIRONMENTAL CONTROL SYSTEM WATER-GLYCOL SERVICE SET REFRIGERATION UNIT	Model No. S14-121 AiResearch Part No. 847250-9-1; NR Part No. G14-854025-111, NR Serial No. 018 (ME 901-0319-0001)

THE INSTRUCTIONS CONTAINED IN PRECEDING SECTIONS OF THIS PUBLICATION APPLY EXCEPT FOR THE DIFFERENCES LISTED IN THIS DATA SHEET.

CHARACTERISTIC DIFFERENCES. Same as Refrigeration Unit Model No. S14-121, AiResearch Part No. 847250-3-1, NR Part No. G14-854025-301, NR Serial No. 008 (ME 901-0319-0001) except for minor component and circuit wiring differences.

DESCRIPTION. Same as Refrigeration Unit Model No. S14-121, AiResearch Part No. 847250-3-1, NR Part No. G14-854025-301, NR Serial No. 008 (ME 901-0319-0001).

FUNCTIONAL TEST. Same as Refrigeration Unit Model No. S14-121, AiResearch Part No. 847250-3-1, NR Part No. G14-854025-301, NR Serial No. 008 (ME 901-0319-0001).

TROUBLE ANALYSIS. Same as Refrigeration Unit Model No. S14-121, AiResearch Part No. 847250-3-1, NR Part No. G14-854025-301, NR Serial No. 008 (ME 901-0319-0001).

REMOVAL AND INSTALLATION. Same as Refrigeration Unit Model No. S14-121, AiResearch Part No. 847250-3-1, NR Part No. G14-854025-301, NR Serial No. 008 (ME 901-0319-0001).

REPAIR INSTRUCTIONS. Same as Refrigeration Unit Model No. S14-121, AiResearch Part No. 847250-3-1, NR Part No. G14-854025-301, NR Serial No. 008 (ME 901-0319-0001).

CALIBRATION AND ADJUSTMENT. Same as Refrigeration Unit Model No. S14-121, AiResearch Part No. 847250-3-1, NR Part No. G14-854025-301, NR Serial No. 008 (ME 901-0319-0001).

PERIODIC INSPECTION AND SERVICE. Same as Refrigeration Unit Model No. S14-121, AiResearch Part No. 847250-3-1, NR Part No. G14-854025-301, NR Serial No. 008 (ME 901-0319-0001).

DIAGRAMS. Same as Refrigeration Unit Model No. S14-121, AiResearch Part No. 847250-3-1, NR Part No. G14-854025-301, NR Serial No. 008 (ME 901-0319-0001) except use figure B-24 in place of figure 8-2, figure B-25 in place of figure 8-5, figure B-26 in place of figure 8-6 and figure B-27 (sheets 1 and 2) in place of figure 8-7 (sheets 1 and 2).

APPENDIX A. Same as Refrigeration Unit Model No. S14-121, AiResearch Part No. 847250-3-1, NR Part No. G14-854025-301, NR Serial No. 008 (ME 901-0319-0001) except use the following source data information instead of that listed in Appendix A.

Difference Data Sheet

Drawing No.	Change Letter	Title
845192	N/C	Control and Instrumentation Panel Assembly
845196	N/C	Relay Panel Electrical (Schematic) Instruction Plate
845566	E	Refrigeration Unit Plumbing Installation
845572	N/C	Circuit Breaker Panel Electrical (Schematic) Instruction Plate
845573	N/C	Refrigeration System Electrical (Schematic) Instruction Plate
845585	A	Interconnecting Cable (Schematic) Diagram
845587	N/C	Refrigeration System Fluid (Schematic) Instruction Plate
845590	A	Control and Instrumentation Panel Electrical (Schematic) Instruction Plate
845892	N/C	Refrigeration Unit Assembly
846357	D	Connector Panel Assembly
847204	T	Fluid Control Module Assembly
847208	F	Refrigeration Unit Fluid (Schematic) Instruction Plate
847218	A	Input Power Electrical (Schematic) Instruction Plate
847233	F	Circuit Breaker Panel Assembly
847250	H	Refrigeration Unit (Outline Drawing)
847254	B	Universal Controller
847255	D	Frequency Converter and Calibration Oscillator Meter Set
847259	J	Input Power Panel Assembly

Difference Data Sheet

Specification No. /Date	Revision	Title
SS-1378-R/30 Aug 1965	Rev. 1	Acceptance Test Procedure

Engineering Orders		
M 522667 M 531570	M 633885	M 652577

FOLD-OUT #1

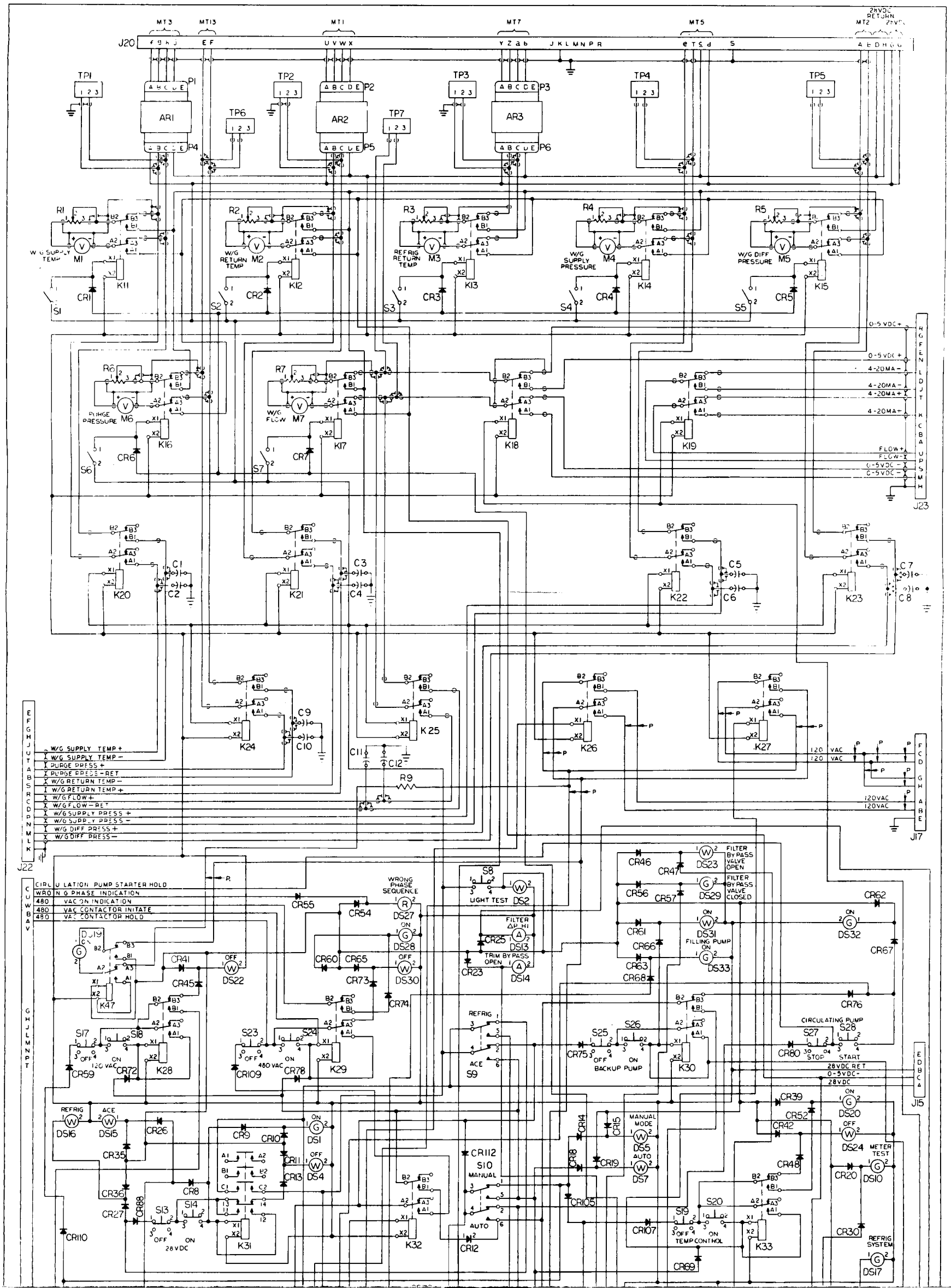
J20
MT3
MT13
MT1
MT7
MT5
MT2
24VDC RETURN
TP1
TP2
TP3
TP4
TP5
TP6
TP7
AR1
AR2
AR3
P1
P2
P3
P4
P5
P6
R1
R2
R3
R4
R5
R6
R7
W/G SUPPLY TEMP
W/G RETURN TEMP
REFRIG RETURN TEMP
W/G SUPPLY PRESSURE
W/G DIFF PRESSURE
PURGE PRESSURE
W/G FLOW
M1
M2
M3
M4
M5
M6
M7
K11
K12
K13
K14
K15
K16
K17
K18
K19
K20
K21
K22
K23
K24
K25
K26
K27
K28
K29
K30
K31
K32
K47
CR1
CR2
CR3
CR4
CR5
CR6
CR7
S1
S2
S3
S4
S5
S6
S7
C1
C2
C3
C4
C5
C6
C7
C8
C9
C10
C11
C12
R9
0-5 VDC +
4-20MA -
4-20MA +
FLOW +
FLOW -
0-5VDC -
J23
J22
J17
J15
W/G SUPPLY TEMP +
W/G SUPPLY TEMP -
PURGE PRESS +
PURGE PRESS - RET
W/G RETURN TEMP -
W/G RETURN TEMP +
W/G FLOW +
W/G FLOW - RET
W/G SUPPLY PRESS +
W/G SUPPLY PRESS -
W/G DIFF PRESS +
W/G DIFF PRESS -
120 VAC
120VAC
CIRCULATION PUMP STARTER HOLD
WRONG PHASE INDICATION
480 VAC ON INDICATION
480 VAC CONTACTOR INITATE
480 VAC CONTACTOR HOLD
WRONG PHASE SEQUENCE
DS27
DS28
DS30
DS22
DJ19
CR55
CR54
CR60
CR65
CR73
CR74
CR41
CR45
S8
LIGHT TEST
DS2
FILTER ΔP HI
DS13
TRIM BY PASS OPEN
DS14
CR25
CR23
CR46
CR47
CR56
CR57
CR61
CR66
CR63
CR68
DS23
DS29
DS31
DS33
FILTER BY PASS VALVE OPEN
FILTER BY PASS VALVE CLOSED
FILLING PUMP
CR62
CR67
DS32
CR76
S17
S18
S23
S24
S25
S26
S27
S28
S9
S10
REFRIG
ACE
MANUAL
AUTO
CR59
CR72
CR109
CR78
CR75
CR80
CIRCULATING PUMP
STOP
START
BACKUP PUMP
28VDC RET
0-5VDC -
28VDC
DS16
DS15
CR26
CR35
CR36
CR27
CR88
CR110
CR9
CR10
CR11
CR13
DS1
DS4
CR8
S13
S14
K31
CR112
CR12
CR14
CR15
CR18
CR19
CR105
MANUAL MODE
DS5
AUTO
DS7
CR107
S19
S20
TEMP CONTROL
K33
CR69
CR39
CR52
CR42
CR48
CR20
CR30
DS20
DS24
DS10
METER TEST
REFRIG SYSTEM
DS17
ON
OFF
28 VDC
120 VAC
480 VAC

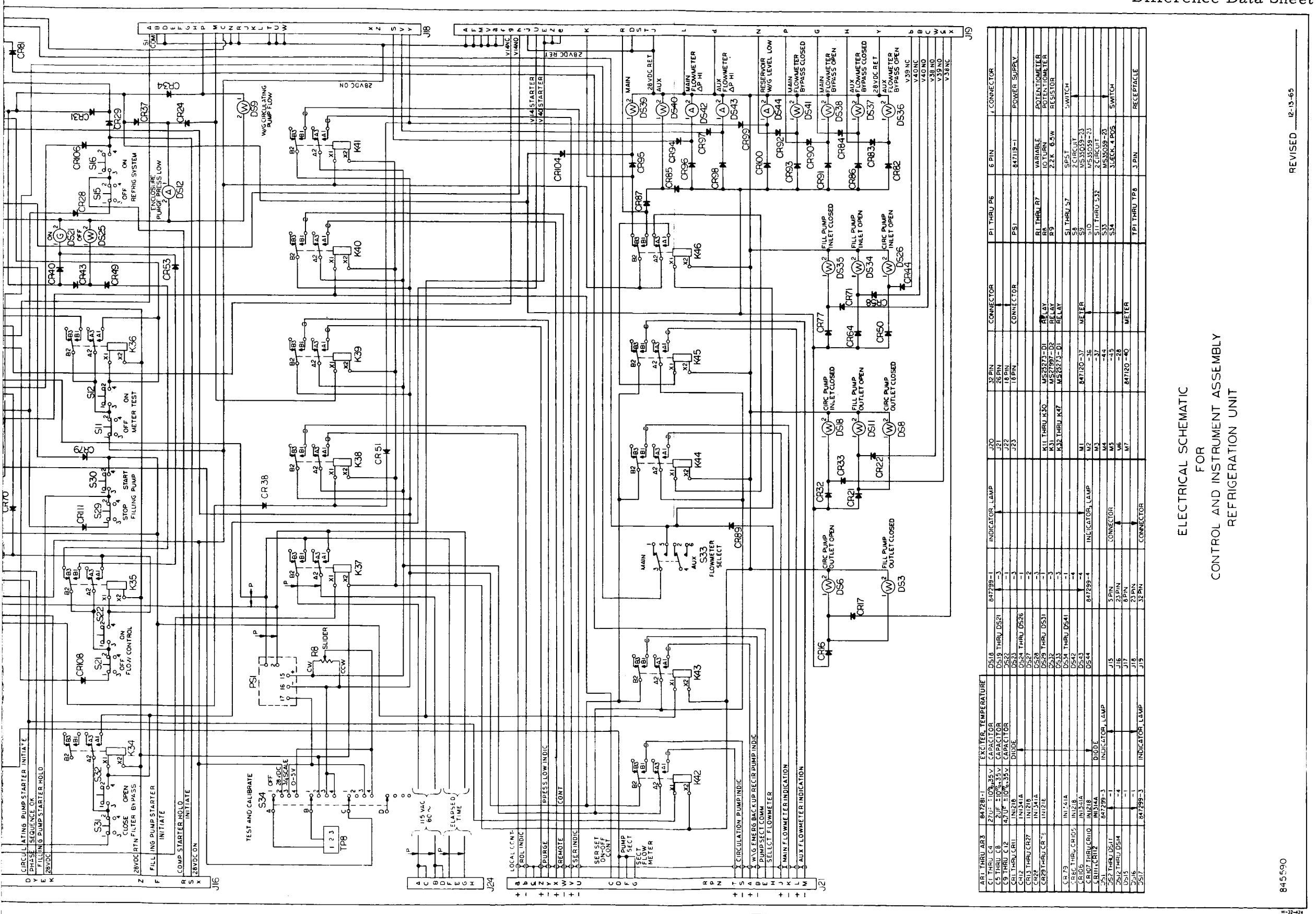

FOLD-OUT #2

Figure B-24. Control and Instrumentation Panel Electrical Schematic

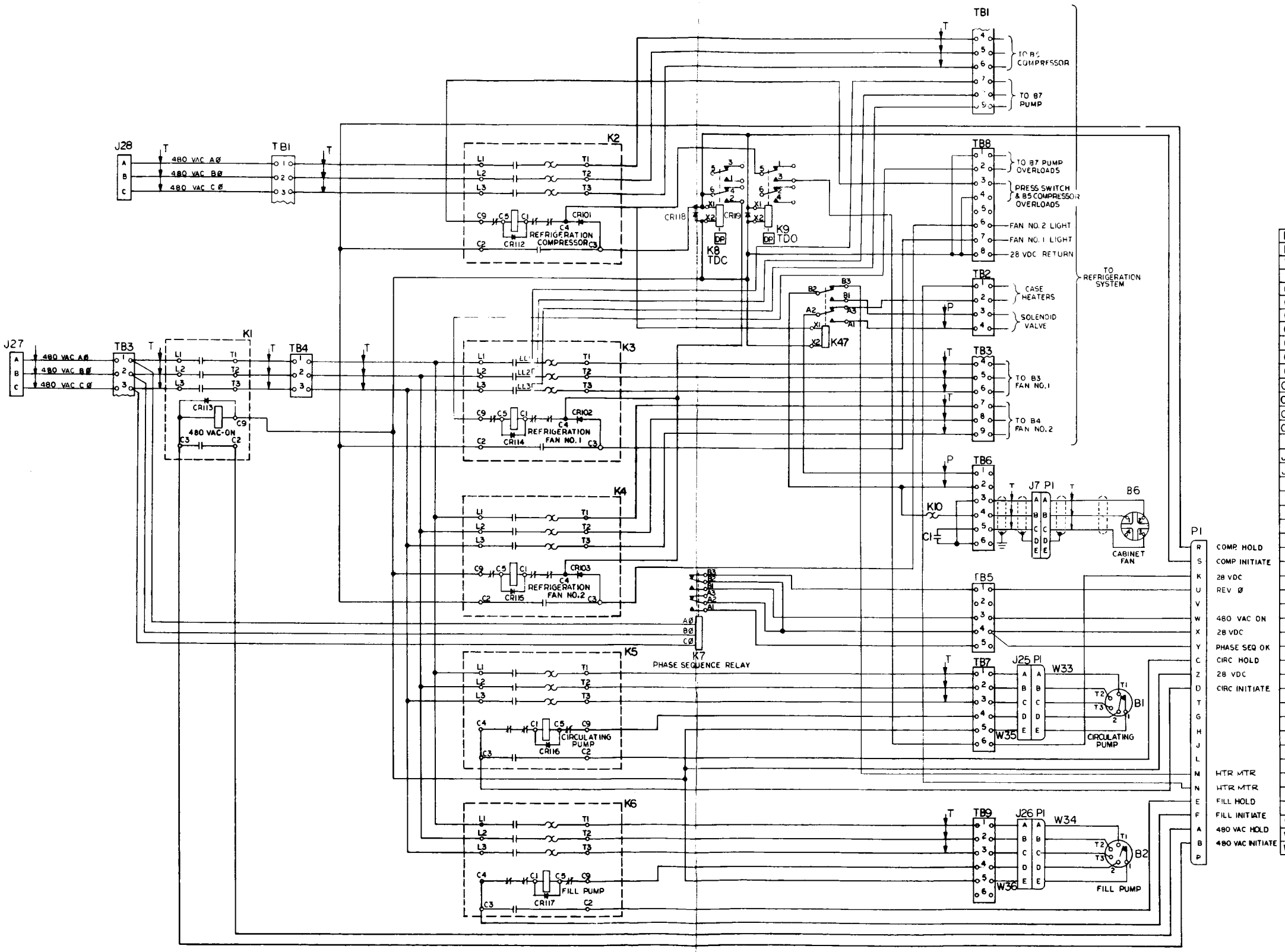

B1	847276-1	PUMP
B2	847275-1	PUMP
B6	115 VAC 60 ~ 1 Ø	FAN
CR101	IN5201	DIODE
CR102	IN1218	
CR103	IN1218	
CR112	IN1341	
CR113		
CR114		
CR115		
CR116		
CR117	IN1341	DIODE
CR118	IN649	DIODE
CR119	IN649	DIODE
C1	25 MFD 200 VAC	CAP.
J27	MS3106A-20-19S	CONNECTOR
J28	MS3106A-28-6S	CONNECTOR
K1	28VDC CONTROL 480 VAC 3Ø POWER	CONTACTOR
K2		
K3		
K4		
K5		
K6		
K7		
K8		
K9		
K10	28 VDC CONTROL 480 VAC 3Ø POWER	CONTACTOR
K47	MS25273-D1	RELAY
P1	23 PIN	CONNECTOR
TB1	9 TERMINAL	TERMINAL BOARD
TB2	4	
TB3	9	
TB4	3	
TB5	5	
TB6	6	
TB7	6	
TB8	8	
TB9	6 TERMINAL	TERMINAL BOARD
W33	845237-1	CABLE ASSEMBLY
W34	845238-1	CABLE ASSEMBLY
W35	845240-1	CABLE ASSEMBLY
W36	845241-1	CABLE ASSEMBLY

Figure B-25. Relay Panel Electrical Schematic

Fold-Out #1

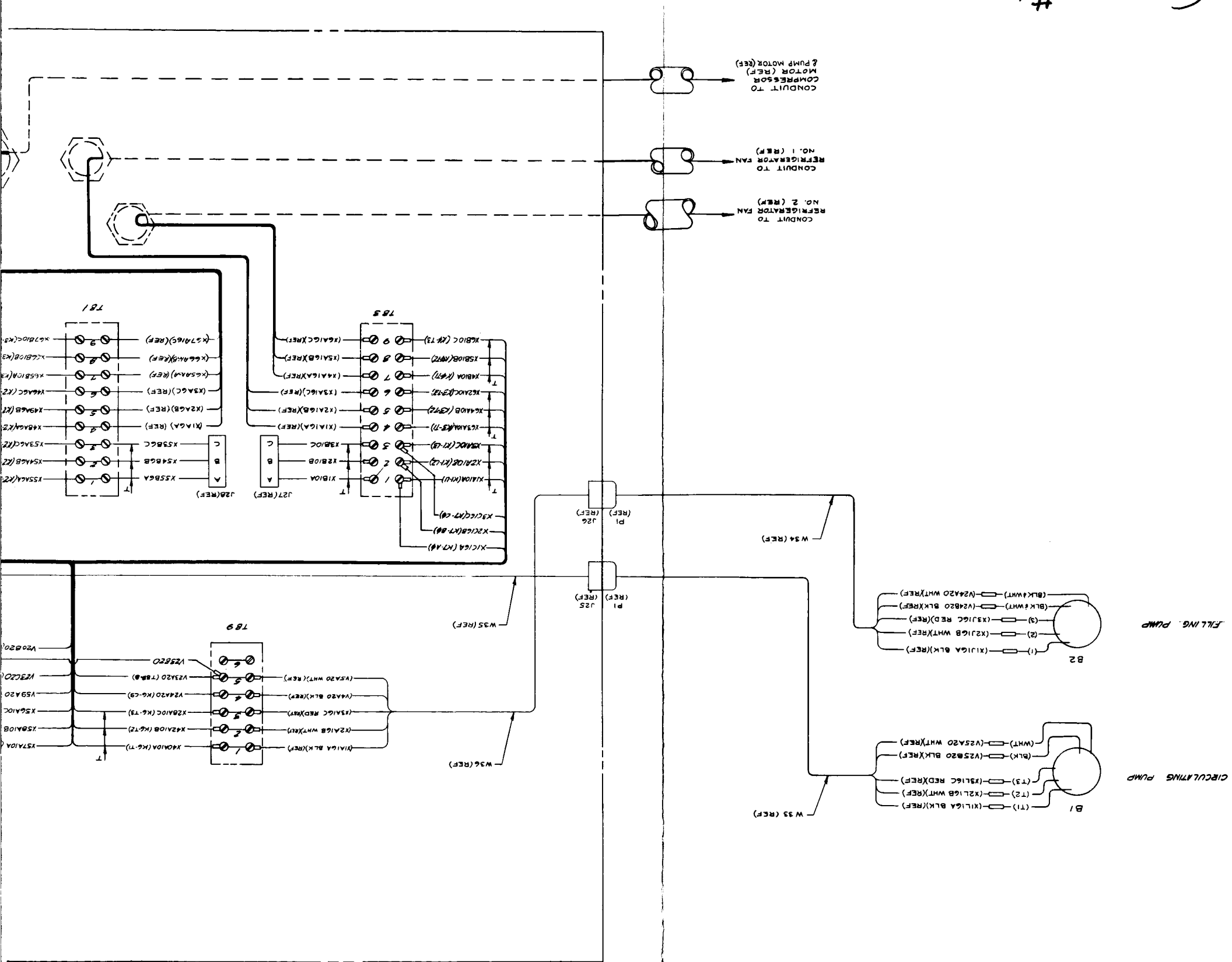
CONDUIT TO COMPRESSOR MOTOR (REF) & PUMP MOTOR (REF)
CONDUIT TO REFRIGERATOR FAN NO. 1 (REF)
CONDUIT TO REFRIGERATOR FAN NO. 2 (REF)
CIRCULATING PUMP
B1
FILLING PUMP
B2
W33 (REF)
W34 (REF)
W35 (REF)
W36 (REF)
P1 (REF)
J25 (REF)
J26 (REF)
J27 (REF)
J28 (REF)
TB1
TB3
TB9

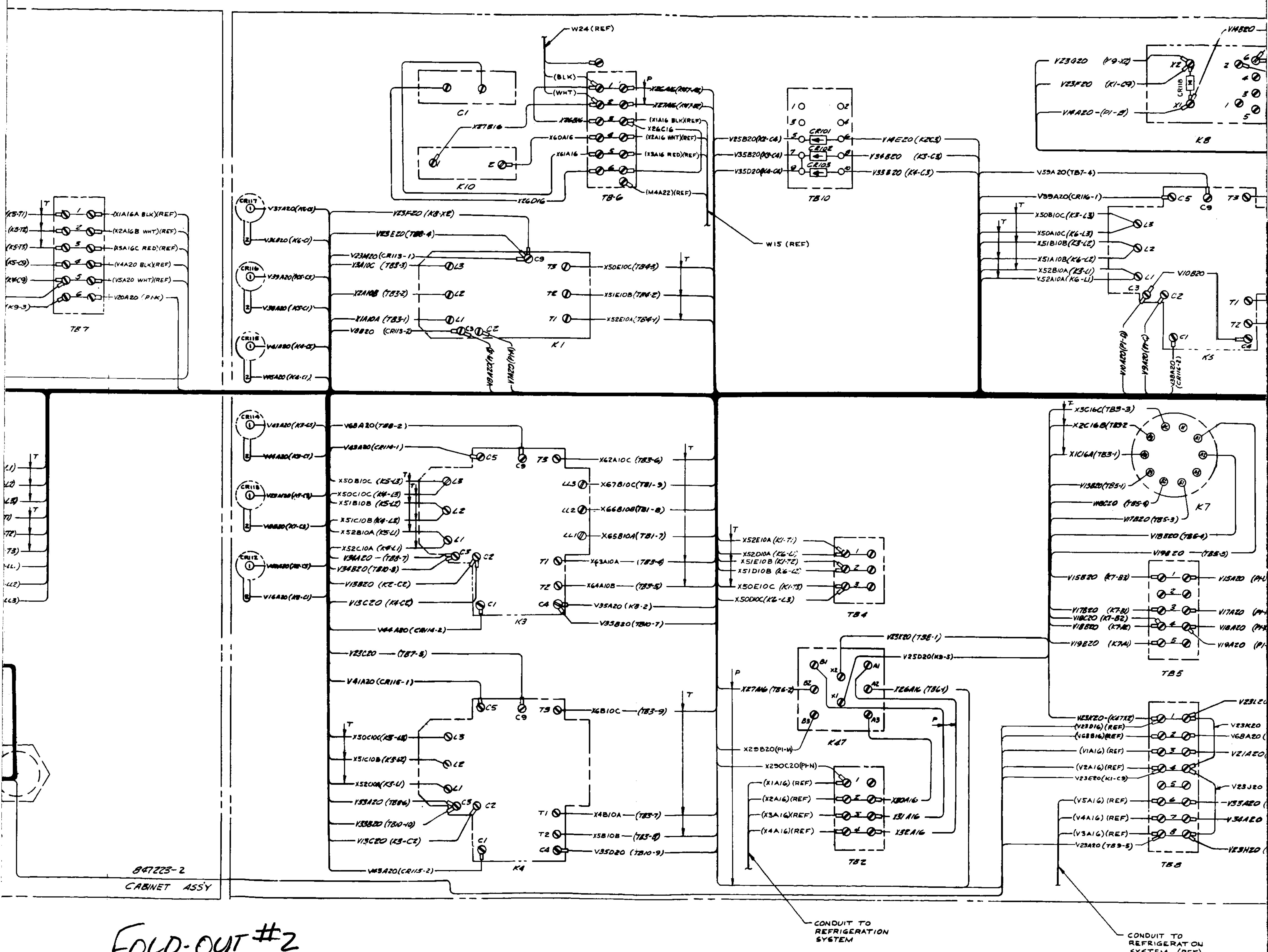
W24 (REF)
W15 (REF)
C1
K10
TB6
TB10
CR101
CR102
CR103
K8
CR118
TB7
CR117
CR116
CR115
CR114
CR113
CR112
K1
K3
K4
K5
K7
TB4
TB5
K47
TB2
TB8
847223-2
CABINET ASSY
CONDUIT TO REFRIGERATION SYSTEM
CONDUIT TO REFRIGERATION SYSTEM (REF)

FOLD-OUT #2

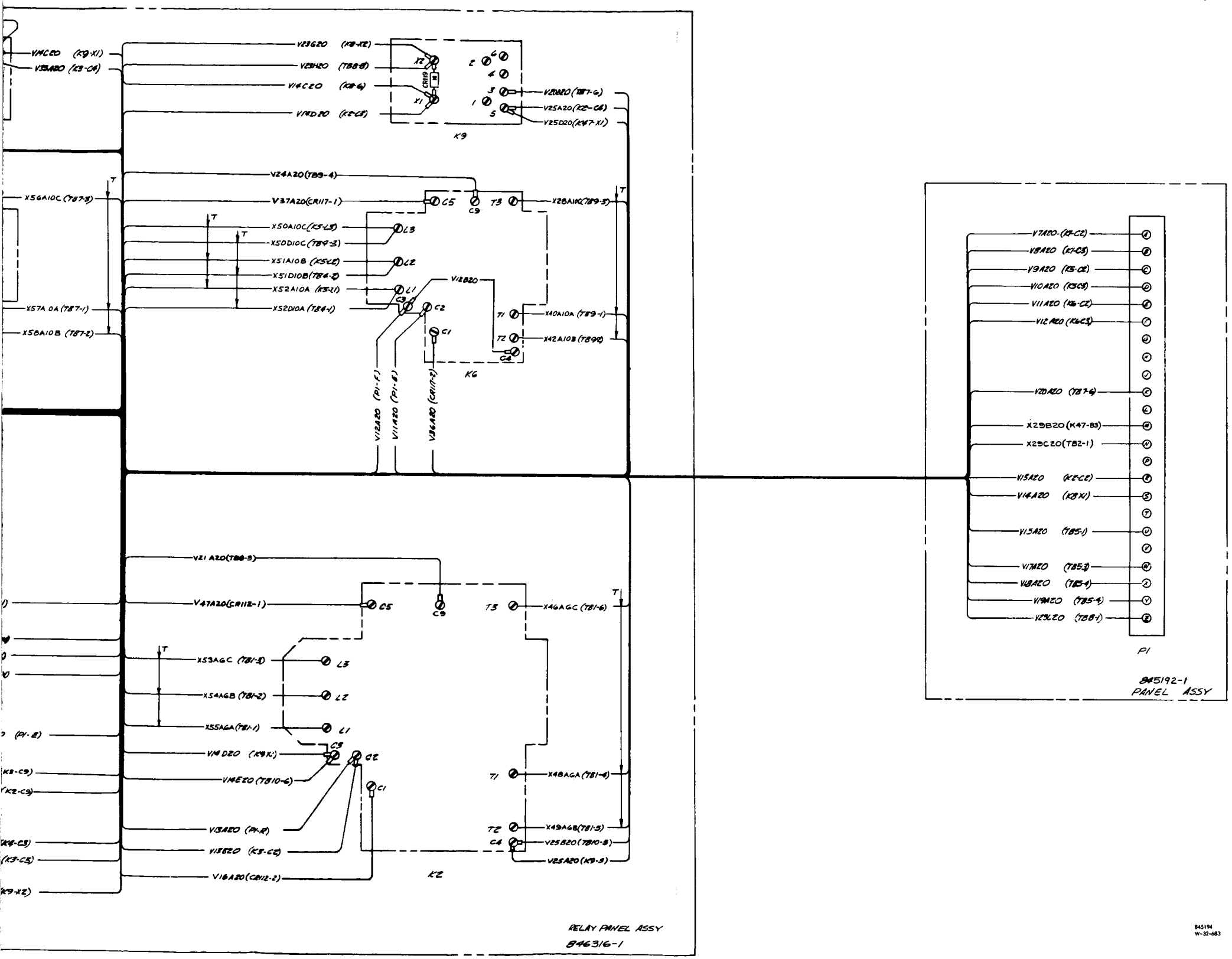

FOLD-OUT #3

Figure B-26. Refrigeration Unit Wiring Diagram

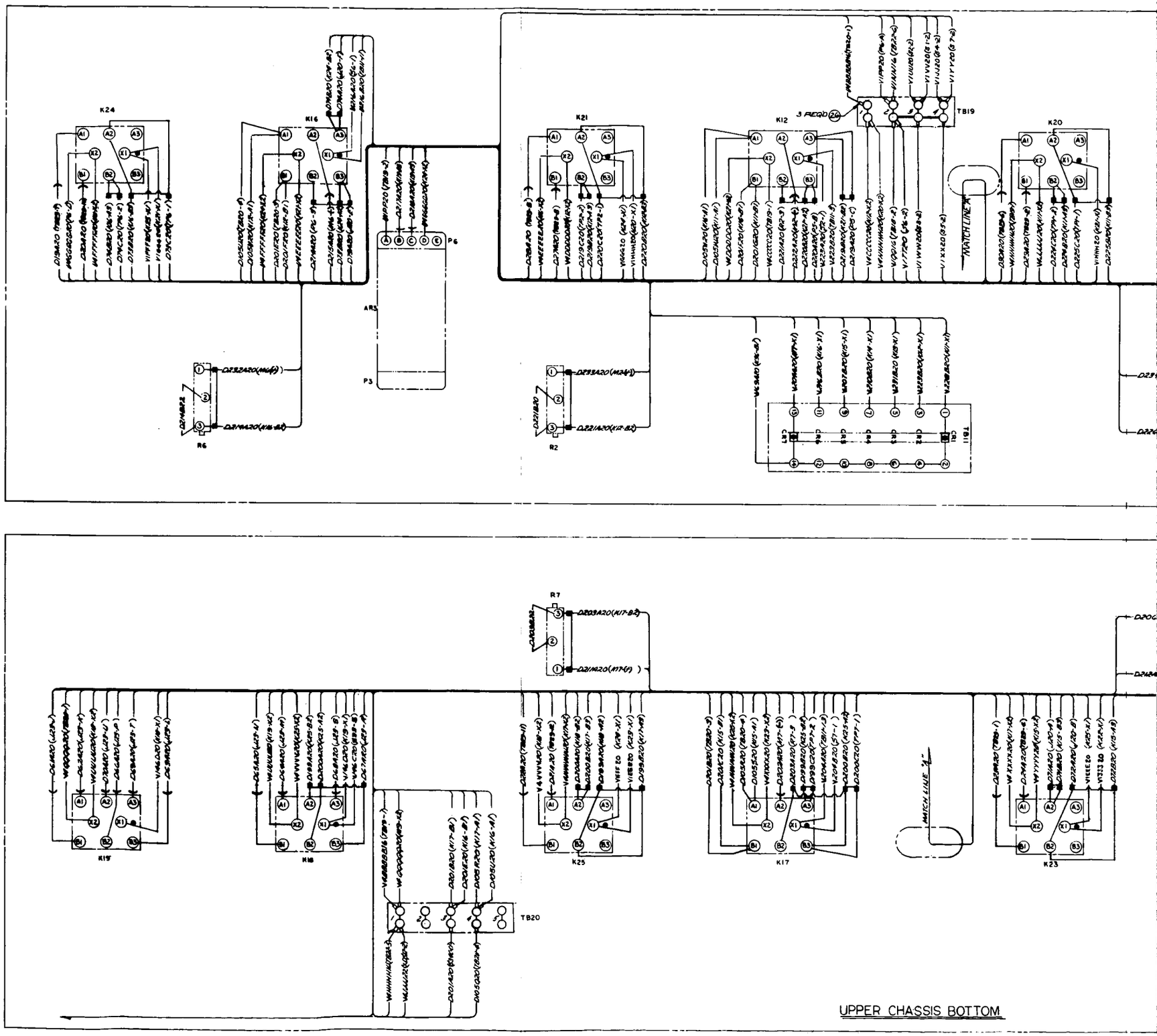
K24
K16
K21
K12
K20
TB19
3 REQD
MATCH LINE "A"
P6
AR5
P3
R6
R2
TB11
R7
K19
K18
K25
K17
K23
TB20
MATCH LINE "A"
UPPER CHASSIS BOTTOM

FOLD-OUT #1

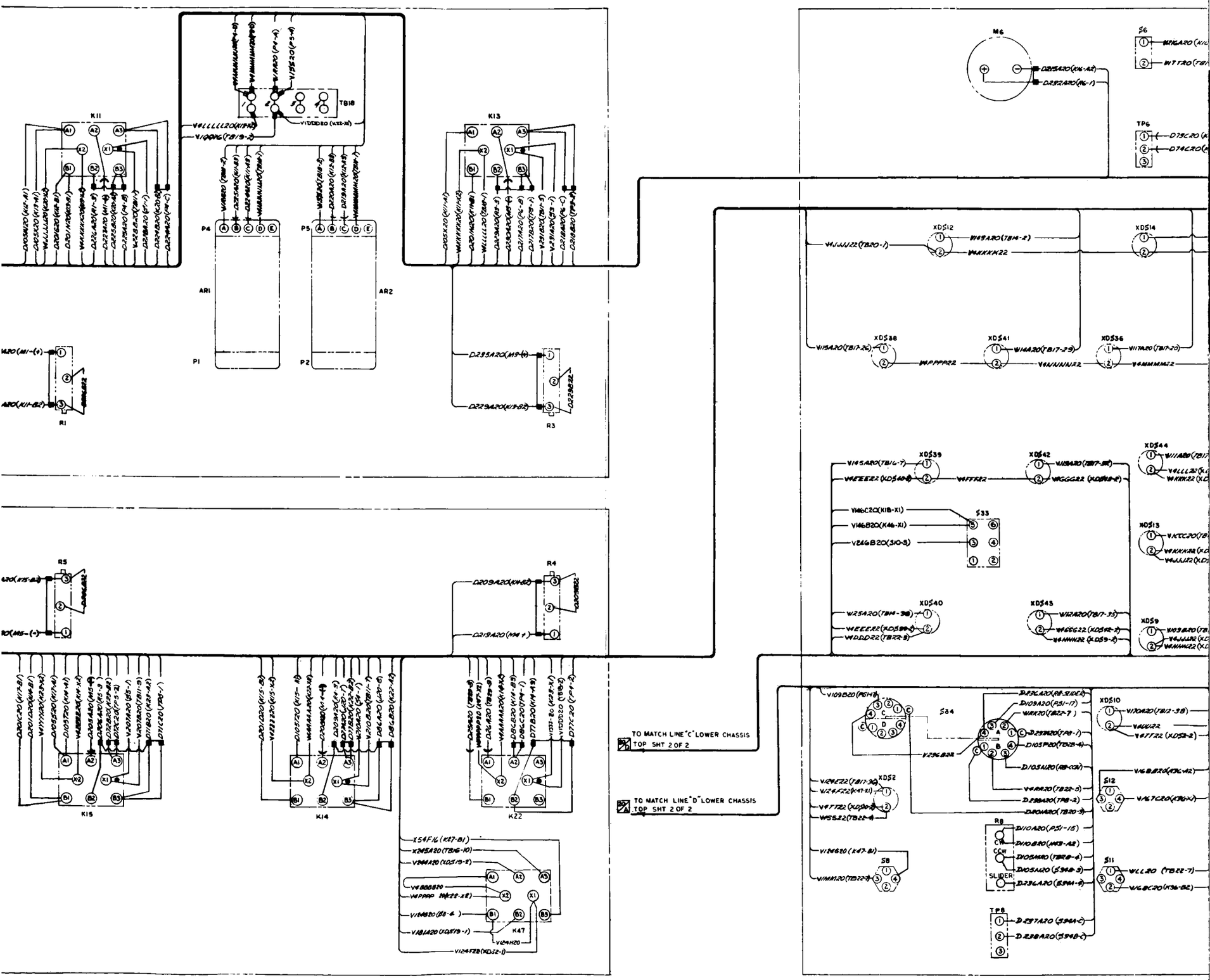
K11
K13
TB18
P4
P5
AR1
AR2
P1
P2
R1
R3
R5
R4
K15
K14
K22
K47
M6
S6
TP6
XDS12
XDS14
XDS38
XDS41
XDS36
XDS39
XDS42
XDS44
S33
XDS13
XDS40
XDS43
XDS9
S84
XDS10
XDS52
S12
R8
S8
S11
TP8
TO MATCH LINE "C" LOWER CHASSIS TOP SHT 2 OF 2
TO MATCH LINE "D" LOWER CHASSIS TOP SHT 2 OF 2

FOLD-OUT #2

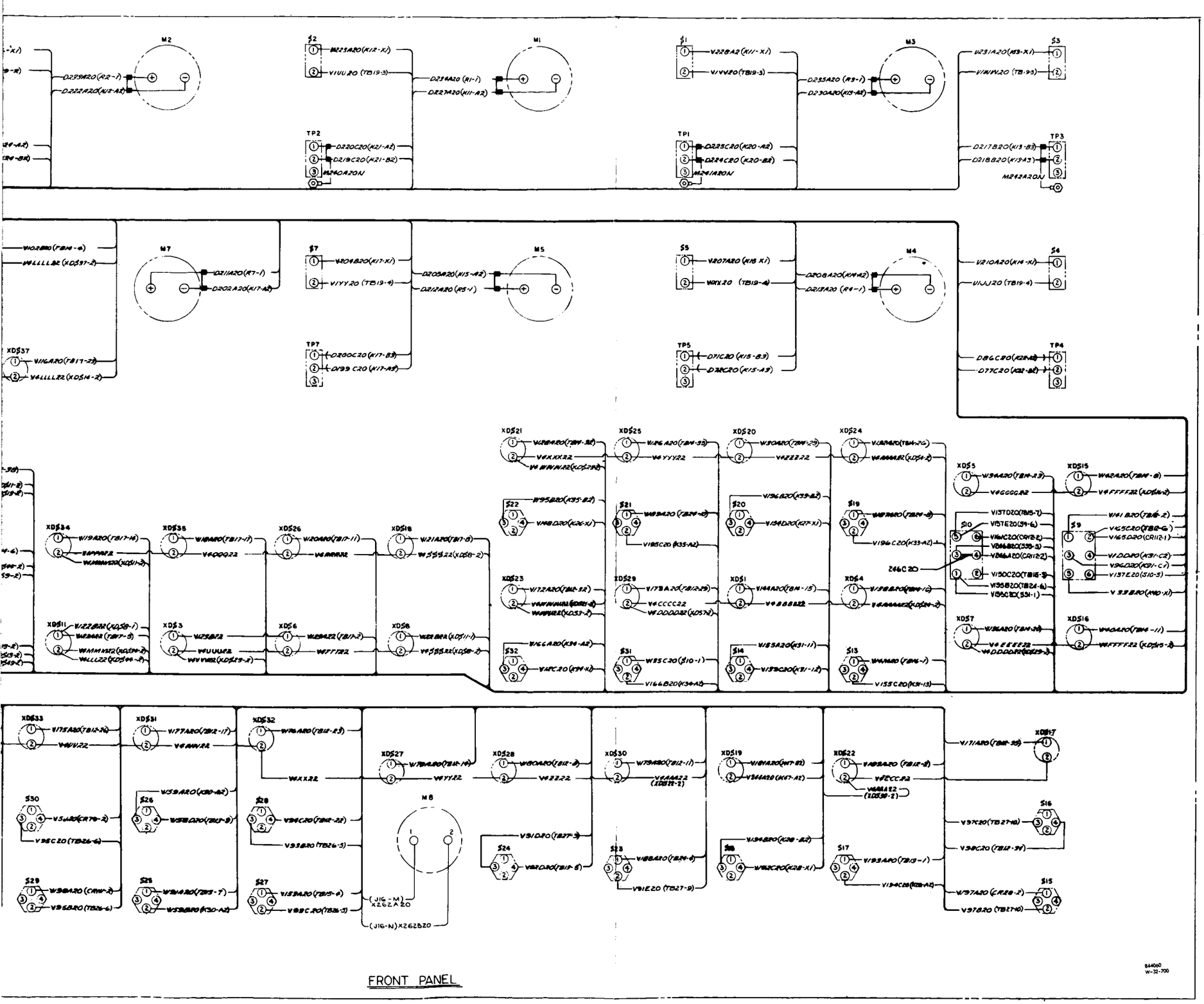

FOLD-OUT #3

Figure B-27. Control and Instrumentation Panel Wiring Diagram (Sheet 1 of 2)

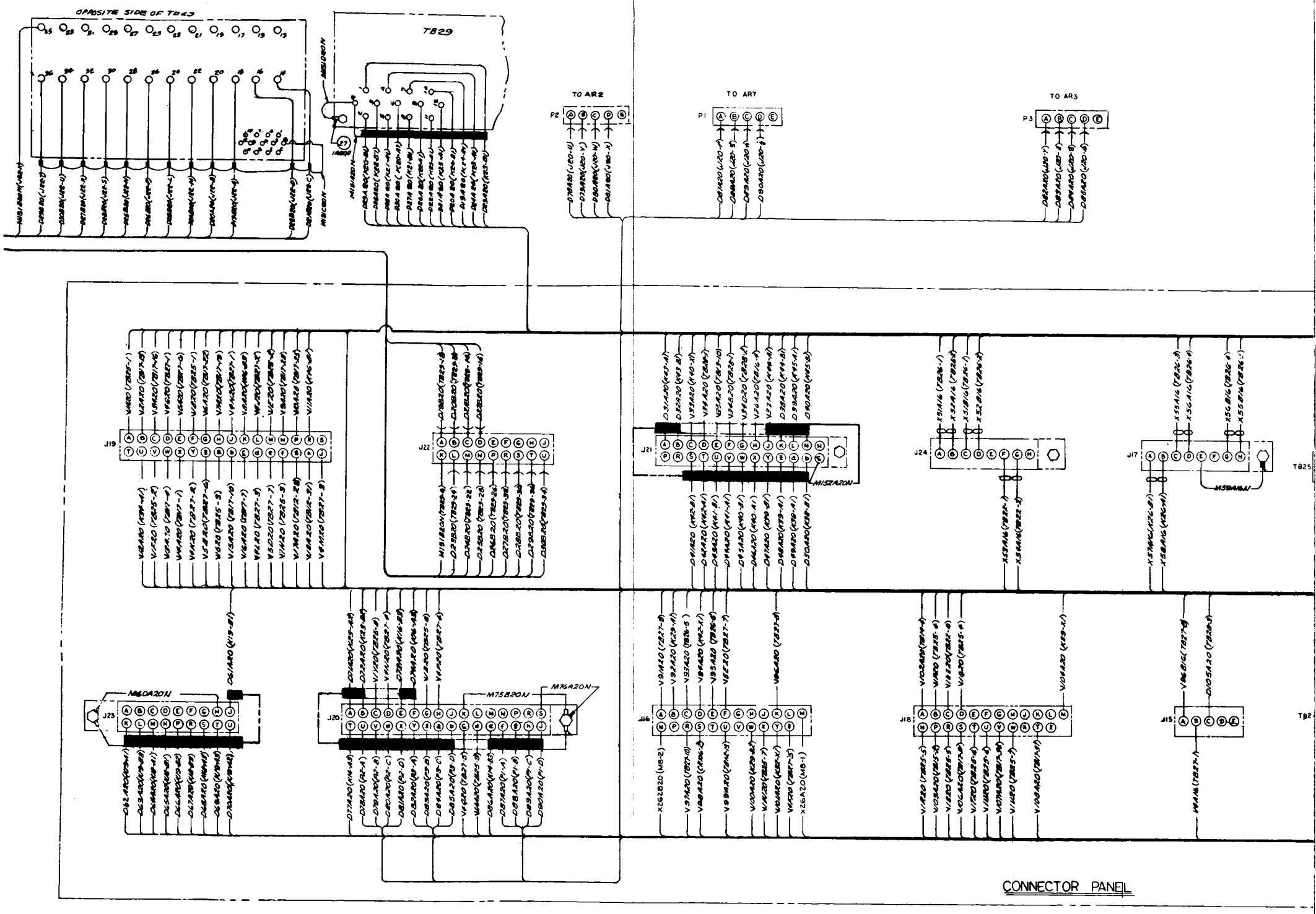
OPPOSITE SIDE OF TB43
TB29
TO AR2
TO AR7
TO AR3
P2
P1
P3
J19
J22
J21
J24
J17
TB25
J23
J20
J16
J18
J15
TB2
M60A20N
M75B20N
M76A20N
CONNECTOR PANEL

FOLD-OUT #1

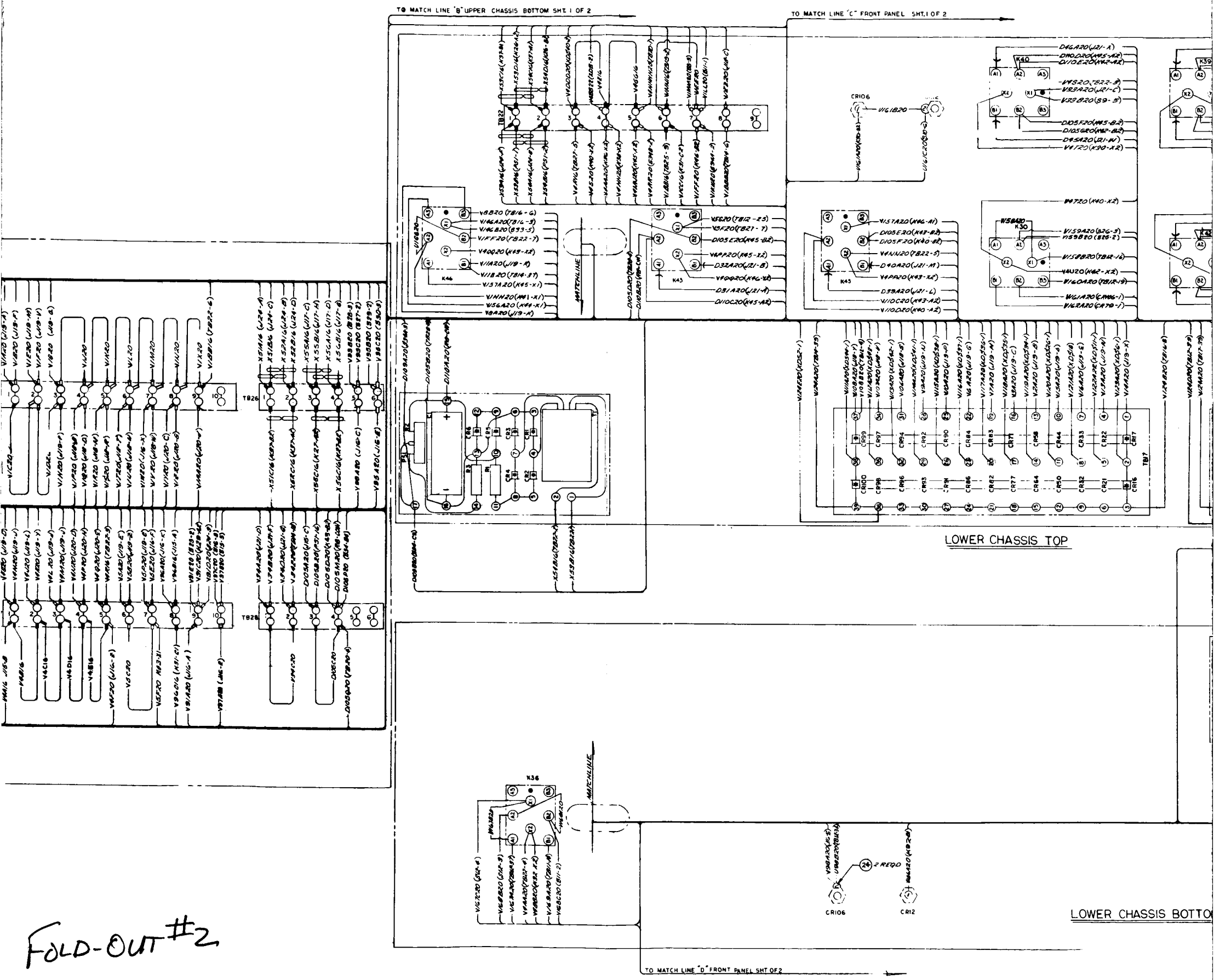
TO MATCH LINE "B" UPPER CHASSIS BOTTOM SHT. 1 OF 2
TO MATCH LINE "C" FRONT PANEL SHT. 1 OF 2
LOWER CHASSIS TOP
LOWER CHASSIS BOTTO
TO MATCH LINE "D" FRONT PANEL SHT OF 2
MATCH LINE
2 REQD

FOLD-OUT #2

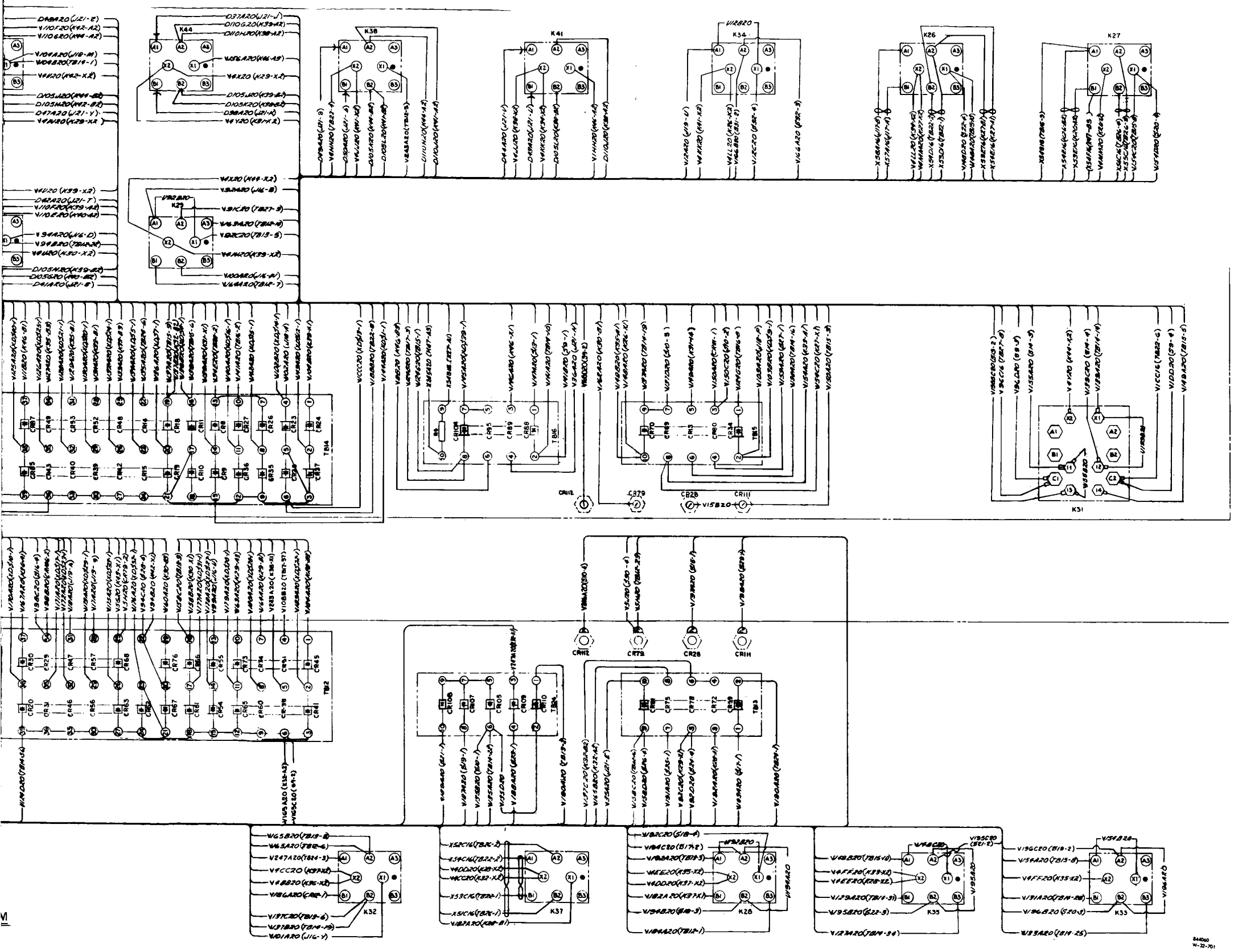

FOLD-OUT #3

Figure B-27. Control and Instrumentation Panel Wiring Diagram (Sheet 2 of 2)

Difference Data Sheet

ENVIRONMENTAL CONTROL SYSTEM WATER-GLYCOL SERVICE SET REFRIGERATION UNIT	Model No. S14-121 AiResearch Part No. 847250-10-1; NR Part No. G14-854025-121, NR Serial No. 012 (ME 901-0319-0001)

THE INSTRUCTIONS CONTAINED IN PRECEDING SECTIONS OF THIS PUBLICATION APPLY EXCEPT FOR THE DIFFERENCES LISTED IN THIS DATA SHEET.

CHARACTERISTIC DIFFERENCES. Same as Refrigeration Unit Model No. S14-121, AiResearch Part No. 847250-3-1, NR Part No. G14-854025-301, NR Serial No. 008 (ME 901-0319-0001) except for minor component and circuit wiring differences.

DESCRIPTION. Same as Refrigeration Unit Model No. S14-121, AiResearch Part No. 847250-3-1, NR Part No. G14-854025-301, NR Serial No. 008 (ME 901-0319-0001).

FUNCTIONAL TEST. Same as Refrigeration Unit Model No. S14-121, AiResearch Part No. 847250-3-1, NR Part No. G14-854025-301, NR Serial No. 008 (ME 901-0319-0001).

TROUBLE ANALYSIS. Same as Refrigeration Unit Model No. S14-121, AiResearch Part No. 847250-3-1, NR Part No. G14-854025-301, NR Serial No. 008 (ME 901-0319-0001).

REMOVAL AND INSTALLATION. Same as Refrigeration Unit Model No. S14-121, AiResearch Part No. 847250-3-1, NR Part No. G14-854025-301, NR Serial No. 008 (ME 901-0319-0001).

REPAIR INSTRUCTIONS. Same as Refrigeration Unit Model No. S14-121, AiResearch Part No. 847250-3-1, NR Part No. G14-854025-301, NR Serial No. 008 (ME 901-0319-0001).

CALIBRATION AND ADJUSTMENT. Same as Refrigeration Unit Model No. S14-121, AiResearch Part No. 847250-3-1, NR Part No. G14-854025-301, NR Serial No. 008 (ME 901-0319-0001) except in table 6-1, the part number for flow transducer MT4, MT8 is 847268-1 instead of 847268-19, pressure transducer MT2 part number is 847342-11 instead of 847342-119, pressure transducer MT5 part number is 847342-10 instead of 847342-109, and flow switch S1, S5 part number is 847285-2 instead of 847285-29.

PERIODIC INSPECTION AND SERVICE. Same as Refrigeration Unit Model No. S14-121, AiResearch Part No. 847250-3-1, NR Part No. G14-854025-301, NR Serial No. 008 (ME 901-0319-0001).

DIAGRAMS. Same as Refrigeration Unit Model No. S14-121, AiResearch Part No. 847250-3-1, NR Part No. G14-854025-301, NR Serial No. 008 (ME 901-0319-0001) except use figure B-28 in place of figure 8-6 and figure B-29 (sheets 1 and 2) in place of figure 8-7 (sheets 1 and 2).

Difference Data Sheet

APPENDIX A. Same as Refrigeration Unit Model No. S14-121, AiResearch Part No. 847250-3-1, NR Part No. G14-854025-301, NR Serial No. 008 (ME 901-0319-0001) except use the following source data information instead of that listed in Appendix A.

Drawing No.	Change Letter	Title
844064	N/C	Control and Instrumentation Panel Electrical (Schematic) Instruction Plate
844065	N/C	Control and Instrumentation Panel Assembly
845179	N/C	Relay Panel Electrical (Schematic) Instruction Plate
845566	E	Refrigeration Unit Plumbing Installation
845572	N/C	Circuit Breaker Panel Electrical (Schematic) Instruction Plate
845573	N/C	Refrigeration System Electrical (Schematic) Instruction Plate
845585	A	Interconnecting Cable (Schematic) Diagram
845587	N/C	Refrigeration System Fluid (Schematic) Instruction Plate
845893	N/C	Refrigeration Unit Assembly
846357	D	Connector Panel Assembly
847204	M	Fluid Control Module Assembly
847208	F	Refrigeration Unit Fluid (Schematic) Instruction Plate
847218	A	Input Power Electrical (Schematic) Instruction Plate
847233	F	Circuit Breaker Panel Assembly
847250	H	Refrigeration Unit (Outline Drawing)
847254	B	Universal Controller
847255	D	Frequency Converter and Calibration Oscillator Meter Set
847259	J	Input Power Panel Assembly

Difference Data Sheet

Specification No. /Date	Revision	Title
SS-1378-R/30 Aug 1965	Rev. 1	Acceptance Test Procedure

Engineering Orders		
M 522667 M 526065 M 527374 M 530757 M 531525 M 531692 M 562074 M 562092	M 624404 M 624409 M 624537 M 624555 M 624565 M 624575 M 631390 M 631392	M 631397 M 631400 M 632789 M 633889 M 652577 M 659637

FOLD-OUT #1

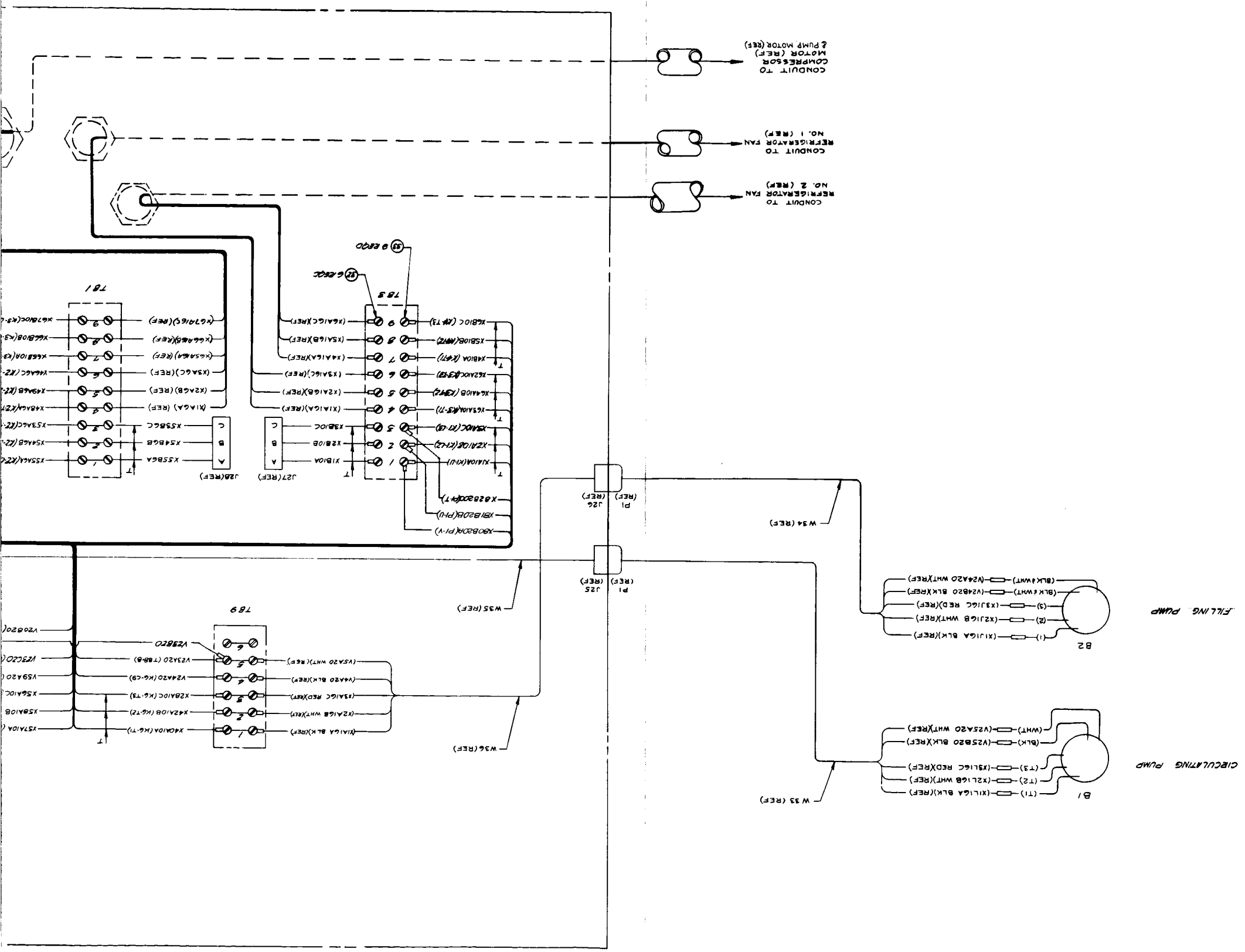
CONDUIT TO COMPRESSOR MOTOR (REF) & PUMP MOTOR (REF)
CONDUIT TO REFRIGERATOR FAN NO. 1 (REF)
CONDUIT TO REFRIGERATOR FAN NO. 2 (REF)
FILLING PUMP
CIRCULATING PUMP
B2
B1
W34 (REF)
W33 (REF)
W35 (REF)
W36 (REF)
P1 (REF)
J25 (REF)
J26 (REF)
J27 (REF)
J28 (REF)
TB1
TB3
TB9

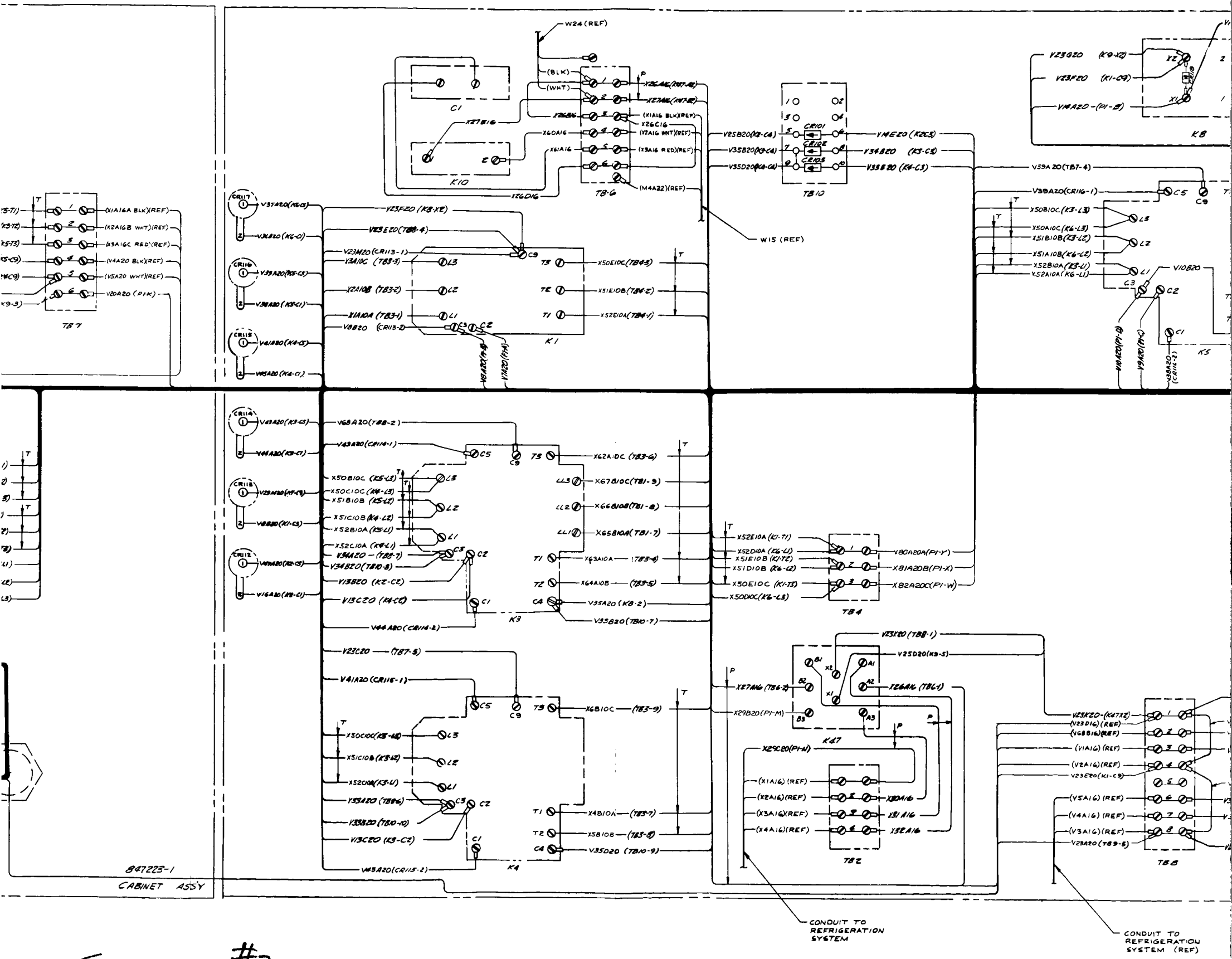

W24 (REF)
C1
K10
TB-6
TB10
K8
TB7
K1
K5
K3
K4
K47
TB4
TB2
TB8
W15 (REF)
847223-1
CABINET ASSY
CONDUIT TO REFRIGERATION SYSTEM
CONDUIT TO REFRIGERATION SYSTEM (REF)

FOLD-OUT #2

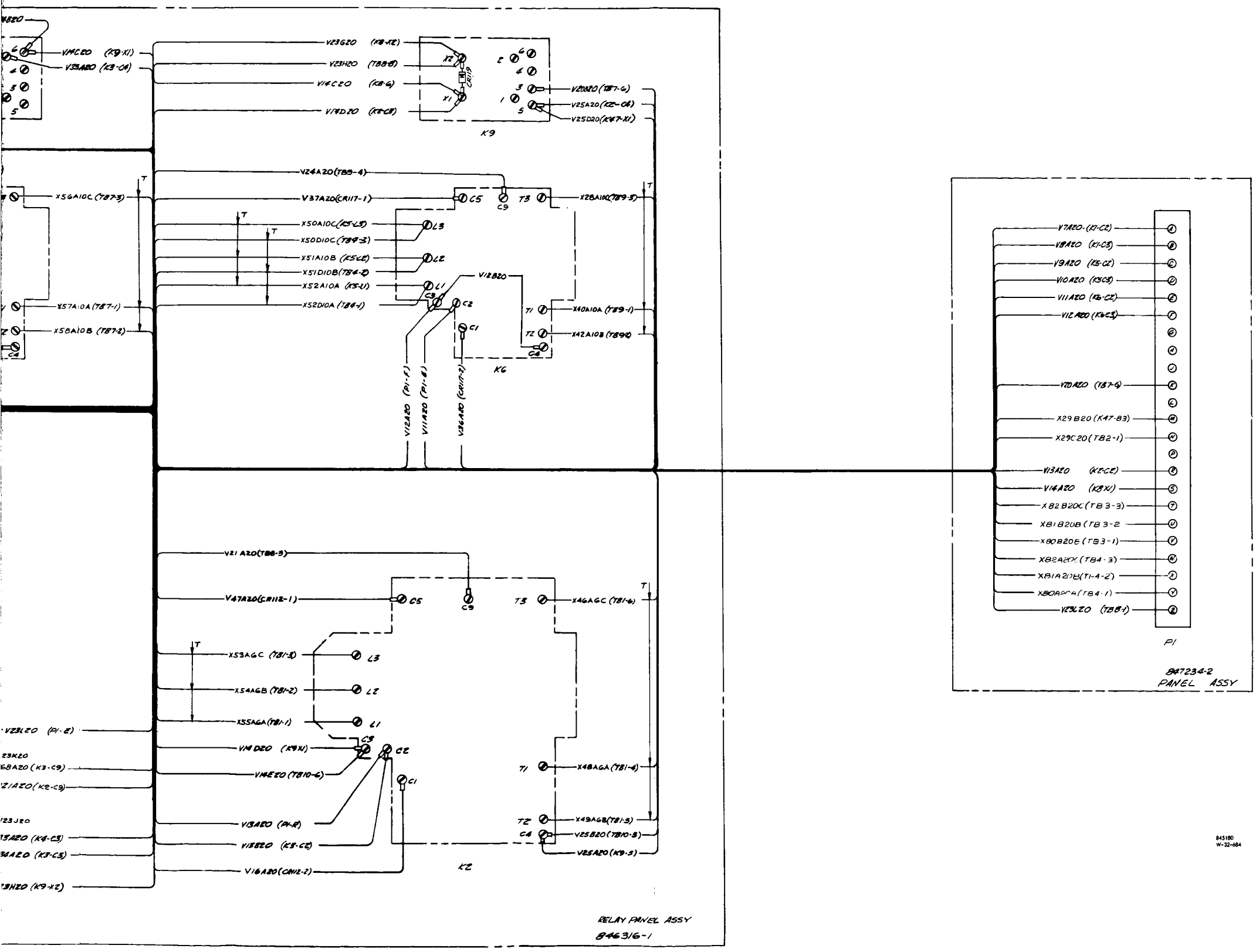

FOLD-OUT #3

Figure B-28. Refrigeration Unit Wiring Diagram

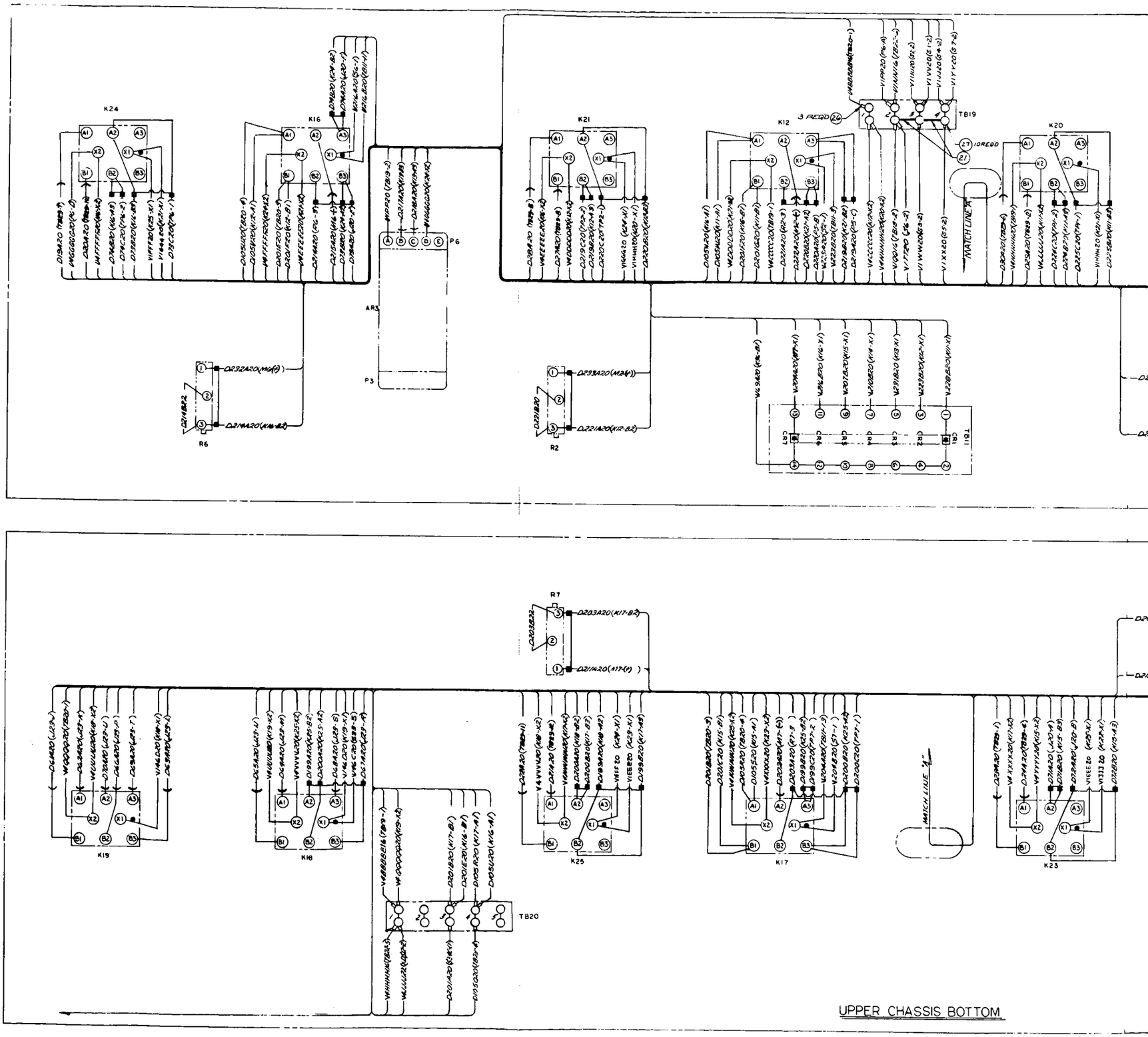
K24
K16
K21
K12
K20
TB19
3 REQD
10 REQD
MATCH LINE "A"
P6
P3
R6
R2
TB11
R7
K19
K18
K25
K17
K23
TB20
MATCH LINE "A"
UPPER CHASSIS BOTTOM

FOLD-OUT #1

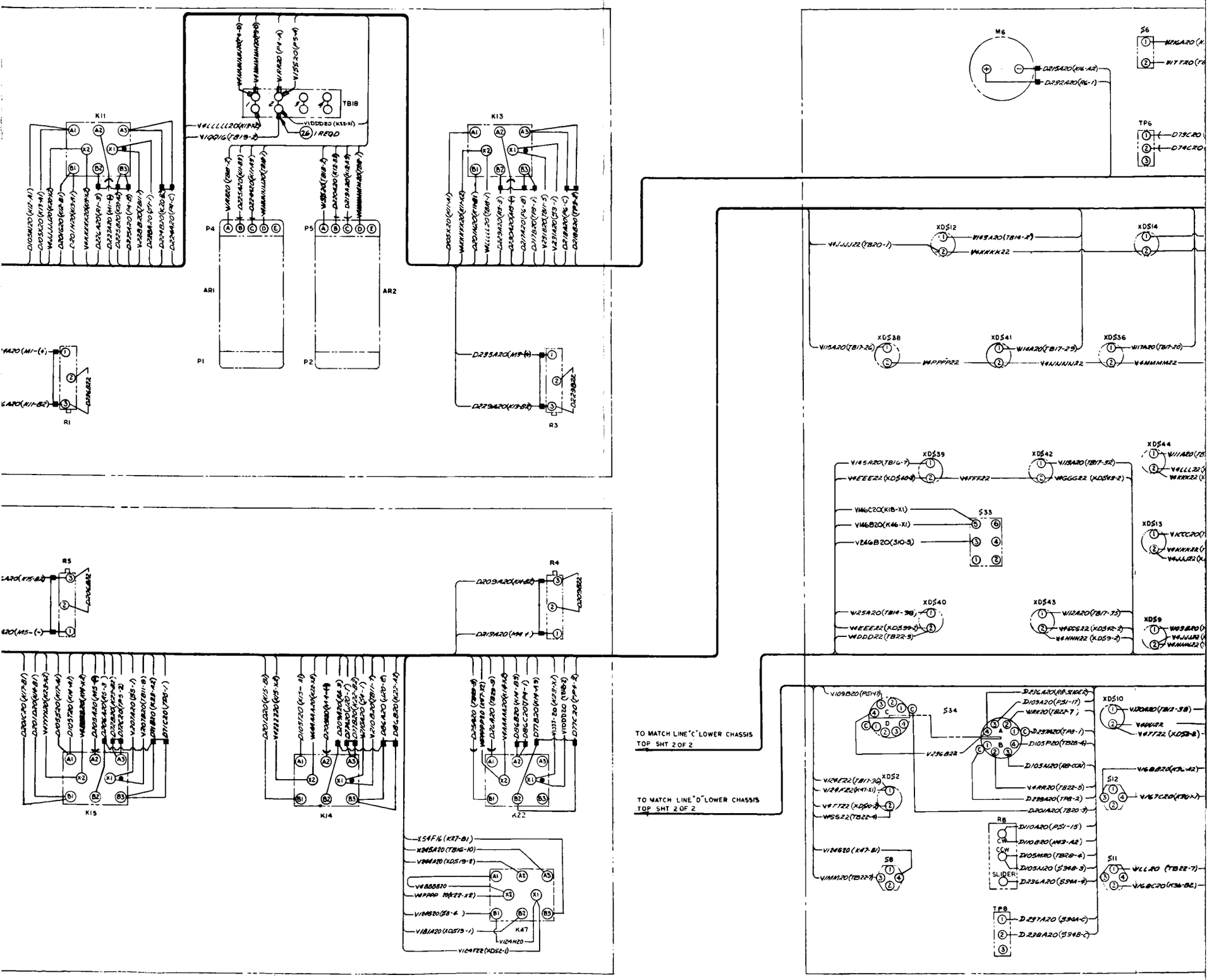
K11
K13
TB18
P4
P5
AR1
AR2
P1
P2
R1
R3
R5
R4
K15
K14
K22
K47
M6
S6
TP6
XDS12
XDS14
XDS38
XDS41
XDS36
XDS39
XDS42
XDS44
XDS13
XDS9
XDS40
XDS43
S33
S34
XDS10
S12
XDS2
S8
R8
S11
TP8
TO MATCH LINE "C" LOWER CHASSIS TOP SHT 2 OF 2
TO MATCH LINE "D" LOWER CHASSIS TOP SHT 2 OF 2

FOLD-OUT #2

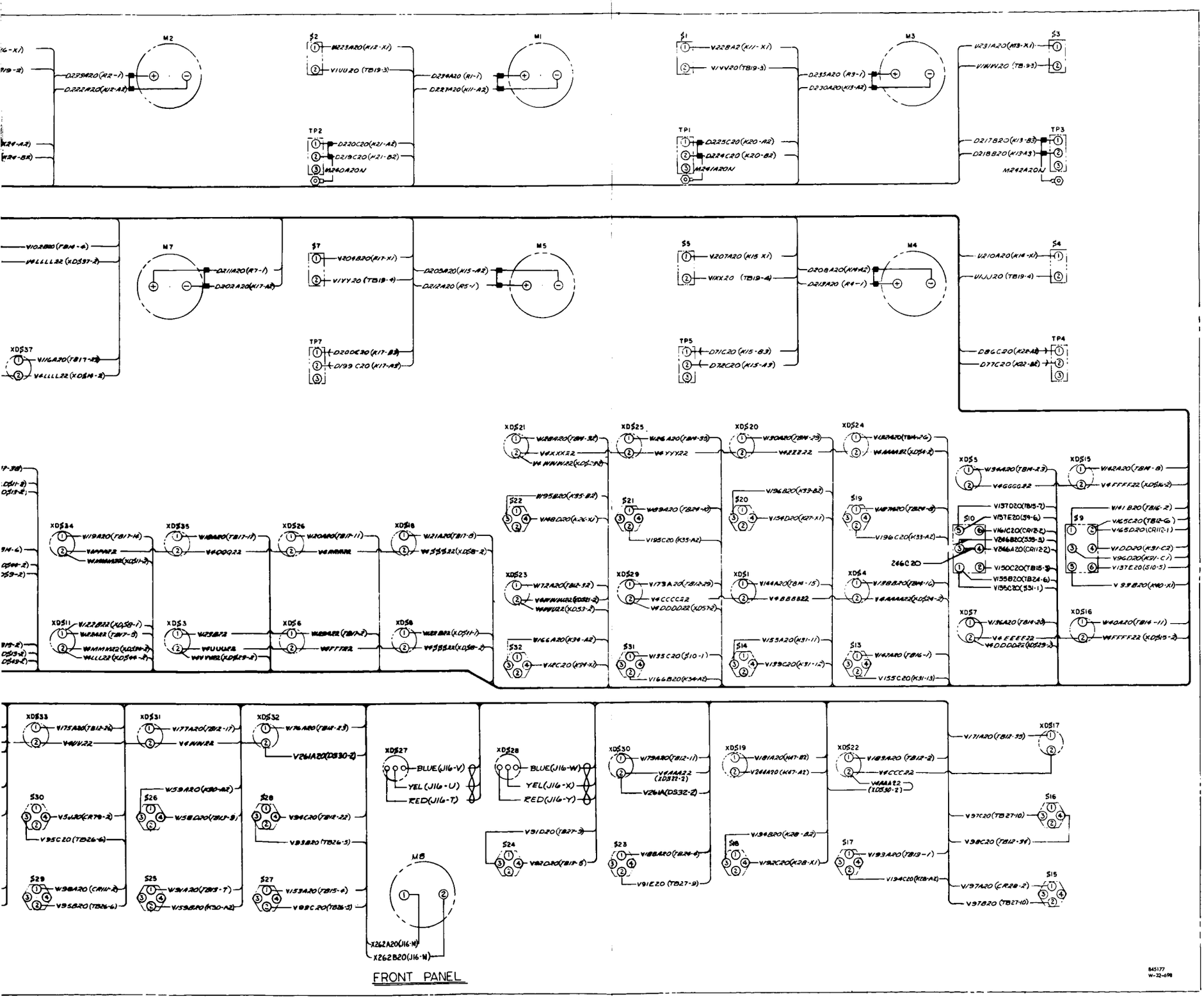

FOLD-OUT #3

Figure B-29. Control and Instrumentation Panel Wiring Diagram (Sheet 1 of 2)

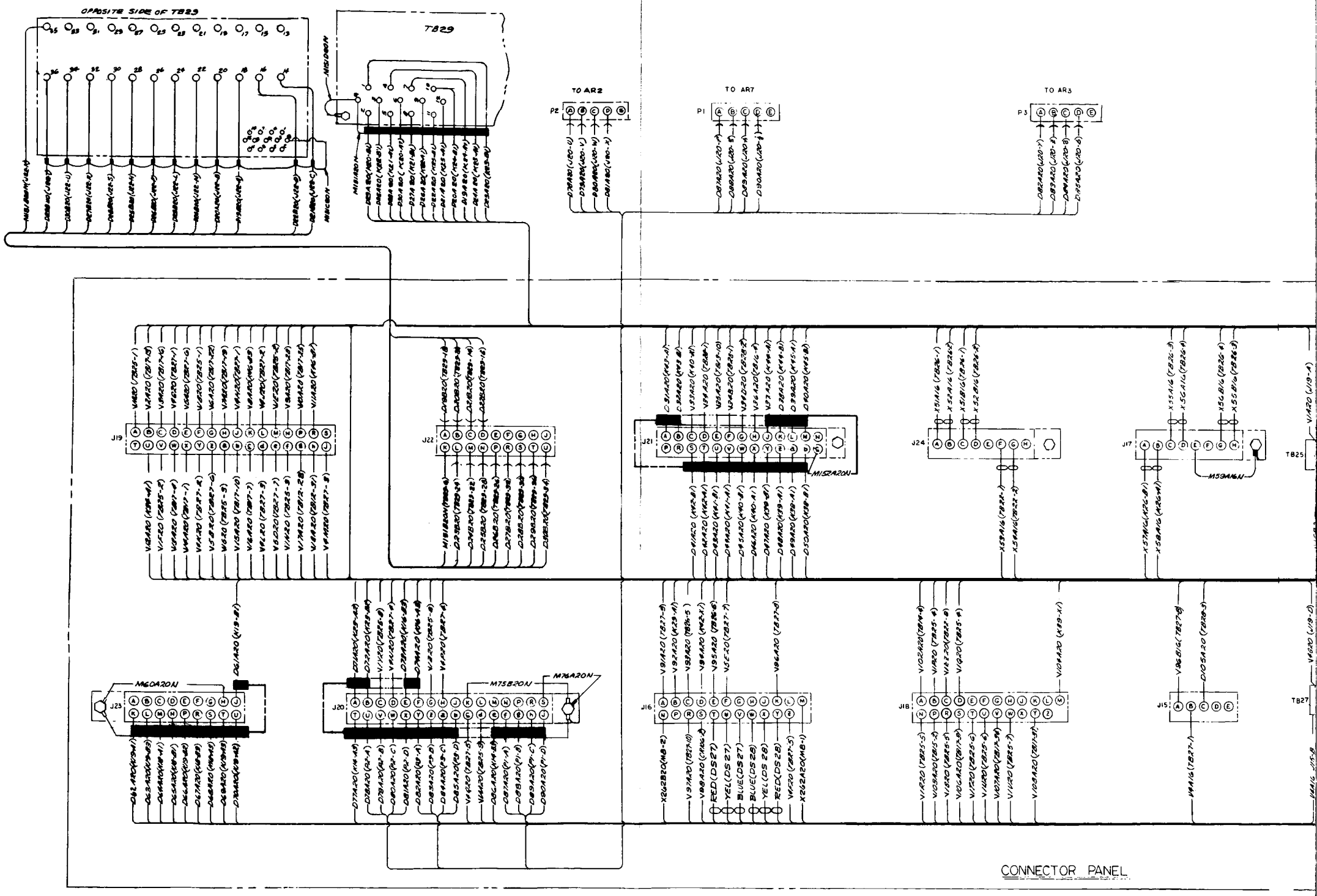
OPPOSITE SIDE OF TB29
TB29
TO AR2
TO AR7
TO AR3
P2
P1
P3
J19
J22
J21
J24
J17
TB25
J23
J20
J16
J18
J15
TB27
M160A20N
M75B20N
M76A20N
M152A20N
M59A16N
CONNECTOR PANEL

FOLD-OUT #1

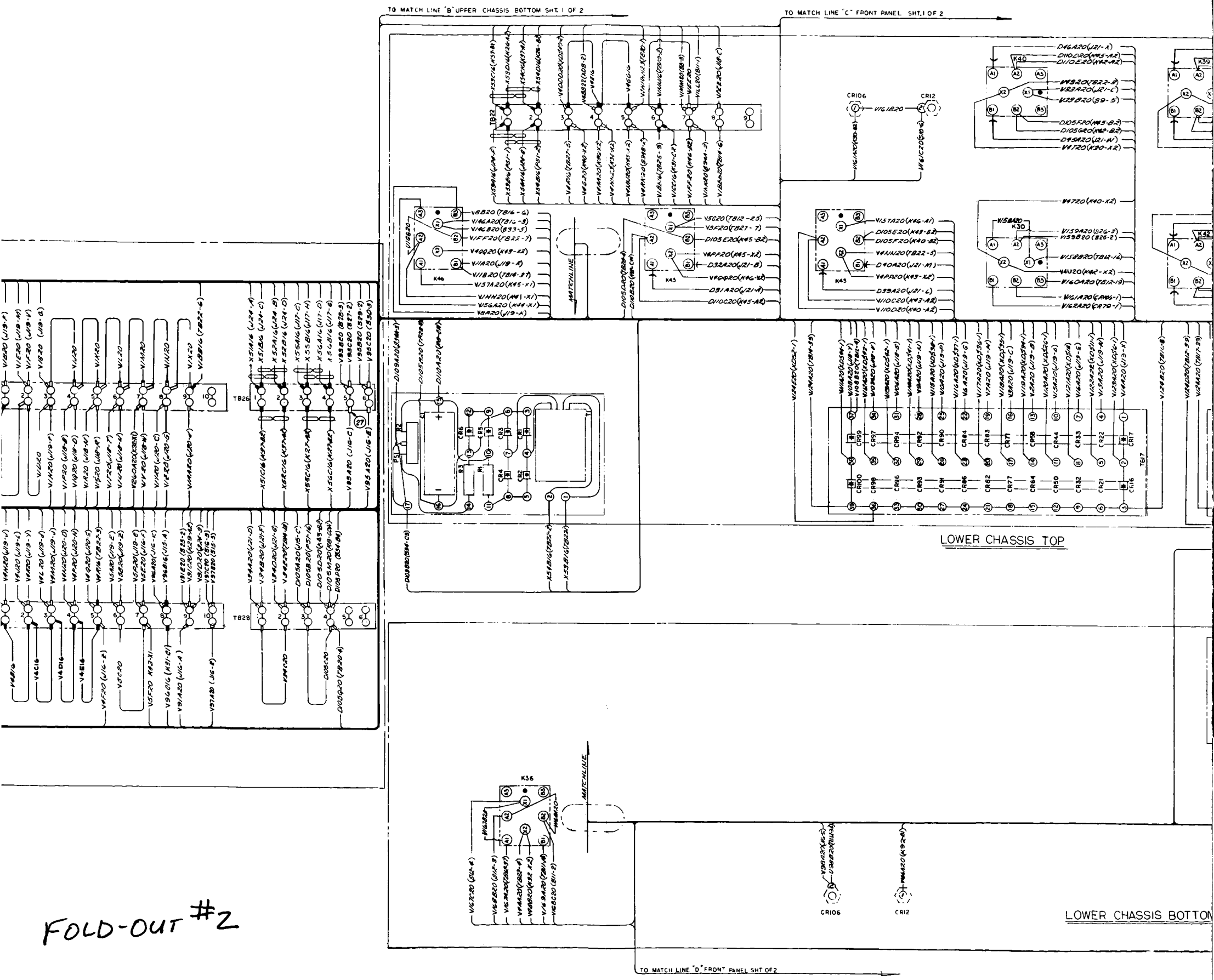
TO MATCH LINE "B" UPPER CHASSIS BOTTOM SHT. 1 OF 2
TO MATCH LINE "C" FRONT PANEL SHT. 1 OF 2
LOWER CHASSIS TOP
LOWER CHASSIS BOTTOM
TO MATCH LINE "D" FRONT PANEL SHT OF 2
MATCHLINE
TB22
TB26
TB28
TB17
K46
K43
K45
K40
K30
K39
K42
K36
CR106
CR12

FOLD-OUT #2

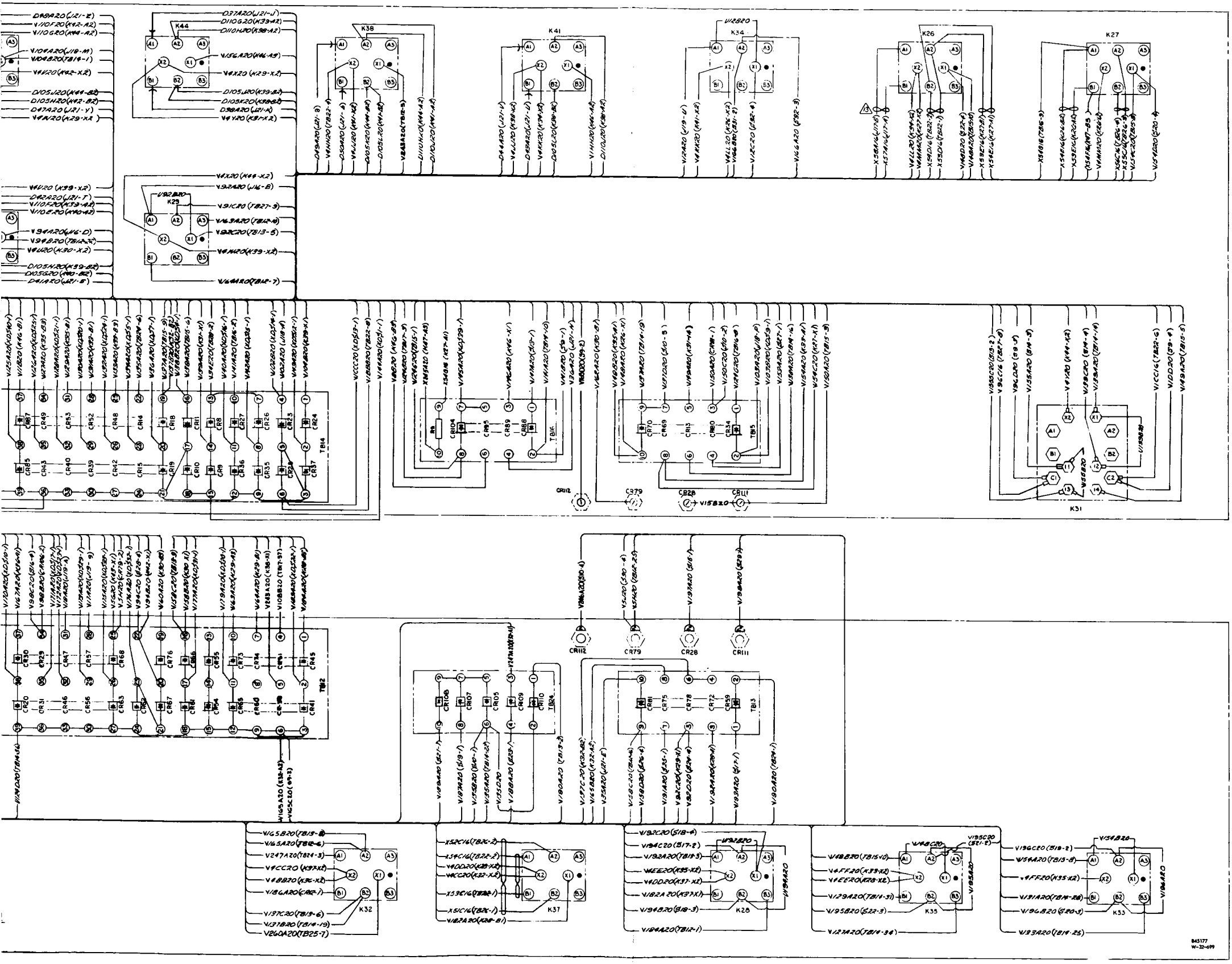

FOLD-OUT #3

Figure B-29. Control and Instrumentation Panel Wiring Diagram (Sheet 2 of 2)

Difference Data Sheet

ENVIRONMENTAL CONTROL SYSTEM WATER-GLYCOL SERVICE SET REFRIGERATION UNIT	Model No. S14-121 AiResearch Part No. 847250-11-1; NR Part No. G14-854025-131, NR Serial No. 017 (ME 901-0319-0001)

THE INSTRUCTIONS CONTAINED IN PRECEDING SECTIONS OF THIS PUBLICATION APPLY EXCEPT FOR THE DIFFERENCES LISTED IN THIS DATA SHEET.

CHARACTERISTIC DIFFERENCES. Same as Refrigeration Unit Model No. S14-121 AiResearch Part No. 847250-3-1, NR Part No. G14-854025-301, NR Serial No. 008 (ME 901-0319-0001) except this unit has a different refrigeration system.

DESCRIPTION. Same as Refrigeration Unit Model No. S14-121, AiResearch Part No. 847250-3-1, NR Part No. G14-854025-301, NR Serial No. 008 (ME 901-0319-0001) except in paragraph 1-54 use Operation and Instruction Manual for Refrigeration System (Part No. 4631, Auto Control Labs, Los Angeles, California) in place of Operation and Instruction Manual for Refrigeration System (Part No. 4512, Auto Control Labs, Los Angeles, California).

FUNCTIONAL TEST. Same as Refrigeration Unit Model No. S14-121, AiResearch Part No. 847250-3-1, NR Part No. G14-854025-301, NR Serial No. 008 (ME 901-0319-0001).

TROUBLE ANALYSIS. Same as Refrigeration Unit Model No. S14-121, AiResearch Part No. 847250-3-1, NR Part No. G14-854025-301, NR Serial No. 008 (ME 901-0319-0001).

REMOVAL AND INSTALLATION. Same as Refrigeration Unit Model No. S14-121, AiResearch Part No. 847250-3-1, NR Part No. G14-854025-301, NR Serial No. 008 (ME 901-0319-0001).

REPAIR INSTRUCTIONS. Same as Refrigeration Unit Model No. S14-121, AiResearch Part No. 847250-3-1, NR Part No. G14-854025-301, NR Serial No. 008 (ME 901-0319-0001).

CALIBRATION AND ADJUSTMENT. Same as Refrigeration Unit Model No. S14-121, AiResearch Part No. 847250-3-1, NR Part No. G14-854025-301, NR Serial No. 008 (ME 901-0319-0001) except in table 6-1, the part number for flow transducer MT4, MT8 is 847268-1 instead of 847268-19, pressure transducer MT13 part number is 847342-39 instead of 847342-3, pressure transducer MT2 part number is 847342-11 instead of 847342-119, pressure transducer MT5 part number is 847342-10 instead of 847342-109, flow switch S1, S5 part number is 847285-2 instead of 847285-29, and the refrigeration system part number is 847247-3 (ACL 4631) with a range of -20 $\pm$3 to +50°F.

PERIODIC INSPECTION AND SERVICE. Same as Refrigeration Unit Model No. S14-121, AiResearch Part No. 847250-3-1, NR Part No. G14-854025-301, NR Serial No. 008 (ME 901-0319-0001).

DIAGRAMS. Same as Refrigeration Unit Model No. S14-121, AiResearch Part No. 847250-3-1, NR Part No. G14-854025-301, NR Serial No. 008 (ME 901-0319-0001) except use figure B-30 in place of figure 8-5, figure B-31 in place of

figure 8-6, figure B-32 (sheets 1 and 2) in place of figure 8-7 (sheets 1 and 2), figure B-33 in place of figure 8-10 and figure B-34 in place of figure 8-11.

APPENDIX A. Same as Refrigeration Unit Model No. S14-121, AiResearch Part No. 847250-3-1, NR Part No. G14-854025-301, NR Serial No. 008 (ME 901-0319-0001) except use the following source data information instead of that listed in Appendix A.

Drawing No.	Change Letter	Title
844063	N/C	Relay Panel Electrical (Schematic) Instruction Plate
844064	N/C	Control and Instrumentation Panel Electrical (Schematic) Instruction Plate
844065	N/C	Control and Instrumentation Panel Assembly
845566	E	Refrigeration Unit Plumbing Installation
845572	N/C	Circuit Breaker Panel Electrical (Schematic) Instruction Plate
845585	A	Interconnecting Cable (Schematic) Diagram
845751	N/C	Refrigeration System Electrical (Schematic) Instruction Plate
845753	N/C	Refrigeration System Fluid (Schematic) Instruction Plate
845894	N/C	Refrigeration Unit Assembly
846357	D	Connector Panel Assembly
847204	N	Fluid Control Module Assembly
847208	F	Refrigeration Unit Fluid (Schematic) Instruction Plate
847218	A	Input Power Electrical (Schematic) Instruction Plate
847233	F	Circuit Breaker Panel Assembly
847250	H	Refrigeration Unit (Outline Drawing)

Difference Data Sheet

Drawing No.	Change Letter	Title
847254	B	Universal Controller
847255	D	Frequency Converter and Calibration Oscillator Meter Set
847259	J	Input Power Panel Assembly

Specification No. /Date	Revision	Title
SS-1378-R/30 Aug 1965	Rev. 1	Acceptance Test Procedure

Engineering Orders		
M 342408 M 522667 M 562092 M 624555 M 624565	M 624575 M 631387 M 631388 M 631394 M 631395	M 633885 M 633895 M 652577 M 656100 M 659637

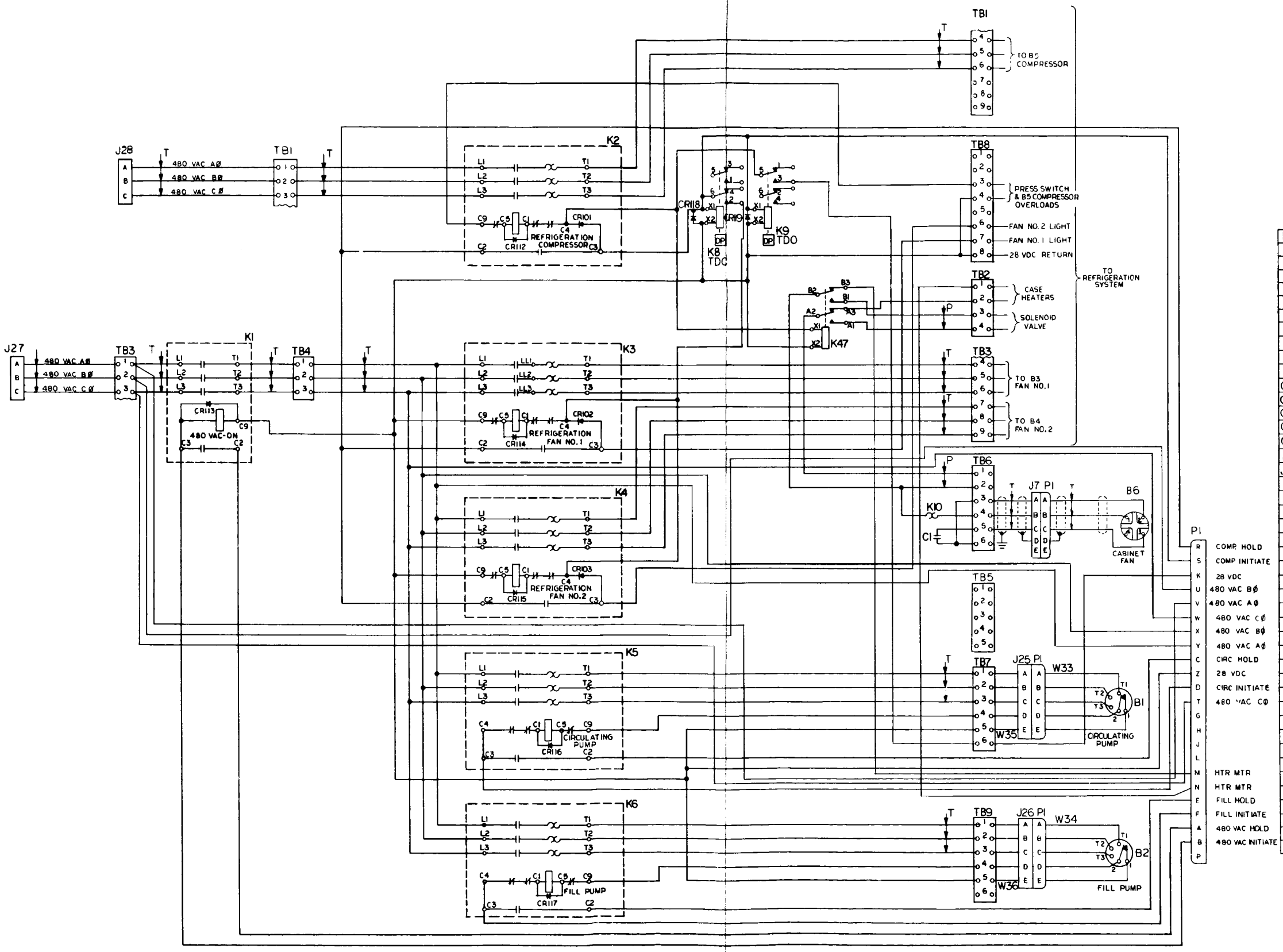

B1	847276-1	PUMP
B2	847275-1	PUMP
B6	115 VAC 60 ~ 1 Ø	FAN
CR101	IN5201	DIODE
CR102	IN1218	
CR103	IN1218	
CR112	IN1341	
CR113		
CR114		
CR115		
CR116		
CR117	IN1341	DIODE
CR118	IN649	DIODE
CR119	IN649	DIODE
C1	25 MFD 200 VAC	CAPACITOR
J27	MS3106A-20-19S	CONNECTOR
J28	MS3106A-28-6S	CONNECTOR
K1	28 VDC CONTROL 480 VAC 3Ø POWER	CONTACTOR
K2		
K3		
K4		
K5		
K6		
K8		
K9		
K10	28 VDC CONTROL 480 VAC 3Ø POWER	CONTACTOR
K47	MS25273-D1	RELAY
P1	23 PIN	CONNECTOR
TB1	9 TERMINAL	TERMINAL BOARD
TB2	4	
TB3	9	
TB4	3	
TB5	5	
TB6	6	
TB7	6	
TB8	8	
TB9	6 TERMINAL	TERMINAL BOARD
W33	845237-1	CABLE ASSEMBLY
W34	845238-1	CABLE ASSEMBLY
W35	845240-1	CABLE ASSEMBLY
W36	845241-1	CABLE ASSEMBLY

Figure B-30. Relay Panel Electrical Schematic

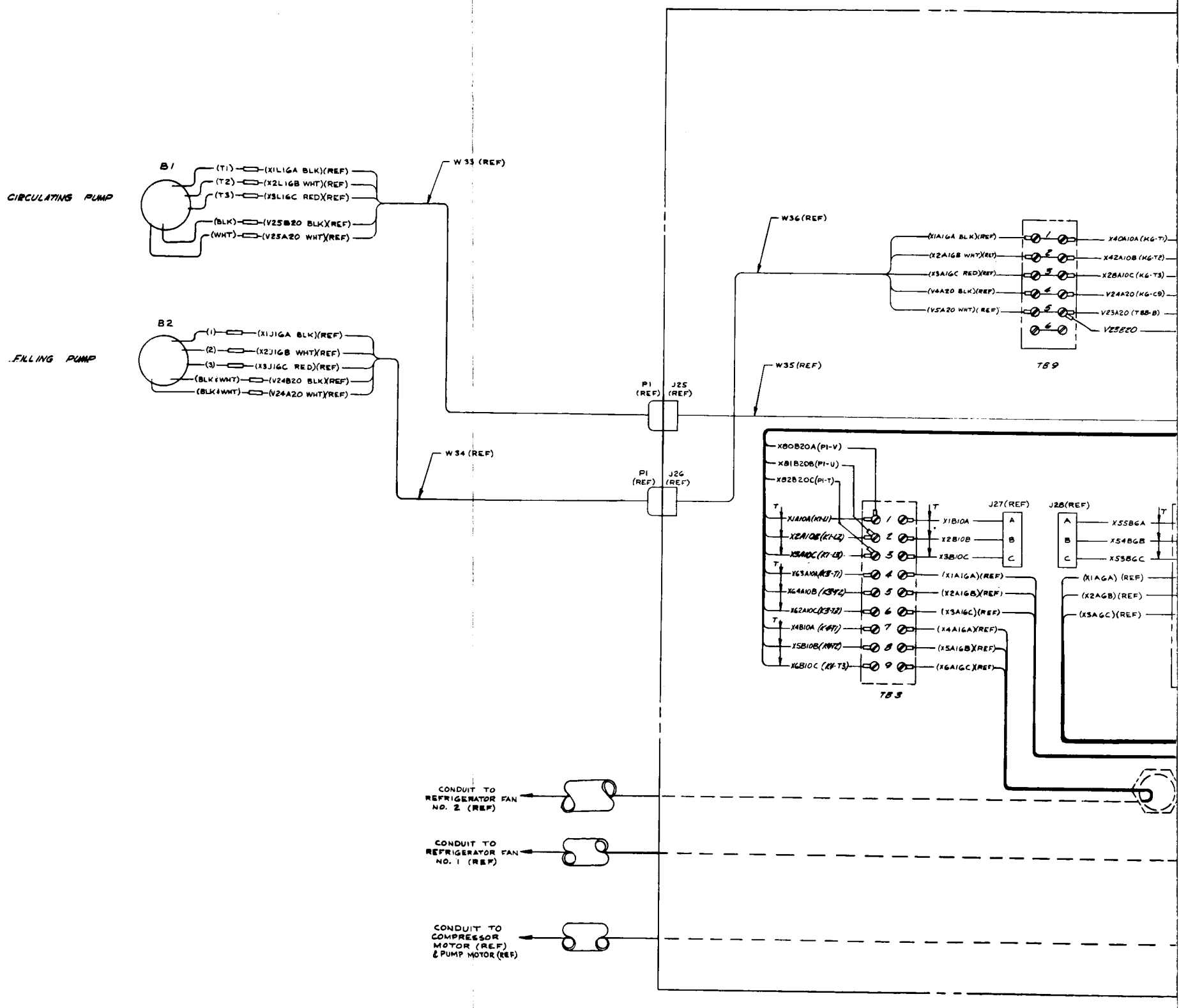
CIRCULATING PUMP
B1
(T1)
(T2)
(T3)
(BLK)
(WHT)
(X1L1GA BLK)(REF)
(X2L1GB WHT)(REF)
(X3L1GC RED)(REF)
(V25B20 BLK)(REF)
(V25A20 WHT)(REF)
FILLING PUMP
B2
(1)
(2)
(3)
(BLK & WHT)
(BLK & WHT)
(X1J1GA BLK)(REF)
(X2J1GB WHT)(REF)
(X3J1GC RED)(REF)
(V24B20 BLK)(REF)
(V24A20 WHT)(REF)
W33 (REF)
W34 (REF)
W35 (REF)
W36 (REF)
P1 (REF)
J25 (REF)
J26 (REF)
(X1A1GA BLK)(REF)
(X2A1GB WHT)(REF)
(X3A1GC RED)(REF)
(V4A20 BLK)(REF)
(V5A20 WHT)(REF)
X40A10A (KG-T1)
X42A10B (KG-T2)
X28A10C (KG-T3)
V24A20 (KG-C9)
V23A20 (TBB-B)
V25B20
TB9
X80B20A (P1-V)
X81B20B (P1-U)
X82B20C (P1-T)
X1A10A (K1-U)
X2A10B (K1-L2)
X3A10C (K1-L3)
X63A10A (K3-T1)
X64A10B (K3-T2)
X62A10C (K3-T3)
X4B10A (K4-T1)
X5B10B (K4-T2)
X6B10C (K4-T3)
X1B10A
X2B10B
X3B10C
(X1A1GA)(REF)
(X2A1GB)(REF)
(X3A1GC)(REF)
(X4A1GA)(REF)
(X5A1GB)(REF)
(X6A1GC)(REF)
TB3
J27(REF)
J28(REF)
X55B6A
X54B6B
X53B6C
(X1A6A) (REF)
(X2A6B)(REF)
(X3A6C)(REF)
CONDUIT TO REFRIGERATOR FAN NO. 2 (REF)
CONDUIT TO REFRIGERATOR FAN NO. 1 (REF)
CONDUIT TO COMPRESSOR MOTOR (REF) & PUMP MOTOR (REF)

FOLD-OUT #1

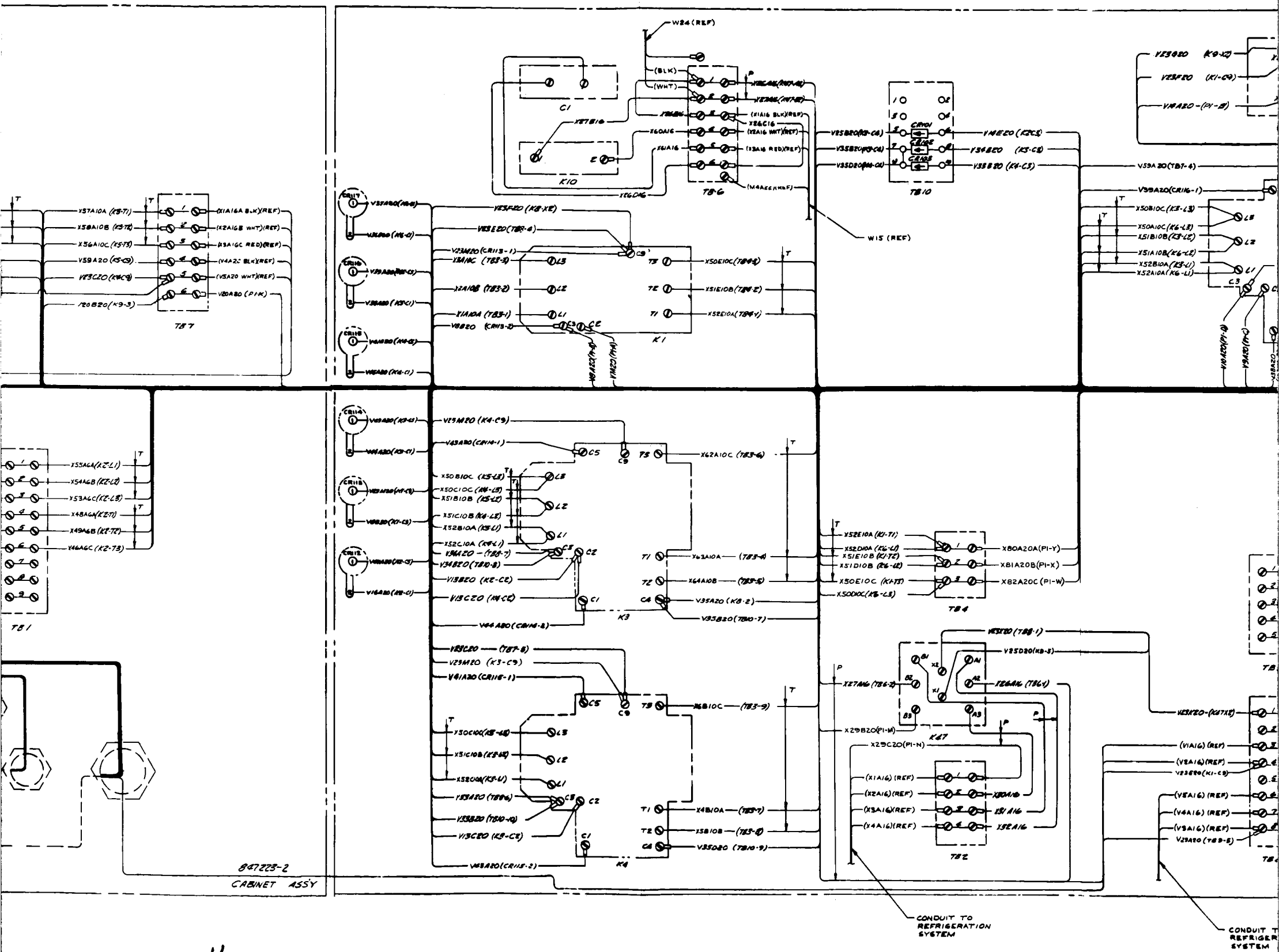

W24 (REF)
C1
K10
TB-6
TB10
W15 (REF)
K1
TB7
TB1
K3
K4
TB4
K47
TB2
847223-2
CABINET ASS'Y
CONDUIT TO REFRIGERATION SYSTEM

FOLD-OUT #2

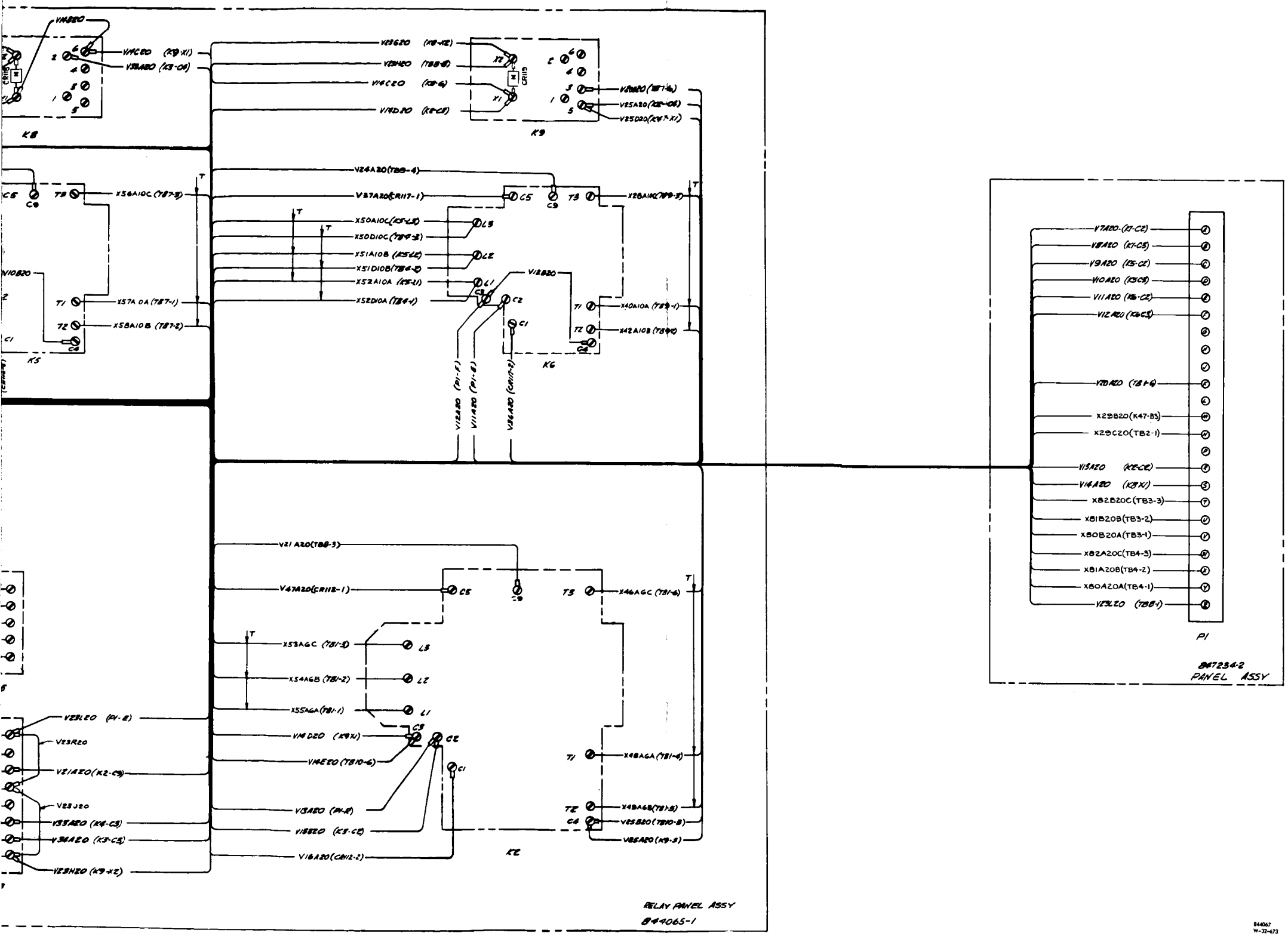

FOLD-OUT #3

Figure B-31. Refrigeration Unit Wiring Diagram

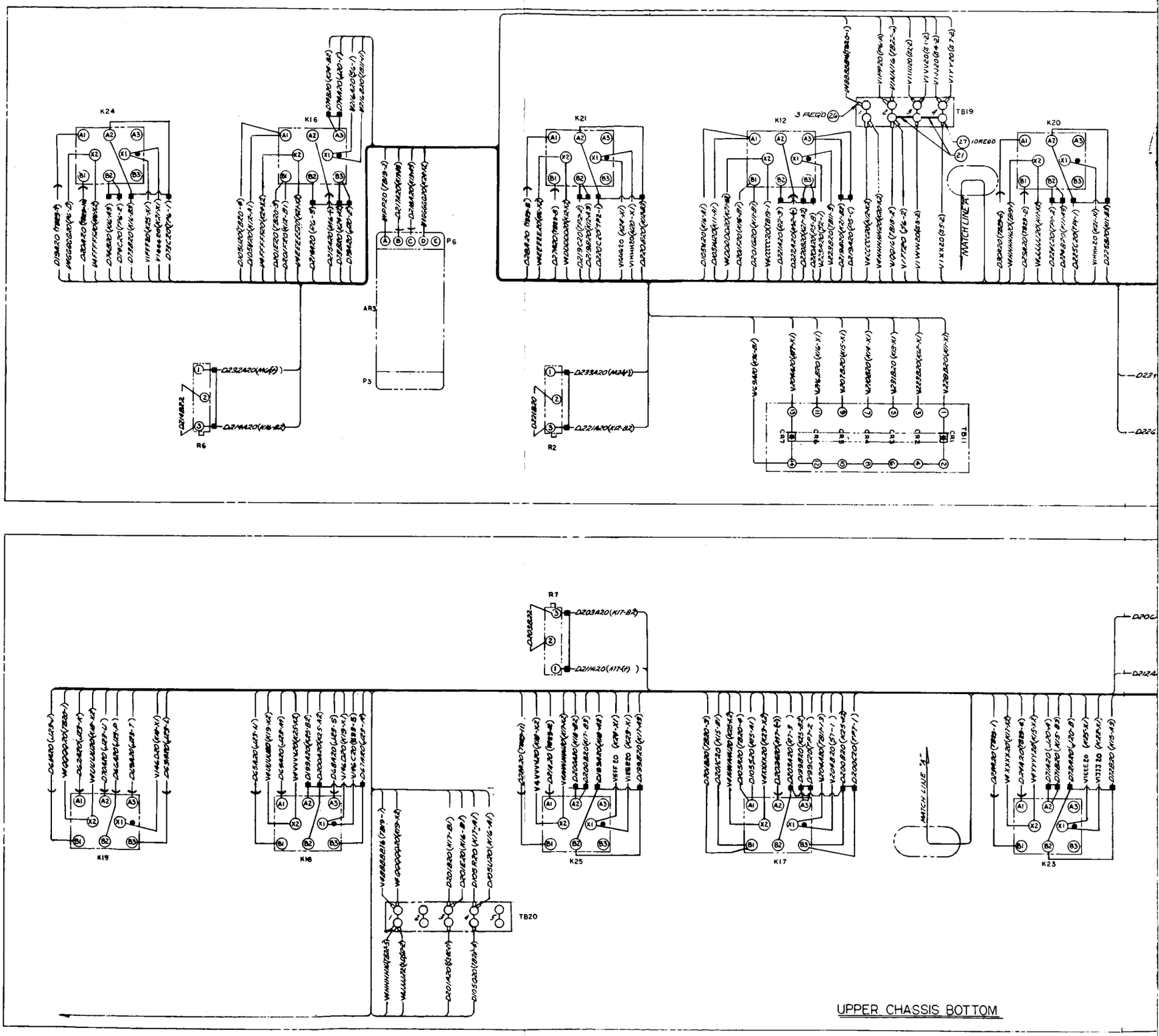
K24
K16
K21
K12
K20
TB19
3 REQD
10 REQD
MATCH LINE "A"
P6
P3
R6
R2
TB1
R7
K19
K18
K25
K17
K23
TB20
MATCH LINE "A"
UPPER CHASSIS BOTTOM

FOLD-OUT #1

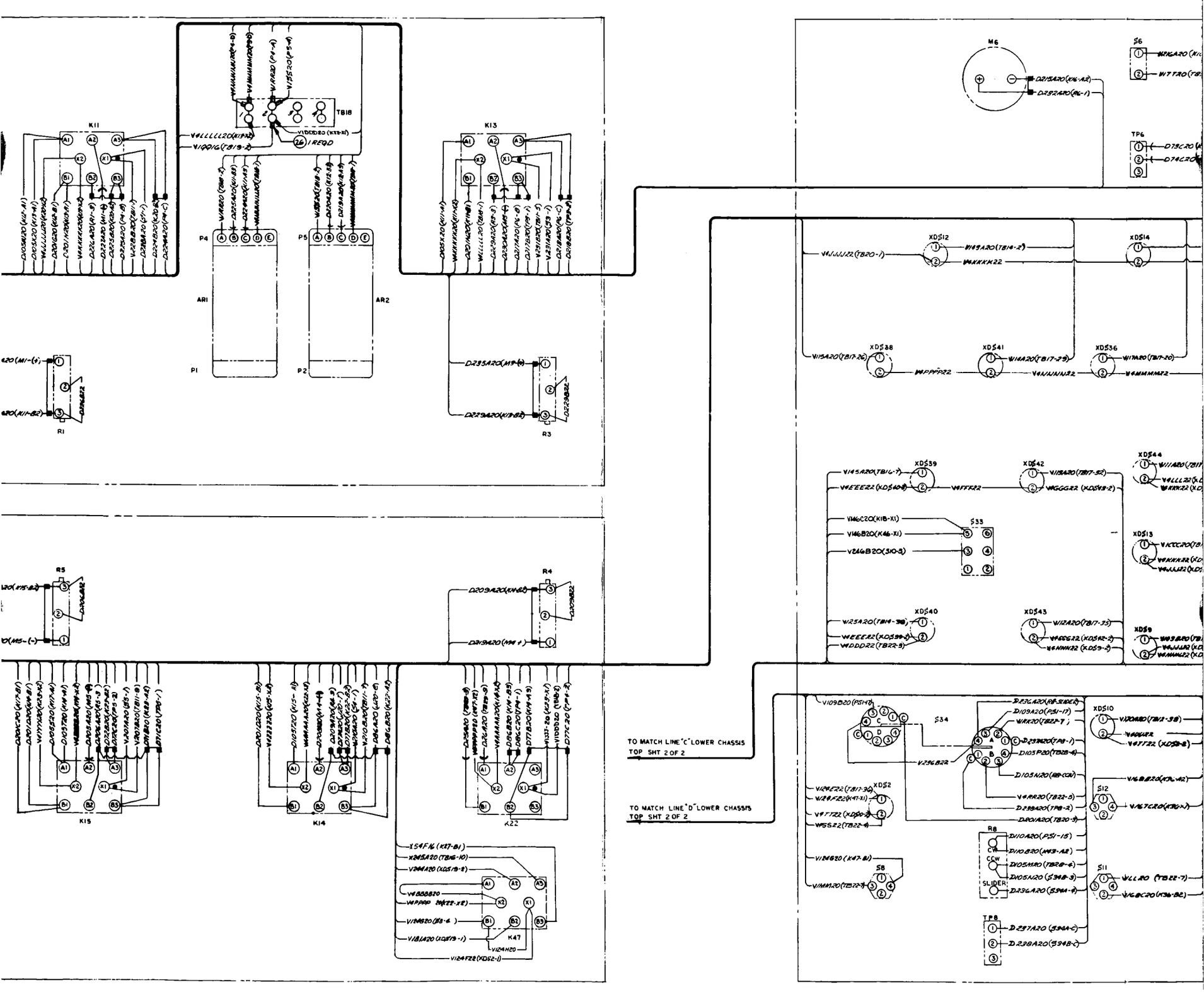
K11
K13
TB18
P4
P5
AR1
AR2
P1
P2
R1
R3
R5
R4
K15
K14
K22
K47
M6
S6
TP6
XDS12
XDS14
XDS38
XDS41
XDS36
XDS39
XDS42
XDS44
XDS13
XDS40
XDS43
XDS9
S33
S34
XDS10
XDS2
S12
R8
S8
S11
TP8
TO MATCH LINE "C" LOWER CHASSIS
TOP SHT 2 OF 2
TO MATCH LINE "D" LOWER CHASSIS
TOP SHT 2 OF 2

FOLD-OUT #2

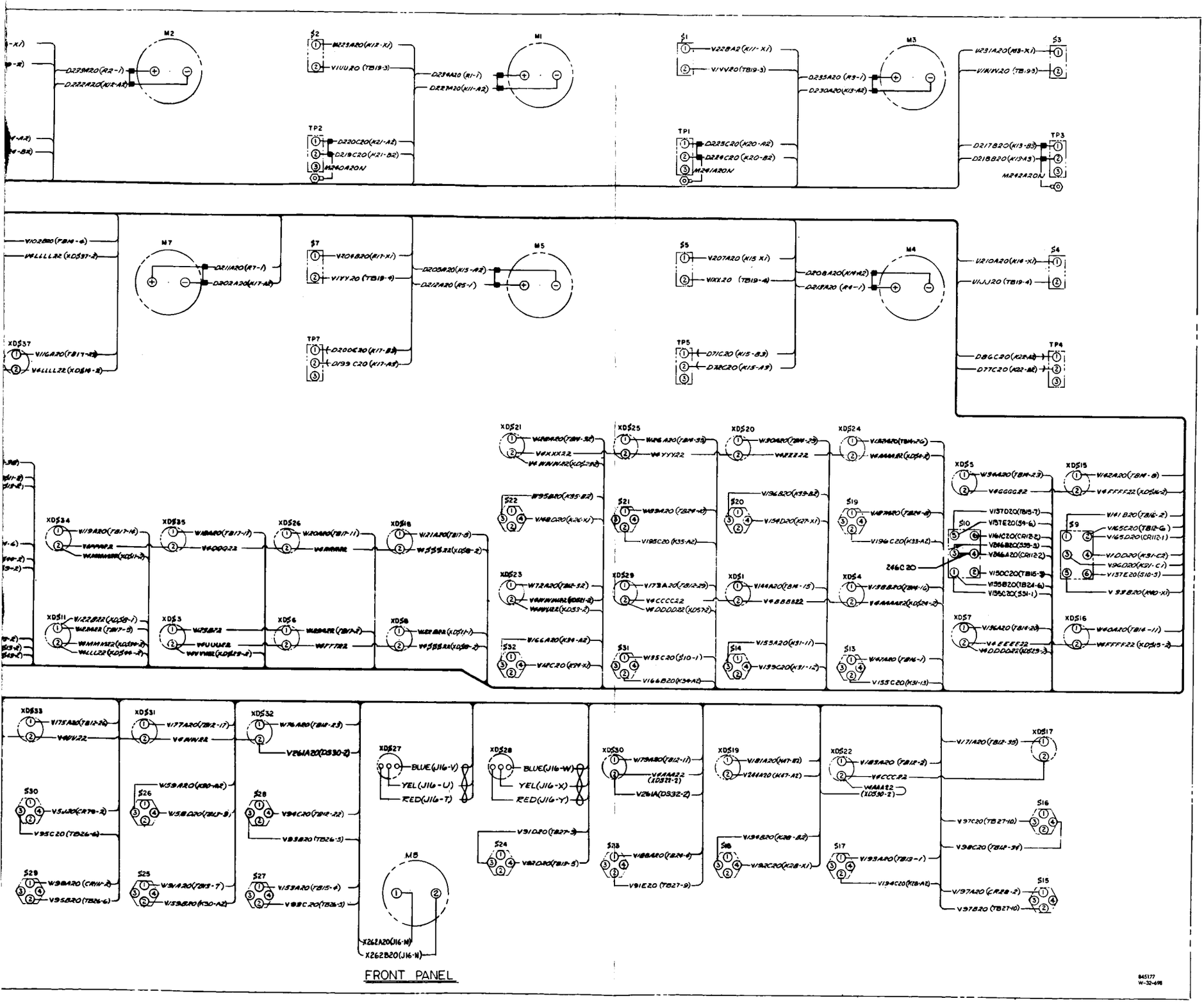

FOLD-OUT #3

Figure B-32. Control and Instrumentation Panel Wiring Diagram (Sheet 1 of 2)

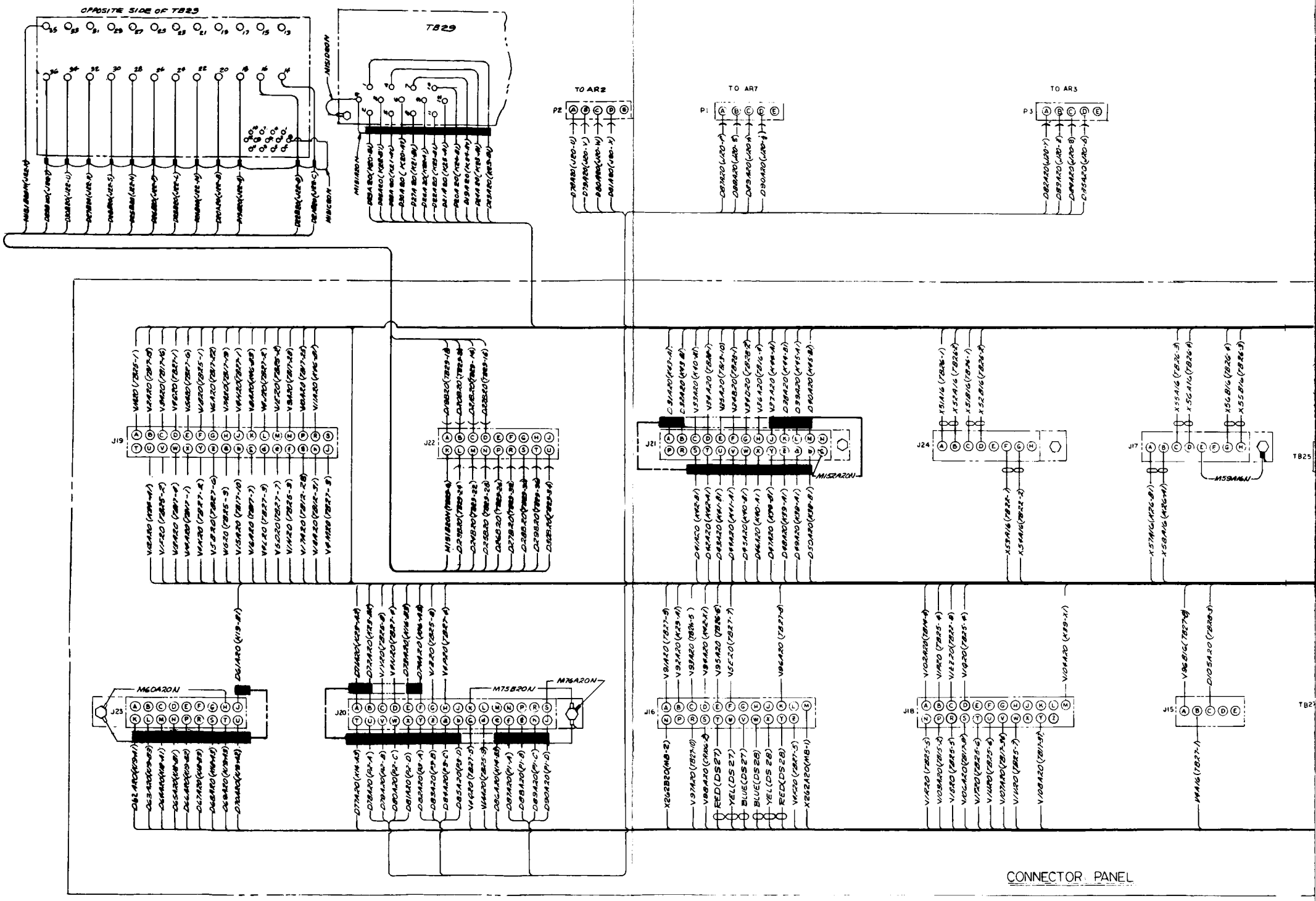
OPPOSITE SIDE OF TB25
TB29
TO AR2
TO AR7
TO AR3
P2
P1
P3
J19
J22
J21
J24
J17
TB25
J23
J20
J16
J18
J15
TB27
M60A20N
M75B20N
M76A20N
M152A20N
M59A16N
CONNECTOR PANEL

FOLD-OUT #1

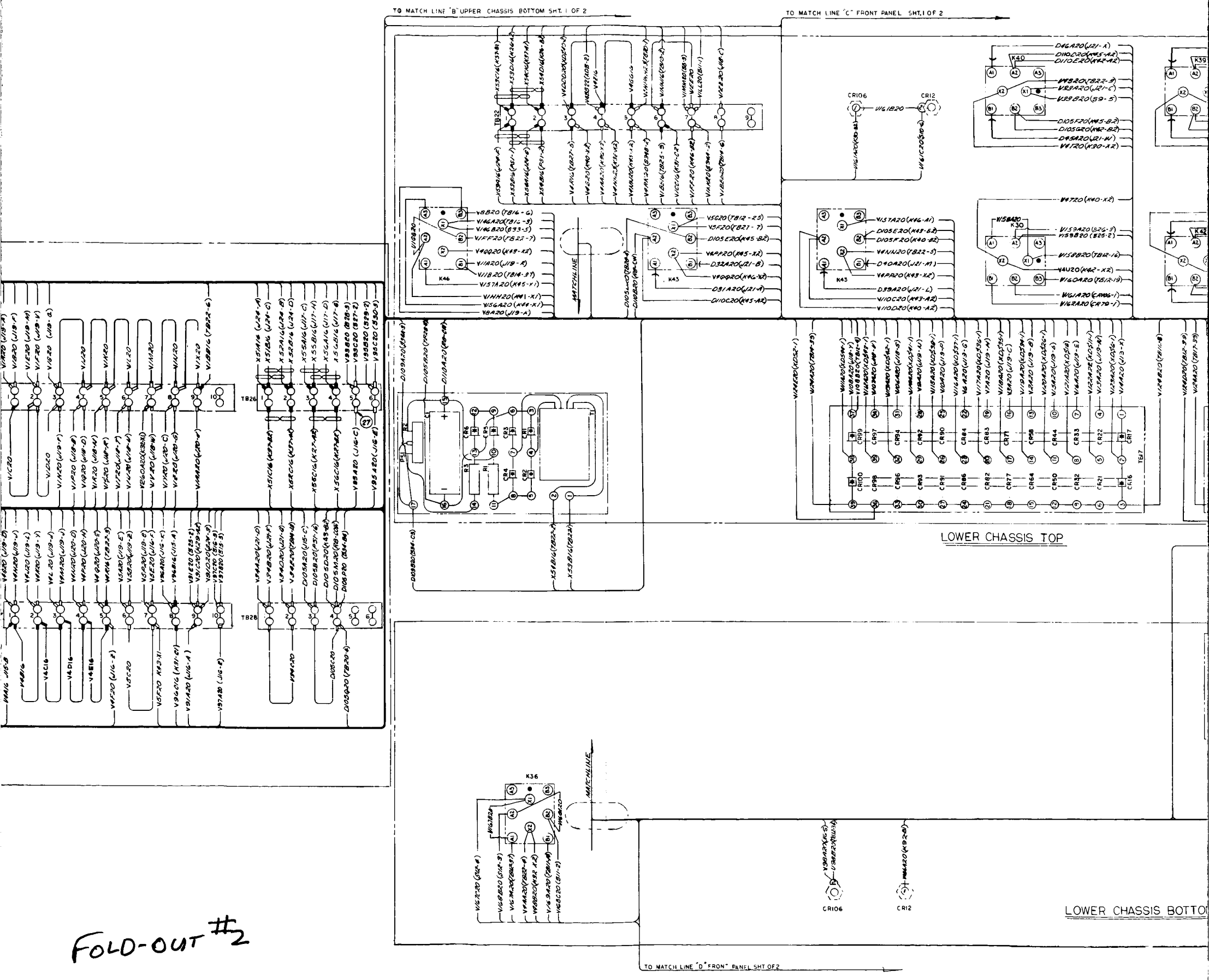
TO MATCH LINE "B" UPPER CHASSIS BOTTOM SHT. 1 OF 2
TO MATCH LINE "C" FRONT PANEL SHT. 1 OF 2
LOWER CHASSIS TOP
LOWER CHASSIS BOTTOM
MATCHLINE
TO MATCH LINE "D" FRONT PANEL SHT OF 2
TB22
TB26
TB28
K46
K43
K40
K30
K36
CR106
CR12

FOLD-OUT #2

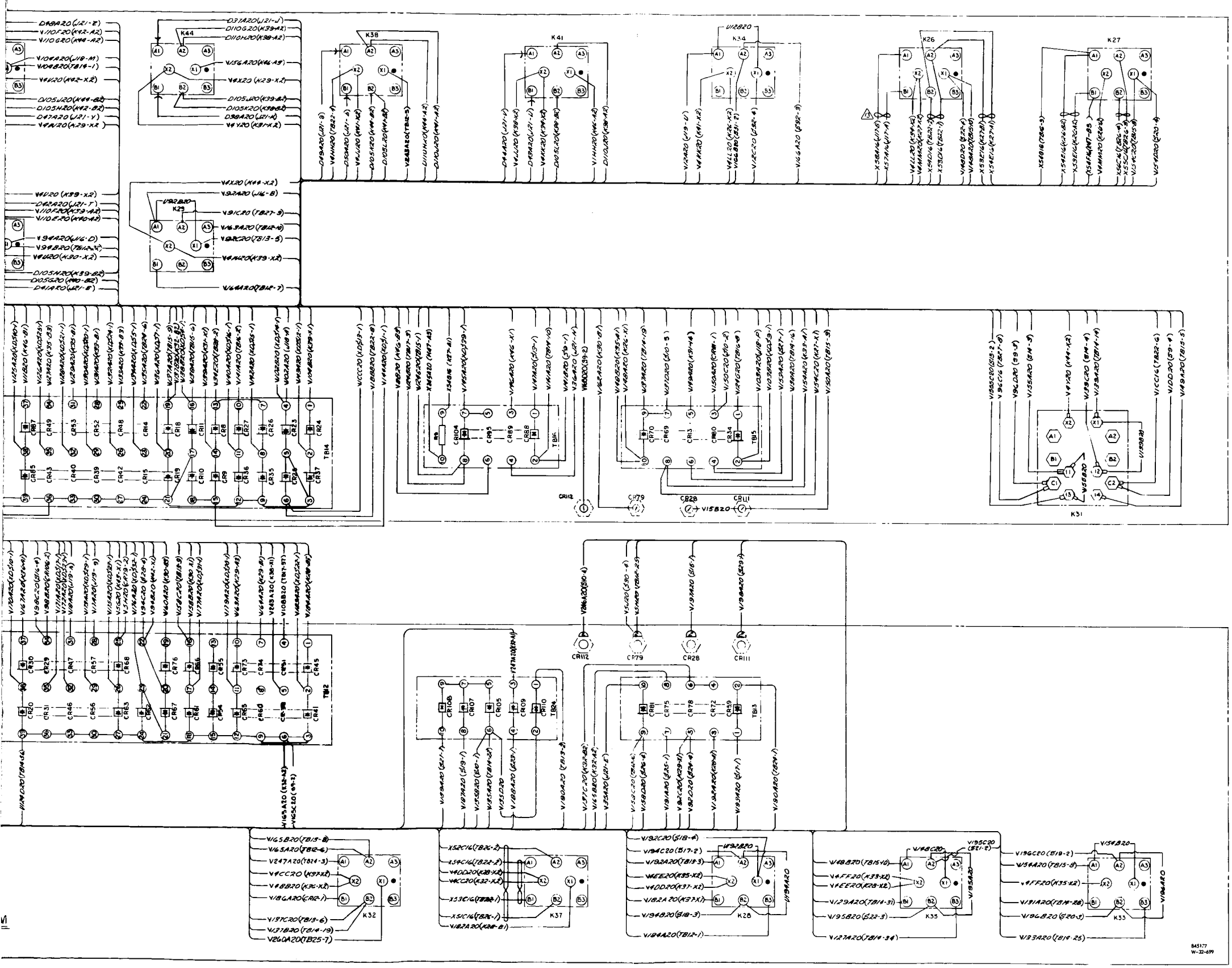

FOLD-OUT #3

Figure B-32. Control and Instrumentation Panel Wiring Diagram (Sheet 2 of 2)

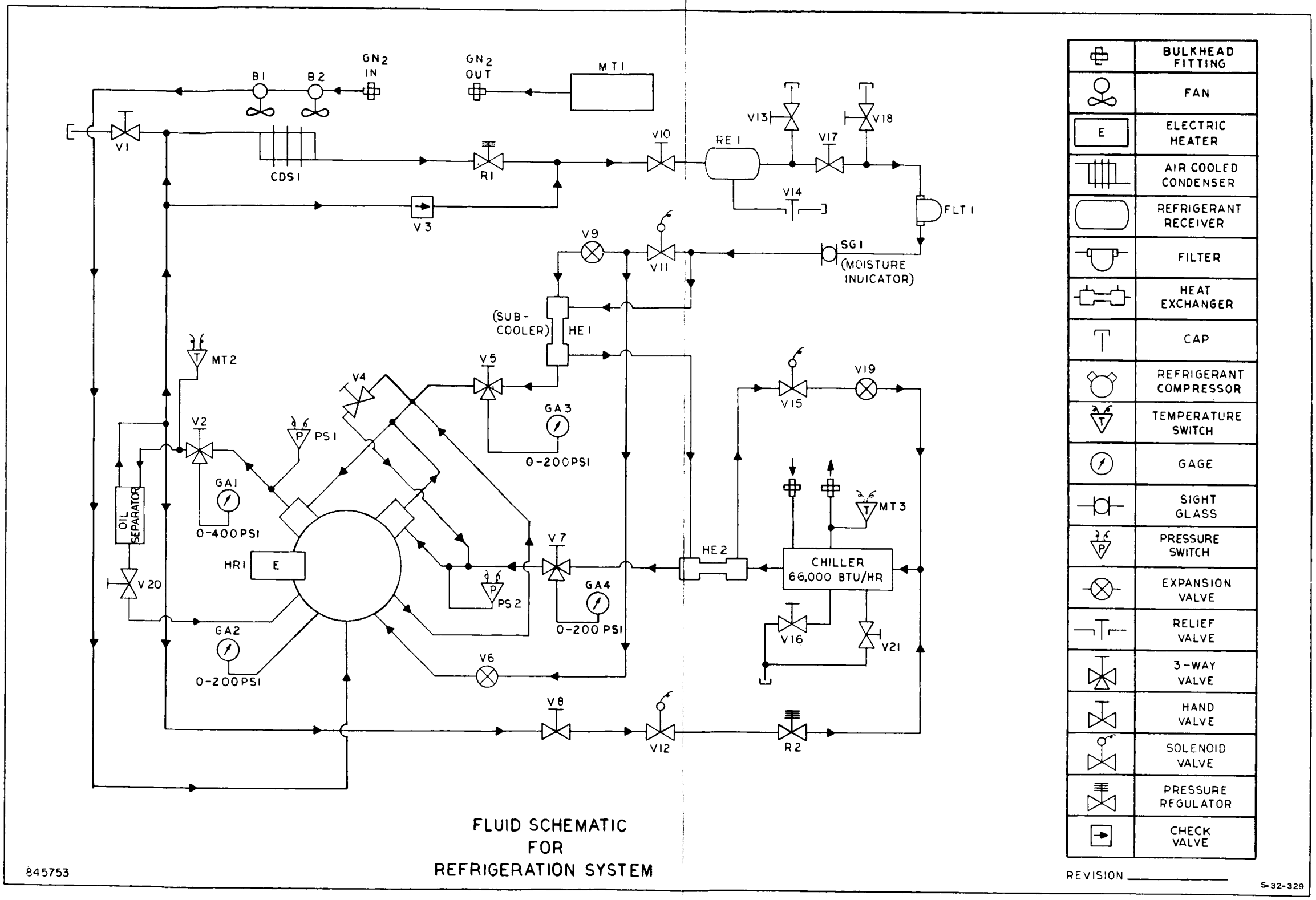

Figure B-33. Refrigeration System Fluid Schematic Diagram

Difference Data Sheet

ENVIRONMENTAL CONTROL SYSTEM WATER-GLYCOL SERVICE SET REFRIGERATION UNIT	Model No. S14-121 AiResearch Part No. 847250-12-1; NR Part No. G14-854025-141, NR Serial No. 013 and 014 (ME 901-0319-0001)

THE INSTRUCTIONS CONTAINED IN PRECEDING SECTIONS OF THIS PUBLICATION APPLY EXCEPT FOR THE DIFFERENCES LISTED IN THIS DATA SHEET.

CHARACTERISTIC DIFFERENCES. Same as Refrigeration Unit Model No. S14-121, AiResearch Part No. 847250-3-1, NR Part No. G14-854025-301, NR Serial No. 008 (ME 901-0319-0001) except this unit has a different refrigeration system.

DESCRIPTION. Same as Refrigeration Unit Model No. S14-121, AiResearch Part No. 847250-3-1, NR Part No. G14-854025-301, NR Serial No. 008 (ME 901-0319-0001) except in paragraph 1-54 use Operation and Instruction Manual for Refrigeration System (Part No. 4631, Auto Control Labs, Los Angeles, California) in place of Operation and Instruction Manual for Refrigeration System (Part No. 4512, Auto Control Labs, Los Angeles, California).

FUNCTIONAL TEST. Same as Refrigeration Unit Model No. S14-121, AiResearch Part No. 847250-3-1, NR Part No. G14-854025-301, NR Serial No. 008 (ME 901-0319-0001) except that the ammeter (79, figure 2-2) is not incorporated in this unit.

TROUBLE ANALYSIS. Same as Refrigeration Unit Model No. S14-121, AiResearch Part No. 847250-3-1, NR Part No. G14-854025-301, NR Serial No. 008 (ME 901-0319-0001).

REMOVAL AND INSTALLATION. Same as Refrigeration Unit Model No. S14-121, AiResearch Part No. 847250-3-1, NR Part No. G14-854025-301, NR Serial No. 008 (ME 901-0319-0001).

REPAIR INSTRUCTIONS. Same as Refrigeration Unit Model No. S14-121, AiResearch Part No. 847250-3-1, NR Part No. G14-854025-301, NR Serial No. 008 (ME 901-0319-0001).

CALIBRATION AND ADJUSTMENT. Same as Refrigeration Unit Model No. S14-121, AiResearch Part No. 847250-3-1, NR Part No. G14-854025-301, NR Serial No. 008 (ME 901-0319-0001) except in table 6-1, the part number for meter M4 is 847120-38 instead of 847120-44; the scale range is 0 to 300 psig. The part number for meter M5 is 847120-39 instead of 847120-45; the scale range is 0 to 100 psid. The part number for pressure transducer MT13 is 847342-39 instead of 847342-3, and the refrigeration system part number is 847247-4 (ACL 4631) with a range of -20 ±3 to +50°F.

PERIODIC INSPECTION AND SERVICE. Same as Refrigeration Unit Model No. S14-121, AiResearch Part No. 847250-3-1, NR Part No. G14-854025-301, NR Serial No. 008 (ME 901-0319-0001).

Difference Data Sheet

DIAGRAMS. Same as Refrigeration Unit Model No. S14-121, AiResearch Part No. 847250-3-1, NR Part No. G14-854025-301, NR Serial No. 008 (ME 901-0319-0001) except use figure B-35 in place of figure 8-2, figure B-36 in place of figure 8-4, figure B-37 in place of figure 8-5, figure B-38 in place of figure 8-6, figure B-39 (sheets 1 and 2) in place of figure 8-7 (sheets 1 and 2), figure B-40 in place of figure 8-9, figure B-41 in place of figure 8-10 and figure B-42 in place of figure 8-11.

APPENDIX A. Same as Refrigeration Unit Model No. S14-121, AiResearch Part No. 847250-3-1, NR Part No. G14-854025-301, NR Serial No. 008 (ME 901-0319-0001) except use the following source data information instead of that listed in Appendix A.

Drawing No.	Change Letter	Title
845176	N/C	Input Power Electrical (Schematic) Instruction Plate
845354	N/C	Relay Panel Electrical (Schematic) Instruction Plate
845356	B	Control and Instrumentation Panel Electrical (Schematic) Instruction Plate
845377	A	Refrigeration System Fluid (Schematic) Instruction Plate
845566	F	Refrigeration Unit Plumbing Installation
845572	N/C	Circuit Breaker Panel Electrical (Schematic) Instruction Plate
845585	A	Interconnecting Cable (Schematic) Diagram
845751	N/C	Refrigeration System Electrical (Schematic) Instruction Plate
845895	N/C	Refrigeration Unit Assembly
846357	D	Connector Panel Assembly
847204	T	Fluid Control Module Assembly
847208	F	Refrigeration Unit Fluid (Schematic) Instruction Plate
847233	F	Circuit Breaker Panel Assembly

Difference Data Sheet

Drawing No.	Change Letter	Title
847234	T	Control and Instrumentation Panel Assembly
847250	H	Refrigeration Unit (Outline Drawing)
847254	B	Universal Controller
847255	D	Frequency Converter and Calibration Oscillator Meter Set
847259	J	Input Power Panel Assembly

Specification No. /Date	Revision	Title
SS-1378-R/30 Aug 1965	Rev. 1	Acceptance Test Procedure

Engineering Orders
NOT APPLICABLE TO THIS UNIT

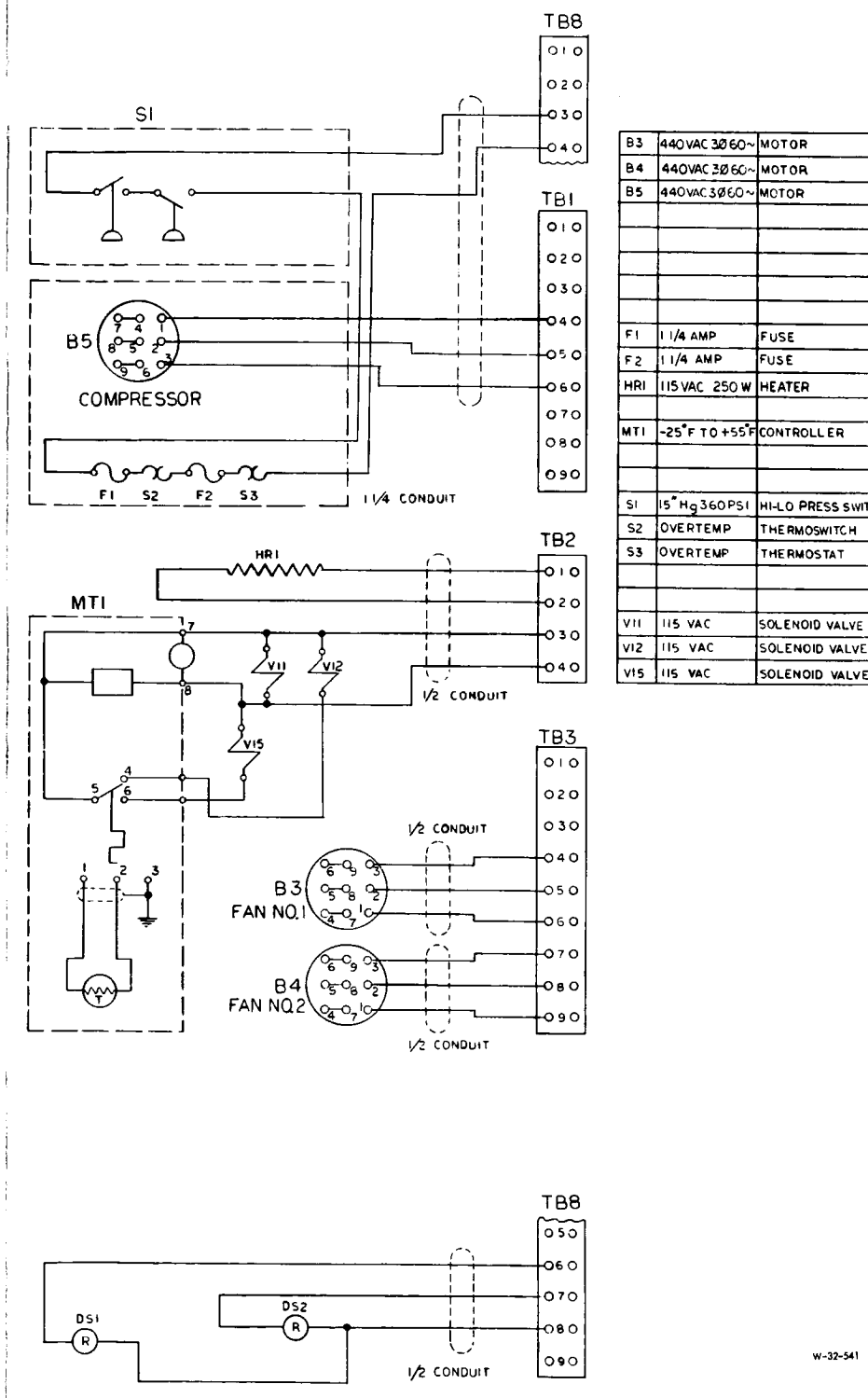

B3	440VAC 3Ø60~	MOTOR
B4	440VAC 3Ø60~	MOTOR
B5	440VAC 3Ø60~	MOTOR
F1	1 1/4 AMP	FUSE
F2	1 1/4 AMP	FUSE
HR1	115 VAC 250 W	HEATER
MT1	-25°F TO +55°F	CONTROLLER
S1	15" H_g 360 PSI	HI-LO PRESS SWITCH
S2	OVERTEMP	THERMOSWITCH
S3	OVERTEMP	THERMOSTAT
V11	115 VAC	SOLENOID VALVE
V12	115 VAC	SOLENOID VALVE
V15	115 VAC	SOLENOID VALVE

Figure B-34. Refrigeration System Electrical Schematic Diagram

FOLD-OUT #1

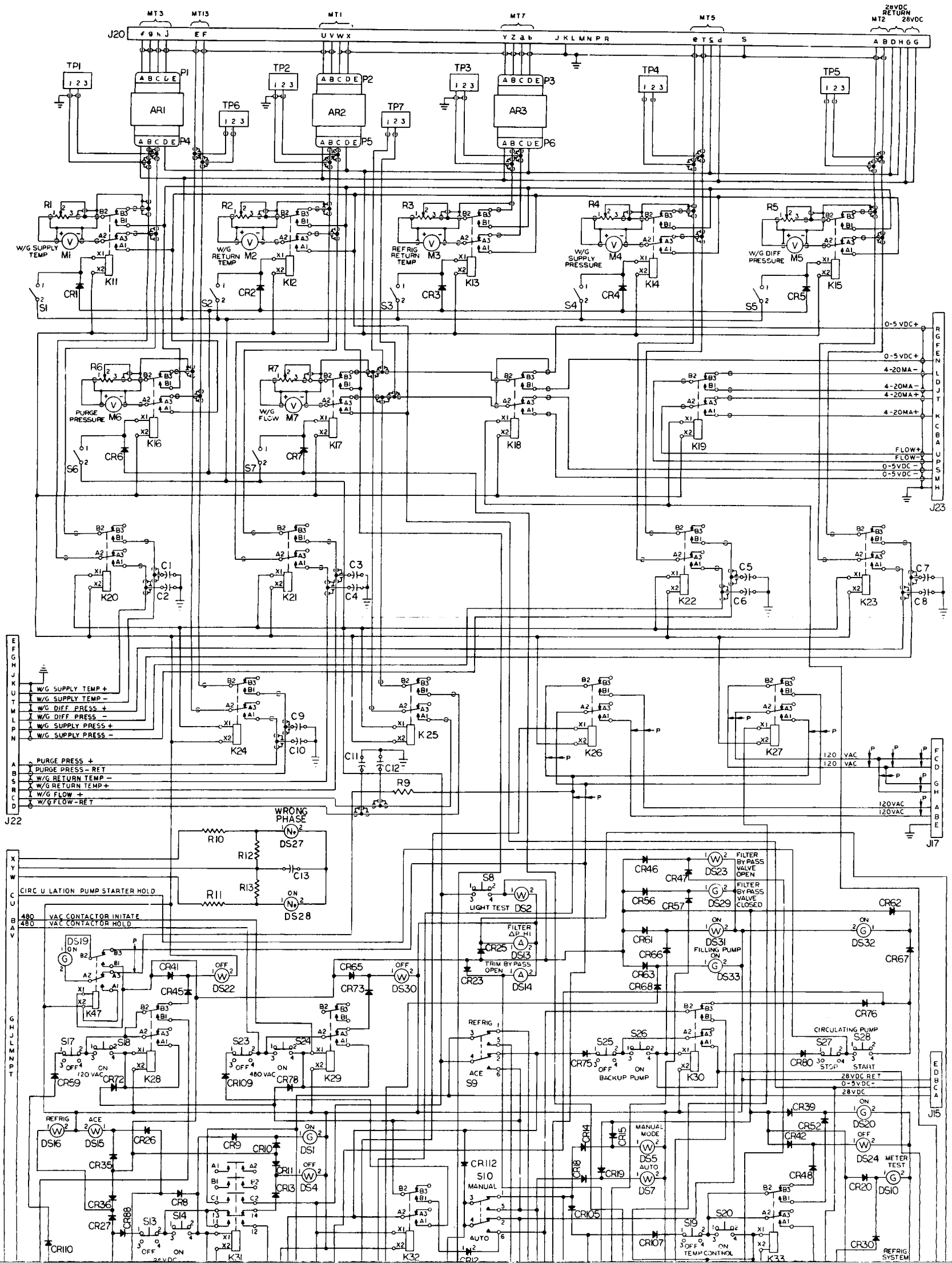
J20
MT3
MT13
MT1
MT7
MT5
28VDC RETURN
MT2
28VDC
TP1
TP2
TP3
TP4
TP5
TP6
TP7
AR1
AR2
AR3
P1
P2
P3
P4
P5
P6
R1
R2
R3
R4
R5
R6
R7
W/G SUPPLY TEMP
M1
W/G RETURN TEMP
M2
REFRIG RETURN TEMP
M3
W/G SUPPLY PRESSURE
M4
W/G DIFF PRESSURE
M5
PURGE PRESSURE
M6
W/G FLOW
M7
K11
K12
K13
K14
K15
K16
K17
K18
K19
K20
K21
K22
K23
K24
K25
K26
K27
K28
K29
K30
K31
K32
K33
K47
S1
S2
S3
S4
S5
S6
S7
S8
S9
S10
S13
S14
S17
S18
S19
S20
S23
S24
S25
S26
S27
S28
CR1
CR2
CR3
CR4
CR5
CR6
CR7
CR8
CR9
CR10
CR11
CR13
CR14
CR15
CR19
CR20
CR23
CR25
CR26
CR27
CR30
CR35
CR36
CR39
CR41
CR42
CR45
CR46
CR47
CR48
CR52
CR56
CR57
CR59
CR61
CR62
CR63
CR65
CR66
CR67
CR68
CR72
CR73
CR75
CR76
CR78
CR80
CR88
CR105
CR107
CR109
CR110
CR112
C1
C2
C3
C4
C5
C6
C7
C8
C9
C10
C11
C12
C13
R9
R10
R11
R12
R13
WRONG PHASE
DS27
DS28
DS1
DS2
DS4
DS5
DS7
DS10
DS13
DS14
DS15
DS16
DS19
DS20
DS22
DS23
DS24
DS29
DS30
DS31
DS32
DS33
J22
J23
J17
J15
W/G SUPPLY TEMP +
W/G SUPPLY TEMP −
W/G DIFF PRESS +
W/G DIFF PRESS −
W/G SUPPLY PRESS +
W/G SUPPLY PRESS −
PURGE PRESS +
PURGE PRESS − RET
W/G RETURN TEMP −
W/G RETURN TEMP +
W/G FLOW +
W/G FLOW − RET
CIRCULATION PUMP STARTER HOLD
480 VAC CONTACTOR INITATE
480 VAC CONTACTOR HOLD
0-5 VDC+
4-20MA−
4-20MA+
FLOW+
FLOW−
0-5VDC −
120 VAC
120VAC
FILTER BY PASS VALVE OPEN
FILTER BY PASS VALVE CLOSED
LIGHT TEST
FILTER ΔP HI
TRIM BY PASS OPEN
FILLING PUMP ON
REFRIG
ACE
OFF BACKUP PUMP
CIRCULATING PUMP
STOP
START
28VDC RET
0-5VDC−
28VDC
MANUAL MODE
AUTO
MANUAL
METER TEST
TEMP CONTROL
REFRIG SYSTEM

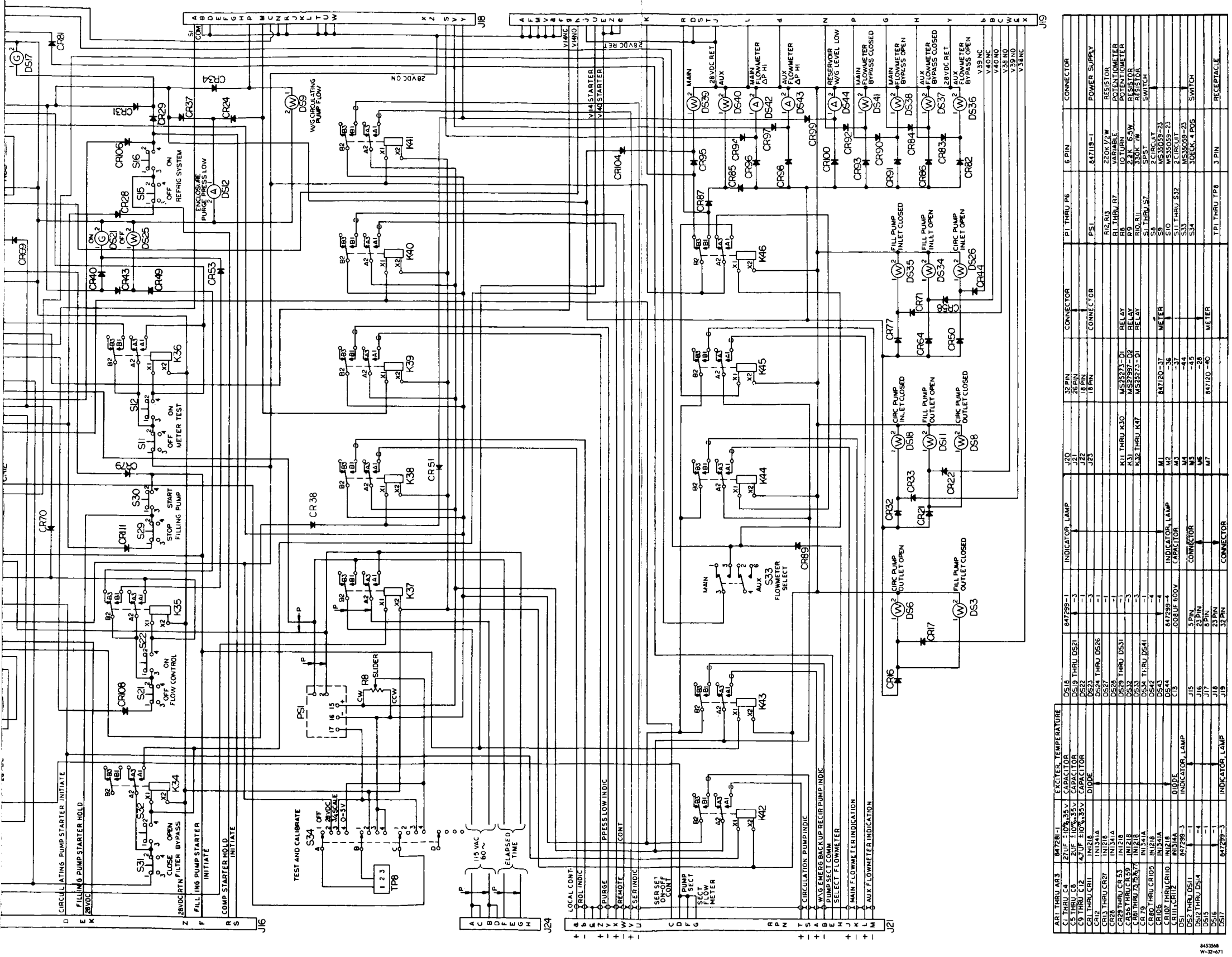

FOLD-OUT #2

Figure B-35. Control and Instrumentation Panel Electrical Schematic

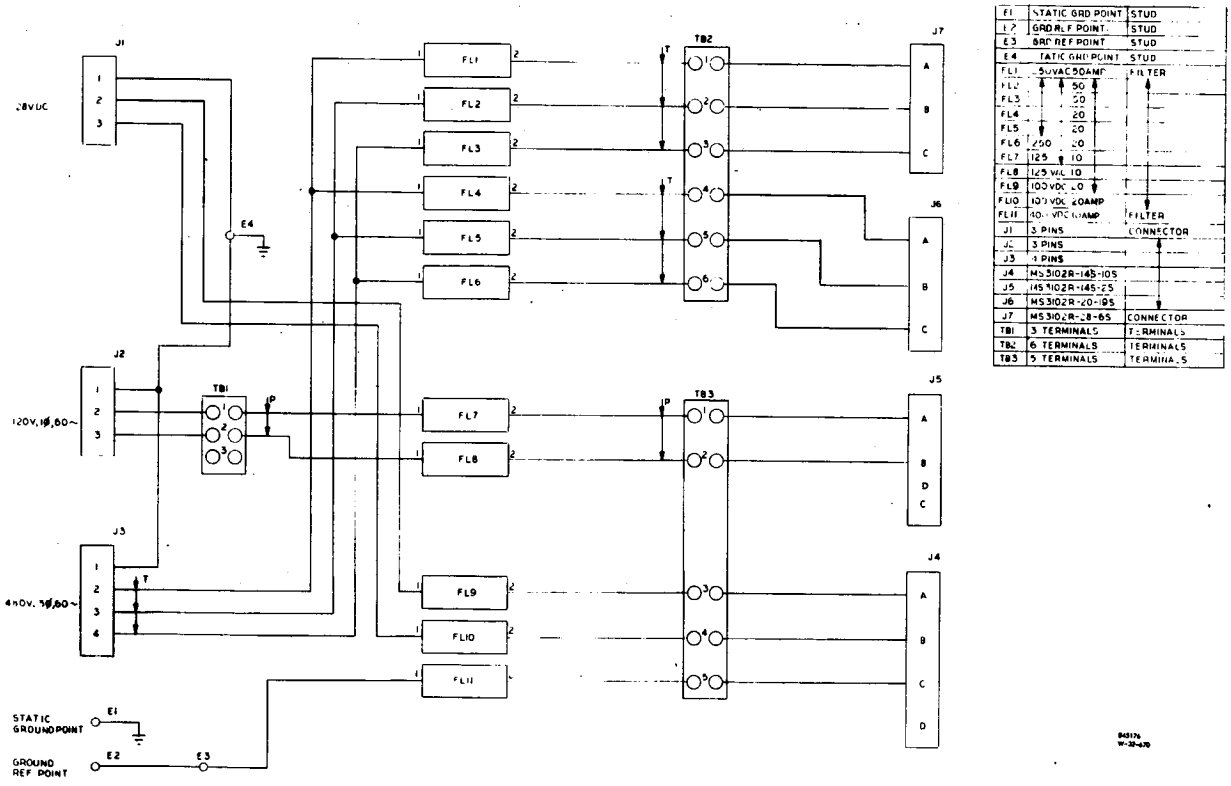

Figure B-36. Input Power Panel Electrical Schematic

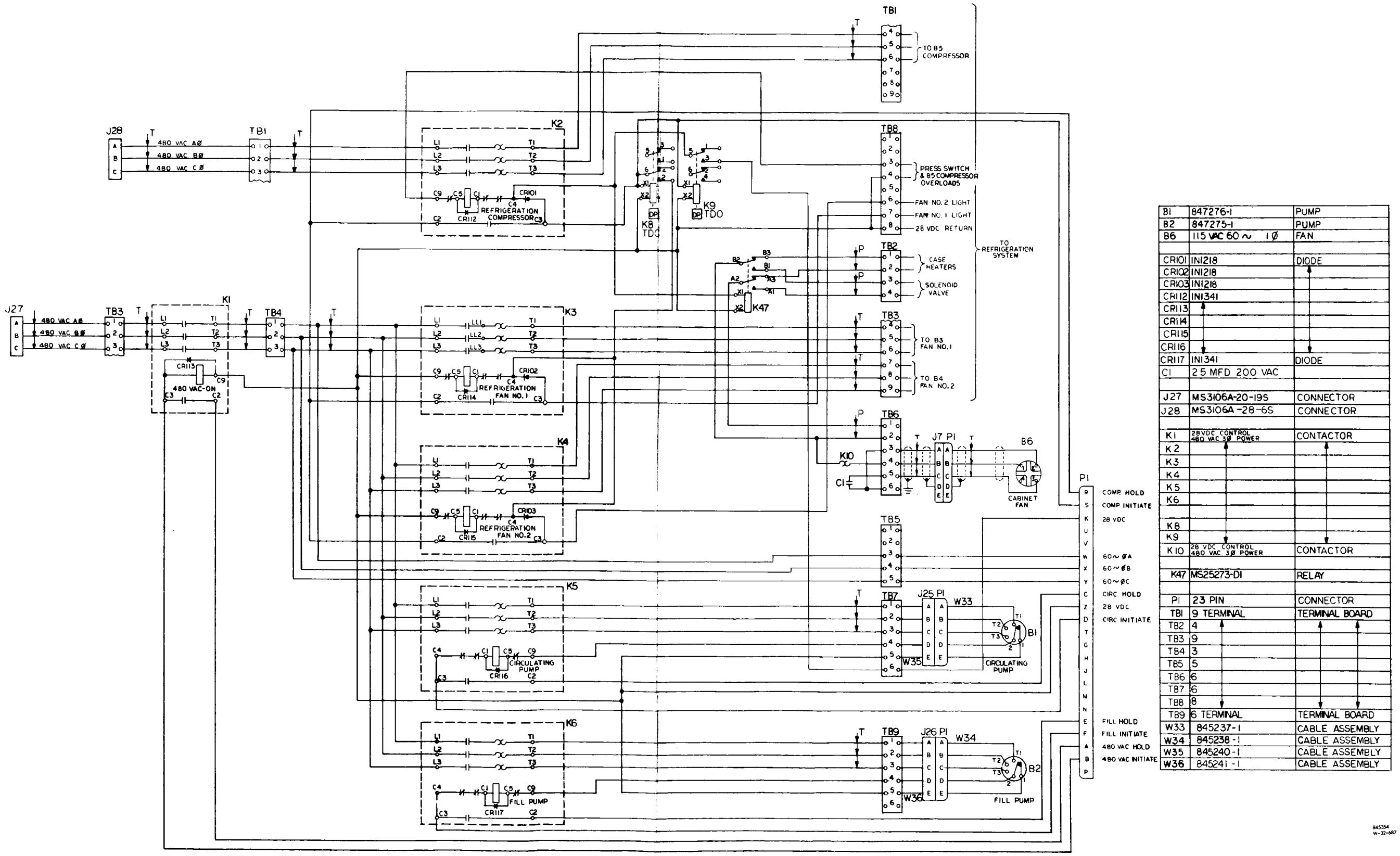

B1	847276-1	PUMP
B2	847275-1	PUMP
B6	115 VAC 60 ~ 1 Ø	FAN
CR101	IN1218	DIODE
CR102	IN1218	↕
CR103	IN1218	
CR112	IN1341	
CR113	↕	
CR114		
CR115		
CR116	↕	↕
CR117	IN1341	DIODE
C1	25 MFD 200 VAC	
J27	MS3106A-20-19S	CONNECTOR
J28	MS3106A-28-6S	CONNECTOR
K1	28VDC CONTROL 480 VAC 3Ø POWER	CONTACTOR
K2	↕	↕
K3		
K4		
K5		
K6		
K8		
K9		
K10	28 VDC CONTROL 480 VAC 3Ø POWER	CONTACTOR
K47	MS25273-D1	RELAY
P1	23 PIN	CONNECTOR
TB1	9 TERMINAL	TERMINAL BOARD
TB2	4	↕ ↕
TB3	9	
TB4	3	
TB5	5	
TB6	6	
TB7	6	
TB8	8	
TB9	6 TERMINAL	TERMINAL BOARD
W33	845237-1	CABLE ASSEMBLY
W34	845238-1	CABLE ASSEMBLY
W35	845240-1	CABLE ASSEMBLY
W36	845241-1	CABLE ASSEMBLY

Figure B-37. Relay Panel Electrical Schematic

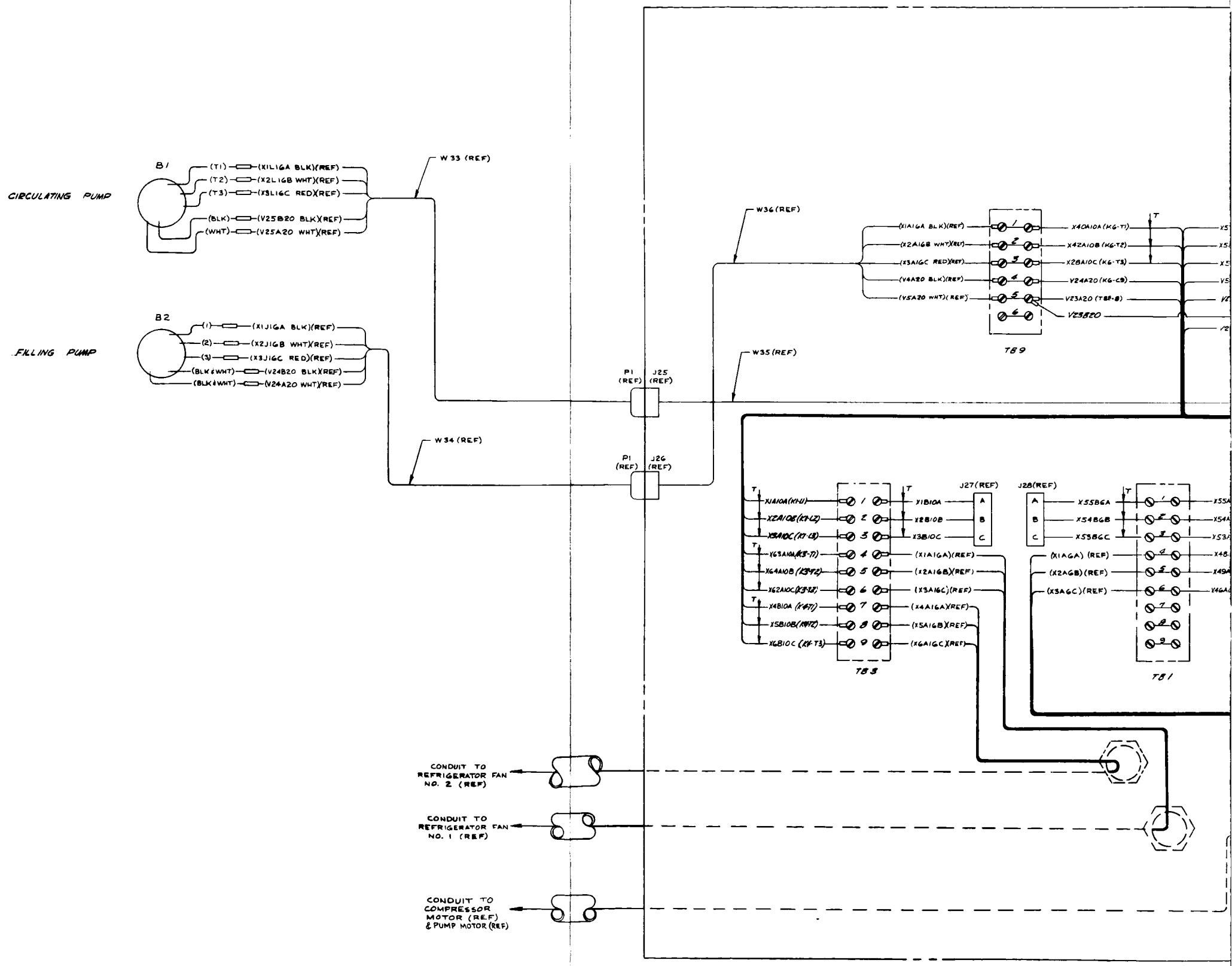
CIRCULATING PUMP
B1
(T1)
(T2)
(T3)
(BLK)
(WHT)
(X1L1GA BLK)(REF)
(X2L1GB WHT)(REF)
(X3L1GC RED)(REF)
(V25B20 BLK)(REF)
(V25A20 WHT)(REF)
FILLING PUMP
B2
(1)
(2)
(3)
(BLK&WHT)
(BLK&WHT)
(X1J1GA BLK)(REF)
(X2J1GB WHT)(REF)
(X3J1GC RED)(REF)
(V24B20 BLK)(REF)
(V24A20 WHT)(REF)
W33 (REF)
W34 (REF)
P1 (REF)
J25 (REF)
J26 (REF)
W36 (REF)
W35 (REF)
(X1A1GA BLK)(REF)
(X2A1GB WHT)(REF)
(X3A1GC RED)(REF)
(V6A20 BLK)(REF)
(V5A20 WHT)(REF)
X4OA10A (K6-T1)
X4ZA10B (K6-T2)
X2BA10C (K6-T3)
V24A20 (K6-C9)
V23A20 (TBE-8)
V23B20
TB9
X1A10A (K1-L1)
X2A10B (K1-L2)
X3A10C (K1-L3)
X6A10A (K3-T1)
X6A10B (K3-T2)
X6A10C (K3-T3)
X4B10A (K4-T1)
X5B10B (K4-T2)
X6B10C (K4-T3)
X1B10A
X2B10B
X3B10C
(X1A1GA)(REF)
(X2A1GB)(REF)
(X3A1GC)(REF)
(X4A1GA)(REF)
(X5A1GB)(REF)
(X6A1GC)(REF)
J27(REF)
TB3
J28(REF)
X55B6A
X54B6B
X53B6C
(X1AGA) (REF)
(X2AGB)(REF)
(X3AGC)(REF)
TB1
CONDUIT TO REFRIGERATOR FAN NO. 2 (REF)
CONDUIT TO REFRIGERATOR FAN NO. 1 (REF)
CONDUIT TO COMPRESSOR MOTOR (REF) & PUMP MOTOR (REF)

FOLD-OUT #1

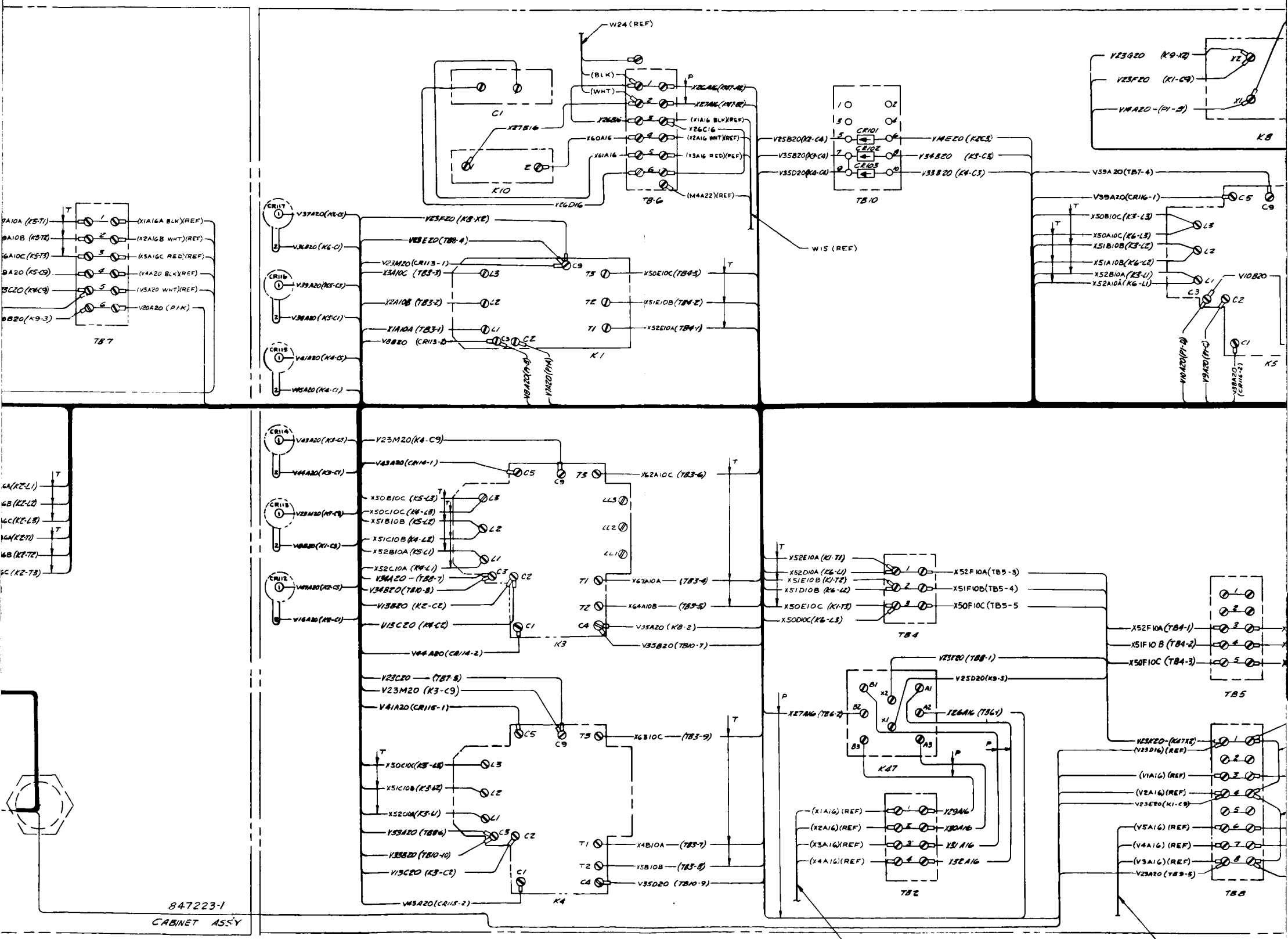

W24 (REF)
(BLK)
(WHT)
C1
K10
TB-6
TB10
K8
K1
K5
K3
K4
K47
TB4
TB5
TB2
TB8
TB7
W15 (REF)
847223-1
CABINET ASS'Y
CONDUIT TO REFRIGERATION SYSTEM
CONDUIT TO REFRIGERATION SYSTEM (REF)

FOLD-OUT #2

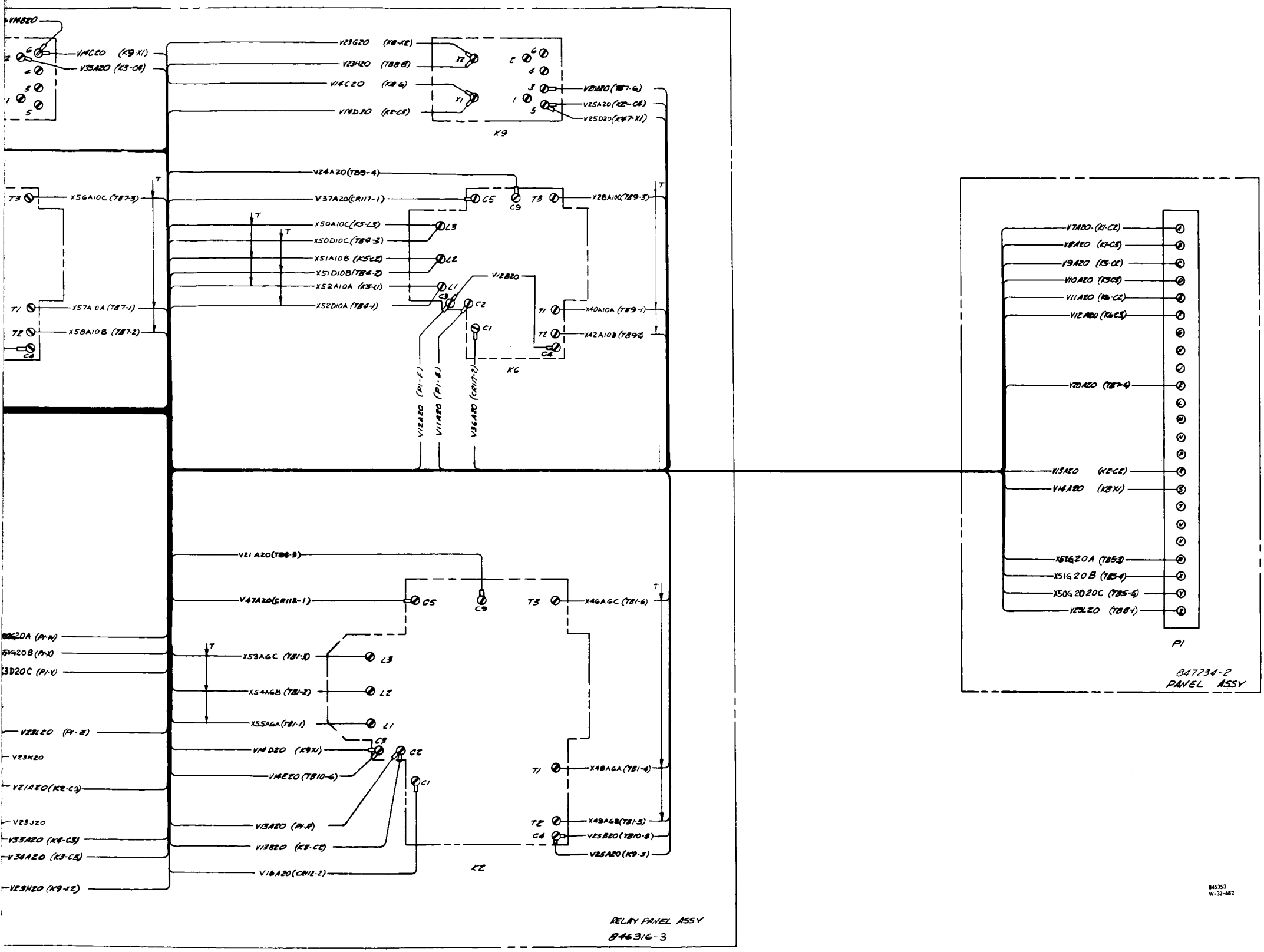

FOLD-OUT #3

Figure B-38. Refrigeration Unit Wiring Diagram

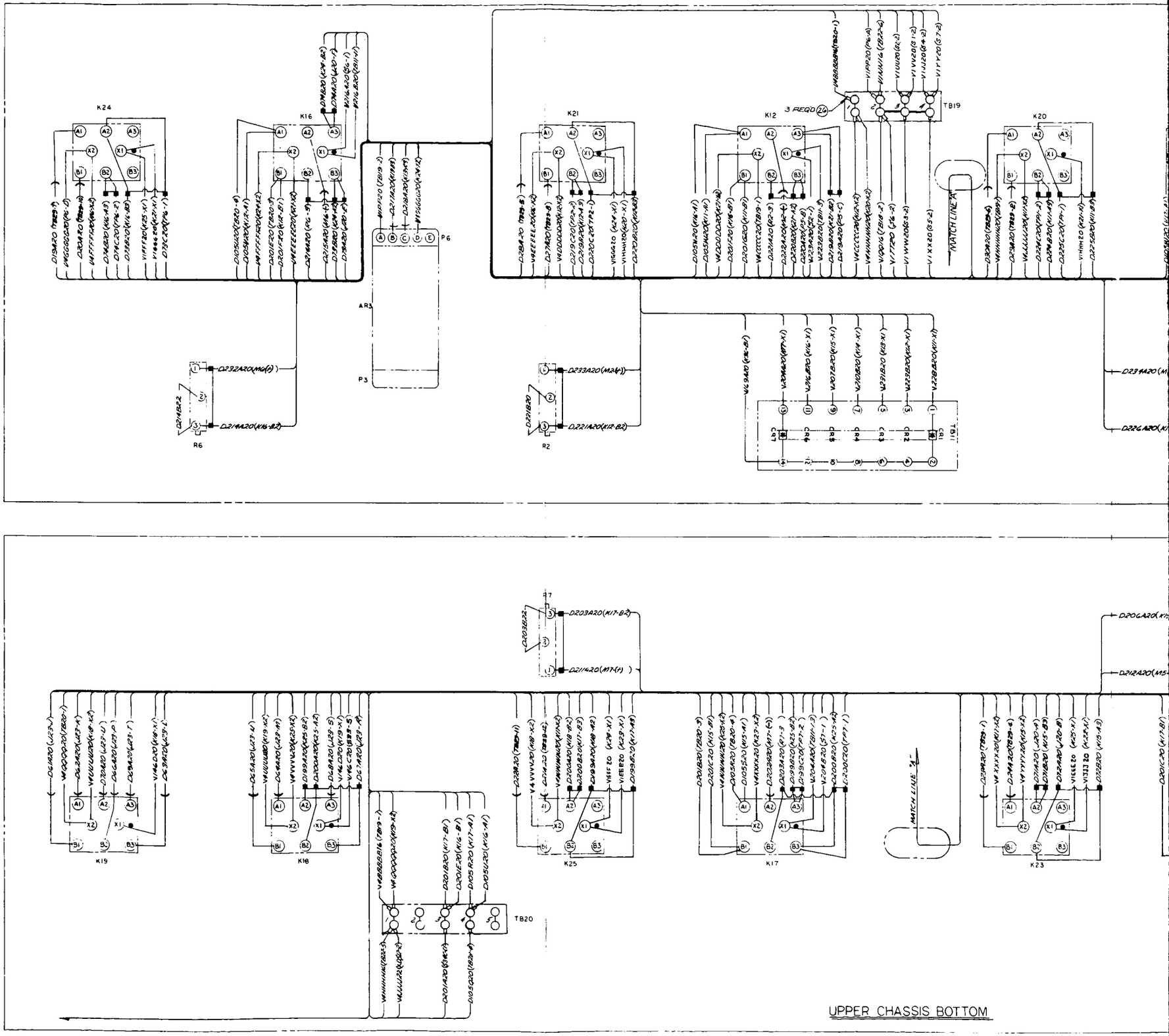
K24
K16
K21
K12
K20
TB19
3 REQD
MATCH LINE "A"
P6
AR3
P3
R6
R2
TB18
K19
K18
K25
K17
K23
R7
TB20
MATCH LINE "A"
UPPER CHASSIS BOTTOM

FOLD-OUT #1

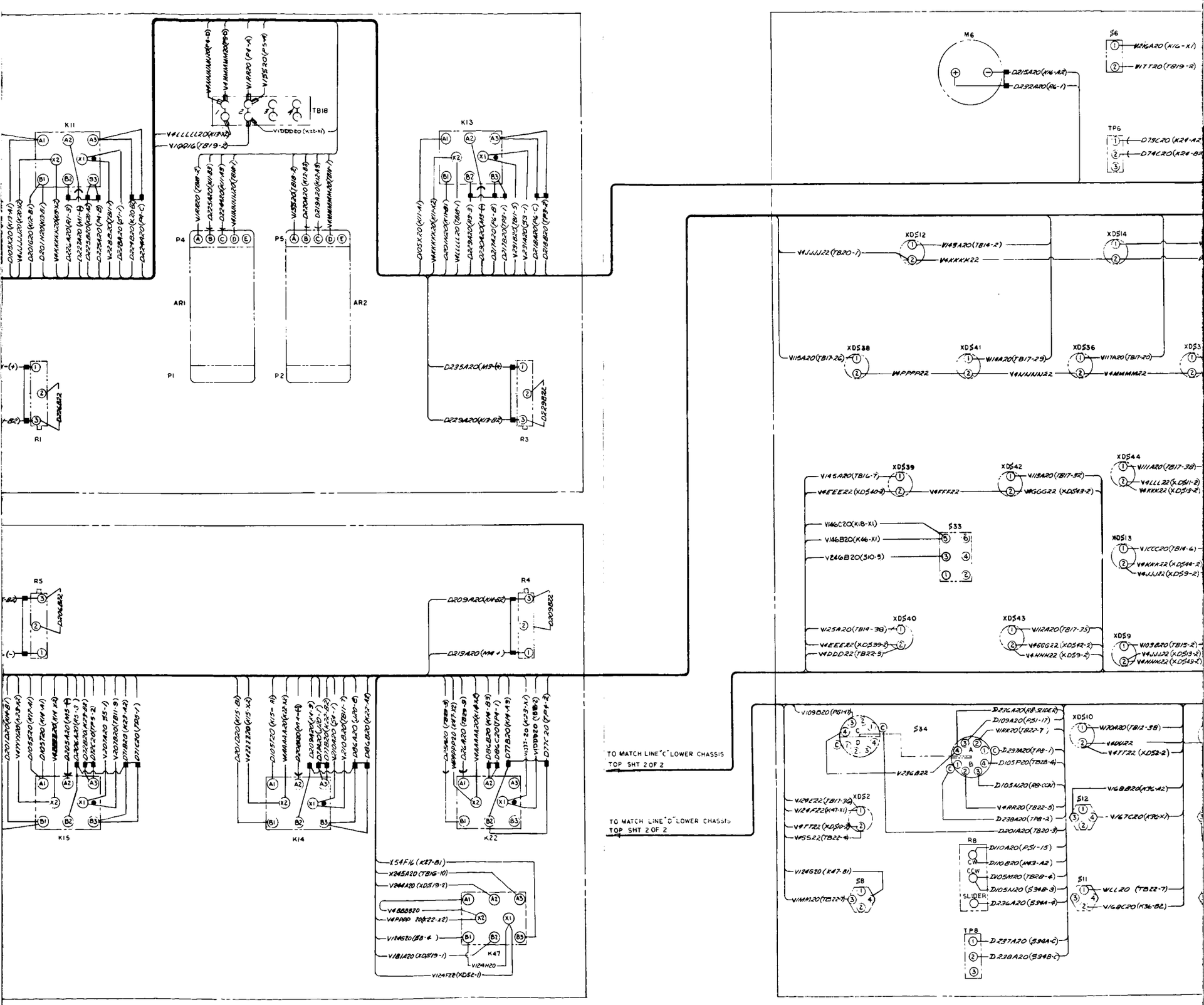
K11
K13
TB18
P4
P5
AR1
AR2
P1
P2
R1
R3
R5
R4
K15
K14
K22
K47
M6
S6
TP6
XDS12
XDS14
XDS38
XDS41
XDS36
XDS39
XDS42
XDS44
XDS13
XDS40
XDS43
XDS9
S33
S34
XDS10
XDS52
S12
S8
RB
S11
TP8
TO MATCH LINE "C" LOWER CHASSIS TOP SHT 2 OF 2
TO MATCH LINE "D" LOWER CHASSIS TOP SHT 2 OF 2

FOLD-OUT #2

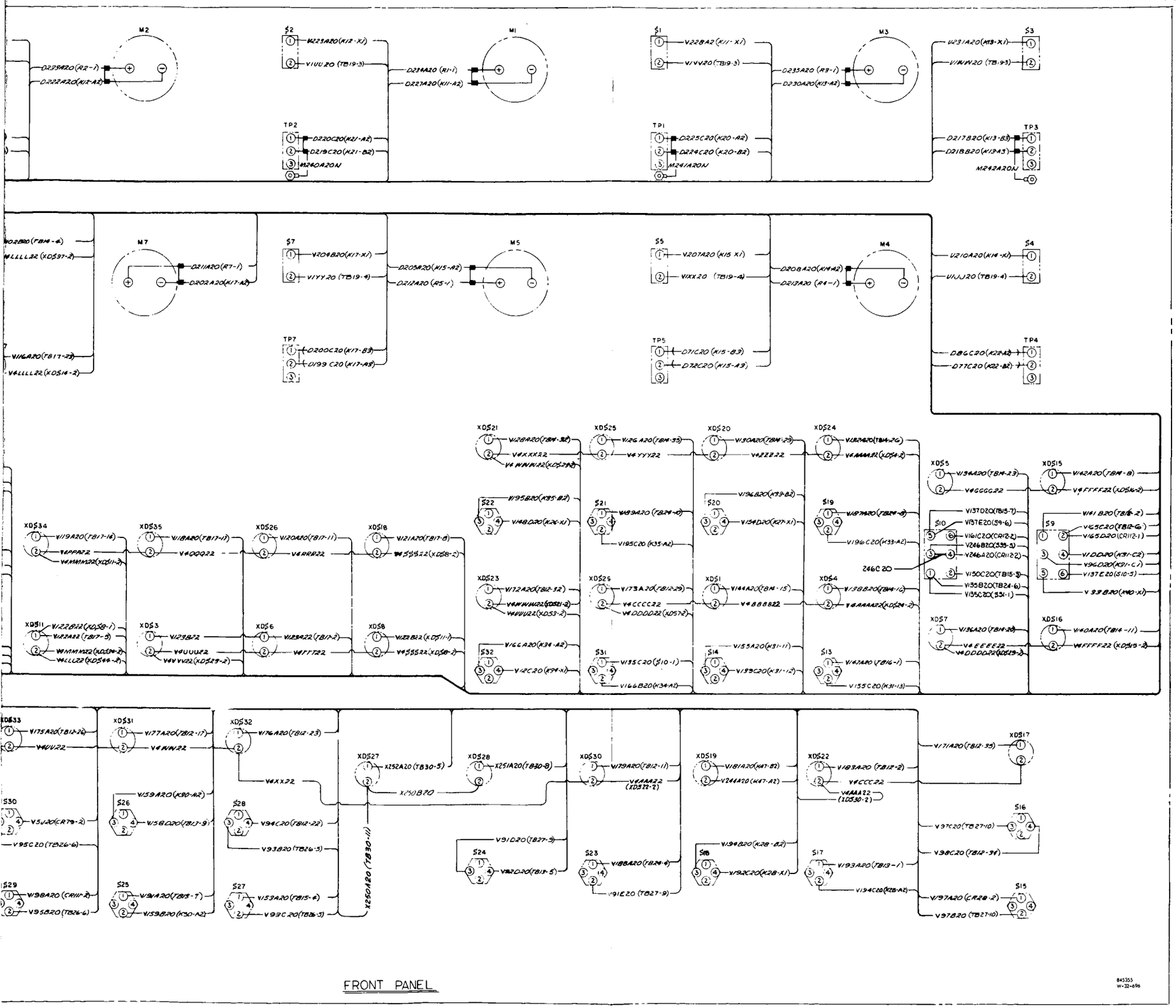

Figure B-39. Control and Instrumentation Panel Wiring Diagram (Sheet 1 of 2)

FOLD-OUT #3

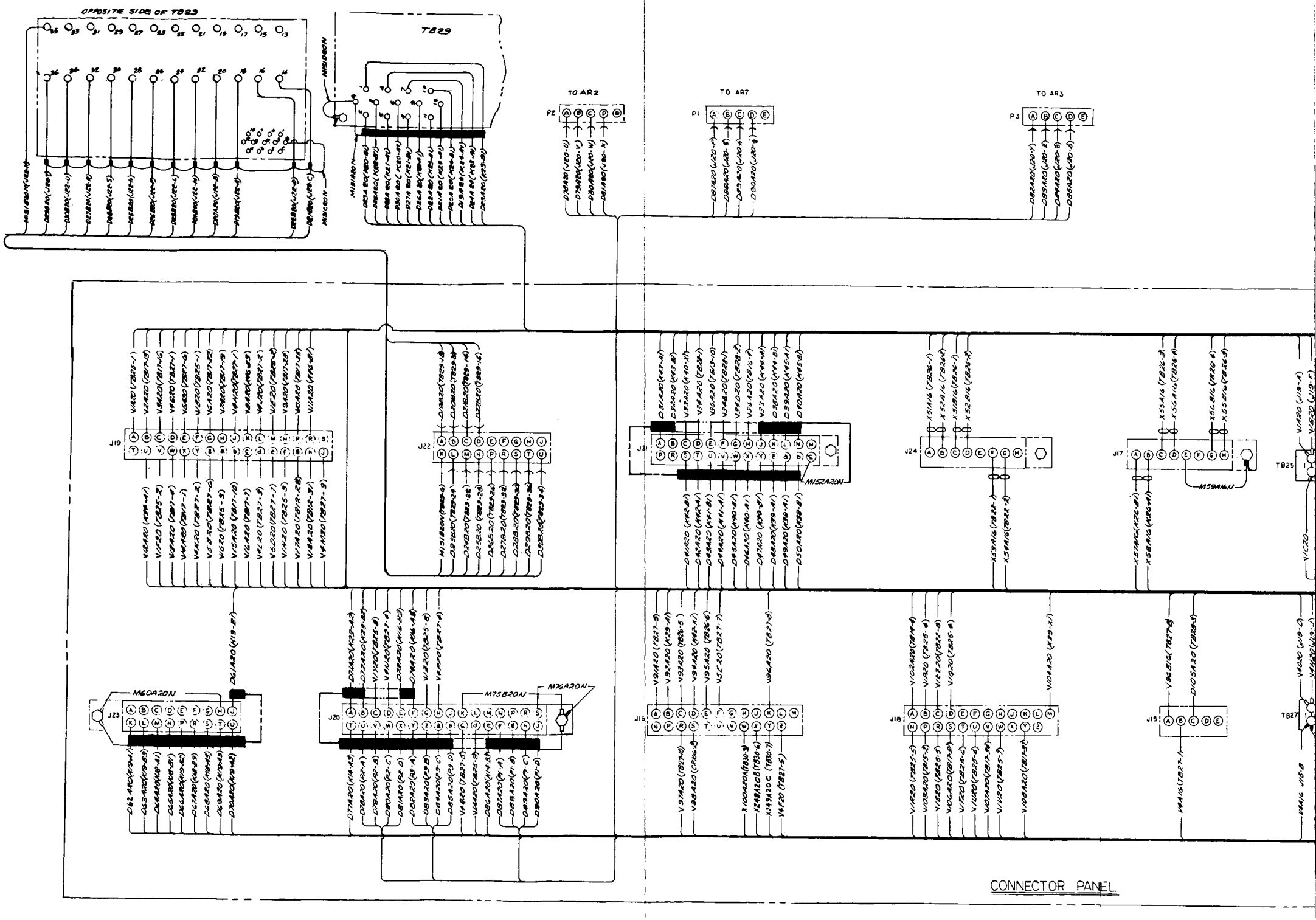
OPPOSITE SIDE OF TB23
TB29
TO AR2
TO AR7
TO AR3
P2
P1
P3
J19
J22
J21
J24
J17
TB25
J23
J20
J16
J18
J15
TB27
M60A20N
M75B20N
M76A20N
M15A20N
M59A16N
CONNECTOR PANEL

FOLD-OUT #1

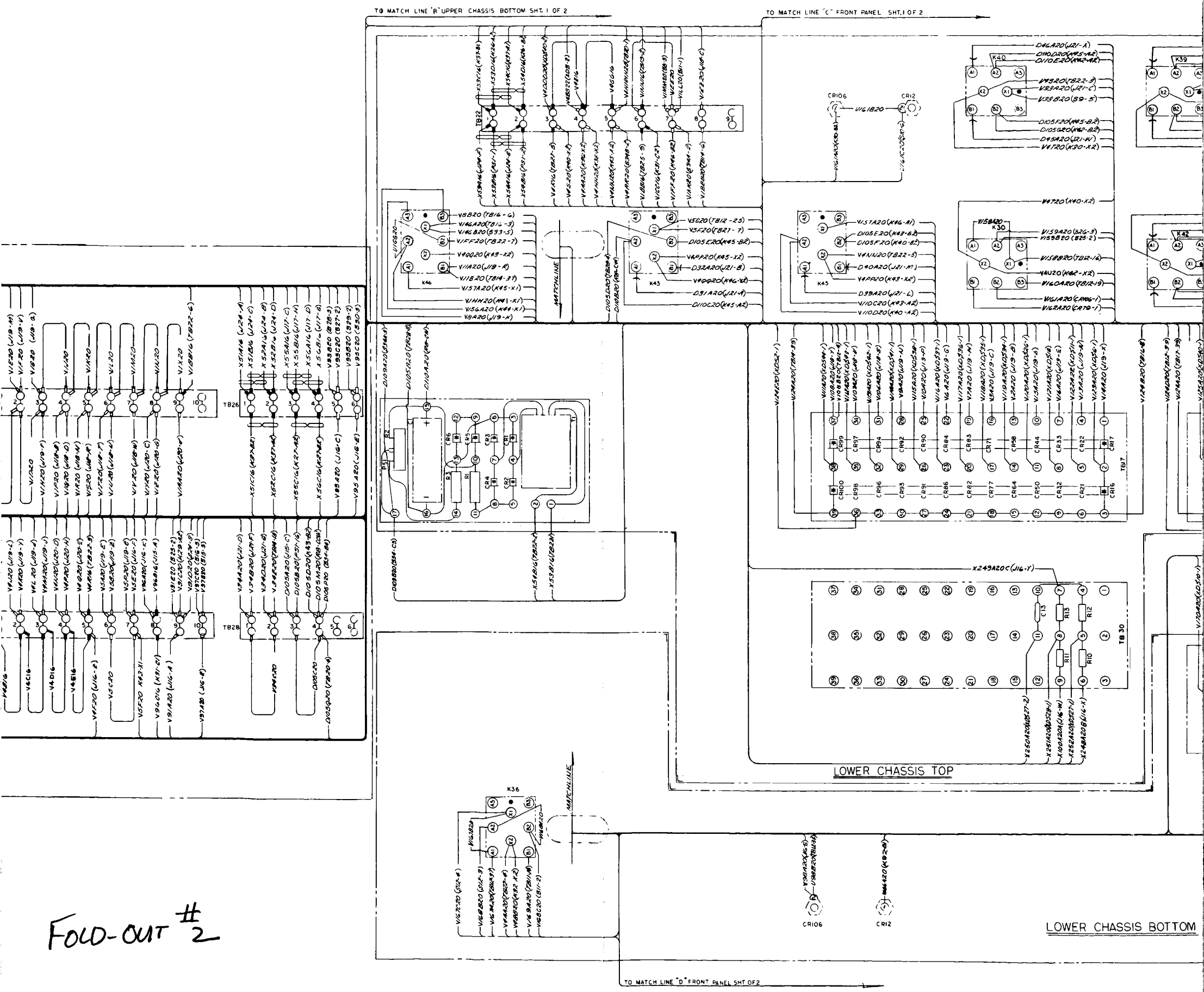
TO MATCH LINE "B" UPPER CHASSIS BOTTOM SHT. 1 OF 2
TO MATCH LINE "C" FRONT PANEL SHT. 1 OF 2
MATCHLINE
LOWER CHASSIS TOP
LOWER CHASSIS BOTTOM
TO MATCH LINE "D" FRONT PANEL SHT OF 2

FOLD-OUT #2

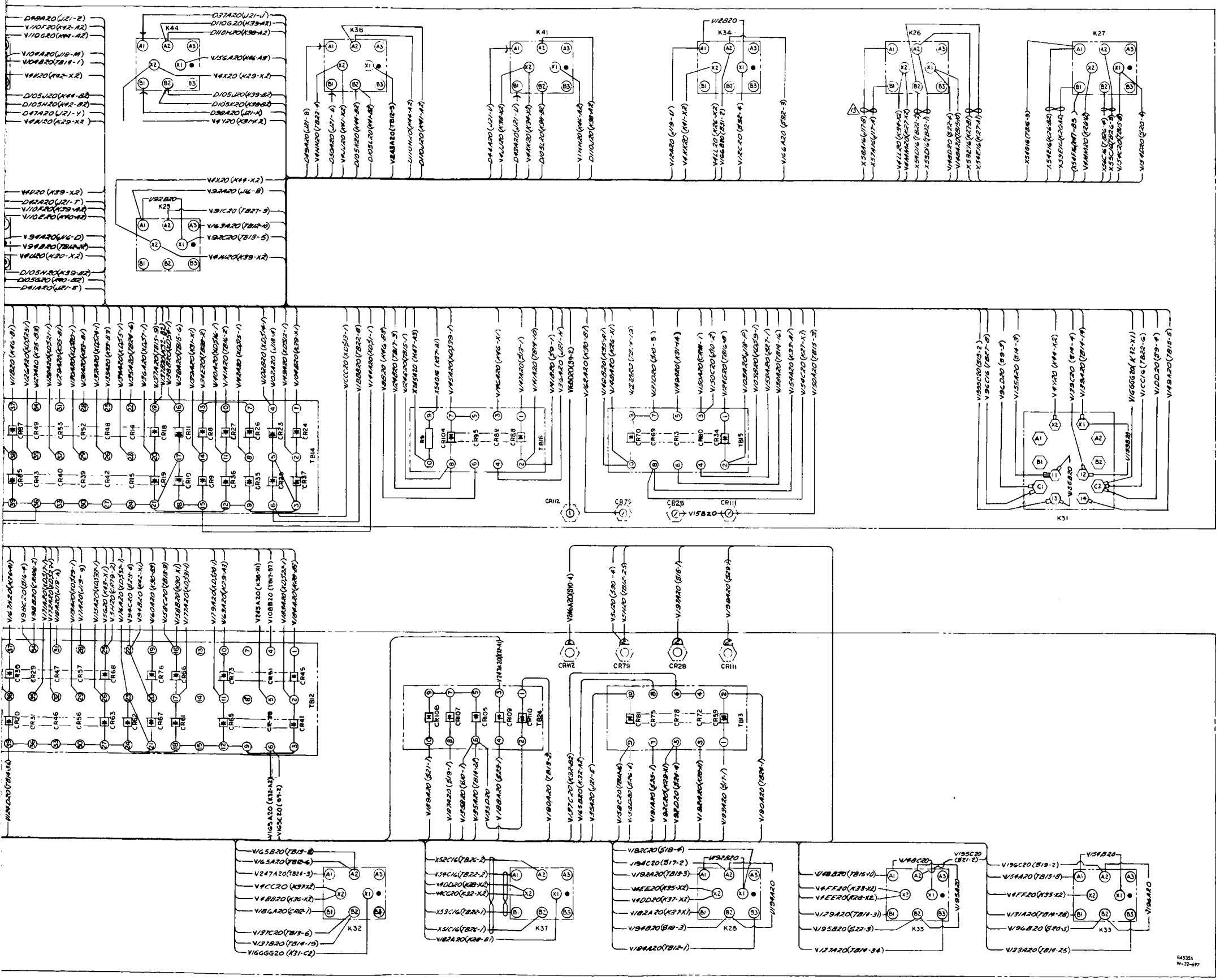

FOLD-OUT #3

Figure B-39. Control and Instrumentation Panel Wiring Diagram (Sheet 2 of 2)

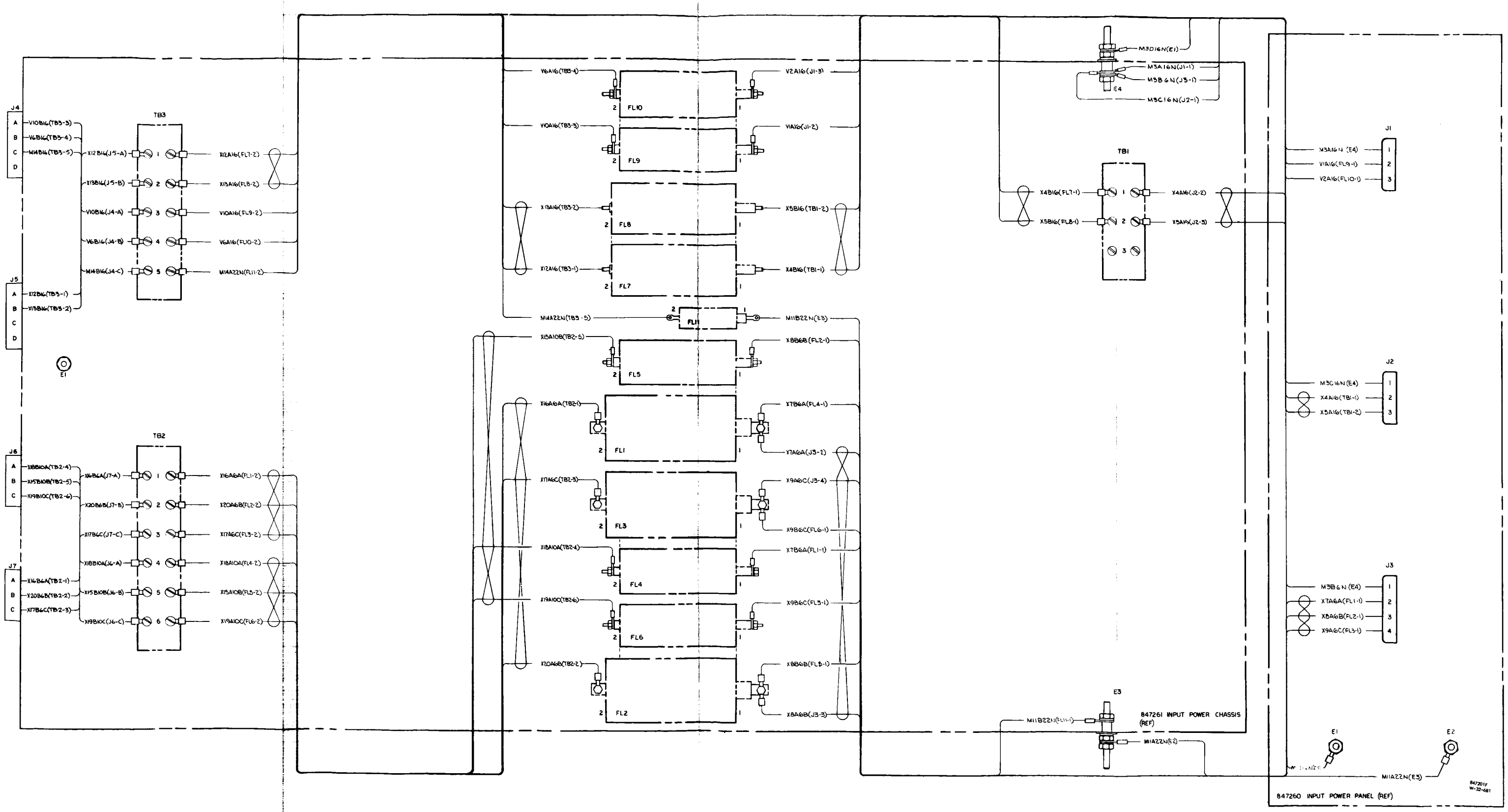

Figure B-40. Input Power Panel Wiring Diagram

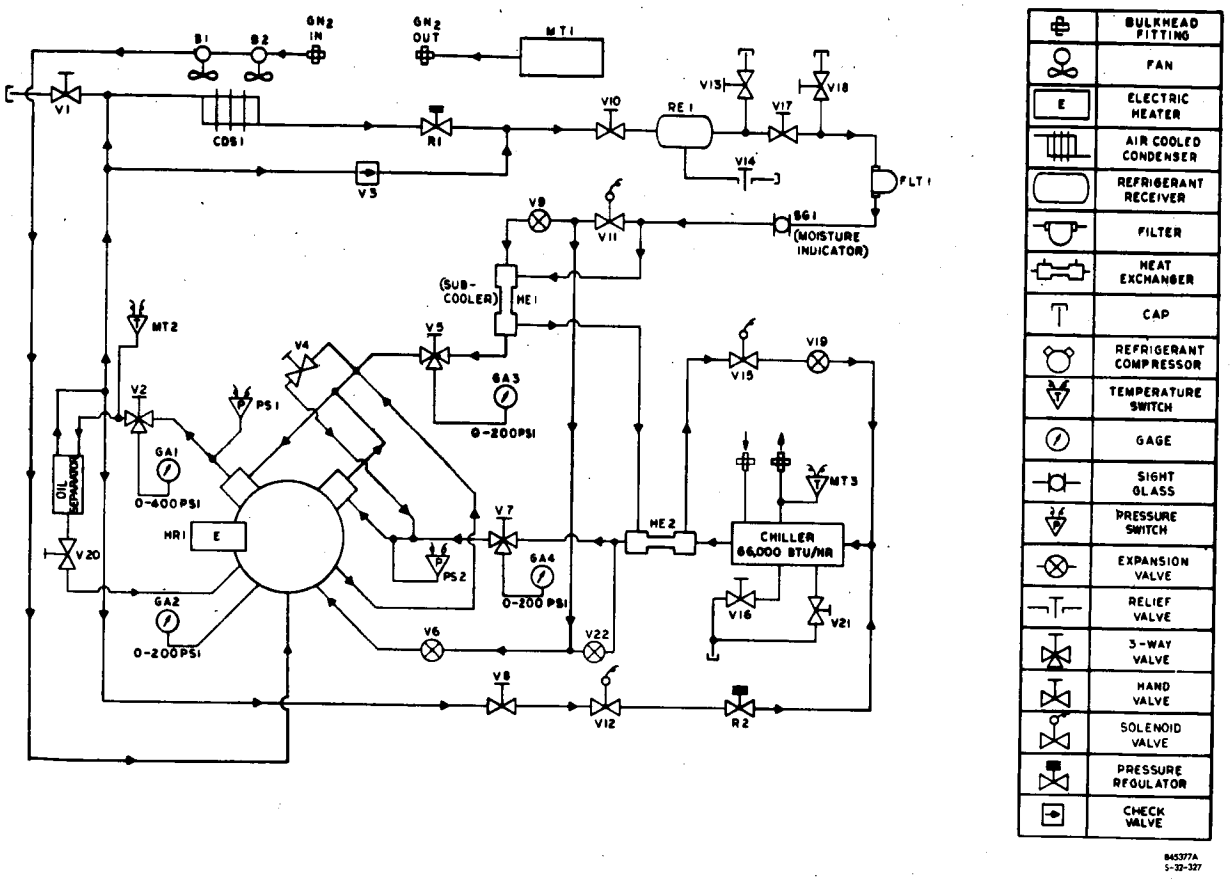

Figure B-41. Refrigeration System Fluid Schematic Diagram

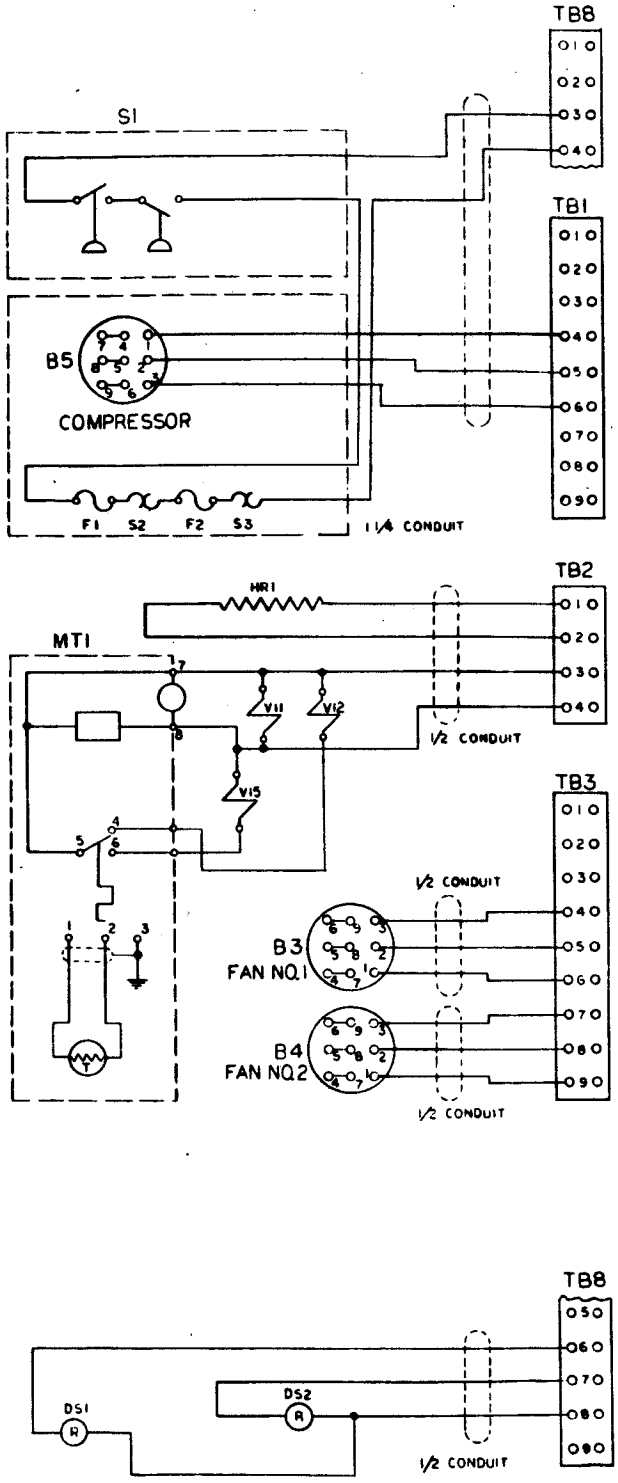

B3	440VAC 3Ø60~	MOTOR
B4	440VAC 3Ø60~	MOTOR
B5	440VAC 3Ø60~	MOTOR
F1	1 1/4 AMP	FUSE
F2	1 1/4 AMP	FUSE
HR1	115VAC 250W	HEATER
MT1	-25°F TO +55°F	CONTROLLER
S1	15" Hg 360PSI	HI-LO PRESS SWITCH
S2	OVERTEMP	THERMOSWITCH
S3	OVERTEMP	THERMOSTAT
V11	115 VAC	SOLENOID VALVE
V12	115 VAC	SOLENOID VALVE
V15	115 VAC	SOLENOID VALVE

Figure B-42. Refrigeration System Electrical Schematic Diagram