N74 29319

COMPUTER DIAGNOSTICS OF SHOCK PROCESSES

A.-A.P. Laurutis, B.V. Rudgal'vis
(Kaunas)

The vigorous development of modern technology and automation of scientific research and production processes requires more and more reliable operation of elements of control, regulation, automation and computer technology systems, in particular, precision apparatus when acted on by external mechanical overloads (shocks, vibrations, linear accelerations). For successful control of these phenomena, as well as for increase in vibration and shock strength of apparatus, a deep understanding of the dynamics of the overloads mentioned is necessary. The most dangerous of all possible shock processes in this regard are impulses, which, as a rule, have complex forms, wide-band spectra and negligible duration. Such processes do not yield to mathematical description; consequently, /104 their physical action on various microelements of precision radio measurement apparatus cannot be determined by this means. The spectral characteristics of complex impulse processes can be determined by visualization of the analysis of their scanned oscillograms, obtained by means of a high-speed recorder.

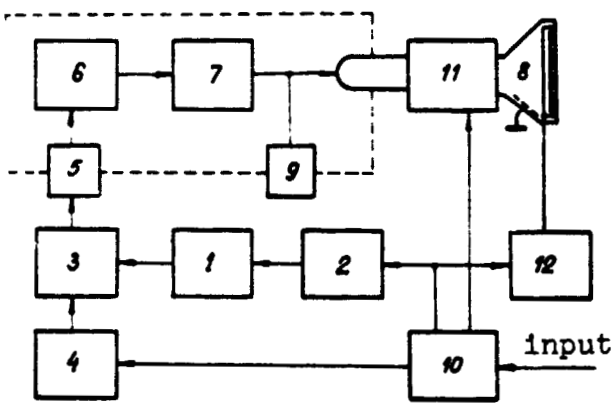

Fig. 1. Block diagram of ER-2 cathode ray electrostatic recorder.

The ER-2 wide-spectrum data, cathode ray electrostatic recorder, a block diagram and outward appearance of which are shown in Figs. 1 and 2, was specially developed for this. Special attention was given to precision in recording and the quality of the visual image in development of the recorder, since they fundamentally determine the precision of an experiment.

High quality of the visual image is guaranteed by a specially developed dynamic bias lighting system. High frequency generator 1 is connected with a device for fixing the duration of recording 2 and modulator 3, which, in turn, is connected with differentiating amplifier 4 and, through high-frequency, high-voltage dividing transformer 5, detector 6 and video amplifier 7, is connected to the cathode assembly of the cathode ray tube of electrostatic recorder 8, which is under high voltage from source 9. Recorded signal amplifier 10, connected with deflection system 11 and differentiating amplifier 4, also is connected to the device for fixing the recording duration 2

and time mark unit 12. In this manner, the signal being studied acts directly on the deflection of the recording tube beam and /105 the beam current increases to the necessary value, at the moment and for the duration of recording, and it is recorded as a function of the speed with which the recorded process takes place. Uniform thickness of the lines of the visual image is guaranteed by this, over a wide speed range of rapidly-changing data. Simultaneous recording of the zero line and time mark (or sampling spacing) facilitates the elimination of amplitude and time distortions, which appear, due to vibration of the mechanical scanner assembly. This is especially important in study of the dynamics of precision systems.

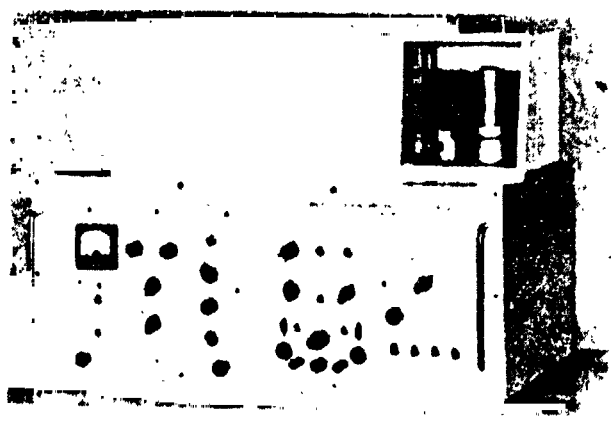

Fig. 2. External appearance of ER-2 electrostatic recorder.

The technical characteristics of the instrument are: maximum recording speed 2000 m/sec; data carrier feed speed up to 100 m/sec; recorded signal frequency range 0-50 kHz; maximum image sweep 100 mm; nonuniformity in line thickness, not more than 5% during measurement of the speed of flow of a process 100 times; recorded signal duration 0.0004-20 sec; time for production of visual image 60 sec.

The visualization of the pulse of an impact stand, obtained by means of this recorder, was processed by a Silhouette type automatic sampler and entered into the Minsk computer, for analysis according to the method presented.

In this case, the most important parameters are the complex /106 spectral density of the shock pulse, energy spectrum, effective pulse duration and effective spectrum width, respectively:

$$S(\omega) = \int_{\tau}^{t_0+\tau} q(t) e^{-j\omega t}\, dt;$$

$$W = \int_{0}^{\infty} [S(\omega)]^2\, d\omega;$$

$$\tau = \int_{t_0-\frac{\tau}{2}}^{t_0+\frac{\tau}{2}} q^2(t)\, dt = \varepsilon \int_{-\infty}^{\infty} q^2(t)\, dt;$$

$$\Delta f = \int_0^{2\pi\Delta f} [S(\omega)]^2 \, d\omega = \varepsilon \int_0^{\pi} [S(\omega)]^2 \, d\omega.$$

ε is the fraction of the total pulse energy arriving during an interval of time.

An analysis was made of the spectral density and energy spectrum as functions of the impact force, design of the stand and energy absorbed by the lining, rigidity of the base, etc. In this case, the solution was carried out according to these mechanical equations:

$$a_k = \frac{2}{N_r} \sum_{1}^{N_r} f(i\,\Delta t_r) \cos k\,\omega_r\, i.$$

$$b_k = \frac{2}{N_r} \sum_{1}^{N_r} f(i\,\Delta t_r) \sin k\,\omega_r\, i.$$

$$S(k) = \sqrt{a_k^2 + b_k^2}\,.$$

$$\varphi(k) = \arctan \frac{b(k)}{a(k)}\,.$$

$$\omega_r = 2\pi\,\Delta t_r.$$

Δt_r is the sampling interval in sec and k = 50 ... 30,000 is the frequency of the spectrum components.

A fragment of a shock pulse and examples of the shock stand spectral density are shown in Fig. 3a and b.

It was determined during the investigation that shock stand /108 pulses are random. Therefore, the method presented is incomplete. The information obtained was statistically processed.

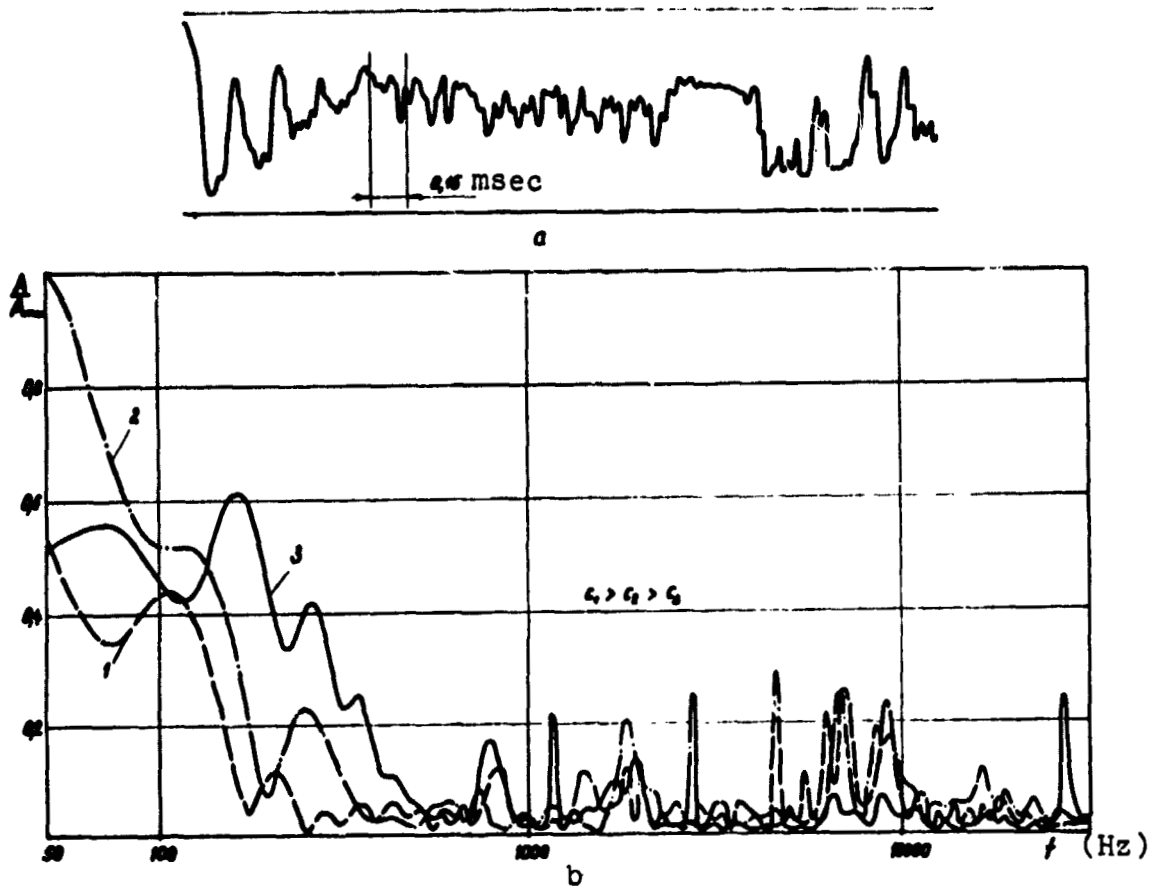

Fig. 3. a: Fragment of shock stand pulse visualization.
b: Spectral density of shock stand pulse, at various rigidities of the energy-absorbing lining.

REFERENCES

1. Laurutis, A.-A. P., K.M. Ragul'skis, and B.V. Rudgal'vis, "Device for Control of Electrostatic Recording of a Recording Cathode Ray Tube," Resheniye o vydache avtorskogo svidetel'stva po zayavke [Decision on Distribution of Authors Certificate on Claim]No. 1603309/26-9).

2. Rudgal'vis, B.V. and B.Ye. Gol'man, "Investigation of Shock Stand Pulses Used During Tests of a Relay," Voprosy radioelektroniki. ser. Tekhnika provodnoy svyazi, Ministry of the Radiotechnical Industry, USSR, No. 4, 1970.

3. Khar'kevich, A.A., Spektry i analiz [Spectra and Analysis], State Publishing House of Technical and Theoretical Literature, Moscow, 1962.