67-FM-97

NATIONAL AERONAUTICS AND SPACE ADMINISTRATION

MSC INTERNAL NOTE NO. 67-FM-97

August 2, 1967

AN EMPIRICAL EQUATION FOR THE CHARACTERISTIC VELOCITY OF OPTIMUM TLI MANEUVERS

By Francis Johnson, Jr.

Mission Analysis Branch

OCT 30 1968

955 L'Enfant Plaza North, S.W.
Washington, D. C. 20024

MISSION PLANNING AND ANALYSIS DIVISION

MANNED SPACECRAFT CENTER

HOUSTON, TEXAS

(NASA-TM-X-69624) AN EMPIRICAL EQUATION FOR THE CHARACTERISTICS VELOCITY OF OPTIMUM TLI MANEUVERS (NASA) 53 p

N74-70490

Unclas

00/99 16125

MSC INTERNAL NOTE NO. 67-FM-97

PROJECT APOLLO

AN EMPIRICAL EQUATION FOR THE CHARACTERISTIC VELOCITY OF OPTIMUM TLI MANEUVERS

By Francis Johnson, Jr.
Mission Analysis Branch

August 2, 1967

MISSION PLANNING AND ANALYSIS DIVISION
NATIONAL AERONAUTICS AND SPACE ADMINISTRATION
MANNED SPACECRAFT CENTER
HOUSTON, TEXAS

Approved: M P Frank
M. P. Frank III, Chief
Mission Analysis Branch

Approved: J P Mayer
John P. Mayer, Chief
Mission Planning and Analysis Division

CONTENTS

Section		Page
I	SUMMARY	1
II	INTRODUCTION	1
III	SYMBOLS	2
IV	THE USE OF δ AND σ AS VARIABLES IN TLI SIMULATION EQUATIONS	4
V	WHAT A TLI SIMULATION AND A TRAJECTORY ITERATOR MUST ACCOMPLISH	6
VI	THE USE OF DAZ AND TAON AS VARIABLES IN TLI SIMULATION EQUATIONS	9
VII	THE USE OF A TLI SIMULATION WITH DIFFERENT TRAJECTORY ITERATORS	11
VIII	PRINCIPLES USED IN DERIVING THE EMPIRICAL EQUATION FOR DV	12
IX	AN EMPIRICAL EQUATION FOR THE DV OF OPTIMUM TLI MANEUVERS	14
X	RESIDUAL ANALYSIS AND CONCLUSIONS	18
	REFERENCES	49

TABLES

Table		Page
I	DATA DEFINING OPTIMUM TLI MANEUVERS	20
II	PLANE CHANGE VARIABLES AND RESIDUALS OF DV EQUATION . .	34
III	SUMMARY OF RESIDUALS WHEN THE 16 CASES HAVING RESIDUALS GREATER THAN 7 m/sec ARE DELETED	48

AN EMPIRICAL EQUATION FOR THE CHARACTERISTIC VELOCITY OF OPTIMUM TLI MANEUVERS

By Francis Johnson, Jr.

I. SUMMARY

A single empirical equation expressing the characteristic velocity (DV) of optimum translunar injection (TLI) maneuvers has been derived to fit all of the data in reference 1 which describe 402 different optimum TLI thrust maneuvers. These data cover the trajectory energy ranges of both nominal and alternate missions and anticipated variations in both initial thrust-to-weight ratio and the radius of the circular earth-parking orbit. The geometric variables used in this DV equation are DAZ and GAN instead of the traditional TLI targeting elements δ and σ. The angles DAZ and GAN describe a specific TLI maneuver whereas δ and σ do not. The implementation of this type of TLI simulation equation with different types of trajectory iterators is discussed in detail. The use of these unconventional variables in the DV equation and its unconventional algebraic form are the direct result of unconventional principles followed in deriving it. These principles are described in detail. An analysis is made of the residuals of the equation at all 402 data points. This analysis indicates that the accuracy of 4 percent of the data is questionable. When this questionable data is deleted, the RMS residual of the equation in fitting the remaining 96 percent of the data is 0.87 m/sec.

II. INTRODUCTION

Earlier this year an empirical equation expressing DV was derived to fit all of the data describing optimum coplanar TLI maneuvers in reference 1. This coplanar DV equation and a listing of its residuals at all data points are presented in reference 2. The complete DV equation presented herein, which fits both coplanar and plane change data, was developed from this earlier coplanar DV equation.

The RMS residual of the coplanar DV equation was an impressively small 4.4 cm/sec. It was hoped that an RMS residual of the same order of magnitude could be maintained when the coplanar equation was expanded to also fit the plane change data. This objective was not realized because, in this author's opinion, the plane change data are not generally as accurate as the coplanar data.

Four conventional integer-power polynomials empirically expressing DV are presented in reference 1 with the TLI data. Each of these polynomials was derived to fit a different category of the data. These categories are defined by the range of trajectory energy (C3), whether or not the initial thrust-to-weight ratio (TTW) differs from 0.7173, and whether or not the circular orbit radius (r_o) differs from 6553.5077 km. Each of these categories contains both conplanar and plane change data.

The empirical equation presented in section IX differs from these four polynomials in two important respects. First, the algebraic form of the equation is vastly different from the conventional integer-power form of the polynomials. Second, the traditional TLI targeting elements δ and σ (see symbol table below) are not directly used in the equation as variables; instead, the geometric variables DAZ and GAN are used. These differences are the direct result of the rather unconventional methods used in deriving this empirical equation. These unconventional methods are described in section VIII. Simulation equations having different variables and their use with different types of trajectory iterators are discussed in sections IV through VII.

III. SYMBOLS

C3	trajectory energy; $C3 = V^2 - 2\,\mu/r$
DAZ	delta azimuth or plane change; inclination of resultant trajectory plane to parking orbit plane
DC	change in energy from that of circular orbit to C3; $DC = C3 + \mu/r_o$
DV	characteristic velocity of TLI maneuver
GAN	flight-path angle on hypothetical trajectory with energy C3 at position radius r_o having true anomaly TAON (see page 16)

I_{sp}	specific impulse
$\hat{M}$	unit TLI target vector
r_o	circular parking orbit radius
r_{pg}	radius of trajectory perigee
T_1, T_2, T_3	terms in empirical equation expressing DV, of the form $DV = T_1 + T_2 + T_3$
TAON	true anomaly of the node between the orbit and trajectory planes, as measured on the trajectory
TTW	thrust-to-weight ratio
V_o	vehicle velocity in circular orbit; $V_o = \sqrt{\mu/r_o}$
V_r	resultant vehicle velocity produced by a hypothetical impulsive maneuver achieving desired values of C3, DAZ, and TAON without a change in position radius (see page 15)
α	angle measured in orbit plane from position of thrust initiation to the perpendicular projection of $\hat{M}$ (see fig. 3)
β	angle measured in orbit plane from the position of thrust initiation to the node between the orbit and resultant trajectory planes (see fig. 3)
δ	declination of $\hat{M}$ with respect to the parking orbit plane (see fig. 1)
η	true anomaly of the position of thrust cutoff on the trajectory (see fig. 3)
μ	earth's gravitational constant
σ	angle between $\hat{M}$ and the hypersurface; "radius" of the hypersurface (see fig. 1)

IV. THE USE OF δ AND σ AS VARIABLES IN TLI SIMULATION EQUATIONS

The use of δ and σ as variables in TLI simulation equations stems from the use of TLI simulations with trajectory iterators which operate directly on $\hat{M}$ and the hypersurface as independent variables. The combination of this type of iterator and a TLI simulation is used to obtain trajectories having characteristics definable by specific values of four state variables at the moon, such as position coordinates and flight-path angle. As one might suspect, there will be more than one unique trajectory having such characteristics, and the problem becomes that of finding the trajectory attainable by the TLI maneuver with minimum DV; i.e., finding the optimum combination of TLI maneuver and trajectory. This is done by using $\hat{M}$ and the hypersurface.

The hypersurface represents a three-dimensional continuum of the positions of perigees, having the same time state variable, on trajectories having the same desired characteristics at the moon definable by four state variables. This hypersurface is approximated as a conical surface, having its apex at the earth's center, and having a circular cross section. To a reasonable approximation all of these trajectories have the same energy at perigee, and their planes share the central axis of the hypersurface as a common node. This central axis of the hypersurface is used as the TLI target vector, $\hat{M}$. It is important to remember that an $\hat{M}$ and hypersurface represent all trajectories having the same values of only four state variables at the moon. (There are exceptions to this since some combinations of state variables cannot be thus represented.) The three-dimensional geometry of an $\hat{M}$, hypersurface, and a parking orbit is usually illustrated two dimensionally by their intersections with an arbitrary earth-centered spherical surface, as shown in figure 1.

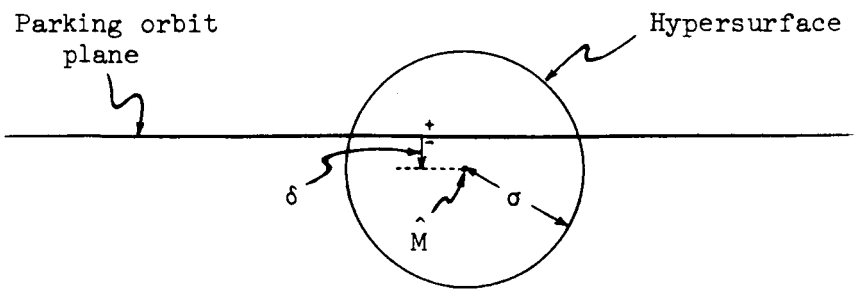

Figure 1.- Geometry of parking orbit, $\hat{M}$, and hypersurface.

The angle from $\hat{M}$ to the hypersurface is σ and is commonly referred to as the radius of the hypersurface. The position of $\hat{M}$ and the hypersurface relative to the parking orbit plane is defined by the angle δ, which is the declination of $\hat{M}$ relative to the orbital plane.

Consider next an inertially fixed $\hat{M}$ and hypersurface and a parking orbit with fixed launch time. For given TLI guidance equations, r_o, TTW, I_{sp}, and C3, there will be a continuum of possible TLI maneuvers which can "fly to" or fit this $\hat{M}$ and hypersurface (assuming δ is reasonably small). The limits of this continuum of possible maneuvers will be determined by hardware limitations. Some of the maneuvers within such a continuum are shown in figure 2.

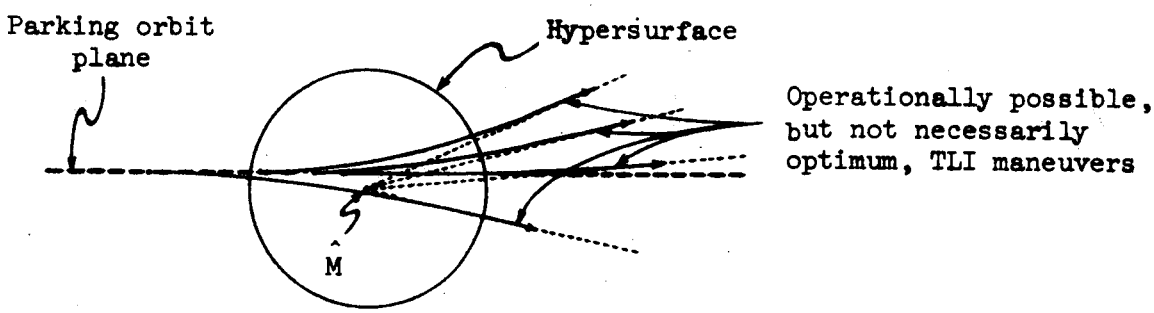

Figure 2.- Several TLI maneuvers "flying to" an $\hat{M}$ and hypersurface.

The maneuvers within this continuum will have different positions of thrust initiation on the orbit and different DAZ, and the resultant trajectories will have different values of TAON and r_{pg}. It is the task of the TLI simulation equations to define the maneuver within any such continuum having the minimum DV.

The trajectory iterator obtains desired trajectory characteristics by manipulating C3, σ, and the inertial position of $\hat{M}$ (thus varying δ). After any such manipulation, the TLI simulation equations are used to define the optimum TLI maneuver and state variables on the resultant trajectory. This trajectory is propagated and this iterative process is

repeated until acceptable convergence is achieved. It follows from the approximations made in using $\hat{M}$ and the hypersurface that the trajectory finally obtained in this process will be the one attainable with a minimum DV out of all possible trajectories having the desired characteristics.

These simulation equations are derived by fitting data describing a large number of optimum TLI maneuvers for different values of r_o, TTW, I_{sp}, C3, δ, and σ. Each of these maneuvers must be defined through calculus of variations. Such a listing of data is found in reference 1 (where I_{sp} is a constant 426 seconds). Simulation equations derived from this data for use with the trajectory iterator just described, will empirically express certain variables, which will define the specific optimum TLI maneuver and the resultant trajectory as functions of r_o, TTW, C3, δ, and σ. A set of variables defining the optimum TLI maneuver and the resultant trajectory are described in the following section.

V. WHAT A TLI SIMULATION AND A TRAJECTORY ITERATOR MUST ACCOMPLISH

The combination of a TLI simulation and a trajectory iterator must ultimately define the six items listed below.

1. Position of thrust initiation on the orbit
2. Orientation of the trajectory plane
3. Polar position of trajectory perigee
4. Position of thrust cutoff on the trajectory
5. Radius of trajectory perigee (r_{pg})
6. Characteristic velocity (DV) of the TLI maneuver

It is assumed that trajectory energy (C3) will always be defined by the trajectory iterator. Knowing DV (item 6), the duration (t_{bd}) of the maneuver from thrust initiation of cutoff can be obtained using the familiar rocket equation:

$$t_{bd} = \frac{I_{sp}}{TTW}\left(1 - e^{-\frac{DV}{g_o I_{sp}}}\right).$$

The importance of having some of these items defined will vary in different phases of the mission planning process. For instance, the definition of DV for purposes of optimization analysis is not necessary during the iterative calculation of a trajectory. The importance of having some of these items defined is also dependent upon the type of simulation employed, i.e., black box or impulsive. For instance, when using an impulsive simulation during a trajectory iteration, the definitions of the positions of thrust initiation and cutoff are not necessary. Nevertheless, at some time during the mission planning process all of the above six items must be defined by the TLI simulation-trajectory iterator combination. This is true regardless of what type of simulation is used (black box or impulsive) and regardless of how restrictive the desired trajectory characteristics are (thus determining what type of trajectory iterator is used).

The trajectory iterator described in section IV, which treats C3, σ, and the inertial position of $\hat{M}$ as independent variables, does not define any of these items. Consequently, all six items must be defined by the TLI simulation. In the following paragraphs, the variables used to define these six items are given. The TLI simulation equations for use with this type of iterator will empirically express these variables as functions of r_o, TTW, C3, δ, and σ (I_{sp} being fixed).

Item 1, the position of thrust initiation, is defined by the angle α, which is measured in the orbit plane from the position of thrust initiation to the perpendicular projection of $\hat{M}$.

Item 2, the orientation of the trajectory plane, can be defined by spherical trigonometry knowing δ and any one of several possible angles. One of these angles is that measured in the orbit plane from the perpendicular projection of $\hat{M}$ to the node between the orbit and trajectory planes. Traditionally, this angle has not been treated as a separate entity and thus it does not have an established character notation. This angle will be denoted herein by the collective notation $(\beta - \alpha)$. The angle α, used to define item 1, is well known and established in use. Likewise, the angle β, which is measured in the orbit plane from the position of thrust initiation to the node between the orbit and trajectory planes, is well know. The angle $(\beta - \alpha)$ is illustrated in figure 3.

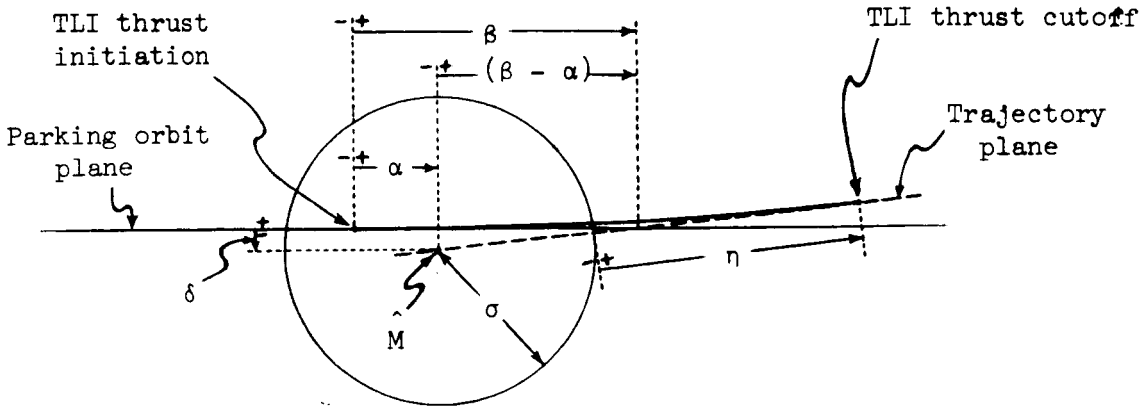

Figure 3.- Geometric variables used to describe a single TLI maneuver "flying to" an $\hat{M}$ and hypersurface.

Item 3, the polar position of perigee, by definition is at the intersection of the trajectory plane and the appropriate side of the hypersurface. Knowing the position of the hypersurface and the orientation of the trajectory plane (item 2), no additional variables are necessary to define item 3.

Item 4, the position of thrust cutoff, is defined by the angle η, once the polar position of perigee and the trajectory plane (items 2 and 3) are defined. η is the true anomaly of the position of thrust cutoff on the resultant trajectory.

Items 5 and 6, the radius of the trajectory perigee and DV, are defined directly by empirical equations expressing their values.

The osculating elements of the trajectory can be calculated using two-body equations if r_{pg} and C3 are known. With items 2 through 5 defined, the position and velocity state variables at thrust cutoff can be calculated using two-body equations. Knowing DV (and I_{sp} and TTW), the duration of the maneuver can be calculated using the familiar rocket equation.

Thus, the TLI simulation for use with a trajectory iterator operating directly on $\hat{M}$ and the hypersurface consists of five equations expressing α, β, η, r_{pg}, and DV as empirical functions of r_o, TTW, C3, δ, and σ. These equations are derived by fitting data of the type found in reference 1, where values of these variables are listed for 402 optimum TLI maneuvers as derived by calculus of variations.

Note that the accuracy of this complete simulation is very dependent on the accuracy of the angle $(\beta - \alpha)$. This angle defines item 2 (plane of the trajectory), but then the definitions of items 3 and 4 (positions of perigee and thrust cutoff) are dependent on the definition of item 2. Note also that the value of $(\beta - \alpha)$ is calculated as the difference between values of β and α obtained from empirical equations. These equations have inherent residual errors which can either cancel each other or accumulate when $(\beta - \alpha)$ is calculated.

VI. THE USE OF DAZ AND TAON AS VARIABLES IN TLI SIMULATION EQUATIONS

In the case of a trajectory iterator operating on $\hat{M}$ and hypersurface, there is a continuum of possible TLI maneuvers and trajectories having the desired characteristics from which an optimum maneuver-trajectory combination can be found. However, if the desired trajectory characteristics are made more restrictive, the dimensions of this continuum of possibilities are reduced in number. For example, if in addition to the position coordinates and flight-path angle, azimuth is also specified in defining the desired trajectory characteristics at the moon, the continuum of possible perigee positions is changed from a conical surface to a line on this surface. (This line of possible perigee positions would take the form of a single point on the circular cross section of a hypersurface at a given radius.) With these more restrictive trajectory characteristics, the problem of defining the one attainable with an optimum TLI maneuver is greatly simplified.

It is not necessary to use $\hat{M}$ and hypersurface in the iterative calculation of this optimum trajectory[1]. Instead, the iterator can operate directly on trajectory state variables. For instance, the iterator can manipulate the polar position of trajectory perigee, the orientation of the trajectory plane at perigee, and the trajectory energy. With launch time fixed, this is equivalent to the iterator's defining values of C3, DAZ and TAON as independent variables (see fig. 4). Notice that when this is done, the polar position of perigee and the trajectory plane orientation (items 2 and 3) are defined directly by the trajectory iterator. TLI simulation equations would then be used to define the remaining four items. These simulation equations would empirically express variables describing optimum TLI maneuvers as functions of r_o, TTW, C3, DAZ, and TAON (assuming I_{sp} is constant).

---

[1] This iteration can be thought of as flying to different polar positions on a hypersurface, but it can be seen that this is equivalent to the iterator's using DAZ and TAON as independent variables.

Only four empirical equations are necessary in this TLI simulation in order to define items 1, 4, 5, and 6 as listed in section V. The four variables expressed by these equations can be the same as expressed by four of the five TLI simulation equations used with the trajectory iterator operating on $\hat{M}$ and hypersurface. Figure 4 shows that the positions of thrust initiation and cutoff (items 1 and 4) are defined by the angles β and η. The radius of trajectory perigee and DV (items 5 and 6) are defined directly by empirical equations expressing their values.

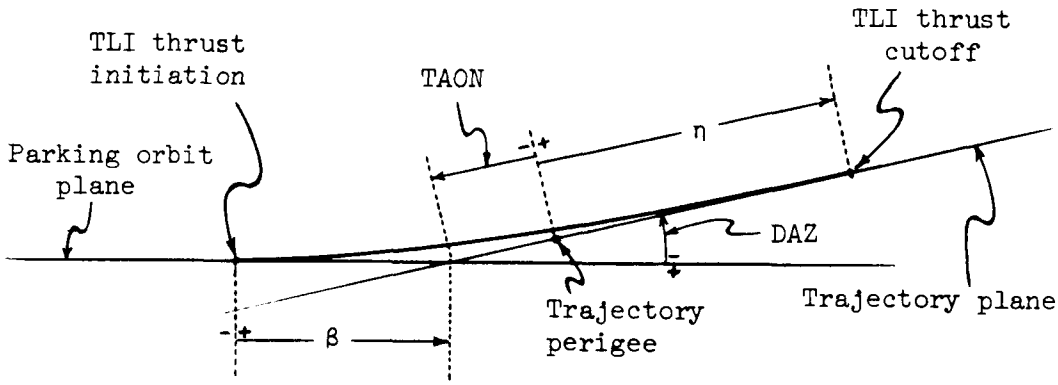

Figure 4.- Geometric variables describing a TLI maneuver.

Note that this TLI simulation, consisting of four equations using DAZ and TAON as independent variables, is used to define the boundaries of the actual maneuver and only the osculating elements of the resultant trajectory. This is in contrast to the TLI simulation consisting of five equations using δ and σ as independent variables, which is used to define the boundaries of the actual maneuver and all state variables on the resultant trajectory.

The four-equation simulation can be derived by fitting the data in reference 1. Since values of DAZ and TAON are not listed there, these angles must be calculated from the other angles listed using spherical trigonometry. However, these data describe TLI maneuvers which are optimum for the listed values of δ and σ. The question arises as to whether these same maneuvers are optimum for their respective values of DAZ and TAON. The brief analysis in the following paragraph shows that they are.

Consider any one TLI maneuver represented by the data in reference 1. This maneuver will be optimum for its specified values of δ and σ. This maneuver will have specific values of DAZ and TAON. Any other maneuver having the same values of r_o, TTW, and C3, which "flies to" these same values of DAZ and TAON more optimally, will also be flying to δ and σ more optimally. According to the calculus of variations procedure used in defining these maneuvers, a maneuver which flies to δ and σ more optimally does not exist. Therefore, the TLI maneuvers represented by the data in reference 1 are optimum for their respective values of DAZ and TAON.

The angles DAZ and TAON are more significant than δ and σ in describing a specific TLI maneuver. Since all TLI simulation equations are used to describe specific optimum maneuvers, one would expect that there would be advantages in using DAZ and TAON instead of δ and σ as independent variables in these equations. This was found to be the case in deriving the empirical equation for DV, presented in section IX. In the following section, it is shown how to use TLI simulation equations having DAZ and TAON instead of δ and σ as independent variables with a trajectory iterator which operates directly upon $\hat{M}$ and the hypersurface.

VII. THE USE OF A TLI SIMULATION WITH DIFFERENT TRAJECTORY ITERATORS

If a complete four-equation TLI simulation, consisting of equations expressing β, η, r_{pg}, and DV as empirical functions of r_o, TTW, C3, DAZ and TAON, were available, could these equations be used with a trajectory iterator which operates directly upon $\hat{M}$ and hypersurface? This type of trajectory iterator manipulates δ, σ, and C3 as independent variables in obtaining desired trajectory characteristics. It turns out that all that is needed for implementing this TLI simulation is the capability of empirically calculating the angle $(\beta - \alpha)$ for optimum maneuvers as a function of δ and σ. With values of δ and σ defined by the iterator and the value of $(\beta - \alpha)$ empirically calculated, the corresponding values of DAZ and TAON of the optimum maneuver can be calculated for use in the simulation equations in the following manner:

$$\mathrm{DAZ} = \arctan\left(\frac{\tan \delta}{\sin (\beta - \alpha)}\right)$$

$$\mathrm{TAON} = \arccos\left[\cos (\beta - \alpha) \cos \delta\right] - \sigma.$$

Using this procedure to calculate values of DAZ and TAON, the empirical equation for DV presented in section IX can be used with trajectory iterators which operate directly upon $\hat{M}$ and hypersurface. The values of $(\beta - \alpha)$ of optimum maneuvers can be calculated using the integer-power polynomials for β and α presented in reference 1.

Conversely, can the five equation TLI simulation, consisting of equations expressing α, β, η, r_{pg}, and DV as empirical functions of r_o, TTW, C3, δ, and σ, be used with a trajectory iterator which operates directly upon trajectory state variables? This type of iterator would be used to obtain trajectories having characteristics which are more restrictive than those attainable by the iterator operating on $\hat{M}$ and hypersurface. This trajectory iterator will directly define the trajectory plane and the polar position of perigee; it thus manipulates C3, DAZ, and TAON as independent variables. All that is needed to implement this TLI simulation is the capability of empirically calculating the angle $(\beta - \alpha)$ as a function of DAZ and TAON. It seems rather ironical, but what this amounts to is the definition of the $\hat{M}$ and hypersurface which a given maneuver with known values of DAZ, TAON, r_o, TTW, and C3, optimally flies to. With DAZ and TAON defined by the iterator and the value of $(\beta - \alpha)$ empirically calculated, the corresponding values of δ and σ for use in the five simulation equations[2] can be calculated in the following manner:

$$\delta = \arctan \left[\tan \text{DAZ} \sin (\beta - \alpha)\right]$$

$$\sigma = \arctan \left(\frac{\tan (\beta - \alpha)}{\cos \text{DAZ}}\right) - \text{TAON}.$$

VIII. PRINCIPLES USED IN DERIVING THE EMPIRICAL EQUATION FOR DV

The basic principle followed in developing the DV equation is as follows: If at all possible, start with an equation with an algebraic form which is known to exactly represent the phenomena involved under certain conditions, and then expand this limited closed-form solution using empirical coefficients or additive terms to represent all conditions. The following example is given to show the importance of this principle in developing any empirical equation.

---

[2]Since $(\beta - \alpha)$ has been empirically calculated as a function of DAZ and TAON, it is not necessary to empirically calculate both α and β as functions of δ and σ.

Imagine a point P on a rotating wheel or disc lying in the x-y plane with center at the origin as shown in figure 5. When time (t)

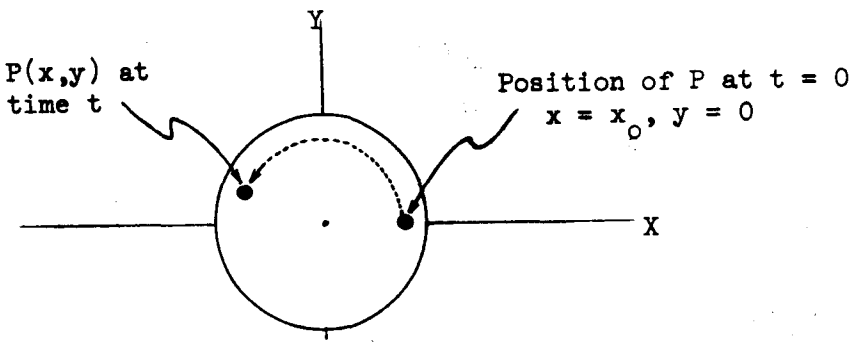

Figure 5.- Example curve fitting problem.

is 0, the Cartesian coordinates of P, denoted as x and y, are measured and found to be x_o, 0. Numerous measurements of x and y are taken at other times, thus providing much data describing the variations of x and y with time. The need arises for an equation expressing either x or y as a function of t so that values of x or y can be predicted between the times of data measurement (interpolation) and beyond the range of these times of measurement (extrapolation). The astute observation is made that x and y are not linear functions of t. Therefore, to cope with this observed nonlinearity, integer-power polynomials, having the form shown below, are fit to the data. These polynomials are the most convenient to use with least squares fitting techniques.

$$x(\text{or } y) = a_o + a_1 t + a_2 t^2 + a_3 t^3 + a_4 t^4 + a_5 t^5 + \ldots\ldots$$

This method of predicting x or y as a function of t is very inefficient. Even if the angular velocity (ω) of the disc and the position radius (R) of P are constant (and we have not stated that they are), this integer-power polynomial must be very long, having many constants and requiring much data in the fitting process in order to insure consistent accuracy. Obviously, if ω and R are constant, we know that the following closed-form expressions for x and y exist:

$$x = R \cos \omega t$$

$$y = R \sin \omega t$$

If ω and R vary with time, even if only linearly, the size of the integer-power polynomials expressing x and y must be extremely large in order to insure consistent accuracy. Obviously, greater accuracy will be achieved if the basic form of the empirical equation is chosen to be that of the exact closed-form solution when ω and R are constant (cosine for x, sine for y), and if curve fitting effort is spent either deriving empirical coefficients or additive terms expressing the effects of the variation of ω and R directly on x (or y), or better yet, deriving equations empirically expressing ω and R as functions of t.

Admittedly, the preceding example is extreme. All too often in situations where empirical equations are needed, there is no known closed-form equation exactly representing the phenomena involved under any imaginable conditions. Even so, analysis of the data will usually reveal the algebraic form of an equation which will fit better than an integer-power polynomial for a given number of constants. This is another important principle which should be followed in deriving any empirical equation. In the preceding example, analysis of the data would indicate that sine and cosine functions are ideally suited, even if the analyst did not know what the phenomena involved was. An integer-power polynomial should be resorted to only in the instance of a lack of time or capability.

IX. AN EMPIRICAL EQUATION FOR THE DV OF OPTIMUM TLI MANEUVERS

Following the principles described in the preceding section, we find that there exists an exact closed-form solution for DV when TTW is infinite. When TTW is infinite, instantaneous changes in velocity magnitude and direction are possible. These maneuvers are commonly referred to as impulsive. Note that in these impulsive maneuvers, the position state variables of the vehicle are unchanged.

Consider a vehicle with velocity V_o in a circular orbit with radius r_o. A TLI maneuver is to be performed resulting in specific values of C3, DAZ, and TAON. If TTW is infinite, the maneuver will be impulsive, and it will be performed at the node between the orbit and trajectory planes. Consequently, the position state variables of the trajectory at this node will be identical to those of orbit; i.e., at a true anomaly of TAON on the trajectory, the position radius will equal r_o. In order to calculate the DV of this impulsive maneuver, it is necessary to first determine the flight-path angle (GAN) on this trajectory where it intersects the orbit at the node. (The notation GAN is derived from Gamma At the Node.) This is easily done with two-body equations; GAN is the

flight-path angle on a trajectory with energy C3, at a position radius r_o, with true anomaly TAON. This impulsive maneuver is shown in figure 6.

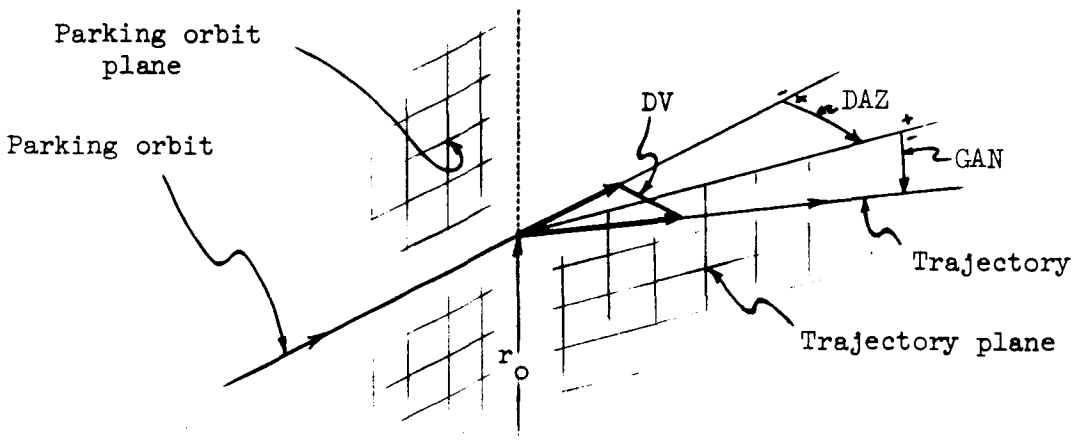

Figure 6.- Impulsive TLI maneuver with infinite TTW.

V_r is the resultant velocity magnitude of the impulsive maneuver. DV is the vector difference between the initial and resultant velocity vectors. The magnitude of DV is given by the following equation:

$$DV = \left(V_r^2 - 2V_rV_o \cos GAN \cos DAZ + V_o^2\right)^{\frac{1}{2}}$$

For coplanar maneuvers, this DV equation for infinte TTW should reduce to $DV = V_r - V_o$. It can be seen that this occurs only if both DAZ and GAN are zero. Only GAN can present a problem in coplanar cases; DAZ will by definition be zero. GAN is by definition the trajectory flight-path angle at the node between the orbit and trajectory planes, but in coplanar cases this node is undefined. Thus, in subsequent implementation, care must be taken to define TAON (and thus GAN) as zero in coplanar cases.

Following the principles described in the preceding section, the complete empirical equation, expressing DV for optimum TLI maneuvers with a realistic finite TTW, was developed around the above equation expressing DV when TTW is infinite. The complete equation is of the

following form. It consists of three major terms, which we will denote as T_1, T_2, and T_3 and describe separately.

$$DV = T_1 + T_2 + T_3$$

The variables C3 and TAON do not appear in any of these terms directly; instead, they are replaced by DC and GAN which are functions of C3 and TAON. All of the variables and their respective units for use in T_1, T_2, and T_3 are as follows:

μ = earth's gravitational constant in km^3/sec^2

r_o = circular orbit radius in km

TTW = initial thrust-to-weight ratio

DC = the change in energy from that of circular orbit to C3 in $(km/sec)^2$;

$$DC = C3 + \mu/r_o$$

where

$$C3 = V^2 - \frac{2\mu}{r}$$

GAN = flight-path angle at the node between orbit and trajectory planes on a hypothetical trajectory resulting from an impulsive maneuver (TTW = ∞) with no discontinuity in position state variables. Note that GAN is not a flight-path angle on the "real" trajectory achieved by the actual TLI maneuver with finite TTW. As described earlier, GAN is the flight-path angle at a position radius r_o, with true anomaly TAON, on a trajectory with energy C3. Also note that in coplanar cases, GAN must be defined as zero.

The first term (T_1) is the basic DV equation described on the preceding pages which expresses the DV of a hypothetical impulsive maneuver with infinite TTW. Note that T_1 is not empirical, being derived from theory, not from the curve fitting of data. Expressing V_o and V_r in terms of DC and r_o, the expression for T_1 takes

the following form:

$$T_1(\text{km/sec}) = \left(DC + \frac{2\mu}{r_o} - 2 \cos DAZ \cos GAN \left[\frac{\mu}{r_o}\left(DC + \frac{\mu}{r_o}\right)\right]^{\frac{1}{2}}\right)^{\frac{1}{2}}$$

The second term (T_2) represents the increase in DV for coplanar maneuvers due to finite TTW.

$$T_2(\text{km/sec}) = \frac{(DC - 11.61)^2}{TTW}\left(2.7022098 - \frac{r_o}{3850.0}\right)\left(\frac{2.0264543 \times 10^{-6}}{TTW} + 3.6327648 \times 10^{-8}\right)$$

T_2 is always positive. Note that the limit of T_2 is zero as TTW becomes infinite. The inverse proportionality between T_2 and TTW^2 which causes this was found to be extremely binding. This expression for T_2 is actually the major part of the equation for coplanar DV presented in reference 2. The algebraic form of this expression for T_2 was derived entirely from empirical curve fitting. There is absolutely nothing sacred about this form, except perhaps the inverse proportionality to TTW^2. Accuracy can be improved either by going to a different algebraic form or by "tuning" the constants in the form presented here.

The third term (T_3) represents the change in DV due to finite TTW when a plane change is introduced.

$$T_3(\text{km/sec}) = \frac{-\sin^2(GAN)}{0.00968\sqrt{DC} + \left[1 - \cos(12.5\ DAZ)\right] TTW^2/B}$$

where

$$B = -8.5067188 \times 10^{-3}DC + 1.07763205 \times 10^{-3}DC^2 - 6.0694218 \times 10^{-6}DC^3$$

T_3 is always negative. This expression for T_3 is absolutely empirical being derived entirely through curve fitting. Consequently, there is nothing sacred about this algebraic form, except perhaps the proportionality of T_3 to $\sin^2$ GAN, which was found to be very binding. Accuracy can be improved by either going to a different algebraic form or by "tuning" the constants in the form presented here.

X. RESIDUAL ANALYSIS AND CONCLUSIONS

Table I presents all of the TLI data in reference 1. In total, 402 optimum TLI maneuvers are represented. Each maneuver or data case has been given an arbitrary reference number. This is done to aid in referring to table II where values of the following are given for each data case:

1. DC, DAZ, TAON, and GAN.

2. Actual value of DV repeated from table I.

3. Value of DV as empirically calculated using the equation of the form $DV = T_1 + T_2 + T_3$.

4. The residual: calculated DV - actual DV

The RMS residual of all 402 cases is an objectionably large 7.2 m/s. Looking over the list of residuals, it is noted that only 16 of them, representing 4 percent of the data, have residuals of over 7 m/s. It is significant that most of these 16 data cases have σ of 2°.

All of the cases for which σ is 2° have relatively large values of DAZ and GAN. If all of these data had large residuals, the obvious conclusion would be that the empirical equation is inaccurate when DAZ and GAN are large. The listing of residuals in table II shows that this is not so. This author concludes that the accuracy of some of the data should be questioned.

When the 16 cases with residuals greater than 7 m/s are deleted, the RMS residual of the equation, with constants unchanged, obtained in fitting the remaining 386 cases (96 percent of the data) drops to 0.87 m/s (2.86 fps). These results are summarized in table III. Remember that this equation was derived to fit all 402 cases, including the 16 questionable ones. The size of this RMS residual in fitting the 386 cases can be further decreased by "tuning" the constants in the existing equation or by going to different algebraic forms. However, this amounts to the very questionable practice of eliminating large residuals by eliminating data.

Before this is done, or for that matter, before any more effort is expended in developing empirical TLI simulation equations, the accuracy of some of the data to which these equations are fit should be ascertained. Reference numbers of the most questionable data are given with table III. The possibility of misprints in the data as published in reference 1 or in this memorandum should be eliminated first. Then, if the accuracy of any of this data is found inadequate, in preference to just throwing this data out, it should be run through the calculus of variations procedure again.

With a more accurate set of data, an empirical equation of the type presented herein can be fit with smaller residuals. Also, it is expected that the integer-power polynomials can be fit to this improved data with residuals smaller than those published in reference 1. The possibility then arises of one integer-power polynomial fitting all of this improved data with acceptably small residuals.

TABLE I.- DATA DEFINING OPTIMUM TLI MANEUVERS[a]

DATA REF	THRUST WEIGHT	ORBIT RADIUS	C3	DELTA	SIGMA	ALFA	BETA	ETA	DV	PERIGEE RADIUS	DATA REF
1	0.62980	6553.5077	-0.5	0.	2.0	12.000	14.000	14.952	3.219973	6582.785	1
2	0.62980	6553.5077	-0.5	0.	8.0	6.000	14.000	14.952	3.219973	6582.744	2
3	0.62980	6553.5077	-0.5	0.	15.0	-1.000	14.000	14.952	3.219973	6582.750	3
4	0.62980	6553.5077	-2.1	0.	2.0	11.746	13.746	14.689	3.146262	6581.429	4
5	0.62980	6553.5077	-2.1	0.	8.0	5.746	13.746	14.689	3.146262	6581.388	5
6	0.62980	6553.5077	-2.1	0.	15.0	-1.254	13.746	14.689	3.146262	6581.388	6
7	0.62980	6553.5077	-5.0	0.	2.0	11.293	13.293	14.183	3.011467	6579.033	7
8	0.62980	6553.5077	-5.0	0.	8.0	5.293	13.293	14.183	3.011467	6579.027	8
9	0.62980	6553.5077	-5.0	0.	15.0	-1.707	13.293	14.183	3.011467	6579.030	9
10	0.62980	6553.5077	-25.0	0.	2.0	7.677	9.677	10.168	2.034986	6564.333	10
11	0.62980	6553.5077	-25.0	0.	8.0	1.677	9.677	10.168	2.034986	6564.280	11
12	0.62980	6553.5077	-25.0	0.	15.0	-5.323	9.677	10.168	2.034986	6564.278	12
13	0.62980	6553.5077	-45.0	0.	2.0	2.968	4.968	5.016	0.956082	6555.097	13
14	0.62980	6553.5077	-45.0	0.	8.0	-3.032	4.968	5.016	0.956082	6555.113	14
15	0.62980	6553.5077	-45.0	0.	15.0	-10.032	4.968	5.016	0.956082	6555.114	15
16	0.71730	6553.5077	-0.5	0.	2.0	10.291	12.291	13.170	3.217186	6576.212	16
17	0.71730	6553.5077	-0.5	0.	6.0	6.291	12.291	13.171	3.217184	6576.044	17
18	0.71730	6553.5077	-0.5	0.	10.0	2.291	12.291	13.170	3.217184	6576.053	18
19	0.71730	6553.5077	-0.5	0.	15.0	-2.709	12.291	13.170	3.217184	6576.040	19
20	0.71730	6553.5077	-1.0	0.	2.0	10.224	12.224	13.096	3.194256	6575.899	20
21	0.71730	6553.5077	-1.0	0.	6.0	6.224	12.224	13.096	3.194255	6575.727	21
22	0.71730	6553.5077	-1.0	0.	10.0	2.224	12.224	13.096	3.194255	6575.729	22
23	0.71730	6553.5077	-1.0	0.	15.0	-2.776	12.224	13.096	3.194256	6575.719	23
24	0.71730	6553.5077	-1.5	0.	2.0	10.157	12.157	13.021	3.171282	6575.585	24
25	0.71730	6553.5077	-1.5	0.	6.0	6.157	12.157	13.020	3.171281	6575.371	25
26	0.71730	6553.5077	-1.5	0.	10.0	2.157	12.157	13.021	3.171281	6575.406	26
27	0.71730	6553.5077	-1.5	0.	15.0	-2.843	12.157	13.021	3.171281	6575.398	27
28	0.71730	6553.5077	-2.1	0.	2.0	10.076	12.076	12.930	3.143652	6575.209	28
29	0.71730	6553.5077	-2.1	0.	6.0	6.076	12.076	12.930	3.143652	6575.029	29
30	0.71730	6553.5077	-2.1	0.	10.0	2.076	12.076	12.930	3.143657	6575.021	30

[a]From reference 1.

TABLE I.- DATA DEFINING OPTIMUM TLI MANEUVERS[a] - Continued

DATA REF	THRUST WEIGHT	ORBIT RADIUS	C3	DELTA	SIGMA	ALFA	BETA	ETA	DV	PERIGEE RADIUS	DATA REF
31	0.71730	6553.5077	-2.1	0.	15.0	-2.924	12.076	12.930	3.143652	6575.014	31
32	0.71730	6553.5077	-5.0	0.	2.0	9.674	11.674	12.484	3.009165	6573.169	32
33	0.71730	6553.5077	-5.0	0.	6.0	5.674	11.674	12.484	3.009165	6573.168	33
34	0.71730	6553.5077	-5.0	0.	10.0	1.674	11.674	12.484	3.009165	6573.178	34
35	0.71730	6553.5077	-5.0	0.	15.0	-3.326	11.674	12.484	3.009165	6573.177	35
36	0.71730	6553.5077	-15.0	0.	2.0	8.182	10.182	10.819	2.532698	6567.143	36
37	0.71730	6553.5077	-15.0	0.	6.0	4.182	10.182	10.819	2.532698	6567.152	37
38	0.71730	6553.5077	-15.0	0.	10.0	0.182	10.182	10.819	2.532698	6567.141	38
39	0.71730	6553.5077	-15.0	0.	15.0	-4.818	10.182	10.819	2.532698	6567.141	39
40	0.71730	6553.5077	-25.0	0.	2.0	6.500	8.500	8.933	2.034293	6561.851	40
41	0.71730	6553.5077	-25.0	0.	6.0	2.500	8.500	8.934	2.034293	6561.814	41
42	0.71730	6553.5077	-25.0	0.	10.0	-1.500	8.500	8.933	2.034293	6561.810	42
43	0.71730	6553.5077	-25.0	0.	15.0	-6.500	8.500	8.933	2.034293	6561.810	43
44	0.71730	6553.5077	-35.0	0.	2.0	4.600	6.600	6.787	1.510341	6557.559	44
45	0.71730	6553.5077	-35.0	0.	6.0	0.600	6.600	6.786	1.510341	6557.549	45
46	0.71730	6553.5077	-35.0	0.	10.0	-3.400	6.600	6.786	1.510341	6557.550	46
47	0.71730	6553.5077	-35.0	0.	15.0	-8.400	6.600	6.787	1.510341	6557.559	47
48	0.71730	6553.5077	-45.0	0.	2.0	2.361	4.361	4.407	0.956030	6554.748	48
49	0.71730	6553.5077	-45.0	0.	6.0	-1.639	4.361	4.406	0.956030	6554.742	49
50	0.71730	6553.5077	-45.0	0.	10.0	-5.639	4.361	4.406	0.956030	6554.746	50
51	0.71730	6553.5077	-45.0	0.	15.0	-10.639	4.361	4.406	0.956030	6554.747	51
52	0.80480	6553.5077	-0.5	0.	2.0	9.000	11.000	11.720	3.215250	6571.381	52
53	0.80480	6553.5077	-0.5	0.	8.0	3.000	11.000	11.720	3.215250	6571.424	53
54	0.80480	6553.5077	-0.5	0.	15.0	-4.000	11.000	11.720	3.215250	6571.401	54
55	0.80480	6553.5077	-2.1	0.	2.0	8.751	10.751	11.560	3.141839	6570.524	55
56	0.80480	6553.5077	-2.1	0.	8.0	2.751	10.751	11.560	3.141839	6570.604	56
57	0.80480	6553.5077	-2.1	0.	15.0	-4.249	10.751	11.560	3.141839	6570.590	57
58	0.80480	6553.5077	-5.0	0.	2.0	8.384	10.384	11.168	3.007569	6568.997	58
59	0.80480	6553.5077	-5.0	0.	8.0	2.384	10.384	11.168	3.007568	6569.139	59
60	0.80480	6553.5077	-5.0	0.	15.0	-4.616	10.384	11.168	3.007569	6569.131	60

[a]From reference 1.

TABLE I.- DATA DEFINING OPTIMUM TLI MANEUVERS[a] - Continued

DATA REF	THRUST WEIGHT	ORBIT RADIUS	C3	DELTA	SIGMA	ALFA	BETA	ETA	DV	PERIGEE RADIUS	DATA REF
61	0.80480	6553.5077	-25.0	0.	2.0	5.500	7.500	8.044	2.033818	6560.147	61
62	0.80480	6553.5077	-25.0	0.	8.0	-0.500	7.500	8.044	2.033817	6560.105	62
63	0.80480	6553.5077	-25.0	0.	15.0	-7.500	7.500	8.043	2.033817	6560.104	63
64	0.80480	6553.5077	-45.0	0.	2.0	1.800	3.800	4.015	0.955997	6554.493	64
65	0.80480	6553.5077	-45.0	0.	8.0	-4.200	3.800	4.015	0.955997	6554.492	65
66	0.80480	6553.5077	-45.0	0.	15.0	-11.200	3.800	4.015	0.955997	6554.493	66
67	0.67357	6508.5077	-0.5	0.	2.0	11.261	13.261	14.173	3.229983	6534.579	67
68	0.67357	6508.5077	-0.5	0.	15.0	-1.739	13.261	14.173	3.229983	6534.539	68
69	0.67357	6508.5077	-2.1	0.	2.0	11.000	13.000	13.947	3.156609	6533.473	69
70	0.67357	6508.5077	-2.1	0.	15.0	-2.000	13.000	13.947	3.156609	6533.364	70
71	0.76105	6508.5077	-0.5	0.	2.0	9.738	11.738	12.576	3.227605	6528.883	71
72	0.76105	6508.5077	-0.5	0.	15.0	-3.262	11.738	12.576	3.227605	6528.892	72
73	0.76105	6508.5077	-2.1	0.	2.0	9.532	11.532	12.349	3.154382	6527.956	73
74	0.76105	6508.5077	-2.1	0.	15.0	-3.468	11.532	12.349	3.154382	6527.972	74
75	0.71730	6553.5077	-0.5	0.50	2.0	7.758	24.146	15.897	3.267394	6572.759	75
76	0.71730	6553.5077	-0.5	0.50	6.0	4.433	19.304	15.153	3.249525	6574.453	76
77	0.71730	6553.5077	-0.5	0.50	10.0	1.156	17.228	14.389	3.237624	6575.564	77
78	0.71730	6553.5077	-0.5	0.50	15.0	-3.284	15.767	13.799	3.229246	6576.008	78
79	0.71730	6553.5077	-0.5	1.00	2.0	3.949	19.200	20.072	3.359711	6554.273	79
80	0.71730	6553.5077	-0.5	1.00	6.0	1.723	17.756	18.147	3.317142	6565.135	80
81	0.71730	6553.5077	-0.5	1.00	10.0	-0.841	16.645	16.597	3.286504	6571.207	81
82	0.71730	6553.5077	-0.5	1.00	15.0	-4.566	15.612	15.228	3.261563	6574.582	82
83	0.71730	6553.5077	-0.5	1.50	2.0	1.403	18.066	23.024	3.456085	6531.844	83
84	0.71730	6553.5077	-0.5	1.50	6.0	-0.501	17.139	20.712	3.395832	6550.775	84
85	0.71730	6553.5077	-0.5	1.50	10.0	-2.782	16.329	18.817	3.349180	6562.354	85
86	0.71730	6553.5077	-0.5	1.50	15.0	-6.016	15.515	16.891	3.307502	6570.601	86
87	0.71730	6553.5077	-0.5	2.00	2.0	-0.597	17.645	25.432	3.552359	6507.941	87
88	0.71730	6553.5077	-0.5	2.00	6.0	-2.450	16.867	23.019	3.478625	6532.789	88
89	0.71730	6553.5077	-0.5	2.00	10.0	-4.474	16.204	20.823	3.418943	6550.639	89
90	0.71730	6553.5077	-0.5	2.00	15.0	-7.398	15.493	18.531	3.362234	6564.309	90

[a]From reference 1.

TABLE I.- DATA DEFINING OPTIMUM TLI MANEUVERS[a] - Continued

DATA REF	THRUST WEIGHT	ORBIT RADIUS	C3	SIGMA DELTA		BETA ALFA		BETA ETA	DV	PERIGEE RADIUS	DATA REF
91	0.71730	6553.5077	-1.0	0.50	2.0	7.636	23.820	15.882	3.245001	6572.308	91
92	0.71730	6553.5077	-1.0	0.50	6.0	4.339	19.137	15.109	3.226878	6574.087	92
93	0.71730	6553.5077	-1.0	0.50	10.0	1.075	17.099	14.330	3.214852	6575.230	93
94	0.71730	6553.5077	-1.0	0.50	15.0	-3.358	15.659	13.732	3.206398	6575.684	94
95	0.71730	6553.5077	-1.0	1.00	2.0	3.822	19.026	20.067	3.337594	6553.633	95
96	0.71730	6553.5077	-1.0	1.00	6.0	1.609	17.613	18.125	3.294784	6564.633	96
97	0.71730	6553.5077	-1.0	1.00	10.0	-0.934	16.525	16.553	3.263981	6570.819	97
98	0.71730	6553.5077	-1.0	1.00	15.0	-4.652	15.506	15.175	3.238894	6574.230	98
99	0.71730	6553.5077	-1.0	1.50	2.0	1.313	17.939	22.987	3.434066	6531.486	99
100	0.71730	6553.5077	-1.0	1.50	6.0	-0.639	17.008	20.717	3.373666	6550.025	100
101	0.71730	6553.5077	-1.0	1.50	10.0	-2.886	16.216	18.789	3.326868	6561.880	101
102	0.71730	6553.5077	-1.0	1.50	15.0	-6.106	15.415	16.845	3.285014	6570.237	102
103	0.71730	6553.5077	-1.0	2.00	2.0	-0.687	17.531	25.398	3.530415	6507.613	103
104	0.71730	6553.5077	-1.0	2.00	6.0	-2.561	16.754	23.002	3.456580	6532.205	104
105	0.71730	6553.5077	-1.0	2.00	10.0	-4.577	16.099	20.795	3.396802	6550.144	105
106	0.71730	6553.5077	-1.0	2.00	15.0	-7.492	15.395	18.492	3.339945	6563.891	106
107	0.71730	6553.5077	-1.5	0.50	2.0	7.509	23.491	15.870	3.222568	6571.845	107
108	0.71730	6553.5077	-1.5	0.50	6.0	4.243	18.969	15.064	3.204189	6573.722	108
109	0.71730	6553.5077	-1.5	0.50	10.0	0.992	16.971	14.272	3.192037	6574.895	109
110	0.71730	6553.5077	-1.5	0.50	15.0	-3.432	15.551	13.665	3.183507	6575.361	110
111	0.71730	6553.5077	-1.5	1.00	2.0	3.713	18.863	20.043	3.315404	6553.120	111
112	0.71730	6553.5077	-1.5	1.00	6.0	1.527	17.484	18.072	3.272388	6564.287	112
113	0.71730	6553.5077	-1.5	1.00	10.0	-1.030	16.404	16.511	3.241416	6570.425	113
114	0.71730	6553.5077	-1.5	1.00	15.0	-4.739	15.399	15.123	3.216183	6573.879	114
115	0.71730	6553.5077	-1.5	1.50	2.0	1.249	17.821	22.924	3.411924	6531.382	115
116	0.71730	6553.5077	-1.5	1.50	6.0	-0.754	16.893	20.700	3.351457	6549.444	116
117	0.71730	6553.5077	-1.5	1.50	10.0	-2.990	16.103	18.756	3.304515	6561.413	117
118	0.71730	6553.5077	-1.5	1.50	15.0	-6.188	15.314	16.791	3.262505	6569.885	118
119	0.71730	6553.5077	-1.5	2.00	2.0	-0.751	17.424	25.339	3.508439	6407.611	119
120	0.71730	6553.5077	-1.5	2.00	6.0	-2.505	16.676	22.826	3.434556	6533.276	120

[a]From reference 1.

TABLE I.- DATA DEFINING OPTIMUM TLI MANEUVERS[a] - Continued

DATA REF	THRUST WEIGHT	ORBIT RADIUS	C3	DELTA	SIGMA	ALFA	BETA	ETA	DV	PERIGEE RADIUS	DATA REF
121	0.71730	6553.5077	-1.5	2.00	10.0	-4.687	15.992	20.773	3.374619	6549.602	121
122	0.71730	6553.5077	-1.5	2.00	15.0	-7.588	15.296	18.453	3.317616	6563.469	122
123	0.71730	6553.5077	-2.1	0.50	2.0	7.361	23.114	15.851	3.195592	6571.303	123
124	0.71730	6553.5077	-2.1	0.50	6.0	4.128	18.769	15.010	3.176906	6573.283	124
125	0.71730	6553.5077	-2.1	0.50	10.0	0.894	16.817	14.199	3.164601	6574.497	125
126	0.71730	6553.5077	-2.1	0.50	15.0	-3.521	15.421	13.583	3.155978	6574.974	126
127	0.71730	6553.5077	-2.1	1.00	2.0	3.569	18.656	20.026	3.288679	6552.422	127
128	0.71730	6553.5077	-2.1	1.00	6.0	1.356	17.298	18.077	3.245450	6563.515	128
129	0.71730	6553.5077	-2.1	1.00	10.0	-1.142	16.259	16.457	3.214282	6569.964	129
130	0.71730	6553.5077	-2.1	1.00	15.0	-4.843	15.272	15.583	3.188873	6573.459	130
131	0.71730	6553.5077	-2.1	1.50	2.0	0.993	17.616	23.019	3.385470	6529.483	131
132	0.71730	6553.5077	-2.1	1.50	6.0	-0.886	16.735	20.672	3.324750	6548.807	132
133	0.71730	6553.5077	-2.1	1.50	10.0	-3.118	15.967	18.721	3.277637	6560.840	133
134	0.71730	6553.5077	-2.1	1.50	15.0	-6.301	15.190	16.738	3.235439	6569.412	134
135	0.71730	6553.5077	-2.1	2.00	2.0	-0.946	17.264	25.379	3.481989	6566.166	135
136	0.71730	6553.5077	-2.1	2.00	6.0	-2.772	16.516	22.930	3.408044	6531.284	136
137	0.71730	6553.5077	-2.1	2.00	10.0	-4.810	15.865	20.739	3.347949	6549.019	137
138	0.71730	6553.5077	-2.1	2.00	15.0	-7.744	15.173	18.445	3.290764	6562.746	138
139	0.71730	6553.5077	-5.0	0.10	2.0	9.581	34.345	12.589	3.011809	6573.179	139
140	0.71730	6553.5077	-5.0	0.10	6.0	5.581	19.734	12.585	3.010828	6573.199	140
141	0.71730	6553.5077	-5.0	0.10	10.0	1.581	16.506	12.581	3.010129	6573.183	141
142	0.71730	6553.5077	-5.0	0.10	15.0	-3.354	14.865	12.514	3.009698	6573.176	142
143	0.71730	6553.5077	-5.0	0.25	2.0	8.955	29.233	13.273	3.025169	6572.968	143
144	0.71730	6553.5077	-5.0	0.25	6.0	5.004	19.048	13.195	3.019099	6573.045	144
145	0.71730	6553.5077	-5.0	0.25	10.0	1.296	16.387	12.887	3.015048	6573.174	145
146	0.71730	6553.5077	-5.0	0.25	15.0	-3.497	14.845	12.671	3.012471	6573.205	146
147	0.71730	6553.5077	-5.0	0.50	2.0	6.606	21.331	15.781	3.064350	6568.548	147
148	0.71730	6553.5077	-5.0	0.50	6.0	3.561	17.805	14.745	3.044160	6571.170	148
149	0.71730	6553.5077	-5.0	0.50	10.0	0.402	16.064	13.853	3.031094	6572.574	149
150	0.71730	6553.5077	-5.0	0.50	15.0	-3.965	14.783	13.184	3.022004	6573.118	150

[a]From reference 1.

TABLE I.- DATA DEFINING OPTIMUM TLI MANEUVERS[a] - Continued

DATA REF	THRUST WEIGHT	ORBIT RADIUS	C3	SIGMA DELTA		BETA ALFA		BETA ETA	DV	PERIGEE RADIUS	DATA REF
151	0.71730	6553.5077	-5.0	1.00	2.0	2.851	17.688	19.950	3.158866	6548.976	151
152	0.71730	6553.5077	-5.0	1.00	6.0	0.713	16.478	17.910	3.114387	6560.761	152
153	0.71730	6553.5077	-5.0	1.00	10.0	-1.708	15.556	16.203	3.082271	6567.703	153
154	0.71730	6553.5077	-5.0	1.00	15.0	-5.358	14.650	14.743	3.055993	6571.449	154
155	0.71730	6553.5077	-15.0	0.10	2.0	7.977	26.846	11.044	2.536566	6567.175	155
156	0.71730	6553.5077	-15.0	0.10	6.0	3.977	16.142	11.034	2.534886	6567.139	156
157	0.71730	6553.5077	-15.0	0.10	10.0	0.089	13.801	10.917	2.533886	6567.150	157
158	0.71730	6553.5077	-15.0	0.10	15.0	-4.856	12.856	10.859	2.533330	6567.139	158
159	0.71730	6553.5077	-15.0	0.25	2.0	6.659	20.658	12.451	2.554855	6566.235	159
160	0.71730	6553.5077	-15.0	0.25	6.0	3.149	15.462	11.914	2.545327	6566.782	160
161	0.71730	6553.5077	-15.0	0.25	10.0	-0.352	13.669	11.389	2.539861	6567.093	161
162	0.71730	6553.5077	-15.0	0.25	15.0	-5.049	12.543	11.071	2.536602	6567.166	162
163	0.71730	6553.5077	-15.0	0.50	2.0	3.790	16.146	15.545	2.599761	6558.589	163
164	0.71730	6553.5077	-15.0	0.50	6.0	1.354	14.920	13.861	2.574546	6563.790	164
165	0.71730	6553.5077	-15.0	0.50	10.0	-1.479	13.399	12.617	2.558652	6566.118	165
166	0.71730	6553.5077	-15.0	0.50	15.0	-5.648	12.494	11.732	2.547708	6566.982	166
167	0.71730	6553.5077	-15.0	1.00	2.0	0.246	14.511	19.608	2.698403	6537.667	167
168	0.71730	6553.5077	-15.0	1.00	6.0	-1.531	13.756	17.159	2.650602	6552.249	168
169	0.71730	6553.5077	-15.0	1.00	10.0	-3.942	13.068	15.391	2.615446	6559.639	169
170	0.71730	6553.5077	-15.0	1.00	15.0	-7.291	12.422	13.592	2.586152	6564.673	170
171	0.71730	6553.5077	-25.0	0.10	2.0	5.919	18.435	9.551	2.040482	6561.749	171
172	0.71730	6553.5077	-25.0	0.10	6.0	2.143	12.483	9.308	2.037317	6561.789	172
173	0.71730	6553.5077	-25.0	0.10	10.0	-1.652	10.948	9.095	2.035821	6561.182	173
174	0.71730	6553.5077	-25.0	0.10	15.0	-6.559	10.103	8.997	2.035074	6561.811	174
175	0.71730	6553.5077	-25.0	0.25	2.0	3.587	13.758	12.023	2.064600	6558.724	175
176	0.71730	6553.5077	-25.0	0.25	6.0	0.904	11.874	10.627	2.050664	6560.974	176
177	0.71730	6553.5077	-25.0	0.25	10.0	-2.295	10.830	9.784	2.043305	6501.661	177
178	0.71730	6553.5077	-25.0	0.25	15.0	-6.837	10.091	9.301	2.039084	6561.815	178
179	0.71730	6553.5077	-25.0	0.50	2.0	0.819	12.110	15.089	2.113732	6549.375	179
180	0.71730	6553.5077	-25.0	0.50	6.0	-1.241	11.275	12.979	2.084376	6556.612	180

[a]From reference 1.

TABLE I.- DATA DEFINING OPTIMUM TLI MANEUVERS[a] - Continued

DATA REF	THRUST WEIGHT	ORBIT RADIUS	C3	DELTA	SIGMA	ALFA	BETA	ETA	DV	PERIGEE RADIUS	DATA REF
181	0.71730	6553.5077	-25.0	0.50	10.0	-3.797	10.635	11.425	2.065608	6559.977	181
182	0.71730	6553.5077	-25.0	0.50	15.0	-7.639	10.067	10.189	2.052406	6561.462	182
183	0.71730	6553.5077	-25.0	1.00	2.0	-2.812	11.486	19.343	2.215790	6526.595	183
184	0.71730	6553.5077	-25.0	1.00	6.0	-4.509	10.960	16.756	2.166256	6542.217	184
185	0.71730	6553.5077	-25.0	1.00	10.0	-6.552	10.521	14.581	2.128872	6551.877	185
186	0.71730	6553.5077	-25.0	1.00	15.0	-9.680	10.072	12.515	2.096613	6550.079	186
187	0.71730	6553.5077	-35.0	0.10	2.0	2.893	10.682	8.563	1.520679	6557.792	187
188	0.71730	6553.5077	-35.0	0.10	6.0	-0.107	8.788	7.524	1.514756	6557.455	188
189	0.71730	6553.5077	-35.0	0.10	10.0	-3.689	7.977	7.089	1.512436	6557.550	189
190	0.71730	6553.5077	-35.0	0.10	15.0	-8.518	7.492	0.912	1.511373	6557.558	190
191	0.71730	6553.5077	-35.0	0.25	2.0	0.243	9.081	11.413	1.549443	6551.916	191
192	0.71730	6553.5077	-35.0	0.25	6.0	-1.909	8.389	9.444	1.531780	6553.787	192
193	0.71730	6553.5077	-35.0	0.25	10.0	-4.673	7.895	8.144	1.522202	6557.160	193
194	0.71730	6553.5077	-35.0	0.25	15.0	-8.961	7.488	7.392	1.516599	6557.511	194
195	0.71730	6553.5077	-35.0	0.50	2.0	-2.705	8.568	14.728	1.601454	6540.900	195
196	0.71730	6553.5077	-35.0	0.50	6.0	-4.556	8.145	12.365	1.570194	6549.451	196
197	0.71730	6553.5077	-35.0	0.50	10.0	-6.615	7.822	10.278	1.549080	6554.537	197
198	0.71730	6553.5077	-35.0	0.50	15.0	-10.123	7.496	8.677	1.533309	6556.777	198
199	0.71730	6553.5077	-35.0	1.00	2.0	-6.470	8.568	19.225	1.706453	6517.353	199
200	0.71730	6553.5077	-35.0	1.00	6.0	-8.089	8.205	16.519	1.658000	6533.138	200
201	0.71730	6553.5077	-35.0	1.00	10.0	-9.908	7.906	14.080	1.619886	6544.082	201
202	0.71730	6553.5077	-35.0	1.00	15.0	-12.744	7.601	11.677	1.585336	6551.729	202
203	0.71730	6553.5077	-45.0	0.10	2.0	-0.865	5.621	7.756	0.971476	6552.638	203
204	0.71730	6553.5077	-45.0	0.10	6.0	-3.098	5.199	5.921	0.962868	6554.346	204
205	0.71730	6553.5077	-45.0	0.10	10.0	-6.213	4.919	5.007	0.959273	6554.699	205
206	0.71730	6553.5077	-45.0	0.10	15.0	-10.843	4.721	4.624	0.957604	6554.747	206
207	0.71730	6553.5077	-45.0	0.25	2.0	-3.954	5.321	11.099	1.003188	6546.285	207
208	0.71730	6553.5077	-45.0	0.25	6.0	-5.677	5.082	8.673	0.984397	6551.362	208
209	0.71730	6553.5077	-45.0	0.25	10.0	-7.932	4.900	6.836	0.972851	6553.698	209
210	0.71730	6553.5077	-45.0	0.25	15.0	-11.702	4.734	5.546	0.965257	6554.547	210

[a]From reference 1.

TABLE I.- DATA DEFINING OPTIMUM TLI MANEUVERS[a] - Continued

DATA REF	THRUST WEIGHT	ORBIT RADIUS	C3	DELTA	SIGMA	ALFA	BETA	ETA	DV	PERIGEE RADIUS	DATA REF
211	0.71730	6553.5077	-45.0	0.50	2.0	-7.217	5.355	14.797	1.057606	6534.563	211
212	0.71730	6553.5077	-45.0	0.50	6.0	-8.779	5.136	12.126	1.027895	6543.679	212
213	0.71730	6553.5077	-45.0	0.50	10.0	-10.619	4.963	9.794	1.006030	6549.443	213
214	0.71730	6553.5077	-45.0	0.50	15.0	-13.639	4.797	7.667	0.987814	6552.880	214
215	0.71730	6553.5077	-45.0	1.00	2.0	-11.586	5.683	20.002	1.163765	6510.023	215
216	0.71730	6553.5077	-45.0	1.00	6.0	-13.100	5.437	17.190	1.121025	6524.838	216
217	0.71730	6553.5077	-45.0	1.00	10.0	-14.747	5.232	14.563	1.085584	6536.025	217
218	0.71730	6553.5077	-45.0	1.00	15.0	-17.231	5.024	11.775	1.050995	6545.047	218
219	0.67357	6508.5077	-0.5	2.00	2.0	0.516	19.400	26.316	3.558175	6468.088	219
220	0.67357	6508.5077	-0.5	2.00	15.0	-6.371	16.954	19.496	3.373285	6523.231	220
221	0.67357	6508.5077	-2.1	2.00	2.0	0.111	18.966	26.292	3.488368	6465.658	221
222	0.67357	6508.5077	-2.1	2.00	15.0	-6.704	16.605	19.371	3.302041	6521.670	222
223	0.67357	6508.5077	-15.0	0.25	2.0	7.788	24.262	12.996	2.567159	6523.770	223
224	0.67357	6508.5077	-15.0	0.25	8.0	2.324	15.978	12.402	2.556249	6524.226	224
225	0.67357	6508.5077	-15.0	0.25	15.0	-4.217	13.770	11.918	2.551069	6524.364	225
226	0.67357	6508.5077	-15.0	1.00	2.0	1.133	16.005	20.417	2.708917	6495.350	226
227	0.67357	6508.5077	-15.0	1.00	8.0	-1.724	14.752	16.950	2.644180	6514.377	227
228	0.67357	6508.5077	-15.0	1.00	15.0	-6.364	13.623	14.356	2.600024	6522.157	228
229	0.67357	6598.5077	-0.5	0.50	2.0	8.654	26.713	16.296	3.253941	6620.973	229
230	0.67357	6598.5077	-0.5	0.50	15.0	-2.641	16.772	14.458	3.218841	6623.587	230
231	0.67357	6598.5077	-0.5	1.50	2.0	2.213	19.320	23.528	3.440206	6580.687	231
232	0.67357	6598.5077	-0.5	1.50	15.0	-5.243	16.495	17.432	3.295969	6618.686	232
233	0.67357	6598.5077	-2.1	0.50	2.0	8.288	25.628	16.194	3.181861	6619.533	233
234	0.67357	6598.5077	-2.1	0.50	15.0	-2.891	16.397	14.229	3.145258	6627.427	234
235	0.67357	6598.5077	-2.1	1.50	2.0	1.807	18.833	23.495	3.369442	6578.382	235
236	0.67357	6598.5077	-2.1	1.50	15.0	-5.557	16.139	17.282	3.223631	6617.316	236
237	0.67357	6598.5077	-5.0	0.25	2.0	9.665	32.326	13.786	3.017774	6670.248	237
238	0.67357	6598.5077	-5.0	0.25	8.0	3.792	18.669	13.623	3.005405	6620.357	238
239	0.67357	6598.5077	-5.0	0.25	15.0	-2.900	15.777	13.299	3.001347	6620.419	239
240	0.67357	6598.5077	-5.0	1.00	2.0	7.665	23.909	16.680	3.170976	6616.839	240

[a]From reference 1.

TABLE I.- DATA DEFINING OPTIMUM TLI MANEUVERS[a] - Continued

DATA REF	THRUST WEIGHT	ORBIT RADIUS	C3	SIGMA DELTA	SIGMA ALFA	BETA	ETA	DV	PERIGEE RADIUS	DATA REF
241	0.67357	6598.5077	-5.0	1.00	8.0	0.253	17.061	17.532	3.083849	6612.432	241
242	0.67357	6598.5077	-5.0	1.00	15.0	-4.661	15.566	15.278	3.044199	6618.889	242
243	0.67357	6598.5077	-25.0	0.25	2.0	4.215	14.947	12.220	2.047976	6605.048	243
244	0.67357	6598.5077	-25.0	0.25	8.0	-0.187	11.968	10.517	2.030658	6607.317	244
245	0.67357	6598.5077	-25.0	0.25	15.0	-6.434	10.650	9.722	2.023599	6607.664	245
246	0.67357	6598.5077	-25.0	1.00	2.0	-2.329	12.157	19.726	2.198119	6572.814	246
247	0.67357	6598.5077	-25.0	1.00	8.0	-5.004	11.342	15.985	2.129687	6593.855	247
248	0.67357	6598.5077	-25.0	1.00	15.0	-9.206	10.623	12.882	2.087833	6604.114	248
249	0.67357	6598.5077	-45.0	0.25	2.0	-3.763	5.531	11.215	0.982173	6591.551	249
250	0.67357	6598.5077	-45.0	0.25	8.0	-6.515	5.173	7.557	0.957072	6597.976	250
251	0.67357	6598.5077	-45.0	0.25	15.0	-11.565	4.904	5.698	0.944485	6599.621	251
252	0.67357	6598.5077	-45.0	1.00	2.0	-11.444	5.905	20.234	1.142122	6555.270	252
253	0.67357	6598.5077	-45.0	1.00	8.0	-13.786	5.533	16.084	1.081542	6575.934	253
254	0.67357	6598.5077	-45.0	1.00	15.0	-17.146	5.211	12.023	1.030526	6590.000	254
255	0.67357	6643.5077	-0.5	0.50	2.0	8.400	25.972	16.225	3.243269	6665.286	255
256	0.67357	6643.5077	-0.5	0.50	15.0	-2.812	16.509	14.302	3.207563	6668.131	256
257	0.67357	6643.5077	-0.5	2.00	2.0	-0.203	18.453	26.023	3.524809	6597.942	257
258	0.67357	6643.5077	-0.5	2.00	15.0	-6.351	16.191	19.069	3.338715	6656.189	258
259	0.67357	6643.5077	-2.1	0.50	2.0	8.064	25.003	16.095	3.170951	6663.922	259
260	0.67357	6643.5077	-2.1	0.50	15.0	-3.059	16.139	14.072	3.133743	6666.884	260
261	0.67357	6643.5077	-2.1	2.00	2.0	-0.589	19.039	25.986	3.450600	6595.711	261
262	0.67357	6643.5077	-2.1	2.00	15.0	-7.272	15.853	18.937	3.266743	6654.704	262
263	0.67357	6643.5077	-5.0	0.25	2.0	9.303	30.383	13.822	3.001105	6664.699	263
264	0.67357	6643.5077	-5.0	0.25	8.0	3.618	18.336	13.475	2.993486	6664.934	264
265	0.67357	6643.5077	-5.0	0.25	15.0	3.065	15.524	13.142	2.989378	6665.002	265
266	0.67357	6643.5077	-5.0	1.00	2.0	7.303	23.075	16.709	3.158515	6660.840	266
267	0.67357	6643.5077	-5.0	1.00	8.0	3.837	16.766	17.424	3.072064	6656.738	267
268	0.67357	6643.5077	-5.0	1.00	15.0	4.832	15.319	15.127	3.032243	6663.429	268
269	0.67357	6643.5077	-25.0	0.25	2.0	3.958	14.478	12.179	2.032719	6649.547	269
270	0.67357	6643.5077	-25.0	0.25	8.0	-0.350	11.715	10.381	2.015108	6652.042	270

[a]From reference 1.

TABLE I.- DATA DEFINING OPTIMUM TLI MANEUVERS[a] - Continued

DATA REF	THRUST WEIGHT	ORBIT RADIUS	C3	DELTA	SIGMA	ALFA	BETA	ETA	DV	PERIGEE RADIUS	DATA REF
271	0.67357	6643.5077	-25.0	0.25	15.0	-6.586	10.443	9.575	2.007983	6652.401	271
272	0.67357	6643.5077	-25.0	1.00	2.0	-2.434	11.928	19.530	2.182649	6617.781	272
273	0.67357	6643.5077	-25.0	1.00	8.0	-5.199	11.118	15.878	2.114172	6638.314	273
274	0.67357	6643.5077	-25.0	1.00	15.0	-9.376	10.422	12.751	2.065213	6648.779	274
275	0.67357	6643.5077	-45.0	0.25	2.0	-4.126	5.323	11.298	0.961524	6635.926	275
276	0.67357	6643.5077	-45.0	0.25	8.0	-6.707	4.998	7.668	0.936523	6642.837	276
277	0.67357	6643.5077	-45.0	0.25	15.0	-11.732	4.742	5.883	0.923833	6644.519	277
278	0.67357	6643.5077	-45.0	1.00	2.0	-11.889	5.724	20.389	1.120969	6598.673	278
279	0.67357	6643.5077	-45.0	1.00	8.0	-14.053	5.366	16.068	1.060982	6620.477	279
280	0.67357	6643.5077	-45.0	1.00	15.0	-17.038	5.053	12.002	1.010768	6634.645	280
281	0.76105	6508.5077	-0.5	2.00	2.0	-1.619	16.567	25.262	3.568715	6455.743	281
282	0.76105	6508.5077	-0.5	2.00	15.0	-8.114	14.657	18.079	3.374406	6516.354	282
283	0.76105	6508.5077	-2.1	2.00	2.0	-1.987	16.213	25.247	3.498505	6453.684	283
284	0.76105	6508.5077	-2.1	2.00	15.0	-8.409	14.363	17.967	3.303200	6515.106	284
285	0.76105	6508.5077	-5.0	0.25	2.0	8.293	26.483	12.857	3.037768	6526.031	285
286	0.76105	6508.5077	-5.0	0.25	8.0	2.604	16.392	12.506	3.028373	6526.254	286
287	0.76105	6508.5077	-5.0	0.25	15.0	-4.024	14.039	12.117	3.023828	6526.348	287
288	0.76105	6508.5077	-5.0	1.00	2.0	6.293	20.497	15.759	3.210930	6522.153	288
289	0.76105	6508.5077	-5.0	1.00	8.0	-1.120	15.068	16.585	3.110017	6517.347	289
290	0.76105	6508.5077	-5.0	1.00	15.0	-5.920	13.864	14.220	3.067953	6524.496	290
291	0.76105	6508.5077	-25.0	0.25	2.0	3.000	12.788	11.883	2.081254	6512.486	291
292	0.76105	6508.5077	-25.0	0.25	8.0	-0.968	10.708	9.751	2.062162	6515.742	292
293	0.76105	6508.5077	-25.0	0.25	15.0	-7.192	9.606	8.933	2.054720	6516.102	293
294	0.76105	6508.5077	-25.0	1.00	2.0	-3.195	10.912	18.965	2.233377	6480.886	294
295	0.76105	6508.5077	-25.0	1.00	8.0	-5.889	10.206	15.269	2.162806	6501.795	295
296	0.76105	6508.5077	-25.0	1.00	15.0	-9.996	9.602	12.093	2.112492	6512.455	296
297	0.76105	6508.5077	-45.0	0.25	2.0	-4.045	5.146	10.925	1.024320	6501.250	297
298	0.76105	6508.5077	-45.0	0.25	8.0	-6.703	4.831	7.391	0.998758	6507.910	298
299	0.76105	6508.5077	-45.0	0.25	15.0	-11.784	4.589	5.377	0.986152	6509.501	299
300	0.76105	6508.5077	-45.0	1.00	2.0	-11.598	5.491	19.690	1.185490	6465.476	300

[a]From reference 1.

TABLE I.- DATA DEFINING OPTIMUM TLI MANEUVERS[a] - Continued

DATA REF	THRUST WEIGHT	ORBIT RADIUS	C3	DELTA	SIGMA	ALFA	BETA	ETA	DV	PERIGEE RADIUS	DATA REF
301	0.76105	6508.5077	-45.0	1.00	8.0	-13.972	5.155	15.612	1.123362	6485.954	301
302	0.76105	6508.5077	-45.0	1.00	15.0	-17.237	4.863	11.493	1.071594	6500.277	302
303	0.76105	6598.5077	-0.5	0.50	2.0	6.400	20.805	15.512	3.259071	6613.387	303
304	0.76105	6598.5077	-0.5	0.50	15.0	-4.167	14.439	12.937	3.217079	6618.101	304
305	0.76105	6598.5077	-0.5	1.50	2.0	0.249	16.416	22.413	3.449204	6570.928	305
306	0.76105	6598.5077	-0.5	1.50	15.0	-0.700	14.232	16.119	3.296165	6612.157	306
307	0.76105	6598.5077	-2.1	0.50	2.0	6.070	20.068	15.426	3.187014	6612.148	307
308	0.76105	6598.5077	-2.1	0.50	15.0	-4.389	14.122	12.732	3.143633	6617.191	308
309	0.76105	6598.5077	-2.1	1.50	2.0	-0.082	16.036	22.354	3.378151	6569.342	309
310	0.76105	6598.5077	-2.1	1.50	15.0	-7.259	13.935	15.963	3.223905	6611.132	310
311	0.76105	6598.5077	-15.0	0.25	2.0	5.580	17.732	12.051	2.542631	6608.909	311
312	0.76105	6598.5077	-15.0	0.25	8.0	0.580	13.050	10.985	2.528267	6610.096	312
313	0.76105	6598.5077	-15.0	0.25	15.0	-5.786	11.488	10.326	2.522395	6610.361	313
314	0.76105	6598.5077	-15.0	1.00	2.0	-0.739	13.167	19.084	2.687451	6578.916	314
315	0.76105	6598.5077	-15.0	1.00	8.0	-3.576	12.228	15.606	2.618809	6598.867	315
316	0.76105	6598.5077	-15.0	1.00	15.0	-8.109	11.392	12.916	2.572398	6607.609	316
317	0.76105	6643.5077	-0.5	0.50	2.0	6.232	20.402	15.392	3.248358	6657.935	317
318	0.76105	6643.5077	-0.5	0.50	15.0	-4.317	14.217	12.796	3.205853	6662.744	318
319	0.76105	6643.5077	-0.5	2.00	2.0	-2.039	15.826	24.788	3.534278	6588.778	319
320	0.76105	6643.5077	-0.5	2.00	15.0	-8.609	14.010	17.678	3.339768	6649.735	320
321	0.76105	6643.5077	-2.1	0.50	2.0	5.830	19.568	15.378	3.176049	6656.478	321
322	0.76105	6643.5077	-2.1	0.50	15.0	-4.538	13.904	12.592	3.132168	6661.843	322
323	0.76105	6643.5077	-2.1	2.00	2.0	-2.210	15.521	24.590	3.463180	6589.236	323
324	0.76105	6643.5077	-2.1	2.00	15.0	-8.913	13.723	17.578	3.267832	6648.442	324
325	0.76105	6643.5077	-35.0	0.25	2.0	-0.719	7.917	11.081	1.514420	6640.255	325
326	0.76105	6643.5077	-35.0	0.25	8.0	-3.905	7.199	8.114	1.490458	6645.867	326
327	0.76105	6643.5077	-35.0	0.25	15.0	-9.614	6.684	6.759	1.405760	6646.765	327
328	0.76105	6643.5077	-35.0	1.00	2.0	-7.336	7.642	18.725	1.671041	6605.111	328
329	0.76105	6643.5077	-35.0	1.00	8.0	-9.810	7.192	14.766	1.602227	6627.452	329
330	0.76105	6643.5077	-35.0	1.00	15.0	-13.451	6.808	11.069	1.549768	6640.769	330

[a]From reference 1.

TABLE I.- DATA DEFINING OPTIMUM TLI MANEUVERS[a] - Continued

DATA REF	THRUST WEIGHT	ORBIT RADIUS	C3	DELTA	SIGMA	ALFA	BETA	ETA	DV	PERIGEE RADIUS	DATA REF
331	0.62980	6553.5077	-0.5	0.50	2.0	10.371	32.522	16.768	3.261925	6581.392	331
332	0.62980	6553.5077	-0.5	0.50	8.0	4.773	21.718	16.279	3.243243	6582.175	332
333	0.62980	6553.5077	-0.5	0.50	15.0	-1.527	18.530	15.533	3.231460	6582.758	333
334	0.62980	6553.5077	-0.5	1.25	2.0	5.151	22.457	22.585	3.397494	6556.611	334
335	0.62980	6553.5077	-0.5	1.25	8.0	1.562	20.067	19.905	3.331128	6572.454	335
336	0.62980	6553.5077	-0.5	1.25	15.0	-3.394	18.242	17.661	3.283580	6580.228	336
337	0.62980	6553.5077	-0.5	2.00	2.0	1.721	20.914	26.668	3.540339	6521.098	337
338	0.62980	6553.5077	-0.5	2.00	8.0	-1.267	19.458	23.265	3.441303	6552.947	338
339	0.62980	6553.5077	-0.5	2.00	15.0	-5.508	18.107	20.169	3.360900	6572.049	339
340	0.62980	6553.5077	-2.1	0.50	2.0	9.908	30.747	16.726	3.189996	6579.698	340
341	0.62980	6553.5077	-2.1	0.50	8.0	4.462	21.148	16.081	3.170230	6580.777	341
342	0.62980	6553.5077	-2.1	0.50	15.0	-1.794	18.114	15.287	3.158022	6581.420	342
343	0.62980	6553.5077	-2.1	2.00	2.0	1.423	20.474	26.520	3.470393	6519.977	343
344	0.62980	6553.5077	-2.1	2.00	8.0	-1.662	19.027	23.189	3.370608	6550.761	344
345	0.62980	6553.5077	-2.1	2.00	15.0	-5.848	17.727	20.023	3.289421	6570.381	345
346	0.62980	6553.5077	-2.1	1.25	2.0	4.652	21.761	22.604	3.327067	6553.698	346
347	0.62980	6553.5077	-2.1	1.25	8.0	1.156	19.564	19.819	3.259507	6570.480	347
348	0.62980	6553.5077	-2.1	1.25	15.0	-3.706	17.841	17.473	3.211089	6578.766	348
349	0.62980	6553.5077	-5.0	0.50	2.0	9.149	28.167	16.551	3.058627	6576.768	349
350	0.62980	6553.5077	-5.0	0.50	8.0	3.879	20.112	15.717	3.036778	6578.257	350
351	0.62980	6553.5077	-5.0	0.50	15.0	-2.293	17.349	14.832	3.023753	6579.021	351
352	0.62980	6553.5077	-5.0	1.00	2.0	5.202	21.509	20.931	3.150129	6559.560	352
353	0.62980	6553.5077	-5.0	1.00	8.0	1.574	19.006	18.314	3.094331	6572.309	353
354	0.62980	6553.5077	-5.0	1.00	15.0	-3.581	17.169	16.296	3.056642	6577.680	354
355	0.62980	6553.5077	-25.0	1.00	2.0	-1.284	13.514	20.324	2.211310	6531.413	355
356	0.62980	6553.5077	-25.0	1.00	8.0	-4.035	12.549	16.642	2.144234	6551.423	356
357	0.62980	6553.5077	-25.0	1.00	15.0	-8.385	11.702	13.672	2.096277	6560.896	357
358	0.62980	6553.5077	-25.0	0.50	2.0	5.677	18.076	12.861	2.126603	6562.978	358
359	0.62980	6553.5077	-25.0	0.50	8.0	-1.094	12.865	13.199	2.072967	6561.559	359
360	0.62980	6553.5077	-25.0	0.50	15.0	-6.410	11.719	11.382	2.052707	6563.999	360

[a]From reference 1.

TABLE I.- DATA DEFINING OPTIMUM TLI MANEUVERS[a] - Continued

DATA REF	THRUST WEIGHT	ORBIT RADIUS	C3	DELTA	SIGMA	ALFA	BETA	ETA	DV	PERIGEE RADIUS	DATA REF
361	0.62980	6553.5077	-45.0	0.50	2.0	-6.479	6.201	15.377	1.056879	6535.374	361
362	0.62980	6553.5077	-45.0	0.50	8.0	-8.998	5.823	11.531	1.015750	6547.429	362
363	0.62980	6553.5077	-45.0	0.50	15.0	-12.964	5.552	8.244	0.987739	6553.346	363
364	0.62980	6553.5077	-45.0	1.00	2.0	-10.767	6.554	20.614	1.162861	6511.243	364
365	0.62980	6553.5077	-45.0	1.00	8.0	-13.112	6.137	16.428	1.101951	6531.873	365
366	0.62980	6553.5077	-45.0	1.00	15.0	-16.425	5.775	12.288	1.050826	6545.937	366
367	0.80480	6553.5077	-0.5	0.50	2.0	5.774	19.351	15.144	3.272150	6566.216	367
368	0.80480	6553.5077	-0.5	0.50	8.0	1.307	15.508	13.513	3.242803	6570.190	368
369	0.80480	6553.5077	-0.5	0.50	15.0	-4.692	13.699	12.462	3.227739	6571.310	369
370	0.80480	6553.5077	-0.5	1.25	2.0	0.765	15.790	20.692	3.415274	6534.777	370
371	0.80480	6553.5077	-0.5	1.25	8.0	-2.200	14.598	17.397	3.337335	6557.363	371
372	0.80480	6553.5077	-0.5	1.25	15.0	-6.653	13.562	14.661	3.282973	6568.150	372
373	0.80480	6553.5077	-0.5	2.00	2.0	-2.320	15.266	24.346	3.560937	6499.268	373
374	0.80480	6553.5077	-0.5	2.00	8.0	-5.007	14.368	20.669	3.451326	6536.066	374
375	0.80480	6553.5077	-0.5	2.00	15.0	-8.907	13.527	17.259	3.363188	6558.695	375
376	0.80480	6553.5077	-2.1	0.50	2.0	5.401	18.612	15.121	3.200319	6564.885	376
377	0.80480	6553.5077	-2.1	0.50	8.0	1.049	15.125	13.369	3.170049	6569.283	377
378	0.80480	6553.5077	-2.1	0.50	15.0	-4.951	13.397	12.314	3.154593	6570.454	378
379	0.80480	6553.5077	-2.1	1.25	2.0	0.449	15.411	20.632	3.344169	6533.348	379
380	0.80480	6553.5077	-2.1	1.25	8.0	-2.484	14.273	17.293	3.265699	6556.229	380
381	0.80480	6553.5077	-2.1	1.25	15.0	-6.917	13.276	14.529	3.210681	6567.174	381
382	0.80480	6553.5077	-2.1	2.00	2.0	-2.559	14.963	24.227	3.490291	6498.804	382
383	0.80480	6553.5077	-2.1	2.00	8.0	-5.326	14.072	20.613	3.380409	6534.583	383
384	0.80480	6553.5077	-2.1	2.00	15.0	-9.208	13.255	17.174	3.291750	6557.455	384
385	0.80480	6553.5077	-5.0	0.50	2.0	4.766	17.499	15.020	3.069001	6562.629	385
386	0.80480	6553.5077	-5.0	0.50	8.0	0.566	14.429	13.104	3.032021	6567.647	386
387	0.80480	6553.5077	-5.0	0.50	15.0	-5.271	12.866	11.883	3.020815	6569.034	387
388	0.80480	6553.5077	-5.0	1.00	2.0	1.144	15.078	19.032	3.165178	6541.899	388
389	0.80480	6553.5077	-5.0	1.00	8.0	-1.971	13.813	15.903	3.098867	6559.625	389
390	0.80480	6553.5077	-5.0	1.00	15.0	-6.723	12.774	13.490	3.055593	6567.120	390

[a]From reference 1.

TABLE I.- DATA DEFINING OPTIMUM TLI MANEUVERS[a] - Concluded

DATA REF	THRUST WEIGHT	ORBIT RADIUS	C3	DELTA	SIGMA	ALFA	BETA	ETA	DV	PERIGEE RADIUS	DATA REF
391	0.80480	6553.5077	-25.0	0.50	2.0	-0.855	10.261	14.839	2.116634	6544.125	391
392	0.80480	6553.5077	-25.0	0.50	8.0	-3.438	9.516	11.209	2.074491	6556.786	392
393	0.80480	6553.5077	-25.0	0.50	15.0	-8.588	8.817	9.240	2.052208	6559.704	393
394	0.80480	6553.5077	-25.0	1.00	2.0	-3.937	9.994	18.494	2.219029	6523.588	394
395	0.80480	6553.5077	-25.0	1.00	8.0	-6.518	9.378	14.703	2.147576	6545.472	395
396	0.80480	6553.5077	-25.0	1.00	15.0	-10.650	8.841	11.562	2.096779	6556.211	396
397	0.80480	6553.5077	-45.0	0.50	2.0	-5.769	4.809	12.373	1.065097	6541.583	397
398	0.80480	6553.5077	-45.0	0.50	8.0	-10.170	4.448	10.422	1.016277	6546.602	398
399	0.80480	6553.5077	-45.0	0.50	15.0	-14.109	4.240	7.157	0.987859	6552.623	399
400	0.80480	6553.5077	-45.0	1.00	2.0	-12.136	5.075	19.431	1.164363	6509.685	400
401	0.80480	6553.5077	-45.0	1.00	8.0	-14.495	4.711	15.368	1.102707	6530.255	401
402	0.80480	6553.5077	-45.0	1.00	15.0	-17.717	4.446	11.229	1.051125	6544.808	402

[a]From reference 1.

TABLE II.- PLANE CHANGE VARIABLES AND RESIDUALS OF ΔV EQUATION

DATA REF	DC	DAZ	TAON	GAN	ACTJAL DV	CALCUL DV	RESIDUAL (CALC-ACT)	DATA REF
1	60.322878	0.	0.	0.	3.219973	3.219981	0.000008	1
2	60.322878	0.	0.	0.	3.219973	3.219981	0.000008	2
3	60.322878	0.	0.	0.	3.219973	3.219981	0.000008	3
4	58.722878	0.	0.	0.	3.146262	3.146264	0.000002	4
5	58.722878	0.	0.	0.	3.146262	3.146264	0.000002	5
6	58.722878	0.	0.	0.	3.146262	3.146264	0.000002	6
7	55.822878	0.	0.	0.	3.011467	3.011464	-0.000003	7
8	55.822878	0.	0.	0.	3.011467	3.011464	-0.000003	8
9	55.822878	0.	0.	0.	3.011467	3.011464	-0.000003	9
10	35.822878	0.	0.	0.	2.034986	2.034984	-0.000002	10
11	35.822878	0.	0.	0.	2.034986	2.034984	-0.000002	11
12	35.822878	0.	0.	0.	2.034986	2.034984	-0.000002	12
13	15.822878	0.	0.	0.	0.956082	0.955945	-0.000137	13
14	15.822878	0.	0.	0.	0.956082	0.955945	-0.000137	14
15	15.822878	0.	0.	0.	0.956082	0.955945	-0.000137	15
16	60.322878	0.	0.	0.	3.217186	3.217187	0.000001	16
17	60.322878	0.	0.	0.	3.217184	3.217187	0.000003	17
18	60.322878	0.	0.	0.	3.217184	3.217187	0.000003	18
19	60.322878	0.	0.	0.	3.217184	3.217187	0.000003	19
20	59.822878	0.	0.	0.	3.194256	3.194257	0.000001	20
21	59.822878	0.	0.	0.	3.194255	3.194257	0.000002	21
22	59.822878	0.	0.	0.	3.194255	3.194257	0.000002	22
23	59.822878	0.	0.	0.	3.194256	3.194257	0.000001	23
24	59.322878	0.	0.	0.	3.171282	3.171281	-0.000001	24
25	59.322878	0.	0.	0.	3.171281	3.171281	-0.000000	25
26	59.322878	0.	0.	0.	3.171281	3.171281	-0.000000	26
27	59.322878	0.	0.	0.	3.171281	3.171281	-0.000000	27
28	58.722878	0.	0.	0.	3.143652	3.143651	-0.000001	28
29	58.722878	0.	0.	0.	3.143652	3.143651	-0.000001	29
30	58.722878	0.	0.	0.	3.143657	3.143651	-0.000006	30

TABLE II.- PLANE CHANGE VARIABLES AND RESIDUALS OF ΔV EQUATION - Continued

DATA REF	DC	DAZ	TAON	GAN	ACTJAL DV	CALCUL DV	RESIDUAL (CALC-ACT)	DATA REF
31	58.722878	0.	0.	0.	3.143652	3.143651	-0.000001	31
32	55.822878	0.	0.	0.	3.009165	3.009162	-0.000003	32
33	55.822878	0.	0.	0.	3.009165	3.009162	-0.000003	33
34	55.822878	0.	0.	0.	3.009165	3.009162	-0.000003	34
35	55.822878	0.	0.	0.	3.009165	3.009162	-0.000003	35
36	45.822878	0.	0.	0.	2.532698	2.532710	0.000012	36
37	45.822878	0.	0.	0.	2.532698	2.532710	0.000012	37
38	45.822878	0.	0.	0.	2.532698	2.532710	0.000012	38
39	45.822878	0.	0.	0.	2.532698	2.532710	0.000012	39
40	35.822878	0.	0.	0.	2.034293	2.034294	0.000001	40
41	35.822878	0.	0.	0.	2.034293	2.034294	0.000001	41
42	35.822878	0.	0.	0.	2.034293	2.034294	0.000001	42
43	35.822878	0.	0.	0.	2.034293	2.034294	0.000001	43
44	25.822878	0.	0.	0.	1.510341	1.510274	-0.000067	44
45	25.822878	0.	0.	0.	1.510341	1.510274	-0.000067	45
46	25.822878	0.	0.	0.	1.510341	1.510274	-0.000067	46
47	25.822878	0.	0.	0.	1.510341	1.510274	-0.000067	47
48	15.822878	0.	0.	0.	0.956030	0.955924	-0.000106	48
49	15.822878	0.	0.	0.	0.956030	0.955924	-0.000106	49
50	15.822878	0.	0.	0.	0.956030	0.955924	-0.000106	50
51	15.822878	0.	0.	0.	0.956030	0.955924	-0.000106	51
52	60.322878	0.	0.	0.	3.215250	3.215252	0.000002	52
53	60.322878	0.	0.	0.	3.215250	3.215252	0.000002	53
54	60.322878	0.	0.	0.	3.215250	3.215252	0.000002	54
55	58.722878	0.	0.	0.	3.141839	3.141841	0.000002	55
56	58.722878	0.	0.	0.	3.141839	3.141841	0.000002	56
57	58.722878	0.	0.	0.	3.141839	3.141841	0.000002	57
58	55.822878	0.	0.	0.	3.007569	3.007568	-0.000001	58
59	55.822878	0.	0.	0.	3.007568	3.007568	0.000000	59
60	55.822878	0.	0.	0.	3.007569	3.007568	-0.000001	60

TABLE II.- PLANE CHANGE VARIABLES AND RESIDUALS OF ΔV EQUATION - Continued

DATA REF	DC	DAZ	TAON	GAN	ACTUAL DV	CALCUL DV	RESIDUAL (CALC-ACT)	DATA REF
61	35.822878	0.	0.	0.	2.033818	2.033816	-0.000002	61
62	35.822878	0.	0.	0.	2.033817	2.033816	-0.000001	62
63	35.822878	0.	0.	0.	2.033817	2.033816	-0.000001	63
64	15.822878	0.	0.	0.	0.955997	0.955910	-0.000087	64
65	15.822878	0.	0.	0.	0.955997	0.955910	-0.000087	65
66	15.822878	0.	0.	0.	0.955997	0.955910	-0.000087	66
67	60.743409	0.	0.	0.	3.229983	3.229988	0.000005	67
68	60.743409	0.	0.	0.	3.229983	3.229988	0.000005	68
69	59.143408	0.	0.	0.	3.156609	3.156609	-0.000000	69
70	59.143408	0.	0.	0.	3.156609	3.156609	-0.000000	70
71	60.743409	0.	0.	0.	3.227605	3.227609	0.000004	71
72	60.743409	0.	0.	0.	3.227605	3.227609	0.000004	72
73	59.143408	0.	0.	0.	3.154382	3.154382	0.000000	73
74	59.143408	0.	0.	0.	3.154382	3.154382	0.000000	74
75	60.322878	1.772	14.395	7.168	3.267394	3.265262	-0.002132	75
76	60.322878	1.948	8.879	4.421	3.249525	3.249738	0.000213	76
77	60.322878	1.806	6.080	3.027	3.237624	3.237786	0.000162	77
78	60.322878	1.531	4.057	2.020	3.229246	3.229287	0.000041	78
79	60.322878	3.796	13.283	6.614	3.359711	3.360156	0.000445	79
80	60.322878	3.616	10.063	5.011	3.317142	3.317543	0.000401	80
81	60.322878	3.325	7.514	3.741	3.286504	3.286642	0.000138	81
82	60.322878	2.897	5.202	2.590	3.261563	3.261514	-0.000049	82
83	60.322878	5.218	14.728	7.334	3.456085	3.456430	0.000345	83
84	60.322878	4.939	11.702	5.827	3.395832	3.396007	0.000175	84
85	60.322878	4.573	9.168	4.565	3.349180	3.349140	-0.000040	85
86	60.322878	4.081	6.581	3.277	3.307502	3.307261	-0.000241	86
87	60.322878	6.365	16.348	8.141	3.552359	3.552223	-0.000136	87
88	60.322878	6.026	13.416	6.681	3.478625	3.478464	-0.000161	88
89	60.322878	5.648	10.770	5.363	3.418943	3.418568	-0.000375	89
90	60.322878	5.130	7.974	3.970	3.362234	3.361696	-0.000538	90

TABLE II.- PLANE CHANGE VARIABLES AND RESIDUALS OF ΔV EQUATION - Continued

DATA REF	DC	DAZ	TAON	GAN	ACTJAL DV	CALCUL DV	RESIDUAL (CALC-ACT)	DATA REF
91	59.822878	1.793	14.192	7.038	3.245001	3.243169	-0.001832	91
92	59.822878	1.957	8.806	4.367	3.226878	3.227122	0.000244	92
93	59.822878	1.811	6.032	2.991	3.214852	3.215023	0.000171	93
94	59.822878	1.534	4.023	1.995	3.206398	3.206443	0.000045	94
95	59.822878	3.808	13.236	6.564	3.337594	3.338034	0.000440	95
96	59.822878	3.623	10.034	4.976	3.294784	3.295179	0.000395	96
97	59.822878	3.330	7.487	3.712	3.263981	3.264110	0.000129	97
98	59.822878	2.900	5.182	2.569	3.238894	3.238841	-0.000053	98
99	59.822878	5.229	14.692	7.286	3.434066	3.434418	0.000353	99
100	59.822878	4.937	11.709	5.806	3.373666	3.373835	0.000169	100
101	59.822878	4.575	9.159	4.542	3.326868	3.326815	-0.000053	101
102	59.822878	4.083	6.571	3.258	3.285014	3.284778	-0.000236	102
103	59.822878	6.373	16.324	8.095	3.530415	3.530309	-0.000106	103
104	59.822878	6.027	13.414	6.652	3.456580	3.456440	-0.000140	104
105	59.822878	5.648	10.768	5.340	3.396802	3.396420	-0.000382	105
106	59.822878	5.131	7.970	3.952	3.339945	3.339396	-0.000549	106
107	59.322878	1.815	13.990	6.908	3.222568	3.221015	-0.001553	107
108	59.322878	1.966	8.734	4.313	3.204189	3.204462	0.000273	108
109	59.322878	1.816	5.987	2.956	3.192037	3.192216	0.000179	109
110	59.322878	1.537	3.989	1.970	3.183507	3.183555	0.000048	110
111	59.322878	3.821	13.182	6.510	3.315404	3.315868	0.000464	111
112	59.322878	3.633	9.987	4.932	3.272388	3.272771	0.000383	112
113	59.322878	3.334	7.462	3.684	3.241416	3.241536	0.000120	113
114	59.322878	2.902	5.162	2.549	3.216183	3.216124	-0.000059	114
115	59.322878	5.246	14.638	7.229	3.411924	3.412362	0.000438	115
116	59.322878	4.937	11.709	5.782	3.351457	3.351620	0.000163	116
117	59.322878	4.577	9.150	4.518	3.304515	3.304451	-0.000064	117
118	59.322878	4.086	6.552	3.235	3.262505	3.262252	-0.000253	118
119	59.322878	6.388	16.281	8.040	3.508439	3.508346	-0.000093	119
120	59.322878	6.067	13.281	6.558	3.434556	3.434343	-0.000213	120

TABLE II.- PLANE CHANGE VARIABLES AND RESIDUALS OF ΔV EQUATION - Continued

DATA REF	DC	DAZ	TAON	GAN	ACTJAL DV	CALCUL DV	RESIDUAL (CALC-ACT)	DATA REF
121	59.322878	5.648	10.771	5.319	3.374619	3.374234	-0.000385	121
122	59.322878	5.131	7.967	3.934	3.317616	3.317058	-0.000558	122
123	58.722878	1.841	13.761	6.761	3.195592	3.194340	-0.001252	123
124	58.722878	1.977	8.649	4.249	3.176906	3.177213	0.000307	124
125	58.722878	1.822	5.931	2.913	3.164601	3.164790	0.000189	125
126	58.722878	1.540	3.948	1.940	3.155978	3.156030	0.000052	126
127	58.722878	3.837	13.119	6.445	3.288679	3.289210	0.000531	127
128	58.722878	3.636	9.973	4.899	3.245450	3.245831	0.000381	128
129	58.722878	3.340	7.429	3.649	3.214282	3.214392	0.000110	129
130	58.722878	2.906	5.139	2.524	3.188873	3.188809	-0.000064	130
131	58.722878	5.230	14.689	7.217	3.385470	3.385854	0.000384	131
132	58.722878	4.944	11.683	5.739	3.324750	3.324903	0.000153	132
133	58.722878	4.579	9.142	4.491	3.277637	3.277561	-0.000076	133
134	58.722878	4.088	6.541	3.213	3.235439	3.235170	-0.000269	134
135	58.722878	6.376	16.316	8.017	3.481989	3.481956	-0.000033	135
136	58.722878	6.035	13.387	6.577	3.408044	3.407831	-0.000213	136
137	58.722878	5.649	10.767	5.290	3.347949	3.347557	-0.000392	137
138	58.722878	5.125	7.999	3.930	3.290764	3.290209	-0.000555	138
139	55.822878	0.239	22.764	10.907	3.011809	2.987077	-0.024732	139
140	55.822878	0.409	8.153	3.903	3.010828	3.011173	0.000345	140
141	55.822878	0.388	4.925	2.357	3.010129	3.010387	0.000258	141
142	55.822878	0.320	3.219	1.541	3.009698	3.009825	0.000127	142
143	55.822878	0.721	18.279	8.755	3.025169	3.016415	-0.008754	143
144	55.822878	1.030	8.046	3.851	3.019099	3.019496	0.000397	144
145	55.822878	0.960	5.093	2.437	3.015048	3.015301	0.000253	145
146	55.822878	0.794	3.344	1.600	3.012471	3.012584	0.000113	146
147	55.822878	1.966	12.733	6.096	3.064350	3.064190	-0.000160	147
148	55.822878	2.031	8.253	3.950	3.044160	3.044589	0.000429	148
149	55.822878	1.852	5.670	2.714	3.031094	3.031320	0.000226	149
150	55.822878	1.555	3.754	1.797	3.022004	3.022074	0.000070	150

TABLE II.- PLANE CHANGE VARIABLES AND RESIDUALS OF ΔV EQUATION - Continued

DATA REF	DC	DAZ	TAON	GAN	ACTJAL DV	CALCUL DV	RESIDUAL (CALC-ACT)	DATA REF
151	55.822878	3.900	12.870	5.161	3.158866	3.159420	0.000554	151
152	55.822878	3.676	9.796	4.689	3.114387	3.114730	0.000343	152
153	55.822878	3.366	7.292	3.490	3.082271	3.082336	0.000065	153
154	55.822878	2.920	5.032	2.408	3.055993	3.055913	-0.000080	154
155	45.822878	0.309	16.869	7.265	2.536566	2.536402	-0.000164	155
156	45.822878	0.475	6.165	2.650	2.534886	2.536038	0.001152	156
157	45.822878	0.422	3.712	1.595	2.533886	2.534357	0.000471	157
158	45.822878	0.329	2.712	1.165	2.533330	2.533599	0.000269	158
159	45.822878	1.033	12.001	5.163	2.554855	2.556652	0.001797	159
160	45.822878	1.172	6.315	2.714	2.545327	2.546198	0.000871	160
161	45.822878	1.032	4.023	1.729	2.539861	2.540260	0.000399	161
162	45.822878	0.827	2.594	1.115	2.536602	2.536786	0.000184	162
163	45.822878	2.335	10.366	4.458	2.599761	2.600647	0.000886	163
164	45.822878	2.131	7.575	3.256	2.574546	2.575194	0.000648	164
165	45.822878	1.947	4.886	2.100	2.558652	2.558874	0.000222	165
166	45.822878	1.605	3.149	1.353	2.547708	2.547794	0.000086	166
167	45.822878	4.052	12.299	5.291	2.698403	2.699124	0.000721	167
168	45.822878	3.788	9.319	4.007	2.650602	2.650806	0.000204	168
169	45.822878	3.415	7.039	3.025	2.615446	2.615395	-0.000051	169
170	45.822878	2.962	4.737	2.036	2.586152	2.585964	-0.000188	170
171	35.822878	0.461	10.516	3.905	2.040482	2.045468	0.004986	171
172	35.822878	0.557	4.340	1.609	2.037317	2.038311	0.000994	172
173	35.822878	0.458	2.600	0.964	2.035821	2.036203	0.000382	173
174	35.822878	0.349	1.662	0.616	2.035074	2.035239	0.000165	174
175	35.822878	1.415	8.174	3.033	2.064600	2.065987	0.001387	175
176	35.822878	1.314	4.973	1.844	2.050664	2.051235	0.000571	176
177	35.822878	1.101	3.127	1.159	2.043305	2.043571	0.000266	177
178	35.822878	0.859	1.930	0.715	2.039084	2.039205	0.000121	178
179	35.822878	2.552	9.302	3.453	2.113732	2.114148	0.000416	179
180	35.822878	2.306	6.526	2.421	2.084376	2.084555	0.000179	180

TABLE II.- PLANE CHANGE VARIABLES AND RESIDUALS OF ΔV EQUATION - Continued

DATA REF	DC	DAZ	TAON	GAN	ACTUAL DV	CALCUL DV	RESIDUAL (CALC-ACT)	DATA REF
181	35.822878	2.005	4.440	1.646	2.065608	2.065649	0.000041	181
182	35.822878	1.644	2.713	1.006	2.052406	2.052402	-0.000004	182
183	35.822878	4.043	12.332	4.583	2.215790	2.216449	0.000659	183
184	35.822878	3.744	9.501	3.527	2.166256	2.166361	0.000105	184
185	35.822878	3.402	7.101	2.634	2.128872	2.128673	-0.000199	185
186	35.822878	2.957	4.776	1.771	2.096613	2.096315	-0.000298	186
187	25.822878	0.738	5.790	1.727	1.520679	1.522140	0.001461	187
188	25.822878	0.647	2.896	0.863	1.514756	1.515120	0.000364	188
189	25.822878	0.495	1.666	0.497	1.512436	1.512545	0.000109	189
190	25.822878	0.363	1.010	0.301	1.511373	1.511381	0.000008	190
191	25.822878	1.627	6.842	2.042	1.549443	1.549650	0.000207	191
192	25.822878	1.398	4.301	1.283	1.531780	1.531833	0.000053	192
193	25.822878	1.149	2.570	0.766	1.522202	1.522188	-0.000014	193
194	25.822878	0.883	1.451	0.432	1.516599	1.516559	-0.000040	194
195	25.822878	2.556	9.284	2.774	1.601454	1.601564	0.000110	195
196	25.822878	2.273	6.711	2.003	1.570194	1.570113	-0.000081	196
197	25.822878	2.005	4.445	1.326	1.549080	1.548885	-0.000195	197
198	25.822878	1.651	2.626	0.783	1.533309	1.533138	-0.000171	198
199	25.822878	3.849	13.070	3.915	1.706453	1.706932	0.000479	199
200	25.822878	3.560	10.324	3.086	1.658000	1.657940	-0.000060	200
201	25.822878	3.266	7.841	2.341	1.619886	1.619590	-0.000296	201
202	25.822878	2.874	5.369	1.601	1.585336	1.584925	-0.000411	202
203	15.822878	0.885	4.487	0.927	0.971476	0.971534	0.000058	203
204	15.822878	0.693	2.298	0.474	0.962868	0.962816	-0.000052	204
205	15.822878	0.518	1.132	0.234	0.959273	0.959187	-0.000086	205
206	15.822878	0.373	0.564	0.116	0.957604	0.957505	-0.000099	206
207	15.822878	1.551	7.278	1.506	1.003188	1.003182	-0.000006	207
208	15.822878	1.339	4.762	0.984	0.984397	0.984248	-0.000149	208
209	15.822878	1.126	2.834	0.585	0.972851	0.972687	-0.000164	209
210	15.822878	0.884	1.438	0.297	0.965257	0.965113	-0.000143	210

TABLE II.- PLANE CHANGE VARIABLES AND RESIDUALS OF ΔV EQUATION - Continued

DATA REF	DC	DAZ	TAON	GAN	ACTUAL DV	CALCUL DV	RESIDUAL (CALC-ACT)	DATA REF
211	15.822878	2.296	10.582	2.196	1.057606	1.057603	-0.000003	211
212	15.822878	2.078	7.924	1.641	1.027895	1.027736	-0.000159	212
213	15.822878	1.861	5.590	1.156	1.006030	1.005782	-0.000248	213
214	15.822878	1.581	3.443	0.711	0.987814	0.987570	-0.000244	214
215	15.822878	3.365	15.297	3.193	1.163765	1.164064	0.000299	215
216	15.822878	3.143	12.563	2.613	1.121025	1.121002	-0.000023	216
217	15.822878	2.925	10.003	2.075	1.085584	1.085388	-0.000196	217
218	15.822878	2.639	7.276	1.506	1.050995	1.050652	-0.000343	218
219	60.743409	6.158	16.986	8.459	3.558175	3.559078	0.000903	219
220	60.743409	5.040	8.406	4.186	3.373285	3.373100	-0.000185	220
221	59.143408	6.167	16.957	8.333	3.488368	3.489268	0.000900	221
222	59.143408	5.043	8.390	4.122	3.302041	3.301808	-0.000233	222
223	46.243409	0.882	14.476	6.238	2.567159	2.569696	0.002537	223
224	46.243409	1.059	5.656	2.434	2.556249	2.557231	0.000982	224
225	46.243409	0.810	2.989	1.286	2.551069	2.551381	0.000312	225
226	46.243409	3.891	12.905	5.559	2.708917	2.710349	0.001432	226
227	46.243409	3.522	8.505	3.661	2.644180	2.644613	0.000433	227
228	46.243409	2.923	5.011	2.156	2.600024	2.600003	-0.000021	228
229	59.908082	1.613	16.066	8.000	3.253941	3.247543	-0.006398	229
230	59.908082	1.504	4.419	2.200	3.218841	3.218748	-0.000093	230
231	59.908082	5.087	15.171	7.554	3.440206	3.439200	-0.001006	231
232	59.908082	4.044	6.787	3.380	3.295969	3.295441	-0.000528	232
233	58.308082	1.677	15.347	7.539	3.181861	3.177105	-0.004757	233
234	58.308082	1.513	4.294	2.109	3.145258	3.145191	-0.000067	234
235	58.308082	5.110	15.090	7.413	3.369442	3.368611	-0.000831	235
236	58.308082	4.052	6.745	3.313	3.223631	3.223083	-0.000548	236
237	55.408082	0.649	20.662	9.895	3.017774	2.994332	-0.023442	237
238	55.408082	0.974	6.879	3.291	3.005405	3.005448	0.000043	238
239	55.408082	0.781	3.679	1.760	3.001347	3.001390	0.000043	239
240	55.408082	3.571	14.274	6.832	3.170976	3.142948	-0.028028	240

TABLE II.- PLANE CHANGE VARIABLES AND RESIDUALS OF ΔV EQUATION - Continued

DATA REF	DC	DAZ	TAON	GAN	ACTUAL DV	CALCUL DV	RESIDUAL (CALC-ACT)	DATA REF
241	55.408082	3.454	8.837	4.228	3.083849	3.083575	-0.000274	241
242	55.408082	2.890	5.251	2.512	3.044199	3.043946	-0.000253	242
243	35.408082	1.342	8.735	3.232	2.047976	2.049408	0.001432	243
244	35.408082	1.187	4.158	1.537	2.030658	2.031051	0.000393	244
245	35.408082	0.851	2.086	0.771	2.023599	2.023724	0.000125	245
246	35.408082	3.992	12.520	4.639	2.198119	2.198563	0.000444	246
247	35.408082	3.549	8.376	3.099	2.129687	2.129392	-0.000295	247
248	35.408082	2.946	4.853	1.794	2.087833	2.080402	-0.007431	248
249	15.408082	1.548	7.297	1.487	0.982173	0.982165	-0.000008	249
250	15.408082	1.234	3.691	0.751	0.957072	0.956895	-0.000177	250
251	15.408082	0.882	1.471	0.299	0.944485	0.944330	-0.000155	251
252	15.408082	3.350	15.377	3.161	1.142122	1.142470	0.000348	252
253	15.408082	3.020	11.344	2.320	1.081542	1.081398	-0.000144	253
254	15.408082	2.627	7.378	1.503	1.030526	1.030171	-0.000355	254
255	59.498907	1.656	15.579	7.757	3.243269	3.236062	-0.007207	255
256	59.498907	1.511	4.327	2.155	3.207563	3.207335	-0.000228	256
257	59.498907	6.230	16.759	8.345	3.524809	3.522200	-0.002609	257
258	59.498907	5.205	7.626	3.797	3.338715	3.337731	-0.000984	258
259	57.898906	1.716	14.946	7.341	3.170951	3.165269	-0.005682	259
260	57.898906	1.520	4.204	2.065	3.133743	3.133548	-0.000195	260
261	57.898906	5.935	17.726	8.707	3.450600	3.453138	0.002538	261
262	57.898906	5.081	8.207	4.030	3.266743	3.265542	-0.001201	262
263	54.998907	0.695	19.081	9.133	3.001105	2.985519	-0.015586	263
264	54.998907	0.984	6.720	3.214	2.993486	2.993230	-0.000256	264
265	54.998907	1.159	-2.539	-1.214	2.989378	2.992439	0.003061	265
266	54.998907	3.674	13.803	6.604	3.158515	3.130471	-0.028044	266
267	54.998907	4.461	4.967	2.376	3.072064	3.083233	0.011169	267
268	54.998907	5.478	-4.466	-2.136	3.032243	3.123397	0.091154	268
269	34.998907	1.369	8.523	3.144	2.032719	2.033675	0.000956	269
270	34.998907	1.196	4.068	1.499	2.015108	2.015380	0.000272	270

TABLE II.- PLANE CHANGE VARIABLES AND RESIDUALS OF ΔV EQUATION - Continued

DATA REF	DC	DAZ	TAON	GAN	ACTJAL DV	CALCJL DV	RESIDUAL (CALC-ACT)	DATA REF
271	34.998907	0.854	2.031	0.748	2.007983	2.008068	0.000085	271
272	34.998907	4.025	12.396	4.579	2.182649	2.182730	0.000081	272
273	34.998907	3.555	8.347	3.079	2.114172	2.113703	-0.000469	273
274	34.998907	2.950	4.822	1.777	2.065213	2.064761	-0.000452	274
275	14.998907	1.522	7.452	1.494	0.961524	0.961528	0.000004	275
276	14.998907	1.232	3.708	0.742	0.935523	0.936316	-0.000207	276
277	14.998907	0.882	1.476	0.295	0.923833	0.923680	-0.000153	277
278	14.998907	3.302	15.640	3.166	1.120969	1.121346	0.000377	278
279	14.998907	3.005	11.444	2.303	1.060982	1.060834	-0.000148	279
280	14.998907	2.657	7.112	1.426	1.010768	1.010038	-0.000730	280
281	60.743409	6.384	16.292	8.113	3.568715	3.569539	0.000824	281
282	60.743409	5.155	7.854	3.911	3.374406	3.374179	-0.000227	282
283	59.143408	6.379	16.306	8.013	3.498505	3.499349	0.000844	283
284	59.143408	5.155	7.855	3.859	3.303200	3.302933	-0.000267	284
285	56.243409	0.801	16.192	7.756	3.037768	3.034922	-0.002846	285
286	56.243409	1.049	5.790	2.772	3.028373	3.028919	0.000546	286
287	56.243409	0.806	3.065	1.467	3.023828	3.023988	0.000160	287
288	56.243409	4.069	12.238	5.861	3.210930	3.175392	-0.035538	288
289	56.243409	3.583	8.218	3.935	3.110017	3.110543	0.000526	289
290	56.243409	2.952	4.808	2.302	3.067953	3.067997	0.000044	290
291	36.243409	1.470	7.791	2.899	2.081254	2.082628	0.001374	291
292	36.243409	1.235	3.679	1.368	2.062162	2.062529	0.000367	292
293	36.243409	0.865	1.800	0.669	2.054720	2.054838	0.000118	293
294	36.243409	4.096	12.142	4.525	2.233377	2.234192	0.000815	294
295	36.243409	3.603	8.125	3.024	2.162806	2.162734	-0.000072	295
296	36.243409	2.979	4.622	1.719	2.112492	2.112319	-0.000173	296
297	16.243409	1.565	7.194	1.512	1.024320	1.024304	-0.000016	297
298	16.243409	1.250	3.537	0.742	0.998758	0.998586	-0.000172	298
299	16.243409	0.887	1.375	0.288	0.986152	0.986018	-0.000134	299
300	16.243409	3.399	15.117	3.203	1.185490	1.185749	0.000259	300

TABLE II.- PLANE CHANGE VARIABLES AND RESIDUALS OF ΔV EQUATION - Continued

DATA REF	DC	DAZ	TAON	GAN	ACTUAL DV	CALCUL DV	RESIDUAL (CALC-ACT)	DATA REF
301	16.243409	3.049	11.152	2.351	1.123362	1.123287	-0.000075	301
302	16.243409	2.656	7.121	1.496	1.071594	1.071260	-0.000334	302
303	59.908082	2.009	12.413	6.181	3.259071	3.257654	-0.001417	303
304	59.908082	1.567	3.612	1.799	3.217079	3.217011	-0.000068	304
305	59.908082	5.373	14.235	7.088	3.449204	3.448762	-0.000442	305
306	59.908082	5.803	0.005	0.003	3.296165	3.338642	0.042477	306
307	58.308082	2.066	12.007	5.898	3.187014	3.186028	-0.000986	307
308	58.308082	1.575	3.518	1.728	3.143633	3.143577	-0.000056	308
309	58.308082	5.388	14.186	6.969	3.378151	3.377787	-0.000364	309
310	58.308082	4.143	6.245	3.067	3.223905	3.223434	-0.000471	310
311	45.408082	1.187	10.155	4.361	2.542631	2.543592	0.000961	311
312	45.408082	1.158	4.472	1.920	2.528267	2.528578	0.000311	312
313	45.408082	0.842	2.276	0.977	2.522395	2.522492	0.000097	313
314	45.408082	4.154	11.941	5.130	2.687451	2.687607	0.000156	314
315	45.408082	3.667	7.835	3.364	2.618809	2.618600	-0.000209	315
316	45.408082	2.993	4.526	1.942	2.572398	2.572111	-0.000287	316
317	59.498907	2.042	12.179	6.064	3.248358	3.246099	-0.002259	317
318	59.498907	1.573	3.541	1.763	3.205853	3.205694	-0.000159	318
319	59.498907	6.494	15.973	7.953	3.534278	3.532538	-0.001740	319
320	59.498907	5.188	7.703	3.835	3.339768	3.338766	-0.001002	320
321	57.898906	2.105	11.747	5.770	3.176049	3.174292	-0.001757	321
322	57.898906	1.580	3.449	1.694	3.132168	3.132024	-0.000144	322
323	57.898906	6.541	15.840	7.781	3.463180	3.461619	-0.001561	323
324	57.898906	5.184	7.720	3.791	3.267832	3.266830	-0.001002	324
325	24.998907	1.664	6.640	1.955	1.514420	1.514349	-0.000071	325
326	24.998907	1.298	3.107	0.914	1.490458	1.490349	-0.000109	326
327	24.998907	0.891	1.300	0.382	1.405760	1.480501	0.074741	327
328	24.998907	3.864	13.011	3.846	1.671041	1.671171	0.000130	328
329	24.998907	3.416	9.031	2.662	1.602227	1.601932	-0.000295	329
330	24.998907	2.886	5.283	1.555	1.549768	1.549316	-0.000452	330

TABLE II.- PLANE CHANGE VARIABLES AND RESIDUALS OF ΔV EQUATION - Continued

DATA REF	DC	DAZ	TAON	GAN	ACTUAL DV	CALCUL DV	RESIDUAL (CALC-ACT)	DATA REF
331	60.322878	1.326	20.156	10.037	3.261925	3.247136	-0.014789	331
332	60.322878	1.715	8.952	4.458	3.243243	3.243242	-0.000001	332
333	60.322878	1.458	5.063	2.521	3.231460	3.231523	0.000063	333
334	60.322878	4.195	15.350	7.644	3.397494	3.397111	-0.000383	334
335	60.322878	3.933	10.546	5.251	3.331128	3.331235	0.000107	335
336	60.322878	3.387	6.670	3.321	3.283580	3.283468	-0.000112	336
337	60.322878	6.063	17.293	8.611	3.540339	3.539718	-0.000621	337
338	60.322878	5.636	12.817	6.382	3.441303	3.440899	-0.000404	338
339	60.322878	4.982	8.695	4.329	3.360900	3.360387	-0.000513	339
340	58.722878	1.405	18.845	9.260	3.189996	3.179816	-0.010181	340
341	58.722878	1.741	8.693	4.271	3.170230	3.170377	0.000147	341
342	58.722878	1.468	4.914	2.414	3.158022	3.158114	0.000092	342
343	58.722878	6.107	17.152	8.427	3.470393	3.469938	-0.000455	343
344	58.722878	5.645	12.781	6.279	3.370608	3.370226	-0.000382	344
345	58.722878	4.990	8.655	4.252	3.289421	3.288836	-0.000585	345
346	58.722878	4.242	15.153	7.445	3.327067	3.326842	-0.000225	346
347	58.722878	3.953	10.449	5.133	3.259507	3.259621	0.000114	347
348	58.722878	3.400	6.582	3.233	3.211089	3.210956	-0.000133	348
349	55.822878	1.534	17.024	8.153	3.058627	3.053569	-0.005058	349
350	55.822878	1.788	8.240	3.944	3.036778	3.037142	0.000364	350
351	55.822878	1.487	4.648	2.225	3.023753	3.023893	0.000140	351
352	55.822878	3.557	14.337	6.864	3.150129	3.150094	-0.000035	352
353	55.822878	3.335	9.460	4.528	3.094331	3.094551	0.000220	353
354	55.822878	2.821	5.773	2.763	3.056642	3.056602	-0.000040	354
355	35.822878	3.910	12.831	4.769	2.211310	2.212170	0.000860	355
356	35.822878	3.500	8.613	3.197	2.144234	2.144203	-0.000031	356
357	35.822878	2.909	5.111	1.895	2.096277	2.096019	-0.000258	357
358	35.822878	2.327	10.409	3.865	2.126603	2.110990	-0.015613	358
359	35.822878	2.072	5.968	2.213	2.072967	2.073276	0.000309	359
360	35.822878	1.607	3.136	1.162	2.052707	2.052783	0.000076	360

TABLE II.- PLANE CHANGE VARIABLES AND RESIDUALS OF ΔV EQUATION - Continued

DATA REF	DC	DAZ	TAON	GAN	ACTUAL DV	CALCUL DV	RESIDUAL (CALC-ACT)	DATA REF
361	15.822878	2.277	10.690	2.219	1.056879	1.056970	0.000091	361
362	15.822878	1.954	6.829	1.413	1.015750	1.015523	-0.000227	362
363	15.822878	1.574	3.523	0.728	0.987739	0.987465	-0.000274	363
364	15.822878	3.355	15.349	3.204	1.162861	1.163372	0.000511	364
365	15.822878	3.031	11.274	2.341	1.101951	1.101842	-0.000109	365
366	15.822878	2.645	7.221	1.494	1.050826	1.050435	-0.000391	366
367	60.322878	2.129	11.586	5.769	3.272150	3.272294	0.000144	367
368	60.322878	2.037	6.210	3.092	3.242803	3.243045	0.000242	368
369	60.322878	1.584	3.398	1.692	3.227739	3.227762	0.000023	369
370	60.322878	4.811	13.076	6.511	3.415274	3.415859	0.000585	370
371	60.322878	4.318	8.843	4.403	3.337335	3.337465	0.000130	371
372	60.322878	3.613	5.252	2.615	3.282973	3.282814	-0.000159	372
373	60.322878	6.593	15.696	7.816	3.560937	3.560898	-0.000039	373
374	60.322878	6.009	11.474	5.713	3.451326	3.451017	-0.000309	374
375	60.322878	5.228	7.518	3.744	3.363188	3.362683	-0.000505	375
376	58.722878	2.187	11.220	5.512	3.200319	3.200666	0.000347	376
377	58.722878	2.055	6.085	2.989	3.170049	3.170294	0.000245	377
378	58.722878	1.588	3.355	1.648	3.154593	3.154618	0.000025	378
379	58.722878	4.831	13.013	6.393	3.344169	3.344800	0.000631	379
380	58.722878	4.328	8.802	4.324	3.265699	3.265770	0.000071	380
381	58.722878	3.617	5.230	2.569	3.210681	3.210495	-0.000186	381
382	58.722878	6.616	15.632	7.681	3.490291	3.490295	0.000004	382
383	58.722878	6.002	11.497	5.648	3.380409	3.380097	-0.000312	383
384	58.722878	5.222	7.547	3.708	3.291750	3.291226	-0.000524	384
385	55.822878	2.267	10.743	5.142	3.069001	3.069536	0.000535	385
386	55.822878	2.086	5.872	2.810	3.032021	3.037269	0.005248	386
387	55.822878	1.606	3.144	1.504	3.020815	3.020845	0.000030	387
388	55.822878	4.146	11.969	5.730	3.165178	3.165782	0.000604	388
389	55.822878	3.672	7.815	3.740	3.098867	3.098993	0.000126	389
390	55.822878	2.994	4.522	2.164	3.055593	3.055486	-0.000107	390

TABLE II.- PLANE CHANGE VARIABLES AND RESIDUALS OF ΔV EQUATION - Concluded

DATA REF	DC	DAZ	TAON	GAN	ACTUAL DV	CALCUL DV	RESIDUAL (CALC-ACT)	DATA REF
391	35.822878	2.592	9.127	3.388	2.116634	2.116755	0.000121	391
392	35.822878	2.229	4.963	1.841	2.074491	2.074483	-0.000008	392
393	35.822878	1.671	2.412	0.894	2.052208	2.052163	-0.000045	393
394	35.822878	4.147	11.966	4.446	2.219029	2.219450	0.000421	394
395	35.822878	3.647	7.927	2.941	2.147576	2.147386	-0.000190	395
396	35.822878	2.995	4.516	1.674	2.096779	2.096544	-0.000235	396
397	15.822878	2.722	8.590	1.779	1.065097	1.063775	-0.001322	397
398	15.822878	1.980	6.626	1.371	1.016277	1.016057	-0.000220	398
399	15.822878	1.588	3.356	0.693	0.987859	0.987645	-0.000214	399
400	15.822878	3.376	15.239	3.181	1.164363	1.164540	0.000177	400
401	15.822878	3.037	11.231	2.332	1.102707	1.102591	-0.000116	401
402	15.822878	2.649	7.184	1.487	1.051125	1.050813	-0.000312	402

SUM OF RESIDUALS = -0.011716 KM/SEC
AVERAGE ABSOLUTE RES = 0.001473 KM/SEC
RMS RESIDUAL = 0.007246 KM/SEC

TABLE III.- SUMMARY OF RESIDUALS WHEN THE 16 CASES[a] HAVING RESIDUALS GREATER THAN 7 m/sec ARE DELETED

Sum of residuals, km/sec	-0.011912
Average absolute residual, km/sec	0.000397
RMS residual, km/sec	0.000872

[a]Cases having the following data reference numbers: 139, 143, 237, 240, 248, 255, 263, 266, 267, 268, 288, 306, 327, 331, 340, 358.

REFERENCES

1. TRW Systems: NAS Contractor Report 67-FMT-506, Empirical Simulations of the Nominal and Alternate Mission Translunar Injection Burn Fit for an Extended Range of Independent Variables, April 14, 1967.

2. Johnson, Francis, compiler: MSC Memorandum 67-FM56-190, Better TLI Simulation Equations, June 5, 1967.