Internal Note No. 67-FM-57

NATIONAL AERONAUTICS AND SPACE ADMINISTRATION

MSC INTERNAL NOTE NO. 67-FM-57

July 3, 1967

Technical Library, Bellcomm, Inc.

AS-503A/AS-504A REQUIREMENTS FOR THE RTCC: REENTRY PHASE

SEP 1969

LIBRARY COPY

JUL 27 1967

MANNED SPACECRAFT CENTER
HOUSTON, TEXAS

By James W. Tolin, Jr.,
Oliver Hill,
Jon C. Harpold,
and
Joseph E. Rogers
Mission Analysis Branch

FEB 1974
RECEIVED
NASA STI FACILITY
INPUT BRANCH

FOR NASA
PERSONNEL ONLY

MISSION PLANNING AND ANALYSIS DIVISION
MANNED SPACECRAFT CENTER
HOUSTON, TEXAS

(NASA-TM-X-69753) AS-503A/AS-504A REQUIREMENTS FOR THE RTCC: REENTRY PHASE (NASA) 61 p

N74-70851

Unclas
00/99 16203

MSC INTERNAL NOTE NO. 67-FM-57

PROJECT APOLLO

AS-503A/AS-504A REQUIREMENTS FOR THE RTCC: REENTRY PHASE

By James W. Tolin, Jr., Oliver Hill, Jon C. Harpold,
and Joseph E. Rogers
Mission Analysis Branch

July 3, 1967

MISSION PLANNING AND ANALYSIS DIVISION
NATIONAL AERONAUTICS AND SPACE ADMINISTRATION
MANNED SPACECRAFT CENTER
HOUSTON, TEXAS

LIBRARY COPY
JUL 27 1967
MANNED SPACECRAFT CENTER
HOUSTON, TEXAS

FOR NASA
PERSONNEL ONLY

Approved: M P Frank
M. P. Frank III, Chief
Mission Analysis Branch

Approved: J P Mayer
John P. Mayer, Chief
Mission Planning and Analysis Division

CONTENTS

Section	Page
SUMMARY AND INTRODUCTION	1
PRIMARY GUIDANCE REQUIREMENTS	1
DIGITAL AUTOPILOT SIMULATION	3
ENTRY MONITORING SYSTEM	3
BACKUP ENTRY MODES	5
RTCC DISPLAYS	6
REFERENCES	56

TABLES

Table		Page
I	VARIABLES FOR REENTRY GUIDANCE	9
II	GUIDANCE GAINS AND CONSTANTS	13
III	FINAL PHASE REFERENCE TRAJECTORY	17
IV	DEFINITION OF VARIABLES FOR FIGURE 16	18
V	DAP GAINS AND CONSTANTS FOR FIGURE 16	19
VI	DEFINITION OF VARIABLES FOR FIGURES 17 THROUGH 21 . . .	20

FIGURES

Figure		Page
1	Reentry steering	27
2	"Average-g" navigation	28
3	Initialization	29
4	Targeting	30
5	Initial roll	31
6	Huntest	32
7	Range prediction	34
8	Constant drag	35
9	Upcontrol	36
10	Ballistic phase	37
11	Predict 3	38
12	G-Limiter	39
13	Lateral control	40
14	Ground initialization flow for EMS initialization	41
15	Backup entry	42
16	Atmospheric roll DAP flow logic	43
17	Retro high-speed entry digitals	49
18	Retro elapsed time display	50
19	Retrofire digitals	52
20	RFO entry/mode III digitals	53
21	Guidance entry/abort digitals	55

AS-503A/AS-504A REQUIREMENTS FOR THE RTCC: REENTRY PHASE

By James W. Tolin, Jr., Oliver Hill,
Jon C. Harpold and Joseph E. Rogers

SUMMARY AND INTRODUCTION

Presented in this internal note are the real-time program requirements for the reentry phases of the AS-503 and AS-504A missions. The primary mode of reentry trajectory control will utilize the guidance and navigation (G&N) system onboard the spacecraft. However, should there be a G&N failure, there are several backup reentry modes available.

The backup modes may utilize the entry monitoring system (EMS) for ranging or may be based on manual open-loop control of the spacecraft bank angle by the flight crew. The recommended displays and real-time computations required to support these reentry modes for AS-503, AS-504A, and subsequent missions are presented in this document.

PRIMARY GUIDANCE REQUIREMENTS

The basic Apollo reentry guidance and navigation is presented in reference 1. Some phases of the reentry guidance flow logic of reference 1 are still in the developmental stages and may be updated at a later date. The current Apollo reentry guidance flow logic is presented in figures 1 through 13 of this internal note. The definitions of the reentry guidance variables are presented in table I. The guidance gains and constants are presented in table II, and the final phase reference trajectory is presented in table III.

The navigation for the real-time program is to be obtained from the real-time processor integration package. The total aerodynamic acceleration, D, used in the targeting phase (fig. 4) is also to be obtained from this integration package. The average-g navigation computation (fig. 2) and the D computation are included in order to present a more complete document.

The initialization phase of the program is presented in figure 3. The parameters Q7 and L/D must be initialized to accommodate a branch to KEPL from INITROLL (fig. 5) for a slow-speed reentry. Q7 is set equal to Q7F and L/D is equated to LAD (cos BETA), where BETA is the command module (CM) bank angle at reentry interface. The parameter FACTOR must be initialized at 1.0 to insure the correct computation of L/D in the UPCONTROL phase in the event of shallow, high-speed reentries. The unit target vector, $\bar{U}$RTO, is the initial target unit vector and must be computed from the longitude and geodetic latitude of the desired splash point. The time increment, TN, is a constant added to the current flight time in order to obtain a nominal time of flight from lift-off through reentry.

The real-time computer program must have an override which permits arbitrary selection of the complete reentry guidance or only the final phase of the reentry guidance. This can be obtained by placing a switch at the V-VFINAL1 logic in the initial roll phase, figure 5.

The Real-Time Computer Complex (RTCC) must have the capability of receiving an update of the targets, trim aerodynamic characteristics, entry state vector, and lateral bias during the missions. The flight controllers must have the option of selecting the initial reentry bank angle of the CM.

The function of the lateral bias term is to simulate the aerodynamic rotation of the lift vector which results from a lateral center-of-gravity offset. The magnitude of the lateral bias (CGBIAS) term is computed from the equation

$$\text{CGBIAS} = \tan^{-1} \frac{Ycg}{Zcg}$$

where Ycg and Zcg are given in CM body coordinates. The positive X-body axis is along the center line and through the apex of the CM, the positive Z-body axis is normal to X-body and in the general direction of the lift vector, and the positive Y-body completes the orthogonal set of a right-hand system. The calculated bank angle (β) which goes to the integrator must reflect the CGBIAS term; i.e., $\beta = \beta + \text{CGBIAS}$.

DIGITAL AUTOPILOT SIMULATION

Figure 16 presents the detailed flow logic for the roll channel of the CM reentry digital autopilot (DAP). The DAP is explained more fully in reference 4, from which the basic flow was taken.

The DAP simulation implements the roll commands issued by the reentry guidance logic every 2 seconds. The only inputs necessary are the roll command from the reentry guidance (delayed by one second), the trim angle of attack, and the initial spacecraft bank angle. Since the roll command to the DAP is delayed by 1 second, the logic implements the command generated at time (T) during the time interval (T + 1) to (T + 3). The spacecraft bank angle is the same as specified in the previous section. The flow, as shown in figure 16, will process the logic at 0.1-second intervals and, as such, will make 10 individual calculations of the pertinent variables during the first second of each 2-second interval before exiting the routine to return immediately for the second second of the 2-second time interval. Outputs from the routine include bank angle, body roll rate, stability roll rate, and CM-RCS fuel usage.

All switches have initial values of zero except LATSW, whose initial value is 1. As indicated in the flow, SWTCH2 must be set equal to zero each time a new roll command is generated by the reentry guidance in order that the parameters be reinitialized.

The DAP roll logic is designed to calculate a delta time interval (T1) to fire the CM-RCS engines to drive the spacecraft to the commanded attitude. This value of T1 that is calculated is based on a roll rate that is proportional to roll attitude error. In addition, time intervals TOFF and T2 are calculated which, respectively, represent a coast time and a time to fire the opposing jets to reduce the roll rate to approximately zero as the spacecraft attitude approaches the roll command.

All constants were taken from reference 4 with the exception of the acceleration about the CM X-body axis which was taken from reference 5. Table IV presents the definition of variables used in the DAP simulation, and table V shows the DAP gains and constants.

ENTRY MONITORING SYSTEM

The entry monitoring system (EMS) provides the crew with the capability for corridor verification and reentry monitoring and backup ranging. It provides a display of load factor (g) versus inertial velocity (V) on a scroll marked with offset and onset curves which enables the crew to monitor the reentry trajectory and aid in performing a safe manual entry. In case there is a failure in the primary G&N

system either before or during reentry, the EMS can be used as a reentry display for the backup mode for manual trajectory control.

The EMS is initialized by the flight crew inserting the inertial velocity and the inertial range-to-go values into the EMS prior to reentry. The inserted data corresponds to the 0.05-g point in the reentry trajectory. These quantities are made available to the crew by voice communications from the ground. The primary method for initialization is to compute the inertial velocity and inertial range-to-go using the RTCC reentry simulation program. The EMS begins operating when it senses a load factor of 0.05 g $\pm$ 0.005 g or when it is manually actuated. The following procedure is to be used to determine the initial conditions:

1. Determine the inertial position and velocity at the 0.05-g point in the reentry trajectory.

2. Using the state vectors at 0.05 g, continue the velocity integration for a guided or backup entry trajectory with:

$$V = V_o - K_D \int_{t_{0.05\ g}}^{t_f} A_X dt$$

where

V_o = velocity at 0.05 g

V = inertial velocity

K_D = 0.935 (a resolution factor)

A_X = sensed aerodynamic acceleration along the longitudinal body axis

t_f = time when the altitude decreases to 25 000 ft

$t_{0.05\ g}$ = time at 0.05 g

g = 32.174 ft/sec^2

3. Using the velocity from the above equation, calculate the inertial range-to-go by

$$R_f = 0.000162 \int_{t_{0.05\ g}}^{t_f} V\, dt$$

where

R_f = inertial range from 0.05 g to t_f above an oblate earth

0.000162 is the conversion factor to obtain range-to-go in nautical miles.

The quantities V_o and R_f are transmitted by voice link to the flight crew for EMS initialization. Figure 14 presents a block diagram of the EMS initialization steps. The inertial velocity will be calculated in feet per second, and the inertial range-to-go in nautical miles. These quantities and the time of the 0.05-g point will be displayed in the Mission Control Center (MCC) to the flight controller for relay to the crew.

BACKUP ENTRY MODES

The mission support for the AS-503 and AS-504A reentry phases is to be designed to encompass all reentry speeds from earth orbital to lunar return and time-critical abort reentry speeds. Therefore, it is necessary to devise a backup entry mode which will satisfy the safe entry requirements for this range of velocities. The RTCC must be programmed to provide the flight controllers with the option of selecting a backup reentry mode as opposed to a guided (closed-loop) reentry mode. The fundamental basis for these backup modes is manual attitude control of the CM lift-vector orientation. The selection of the proper routine to be used is basically a function of three parameters:

1. amount of degradation in the spacecraft systems

2. inertial velocity at reentry

3. inertial flight-path angle at reentry

Figure 15 presents a flow diagram containing three possible backup modes. At reentry interface the spacecraft is banked to an angle defined by k_1, a manual entry device (MED) quantity (normally 0° or 180°). The bank angle is then held constant until the "g" level is greater than g_c. The parameter g_c may be defined in one of three ways: (1) an MED quantity, (2) the first maximum load factor encountered during reentry, or (3) a g level which produces a maximum load factor equal to X g where X is an MED parameter. When the g level is greater than g_c, any one of the three subroutines may be entered depending upon the value of KSWCH, which is also an MED parameter.

The basic program described above is designed to shape the high-speed reentry trajectory and prevent skipout. It accomplishes this by controlling the bank angle as a function of the load factor. This will enable the flight crew to avoid a possible skipout during reentries from high-speed abort conditions.

The subroutines which may be selected by setting KSWCH to a value of 1, 2, or 3 are described as follows:

Subroutine 1 is a bank - reverse-bank routine. Bank angle, k_3, and time-to-reverse bank angle, t_{rB}, must be entered through the MED. At some time, t_{rB}, in the reentry trajectory a reverse bank angle maneuver is executed. There is no target position specified, and each maneuver is done only once. Aside from the bank angle reversal there is no effective cross-range control in this subroutine. By setting the time-to-reverse bank angle to a large number, it is also possible to fly a constant bank angle to splashdown.

Subroutine 2 shapes the trajectory by minimizing the cross-range and down-range errors to reach a specified target. The routine iterates on a bank angle and time-to-reverse bank angle required to reach a specified target. It should be noted that this subroutine cannot be used if g_c is determined by the third method.

Subroutine 3 generates a rolling reentry with a roll rate of 20 deg/sec about the X-body axis. There is no trajectory control and no specified target.

The RTCC must have the capability of entering subroutines 1, 2, and 3 directly. This can be done by specifying g_c equal to zero. The backup reentry program may serve additional purposes if desired. It is capable of computing the zero-lift and full-lift impact points (IP). Should one of these backup entry modes be employed rather than using the EMS to fly the reentry, the EMS could be used to monitor the flight.

RTCC DISPLAYS

The following is a partial list of recommended digital displays for missions AS-503 and AS-504A. These displays are illustrated in figures 17 through 21.

1. Retro High-Speed Entry Digitals (fig. 17)

2. Retro Elapsed Time Display (fig. 18)

3. Retrofire Digitals (fig. 19)

4. RFO Entry/Mode III Digitals (fig. 20)

5. Guidance Entry/Abort Digitals (fig. 21)

With the exception of figures 17 and 18, the displays are the same as those recommended for mission AS-258.

In addition to the display parameters recommended for AS-258, several additional display quantities will be necessary for the AS-503 and AS-504A missions in order to support a high speed reentry. These additional quantities are defined in reference 3. Figures 17 and 18 represent the proposed display format for the additional parameters. Figure 17 represents a new display not used for AS-258, and figure 18 represents a reformated AS-258 display. The definition of abbreviations used in the displays can be found in table VI. An additional display of telemetry quantities is being formulated at the present time and will be documented at a later date.

In addition to the above digital displays, several limit-line digital TV displays will be required. These requirements are not completely defined at the present time, but a requirement for three displays has been defined. These three displays would consist of one plot each to support high-speed reentry using primary guidance, high-speed reentry using backup trajectory control, and low-speed reentry.

TABLE I.- VARIABLES FOR REENTRY GUIDANCE

Variable	Definition
$\bar{U}RTO$	initial unit target vector
$\bar{U}Z$	unit vector north
$\bar{V}$	velocity vector
$\bar{R}$	position vector
$\bar{V}I$	inertial velocity vector
$\bar{R}TE$	vector east at initial target
$\bar{U}TR$	vector normal to $\bar{R}TE$ and $\bar{U}Z$
$\bar{U}RT$	target vector
$\bar{U}NI$	unit vector normal to trajectory plane
$\bar{D}ELV$	integrated acceleration from PIPAS
$\bar{G}$	gravity vector
AHOOK	term in GAMMAL calculation
AO	initial drag for upcontrol
ALP	constant for upcontrol
ASKEP	Kepler range
ASP1	final phase range
ASPUP	up-range
ASP3	gamma correction
ASPDWN	range down to pull up
ASP	predicted range
COSG	cosine of GAMMAL

TABLE I.- VARIABLES FOR REENTRY GUIDANCE - Continued

Variables	Definition
D	total aerodynamic acceleration
DO	controlled constant drag
DHOOK	term in GAMMAL computation
DIFF	THETNM-ASP (range difference)
DIFFOLD	previous value of DIFF
DR	previous value of down control
DREFR	reference drag
DVL	VS1 - VL
E	eccentricity
F1	∂ range/∂ drag (final phase)
F2	∂ range/∂ RDOT (final phase)
F3	∂ range/∂ L/D
FACT1	constant for upcontrol
FACT2	constant for upcontrol
FACTOR	used in upcontrol
GAMMAL	flight-path angle at VL
GAMMAL1	simple form of GAMMAL
KA	drag level to initiate constant drag steering
K1ROLL	parameter used in calculation of roll command
K2ROLL	parameter used in calculation of roll command

TABLE I.- VARIABLES FOR REENTRY GUIDANCE - Continued

Variables	Definition
LATANG	lateral range
LEQ	excess centrifugal force over gravity: = (VSQ - 1) GS
LEWD	upcontrol reference L/D
L/D	desired lift-to-drag ratio (osculating plane)
L/D1	temporary storage for L/D in lateral logic
P	partial derivative of range with respect to L/D
PREDANG1	reference range from final phase table
PREDANG2	final phase range perturbation due to drag
PREDANG3	final phase range perturbation due to RDOT
PREDANGL	predicted range (final phase)
Q7	minimum drag for upcontrol
RDOT	altitude rate
RDOTREF	reference RDOT for upcontrol
RDTR	reference RDOT for downcontrol
RDTRF	reference RDOT from final phase table
ROLLC	roll command
RTOGO	range-to-go (final phase)
SL	sine of latitude
T	elapsed time from lift-off

TABLE I.- VARIABLES FOR REENTRY GUIDANCE - Concluded

Variables	Definition
TEMIB	incremental value of L/D for upcontrol
THETA	desired great circle range (radians)
THETNM	desired great circle range (nautical miles)
V	velocity magnitude
V1	initial velocity for upcontrol
V1OLD	previous value of V1
VCORR	velocity corrected for upcontrol
VL	exit velocity for upcontrol
VREF	reference velocity for upcontrol
VS1	VSAT or V1, whichever is smaller
VBARS	$(VL/VSAT)^2$
VSQ	normalized velocity squared: = $(V/VSAT)^2$
WT	earth rate times time
X	intermediate variable in G-limiter
Y	lateral miss limit

TABLE II.- GUIDANCE GAINS AND CONSTANTS

	Symbol	Value	Units
Entry constants and gains			
Factor in ALP computation	C1	1.25	n.d
Constant gain on drag	C16	0.01	1/fpss
Constant gain on RDOT	C17	0.001	1/fps
Bias velocity for final phase start	C18	500.	fps
Maximum drag for down-lift	C20	175.	fpss
Factor in AHOOK computation	CHOOK	0.25	n.d.
Factor in GAMMAL computation	CH1	0.75	n.d.
Drag for changing values of LEWD	D2	175.	fpss
Computation cycle-time interval	DT	2.	sec
Maximum acceleration	GMAX	322.	fpss
Factor in KA computation	KA1	1.3	GS
Factor in KA computation	KA2	.2	GS
Factor in DO computation	KA3	90.	fpss
Factor in DO computation	KA4	40.	fpss
Optimized upcontrol gain	KB1	3.4	n.d.
Optimized upcontrol gain	KB2	0.0034	1/fps
Increment on Q7 to detect end of Kepler phase	KDMIN	0.5	fpss
Lateral switch gain	KLAT	0.0125	rad

TABLE II.- GUIDANCE GAINS AND CONSTANTS - Continued

	Symbols	Value	Units
Time of flight constant	KTETA	1000.	sec
Nominal time of flight	TN	500.	sec
Constant in FINAL PHASE	K13P	4.	n.d.
Maximum L/D [minimum actual vehicle (L/D]	LAD	0.3	n.d.
LAD cosine (15 degrees)	L/D CMINR	0.2895	n.d.
Upcontrol L/D:	LEWD1	0.1	n.d.
	LEWD2	0.2	n.d.
Final phase L/D	LOD	0.18	n.d.
Factor to reduce upcontrol gain	POINT1	0.1	n.d.
Final phase range - 23 500 Q3	Q2	-1002	n. mi.
Final phase D range/DV	Q3	0.07	n. mi./fps
Final phase D range/D GAMMA	Q5	7050	n. mi./rad
Final phase initial flight-path angle	Q6	0.0349	rad
Constant in factor	Q7MIN	50	fpss
Minimum drag for upcontrol	Q7F	6	fpss
Constant in GAMMAL1	Q19	0.2	n.d.
If V less than VSLOW, LEWD = 0.2	VSLOW	35 000	fps
Minimum VL	VLMIN	18 000	fps
Velocity to switch to relative velocity	VMIN	VSAT/2	fps
RDOT to start into HUNTEST	VRCONTRL	700	fps

TABLE II.- GUIDANCE GAINS AND CONSTANTS - Continued

	Symbol	Value	Units
Tolerance to stop range iteration	25NM	25.	n. mi.
Lateral switch bias term	LATBIAS	.00012	rad
Velocity to stop steering	VQUIT	1000	fps
Initial attitude gain	K44	$105 \times \left(\frac{180}{\pi}\right)^3$	$\left(\frac{rad}{sec}\right)^3 \frac{ft}{sec}$
Velocity to start final phase on INITENTRY	VFINAL1	27 000	fps
Factor in initial attitude	VFINAL	26 600	fps
Maximum value of VCORR	VCORLIM	1000	fps
Entry conversion factors and scaling constants			
Angle in RAD to NM	ATK	3437.7468	n. mi./rad
Nominal G value for scaling	GS	32.2	fpss
Atmosphere scale height	HS	28 500	ft
Earth radius	RE	21 202 900	ft
Satellite velocity at RE	VSAT	25 766.1973	fps
Earth rate	WIE	$72.9211505 \times 10^{-6}$	rad/sec
Equatorial earth rate	KWE	1546.70168	fps
Gravity harmonic coefficient	J	.00162345	n.d.
Earth gravitational constant	MUE	$3.986032233 \times 10^{14}$	m^3/sec^3

TABLE II.- GUIDANCE GAINS AND CONSTANTS - Concluded

Switches		Initial Value
EGSW	Final phase switch	0
GONEPAST	Indicates overshoot of target	0
HIND	Indicates iteration in HUNTEST	0
HUNTIND	Indicates pass thru HUNTEST	0
INRLSW	Indicates initial roll attitude set	0
RELVELSW	Relative velocity switch	0
LEWDSW	Use LEWD = .2 if set = 1	0
LATSW	Inhibit downlift switch in DAP if set = 0	1

TABLE III.- FINAL PHASE REFERENCE TRAJECTORY

N	VREF, fps	RDTR (RDTRF), fps	AREF, fpss	FRDT F2 DR/DRDOT, n. mi./fps	FA F1 DR/DA, n. mi./fpss	RTOGO, n. mi.	PP (DR/DL/D), n. mi.
1	0	-331	34.1	0.	-0.02695	0	1
2	337	-331	34.1	0.	-0.02695	0	1
3	1080	-693	42.6	0.002591	-0.03629	2.7	12.88
4	2103	-719	60.0	0.003582	-0.05551	8.9	21.82
5	3922	-694	81.5	0.007039	-0.09034	22.1	43.28
6	6295	-609	93.9	0.01446	-0.1410	46.3	96.70
7	8531	-493	98.5	0.02479	-0.1978	75.4	187.44
8	10101	-416	102.3	0.03391	-0.2372	99.9	282.2
9	14014	-352	118.7	0.06139	-0.3305	170.9	329.4
10	15951	-416	125.2	0.07683	-0.3605	210.3	465.5
11	18357	-566	120.4	0.09982	-0.4956	266.8	682.7
12	20829	-781	95.4	0.1335	-0.6483	344.3	980.5
13	23090	-927	28.1	0.2175	-2.021	504.8	1385.
14	23500	-820	6.4	0.3046	-3.354	643.0	1508.
15	35000	-820	6.4	0.3046	-3.354	643.0	1508.

TABLE IV.- DEFINITION OF VARIABLES FOR FIGURE 16

Variable	Definition
BACC	body acceleration
BETA	spacecraft bank angle
BRATE	body roll rate
BRR	pseudo body roll rate
FUEL	fuel used by RCS
JNDX, JNDX1	direction of roll flags
RAE	roll attitude error
RAEDES	desired roll attitude error
ROLLCD	roll command
ROLLCD1	roll command storage
SACC	stability acceleration
SRATE	stability roll rate
TEM	temporary storage
TOFF	coast time
T1	time to fire jets
T2	time to reverse firing
T3	temporary storage
T4	temporary storage
VDRIF	drift roll rate

TABLE V.- DAP GAINS AND CONSTANTS FOR FIGURE 16.

Symbol	Value	Units
ANGMAX	20.0	deg/sec
A1	8.0	deg/sec^2
A2	4.55	deg/sec^2
KLAG1	0	---
KLAG2	0	---
KLAG3	0	---
M	0	---
RAEMIN	4.0	deg
SLOPE	0.25	sec^{-1}
SWTCH1	0.0	---
SWTCH2	0.0	---
SWTCH3	0.0	---
TIMINT	2.0	sec
TMAX	0.1	sec
VZ	2.0	deg/sec
XS	2.0	deg

TABLE VI.- DEFINITION OF VARIABLES FOR FIGURES 17 THROUGH 22.

AGC	command module computer (Apollo guidance computer)
AREA	planned landing area
BANK	backup bank angle
BC	burn code
BN/ENT Code	burn and entry code
BT	total SPS burn duration required for deorbit
CLA	contingency landing area
CM WT	Command module weight
ENT Code	type of entry profile being generated
EP	primary entry profile
GETBBO-GETBOI	ground elapsed time at beginning of communications blackout
GETCO	ground elapsed time of SPS cutoff
GETDD	ground elapsed time of drogue deploy
GETEBO-GETBOE	ground elapsed time at end of communications blackout
$GETEI-GET_{400K}$	ground elapsed time at reentry interface (400 000-ft altitude)
GETI	ground elapsed time of SPS ignition
GETLC	ground elapsed time of touchdown
GETMD	ground elapsed time of main chute deploy
GETPI	ground elapsed time of retrofire ignition
GETRB	ground elapsed time to reverse bank
$GET_{.05g}$	ground elapsed time of .05 g

GMTI	Greenwich mean time of retrofire
H	altitude above geodetic earth at retrofire
MAN	manual
MATRIX	REFSMAT used
MAX G	maximum load factor
MISS	miss distance of IP from target
NO	telemetry value of noun in command module computer (CMC)
PLA	planned landing area
PRE	preburn
PROG	telemetry value of program being executed by CMC
PST	postburn
P_I	IMU pitch gimbal angle at retrofire
P_I-RB	IMU pitch gimbal angle at RETRB
P_I-Sep	IMU pitch gimbal angle at CM-SM separation
P_I Xg	IMU pitch gimbal angle at Xg's
P_I 400k	IMU pitch gimbal angle at 400 000-ft altitude.
P_H - P_{LH}	pitch angle in local horizontal system at retrofire.
P_{LH}SEP	local horizontal pitch attitude at CM-SM separation
Q7 + KDMIN	drag at start of second reentry guidance
R_1, R_2, R_3	CMC telemetry values of the 3 DSKY registers
RETBB01	RET of first begin communications blackout
RETBB02	RET of second begin blackout
RETD-RETDD	elapsed time from retrofire initiate to drogue deploy
RETEB01	RET of first end blackout

RETEB02	RET of second end blackout
RETEI	RET at reentry interface (400k feet altitude)
RETEMS	RET of X altitude. Point where CMC computes the EMS initialization
$RETGI_{HS}$	RET of reentry guidance initiate for high speed reentry
RETLC	elapsed time from retrofire initiate to touchdown
RETM - RETMD	elapsed time from retrofire initiate to main chute deploy
RETMAXG	RET of maximum g
RETRB	elapsed time from retrofire initiate to reverse bank
RETSEP	elapsed time from retrofire initiate to CM-SM separation
RET_{400K}	elapsed time from retrofire initiate to 400 000-ft altitude
RET .05G	elapsed time from retrofire initiate to .05 g
RET .2G	elapsed time from retrofire initiate to .2 g
RET_{XG}	RET of manually input g level
RNGEMS	range as computed by the onboard computer for EMS initialization
$(R_p - R_T)_{GI}$	predicted minus actual range to target at start of second entry guidance
R .05G	range to the target at .05 g
RT_{400K}	inertial range to the target at 400 000-ft altitude
$R_H - R_{LH}$	roll angle at retrofire referenced to the local horizontal reference frame
RO	IMU roll gimbal angle at retrofire initiate
R_O RB	IMU roll gimbal angle at RETRB
R_OSEP	IMU roll gimbal angle at CM-SM separation
R_O X_G	IMU roll gimbal angle at X g

R_0 400K	IMU roll gimbal angle at 400 000 ft altitude
(RP - RT) .2g	predicted range minus actual range to the target as computed by the onboard computer at .2 g
STA ID	station ID
TAR	true anomaly
TFF	time of free fall to 400 000 ft altitude
TRK	tracking
UΔT	SPS ullage burn time
VB	telemetry value of verb in CMC
VC	velocity to be gained along X-body axis (including ullage but not tailoff)
V_{EI} - V_{400K}	inertial velocity at reentry interface (400 000-ft altitude)
VEMS	velocity as computed by the onboard computer for EMS initialization
V .05g	inertial velocity at .05 g
V_{GX} (XΔV)	X component of velocity to be gained at the centroid of the SPS deorbit burn in the local horizontal reference frame
V_{GY}(XΔV)	Y component of velocity to be gained at the centroid of the SPS deorbit burn in the local horizontal reference frame
V_{GZ} (XΔV)	Z component of velocity to be gained at the centroid of the SPS deorbit burn in the local horizontal reference frame
VL	skip velocity as computed by the command module computer
V_T	total velocity at retrofire initiate
WT	weight
Y_M	IMU yaw gimbal angle at retrofire initiate

Y_M RB	IMU yaw gimbal angle at RETRB
Y_M SEP	IMU yaw gimbal angle at CM-SM separation
Y_M X_G	IMU yaw gimbal angle at X g
Y_M 400K	IMU yaw gimbal angle at 400 000-ft altitude
Y_H - Y_{LH}	yaw angle in local horizontal system at retrofire
γ_{EI} - γ_{400K}	inertial geocentric flightpath angle at reentry interface (400 000-ft altitude)
ϕ_{IP}	geodetic latitude of touchdown
ϕ_{ZL} 1	geodetic latitude of zero-lift IP for first reentry footprint
ϕ_{ZL} 2	geodetic latitude of zero-lift IP for second reentry footprint
ϕ_{ML} 1	geodetic latitude of maximum-lift IP for first reentry footprint
ϕ_{ML} 2	geodetic latitude of maximum-lift IP for second reentry footprint
ϕ_T	geodetic latitude of target
ϕ_{400K}	geodetic latitude at 400 000-ft altitude
λ_{IP}	longitude of touchdown point
λ_{ZL} 1	longitude of zero-lift impact point for first reentry footprint
λ_{ZL} 2	longitude of zero-lift impact point for second reentry footprint
λ_{ML} 1	longitude of maximum-lift impact point for first reentry footprint
λ_{ML} 2	longitude of maximum-lift impact point for second reentry footprint
λ_T	longitude of touchdown point

λ_{400K}	longitude at 400 000-ft altitude
$\Delta\phi$	miss distance in terms of delta latitude
$\Delta\lambda$	miss distance in terms of delta longitude
VT	total ΔV
BT	burn time

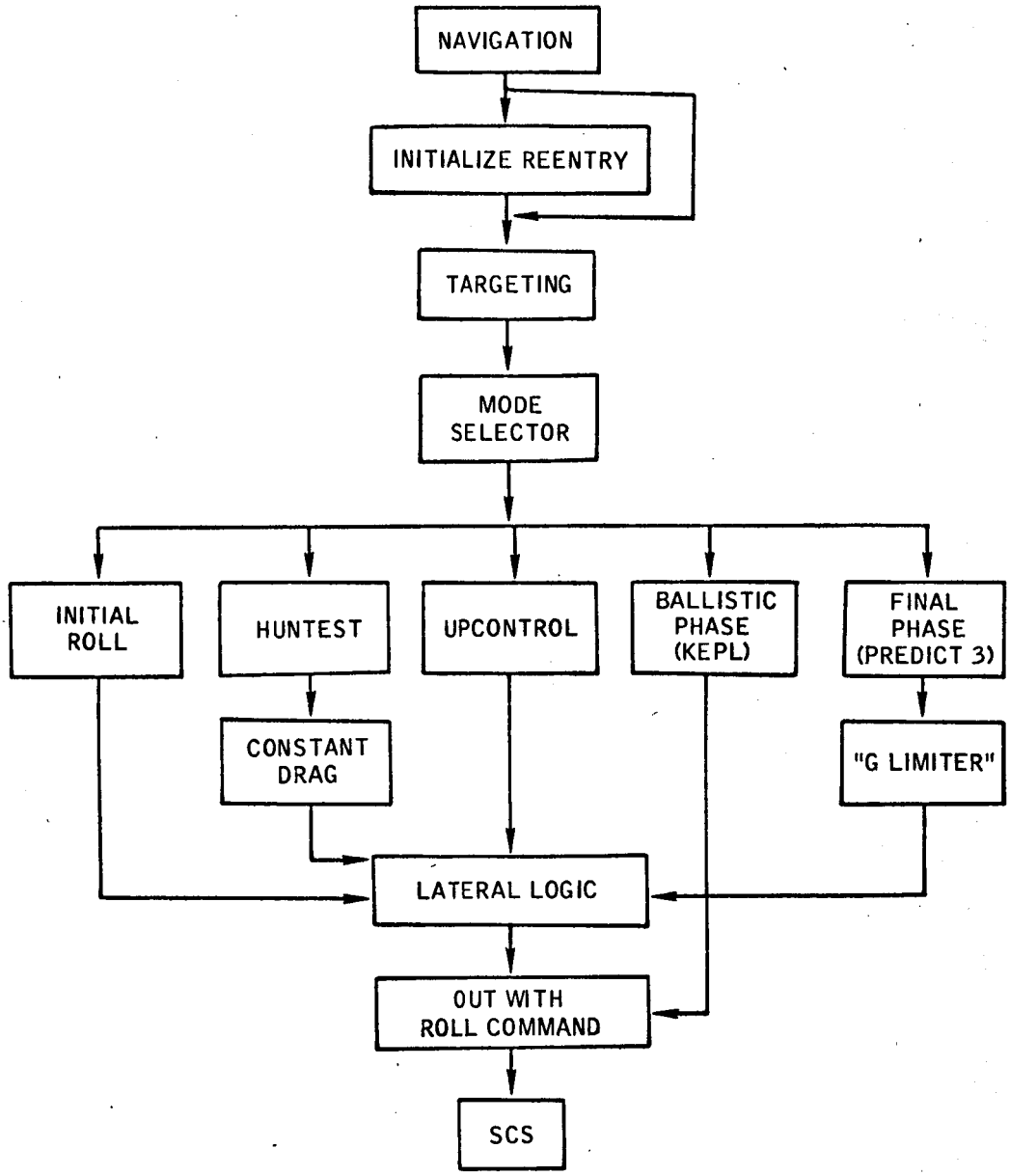

Figure 1.- Reentry steering.

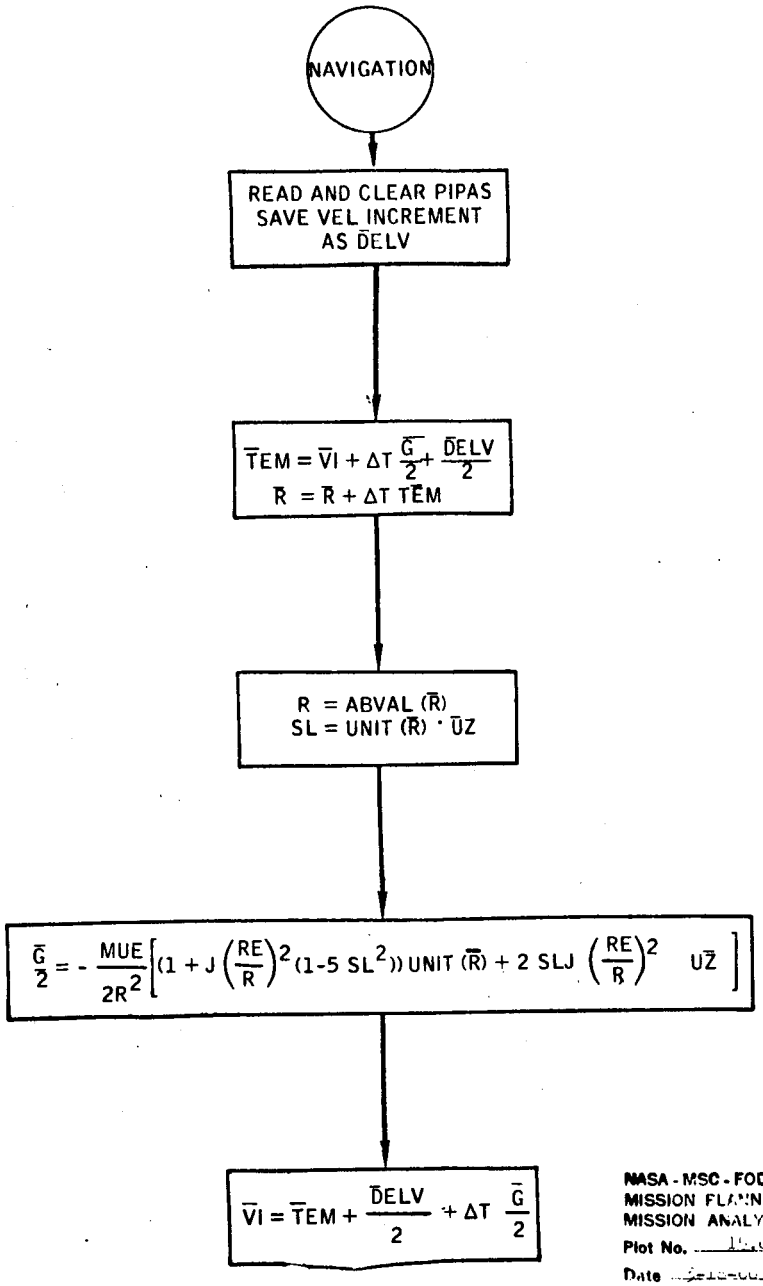

NASA - MSC - FOD
MISSION PLANNING
MISSION ANALYSIS
Plot No.
Date

Figure 2.- "Average - g" navigation.

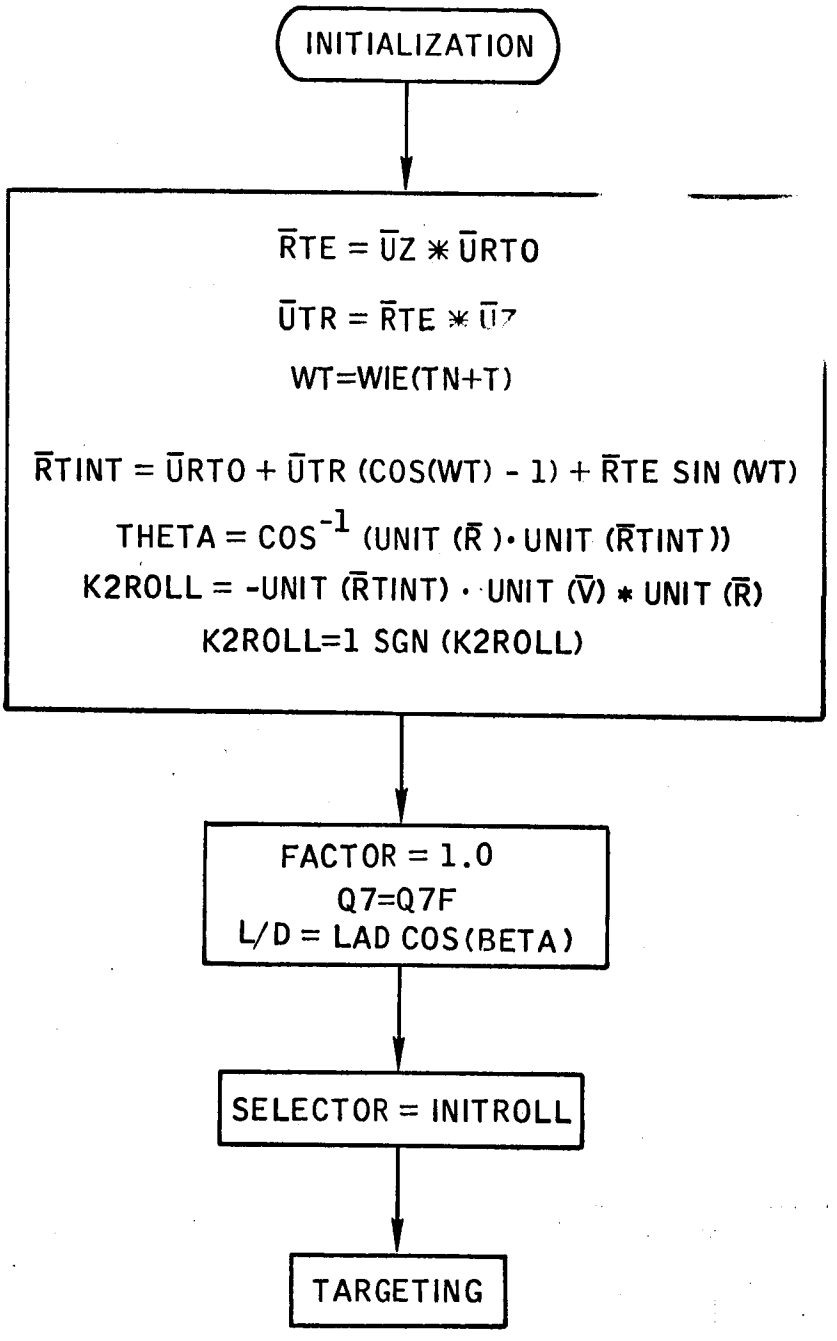

* INDICATES VECTOR CROSS PRODUCTS

Figure 3. - Initialization.

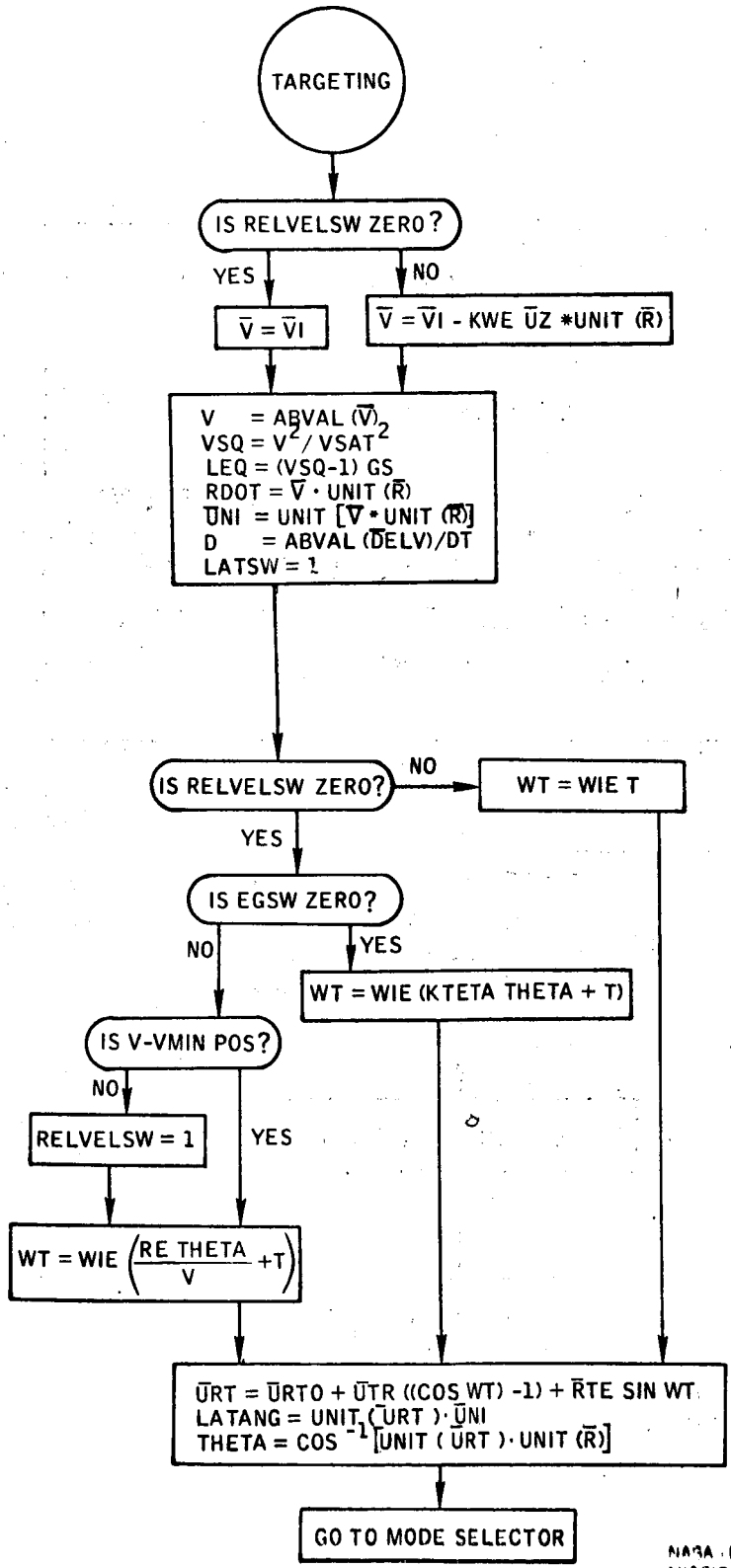

NASA - MSC - FOD
MISSION PLANNING & ANALYSIS DIVISION
MISSION ANALYSIS BRANCH
Plot No. [illegible]
Date 5-18-66 [illegible]

Figure 4.- Targeting.

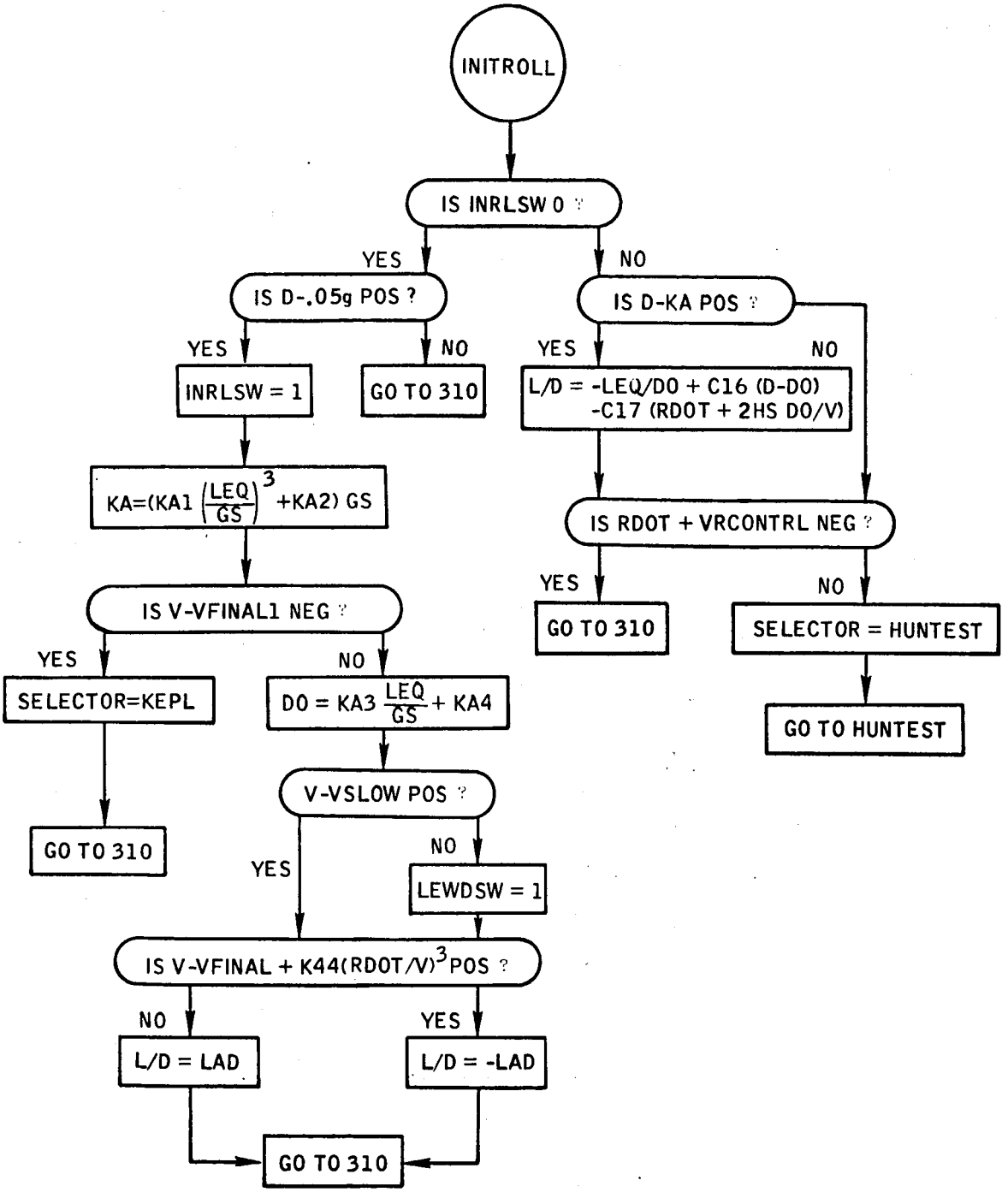

Figure 5. - Initial roll

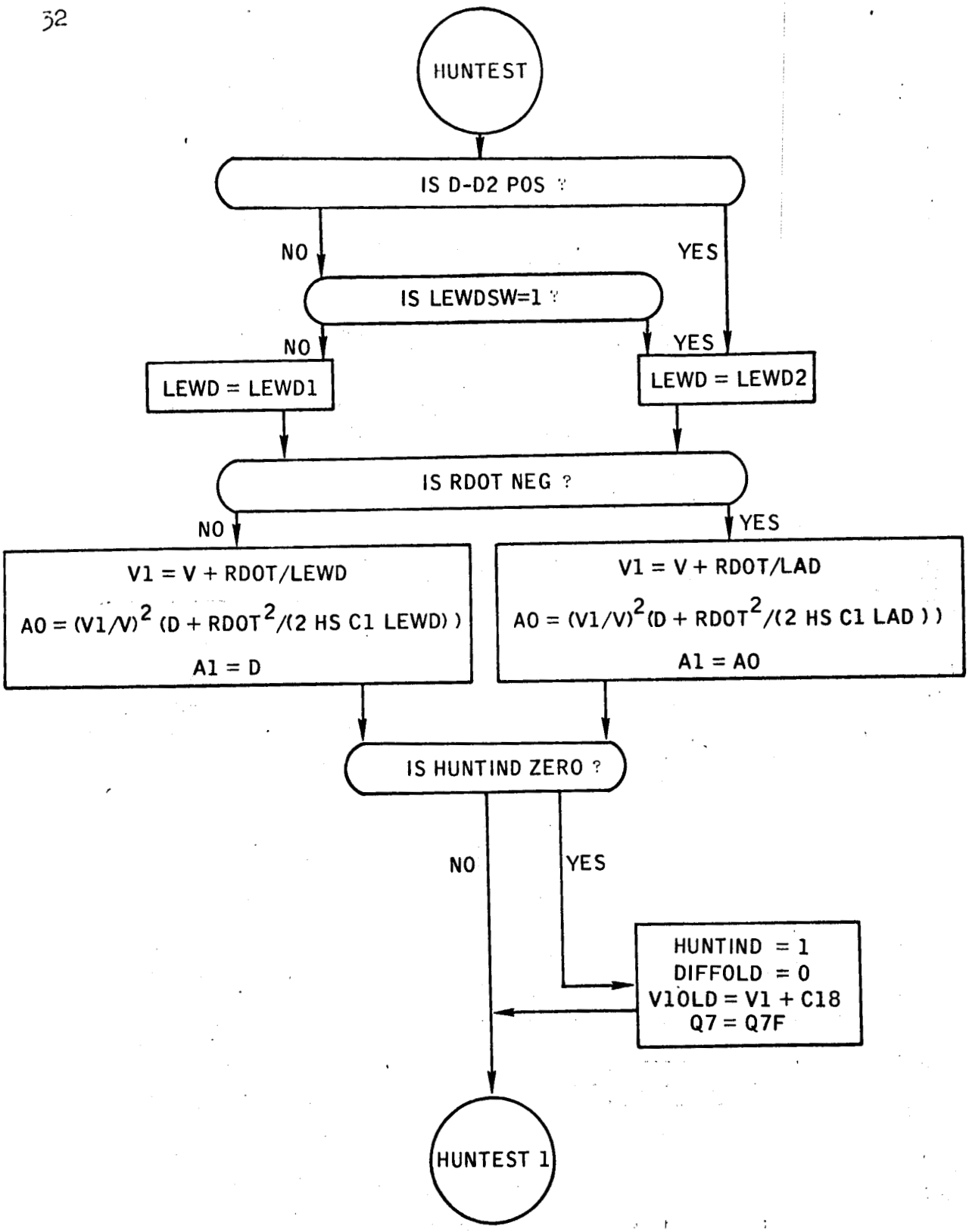

Figure 6. - Huntest.

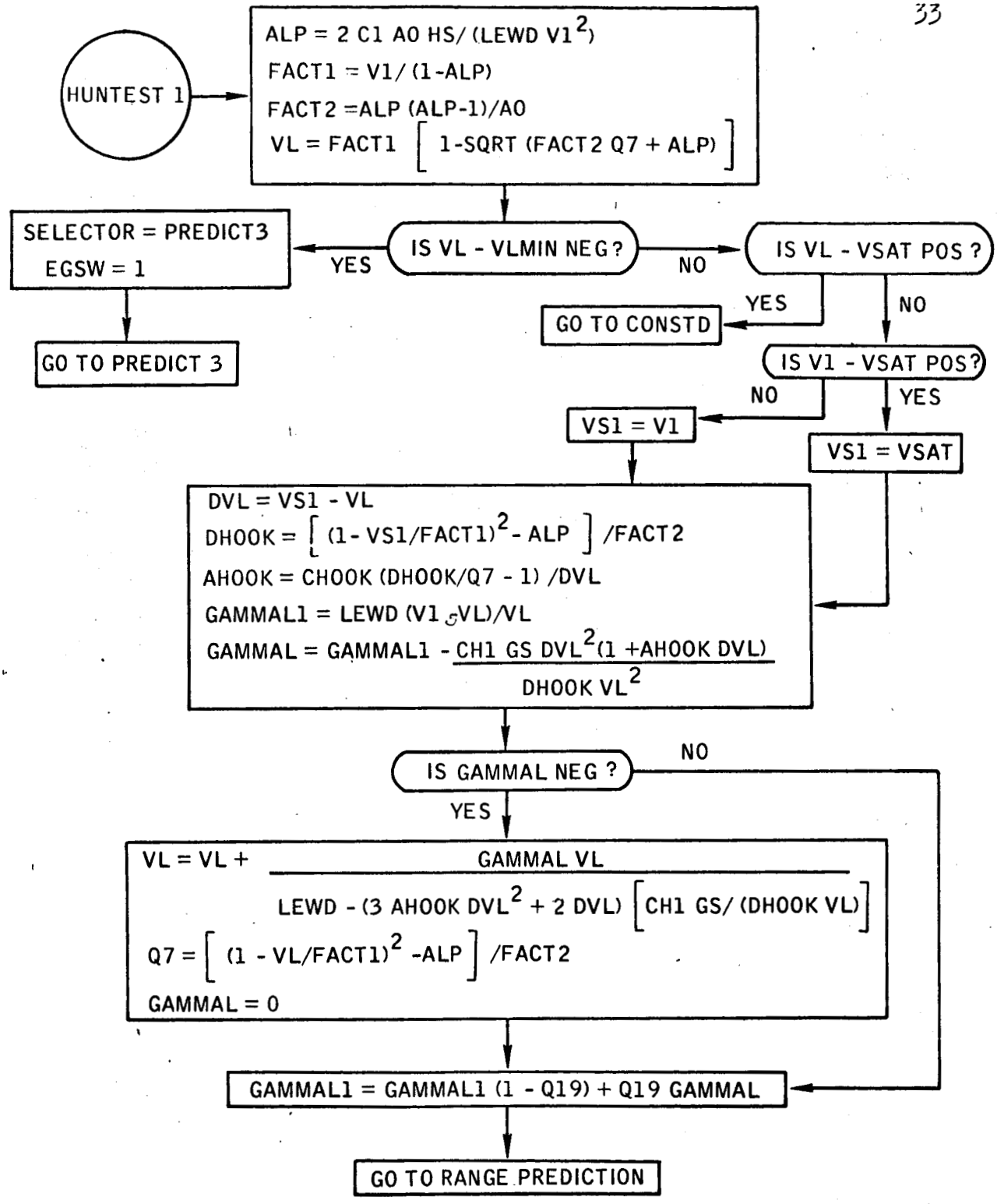

Figure 6. - Concluded.

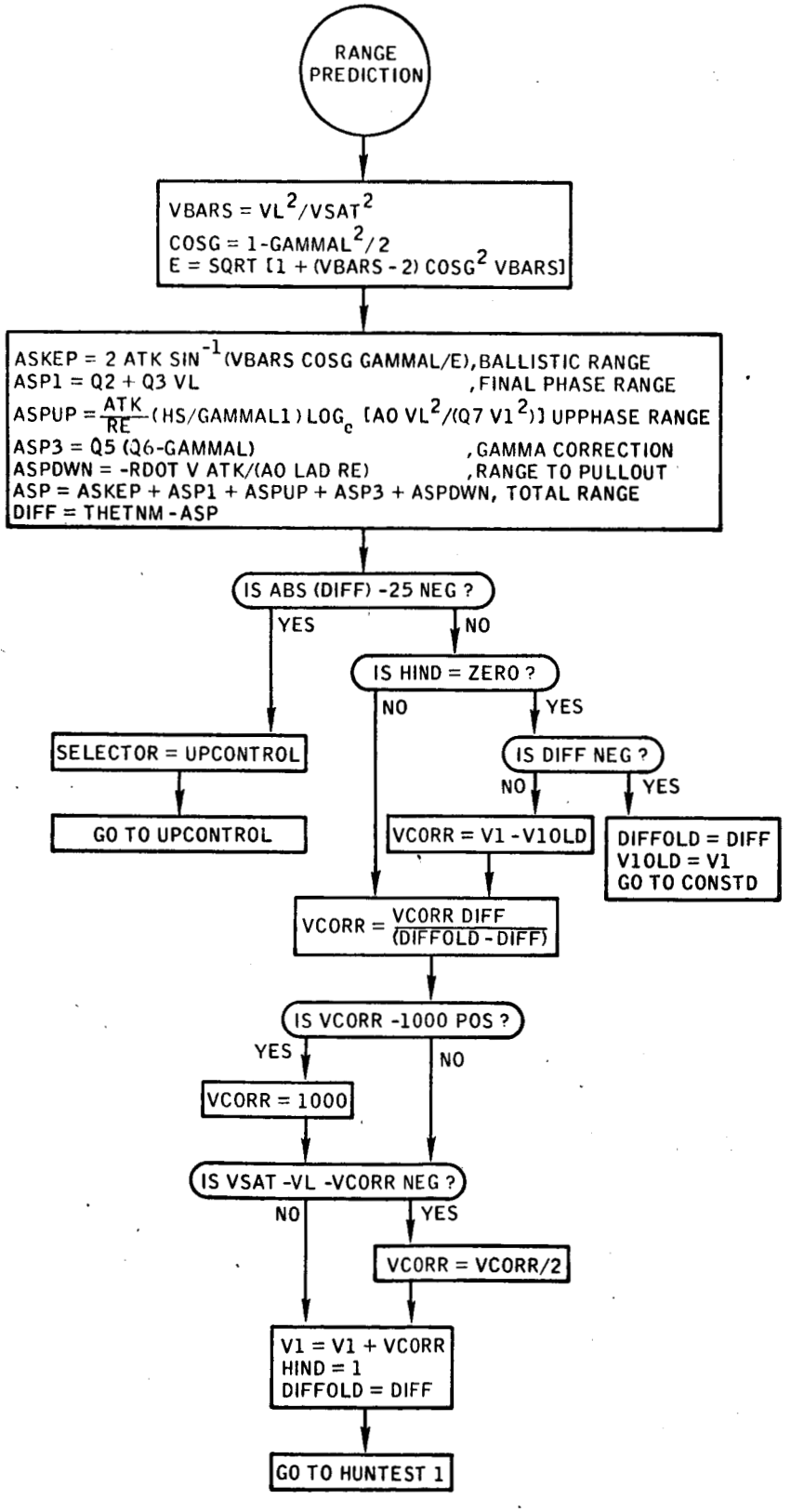

Figure 7.- Range prediction

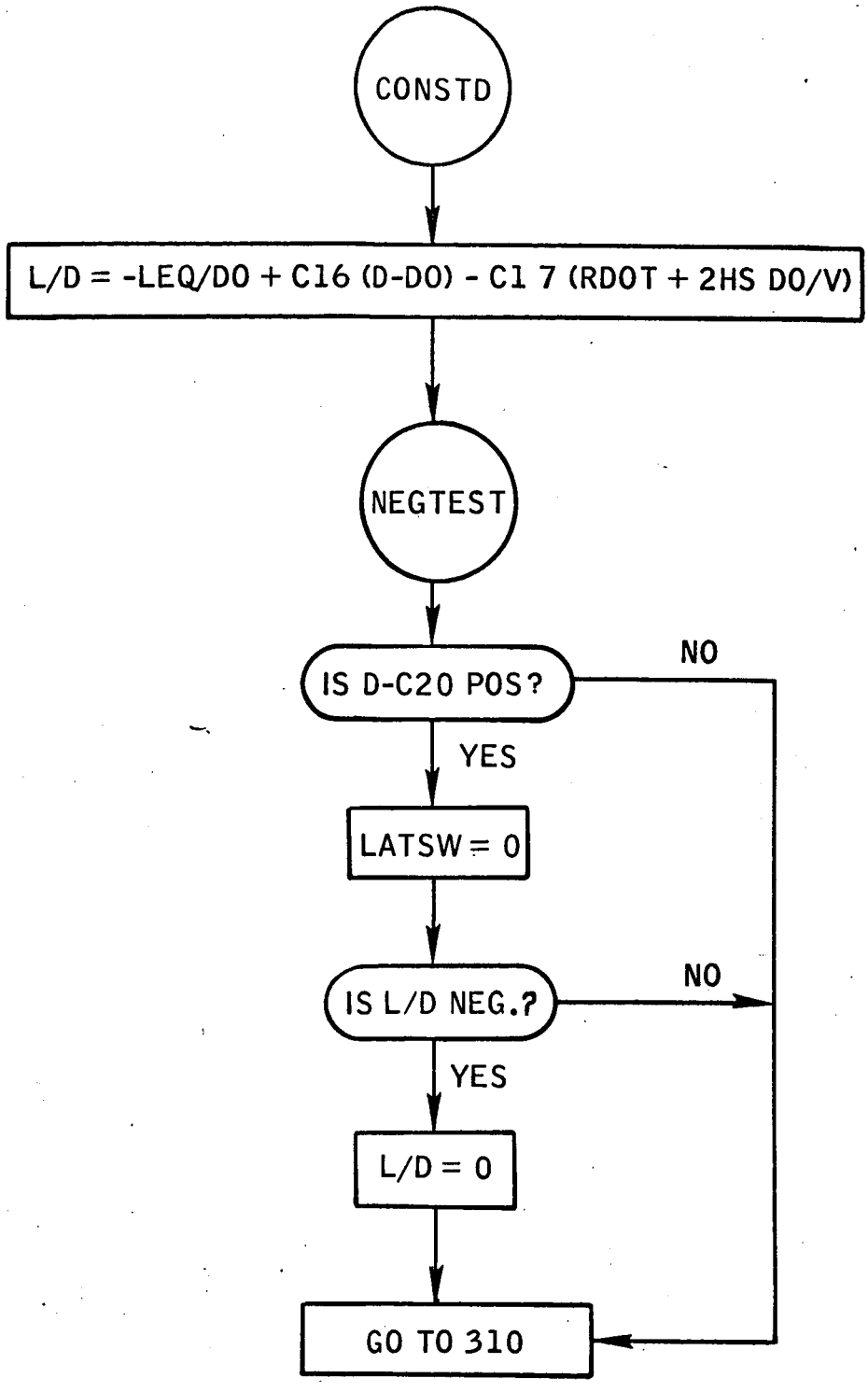

Figure 8. - Constant drag.

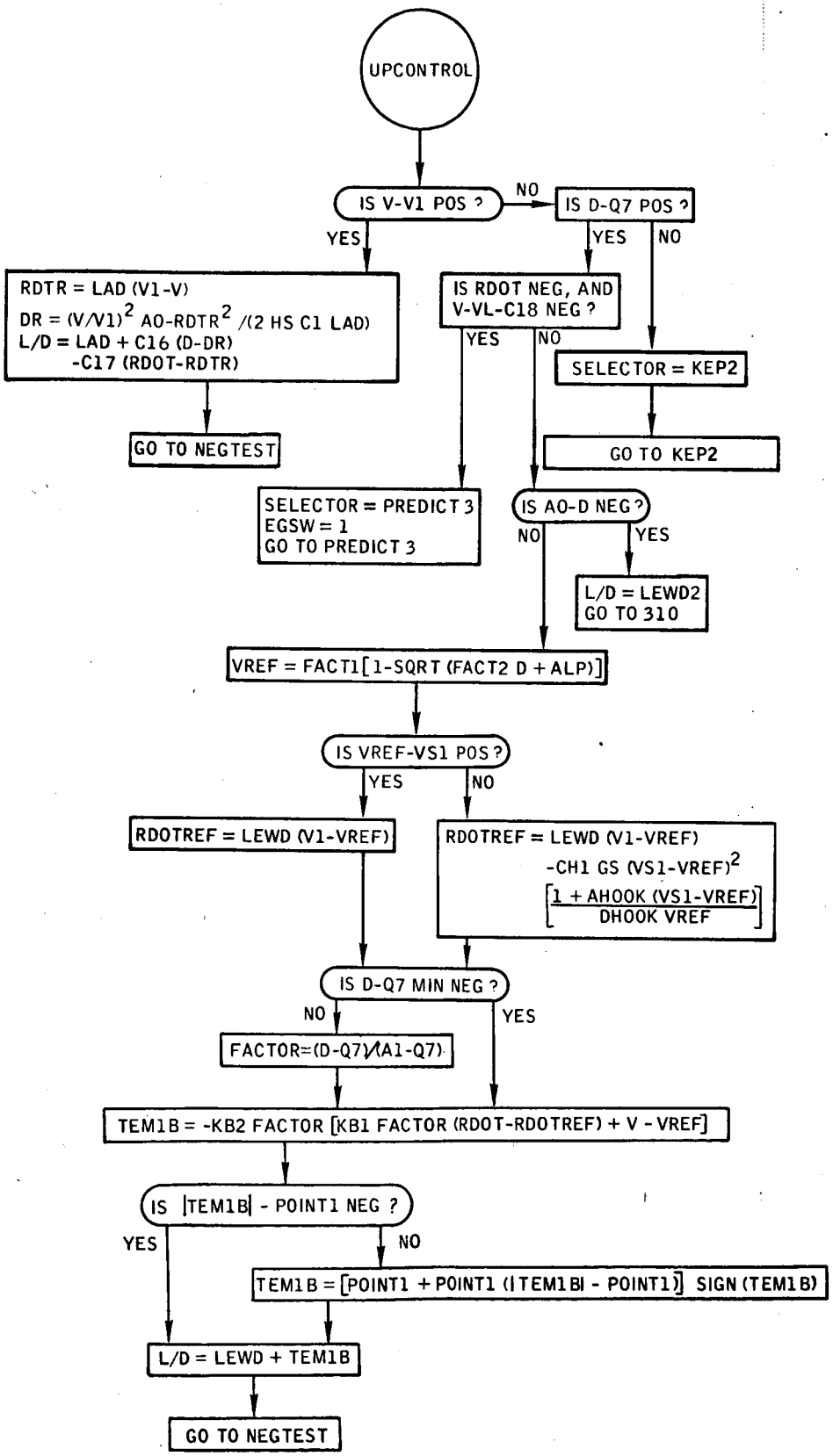

Figure 9.- Upcontrol.

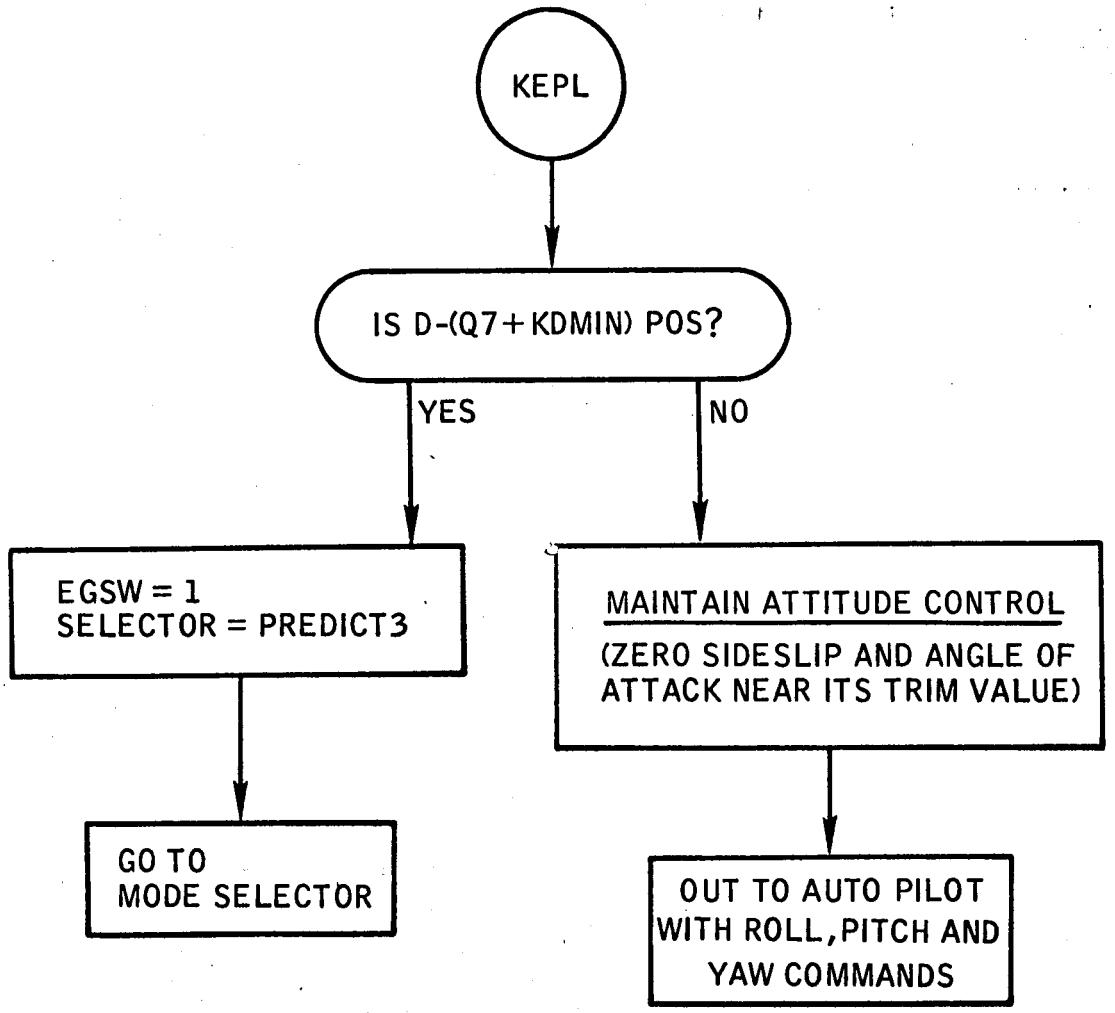

Figure 10.- Ballistic phase

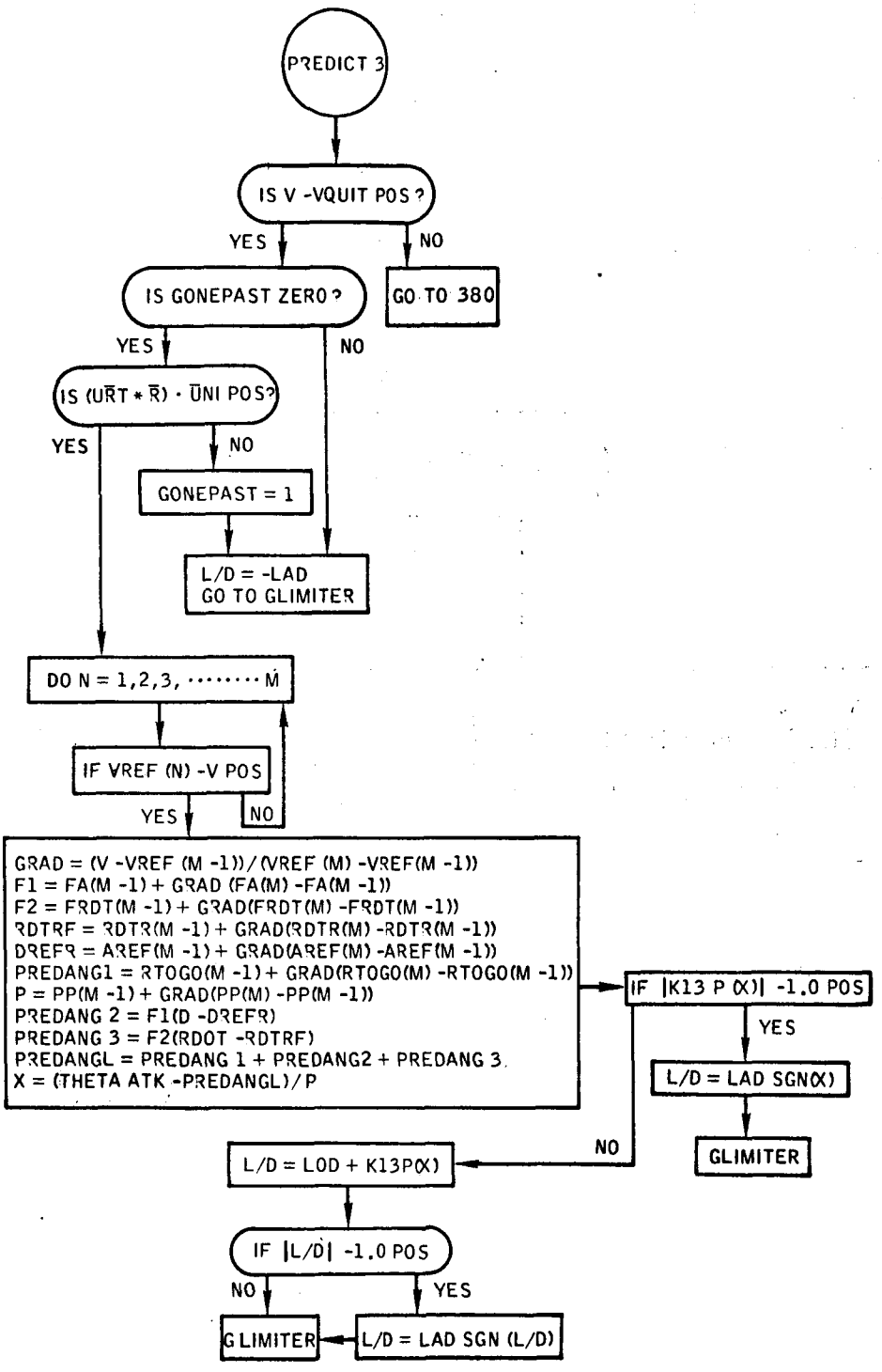

Figure 11. - Predict 3.

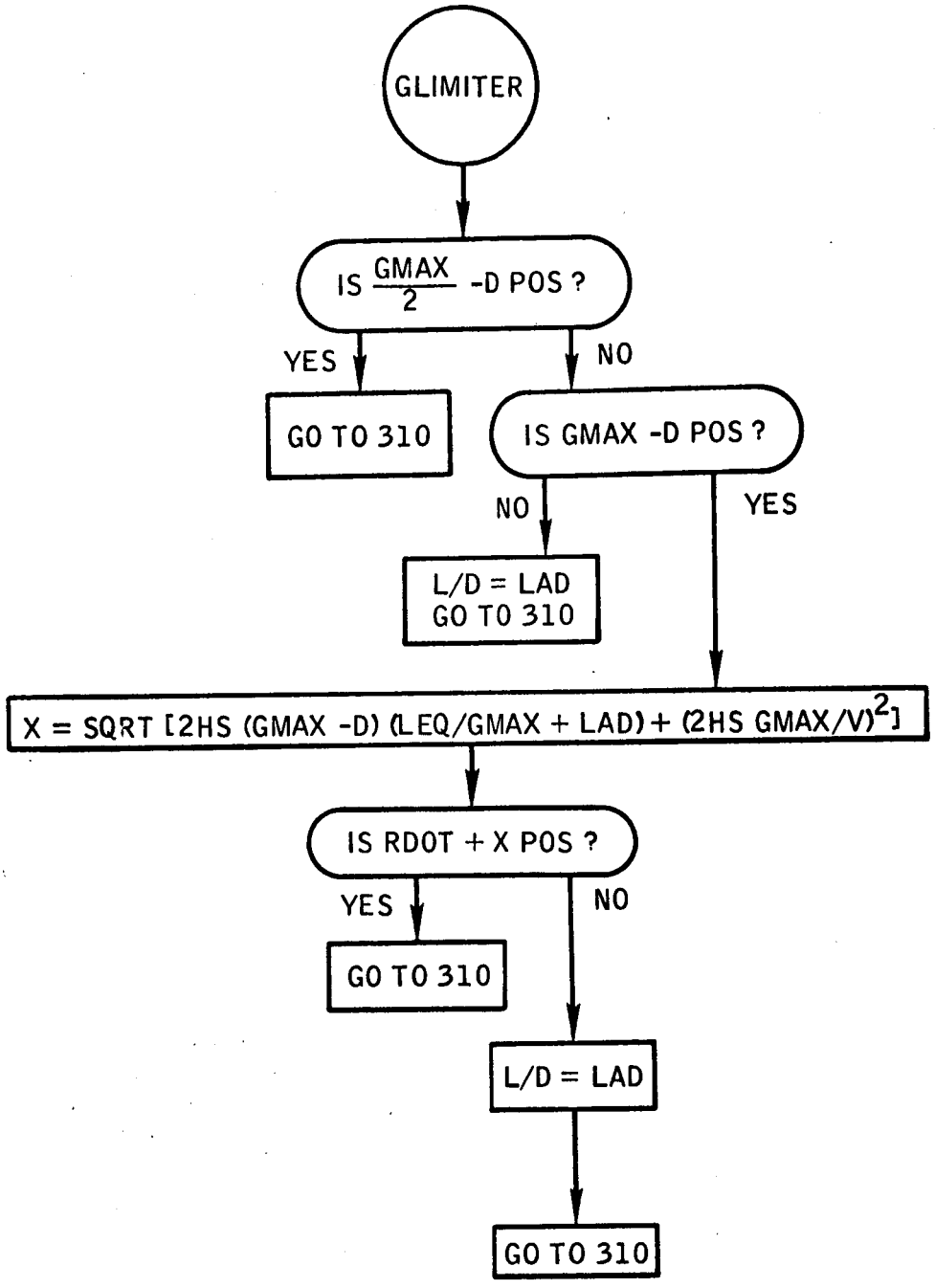

Figure 12. - G-Limiter.

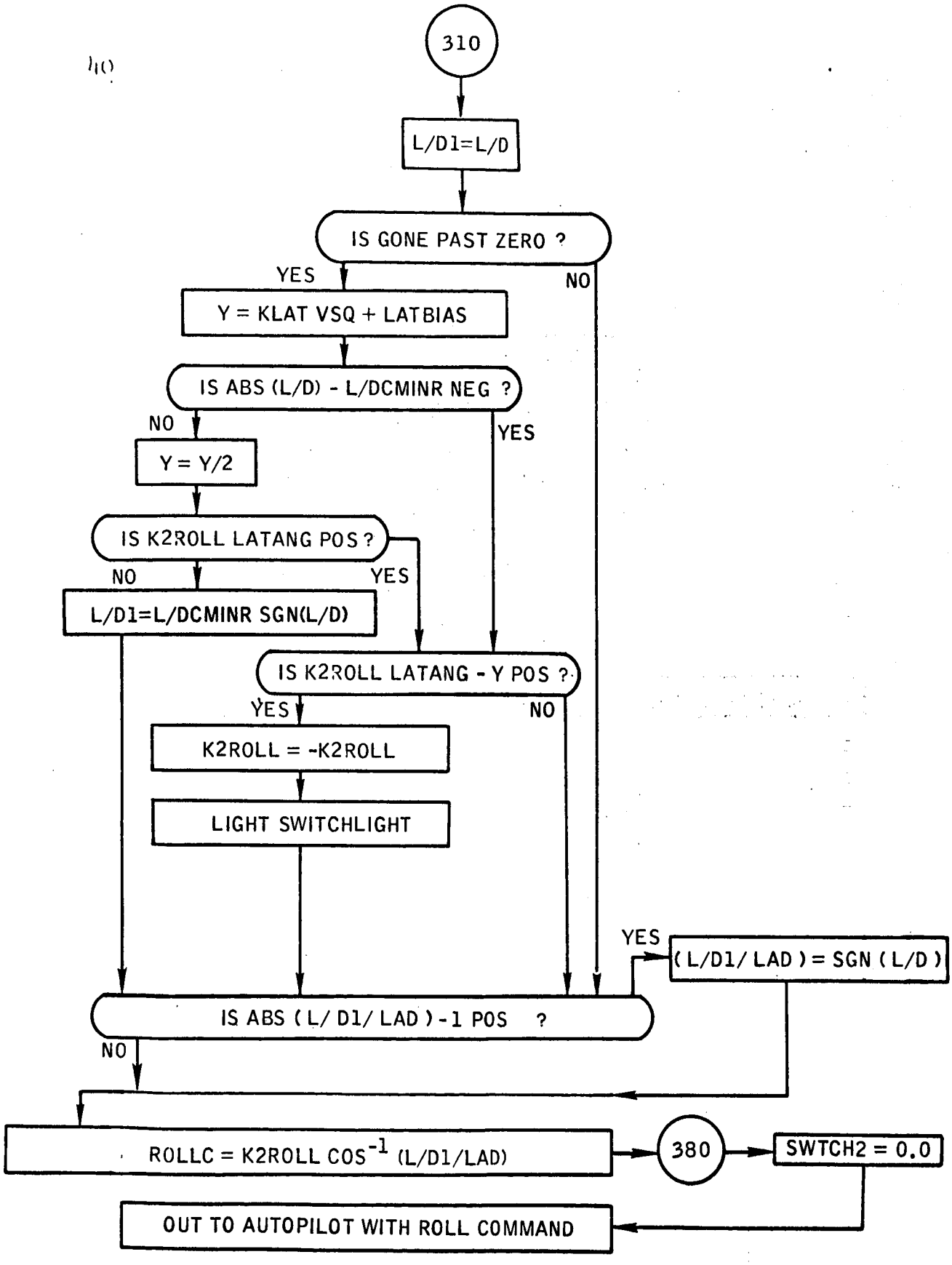

Figure 13. - Lateral control.

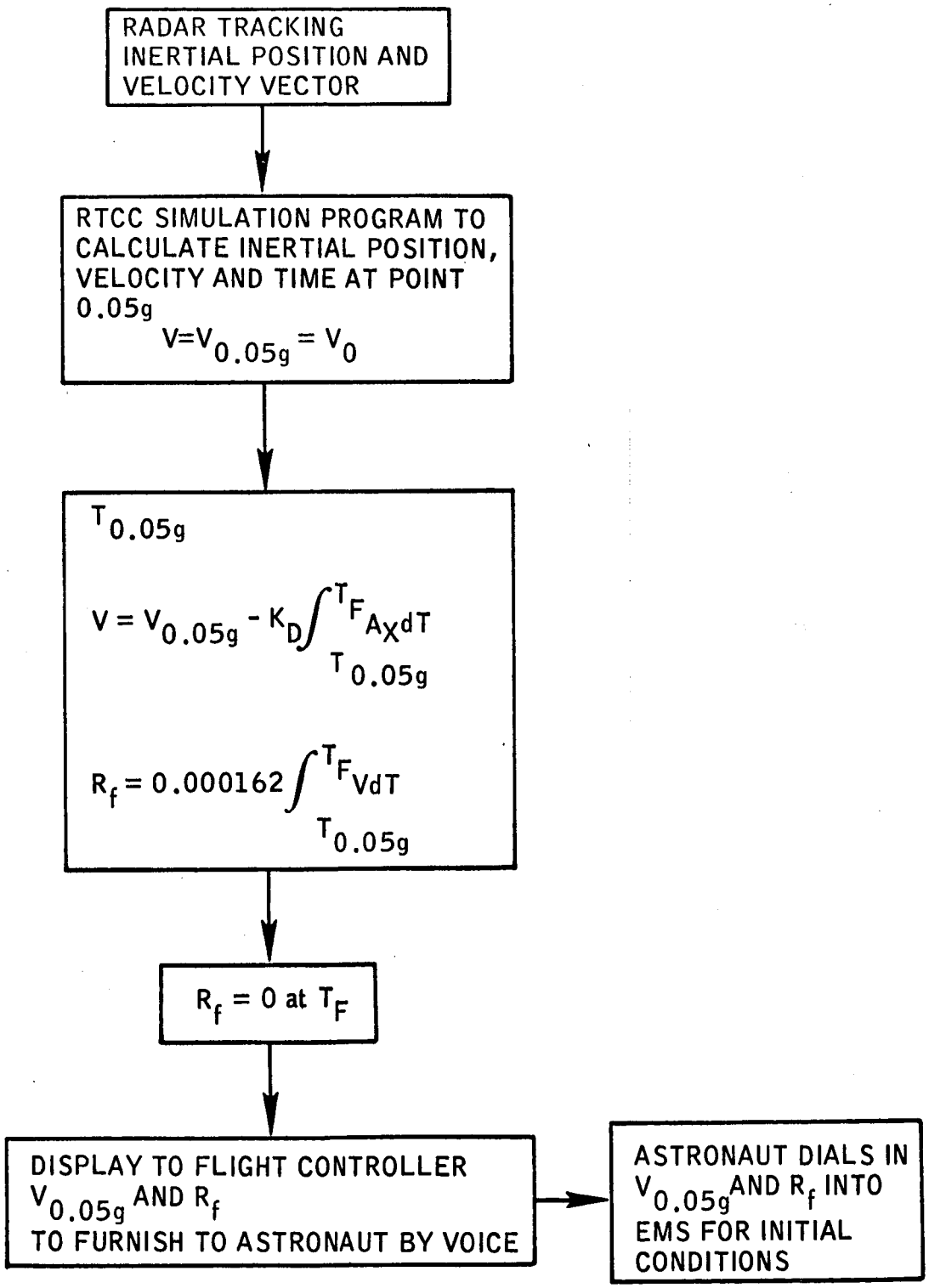

Figure14.- Ground initialization flow for EMS initialization.

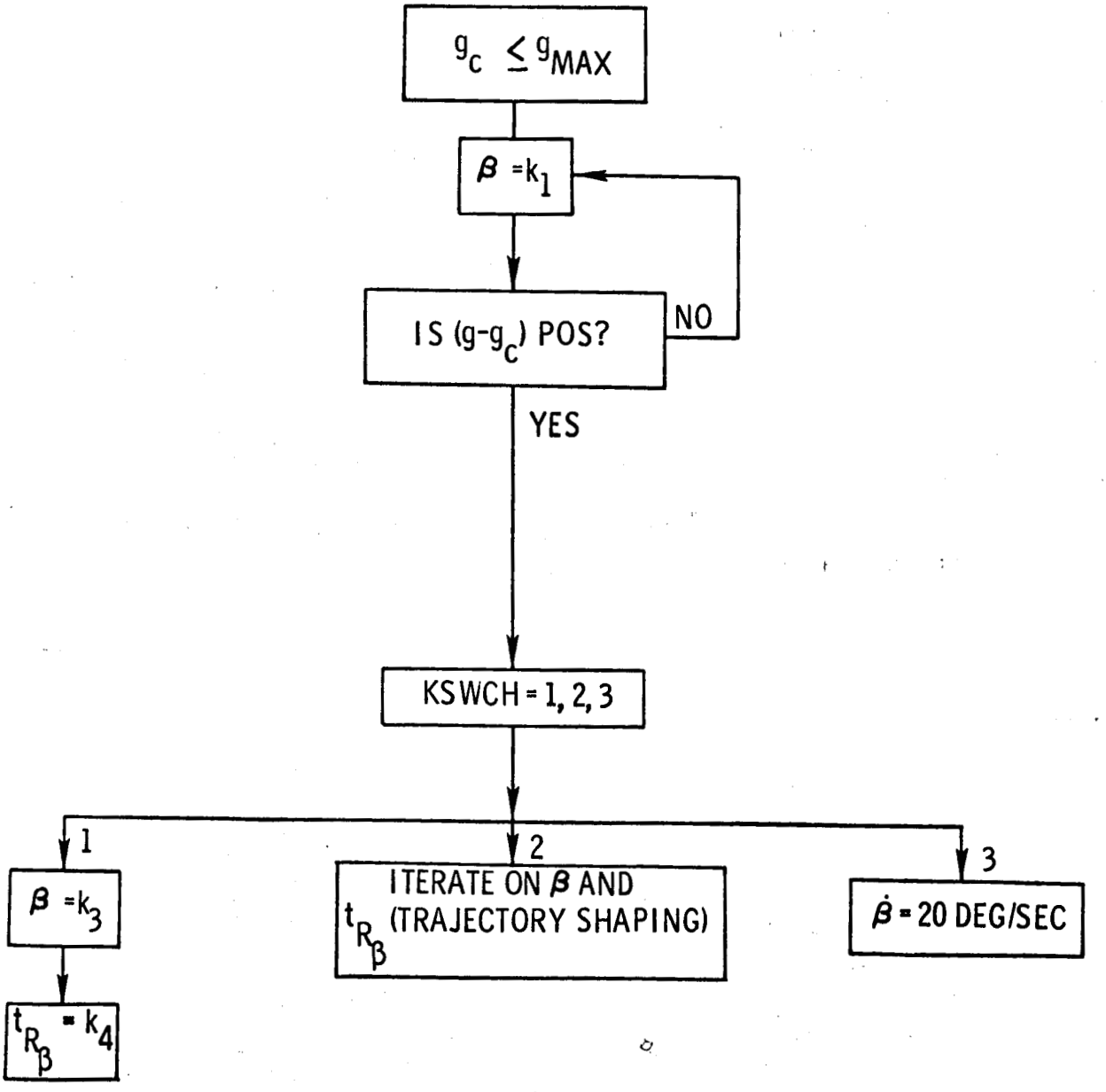

Figure 15. - Backup entry.

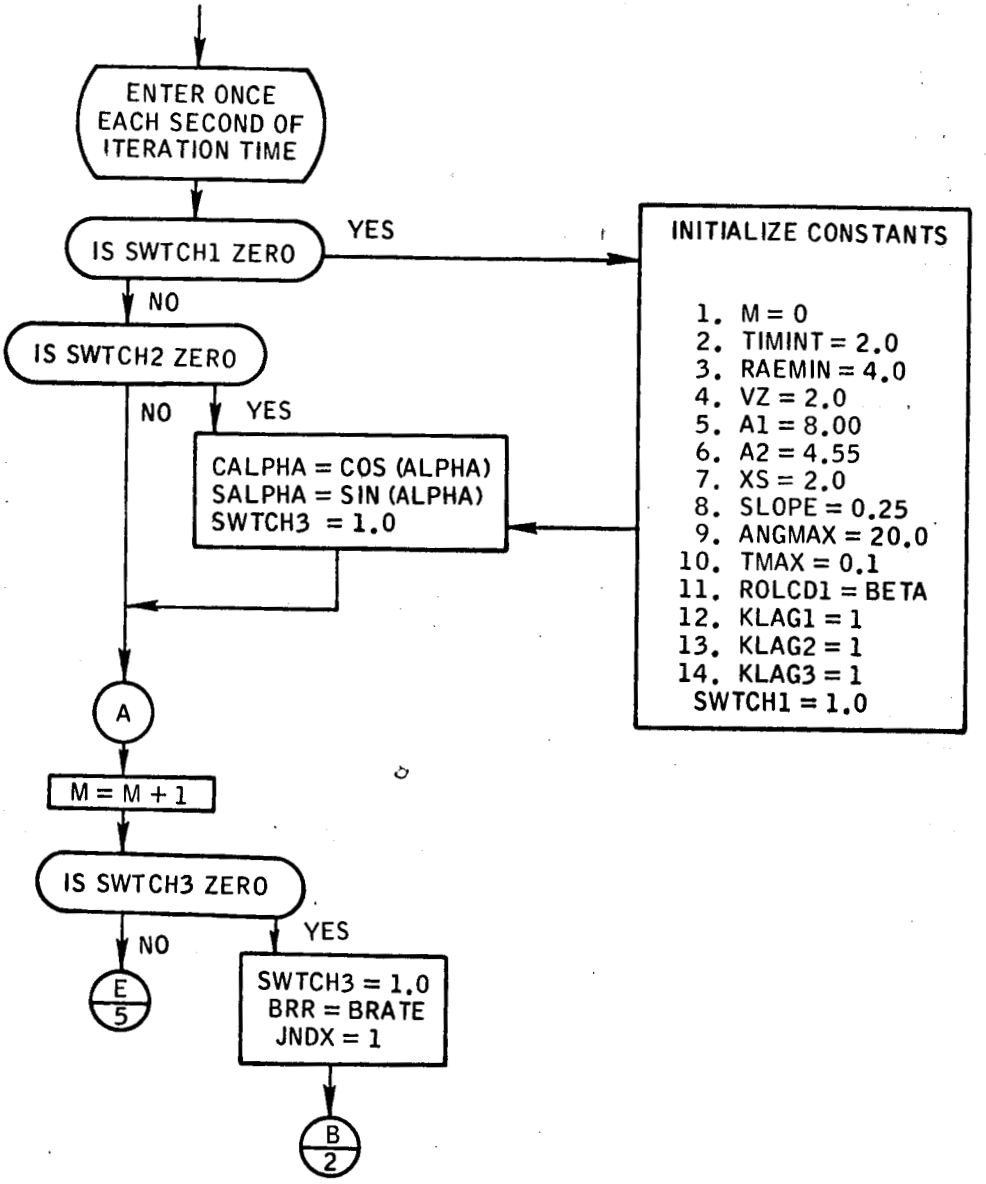

Figure 16. - Atmospheric roll DAP flow logic.

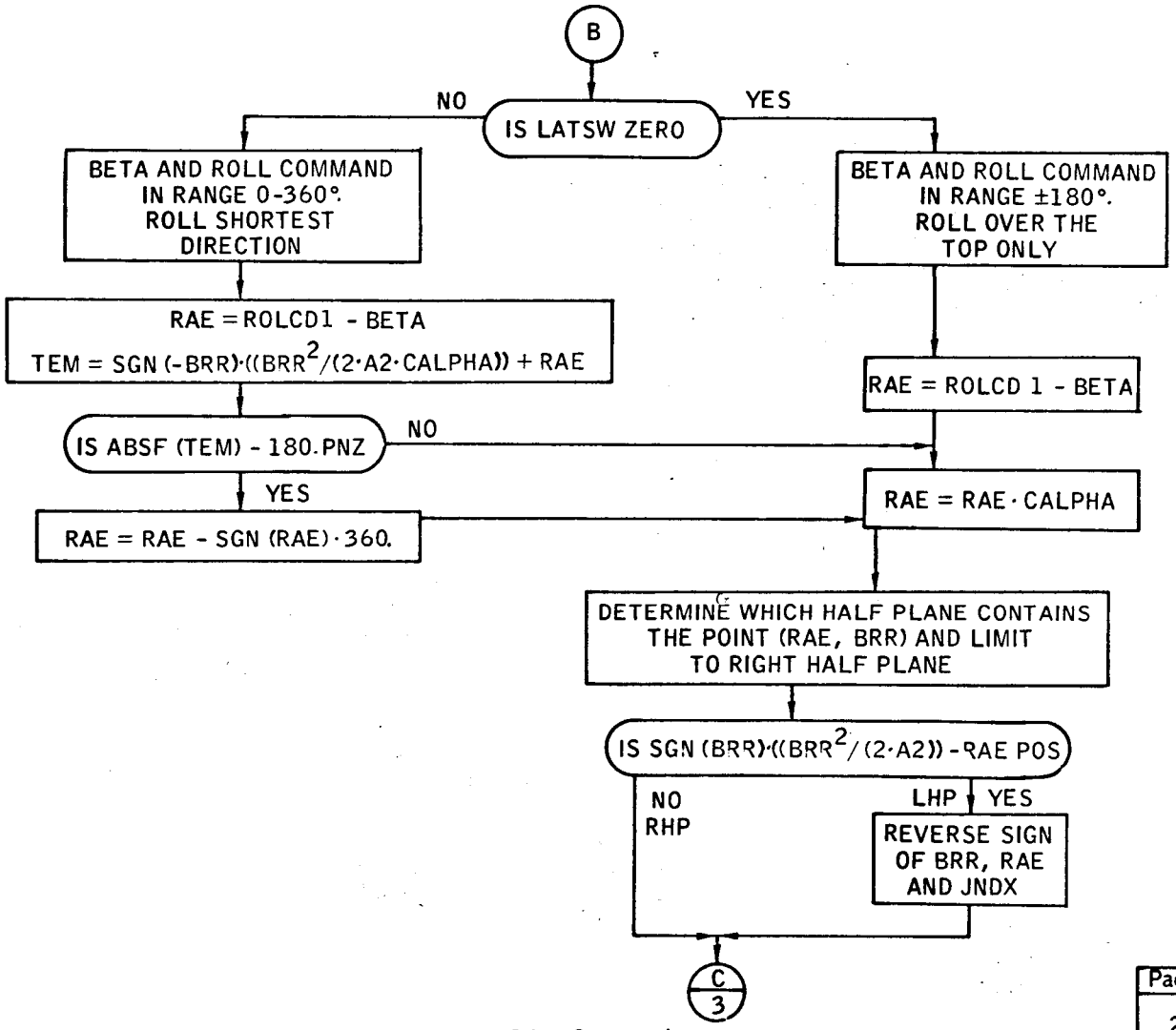

Figure 16.- Continued.

Page	of	pages
2		6

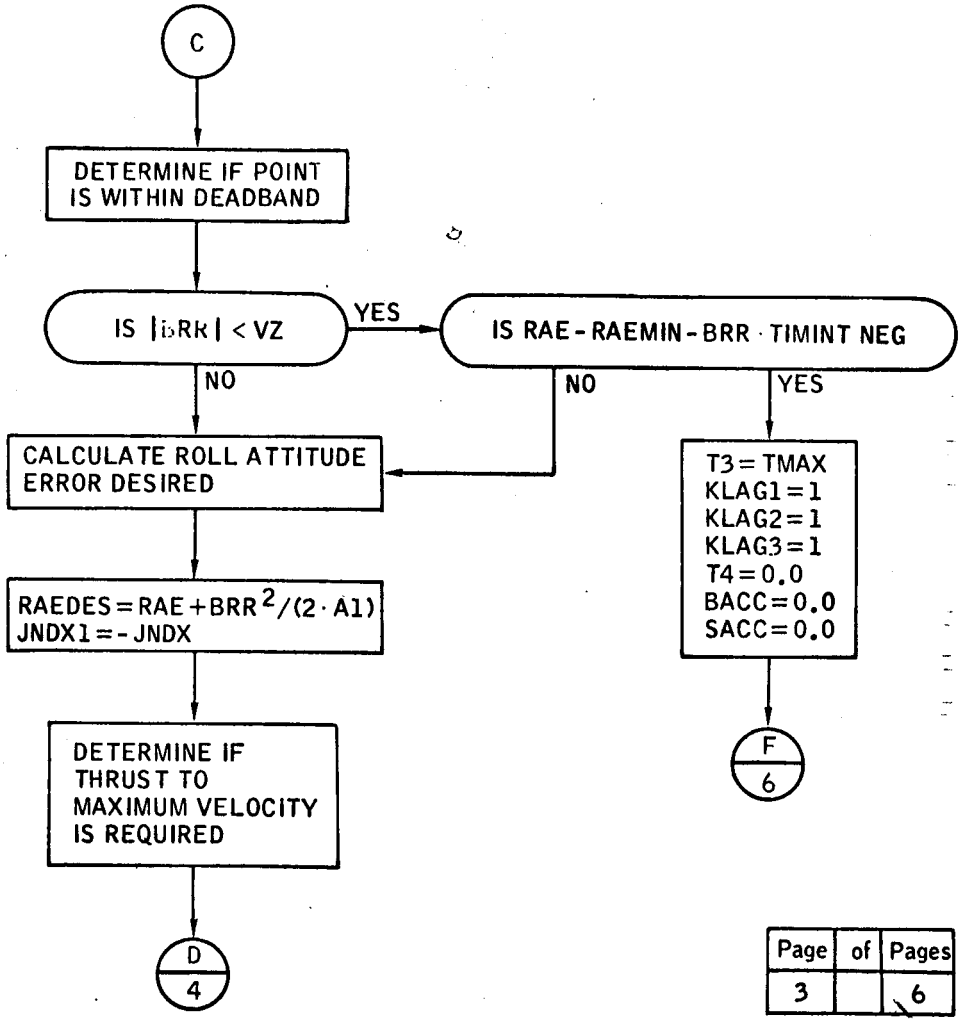

Figure 16.- Continued.

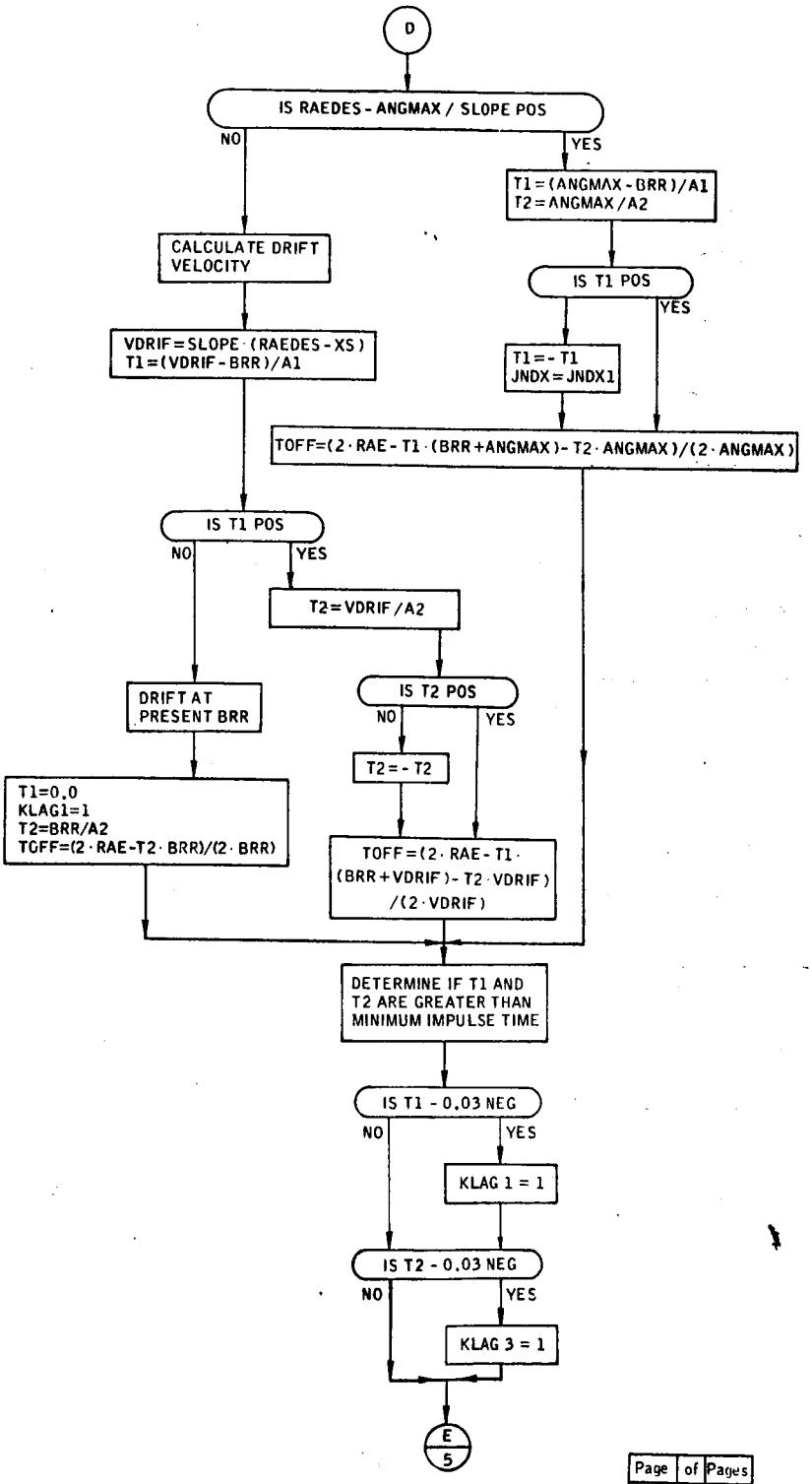

Page	of	Pages
4		6

Figure 16.- Continued.

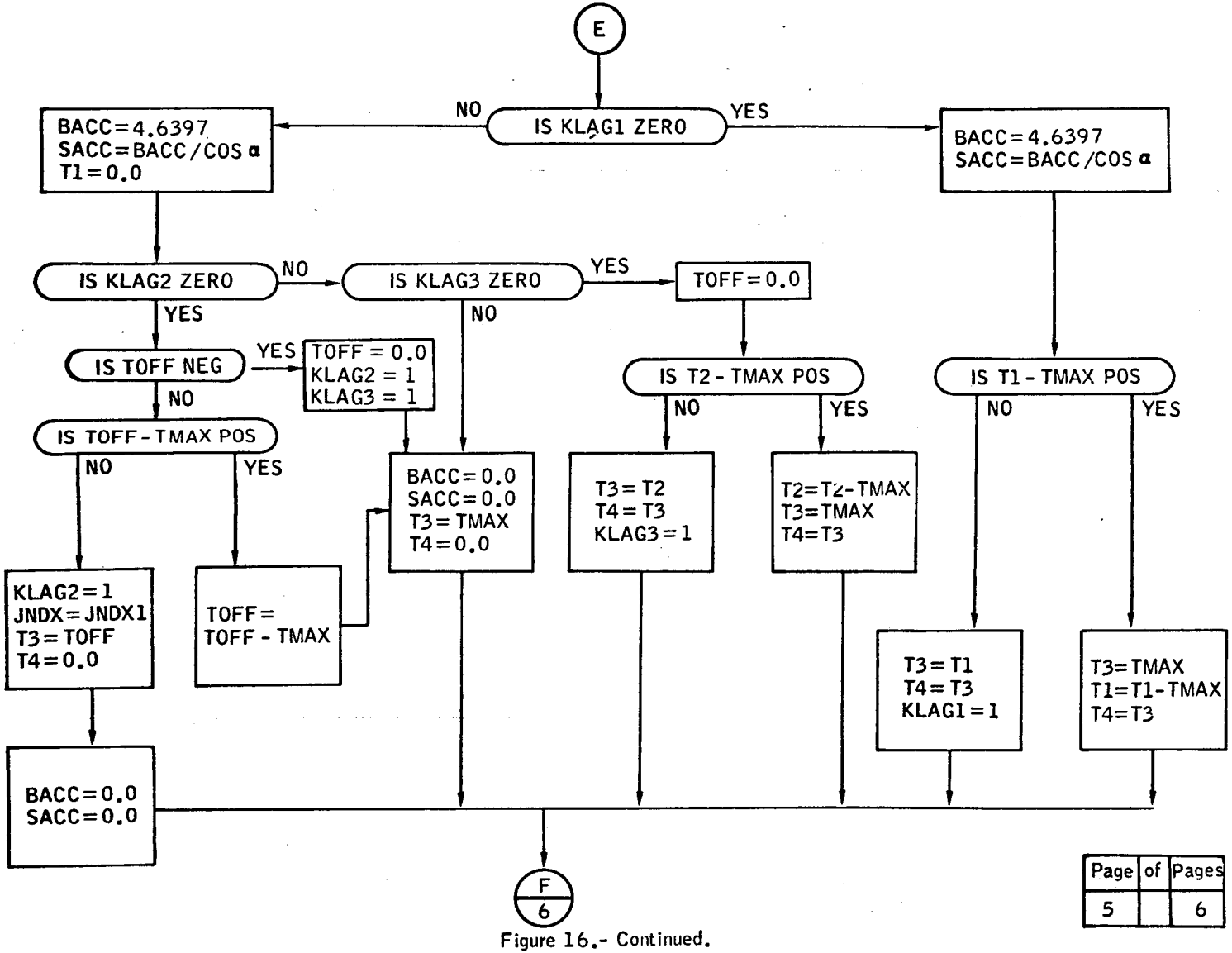

Figure 16.- Continued.

Page	of	Pages
5		6

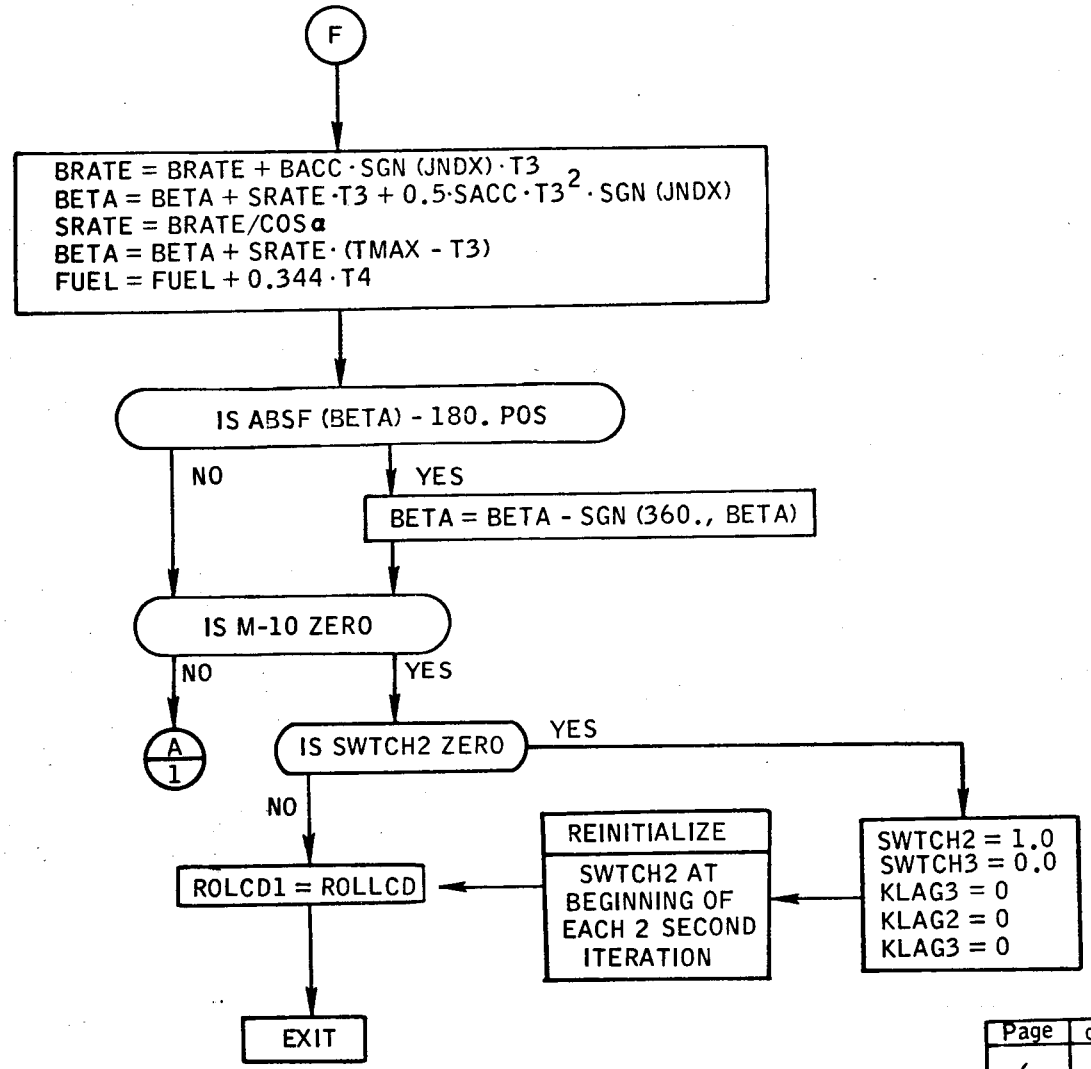

Figure 16.- Concluded.

Page	of	pages
6		6

RETRO HIGH-SPEED ENTRY DIGITALS

Area_____ WT_____ Matrix_____ BC_____ EP_____

	PRE	PST	AGC	TRK
$\phi_{ZL}{}^{1}$				
$\lambda_{ZL}{}^{1}$				
$\phi_{ZL}{}^{2}$				
$\lambda_{ZL}{}^{2}$				
ϕ_{T}				
λ_{T}				
$\phi_{ML}{}^{2}$				
$\lambda_{ML}{}^{2}$				
$\phi_{ML}{}^{1}$				
$\lambda_{ML}{}^{1}$				
ϕ_{IP}				
λ_{IP}				
MISS				
$(V, \gamma)_{EI}$				
VL				

Figure 17.- Retro high-speed entry digitals

RETRO ELAPSED TIME DISPLAY

GETR _____ RET _____

	PRE	PST	AGC
BANK			
RETRB			
RET EI			
RET .05g			
RET .2g			
RET XG			
$RETGI_{HS}$			
RETBB01			
RETEB01			
RETBB02			
RETEB02			
RETD			
RETM			
RETLC			
R_T 400K			
$(R_p - R_T)_{GI}$			
V.05g			
R.05g			

Figure 18.- Retro elapsed time display.

RETRO ELAPSED TIME DISPLAY - Concluded

GETR _____ RET _____

	PRE	PST	AGC
RETEMS			
VEMS			
RNGEMS			
MAX G			
RET MAX G			
Q7 + KDMIN			

Figure 18.- Retro elapsed time display - concluded.

RETROFIRE DIGITALS

STA ID_____ CM WT_____ GET_____

	PLA Code	CLA Code	MAN Code
Area			
Matrix			
WT, TAR			
R_{LH}, P_{LH}, Y_{LH}			
R_o, P_I, Y_m			
Vc, BT			
V_T, $U\Delta T$			
H			
GMTI			
GETI			
RET_{400K}			
V_{400K}, γ_{400K}			
BANK			
RETRB			
ϕ_{ML}, λ_{ML}			
ϕ_T, λ_T			
ϕ_{IP}, λ_{IP}			
ϕ_{ZL}, λ_{ZL}			
$\Delta\phi$ $\Delta\lambda$			

Figure 19.- Retrofire digitals.

RFO ENTRY/MODE III DIGITALS

WT_____ MATRIX_____ BN/ENT CODE_____

	PRE	PST	TRK	TM
R_O P_I Y_M				
VT BT				
V_{GX} (XΔV)				
V_{GY} (XΔV)				
V_{GZ} (XΔV)				
GMT I				
GET I				
ϕ ML				
λ_{ML}				
ϕT				
λ_T				
ϕ_{ZL}				
λ_{ZL}				
ϕ_{IP}				
λ_{IP}				
BANK				
GETRB				
V_{400K} γ_{400K}				
GET 400K				

Figure 20.- RFO entry/mode III digitals.

RFO ENTRY/MODE III DIGITALS - Concluded

WT_____ MATRIX_____ BN/ENT CODE_____

	PRE	PST	TRK	TM
GET .05g				
GETBBO				
GETEBO				
GETDD				

Figure 20.- RFO entry/mode III digitals - concluded.

GUIDANCE ENTRY/ABORT DIGITALS

WT_____ MATRIX_____ ENT CODE_____

	PRE	PST	TRK	TM
PROG VB NO				
R_1 R_2 R_3				
TFF				
ϕ400K				
λ400K				
RETSEP				
P_{LH} SEP				
R_O P_I Y_M SEP				
RETRB				
R_O P_I Y_M 400K				
R_O P_I Y_M Xg				
R_O P_I Y_M RB				
STATION ID				

Figure 21.- Guidance entry/abort digitals.

REFERENCES

1. North, Raymond, (MIT): Reentry Guidance for Apollo. NASA CR R-532, January, 1966.

2. Tolin, James W. and Hill, Oliver: AS-258 Requirements for the Real-Time Program - Reentry Phase. MSC IN 67-FM-79, June 16, 1967.

3. Hodge, John D.: RTCC Requirements: AS-503/504 Retrofire Officer Computing Requirements, Return-to-Earth Abort Processor, and Entry Phase. MSC Memorandum (Flight Control Division), June 7, 1967.

4. Guidance System Operations Plan, Apollo Mission AS-278. MIT Instrumentation Laboratory Report No. R-547, October, 1966.

5. Nunn, James R.: Block II Command Module RCS Force and Moment Components. MSC Memorandum 67-FM53-146, 1967.