NATIONAL AERONAUTICS AND SPACE ADMINISTRATION

REPORT ON THE STATUS OF THE APOLLO BACK CONTAMINATION PROGRAM

(NASA-TM-X-70034) REPORT ON THE STATUS OF THE APOLLO BACK CONTAMINATION PROGRAM (NASA) 38 p

N74-72477

Unclas

00/99 16817

APRIL 28, 1969

MANNED SPACECRAFT CENTER

HOUSTON, TEXAS

REPORT ON THE STATUS

OF THE

APOLLO BACK CONTAMINATION PROGRAM

April 28, 1969

Richard S. Johnston
Special Assistant to the Director

INDEX

		Page
I	Introduction	1
II	Spacecraft Design and Operational Consideration	2
III	Lunar Mission Recovery Operations	13
IV	Mobile Quarantine Facility	21
V	Biological Isolation Garment	23
VI	Lunar Receiving Laboratory	24
VII	Quarantine Testing	29
VIII	Sterilization and Release of Spacecraft	34
	Summary	35

April 28, 1969

REPORT ON THE STATUS OF THE APOLLO BACK CONTAMINATION PROGRAM

I. INTRODUCTION

The purpose of this paper is to establish an understanding of the Apollo Back Contamination Program, to establish in general terms the present plan and procedures, to summarize current problems and to establish a Manned Spacecraft Center position on critical issues.

In 1964 an Interagency Committee on Back Contamination (ICBC) was established. The function of this Committee was to assist the NASA in developing a program to prevent the contamination of the earth from possible lunar contamination following manned lunar exploration. The committee charter included specific authority to review and approve the plans and procedures to prevent back contamination.

Over the last several years the NASA has undertaken the development of facilities, equipments, and operational procedures to provide an adequate back contamination program for the Apollo missions. This program of facilities and procedures which is well beyond the current state-of-the-art and the overall effort has resulted in a laboratory with capabilities which have never previously existed. The scheme of complete isolation of the Apollo crewman and lunar samples, and the exhaustive test programs to be conducted are unparallelled in scope and complexity.

This paper is divided into sections which progressively describe the procedures to be followed from the completion of lunar operations through the recovery of crew and samples. The section on the Lunar Receiving Laboratory (LRL) primarily discusses the recent simulation activity.

II. SPACECRAFT DESIGN AND OPERATIONAL CONSIDERATIONS

A. Lunar Module Operations. The lunar module (LM) has been designed with a bacterial filter system to prevent contamination of the lunar surface when the cabin atmosphere is released at the start of lunar exploration. Following manned exploration, specific operational procedures will be used by the crew to minimize the possibility of lunar surface particulate matter entering the LM and ultimately being carried into the command module (CM).

Prior to re-entering the LM, the crewmen will brush the surfaces of the spacesuit using the suit gloves. They will scrape their feet on the LM footpad and kick the LM ladder while ascending to dislodge any clinging particles on the lunar boots.

After entering the LM and pressurizing the cabin, the crew will doff the Portable Life Support System (PLSS), oxygen purge system (OPS), lunar boots, EVA gloves, etc. They will then brush all equipments to remove visible contaminates.

The contingency sample container will be brushed off and placed in a second bag, sealed and stowed for lunar launch. The equipment shown on table I as jettisoned equipment will be assembled to be subsequently left on the lunar surface. The lunar boots will be placed in a bag as early as possible to insure containment of lunar surface particles. For the equipment jettisioning operation the LM cabin will be depressurized through a dump valve which contains a filter. Dust particles which are suspended in the LM atmosphere will be trapped in this filter.

Following cabin repressurization, the LM will be launched from the lunar surface and will dock with the CM. The CM tunnel will be pressurized and checks made to insure that an adequate pressurized seal has been made. The LM crewmen will then doff their spacesuits and stow them in a CM stowage bag. During this period LM equipments will be vacuumed with the ECS return hose. The stowed spacesuits and helmets will be passed into the command module for the transearth phase of the mission. In a normal mission, the spacesuits will not be unbagged unless a failure occurs in the cabin pressurization system. The items listed in table I as equipment transferred to the CM will be bagged to prevent the transfer of lunar dust to the command module. The only equipment which will not be bagged are the crewmen's

TABLE I

LUNAR SURFACE EQUIPMENT - CLEANING AND TRANSFER

ITEM	LOCATION AFTER JETTISON	EQUIPMENT LOCATION AT LUNAR LAUNCH	LM-CM TRANSFER	REMARKS
Jettisoned Equipment:				
Overshoes (In Container)	Lunar surface			
Portable Life Support System	" "			
Camera	" "			
Lunar tool tether	" "			
Spacesuit connector cover	" "			
Equipment Left in LM:				
EVA tether	RH side stowage container	RH side stowage container		Equipment Brushed prior to stowage for launch
EVA visors	Helmet bag	Helmet bag		
EVA gloves	Helmet bag	Helmet bag		
Purge valve	Interim stowage assy	Interim stowage assy		
Oxygen purge system	Engine cover	Engine cover		
Equipment Transferred to CSM:				
Spacesuit	On crew	On crew	Stowed in bag	All equipment to be cleaned by brush and/or vacuum prior to transfer to CSM
Liquid-cooled garment	On crew	On crew	On crew	
Helmet	On crew	On crew	Stowed in bag	
Watch	On crew	On crew	On crew	
Lunar grab sample	LH stowage	LH stowage	Stowed in bag	Does not include other LM equipment, like log books, etc.
Lunar sample box	SRC rack	SRC rack	Stowed in bag	
Film magazine	SRC rack	SRC rack	Stowed in bag	

liquid-cooled underwear garments, communications carrier, and watches. These items are all worn by the crewmen. Once the LM has been separated, the crew will doff the liquid-cooled garment and stow them in bags. Several items of equipment will be left in the LM as shown in table I.

In summary, all equipment which has been exposed to the lunar surface will be cleaned and packed into bags prior to the transfer of equipment into the command module. In a normal transearth mission phase none of this lunar surface equipment will be used in the command module. The housekeeping procedures outlined above require some equipment modifications and significant changes in the current crew timelines.

B. Command Module Operations for Contamination Control.

Through the use of operational and housekeeping procedures the command module cabin can be purged of lunar surface and/or other particulate contamination prior to earth re-entry. These procedures start while the LM is docked with the CM and continues through re-entry into the earth's atmosphere. These procedures may be summarized as follows:

1. Prevention of lunar surface dust being transferred to the CM while docked with the LM.

As outlined previously prior to the transfer of equipment to the command module, extensive cleaning will have been accomplished to remove surface contamination. During the shirt-sleeve operation the LM cabin gas will be circulated through the environmental control system (ECS) suit circuit lithium hydroxide (LiOH) canister. This canister is a full flow LiOH and filter bed and depending upon the operating time will filter all particulate matter from the atmosphere. Figure 1 shows the results on an analysis of the percent of particulate contamination as a function of time and filter efficiency. The analysis assumes a uniform distribution of dust particles in the cabin atmosphere. The exact amount of LM atmosphere filtering cannot be established until a firm timeline has been developed. A minimum of 5 hours of weightless operations and LiOH filtration will be available. This will reduce the original airborne contamination to about 10^{-15} percent. Additionally, experience in 19 manned space flights has shown that in the weightless environment dust and dirt particles and small scraps of material have been found

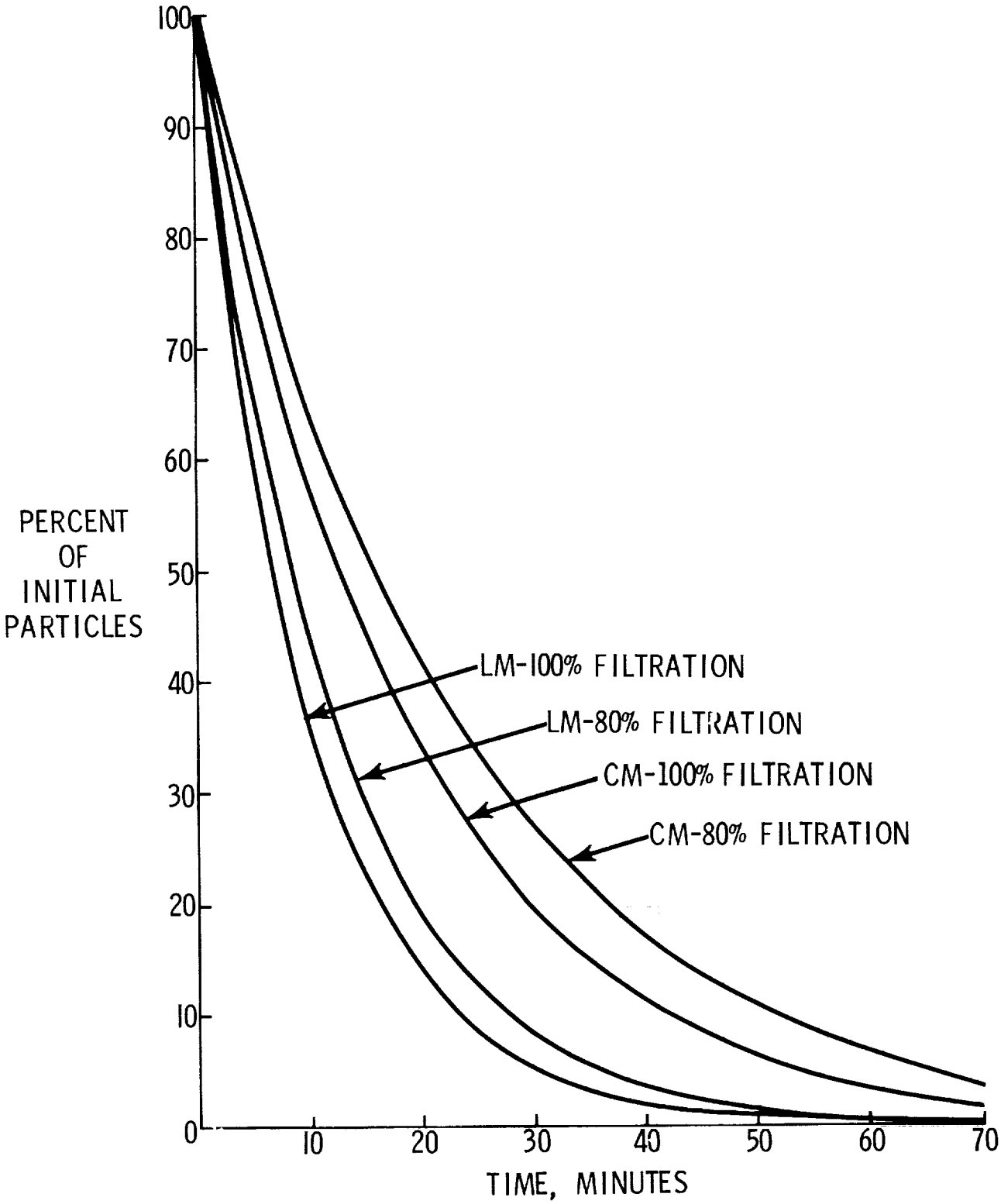

Figure 1.- Percent of initial particles remaining as a function of time and filtration efficiency for CM and LM.

to float in the cabin. This debris was not found on shaking and tilting the spacecraft during preflight operations to clean the spacecraft. This phenomena increases the confidence that dirt particles will be carried into the LiOH filter system.

To prevent dust particles from being transferred from the LM atmosphere to the CM, provisions are being made to insure a positive CM pressure relative to the LM. A constant flow of 0.8 lb/hr oxygen will be initiated in the CM at the start of combined LM/CM operation. Oxygen will flow from the CM into the LM then overboard through the LM cabin relief valve. Since the flow of gas is always from the CM to the LM, diffusion and flow of dust contamination into the CM will be minimized. The operation of the LM cabin relief valve to perform this pressure-control function must be demonstrated to preclude any crew safety problems. Efforts are underway to determine if a small valve could be installed for use in lieu of the LM cabin pressure relief valve to accommodate the LM bleed-flow of 0.8 lb/hr. The approach for this positive flow method must still be established.

2. During the transearth mission phase, the CM atmosphere will be continually filtered through the ECS lithium hydroxide canister. This continuous filtering will remove essentially all airborne dust particles. Figure 2 presents a simplified schematic of the ECS suit circuit. Cabin gas enters the system at points 1 and 2, passes through a debris filter at point 3, then passes through the lithium hydroxide canister at point 5 and exits back into the cabin at point 7. Figure 3 shows a cutaway of the lithium hydroxide canister. Gas enters the lithium hydroxide canister and the flow is split, with half directed through the filter bed and half through an open bypass. The filter bed composition is shown and is approximately 4-3/4 inches in depth. Figure 1 presents the results of an analysis of the cabin contaminates remaining as a function of time and filter efficiency. The analysis assumes a uniform distribution of the cabin contaminates in the weightless environment. The data indicate that with a filter efficiency of 100 percent for the filtered gas and zero percent for the bypassed gas, only 4 percent of the original particulate contaminate remains after 1 hour of recirculation. It is further calculated that after 63 hours of operation at the time of splashdown essentially none of the particulate contaminates will remain (10^{-90} percent of the original

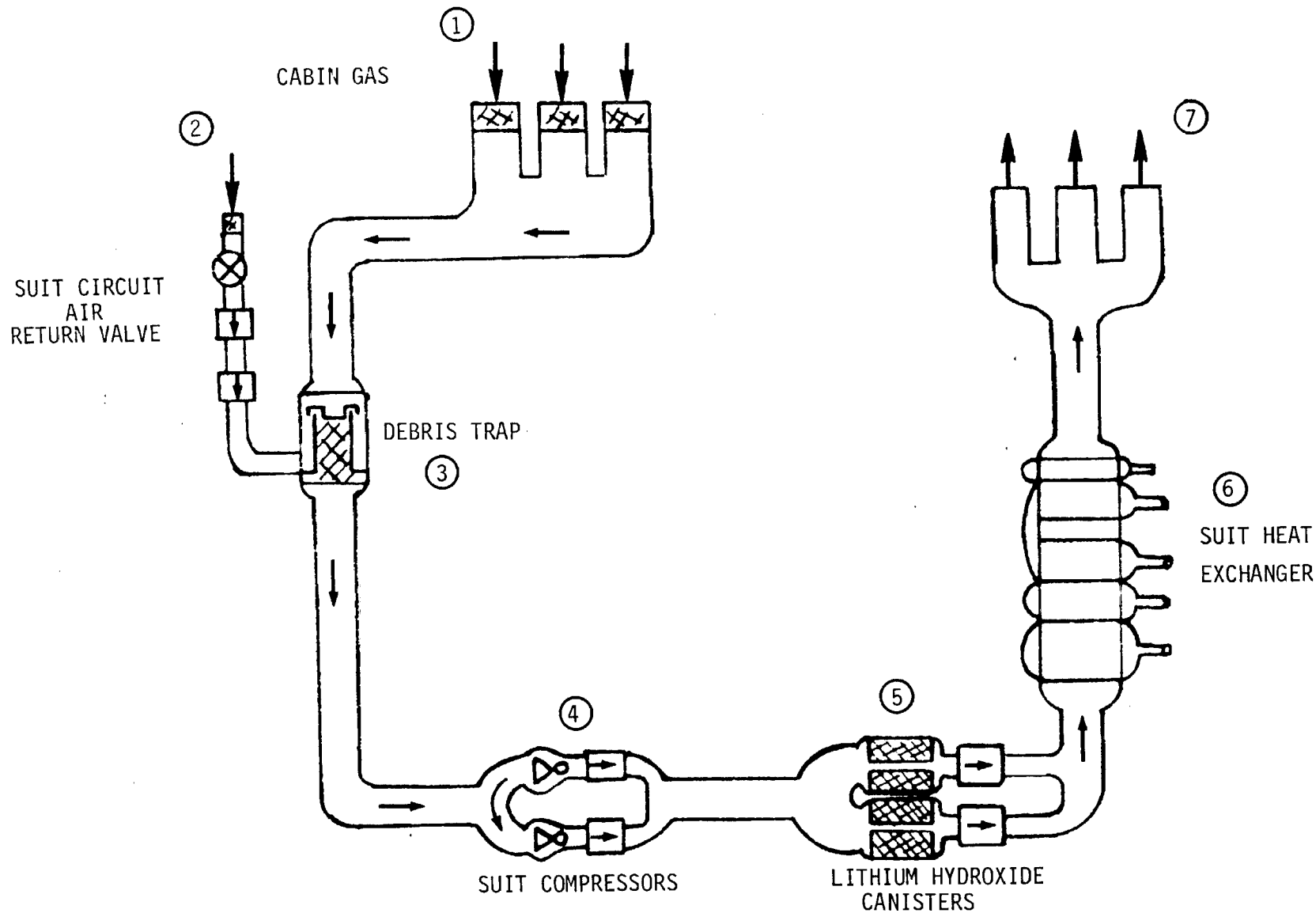

Figure 2.- Cabin atmosphere filtration through the suit circuit.

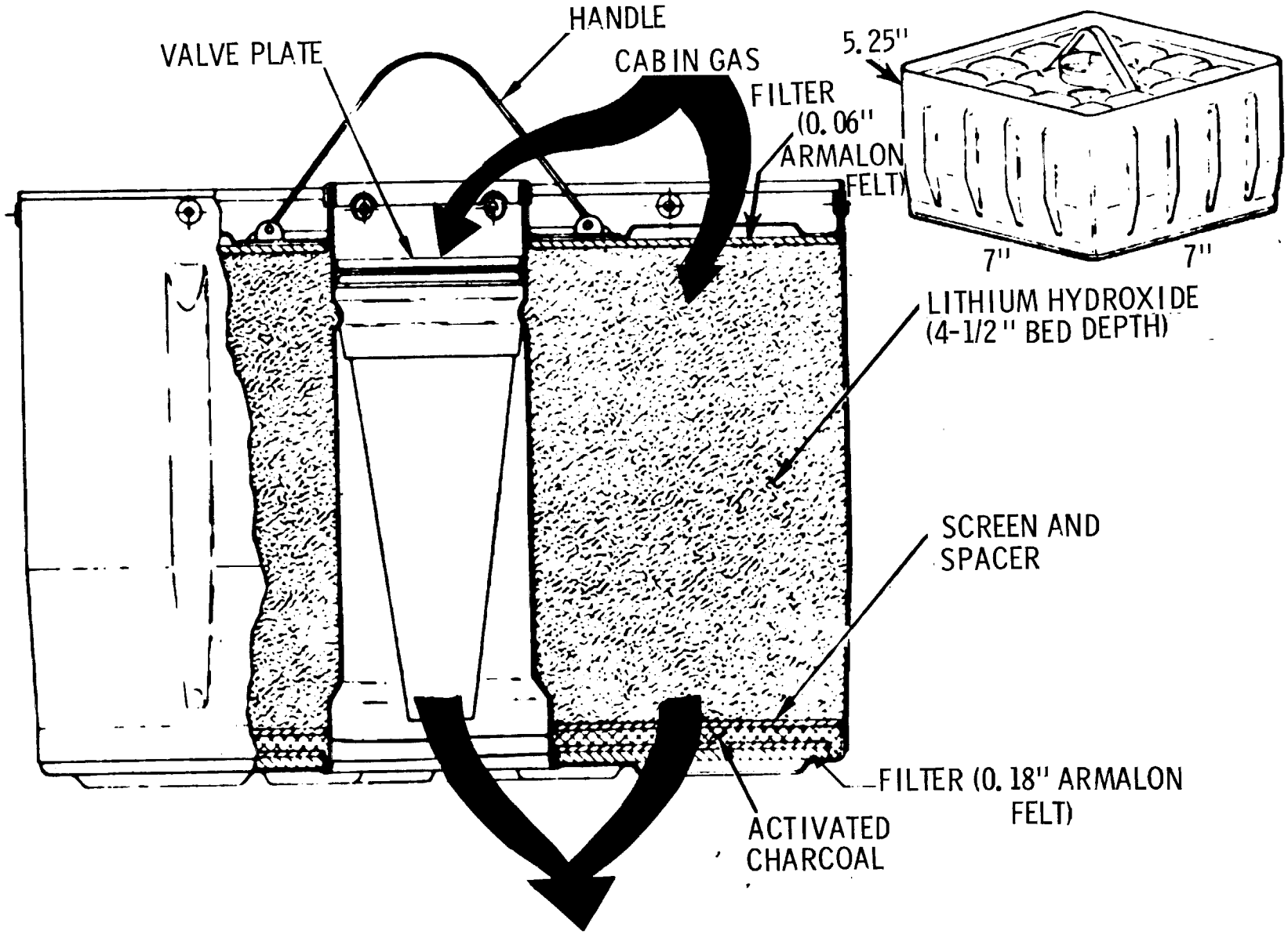

Figure 3.- Lithium Hydroxide Canister.

contaminates). Testing to date related to LiOH canister performance requirements indicate that filter efficiency can conservatively be estimated at 80 percent and may even approach 100 percent. These data were generated during the LiOH canister qualification test program in which chemical analysis was performed to determine the quantity of LiOH dust following vibration loads. It was clearly demonstrated that the extremely fine LiOH dust did not pass through the canister filters. It might also be noted that the reaction of CO_2 with LiOH produces water which in turn forms a tacky or sticky surface which would tend to collect dust particles. It has also been shown by tests that some living organisms are killed when passed through the LiOH chemical bed which is reacting with CO_2. The CM LiOH canisters are changed after 24 hours of operation.

A test program has been initiated by MSC to further demonstrate the particulate filtration efficiency of the LiOH canister. In this program, the maximum particle size, if any, which might be passed through the LiOH canister will be determined.

3. During the trans-earth period specific periods are being established during which the crew will perform housekeeping functions to remove dirt and liquids. Visible dust or condensate liquids will be removed by wiping with a cloth or by vacuum cleaning. Either the ECS suit return line or the urine dump line will be used to vacuum the spacecraft.

In summary, the CM should be free of contaminate particles at the time of earth landing. This is based on the filtration capabilities of the LiOH canister and by the use of good housekeeping procedures.

C. CM Postlanding Operations. Following earth entry and splashdown, CM cabin cooling is accomplished through the use of a postlanding ventilation system (PLV). Figure 4 is a simplified schematic of this system. Ambient air is drawn into the spacecraft by a fan, is circulated through the spacecraft, and is finally passed overboard through an exhaust port. To satisfy an ICBC requirement to filter this exhaust gas, extensive studies were conducted in 1966 to provide a 99.99 percent bacteria filter on the postlanding ventilation system. Results of this study showed that even a 50 percent efficient bacteria filter when installed in the existing PLV would not permit sufficient ventilation gas flow to maintain the crew in a satisfactory

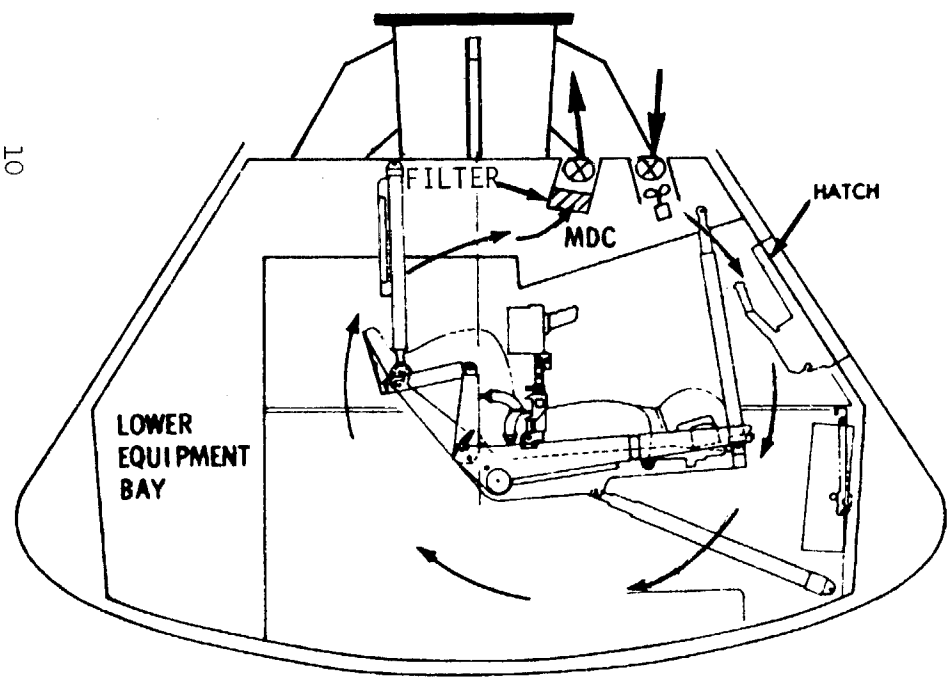

SYSTEM PARAMETERS

FLOW RATE; 140 CFM

FILTER SIZE; 30 μ ABSOLUTE

SEA AND AIR TEMPERATURE, 85^{0} F

RELATIVE HUMIDITY, 85 PERCENT

CM WALL TEMP, 90^{0} F

METABOLIC ACTIVITY LEVEL, 500 BTU/HR

HEAT STORAGE, 165 BTU/MAN

Figure 4.- Postlanding ventilation system.

thermal condition. Work was discontinued on the filter based upon an ICBC meeting recommendation in October 1966. The ICBC minutes of October 28, 1966, stated, "If the CM is filtered through the LiOH canisters prior to splashdown, and if the cabin atmosphere is effectively recirculated without partitioning, no filter is required in the CM after splashdown for protection of the environment. The use of individual respirators will be required for one and/or the other support personnel or astronauts to afford personnel protection. The specifics will be defined in the operational mission protocol of rules." This position was reaffirmed in the January 12, 1967, ICBC minutes and once again, this ICBC position on PLV filters was reaffirmed in the October 4, 1967, committee meeting minutes (Pg.2, para. f). "The committee reaffirmed its position that the absence of a biological filter during postlanding ventilation was acceptable, but that the requirement for a biological garment with respiratories was essential and should be donned before contact is made with other persons." At the ICBC meeting on February 8-9, 1968, the committee reinstated its original requirement for providing an externally mounted biological filter for the postlanding ventilation system. In the October 1968 ICBC minutes, the committee stated, "It is the concerned opinion of the committee that a filter fan development should be energetically pursued to avoid what could be compromised and untoward decisions. The regulatory members indicated that they cannot compromise this requirement; the problem must be corrected."

Design studies were made on externally mounted filter/fan combinations for installation on the spacecraft following landing. It was MSC's strong recommendation that the required operational activity is undesirable to conduct in the open seas, and, in fact, does pose some swimmer safety problems. In addition, an externally added filter/fan package would only provide filtration when the spacecraft lands within helicopter range.

Additional studies have recently been conducted, and it has been shown that it is possible to install a filter in the spacecraft PLV outflow valve as shown on figure 4. The 30-micron absolute filter will permit sufficient gas flow (140 cfm) to maintain adequate crew cooling during the postlanding period. This filter efficiency is two orders of magnitude higher than the original ICBC requirement. Retrofit kits are being developed for CM installation. Apollo 11 schedules will be impacted by approximately 1 week for the filter installation.

Summary. A postlanding ventilation filter can be installed in the CSM. Filter efficiency is two orders of magnitude lower than desired by the ICBC. The decision has not been made to install the filter in Apollo 11 spacecraft. It is felt that based on the demonstrated filter efficiency of the spacecraft ECS lithium hydroxide canisters that the ICBC may revert to the position taken in October 1966 of not requiring a filter on the PLV.

III. LUNAR LANDING MISSION RECOVERY OPERATIONS

Additional requirements for effecting a safe recovery of crew and command module following a lunar mission were imposed in 1965 to prevent back contamination during recovery operations and to provide biological isolation of the crew until return to an isolation facility.

A. Background. Various concepts were studied to meet these requirements. In late 1965, preliminary planning centered around housing the recovered crew in sophisticated medical isolation shelters placed aboard recovery ships. The hardware for this concept included a Primary Mobile Isolation Unit, a Secondary Mobile Isolation Unit, Spacecraft Isolation Container, and various pieces of support equipment. The planned deployment for this hardware would vary dependent upon the probability of a landing occurring in the vicinity of a given ship. The primary recovery ship would be equipped with both the mobile units providing the highest level of living comfort and postlanding medical testing facilities. The primary recovery ship would also be equipped with the spacecraft container which would shroud the spacecraft allowing engineers to perform complete spacecraft retrieval procedures and removal of samples and data. Secondary recovery ships would be equipped with only the secondary unit and its support equipment thus permitting a lower level of comfort and less medical and engineering mission support activities.

It should be noted that at that point in the Apollo program, principally because of the very long command module reentry range, it was planned to deploy four or five ships into the Pacific for end-of-mission recovery support. A cost study of this initial concept indicated that the cost of these types of units, the support equipment and spares, was approximately $5 million. This concept was proposed to the ICBC in April 1966 and although it appeared the concept provided maximum biological isolation, the costs were prohibitive. The committee recommended that MSC investigate alternate means of accomplishing the basic requirements of isolation and quarantine.

One of the ICBC proposals at this time was that the crew (wearing masks and protective clothing) egress from the command module aboard ship and then enter especially configured isolation areas within the ship sick bay. This concept was studied in view of the requirements stated for configuration of these special shipboard areas. In general, because of the

modifications required aboard ship, shipyard time required, late changes in recovery ship designation, and variation of ships, it was determined that this concept resulted in a major impact on Navy support, and the plan was dropped.

In mid-1966 a concept was adopted in which a minimally converted commercially available trailer would be utilized for isolation of the crew in the recovery area. The committee reviewed and approved the hardware and associated operational concepts as presented. A statement of work was issued in September 1966 for the recovery quarantine equipment. The major equipment, the Mobile Quarantine Facility (MQF) and the Biological Isolation Garment (BIG) are described in a following section of this report.

The operational procedures involving crew retrieval as a part of the adopted concept were presented to the ICBC as follows:

Nominal situation - defined as a landing within the helicopter range of the primary recovery ship.

The CM is retrieved and moved to a position beside the MQF. A plastic tunnel mates and seals the MQF to the CM. The crew egress the CM and enter the MQF for medical examination, etc., and return to the LRL.

An alternate procedure to the above was proposed if the crew were forced to egress the CM after landing. This procedure states that BIG's would be delivered to the crew who would don the BIG's in the raft and wait for retrieval by helicopter. They would then be returned to the ship where they enter the MQF. Swimmers and helicopter crew would be protected by means of protective garment and breathing mask.

Near nominal - defined as a landing within the vicinity of a secondary recovery ship. (In this situation, first assistance at the CM is accomplished by rescue personnel who parachute from fixed-wing aircraft.)

The CM is retrieved. The crew egress, don BIG's, and walk to an MQF placed as close as possible to the shipboard CM retrieval area.

The alternate to this is very similar to the nominal situation except the ship's small boat performs the personnel retrieval task.

Contingency - defined as a landing beyond limits of a planned recovery area. In this situation a ship-of-opportunity would be called to make the retrieval of crew and CM, if possible. Quarantine is on an after-the-fact basis.

The ICBC, in general, accepted and understood the variation in degree of isolation dependent upon the recovery situation and the probabilities of such situations occurring. They did repeat their great concern about the lack of filtration of CM effluent air through the postlanding ventilation valve.

B. Present Position. In several briefings to the ICBC through 1967 and 1968, the LRD personnel expressed a continuation in plans to utilize the above recovery procedures. However, as a result of a series of reviews on this subject within MSC, the position has been reached that the crew should not be retrieved while in the CM; but should be retrieved by helicopter following egress from the CM. This position has been reached because of the increasing concern for safety of personnel during Apollo recovery operations to date, a comparison of current procedures with those proposed to the ICBC, and consideration of various suggested retrieval methods.

A review of recovery operations--that phase dealing with crew and CM retrieval--reveals these specific areas of concern for retrieving the crew in the CM: spacecraft lifting loads, personnel training, retrieval equipment, and operational environment. The following discussion is offered as an explanation of our concern in each area. It should be emphasized that the MSC position is based on a combination of all concerns and does consider corrections and improvement in current recovery practices.

The loads encountered during Apollo CM retrieval have been higher than expected. Given the possible worst case conditions encountered during Apollo 8 recovery, it was shown that dynamic loads could have reached 44,000 pounds. Earlier calculations indicated that peak loads during CM retrieval by a CVS type ship in approximately 8-foot seas would not exceed 32,000 pounds. The CM top deck structure has a demonstrated capability of 48,300 pounds and an estimated capability of 55,000 pounds. In order to provide a 1.5 load safety factor, it is, therefore, necessary to place some type load limiter in the system to limit loads to 32,000 pounds.

The present technique for limiting loads during retrieval is to utilize a section of nylon in the retrieval line. There are particular limitations in this technique in that the types

of cranes aboard the currently assigned primary recovery ships do not provide sufficient clearance between hook and CM for the length nylon required to attenuate the loads for most sea states. MSC is investigating various methods to add the required load limiter, including the addition of nylon, substituting all nylon for lifting cable, or incorporating a pneumatic-hydraulic type device into the system. Each method requires modification of the cranes with equipment not available in the Navy supply system.

An alternate to an adequate load limiter is to wait until the sea state decreases, then retrieve the CM. This procedure is not acceptable for leaving the crew in the CM for retrieval.

Giving rise to greater concern for loads is the fact that the recovery loop on CM 101 (Apollo 7) through CM 107 (Apollo 11) is not a structurally qualified loop. An auxiliary loop was designed and fabricated and used successfully for Apollo 7, 8, and 9. The auxiliary loop meets the load requirements, but there is an element of risk involved in that the loop assembly is installed on the CM by Navy swimmers under less than ideal conditions.

Personnel training is a far-reaching and extremely important phase of every aspect of spaceflight. A high level of proficiency is achieved under the present NASA/Department of Defence (DOD) policy of support. This policy is based on minimum schedule impact on the DOD and on minimum interference with their primary mission. Under this policy, however, a ship is sometimes available for only a limited amount of recovery training, and seldom are ships and personnel reassigned for recovery support. Steps have been taken to improve this situation especially for the lunar missions, but it remains a concern that even with a great increase in training can the shipboard retrieval personnel be trained and coordinated to confidently react to the various situations that could and do arise during a manned operation.

Another very apparent concern for retrieving the crew in the CM stems from the retrieval equipment itself. The primary function of shipboard equipment presently utilized for CM retrieval is designed for dock side or sheltered water operation. The equipment approaches a marginal state when encountering loads mentioned previously. In addition, even though the Navy has fairly rigid equipment inspection criteria, the inspection procedures do not reach a level of "manrating." The crane system has many potential "single point failures" which could render CM retrieval impossible or result in mishaps

during the retrieval operation. Backup methods for CM retrieval have been developed, but these, too, are not "manrated." LRD has studied the possibility of placing special cranes aboard the primary ship. The type cranes considered are better suited to do the job and more reliable; also, NASA could exercise more positive control and inspection of these cranes. The primary problem with this concept is finding or building a structurally adequate shipboard location for mounting such a crane.

The very fact that CM recovery is an open sea operation gives rise to concern when consideration is given to retrieving the crew in the CM. Experience has shown that on several occasions, including situations involving the better trained ship recovery teams, that the activity along side a ship can rapidly develop into an unsafe operation.

In summary and in consideration of all these expressed concerns, it is judged safer to retrieve the crew by helicopter than to retrieve them in the CM. It is true that several of the above concerns can be applied to helicopter personnel retrieval operations--such things as inspection criteria, "manrating," and training. Aircraft and associated equipment inspections are more frequent and more stringent than for shipboard crane systems. The helicopter and the personnel hoist are a manrated system. Proficiency and safety in operations as a result of training has been demonstrated repeatedly to be greater for helicopter personnel retrieval operations than for CM retrievals by ship. Although the Naval Safety Center does not have statistics that are applicable in comparing safety of ship crane operations to helicopter operations, the figures for helicopter operations indicate an impressive record. These statistics show that the probability of successfully completing an hour long retrieval mission and returning the three astronauts to the ship using the present SH-3 type helicopter is .999915.

The position reached by MSC has been discussed with the Department of Defense representative for Manned Space Flight and with several Navy representatives directly associated with past and upcoming recovery operations, and they concur with this position.

Planned Recovery Procedures - The procedures to be followed for a nominal recovery operation are shown on table II. The steps in the recovery operations are listed in sequence.

TABLE II. - RECOVERY PROCEDURES.

NOMINAL - CM LANDS WITHIN HELICOPTER RANGE OF PRIMARY RECOVERY SHIP

1. HELO DROPS SWIMMERS WHO INSTALL FLOTATION COLLAR
2. LARGE RAFT (7 MAN) SECURED TO COLLAR
3. PACKAGE OF BIOLOGICAL ISOLATION GARMENTS (BIG's) LOWERED INTO RAFT
4. ONE SWIMMER DONS BIG AND PREPARES TO ASSIST ASTRONAUT EGRESS
5. TWO SWIMMERS MOVE UPWIND OF CM IN A SECOND LARGE RAFT
6. PLV FAN TURNED OFF, CM POWERED DOWN
7. HATCH OPENED SLOWLY
8. ASTRONAUTS EGRESS AND ASSIST SWIMMER IN CLOSING OF HATCH
9. ASTRONAUTS DON BIG's
10. SWIMMER DECONTAMINATES ALL GARMENTS, HATCH AREA, COLLAR, AND AREA AROUND PLV VALVES
11. HELO MOVES IN AND RECOVERS ASTRONAUTS

    NOTE: HOIST OPERATOR IN PROTECTIVE SUIT AND MASK, PILOTS PREPARED TO DON MASKS. THE RECOVERY PHYSICIAN RIDES IN THE HELO PREPARED TO ASSIST IF REQUIRED.
12. SWIMMER PERFORMS FINAL DECONTAMINATION OF GARMENT EXTERIOR AND RAFT SURFACES
13. SWIMMER DOFFS BIG
14. SWIMMERS (IN SCUBA) MOVE IN AND PREPARE RAFT AND SWIMMER BIG FOR DISPOSAL
15. HELO LANDS AND IS TOWED TO HANGAR DECK, ASTRONAUTS AND PHYSICIAN ENTER MQF

    NOTE: HOIST OPERATOR AND HELO DECONTAMINATED ONLY IF ASTRONAUTS ARE SICK DURING STAY IN HELO

Alternate Methods of Astronaut Retrieval. Throughout recovery operations, LRD personnel have studied various methods of conducting operations that could lead to simpler, safer techniques. Many methods have been suggested and considered. As the back contamination plans developed and the accent on retrieving the crew in the CM increased, the following three methods were most seriously considered: 1) use of a net to surround the CM during retrieval, 2) draw the CM into the flooded bay of a large landing ship, and 3) retrieve CM and crew with a heavy lift helicopter.

A large net was designed, fabricated, and evaluated about the same time the auxiliary recovery loop was designed. Due to difficulty encountered by swimmers in rigging the net around the floating CM, this idea was rejected.

The second method is attractive because it would circumvent lifting the CM. This technique was tried with some success during the Gemini and Mercury programs. The technique is very limited by sea state both in flooding the bay and in controlling the spacecraft as it is drawn into the bay. In some cases, the CM would have to be towed into the bay by an amphibious landing craft, suspended in a net as the water is pumped from the bay, then raised to a higher deck to be mated to the MQF. With the exception of using an LPD type ship (helicopter landing platform - dock) for this particular technique, two large ships would be required--a helicopter platform and a landing ship. The LPD meets most requirements; however, there is no feasible way to move the CM, once aboard, to the MQF. Thus advantages which might be gained by retrieving the crew in the CM are negated when they egress and walk to the MQF.

The third method, heavy lift helicopter, was studied as a possible solution to the present problem. The two helicopters(HH-53C and CH-54A) presently in the DOD inventory that can safely lift the CM are not at present totally compatible for at-sea operation aboard the carrier. The rotor blades cannot be folded; therefore, storage and maintenance would have to be performed on the flight deck. Although this is not standard Navy practice, it is assumed open storage would be acceptable. The Air Force HH-53 helos are used to support launch site recovery operations and have been configured by NASA with a "manrated" external cargo system. Present practice, however, is to have crew egress prior to pickup of the CM. The Army CH-54A helicopter, also evaluated for launch site recovery, is better suited to perform the mission because of superior lift performance; but it would require

major modifications to manrate its cargo system. It remains doubtful that a safe technique could be developed for placing a manned CM on the moving deck of a ship.

In considering these three methods of retrieval, it is still judged safer to return the crew to the ship by helicopter.

IV. MOBILE QUARANTINE FACILITY.

The development of a Mobile Quarantine Facility (MQF) was initiated in June 1967 with the awarding of a contract to Melpar, Inc.

A. Design and Development History. The Mobile Quarantine Facility is designed to sustain personnel and provide quarantine, and includes the following: The facility is equipped to house six people for a period of 10 days. The interior is divided into three sections--lounge area, galley, and sleep/bath area. The facility is powered through several systems to interface with various ships, aircraft, and transportations vehicles. The shell is air and water tight. The principal method of assuring quarantine is to filter effluent air and provide a negative pressure differential for biological containment in the event of leaks. Non-fecal liquids from the trailer are chemically treated and stored in special containers. Fecal wastes will be contained until after the quarantine period. Items are passed into or out of the MQF through a submersible transfer lock. A complete communications system is provided for intercom and external communications to land bases from ship or aircraft. Emergency alarms are provided for oxygen alerts while in transport by aircraft, for fire, loss of power, and loss of negative pressure. Redundant power systems and fans assure maintaining a negative pressure. Specially packaged and controlled meals will be passed into the facility where they will be prepared in a micro-wave oven. Medical equipment to complete immediate postlanding crew examination and tests are provided.

B. Certification Tests and Simulations. An extensive operational test program of the MQF and associated equipment has been completed. In addition to the in-process and acceptance tests at the contractor facility, a multi-phased program has been conducted at MSC and interfaced with the DOD vehicles (ships and aircraft). The most significant test was the end-to-end test conducted in parallel with Apollo 9. The first part of the test consisted of a recovery simulation from splashdown to MQF entry and the second part simulated the isolation and return phase from the entry of the MQF to entry into LRL of the crew and samples.

A series of minor problems resulted from the test which are being resolved and will be demonstrated prior to the first lunar landing flight. The most significant test remaining is the biological containment certification of the MQF. This will be conducted at MSC by Ft. Detrick personnel on each MQF. An operational readiness inspection has been conducted resulting in a total of 22 items concerning personnel responsibilities, documentation, certification, storage, safety,

and general design. All of the items are being resolved prior to the first lunar landing mission.

The target date for the operational readiness of the hardware to support Apollo 11 is June 15. Presently, the delivery of the mission support MQF is approximately 1 month behind schedule because of problems resulting from MSC Operational Readiness Inspection mandatory items to improve the fire retardant characteristics of the interior. It is anticipated that the work schedule will be compressed to still meet the readiness milestone date.

C. Operational Transfer Plans for MQF. The Recovery Quarantine Equipment is deployed only to those ships with a high probability of retrieving the Command Module and astronauts. Within present planning, this limits the deployment to the primary recovery ship only in the end-of-mission recovery area. The equipment will be deployed on all lunar landing missions until the present directives are modified.

Following the crew recovery and entry into the MQF, the CM will be recovered and connected to the MQF using a plastic tunnel. The biomedical samples and lunar sample containers, film, data, etc., from the CM will be packaged and outlocked for quick return to MSC via the closest land base. The MQF, with the astronauts, one doctor, and one recovery engineer inside, will be transported by the recovery ship to Hawaii where it will be off-loaded at the dock. The MQF will then be transferred to Hickam Air Force Base where it is loaded aboard a USAF C-141 aircraft for a direct flight to Ellington AFB, Houston, Texas. The MQF will then be transported by truck from Ellington to the Lunar Receiving Laboratory where the interface will again be accomplished using a plastic tunnel.

The test program has been successful in all phases of this transfer operation with the exception of the actual accomplishment of the MQF off-loading from the recovery ships.

V. BIOLOGICAL ISOLATION GARMENT

The Biological Isolation Garment (BIG) will be used by the Apollo flight crew after they have egressed from the command module. The garment is donned in the raft just prior to the helicopter hoist operation and will be worn until the crew enters the MQF aboard the primary recovery ship. The suit is fabricated of a light weight cloth fabric which completely covers the wearer and serves as a biological barrier. Built into the hood area is a face mask with a plastic visor, air inlet flapper valve, and an air outlet high efficiency filter.

The garment was developed at MSC by the Crew Systems Division and the Landing and Recovery Division. The major phases of the development test program are complete. This testing consisted of manned tests in the various MSC test chambers and at sea under representative environmental conditions. The total number of manhours in the BIG is in excess of 30. Prototype garments have been to Ft. Detrick, once to test the first garment fabricated and once to test a group of safety improvements made to the basic design. The suit has been evaluated by representatives of the astronaut office during the test program and has been approved for operational use. The garment has been demonstrated to the ICBC and the results of the test's phases have been summarized during the various briefings. The committee has accepted the garment for use in the contingency recovery area when the crew egresses from the CM.

The garments are being fabricated by B. Wilson Co., Hartford, Conn., under a contract with Crew Systems Division. A total of 100 garments have been purchased. Eight garments have been delivered, three of which will be used as qualification articles which will include a test at Ft. Detrick for biological containment certification. The remainder of the first eight will be used as training articles. Fifty-five garments will be delivered by May 15, 1969, and the remaining 37 by October 1, 1969. The garments are presently ahead of schedule without any predictable problems.

VI. LUNAR RECEIVING LABORATORY AS A CONTAINMENT FACILITY

A. Introduction. The LRL serves four basic purposes.

1. The quarantine of the lunar mission crew and spacecraft, the containment of lunar and lunar-exposed materials, and quarantine testing to search for adverse effects of lunar material upon terrestrial life.

2. The preservation and protection of the lunar samples.

3. The performance of time critical investigations.

4. The preliminary examination of returned samples to assist in an intelligent distribution of samples to Principal Investigators.

The need for a central facility to carry out the foregoing functions was identified early in 1964. A series of studies preceded the construction of the building which began in July 1966. The test system equipment were developed and installed during the period from mid 1966 until about September 1968. Since that time, a series of shakedown tests has been run, and simulated operations have been carried out.

The LRL is a unique facility in many respects. It has inside it the only vacuum system in the world with space gloves operated by a man leading directly into a vacuum chamber at pressures of 10^{-7} torr. It has a low-level counting facility, the best in the world by an order of magnitude. It has the only facility in the world that can handle a large variety of biological specimens inside Class III biological cabinets designed to contain extremely hazardous pathogenic material. Both the variety of instrumentation and capabilities present in the laboratory and the extreme complexity and advanced nature of many of these special facilities make it a difficult laboratory to put into operation.

The LRL, housed in Building 37 at MSC, covers 83,000 square feet of floor space and includes several distinct areas. These are the Crew Reeceiving Area (CRA), Vacuum Laboratory, Sample Laboratories (Physical and Bio Science), and an administrative and support area. Very special building systems are employed to maintain air flow into sample handling areas and the CRA to sterilize liquid waste and to incinerate contaminated air from the primary containment systems.

B(1). Simulation Activities. Partial simulations of the LRL were carried out in October, 1968, and February, 1969, and a simulation of the entire laboratory was run during March, 1969. The first of these simulations identified the major hardware problems. These were rectified and retested in February. The simulation in March, which included the

biological test laboratories for the first time, demonstrated that the facility and equipment are generally satisfactory but that test procedures and training of staff and test direction need to be strengthened.

B.(2). Physical Sciences. The returned lunar sample container is processed first in the vacuum laboratory. The Vacuum Laboratory comprises a conditioning system for the preparation of sample boxes for the outbound Apollo flight and a unique processing facility in which returned sample containers can be opened and their contents examined under high (10^{-7} torr) and ultra high (10^{-11} torr) vacuum conditions. The heart of the sample processing complex is the F-201 high vacuum system which permits sample handling by an operator working through spacesuit gloves giving a manipulative repertoire close tothat available on a bench top. The special lunar environment samples are handled in the F-601 ultra high vacuum chamber with mechanical manipulator.

These systems can be sterilized to prevent biological contamination of the sample, and are constructed of special materials to limit organic contamination in general. The containment function of the vacuum system is insured by the leak-tightness necessary for vacuum operation.

Auxilliary equipment includes decontamination chambers to transfer items in and out of the vacuum system and storage carrousels in which sample can be protected under vacuum for extended periods.

The F-201 vacuum system has been exercised in all simulations to date. Sample processing operations have been carried out five times with actual sample return containers and simulated lunar material. Approximately 1500 hours of operation have been accumulated on the F-201 system and about 90 percent of the operations which will be performed on the lunar sample have been practiced. The spacesuit gloves, which are pivotal to the success of the vacuum operation, were an item of concern during the early simulations when operating glove life was about 4 or 5 hours. A change in liner thickness was implemented prior to the March simulation and this has greatly improved the glove life. Operating times of 80 hours with 400 hours at vacuum were accumulated on gloves that are still tight. Glove life is not now expected to constrain vacuum lab operations. The sample transfer operations from the vacuum laboratory

to the other laboratories in the LRL have been exercised and are generally satisfactory. During the simulations, as will be the case during a mission, visiting scientists worked in the LRL on the investing action and description of the simulated lunar material.

Small portions of the lunar sample will be subjected to preliminary examination to gather data upon which to base sample distribution plans and to gather data of a short-lived nature which cannot wait until sample release. This work is done in sample laboratories in which the material is handled behind biological barriers. Mineralogical and petrographic examination by microscope, X-ray, and spectroscopic techniques will be done on small chips of each returned rock. Radioactive nuclides in the larger rocks will be measured in the Radiation Counting Laboratory (RCL). Organic and inorganic gas analysis will be carried out on small chips of the material and upon the gaseous contents of the ALSRC. A representative sample of the total return will be subjected to chemical analysis to determine toxicity with respect to the bio sample to be used upon the various life systems.

The Physical Science Laboratories have been operating during simulations and developed satisfactory data in all areas except X-ray and some parts of chemical analysis.

Operated in conjunction with the Physical Science Laboratories are a Thin Section Laboratory in which sections for microscopic examination can be made and a Mineral Separation Laboratory in which samples will be disaggregated into components for outside investigators who work only with specific minerals. The Thin Section Laboratory is fully operational. The Mineral Separation facility is complete and approximately 95 percent equipped. A simulation of this laboratory will take place in late May.

C. Problem Areas. The operation of LRL through the simulations has identified a number of problem areas. The required modification to the facility and equipment are essentially complete including the transfer autoclaves. Some minor items of refurbishment and repair, and the addition of some special tools are scheduled for completion by mid May 1969. The autoclaves, through which samples are transferred to Class III cabinets and across the secondary biological barrier have

performed erratically and have flooded with contaminated water during the March simulation. This particular installation of autoclaves is unique in its complexity and only during the simulation was it exercised sufficiently to give a clear indication of design defects as contrasted to random faults which could possibly be attributed to operator error.

The autoclaves have been modified and the initial testing has shown satisfactory operation.

A general problem exists in the area of operational documentation. The detailed procedures have been developed but changes to sample flow and new experiments have made it necessary to revise the operational plans and rearrange and update detailed test procedures. A documentation review board has been established to assure that necessary documentation is developed and approved.

The level of staffing is generally adequate although the March simulation led to the identification of a few weak points in the support contractor staffing. The required increase (less than 10 percent) in contractor support has been authorized.

Training of the staff has lagged due to the intense effort which has been expended on getting the equipment in order. Also, the plans for certification of personnel are being revised to assure that all operating team members are properly trained and have practiced their duties adequately.

Current Activity. At the present time, work is proceeding on all open hardware items including refurbishment of vacuum systems, annual maintenance, and barrier sealing. Work affecting containment is now nearly complete, contamination certification for the facility will be accomplished prior to next program milestones for the Apollo mission.

Documentation, training and certification of personnel will proceed during May, and a series of partial simulations are underway and will be completed by early June 1969. This will include an abbreviated mission containment exercise during which the laboratory test direction and quarantine control systems will be exercised.

Processing of the Apollo Lunar Surface Return Container (ALSRC) for Apollo 11 will commence on May 2 with boxes ready for shipment to KSC in mid June.

Sample integrity is a matter of great concern and the extent of contamination from terrestrial sources, especially organic contamination, is appreciable. Considerable effort has been expended to minimize contamination in the ALSRC; for example, initial machining is done with alcohol rather than cutting oil. The pre-flight preparation involves bake-out but the basic alloy of which the box is made cannot withstand temperatures as high as would be desired for good clean up.

Testing is being carried out to determine the base line level or organic contamination resulting from properly prepared containers.

VII. QUARANTINE TESTING

The biomedical laboratories provide for the required quarantine tests to determine the effect of lunar samples on terrestrial life. Thse tests are not primarily to further our scientific knowledge concerning the lunar material, but are to provide the minimum data upon which to base the decision to release lunar material from quarantine.

These laboratories have had a single opportunity to simulate their mission activities. This simulation in March 1969, lasting from several days to several weeks in the Laboratory, was to gain expertise in biobarrier laboratory operations. In general the bio-laboratories and the supporting staffs demonstrated a capability to support the quarantine operation. Significant operational experience is summarized as follows:

A. Mice

This is the only mammal used in the quarantine tests. They are exposed to lunar material and observed for 21 days. Periodically, mice are studied for infection. Over 9,000 mice have been studied in the Lunar Receiving Laboratory. Of these, 60 have died inadvertently. Of these deaths, over 90 percent were lost in a single event due to a mechanical failure in a germ-free isolator.

During the recent simulation, 191 mice were utilized. None of the animals exposed to simulated lunar material were affected, and the decision to release the material could have been made with confidence. Three control animals did die due to a chemical toxicity. This was definitely diagnosed as noninfectious, and effective procedures have been introduced to preclude the recurrence of this event. All "germ-free" mice, at the Lunar Receiving Laboratory and elsewhere, have been noted to possess a microbial contaminant transmitted from the mother. A small number of the mice in the Lunar Receiving Laboratory have been noted to acquire an additional microorganism. However as this organism was found in both control and experimental animals, it did not confuse the data interpretation for release. The cause of this latter contamination is due to the unique problems associated with maintaining "germ-free" animals within the laboratory cabinet work. No other laboratory in the world is known to be operating this type of animal colony. Mechanical changes have been designed and constructed to preclude this contamination. In summary, although changes are in progress to enhance system

reliability, the mouse colony proved capable of supporting the July lunar landing mission.

Microbiology. Lunar sample material is applied to 12 different media and maintained under various environmental conditions. The media are then observed for the presence of bacterial or fungal growth. Also in this Laboratory, detailed inventories are developed of the microbial flora of the spacecraft and the crew. Any living material found in the sample is then compared against this "shopping list" of potential contaminants taken to the moon with the crew or spacecraft. Additionally, this Laboratory provides detailed studies of the various animals used in the biomedical tests.

In its simulation, this Laboratory successfully accomplished the analysis of the crew samples and lunar sample. An organism, *Bacillus sphaericus*, was purposely put into the simulated lunar sample. The organism was both recovered and correctly identified by the laboratory staff, who were unaware of its presence.

Virology. To detect virus material, six types of human and animal cells are maintained in the laboratory. These, together with embryonated eggs, are challenged with lunar material. Based upon the cellular and other changes, the presence of virus material can be established. Still other tests are then carried out to determine the type of virus present. This laboratory also provides for the conduct of the crew virology program and, when required, for the diagnostic virology in support of the various animal studies.

In its simulation, this laboratory demonstrated its ability to identify a number of viruses -- influenza, echovirus, and adenovirus; one virus, Coxsackie, was not identified. Upon investigation, this was due to a particularly nonvirulent Coxsackie inoculum which failed to kill the suckling mice to which it was exposed.

On April 14, the Department of the Interior strongly recommended the inclusion of several additional types of tissue culture material. Of the six recommended, two are currently being considered. Reliability and impact studies are currently in progress. These types will not be included in the Apollo 11 protocols, but will be appended later if their inclusion can be shown feasible for later missions.

This laboratory also conducts special testing for the presence of Mycoplasma, a microorganism that is intermediate between a virus and a bacterium.

In the simulation, M. Pneumoniae was introduced into the simulated lunar sample for this laboratory. The agent was effectively isolated and identified.

Botany. Thirty-three species of plants are exposed to lunar material. Either seed germination, the growth of plant cells in vitro, or the health of seedlings is observed. If abnormalities are observed, histological, microbiological, and biochemical techniques are utilized to determine the cause of the abnormal condition.

In the recent simulation, 27 of the 33 species were utilized. Mechanical problems, in the plant growth chambers, precluded the introduction of the remaining species. Design changes to correct these problems have been completed and the required modification is currently in progress. Completion is anticipated by May 1. The botany laboratory requires the longest lead time of the biomedical laboratories. In consequence, during the week of April 7, seeds were planted to provide the seedling material for the "G" mission support. Work schedules have been designed to provide the required modifications, and partial simulations, without impact upon the premission preparations now in progress.

The data acquired in the simulation were adequate to confirm the adequacy of the test species included and to demonstrate that the simulated lunar material had no deleterious effects upon the plant systems.

Invertebrate/Lower Vertebrate Animals. Of particular interest to the Department of the Interior and the Department of Agriculture, a number of lower animals are exposed to lunar material. These include fish, birds, oysters, shrimp, cockroaches, planaria, paramecia, and euglena. If abnormalities are noted, further tests are conducted to determine if the condition is transmissible from one group to another. Detailed diagnostic investigations will be pursued only if the abnormality is of significance, is reproducible, and is transmissible.

In simulation, this laboratory utilized all but two of the test species. The resultant data indicated considerable variability in the deaths of the animals, but showed clearly that no significant death or illness event resulted from exposure

to the simulated lunar sample. As a result of the simulation, three of the test species, (Amoeba, Hydra and Fundulus) are being deleted due to the inability to maintain reliable colonies within the biological barrier. Most of the test species have never been maintained under the biological barrier conditions required by this program. Additionally, the Department of Agriculture has requested the addition of two additional insect species, the waxwing moth and the housefly. These will be included, subject to verification testing in the Lunar Receiving Laboratory of their reliability.

Summary. The biomedical test laboratories represent a unique and highly complex assembly of test systems, many of which have never previously been conducted within biological barriers. Although only a limited practice time was available, the staff demonstrated the capability to conduct the biological tests almost in their entirety.

As a result of the simulation, several design changes have been effected to increase reliability. Several lower animal species have been recommended for elimination due to their limited reliability.

In living systems, sporadic random death and illness events occur. The simulation demonstrated the ability to identify these events appropriately and to distinguish them from infectious disease due to exposure to simulated material.

As a result of the simulation, a "Biolab Task Group" has been established representing the heads of the several biomedical laboratories and chaired by the Quarantine Manager. This Group has significantly upgraded the responsiveness of the biomedical laboratory operation. It has significantly reduced the time required for effective decision making, and facilitated communication.

In summary, anticipating the prompt opportunity to re-enter the laboratories and the approval of the existing protocols by the Interagency Committee on Back Contamination, the biomedical test laboratories will be capable of supporting a mid July lunar landing mission.

Crew Reception Area. The Crew Reception Area provides biological containment for the flight crew and 12 support personnel. While the nominal occupancy period is about 14 days, the facility must be prepared to operate for considerably longer periods if release cannot be secured. Also, in the event of a major biological spill in the sample laboratory, this area must be prepared to support up to 100 persons.

Logistic support has been provided successfully during a 5 day simulation. The medical support, including execution of the postflight medical testing and the simulation of a crew medical problem, has been exercised. Also, handling of the simulated flight film, data tapes, and lunar sample boxes has been accomplished successfully during the simulation. All biological containment systems operated effectively during the simulation.

Remaining problem areas are principally concerned with establishment and approval of the crew release plans, emergency medical procedures, and medical and surgical consultant panels.

Of major importance is the recent requirement for entering and examining the spacecraft prior to the end of quarantine. The exact definition of the requirement, and its impact upon the facility and Crew Reception Area operations is currently being developed.

Containment. Biological containment is a requirement that exists throughout the sample laboratory, and Crew Reception Area. Its accomplishment involves the effective operation of highly specialized air handling, waste treatment sterilization, and containment equipment. All laboratory personnel must be active participants in the maintenance of the biological barrier. Thus, personnel training and motivation is a critical part of containment operations.

Several aspects of containment were waived in the simulation. Excluded were occupational medicine plan, sterilization of the vacuum laboratory, and leak checking of the radiation counting container. In the simulation, the facility air handling and waste containment systems all operated effectively. The most significant problem concerned malfunction of the autoclaves. This is discussed in greater detail elsewhere in this paper. A number of small, but significant, interface problems were identified as related to the transfer of contaminated and potentially contaminated materials within the sample laboratory. Additionally, the simulation pointed up the requirement for revision of the access plan and many of the emergency plans.

In summary, the primary facility containment equipment, with the exception of autoclaves, worked properly throughout the simulation. Emergency procedures and transfer procedures are being modified, as necessitated by the results of the simulation to permit ease of operations while maintaining biological containment.

VIII. STERILIZATION AND RELEASE OF SPACECRAFT

A. Postflight testing and inspection of the spacecraft is presently limited to investigation of anomalies which happen during the flight. Generally, this entails some specific testing in the spacecraft and removal of certain components of systems for further analysis in the laboratory. The timing of postflight testing is important so that corrective action can be taken for the subsequent flights. Deterioration may also affect some components as a result of salt water immersion. The spacecraft hatch will be closed after crew egress except for removal of lunar samples and film magazine onboard the recovery ship Access to the spacecraft will only be possible thru the MQF tunnel. The time line then calls for returning the the spacecraft to port where a team will deactivate pyrotechnics, flush and drain fluid systems (except water). This operation will be confined to the exterior of the vehicle. A special room has been set aside for the storage and postflight checkout of the spacecraft. Plans are being formulated to activate the spacecraft for checkout.

Another approach is being pursued to decontaminate the spacecraft when it is returned to MSC. If this proves feasible, the spacecraft will not have to be placed in quarantine. Two different methods have been tried to kill particular spores that have been placed in the spacecraft. An attempt to kill the spores with an ethylene-oxide gas mixed with freon, was unsuccessful. One hundred percent kill of the spores was accomplished, however, by using formaldehyde for a 24-hour period. MSC will pursue this approach in parallel with the efforts to provide for a postflight test capability in the LRL. The ICBC has not yet fully evaluated the approach of decontamination of the spacecraft by the formaldehyde techniques. If the sterilization technique is not verified and approved, then the spacecraft would be stored in the LRL and post mission tests conducted as required.

SUMMARY

1. Procedures are being developed to clean lunar surface equipment prior to transfer to the lunar module.

2. Spacecraft housekeeping and equipment cleaning procedures will be employed inflight to eliminate the transfer of lunar surface contamination back to earth.

3. The spacecraft environmental control system lithium hydroxide filter provides an effective method of removing contaminate particles from the cabin atmosphere. Analytical data shows that essentially all of the airborne particles will have been removed from the spacecraft at splashdown. Calculations show that 10^{-90} percent of the original particles will remain.

4. A 30 micron filter for the postlanding ventilation system can be provided; however, it will impact launch schedules. It is hoped that the ICBC will revert to its October 1966 position of not requiring this PLV filter due to the efficiency in removing dirt particles during the trans-earth mission phase.

5. It has been determined that the retrieval of the crews by helicopter following splashdown is the preferred recovery method due to operational and safety considerations.

6. Equipments for the transfer of crewmen (biological isolation garments and Mobile Quarantine Facility) have been developed and are nearing operational status.

7. The Lunar Receiving Laboratory equipment problems appear to be nearing complete resolution. A short term simulation will be required to demonstrate this operational readiness.

8. Actions are underway to obtain ICBC approval of the required bioprotocols and to establish certification of the LRL as a containment facility.

9. The March 1969 LRL simulations revealed equipment and procedure problems which will be resolved. The ability to sustain biological test specimens was considered quite successful.

10. The operation of the Lunar Receiving Laboratory is receiving top level management attention on a daily basis to insure an operational readiness date compatible with the Apollo 11 mission launch date.