~~CONFIDENTIAL~~

X63-80389 H-51
WA420

REPORT NO. AE610363

CLASSIFICATION CHANGE
TO UNCLASSIFIED
By authority of E.O. 11652
Changed by L. Shirley Date 8-22-73

APOLLO

FINAL STUDY REPORT

VOLUME III | SUPPORTING DESIGN ANALYSES
BOOK 8 | ENVIRONMENTAL CONTROL AND LIFE SUPPORT

(NASA-CR-137349) SUPPORTING DESIGN ANALYSIS, VOLUME 3: ENVIRONMENTAL CONTROL AND LIFE SUPPORT, BOOK 8 Final Study Report (General Dynamics/Convair) 81 p

N74-73546

Unclas
00/99 33808

GDD

CONVAIR (ASTRONAUTICS) DIVISION OF GENERAL DYNAMICS CORPORATION AND AVCO CORPORATION

EXCLUDED FROM THE GDS

~~CONFIDENTIAL~~

SECURITY NOTICE

This document contains information affecting the national defense of the United States within the meaning of the Espionage Laws, Title 18, U.S.C., Sections 793 and 794. Its transmission or the revelation of its contents in any manner to an unauthorized person is prohibited by law.

NOTICE OF EXISTENCE OF PROPRIETARY INFORMATION

This report is furnished to the Space Task Group, NASA, under the terms of Contract NAS 5-304, and shall not be released outside the Government (except to foreign Governments, subject to these same limitations), nor be disclosed, used, or duplicated, for procurement or manufacturing purposes, without the permission of Convair-Astronautics, a Division of General Dynamics Corporation, and of Research and Advanced Development Division of AVCO Corporation. This legend shall be marked on any reproduction hereof in whole or in part.

CONFIDENTIAL

APOLLO

FINAL STUDY REPORT

Report No. AE61-0363

15 May 1961

Contract NAS 5-304

Volume III

SUPPORTING DESIGN ANALYSES

Book 8

ENVIRONMENTAL CONTROL
AND LIFE SUPPORT

Prepared by:

CONVAIR (ASTRONAUTICS) DIVISION
GENERAL DYNAMICS CORPORATION
and
AVCO CORPORATION

RDF61-026

CONFIDENTIAL

EXCLUDED FROM THE GDS

VOLUME I | SUMMARY

VOLUME II | SELECTED VEHICLE DESIGN

VOLUME III | SUPPORTING DESIGN ANALYSES

BOOK 1 | FLIGHT MECHANICS

BOOK 2 | HEAT CONTROL SYSTEMS

BOOK 3 | STRUCTURAL ANALYSES AND MATERIALS

BOOK 4 | PROPULSION AND AUXILIARY POWER

BOOK 5 | TRACKING, COMMUNICATIONS AND DATA SYSTEMS

BOOK 6 | GUIDANCE AND CONTROL

BOOK 7 | AEROSPACE MEDICINE AND RADIATION

BOOK 8 | ENVIRONMENTAL CONTROL AND LIFE SUPPORT

BOOK 9 | HUMAN FACTORS

BOOK 10 | RELATED CONFIGURATION STUDIES

VOLUME IV | GROWTH AND ADVANCED CONCEPTS

VOLUME V | IMPLEMENTATION PLAN

BOOK 1 | SYSTEMS ANALYSIS, SCHEDULES AND COSTS

BOOK 2 | RELIABILITY

BOOK 3 | DEVELOPMENT PROGRAM

BOOK 4 | MANUFACTURING PLAN

BOOK 5 | SUPPORT OPERATIONS

TABLE OF CONTENTS

Section		Page
1	INTRODUCTION	1
1.1	STUDY AREAS	1
1.2	SYSTEM SELECTION SUMMARY	1
2	ATMOSPHERIC CONTROL	3
2.1	CONCEPT OF THREE INDEPENDENT SYSTEMS	3
2.2	PERFORMANCE REQUIREMENTS	3
2.2.1	System Capacities	4
2.3	LEAKAGE AS A DESIGN PARAMETER	4
2.3.1	Leakage Causes and Control	4
2.3.2	Leakage Estimates	4
2.3.3	Reserves of Atmospheric Gases	4
2.3.4	Cabin Pressure	5
2.4	SYSTEM TYPES CONSIDERED	5
2.5	SYSTEM DESCRIPTION AND SUBSYSTEM SYNTHESIS	5
2.5.1	Introduction	5
2.5.2	System Synthesis	5
2.5.3	Modes of Operation of the Environmental Control System	6
2.5.4	Description of the Command Module System	8
2.5.5	Description of the Mission Module System	9
2.6	OXYGEN SUPPLY	10
2.6.1	Supercritical Storage	14
2.7	PRESSURIZATION	14
2.8	MIXED GASES	15
2.9	CARBON DIOXIDE REMOVAL	17
2.9.1	Lithium Hydroxide	19
2.9.2	Molecular Sieves	19
2.9.3	Carbon Dioxide Freeze-Out	19
2.9.4	Combination Freeze-Out and Molecular Sieve	19
2.9.5	Integrated Heat Exchanger and Absorber	19
2.9.6	Potassium Superoxide	20
2.10	MOISTURE REMOVAL	20
2.11	TRACE CONTAMINANTS	20
2.11.1	Catalytic Burner	20
2.11.2	Activated Carbon	23
2.11.3	Aerosol and Particle Filtration	24
2.12	INTERNAL HEAT LOADS	24
2.12.1	Metabolic Heat Loads	24
2.12.2	Mission Heat Loads	25
2.13	RELIABILITY	30
2.14	AUTOMATIC CONTROLS AND SENSORS	36
3	THERMAL CONTROL	41
3.1	CONCEPT	41
3.2	TRANSIENT THERMAL CONTROL	41
3.2.1	Heat Loads	41
3.2.2	Description of Equipment	42
3.2.3	System Selection	42
3.3	PRIMARY THERMAL CONTROL SYSTEM	44
3.3.1	Internal Cooling Requirement	44
3.3.2	Description of Equipment	45
3.3.3	Heat Transport Fluid Study	45
3.3.4	Electronic Equipment Cooling	47
3.3.5	System Performance	47
4	FOOD, WATER AND WASTE MANAGEMENT	49
4.1	INTRODUCTION	49
4.2	FACILITIES ARRANGEMENT	49
4.2.1	Waste Collection Facilities	49
4.2.2	Food Preparation Facilities	50
4.2.3	Personal Hygiene Area	53
4.3	WATER MANAGEMENT	53
4.3.1	General	53
4.3.2	Water Requirements	55
4.3.3	Water Sources	55
4.3.4	Water Management Profile	55
4.3.5	Water Storage and Transfer	55
4.3.6	Emergency Modes	57
4.3.7	Water Recovery	57
4.3.8	Integrated Water System	59
4.4	WASTE MANAGEMENT	61
4.4.1	Feces Collection Unit	61
4.4.2	Light-Weight Feces Collection Unit	61
4.4.3	Urine Collection Unit	62
4.4.4	Vomit Receptacle	62
4.5	PERSONAL HYGIENE	62
4.5.1	Body Cleanliness	62
4.5.2	Medicine Chest	64
4.6	CABIN SANITATION	64
4.7	FOOD MANAGEMENT	64

TABLE OF CONTENTS (Cont)

Section		Page
4.7.1	General Specifications	64
4.7.2	Detailed Approach - Mission Module	65
4.7.3	Detailed Approach - Command Module	65
4.7.4	Alternate Approach	66
4.7.5	Testing	66
4.7.6	Summary	66
5	POWER PROFILE	69
5.1	COMMAND MODULE	69
5.2	MISSION MODULE	69
6	VIBRATION AND ACOUSTICS	71
6.1	INTRODUCTION	71
6.2	NOISE AND VIBRATION	71
6.2.1	Acoustic Spectra - Prelaunch and Launch	71
6.2.2	Noise Spectra During Maximum Aerodynamic Pressure	71
6.2.3	Re-Entry Noise Spectra	71
6.3	ACOUSTICAL CRITERIA FOR WORK, REST AND COMMUNICATION AREA	71
6.3.1	Introduction	71
6.3.2	Work Area	72
6.3.3	Rest Area	73
6.3.4	Communication Area	73
6.3.5	Acoustical Criteria For the Command Module - Launch and Re-Entry	73
6.4	RELIABILITY OF VOICE COMMUNICATIONS AND EAR PROTECTION	73
6.5	ACOUSTIC INSTRUMENTATION	73
6.5.1	Data Acquisition and Handling	73
6.5.2	Back-Up Equipment for Data Acquisition	73
6.5.3	Microphone System	73
6.6	ACOUSTICAL-NOISE CONTROL MATERIALS	73
6.6.1	Applicability of Acoustical Materials	73
6.6.2	Finalizing of Acoustic Design	73

LIST OF ILLUSTRATIONS

Figure		Page
1	Schematic Diagram of Environmental Control System	7
2	Major Components of Command Module Environmental Control System	9
3	Major Components of Mission Module Environmental Control System	11
4	Mollier Chart Supercritical Storage	14
5	Effect of Command Module Leakage Rate on Oxygen Partial Pressure	17
6	Effect of Command Module Leakage Rate on Oxygen Partial Pressures for Various Module Pressures	17
7	Psychometric Process Environmental Control System; Operation in Lunar Vicinity	31
8	Failure Distribution Curves	32
9	Comparative Designs of Oxygen Supply Systems for Reliability Analysis	33
10	Thermal Control System Schematic	41
11	Secondary Thermal Control System Weight vs. Operating Time	43
12	Location of Food, Bath, and Waste Collection Areas	50
13	Bath and Waste Collection Areas	51
14	Food Preparation Area	52
15	Food/Feces/Refuse Freezer	53
16	Crushable Food Carton and Water/Food Containers	54
17	Hot and Cold Water Dispenser	55
18	Water Management Program for 14-Day Mission	56
19	Water Transfer Diagram	58
20	Integrated Water System	60
21	Lightweight Feces Collection Unit (Design A)	61
22	Lightweight Feces Collection Unit (Design B)	62
23	Urinal and Vomit Receptacle	63
24	Environmental Control Power Profile	69
25	Estimated External Capsule Nose from Static Firing of Rocket Engines	71
26	Estimated Boundary Layer Nose at Launch During Maximum Dynamic Pressure	72
27	Estimated Base Pressure Fluctuation on Re-Entry Vehicle for the Condition of Maximum Dynamic Pressure, AVCO M-1 Configuration	72
28	Estimated Base Pressure Fluctuation on Re-Entry Vehicle, AVCO M-1 Configuration	72

LIST OF TABLES

Table		Page
1	Computation of Quantities of Oxygen and Nitrogen Required	12
2	Oxygen Supply	13
3	Nitrogen Supply	16
4	Carbon Dioxide Control	18
5	Moisture Removal	21
6	Trace Contaminant Removal Low Molecular Weight Substances	22
7	Trace Contaminant Removal High Molecular Weight Substances	23
8	Trace Contaminant Removal Particulate Substances	24
9	Heat Loads	26
10	Distribution of Heat Loads Between Heat Exchangers	28
11	Reliability of Emergency Oxygen Supply Original Design	34
12	Reliability of Emergency Oxygen Supply Modified Design	37
13	Summary of the More Promising Atmosphere Composition Sensors	40
14	Cryogenic Coolant Unit Evaluation	43
15	Cooling Effect of Superheater Section (Air Inlet Temperature to Boiler = 200°F)	44
16	Water Boiler Analysis (Air Inlet Temperature = 200°F; Air Outlet Temperature = 65°F)	44
17	Water Boiler Analysis (Air Inlet Temperature = 155°F; Air Outlet Temperature = 60°F)	44
18	Heat Transport Fluid Comparison	46
19	Component Weights of 0.1 hp (0.0746 KW) Vapor Compression Still	59
20	Component Weights of 0.05 hp (0.037 KW) Hot Air Centrifugal Still	59
21	Weight of Items for Personal Hygiene	64
22	Summary of Weight, Volume, and Power Requirements (Mission Module)	67
23	Environmental Control Power Requirements	70

1 INTRODUCTION

1.1 STUDY AREAS. Environmental control and life support studies were organized into three study areas: 1) atmospheric control studies, dealing with requirements for and means to accomplish cabin pressurization and internal atmospheric composition control; 2) thermal control studies, including determination of heat loads, the thermostructural design, the heat transfer devices, and the fluid loops involved in maintaining acceptable temperature environments for crew and equipment; and 3) food, water, and waste management.

1.2 SYSTEM SELECTION SUMMARY. As a consequence of the relatively short mission duration, the selected food, water, waste, and oxygen systems are of the "open" type; that is, nutrients are not reclaimed from wastes. Liquid wastes are used for radiation shielding but not for reclamation of potable water. Carbon dioxide is separated from the cabin atmosphere by an expendable absorbent and there is no reclamation of oxygen from carbon dioxide. Otherwise, the atmospheric system is closed, in that dehumidifying and purifying components permit recirculating the air. The thermal control system is essentially closed, with expendable coolants used only during boost and re-entry.

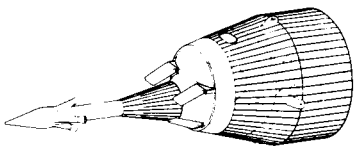

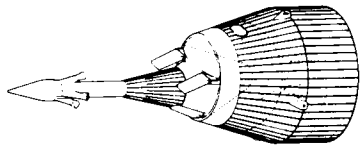

2 ATMOSPHERIC CONTROL

2.1 CONCEPT OF THREE INDEPENDENT SYSTEMS. An analysis of the vehicle modular arrangement and the operating modes of the modules led to the concept of providing three systems for atmospheric control, with each system capable of independent operation. If a single system were to be used, it would of necessity be located in the command module and also be capable of providing a habitable atmosphere in the mission module. This is objectionable for reasons of low reliability and the excessive weight and space requirements imposed on the command module. These objections can be overcome, however, by providing a primary atmospheric control system in the mission module, plus a secondary system for short duration operation in the command module. This would be acceptable except for the re-entry period, when there would still be no back-up capability in the command module and hence reliability would be low. There must be a third system, and the combination of second and third systems must provide acceptable reliability for the re-entry period and all other periods of flight. The three systems, described subsequently, have the following salient characteristics:

a. Each is capable of independent operation.

b. Each is further capable of emergency modes of operation, including use with pressure suits.

c. They are interconnected so that each greatly complements the capability and reliability of the others.

d. The two systems in the command module are alike and share certain static components of very high reliability.

2.2 PERFORMANCE REQUIREMENTS. A performance specification for the atmospheric control system was derived from the metabolic requirements as defined earlier in Volume III, Book 7. The design values thus established reflect a performance capability somewhat greater than the actual metabolic requirements, so that the system can accommodate excursions in loads and has reserve capability for possible off-design performance of the system. Further, the system performance meets the concept of "shirtsleeve" conditions for the crew. In brief, the nominal design values are:

a.	Cabin pressure	14.7 psia
b.	Air temperature	68°F
c.	Minimum ventilation rates:	(exceeded for other reasons)
	In command module	5 CFM per man
	In mission module	10 CFM per man
	In pressure suits	10 CFM per man
d.	Metabolic heat loads, per man:	
	At rest:	Sensible 210 BTU/hr
		Latent 180 BTU/hr
	Routine duties:	Sensible 220 BTU/hr
		Latent 330 BTU/hr
	In closed pressure suit:	Sensible 230 BTU/hr
		Latent 570 BTU/hr
e.	Oxygen requirement:	2.0 lb/man-day
	Supply partial pressure	160 mm Hg
f.	Carbon dioxide to be removed	2.4 lb/man-day
	Partial pressure	4 mm Hg
g.	Flatus to be removed	One liter/man-day

h. Humidity removal load: Based on estimated average activity the latent heat loads and the corresponding humidity removal loads are:

	Latent Heat
1 man	180 BTU/hr
1 man	290 BTU/hr
1 man	330 BTU/hr
Total for 3 men	800 BTU/hr, 0.762 lb/hr moisture

i. Maximum cabin air relative humidity: 60%

2.2.1 System Capacities. The design quantities of stored supplies for atmospheric control are consistent with the specification in the preceding paragraph. Operating duration is 14 days for the systems in the mission module. A reserve is provided by storing a two-day supply in the command module. Atmospheric control stores are not necessary for the three-day post-landing period because provision is made to ventilate the command module with outside air; however, if there are no malfunctions, the two-day supply in the command module will still be available after landing.

2.3 LEAKAGE AS A DESIGN PARAMETER. In order to program the supply of atmospheric gases for the crew compartments it is necessary to estimate leakage of these gases through the structure and via through-hull fittings. In contrast with the fairly well established metabolic rates, there is no means apparent at this time to predict gas losses with comparable accuracy.

2.3.1 Leakage Causes and Control. Full cognizance of the leakage problem during design is the first step toward control. Possible leaks induced by stresses during boost should be considered, and leaks due to manufacturing imperfections can be minimized by superior quality-control techniques. The possibility of fire, puncture, or other hull damage due to serious equipment failures is to be considered in reliability studies. The probability of puncture by meteoroids discussed elsewhere is a design consideration. A particularly significant leakage-control measure is a program of extensive testing to detect, measure, locate and correct leaks prior to flight. Finally, the crew may be provided with means to detect, locate, and repair leaks while in flight.

2.3.2 Leakage Estimates. The only comparable space vehicle structure for which leak-rate experience is available is the Mercury capsule. The reported average leak rates (in excess of 1000 cc/min at STP) are obviously not acceptable for Apollo. This indicates the necessity for full application of the leakage-control measures described in the preceding paragraph. It is believed that these measures will then result in an acceptably low leak rate. For the purposes of this study it has been assumed that the oxygen leak-rate overboard equals 10% of the stored oxygen, and that nitrogen is also lost in proportion to the atmospheric composition. If a substantial part of the leakage is by the diffusion mode, the different gases of the cabin atmosphere will exhibit preferential leak rates in accordance with Graham's Law. The significance of this effect can be determined by testing.

2.3.3 Reserves of Atmospheric Gases. Although the design goal for leak rate is low relative to Project Mercury experience, the design quantities of atmospheric gases provide reserves through a number of redundancies mentioned in preceding paragraphs. These redundancies are summarized here to focus them in relation to the unknown leakage parameter:

a. The design operating duration is 14 days versus a lunar mission time of about six days (133% redundancy).

b. The design liquid-oxygen consumption rate is 2.0 lb/man-day versus estimated average consumption of 1.87 lb/man-day (7% redundancy).

c. Stored reserve for leakage: 10%.

d. A two-day supply, plus 10% excess for leakage, is stored in the command module. Relative to a 14-day mission, this is a redundancy of 16%; relative to a six-day mission it is 37% excess.

e. The supply of stored gases in the mission module includes the capability for one complete repressurization of both modules from zero to one atmosphere, and the supply in the command module includes the capability for two-thirds repressurization of that module.

f. Propulsion system liquid-oxygen boil-off and residuals in tanks and lines may be made available in the mission module. The estimated boil-off in excess of consumption in the fuel-cell power supply is 100 pounds in three to four days, which is more than four times the metabolic consumption rate. Estimated tank and line residual available is 24 pounds, which is a four-day supply for the crew. Only part of the boil-off could be utilized, and to use the residuals would require

closing tank vent valves and initially consuming gaseous oxygen at a rate consistent with vaporization of the liquid residual. Further consumption of liquid oxygen would then be possible until tank pressure dropped to cabin pressure.

2.3.4 Cabin Pressure. In addition to repairing leaks and using reserve stores of atmospheric gases, the crew has the option of reducing cabin pressure to reduce the leak rate. Since the lower pressure limit is about one-third of an atmosphere, the leak rate could also be reduced to one-third of the initial value at one atmosphere. This would necessitate enrichment to nearly pure oxygen content, which could be done by an automatic liquid-oxygen partial-pressure controller.

2.4 SYSTEM TYPES CONSIDERED. The types of atmospheric control systems may be categorized as open, closed, and partially closed. In a fully open system, a simple ventilation mode performs the functions of supplying oxygen, removing metabolic heat, and flushing out impurities and excess moisture by venting the hot, moisture-laden, impure air overboard. The air required is about 10 CFM per man. For the Apollo 3-man crew on a 14-day mission, this would be about 45,000 pounds of air and is obviously unacceptable.

A fully closed system is one which not only purifies the air in a closed circuit, but also reclaims oxygen from carbon dioxide. Such systems have also been named "regenerative" and include photosynthetic methods, the reduction of carbon dioxide with hydrogen together with electrolysis of the water formed, and absorption of carbon dioxide with alkali metal hydroxides together with electrolysis of the hydroxide. Studies have shown that hydrogen reduction has the lowest weight and power penalties of the methods mentioned. For a 3-man vehicle, the estimated hardware weight for oxygen regeneration only is 225 pounds, and the power requirement is 1080 watts. The Apollo vehicle equivalent weight penalties for power and heat rejection are 72 pounds and 81 pounds, respectively. Thus, the total equivalent weight for the oxygen regeneration only is 378 pounds. This weight is independent of mission duration, so that for 14 days or less this system is not competitive with partially closed systems. Also, the regenerative systems are still in early stages of research and it is not assured that development could match the Apollo schedule.

By leaving the gaseous-oxygen loop open, a partially closed system is established, as discussed in subsequent sections.

2.5 SYSTEM DESCRIPTION AND SUBSYSTEM SYNTHESIS

2.5.1 Introduction. The environmental control system may be divided into a number of sections:

a. Supply of oxygen and nitrogen for the command module. The oxygen is required for breathing purposes; the nitrogen is used as a diluent to reduce fire hazard and to maintain more nearly sea-level conditions.

b. An oxygen and nitrogen supply for the mission module.

c. Air circulation, temperature control, humidity control, carbon dioxide control and contaminant control for the atmosphere of the command module. An idea of the complexity of this problem may be obtained from Table 9, Section 2.12, which indicates the sensible and latent heat loads and their sources in each module.

d. A similar system is required to cover air circulation and quality in the mission module. This system, when in space flight, will also handle the command module.

e. A fluid loop is required to transfer heat from the air in the modules and from selected packages of equipment in the modules to the ultimate heat sinks. For the command module, the heat sink on the ground before launch is liquid Freon-114. During launch and re-entry, the heat sink function is performed by water evaporating to the low pressure of space. During space flight, the command module liquid loop is cooled by interconnection with the mission module loop.

f. The mission module liquid heat-transfer loop is cooled on the ground by interconnection with the command module. During launch, it is also cooled by interconnection with the command module. While in space flight, the mission module loop is cooled by means of radiation through a built-in radiator which is exposed to outer space.

g. Portions of the main oxygen-supply system and several auxiliary pieces of equipment act to control pressure in each module.

h. Emergency operation phases are handled by means of special adjustments of regulators and/or by means of separate manifolds to which the pressure suits may be connected.

2.5.2 System Synthesis. The various functions to be performed, which have just been described, will be accomplished by specific means. For

each case, substantial study has been given to the characteristics of subsystems available, or likely to be available during the course of this project; a brief outline of these studies is shown in subsequent sections of this report.

The oxygen supply for the command module will be from high-pressure bottles containing a mixture of 77% oxygen and 23% nitrogen at a pressure of 7500 psi. This system was chosen over competing systems because of 1) its relatively complete independence of any other features concerning operation of the vehicle, and 2) the lack of boil-off losses during the relatively long period between launch and the vital need for this gas on reentry. Methods of storing nitrogen and the advisibility of using mixed gases are discussed later.

The oxygen and nitrogen supply for the mission module will be in the form of separate cryogenic fluid bottles, one holding oxygen and the other nitrogen. The two gases are stored separately in this module since, for the quantities involved, this method results in more positive and more flexible control of atmosphere composition with minimum weight and complexity. The oxygen and nitrogen will be stored at supercritical pressure, since this provides more satisfactory delivery of these gases under zero-gravity conditions than the use of a cryogenic liquid. The supercritical cryogenic storage is more favorable weightwise than high-pressure storage for the relatively large quantities of gas required by the mission module. Boil-off losses have been reduced to zero by using sufficiently high-quality insulation so that the use rate is always equal to or greater than the boil-off rate.

The air circulation in each module will be by means of electrical motor-driven compressors. These have been developed to a high degree of reliability and efficiency and are provided in duplicate in each case. Temperature control of the atmosphere will be by means of heat exchangers operating from the cooled-liquid loop. Humidity control is maintained by operating the heat exchangers at surface temperatures just below the desired dew point of the exit air and collecting the resultant moisture in a gravity-insensitive water separator. Carbon dioxide control is provided by means of lithium hydroxide absorbers which now show the greatest state of development and the highest degree of reliability. Contaminant control involves control of particulate contaminants and aerosols by the filtering action inherent in the lithium hydroxide absorber, in the heat exchanger, and in the water separator. Control of high molecular weight contaminants is provided by adsorption on activated charcoal. If control of low-molecular-weight contaminants eventually proves to be a requirement, catalytic combustion may be utilized to oxidize these substances so that they may be removed by the other contaminant-removal systems.

The control of air circulation, temperature, humidity, carbon dioxide, and contaminants in the mission module is essentially identical with that in the command module.

The heat-transfer loop utilizes a solution of 60% glycol and 40% water, which was chosen for its good heat transfer characteristics and its low freezing point. This substance is most easily cooled on the ground by use of liquid Freon-114, which evaporates at a temperature of approximately 40°F at sea level. When the vehicle is above the lower atmosphere, the outside pressure is low enough that evaporating water will provide ample cooling. A temperature control is provided to avoid freezing in this circuit. The choice of water as the heat sink was made on the basis of its high-heat-of-vaporization and on the availability of an on-board supply. During space flight operation, the glycol is cooled by radiant interchange with outer space in a radiator built into the mission module. This method has been shown to be the lightest cooling method for all except very short missions.

In order to keep men comfortable and operating at top efficiency, it is essential that the characteristics of their surrounding atmosphere, including temperature and pressure, be controlled within known limits. It is also necessary to provide cooling for practically all of the power-consuming equipment. As a matter of design choice, some items of the equipment are cooled by air and others are cooled by inclusion of appropriate heat exchangers in the glycol loop.

Separate components act to provide pressure control and to provide alternate flow paths for the atmosphere during certain phases of the flight. In addition, these components are designed to handle those emergencies which as presently viewed could have a major effect on the system, such as depressurization caused by puncture of the capsule or depressurization performed to eliminate fire or other contamination. The various factors influencing the detail choice of pressure-control elements and of the specific mixture of oxygen and nitrogen used in the high pressure bottles are discussed later in this book.

2.5.3 Modes of Operation of the Environmental Control System. There are several modes of operation for the Apollo vehicle, as described below. A schematic diagram of the complete system is shown in Figure 1; the numbers in parentheses in the following discussion refer to items in Figure 1.

Sequentially, the modes of operation would be as follows: During launch the three men would have their suits connected to the supply-and-return

~~CONFIDENTIAL~~

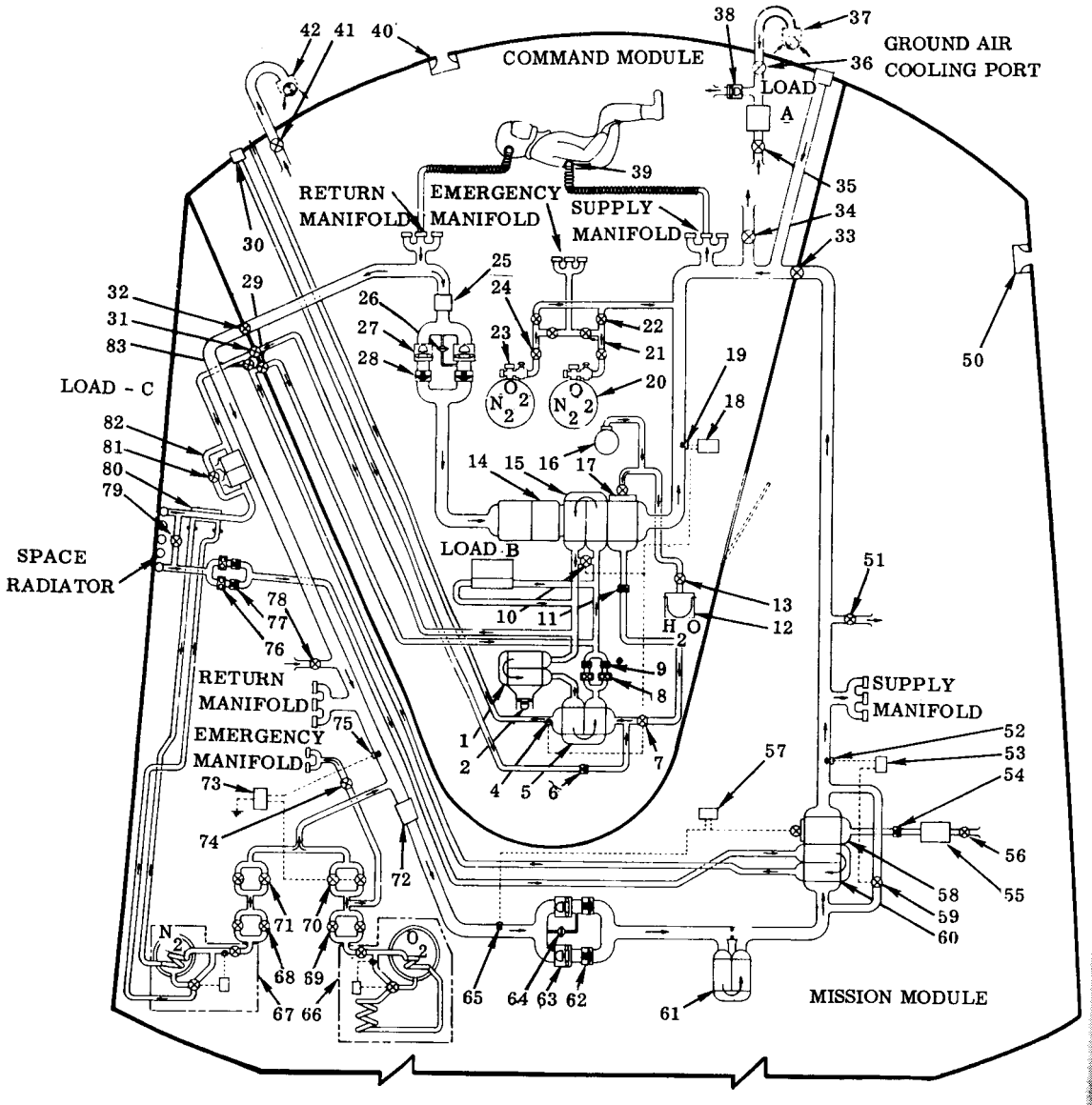

~~CONFIDENTIAL~~

COMMAND MODULE

ITEM	NUMBER REQUIRED		WEIGHT EACH	WEIGHT TOTAL
1	1	RE-ENTRY HEAT EXCHANGER	3.5	3.5
2	1	FAN, RE-ENTRY	3.0	3.0
4	1	STEAM TEMPERATURE SENSOR	.10	.10
5	1	WATER EVAPORATOR	8.90	8.90
6	1	FREON CHECK VALVE	.40	.40
7	1	WATER FLOW CONTROL VALVE	.75	.75
8	2	GLYCOL PUMP	1.70	3.40
9	2	GLYCOL CHECK VALVE	.20	.40
10	1	GLYCOL BYPASS VALVE	1.0	1.0
11	1	WATER CHECK VALVE	.40	.40
12	1	WATER TANK	3.0	3.0
13	1	WATER PRESSURE REGULATOR	1.4	1.4
14	1	CARBON DIOXIDE AND ODOR ABSORBER	28.7	28.7
15	1	SUIT HEAT EXCHANGER	14.7	14.7
16	1	ACTUATOR AIR PRESSURE TANK	4.5	4.5
17	1	WATER SEPARATOR	5.0	5.0
18	1	TEMPERATURE CONTROL	1.50	1.50
19	1	TEMPERATURE SENSOR	.10	.10
20	2	$O_2 + N_2$ STORAGE BOTTLE	22.50	45.0
21	2	EMERGENCY SUIT FLOW REGULATOR	1.25	2.50
22	2	SUIT AND CABIN DEMAND FLOW REGULATOR	1.25	2.50
23	2	BOTTLE SQUIB VALVE ASSEMBLY	1.6	3.2
24	2	HIGH PRESSURE REGULATOR	.8	1.6
25	1	DEBRIS TRAP	1.0	1.0
26	1	PRESSURE SWITCH	.40	.40
27	2	SUIT AND CABIN COMPRESSOR	5.0	10.0
28	2	CHECK VALVE	.50	1.0
29	1	GLYCOL BYPASS VALVE	1.9	1.9
30	1	FREON QUICK DISCONNECT	.4	.4
31	1	GLYCOL QUICK DISCONNECT SHUTOFF VALVE	1.9	1.9
32	1	QUICK DISCONNECT VALVE	1.25	1.25
33	1	QUICK DISCONNECT VALVE	1.25	1.25
34	1	MODULE SUPPLY VALVE	1.2	1.2
35	1	ELECTRONICS AIR SHUTOFF VALVE	1.1	1.1

Figure 1. Schematic Diagram o

36	1	GROUND VENT INLET VALVE	1.25	1.25
37	1	GROUND VENT INLET SNORKEL	1.3	1.3
38	1	ELECTRONICS AND GROUND VENT FAN	2.8	2.8
39	1	SUIT RELIEF VALVE	1.2	1.2
40	1	PRESSURE RELIEF VALVE	3.0	3.0
41	1	GROUND VENT OUTFLOW VALVE	1.25	1.25
42	1	GROUND VENT OUTFLOW SNORKEL	1.3	1.3
		TOTAL		169.05

MISSION MODULE

ITEM	NUMBER REQUIRED		WEIGHT EACH	WEIGHT TOTAL
50	1	PRESSURE RELIEF VALVE	3.0	3.0
51	1	AIR DISTRIBUTION VALVE	1.2	1.2
52	1	TEMPERATURE SENSOR	.10	.10
53	1	TEMPERATURE CONTROLLER	1.50	1.50
54	1	WATER CHECK VALVE	.40	.40
55	1	WATER SUMP	3.0	3.0
56	1	WATER DRAIN VALVE	.50	.50
57	1	HUMIDITY CONTROL	1.50	1.50
58	1	WATER SEPARATOR	5.00	5.00
59	1	BYPASS CONTROL	2.2	2.2
60	1	HEAT EXCHANGER	16.3	16.3
61	1	CARBON DIOXIDE AND ODOR ABSORBER	126.0	126.0
62	2	CHECK VALVE	.50	1.00
63	2	CABIN AIR COMPRESSOR	5.75	11.50
64	1	PRESSURE SWITCH	.40	.40
65	1	HUMIDITY SENSOR	.20	.20
66	1	OXYGEN STORAGE TANK ASSEMBLY	68.0	68.0
67	1	NITROGEN STORAGE TANK ASSEMBLY	69.0	69.0
68	2	NITROGEN HIGH PRESSURE REDUCER	.80	1.6
69	2	OXYGEN HIGH PRESSURE REDUCER	.80	1.6
70	2	OXYGEN FLOW REGULATOR	1.25	2.50

of Environmental Control System

71	2	NITROGEN FLOW REGULATOR	1.25	2.50
72	1	DEBRIS TRAP	1.6	1.6
73	1	O_2 PARTIAL PRESSURE CONTROL	1.8	1.8
74	1	EMERGENCY SUIT FLOW REGULATOR	1.25	1.25
75	1	O_2 PARTIAL PRESSURE SENSOR	.55	.55
76	2	GLYCOL PUMP	1.70	3.40
77	2	GLYCOL CHECK VALVE	.20	.40
78	1	RETURN AIR VALVE	1.2	1.2
79	1	RADIATOR BYPASS VALVE	2.2	2.2
80	1	GLYCOL TO NITROGEN HEAT EXCHANGER	2.50	2.50
81	1	GLYCOL BYPASS VALVE	1.8	1.8
82	1	HYDROGEN TO GLYCOL HEAT EXCHANGER	10.0	10.0
83	1	GLYCOL BYPASS VALVE	.9	.9
		TOTAL		346.60

manifolds and would be provided environmental control by the command module system. At the same time the liquid loop must be operating, not only to operate the command module system but also to pick up heat from aerodynamic heating and from fuel cells in the mission module. On reaching space flight and establishing satisfactory conditions, the hatch between the command module and mission module would be opened, and two of the men would leave the command module and go to the mission module. The third man remaining in the command module would take 0.71 lb/min of air from the supply manifold and discharge it from the open face plate of his suit. Under normal conditions, the balance of 4.29 lb/min of air would flow from valve (34) to cool equipment within the command module. From the command module, the total air flow would pass through the connecting hatch into the mission module. The air returns to the environmental control system through valve (78).

In case of a minor emergency in the mission module, the suits would be connected to the supply-and-return manifolds and valves (34), (51), and (78) would be closed. The men would then breathe from the mission module circuit. In case of a more serious emergency, they would connect to the emergency manifold and receive a substantial flow of oxygen directly from the cryogenic oxygen tank. For an ultimate emergency they would enter the command module and, if it were still completely integral, they would be able to connect between the supply-and-return manifolds with valves (32) and (33) closed. However, if there were some defect in the air conditioning system or power supply in the command module, they would then connect to the emergency manifold and receive full ventilating flow directly from the high pressure gas bottles (20). For re-entry the three men would be in the command module, connected to the supply-and-return manifolds, and their load would be taken by the air conditioning equipment. The balance of the cooling load would be handled by the liquid loop. After the command module lands, the air supply would come from the snorkel (37) and fan (38) with air exiting from snorkel (42).

2.5.4 Description of the Command Module System. The bottles (20) contain compressed oxygen and nitrogen at high pressure. The air flows first through the squib-operated shutoff valve (23) to the high-pressure regulator (24). In the high pressure regulator (24), the pressure is reduced to 100 psi. The mixed gases then flow through the demand pressure regulator (22). These regulators supply the mixed oxygen and nitrogen through the main manifold as required to maintain appropriate pressure in the command module. The emergency oxygen supply is obtained by flow through regulator (21) to the emergency manifold. Regulator (21) supplies a fixed-quantity rate flow of gas per minute, as distinguished from the demand operation of regulator (22). For launch and re-entry in the command module, the lines by which the gas passes to the suits will be connected to the supply manifold, and the lines by which the gas passes from the suits to the circulating system will be connected to the return manifold. At this time, valves (32), (33), and (34) are closed.

Air from the suits entering the return manifold passes first through the debris trap (25) which catches any hair, lint, or other large particles before they can damage the system. From the debris trap, the gas passes through compressor (27) and then through check valve (28). Only one of the compressors (27) operates at any one time, the choice between these being made by pressure-actuated switch (26) which is set to operate only one compressor unless a failure occurs, in which case the second compressor will automatically be turned on. From the compressor, the gas passes through the odor and carbon dioxide absorber (14). In the carbon dioxide absorber, lithium hydroxide removes the carbon dioxide and activated charcoal removes many of the odors. From this point, the gas passes through the suit heat exchanger (15) which is cooled by glycol from the heat exchange loop described later. The heat exchanger is operated at a surface temperature of about 35°F so that moisture will condense on the tubes of the heat exchanger. Moisture blows off the tubes due to air flow and is absorbed in the sponge of the water separator (17). The gas passes through the sponge, but the water is absorbed. From the water separator (17), the gas passes back through the supply manifold and to the suits, thus completing a closed circuit. Note that the valve (22) maintains the correct pressure in this circuit since it acts as a demand valve.

Fan (2) circulates command-module air through air-to-glycol heat exchanger (1) to transfer the command-module heat load to the liquid loop. During launch, space flight, and re-entry, the batteries and command console (LOAD-A) receive air flow from the command module for cooling by means of fan (38), with valve (35) open and valve (36) closed. After the module has landed in water on re-entry, air may flow through inlet snorkel (37), except when the snorkel is underwater, through valve (36) and through ground vent fan (38). When the module is in the water and air is entering through snorkel (37), it exits through valve (41) and snorkel (42).

Temperature regulation of the air in the command module circuit is obtained from signals originating at temperature sensors (4) and (19) which are fed to control (18). Control (18) operates valve (7) in the water line leading to water-evaporator heat exchanger (5). Valve (7) allows water from tank (12), containing a bladder pressurized via valve (13) from compressed gas tank (16), to be fed to water-evaporator heat exchanger (5) for evaporation. The water side of heat exchanger (5) is connected to space at essentially zero pressure and therefore evaporation of water is controlled

to take place at a temperature of 35°F, with the resulting steam being superheated in the second pass to avoid freezing in the outlet line to space.

The purpose of heat exchanger (5) is to cool glycol in the glycol heat-exchange loop. When the command module is operating alone, the glycol from heat exchanger (5) passes through one of the pumps (8) and one of the corresponding check valves (9). The glycol then passes through heat exchanger (15) used to cool the air in the command module circuit. Heat exchanger (15) may be bypassed partially or totally by valve (10) when required by signal from control (18). Another liquid loop passes through the electronic-equipment heat exchanger (LOAD-B). During launch the bypass valve (83) will be closed and the two connecting valves (29 and 31) will be open to provide a liquid loop in the mission module for necessary cooling of launch loads described later. During re-entry, connecting valves (29) and (31) will be closed, and re-entry heat exchanger (96) takes the excess aerodynamic heat loads from the command module atmosphere.

For ground cooling, liquid Freon-114 is used in heat exchanger (5) instead of water. The freon enters the outside line through quick-disconnect (30) and passes through check valve (6) to the heat exchanger, where it evaporates at sea-level pressure and at a sufficiently low temperature to operate the system successfully. The sponge in the water separator (17) is periodically squeezed by means of compressed gas from bottle (16) and the resulting water passes through check valve (11) and is added to the quantity of cooling water in tank (12).

Pressure in the command module is under the control of regulator (22), regulator (39), and relief valve (40). Regulator (22) operates to maintain an absolute pressure of 14.7 psia in the supply manifold, for the low flow rates within the capacity of this regulator. Regulator (39), as one of its functions, maintains a differential pressure of 2 inches of water between the pressure suit and the command module. If the pressure differential exceeds 2 inches of water, air flows from the suit to the module to maintain its pressurization. Relief valve (40) is set to relieve pressure in the command module if it is higher than 14.8 psia. It also acts as a negative pressure relief, permitting inflow if the internal pressure becomes less than outside pressure. In case of excessive leakage or emergency operation, regulator (39) changes from its low differential mode of operation to one in which it regulates to maintain suit pressure at 5 psi above the module pressure. The subsystem package is shown in Figure 2.

2.5.5 Description of the Mission Module System. The mission module receives its gas supply from two supercritical cryogenic storage tanks, tank (66) containing oxygen and tank (67) containing nitrogen. Oxygen

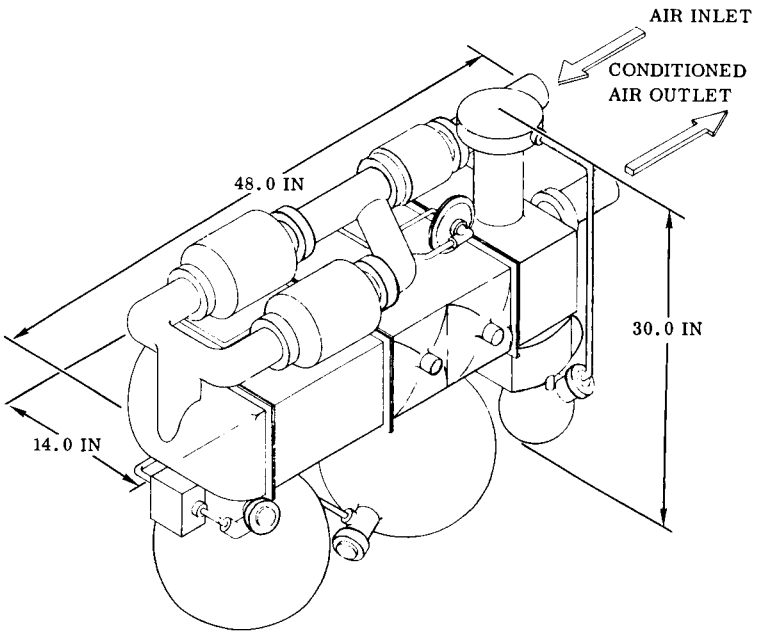

Figure 2. Major Components of Command Module Environmental Control System

flows from cryogenic tank (66) through high-pressure regulating valve (69) which reduces the pressure to 100 psi. It then flows through regulator (70) which reduces the pressure to the desired pressure in the module. This regulator is connected to a control circuit so that it will be sensitive to the partial pressure of the oxygen in the module rather than the total pressure. When emergency oxygen is required, emergency pressure regulator (74) will be used to supply oxygen to the emergency manifold. Nitrogen from cryogenic tank (67) passes first through the high-pressure regulator (68) where its pressure is reduced to 100 psi and then to low pressure regulator (71), which is normally set to control to a total pressure of 14.7 psia, although it may be set to control to lower pressures.

Each of the cryogenic tanks contains oxygen or nitrogen at supercritical pressure and temperature. This is obtained by charging the tank with liquid oxygen or nitrogen, as the case may be, and allowing the liquid flowing through the warmup coil to build up pressure in the tank until a supercritical pressure is reached. It is expected that the warmup coil for the oxygen tank can merely absorb heat from the atmosphere around the tank. However, in case of emergency repressurization, the nitrogen tank will probably require more heat and therefore the nitrogen warmup loop includes a heat exchanger (80) connected in the glycol circuit in such a way as to provide a larger quantity of heat than would otherwise be available on short notice. The partial-pressure sensor (75) located in the return duct of the mission module system operates control (73) and regulator (70) to maintain the desired partial pressure of oxygen in the mission module circuit. This will normally be set for 160 millimeters of mercury.

Under normal operation, air from the mission-module control system will enter the module through valve (51) and will return to the system through valve (78). If it is necessary to operate using pressure suits in the mission module, the suit inlet and outlet lines will be connected to the supply and return manifolds, respectively, and valves (51) and (78) will be closed. Under normal operation, when one man is in the command module, valve (33) will be open and he will be connected to the supply manifold to obtain flow into his suit. The flow from his suit will come out the face plate under normal conditions, but the suit exit line would probably be connected to the return manifold.

Air which enters the mission module system passes first through debris trap (72) and then through the system of compressors, check valves, and controls (63 and 64), whose operation is identical with those of the command module. From the check valves the gas passes to an orifice which divides the flow so that part of it will go through carbon-dioxide absorber (61). In the carbon-dioxide absorber the action will be similar to that of the odor and carbon-dioxide absorber (14) of the command module. From the absorber the gas passes to heat exchanger (60) in which its temperature is reduced and in which water is condensed on the tubes of the heat exchanger, which operates similarly to heat exchanger (15) of the command module. From the heat exchanger the gas passes through water separator (58) where water is removed by a sponge. From the water separator the air returns to the main duct from which it can flow to the mission module through valve (51), and to the man in the command module through the supply manifold.

The humidity of the air in the mission module circuit is sensed by sensor (65). The signal is transmitted to control (57) and to the electrical actuator of water separator (58). The actuator operates to compress the sponge when necessary. When the sponge compresses it forces the water through check valve (54) into tank (55). From this tank it may, if desired, be removed by use of valve (56). Sensor (52) senses the temperature in the mission module circuit and transmits a signal to temperature control (53). This control actuates valve (59) which controls the bypass around the heat exchanger (60).

The glycol heat loop in the mission module receives its basic cooling from the space radiator which forms part of the module structure. The cooled glycol from the space radiator flows through pump (76) and check valve (77) to heat exchanger (60) where it serves to cool the air in the mission-module circuit. From heat exchanger (60) the glycol flows through valve (29) to the command-module circuit. In the command-module circuit it normally would flow to heat exchanger (LOAD-B) which cools the electronic equipment in the command module. From heat exchanger (LOAD-B) the glycol flows back through valve (31) to heat exchanger (82). Heat exchanger (82) controls the temperature of the fuel cells (LOAD-C) located in the mission module. The flow through the heat exchanger may be bypassed by valve (81). From heat exchanger (82) the glycol flows to heat exchanger (80) which is used to provide extra heat for vaporizing the cryogenic nitrogen in case repressurization is necessary. From heat exchanger (80) the glycol flows back to the space radiator. Where space radiation in cooling is not needed or desired, such as in case of repressurization, bypass valve (79) would be open. Under some circumstances there will not be sufficient cooling in the glycol loop by the space radiator and it will be necessary to provide additional cooling by vaporizing water in heat exchanger (5). To do this, valve (7) will be opened and pump (8) started for circulation through heat exchanger (5). During re-entry of the command module the valves (30) and (31) will be closed. In this case glycol would flow through re-entry heat exchanger (1) and air in the module would be blown over the heat exchanger by fan (2). This would be utilized to absorb the aerodynamic heating which takes place on re-entry, and maximum evaporation of water would be taking place in heat exchanger (5). The subsystem package is shown in Figure 3.

2.6 OXYGEN SUPPLY. In storing the oxygen supply which must be carried on board it is first necessary to determine the oxygen requirements, since the weight and space considerations are determined by the actual sizes of the vessels or containers used for the oxygen. In investigating these requirements it should be recognized that it is impossible to separate the oxygen-storage program from the nitrogen-storage program.

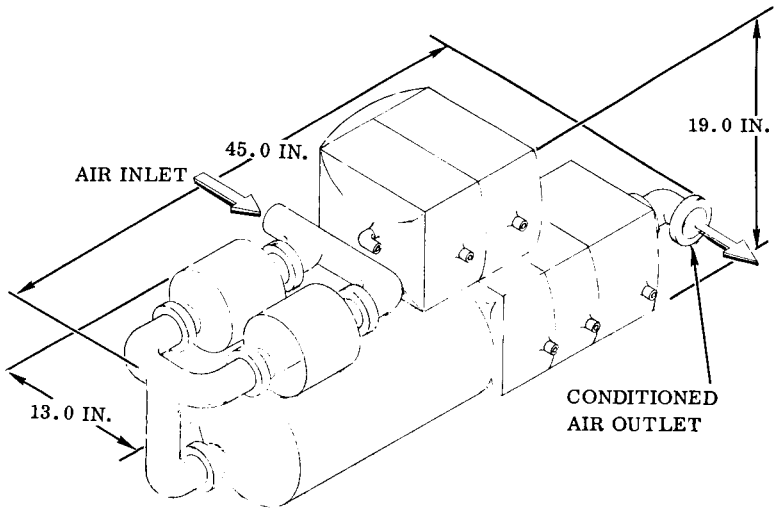

Figure 3. Major Components of Mission Module Environmental Control System

Since it is desired to provide for metabolic requirements, for leakage, and for repressurization we must first consider the effect of each of these items. The metabolic requirement for oxygen has been taken as 2 lb/man/day. The leakage is assumed to be such that 10% of the oxygen will leak out during the mission. Along with the oxygen leakage there will, of course, be leakage of nitrogen in the proportion in which it occurs in the capsule atmosphere. Repressurization can be accounted for by computing the weight of oxygen and nitrogen in the particular volume involved and then allowing for this necessary additional material in the storage tanks. It is assumed that one repressurization of the mission module, with the command module volume incorporated, may be required during the flight. It is further assumed that a separate repressurization of the command module alone (to 10 psia) may be required once during the flight. The assumptions are further based on 14 days of operation for the mission module and 48 hours for the command module. The computation of these quantities is shown in Table 1.

The various available storage methods which appear to lie within the practical range are shown in Table 2. It has seemed desirable to investigate the storage of oxygen by means of:

a. High pressure titanium spheres operating at 7500 psi. Containers of this type constructed of 43xx steel are currently being manufactured for use in Project Mercury and have achieved good reliability. High-pressure storage has the advantages of operating successfully under zero-gravity conditions, of operation with mixed gases without changing the percentage of composition during withdrawal, of the lack of boil-off problems encountered with low-temperature storage methods, and of a very high degree of reliability.

b. Cryogenic liquid oxygen. In this case, substantial insulation is required to avoid excessive losses. A means of positive expulsion of the liquid into a liquid-to-gas converter is required. Normally this is done by helium pressure and a bladder. The liquid is held to a low pressure, less than 100 psig, resulting in minimum tank weight. The principal disadvantage lies in the relative complexity of the expulsion means and the lack of a reliable bladder material for prolonged low-temperature use.

c. Supercritical fluid. In this case a cryogenic tank similar to that used for liquid oxygen is provided but the operating pressure should be 800 to 1000 psi. Oxygen is charged into the tank as a liquid. At this point the addition of heat along a constant density line raises the pressure to 800 psi. Withdrawal of oxygen at 800 psi continues until the point is reached at which the process is continued at constant temperature and with the reduction of pressure. Use of this technique has several advantages. It permits the storage of the oxygen in a minimum volume since the supercritical tank is the same size as one which would be used for liquid oxygen. The tank is of reasonable pressure strength and the fluid is stored and maintained entirely as a single-phase homogeneous gas which means that there are no zero-gravity operating problems. In addition, the same principle can be applied if it is desirable to store two gases in a mixture. The supercritical cryogenic technique has been fully developed and is recommended for use in the mission model.

d. Chlorate candle. These candles are made of sodium chlorate and iron, with suitable catalysts. When ignited, the reaction operates to produce sodium chloride, ferrous oxide, and oxygen, with about one pound of oxygen available from 2.8 pounds of candle. The reaction is exothermic with about 1000 BTU per pound of oxygen being

Table 1. Computation of Quantities of Oxygen and Nitrogen Required

	OXYGEN (LB)	NITROGEN (LB)
COMMAND MODULE VOLUME 270 CU FT		
Normal Content at 14.7 psia and 75°F = 20.0 lb	(4.7)	(15.3)
Metabolic Requirement, 3 men, 48 hours at 2 lb O_2 per man-day	12.0	
Leakage, at 10%, of Metabolic Oxygen	1.2	4.0
Make-up gas should then have 13.2 lb oxygen and 4 lb nitrogen or 23 percent N_2 and 77 percent O_2		
If repressurization is necessary, 10 psia at 23 percent N_2 and 77 percent O_2 should be used. Weight required = 15 lb	11.5	3.5
Total required for Command Module	(24.7)	(7.5)
MISSION MODULE VOLUME 878 CU FT		
Normal Content at 14.7 psia and 75°F = 65.0 lb	(15.1)	(49.9)
Metabolic Requirement, 3 men, 14 days at 2 lb O_2 per man-day	84.0	
Leakage, at 10 percent, of Metabolic Oxygen	8.4	28.1
Repressurize once, use combined volumes of Mission and Command = 65.0 + 20.0 = 85.0 lb	19.8	65.2
Total required for Mission Module	(112.2)	(93.3)

CHARACTERISTIC	UNITS	METHOD QUANTITY OR REACTION	G. HIGH PRESSURE → 120 LO_2	POTASSIUM SUPEROXIDE $2KO_2 + CO_2 \rightarrow K_2CO_3 + 3/2\ O_2$
Direct Weight Penalty				
Container-Complete	Lb/Lb O_2		1.400	0.200
Unavailable Material	Lb/Lb O_2		0.005	2.210
Stand-By Loss, 336 Hours on 20-Lb Containers	Lb/Lb O_2			
Substance Supplied	Lb/Lb O_2		1.000	1.000
Total Direct Weight	Lb/Lb O_2		2.405	3.410
Indirect Penalties				
Heat of Process	BTU/Lb O_2			940
Endo-Exo Thermic				Exo
Volume-Including Insulation For 336-Hr on 20-Lb Containers	Cu Ft/Lb O_2		0.028	
Zero-Gravity Operation	Relative		Very Good	Very Good
Service Required for Use in Flight	Relative		None	Refill
Reliability	Relative		Very High	Poor
Surge Load Ability After Decompression	Relative		Very Good	None
Quantity Measurement	Relative		Simple	Simple

given off. Although these candles have been well developed they require more space than the gaseous or liquid storage methods, they have poor ability to handle surge loads such as repressurization, and the gas is emitted at high temperature.

e. Hydrogen Peroxide. A 90% solution of hydrogen peroxide may be used with the oxygen being released by use of a catalyst. This method is unreliable and has a very high exothermic heat load of 2820 BTU per pound of oxygen, with the gas emitted at 1100°F. Since this requires a heat exchanger, this method is considered undesirable.

f. Potassium and sodium superoxides. Use of these chemicals provides interesting sources of oxygen, although the weight relative to oxygen produced is not favorable. The reaction required to release the oxygen is initiated by carbon dioxide or by water vapor, both of which are substances which should be removed. The capability of potassium superoxide to remove water is relatively poor and its use for this purpose should be ruled out. It is difficult to moderate for pressure control and would be particularly difficult to handle for a rapid repressurization operation; its advantage lies in its storability and portability, which may lead to its use as an emergency supply during some conditions.

2.6.1 Supercritical Storage. In order to avoid the inherent difficulties connected with the storage of liquid oxygen at cryogenic temperatures and the corresponding difficulties connected with storing the gas at very high pressures, it is proposed that for the mission module, the gas be stored as a supercritical cryogenic fluid. The Mollier chart for oxygen (Figure 4), shows that if saturated liquid oxygen is charged into a suitable container at one atmosphere, the temperature will be approximately 90°R. If this container is closed and heat is added through a heating loop (or otherwise) the fluid will have to operate at constant density as its heat content is increased. The constant-density line leading from the intersection of the 90°R temperature line and the saturated-liquid line passes to the left of the liquid dome and the addition of a moderate amount of heat will increase the pressure from one atmosphere to perhaps 60 atmospheres with some change in temperature but with no change in density. If by use of a pressure regulator the pressure is maintained constant while withdrawing fluid, and the appropriate amount of heat is added to accomplish this withdrawal, the operation will proceed horizontally across the chart with gas being withdrawn as heat is added. To get nearly all of the gas out would require an addition of a large amount of heat; therefore, when some suitable temperature is reached, 300°R for example, control goes to a temperature-sensitive device instead of a pressure-sensitive

1 FILL

1 - 2 INITIAL PRESSURIZATION AT CONSTANT DENSITY

2 - 3 CONSTANT PRESSURE WITHDRAWAL

3 - 4 CONSTANT TEMPERATURE WITHDRAWAL

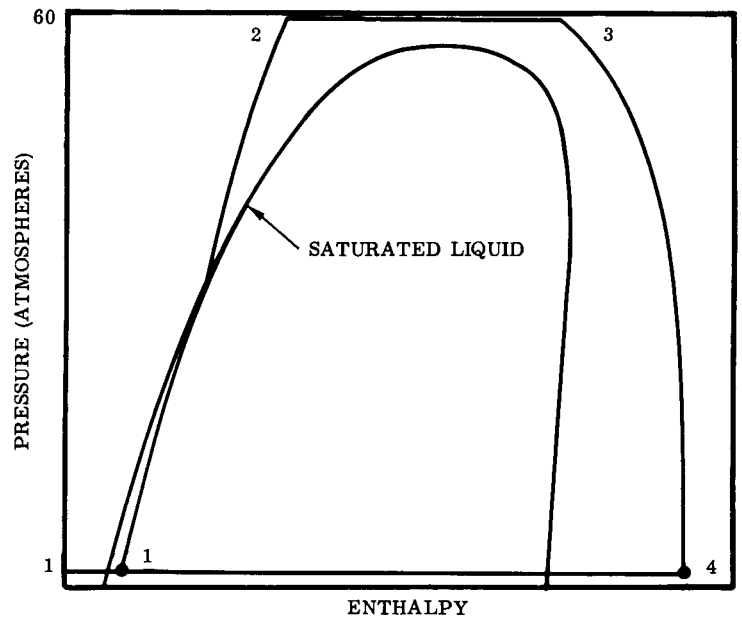

Figure 4. Mollier Chart Supercritical Storage

device, whereupon the fluid properties will follow a constant-temperature line down to the one-atmosphere pressure line. It will be noted that the paths taken by the fluid lie everywhere outside of the liquid dome and therefore the fluid is essentially a homogeneous gaseous substance and it is not important that it may be made up of more than one material so long as the line passes outside the appropriate domes for the constituent materials.

2.7 PRESSURIZATION. Under normal conditions the pressure is maintained at 14.7 psia in the command module and in the mission module. The only routine exception to this will be that, upon initiating re-entry,

the command module pressure will be reduced to 10 psia for structural strength considerations. This, unfortunately, has an objectionable effect on the heat transfer in the command module and will result in relatively hot walls. The two fans (32) should both be turned on during this period of time in order to assist in increasing the cooling in this circuit, since the pressure drop in the heat exchanger will be higher for the less dense air in order to maintain the same mass rate of flow. After the module lands in water the snorkel will open and the air will enter from outside. In case of fire or other serious contaminating emergencies, the method of fighting the fire and removing the contaminant is for the crew to connect to their pressure suits and then discharge the modules to the low pressure of outside space. Under this circumstance both modules would be discharged at the same time. When the emergency has been alleviated, repressurization is accomplished by suitable controls on valves (70) and (71). In order to obtain sufficiently rapid boiling of the nitrogen for repressurization, additional heat is supplied by heat exchanger (80) which connects the nitrogen circuit to the heat sink available in the glycol circuit. Since much of the electronic equipment is cooled by the glycol circuit it would probably continue to operate and warm the glycol even when there is no atmosphere in the module. Suitable adjustments should be made so that repressurizing takes place only to about 10 psia, from which point manual adjustment of the valves will be required to secure the appropriate atmosphere with the proper percentage of oxygen. In some cases it may not be desirable to repressurize to the full pressure; for example, if the capsule is punctured by a meteorite or other object. If the emergency occurs when the hatch is closed and the men are in the command module, repressurization will take place from the high-pressure bottles containing the mixture of oxygen and nitrogen. This requires no extra energy from outside but it is assumed that manual monitoring would be used to ascertain economical repressurization. A comparison of nitrogen-storage methods is shown in Table 3.

2.8 MIXED GASES. The command-module gas supply will be from high-pressure bottles containing a mixture of 23% nitrogen and 77% oxygen. By eliminating a separate nitrogen tank, the controls are simplified and the feedback problems engendered by the use of partial- and total-pressure controls are eliminated. The stored mixture contains just enough nitrogen to replace that which is lost overboard as leakage, using specific design leakage rate. If the leakage is less than the design value, the oxygen partial pressure is reduced. If this occurs, the leakage rate may be increased to the design value either automatically or manually. A much greater probability is that of excessive leakage which results in an increase in the oxygen partial pressure. This increase, although not desirable for long periods of time, is not as serious as the possible increase in the hazard due to fire or gas-supply depletion due to the leakage itself. By reducing the module pressure, the physiological problem of high-oxygen tension and the fire hazard would be eliminated and, at the same time, the module leakage rate would be reduced in proportion to the reduction in the module air density. Such a procedure could reduce the probability of a more serious emergency at a later time. The proportions of the two gases were chosen from the leakage considerations described in the following paragraph.

Leakage has been allowed for by providing an extra 10% in all gas containers. If leakage occurs when the cryogenic supplies of the mission module are being used, the automatic regulating devices will make up this leakage largely from the nitrogen supply in order to maintain the normal proportion of about four parts of nitrogen to one part of oxygen. For the command module the leakage situation is somewhat different. Here a mixture of two gases is used and the make-up is of fixed composition. The leakage is normally assumed to be 0.11 pound per hour and this assumption leads to a nitrogen/oxygen mixture containing approximately 23% nitrogen and 77% oxygen. If the leakage is of the expected amount, the atmosphere in the command module will continue to be the normal desired proportion. If the leakage changes, however, the proportion of oxygen and nitrogen in the module will change. In most cases this will not have a very serious effect but two sets of curves have been drawn to indicate its magnitude. Figure 5 shows the effect of leakage rate on the oxygen partial pressure based on a 270 cubic foot module operating for a full 48 hours. In each case the original or starting situation was assumed to be 14.7 psia and 160 mm of mercury was assumed to be the oxygen partial pressure. The curves show the effect as it would exist at the end of 48 hours. For any shorter time a proportionately smaller change from the 160 mm would take place. It is seen that unless the leakage becomes excessive the pressure will not rise much above 160 mm and if the pressure must be reduced due to the build up from excessive leakage, it could be done by reducing the total pressure. The figure also indicates that during the return trip, as long as the leakage is as high as expected, the partial pressure of oxygen should not drop below 160 mm.

Figure 6 shows the effect of leakage rate on oxygen partial pressure for a variety of module pressures and leakage rates. Starting from an original leakage rate of 0.11 pounds per hour and 160 mm of mercury partial pressure for the oxygen, the 0.11 line indicates the change for 48 hour operation if the module pressure is less than 14.7 psia. The other lines indicate the change for other leakage rates. It may very well be necessary, in case of a relatively high leakage, to reduce the pressure in order to reduce the absolute amount of the leakage. This curve indicates that a

Table 3. Nitrogen Supply

CHARACTERISTIC	METHOD	GASEOUS HIGH PRESSURE		LIQUID CRYOGENIC		SUPERCRITICAL CRYOGENIC	
	QUANTITY	100 LB	20 LB	100 LB	20 LB	100 LB	20 LB
	UNITS						
Direct Weight Penalties							
Container	Lb/Lb N_2	1.700	1.700	0.455	0.640	0.740	0.980
Unavailable Material	Lb/Lb N_2	0.005	0.005	0.005	0.005	0.005	0.005
Stand-By Loss	Lb/Lb N_2	---	---	---	0.200	---	---
Substance Supplied	Lb/Lb N_2	1.000	1.000	1.000	1.000	1.000	1.000
Total Direct Weight	Lb/Lb N_2	2.705	2.705	1.460	1.845	1.745	1.985
Indirect Penalties							
Heat of Process	BTU/Lb N_2	---	---	180	180	180	180
Endo-Exo Thermic				Endo-	Endo-	Endo-	Endo-
Volume - Including Insulation for 336 Hr on 20-Lb Containers	Cu Ft/Lb N_2	0.0385	0.0385	0.0279	0.0338	0.0279	0.0338
Zero-Gravity Operation	Relative	Very Good	Very Good	Fair	Fair	Very Good	Very Good
Service Required for Use in Flight	Relative	None	None	None	None	None	None
Reliability	Relative	Very High	Very High	Fair	Fair	Very High	Very High
Surge Load Ability After Decompression	Relative	Very Good	Very Good	Fair	Fair	Fair	Fair
Quantity Measurement	Relative	Simple	Simple	Complex	Complex	Moderate	Moderate

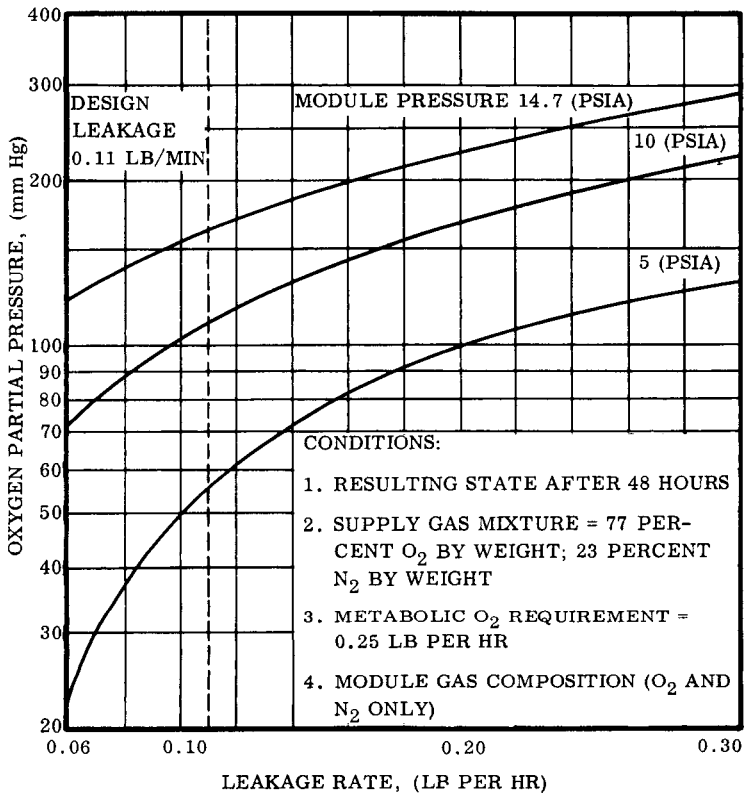

Figure 5. Effect of Command Module Leakage Rate on Oxygen Partial Pressure

wide choice is available. Should the leakage be much lower than expected, the oxygen partial pressure will theoretically become too low. This situation could be corrected by inducing a slight leakage by momentarily opening valve (40). This would serve to maintain sufficient oxygen partial pressure in the command module. The reason that pure oxygen is not used in the bottles in the command module is that it may result in a very high oxygen partial pressure in this module, which would increase the danger of fire. It should be particularly noted that these effects relative to the command module apply only when the atmosphere is being supplied from the tanks containing mixed oxygen and nitrogen. It is contemplated that the use of separate oxygen and nitrogen cryogenic tanks in the mission module will permit continuous maintenance of the desired normal

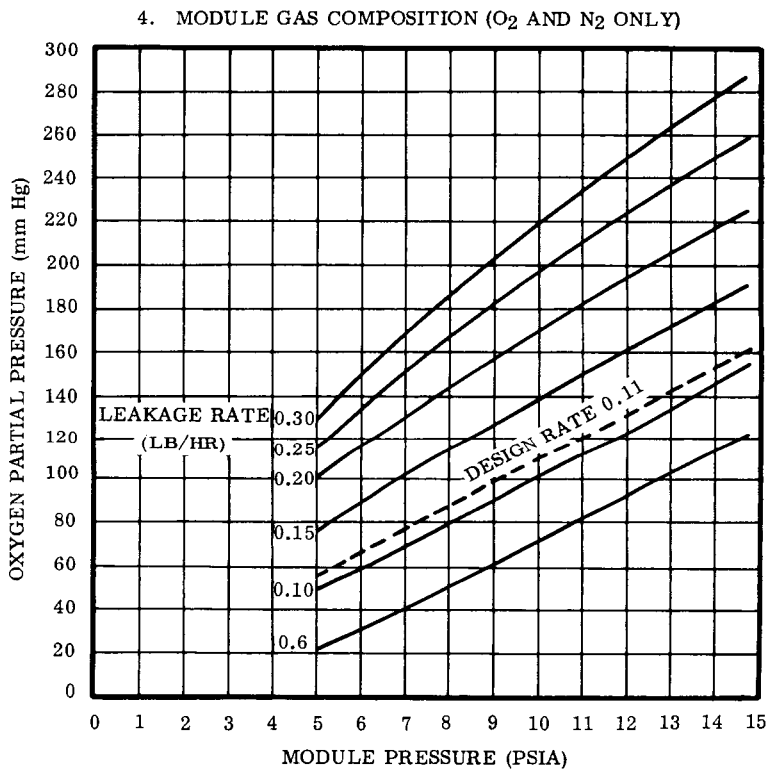

Figure 6. Effect of Command Module Leakage Rate on Oxygen Partial Pressures for Various Module Pressures

sea-level atmospheric composition even in the event of rather wide variations in actual usage.

2.9 CARBON DIOXIDE REMOVAL. The removal of carbon dioxide constitutes one of the major functions of the environmental control system. Table 4 shows a comparison between various methods of removing carbon dioxide.

Table 4. Carbon Dioxide Control

CHARACTERISTICS	METHOD / REACTION / UNITS	LITHIUM HYDROXIDE	SILVER OXIDE	POTASSIUM SUPEROXIDE	CONDENSATION WITH LIQUID OXYGEN	ZEOLITE SYNTHETIC ALUMINOSILICATE	REDUCTION WITH HYDROGEN $CO_2 \rightarrow C + O_2$ THREE STEPS			BARALYME
	REACTION	$2LiOH + CO_2 \rightarrow Li_2CO_3 + H_2O$	$Ag_2O + CO_2 \rightarrow Ag_2CO_3$	$2KO_2 + CO_2 \rightarrow K_2CO_3 + 3/2\,O_2$			1. $CO_2 + 4H_2 \rightarrow CH_4 + 2H_2O$	2. $CH_4 \rightarrow C + 2H_2$	3. $2H_2O \rightarrow 2H_2 + O_2\uparrow$	$Ba(OH)_2$ and $Ca(OH)_2$
Direct Weight Penalty										
Container	Lb/Lb CO_2	0.200	0.200	0.200						0.200
Substance Supplied	Lb/Lb CO_2	1.150	5.250	3.570	1.000	10.000				2.900
Total Direct Weight	Lb/Lb CO_2	1.350	5.450	3.770	1.000	10.000				3.100
Fixed Weight Per Man	Lb/Man		8.000		8.000	20.000				3.100
Indirect Penalties										
Conversion	Percent	96	Low		99		97	90	100	
Heat of Process	BTU/Lb CO_2	1110	800	1360-1770	330		2460	730	5590	
Endo-Exo Thermic		Exo	Exo	Exo	Endo		Exo	Endo	Exo	
Operating Temperature	°F						450	1850		
Power Required	Watt-Hr/Lb CO_2								1645	
Volume	Cu Ft/Lb CO_2	0.048								0.0173
Vol/Man	Cu Ft/Man		0.67		0.23	0.50				
Zero-Gravity Operation	Relative	Good	Good	Good	Good	Good	Good			Good
Service Required	Relative	Refill	Regenerate	Refill	Purge	Purge	Supply H_2 to Start			Refill
Reliability	Relative	Very High	Unknown	High	High	High	Under Development			Fair
Surge Load Ability	Relative	Good	Poor	Fair	Good	Fair	Poor			Good

2.9.1 Lithium Hydroxide. The use of lithium hydroxide to remove carbon dioxide has a long history in submarine operation. As currently manufactured, the chemical is powdered and then compressed into cakes which are broken into granules with a maximum dimension of about 1/8 inch. A bed of these granules will react with carbon dioxide in an air stream to form lithium carbonate and water. If carried on under reasonably warm conditions, such as will occur in the environmental control system, the material operates very effectively and with practically no tendency to pack or channel. Extensive experiments carried on at AiResearch indicate a high degree of utilization with 1.15 pounds of lithium hydroxide being required for each pound of carbon dioxide. This may be compared with the 1.08 pounds required for an ideal reaction. When the material is first placed in the canister, there is some tendency for the lithium hydroxide to produce an irritating dust. However, this matter can be completely controlled with suitable filters, and is not considered a major deficiency. The method has a high degree of reliability and a good capability to respond to surges in load.

The disadvantage of lithium hydroxide is the fact that it is difficult and impractical to purge and re-use. Although this is unimportant for short missions, a weight penalty is incurred for longer missions. The lithium hydroxide canister and sufficient chemicals for the 14-day mission will weight 118 pounds. Other competitive system weights are discussed below and it will be seen that the slight weight penalty is negligible compared to the difference in reliability. If the lithium hydroxide bags are to be stored separately and periodically loaded into the canister, changes in the mission duration and/or number of the crew can easily be accommodated by adding or subtracting the weight of the bags.

2.9.2 Molecular Sieves. The use of molecular sieves or synthetic zeolites was investigated both analytically and in the laboratory. The advantage of this material is its ability to desorb the carbon dioxide at reasonably low temperature in a vacuum. The disadvantage stems from its preferential affinity for water vapor. A regenerative system utilizes two silica-gel water-adsorber beds, two molecular-sieve beds, one or two heat exchangers, a fan, and a complex of 12 valves for control and switching functions. A timer or a carbon-dioxide sensitive control is required and a source of heat for purging is necessary. It may be possible to develop this system and to simplify it by integration of valve functions or to develop multiple-port valves which could reduce the total number of in-series operational hazards, but at the present time it appears deficient in reliability. A system designed for the two-week period for the mission module alone would weigh 85 pounds with no provisions for operational redundancy. In the event of a failure of any one of the valves or beds, the system would be inoperative within a few minutes.

2.9.3 Carbon Dioxide Freeze-Out. Consideration has also been given to the carbon dioxide freeze-out system. This system operates on the principle of freezing-out the carbon dioxide by the use of the cryogenic gases as a low temperature heat sink.

Unfortunately, this system is also plagued by the moisture problem much the same as is the molecular sieve system since water will be frozen out at 32°F, and the temperature must be reduced to about -240°F to eliminate the required amount of carbon dioxide. The resultant regenerative system, then, looks much the same as the molecular sieve system and has about the same number of components used in the same series sequence, which reduces the reliability.

Calculations indicate that it is not possible to freeze the required amount of water and carbon dioxide from the heat sink that is available from oxygen at the normal metabolic rate. If, however, the leakage rate of the vehicle were as much as 50% of the metabolic rate, then the combined oxygen flow would suffice to do the job.

2.9.4 Combination Freeze-Out and Molecular Sieve. A similar system exists which may offer some promise for the future. It is an outgrowth of the studies of the molecular sieve and freeze-out systems, and therefore has not yet been fully analyzed. This system would use the best features of both the freeze-out system and the molecular sieve system and would eliminate some of their disadvantages. This system would use the low-temperature heat sink to freeze the moisture and then direct the flow to a sieve which would adsorb the carbon dioxide. The water-freeze method is superior mechanically and thermally to the use of the chemical silica-gel bed for water adsorption, while the sieve is superior both mechanically and thermally to the freeze method for the elimination of the carbon dioxide. In the carbon-dioxide freeze method, it is necessary to regain the carbon dioxide heat of condensation and fusion as it sublimes, but before it is rejected to space. In the moisture-freeze method, regeneration of both the moisture and the heats of condensation and fusion are desired to be reinjected into the air stream. This is easily done by sublimation of all of the ice in the return stream to the cabin.

The system is, however, subject to the same criticism regarding the reliability due to the number of in-series valves and switching functions, as in the previous systems. It may be possible to simplify portions of the system; therefore further study on this technique is warranted.

2.9.5 Integrated Heat Exchanger and Absorber. Since both the adsorption and desorption of a regenerative system are thermal processes, a logical attempt was made to integrate these functions with the vehicle internal heat

transfer system. Such a system has been under intensive investigation during the course of the study. The concept entails the use of a metallic oxide deposited on the inner surfaces of the heat exchanger which is used for temperature and humidity control in the manned compartment. The heat exchanger is cooled by the liquid-transport loop which is in series with other vehicle heat loads. In this manner, the coated heat exchanger would reject the compartment heat, condense the moisture, reject the exothermic heat of carbon dioxide adsorption, adsorb the carbon dioxide, and periodically act as a heater to reject the adsorbed carbon dioxide. The success of such a system would lead to a dramatic reduction in the complexity of a regenerative system and would lead to greater reliability.

The literature and data available led to the possibility of utilizing silver oxide as the active coating in the heat exchanger. Extensive tests and analytical investigations by AiResearch now show conclusively that some of the past data has been erroneous and that the silver oxide will have poor performance as the required adsorber. The studies are being continued, however, and in the event that a suitable material is found, the concept may again show promise.

2.9.6 Potassium Superoxide. As mentioned under the description of the oxygen supply system, potassium superoxide may be used for carbon dioxide removal; however, it appears that the system will weigh more than a stored oxygen supply plus a lithium-hydroxide removal system.

2.10 MOISTURE REMOVAL. The removal of moisture from the air being circulated in the module may be performed by several methods as shown on Table 5. The use of chemicals for this purpose is generally ruled out by the large amount of moisture to be collected. The normal moisture produced from the three men will be about 93 grains per minute (approximately 0.8 pound per hour), giving a total of 270 pounds for the entire mission. For this reason, a very high weight of chemical would be involved. There is a further disadvantage in that no water would be recovered with a chemical removal system.

It is also possible to use certain methods of adsorption such as a molecular sieve. Such a device can be regenerated but it is relatively difficult to recover the water.

The preferred choice appears to incorporate the function of water removal with that of temperature control by operating the tubes of the heat exchanger at a temperature slightly below the desired dew point of the air flowing from the environmental control system so that the excess moisture will condense on the tubes of the heat exchanger. From the tubes the water will be blown off and collected in the water separator. A plastic sponge may be used in order to obtain a water separator which operates at zero gravity. The water-laden air passes through this sponge and the water is collected on the sponge. By means of a piston the sponge is periodically squeezed and the water forced into a storage tank. This method has been fully developed and is applicable to this system. The heat-exchanger tubes will be operated at a surface temperature of between 35 and 40°F, and the outlet temperature of air will not be higher than 40°F, with a dew point of 40°F. The low temperature in the heat exchanger will be obtained by different methods in the command and mission modules. In the command module water will be evaporated at the low outside pressure with controls to maintain its temperature just above freezing (approximately 35°F). In the mission module the coolant will be glycol from the space radiator at a temperature of about 35°F.

2.11 TRACE CONTAMINANTS. The potential sources of air pollution in a space vehicle are many. Although several can be specifically defined, the majority can only be estimated with varying degrees of certainty. Contaminant control in a closed cabin begins at the design stage. Rigorous scrutiny of coatings, in the cabin and on support equipment for possible contaminant sources is mandatory. Dust- and small-particle removal should be as complete as possible prior to launch.

The contaminant removal components listed in Tables 6 through 8 are of high reliability if not used beyond the limitations described, and if used in the proper sequence. None of the components listed is subject to zero gravity influences.

2.11.1 Catalytic Burner. Hopcalite is a co-precipitated mixture of manganese and copper oxides. It has the ability to accelerate the oxidation of carbon monoxide to carbon dioxide at room temperature. At 650°F it catalyzes the combustion of hydrocarbons, general organics, and hydrogen with efficiencies ranging from 80 to 100%. Methane is only 10% converted at 650°F. Sulfur and nitrogen are converted to the respective oxides, freon to hydrofluoric acid, and hydrogen to water. The catalyst has a useful life in excess of 1000 hours; however, it is attacked by water vapor below 250°F and poisoned by trace amounts of antimony. Three to five passes of cabin air through the burner per day should be sufficient to remove contaminants. For four passes at six hours per pass, an airflow of 3.3 cfm is required for a 1200 cubic foot space. For a catalyst bed five inches deep the ratio of cross-sectional area to flow is 1 square inch per cfm, or 3.3 square inches for the preceding case. Therefore the catalyst bed will have a diameter of two inches and will weigh about 2.5 pounds.

Table 5. Moisture Removal

CHARACTERISTICS	UNITS	CONDENSATION METHOD	ABSORPTION METHOD: POTASSIUM SUPEROXIDE $2KO_2 + H_2O \rightarrow 2KOH + 3/2\ O_2$	ABSORPTION METHOD: SODIUM PEROXIDE $Na_2O_2 + H_2O \rightarrow 2NaOH + 1/2\ O_2$	ABSORPTION METHOD: MAGNESIUM PERCHLORATE $Mg(ClO_4)_2 + 6H_2O \rightarrow Mg(ClO_4)_2 \cdot 6H_2O$	ADSORPTION METHOD: MOLECULAR SIEVE	ADSORPTION METHOD: ACTIVATED ALUMINA	ADSORPTION METHOD: SILICA GEL
Direct Weight Penalty								
Container	Lb/Lb H_2O	-	1.910	1.260	0.800	1.160	1.490	1.430
Substance Supplied	Lb/Lb H_2O	-	9.900*	5.400**	2.500	4.500	8.000	6.000
Total Direct Weight	Lb/Lb H_2O	-	11.810	6.660	3.300	5.660	9.490	7.430
Fixed Weight Per Man	Lb/Man	2-4	-	-	-	-	-	-
Indirect Penalties								
Heat of Process	Btu/Lb H_2O	1070	940	2558	545	>1070	>1070	1300
Endo-Exo Thermic	-	-	Exo	Exo	Exo	Exo	Exo	Exo
Operating Temperature	°F	Low	Moderate	High	Moderate	Moderate	Moderate	Moderate
Volume	Cu Ft/Lb H_2O	-	0.24	0.12	0.056	0.105	0.16	0.15
Vol/Man	Cu Ft/Man	-	0.3	-	-	-	-	-
Zero-Gravity Operation	Relative	-	-	-	-	-	-	-
Regeneration	-	Continuous	Complex	Complex	Complex	Complex	Complex	Complex
Reliability	Relative	Very Good	Fair	Fair	Fair	Good	Good	Good
Water Recovery	-	Yes	No	No	No	Yes	Yes	Yes

*9.9 Lb KO_2 Produces Approximately 2.7 Lb O_2
**5.4 Lb Na_2O_2 Produces Approximately 0.89 Lb O_2

Table 6. Trace Contaminant Removal Low Molecular Weight Substances

CHARACTERISTICS	UNITS	CATALYTIC BURNER METHOD HOPCALITE HIGH LEVEL CONTAMINATION	CATALYTIC BURNER METHOD HOPCALITE LOW LEVEL CONTAMINATION	CATALYTIC BURNER METHOD P_t - H_2 HIGH LEVEL CONTAMINATION	CATALYTIC BURNER METHOD P_t - H_2 LOW LEVEL CONTAMINATION	CATALYTIC BURNER METHOD P_t - ELEC HIGH LEVEL CONTAMINATION	CATALYTIC BURNER METHOD P_t - ELEC LOW LEVEL CONTAMINATION
Weight Penalty							
Catalyst Weight	Lb Lb/Man/Day	10 0.238	2.5 0.0595	10 0.238	2.5 0.0595	10 0.238	2.5 0.0595
Container + Piping + Insulation	Lb Lb/Man/Day	6.5 0.153	2.5 0.0595	7.0 0.166	3 0.071	7 0.166	3 0.071
Blower	Lb	5	1.5	5	1.5	5	1.5
Regeneration System	Lb/Man/Day	None	None	0.1	0.075	0.1	0.075
Total (Blower Not Included)	Lb/Man/Day	0.391	0.119	0.504	0.200	0.504	0.206
Power Penalty							
Pump Power Requirement							
Heating Power	Kw	-	-	-	-	6.9	0.9
Hydrogen Combustion Heating	Lb H_2/Min	0.00105	0.00015	0.0014	0.0002	-	-
Air Flow Through Component	CFM	27	3.3	27	3.3	27	3.3
Time for One Complete Air Change	Min	45	360	45	360	45	360
Volume - Total System	Cu Ft	0.3	0.2	0.35	0.25	0.35	0.25
Catalyst Life (Time Between Regeneration)	Hours	1000	1000+	50-100	100-300	50-100	100-300
Operating Temperature	°F	650	650	840	840	840	840
CO Combustion Per Pass	%	99-100	99-100	60-80	60-80	60-80	60-80
Service Required	-	None	None	Catalyst Change	Catalyst Change	Catalyst Change	Catalyst Change
Reliability	-	High	High	-	-	-	-
Zero Gravity Consideration	-	None	None	None	None	None	None

Table 7. Trace Contaminant Removal High Molecular Weight Substances

CHARACTERISTIC	UNITS	ACTIVATED CARBON	CATALYTIC CARBON
Carbon Weight	Lb/Man/Day	0.118	0.059
Total	3 Men-2 Wks	5	2.5
Container + Piping + Insulation	Lb/Man/Day	0.04	0.06
Regeneration System	Lb/Man/Day	None Required	0.06
Total	Lb/Man/Day	0.158	0.18
Heating Power Requirements (Blower Excluded)	Watts	None	200
Air Flow Through Component	CFM	27	27
Useful Life	Days	100-300	Unlimited
Total Volume	Cu Ft	0.1	0.2
Service Required		None	Actuation Regeneration Sys
Reliability		Very High	High
Zero Gravity Considerations		None	None
Mission Module		Required	
Command Module		Required	

If the danger of hydrogen leakage is high, however, the time required for four complete air changes should be reduced to three hours, requiring a flow rate of 27 cfm. In this case a catalyst chamber of a different configuration is used (a hollow cylinder, with a catalyst weight of ten pounds).

The air passing through the catalyst bed must be at 650°F to convert organic contaminants efficiently. For electrical heating four kilowatts are required to heat the air at 27 cfm to 650°F in the catalyst bed. Heat can be exchanged between air entering and air leaving the reactor. Assuming 80% efficiency for this transfer, 0.8 kilowatt is necessary to sustain the bed at temperature after initiation. For hydrogen heating, a hydrogen air flame is used to bring the bed to temperature, after which the flame is quenched and hydrogen metered in to react at the catalyst wall. To bring the catalyst to temperature, 0.005 pound of H_2 per minute is required; 0.001 pound per minute is required to maintain the temperature.

A catalyst consisting of platinum coated on alumina has been investigated. In general, the higher operating temperature and shorter catalyst life do not make it attractive. Table 1 lists pertinent characteristics of both the Hopcalite and platinum catalysts.

2.11.2 Activated Carbon. Activated carbon can adsorb up to 30% of its own weight in high-molecular-weight contaminants (i.e., skatole, benzene), 15% of its weight in medium-molecular-weight compounds (sulfur trioxide, acrolein), 5% of its weight in low-molecular-weight material (ammonia, nitric oxide), and essentially no methane, hydrogen, and carbon monoxide. The effluent of the catalytic burner should be passed through the carbon canister to remove noxious oxidation products such as acidic gases. The per man per day requirement for activated carbon is 0.1 or a total 4.2 pounds for 3 men for 14 days if contaminant levels are low. A figure of 0.16 to 0.67 pound per man per day will be required if contaminant loads are heavy. Two pounds of the carbon will be sufficient for the command module. Activated carbon impregnated with a catalyst can be regenerated by heating to 500°F for 30 minutes, thus oxidizing the adsorbate. Complete combustion does not occur spontaneously, thus a separate recycle system is required to pass desorbed gases through the bed several times. Unless contaminant levels will be much higher than presently predicted, the weight penalty imposed by an added recycle system does not make the catalytic carbon bed competitive with the non-catalyzed adsorber. Such a bed cannot be used with a contaminant burner because the gases passing from the burner are inorganic in nature and cannot be further oxidized. Activated carbon of both varieties has a higher relative adsorbancy at higher contaminant concentrations than at lower contaminant concentrations.

Table 8. Trace Contaminant Removal Particulate Substances

METHOD CHARACTERISTIC	UNITS	MILLIPORE FILTER	FIBER-"ULTRA" FILTERS	ELECTRO-STATIC PRECIPITATOR	ULTRA-* SONIC AGGLOM	SYSTEM INHERENT
Filter Element Weight	Lb	0.06	0.4	-	-	-
Container + Power Source	Lb	4.00	2	10	5	-
Total System Weight (not including blowers)	Lb	4.06	2.4	10	5	-
Air Flow	CFM	30	30	30	30	System Dependent
Pressure Drop	In. H_2O	30	1	0.5	0.5	-
Additional Equipment Needed	-	-	-	High Voltage Power Source	Sonic Vibrator	None
Cleaning Method	-	Replace	Replace	Hand	Hand	None
Volume	Cu Ft	0.05	0.15	0.5	0.5	-
Service Life/Element	Relative	Short	Long	Unlimited	Unlimited	System Dependent
Efficiency of Removal of 0.3 μ Particles	%	99+	99+	99+	-	75 - 90
Possibility of Dust Re-Entrainment	Relative	None	None	High	High	Low
Zero Gravity Operation	-	Good	Good	Poor	-	Good

*Requires Additional Filter

2.11.3 Aerosol and Particle Filtration. Both the carbon filter and the catalytic burner will effectively remove dust and aerosols. The burner alone should remove up to 90% of these. Other components of the general support system have inherent particle-removing qualitites also.

If additional filtration is necessary, a fiber filter would seem to be the best choice. It effectively removes 99% of particles 0.3 microns and larger and can be placed in a main air circulation system. The millipore filter has a short element life and requires high operating pressures. The electrostatic precipitator requires a high voltage source (25,000 volts), and has high comparative weight. The ultrasonic agglomeration unit is not a filtration unit, but rather coagulates sub-micron particles for easier filtration. Since most aerosols are 0.3 micron in size, the fiber filter should suffice.

2.12 INTERNAL HEAT LOADS

2.12.1 Metabolic Heat Loads. In operation it is desirable to maintain a temperature close to 68°F and a relative humidity of about 50 percent in the mission module. To obtain this, it is desirable first to consider the

latent heat load. It had been estimated that the latent heat load for the two men in the mission module would be 10.3 BTU per minute, which is equivalent to 69 grains of water per minute. In addition, the latent heat load for the man in the command module will be 3 BTU per minute or 20 grains per minute. It has been found that it is better to compute the results relative to the latent heat load and then determine whether these are applicable to the sensible heat load. Data on pressure suit operation indicates that the air coming from the suit will be around 82°F and 40 percent relative humidity and will contain 65 grains of water per pound, which will be a comfortable and normal condition. On the inlet side the limitation is the dew point temperature which can be obtained in the glycol-to-air heat exchanger. This will probably be about 40°F, since the glycol is controlled to 35°F. A dew point of 40°F corresponds to 37 grains per pound; thus, there is a possible pickup in the suit of the difference between 65 and 37 grains per pound, or 28 grains per pound. Since the actual amount of moisture to be picked up is 20 grains per pound, only 20/28 (0.72) pounds of air flow per minute is required in the suit to meet the latent heat load.

The sensible heat load in the suit is 3.5 BTU per minute, and this represents a temperature rise of 20.3°F dry bulb for the 0.72 pound of air running through the suit. Thus, the air to the suit would have to be between 61°F and 62°F to provide an exit temperature of 82°F. Assuming a total flow of 5 pounds per minute, which originally was at 37 grains per pound, and that all this air comes from the command module then the one man in the command module would add 20 grains to the total 5 pound per minute air flow, or 4 grains per pound. Thus, the air going to the mission module would contain 41 grains per pound. The 70 grains of moisture latent heat load added by the men in the mission module, divided by 5 pounds, is an increase of 14 grains per pound. Thus, the air in the mission module would be at a total of 55 grains per pound. On the psychrometric chart it is seen that 55 grains per pound at 70°F dry bulb is 50 percent relative humidity. Therefore, a comfortable condition is maintained in the mission module for a normal shirtsleeve atmosphere. The sensible heat load of the two men in the mission module is 7.2 BTU per minute, which corresponds to a dry-bulb temperature rise of 6°F for the 5 pounds flowing through the mission module. As will be seen later, there may not actually be as much temperature difference in this module due to the cooling effects from the radiation to space through the walls.

To recapitulate, the requirement for the suit appears to be 62°F dry bulb at 37 grains per pound and for the men in the mission module, 64°F at 37 grains per pound. These two similar requirements indicate that reheating is required at some point in the circuit to raise the 40°F outlet temperature of the heat exchanger (required to obtain a 40°F dew point) to 62°F. The low dew point is necessary to meet comfort conditions and the moisture load, but this will require a reheating effect of approximately 26.5 BTU per minute, which can readily be obtained from electronic or other equipment already available in the modules (see Tables 9 and 10).

For launch and landing the consideration is somewhat different. In this case the latent heat load for the three men is estimated to be 110 grains per pound. If it is assumed that the outlet will be at 65 grains per pound, and the inlet at 37 grains per pound, then the 110 grains will require a total flow of 3.92 pounds through the three suits operating in parallel. That is, 1.31 pounds per suit would provide sufficient flow to handle the latent heat load if the dew point is maintained at 40°F. If, due to the heavy heat loads it is not possible to maintain a dew point as low as 40°F, then the dew point which would be required to stay within the assumed 5 pound per minute limitation can be computed. It will be found that a dew point of 44 degrees would correspond to a 5 pound per minute flow. This is readily accomplished on launch, but is more difficult on re-entry. Not only are the heat loads higher, but the pressure of the air in the command module will have been reduced from 14.7 to 10 pounds per square inch, which will result in decreased flow through the air conditioning system and through the suits. During re-entry both compressors in the circulating system may be operated to circulate a larger amount of air. Also, because of the heavy load, it will be necessary that both of the glycol pumps be turned on. The small electrical load increase is a small cost to pay for more satisfactory operation of the equipment. The sensible heat load for metabolic cooling during launch and re-entry is 11 BTU per minute, which would result in a dry-bulb temperature rise of 9°F for a flow of 5 pounds per minute. Again the sensible heat load is of less consequence than the latent heat load in determining the design.

2.12.2 Mission Heat Loads. The complete mission heat load problem starts with launch and the command module. In this case the sensible heat load in the command module is about 35.5 BTU per minute plus aerodynamic heating; this compares favorably with the 36 BTU per minute available if a 5 pound per minute air flow and temperature variation of from 40 to 70°F are assumed. Thus, the command module circuit sized for 5 pounds per minute should work satisfactorily during launch. However, there is a sensible aerodynamic heat load of 66.7 BTU per minute in the mission module and 37.5 BTU per minute of glycol load. In order to handle these, the mission module glycol circuit will also be operating, which transfers the air load into the glycol line via heat exchanger (60) and the fuel cell load into the glycol circuit via heat exchanger (82). The radiator would be bypassed by opening valve (79). This would place this complete load of some 104 BTU per minute into the glycol-to-water heat exchanger (5) located in the command module. Projecting this for 15 minutes

Table 9. Heat Loads

	COMMAND MODULE AIR LOADS					MISSION MODULE AIR LOADS				
	POWER (WATTS)	SENSIBLE BTU/MIN	LATENT BTU/MIN	LATENT GRAINS/MIN	LIQUID BTU/MIN	POWER (WATTS)	SENSIBLE BTU/MIN	LATENT BTU/MIN	LATENT GRAINS/MIN	LIQUID BTU/MIN
Launch										
Electronic	1100				62.5					
Command Console	200	11.4								
Blower	100	5.7								
Thermal Control Blower - Equipment	100	5.7								
Lights	30	1.7								
Personnel Metabolic	480	11.0	16.5	110						
Aerodynamic Heating							66.7			
Fuel Cells						660				37.5
Total		35.5								
Coast and Lunar Vicinity										
Electronic Equipment	1050				59.7	84	4.8			
Autopilot						50	2.8			
Experiments and Measurements						150	8.5			
Command Console	200	11.4								
Lights	30	1.7				60	3.4			
Blower						150	8.5			
Fuel Cells						800				45.5
Environmental Control and Instruments						86	4.9			
Thermal Control Fans and Pump						150	8.5			
Personnel Metabolic		3.5	3.0	20			7.2	10.3	69	
Subtotal		16.6			59.7		48.6			

Table 9. Heat Loads (Cont)

	COMMAND MODULE AIR LOADS					MISSION MODULE AIR LOADS				
	POWER (WATTS)	SENSIBLE BTU/MIN	LATENT BTU/MIN	LATENT GRAINS/MIN	LIQUID BTU/MIN	POWER (WATTS)	SENSIBLE BTU/MIN	LATENT BTU/MIN	LATENT GRAINS/MIN	LIQUID BTU/MIN
Cooling Effect, Coast							-50.0			
Cooling Effect, Lunar Vicinity							-25.0			
Total, Coast							-1.4			
Total, Lunar Vicinity							23.6			
Entry										
Electronic Equipment	1100				62.5					
Command Console	200	11.4								
Blower	100	5.7								
Thermal Control	200	11.4								
Lights	30	1.7								
Personnel Metabolic	480	11.0	16.5	110						
Aerodynamic Heating		133.3								
Batteries	180	10.4								
Total		184.9								

Table 10. Distribution of Heat Loads Between Heat Exchangers

	WATER EVAPOR-ATOR	COMMAND AIR HEAT EXCH	ELECT. LOAD A	ELECT. LOAD B	FUEL CELLS LOAD C	MISSION AIR HEAT EXCH	SPACE RADIATOR	RE-ENTRY HEAT EXCH
Launch Phase								
Command Console	11.4	11.4	11.4					
Command Console Blower	5.7	5.7	5.7					
Command Thermal Control Equipment	5.7	5.7						
Command Lights	1.7	1.7	1.7					
Personnel Metabolic, Sensible	11.0	11.0						
Personnel Metabolic, Latent	16.5	16.5						
Command Electronics	62.5			62.5				
Aero. Heating	66.7					66.7		
Fuel Cells	37.5				37.5			
Launch Total	218.7	52.0		62.5	37.5	66.7	0	
Coast and Lunar-Vicinity Phases								
Command Electronics				59.7			59.7	
Command Console			11.4			11.4	11.4	
Command Lights			1.7			1.7	1.7	
Command Personnel, Sensible						3.5	3.5	
Command Personnel, Latent						3.0	3.0	
Mission Electronics						4.8	4.8	
Autopilot						2.8	2.8	
Experiments						8.5	8.5	
Mission Lights						3.4	3.4	
Mission Blower						8.5	8.5	
Fuel Cells					45.5		45.5	
Env Control and Instrum						4.9	4.9	

Table 10. Distribution of Heat Loads Between Heat Exchangers (Cont)

	WATER EVAPOR-ATOR	COMMAND AIR HEAT EXCH	ELECT. LOAD A	ELECT. LOAD B	FUEL CELLS LOAD C	MISSION AIR HEAT EXCH	SPACE RADIATOR	RE-ENTRY HEAT EXCH
Thermal Control Fans and Pumps						8.5	8.5	
Personnel, Sensible						7.2	7.2	
Personnel, Latent						10.3	10.3	
Radiation to Space						-25.0	-25.0	
Orbit Total	0	0		59.7	45.5	53.5	158.7	
Re-Entry Phase								
Command Electronics	62.5			62.5				
Command Console	11.4	11.4	11.4					
Command Console Blower	5.7	5.7	5.7					
Command Thermal Control	11.4	5.7						5.7
Command Lights	1.7	1.7	1.7					
Personnel, Sensible	11.0	11.0						
Personnel, Latent	16.5	16.5						
Aero. Heating	133.3							133.3
Batteries	10.4							10.4
Re-Entry Total	263.9	52.0		62.5				149.4

All heat loads in Btu per minute

means that approximately 1-1/2 pounds more water would be evaporated in this heat exchanger. For safety during this phase, valves (32) and (33) would be closed, but the two circuits would still be operating. There is ample allowance in the thermal loads to keep the necessary fans and pumps working to have both modules operating during the launch phase.

During the coast phase of the main flight, which constitutes by far the largest proportion, the total sensible heat load in the mission module is 46.6 BTU per minute and the cooling effect through the walls is 50 BTU per minute. Thus, the temperature in the mission module will effectively be constant. In order to meet this situation, it is required that all the air from the mission-module air conditioning system be sent (during coast phase) into the command module and that suitable adjustments be made so that the air flows from the command module through the interconnecting hatch at a temperature of 68°F (the desired temperature in the mission module). It will likewise be at a temperature of 68°F when it re-enters the mission-module air conditioning circuit through valve (78). In order to accomplish the 68°F exit temperature from the command module, use will be made of the re-entry heat exchanger previously described. Air coming from the mission module air conditioning system will pass through valve (33) and into valve (34). It will at this point be at a temperature of approximately 40°F, plus a small line rise. Air will then pass, at least partially, through the re-entry heat exchanger where it will pick up sufficient heat from the glycol to reach the appropriate temperature in the command module to satisfy the command module load (about a 20-degree rise). In other words, air coming from the re-entry heat exchanger should be about 60°F. If the glycol flow is 2 pounds per minute and if the heat exchangers operating with the glycol are arranged in the order previously recommended, then glycol entering the re-entry heat exchanger will be at approximately 100°F and will be sufficiently warm for heating the air in the command module. This calculation has allowed for the rather small load of 16.6 BTU per minute in the command module.

Thus, during coast phase all air would go to the command module and be heated by the occupant, by the equipment, and by additional heat supplied from the hot side of the glycol circuit. It would then pass through the connecting hatch, at a temperature of 68°F, to the mission module, and would exit at the same temperature since the heating and cooling loads on the mission module are equal during this phase. For the lunar-vicinity phase where the cooling load is less (that is, the radiation through the walls to outside is less by a matter of some 25 BTU per minute) the heating effect of the re-entry heat exchanger would not be used and the command module would be operated at an appreciably lower temperature. This would not be uncomfortable, since the occupant would be in a suit and sensible only to the temperature of the air in the suit. Fortunately, the load required to be added by the re-entry heat exchanger under this condition is just about equal to the change in load for the lunar vicinity; therefore, turning off the heat exchanger satisfies this particular condition, which is depicted on the psychometric chart of Figure 7.

For the case of actual re-entry, all of the cooling load will have to be taken by the evaporative heat exchanger and none of it can be taken by the radiation heat exchanger, since the command module is disconnected from the mission module.

2.13 RELIABILITY. It is considered axiomatic that the reliability of an environmental control system for space usage must be very high. The reliability of the complete system depends on three factors. First, the units of equipment chosen for incorporation in the system must each have a relatively high reliability in order to justify their inclusion from a weight and space basis. Second, the units must be connected together in systems or subsystems in such a manner that the resulting overall operation is of maximum possible reliability. Third, the quantities of materials stored must be chosen so that the chance that they will be depleted before the end of the mission is very small. This last factor is involved with overall mission planning and is not further treated in this discussion.

The usual method of obtaining reliability is by redundancy, but, as will be seen, such duplication of elements must be carefully examined in the light of their use within the circuit in order to determine whether they are best serving the function of improving the overall system reliability.

In order to develop this matter successfully, reliability terms to be used must be defined: Reliability is the probability that the equipment or system in question will successfully complete a specified mission under specified conditions of operation and environment. To estimate the reliability of a system which has not yet been built, knowledge of the reliability of the component parts and subsystems which will make up the complete system must be utilized. If the component parts of the equipment are arranged so as to be functionally in series; that is, so that the failure of any single part causes the failure of the proper function of the series, the reliability of the series is found by multiplying the separate reliabilities of the component parts. If certain elements or subsystems of a series system are functionally in parallel, one with another, the failure probabilities (complements of the reliabilities) of the parallel elements are multiplied together and the resulting reliability for the combination is then considered as an integral part of the series system.

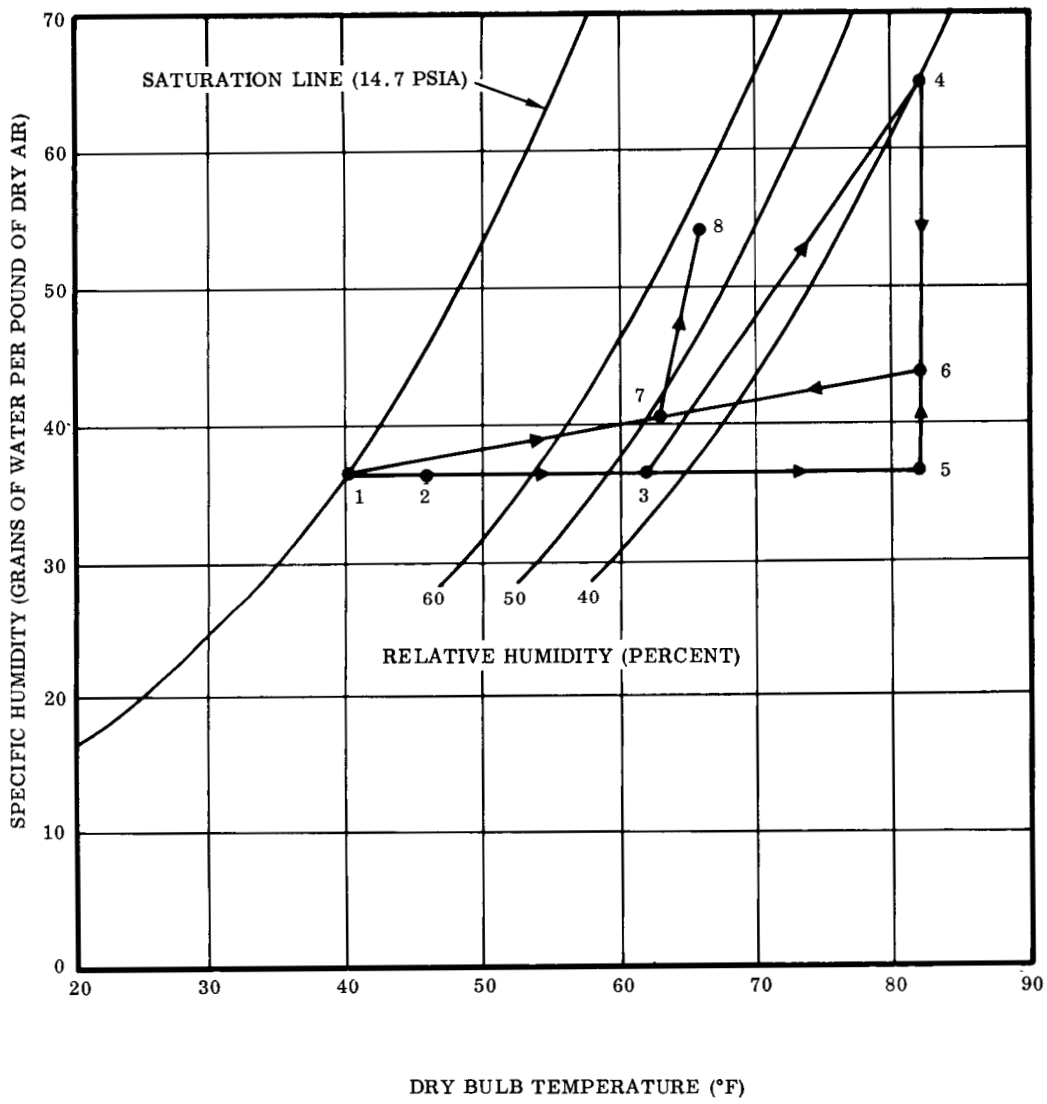

EXPLANATION OF THE STATE POINTS

1. SUPPLY AIR DELIVERED BY THE ENVIRONMENTAL CONTROL EQUIPMENT: 2.24 LB/MIN TO MISSION MODULE, 2.76 LB/MIN TO COMMAND MODULE.
2. SUPPLY AIR TO COMMAND MODULE DISTRIBUTION SYSTEM: 2.76 LB/MIN.
3. SUIT INLET AIR: 0.72 LB/MIN.
4. SUIT OUTLET AIR: 0.72 LB/MIN.
5. COMMAND MODULE EQUIPMENT COOLING OUTLET AIR: 2.04 LB/MIN.
6. RETURN AIR FROM COMMAND MODULE DISTRIBUTION SYSTEM: 2.76 LB/MIN.
7. MIXTURE OF ENVIRONMENTAL CONTROL EQUIPMENT SUPPLY AIR (NOTE 1) TO MISSION MODULE AND RETURN AIR FROM COMMAND MODULE (NOTE 6): 5.0 LB/MIN.
8. RETURN AIR TO THE ENVIRONMENTAL CONTROL EQUIPMENT: 5.0 LB/MIN.

Figure 7. Psychometric Process Environmental Control System; Operation in Lunar Vicinity

Failures are classified as initial, chance, and wear-out. Figure 8 is an approximate representation of the accepted probability density functions for these classifications. Initial failure data are properly used to determine quality control, inspection and run-in procedures and to monitor the effectiveness of these procedures. Wear-out failure data are properly used to determine maintenance and overhaul periods and to monitor them. Chance failure data and the right- and left-hand extremities of the initial and wear-out failure distributions (see Figure 8) provide knowledge of the failures which, for practical reasons, cannot be eliminated and are used to determine mission success probabilities.

To compute the complete reliability of the environmental control system requires a very extensive analysis which is probably not justified at this stage in the project. However, to illustrate the method which will be used, this section shows the method of computing the reliability of the emergency oxygen supply when the astronaut plugs into the manifold in the command capsule. This is, in one sense, the basic reliability of the entire system, since it is his normal course of action in the event of a serious emergency, and when he has plugged into this emergency supply, he wants to be sure that it will work as desired. Figure 9 shows two designs for the circuit and related components necessary to supply emergency oxygen to the connecting manifold. The original design is that which was first proposed under this program. The modified design is that which resulted from reliability considerations. As will be seen, the probability of failure of the modified design is less than one-hundredth that of the original design; and this may serve as a typical illustration of the process of considering reliability as a tool in designing a successful environmental control system.

In Figure 9, dash letters A and B associated with the same numeral indicate separate but identical components. Where the same numeral appears in both designs, then identical components are proposed. Specific descriptions of the items and their relation to reliability are as follows:

a. Oxygen Tank - Has a leakage hazard which would impair its function of 5×10^{-6} per hour.

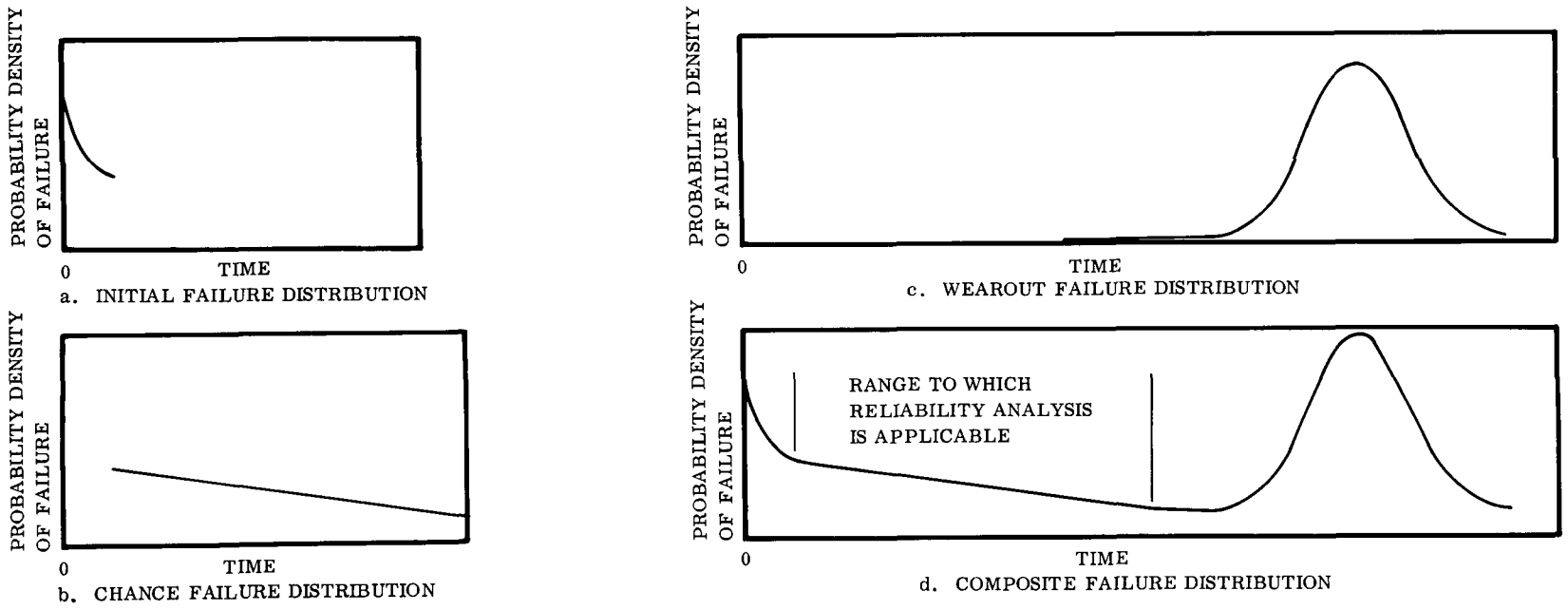

Figure 8. Failure Distribution Curves

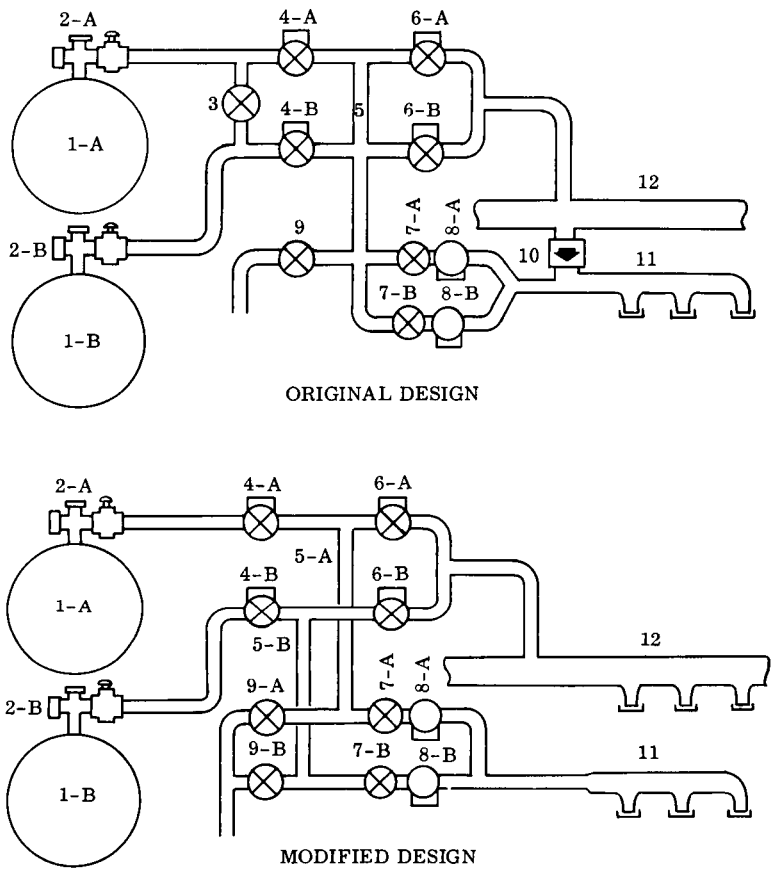

Figure 9. Comparative Designs of Oxygen Supply Systems for Reliability Analysis

b. Tank Valve - Assumed to be a squib-operated valve utilizing a dual charge and a dual bridge-ignition circuit. The manufacturer of this valve claims a reliability of 0.9999, which is a hazard of 100×10^{-6} per cycle. In addition, there is a hazard of leakage of this valve of 5×10^{-6} per hour.

c. Cross-Over Valve - Same cycle and leakage hazard as Valve 2. A separate analysis of this valve is presented later. For the current analysis, it is assumed closed with no hazard of leakage.

d. Pressure Reducer - Decreases the pressure to 100 psia. Has a functional hazard of 20×10^{-6} per hour.

e. Manifold Duct - Considered to introduce some hazard because of its strategic location and large number of connections. In the original design, there are 7 connections, so the hazard has been estimated as 7×10^{-6} for each hour that there is pressure in the duct. For the modified design, the hazard of each manifold has been estimated as 4×10^{-6} for each hour that there is pressure in the manifold.

f. Pressure Reducer - Used in the normal oxygen supply circuit; of interest here is the hazard that it may not fail safely, which is assumed to be 5×10^{-6} per hour during which it is exposed to 100 psia pressure.

g. Valve - Upstream of emergency pressure reducer. This valve has three modes of failure. First, there is the hazard that it will leak before it is required, at a value of 5×10^{-6} per hour. Second, the hazard that the squib will not operate, assumed to be 100×10^{-6} per cycle. Third, that it will leak when operating, at a hazard of 5×10^{-6} per operating hour.

h. Emergency Pressure Reducer - Operating hazard of 20×10^{-6} per hour.

i. Valve - Controls pressure to water separator. This has a hazard that it will leak and cause loss of pressure in Manifold (item 5) of 5×10^{-6} per hour of pressure in the manifold.

j. Check Valve - Has a hazard that it will fail in the open position, and thereby leak pressure from Manifold (item 11), of 100×10^{-6} per cycle.

Tables 11 and 12 compare the reliabilities of the original and modified emergency oxygen supply systems. It should be noted that no consideration is given to depletion of oxygen due to normal use, except that it is assumed that a leak in the system will mean that oxygen will not be available when required.

It will be recognized that the hazard rates used in the above analysis are based upon the small amount of information now available. Few space

Table 11. Reliability of Emergency Oxygen Supply Original Design

ITEM NO.	COMPONENT	HAZARD PER HOUR OR PER CYCLE $\times 10^6$	OPERATING TIME, HOURS OR CYCLES	HAZARD PER MISSION $\times 10^6$	RESULTS $\times 10^6$
1-A	Oxygen Tank - Leakage	5	336	1680	
2-A	Tank Valve - Squib Operation	100	1	100	
	- Leakage	5	336	1680	
4-A	High Pressure Regulator - Malfunction	20	336	6720	
	I - Sum of Above				10,180
	This is hazard that oxygen will not be available through Valve 4-A				
1-B	Oxygen Tank - Leakage	5	336	1680	
2-B	Tank Valve - Squib Operation	100	1	100	
	- Leakage	5	336	1680	
4-B	High Pressure Regulator - Malfunction Based on Probable Maximum Operating Time	20	24	480	
	II - Sum of Above				3,940
	This is hazard that oxygen will not be available through Valve 4-B				
	III - Product of I and II				40
	This is hazard that oxygen will not be available through either Valve 4-A or Valve 4-B				
5	Manifold Duct - Leakage	7	336	2352	
6-A	Low Pressure Regulator - Non Fail-Safe	5	336	1680	
6-B	Low Pressure Regulator - Non Fail-Safe	5	336	1680	
7-A	Shutoff Valve - Leakage	5	336	1680	

Table 11. Reliability of Emergency Oxygen Supply Original Design (Cont)

ITEM NO.	COMPONENT	HAZARD PER HOUR OR PER CYCLE $\times 10^6$	OPERATING TIME, HOURS OR CYCLES	HAZARD PER MISSION $\times 10^6$	RESULTS $\times 10^6$
7-B	Shutoff Valve - Leakage	5	336	1680	
9	Control Valve - Water Separator, Non Fail-Safe	5	336	1680	
	IV - Sum of Above				10,752
	This is hazard that there will be a defect in Manifold 5 or in one of its downstream valves which will make it impossible to maintain pressure in the manifold				
7-A	Shutoff Valve - Squib Operation	100	1	100	
	- Leakage	5	24	120	
8-A	Low Pressure Regulator - Malfunction	20	24	480	
	V - Sum of Above				700
	This is hazard that emergency oxygen will not pass through 7-A and 8-A when needed				
7-B	Shutoff Valve - Squib Operation	100	1	100	
	- Leakage	5	24	120	
8-B	Low Pressure Regulator - Malfunction	20	24	480	
	VI - Sum of Above				700
	This is hazard that emergency oxygen will not pass through 7-B and 8-B when needed				
	VII - Product of V and VI				< 1
	This is hazard that emergency oxygen will not pass through V or VI when needed				
10	Check Valve - Fail Open	100	1	100	
	This would prevent maintenance of pressure in Manifold II				

Table 11. Reliability of Emergency Oxygen Supply Original Design (Cont)

ITEM NO.	COMPONENT	HAZARD PER HOUR OR PER CYCLE $\times 10^6$	OPERATING TIME, HOURS OR CYCLES	HAZARD PER MISSION $\times 10^6$	RESULTS $\times 10^6$
	VIII - Sum of II, IV, VII and 10				10,893
	This is hazard that emergency oxygen will not be available through Circuit A or Circuit B				
	Equivalent Mission Reliability = 0.9891				

systems have been built and operated to date. It is expected that results of further tests connected with the development of new systems will steadily increase the background of knowledge in this field.

Another factor not considered in the analysis is the improvement in reliability of the system due to the monitoring and maintenance which will be performed by the crew. This will act to increase the overall system reliability.

2.14 AUTOMATIC CONTROLS AND SENSORS. The Apollo mission requires that many automatic controls, sensors, and instruments be on board. It is also necessary that manual overrides be provided wherever possible since, in many cases, the use of the man and his judgment represents the most reliable method. Automatic controls will be applied to the crew and equipment thermal control system in both the gas and liquid loops. These controls will be designed to complement each other for the maximum control accuracies and yet will be sufficiently independent to permit separate manual override and readjustment for the various unpredictable contingencies.

The atmospheric controls will consist of automatic temperature, total pressure, oxygen partial pressure and total pressure, and relative humidity controls. Of these, the oxygen partial pressure control is the only significantly new type of control which is to be used. For this reason, major emphasis during the study was placed on this control.

A system which has been developed and successfully demonstrated in the laboratory in a two-gas atmosphere of variable composition makes use of the Beckman polarographic sensor. The sensor utilizes platinum and silver electrodes with a potassium chloride gel electrolyte. The reduction of oxygen at the platinum cathode causes a current flow between the electrodes that is directly proportional to the oxygen partial pressure. Since the output current is also affected by ambient temperature, a thermistor is physically located in the sensor to compensate for temperature changes. The output signal is fed into a magnetic amplifier where it is compared to a reference voltage from the pO_2 selector. Any unbalance in the signal will cause the oxygen controls to modulate.

Other sensors will be required in the vehicle, although not necessarily linked to automatic control functions.

A general tabulation of some of the more promising sensors for various constituents is presented in Table 13, which shows that in addition to the gas chromatograph and mass spectrometer there are individual sensors available which are small, compact, and consume relatively little power. Unfortunately, most of these sensors have limitations; for example, the electrochemical cells have limited use-life. Others are temperature sensitive, require external fluids, or require recalibration periodically. Only the sensor weights and characteristics are given in this table. Most of these systems require an amplifier and read-out device, the weights and power consumptions of which must be added. If the sensor is also to be used for control, then additional components will be required.

Table 12. Reliability of Emergency Oxygen Supply Modified Design

ITEM NO.	COMPONENT	HAZARD PER HOUR OR PER CYCLE $\times 10^6$	OPERATING TIME, HOURS OR CYCLES	HAZARD PER MISSION $\times 10^6$	RESULTS $\times 10^6$
1-A	Oxygen Tank - Leakage	5	336	1680	
2-A	Tank Valve - Squib Operation	100	1	100	
	- Leakage	5	336	1680	
4-A	High Pressure Regulator - Malfunction	20	336	6720	
	I - Sum of Above				10,180
	This is hazard that oxygen will not be available through Valve 4-A				
5-A	Manifold Duct - Leakage	4	336	1344	
6-A	Low Pressure Regulator - Non Fail-Safe	5	336	1680	
7-A	Shutoff Valve - Leakage	5	336	1680	
9-A	Control Valve, Water Separator - Non Fail-Safe	5	336	1680	
	II - Sum of Above				6,384
	This is hazard that there will be a defect in Manifold 5-A or in one of its downstream valves which will make it impossible to hold pressure in the manifold				
7-A	Shutoff Valve - Squib Operation	100	1	100	
	- Leakage	5	24	120	
8-A	Low Pressure Regulator - Malfunction	20	24	480	
	III - Sum of Above				700
	This hazard that emergency oxygen will not pass through 7-A and 8-A when needed				
	IV - Sum of I, II and III				17,264
	This is hazard that emergency oxygen will not be available through Circuit A				

Table 12. Reliability of Emergency Oxygen Supply Modified Design (Cont)

ITEM NO.	COMPONENT	HAZARD PER HOUR OR PER CYCLE $\times 10^6$	OPERATING TIME, HOURS OR CYCLES	HAZARD PER MISSION $\times 10^6$	RESULTS $\times 10^6$
1-B	Oxygen Tank - Leakage	5	336	1680	
2-B	Tank Valve - Squib Operation	100	1	100	
	- Leakage	5	336	1680	
4-B	High Pressure Regulator - Malfunction	20	24	480	
	V - Sum of Above				3,940
	This is hazard that oxygen will not be available through Valve 4-B				
5-B	Manifold Duct - Leakage	4	24	96	
6-B	Low Pressure Regulator - Non Fail-Safe	5	24	120	
7-B	Shutoff Valve - Leakage	5	24	120	
9-B	Control Valve Water Separator - Non Fail-Safe	5	24	120	
	VI - Sum of Above				456
	This is hazard that there will be a defect in Manifold 5-B or in one of its downstream valves which will make it impossible to hold pressure in the manifold				
7-B	Shutoff Valve - Squib Operation	100	1	100	
	- Leakage	5	24	120	
8-B	Low Pressure Regulator - Malfunction	20	24	480	
	VII - Sum of Above				700
	This is hazard that emergency oxygen will not pass through 7-B and 8-B when needed				

Table 12. Reliability of Emergency Oxygen Supply Modified Design (Cont)

ITEM NO.	COMPONENT	HAZARD PER HOUR OR PER CYCLE $\times 10^6$	OPERATING TIME, HOURS OR CYCLES	HAZARD PER MISSION $\times 10^6$	RESULTS $\times 10^6$
	VIII - Sum of V, VI and VII				5,096
	This is hazard that emergency oxygen will not be available through Circuit B				
	IX - Product of IV and VIII				88
	This is hazard that emergency oxygen will not be available through Circuit A or Circuit B				
	Equivalent Mission Reliability = 0.9999				

Table 13. Summary of the More Promising Atmosphere Composition Sensors

GAS	SENSOR TYPE	WEIGHT (LB)	VOLUME (IN^3)	POWER (WATTS)	DISADVANTAGES
All	Gas Chromatograph	15-20	1000	1	Requires Temperature Control and Carrier Gas
All	Mass Spectrometer	17-20	1200	15	Limited Resolution; May Require Maintenance for Extended Use
Oxygen	Electrochemical-Reduction	0.10	2	0	Limited Life; Requires Replacement of Electrolyte
Oxygen	Electrochemical-Polarizing Cell	0.15	3.5	2	Temperature Sensitive; Requires Replacement of Electrolyte
Carbon Dioxide	Electrochemical	0.15	3.5	2	Limited Life; Requires Replacement of Electrolyte; Requires Humid Atmosphere
Water Vapor	Dewpoint	5-8	800	3-6	Requires Cryogenic Source
Water Vapor	Hygroscopic Film Resistance Change	0.5-1.5	25-50		Requires Recalibration; Temperature Sensitive

3 THERMAL CONTROL

3.1 CONCEPT. The thermal control system will provide livable thermal environment within the Apollo vehicle during all anticipated flight conditions. A schematic diagram of the system is shown in Figure 10.

Sources of heat include personnel, equipment, and external heating effects such as aerodynamic and space heatings. The crew generate an average of 1440 BTU/hr, of which 800 BTU/hr is latent heat. A maximum of 9600 BTU/hr is normally generated by the equipment. The cabin walls have been designed such that a maximum of 2000 BTU is absorbed by the outer skin during the actual aerodynamic re-entry time. The walls are also capable of dissipating 3200 BTU/hr of internal heat during space flight.

The thermostructure, a water boiler, and a space radiator constitute the vehicle's heat sinks. Special emissivity coatings on the outer skin, coupled with an average air velocity movement of about 200 ft/min enable the vehicle to emit 3200 BTU/hr of internally generated heat during space flight. The remainder of the internal heat loads is emitted by a space radiator. A water boiler, located in the command module, operates as a heat sink during the launch and re-entry phases of the mission. It is also capable of cooling the entire vehicle, in case of emergency shutdown of the space radiator. This capability is time-limited by the quantity of water on board, having a minimum value of 88 hours if all heat sources remain operating. It is greater if equipment is shut down.

Two fluids (a 60% aqueous ethylene glycol solution and air) are utilized as heat transport media between the heat sources and sinks. The glycol solution circulates in the water boiler, the space radiator, the equipment's cold plates and the heat exchangers. Air is cooled in heat exchangers and then circulated to cool the personnel and some of the equipment. Air is circulated in a closed circuit over the air-cooled equipment in order to ensure continuous operation of equipment in case of cabin decompression.

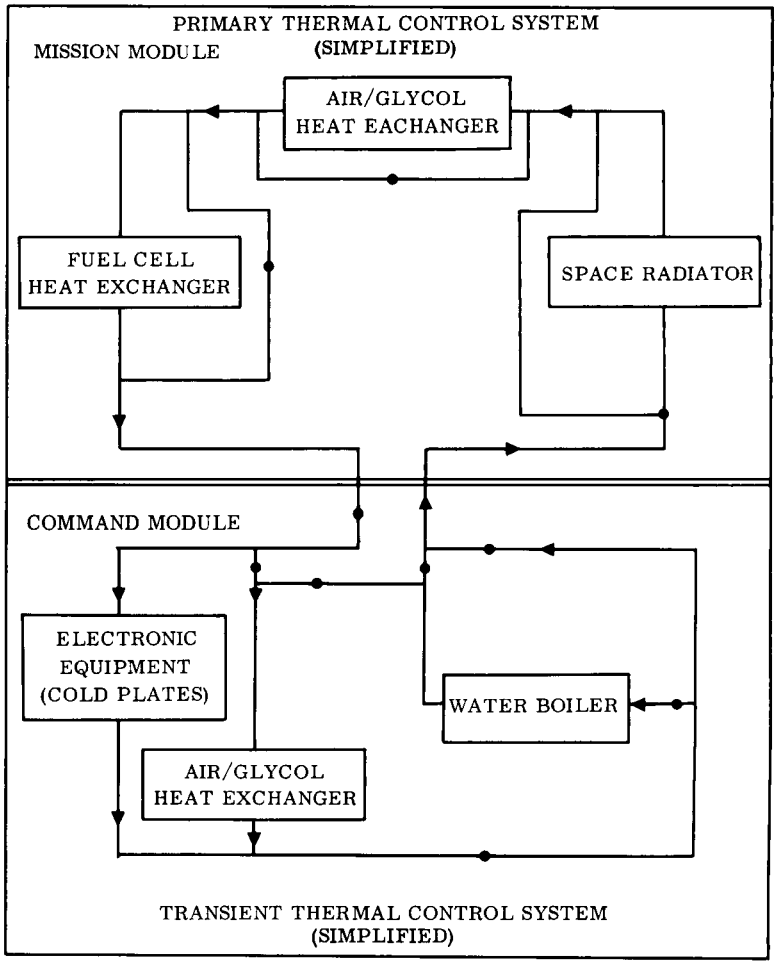

Figure 10. Thermal Control System Schematic

3.2 TRANSIENT THERMAL CONTROL

3.2.1 Heat Loads

3.2.1.1 Launch Heat Loads. The estimated internal heat loads encountered within the vehicle during the launch phase are as follows:

Command Module Heat Loads:

Electronic Equipment	3750 BTU/hr

Command Console Equipment		684 BTU/hr
Environmental Control		684 BTU/hr
Lights		102 BTU/hr
Personnel Sensible Heat Load		660 BTU/hr
Personnel Latent Heat Load		990 BTU/hr
	Total	6870 BTU/hr

Mission Module Heat Loads:

Aerodynamic Heating Effects	1000 BTU (Total)
(Estimated over a period of 15 minutes.)	
Fuel Cell Heat Load	2250 BTU/hr
Electronic and Electrical Equipment	340 BTU/hr

3.2.1.2 Re-entry Heat Loads. The following are the estimated maximum heat loads to be experienced within the command module during re-entry into the earth's atmosphere and will thus constitute the design cooling load:

Electronic Equipment		4040 BTU/hr
Command Console Equipment		684 BTU/hr
Environmental Control		342 BTU/hr
	Plus	171 BTU/over a 15-minute period
Lights		102 BTU/hr
Batteries Heat Load		614 BTU/hr
Aerodynamic Heating Effect		(*)2000 BTU
Personnel Sensible Heat Load		660 BTU/hr
Personnel Latent Heat Load		990 BTU/hr
Total maximum load over 15-minute period		4070 BTU

(*) Total heat dissipated through the walls, over 750 seconds for 10% lifting undershoot trajectory, or over 250 seconds for a ballistic overshoot entry trajectory.

3.2.1.3 Prelaunch Heat Loads. Ground heat loads encountered within the Apollo vehicle are estimated to be identical to the launch heat loads, with the exception of the addition of an estimated ground atmospheric load of about 10,000 BTU/hr and the deletion of the aerodynamic heating effect. Hence, a total of 6870 BTU/hr in the command module and 12,590 BTU/hr in the mission module will constitute the ground heat loads.

3.2.2 Description of Equipment. The overall thermal control system is shown schematically in Figure 10. During the launch phase the transient environmental control system, located in the command module, will be in operation. Ethylene glycol solution, chosen as the heat transport fluid, is cooled in the water boiler and then circulated into the air/glycol heat exchanger which, in turn, cools the personnel and the gas-cooled equipment in the command module. Part of the glycol solution is diverted to the mission module, into the primary system air/glycol heat exchanger to cool the mission module equipment, and then into the fuel cell heat exchanger. It is then routed to the command module and circulated into the liquid-cooled equipment cold plates before it returns to the water boiler.

3.2.3 System Selection. The transient thermal control system was selected to maintain reasonable, livable temperatures in the command module during the launch and re-entry phases, when the personnel are confined to it. It is also capable of cooling the entire vehicle in case of a primary system breakdown, for periods up to 45 hours, during space flight conditions. Selection of the transient system was based on trade-offs between insulations and active thermal control systems.

Different transient thermal control systems were evaluated. However, since no heat sinks are available during aerodynamic heating periods, only expendable coolant units were considered. A comparison between cryogenic coolant units, utilizing hydrogen, and water evaporative systems is shown schematically in Figure 11 for an average cooling load of 2.0 thermal KW. These studies led to the choice of a water boiler as a heat sink for the secondary thermal control system. Bases for selection include the reduced weight penalty of a water boiler, and the possibility of utilizing waste water in cases of emergency. The danger of hydrogen leakage, associated with cryogenic coolant units, was also considered.

3.2.3.1 Cryogenic Cooling Unit Evaluation. Cryogenic cooling units, utilizing liquid hydrogen, were evaluated for a cooling capacity range of 1 to 10 thermal KW. The heat exchanger in which the air is cooled was chosen to be a cross-flow shell-and-tube type. Hydrogen was allowed to flow in double-walled tubes in which helium, at a higher pressure, was placed as a stationary intermediate medium between the two tube walls.

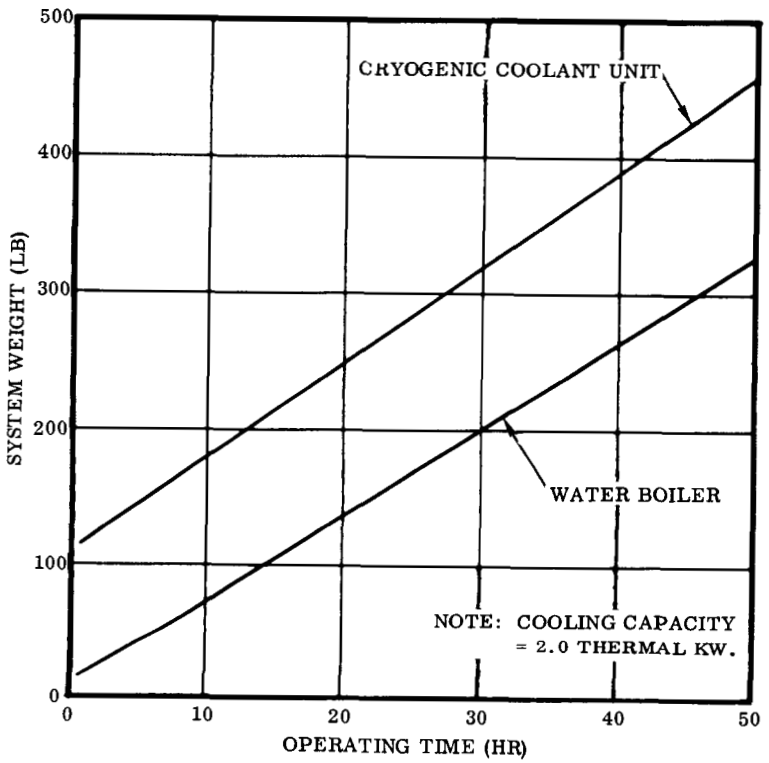

Figure 11. Secondary Thermal Control System Weight vs. Operating Time

This technique was considered to give a highly flexible system and to provide a measure of safety against hydrogen leakage. Another advantage of this system is that it requires no low-temperature pump to circulate the helium.

Air was assumed to be cooled from 660°R to 525°R. Aluminum tubes were used, with 0.50-inch O.D. for helium and 0.375-inch O.D. for hydrogen. The heat transfer coefficient on the hydrogen side was computed assuming turbulent flow. Conductivities for the double wall were computed for various rates of flow. Overall conductance values, based on boiler and superheater sections were then calculated.

Table 14 shows, parametrically, the operational characteristics of the cryogenic coolant units.

Table 14. Cryogenic Coolant Unit Evaluation

HEAT LOAD (KW_t)	TOTAL TUBE LENGTH (FT)	HYDROGEN FLOW (LB/HR)	VOLUME OF HEAT EXCHANGER (CU FT)	AIRFLOW (LB/HR)
1	20.1	1.91	0.052	105.3
5	83.4	9.55	0.218	506.5
10	161.4	19.1	0.42	1053

3.2.3.2 Water Boiler Evaluations. An optimization study for the design of a water boiler was also conducted, assuming a range from 1 to 10 thermal KW.

Rohsenow's correlation of film conductance of boiling water was employed. This was coupled with more recent experimental data to determine the heat transfer coefficients. It was assumed that the prevailing mode of boiling would be nucleate. Two cases of air cooling were assumed. In the first, air was cooled from 200°F to 65°F, while in the second, air was cooled from 155°F to 60°F. Air was assumed to enter the unit at 14.7 psia, water inlet temperature was assumed to be 50°F, and superheated water vapor outlet temperature was about 100°F. The water boiler was assumed to be of the shell-and-tube type with aluminum tubes of 0.37-inch I.D. and 0.384-inch O.D.

Pressure drops, amount of heat transfer, heat transfer areas, and length and number of tubes were all computed with varying Reynolds number as a common parameter. Two simultaneous solutions for the total number of tubes gave the total number of tubes and the operating Reynolds number. Knowing the Reynolds number, the remaining characteristics of the water boiler were determined.

A superheater section was added to the water boiler to prevent the possibility of ice formation near the outlet duct. Calculations showed that the required steam flow was rather insensitive to the amount of superheat. Further, very little air cooling was produced in the superheater. Thus, a minimum amount of superheat was considered, since any saving in water requirements from increasing the superheat section would be offset by the increased weight of the superheater. The superheater configuration was identical to that of the water boiler. Table 15 shows the cooling effect of the superheater section due to changing the superheat temperature.

Table 15. Cooling Effect of Superheater Section (Air Inlet Temperature to Boiler = 200°F)

STEAM OUTLET TEMP (°F)	FLOW RATE OF STEAM (LB/HR/KW_t)	BOILER HEAT TRANSFER (BTU/HR/KW_t)	AIR TEMP DROP IN BOILER (°F)	AIR TEMP DROP IN SUPER-HEATER (°F)
100	3.15	3350	132.5	2.5
140	3.10	3290	130.4	4.6
190	3.04	3230	127.8	7.2

Results of water boiler analysis are given in Tables 16 and 17 for two different cases of cooling.

Table 16. Water Boiler Analysis (Air Inlet Temperature = 200°F; Air Outlet Temperature = 65°F)

Cooling Load (KW)	1	3	5	10
Total No. of Tubes	6	9	30	61
Length of Tubes (Ft)	8.1	8.02	8.5	8.1
Total Outside Area (Sq Ft)	4.97	15.2	25.5	49.7
Air Flow (Lb/Hr)	105.3	315.2	526.5	1053
Steam Flow (Lb/Hr)	3.15	9.45	15.75	31.5
Boiler and Superheater Weight (Lb)	0.5	3.1	5.1	10.0

Table 17. Water Boiler Analysis (Air Inlet Temperature = 155°F; Air Outlet Temperature = 60°F)

Cooling Load (KW)	1	3	5	10
Total No. of Tubes	10	30	49	98
Length of Tubes (Ft)	6.9	6.9	6.9	6.9
Total Surface Area of Tubes (Sq Ft)	6.93	20.8	34.0	67.9
Air Flow (Lb/Hr)	151	453	755	1510
Steam Flow (Lb/Hr)	3.2	9.6	16.0	32
Boiler and Superheater Weight (Lb)	1.4	4.2	6.8	13.6

3.3 PRIMARY THERMAL CONTROL SYSTEM

3.3.1 Internal Cooling Requirement. Design conditions for the thermal control system are dictated by accurate prediction of the thermal loads in the mission and command modules. These loads are due both to internal and external heating effects. The vehicle walls are designed in such a manner that a net heat load of 3200 BTU/hr will be dissipated through the skin and radiated to space. Internally generated heat loads are due to the personnel and electrical and electronic equipment. The metabolic heat dissipated by the personnel will depend largely on their level of activity and on their physiological conditions throughout the mission. The design metabolic heat load was taken as 640 BTU/hr of sensible heat and 800 BTU/hr of latent heat. The equipment heat loads during the coast and lunar-vicinity phases of the mission are estimated as follows:

Electrical Equipment	4040 BTU/hr
Command Console Equipment	683 BTU/hr
Lights	307 BTU/hr
Environmental Control	1318 BTU/hr
Fuel Cell Heat Load	2730 BTU/hr
Experiments and Measurement	512 BTU/hr
Total	9580 BTU/hr

3.3.2 Description of Equipment. The primary thermal control system will maintain normal sea-level thermal environment within both modules of the vehicle during the space-flight phases of the mission. The heat transport fluid, after being cooled in the space radiator, is circulated through the air/glycol heat exchanger and the fuel cell heat exchanger. It is then routed to cool the liquid-cooled equipment in the command module before returning to the space radiator.

3.3.2.1 Ethylene Glycol Distribution. During normal space flight design conditions, about 120 lb/hr of 60% aqueous ethylene glycol solution will be circulated within the system. The glycol solution will leave the radiator at about 35°F and return at 115°F.

3.3.2.2 Air Distribution. A minimum of air (5 lb/min), circulated throughout the vehicle, will be used to cool the equipment in the mission module as well as the air-cooled equipment in the command module. Air will be cooled to a dew point temperature of 45°F. It will then be reheated, by passing it over some of the mission module electrical equipment, to 60°F and a relative humidity of about 57%. After circulating in the mission module, the air is ducted to the command module to cool the air-cooled equipment and the personnel present there. Considering the heat dissipation of 3200 BTU/hr by the cabin walls, it is estimated that air will be returned to the heat exchanger at a maximum temperature of about 87°F and 40% relative humidity.

3.3.3 Heat Transport Fluid Study. A heat transport fluid study was conducted to determine the optimum transport fluid for the thermal control circuit. Quantitative thermodynamic comparison criteria were established for a number of fluids. Qualitative nonthermodynamic factors such as toxicity, explosiveness, corrosiveness, and logistics were also considered in the selection of an optimum fluid.

The method used was to solve simultaneously McAdam's forced convection heat transfer equation, and Darcy's relation for pressure drop. In the latter the friction was computed as:

$$f = 64\, N_{Re}^{-1} \quad \text{for } 0 < N_{Re} < 2100,$$

and

$$f = 0.184\, N_{Re}^{-0.2} \quad \text{for } 2100 < N_{Re} < 200{,}000.$$

After substitutions, it was found out that the pumping power can be expressed as:*

$$P = \text{const.} \times \left(\frac{D^{0.2}}{pL}\right)^{2.5} \frac{\mu^{1.6}}{\rho^2 c_p^{1.4} k^{2.1}} \left(\frac{Q}{\Delta T}\right)^{3.5}$$

It is possible from this equation to compare fluids and geometries for a given heat transfer rate pre degree temperature difference. If a specific fluid is chosen the term $\left(\frac{D^{0.2}}{pL}\right)^{2.5}$ has to be minimized; however, the Reynolds number has to be kept within the limits of validity for the friction coefficient equation. On the other hand, when $\frac{Q}{\Delta T}$ is given for a chosen geometry, the parameter

$$\frac{\mu^{1.6}}{\rho^2 c_p^{1.4} k^{2.1}}$$

gives an indication of preference as to the desirability in using various heat transfer fluids.

In order to show the results in the simplest possible way, nitrogen gas was chosen as the basis of comparison. The properties of nitrogen gas were evaluated at standard temperature and pressure (59°F and 14.7 psi). The comparison parameter then becomes:

$$\frac{P}{P_{N_2}} \propto \frac{\mu^{1.6}}{\rho^2 c_p^{1.4} k^{2.1}}$$

The results of these computations are shown in Table 5. The effect of gas density is quite apparent from the above equation. The gas pressure should be as high as possible to provide efficient heat transfer. The pressure drop in the ducting connecting the heat exchanger and the space radiator can be expressed as

$$\Delta P = \Sigma \left\{ f \times \frac{L}{D} \right\} \times \frac{\rho V^2}{2g}$$

(*) See nomenclature at end of section.

and the corresponding power loss is given by

$$P = \Sigma \left\{ f \times \frac{L}{D} \right\} \frac{\dot{m}V^2}{2g}$$

As the mass flow rate is more or less defined by the heat exchanger characteristics, it is quite obvious that the only way to minimize the power loss in the ducting is to reduce velocity. This can be accomplished by giving the ducts the largest cross-section and to increase the hydraulic diameter as much as possible. Other considerations of importance in selecting the best possible heat transport fluid for the present application are system weight, safety and availability factors, and compatibility with system components. These criteria were selected, after an extensive literature survey, and are listed in Table 18.

Based on the comparison between the various substances, it has been concluded that aqueous ethylene glycol solution constitutes the best possible choice and was consequently selected as the heat transport fluid for the Thermal Control System.

Nomenclature:

Q = Thermal Energy Transferred

h = coefficient of convection heat transfer

A = area

D = diameter

Table 18. Heat Transport Fluid Comparison

SUBSTANCE	PUMPING POWER AT 14.7 PSIA, 62°F	RELATIVE RANK WEIGHT BASIS	SAFETY	CORROSIVENESS	LOGISTICS
Nitrogen	1	8	Good	Acceptable	Fair
Hydrogen	0.0281	3	Explosive	Acceptable	Poor
Helium	0.1534	5	Good	Acceptable	Poor
Oxygen	1.056	-	Good	Acceptable	Fair
Air	0.9953	7	Good	Acceptable	Fair
Argon	4.169	9	Good	Acceptable	Poor
Carbon Dioxide	1.0206	6	Good	Acceptable	Fair
Ammonia	0.495	4	Toxic	Acceptable for Short Duration	Good
Glycol*	2.34×10^{-7}	1	Good	Acceptable for Short Duration	Excellent
Freon-12	1.42×10^{-3}	2	Good	Acceptable	Fair

(*) 60% aqueous ethylene glycol solution.

k = thermal conductivity

N_{Re} = Reynolds number

N_{Pr} = Prandtl number

V = velocity

ρ = density

c_p = specific heat

μ = viscosity

p = perimeter

L = length

f = friction coefficient

$\dot{m}$ = mass flow rate

P = pumping power

g = gravity factor

ΔP_p = pressure drop

ΔT = temperature differential

3.3.4 Electronic Equipment Cooling. Provisions have been made to insure proper thermal environment for the electronic equipment during all flight modes including such emergency conditions as cabin decompression. Ethylene glycol solution is circulated within cold plates to cool the high heat generating equipment such as the guidance platform and computer, the inertial reference backup, and the command module autopilot. The glycol solution will be available at about 85°F and will have a maximum temperature rise of 30°F before returning to the heat sink. Other equipment in the command module is gas-cooled by return air from the environmental control system. A temperature less than 90°F will be normally maintained. This air is ducted through a closed circuit and is thus unaffected by the loss of cabin atmosphere in the event of decompression. It is anticipated that environmental control air will be circulated at about 5 psia in case of a cabin decompression and, hence, the electronic equipment consoles and ducts are to be designed to withstand such a pressure differential.

The electronic equipment in the mission module dissipates less than 90 watts and will be cooled with the same air as the personnel. It is not anticipated that this equipment will be overheated in case of cabin decompression in space.

3.3.5 System Performance. The primary Thermal Control System is capable of cooling the men and equipment in the Apollo vehicle during all anticipated space flight conditions. The primary system was designed to operate with either the space radiator or the water boiler acting as a heat sink. The radiator and the water boiler may also be run in tandem. The system is also capable of cooling the entire vehicle, with the personnel located in either module or confined to the command module in case of decompression of the mission module. Different modes of system operation can be followed diagrammatically on Figure 10. Air is delivered to the crew at 60°F in all cases to provide a maximum degree of comfort.

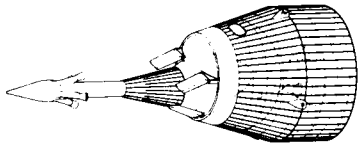

4 FOOD, WATER AND WASTE MANAGEMENT

4.1 INTRODUCTION. The life support areas covered in this report are 1) waste management, 2) personal hygiene, 3) food management, 4) water management, and 5) cabin sanitation. The design, location, and integration of the life support systems detailed in this report have been developed under the following criteria:

a. Optimum use of available space.

b. Minimum energy and weight requirements.

c. Maximum reliability.

d. Ease of operation and maintenance in the mission environment.

e. Equipment and applications which are not offensive to crewmen so as not to affect their performance efficiency.

f. Adaptability under emergency conditions.

g. Pleasant and familiar appearance.

Since weight, volume, and power are at a very high premium in this module, only the most basic essentials required for life support are being considered. The total of 12.4 pounds of dehydrated food and 45 pounds of water allowed will occupy 0.7 and 1.25 cubic feet, respectively. Waste collection will be by means of plastic bags similar in design to those employed in the mission module. Feces may be collected by a lightweight collection unit or a collection device may be integrated with the space suit. Following completion of the launch phase of the mission, or following brief periods while the vehicle is in orbit, the waste may be transferred to the waste storage area in the mission module. After re-entry, the wastes may either be stored in containers having a disinfectant or be discharged overboard.

4.2 FACILITIES ARRANGEMENT

4.2.1 Waste Collection Facilities. The toilet hardware will be located in Area A as illustrated in Figure 12 and will include the following items shown in Figure 13:

Waste collector (9)

Urine water recovery unit and storage tank (10)

Urine water recovery unit control panel (11)

Urine storage tank receptacle (12)

Small freezer containing one compartmented fecal storage drawer (13)

Containers for individual, reusable urine bags or bladders (14)

Fecal bag dispenser (15)

Vomit bag dispenser (16)

Toilet tissue dispenser (17)

The arrangement hygienically segregates food preparation from waste collection facilities, and allows crewmen to perform daily elimination in relative privacy. The water recovery unit and urine storage tank are placed together for convenience. Urine can easily be transferred or "stripped" from the urine collection bladder into the nearby urine storage tank. If it becomes necessary to use the water recovery unit, this location separates the deposit of urine from the source of potable water, thereby rendering the system more acceptable to the crewmen.

The personal urine bladders will be stored in sanitary drawers that contain disinfectant. Each drawer will be capable of containing five bladders, thereby allowing one bag per man per three days. Bags will be reused several times by the same crew member after emptying.

The fecal storage drawer and freezer are included as part of a "deluxe" storage system. The five-day fecal storage drawer is located in the waste collection area, thus eliminating the need to hand-carry fecal bags to another area of the compartment for deposit in the food storage freezer. Since it will be necessary to integrate food and feces storage due to space conservation, this drawer will be transferred when full to the main freezer for permanent storage and will be replaced by a drawer made empty by food consumption. This procedure will be inoffensive as the contents will be covered and frozen. If energy limitations prohibit division of the main freezer, the separate drawer in the waste collection area may be eliminated and an additional drawer included in the main freezer. Three drawers will contain the food supply for the 14-day mission; the fourth

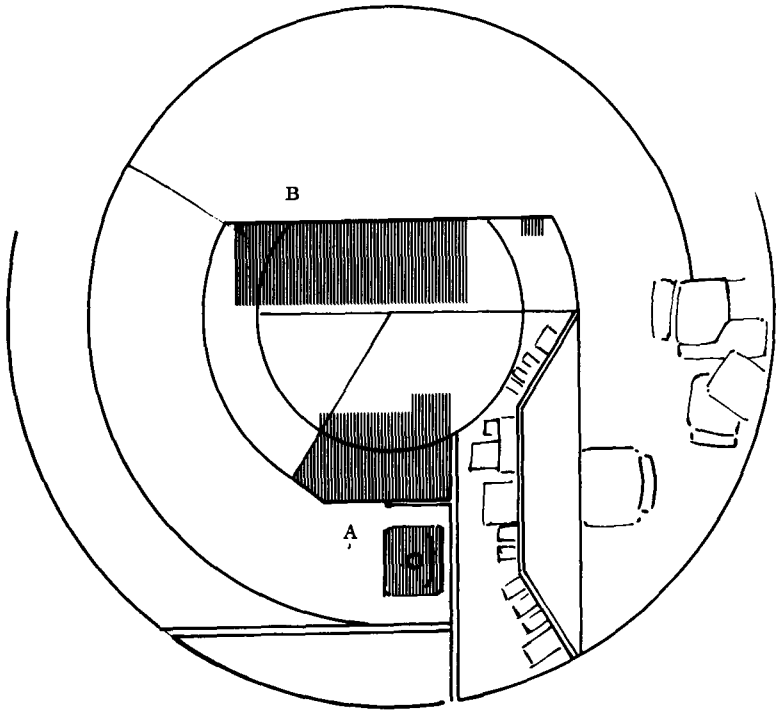

Figure 12. Location of Food, Bath, and Waste Collection Areas

drawer will be used to store fecal bags for the first five days. Crewmen will be required to make their deposit after each elimination. The remaining drawers will be used in turn as they are emptied of their food supply.

The toilet tissue, fecal bag dispenser, and vomit bags will be easily accessible to the feces collection unit.

4.2.2 Food Preparation Facilities. Food preparation will be conducted in Area B (Figure 12). Equipment in this area, as itemized in Figure 14 will include:

Water dispensers, hot and cold, with hand pumps (1)

Hot plate food warmer (2)

Paper napkin dispenser (3)

Hinged, magnetic countertop (4)

One-gallon hot water heater - storage (5)

Drinking water container/dispenser (6)

Compartment for two-day storage of defrosting and defrosted food (7)

Two-gallon cold water storage (8)

Refuse freezer (9)

Food and feces freezer (10)

Emergency vacuum cleaner (11)

The food/feces/refuse freezer is located in convenient proximity to the food preparation counter. The food freezer contains three drawers (20 in. × 16 in. × 4 in.), each drawer being divided into sixteen compartments (4 in. × 4 in. × 5 in.), as shown in Figure 15, Item 1, and having a five-day food capacity. The fourth drawer is located in the waste collection area. The first drawer will be emptied of food in three days and will be removed and replaced on the fifth day with the filled fecal drawer. Thus there will be a two-day safety lag between the consumption of food from one drawer and its transfer for fecal storage purposes. At the start of the mission the food/feces locker will contain 13 days' supply of dry and hydrated food. One drawer will contain a three-day, and each of the remaining two drawers will contain a five-day, food supply.

The first day's food supply for three men will be located in the defrost drawer (Item 7 of Figure 14). This drawer is provided for the defrosting and storage of two days' rations for three men. Once each day throughout the mission, rations for the crew for one day will be removed from the food/feces freezer and placed in this drawer to be defrosted for the following day's consumption. It will also contain the food to be consumed for the current day.

The refuse disposal drawer (Item 2, Figure 15) will be adjacent to the food drawers in the freezer and will roll out like a file drawer. This disposal drawer has a net volume of 1.33 cubic feet (12 in. × 12 in. × 16 in.) which will be used for the storage of soiled bath and food wipers, empty food and water bags, (Figure 16) miscellaneous packages, cabin clutter, and vomit bags in case the feces storage is filled.

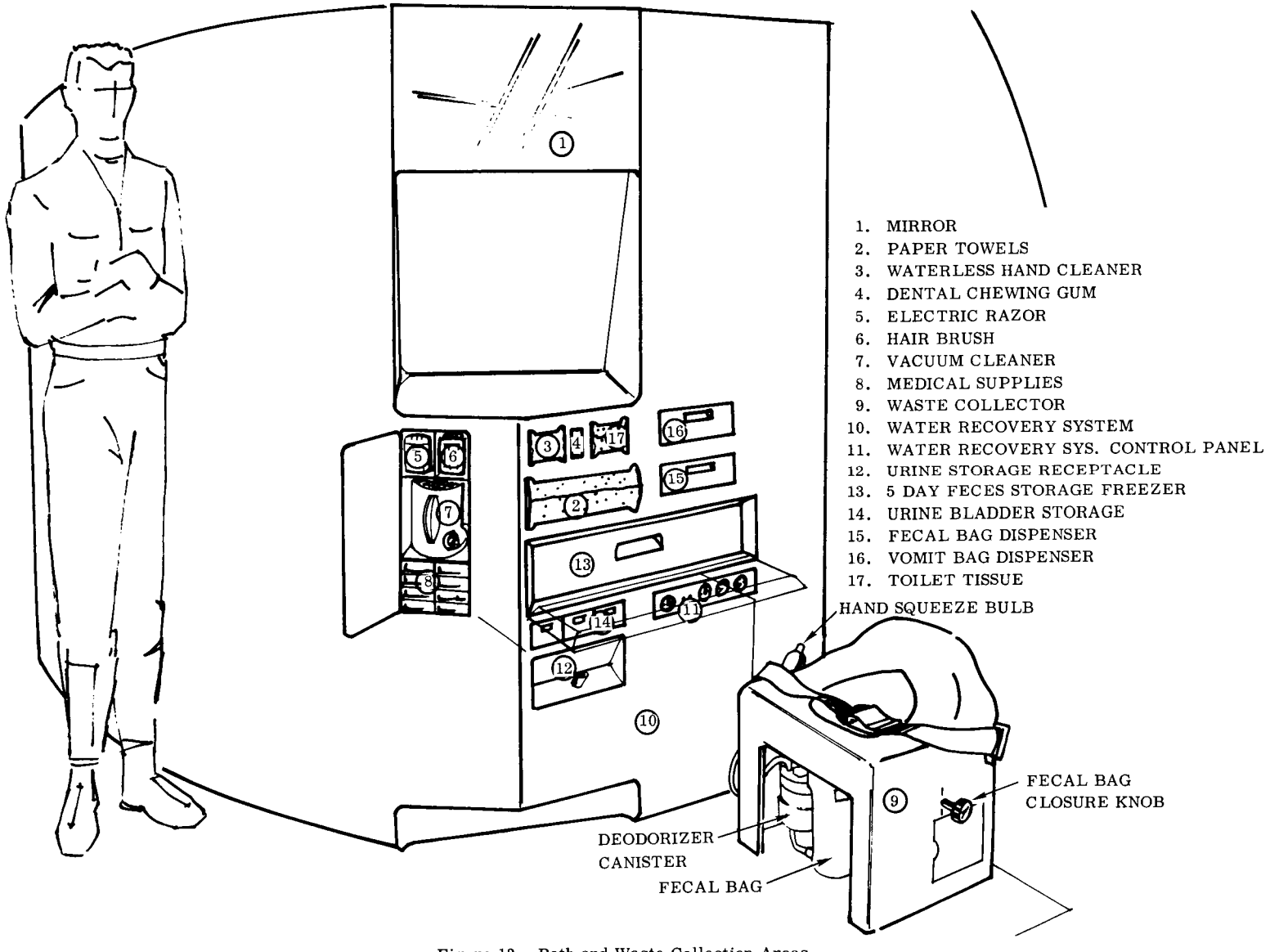

Figure 13. Bath and Waste Collection Areas

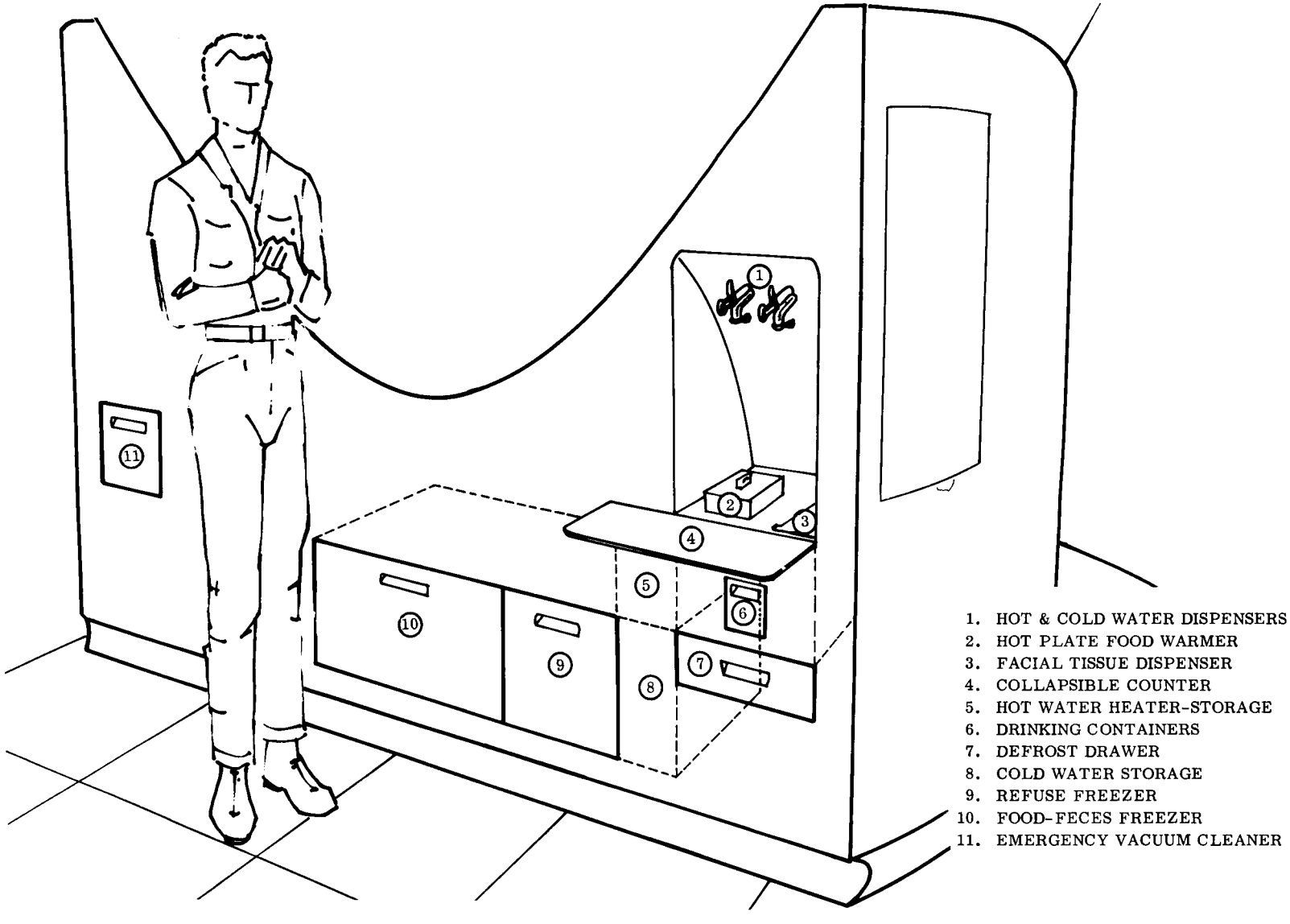

Figure 14. Food Preparation Area

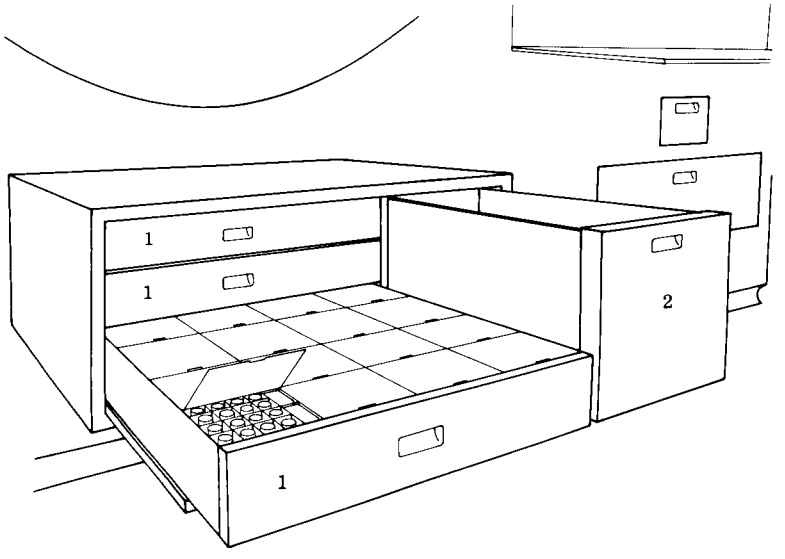

Figure 15. Food/Feces/Refuse Freezer

The hot and cold water dispensers with their component hand pumps are located above the food preparation counter (Figures 14 and 17). Each dispenser is equipped with a valve and pump that are used to recirculate the water in the line to obtain instant hot or cold water. The dispenser pumps are hypodermic type for easy operation under zero gravity. The nozzle of each dispenser will be designed to receive the plastic nozzle of the water and food containers with a positive snap connection. A valve will be located at the mouth of the dispenser to eliminate leakage after disconnection of food bags.

The cold water storage tank is located adjacent to the food freezer so that water can be chilled by reducing the wall insulation between the two units. Light non-lint facial napkins (Item 3, Figure 14) are available for use as handkerchiefs and as wipes for meals. The 336 napkins (8 per man per day) occupy 0.25 cubic feet. Figure 14, Item 2 shows the tentative location of the food warmer which may be provided as an optional feature. A folding shelf (figure 14, Item 4) is provided for convenience. This shelf will be either light metal or reinforced plastic, magnetically charged to hold food containers which will have two metal staples attached for this purpose. If a magnetic charge is not permissible because of interference with instrumentation, each bag will have an adhesive tab to anchor it.

4.2.3 Personal Hygiene Area. The following equipment is located in the bath area (Figure 13):

Polished stainless mirror (1)

Heavy duty paper towel dispenser (2)

Waterless skin cleaner dispenser (3)

Dental gum dispenser (4)

Electric razor (5)

Community hair brush (6)

Vacuum cleaner (7)

Medicine cabinet (8)

If permissible, a magnetic countertop will be available for convenience while washing.

The heavy paper towels are used for washing and drying hands and face. This 0.5 cubic foot dispenser (Figure 13, Item 2) contains 336 wipes, which allows six per man per day for washing and two per man per day for cleaning up miscellaneous accidental spillage or leakage from instruments. The battery-operated community electric razor in the utility cabinet (Figure 13, Item 5) has a fitting to receive the hose from the vacuum cleaner. The vacuum cleaner (Figure 13, Item 7) is battery-operated, has an automatic hose rewind and is easily accessible for quick collection of spillage in the immediate area. It will be reloaded with replaceable moisture-trap bags which will be stored in the rear of the vacuum cleaner compartment. The hair brush will be supplied if the crewmen do not have their heads shaved and will be for use of the entire crew; it will be attached to the vacuum cleaner during use.

4.3 WATER MANAGEMENT

4.3.1 General. Water-use planning is dominated by the large requirement for radiation shielding as discussed in Volume III, Book 7. This permits the storage of fresh water for shielding at the beginning of a mission, with subsequent consumption of this water by the crew and the substitution of liquid wastes for shielding. Thus, there is normally no requirement for reclaiming potable water from wastes, but an emergency distillation unit is proposed for use in event of accidental loss or contamination of the fresh water supply.

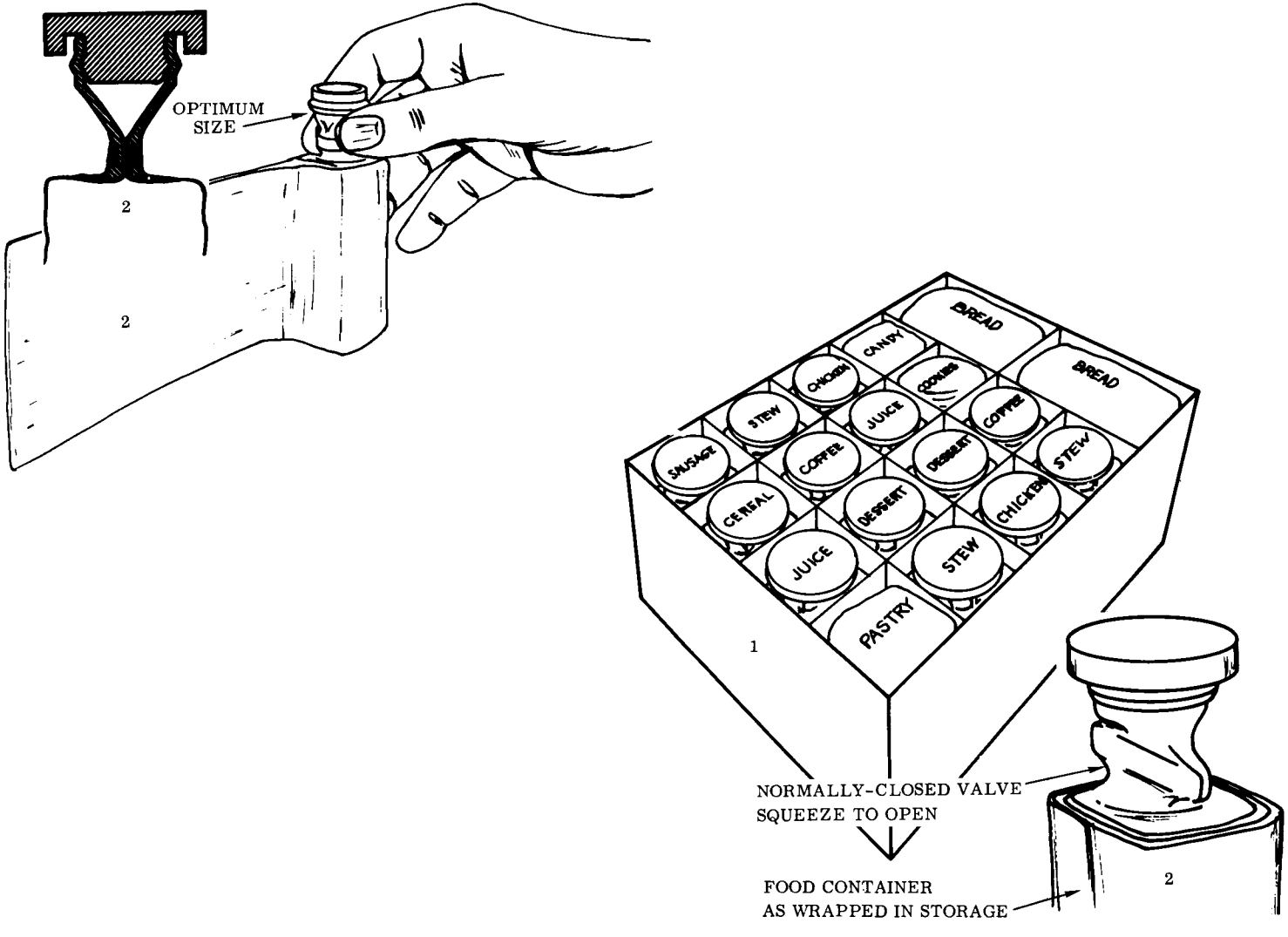

Figure 16. Crushable Food Carton and Water/Food Containers

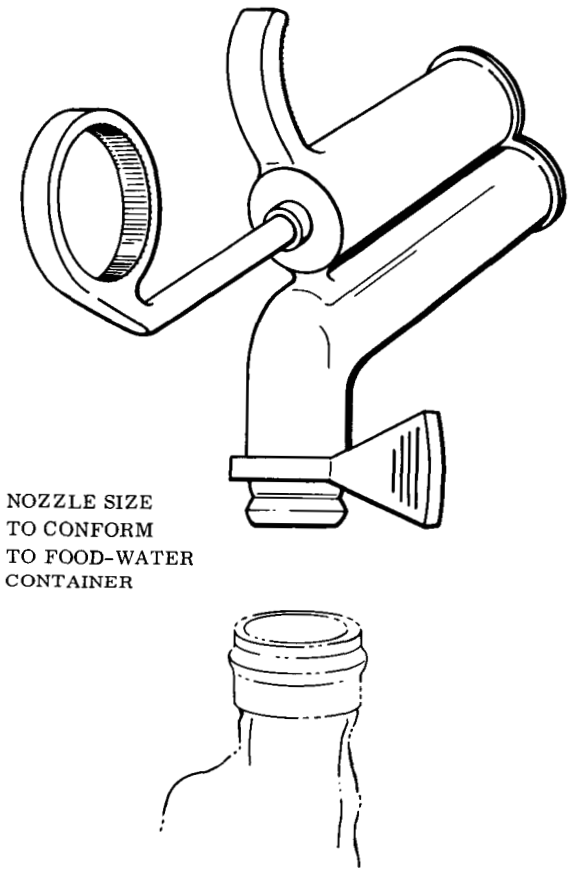

Figure 17. Hot and Cold Water Dispenser

4.3.2 Water Requirements. Other sections of this report discuss various water requirements. A summary follows:

a. Radiation shielding - Minimum 180 lb/man

b. Expendable heat sink - Boost 5 lb
Re-entry 3.5 lb

c. Crew consumption by drinking and preparation of food and beverages - 6.17 lb/man-day

d. Excess crew consumption, first 3 days - 22 lb/man

In Section 4.5 it is proposed that the crew may use cream type cleansers for personal hygiene, so that there is no requirement for wash water, but, since waste wash water is acceptable for radiation shielding, no weight penalty is incurred for this use. A consumption of 6 lb/man-day has been assumed in determining potable water balances.

4.3.3 Water Sources. A fresh water storage capacity of 540 lb is necessary to meet the radiation shielding requirement. Operation of the fuel cell power supply on propellant boiloff will yield a minimum of 153 lb of potable water in the first 3 to 4 days of the mission. Based on the data of Volume III, Book 7, the minimum condensate recovered from the cabin atmosphere humidity control subsystem will be 2.58 lb/man-day, and it, too, is potable. If all of the excess water allowance for the first three days is voided as urine, the total urine for the mission is 232 lb. The waste wash water equals the consumption of 6 lb/man-day.

4.3.4 Water Management Profile. Figure 18 shows the cumulative water availability and water consumption for the four consecutive periods of boost, 14-day mission, re-entry, and 3-day post-landing period. Of primary significance is the net potable water balance, which varies from 540 lb at the beginning of the mission to 218 lb at the end of the mission. Since the radiation shielding requirement terminates upon inbound passage through the Van Allen belts, all liquid waste and the excess potable water may be transferred to the mission module prior to module separation. The minimum water to be saved in the command module will be 59 lb, of which 3.5 lb is for expendable heat sink and 55.5 lb is for a 3-day supply of drinking water. The proposed capacity of the potable water storage vessel in the command module is 70 lb, which provides a modest reserve for either excess re-entry heat loads or for crew consumption after landing.

4.3.5 Water Storage and Transfer. The locations of water storage vessels are determined by considerations of water use during normal and aborted missions. The expendable heat sink requirement during launch is 5 lb, and a re-entry immediately after launch would require an additional 3.5 lb. Thus, the 70-lb capacity of the storage vessel in the command module is more than adequate for this situation. The remaining 470 lb is not needed until after a successful launch, and should not be in the command module during launch because of the possibility of immediate re-entry. These considerations indicate a requirement for initial fresh-water storage of 470 lb in the mission module and 70 lb in the command

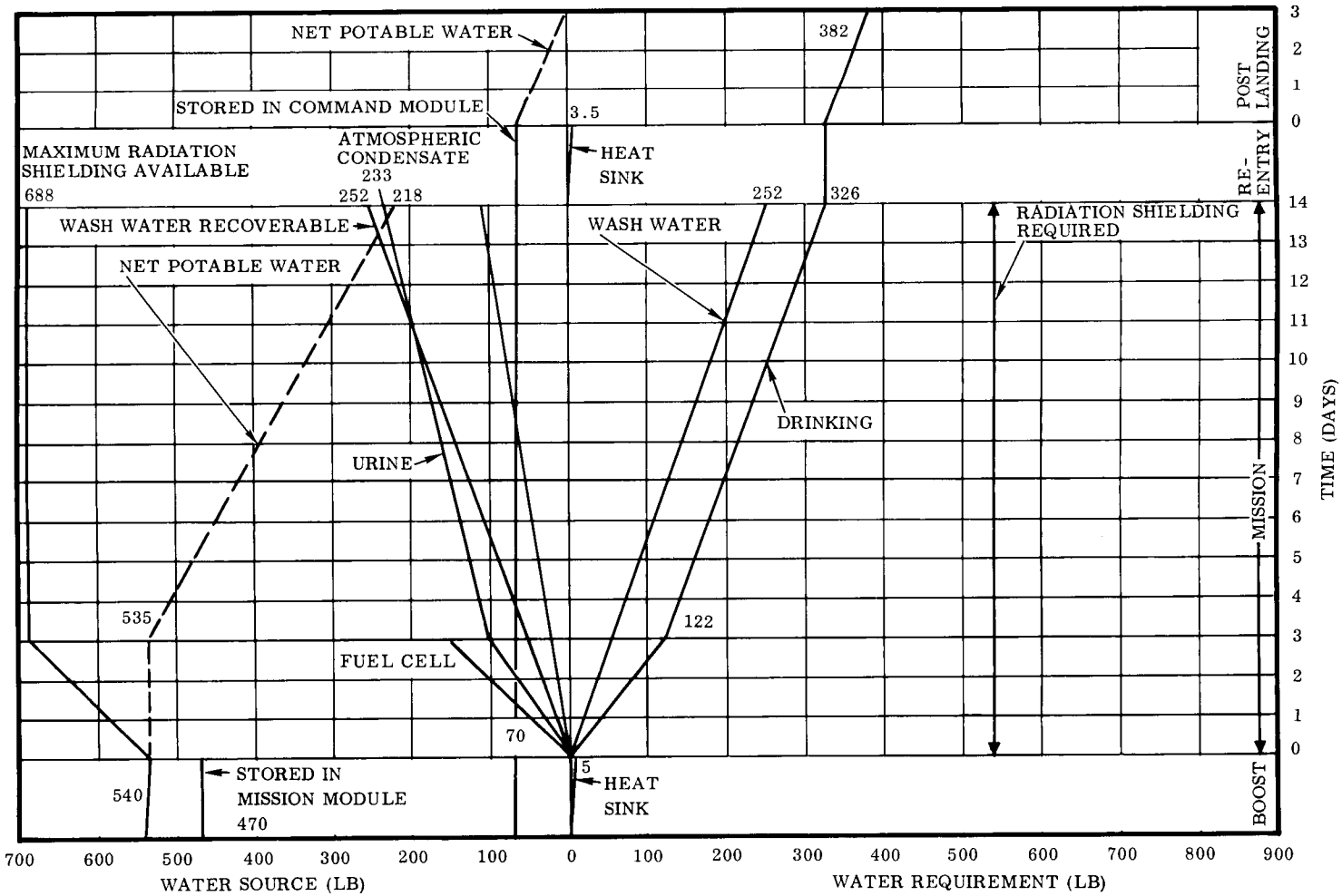

Figure 18. Water Management Program for 14-Day Mission

module, with provision for transferring the entire 540 lb into the radiation shielding garments. The initial consumption of 5 lb as expendable heat sink is partly made up by water produced in the fuel cell power supply and by atmospheric condensate. These quantities, however, are insignificant in comparison with the shielding use and may be disregarded for storage and transfer calculations.

Figure 19 shows a method for transferring water from storage to the radiation shielding garments, and for substituting liquid wastes for potable water in these garments. The garments are initially filled by pumping from the fresh water storage tanks into a manifold which distributes water to the garments. Each of the three garments has 12 to 14 compartments which are connected by internal manifolds to provide three sections of equal capacity per garment. Thus, each section will receive 60 lb of water. Waste water, including urine, is collected in a vessel of 60 lb capacity. Each time this container becomes full, the potable water from one section of a shielding garment is pumped back into a fresh water storage tank and waste water is pumped into the empty garment section. The total liquid on board will increase by the 153 lb of water produced by the fuel cells. By correct pumping procedures, garment sections containing potable water will receive additional potable water, and those containing waste will receive additional waste. At the end of the mission, each garment could have 77 lb per section, or 231 lb per garment.

The only significant power load for pumping is that to initially fill the radiation shielding garments with 540 lb of water. A time limit of 4 minutes has been established. For a Δp of 10 psi the corresponding ideal power is 67 watts, and the expected efficiencies of pump and motor indicate a motor input of about 200 watts. If a radiation hazard requires this rate, it is assumed that some other power-consuming elements will be shut down to make the power available for this brief period. Subsequent transfers of both fresh and waste water involve quantities of 60 lb or less in any batch, and a longer time is acceptable for transfer. A pump of about 20 watts input is adequate for these conditions.

4.3.6 Emergency Modes. If the stored water is accidentally contaminated, or if it is lost through some malfunction, the crew can survive by reclaiming potable water from urine and waste wash water. An emergency distillation unit is proposed for this purpose.

Another emergency of concern in water management is the possible failure of the space radiator subsystem for heat dissipation. Water is then used as an expendable heat sink in the water boiler of the command module, as discussed in Section 3. Water so used is not recoverable and reduces the radiation shielding capability.

4.3.7 Water Recovery. It is assumed that sufficient potable water to supply crew needs will be available from the stored supply and the hydrogen-oxygen fuel cells during normal operation. However, in the event of failure of the primary system, a secondary water system is recommended as backup for the successful completion of the mission.

The secondary source of potable water will be reclaimed water from respiration, perspiration, and urine. Recovery of this waste water is certainly feasible; further developmental work, however, may be necessary to substantially reduce the weight, power, and volume requirements inherent in aerospace missions.

The respiration-perspiration water may be reclaimed directly from the air conditioning equipment and passed through activated charcoal and bacterial filters to make potable water. Two basic systems are being considered for the recovery of water from urine: 1) vapor compression and 2) hot-air centrifugal still. Both units have approximately the same weight and volume. The vapor compression system is unique in that it does not require external cooling and thus can eliminate the use of space radiators. The hot air centrifugal still requires external heating and cooling. However, the quantity of heat extracted from the overall vehicle systems equals the quantity of heat rejected, and therefore this unit does not impose any additional load on the present space radiators.

The two schemes for recovering potable water from urine are discussed in WADD Technical Report 60-243, Water Recovery Systems (Multi-Variable), by H. Wallman and S. M. Barnett. Schemes such as electrodialysis, chemical or physical absorption, etc., have been eliminated for reasons stated in this same reference. The system must be capable of processing approximately 4 lb of urine per man-day which is 12 pounds per day for a three-man crew. In addition, the system must be capable of operating for a period of 14 days and must be able to withstand accelerations from 0 to 9g's. A power weight penalty of 67 pounds per kilowatt is included in the estimated weight of the two schemes. All liquid storage tanks will be of the bladder type in order to separate the gas and liquid phase.

4.3.7.1 Vapor Compression. The estimated weight of the vapor compression still is shown in Table 19.

The total system volume for vapor compression with the design used here is estimated to be approximately 0.75 cubic feet.

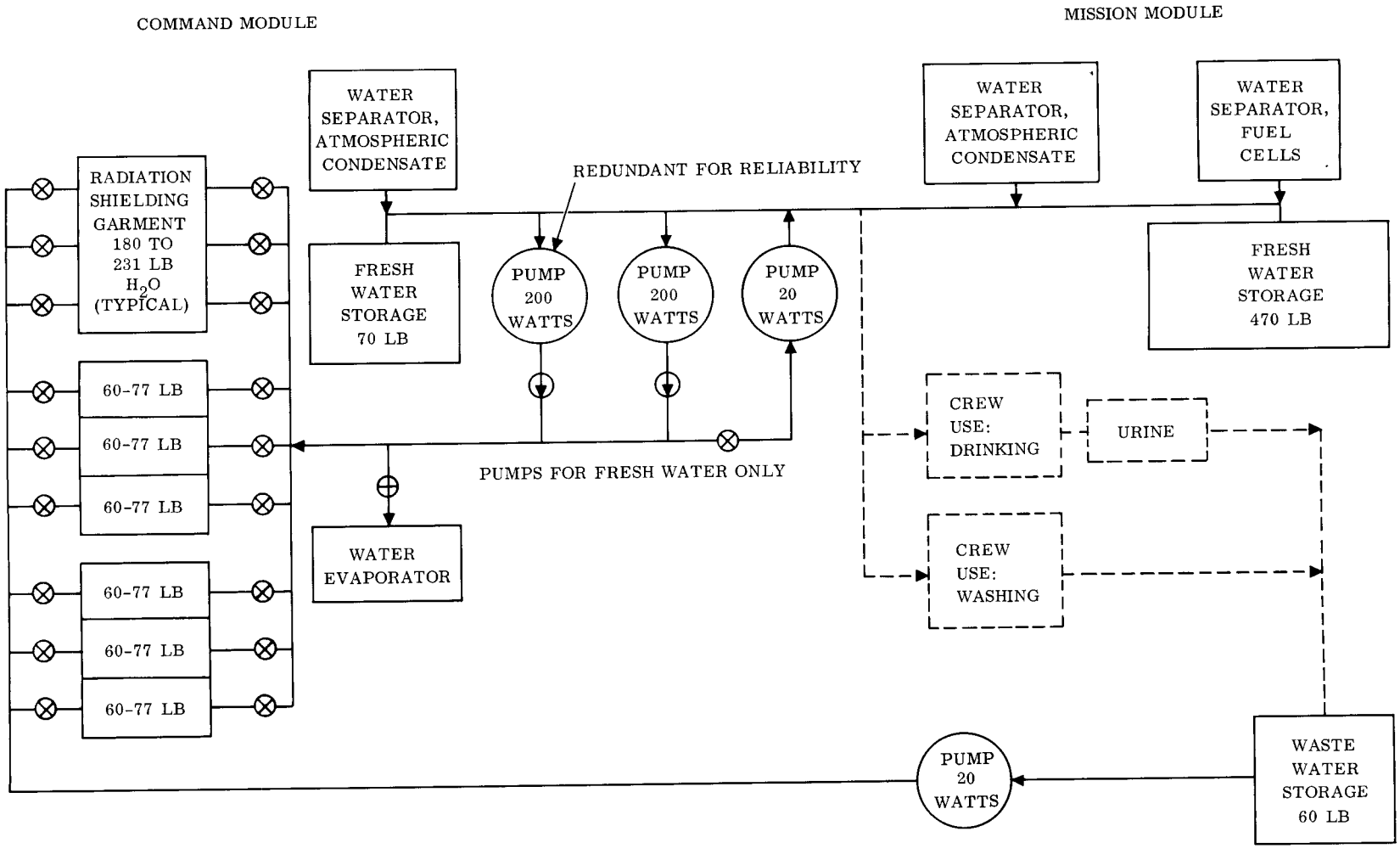

Figure 19. Water Transfer Diagram

Table 19. Component Weights of 0.1 hp (0.0746 KW) Vapor Compression Still

ITEM	FIXED WEIGHT (LB)
Evaporator-Condenser	9.9
Compressor and Mount	4.2
Drive and Motor	15.4
3-Way Valve and Piping	2.4
Storage Tank with Plastic Bottle	1.3
Activated Carbon	5.6
Piston	5.0
Activated Carbon Unit	0.2
Activated Carbon Vapor Filter or Catalytic Burner	3.0
Total	49.0
Power Weight Penalty	5.0
Equivalent Total Weight	54.0

Table 20. Component Weights of 0.05 hp (0.037 KW) Hot Air Centrifugal Still

ITEM	FIXED WEIGHT (LB)
Centrifugal Evaporator (3 ft^2)	9.0
Condenser (0.3 ft^2) with Piston	4.5
Coolant Inventory	1.5
Storage Tank with Piston	7.2
Centrifuge Ducting	2.7
Tubing and Valves	3.9
Motor and Drive	4.5
Activated Carbon	4.2
Feed Reservoir and Piston	7.2
Carbon Holder	0.4
Vacuum Filter Device	3.0
Total	48.1
Power Weight Penalty	2.6
Equivalent Total Weight	50.7

4.3.7.2 Hot Air Centrifugal Still. As stated previously, the hot air centrifugal still does not affect the size of the present space radiators since the heat extracted equals the heat rejected.

The estimated weight of this still is shown in Table 20. The volume of this system is estimated to be 0.8 cubic feet.

4.3.8 Integrated Water System. The integrated water supply system is shown in Figure 20. It may incorporate either the vapor compression or a hot air centrifugal still. It also contains a fresh water storage tank and a hot water storage tank. The water may be heated either electrically or by heating coils containing the hot coolant that is enroute to the space radiators (if it is at a sufficiently high temperature level; e.g., 120 to 140°F). Although both the fresh water and the hot water tanks are contained in the same housing as the emergency water reclamation unit, they may be used for storage and heating of primary water from the hydrogen-oxygen fuel cells. This water enters directly into the two separate water tanks. Condensate from the air conditioning system, which represents reclaimed respiration-perspiration water, is passed through activated charcoal and a bacterial filter before entering the fresh water storage tank.

To minimize heat losses and weight, the water dispenser should be in the same vicinity as the integrated water system. The food hydration and warming unit may be integrated with the water dispenser. Therefore, it may be advantageous to locate the food freezer and waste storage unit in the same locality as the integrated water system.

In an attempt to provide immediate hot water and minimize water losses at the water dispenser outlet, a short circuit is provided from the outlet of the water dispenser to the hot water tank. Circulation of this hot water is

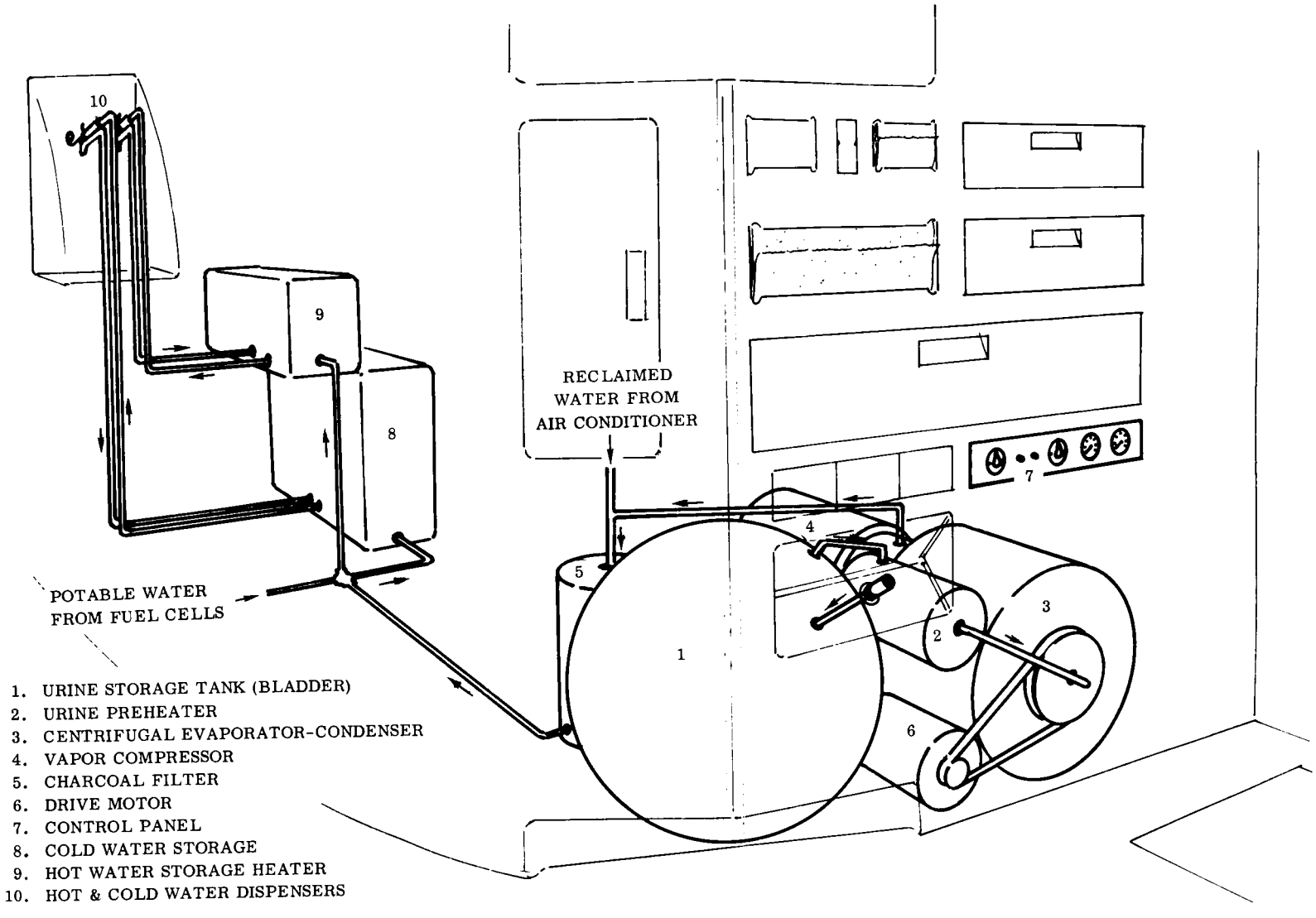

Figure 20. Integrated Water System

provided by a lightweight hand-operated water pump (Figure 17). The estimated weight, excluding the urine recovery unit is:

Hot Water Tank	3.0 lb
Activated Carbon	3.0 lb
Enclosure and Piping	5.0 lb
Water Dispenser	0.8 lb
Bacterial Filter	1.0 lb
	12.8 lb

The additional power required to maintain a hot water supply may not be necessary since it might be possible to use waste heat from sources elsewhere in the mission module. If waste heat is not available, the power requirement is approximately 0.032 KW with a capacity of 7.6 KW-hr for heating approximately 100 lb of water from 70°F to 200°F, assuming a 50% heat loss. The power weight penalty for the above figure is 2.1 lb.

If the water is preheated to 110°F by waste heat, the power weight penalty may be reduced to approximately 1.5 lb; however, preheating would necessitate an additional heat exchanger which would probably cancel the gain.

4.4 WASTE MANAGEMENT

4.4.1 Feces Collection Unit. The recommended feces collection unit is shown in Figure 13. To minimize the escape of noxious odors during defecation, the bowl of the reinforced fiberglass seat is molded to conform to the buttocks. Toilet tissues and six disposable feces collection bags are stored in compartments in the seat. The bags are constructed of conducting, antistatic latex. The feces bag is held in position by its wide sanitary lip at the top and a metal disk incorporated in the bottom which attaches to a magnet on the floor. During defecation, the feces are moved to the bottom of the bag by a flow of air which passes through a deodorizing canister before re-entry into the cabin. The flow of air is provided by a hand-squeezed bulb.

To prevent contamination of the deodorizing system by fecal matter, there is a 1/2-inch polyurethane foam sponge covering the bottom of the bag. After defecating, the user closes the feces bag by pushing in the spring-loaded knobs on opposite sides of the seat. This brings together the surfaces of a Velcro nylon nap fastener inside the bag, which seals the feces in the lower portion of the container. Used toilet tissue is placed in the upper portion of the bag. The sanitary lips are folded over and held in place by an elastic band. The bag is then rolled up, and the deodorizing tube is disconnected. Air leaves the bag during this process through the deodorizing canister by a perforated quick-disconnect nipple inserted into the bottom of the bag. After rolling the bag, a built-in plug is used to close the suction hole, and the bag is then ready for freeze storage.

The seat unit weighs approximately 10 pounds and occupies a space of approximately three cubic feet. The width of the unit is 15 inches (20 inches including the bag closure knobs), the depth is 12-1/2 inches, and the height 21-1/2 inches. A supply of 63 bags will be required for the 3-man, 14-day mission. Empty, they have a total weight of approximately 7.5 pounds, and a storage volume of approximately 1.5 cubic feet. When full, their total storage volume will be approximately 3 cubic feet and their weight approximately 33.9 pounds.

4.4.2 Light-Weight Feces Collection Unit. To reduce the weight of the feces collection unit, two radical designs which eliminate the seat are also being considered. In one of these, unit "A" (Figure 21), the feces collection unit is attached to a belt around the user's waist with a rod from the unit running between the user's legs to clamps on the thighs. In the

Figure 21. Lightweight Feces Collection Unit (Design A)

squatting position the bag tends to seal to the user's buttocks. Two pockets located on the sides of the bag coated with tissue material are provided for cleansing purposes. To move the feces to the bottom of the bag, a suction of air is created by hand-squeezing a bulb on a tube which has a nozzle inserted in the bottom of the bag. Air circulation is completed by providing a small tube in the mouth of the container.

In the second design, unit "B" (Figure 22), the collection unit is attached to a belt as before, but the disposable bag is sealed to the body by pulling a lever. A pump is built into the lever handle for a movement of air by positive displacement.

Both lightweight seatless feces collection units are expected to weigh approximately 3 pounds each. A supply of 63 disposable bags would weigh approximately 7.5 pounds.

4.4.3 Urine Collection Unit. The recommended urinal is shown in Figure 23, Item 1. During urination, to prevent spillage, the upper end of the unit forms a double seal around the penis head. The first seal, directly behind the glans, serves as a retaining device to free hands during use.

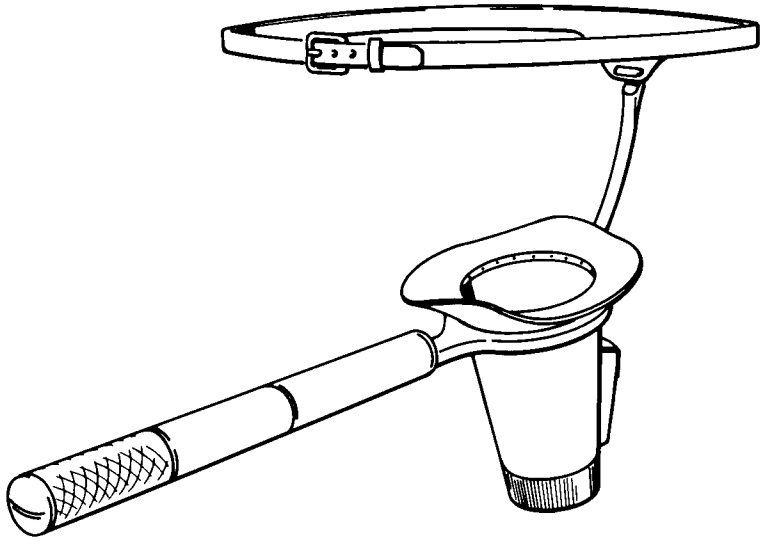

Figure 22. Lightweight Feces Collection Unit (Design B)

It is a latex-coated urethane foam disc with an elliptically shaped hole. The disc is attached to the top surfaces of an annular head piece made of plastic. The disc is designed to admit the penis and form a rigid opening for a moveable latex bag. The head piece also serves to store a clamp-stripper. The second seal is formed by the head of the penis penetrating through the annulus and sealing in the cone-shaped top portion of the urine bag.

The bag is approximately 18 inches long and 2-1/2 inches wide when empty, and weighs 0.28 lb. To transfer the urine from the bag to the urine recovery tank, the lower end of the bag is equipped with a nipple. During urination, the nipple is closed by a quick-disconnect clamp. After urination, the clamp-stripper is moved into place at the head of the penis and clamps off the top of the bag as the penis is withdrawn. To transfer urine from the bag, the nipple is attached to the tank and the quick-disconnect clamp is removed. The clamp-stripper is moved down the bag, forcing the urine into the recovery tank. Each astronaut will have a personal urinal and a supply of urine bags. The bags are reusable, but may also be replaced.

4.4.4 Vomit Receptacle. The vomit receptacle (Figure 23, Item 2) is similar in design to the urinal. The upper end will be equipped with a flared latex mouthpiece molded to conform to the face when the mouth is open and person is vomiting. The inner periphery of the mouthpiece will be lined with urethane foam. The lower end will be closed. After vomiting, the receptacle will be sealed at the top with a spring-loaded clamp and placed in the waste cold storage locker.

Since the spillage of vomit in the cabin might contaminate the emergency water supplied by the air conditioning equipment, the receptacle will be attached to the astronaut's suit and available for instant use.

4.5 PERSONAL HYGIENE

4.5.1 Body Cleanliness. Maintaining the cabin free of human wastes, and providing sufficient oxygen, food, and water for survival, are considered basic requirements for man to complete the mission. Several of the items listed in the following paragraphs are not prime prerequisites for completing the mission; however, they may be considered as prime prerequisites if man is to operate well. Such items as body wipes, electric shaver, etc., will not heavily penalize the vehicle in regard to weight and volume losses, and since these items will greatly boost morale, they are recommended equipment to be included in the mission module.

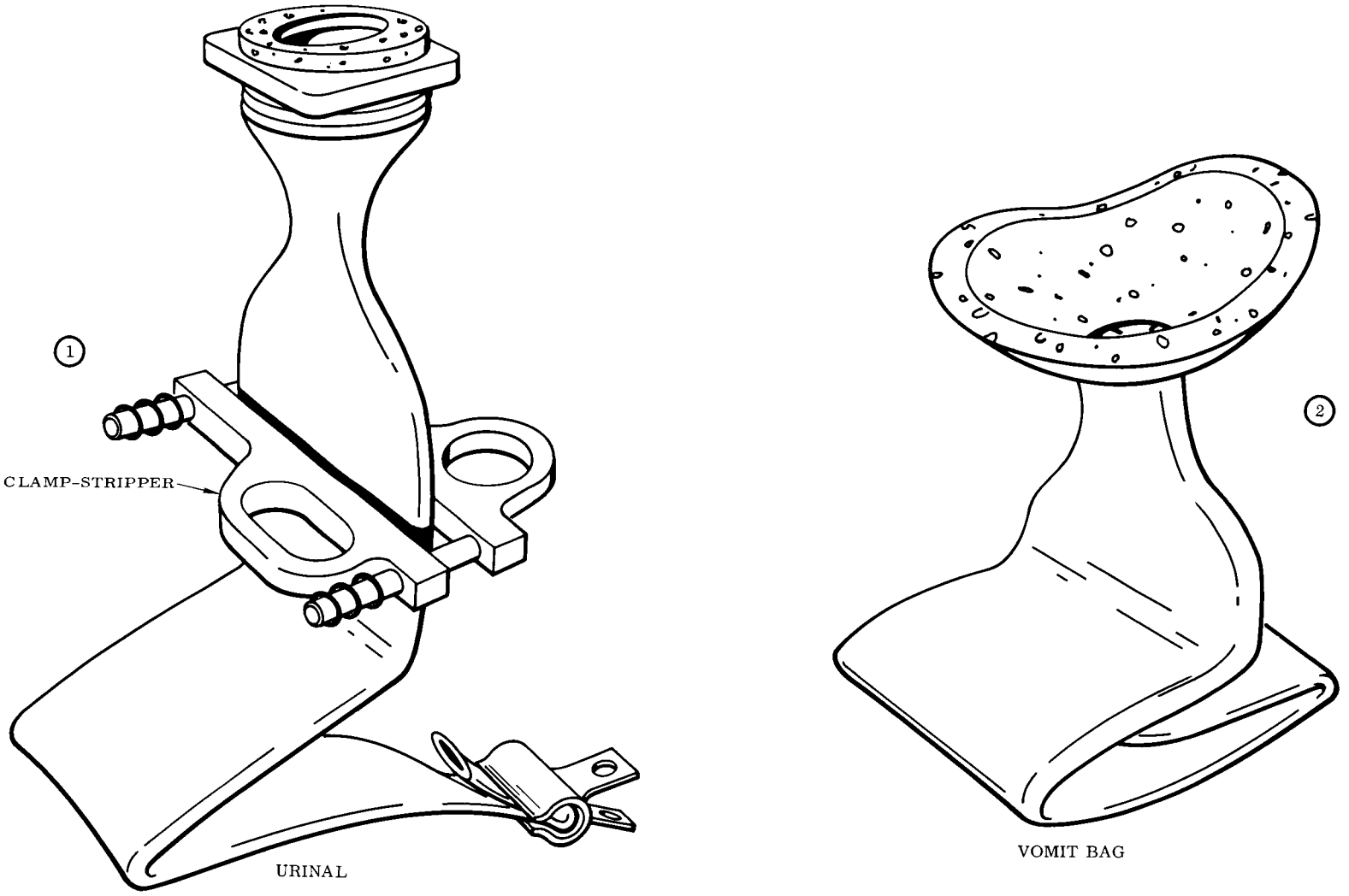

Figure 23. Urinal and Vomit Receptacle

For the 14 days, it is considered neither necessary nor practical for the astronauts to bathe in water. Therefore, a face and hand cleanser (3 per man per day, Figure 13, Item 3) is provided to maintain body cleanliness. The hand cleanser will probably be of the type 5B5-30 manufactured by Sugar Beet Products Co. This cleanser is nontoxic and odorless. The cream will be wiped from the body with industrial wipes such as Scott Perf-Embossed 2 ply wipes (Figure 13, Item 2). There will be approximately 336 wipes, which will occupy a volume of 0.5 cubic feet. Six wipes are provided for washing and drying per man-day, and 2 wipes per man-day are provided for miscellaneous use such as cabin cleanliness. When soiled, these wipes will be deposited in the refuse locker (Figure 14, Item 9, and Figure 15, Item 2).

The battery-operated electric shaver (Item 5, Figure 13) will be provided for the use of all three crewmen for the 14-day period. The shaver will be connected to the vacuum cleaner (Item 7, Figure 13) to prevent shaving dust from entering the cabin air. The vacuum cleaner (battery operated) will also be used for emergency cabin sanitation.

It might be desirable to provide each astronaut with a personal body deodorant.

The estimated weight and volume of the above items are shown in Table 21.

Table 21. Weight of Items for Personal Hygiene

	WEIGHT (LB)	VOLUME (CU FT)
Face and Hand Cleanser	1.0	0.06
Electric Razor (Plus Battery)	0.75	0.01
Vacuum Cleaner (Plus Battery)	1.7	0.13
Stainless Steel Mirror (Part of Cabin Wall)	Provided	
Body Deodorant	0.1	0.01
Light Facial Wipes	0.8	0.25
Paper Bath Towels	2.7	0.5
Emergency Vacuum Cleaner	1.4	0.1
Total	8.45	1.06

4.5.2 Medicine Chest. Detailed needs for medicines should probably be specified only after simulated ground confinement tests have been completed. At this time, only a general list of medical needs for missions of the Apollo scope need be made. The medicine chest (Figure 13, Item 8) will contain medicines and supplies, together with packaging and a container or dispenser. These medicines and supplies should weigh about a pound and occupy a space about 2 in. by 3 in. by 6 in.

Final selection of the medical kit inventory, and the question of the desirability of including barbiturates, tranquilizers, or morphine syrettes for severe pain is left to the judgment of the responsible flight surgeon.

4.6 CABIN SANITATION. In addition to waste collection and storage, other means are provided to prevent contamination of the cabin by spillage of wastes, vomit, etc. There are two emergency vacuum cleaners for picking up liquids as well as solids. One vacuum cleaner (Item 7, Figure 13) is located in area A of Figure 12; it is also used in connection with the electric razor. The other vacuum cleaner is shown in Figure 14, Item 11. There are also six industrial wipes per day provided for miscellaneous cabin cleanliness problems that might arise. These industrial wipes can be impregnated with a suitable nonvolatile sterilizing agent.

4.7 FOOD MANAGEMENT

4.7.1 General Specifications. Nutritional requirements are discussed in Vol III, Book 7; therefore, this section is concerned with food management and practical dietetics.

4.7.1.1 Mission Module. The parameters cover three men under zero-gravity conditions for a 14-day period. The space allotted for food is five cubic feet and the weight, 93 pounds. Enough potable water for all needs will be available.

4.7.1.2 Command Module. The parameters cover three men under extremes of zero to nine g's for 48 hours and under normal gravity conditions for 72 hours while awaiting pickup on return. The 12.4 pounds of food and 70 pounds of water allowed will occupy 0.7 and 1.25 cubic feet, respectively.

4.7.1.3 Quality of Food. The food carried in both modules should be wholesome, easy to prepare, light in weight, durable in composition, attractive in appearance, varied in form, and acceptable in flavor, aroma, and texture.

4.7.2 Detailed Approach - Mission Module. No difficulty is anticipated in meeting the specifications cited above for the mission module.

Frequent and small meals may be in order, based on knowledge gained from balloon flights. According to Lt. Col. Simons, there is, during weightlessness, an apparent relaxation of the cardiac sphincter of the stomach, permitting reflux of foods through the esophagus and into the mouth if even slight pressure is exerted on the abdomen.

Clear plastic packaging should be used so that the color of the food being consumed can be seen. The caps of the food packages should be labeled as to contents and perhaps color coded for each astronaut. Suitably sized nozzles can be attached to the food and drink bags, eliminating the need for combined packaging. A supply of water bags will also be available from a dispenser (Figure 14, Item 6). Proposed food containers, water bags, and nozzles are shown in Figure 16, Item 2.

The food locker will be based on a modular system with each basic unit occupying 1 × 1 × 4 inches. Coffee, beverages, and juices would take up about one half of this space; bread and ice cream could take up about twice this space. Each astronaut will require 4 × 4× 5 inches of food package storage space per day. In addition to this, a ration of three ice cream bars occupying 2 × 1 × 4 inches would be available for use over each 5-day period. All foods will be stored in a freezing compartment to save space. The foods stored in the freezing compartment will not necessarily require this type of storage for preservation. The methods of storing and "filing" food packages are shown in Figure 15, Item 1 and Figure 16, Item 1.

Maximum use will be made of precooked, dehydrated, or freeze-dried foods which can be reconstituted by adding hot or "ice" water to the food package, and which will be acceptable when eaten in an "as is" state. A number of menus and representative rations have been described in ARDC Technical Report No. 60-8. This publication should serve as a general guide in planning the crew's diet, but other rations must be considered before on-the-ground tests are begun. Compressed one-dish meals should form the basic ration; e.g., minestrone, hash, meatballs, meat loaf, shrimp, spaghetti and meat, macaroni and cheese, cheese flavored bars, cereal bars including dry milk and sugar, and chicken flavored bars. This type of food would have to be compounded with enough fat and extender to prevent "dust" which might cause choking if the food bar were to be eaten without reconstitution.

The food would be initially prepared so that it could be consumed in one of three ways:

a. As a food bar to be chewed.

b. As a semi-solid. Hot water and kneading would reconstitute the ration in approximately 20 minutes. Such semi-solid rations could be eaten with a utensil or squeezed directly into the mouth with or without the the addition of a nozzle.

c. As a soup. More water and greater manipulation of the plastic food package would produce a liquid that could be consumed through a nozzle.

Soluble coffee would be packaged in a plastic bag with dried cream and sugar supplied as a compressed cube. The mixture would be so formulated that it could be used as a candy or, when completely liquefied, as a hot or cold beverage. Orange drink, other fruit drinks, cocoa, tea, and perhaps vegetable juices would also be prepared in a versatile manner.

Candy, fruit and nut bars, cheese bars, fruit cake, fruit and nut paste, nuts and dried fruits could be used as desserts. The same technique of multiple use (dry or semi-solid or liquid) used for main course rations can be applied to desserts.

Bread, cake, and ice cream would be the only hydrated foods supplied to the astronauts. Bread with butter and/or other spreads will be supplied in 2 × 1 × 4 inch packages, or as bite size sandwiches occupying the same storage space. Sweet rolls, cake, and donuts will be packaged as 1 × 1 × 4 inch units, formulated to stay fresh at room temperature for multi-day periods. The only food in the ration that actually requires freezing for preservation is ice cream. Chewing gum and hard candy can be provided if desired by the crew.

It is tentatively recommended that food be eaten at three-hour intervals. Thus, the daily feeding schedule will consist of three meals and three snacks during the waking hours.

All used food containers and waste packaging material will be folded and stored in the freezer to prevent bacterial decomposition of the hydrated food residues.

4.7.3 Detailed Approach - Command Module. Command module specifications requiring 12.4 pounds of food occupying 0.7 cubic feet of space can also be filled simply. In order to do so, however, it will be necessary to use concentrated rations. Nevertheless, it is reasonable to expect that the

astronauts will be so busy and under such stress during the initial and terminal stages of the flight that they will not have the time or the inclination for the more elaborate mission-module meals.

In the command module, all foods will be eaten cold and without reconstitution. Six food bars are recommended as the daily food ration. These bars will be eaten at 3- or 4-hour intervals, or at will. Bubble-free water under pressure will be supplied to the crew, who will drink measured amounts at specified intervals from water bags equipped with nozzles.

4.7.4 Alternate Approach. An alternate approach to be considered is the use of a completely synthetic balanced liquid diet similar to those developed by Winitz and Greenstein at the National Institute of Health. These diets contain 50% water and consist of amino acids, vitamins, minerals, essential fatty acids, and sugar. The diet chosen could be suitably flavored and preserved in sterilized tanks or nozzled tubes. Dr. Winitz's claim that 0.5 cubic feet of this liquid would supply 2000 calories per day for 3 men for approximately 5 days would have to be checked, and the astronauts' water requirements when on such a diet would have to be determined.

4.7.5 Testing. Ground chamber testing should be carried out to determine each crew member's food preferences. The caloric requirements depend on basal metabolic rate, stress level, work activity, temperature of the chamber, and specific dynamic action of foods. During the tests, the crew members will be trained to eat and eliminate on schedule. The latter function is important as, without gravity, the various urges to eliminate may not be felt.

4.7.6 Summary. Table 22 summarizes the weight, power and volume requirements of the food, water and waste management systems in the mission module.

Table 22. Summary of Weight, Volume, and Power Requirements (Mission Module)

ITEM	WEIGHT (LB)	VOLUME (CU.FT.)	POWER	ELECTRICAL CAPACITY (14 DAYS)
Food and Waste Storage Freezer	30.0	4.50	(Dependent on Available Cryogenic Fluid Supply)	
Food	93.0	Included in Item 1		
Food Containers and Cartons	3.0			
Water Dispenser and Food Hydration Unit	0.70	1.00		
Personal Hygiene				
1. Body Cleanliness	8.8	1.00		
2. Medicine	1.0	0.02		
Water Recovery				
1. Vapor Compression, or	49.0	0.75	0.1 hp = 0.0746 kw	18.9 kw-hr
2. Hot Air Centrifugal Still	48.1	0.80	0.05 hp = 0.0373 kw	10.5 kw-hr
Integrated Water System	12.8	4.50	0.032 kw	7.6 kw-hr
Urine Storage Tank	5.0	1.00		
Feces Collection Unit	10.0	3.00		
Lightweight Feces Collection Unit	3.0	0.50		
Feces Collection Bags	7.5	1.30		
Urine Collection Unit and Bags	0.8	0.50		

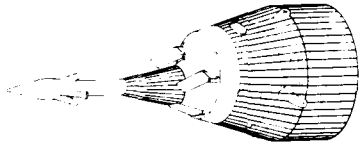

5 POWER PROFILE

5.1 COMMAND MODULE. The power profile for the environmental control system consists of that power required in the command and mission module during the launch, coast, lunar-vicinity and re-entry phases of the mission.

The environmental control power requirement in the command module is composed of:

a. 100 watts are required for the atmospheric control blower which provides air circulation in the command module air conditioning loop. This blower is in operation during launch and re-entry only.

b. The thermal control blowers require 100 watts during the launch phase and 100 watts for 15 minutes during the re-entry phase. Additional cooling is required during the re-entry period, resulting in the higher power requirement.

c. 200 watts are required for the water transfer pump. This pump transfers water from the fresh water tank in the mission module to the radiation protection garments in the command module. These garments are filled with water in approximately four minutes during that portion of the boost period prior to entering the Van Allen radiation belt. This pump is in operation only during those four minutes.

5.2 MISSION MODULE. The environmental control equipment requiring power in the mission module is:

a. An atmospheric control blower is required in the mission module to provide ventilation and air conditioning to the command and mission modules during the coast and lunar vicinity phases of the mission. This blower requires 150 watts.

b. Thermal control equipment, such as equipment cooling fans, space radiator glycol pumps, etc., use 150 watts of power. This thermal control equipment is in operation during the launch, coast, and lunar-vicinity phases of the mission.

c. A water system heater is located in the mission module to provide hot water for such purposes as food preparation, etc. This heater requires 32 watts during the coast and lunar-vicinity periods.

d. Instrumentation and miscellaneous environmental control equipment requires 86 watts during the coast and lunar-vicinity phases of the mission.

These requirements are summarized in Table 23, and are shown as a power profile in Figure 24.

Table 23. Environmental Control Power Requirements

ITEM	POWER - WATTS LAUNCH PHASE	COAST & LUNAR VICINITY PHASES	RE-ENTRY PHASE
COMMAND MODULE			
Blower, Atmospheric Control	100		100
Blower, Thermal Control	100		200 (15 Min)
Pump, Water Transfer	200 (4 Min)		
Total	400 Max		300 Max

Table 23. Environmental Control Power Requirements (Cont)

ITEM	POWER - WATTS LAUNCH PHASE	COAST & LUNAR VICINITY PHASES	RE-ENTRY PHASE
MISSION MODULE			
Blower, Atmospheric Control		150	
Environmental Control and Instrumentation		86	
Thermal Control (Equip. Cool. Fans & Rad Pump)	150	150	
Heater, Water System		32	
Total	150	418	

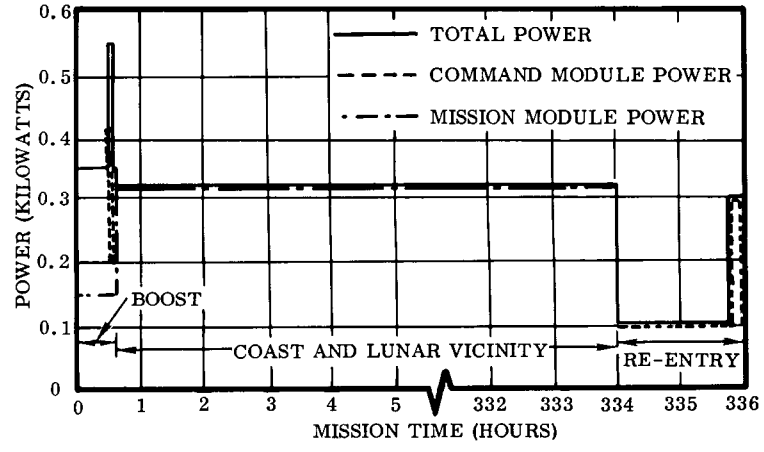

Figure 24. Environmental Control Power Profile

6 VIBRATION AND ACOUSTICS

6.1 INTRODUCTION. The noise levels anticipated for the Apollo vehicle present an immediate challenge to the successful completion of the mission. During the mission, the vehicle will be subjected to diverse noise conditions associated with propulsion systems, aerothermodynamic phenomena during flight, and the operation of on-board auxiliary equipment. It was necessary, therefore, to anticipate noise environments early in the planning and predesign stage so as to define parameters that, in the final analysis, would aid in the selection of acoustic design. This, in turn, was predicted on human reaction and tolerance to the complex stress environment posed by space missions.

6.2 NOISE AND VIBRATION

6.2.1 Acoustic Spectra - Prelaunch and Launch. A general evaluation of the results of existing source materials, i.e., Mercury data, rocket ground test data, Atlas firing data, etc., has resulted in generalized methods for determining the noise levels in the vicinity of a space capsule (during static firing and launch). The noise level in the vicinity of the vehicle during static firing and launch is plotted in Figure 25.

6.2.2 Noise Spectra During Maximum Aerodynamic Pressure. The noise level spectrum generated by the turbulent boundary layer in flight just subsequent to launch is presented in Figure 26. The average anticipated vibration level during the maximum aerodynamic pressure period is expected to attain magnitudes up to approximately 0.3g for a period of 30 seconds, in the frequency range from 3 to 40 cps. This is expected to be the worst condition in this frequency range during the flight.

6.2.3 Re-Entry Noise Spectra. An evaluation of available source literature studies has resulted in a generalized method for evaluating the base pressure fluctuations and wake turbulence of a re-entry vehicle. This method has been applied to the Apollo vehicle. The base pressure fluctuation during re-entry is noted in Figure 27 for both the undershoot and overshoot trajectory at maximum dynamic pressure. Figure 28 illustrates the overall sound pressure level distribution versus re-entry time. Indicated in the figure are calculated values for maximum dynamic pressure versus re-entry time.

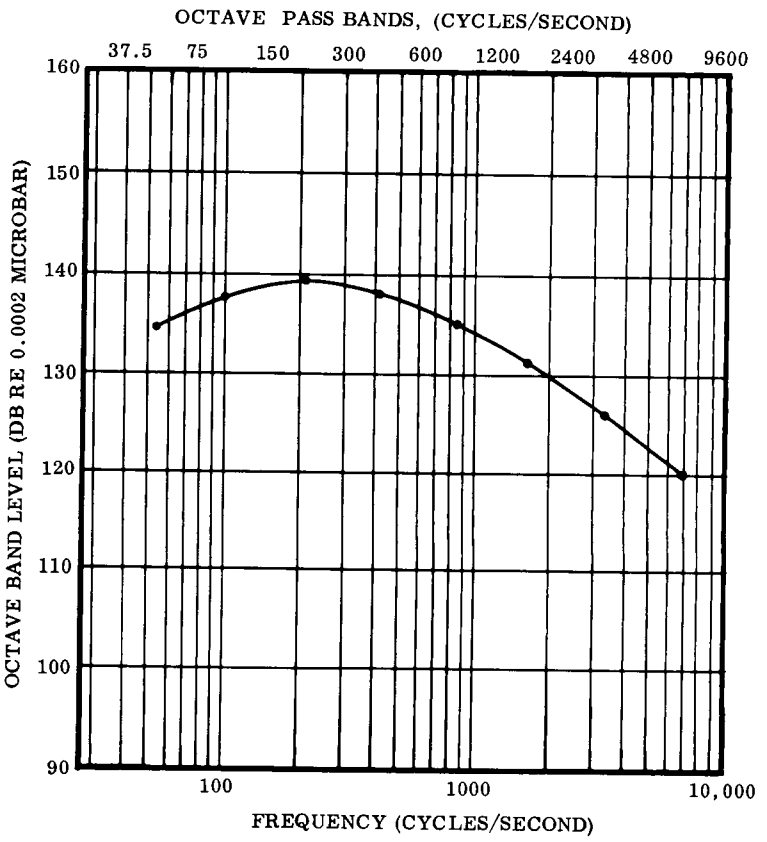

Figure 25. Estimated External Capsule Nose from Static Firing of Rocket Engines

6.3 ACOUSTICAL CRITERIA FOR WORK, REST AND COMMUNICATION AREA

6.3.1 Introduction. A general evaluation of the results gained from experimental approaches described in bio-acoustic and aeromedical laboratory reports has been completed. It has been determined that noise and

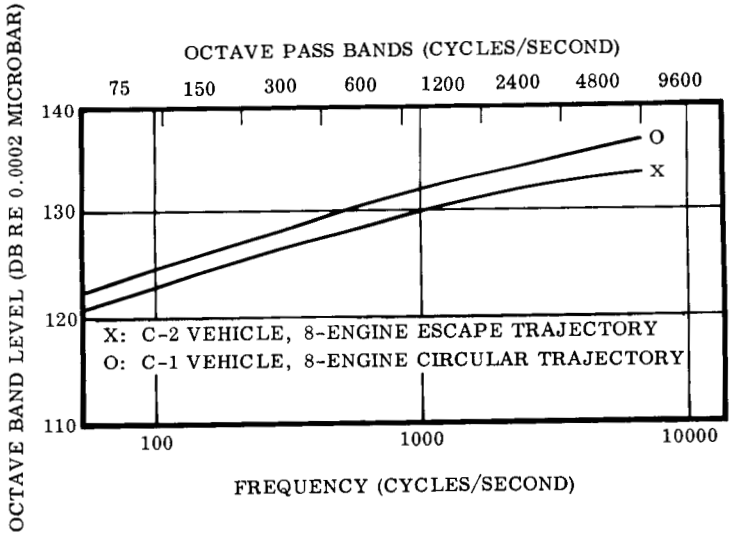

Figure 26. Estimated Boundary Layer Noise at Launch During Maximum Dynamic Pressure

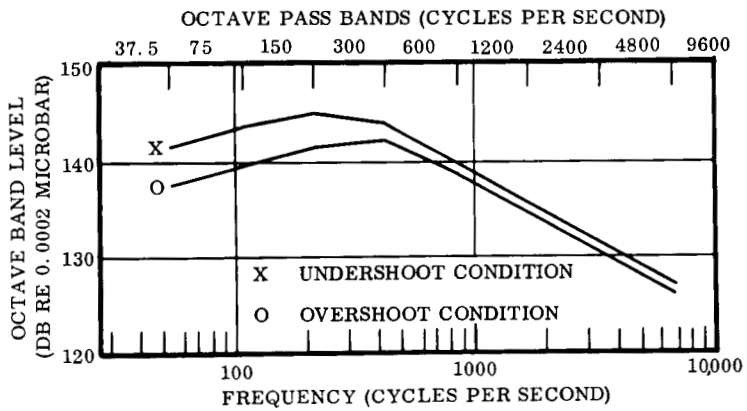

Figure 27. Estimated Base Pressure Fluctuation on Re-Entry Vehicle for the Condition of Maximum Dynamic Pressure, AVCO M-1 Configuration

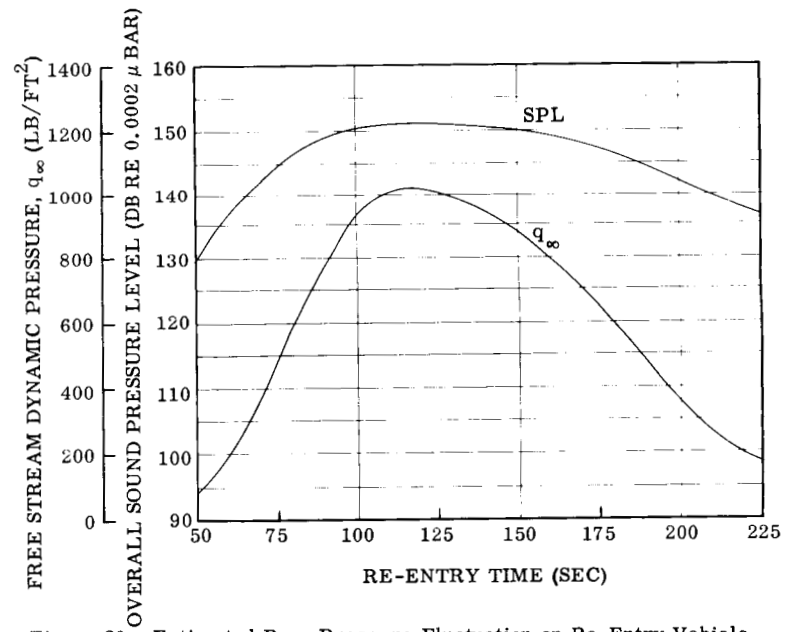

Figure 28. Estimated Base Pressure Fluctuation on Re-Entry Vehicle, AVCO M-1 Configuration

vibration levels affecting human behavior, efficiency and performance, when presented as individual stimuli, must be recognized as of a compounding significance to the overall physical and psychological stress picture. The following criteria for habitable areas have been established as the upper limit of acceptable interior noise levels during the orbital mission.

6.3.2 Work Area. In the work area, good communication conditions are not essential, some distraction due to external noise is permitted, and internal noise generation due to other activities may be present.

OCTAVE BAND (CPS)	NOISE CRITERIA (DECIBELS)	OCTAVE BAND (CPS)	NOISE CRITERIA (DECIBELS)
20 - 75	76	600 - 1200	58
75 - 150	70	1200 - 2400	55
150 - 300	67	2400 - 4800	54
300 - 600	62	4800 - 9600	52

6.3.3 Rest Area. The rest area is an area in which sufficient quiet for concentration or relaxation is desirable.

OCTAVE BAND (CPS)	NOISE CRITERIA (DECIBELS)	OCTAVE BAND (CPS)	NOISE CRITERIA (DECIBELS)
20 - 75	71	600 - 1200	53
75 - 150	65	1200 - 2400	50
150 - 300	62	2400 - 4800	49
300 - 600	57	4800 - 9600	47

6.3.4 Communication Area. In the isolation of space travel, speech communication will be of utmost psychological importance as the connecting link to earth. This area must be maintained with a high degree of quietness.

6.3.5 Acoustical Criteria For the Command Module - Launch and Re-Entry. It is anticipated that the major bio-acoustic problems will be encountered during the launch and re-entry phases. Because of the high levels of noise anticipated in the vehicle, meticulous care is to be exercised in selecting proper noise-alleviating cushions and ear muffs. Criteria for noise levels at the ear have been established for high intensity environments. These criteria are presented in Volume III, Book 7.

6.4 RELIABILITY OF VOICE COMMUNICATIONS AND EAR PROTECTION. The maximum possible sound attenuation permissible through the application of properly fitting ear protection devices is limited by bone conduction (cranial excitation). Efforts to date have been expended to increase the reliability of two-way voice communications in the presence of excessive sound pressure levels. Both problem areas are amenable to solution through the utilization of a helmet incorporating the specially designed features.

6.5 ACOUSTIC INSTRUMENTATION

6.5.1 Data Acquisition and Handling. A review and evaluation of existing and proposed instrumentation and techniques for data acquisition and handling has been completed. It has been determined that adequate instrumentation is available to record and analyze samples of the anticipated noise spectra during the entire mission. On-board tape recorders, occupying the space equivalent to a cube 4-1/2 in. × 4-1/2 in. × 4-1/2 in. and weighing approximately 4-1/2 pounds, are available in 14 channels. This equipment requires an input of 24-28 VDC to operate. Through proper programming, necessary acoustic and vibration data can be recorded for selected portions of the entire mission. After completion of the mission, the tape will be edited and processed.

6.5.2 Back-Up Equipment for Data Acquisition. As a back-up to on-board tape recording during the initial flights, there will be made available one r-f carrier that will provide acoustic and vibration data to the ground stations.

6.5.3 Microphone System. The microphone system will have an automatic gain control system built in, so as to maintain an acceptable signal-to-noise ratio for the several noise conditions to be recorded. It is anticipated that one microphone will be mounted in the wall of the vehicle, and one each in the command module and mission module.

6.6 ACOUSTICAL-NOISE CONTROL MATERIALS

6.6.1 Applicability of Acoustical Materials. Between the human occupant of the spacecraft and the exterior noise environment there must be interposed a structure that will fulfill acoustical requirements. Sound absorbing materials, vibration damping materials, vibration isolation devices, and duct attenuation materials have been evaluated for application to the space capsule. It can be demonstrated that presently available materials would aid in the noise control measures contemplated for the vehicle. A major limiting factor to the overall acoustic design has been the requirement that the attachment of noise control materials to the interior surfaces of the mission module not be permitted. This precaution has been taken in order to facilitate plugging any gaps which may arise due to meteorite penetration of the skin.
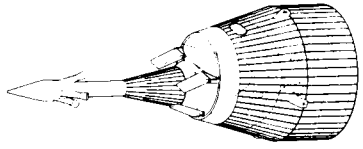
6.6.2 Finalizing of Acoustic Design. In order to ensure the optimum design of a space cabin and human protection equipment, it will be necessary to direct the course of basic studies in human tolerance, efficiency, and performance for complex stress environments. However, due to the overall lack of information necessary to define the total stress environment it will be necessary to test under simulated conditions.