LMSC-A991394
ACS-167

(NASA-CR-120262) ALTERNATE SPACE SHUTTLE CONCEPTS STUDY: INTERIM REVIEW PRESENTATION (Lockheed Missiles and Space Co.) 162 p

N74-75495

Unclas
00/99 15897

INTERIM REVIEW PRESENTATION

ALTERNATE SPACE SHUTTLE CONCEPTS STUDY

1 SEP 1971 • CONTRACT NAS8-26362

LMSC-A991394
ACS-167
1 September 1971

INTERIM REVIEW PRESENTATION

ALTERNATE SPACE SHUTTLE CONCEPTS STUDY

CONTRACT NAS8-26362

LOCKHEED MISSILES & SPACE COMPANY
Sunnyvale California

LOCKHEED

AGENDA

1 SEPTEMBER 1971

- EFFECT OF INTERIM SYSTEM ON SHUTTLE PROGRAM
- EXTERNAL H OR H AND O?
- 60 FOOT OR 40 FOOT PAYLOAD BAY?
- PARALLEL OR TANDEM CONFIGURATION?
- SOLID STAGE DESIGN
- OTHER WAYS TO REDUCE COSTS
- CONCLUSIONS

JTL-5
D04528

SUMMARY CHARACTERISTICS

INTERIM CONCEPTS

2 STAGE – 120 IN. PARALLEL	
GLOW (MLB) – 5.042	SRMs
BLOW (MLB) – 3.970	NUMBER – 5/2
STAGING VEL (FT/SEC) – 6742	THRUST MOTOR (MLB) – 1.328
STAGING q-1ST STG (PSF) – 240	DDT&E ($B) – 6.551
	AVERAGE RECURRING/FLIGHT ($M) – 32.4
2 STAGE – 120 IN. TANDEM	
GLOW (MLB) – 5.358	SRMs
BLOW (MLB) – 4.233	NUMBER – 5/2
STAGING VEL (FT/SEC) – 6588	THRUST MOTOR (MLB) – 1.328
STAGING q-1ST STG (PSF) – 240	DDT&E ($B) – 6.712
	AVERAGE RECURRING/FLIGHT ($M) – 35.1
1 STAGE – 156 IN. TANDEM	
GLOW (MLB) – 4.759	SRMs
BLOW (MLB) – 3.763	NUMBER – 3/0
STAGING VEL (FT/SEC) – 6235	THRUST MOTOR (MLB) – 2.14
STAGING q-1ST STG (PSF) – 40	DDT&E ($B) – 6.373
	AVERAGE RECURRING/FLIGHT ($M) – 32.5

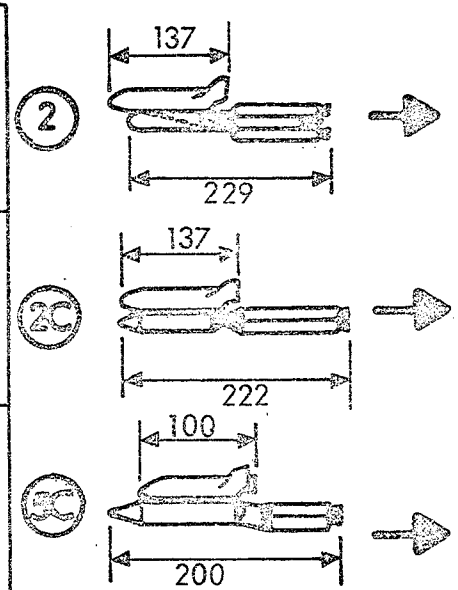

CB-3
DO 4538 (1)

SUMMARY CHARACTERISTICS

FINAL CONCEPTS

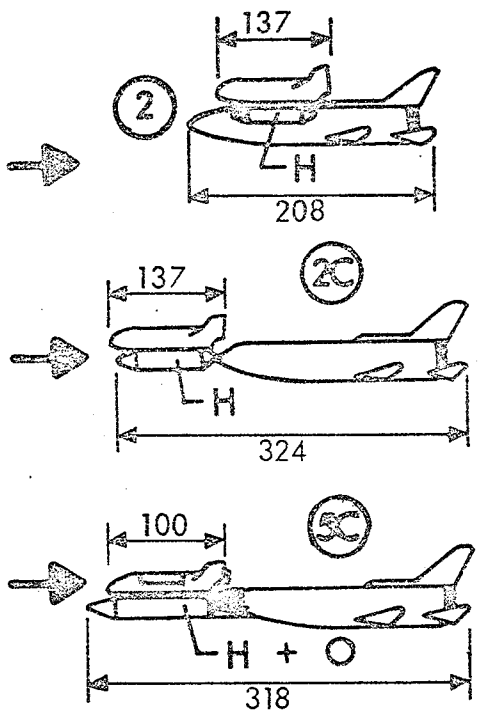

2-1/2 STAGE – PARALLEL	
GLOW (MLB) – 3.320	WING LDG (REF AREA) – P/L IN (PSF) – 63.3
BLOW (MLB) – 2.249	T/W ORBITER (LB/LB) – 1.34
OLOW (MLB) – 1.071	T/W LIFTOFF (LB/LB) – 1.38
ORB (DRY) (KLB) – 0.171	TOTAL PROGRAM COST ($B) – 9.755
STAGING VEL (FT/SEC) – 6100	PEAK ANNUAL FUND ($B) – .972
LNDG. SPD* (P/L OUT) (KT) – 117	AVERAGE RECURRING/FLIGHT ($M) – 4.77
2-1/2 STAGE – TANDEM	
GLOW (MLB) – 3.694	WING LDG (REF AREA) – P/L IN (PSF) – 63.3
BLOW (MLB) – 2.569	T/W ORBITER (LB/LB) – 1.27
OLOW (MLB) – 1.125	T/W LIFTOFF (LB/LB) – 1.35
ORB (DRY) (KLB) – 0.170	TOTAL PROGRAM COST ($B) – 10.144
STAGING VEL (FT/SEC) – 6200	PEAK ANNUAL FUND ($B) – 1.021
LNDG. SPD* (P/L OUT) (KT) – 117	AVERAGE RECURRING/FLIGHT ($M) – 5.16
2-1/2 STAGE – TANDEM	
GLOW (MLB) – 3.036	WING LDG (REF AREA) – P/L IN (PSF) – 102.3
BLOW (MLB) – 2.040	T/W ORBITER (LB/LB) – 1.40
OLOW (MLB) – 0.996	T/W LIFTOFF (LB/LB) – 1.50
ORB (DRY) (KLB) – 0.123	TOTAL PROGRAM COST ($B) – 9.873
STAGING VEL (FT/SEC) – 6000	PEAK ANNUAL FUND ($B) – .956
LNDG. SPD* (P/L OUT) (KT) – 124	AVERAGE RECURRING/FLIGHT ($M) – 5.54

*ALL PAYLOAD-IN LANDING SPEEDS ARE 150 KTS

CB-4
DO 4539(1)

SUMMARY CHARACTERISTICS

INTERIM CONCEPTS

2 STAGE – 156 IN. TANDEM	
GLOW (MLB) – 4.665 BLOW (MLB) – 3.594 STAGING VEL (FT/SEC) – 6644 STAGING q-1ST STG (PSF) – 240	SRMs NUMBER – 2/1 THRUST MOTOR (MLB) – 3.15 DDT&E ($B) – 6.536 AVERAGE RECURRING/FLIGHT ($M) – 32.2
1 STAGE – 120 IN. TANDEM	
GLOW (MLB) – 5.826 BLOW (MLB) – 4.755 STAGING VEL (FT/SEC) – 6252 STAGING q-1ST STG (PSF) – 280	SRMs NUMBER – 9/0 THRUST MOTOR (MLB) – 0.875 DDT&E ($B) – 6.423 AVERAGE RECURRING/FLIGHT ($M) – 39.0
1 STAGE – 156 IN. TANDEM	
GLOW (MLB) – 5.173 BLOW (MLB) – 4.102 STAGING VEL (FT/SEC) – 6263 STAGING q-1ST STG (PSF) – 40	SRMs NUMBER – 4/0 THRUST MOTOR (MLB) – 1.745 DDT&E ($B) – 6.512 AVERAGE RECURRING/FLIGHT ($M) – 34.0
2 STAGE – 120 IN. TANDEM	
GLOW (MLB) – 4.924 BLOW (MLB) – 3.853 STAGING VEL (FT/SEC) – 6643 STAGING q-1ST STG (PSF) – 240	SRMs NUMBER – 5/2 THRUST MOTOR (MLB) – 1.328 DDT&E ($B) – 6.452 AVERAGE RECURRING/FLIGHT ($M) – 35.2

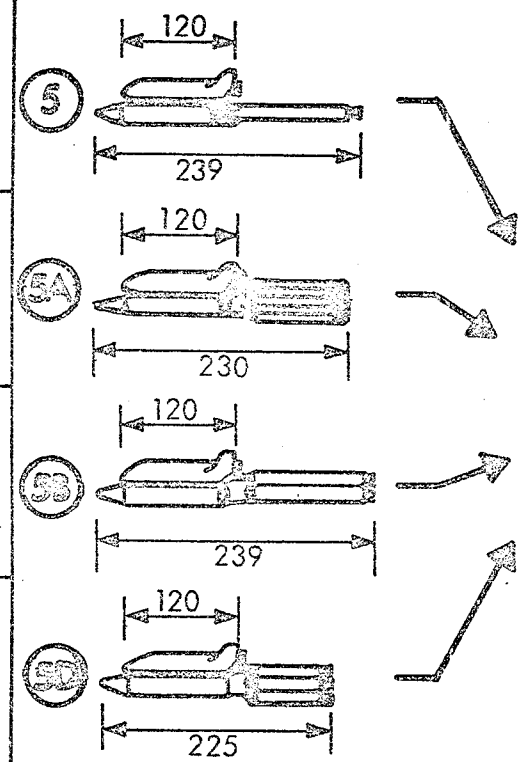

CB-1
DO 4536(1)

SUMMARY CHARACTERISTICS

FINAL CONCEPTS

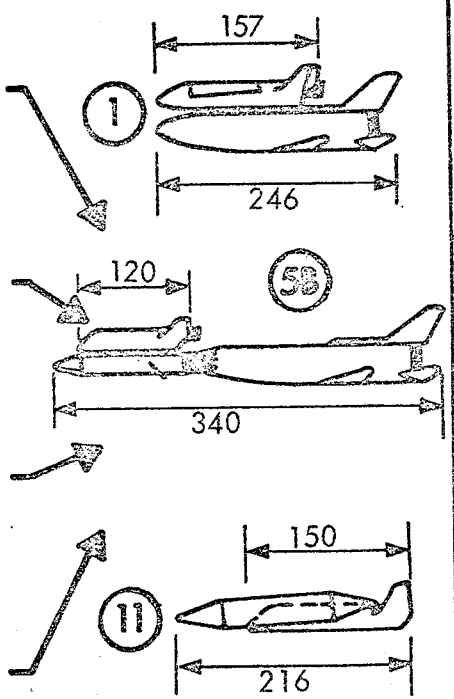

2 STAGE – PARALLEL	
GLOW (MLB) – 4.467	WING LDG (REF AREA) – P/L IN (PSF) – 56.8
BLOW (MLB) – 3.381	T/W ORBITER (LB/LB) – 1.32
OLOW (MLB) – 1.086	T/W LIFTOFF (LB/LB) – 1.39
ORB (DRY) (KLB) – 0.217	TOTAL PROGRAM COST ($B) – 9.848
STAGING VEL (FT/SEC) – 7,480	PEAK ANNUAL FUND ($B) – 1.868
LNDG. SPD* (P/L OUT)(KT) – 122	AVERAGE RECURRING/FLIGHT ($M) – 3.80
2-1/2 STAGE – TANDEM	
GLOW (MLB) – 3.339	WING LDG (REF AREA) – P/L IN (PSF) – 69.8
BLOW (MLB) – 2.269	T/W ORBITER (LB/LB) – 1.31
OLOW (MLB) – 1.070	T/W LIFTOFF (LB/LB) – 1.37
ORB (DRY) (KLB) – 0.136	TOTAL PROGRAM COST ($B) – 10.116
STAGING VEL (FT/SEC) – 6,000	PEAK ANNUAL FUND ($B) – .972
LNDG. SPD* (P/L OUT) (KT) – 120	AVERAGE RECURRING/FLIGHT ($M) – 5.69
1-1/2 STAGE – TANDEM	
GLOW (MLB) – 4.101	WING LDG (REF AREA) – P/L IN (PSF) – 77.5
BLOW (MLB) – 0.0	T/W ORBITER (LB/LB) – —
OLOW (MLB) – 4.101	T/W LIFTOFF (LB/LB) – 1.30
ORB (DRY) (KLB) – 0.320	TOTAL PROGRAM COST ($B) – 7.792
STAGING VEL (FT/SEC) – 18,300	PEAK ANNUAL FUND ($B) – 1.077
LNDG. SPD* (P/L OUT) (KT) – 135	AVERAGE RECURRING/FLIGHT ($M) – 7.25

*ALL PAYLOAD-IN LANDING SPEEDS ARE 150 KTS

CB-2
DO 4537(1)

CONFIGURATION I FINAL

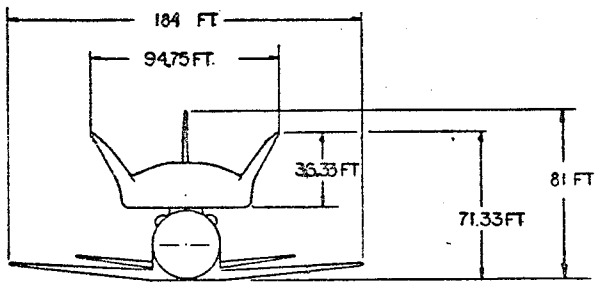

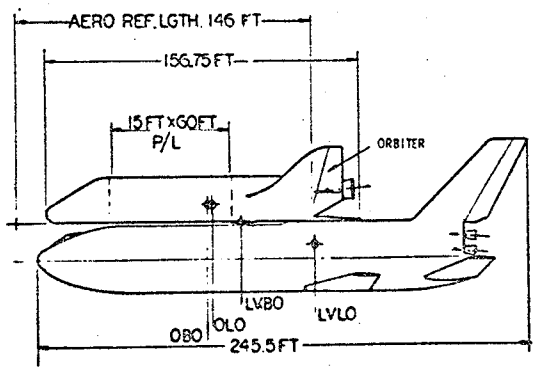

I. LAUNCH VEHICLE

GLOW	4,457	KLB
V_{STAGE}	7,459	FT/SEC
T/W	1.394	

II. BOOSTER – REUSABLE

PROPELLANT	2,389	KLB
MAIN ROCKET ENGINES		
NUMBER	15	
THRUST S.L.	415	KLB
	35:1	
GLOW	3,381	KLB
DRY WEIGHT	673.5	KLB

III. ORBITER

A. AERODYNAMIC

1. REF PLANFORM AREA	4,878	FT^2
2. TOTAL PLANFORM AREA	6,846	FT^2
3. WETTED AREA EXCL BASE	17,850	FT^2
4. BASE	1,223	FT^2
5. FIN	1,248	FT^2
6. RUDDER	474	FT^2
7. SPEED BRAKE	225	FT^2
8. UPPER FLAP	693	FT^2
9. LOWER FLAP	1,056	FT^2
10. ELEVON	543	FT^2

B. PROPULSION

1. MAIN ROCKET ENGINE

NUMBER	3	
THRUST (SL. & = 35:1)	415	KLB
EXPANSION RATIO	150:1	

2. ASCENT PROPELLANT

LO_2 IN ORBITER	4,439	FT^3
LO_2 IN ORBITER	649.7	KLB
LH_2 IN ORBITER	25,365	FT^3
LH_2 IN ORBITER	108.3	KLB
TOTAL	756	KLB

3. OMPS INCL ACPS

OMPS ENGINES:

NUMBER		3	
TYPE		RL10	
LO_2	472 FT^3	25,030	LB
LH_2	1,829 FT^3	6,180	LB

4. AIRBREATHER ENGINES

TYPE	JTF-22B	
NUMBER	4	
JP-4		LB

C. GENERAL DATA

GLOW	1,056	KLB
DRY WEIGHT	217	KLB
TOTAL VOLUME	99,950	FT^3
OCCUP/TOTAL VOL	.875	
MAIN ENGINE		
CANT ANGLE	5° 30	DEGREE
GIMBAL ANGLE	±1	DEGREE

CONFIGURATION 2 INTERIM

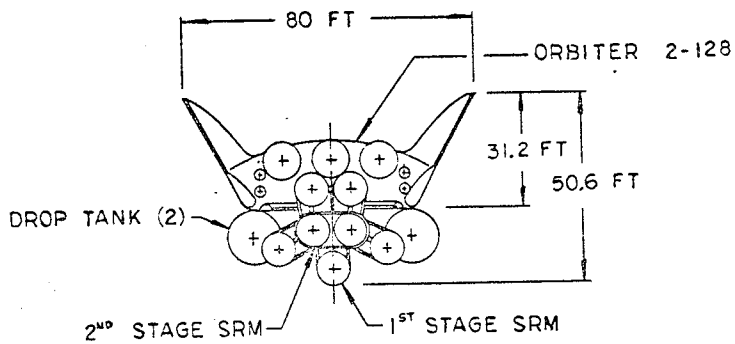

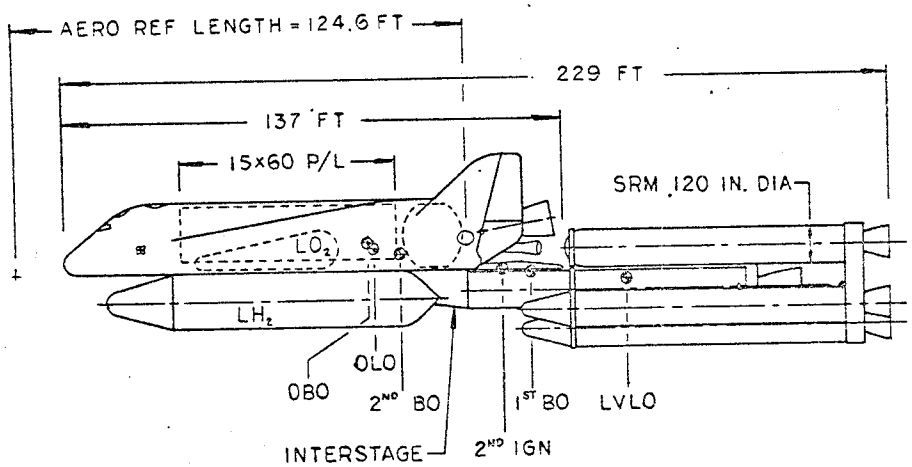

I. LAUNCH VEHICLE

GLOW	5,041	KLB
V_{STAGE}	2400/630	FPSEC
T/W	1.35	

II. BOOSTER - SRM - TWO STAGE

	1ST STAGE	2ND STAGE
NUMBER OF MOTORS	5	2
DIAMETER	120 INCH	120 INCH
L/D	7.19	7.19
PROPELLANT	470 KLB	470 KLB
MAX S.L. THRUST	1,328 KLB	1,485 KLB
MAX VAC THRUST	- KLB	- KLB
TOTAL STAGE WEIGHT	2,640 KLB	1,056 KLB
CANT ANGLE	3 DEGREE	5 DEGREE
GIMBAL ANGLE	±2 DEGREE	±2 DEGREE
NOZZLE DIA	116.5 INCH	116.5 INCH
THROAT DIA	38 INCH	38 INCH

III. ORBITER

A. AERODYNAMIC

1. REF PLANFORM AREA	3,552	FT^2
2. TOTAL PLANFORM AREA	5,205	FT^2
3. WETTED AREA EXCL BASE	14,250	FT^2
4. BASE	888	FT^2
5. FIN	909	FT^2
6. RUDDER	345	FT^2
7. SPEED BRAKE	230	FT^2
8. UPPER FLAP	505	FT^2
9. LOWER FLAP	791	FT^2
10. ELEVON	395	FT^2

B. PROPULSION

1. MAIN ROCKET ENGINE

NUMBER	3	
THRUST (SL E= 35:1)	415	KLB
EXPANSION RATIO	150:1	

2. ASCENT PROPELLANT

LO_2 IN	ORBITER	9,850	FT^3
LO_2 IN	ORBITER	678	KLB
LH_2 IN	DROPTANK	26,500	FT^3
LH_2 IN	DROPTANK	113	KLB
TOTAL		791	KLB

3. OMPS INCL ACPS

OMPS ENGINES:

NUMBER

TYPE

PROPEL.	19,650	LB
		LB

4. AIRBREATHER ENGINES

TYPE	4	
NUMBER	JTF-22B	
JP-4		LB

C. GENERAL DATA

GLOW	1,071	KLB
DRY WEIGHT	171	KLB
TOTAL VOLUME	59,900	FT^3
OCCUP/TOTAL VOL	.84	
MAIN ENGINE		
CANT ANGLE	10	DEGREE
GIMBAL ANGLE	± 1	DEGREE

GH-3
DO 4605

CONFIGURATION 2 FINAL

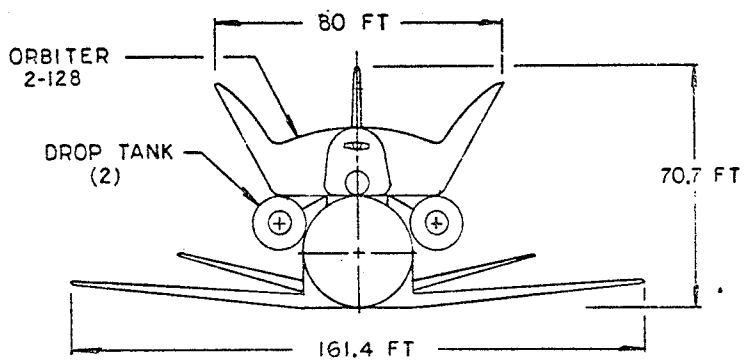

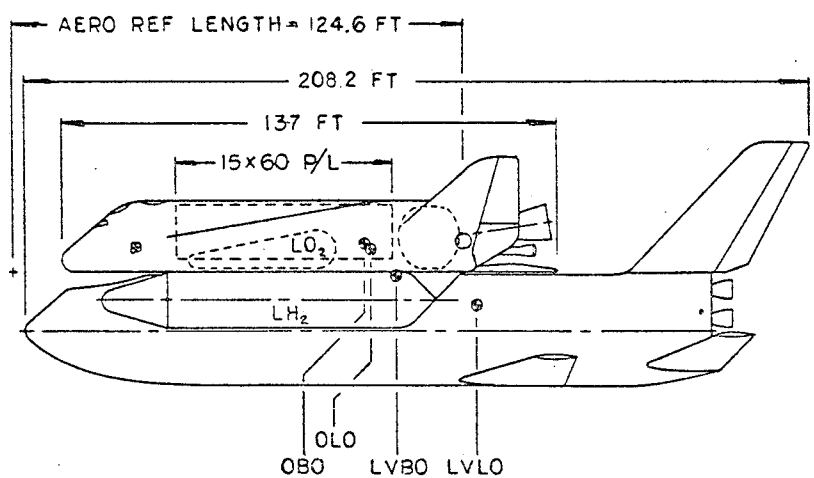

I. LAUNCH VEHICLE

GLOW	3,320	KLB
V_{STAGE}	6,100	FT/SEC
TPW	1.375	

II. BOOSTER - REUSABLE

PROPELLANT	1,796	KLB
MAIN ROCKET ENGINES		
NUMBER	11	
THRUST S.L.	415	
ε	35:1	
GLOW	2,248	
DRY WEIGHT	387	

III. ORBITER

A. AEROPHYSICS

1. REF PLANFORM AREA	3,552	FT^2
2. TOTAL PLANFORM AREA	5,205	FT^2
3. WETTED AREA EXCL BASE	14,250	FT^2
4. BASE	688	FT^2
5. FIN	909	FT^2
6. RUDDER	345	FT^2
7. SPEED BRAKE	230	FT^2
8. UPPER FLAP	505	FT^2
9. LOWER FLAP	791	FT^2
10. ELEVON	395	FT^2

B. PROPULSION

1. MAIN ROCKET ENGINE

NUMBER	3	
THRUST (SL ε = 35:1)	415	KLB
EXPANSION RATIO	150:1	

2. ASCENT PROPELLANT

LO_2 IN ORBITER	9,850	FT^3
LO_2 IN ORBITER	678	KLB
LH_2 IN DROPTANK	26,500	FT^3
LH_2 IN DROPTANK	113	KLB
TOTAL	791	KLB

3. OMPS INCL ACPS

OMPS ENGINES:		
NUMBER		
TYPE		
PROPEL.	19,650	LB
		LB

4. AIRBREATHER ENGINES

TYPE	4	
NUMBER	JTF-22B	
JP-4		LB

C. GENERAL DATA

GLOW	1,071	KLB
DRY WEIGHT	171	KLB
TOTAL VOLUME	59,900	FT^3
OCCUP/TOTAL VOL	.84	
MAIN ENGINE		
CANT ANGLE	10	DEGREE
GIMBAL ANGLE	±1	DEGREE

CONFIGURATION 2C INTERIM

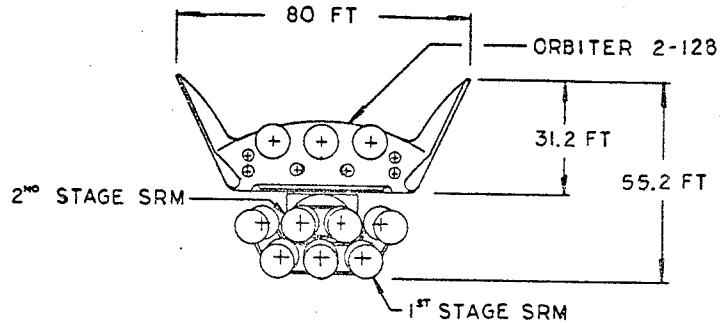

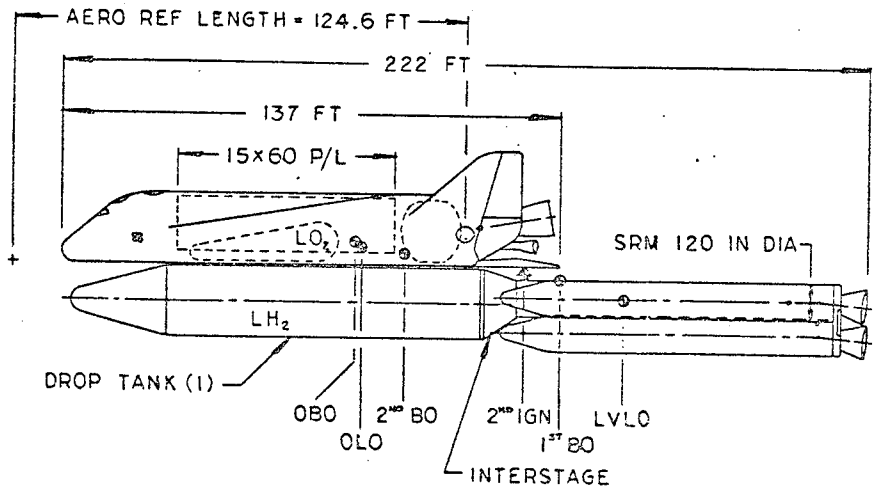

I. LAUNCH VEHICLE

GLOW	4,870	KLB
V_{STAGE}	2,400/6,300	FT/SEC
Σ/Σ	1.35	

II. BOOSTER – SRM – TWO STAGE

	1ST STAGE		2ND STAGE	
NUMBER OF MOTORS	5		2	
DIAMETER	120	INCH	120	INCH
L/D	7.19		7.19	
PROP/MOTOR	470	KLB	470	KLB
MAX S.L. THRUST	1,328	KLB	-	KLB
MAX VAC THRUST	-	KLB	1,485	KLB
TOTAL STAGE WEIGHT	2,640	KLB	1,056	KLB
CANT ANGLE	6.5	DEGREE	6	DEGREE
GIMBAL ANGLE	±2	DEGREE	±2	DEGREE
NOZZLE DIA	116.5	INCH	116.5	INCH
THROAT DIA	38	INCH	38	INCH

III. ORBITER

A. AERODYNAMIC

1. REF PLANFORM AREA	3,552	FT^2
2. TOTAL PLANFORM AREA	5,205	FT^2
3. WETTED AREA EXCL BASE	14,250	FT^2
4. BASE	888	FT^2
5. FIN	909	FT^2
6. RUDDER	345	FT^2
7. SPEED BRAKE	230	FT^2
8. UPPER FLAP	505	FT^2
9. LOWER FLAP	791	FT^2
10. ELEVON	395	FT^2

B. PROPULSION

1. MAIN ROCKET ENGINE

NUMBER	3	
THRUST (SL Σ= 35:1)	415	KLB
EXPANSION RATIO	150:1	

2. ASCENT PROPELLANT

LO_2 IN ORBITER	9,850	FT^3
LO_2 IN ORBITER	378	KLB
LH_2 IN DROPTANK	26,500	FT^3
LH_2 IN DROPTANK	113	KLB
TOTAL	791	KLB

3. OMPS INCL ACPS

OMPS ENGINES:

NUMBER		
TYPE		
PROPEL.	19,650	LB
		LB

4. AIRBREATHER ENGINES

TYPE	4	
NUMBER	JTF-22B	
JP-4		LB

C. GENERAL DATA

GLOW	1,066	KLB
DRY WEIGHT	168.6	KLB
TOTAL VOLUME	59,900	FT^3
OCCUP/TOTAL VOL	.84	
MAIN ENGINE		
CANT ANGLE	10	DEGREE
GIMBAL ANGLE	±1	DEGREE

GH-5
DO 4607

CONFIGURATION 2C FINAL

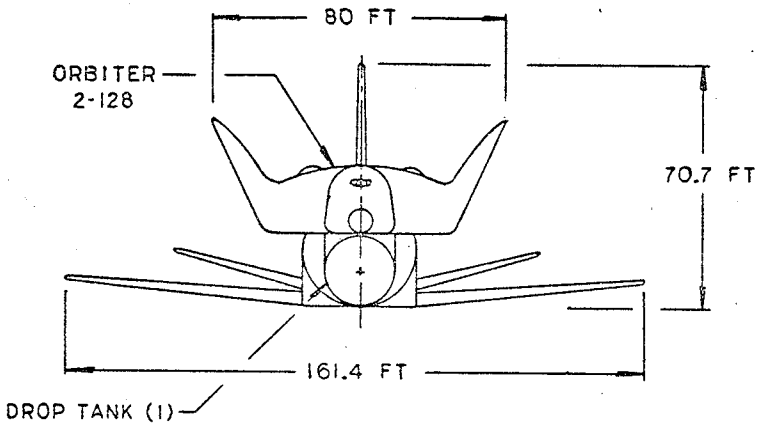

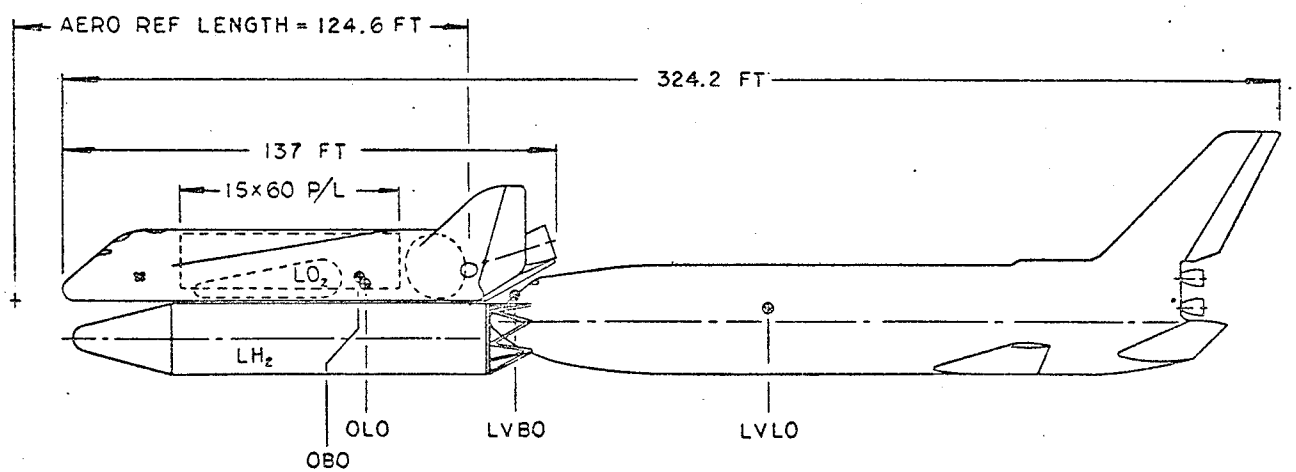

I. LAUNCH VEHICLE

GLOW	3,299	KLB
V_{STAGE}	6,000	FT/SEC
IMR	1.38	

II. BOOSTER - REUSABLE

PROPELLANT	1,762	KLB
MAIN ROCKET ENGINES		
NUMBER	11	
THRUST S.L.	415	KLB
ε	35:1	
GLOW	2,216	KLB
DRY WEIGHT	389	KLB

III. ORBITER

A. AERODYNAMIC

1. REF PLANFORM AREA	3,552	FT^2
2. TOTAL PLANFORM AREA	5,205	FT^2
3. WETTED AREA EXCL BASE	14,250	FT^2
4. BASE	888	FT^2
5. FIN	909	FT^2
6. RUDDER	345	FT^2
7. SPEED BRAKE	230	FT^2
8. UPPER FLAP	505	FT^2
9. LOWER FLAP	791	FT^2
10. ELEVON	395	FT^2

B. PROPULSION

1. MAIN ROCKET ENGINE

NUMBER	3	
THRUST (SL ε = 35:1)	415	KLB
EXPANSION RATIO	150:1	

2. ASCENT PROPELLANT

LO_2 IN	ORBITER	9,850	FT^3
LO_2 IN	ORBITER	678	KLB
LH_2 IN	DROPTANK	26,500	FT^3
LH_2 IN	DROPTANK	113	KLB
TOTAL		791	KLB

3. OMPS INCL ACPS

OMPS ENGINES:

NUMBER

TYPE

PROPEL. 19,650 LB

LB

4. AIRBREATHER ENGINES

TYPE +

NUMBER JTF-22B

JP-4 LB

C. GENERAL DATA

GLOW	1,066	KLB
DRY WEIGHT	168.6	KLB
TOTAL VOLUME	59,900	FT^3
OCCUP/TOTAL VOL	.84	
MAIN ENGINE		
CANT ANGLE	10	DEGREE
GIMBAL ANGLE	±1	DEGREE

GH-6
DO 4608

CONFIGURATION 5 INTERIM

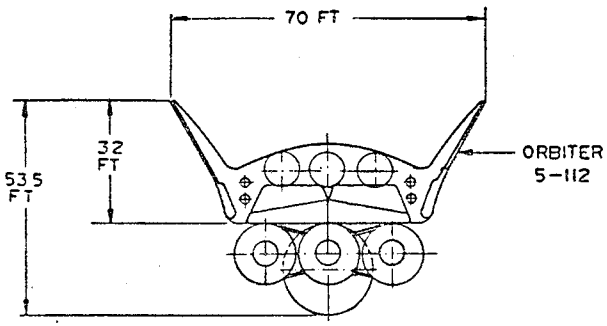

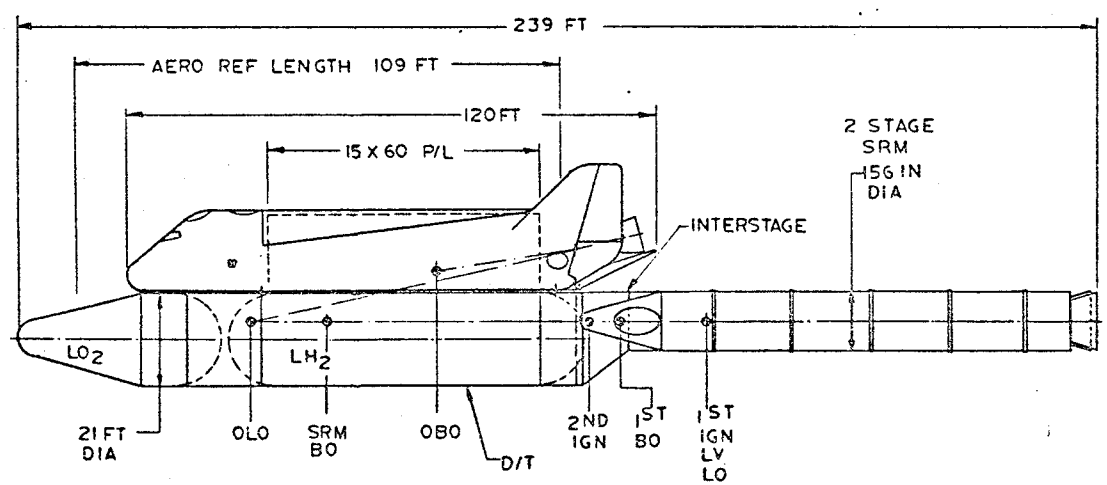

I. LAUNCH VEHICLE

GLOW	4,665	KLB
V_{STAGE}	2300/6300	FT/SEC
T/W	1.25	

II. BOOSTER - SRM - TWO STAGE

	1ST STAGE		2ND STAGE	
NUMBER OF MOTORS	2		1	
DIAMETER	156	INCH	156	INCH
L/D	7.05		7.05	
PROP/MOTOR	1,047	KLB	1,047	KLB
MAX S.L. THRUST	3,150	KLB	-	KLB
MAX VAC THRUST	-	KLB	3,425	KLB
TOTAL STAGE WEIGHT	2,388	KLB	1,194	KLB
CANT ANGLE	0	DEGREE	0	DEGREE
GIMBAL ANGLE	0	DEGREE	0	DEGREE
NOZZLE DIA	156	INCH	156	INCH
THROAT DIA	51.3	INCH	51.3	INCH

III. ORBITER

A. AERODYNAMIC

1. REF PLANFORM AREA	2,720 FT^2
2. TOTAL PLANFORM AREA	3,960 FT^2
3. WETTED AREA EXCL BASE	10,900 FT^2
4. BASE	660 FT^2
5. FIN	705 FT^2
6. RUDDER	268 FT^2
7. SPEED BRAKE	167 FT^2
8. UPPER FLAP	326 FT^2
9. LOWER FLAP	605 FT^2
10. ELEVON	302 FT^2

B. PROPULSION

1. MAIN ROCKET ENGINE	
NUMBER	3
THRUST (SL - 35:1)	415 KLB
EXPANSION RATIO	90:1
2. ASCENT PROPELLANT	
LO_2 IN DROPTANK	9,800 FT^3
LO_2 IN DROPTANK	674.5 KLB
LH_2 IN DROPTANK	26,340 FT^3
LH_2 IN DROPTANK	112.5 KLB
TOTAL	787 KLB
3. OMPS INCL ACPS	
OMPS ENGINES:	
NUMBER	3
TYPE	RL-10
LO_2 380 FT^3	12,000 LB
LH_2 1,220 FT^3	2,000 LB
4. AIRBREATHER ENGINES	
TYPE	JTF-22B
NUMBER	4
JP-4	

C. GENERAL DATA

GLOW	1,070 KLB
DRY WEIGHT	136.5 KLB
TOTAL VOLUME	42,400 FT^3
OCCUP/TOTAL VOL	.81
MAIN ENGINE	
CANT ANGLE	10 DEGREE
GIMBAL ANGLE	±1.75 DEGREE

GH-7
DO 4609

CONFIGURATION 5 FINAL

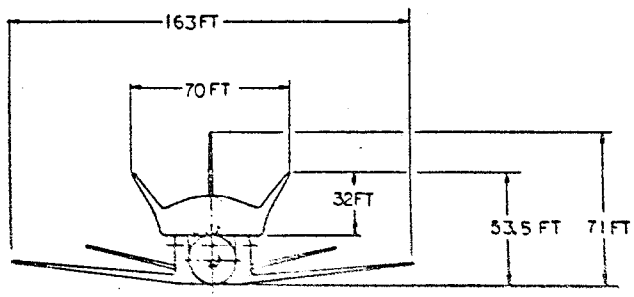

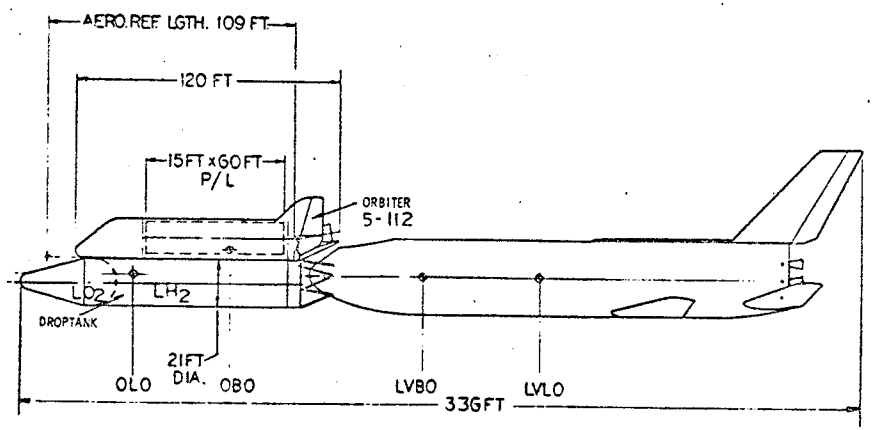

I. LAUNCH VEHICLE	
GLOW	3,339 KLB
V_{STAGE}	6,000 FT/SEC
T/W	1.367
II. BOOSTER - REUSABLE	
PROPELLANT	1,792 KLB
MAIN ROCKET ENGINES	
NUMBER	11
THRUST S.L.	415 KLB
ε	25:1
GLOW	2,252 KLB
DRY WEIGHT	395 KLB

III. ORBITER	
A. AERODYNAMIC	
1. REF PLANFORM AREA	2,720 FT^2
2. TOTAL PLANFORM AREA	3,960 FT^2
3. WETTED AREA EXCL BASE	10,900 FT^2
4. BASE	660 FT^2
5. FIN	705 FT^2
6. RUDDER	263 FT^2
7. SPEED BRAKE	167 FT^2
8. UPPER FLAP	386 FT^2
9. LOWER FLAP	605 FT^2
10. ELEVON	302 FT^2
B. PROPULSION	
1. MAIN ROCKET ENGINE	
NUMBER	3
THRUST (NOZZLE - [illegible])	[illegible] KLB
EXPANSION RATIO	[illegible]
[illegible]	[illegible]
LO_2 IN DROPTANK	[illegible] KLB
LH_2 IN DROPTANK	28,340 FT^3
LH_2 IN DROPTANK	112.5 KLB
TOTAL	787 KLB
3. OMPS INCL ACPS	
OMPS ENGINES:	
NUMBER	3
TYPE	RL-10
LO_2: 380 FT^3	12,000 LB
LH_2: 1,220 FT^3	2,000 LB
4. AIRBREATHER ENGINES	
TYPE	JTF-22B
NUMBER	4
JP-4	
C. GENERAL DATA	
GLOW	1,070 KLB
DRY WEIGHT	136.5 KLB
TOTAL VOLUME	42,400 FT^3
OCCUP/TOTAL VOL	
MAIN ENGINE	
CANT ANGLE	10 DEGREE
GIMBAL ANGLE	±1.75 DEGREE

REV. A

CONFIGURATION 5A INTERIM

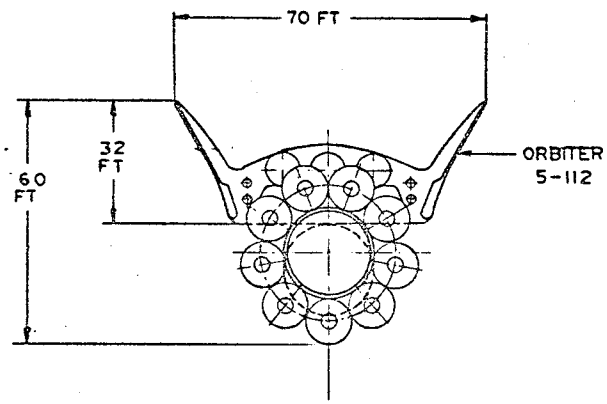

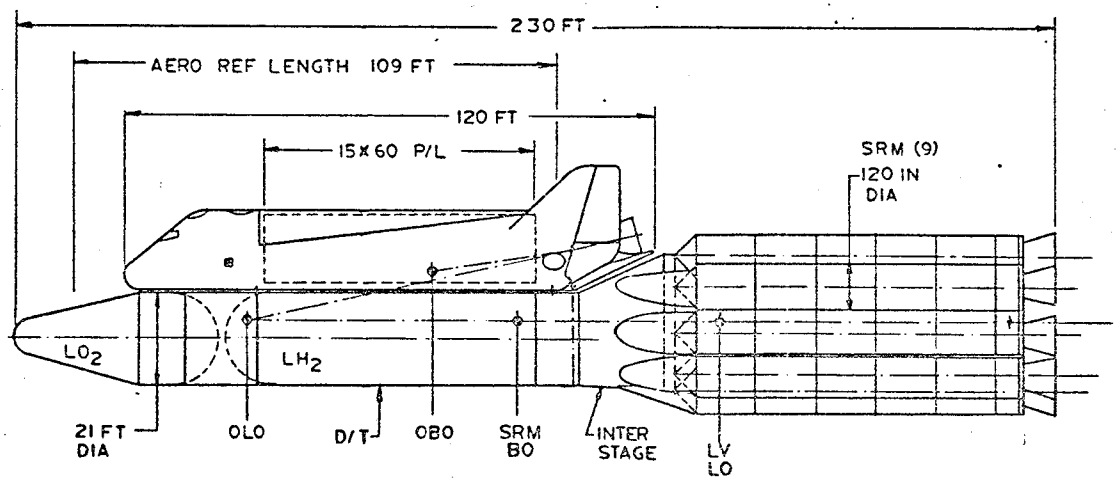

I. LAUNCH VEHICLE

GLOW	5,826	KLB
V_{STAGE}	6,330	FT/SEC
T/W	1.35	

II. BOOSTER - SRM - SINGLE STAGE

NUMBER OF MOTORS	9	
DIAMETER	120	INCH
L/D	6.93	
PROP/MOTOR	452	KLB
MAX S.L. THRUST	873	KLB
TOTAL SRM WEIGHT	4,572	KLB
CANT ANGLE	0	DEGREE
GIMBAL ANGLE	0	DEGREE
NOZZLE DIA	92	INCH
THROAT DIA	31	INCH

III. ORBITER

A. AERODYNAMIC

1. REF PLANFORM AREA	2,720	FT^2
2. TOTAL PLANFORM AREA	3,950	FT^2
3. WETTED AREA EXCL BASE	10,900	FT^2
4. BASE	660	FT^2
5. FIN	705	FT^2
6. RUDDER	256	FT^2
7. SPEED BRAKE	167	FT^2
8. UPPER FLAP	386	FT^2
9. LOWER FLAP	605	FT^2
10. ELEVON	302	FT^2

B. PROPULSION

1. MAIN ROCKET ENGINE		
NUMBER	3	
THRUST (SL - 35:1)	415	KLB
EXPANSION RATIO	90:1	
2. ASCENT PROPELLANT		
LO_2 IN DROPTANK	9,800	FT^3
LO_2 IN DROPTANK	674.5	KLB
LH_2 IN DROPTANK	26,340	FT^3
LH_2 IN DROPTANK	112.5	KLB
TOTAL	787	KLB
3. OMPS INCL ACPS		
OMPS ENGINES:		
NUMBER	3	
TYPE	RL-10	
LO_2: 380 FT^3	12,000	LB
LH_2: 1,220 FT^3	2,000	LB
4. AIRBREATHER ENGINES		
TYPE	JTF-22B	
NUMBER	4	
JP-4		

C. GENERAL DATA

OLOW	1,070	KLB
DRY WEIGHT	136.5	KLB
TOTAL VOLUME	42,400	FT^3
OCCUP/TOTAL VOL	.81	
MAIN ENGINE		
CANT ANGLE	10	DEGREE
GIMBAL ANGLE	±1.75	DEGREE

GH-9
DO 4611

CONFIGURATION 5B INTERIM

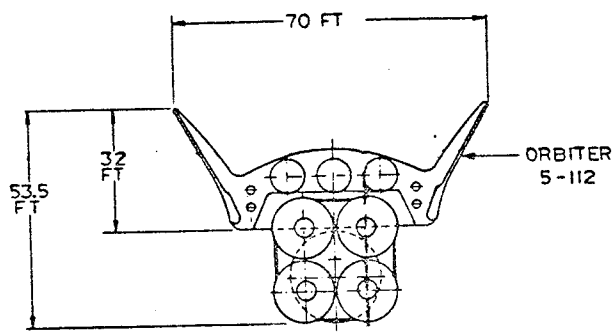

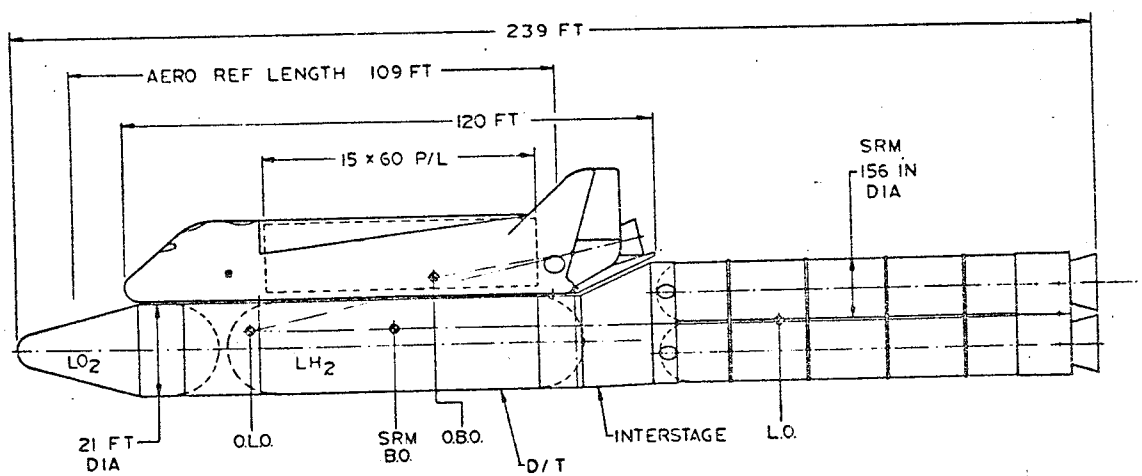

I. LAUNCH VEHICLE

GLOW	5,170 KLB
V_{STAGE}	6,300 FT/SEC
T/W	1.35

II. BOOSTER - SRM - SINGLE STAGE

NUMBER OF MOTORS	4
DIAMETER	156 INCH
L/D	6.03
PROP/MOTOR	896 KLB
MAX S.L. THRUST/MOTOR	1,745 KLB
TOTAL SRM WEIGHT	4,032 KLB
CANT ANGLE	0 DEGREE
GIMBAL ANGLE	0 DEGREE
NOZZLE DIA	142 INCH
THROAT DIA	64.4 INCH

III. ORBITER

A. AERODYNAMIC

1. REF PLANFORM AREA	2,730 FT^2
2. TOTAL PLANFORM AREA	3,950 FT^2
3. WETTED AREA EXCL BASE	10,900 FT^2
4. BASE	660 FT^2
5. FIN	705 FT^2
6. RUDDER	266 FT^2
7. SPEED BRAKE	167 FT^2
8. UPPER FLAP	366 FT^2
9. LOWER FLAP	605 FT^2
10. ELEVON	302 FT^2

B. PROPULSION

1. MAIN ROCKET ENGINE	
NUMBER	3
THRUST (SL - 35:1)	415 KLB
EXPANSION RATIO	90:1
2. ASCENT PROPELLANT	
LO_2 IN DROPTANK	9,800 FT^3
LO_2 IN DROPTANK	674.5 KLB
LH_2 IN DROPTANK	26,340 FT^3
LH_2 IN DROPTANK	112.5 KLB
TOTAL	787 KLB
3. OMPS INCL ACPS	
OMPS ENGINES:	
NUMBER	3
TYPE	RL-10
LO_2: 350 FT^3	12,000 LB
LH_2: 1,220 FT^3	2,000 LB
4. AIRBREATHER ENGINES	
TYPE	JTF-22B
NUMBER	4
JP-4	

C. GENERAL DATA

GLOW	1,070 KLB
DRY WEIGHT	136.5 KLB
TOTAL VOLUME	42,400 FT^3
OCCUP/TOTAL VOL	.81
MAIN ENGINE	
CANT ANGLE	10 DEGREE
GIMBAL ANGLE	±1.75 DEGREE

GH-10
DO 4612

CONFIGURATION 5D INTERIM

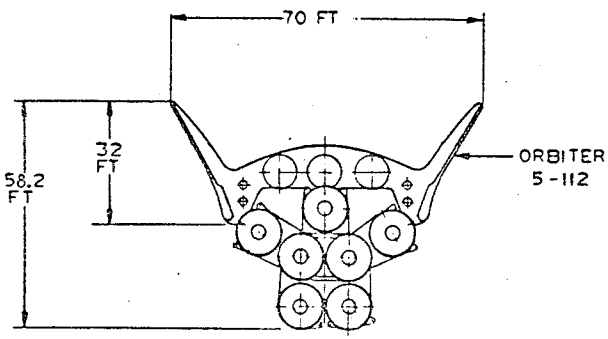

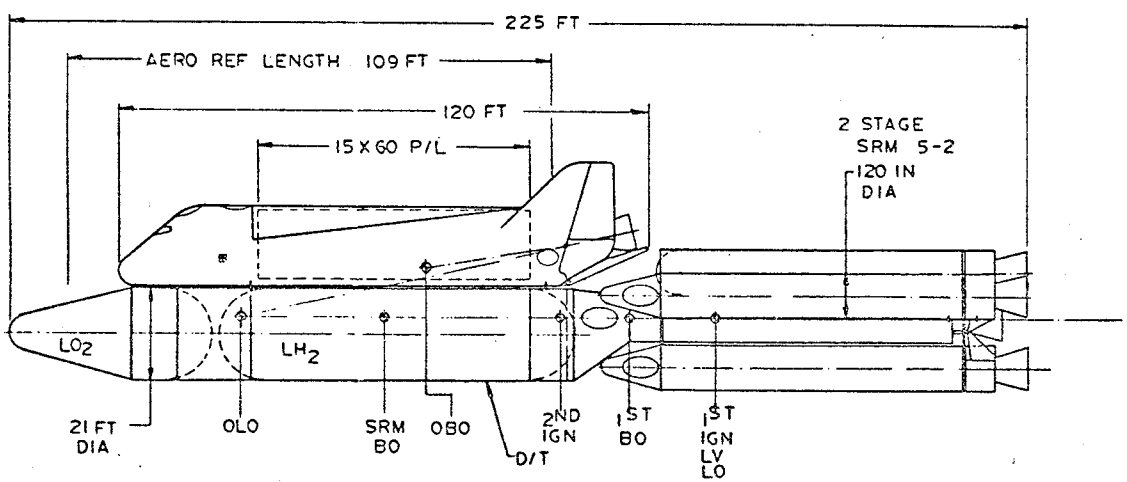

I. LAUNCH VEHICLE

GLOW	4,924 KLB
V_{STAGE}	2,400%, 300 FT/SEC
T/W	1.35

II. BOOSTER - SRM - TWO STAGE

	1st STAGE	2nd STAGE
NUMBER OF MOTORS	5	2
DIAMETER	120 INCH	120 INCH
L/D	7.19	7.19
PROPELLANT	470 KLB	470 KLB
MAX S.L. THRUST	1,328 KLB	- KLB
MAX VAC THRUST		1,435 KLB
TOTAL STAGE WEIGHT	2,640 KLB	1,056 KLB
CANT ANGLE	0 DEGREE	0 DEGREE
GIMBAL ANGLE	0 DEGREE	0 DEGREE
NOZZLE DIA	116.5 INCH	116.5 INCH
THROAT DIA	38 INCH	38 INCH

III. ORBITER

A. AERODYNAMIC

1. REF PLANFORM AREA	2,720 FT^2
2. TOTAL PLANFORM AREA	3,960 FT^2
3. WETTED AREA EXCL BASE	10,900 FT^2
4. BASE	660 FT^2
5. FIN	705 FT^2
6. RUDDER	263 FT^2
7. SPEED BRAKE	167 FT^2
8. UPPER FLAP	336 FT^2
9. LOWER FLAP	605 FT^2
10. ELEVON	302 FT^2

B. PROPULSION

1. MAIN ROCKET ENGINE	
NUMBER	3
THRUST (SL - 35:1)	415 KLB
EXPANSION RATIO	90:1
2. ASCENT PROPELLANT	
LO_2 IN DROPTANK	9,800 FT^3
LO_2 IN DROPTANK	674.5 KLB
LH_2 IN DROPTANK	26,340 FT^3
LH_2 IN DROPTANK	112.5 KLB
TOTAL	787 KLB
3. OMPS INCL ACPS	
OMPS ENGINES:	
NUMBER	3
TYPE	RL-10
LO_2: 350 FT^3	12,000 LB
LH_2: 1,220 FT^3	2,000 LB
4. AIRBREATHER ENGINES	
TYPE	JTF-22B
NUMBER	4
JP-4	

C. GENERAL DATA

GLOW	1,070 KLB
DRY WEIGHT	136.5 KLB
TOTAL VOLUME	42,400 FT^3
OCCUP/TOTAL VOL	.81
MAIN ENGINE	
CANT ANGLE	10 DEGREE
GIMBAL ANGLE	±1.75 DEGREE

CONFIGURATION 5C INTERIM

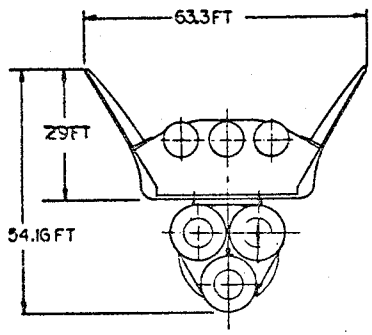

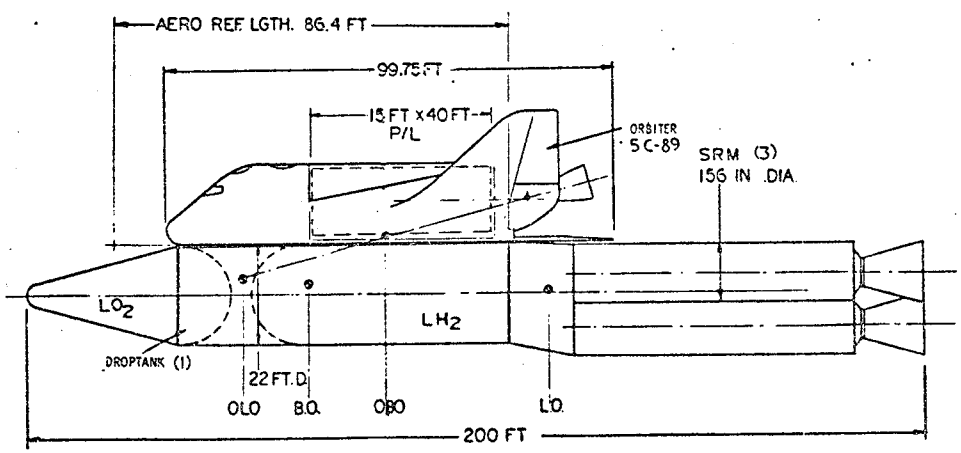

I. LAUNCH VEHICLE

GLOW	4,759 KLB
V_{STAGE}	6,300 FT/SEC
T/W	1.35

II. BOOSTER – SRM – SINGLE STAGE

NUMBER OF MOTORS	3
DIAMETER	156 INCH
L/D	7.23
PROP/MOTOR	1,070 KLB
MAX S.L. THRUST	2,140 KLB
TOTAL SRM WEIGHT	3,670 KLB
CANT ANGLE	0 DEGREE
GIMBAL ANGLE	±1.5 DEGREE
NOZZLE DIA	154 INCH
THROAT DIA	49.2 INCH

III. ORBITER

A. AERODYNAMIC

1. REF PLANFORM AREA	2,013 FT^2
2. TOTAL PLANFORM AREA	2,944 FT^2
3. WETTED AREA EXCL BASE	8,870 FT^2
4. BASE	632 FT^2
5. FIN	796 FT^2
6. RUDDER	302 FT^2
7. SPEED BRAKE	180 FT^2
8. UPPER FLAP	443 FT^2
9. LOWER FLAP	695 FT^2
10. ELEVON	397 FT^2

B. PROPULSION

1. MAIN ROCKET ENGINE

NUMBER	3
THRUST (SL ε = 35:1)	415 KLB
EXPANSION RATIO	90:1

2. ASCENT PROPELLANT

LO_2 IN DROPTANK	9,103 FT^3
LO_2 IN DROPTANK	626.5 KLB
LH_2 IN DROPTANK	24,470 FT^3
LH_2 IN DROPTANK	1044 KLB
TOTAL	731 KLB

3. OMPS INCL ACPS

OMPS ENGINES:

NUMBER	3
TYPE	RL10
PROPELLANT	15,600 LB

C. GENERAL DATA

GLOW	995 KLB
DRY WEIGHT	122.8 KLB
TOTAL VOLUME	32,833 FT^3
OCCUP/TOTAL VOL	.95
MAIN ENGINE	
CANT ANGLE	15 DEGREE
GIMBAL ANGLE	±1.5 DEGREE

GH-11
DO 4613

CONFIGURATION 5C FINAL

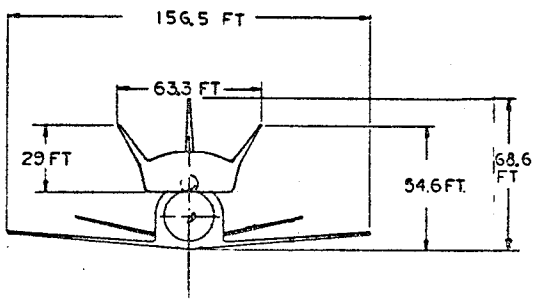

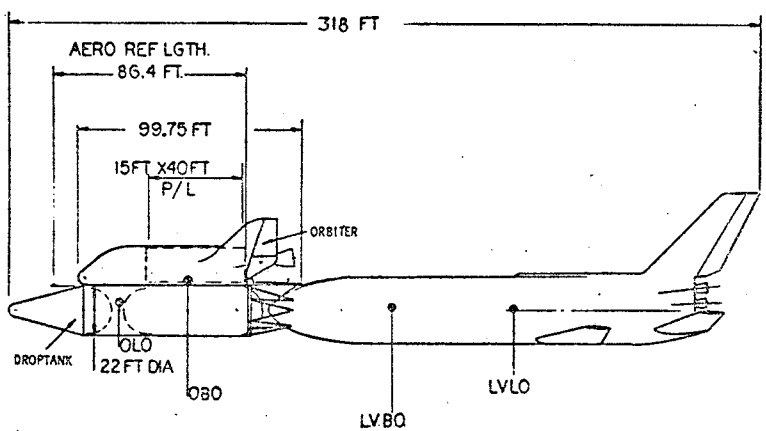

I. LAUNCH VEHICLE		
GLOW	3,096	KLB
V_{STAGE}	6,000	FT/SEC
T/W	1.593	
II. BOOSTER – REUSABLE		
PROPELLANT	1,506	KLB
MAIN ROCKET ENGINES		
NUMBER	11	
THRUST S.L.	415	KLB
	35:1	
BLOW	2,024	KLB
DRY WEIGHT	376	KLB

III. ORBITER

A. AERODYNAMIC		
1. REF PLANFORM AREA	2,013	FT^2
2. TOTAL PLANFORM AREA	2,944	FT^2
3. WETTED AREA EXCL BASE	8,870	FT^2
4. BASE	632	FT^2
5. FIN	296	FT^2
6. RUDDER	302	FT^2
7. SPEED BRAKE	180	FT^2
8. UPPER FLAP	403	FT^2
9. LOWER FLAP	695	FT^2
10. ELEVON	397	FT^2
B. PROPULSION		
1. MAIN ROCKET ENGINE		
NUMBER	3	
THRUST (SL ϵ = 35:1)	415	KLB
EXPANSION RATIO	60:1	
2. ASCENT PROPELLANT		
LO_2 IN D/T	9,103	FT^3
LO_2 IN D/T	626.5	KLB
LH_2 IN D/T	24,470	FT^3
LH_2 IN D/T	104.4	KLB
TOTAL	731	KLB
3. OMPS INCL ACPS		
OMPS ENGINES:		
NUMBER	3	
TYPE	RL10	
PROPELLANT	15,620	LB
C. GENERAL DATA		
GLOW	996	KLB
DRY WEIGHT	122.8	KLB
TOTAL VOLUME	33,000	FT^3
OCCUP/TOTAL VOL	.95	
MAIN ENGINE		
CANT ANGLE	15	DEGREE
GIMBAL ANGLE	±1.5	DEGREE

GH-12
DO 4614

CONFIGURATION II

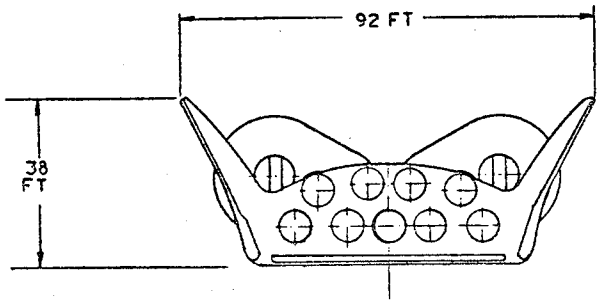

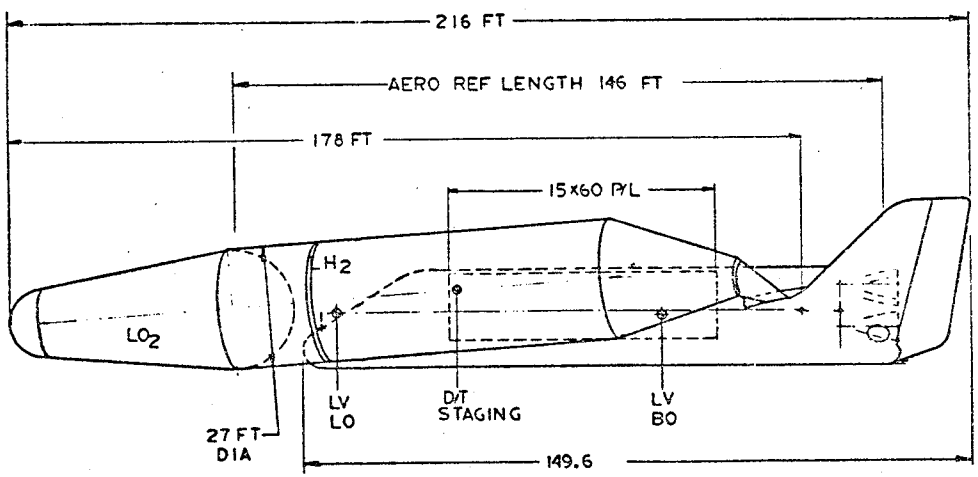

I. LAUNCH VEHICLE

GLOW	4,020.7	KLB
V_{STAGE}	18,300	FT/SEC
T/W	1.2993	

II. ORBITER

A. AERODYNAMIC

1. REF PLANFORM AREA	4,878	FT^2
2. TOTAL PLANFORM AREA	6,846	FT^2
3. WETTED AREA EXCL BASE	17,700	FT^2
4. BASE	1,230	FT^2
5. FIN	1,248	FT^2
6. RUDDER	474	FT^2
7. SPEED BRAKE	225	FT^2
8. UPPER FLAP	693	FT^2
9. LOWER FLAP	1,026	FT^2
10. ELEVON	503	FT^2

B. PROPULSION

1. MAIN ROCKET ENGINE		
NUMBER	9	
THRUST (S.L. • 35:1)	530	KLB
EXPANSION RATIO	53:1	
2. ASCENT PROPELLANT		
LO_2 IN ORBITER	100.0	KLB
LO_2 IN DROPTANK	2,650.1	KLB
LH_2 IN ORBITER	34.7	KLB
LH_2 IN DROPTANK	644.3	KLB
TOTAL	3,319	KLB
3. OMPS INCL ACPS		
OMPS ENGINES:		
NUMBER		
TYPE		
LO_2 640 FT^3	34,000	LB
LH_2 2,400 FT^3	8,000	LB
4. AIRBREATHER ENGINES		
TYPE	JTF-22B	
NUMBER	6	
JP-4		LB

C. GENERAL DATA

GLOW	852	KLB
DRY WEIGHT	211.0	KLB
TOTAL VOLUME	97,603	FT^3
OCCUP/TOTAL VOL	.85	
MAIN ENGINE		
CANT ANGLE	9	DEGREE
GIMBAL ANGLE	±2	DEGREE

ISSUES SUMMARY

SYSTEM ISSUES	CONCEPT NO.	WEIGHT CONSIDERATIONS GLOW	ORB (DRY)	TANK (DRY)	OTHER CONSIDERATIONS	RECOMMENDED SELECTION
P/L BAY LENGTH	5B	FINAL 3,339K	136.5K	50.4K	• UNACCEPTABLE REENTRY HEATING FOR 40-FT BAY • MODEST IMPROVEMENT IN COSTS AND WEIGHTS FOR 40-FT BAY • SENSITIVITY A MINOR CONSIDERATION	60-FT BAY
		Δ = 303K	Δ = 13.6K	Δ = 3.4K		
	5C	3,036K	122.9K	47.0K		
EXTERNAL TANKS	2C	FINAL 3,694K	170.4	33.1K	• HO TANK DECOUPLES ORBITER FROM STAGING AND ASCENT VELOCITY • SMALLER AND LIGHTER ORBITER FOR HO TANK • LOWER RECURRING COST FOR H TANK	HO TANK
		Δ = 355K	Δ = 33.9K	Δ = 17.3K		
	5D	3,339K	136.5K	50.4K		
SRM STAGING	5B	5,173K			• SINGLE STAGE LESS COMPLEX • TWO-STAGE HAS HIGH Q (≈ 260 LB/FT^2) FIRST SEPARATION • TWO-STAGE REQUIRES MULTIPLE-UNIT SEPARATIONS	SINGLE STAGE
		Δ = 508K	Δ = 0	Δ = 0		
	5	4,665K				
		INTERIM				
	5A	5,826K				
		Δ = 902K	Δ = 0	Δ = 0		
	5D	4,924K				
SRM SIZE	5A	5,826K			• 156 IN. DIA ALLOWS FEWER SRMs • 156 IN. RESULTS IN LOWER GLOW AND TOTAL PROGRAM COST • 156 IN. PRESENTS LEAST COMPLEX STAGE DESIGN	156 IN.
		Δ = 653K	Δ = 0	Δ = 0		
	5B	5,173K				
		INTERIM				
	5D	4,924K				
		Δ = 259K	Δ = 0	Δ = 0		
	5	4,665K				
CONFIG-URATION	2	FINAL 3,320K	170.8K	17.1K	• SIMPLER SEPARATION FOR TANDEM • GREATER COMMONALITY BETWEEN INTERIM AND FINAL FOR TANDEM • COSTS AND WEIGHTS FAVOR PARALLEL	TANDEM
		Δ = 374K	Δ = 0.4K	Δ = 16K		
	2C	3,694K	170.4K	33.1K		

ISSUES SUMMARY

SYSTEM ISSUES	CONCEPTS COMPARED	COST CONSIDERATIONS				
		DDT&E ($B)	PK.ANN. ($B)	TOT. PRO ($B)	INT. REC ($M)	FIN. REC ($M)
P/L BAY LENGTH	5B 1 STG-156 IN. → H + O; 60 FT BAY	6.512	.972	10.116	34.0	5.69
		Δ= .139	Δ= .016	Δ= .242	Δ= 1.5	Δ= .25
	5C 1 STG-156 IN. → H + O; 40 FT BAY	6.373	.956	9.873	32.5	5.54
EXTERNAL TANKS	2C 2 STG-120 IN. → H	6.712	1.021	10.144	35.1	5.16
		Δ= .260	Δ= .047	Δ= .080	Δ= .1	Δ= .52
	5D 2 STG-120 IN. → H + O	6.452	.976	10.064	35.2	5.68
SRM STAGING	5B 1 STG-156 IN. / 5 2 STG-156 IN.	6.512	.972	10.116	34.0	5.69
		Δ= .024	Δ= .005	Δ= .003	Δ= 1.8	Δ= .01
		6.536	.967	10.119	32.2	5.70
	5A 1 STG-120 IN. / 5D 2 STG-120 IN.	6.423	.987	10.080	39.0	5.68
		Δ= .029	Δ= .011	Δ= .016	Δ= 3.8	Δ= 0
		6.452	.976	10.064	35.2	5.68
SRM SIZE	5A 1 STG-120 IN. / 5B 1 STG-156 IN.	6.423	.987	10.080	39.0	5.68
		Δ= .089	Δ= .015	Δ= .035	Δ= 5.0	Δ= .01
		6.512	.972	10.116	34.0	5.69
	5D 2 STG-120 IN. / 5 2 STG-156 IN.	6.452	.976	10.064	35.2	5.68
		Δ= .084	Δ= .009	Δ= .055	Δ= 3.0	Δ= .02
		6.536	.967	10.119	32.2	5.70
CONFIG-URATION	2 2 STG-120 IN. → PARALLEL H	6.551	.972	9.755	32.4	4.77
		Δ= .161	Δ= .049	Δ= .389	Δ= 2.9	Δ= .39
	2C 2 STG-120 IN. → TANDEM H	6.712	1.021	10.144	35.1	5.16

CB-10
no 4631(1)

SUMMARY WEIGHTS: INTERIM CONCEPTS

PAYLOAD	OTHER ORBITER INERT	OLOW	1ST STAGE INERT	1ST STAGE PROPELLANT	2ND STAGE INERT	2ND STAGE PROPELLANT	INTERIM GLOW	INTERIM
65K	22.1K	1,086K	N/A	N/A	N/A	N/A	N/A	→
65K	19.8K	1,071K	403K	2,433K	161K	973K	5,042K	(2) 2 STG-120 IN. →
65K	19.9K	1,125K	428K	2,584K	188K	1,033K	5,358K	(2C) 2 STG-120 IN. →
65K	15.5K	1,071K	292K	2,093K	163K	1,046K	4,665K	(5) 2 STG-156 IN. →
65K	↓	↓	690K	4,065K	N/A	N/A	5,826K	(5A) 1 STG-120 IN. →
65K			517K	3,585K	N/A	N/A	5,173K	(5B) 1 STG-156 IN. →
65K			390K	2,351K	172K	940K	4,924K	(5D) 2 STG-120 IN. →
65K	14.7K	996K	475K*	3,288K	N/A	N/A	4,759K	(5C) 1 STG-156 IN. →
25K**	25.5K	4,101K	N/A	N/A	N/A	N/A	N/A	→

*3 BOTTLES **LOG MISS SIZES VEH; EQUIV P/L DUE EAST EXCEEDS 65K

SUMMARY WEIGHTS: FINAL CONCEPTS

FINAL	ORBITER (DRY)	ORBITER INTERNAL PROPELLANT	DROPTANK (DRY)	DROPTANK PROPELLANT	OLOW	BOOSTER INERT	BOOSTER PROPELLANT	FINAL GLOW
	217.2K	782K	N/A	N/A	1,086K	792K	2,259K	4,467K
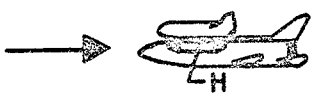	170.8K	687K	17.1K	111.3K	1,071K	453K	1,796K	3,320K
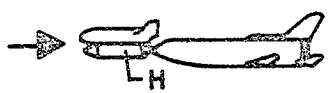	170.4K	720K	33.1K	116.7K	1,125K	554K	2,015K	3,694K
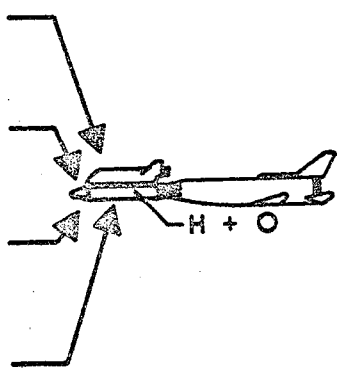	136.5K	16.7K	50.4K	786.6K	1,071K	477K	1,792K	3,339K
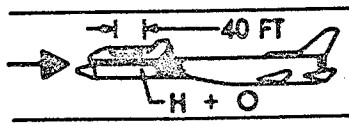	122.9K	15.6K	47.0K	730.9K	996K	454K	1,586K	3,036K
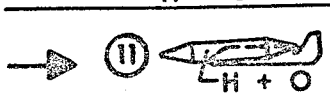	320K	290K	127K	3,313K	4,101K	N/A	N/A	4,101K

PERFORMANCE SUMMARY: INTERIM CONFIGURATIONS

PAYLOAD (CRITICAL MISSION REQUIREMENT)	ABES (CRITICAL MISSION REQUIREMENT)	ORBIT ALT/INCL (CRITICAL MISSION REQUIREMENT)	DESIGN ASCENT VELOCITY (IDEAL)	ΔV FPR (IDEAL)	ΔV ON ORBIT (IDEAL)	LIFTOFF T/W (IDEAL)	SECOND STAGE T/W (SRM)	OLOW T/W	MAX ACCELERATION	STAGING VEL (IDEAL) (FIRST STAGE)	STAGING VEL (REL) (FIRST STAGE)	STAGING DYNAMIC PRESSURE (FIRST STAGE)	PEAK DYNAMIC PRESSURE	INTERIM
NO INTERIM														
65K/40K	OUT	100/55	29,700	297	900	1.35	–	1.34	3	5,600	2,400	240	SAME AS FINAL SYSTEM	2 STG-120 IN.
			29,600	296			1.38	1.34		5,530	2,400	240		2C 2 STG-120 IN.
			29,600	296			1.57	1.30		5,100	2,300	280		5 2 STG-156 IN.
			29,400	294			–			10,225	6,300	40		5A 1 STG-120 IN.
			29,300	293			–			10,080	6,300	40		5B 1 STG-156 IN.
			29,600	296			1.38			5,500	2,400	240		5D 2 STG-120 IN.
			29,200	292			–			10,020	6,300	40		5C 1 STG-156 IN.
NO INTERIM														

PERFORMANCE SUMMARY: FINAL CONFIGURATION

FINAL	PAYLOAD	ABES	ORBIT ALT/INCL	DESIGN ASCENT VELOCITY	ΔV FPR	ΔV ON ORBIT	LIFTOFF T/W	OLOW T/W	MAX ACCELERATION	STAGING VEL (IDEAL)	STAGING VEL (REL)	STAGING DYNAMIC PRESSURE	PEAK DYNAMIC PRESSURE	
	CRITICAL MISSION REQUIREMENT													
①	65K/ 40K	OUT	100/ 55	29,710	297	900	1.39	1.32	3	12,150	7,480	25	546	
H				29,960	300		1.38	1.34		10,900	6,100	30	510	
H				29,940	299		1.38	1.34		10,700	6,000		520	
H + O				29,980	300		1.37	1.31		10,800			510	
40 FT H + O				29,500	295		1.5	1.4		10,400	6,000	30	630	
⑪ H + O	25K/ 25K	IN	100/ 55	29,850	299	1,500	1.3	—		23,265	18,300	1	500	

JET-4
DC 4565

FINAL CONFIGURATIONS: ORBITER AND BOOSTER ENGINE CHARACTERISTICS

	ORBITER					BOOSTER				
	ROCKET ENGINES NO./F_{vac}	Is_{vac}	ENGINE WT	NOZZLE ϵ	NOZZLE GIMBAL NO./ANGLE	ROCKET ENGINES NO./F_{sl}	Is_{sl}	ENGINE WT	NOZZLE ϵ	NOZZLE GIMBAL NO./ANGLE
1	3/477K	459±3	6330	150 2-POS.	3/±7°	15/415K	400±3	5270	35 FIXED	15/±10°
2 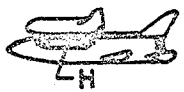	3/477K	459±3	6330	150 2-POS.	3/±7°	11/415K	400±3	5270	35 FIXED	11/±10°
2C 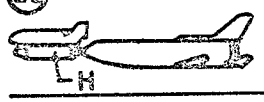	3/477K	459±3	6330	150 2-POS.	3/±7°	11/415K	400±3	5270	35 FIXED	11/±10°
5	3/465K	453±3	6050	90 FIXED	3/±7°	11/415K	400±3	5270	35 FIXED	11/±10°
5C 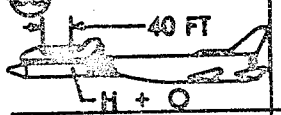	3/465K	453±3	6050	90 FIXED	3/±7°	11/415K	400±3	5270	35 FIXED	11/±10°
11 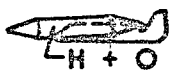	11/549	445±3	6700	53 FIXED	5/±7°	11/475K	386±3	—	—	—

CB-5
DO 4568

CONFIGURATION SENSITIVITIES

$\frac{\partial GLOW}{\partial V}$	$\frac{\partial GLOW}{\partial ISP_1}$	$\frac{\partial GLOW}{\partial ISP_{2,3}}$	$\frac{\partial GLOW}{\partial Wi_1}$	$\frac{\partial GLOW}{\partial Wi_2}$	$\frac{\partial GLOW}{\partial Wi_3}$	INTERIM
NO INTERIM						
		(TBD)				2 — 2 STG-120 IN.
		(TBD)				2C — 2 STG-120 IN.
1,100	-25,000	-21,000	4.0	23	29	5 — 2 STG-156 IN.
1,700	-43,000	-27,000	5.0	30	37	5A — 1 STG-120 IN.
1,500	-35,000	-24,000	4.0	27	33	5B — 1 STG-156 IN.
1,200	-28,000	-22,000	4.0	25	30	5D — 2 STG-120 IN.
1,300	-31,000	-21,000	4.0	25	31	5C — 1 STG-156 IN.
NO INTERIM						

1 BOOSTER 2 TANKS 3 ORBITER

JET-5
DO 4600

CONFIGURATION SENSITIVITIES

FINAL	$\frac{\partial GLOW}{\partial V}$	$\frac{\partial GLOW}{\partial ISP_1}$	$\frac{\partial GLOW}{\partial ISP_{2,3}}$	$\frac{\partial GLOW}{\partial W_1}$	$\frac{\partial GLOW}{\partial W_2}$	$\frac{\partial GLOW}{\partial W_3}$
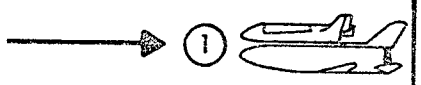	630	-19,000	-24,500	9.4	–	42
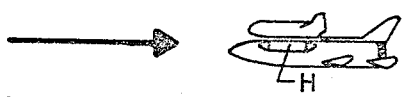	700	-10,000	-25,000	3.0	27	34
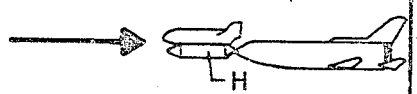	700	-10,000	-24,000	3.0	27	33
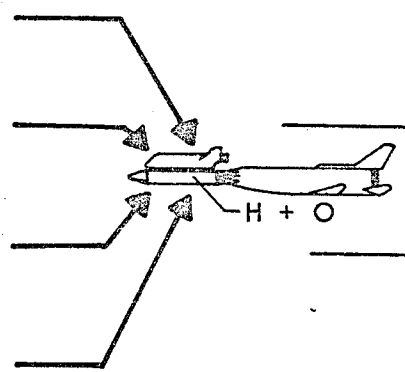	1,385	-11,000	-19,000	4.0	22	28
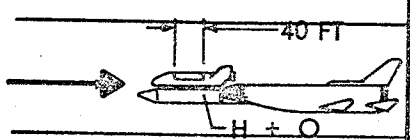	900	-9,000	-15,000	2.0	18	22
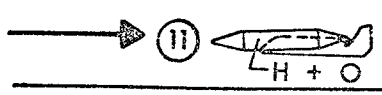	590	-40,000	–	10.7	–	26

1 BOOSTER 2 TANKS 3 ORBITER

COSTING GROUNDRULES

- MAIN ENGINE PHASE C/D GO-AHEAD OF 7/71
- ORBITER PHASE C/D GO-AHEAD OF 4/72
- BOOSTER PHASE C/D GO-AHEAD OF 7/72
- INTERIM SYSTEM FMOF OF 9/78
- INTERIM OPERATIONAL PROGRAM IS 3 FLIGHTS/YEAR FOR 4 YEARS } VARIED FOR CONFIG. 5B
- ULTIMATE SYSTEM FMOF OF 9/82
- ULTIMATE OPERATIONAL PROGRAM IS 445 FLIGHTS OVER 10 YEARS
- ORBITER HARDWARE INCLUDES 2 FLIGHT TEST VEHICLES AND 3 PRODUCTION VEHICLES
- BOOSTER HARDWARE INCLUDES 2 FLIGHT TEST VEHICLES AND 2 PRODUCTION VEHICLES
- NO BOOSTER/ORBITER COMMONALITY EXCEPT FOR MAIN ENGINE
- COST ESTIMATES INCLUDE MAIN ENGINES AND FACILITIES
- COST ESTIMATES DO NOT INCLUDE FEE
- COST IN 1970 DOLLARS
- ALL SYSTEMS COSTED TO GROUNDRULES OF TECHNICAL DIRECTIVE NO. 3001

JD-4
DO 4620

CONCEPT COSTS: DDT&E (IN $M)

CONCEPTS	ORBITER	D/T	BOOSTER	ENGINES	SRM	FLT TEST	OPS	TOTAL
INTERIM → FINAL (1)	2545	0	3416	1051	0	104	154	7269
(2) 2 STG-120 IN. → H	2357	147	2703	967	92	104	181	6,551
(2C) 2 STG-120 IN. → H	2355	181	2838	961	92	104	181	6712
(5) 2 STG-156 IN.	2194	210	2718	952	156*	104	202	6536
(5A) 1 STG-120 IN. → H + O	2194	210	2718	952	63	104	181	6423
(5B) 1 STG-156 IN. → H + O	2194	210	2718	952	132*	104	202	6512
(5D) 2 STG-120 IN.	2194	210	2718	952	92	104	181	6452
(5C) 1 STG-156 IN. → 40 FT, H + O	2129	172	2682	952	132*	104	202	6373
→ (11) H + O	2721	263	0	890	0	72	81	4027

*INCLUDES $39M FOR MANUFACTURING FACILITY

CONCEPT COSTS: RECURRING COSTS (IN $M)

	RECURRING PRODUCTION				INTERIM OPS	RECURRING OPERATIONS			GRAND TOTAL	PEAK FUNDING
	ORBITER	BOOSTER	ENGINES	SUBTOTAL		D/T	OPS	SUBTOTAL		
1	362	368	156	886	0	0	1693	1693	9848	1868
2	326	244	124	694	389	577	1544	2121	9755	972
2C	326	262	129	717	421	712	1582	2294	10144	1021
5	297	247	122	666	387	981	1549	2530	10119	967
5A	297	247	122	666	468	981	1542	2523	10080	987
5B	297	247	122	666	408	981	1549	2530	10116	972
5D	297	247	122	666	423	981	1542	2523	10064	976
5C	284	242	122	648	390	940	1522	2462	9873	956
11	402	0	131	533	0	2023	1208	3231	7792	1077

CONFIGURATION 1 CONCURRENT DEVELOPMENT FUNDING PROFILE

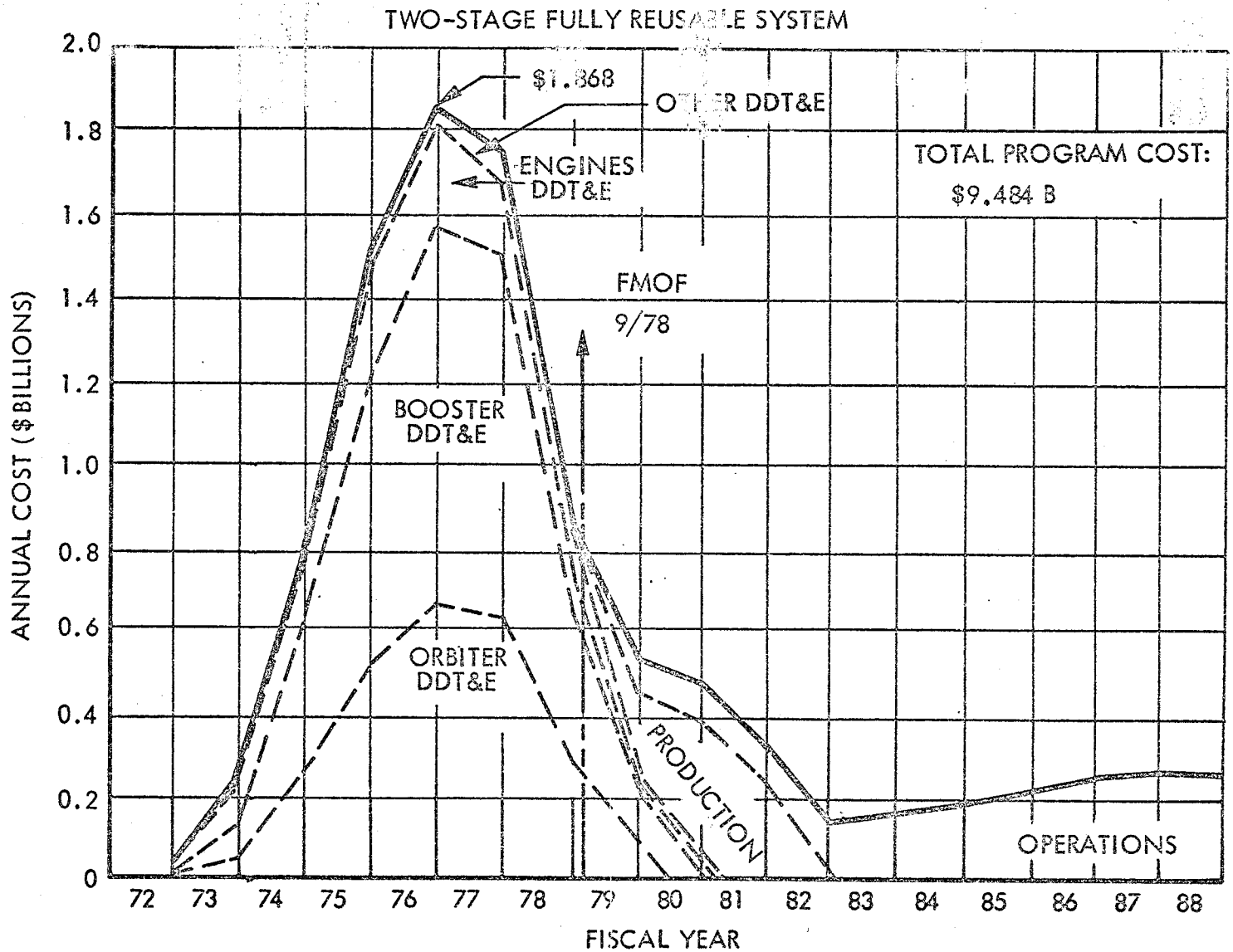

JD-5
DO 4639(1)

CONFIGURATION 5B FUNDING PROFILE

2-1/2 STAGE, EXT. H + O, TANDEM

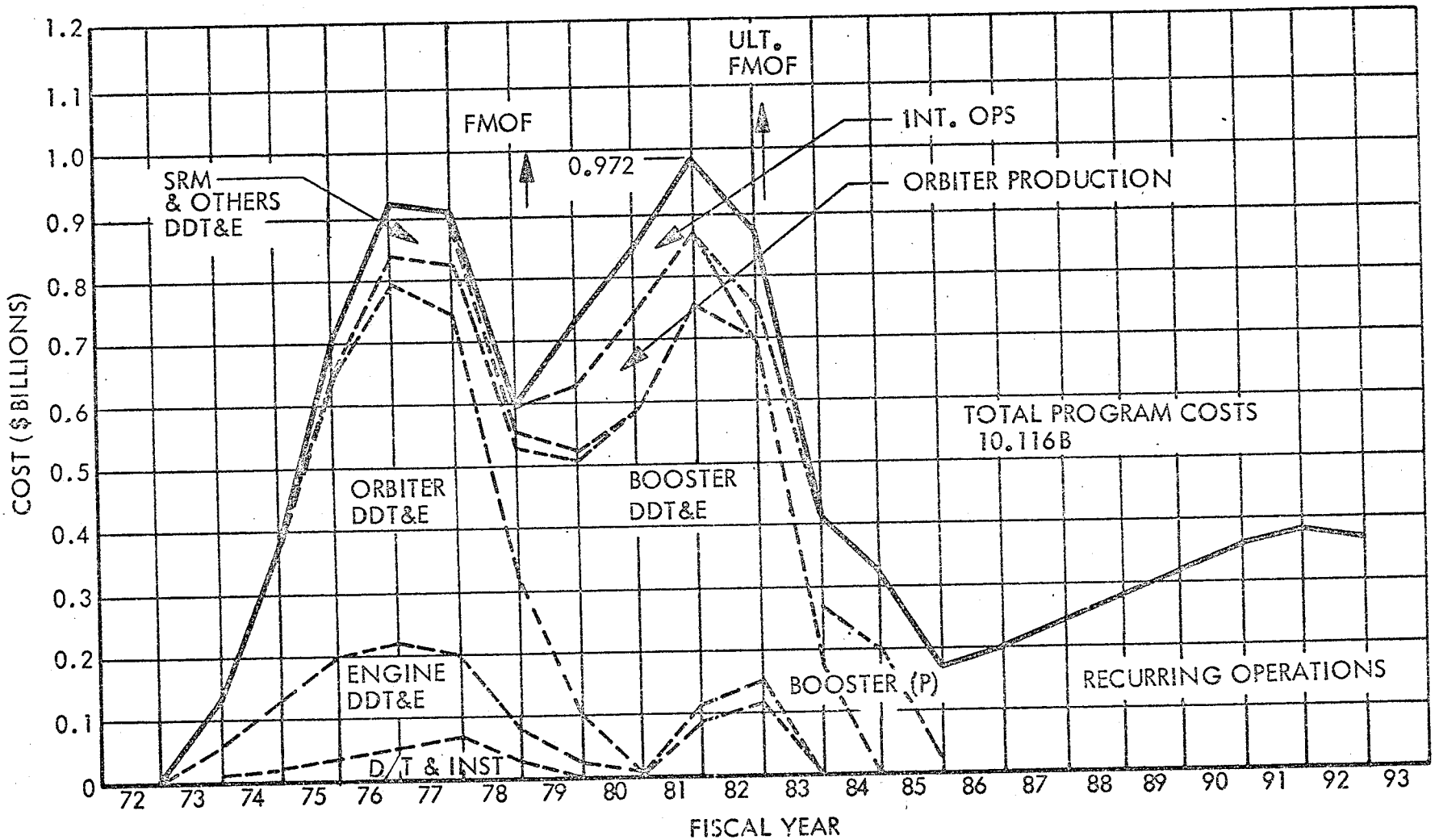

JD-6
DO4640(1)

CONFIGURATION 5B FUNDING (CASE II)

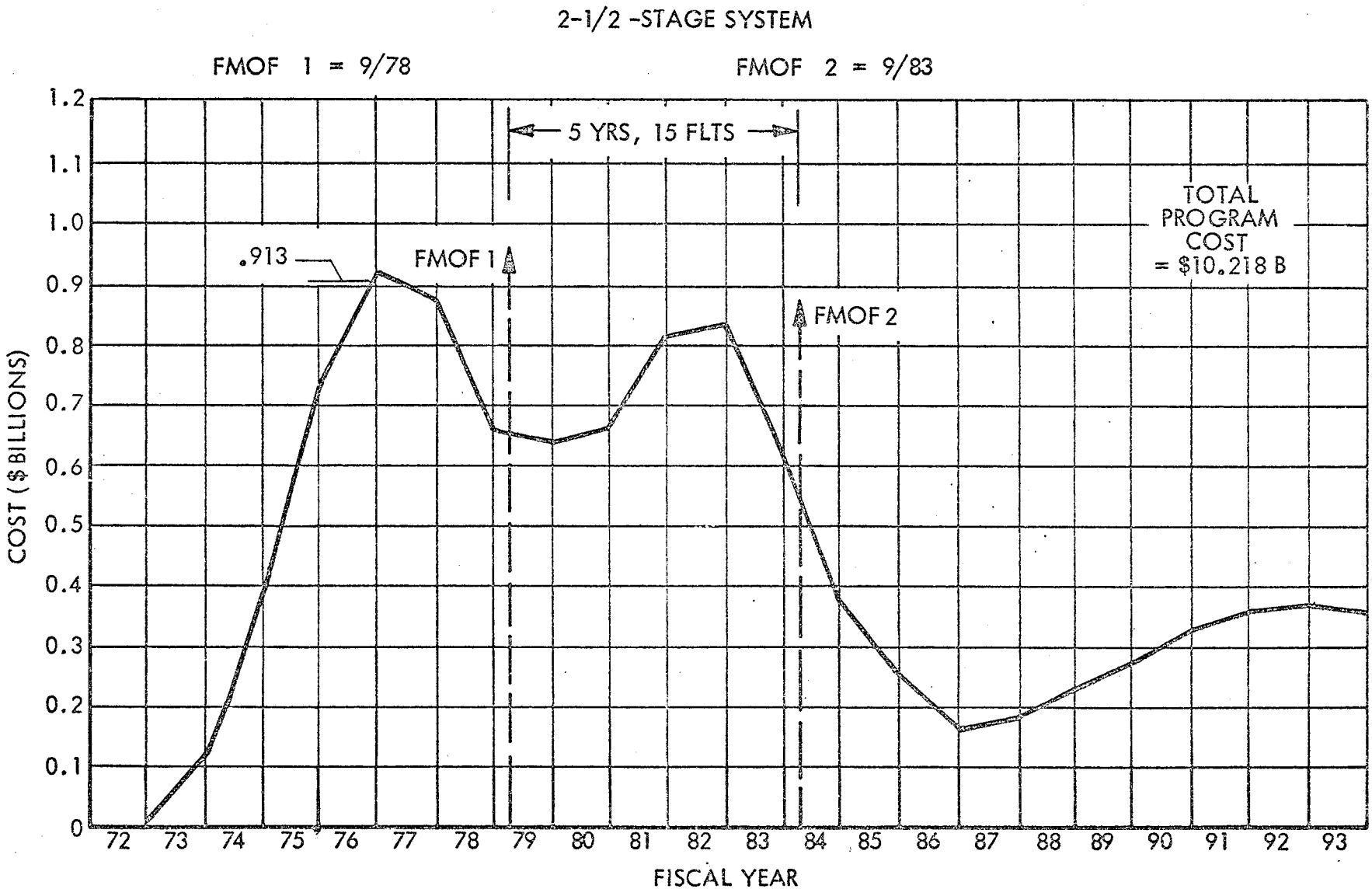

JD-11
D04653(1)

CONFIGURATION 5B FUNDING (CASE III)

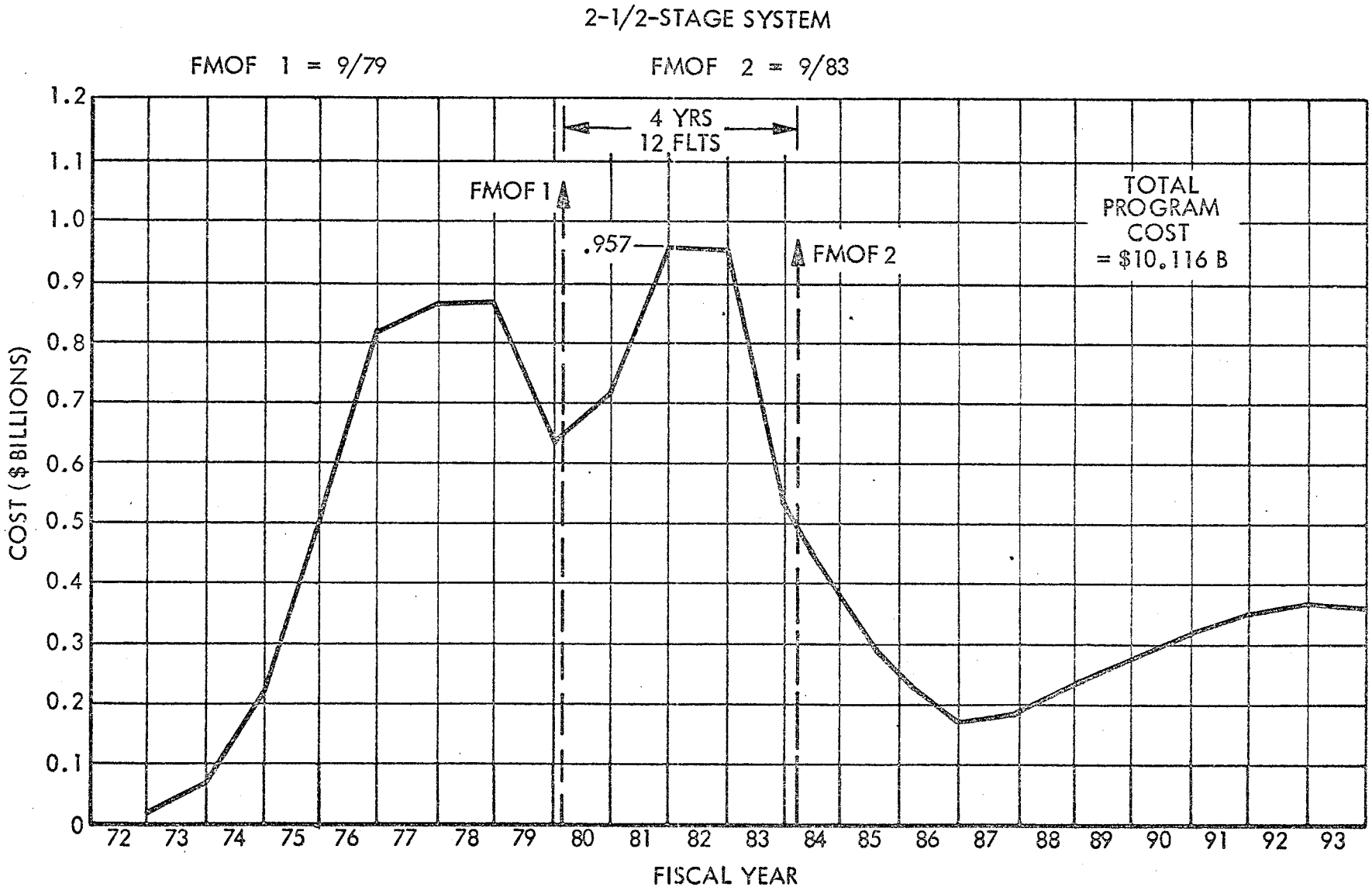

JD-12
D04654(1)

SHUTTLE FUNDING COMPARISON

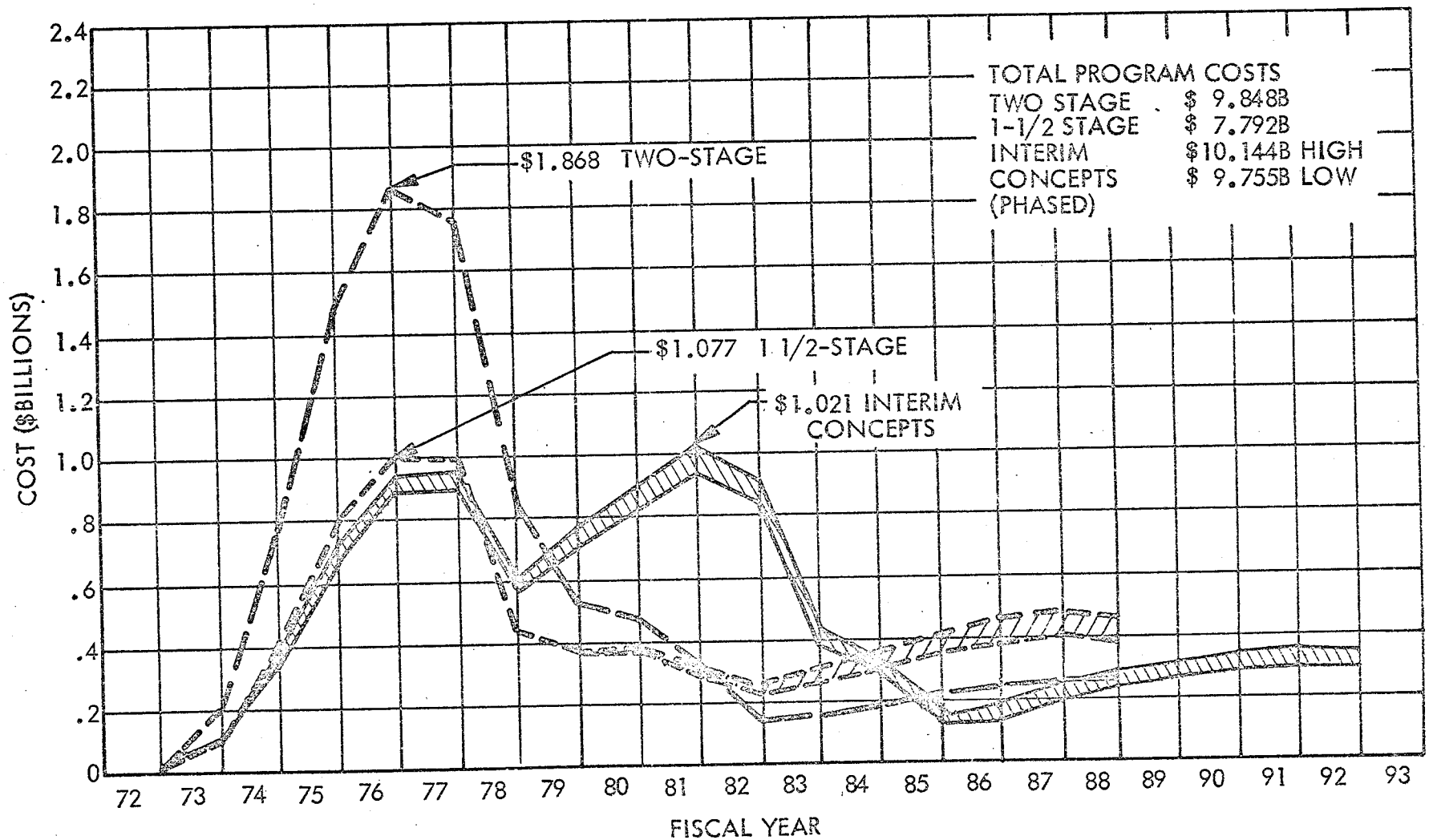

JD-7
DO 4641 (1)

CONCLUSION

1. PHASED BOOSTER DEVELOPMENT SAVES 896 M/YR PEAK ANNUAL FUNDING.

JTL-12
DO4656

EFFECT OF EXTERNAL TANK SELECTION ON SYSTEM

PARAMETER	COMPARATIVE DATA		COMMENTS
CONFIGURATION	2C 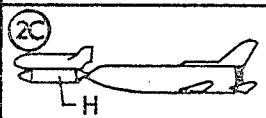	5D 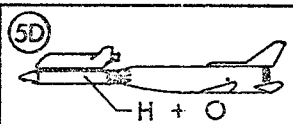	BOTH ARE TANDEM CONFIGURATIONS.
ORBITER			HO TANK ADVANTAGES INCLUDE:
BODY LENGTH (FT)	137	120	• DECOUPLES ORBITER FROM STAGING AND ASCENT VELOCITY (REDUCES PROGRAM RISK)
DRY WEIGHT (KLB)	170.4	136.5	
INTERNAL PROP WT (KLB)	720	16.7	
EXTERNAL TANKS			• LOWER PEAK FUNDING (.98 VS 1.02 $B)
SIZE DIA, & LENGTH (FT)	22 X 110	21 X 124	
DRY WT (KLB)	33.1	50.4	• SMALLER AND LIGHTER ORBITER (AS SHOWN)
PROP WT (KLB)	116.7	786.6	
DEVELOP COST ($M)	181	210	• SLIGHTLY LOWER DDT&E COST (6.45 VS 6.71 $B)
DEVELOP SCHEDULE	–	+9 MO.	
TOTAL SYSTEM			H ONLY TANK (LARGER ORBITER) ADVANTAGES INCLUDE:
INTERIM GLOW (MLB)	5.358	4.924	• SLIGHTLY LOWER WING LOADING (63.3 VS 69.8 PSF)
FINAL GLOW (MLB)	3.694	3.339	
TOTAL PROG. COST ($ B)	10.144	10.064	• LOWER RECURRING COST (5.2 VS 5.7$M)
PEAK ANN. FUND ($ B)	1.021	.976	• SMALLER (22 FT X 110 FT VS 21 FT X 124 FT)
INTERIM AVE. RECUR. ($ M)	35.1	35.2	
FINAL AVE. RECUR. ($ M)	5.16	5.68	• SLIGHTLY REDUCED (BY 9 MOS) DEVELOP. SCHEDULE – NOT A DRIVER
			IMPORTANT BUT NON-DRIVING FACTORS INCLUDE
			• GLOWs, PROGRAM COSTS AND SENSITIVITIES
			• LANDING SPEED 150 KT – BOTH VEHICLES FOR P/L IN 117 KT – H AND 120 KT – HO FOR P/L OUT
			• NO IMPACT ON DELTA BODY SHAPE (SCALEABLE)

BOOSTER STAGING VELOCITY VS. COST
CONFIG. 2 (EXTERNAL H_2 TANKS)

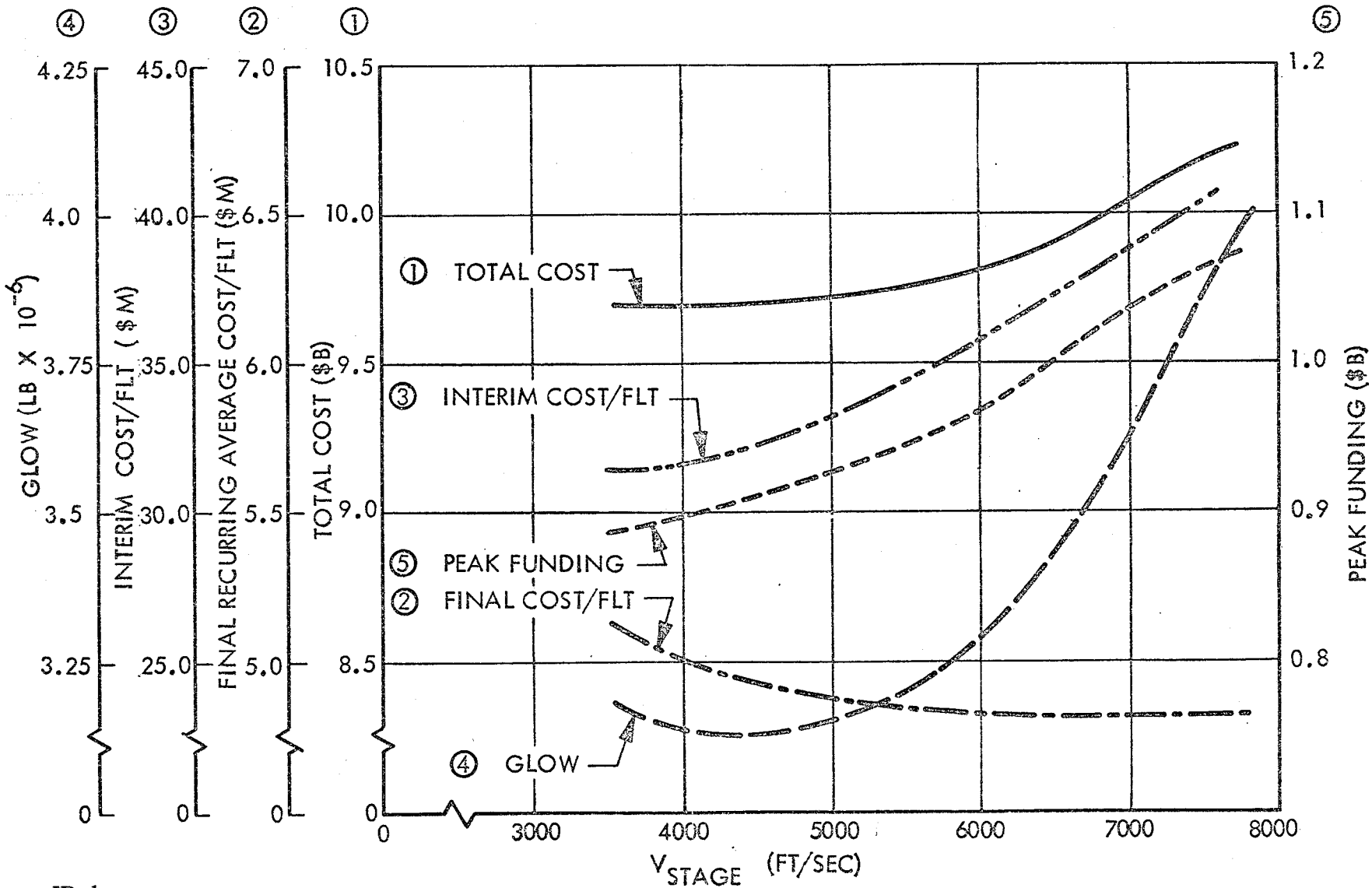

JD-1
DO4581 (1)

BOOSTER STAGING VELOCITY VS COST
CONFIGURATION 5A (EXTERNAL H + O TANK)

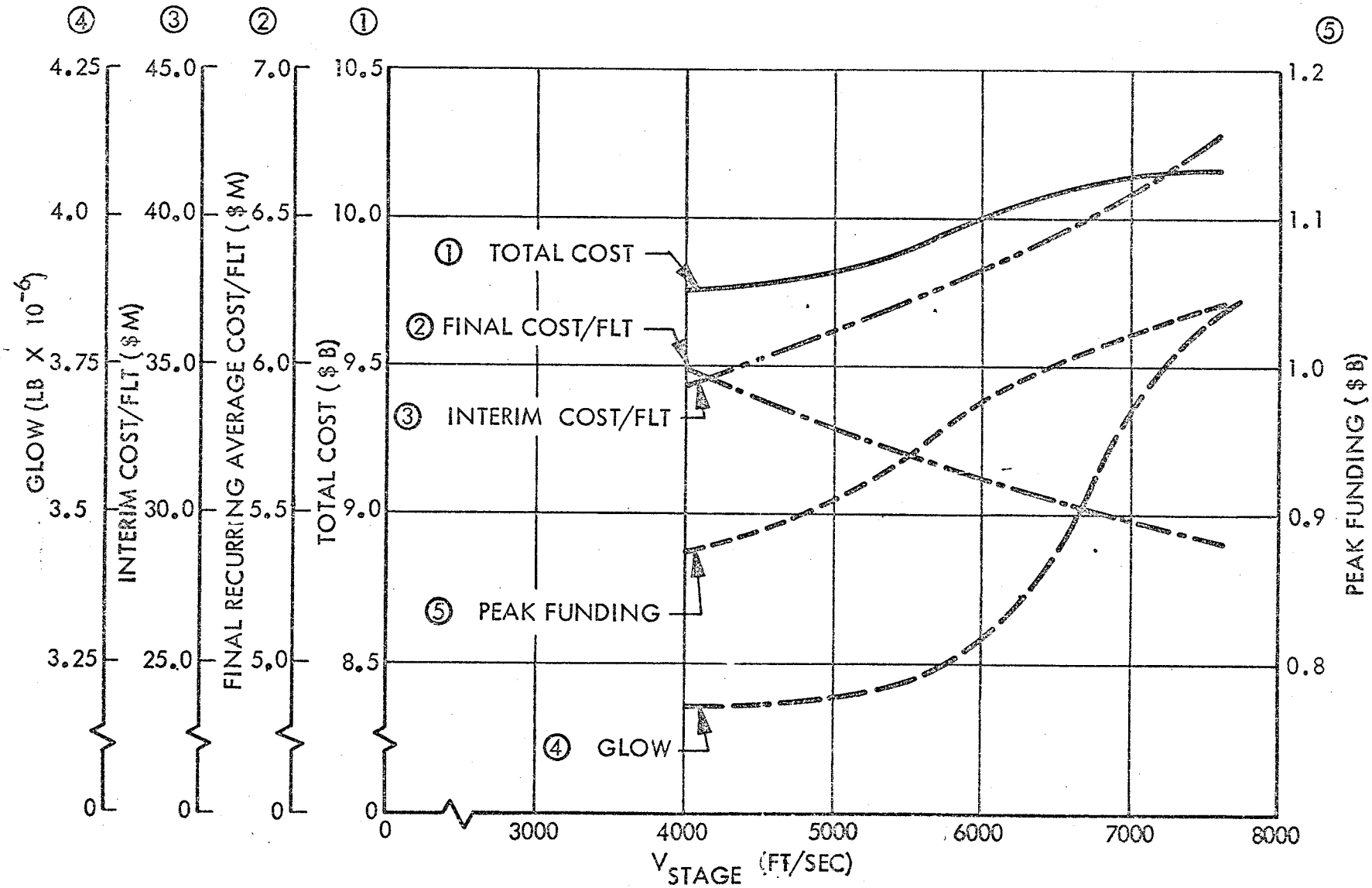

JD-2
DO4582(2)

PERFORMANCE/PROPULSION INTERFACE

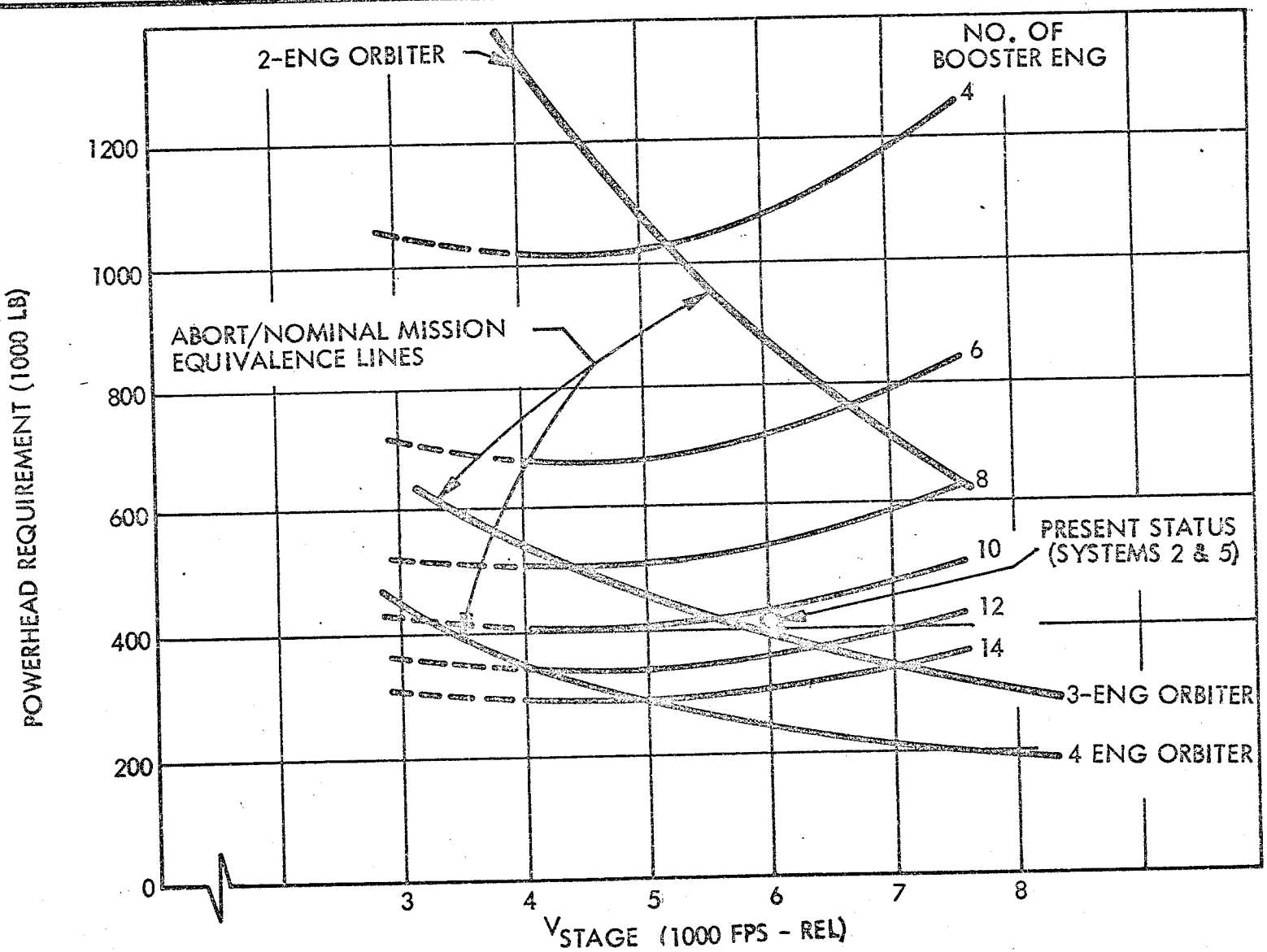

JET-1
DO 4561

ABORT PHASES DURING BOOSTER ASCENT

Abort procedure options are shown based on the two-and-one-half stage interim system trajectory and performance capability of the orbiter.

ABORT PHASES DURING BOOSTER ASCENT

5B INTERIM SYSTEM

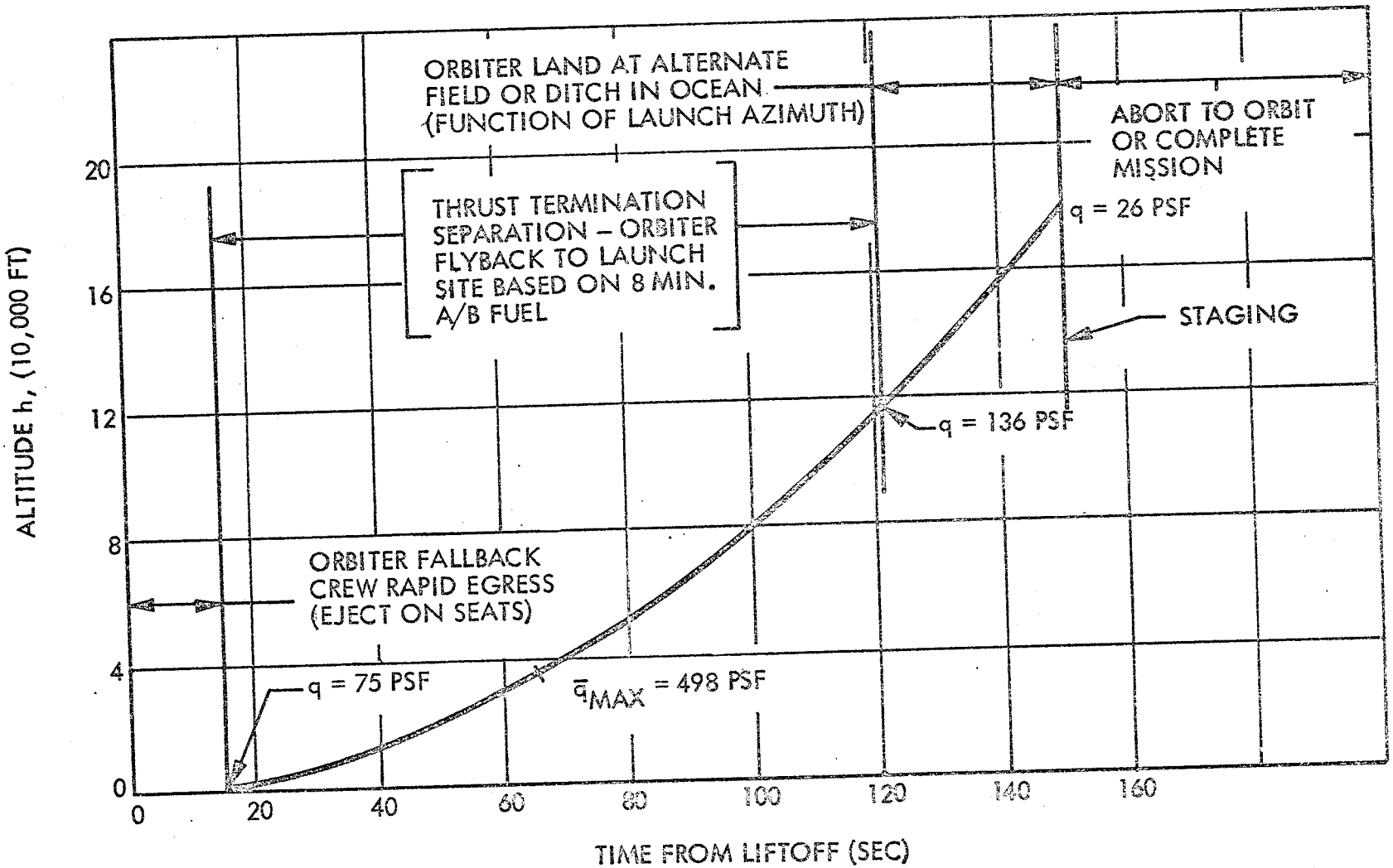

JAD-5
DO4584

ABORT PHASES DURING BOOSTER ASCENT

Abort procedure options are shown based on the two-and-one-half stage final system trajectory and performance capability of the orbiter.

ABORT PHASES DURING BOOSTER ASCENT

5B FINAL SYSTEM

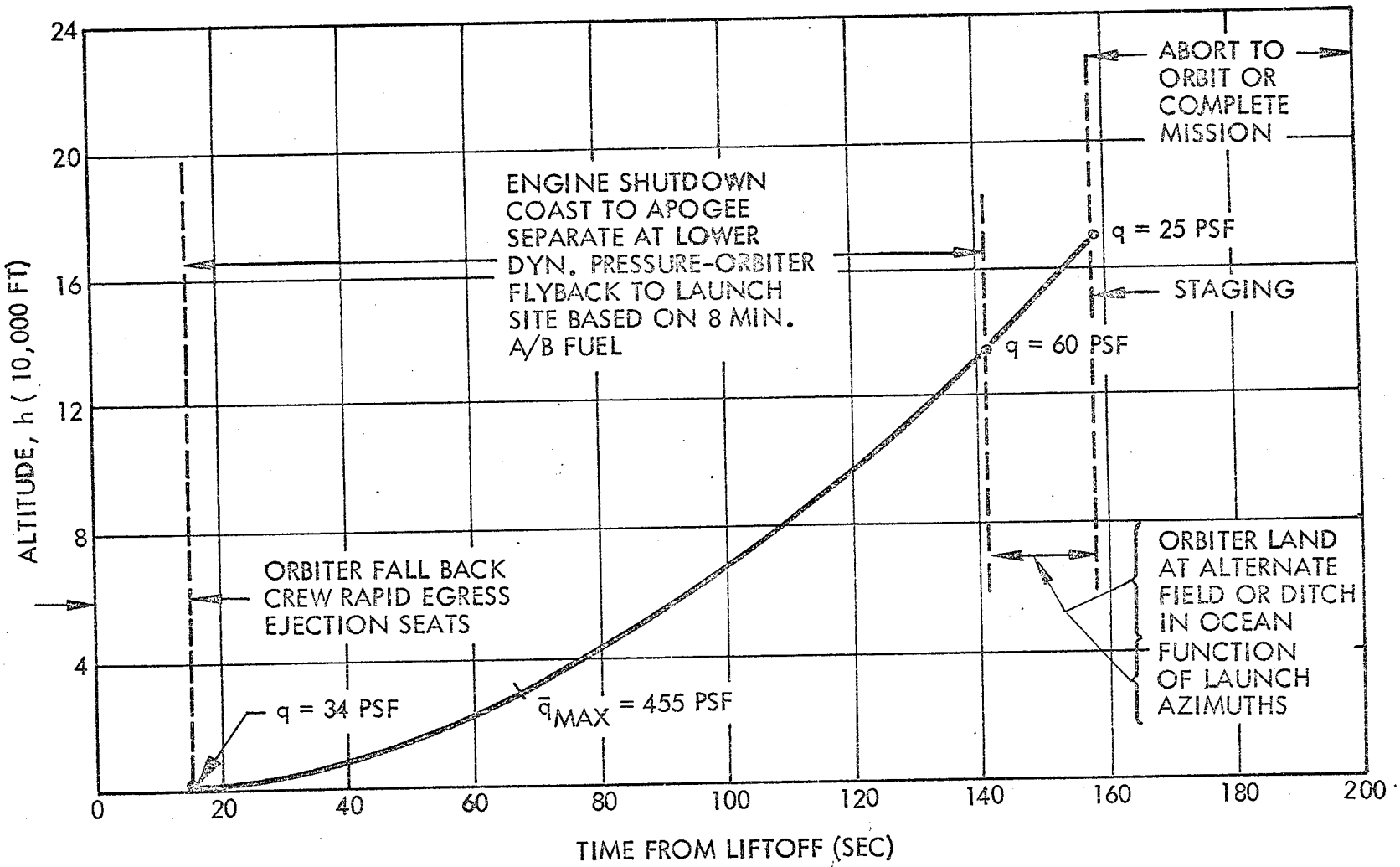

JAD-4
DO4583

DROPTANK DESIGN AND COST COMPARISON

- OBJECTIVES

- DESIGN COMPARISON
  - ASSUMPTIONS
  - DESIGN DESCRIPTION
  - WEIGHT COMPARISON
- NORMALIZATION
  - NORM. ASSUMPTIONS
  - ADJUSTED WT. STATEMENT
- PROGRAM COMPARISON
  - ASSUMPTIONS
  - PRODUCT. COST COMPARISON
- NORMALIZATION
  - NORM. ASSUMPTIONS
  - ADJUSTED COST
- COST COMPARISON

JFH-1
D04279

DROPTANK CONFIGURATION SUMMARY

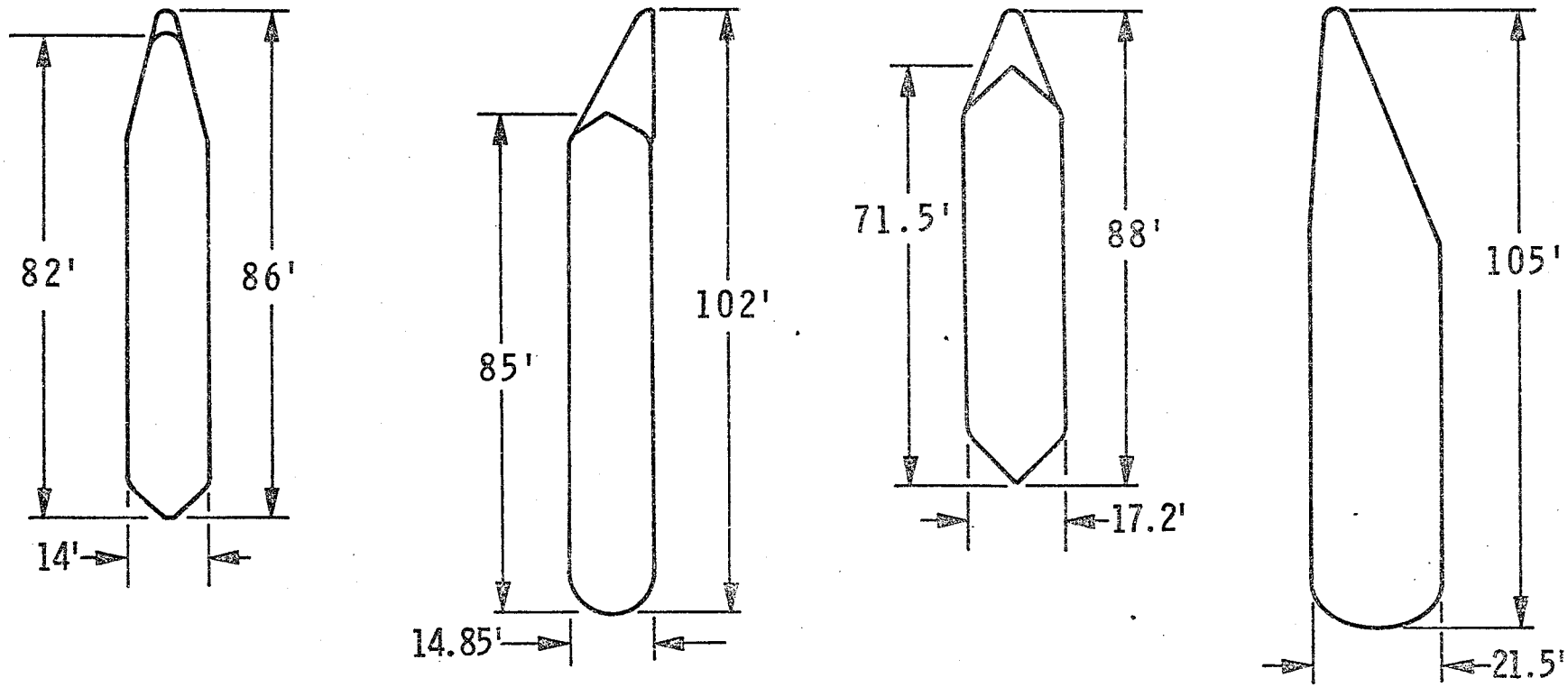

	LOCKHEED	GRUMMAN	NAR	MDAC
FT^3	10,433	13,666	12,804	28,500
$LB - LH_2$	42,253	56,660	50,600	117,860
WEIGHT	8,571	11,058	11,990	22,491
	BASELINE CONF 'B' LMSC – A990949 FINAL REPORT	CONFIG H3-3 NASA/MSC REVIEW 28 APRIL 1971	NASA/MSC REVIEW 12 MAY 1971	NASA/MSC REVIEW 25 MAY 1971

JFH-3
D04248(1)

DROPTANK WEIGHT SUMMARY

ITEM	LOCKHEED	GRUMMAN	NAR	MDAC
STRUCTURE	2,986	5,335	4,960	13,605
ATTACH	413	603	(INCLUDED ABOVE)	1,000
TPS	3,667	2,670	4,266	4,040
SEPARATION	85	83	30	(ON ORBITER)
DEORBIT	340	364	539	900
PROPULSION	699	1,477	1,105	900
CONTINGENCY	10% – 789	5% – 527	10% – 1,090	10% – 2,045
DRY WEIGHT	8,571	11,058	11,900	22,491
MASS FRACTION	0.836	0.836	0.812	0.836
TANK WT (LB)/FT^3	0.821	0.810	0.855	0.788
TANK VOLUME	10,433 FT^3	13,666 FT^3	12,804 FT^3	28,500 FT^3

JFH-4
D04260(1)

DESIGN CRITERIA & DEFINITION COMPARISON

CRITERIA & DEFINITION	LOCKHEED	GRUMMAN	NAR	MDAC
ASCENT N_X, N_Y, N_Z	N_X = 3.0 g. (MAX BOOSTER ACCEL), $N_{Y,Z}$ = ± .4 g. (MAX Q)	N_X = 3.0 + .25 (DMF), N_Y = 0 ± .1, N_Z = 0 ± 0.5, (END BOOST - BOOSTER)		
MAX PRESSURE	ULT FS. - 1.4, 29 PSIA (ORBITER IGNITION)	ULT FS - 1.4, 31 PSIG	35 PSIA	ULT FS - 1.4, 30 PSIG
THERMAL PROTECTION	ASCENT/DESCENT	ASCENT	ASCENT	ASCENT
RETROROCKET PARAMETERS	300 FPS - ΔV		300 FPS - ΔV	150 FPS - ΔV
STRUCTURE TYPE	MONOCOQUE, PRESSURE - STABILIZED	MONOCOQUE, PRESSURE - STABILIZED	MONOCOQUE, PRESSURE - STABILIZED	MONOQUE, PRESSURE - STABILIZED
MATERIAL	ALUM 2219-T87	ALUM 2219-T87	ALUM 2219-T87	ALUM 2219-T87
JOINING METHOD	WELD-BOND	FUSION-WELD	FUSION-WELD	FUSION-WELD
NOSE FAIRING	SITKA SPRUCE NOSE DOME, ALUM CONE, INTEGRAL CLOSE-SPACED RINGS	SKIN, STRINGER, FRAME, POLYIMIDE FIBERGLASS, - AFT END	SKIN, STRINGER, FRAME	NONE
TANK SUPPORTS	THRUST LOADS AT AFT END, TRUSS STRUCTURE	THRUST LOAD AT AFT CYL, TRUSS STRUCTURE	TRUSS STRUCTURE	THRUST LOADS AT AFT END
SEPARATION SYSTEM	GAS GENERATOR - OPERATED PISTONS	GAS GEN - OPERATED PISTONS	TELESCOPING THRUST STRUT, PYRO ACTUATORS	GAS GEN PISTONS ON ORBITER
RETRO PROPULSION	SRM THIOCKOL TE-M-416 OR LPC JAVELIN	SRM	SRM - DEORBIT, SRM - SPIN	SRM, FIVE 38-4, SEPARATION MOTORS
INSTRUMENTATION	15 OPTICAL SENSORS FOR LIQUID LEVEL	12 SENSORS	CAPACITANCE PROBE WITH PT SENSORS	
INSULATION	NOSE CAP - SITKA SPRUCE, NOSE CONE - CORK, TANK CYLINDER - POLYURETHANE FOAM, TANK SUPPORT - CORK	NOSE CONE - FIREX 250, TANK CYLINDER POLYURETHANE FOAM	SOFI - OUTSIDE TANK, CORK - ABLATION	FOAM WITH LOCAL AREAS OF ABLATOR
PRESSURIZATION SYSTEM	ENGINE BLEED - 500°R, HYDROGEN	ENGINE BLEED - WARM, HYDROGEN	ENGINE BLEED - WARM, HYDROGEN	
PROPELLANT FEED SYSTEM	14 IN. DIA FEED LINE, 6 IN. DIA PRESS AND VENT, 2 IN. DIA RECIRCULATION	14 IN. DIA FEED LINE, 6 IN. DIA PRESS AND VENT, 2 IN. DIA RECIRCULATION	15 IN. FEED LINE, 2 IN. DIA PRESS, 2 IN. DIA RECIRCULATION	12 IN. DIA FEED LINE, 6 IN. DIA VENT & PRESS 2 IN. DIA RECIRCULATION
VOLUME FOR ULLAGE RESERVES & RESIDUALS	3 PERCENT			6 PERCENT PROPELL CAPACITY

JFH-2
D04266

DESIGN NORMALIZATION SUMMARY

ASSUMPTIONS

- INSULATION FOR ASCENT ONLY
- 10% WEIGHT CONTINGENCY
- NO SPIN SYSTEM

ADJUSTED WEIGHT

ITEM	LOCKHEED	GRUMMAN	NAR	MDAC
DRY WEIGHT - (LB)				
ORIGINAL	8,571	11,058	11,900	22,491
ADJUSTMENTS *				
INSULATION	-1,507	0	0	0
CONTINGENCY	0	+527	0	0
SPIN SYSTEM	0	0	-60	0
DRY WT - ADJUSTED	7,064	11,585	11,840	22,491

*FOR STATED ASSUMPTIONS ONLY

JFH-5
D04261(1)

WORK BREAKDOWN STRUCTURE

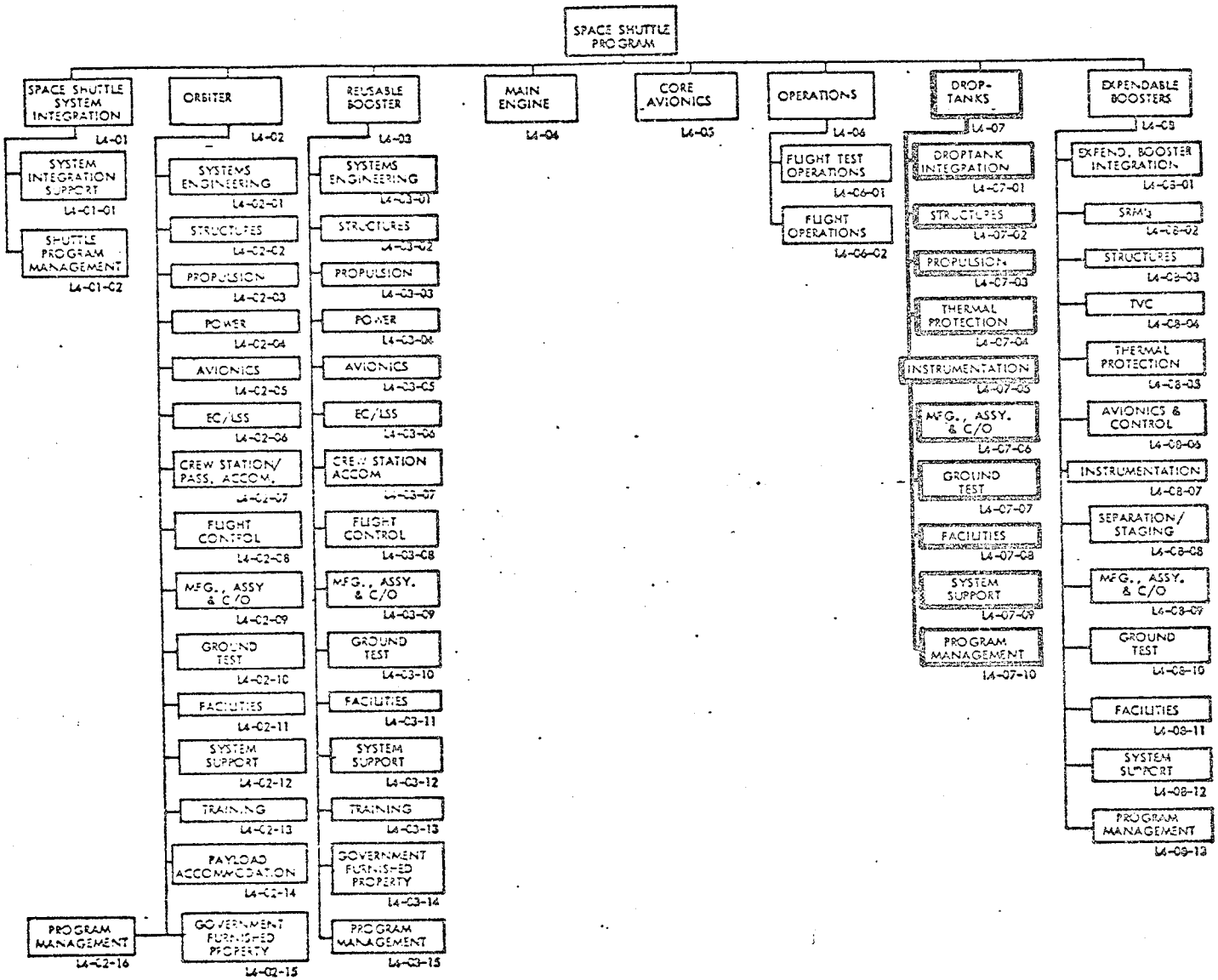

JFH-8
D04079

BASIS FOR GAC-COSTING (WBS)

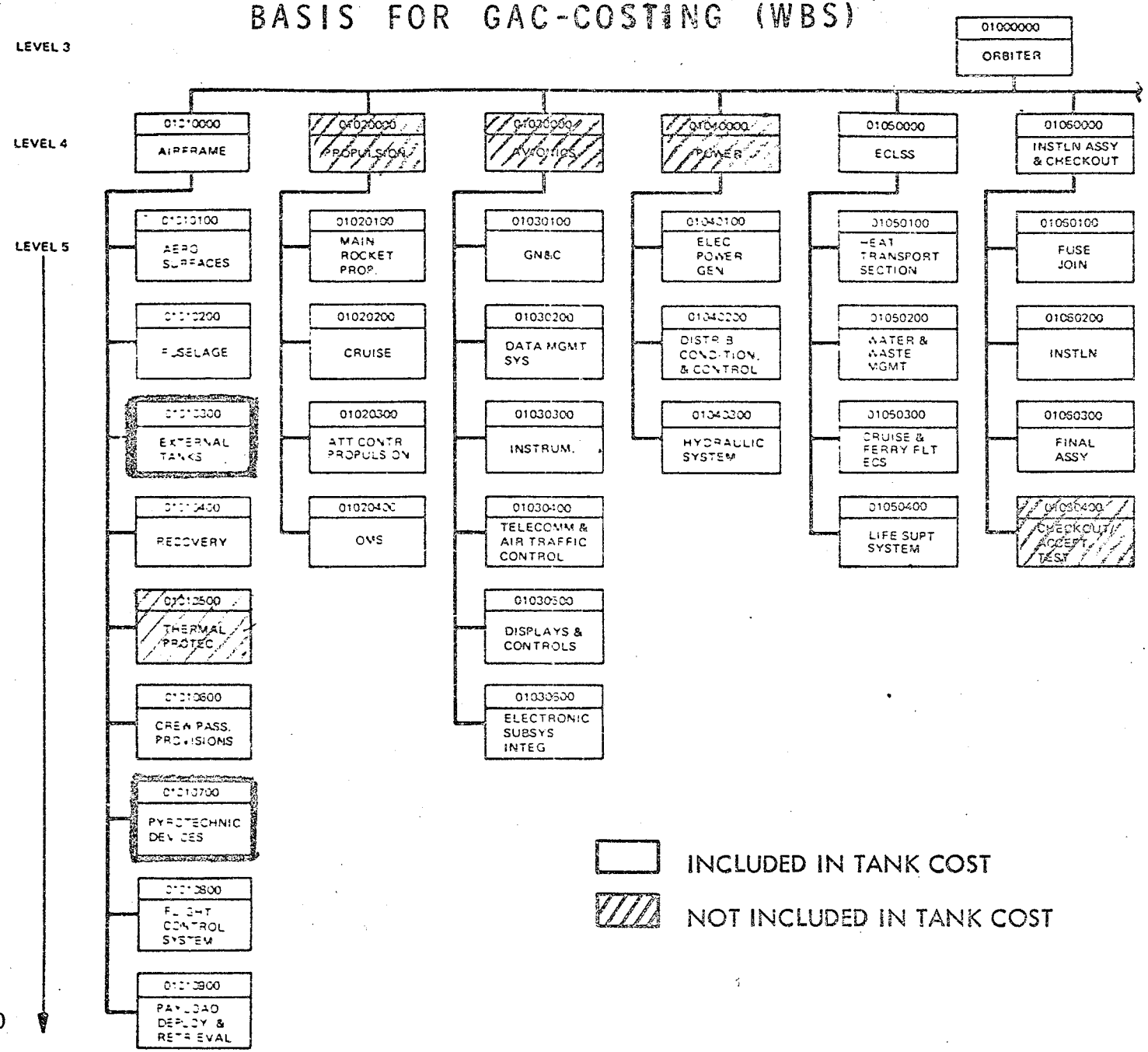

JFH-9
D04300

BASIS FOR GAC-COSTING (WBS) (CONTINUED)

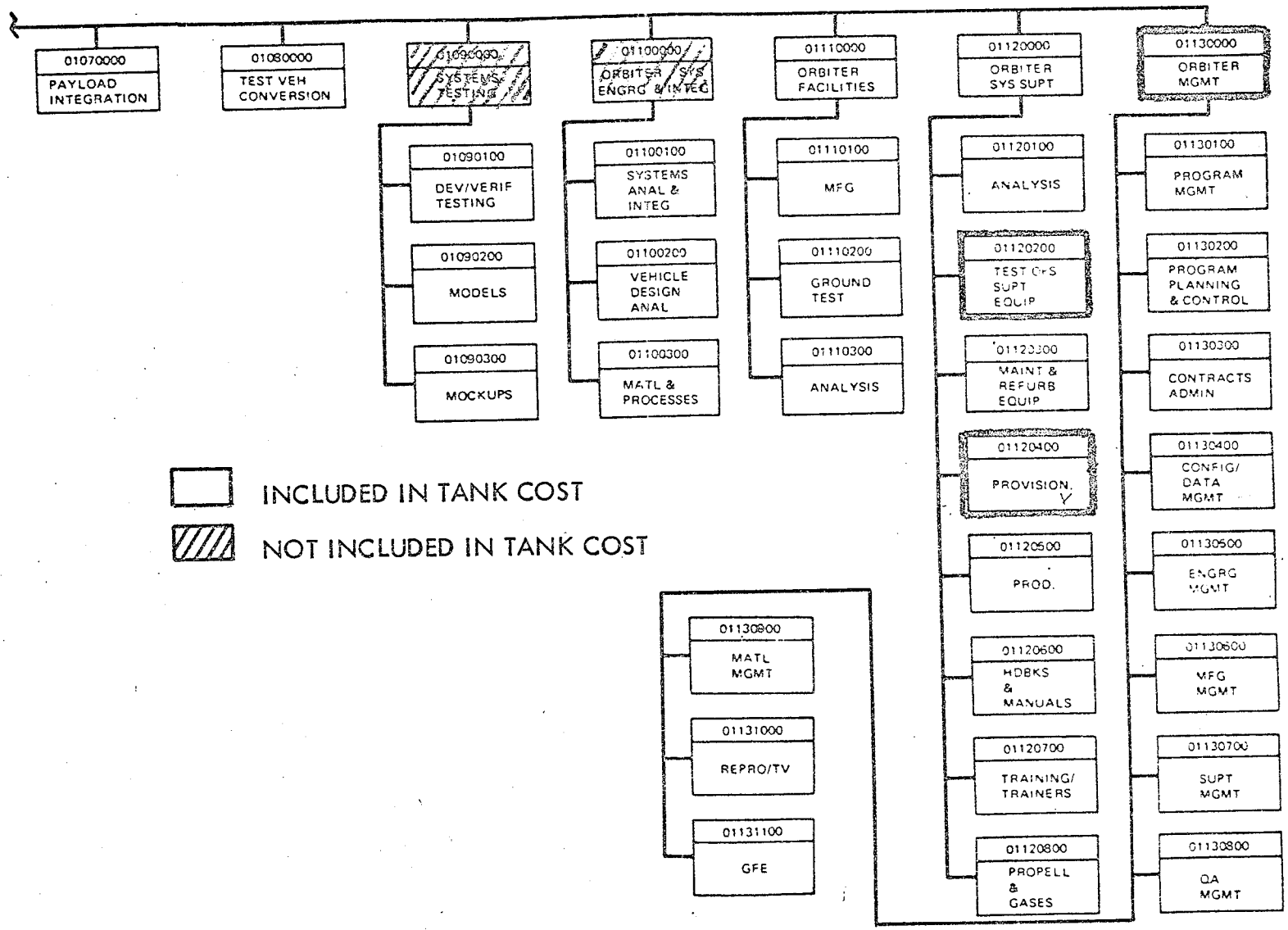

JFH-10
D04301

COMPARISON OF PROGRAM COST ASSUMPTIONS

FUNCTION	LMSC	GAC	NAR	MDAC	COMMENTS
TANK QUANTITIES - RDT&E	6	10	6	10	TANKS
PRODUCTION	450	445	445	440	SETS
FACILITIES & EQUIP. COSTED	YES	YES	NO	NO	
LOGISTICS COSTS	YES	NO	NO	?	
SPARES COSTS	NO	4%	NO	?	
GROUND HANDLING COSTS	YES	NO	NO	?	MDAC USE SATURN EQUIP
TPS INTACT ENTRY	YES	NO	NO	NO	GAC IN ORBITER COSTS
LEARNING CURVE % SCOPE	92%	77%/90%	82%	85%	
FEE	10%	-0-	-0-	?	
REWORK AND GROWTH	YES	YES	YES	?	

JFH-6
D04421(1)

COST COMPARISONS AS QUOTED $(000)

FUNCTION	LMSC	GAC	NAR	MDAC	VARIANCES
					TOTAL SYSTEMS
RDT&E (TOTAL)	58,000	33,000	61,300	89,000	QUANTITIES – RDT&E PROD. FACILITIES & EQUIPMENT LOGISTICS & SPARES GROUND HANDLING PROFIT & FEE TPS LEARNING CURVES LABOR RATES
PRODUCTION					
ENGINEERING	3,000	1,000	18,000		
MANUFACTURING	414,000	104,000	214,000		
PRODUCT ASSURANCE	52,000	?	27,000	CER EST.	
PROCUREMENT/MATERIAL	159,000	195,000	76,000		
MACH. & EQUIPMENT	10,000	2,000	-0-		
PROGRAM MGMT	8,000	17,000	-0-		
PYROTECHNICS	IN MFG.	19,000	-0-		
PROVISIONING	-	1,000	-0-		
TOTAL PRODUCTION	646,000	339,000	335,000	530,000	
TOTAL PROGRAM	704,000	372,000	396,500	619,000	

JFH-7
D04398

NORMALIZATION LMSC – GAC ($M)

FUNCTION	LMSC	GAC	COMMENTS
PROGRAM ADJUSTMENTS			
QUANTITIES RDT&E	15	-	10 TEST TANKS
PRODUCTION	(7)	-	890 FLIGHT TANKS
FACILITIES & EQUIPMENT	(10)	(2)	SEPARATE CONTRACTUAL COSTS
LOGISTICS/SPARES/GRND HNDLG	(9)	(15)	IN OPERATIONAL COSTS
TPS ASCENT CONFIG.	(44)	-	ASCENT PROTECTION ONLY
NET EFFECT	(55)	(17)	
HARDWARE ADJUSTMENTS			
PROPULSION	(74)	-	GAC COST IN ORBITER WBS - (UNCONFIRMED)
SYSTEMS TEST	(12)	-	GAC COST IN ORBITER WBS - (UNCONFIRMED)
ELECT. PWR/INSTR/AVIONICS	(95)	-	GAC COST IN ORBITER WBS - (UNCONFIRMED)
NET EFFECT	(181)	-	
COSTING			
LABOR RATES	(66)	-0-	LMSC INITIAL $15.90 REVISED $12.95/HR*
FEE 10%	(64)	-0-	ADJUSTED FOR NO FEE
NET EFFECT	(130)	-0-	
GRAND TOTAL ADJUSTMENTS	(366)	(17)	PROVIDES A COMMON COST BASE
ORIGINAL PROGRAM COSTS	704	372	AS QUOTED
ADJUSTED PROGRAM COSTS	338	355	SHOWS COMMON PROGRAM SCOPE OF EFFORT

*LMSC REMOTE SITE RATES

JFH-11
D04400(1)

NORMALIZATION LMSC – NAR ($M)

FUNCTION	LMSC	NAR	COMMENTS
HARDWARE ADJUSTMENTS	NONE	NONE	SAME BASIC SYSTEM
PROGRAM ADJUSTMENTS			
PROGRAM MANAGEMENT	(18)		NOT SHOWN FOR NAR
QUANTITIES RDT&E	-	-	6 TANKS
PRODUCTION	(7)		890 TANKS
FACILITIES & EQUIPMENT	(10)		NOT INCLUDED
LOGISTICS & GRND HNDLG	(9)		NOT INCLUDED
TPS - ASCENT CONFIG.	(44)		ASCENT ONLY
NET EFFECT	(78)		
COSTING			
LABOR RATES	(77)		REVISED LMSC RATES (12.95 $/HR)
FEE 10%	(64)		NO FEE
NET EFFECT	(141)		
GRAND TOTAL ADJUSTMENT	(219)		PROVIDES A COMMON COST BASE
ORIGINAL PROGRAM COSTS	704	396.5	
ADJUSTED PROGRAM COSTS	485	396.5	COMMON PROGRAM SCOPE OF EFFORT

REVISED COST SUMMARY

	LMSC	GAC	NAR	MCDAC	LMSC(1)
DDT&E	73	33	61	89	73
REC. PRODUCTION	477	322	335	530	265
TOTAL PROGRAM	550	355	396	619	338
DRY WEIGHT/TANK	7064	11585	11840	22491	7064
AVG REC PROD, $/LB	76	31	32	27	42

(1) LMSC-NORMALIZED TO GAC BASE

JFH-14
D04422(1)

EXTERNAL LH_2 TANK – COST RANGE

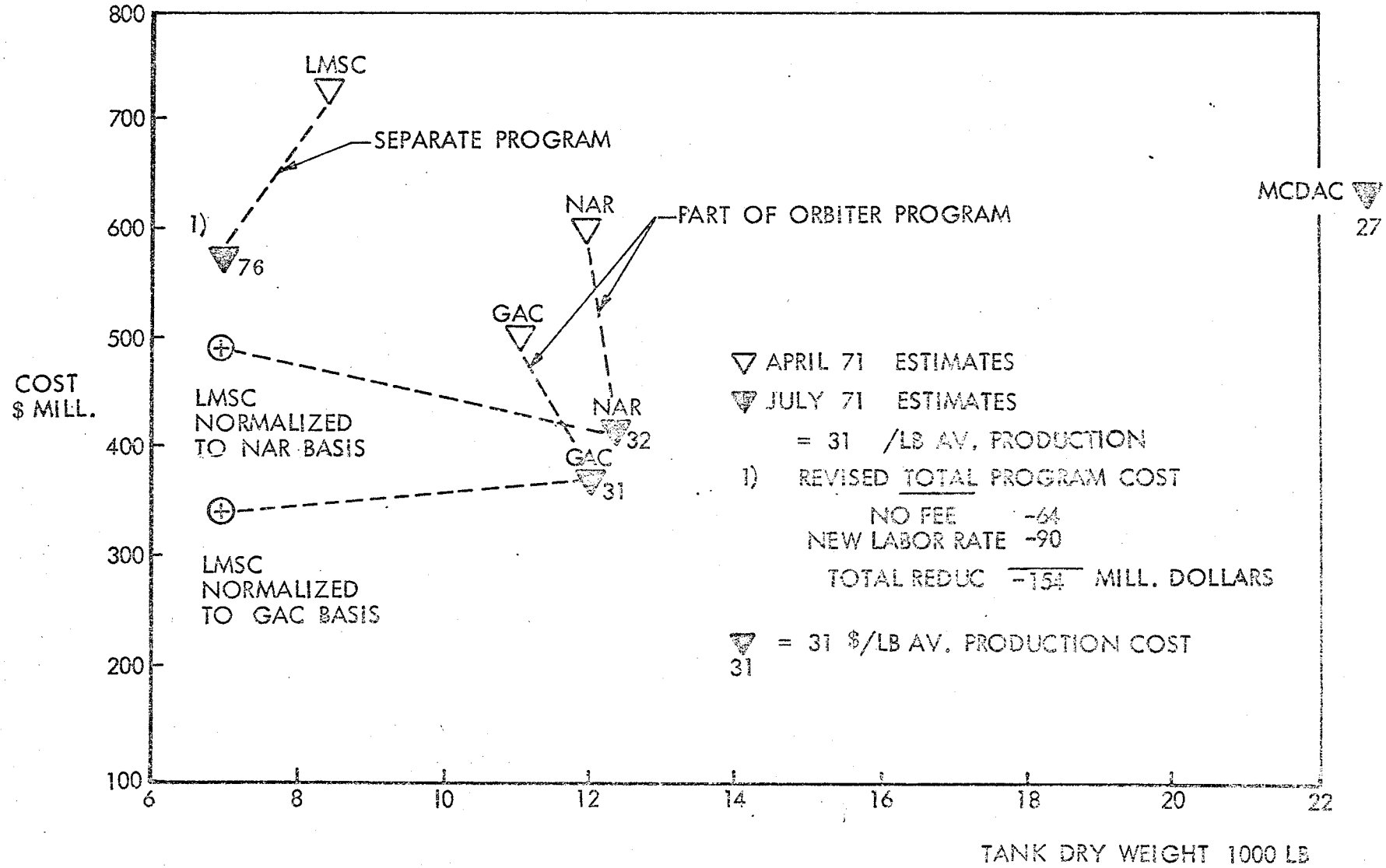

JFH-13
D04424(1)

DROPTANK - TOTAL RECURRING PRODUCTION COST FOR 445 FLIGHTS (10 YRS)

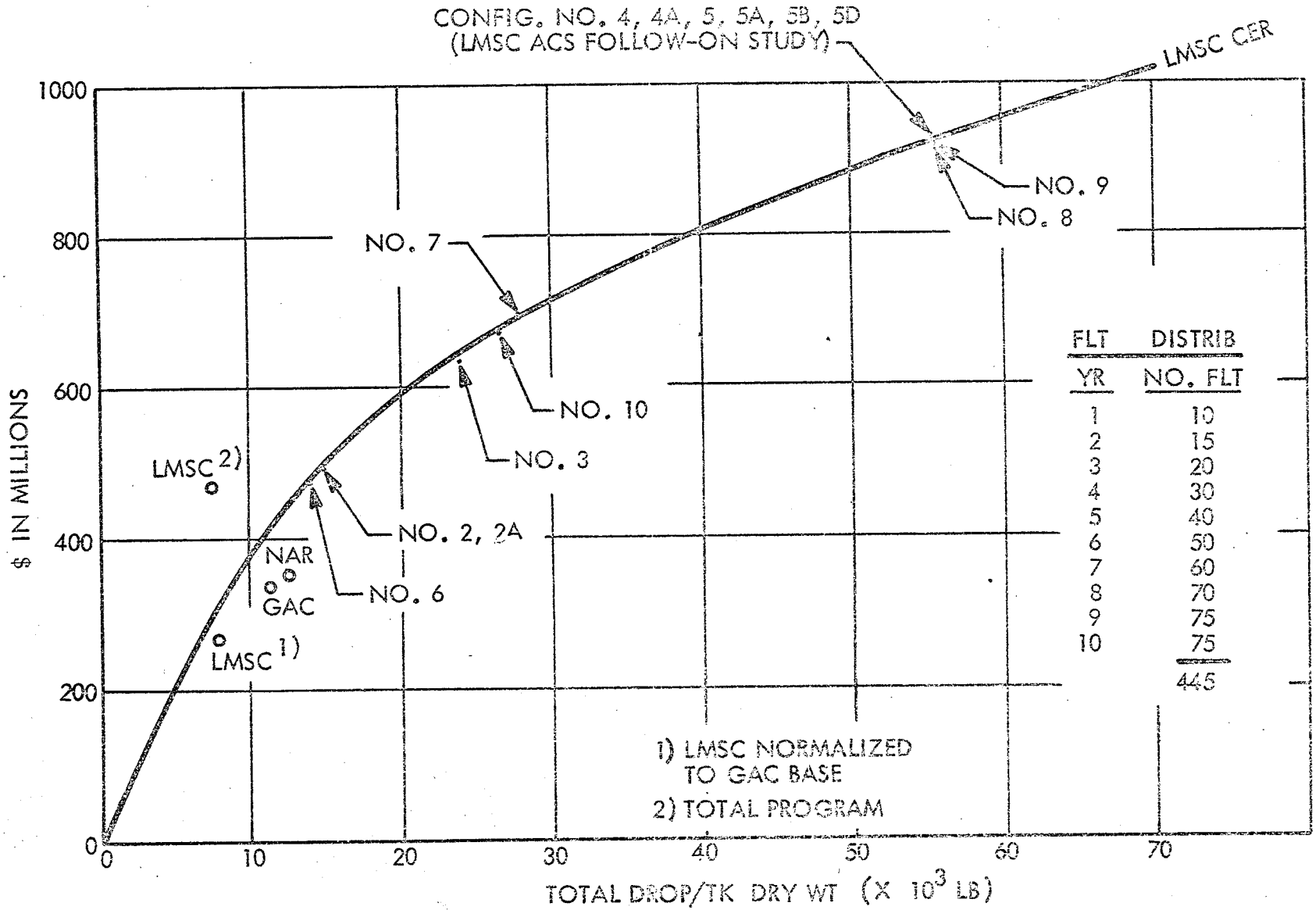

FLT YR	DISTRIB NO. FLT
1	10
2	15
3	20
4	30
5	40
6	50
7	60
8	70
9	75
10	75
	445

JFH-16
D04236(1)

AVERAGE RECURRING TANK COST COMPARISON

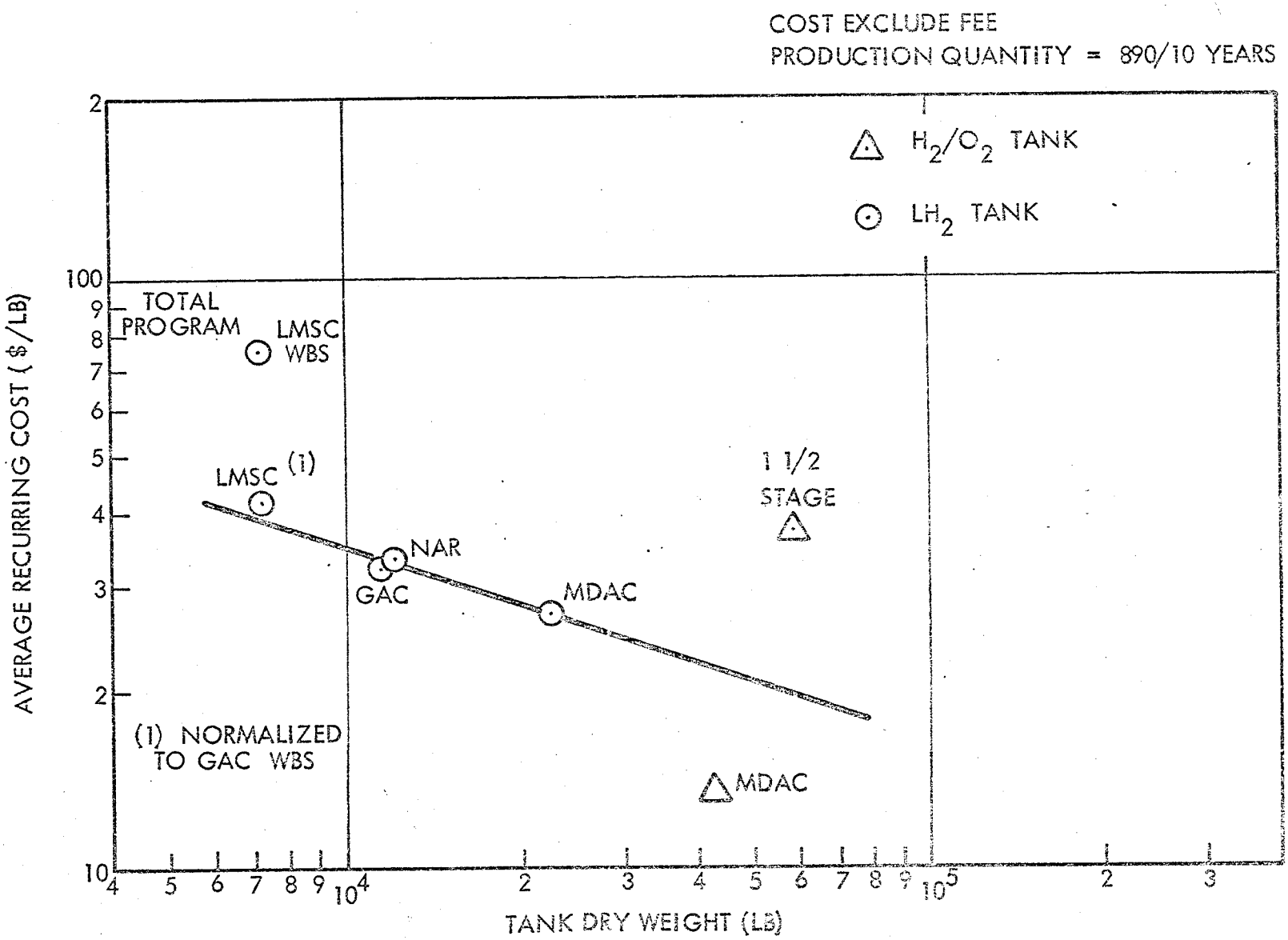

JFH-17
D04556

COST AS FUNCTION OF DROPTANK COST

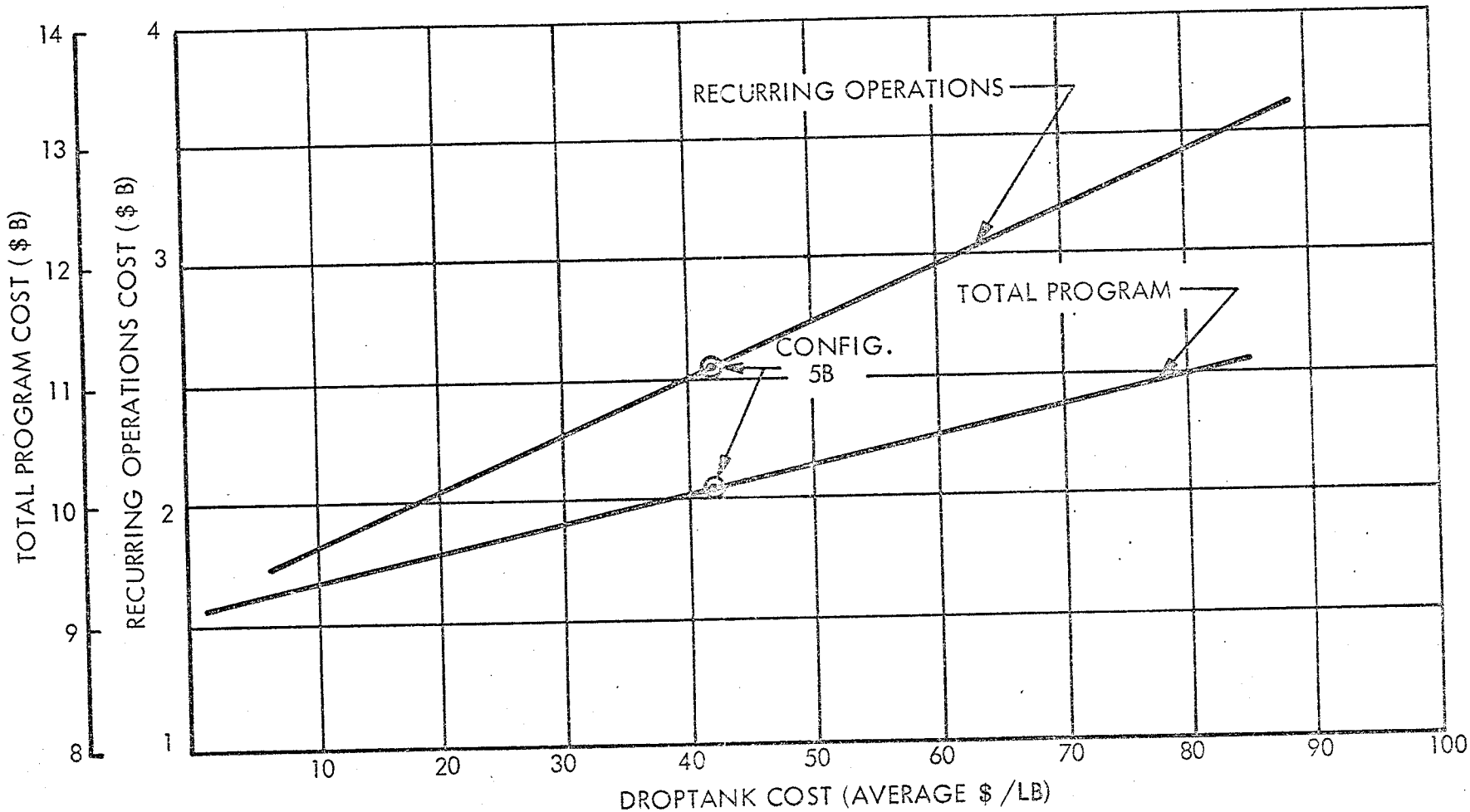

RECOMMENDATIONS FOR EXTERNAL DROPTANK PROGRAM DEFINITION

- ESTABLISH WBS FOR EXTERNAL DROPTANK PROGRAM
- NORMALIZE DESIGN ASSUMPTIONS
- NORMALIZE COSTING ASSUMPTIONS

JFH 15
D04423

CONCLUSIONS

1. PHASED BOOSTER DEVELOPMENT SAVES 896 M/YR PEAK ANNUAL FUNDING.

2. EXTERNAL H AND O DECOUPLES ORBITER DEVELOPMENT FROM STAGING, OFFERS LOWER SYSTEM DEVELOPMENT RISK AND MINIMIZES SIZE OF ORBITER.

JTL-13
DO4657

EFFECT OF P/L BAY SIZE ON ORBITER

FINAL

PARAMETER	COMPARATIVE DATA		COMMENTS
CONFIGURATION	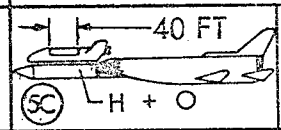	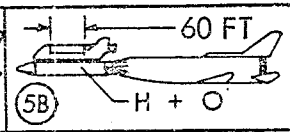	BOTH ARE DESIGNED TO CARRY 65K PAYLOAD.
ORBITER			SMALL P/L BAY LENGTH IMPACT: • EXCESSIVE REENTRY HEATING (W/S = 102 PSF) • DELTA BODY SHAPE IS ALTERED (NON-SCALEABLE) • SLIGHTLY REDUCED ORBITER WEIGHTS AND COSTS (AS SHOWN)
BODY LENGTH (FT)	99.8	120	
DRY WEIGHT (KLB)	122.9	136.5	
WING LOADING-P/L IN (PSF)	102.3	69.8	
LANDING SPEED			
P/L OUT (KT)	150	150	
P/L IN (KT)	124	120	
OLOW (KLB)	996.0	1,070.6	
SYSTEM			IMPORTANT, BUT NON-DRIVING CONSIDERATIONS: • GLOWs, SENSITIVITIES AND TOTAL COST • AERO AND STABILITY FACTORS
INTERIM GLOW (MLB)	4.759	5.173	
FINAL GLOW (MLB)	3.036	3.339	
TOTAL PROG. COST ($B)	9.873	10.116	
PEAK ANN. FUND ($B)	.956	.972	
FINAL AVE. RECUR ($M)	5.54	5.69	
$\frac{\partial \text{GLOW}}{\partial \text{ORB. INERT}} \left(\frac{\text{LB}}{\text{LB}}\right)$	22	28	

CB-11
DO 4632(1)

ALL ORBITER DESIGNS WILL MEET THE 150 KNOT V_D

- MODIFY FIN ASPECT RATIO

$\Delta C_L \approx 0.038$

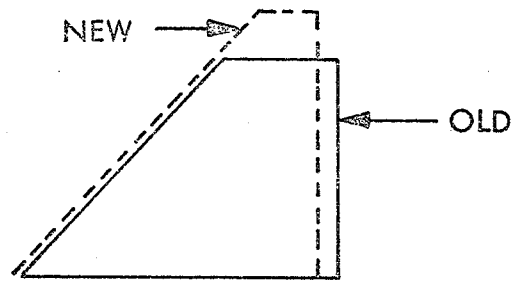

- INCREASE TAIL-SCRAPE ANGLE-OF-ATTACK

$\Delta C_L \approx 0.05$

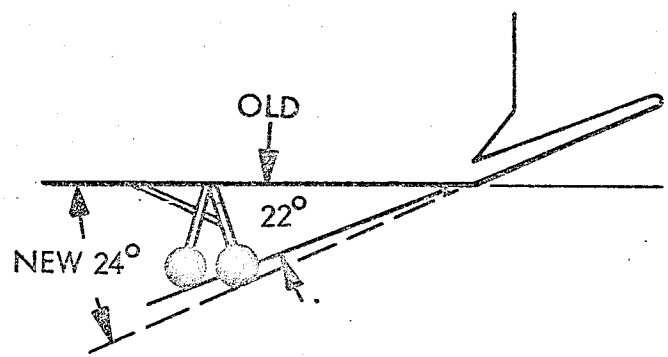

- DESIGN MORE FAVORABLE C.G.

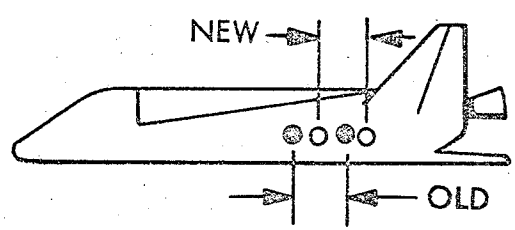

OLD: V_D	> 150 KTS
NEW: V_D	= 150 KTS

GA-8
DO4594(1)

L/D DEPENDS ON C.G. LOCATION

SUBSONIC

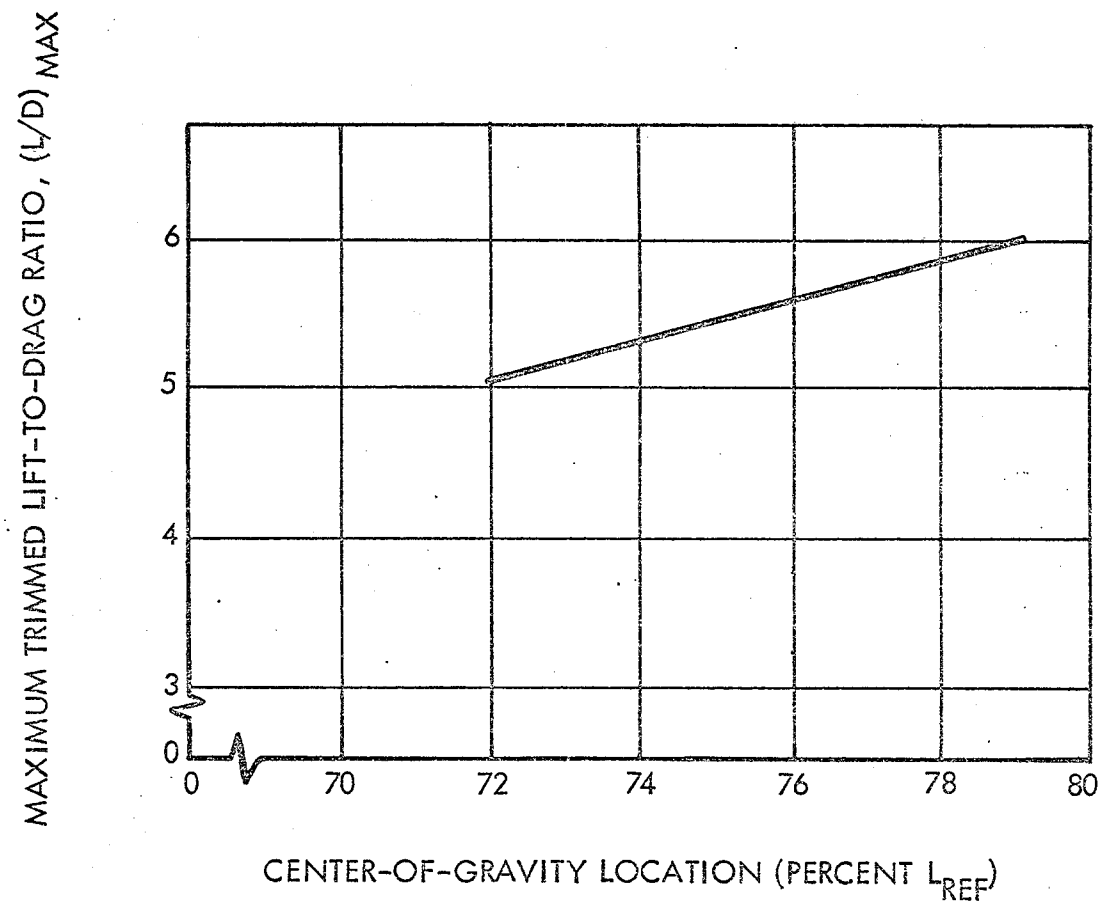

GA-6
DO4592

LIFT COEFFICIENT DEPENDS ON C.G. LOCATION

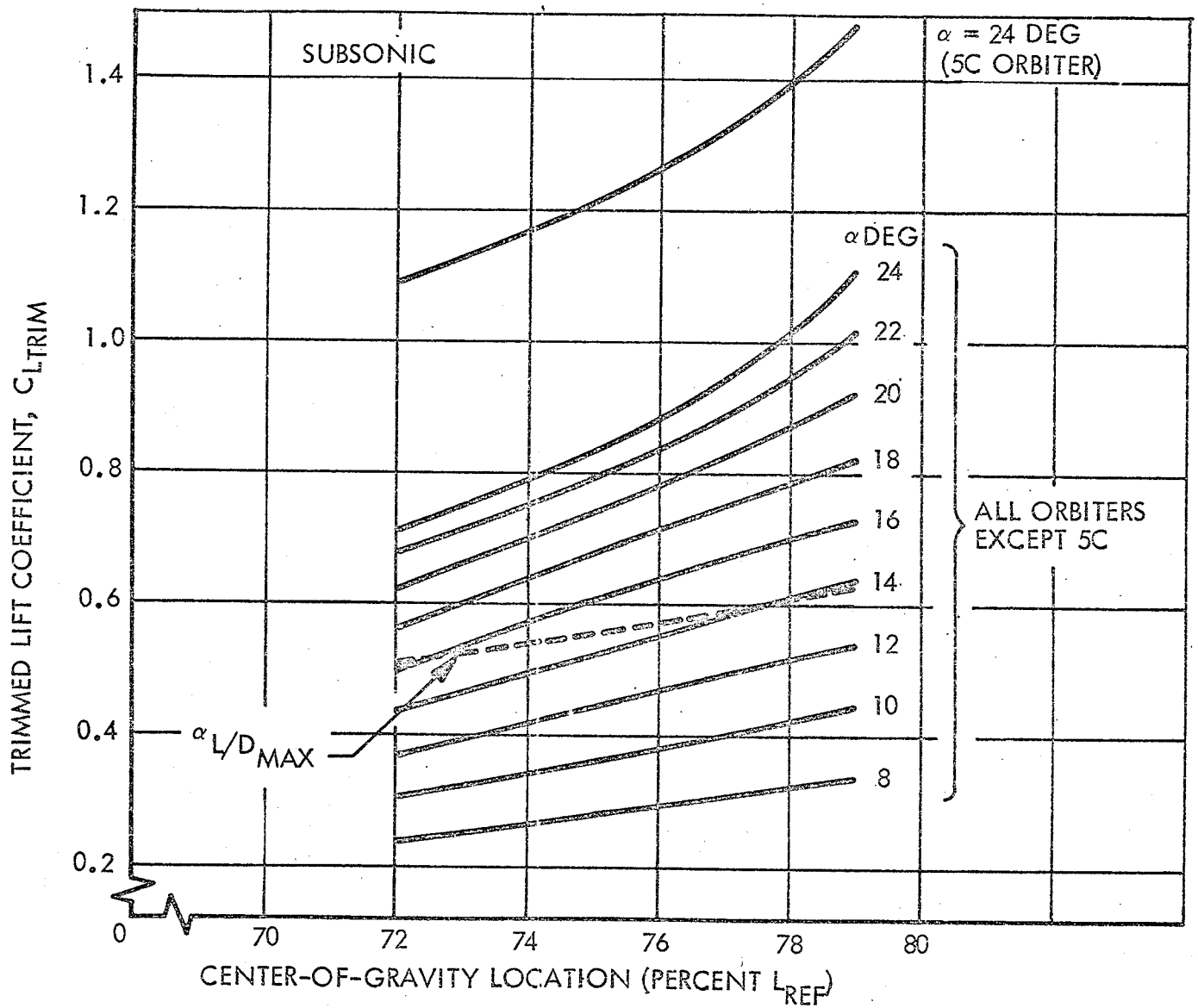

GA-5
DO4591

SMALLER ORBITERS HAVE HIGHER WING LOADING

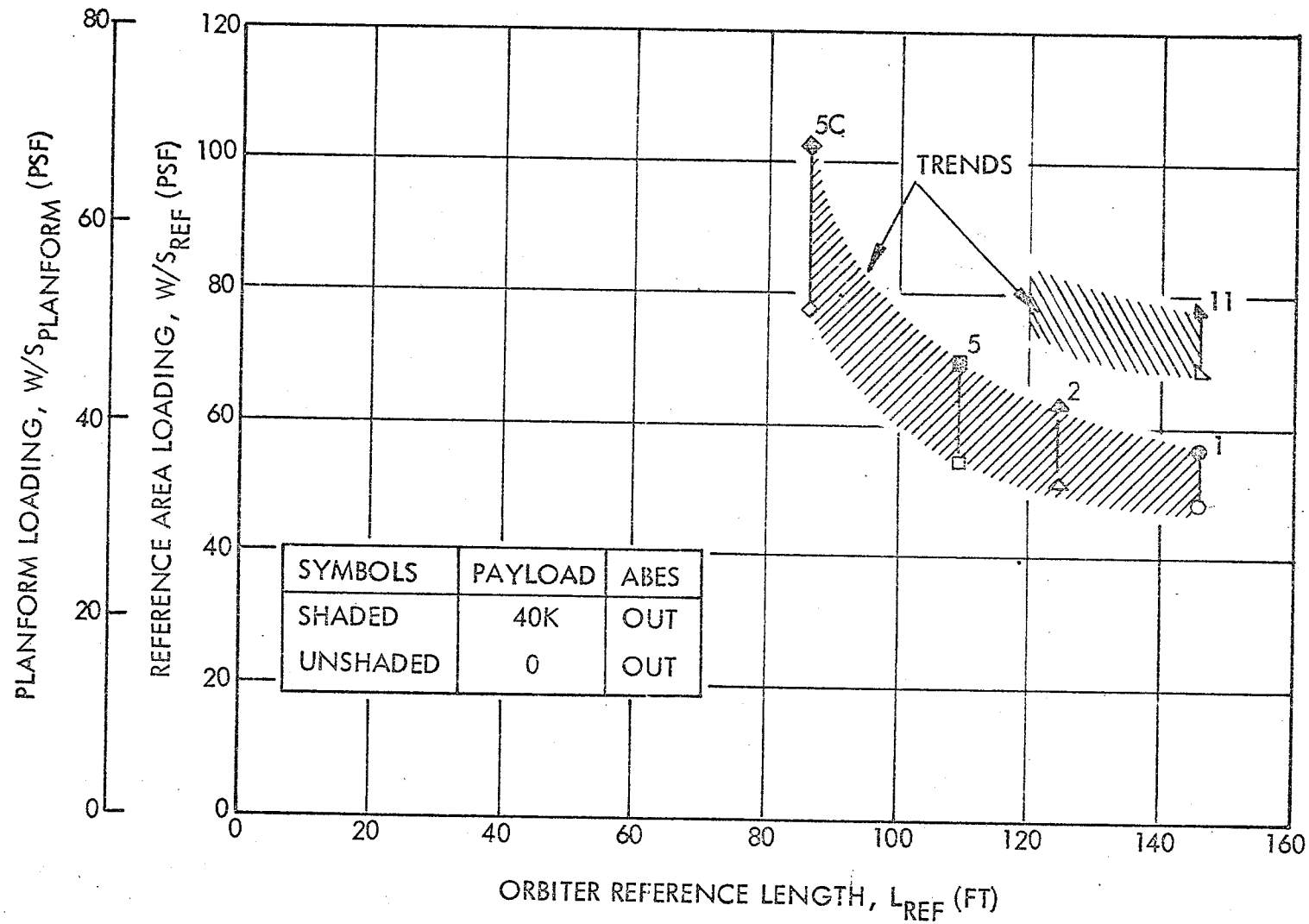

GA-7
DO4593

AERODYNAMIC LANDING DATA SUMMARY

REFERENCE LENGTH (FT)	REFERENCE AREA (FT2)	40 K PAYLOAD IN/ABES OUT: LANDING CG STATION (%L_{REF})	LANDING WEIGHT (LB)	W/S_{REF} (PSF)	C_L at $\alpha = 24°$	V_{DESIGN} (KNOTS)	PAYLOAD OUT/ABES OUT: LANDING C.G. STATION (%L_{REF})	LANDING WEIGHT (LB)	W/S_{REF} (PSF)	C_L at $\alpha = 24°$	V_{DESIGN} (KNOTS)	INTERIM · FINAL
146	4621	1277 (72.90)	262,251	56.8	.744	150	1352 (77.2)	222,251	48.1	.957	122	1
124.6	3365	1120 (74.90)	213,098	63.3	.830	150	1181 (79.0)	173,098	51.4	1.110	117	2 STG-120 IN. → H 2C 2 STG-120 IN. → H
109	2576	1001 (76.55)	179,694	69.8	.914	150	1033 (79.0)	139,694	54.2	1.110	120	5 2 STG-156 IN. 5A 1 STG-120 IN. 5B 1 STG-156 IN. 5D 2 STG-120 IN. → H + O
86.5	1621	801 (77.25)	165,778	102.3	1.340	150	820 (79.0)	125,778	77.6	1.490	124	5C 1 STG-156 IN. → H + O
146	4621	1367 (78.00)	358,002	77.5	1.015	150	1384 (79.0)	318,002	68.8	1.110	135	11 → H + O

GA-10
DO4596(1)

V_{DESIGN} = 150 KNOTS

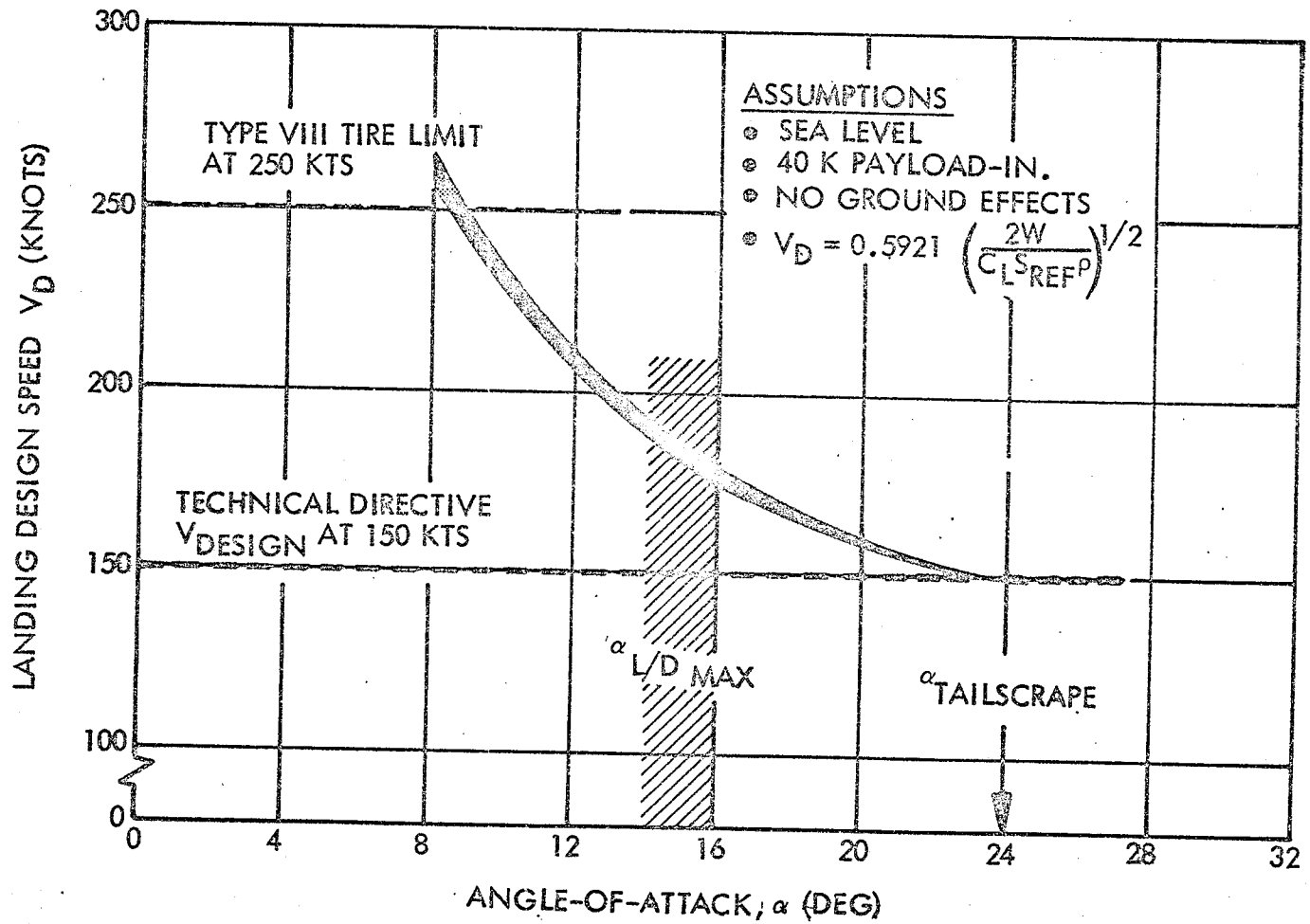

GA-9
D04595

ORBITER ENTRY HEATING BOUNDARIES

Entry heating boundaries are shown for lower-surface/body-leading edge temperature limits of 1900°F and 2300°F. The lower limit represents a temperature constraint based on a superalloy metallic TPS, whereas the limit of 2300°F is taken as the design temperature, with 200°F margin, for a TPS composed of rigid external insulation. The slope discontinuities in the lower surface curves result from assumed boundary layer transition. Heating boundaries also are shown for the nosecap stagnation point and fin leading edge. At high velocity and low angles-of-attack, laminar heating to stagnation regions is critical. At angles-of-attack greater than about 35 deg, heating on the lower surface is critical for all velocities.

ORBITER ENTRY HEATING BOUNDARIES

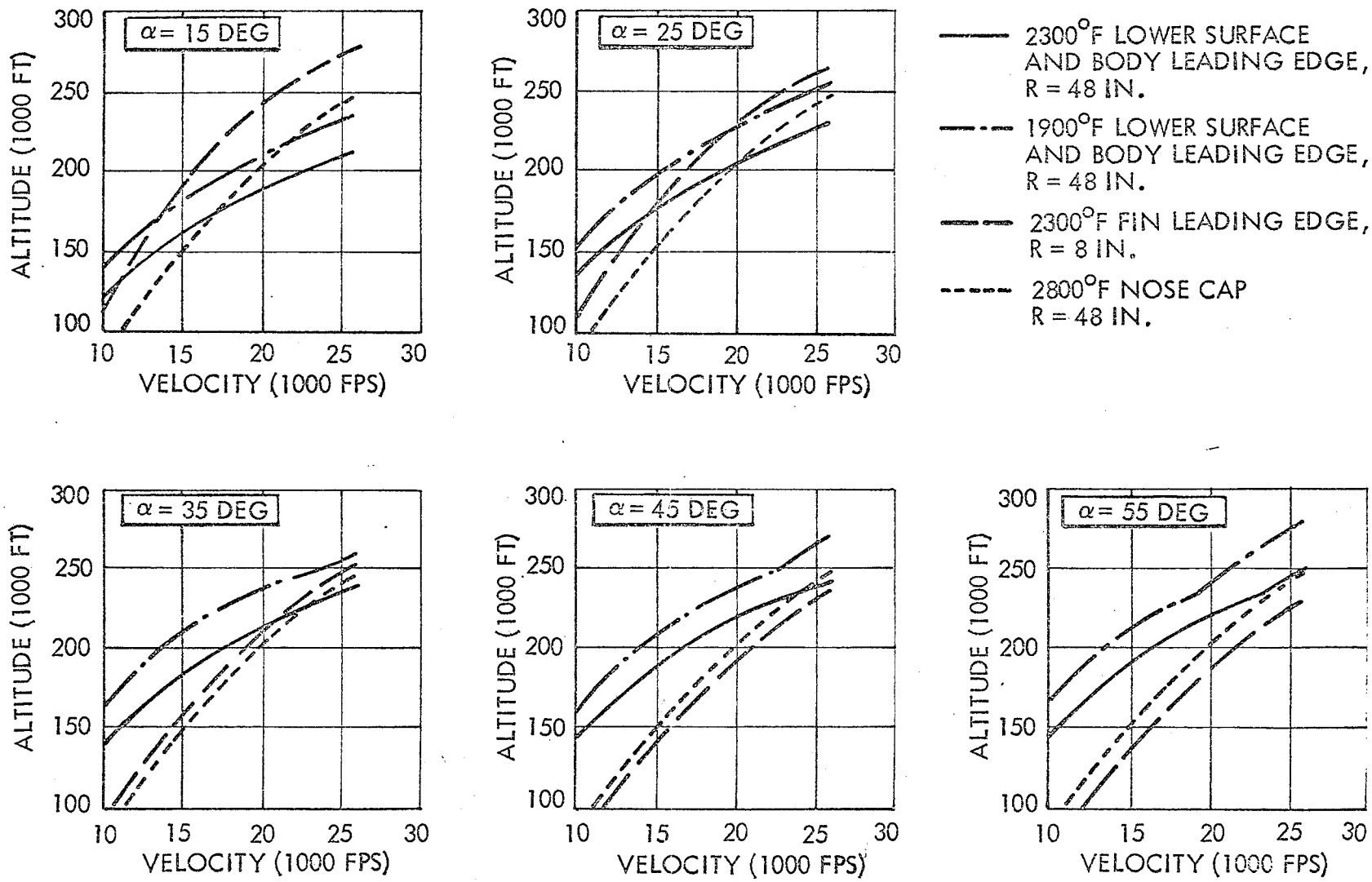

GA-2
DO4579

ORBITER COMPOSITE HEATING BOUNDARIES

1900°F LOWER SURFACE
1900°F BODY LEADING EDGE, R = 48 IN.
2300°F FIN LEADING EDGE, R = 8 IN.
2800°F NOSE CAP, R = 48 IN.

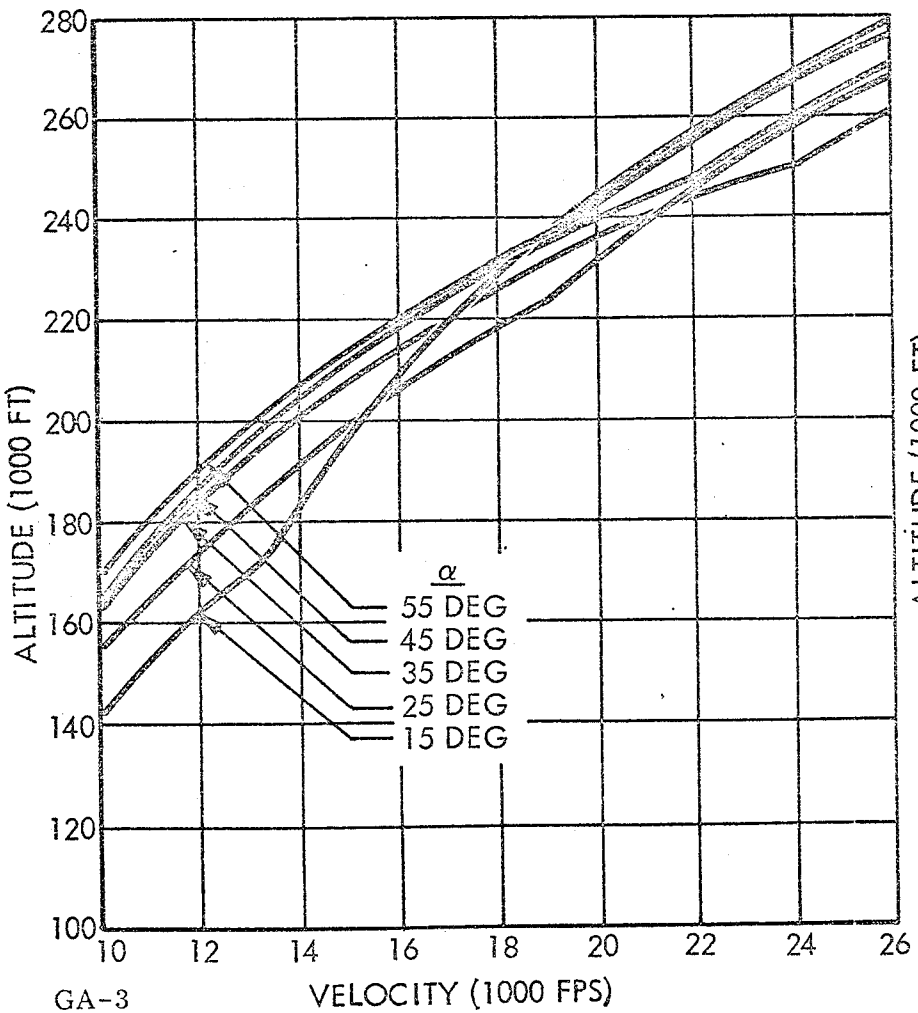

2300°F LOWER SURFACE
2300°F BODY LEADING EDGE, R = 48 IN.
2300°F FIN LEADING EDGE, R = 8 IN.
2800°F NOSE CAP, R = 48 IN.

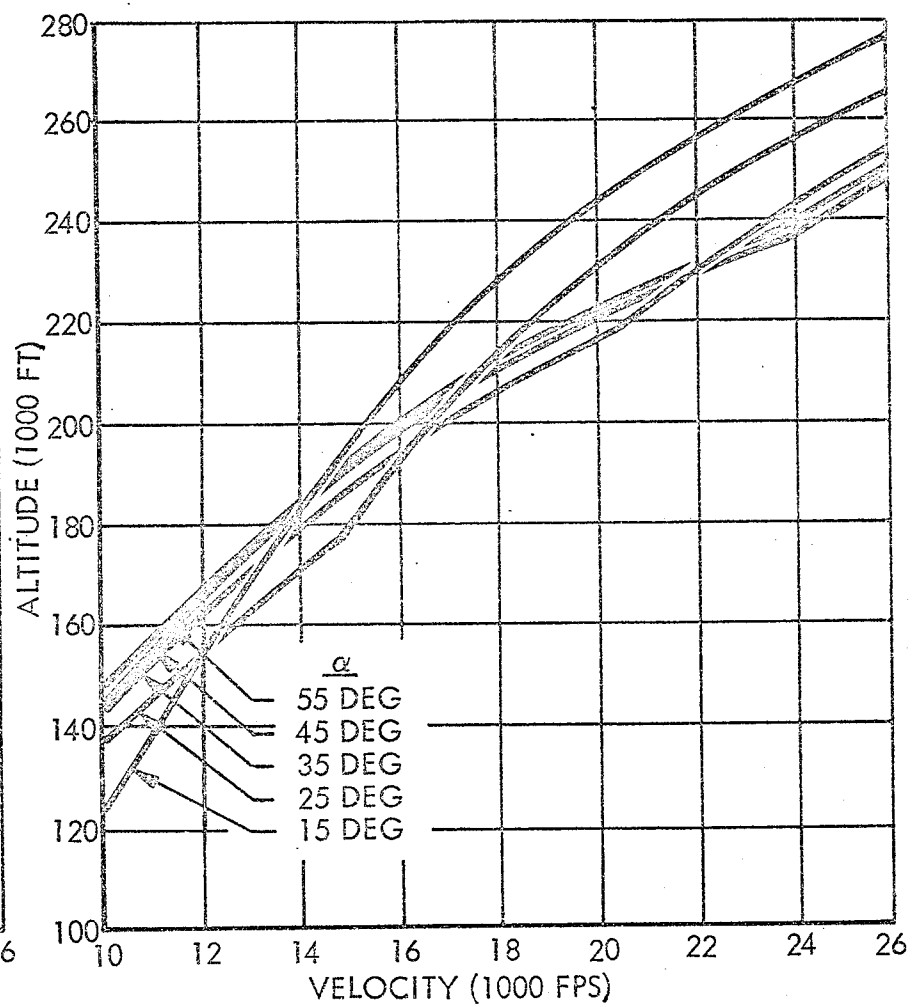

GA-3
DO4580

ALLOWABLE ENTRY WING LOADING

Allowable entry wing loadings, based on wing-level flight at peak heating, are shown for lower surface temperature limits of 1900°F and 2300°F. Two wing-loading scales are used: the lefthand based on aerodynamic reference area and the righthand based on total planform area. For either lower surface constraint, the maximum allowable wing loading is a maximum at a vehicle angle-of-attack of about 40 deg. With a 2300°F limit, the maximum reference wing loading is about 106 psf, whereas, reducing the temperature constraint to 1900°F lowers this value to 52 psf. The effects of nosecap and fin temperature constraints also are shown for radii scaled with vehicle length. At low angles-of-attack, these limits significantly lower the allowable wing loading.

ALLOWABLE ENTRY WING LOADING

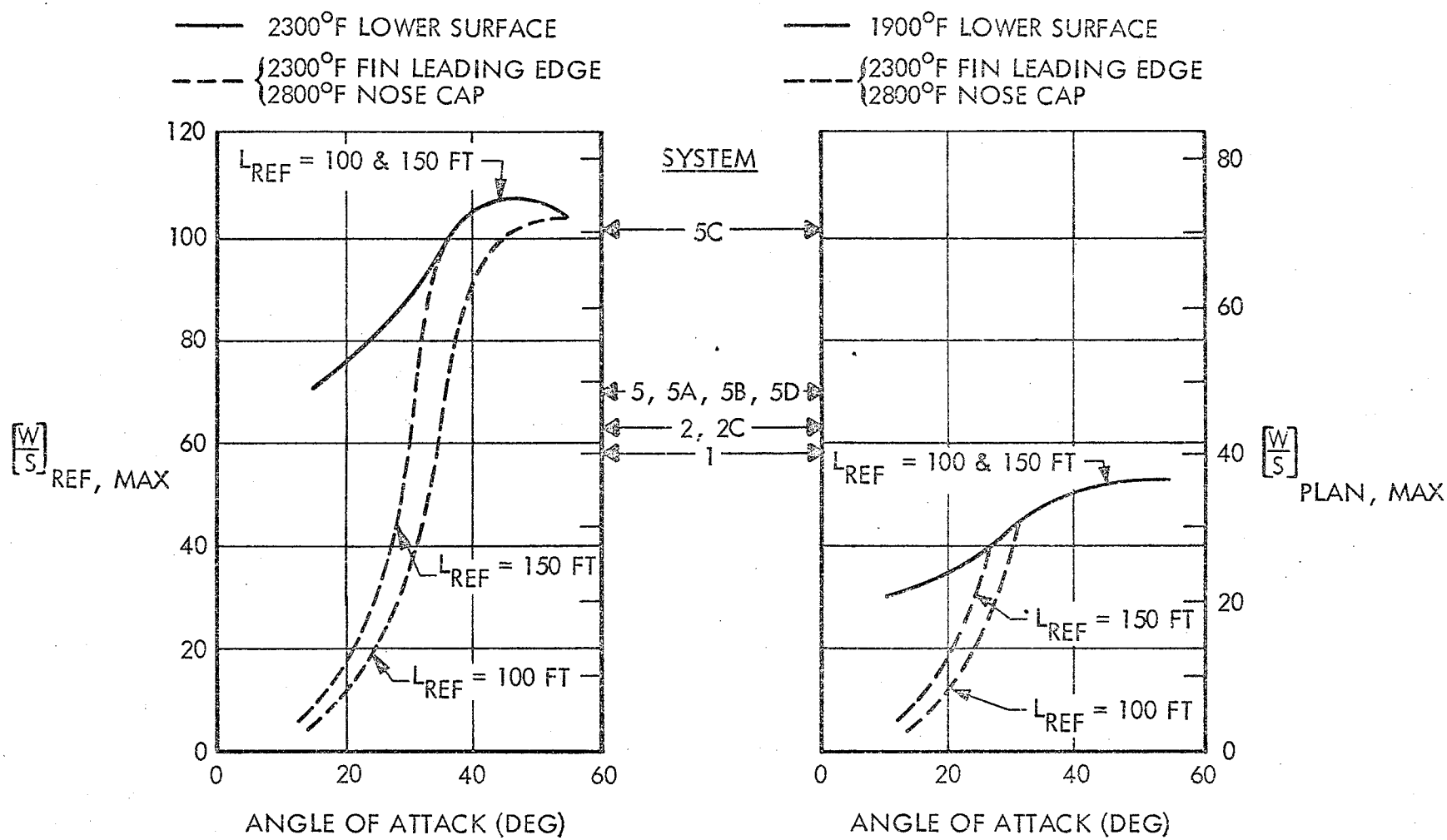

GA-1
DO4578(1)

ORBITER PEAK TEMPERATURE ISOTHERMS

Peak temperature isotherms experienced by various orbiter configurations during entry are shown. For all configurations, peak heating to stagnation regions occurs at pullup following the initial plunge. For Configurations 1, 2, and 5B, temperatures at these locations increase with wing loading since the radii are scaled with vehicle length. Excepting 5C, all orbiters generate 1100-nm crossrange without exceeding a lower-surface limit of 2300°F. This is not true for the shorter higher wing-loading orbiter 5C. To achieve 1100-nm crossrange with this configuration, results in peak lower-surface temperature of 2600°F.

ORBITER PEAK TEMPERATURE ISOTHERMS

1100 NM CROSSRANGE

TEMPERATURE IN °F ($\epsilon = 0.8$)

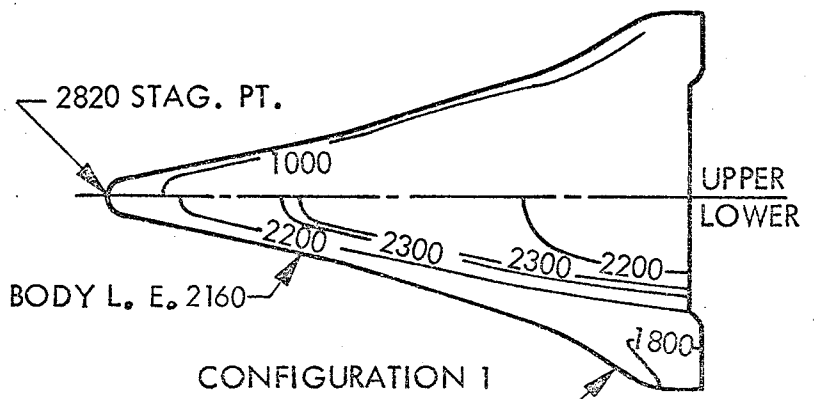

CONFIGURATION 1

$W/S_{REF} = 57\ LB/FT^2$

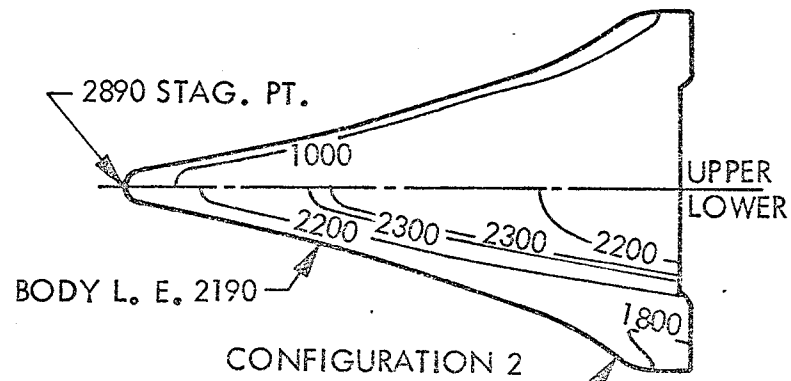

CONFIGURATION 2

$W/S_{REF} = 64.2\ LB/FT^2$

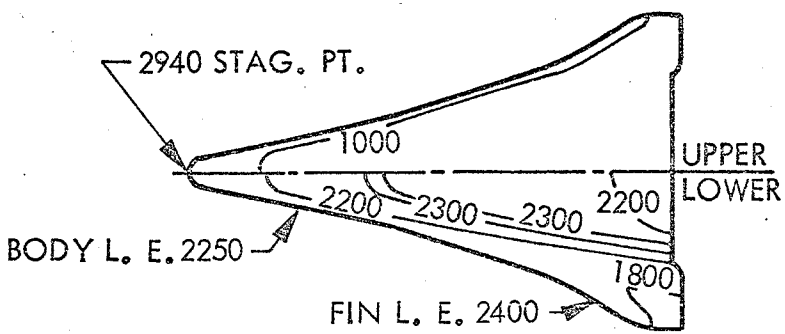

CONFIGURATION 5B

$W/S_{REF} = 70.2\ LB/FT^2$

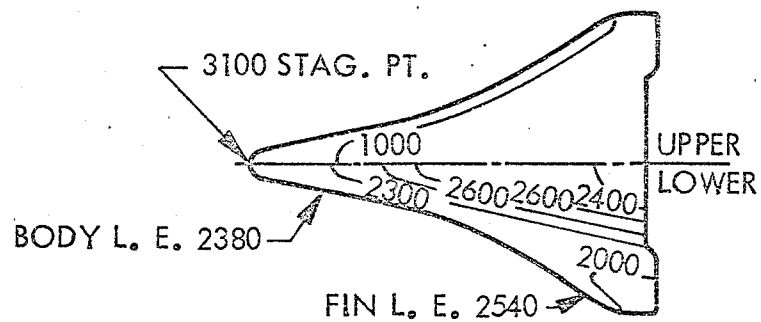

CONFIGURATION 5C

$W/S_{REF} = 102.3\ LB/FT^2$

NOTE:

HEATING COMPUTED USING NASA THERMO PANEL RECOMMENDED TECHNIQUES.

GA-4
DO4585(1)

CONCLUSIONS

1. PHASED BOOSTER DEVELOPMENT SAVES 896 M/YR PEAK ANNUAL FUNDING.

2. EXTERNAL H AND O DECOUPLES ORBITER DEVELOPMENT FROM STAGING, OFFERS LOWER SYSTEM DEVELOPMENT RISK AND MINIMIZES SIZE OF ORBITER.

3. LARGE PAYLOAD BAY RELIEVES ENTRY HEATING AND DOES NOT INCREASE COST SIGNIFICANTLY.

JTL-14
DO4658

PARALLEL VS TANDEM STAGING

The tandem configuration (2C) requires an interstage which weighs approximately 16,000 lb. No interstage is required for the parallel configuration (2). This weight is expended during interim operations and becomes a part of the booster reusable structure during final operations. The effect of this structure is to make the tandem total cost $389 million higher, the peak funding $49 million higher, and the recurring cost of the final system $390,000 per flight higher. However, the extremely difficult abort or staging separation associated with the final parallel configuration (2) and the fact that this configuration experiences quite different interim-to-final ascent aerothermodynamic environments favors the tandem configuration (2C).

PARALLEL VS TANDEM STAGING

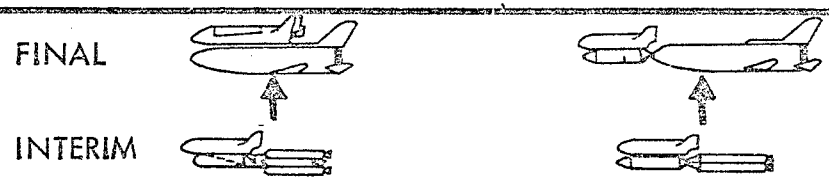

PARAMETER	COMPARATIVE DATA		COMMENTS
CONFIGURATION NO.	2 (PARALLEL)	2C (TANDEM)	SAME SIZE ORBITERS, BOTH HAVE EXT. LH_2, SAME INTERIM SRM.
ORBITER COMMONALITY	DIFFERENT ASCENT ENVIRONMENT	SAME ASCENT ENVIRONMENT	HIGHER TANK WEIGHT OF 2C (TANDEM) DECREASES PERFORMANCE AND INCREASES COSTS, BUT MORE DIFFICULT ABORT OR STAGING SEPARATION OF 2 AND DIFFERENCES IN INTERIM TO FINAL ASCENT AEROTHERMODYNAMICS OF 2 FAVOR THE TANDEM CONFIGURATION.
FINAL BOOSTER DRY WT (10^3 LB)	387.1	462.4	
EXT. TANK DRY WT (10^3 LB)	17.1	33.1*	
FINAL GLOW (10^6 LB)	3.32	3.69	THEREFORE, TANDEM IS RECOMMENDED.
TOTAL PROG COST ($\$10^9$)	9.76	10.14	
PEAK FUNDING ($\$10^9$)	0.97	1.02	
FINAL RECURRING COST/ FLIGHT ($\$10^6$)	4.77	5.16	
STAGING AND ABORT	DIFFICULT SEPARATION	SIMPLER SEPARATION	

*INCLUDES APPROXIMATELY 16,000 LB OF INTERSTAGE

PARALLEL VS TANDEM CONFIGURATIONS

	PARALLEL	TANDEM
INTERIM	ADVANTAGES • BOOSTER LIGHTER BY 5 PERCENT • TANKS LIGHTER BY 50 PERCENT • SIMPLER INTERSTAGE DISPOSAL OR STORAGE • BETTER STIFFNESS 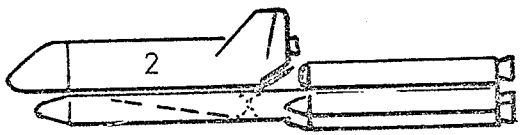	ADVANTAGES • ORBITER LIGHTER BY 2 PERCENT • FEWER ORBITER HEAT SHIELD PENETRATIONS • ASCENT C.G. GIMBAL TRACKING = 0.7 DEG (COMPARED TO 5 DEG) • SIMPLER CONTROL DURING STAGING 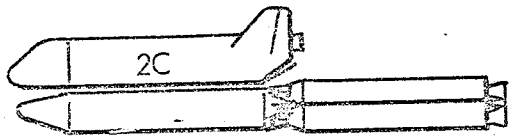
COMMON	• ASCENT FLOW FIELD AND LOCAL LOADS • PRIMARY LOAD PATHS • SEPARATION AND STAGING • ASCENT HEATING NOT DESIGNING • ADAPTER STRUCTURE	
FINAL	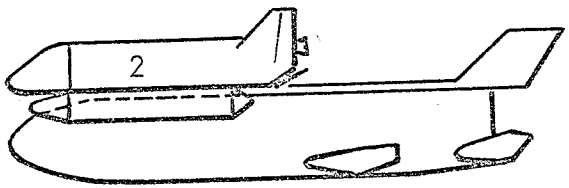	

TANDEM VS PARALLEL STAGING ADAPTER CONSIDERATIONS

The necessity for an adapter or interstage structure between the booster and tanks of the tandem configuration constitutes a penalty over the parallel configuration, where adapter structure is integral with the booster upper surface. This effect can be minimized through clever design -- the ideal solution being to incorporate as much as possible into the booster as recoverable structure as shown in Configuration 2. The present performance and cost data are based on Configuration 3 where the penalty is 16,900 lb of expendable structure.

TANDEM VS PARALLEL STAGING

ADAPTER CONSIDERATIONS

CONFIGURATION	ADAPTER	COMMENT
2 INTERIM (PARALLEL)	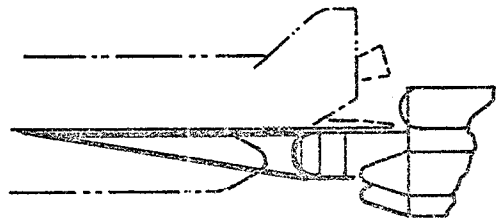	• JETTISON WITH SRMs
2 FINAL 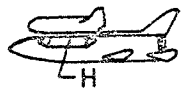		• ADAPTER INTEGRAL PART OF BOOSTER
2C INTERIM (TANDEM)	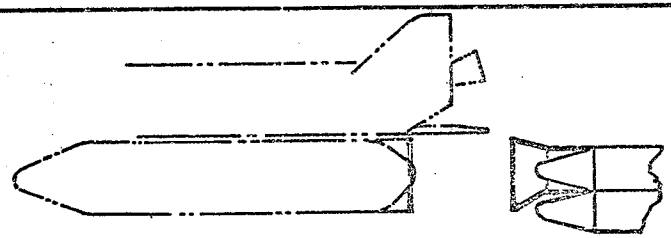	• JETTISON WITH SRMs
2C FINAL 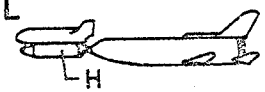		
CONCEPT 1		• ADAPTER TO ORBIT
CONCEPT 2	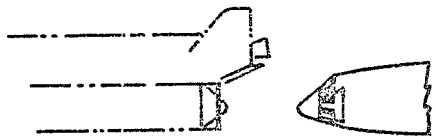	• SHORT SKIRT TO ORBIT REMAINDER INTEGRAL WITH BOOSTER
CONCEPT 3	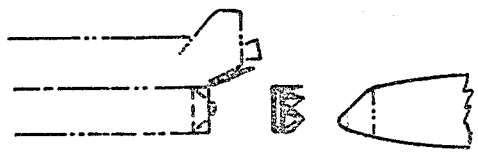	• JETTISON ADAPTER

SF-2
DO4557

SRM STAGE SEPARATION

The stage separation for configurations with single stage boosters is comparatively straightforward as indicated on the chart. Such an arrangement requires only one joint and one separation device resulting in a single separated unit being longitudinally decelerated by retrorockets.

The two-stage booster configurations, on the other hand, present a rather complex separation problem. The 120-inch SRM configuration has five motors in the first stage, two of which can be conveniently coupled structurally. Because of the thrust alignment problem, the attachment of the other three motors is not as convenient, resulting in a need for them to be separated independently. If these three motors could be structurally integrated, the numbers of separated units would be reduced from four to two, but the number of separation devices would be about the same. Of the two-stage configurations, the one with the 156-inch SRMs is obviously the more desirable.

SRM STAGE SEPARATION

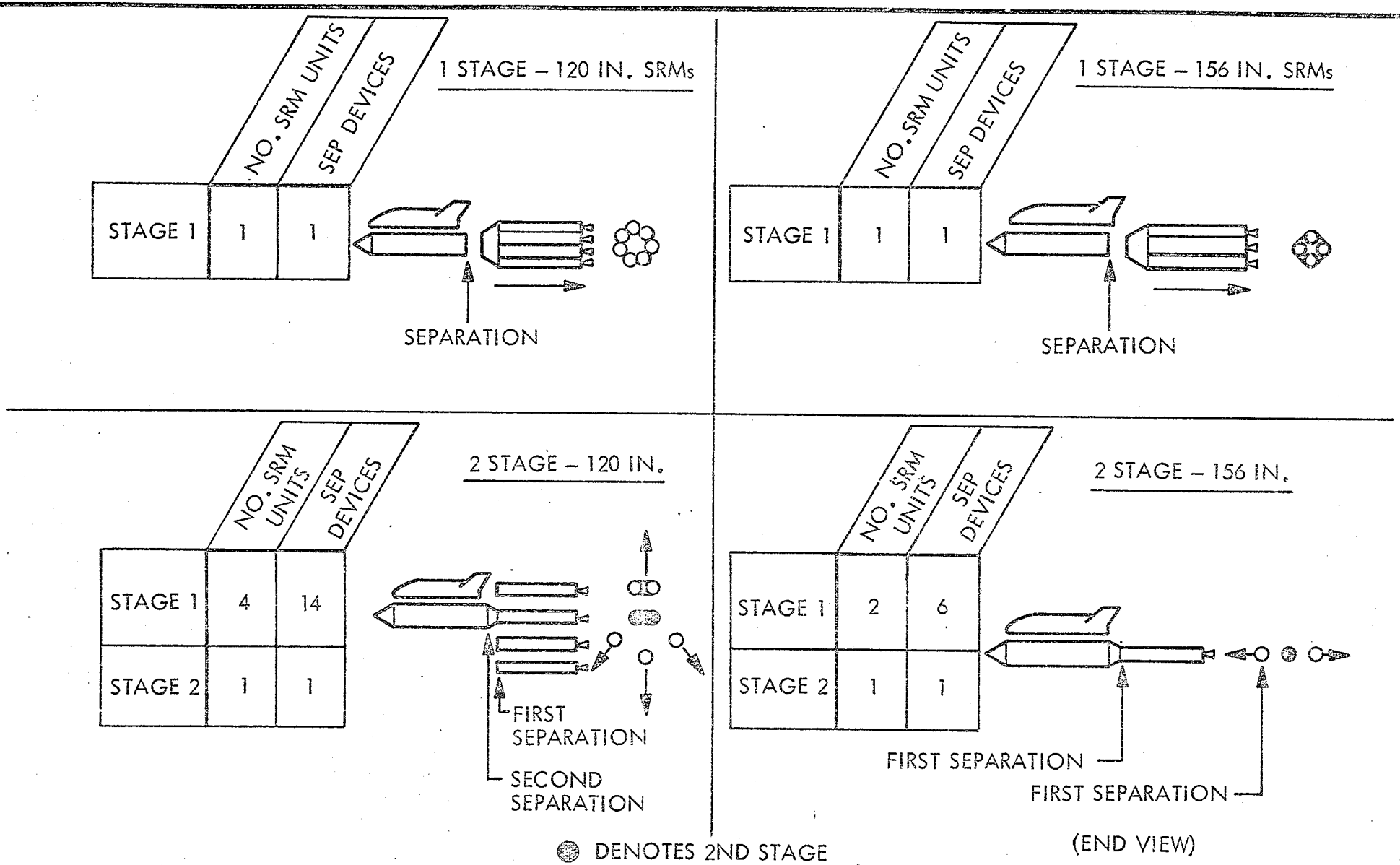

RB-4
DQ 4554

INTERIM-TO-FINAL ASCENT VEHICLE COMMONALITY

FINAL	H	H	H + O				
INTERIM	2 2 STG-120 IN.	2C 2 STG-120 IN.	5 2 STG-156 IN.	5A 1 STG-120 IN.	5B 1 STG-156 IN.	5D 2 STG-120 IN.	5C 1 STG-156 IN.
LOADS & STRUCTURE	✓ INDICATES NO PENALTY INVOLVED	→	→	→	→	→	→
STABILITY & FLIGHT CONTROLS	1 STATIC UNSTABLE VS FINAL STABLE BUT BOTH CONTROLLABLE	1	2 SPECIAL ROLL CONTROL REQUIRED FOR 2ND STAGE	1	→	→	→
STAGING	3 TWO SEPARATIONS COMPARED TO ONE FOR FINAL	3	3	✓	✓	3	✓
ORBITER PROPULSION	4 MAIN PROP SAME BUT POSSIBLE WT VARIATION FOR AUX PROP	→	→	→	→	→	→
SUBSYSTEMS	5 POSSIBLE WT VARIATION TO ALLOW PHASED DEVELOPMENT	→	→	→	→	→	→
ASCENT THERMO	✓	✓	✓	✓	✓	✓	✓
ORBITER ENTRY THERMO	6 CAN ALLOW 15-25% ENTRY WT INCREASE	6	7 CAN ALLOW 5-10% WT INCREASE	7	7	7	8 MARGINAL CONFIGURATION
ORBITER LANDING	9 INTERIM MUST BE SAME LANDING WTS AS FINAL	→	→	→	→	→	→
ATMOSPHERIC ABORT (HIGH Q)	10 STABLE FINAL CONFIG. WOULD ALLOW COAST TO LOW Q TO SEPARATE NOT POSSIBLE FOR INTERIM	→	→	→	→	→	→

RB-1

OPERATIONAL DIFFERENCES – PARALLEL VS TANDEM

	HANDLING & STORAGE	LAUNCH EQUIPMENT	TANK MATE OPERATIONS	
PARALLEL CONFIGURATION 2	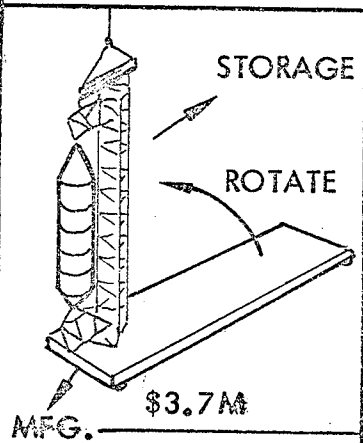 $3.7M	INTERIM → FINAL 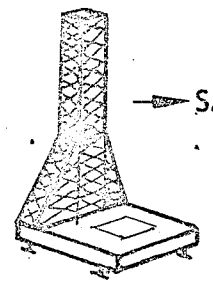 → SAME $15M (2 EA)	2 TANKS 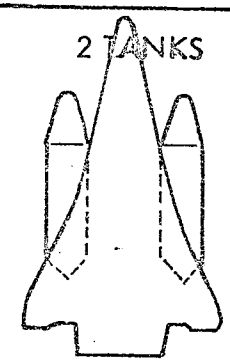 $12.5M	= $31.2M COST DIFFERENCE OF $0.1M IS NOT SIGNIFICANT = $31.3M
TANDEM CONFIGURATION 2C	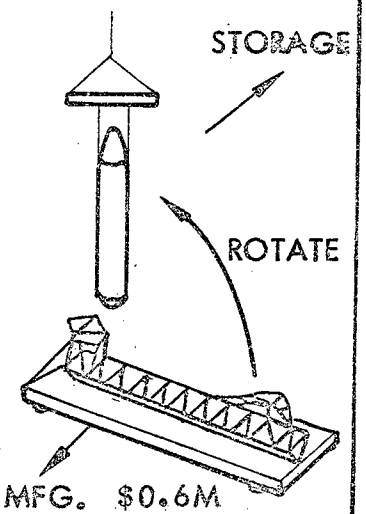 MFG. $0.6M	INTERIM → FINAL 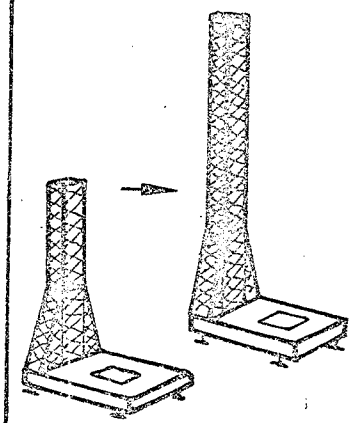 $21M (2 EA)	1 TANK 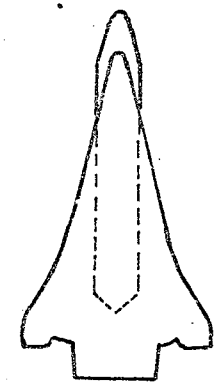 $9.7M	

RR-4
D04535

PARALLEL VS TANDEM: BOOSTER WEIGHT COMPARISON

Weight penalty on the heatsink booster for a tandem system compared to a parallel system is based on preliminary loads and structural analysis of the booster. The weight increase is primarily in the top side of the booster hydrogen tank; the booster oxygen tank is designed by other load conditions and, hence, is unaffected by the change from parallel to tandem orbiter mounting. The weight penalty shown in the accompanying chart includes the interstage support structure for the tandem system.

PARALLEL VS TANDEM: BOOSTER WEIGHT COMPARISON

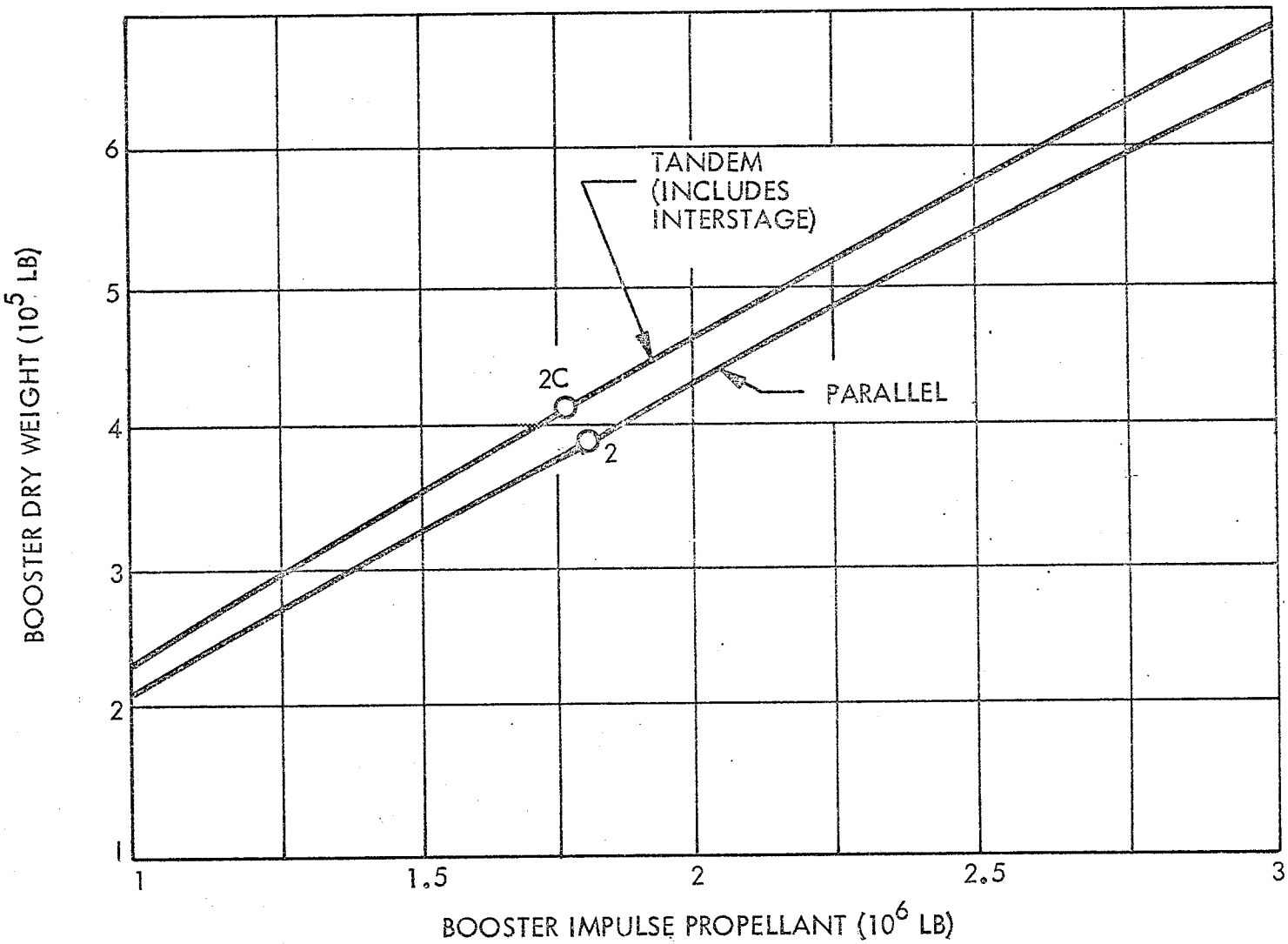

SF-3
DO 4559

PARALLEL VS TANDEM: DROPTANK WEIGHT COMPARISON

The liquid-hydrogen, external, bottom-mounted tanks (tandem system) are heavier than the side-mounted tanks (parallel system), since in the tandem system the tank must transfer the orbiter loads to the booster.

When both liquid oxygen and liquid hydrogen are carried in external tanks, the hydrogen tank must be stiffened to carry the increased loads from the liquid oxygen, and, thus, the difference between a tandem and parallel system is greatly reduced. The unit weight (lb/ft^2) of the droptank for the tandem system is slightly larger than for the parallel system; however, in the parallel system, the propellant is contained in two droptanks, while the tandem system uses only one droptank. This, combined with the added system complexity of using two tanks, results in the total droptank weight being somewhat less for the tandem configuration. This complements the lighter orbiter vehicle weight obtained in the tandem configuration (since the orbiter does not have to transfer any of the ascent propellant loads to the booster).

PARALLEL VS TANDEM: DROPTANK WEIGHT COMPARISON

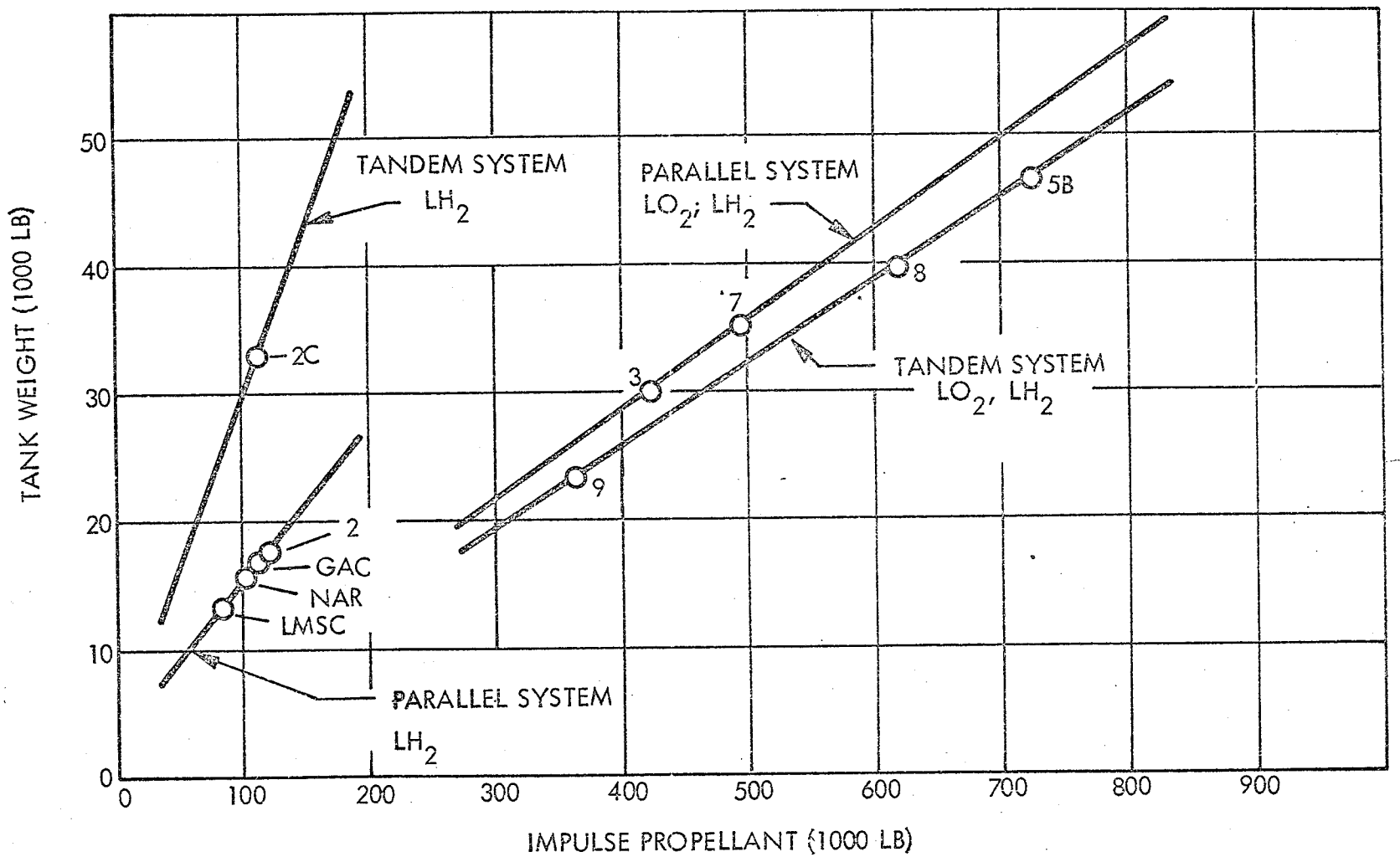

SF-4
DO 4560

INTERSTAGE STRUCTURE, CONFIGURATION 5B INTERIM

(DWG SKN 100132, SHEET 1)

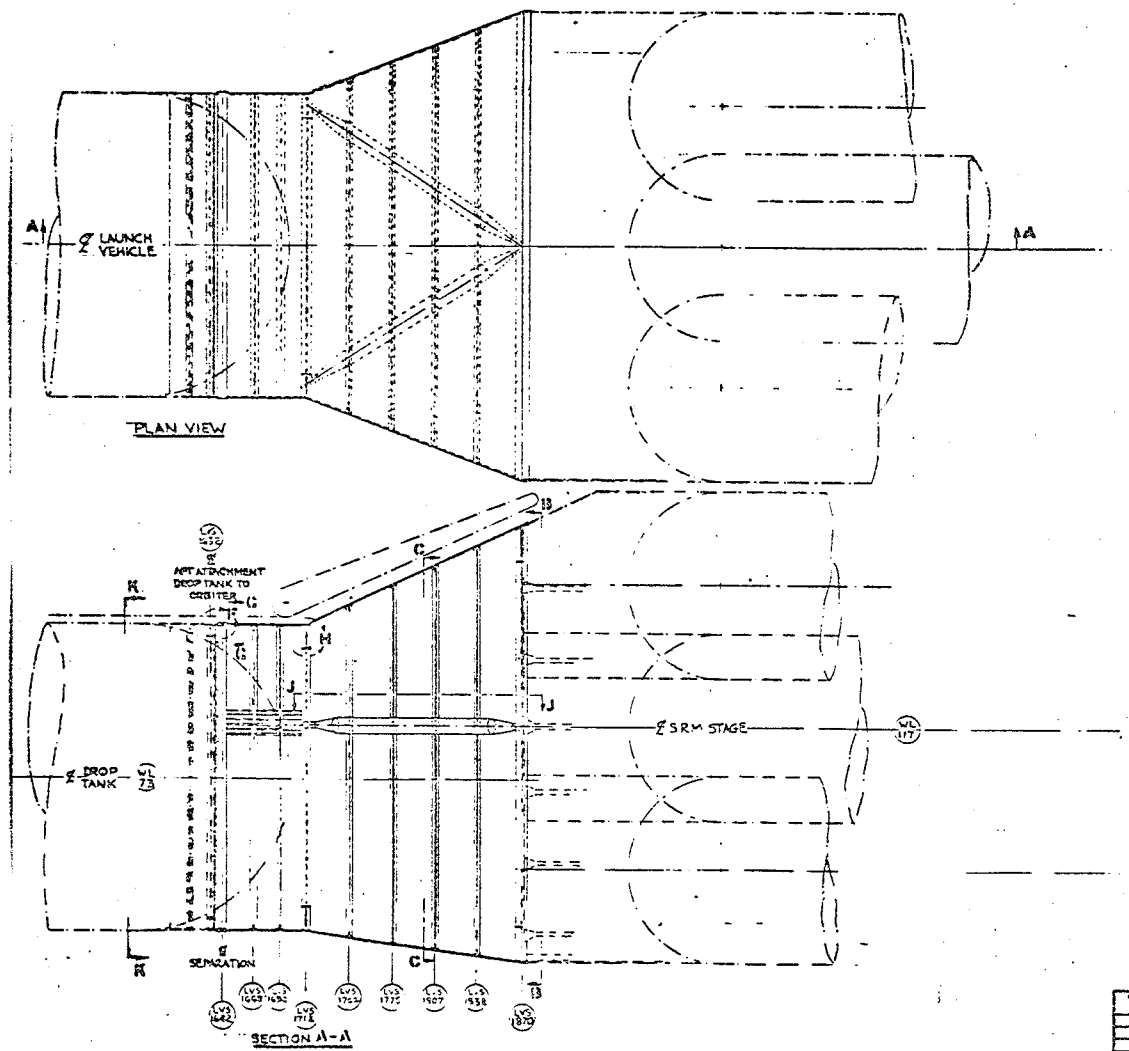

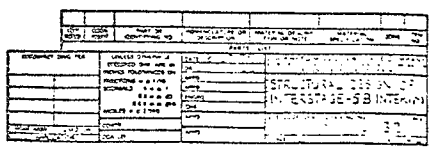

GH-21
BO 4642

INTERSTAGE STRUCTURE, CONFIGURATION 5B INTERIM

(DWG SKN 100132, SHEET 2)

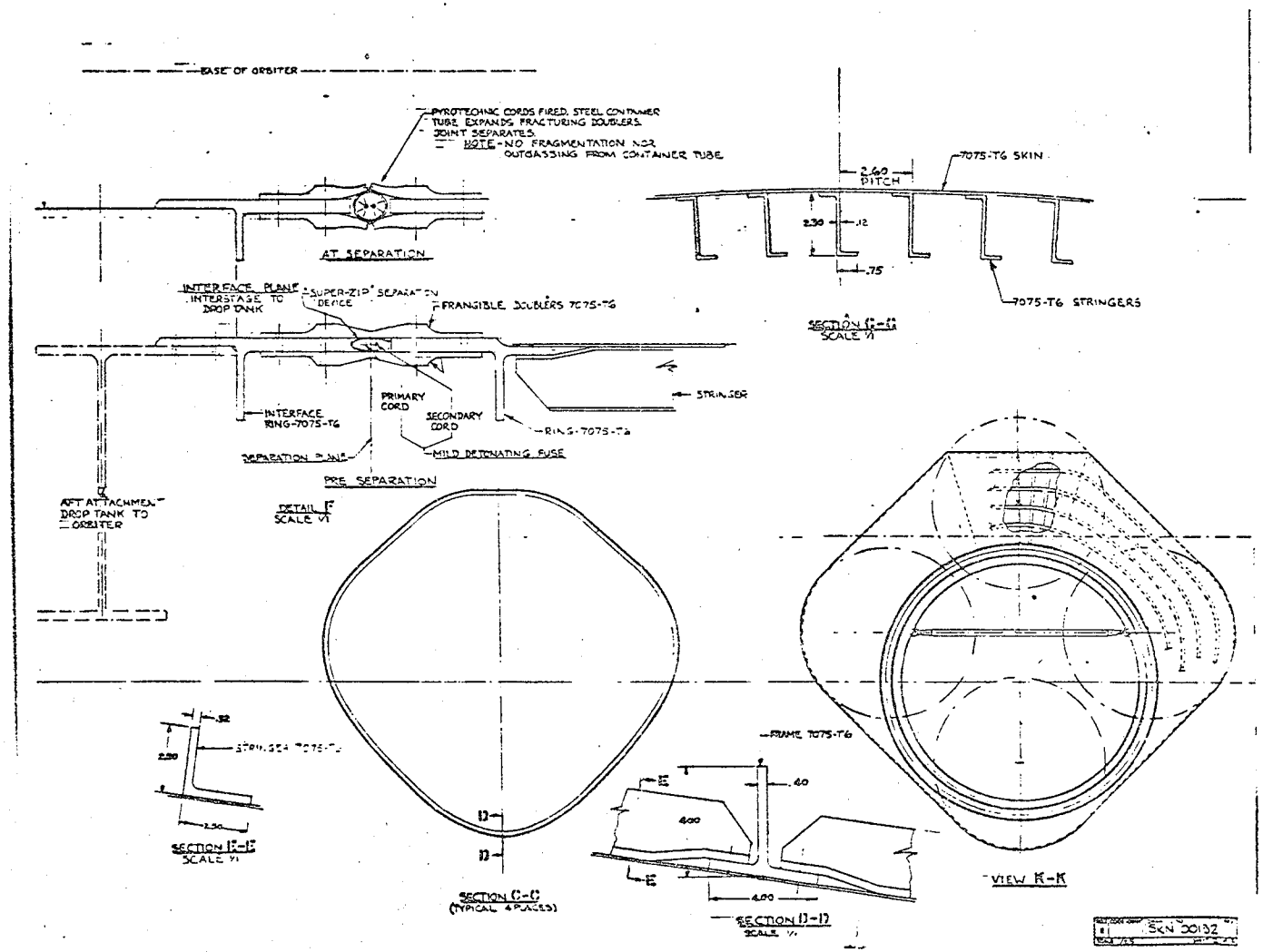

GH-22
DO 4643

INTERSTAGE STRUCTURE, CONFIGURATION 5B INTERIM

(DWG SKN 100132, SHEET 3)

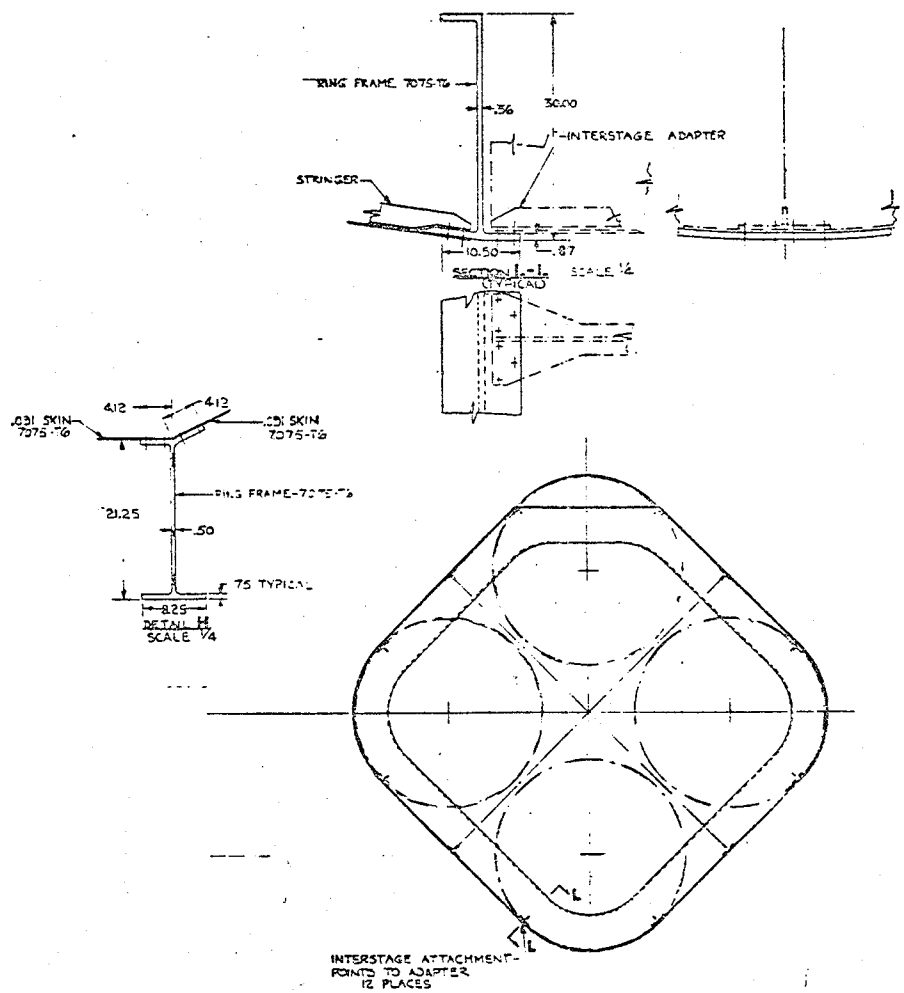

GH-23
DO 4644

LOCKHEED

INTERSTAGE STRUCTURE, CONFIGURATION 5B INTERIM

(DWG SKN 100132, SHEET 4)

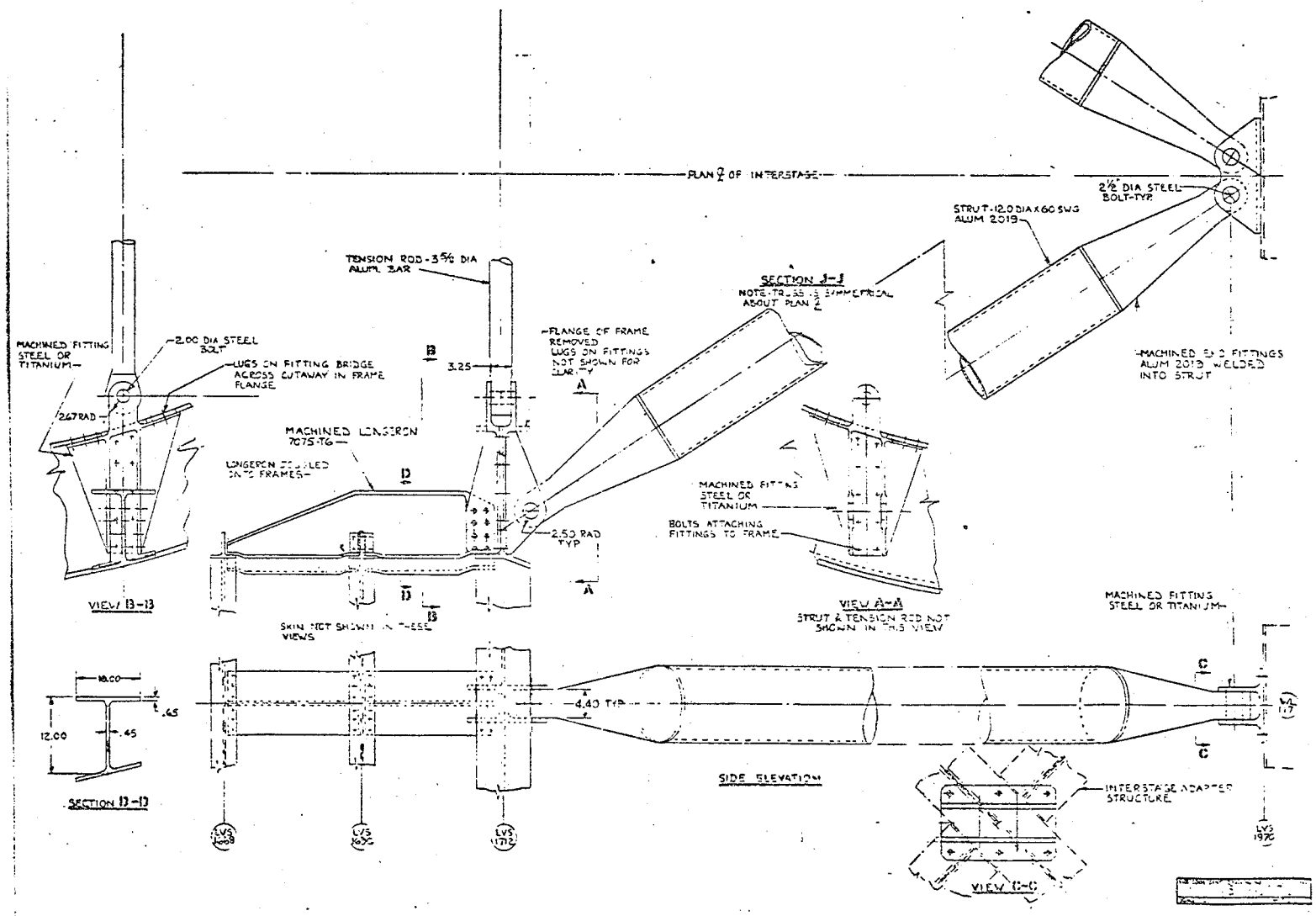

GE-24
DO 4645

BOOSTER/NOSELOAD INTERSTAGE
(INTEGRAL WITH BOOSTER CONCEPT)

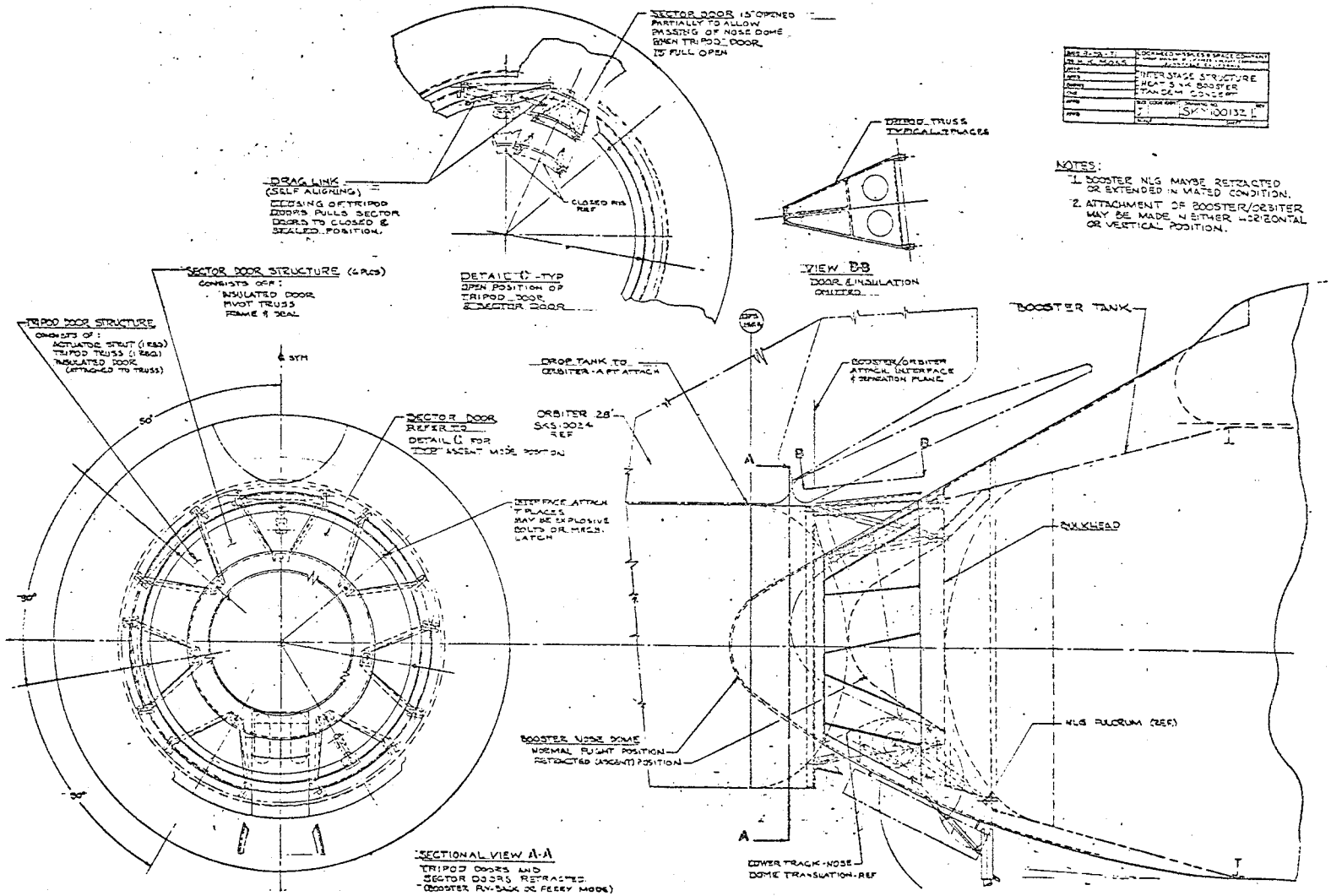

GH-18
DO 4627

CONCLUSIONS

1. PHASED BOOSTER DEVELOPMENT SAVES 896 M/YR PEAK ANNUAL FUNDING.

2. EXTERNAL H AND O DECOUPLES ORBITER DEVELOPMENT FROM STAGING, OFFERS LOWER SYSTEM DEVELOPMENT RISK AND MINIMIZES SIZE OF ORBITER.

3. LARGE PAYLOAD BAY RELIEVES ENTRY HEATING AND DOES NOT INCREASE COST SIGNIFICANTLY.

4. TANDEM ARRANGEMENT RESULTS IN MAXIMUM COMMONALITY BETWEEN INTERIM AND FINAL DESIGN AND RESULTS IN SIMPLER STAGING.

JTL-15
DO4659

SELECTION OF INTERIM BOOSTER CONFIGURATION

Accepting the advantage of the 156-inch configurations in weight and cost, the question of the number of stages remains. The two-stage configurations offer some advantages over a single stage in weight and cost, but these must be balanced against system considerations which are not so readily apparent. For example, the single stage has advantages regarding stage separation and structural design. Furthermore, the weight and cost advantages of the two-stage booster would be mitigated if a staging "Q" constraint was imposed (present dynamic pressure at first separation is approximately 360 psf). Based on the current analysis and data base, it is recommended that future activity emphasize the 156-inch single-stage booster.

SELECTION OF INTERIM BOOSTER CONFIGURATION

SRM DIA/ NO. SRMs	PROPELLANT/ SRM WT	SRM DEV. RISK	NO. STAGES/ SEPARATED UNITS	INTERIM BLOW	INTERIM GLOW	CONTROL REQ. θ/q_c	SRM DEV COST ($M)	SRM PROC COST ($M)	NONRECURRING GSE COST ($M)	STAGE DEV COST ($M)	INTERIM PROG COST ($M)	INTERIM COST PER FLIGHT ($M)	TOTAL PROG. COST ($M)	PEAK FUNDING ($M)
156 IN/3	1,047 K/ 1,192 K	LOW RISK	2/3	3,590 K	4,660 K	2.5/ 3.5	66	134	15.0	51	387	32.2	10,119	967
120 IN./9	452 K/ 507 K	LOWEST RISK	1/1	4,750 K	5,830 K	2.5/ 2.0	33	212	5.0	30	468	39.0	10,080	987
156 IN./4	896 K/ 1,006 K	LOW RISK	1/1	4,100 K	5,170 K	4.5/ 2.5	62	154	15.0	32	408	34.0	10,116	972
120 IN./7	470 K/ 527 K	LOWEST RISK	2/5	3,850 K	4,920 K	3.5/ 2.5	33	172	5.0	58	423	35.2	10,064	976

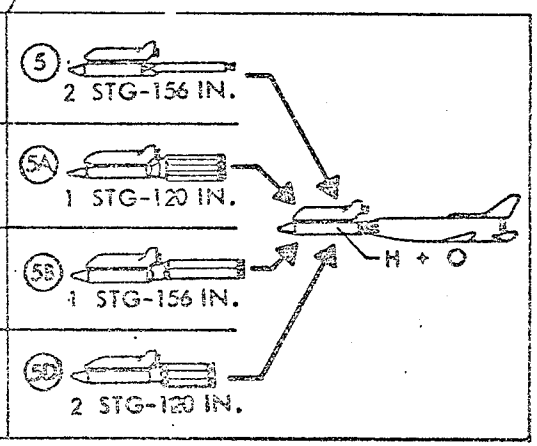

COMMENTS

120 IN. D VS 156 IN. ISSUE

- 156 IN. DIA ALLOWS FEWER SRMs
- 156 IN. RESULTS IN LOWER GLOW AND PROG COST
- 156 IN. LEAST COMPLEX STAGE DESIGN

SINGLE VS TWO-STAGE ISSUE

- SINGLE IS LESS COMPLEX
- TWO-STAGE HAS HI-Q 1ST SEPARATION
- TWO-STAGE REQ MULTIPLE UNIT SEPARATIONS

RECOMMENDATION

- SELECT 156 IN. DIA.
- SELECT SINGLE STAGE

RB-8
D04575(1)

INTERIM CONFIGURATIONS
SOLID ROCKET MOTOR CHARACTERISTICS

NUMBER MOTORS STG 1/STG 2	MAX S.L. THRUST PER MOTOR (LB X 10^{-6})	MAX PC/ MEOP (PSI)	EXPANSION RATIO	I_{SP} S.L./VAC	BURN TIME (SEC)	TOTAL WEIGHT PER MOTOR (LB X 10^{-6})	MASS FRACTION	MOTOR LENGTH (IN.)	MOTOR CASE L/D	
5/2	1.328	750/853	9.4	240/269	103	0.527	0.892	992	7.2	(2) 2 STG-120 IN.
				SAME AS ABOVE						(2C) 2 STG-120 IN.
2/1	3.15	1000/1200	9.3	247/269	85	1.192	0.879	1266	7.1	(5) 2 STG-156 IN.
9/0	0.875	750/853	10.0	240/270	150	0.507	0.892	937	6.9	(5A) 1 STG-120 IN.
4/0	1.745	750/1000	10.0	240/270	141	1.006	0.891	1083	6.0	(5B) 1 STG-156 IN.
3/0	2.328	750/1000	9.2	241/268	141	1.339	0.893	1415	8.0	(5B) 1 STG-156 IN. (3)
5/2	1.328	750/853	9.4	240/269	103	0.527	0.892	992	7.2	(5D) 2 STG-120 IN.
3/0	2.14	750/1000	9.8	240/270	140	1.221	0.893	1299	7.3	(5C) 1 STG-156 IN.

NOTES:
1. FLEXIBLE SEAL NOZZLE WITH MAX DEFLECTION ANGLE OF ± 8 DEG
2. THRUST TERMINATION AND TVC ACTUATION SYSTEM WT NOT INCLUDED
3. STRUCTURAL DESIGN STRESS = 200,000 PSI PLUS SAFETY FACTOR OF 1.25
4. INSULATION SAFETY FACTOR OF 1.5
5. PBAN TYPE PROPELLANT

CB-8
DO 4576

INTERIM BOOSTER SELECTION ISSUES

ISSUES

1. 120-IN. DIA. VS 156-IN. DIA. SOLID ROCKET MOTORS (SRMs)
2. SINGLE STAGE VS TWO-STAGE BOOSTER

APPROACH AND GUIDELINES

DEFINE THE FOUR LAUNCH SYSTEMS AND COMPARE:

- PERFORMANCE/WEIGHTS
- AERO STABILITY AND TVC
- STAGING/SEPARATION
- ABORT REQ./THRUST TERMINATION
- ACCOUSTICAL ENVIRONMENT
- POLLUTION
- FACILITIES
- GROUND OPERATIONS
- SRM DEV. RISK
- SYSTEM COST

RB-5
DO4547

INTERIM BOOSTER SYSTEM PERFORMANCE GROUNDRULES

CONSTRAINTS

- EACH CONFIGURATION HAS COMMON SRMs
- MAXIMUM DYNAMIC PRESS $\leq$ 500 PSF
- MAXIMUM ACCELERATION $\leq$ 3 G
- STAGING VELOCITY $\simeq$ 6000 FPS
- MAXIMUM $\bar{Q}\alpha \leq$ 2500 PSF - DEG
- INTERIM AND FINAL SYSTEMS SHALL HAVE A COMMON INTERFACE
- FINAL ORBITER PERFORMANCE USED FOR SIZING INTERIM BOOSTERS

RB-7
DO4558

SOLID ROCKET MOTOR CHARACTERIZATION

GUIDELINES

- CONSTRAIN TO STATE-OF-THE-ART
- EMPHASIZE SAFETY

GROUNDRULES

STEEL CASE	STIFFNESS
PBAN TYPE PROPELLANT	SAFETY
FLEX SEAL NOZZLE	WEIGHT
BURN RATE AT 1000 PSI; $0.3 < r_b < 0.6$	SOTA
CASE L/D RATIO $\leq$ 8.5:1	SOTA
STANDARD S.L. I_{SP} = 245 SEC.	SOTA
NOZZLE EXIT DIA. $\leq$ CASE DIA.	INTERFERENCE
THRUST TERMINATION REQ.	SAFETY

CANDIDATE INTERIM BOOSTERS

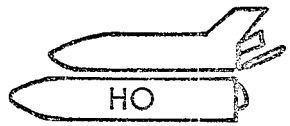

L_{REF} = 112 FT

FIXED ORBITER CONFIGURATION

SINGLE STAGE

STAGING COMPARISON

TWO STAGE

120 IN. SRMs

5A

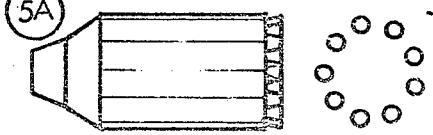

9 - 120 IN. SRMs

PROP. WT = 452K EA
SRM WT = 507K EA
T_{SL} = 875K EA

5D

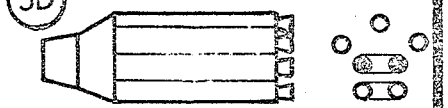

5 + 2 120 IN. SRMs

PROP. WT = 470K EA
SRM WT = 527K EA
T_{SL} = 1,328K EA

SRM DIAMETER COMPARISON

156 IN. SRMs

5B

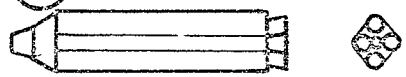

4 - 156 IN. SRMs

PROP. WT = 896K EA
SRM WT = 1,006K EA
T_{SL} = 1,745K EA

5

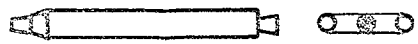

2 + 1 156 IN. SRM

PROP. WT = 1,047K EA
SRM WT = 1,192K EA
T_{SL} = 3,150K EA

● DENOTES SECOND STAGE

RB-3
DO4567

SRM STAGE ARRANGEMENT (CONFIG. 5B)

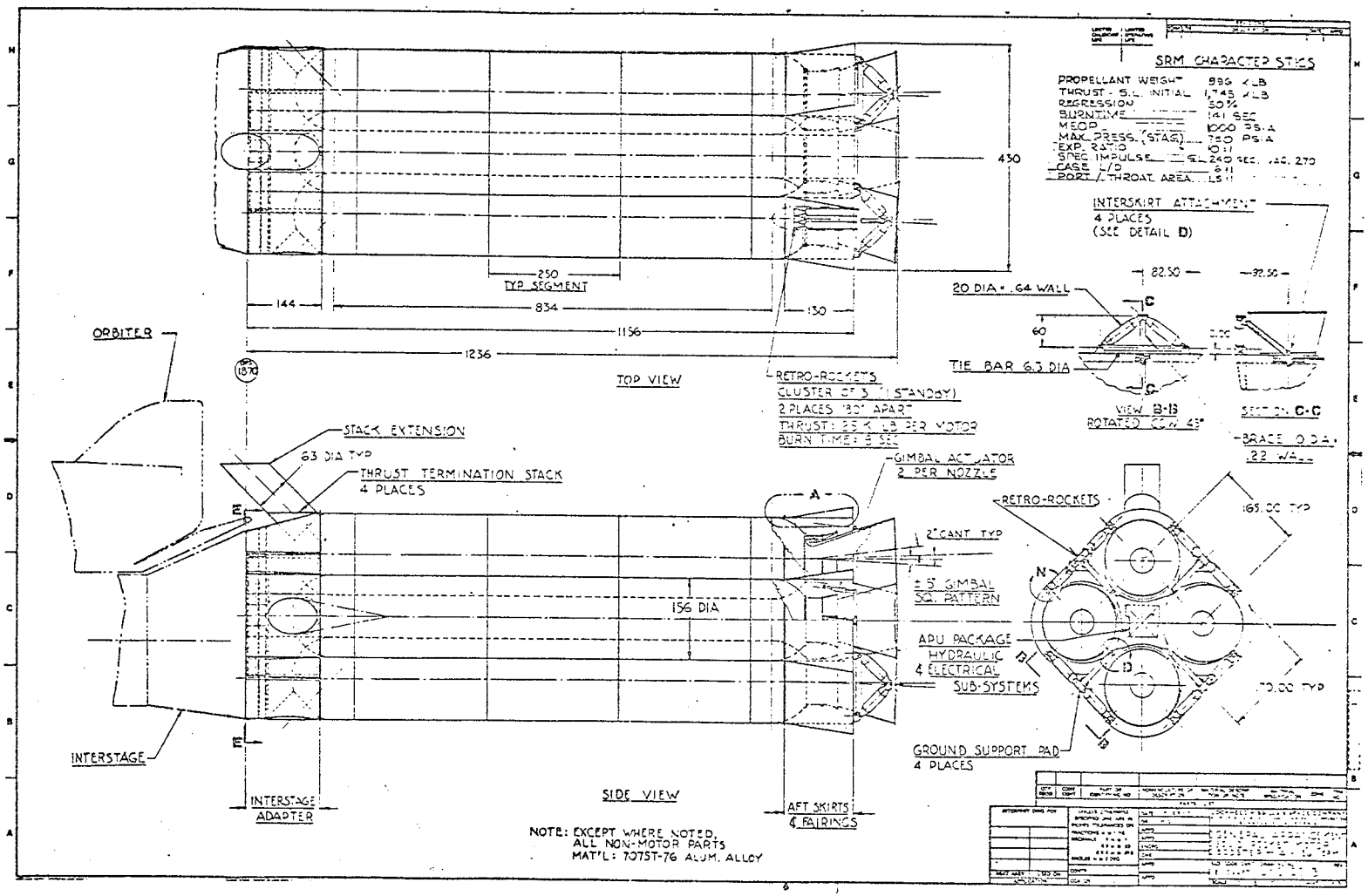

GH-15
DO 4624

SRM STAGE ARRANGEMENT (CONFIG. 5B) (CONT'D)

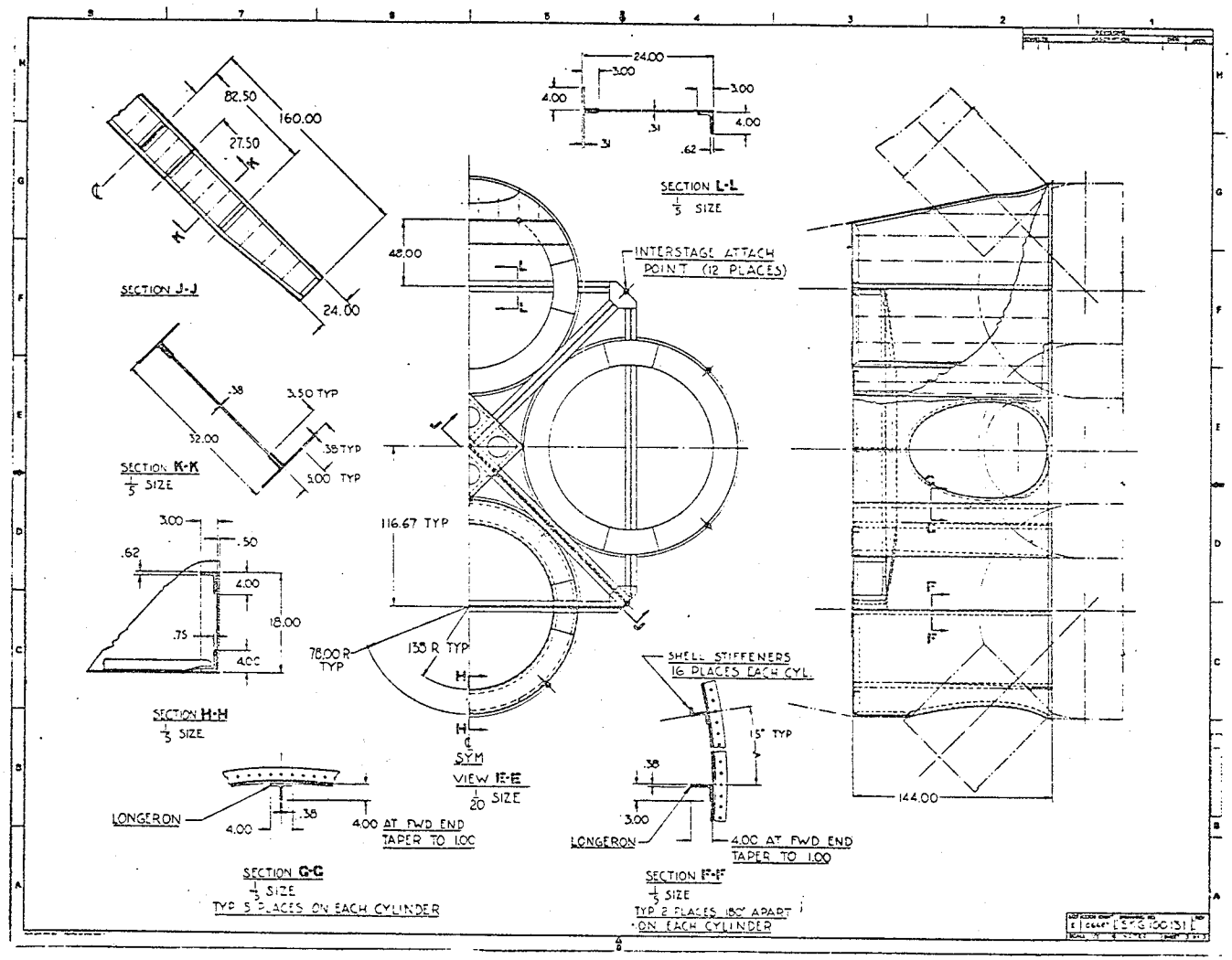

GH-17
DO 4626

SRM STAGE ARRANGEMENT (CONFIG. 5B) (CONT'D)

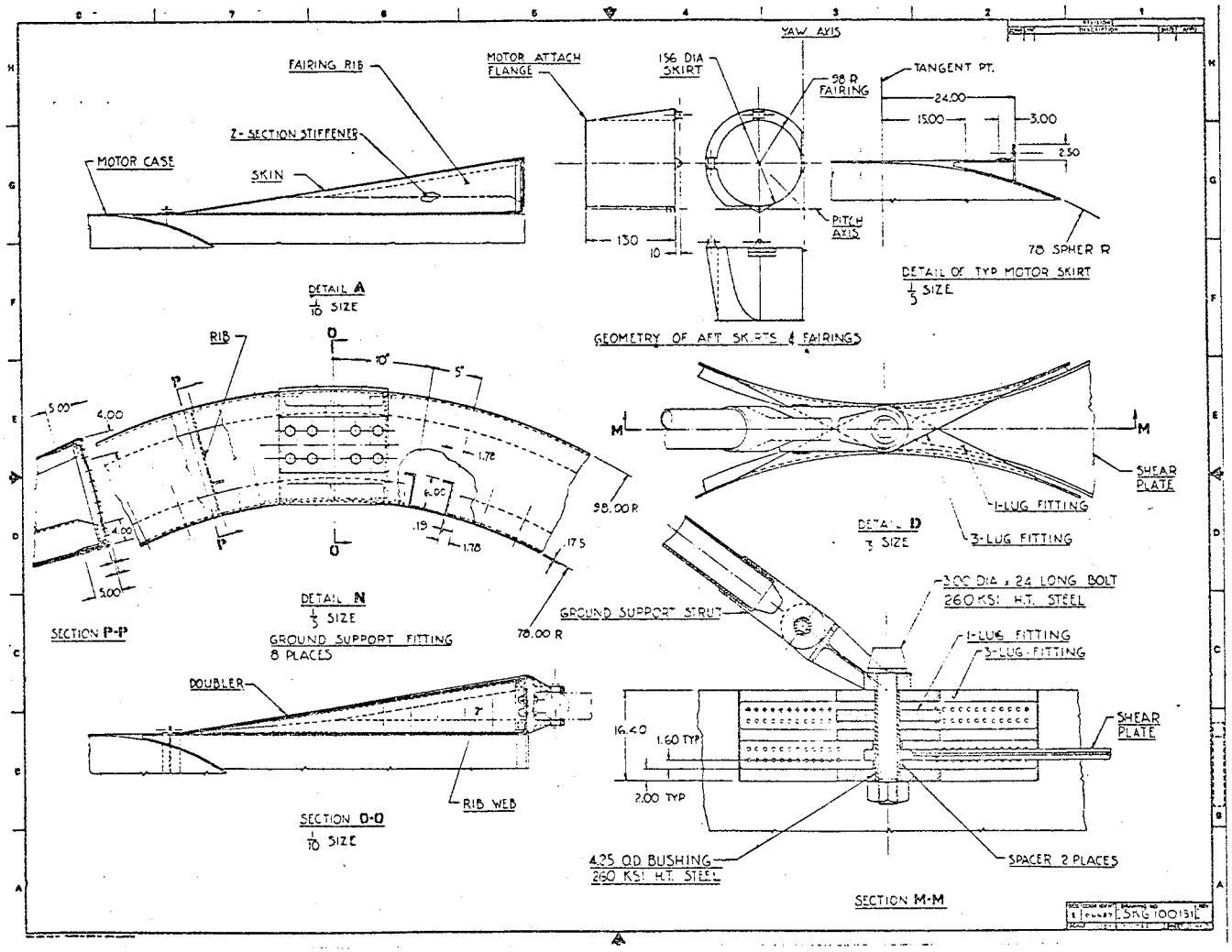

GH-16
DC 4625

TVC POWER AND ACTUATION SYSTEM

A high-pressure, 4000-psi hydraulic system driving linear hydraulic actuators has been selected. Practical alternatives of furnishing the hydraulic energy are a gas-turbine driven pump and a blowdown system using a cold-gas-pressurized hydraulic fluid reservoir. In comparing these alternatives, compactness and low weight with the turbopump system and simplicity and reduced cost with the other system are traded. Either system is within the state-of-the-art, and for both systems, components of the size required are not existing.

Gas driving the turbine is provided by hydrazine monopropellant decomposition to permit adjusting the consumption for varying power demand. The constant-speed turbine drives a pressure-controlled variable-displacement hydraulic pump to maintain operating pressure.

Two redundant power systems are used. One system proves the power under normal operating condition with the standby system idling during the entire cycle. Prior to liftoff, the lines are pressurized by small electric-motor driven pumps to prevent turbopump overspeeding. Two redundant shuttle valves at each actuator isolate the standby power system from the actuator valves as long as the primary system pressure is maintained within design tolerance. If primary pressure drops below this limit, the shuttle valves lock out the primary system and connect the supply from the redundant system.

Flow into the actuators is controlled by a majority-voting, triple servo-valve unit, which receives three separate command signals from the vehicle guidance and control unit. Triple seals are installed on actuator pistons and rod bearings to protect against fluid loss. If hydraulic power is lost, the spring-torque of the nozzle seal and the torque produced by the internal gas flow in the nozzle act to return or maintain the nozzle in the null position.

Individual and fully independent power systems are being used with each SRM in a stage.

TVC ACTUATION/POWER SYSTEM

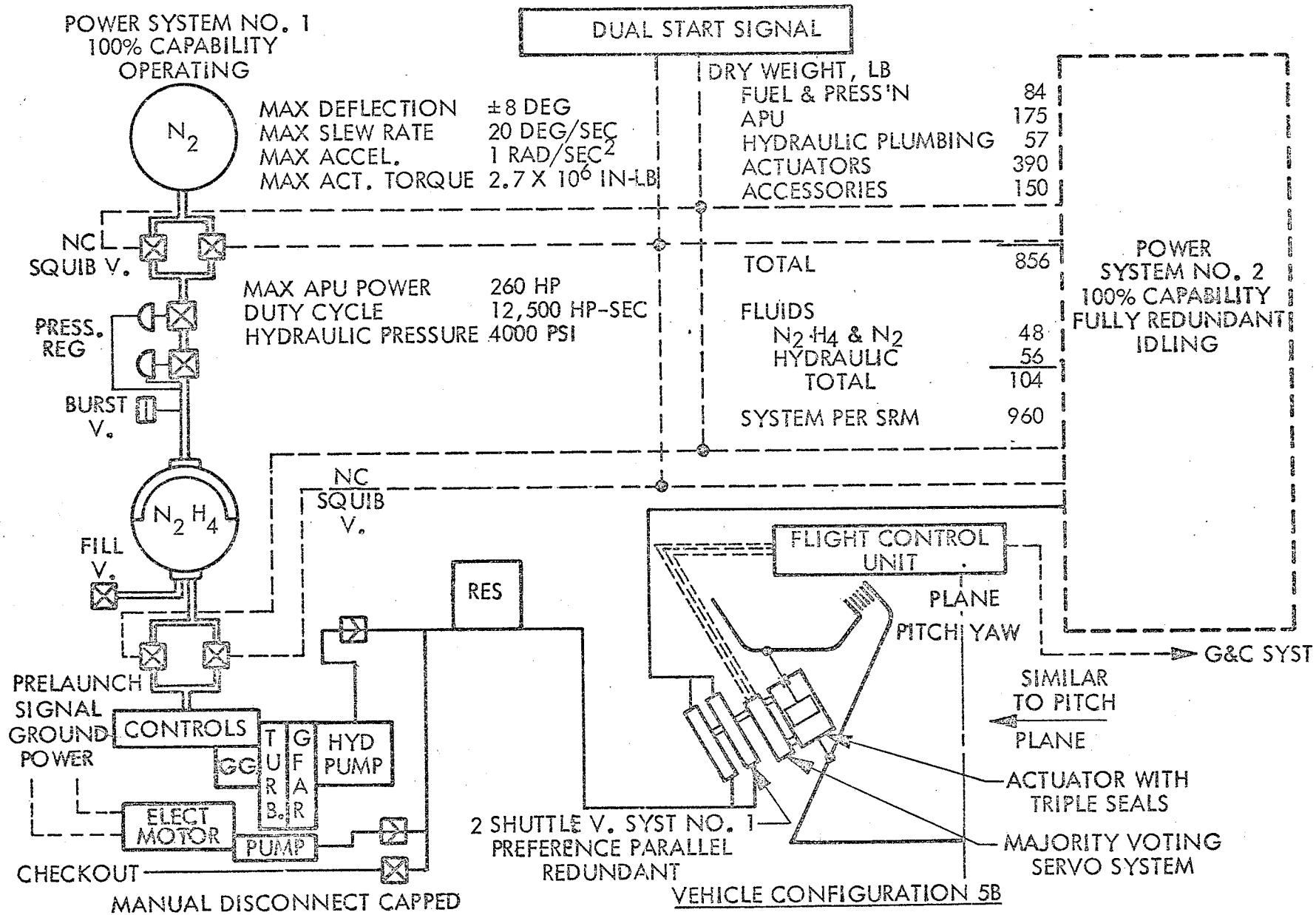

WN-1
DO4555

SRM BOOSTER SUBSYSTEM INERT WEIGHTS

This chart compares the relative weights of the individual subsystems (except SRMs) in the booster stages for the different orbiter-booster tandem configurations.

Insulation. Weight data reflect the requirements for the insulation of the peripheral and base surfaces of the stages.

TVC. Shown are the relative total weights for the TVC power and actuation systems (individual and independent systems for each SRM). Differences are due to the number of subsystems in the stage and to the required deflection angles, determined by the individual requirements for control authority and for c.g. tracing of the different configurations. With the tandem configurations considered in this comparison, nozzle cant angles vary from 2 deg with configuration (5B) to 5.3 deg with configuration (5D), and deflection angle requirements from ± 8 deg with configurations (5A) and (5B) to ± 10.3 deg with configuration (5D).

Thrust Termination. The large variation between the weights of this subsystem reflect the interface problems encountered with the installation of this system in the booster stage. Use of single ports and of extended stack lengths to avoid impingement on the orbiter results in considerable weight increases over the basic design using two ports with short stacks. Also of influence is the selected MEOP of the SRM, and this parameter has not yet been optimized considering all related effects on system design, performance, and weight.

Separation. For all configurations, only systems employing auxiliary rockets for providing the separation impulses to the separated stage were considered, and all systems are divided into three independent sets of rockets, of which two sets combined are capable of furnishing the required impulse and where the third set provides full standby capability for a single motor failure in each set. The differences in percentile weight reflect whether only axial, or a combination of axial and lateral impulses, was assumed required to satisfy the peculiar separation condition of the individual configuration arrangements.

SRM BOOSTER SUBSYSTEM INERT WEIGHTS

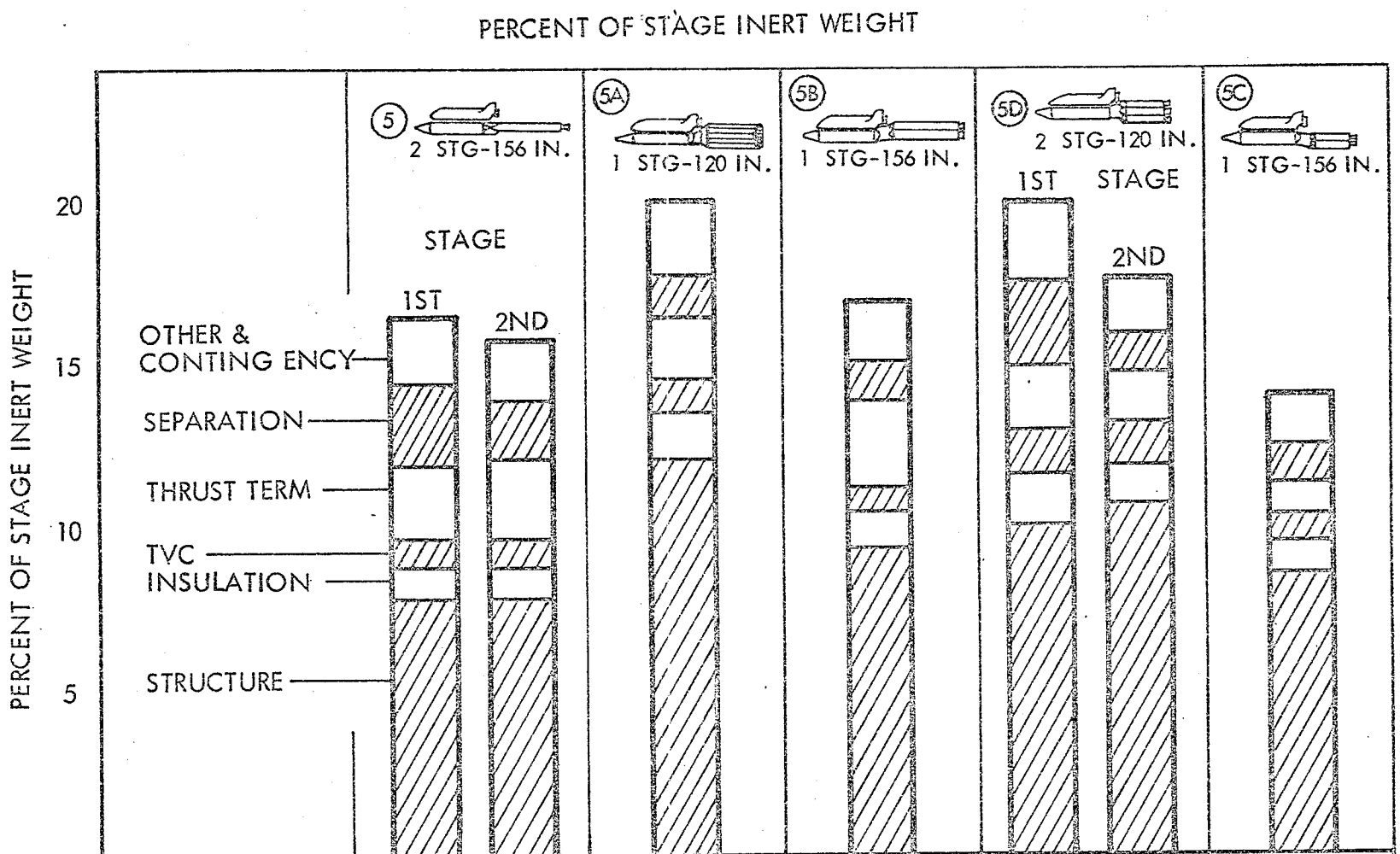

	5		5A	5B	5D		5C
STAGE λ	0.858	0.859	0.868	0.871	0.870	0.870	0.877
TOTAL SUBSYSTEM WEIGHT (KLB)	54.6	27.0	124.0	90.0	71.0	26.0	65.0

WN-5
DO 4637

SRM BOOSTER STAGE INERT WEIGHTS

This diagram shows the results of weight analyses of the five interim systems with tandem orbiter-booster arrangement, where the particular load, operating, and interface conditions affecting the design of the stage structure and subsystems are accounted for.

Using the difference between stage mass fraction and SRM mass fraction as a criterion for the stage inert weight evaluation, it appears that the number of SRMs in a stage is the predominant factor (substantial increase in subsystem weight with increase in number of SRMs), as evidenced by comparing configurations (5) with (5D), (5D) with (5A), and (5C) with (5B). On the other hand, no significant trend becomes evident in comparing single-stage configurations with two-stage configurations, since a reduction in stage subsystem weight occurs from single- to two-stage designs with configurations (5D) to (5A), and no change occurs between configurations (5) and (5B).

SRM BOOSTER STAGE INERT WEIGHTS

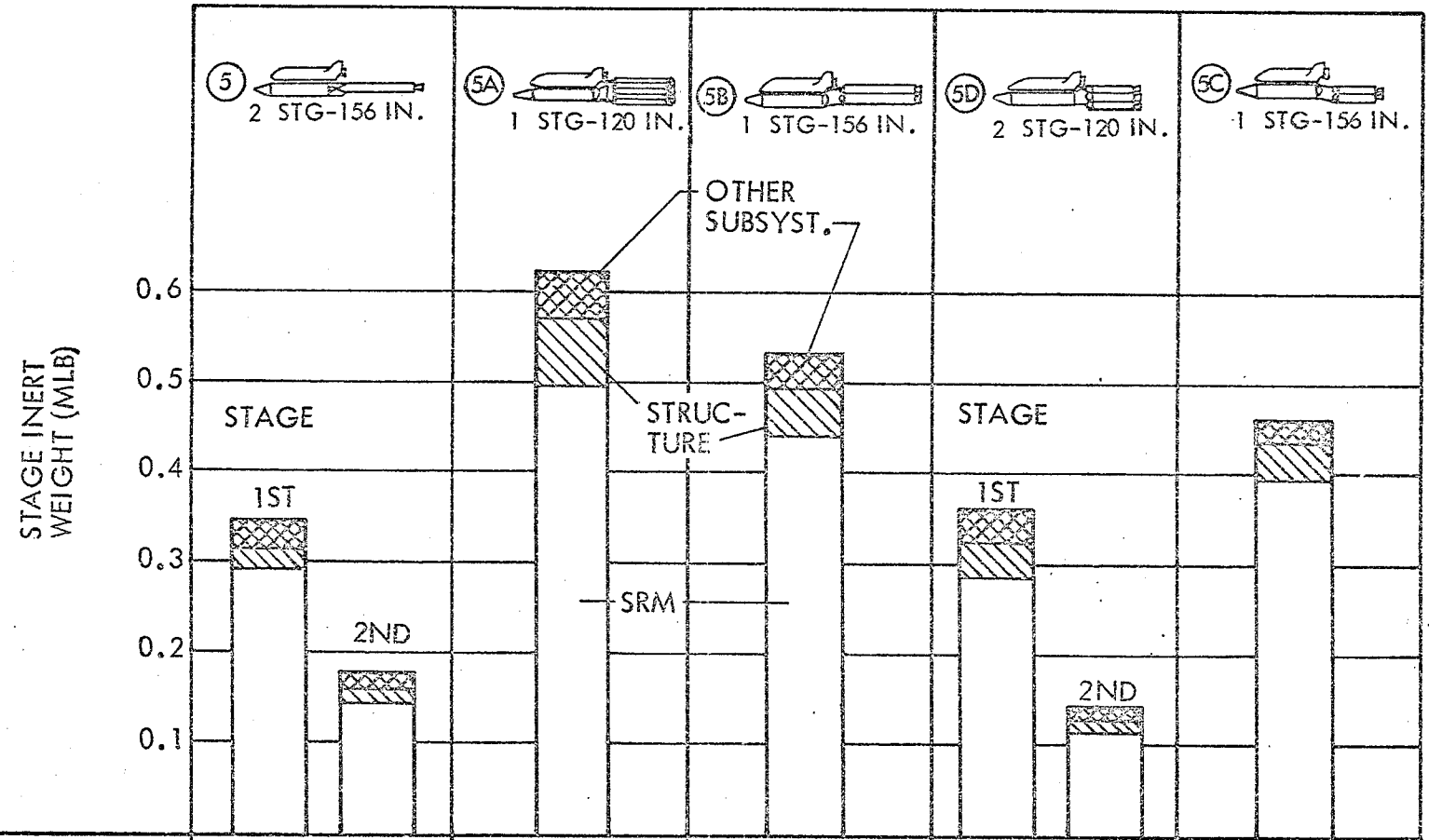

	5		5A	5B	5D		5C
λ′ SRM	0.878	0.878	0.892	0.891	0.892	0.892	0.893
λ′ STAGE	0.858	0.859	0.868	0.871	0.870	0.870	0.877

WN-4
DO 4628

INTERIM BOOSTER CONTROL DESIGN CRITERIA

- STABILIZE AND CONTROL COMPOSITE BOOST PHASE
- MINIMIZE DRIFT FROM NOMINAL (NO WIND) TRAJECTORY WITHIN $\alpha\bar{q}$ CONSTRAINT
- CONSTRAIN $\alpha\bar{q}$ TO LESS THAN 2500 DEG-PSF
- USE LOADS DESIGN WIND/GUST (90 FPS/1000 FT SHEAR, 25 FPS (1 - COS) GUST)
- WIND AND GUST PEAK SIMULTANEOUSLY AT THE ALTITUDE OF NOMINAL PEAK DYNAMIC PRESSURE
- WIND FROM WORST AZIMUTH
- NOMINAL (NO-WIND) ANGLE-OF-ATTACK IS SMALL (<1 DEG) AT MAXIMUM q

GA-13
DO 4623

SRM GIMBALLING CAPABILITY ADEQUATE

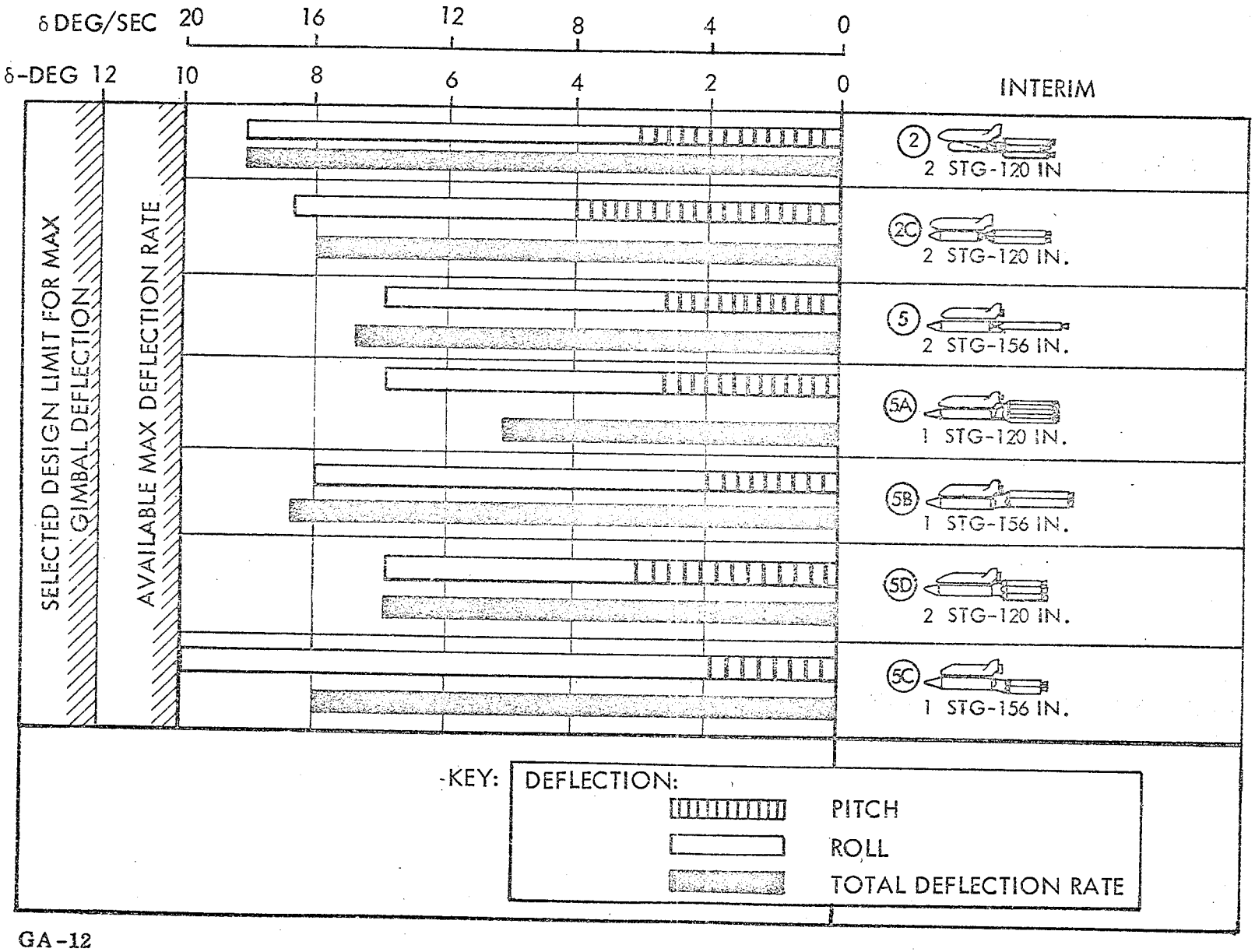

GA-12
DO 4622

NO SRM GIMBALLING PENALTY FOR LOAD ALLEVIATION

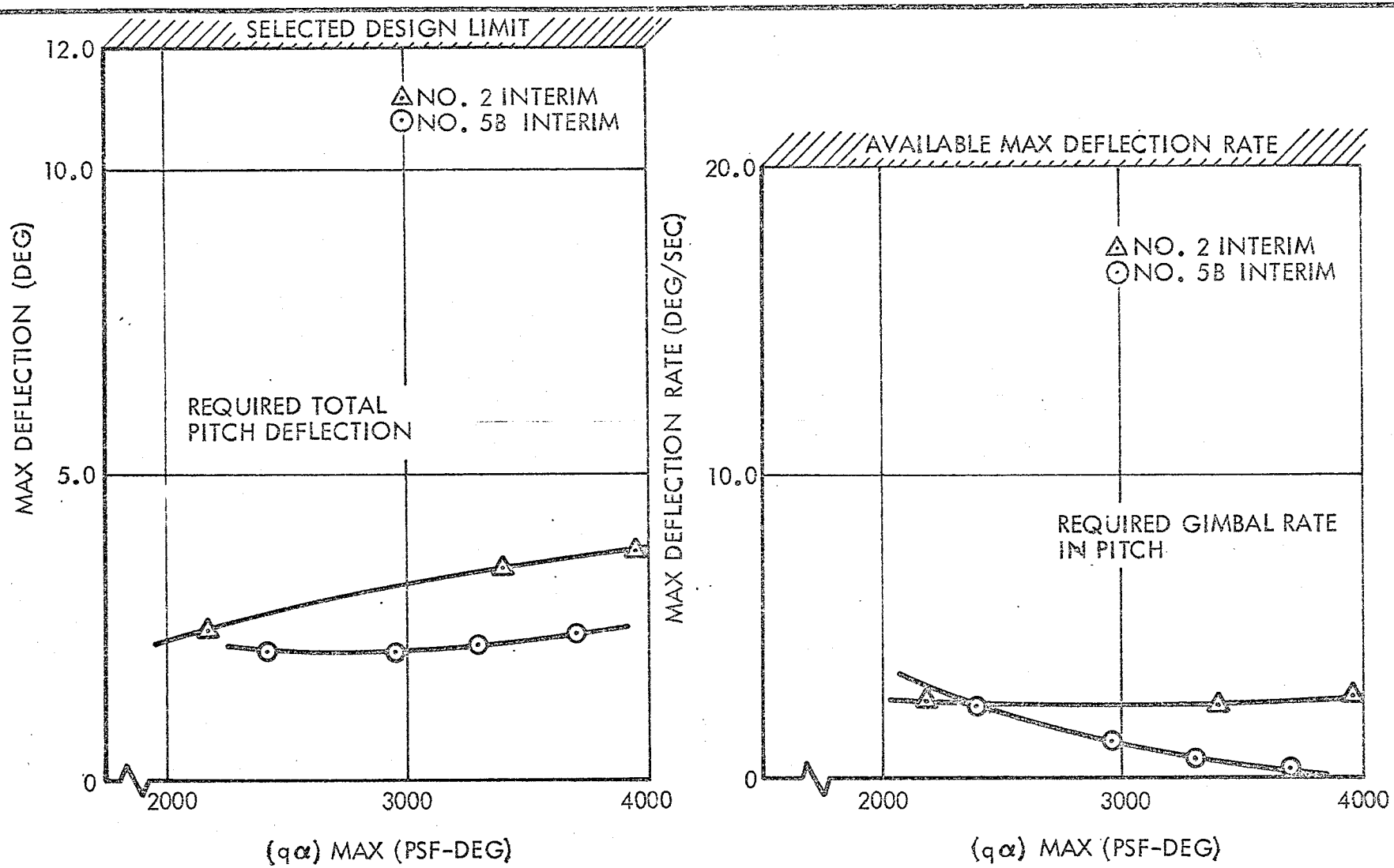

NOTE: MSFC WIND AND GUST CRITERIA ASSUMED.

GA-11
DO 4621

SRM PERFORMANCE

The single-stage booster motors are characterized by an approximate 145-second burn time with MEOPs of 800 psi for the 120-inch diameter motors and 1000 psi for the 156-inch diameter motors. Motors for the two-stage booster are characterized by an approximate 95-second burn time with MEOPs of 800 psi for the 120-inch diameter motors and 1200 psia for the 156-inch diameter motors. Mass fraction values do not include the weights for thrust termination provisions, nor for the TVC actuation system. The specific impulse points represent delivered values.

Circled data points are values calculated by LMSC motor performance and design programs for the vehicle configurations denoted on the abscissa line. MEOPs have been chosen to allow expansion ratios that will deliver near-maximum average specific impulse for the first-stage burn. Further efforts are including the effect of MEOP on mass fraction. Minimum port-to-throat area ratio has been limited to 1.5 to minimize initial internal pressure drop within the grain port.

SRM PERFORMANCE

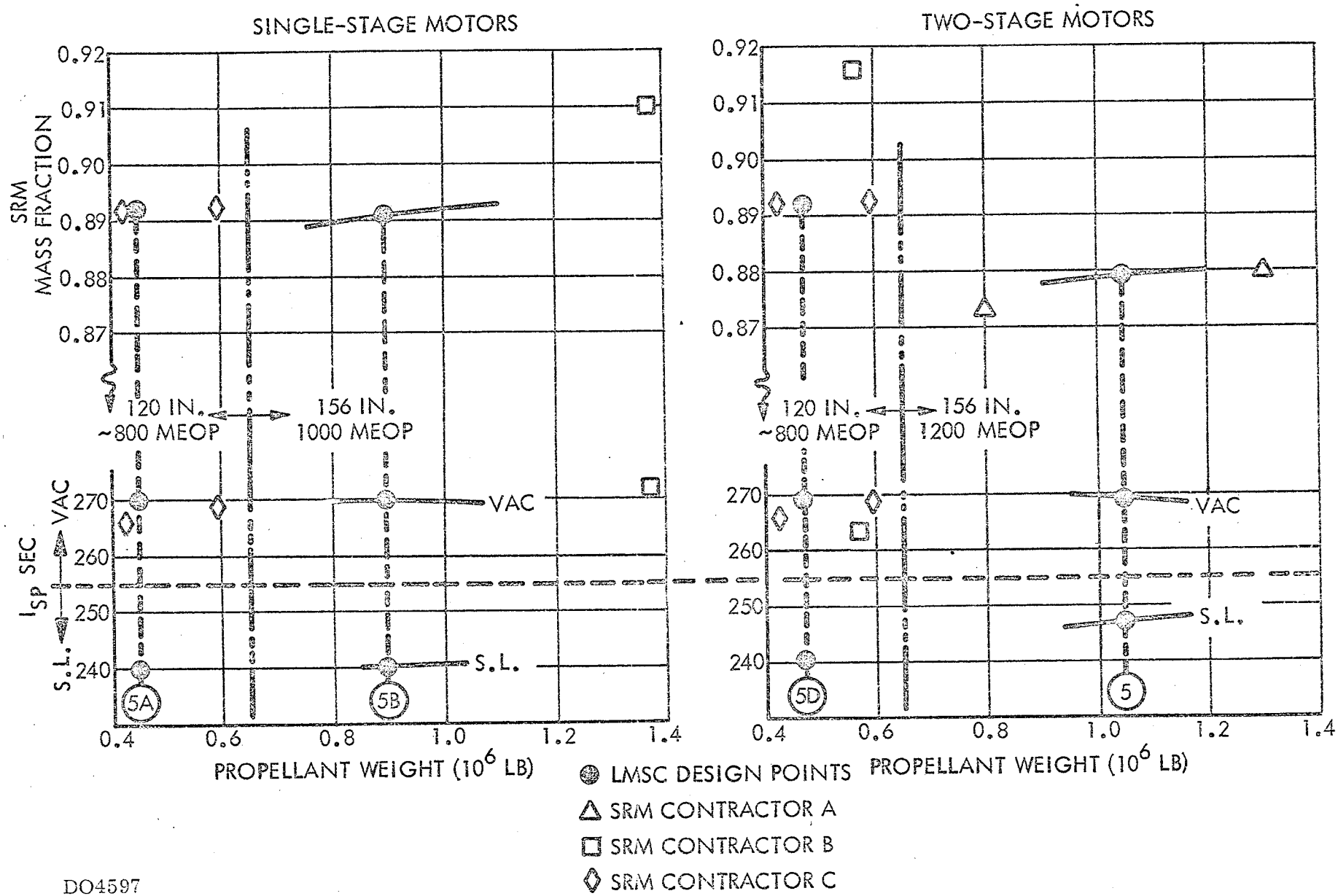

DO4597
RB-11

SRM COSTS - MOTOR ONLY

SRM development and recurring cost estimates as a function of propellant weight and case diameter were received from two subcontractors. There is a comparatively large disparity in the estimates for 156-inch development costs, but fairly good agreement for recurring costs. The slopes of the curves for the latter are at variance, however. LMSC reviewed the subcontractor data and then estimated the costs of the four SRM sizes as indicated by the solid dots on the chart.

SRM COSTS - MOTOR ONLY

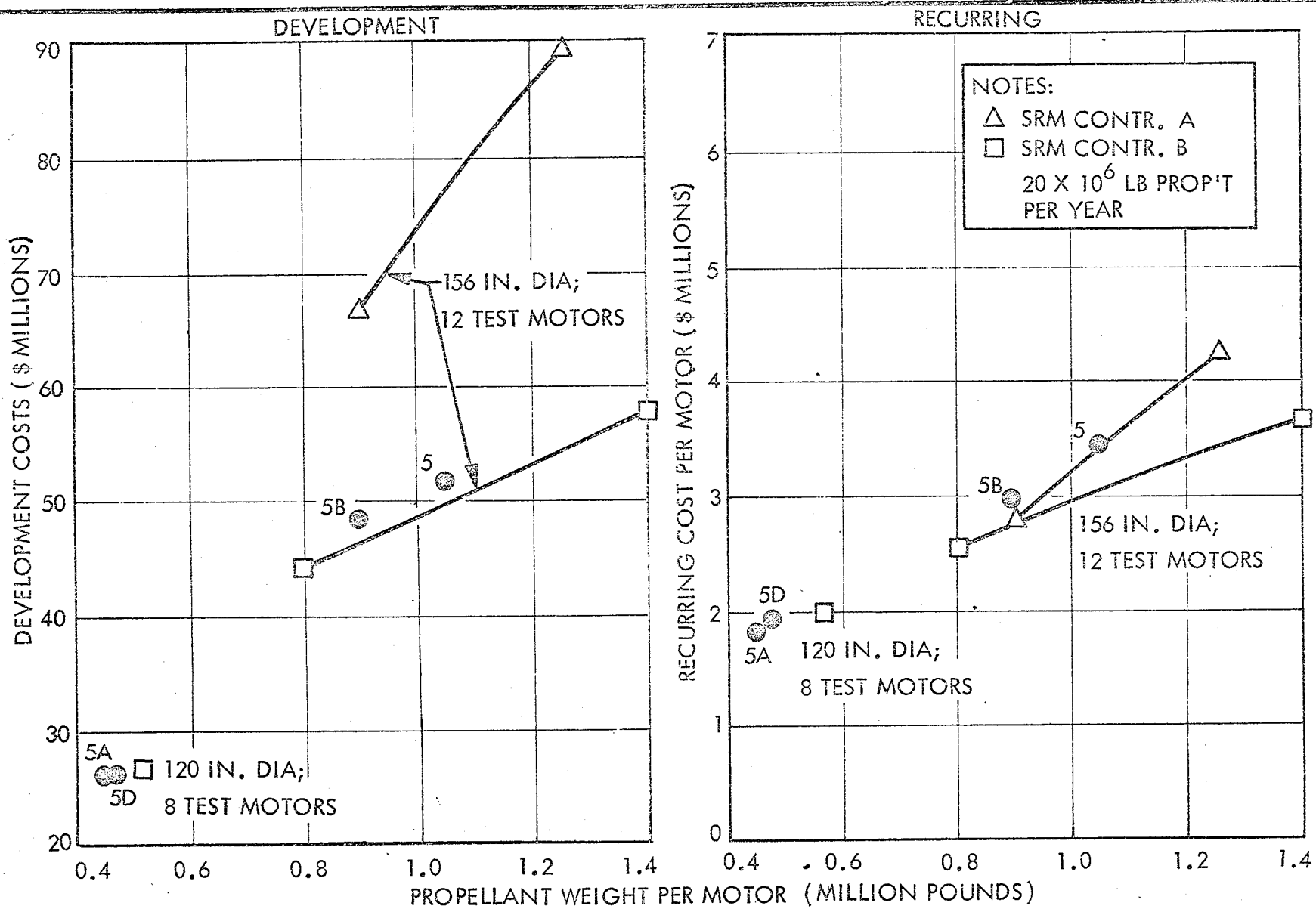

RD-10
DO 4602

INTERIM BOOSTER COSTS ($ MILLIONS)

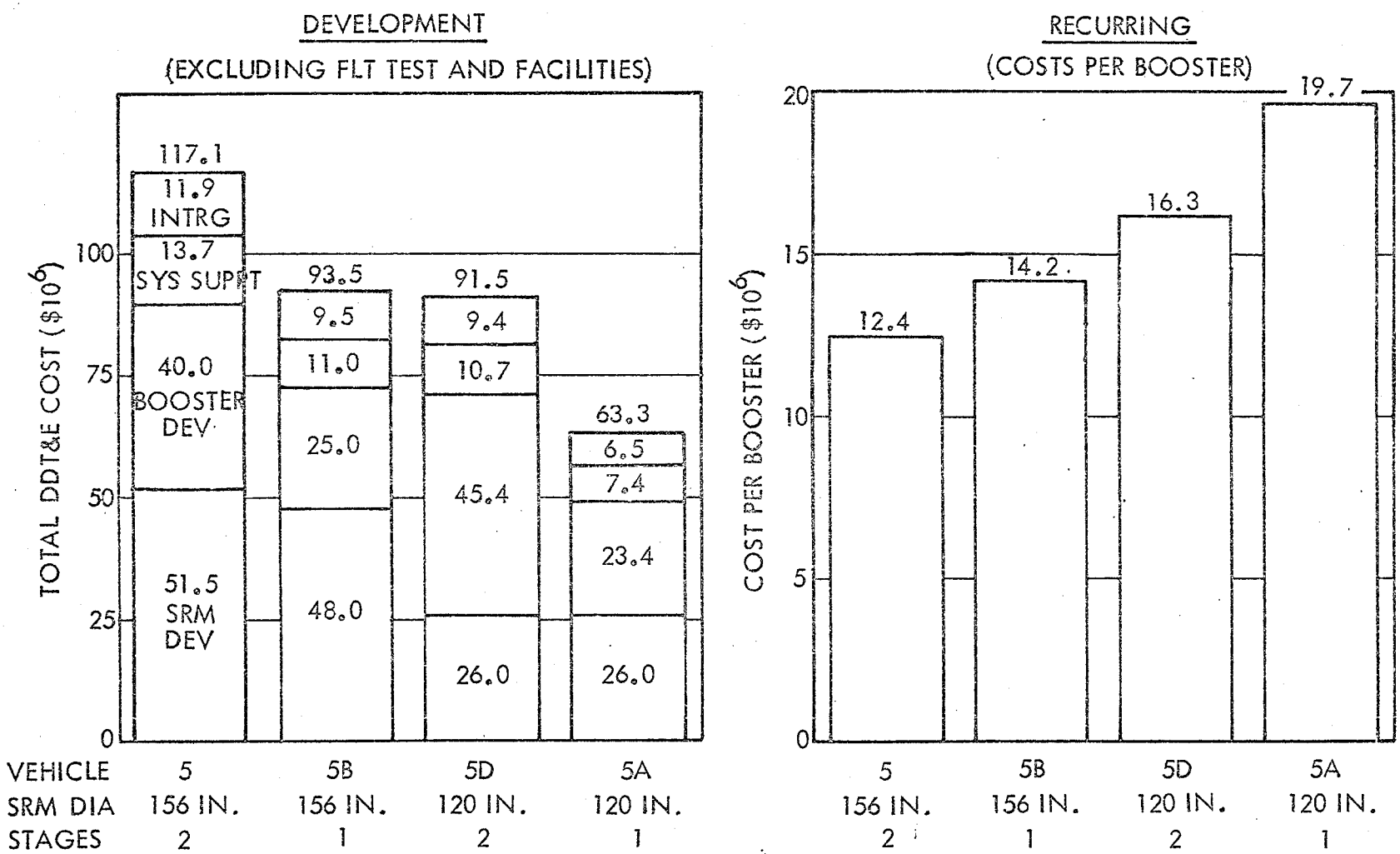

JD-3
DO 4619

INTERIM SYSTEM RECURRING COSTS ($ MILLIONS)

COST ELEMENT	CONFIGURATION 5A (1 STAGE - 120 IN.)	CONFIGURATION 5B (1 STAGE - 156 IN.)
(A) SRMs $2.95/LB x 1.000 MLB x 4 MOTORS; $3.53/LB x .511 MLB x 9 MOTORS	$ $16.2	$ 11.8
(B) BOOSTER STRUCTURE AND SUBSYSTEMS	1.5	1.0
(C) LAUNCH AND TURNAROUND OPS (AT $25.2 M/YR)	8.4	8.4
(D) ORBITER TURNAROUND HARDWARE	0.56	0.56
(E) EXTERNAL TANK (≈47,000 LB) (FIRST UNIT)	4.25	4.25
(F) INTERSTAGE (≈17,000 LB) (FIRST UNIT)	2.2	2.2
(G) AGE MAINTENANCE	0.7	0.7
(H) SYSTEM SUPPORT [.15 x (C + D + G)]	1.45	1.45
(J) MGMT AND INTEGRATION (11.3 PERCENT OF ALL ABOVE)	3.99	3.45
TOTAL INTERIM RECURRING COST/FLIGHT	$39.25	$33.81 M

ACOUSTIC ENVIRONMENT

CONFIG. NO.	SRM NOZZLE EXIT PLANE STA (FT)	BOOSTER ENGINE CLUSTER ARRANGEMENT ● DENOTES SECOND STAGE	ENVIRONMENT (OVERALL DECIBELS)	REMARKS
2	160	120 IN. SRMs	ORBITER 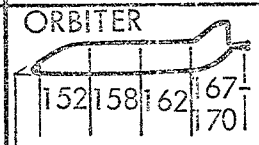	(1) CONSIDERS ALTERNATE FWD SRM LOCATION (2) LIFTOFF ACOUSTIC EXCITATION OF AFT SECTION AND CONTROL SURFACES IS INTENSE (3) ACOUSTIC ENVIRONMENT IS A PRIMARY DESIGN CRITERION (4) SIGNIFICANT INFLUENCE ON TPS DEVELOPMENT COSTS AND POSSIBLY RECURRING COSTS
2	245	120 IN. SRMs	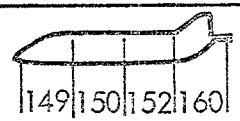	(1) MODERATELY HIGH EXCITATION OF AFT SECTION (2) SHOULD NOT PRESENT SIGNIFICANT IMPACT ON STRUCTURES AND TPS DEVELOPMENT COSTS
2C	240	120 IN. SRMs	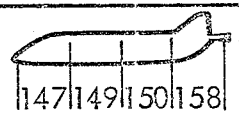	(1) ACOUSTIC ENVIRONMENT COMPARABLE TO CONVENTIONAL SPACE VEHICLES (2) NO IMPACT ON STRUCTURES AND TPS DEVELOPMENT COSTS
5	267	156 IN. SRMs	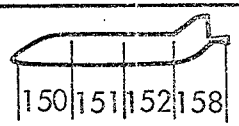	SAME AS 2C
5A	260	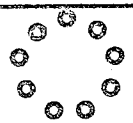 120 IN. SRMs	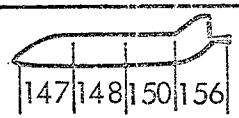	SAME AS 2C
5B	267	156 in. SRMs	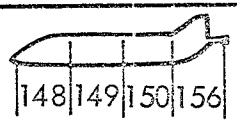	SAME AS 2C

KF-1
DO 4569

TIME DEPENDENT SOLID-ROCKET MOTOR FAILURE MODES

Principal modes of failure related to crew safety are (1) overpressurization of the motor case, (2) burnthrough of the insulations and case wall, and (3) structural failure of the case wall and joints. The potential of structural failure will be increased as a function of the number of SRMs in the cluster. Of these failure modes, the burnthrough has the highest probability of occurrence, but overpressure conditions allow the least time for detection. The projected failure rates were established based on 1967 data and the state of process development with propellants and test history of multiple programs.

Detail analysis needs to be accomplished to bring solid-rocket motor failure modes current with the expected design choice.

TIME DEPENDENT SOLID ROCKET MOTOR FAILURE MODES

ROCKET MOTOR FAILURE MODE	TIME FROM LIFTOFF (SECONDS)	DYNAMIC PRESSURE* (PSF)	ALTITUDE* (FT)	DOWN-RANGE* (NM)	PROJECTED FAILURES PER MILLION	CONSEQUENCES AND REMEDIAL ACTION
OVERPRESSURE • LINER BOND SEPARATION	0 → 20	0 → 136	0 → 3630	0	100	STAGE THRUST TERMINATION INTACT ABORT MODE
BURNTHROUGH • INSULATION • CASE BOND • NOZZLE	20 → 60	136 → 494	3630 → 30220	12	200**	STAGE THRUST TERMINATION INTACT ABORT MODE
STRUCTURAL • TVC • CLOSURE • IGNITOR SEAL	0 → 20	0 → 136	0 → 3630	0	150	STAGE THRUST TERMINATION INTACT ABORT MODE

*BASED ON A TYPICAL SOLID ROCKET MOTOR BOOSTER SYSTEM-SHUTTLE ASCENT TRAJECTORY
**SPECIAL DESIGN EMPHASIS IS NEEDED TO AVOID BURNTHROUGH AT HIGH DYNAMIC PRESSURES

SUCCESS PROBABILITY OF SOLID ROCKET MOTOR BOOSTER SYSTEM

The calculation of success probability on a purely statistical basis indicates a substantial advantage to having three SRMs available and needing only two for the initial flight phase.

(System 5) $P_S = R^2 + 2q\,R^2$

Probability of Success

or — Two combinations of one <u>or</u> the other first stage fails and the one second-stage works

Success of both first stage units (0.997 x 0.997)

(System 5D) $P_S = R^5 + 5q\,R^5 + 5q^2\,R^5 + 10q^2\,R^5$

or or or

Ten cases – two of first stage fail

Five cases – one or the other second stage fails

Five cases – one first stage fails; four first stage plus one second stage work

All five work

The cases where all available engines are needed for success, the multiplication theorem applies.

(System 5A) $P_S = (0.997)^9 = 0.973000$ or $27 \times 10^{-3} = (27 \times 10^3) \times 10^{-6}$

<u>Conclusion.</u> Selection of best combination yields low probability of failure - precludes need for high-risk full-burn hold-down in the event of one SRM malfunction.

SUCCESS PROBABILITY OF SOLID ROCKET MOTOR BOOSTER SYSTEM

SYSTEM	SOLID ROCKET MOTOR		MOTOR TYPE	NUMBER OF STAGES	PROBABILITY OF FAILURE (FAILURES PER MILLION)
	AVAILABLE PER SYSTEM	NEEDED FOR LIFTOFF			
5	3	2	156	2	40
5A	9	9	120	1	27×10^3
5B	4	4	156	1	12×10^3
5B (ALT)	3	3	156	1	9×10^3
5D	7	5	120	2	93

ASSUMED PROBABILITY OF SUCCESS FOR SOLID ROCKET MOTORS IS 0.9977

JAD-2
DO4549

THRUST TERMINATION CONCEPTS

The separation of interim booster stages with fully thrusting rocket motors is not considered to be a feasible operational mode. Stage separation is initiated after all SRMs of the stage have burned to a thrust level commensurate with the stage retro requirements. For the abort mode, where premature stage separation is a design requirement, thrust-termination capability must be provided.

THRUST TERMINATION CONCEPTS

CONCEPT	EFFECT	DEVELOPMENT STATUS	THRUST	SUBSYSTEM DESIGN	EFFECTS ON VEHICLE SYSTEM	WEIGHT PENALTY
(1) WATER QUENCH	EXTINGUISHES PROPELLANT	NOT USED WITH LARGE SRM	FAST DECAY TO ZERO	ADDITIONAL INJECTION, TANKAGE, PRESSURIZATION SYST.	LEAST ADVERSE FEASIBLE WITH ALL SEPARATION MODES	?
(2) BLOW FORWARD CLOSURE	REDUCES PRESSURE, PROBABLY BELOW BURN LIMIT	NOT USED WITH LARGE SRM	VERY HIGH REVERSE SPIKE, UNCONTROLLED DECAY	RELATIVELY SIMPLE LINEAR-SHAPED CHARGE	SPIKE SHOCK ON SYSTEM, DIFFICULT TO CONTROL BLAST CLOSE TO ORBITER	PROBABLY LOW
(3) BLOW AFT CLOSURE	SAME AS (2)	NOT USED WITH LARGE SRM	VERY HIGH FORWARD SPIKE, UNCONTROLLED DECAY	SAME AS (2)	SPIKE SHOCK ON SYSTEM BLAST REMOVED FROM ORBITER THRUST OPPOSED TO AXIAL SEPARATION	PROBABLY LOW
(4) BLOW SIDE PORTS	REDUCES PRESSURE	ANALYSIS	FORWARD THRUST REDUCTION LIMITED TO ABOUT 10% OF NORMAL	VERY LARGE PORT AREA REQUIRED; MAY AFFECT CASE DESIGN AND PROPELLANT LOADING EFFICIENCY	IF USED AT END OF BURN TIME, F/W PROBABLY TOO HIGH FOR AXIAL SEPARATION NO BLAST EFFECT ON ORBITER	HARDWARE SIMILAR TO (5) ADDITIONAL LOSS IN λ' BECAUSE OF REDUCED LOADING EFFICIENCY
(5) BLOW FRONT PORTS WITH STACKS GIVING FWD COMPONENT TO EXHAUST SELECTED	REDUCES PRESSURE AND GENERATES REVERSE THRUST COMPONENT	OPERATIONAL POSEIDON UNDER DEVPT. FOR TITAN IIID	EQUILIBRIUM THRUST BETWEEN +15% AND -15% NORMAL THRUST	FOR NULL THRUST, PROJECTED PORT AREA ABOUT 1.4 NOZZLE THROAT AREA	DESIGN TO AVOID IMPINGEMENT ON ADJACENT STRUCTURE	ABOUT 0.003 TO 0.006 $\Delta \lambda'$ ESTIMATED

RB-2
DO 4541

THRUST TERMINATION SYSTEM CHARACTERISTICS

In current designs, the combined effect of reduction in chamber pressure and reverse thrust is obtained by the rupture of covers installed in ports in the forward motor closure, and by ducting the exhaust gas from the ports through short stack for obtaining the desired thrust vector direction. Single or multiple ports may be installed.

THRUST TERMINATION PORT DETAILS

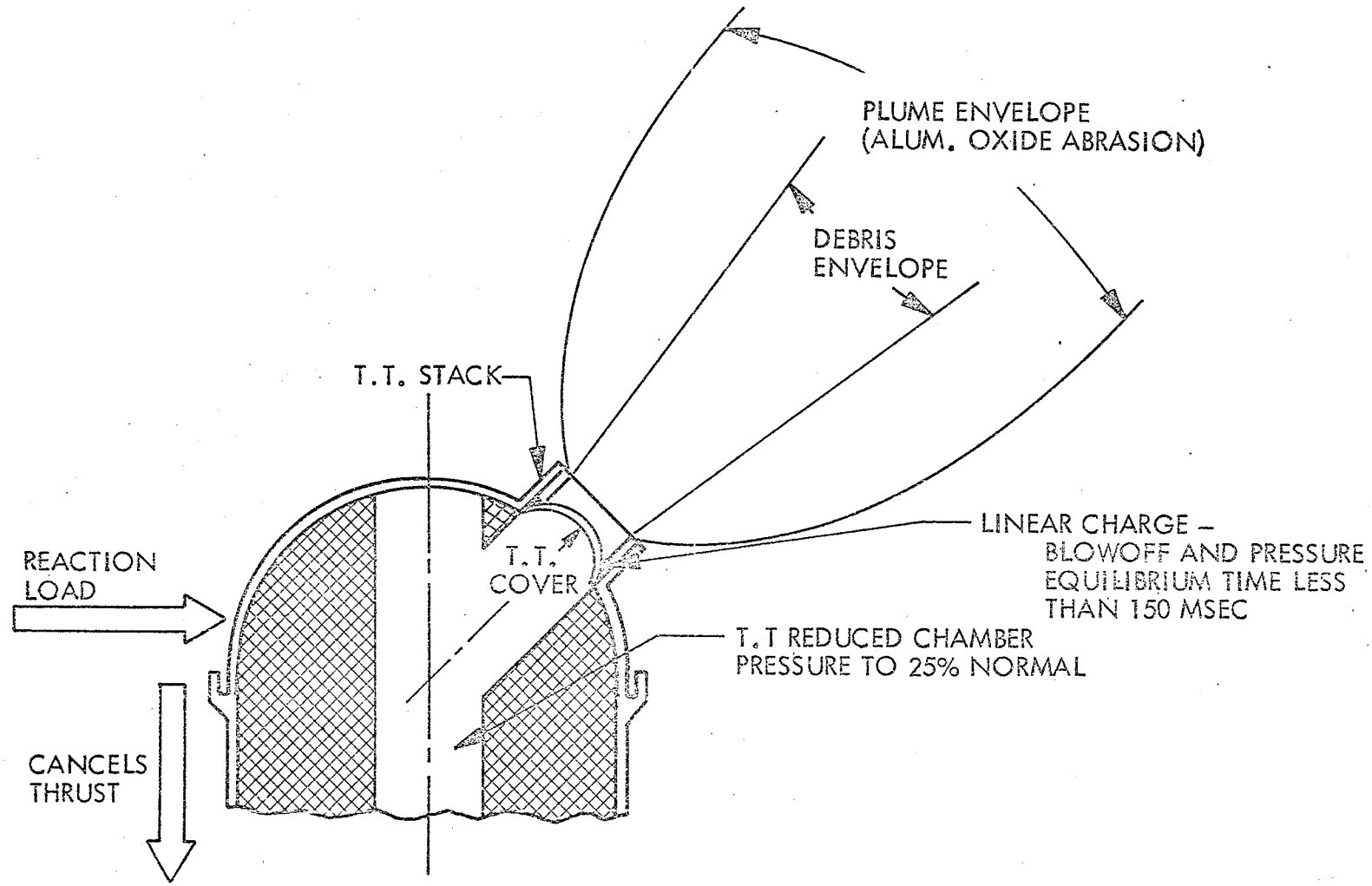

WX-3
DO4598

SEGMENTED SRM STAGE (120 IN.-156 IN.) OPERATIONS CONCEPT

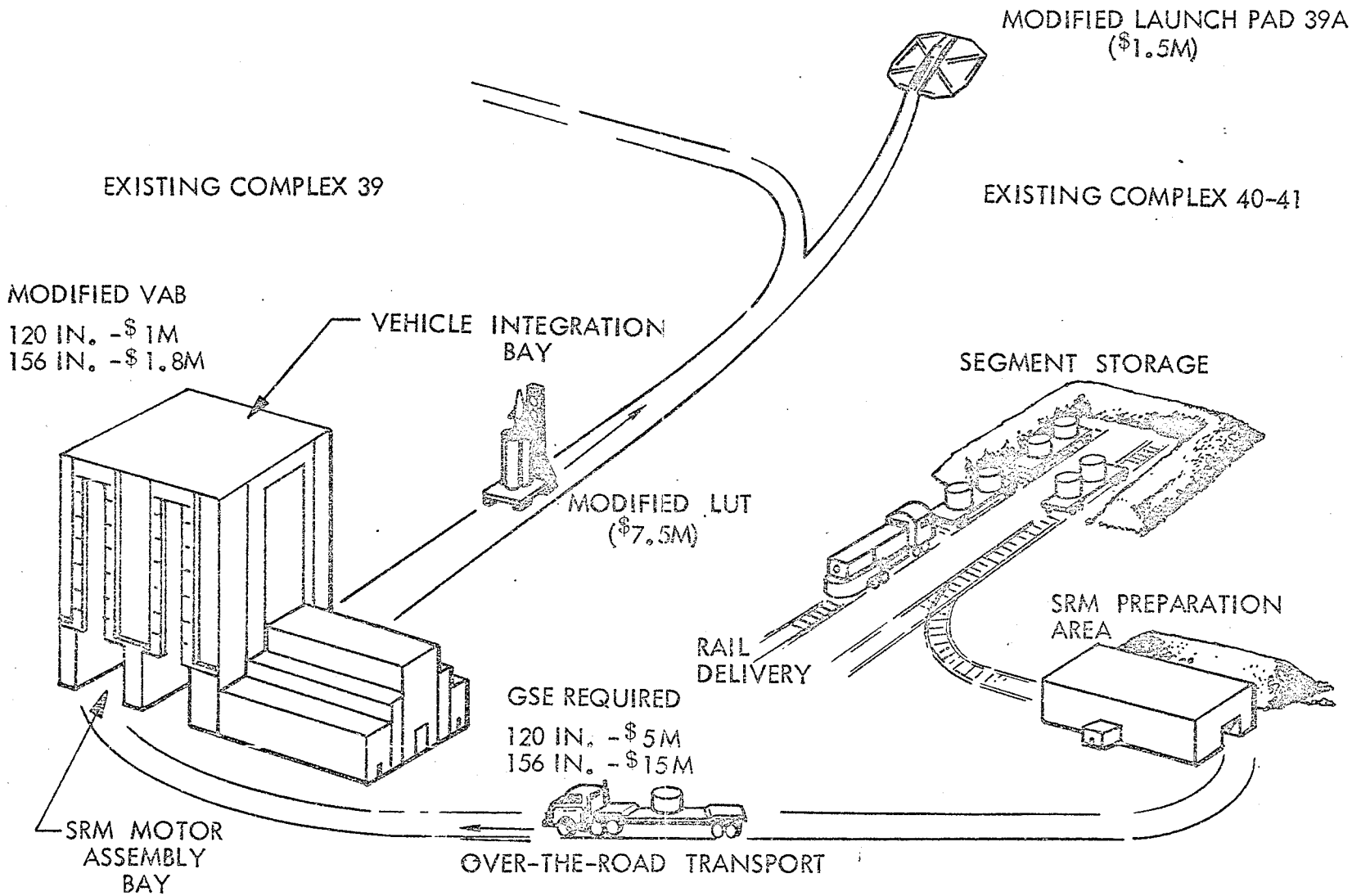

FACILITY AND GSE COSTS: 120 IN. -$ 15M
156 IN. -$ 25.8 M

RR-2
D04225(1)

INTERIM SRM IMPACT AREAS AND SAFETY

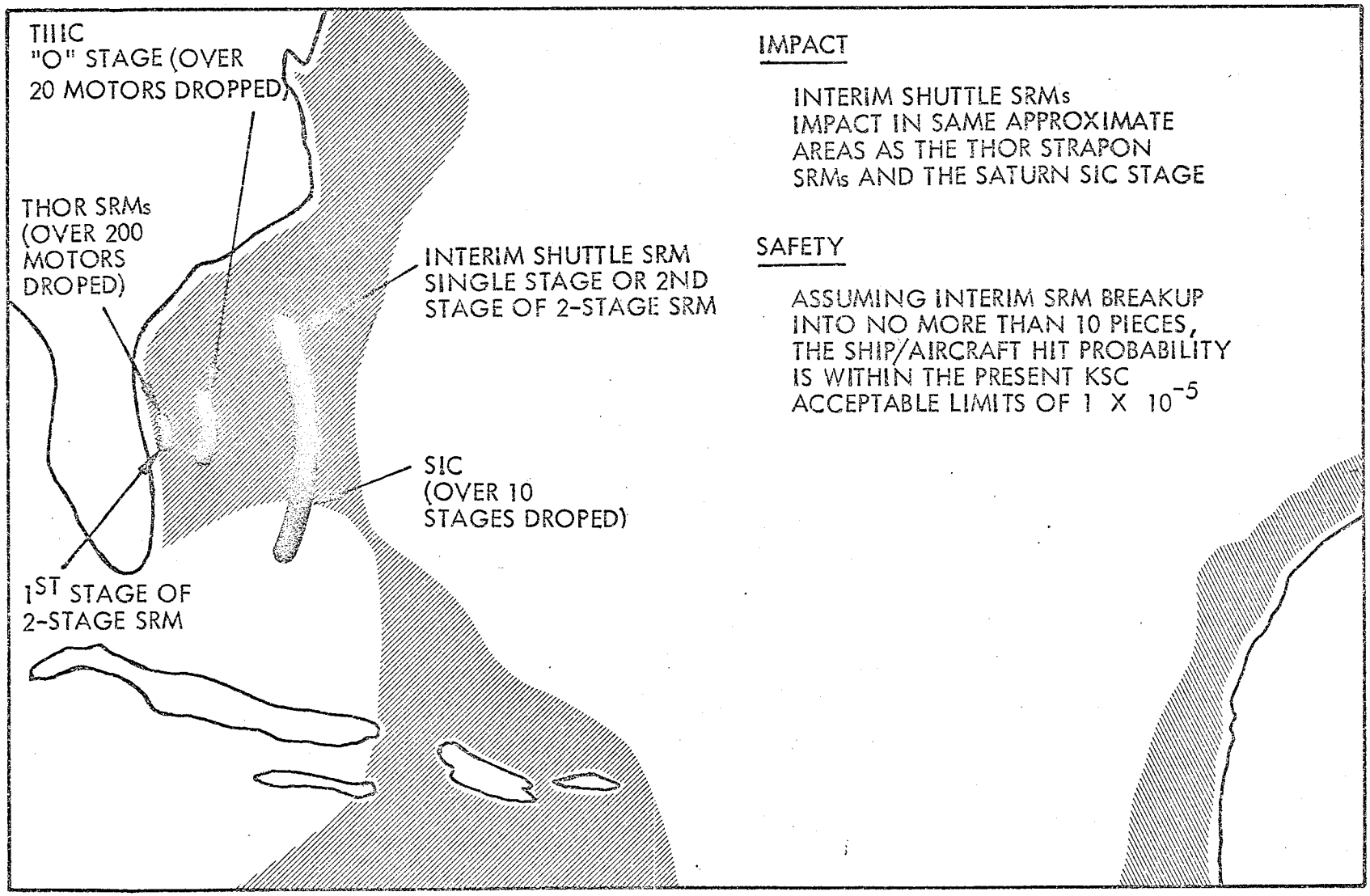

IMPACT

INTERIM SHUTTLE SRMs IMPACT IN SAME APPROXIMATE AREAS AS THE THOR STRAPON SRMs AND THE SATURN SIC STAGE

SAFETY

ASSUMING INTERIM SRM BREAKUP INTO NO MORE THAN 10 PIECES, THE SHIP/AIRCRAFT HIT PROBABILITY IS WITHIN THE PRESENT KSC ACCEPTABLE LIMITS OF 1×10^{-5}

RR-3
D04530

~ 6 CRAFT PER 10,000 SQ NM

AIR POLLUTION ASPECTS OF SOLID ROCKETS

Calculated values for concentrations of SRM exhaust products are shown as a function of time after ignition to illustrate that even these conservative maximum concentrations are well below the accepted harmful thresholds. Actual measurements of SRM exhaust clouds made during static tests found quantities of only about 30 percent of these calculated concentrations. Also, these peak concentrations occur at the SRM launcher shortly after liftoff. No personnel are present.

AIR POLLUTION ASPECTS OF SOLID ROCKETS

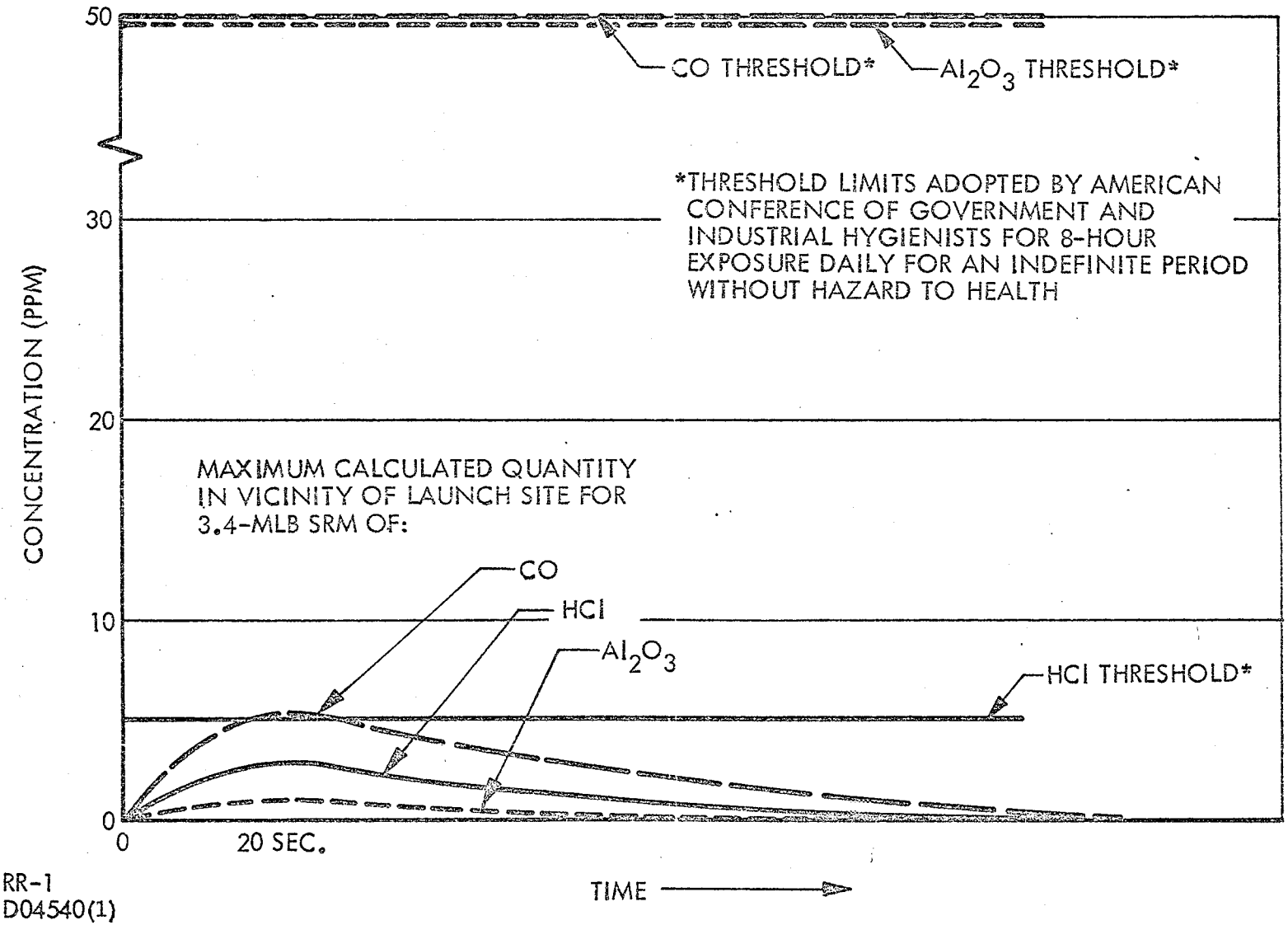

RR-1
D04540(1)

CONCLUSIONS

1. PHASED BOOSTER DEVELOPMENT SAVES 896 M/YR PEAK ANNUAL FUNDING.

2. EXTERNAL H AND O DECOUPLES ORBITER DEVELOPMENT FROM STAGING, OFFERS LOWER SYSTEM DEVELOPMENT RISK AND MINIMIZES SIZE OF ORBITER.

3. LARGE PAYLOAD BAY RELIEVES ENTRY HEATING AND DOES NOT INCREASE COST SIGNIFICANTLY.

4. TANDEM ARRANGEMENT RESULTS IN MAXIMUM COMMONALITY BETWEEN INTERIM AND FINAL DESIGN AND RESULTS IN SIMPLER STAGING.

5. ONE-STAGE - 156-INCH SRM IS SIMPLEST LOWEST COST INTERIM BOOSTER.

JTL-16
DO4660

UNIQUE CONCEPT - STAGE-AND-ONE-HALF

PARAMETER	COMPARATIVE DATA			COMMENTS
CONFIGURATION NO. AND TYPE	NO. 11 (1-1/2 STAGE)	NO. 1 (2-STAGE)	NO. 5B (2-1/2 STAGE)	
DEVELOPMENT PROGRAM	CONCURRENT	CONCURRENT	PHASED	
FINAL SYSTEM GLOW (10^6 LB)	4.101	4.467	3.339	
TOTAL PROGRAM COST ($\$10^9$)	7.792	9.848	10.116	(NO. 5B HAS 12 FLIGHTS MORE-INTERIM CONFIGURATION)
PEAK ANNUAL FUNDING ($\$10^9$)	1.077	1.868	0.972	1-1/2 STAGE SHOWS NEAR $1B PEAK IN A CONCURRENT DEV PROGRAM
AVERAGE RECURRING COST ($\$10^6$)	7.25	3.8	5.69	(FOR FINAL SYSTEMS ONLY)
ORBITER LENGTH (FT)	145	145	108	1-1/2 STAGE ORBITER IS LARGEST-A MODERATE PENALTY FOR COMPLETE ELIMINATION OF BOOSTER
ORBITER ENGINES (NO.)	11	3 (415K)	3 (415K)	
ORBITER DRY WT (10^3 LB)	320	217.2	136.5	
SENSITIVITY: $\frac{\partial GLOW}{\partial ORBIT\ INERT}$ (LB)	26	42	28	1-1/2 STAGE LEAST SENSITIVE-CONCURRENT PROGRAM HAS MODERATE RISK
STAGING METHOD	PASSIVE (1 EVENT)	ACTIVE (1 EVENT)	ACTIVE (2 EVENT)	1-1/2 STAGE STAGING CAN BE SIMULATED ON GROUND
TANK IMPACT	900 DOWNRANGE	NONE	≈10,000 MI.	1-1/2 STAGE TANKS HAVE OCEAN IMPACT FOR MOST AZIMUTHS
ABORT-TO-ORBIT DEADBAND	(TBD) SEC.	(TBD) SEC.	(TBD) SEC.	1-1/2 STAGE HAS ONLY ONE VEHICLE AND CREW
LDG SPEED (P/L IN) ORBITER (KTS)	150	150	150	1-1/2 STAGE HAS NO BOOSTER TO LAND
BOOSTER		(TBD)	(TBD)	

TW-5
DO4425(2)

COST SAVING POSSIBILITIES*

		TOTAL PROGRAM SAVINGS $ M	PEAK ANNUAL SAVINGS $ M/YR
PROGRAM LEVEL EFFECTS	DELAY BOOSTER DEVELOPMENT (1-5B)	<268>	896
	OR		
	DELETE BOOSTER DEVELOPMENT (1-11)	1056	791
	RELAX REQUIREMENTS CONTINGENCIES	400	40
	SUBSTITUTE J2S FOR ICD ENGINE	250	20
DESIGN LEVEL EFFECTS	ADOPT LOW-COST EXTERNAL TANKS (43 /LB – 20 /LB	500	0
	MINIMIZE USE OF TITANIUM	145	39
	PHASE AVIONICS DEVELOPMENT	<80>	13

LEAD TO ATTAINABLE PROGRAM COST TARGETS

*COMPARED TO CONCURRENT TWO-STAGE DEVELOPMENT

JTL-9
DO4648(1)

CONTINGENCY AREAS SUMMARY

RECOMMENDED CHANGES IN	REDUCTION IN GLOW (2-1/2 STAGE)
LEVEL I REQUIREMENTS	215K
LEVEL II REQUIREMENTS	35K
TD REQUIREMENTS AND DESIGN PRACTICE	175K
	425K

APPROXIMATE COST EFFECTS

$400M REDUCTION IN TOTAL PROGRAM COSTS

$40M REDUCTION IN PEAK ANNUAL FUNDING

TW-1
DO4587

CONTINGENCY AREAS

LEVEL I REQUIREMENTS

CURRENT REQUIREMENT OR DESIGN PRACTICE			POSSIBLE ALTERNATIVE WITH WEIGHT/COST REDUCTION	PRINCIPLE EFFECTS	APPROX. REDUCTION IN GLOW	
SOURCE						
LEVEL	ITEM NO.	IDENTIFICATION				
I	2	15 X 60 P/L BAY	15 X 40 P/L BAY	APPROX 17% OF MISSIONS NOT ACCOMMODATED OR WOULD NEED REDEFINITION	300 K	
I	10	1500 FPS ON-ORBIT ΔV FOR RESUPPLY MISSION	1350 FPS	REMOVES CONSERVATISM FROM REQUIREMENT	80K	*
I	10	TANKS SIZED FOR 2000 FPS ON-ORBIT	TANKS SIZED FOR 1500 FPS ON-ORBIT	STILL WOULD LEAVE 400 TO 500 FPS BEYOND MIN. NEEDED IN LONG-TERM STORAGE FOR RESUPPLY MISSION	10K	*
I	11	ORBITER GO-AROUND CAPABILITY	RELAX ABES RQMTS, E.G., REQUIRE 15K RESUPPLY MISSION P/L WITH ABES; OBTAIN ABOUT 35K WITHOUT ABES	SAVINGS FOR THOSE SYSTEMS DESIGNED BY RESUPPLY MISSION -FULL GAIN FOR 1-1/2 ST, SOME GAIN FOR 2-1/2 ST NO GAIN FOR 2-ST	UP TO 250 K	*
I	24	FAIL OP/FAIL OP/FAIL SAFE (ELECT SUBSYSTEMS)	FAIL OP/FAIL SAFE	REDUCED PROBABILITY OF FULL MISSION ACCOMPLISHMENT-SAVES ~ 1500 LB ORBITER WEIGHT	45K	*
I	27	3-G MAX LOAD FACTOR	3G-RESUPPLY MISSION 4G-EAST AND POLAR	SAVING FOR THOSE SYSTEMS DESIGNED BY EAST OR POLAR MISSIONS, E.G., TWO STAGE	UP TO 30K	*
I	29	LAND 40,000 LB P/L	REENTER & LAND 25,000 LB P/L	ABORT OPERATIONS REQUIRES DUMPING TO 25,000 LB	50K	*

*RECOMMENDED CHANGE

CONTINGENCY AREAS

LEVEL II REQUIREMENTS

CURRENT REQUIREMENT OR DESIGN PRACTICE			POSSIBLE ALTERNATIVE WITH WEIGHT/COST REDUCTION	PRINCIPLE EFFECTS	APPROX REDUCTION IN GLOW	
SOURCE						
LEVEL	ITEM NO.	IDENTIFICATION				
II	APP. C	NATURAL ENVIRONMENT (SEVERE WIND AND OTHER REQUIREMENTS)	REDUCE TO WIND LEVELS TO NEAR THOSE FOR SUSPENDING AIRLINE OPERATIONS AND REEVALUATE OTHER ENVIRONMENTS	TBD	TBD	*
II	APP. E	10% WEIGHT CONTINGENCY AT END OF PHASE B	IN PHASE C - ESTIMATE NOMINAL WEIGHT AND VARIATIONS FOR EACH ITEM; COMBINE STATISTICALLY	TBD-LITTLE OVERALL CHANGE EXPECTED, BUT PROVIDES BASIS FOR WEIGHT CONTROL SYSTEM	--	*
II	APP. F	FLIGHT PERF. RESERVE (1% OF CHAR VEL FOR ASC IN PU SYST.)	USE 3-SIGMA CONFIDENCE LEVEL - CURRENTLY ESTIMATED AT ~0.8%	REDUCTION OF ABOUT 60 FPS IN FPR	35K	*
II	APP. G	STRUCTURAL CRITERIA (CRITERIA TO BE BASED ON ANALYSIS FOR MOST PART)	CONTINUE PER APP. G - IMPLIES CONTINUED ANALYSIS AND JUSTIFICATION OF CRITERIA	TBD-LITTLE CHANGE IN CURRENT ESTIMATES EXPECTED	--	

*RECOMMENDED CHANGE

TW-3
DO4589

CONTINGENCY AREAS

TD REQUIREMENTS AND DESIGN PRACTICE

CURRENT REQUIREMENT OR DESIGN PRACTICE			POSSIBLE ALTERNATIVE WITH WEIGHT/COST REDUCTION	PRINCIPLE EFFECTS	APPROX REDUCTION IN GLOW (2-1/2 STG)
SOURCE					
LEVEL	ITEM NO.	IDENTIFICATION			
TD-3002	4	DESIGN TOUCHDOWN VELOCITY OF 150 KTS (THEORETICAL EXTREME OF CONDITIONS)	ESTABLISH SAFE LANDING REQUIREMENTS FOR REALISTIC CONDITIONS - NOT THEORETICAL EXTREMES	ACTUAL SAFE LANDINGS WILL BE MADE IN 160 TO 170 KT RANGE EVEN IF 150 KT REQ'T IS RETAINED	UP TO 20K *
NASA ENGINE DATA		I_{SP} VALUES AND ENGINE WEIGHTS	USE REALISTIC NOMINAL VALUES WITH VARIATIONS TO COMPUTE CONTINGENCIES	NOMINAL I_{SP} INCREASE OF ABOUT 2 SEC	75K *
				NOMINAL ENG. WT. DECREASE OF ~ 5%	30K *
LMSC		3% ULLAGE	2% ULLAGE	MORE CARE IN LOADING OPERATIONS REQUIRED	30K *
LMSC		H_2 DENSITY < 4.4 LB/CU^3 (BUBBLES ASSUMED IN LIQUID DURING LOADING)	APPROX 1% INCREASE IN ASSUMED LOADING DENSITY	MORE CARE IN LOADING OPERATIONS REQUIRED	20K *

*RECOMMENDED CHANGE

ORBITER MAIN ENGINE COMPAIRSON

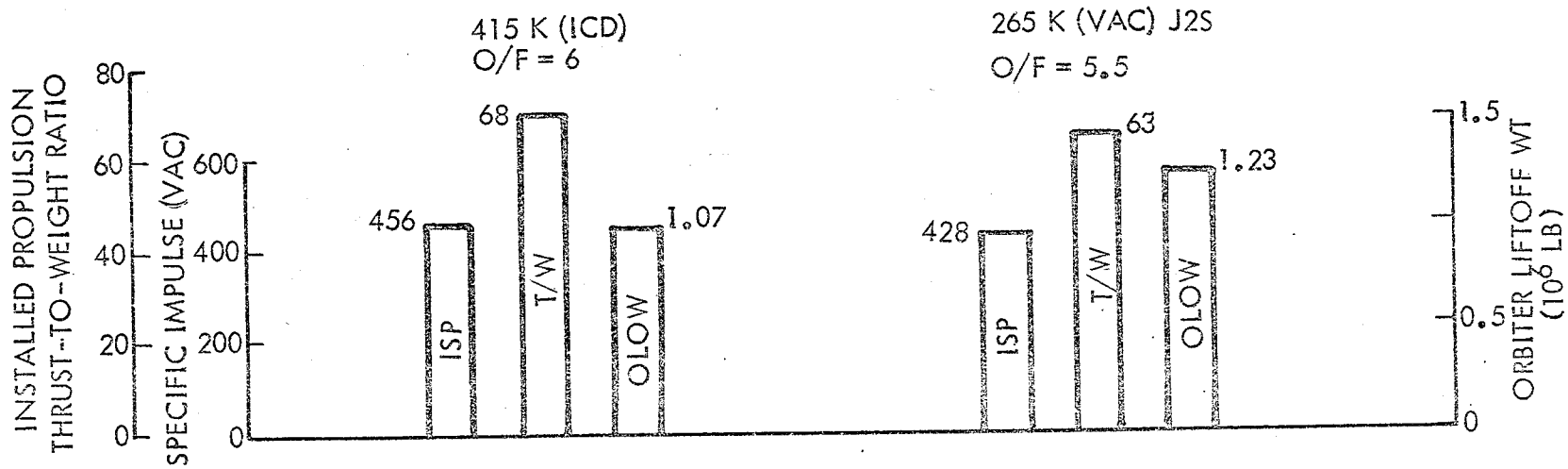

JTL-6
DO4599(1)

COMPARISON - ALUMINUM VS TITANIUM

This chart reflects the percentage of body weight that is considered structure and does not include TPS, insulation, or internal tanks. The LMSC values are for the -5B configuration. The values for the other contractors are as follows:

Grumman:	MSC-03814 - Final Report Detailed Mass Properties Report, Dated 6 July 1971
North American:	MSC-03317 - Final Submittal Detailed Mass Properties Report, Dated 25 June 1971
MAC/DAC	MP-10 – Mass Properties Status Report, Dated 3 May 1971

ALUMINUM VS TITANIUM: BASIC BODY STRUCTURE

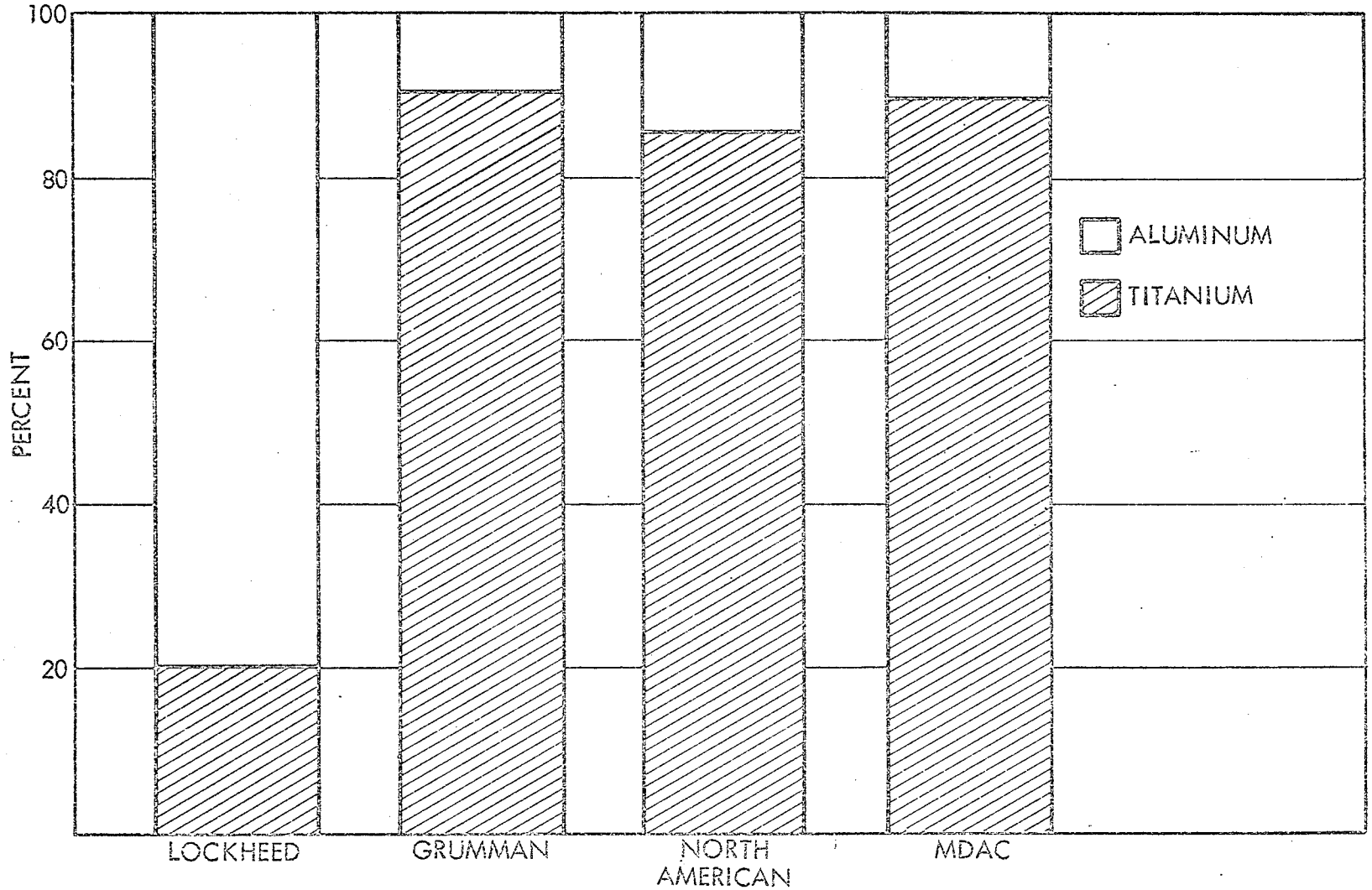

KF-7
DO 4586

SOURCES OF COST DATA FOR TITANIUM STRUCTURES

SOURCE	APPROX. LB (Ti)/VEHICLE	BASIS FOR DATA			DATA VINTAGE
		PRODUCTION RECORD	DEVELOP STUDIES	ANALYTICAL STUDIES	
SST	96,664	—	DEV. FAB. OVER 25,000 LB Ti	—	1964-5
L1011	10,000	117,000 SM 9000 MACHINED		✓	1971
C-5A	6600	✓		✓	1971
SR-71	CLASSIFIED	✓	—	—	
LOCKHEED ADV. DEV. PROG (ADP)	IN EXCESS OF 100,000 LB TOTAL USAGE	8M SM 1.9M MACHINED		✓	1971

SM = SHEETMETAL

KF-5
DO4573

WEB - PART NO. 903246-7

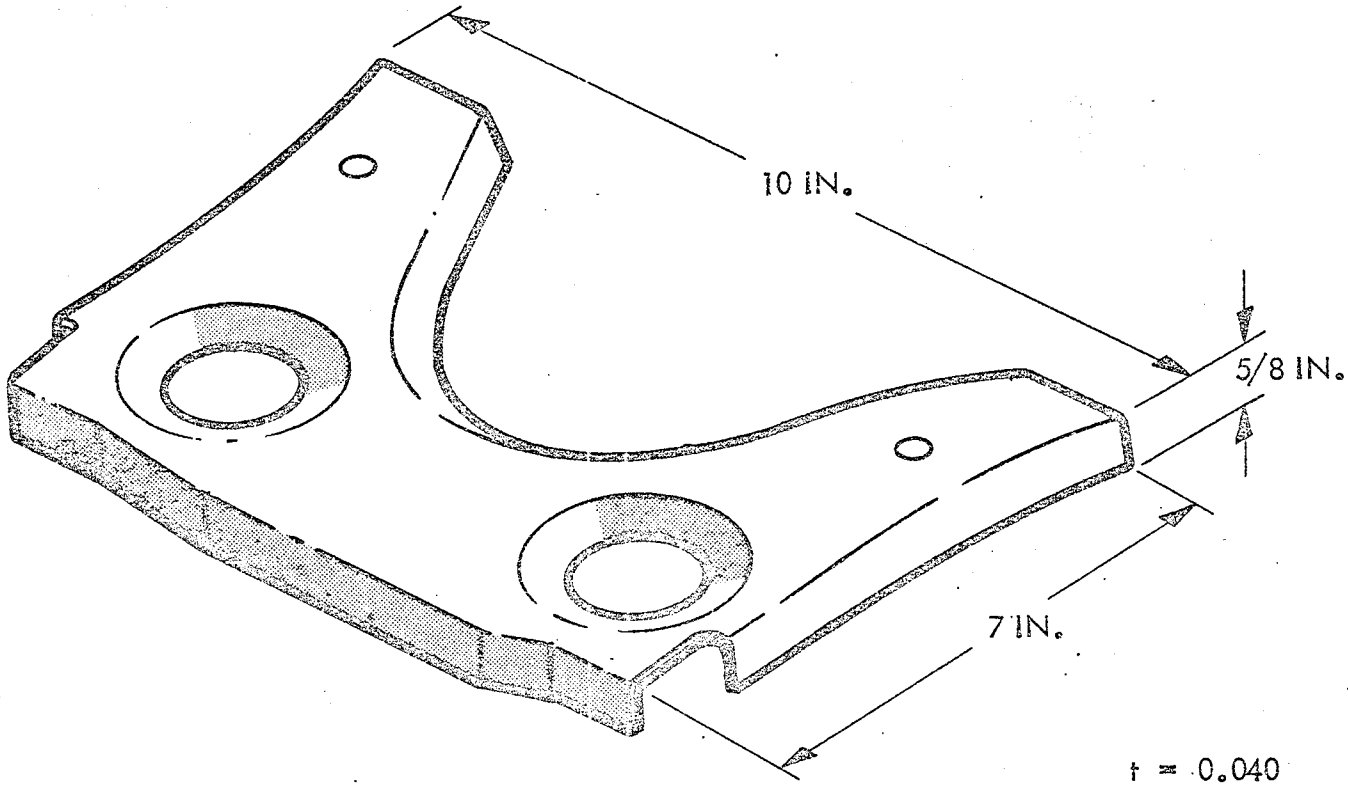

STANDARD HOURS PER 100

0.3 LB	0.45 LB
ALUMINUM HOURS 9.96	TITANIUM HOURS 33.66

RATIO 1.00 : 3.38

KF-8
D04617

MANHOURS PER 100 PARTS

- Differences in fabrication costs of titanium and aluminum parts were studied extensively during the SST Development Phase II-B Program performed at the Lockheed-California Company. Over 500 parts were studied in detail to develop data on cost complexity factors for titanium versus aluminum fabrication.

- Other typical complexity factors for titanium versus aluminum structure are as shown below.

Fab/Ass'y Labor	Complexity Factor Ti	Complexity Factor Alum
Skin Fab W/O Forming	2.6	1.0
Simple Hot Form	2.8	1.0
Average Hot Form	3.3	1.0
Complex Hot Form	4.2	1.0
Machinery and Drilling	6.7	1.0
Assembly (Gauge $\lesssim$ 0.060)	3.0	1.0
Assembly (Gauge 0.060-0.125)	4.0	1.0

MANHOURS PER 100 PARTS
ALUMINUM VS TITANIUM, PART NO. 903246-7, WEB.

ALUMINUM	SETUP	FAB
LAYOUT	0.07	-
SHEAR	0.06	0.02
BLANK	0.90	0.30
BURR	0.03	1.00
IDENTIFY	0.12	0.10
INSPECT	-	-
FORM	0.05	1.20
HAND FORM	0.10	3.80
INSPECT	-	-
A.A.	0.05	0.13
H.T.	0.05	0.36
INSPECT CHECK & STRAIGHTEN	0.10	2.30
INSPECT	-	-
IRIDITE	0.03	0.17
INSPECT	-	-
PAINT	0.02	0.48
INSPECT	-	-
IDENTIFY	0.12	0.10
INSPECT	-	-
STOCK	-	-
TOTAL	1.78	9.96

TITANIUM	SETUP	FAB
RECORD MATERIAL CONTROL NO. LAYOUT	0.07	-
SHEAR	0.06	0.02
BLANK & PIERCE	0.90	0.30
BURR & GRIND EDGES	0.03	7.98
IDENTIFY - TAG 10%, PART & CONTAINER NO.	0.12	0.20
INSPECT	-	-
ALKALINE CLEAN	0.05	0.19
APPLY ANTI-GALLING COMPOUND	0.05	0.75
PRE-FORM	0.05	1.20
INSPECT	-	-
ALKALINE CLEAN	0.05	0.19
PICKLE	0.05	0.41
APPLY SCALE DETERGENT	0.05	0.75
INSPECT	-	-
HOT SIZE (1400°F)	0.90	13.58
ALKALINE CLEAN	0.05	0.19
PICKLE	0.05	0.41
VAPOR HONE	0.02	5.00
MIKE PARTS, PICKLE, MIKE PARTS	-	-
CHECK AND STRAIGHTEN	0.10	1.50
INSPECT	-	-
PENETRANT INSPECT	-	-
ALKALINE CLEAN*	0.10	0.19
INSPECT*	-	-
IDENTIFY-CHEM-ETCH*	0.12	0.20
INSPECT*	-	-
WRAP & IDENTIFY*	0.07	0.40/ 0.20
INSPECT *	-	-
STOCK	-	-
TOTAL	2.89	33.46

*WHITE GLOVES

KF-9
DO 4618

FUSELAGE STRUCTURE/TPS CONFIGURATIONS

- Baseline Configuration (1) TPS concept is based upon use of external fuselage frames and metallic subpanels to which the LI-1500 insulator is bonded. Configurations 2, 3, and 7 also employ external frames.

- Configurations 4, 5, and 6 employ internal frames, and the insulator is bonded directly to the primary shell structure.

- Configurations 2 and 6 (least weight) use beryllium in the subpanels or in the primary skin/stringer structure.

- For the System 5B cost study, Configurations 1, 4, and 5 (using LI-1500) were adopted for comparison with Configurations 3 and 7 which employ a metallic TPS.

- Use of beryllium produces the lightest vehicle, but full benefit of weight reductions must consider resizing of the vehicle. Cost study, including resizing of the vehicle, is in progress.

FUSELAGE STRUCTURE/TPS CONFIGURATIONS

TWO-STAGE LS 400-7 (1)

PRIMARY STRUCTURE MAT'L	DESIGN CONFIG.	TPS					TOTAL WEIGHT (LB)	
		SUR-FACE	INSULATOR	SUBPANEL MAT'L	SUBPANEL BOND TEMP.	UNIT WEIGHT (LB/FT^2)	TPS	STRUCTURE + TPS
ALUMINUM	1	U	TITANIUM	—	—	1.43	26,856	43,682
		L	L1-1500 (1.67 IN.)	Ti	600	3.50		
	2	U	BERYLLIUM	—	—	0.75	16,520	33,346
		L	L1-1500 (1.00 IN.)	Be	600	2.20		
	3	U	TITANIUM	—	—	1.43	30,500	47,326
		L	COLUMBIUM	—	—	4.08		
	4	U	L1-1500 (0.5 IN.)	PRIMARY STRUCTURE	300	0.92	22,600	40,946
		L	L1-1500 (2.25 IN.)		300	3.20		
TITANIUM	5	U	L1-1500 (0.5 IN.)	PRIMARY STRUCTURE	600	1.12	20,500	42,900
		L	L1-1500 (1.67 IN.)		600	2.70		
	6	U	L1-1500 (0.5 IN.)	Be	600	1.12	19,050	32,409
		L	L1-1500 (1.60 IN.)	Be	600	2.55		
	7	U	TITANIUM	—	—	1.43	28,850	49,450
		L	COLUMBIUM	—	—	3.80		

AIRFRAME STRUCTURE/TPS WEIGHTS
SYSTEM 5B

- The System 5B Baseline Configuration was selected for the cost impact study, where the differences in cost due to use of titanium versus aluminum are developed.
- All aluminum and maximum titanium versions of the System 5B vehicle were established, for purposes of this study, without resizing of the vehicle.
- Further analysis, including vehicle resizing, is in progress.

AIRFRAME STRUCTURE/TPS WEIGHTS

5B

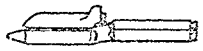

1 STG-156 IN.

DESIGN CONFIGURATION			COMPONENT WEIGHTS (LB)				TPS WEIGHT (LB)	STRUCTURE + TPS (LB)
			PROPELLANT SYSTEM & TANKAGE	TAIL GROUP	BODY GROUP	SUBTOTAL		
RIGIDIZED SURFACE INSULATION (LI-1500) TPS	SYSTEM 5B	Ti	—	9067	7241	16,308	23,423	73,019
		Al	4962	—	28,326	33,288		
	ALL ALUMINUM	Al	4962	9380	37,796	52,138	23,800	75,938
	MAXIMUM TITANIUM	Ti	—	9067	22,803	31,870	18,830	71,208
		Al	4962	—	15,546	20,508		
METALLIC TPS	ALL ALUMINUM	Al	4962	9380	35,839	50,181	33,600	83,781
	MAXIMUM TITANIUM	Ti	—	9067	20,473	29,540	27,650	77,698
		Al	4962	—	15,546	20,508		

KF-3
DO 4572

AIRFRAME STRUCTURE/TPS COSTS*

5B

1 STG-156 IN.

DESIGN CONFIGURATION		TOTAL PROGRAM			DDT&E	MAX. PEAK ANNUAL FUNDING
		TPS	STRUCTURE	SUM		
RIGID. SURF. INSULATION (LI-1500 TPS)	SYSTEM 5B	35.4	166.6	202.0	144.8	39.3
	ALL ALUMINUM	0	0	0	0	0
	MAX. TITANIUM	-18.6	345.0	326.4	235.8	63.5
METALLIC TPS	ALL ALUMINUM	463.6	-8.8	454.8	331.8	89.5
	MAX. TITANIUM	408.8	311.0	719.8	521.8	140.5

*DIFFERENCE IN COSTS ($M)

KF-4
DO 4571

BASELINE SCHEDULE CHARACTERISTICS

Current NASA TD baseline schedule and development planning guidelines for a phased interim booster-development approach display elements of a relatively high-risk approach forced by anticipated funding constraints. The interim approach inherently tends to produce two funding peaks roughly opposite the reusable orbiter and reusable booster DDT&E cost peaks. Suppressing these funding peaks tends to exaggerate uneconomic development and production phasing and increase financial and technical risks of increased total program cost. Suppressing the first peak tends to delay the orbiter first horizontal flight against a fixed FMOF requirement and, thereby, severely constrains flight test options, with associated flight test risk. The 16-month flight test span currently available with two vehicles provides 22 vehicle months, and requires maintaining a minimum average of about 10 flights per month on each vehicle. There is high exposure to certification delay with damage or loss to either of the two vehicles, and elimination of hypersonic single-element vertical-flight-test capability means lack of design verification prior to FMOF in the entry environment. Introduction of an interim booster configuration may require additional integrated stage man-rating flight test not provided for in the restricted schedule spans. Suppressing the second peak forces early completion of orbiter production with risk of increased costs to retro-fit engineering changes resulting from interim orbital flight into production vehicles; and also forces a reusable booster-production gap that may widen under the impact of development delays or continued funding pressure.

BASELINE SCHEDULE CHARACTERISTICS

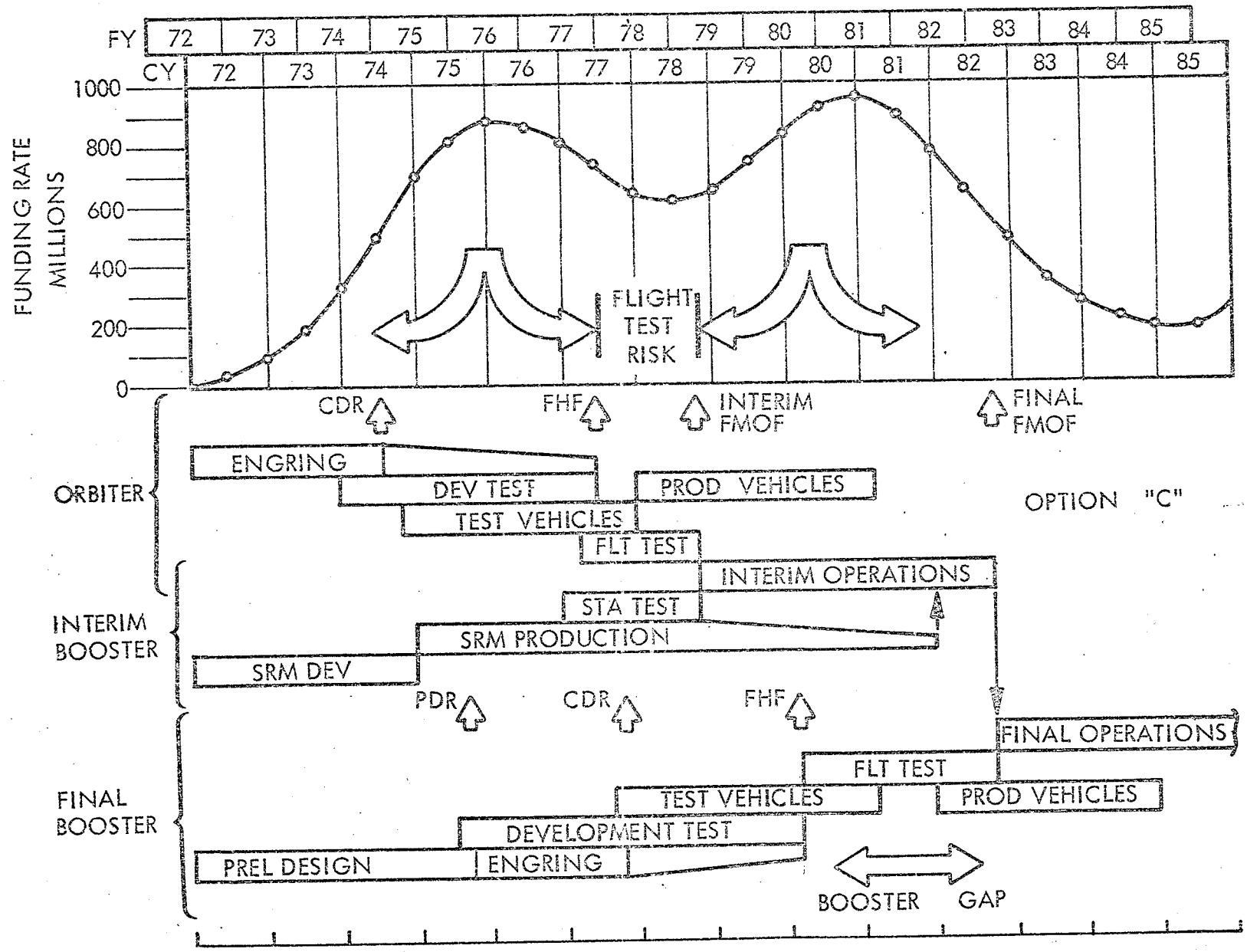

DEVELOPMENT RISK IMPACT

Technical and financial development risk impact, as measured by failure to achieve a development objective, is concentrated in the FY 76/FY 77 time period opposite the first funding peak. The degree of commitment, implied in the orbiter development activities and milestones concentrated in this period, includes initial deliveries of primary and secondary engines, a peak level of expensive subsystem-qualification testing, final assembly of the structures test vehicle (STV) and full-scale propulsion-development module hardware (PDM), completion and proving of major tools, and initiation of final assembly of the first flight-test vehicle (FTV-1). Failure to achieve significant technical objectives in this time period leads to remedial DDT&E costs that extend the manpower loading in all areas of the program pending, and potentially delays both interim and final booster development and production activity. Concerns over the impact of such remedial costs leads to preventive DDT&E costs to increase design assurance, which, in turn, tend to front-load the manpower buildup and increase the first funding peak. Finally, the incidence of these costs and associated delays may compromise economical attainment of an early traffic buildup following introduction of the reusable booster. In balancing risks and costs, both initial and deferred, one recommendation is to accept a predictable and controllable increase in program buildup and first peak funding to accelerate CDR and FHF milestones, and, thereby, provide sufficient orbiter horizontal and vertical-flight-test experience to fully verify the design prior to FMOF. Beneficial effects anticipated from development and production hardware phasing and insurance against preventive DDT&E cost elements minimize over-run potential in total program cost to FMOF.

JTL-8
D04646

DEVELOPMENT RISK IMPACT

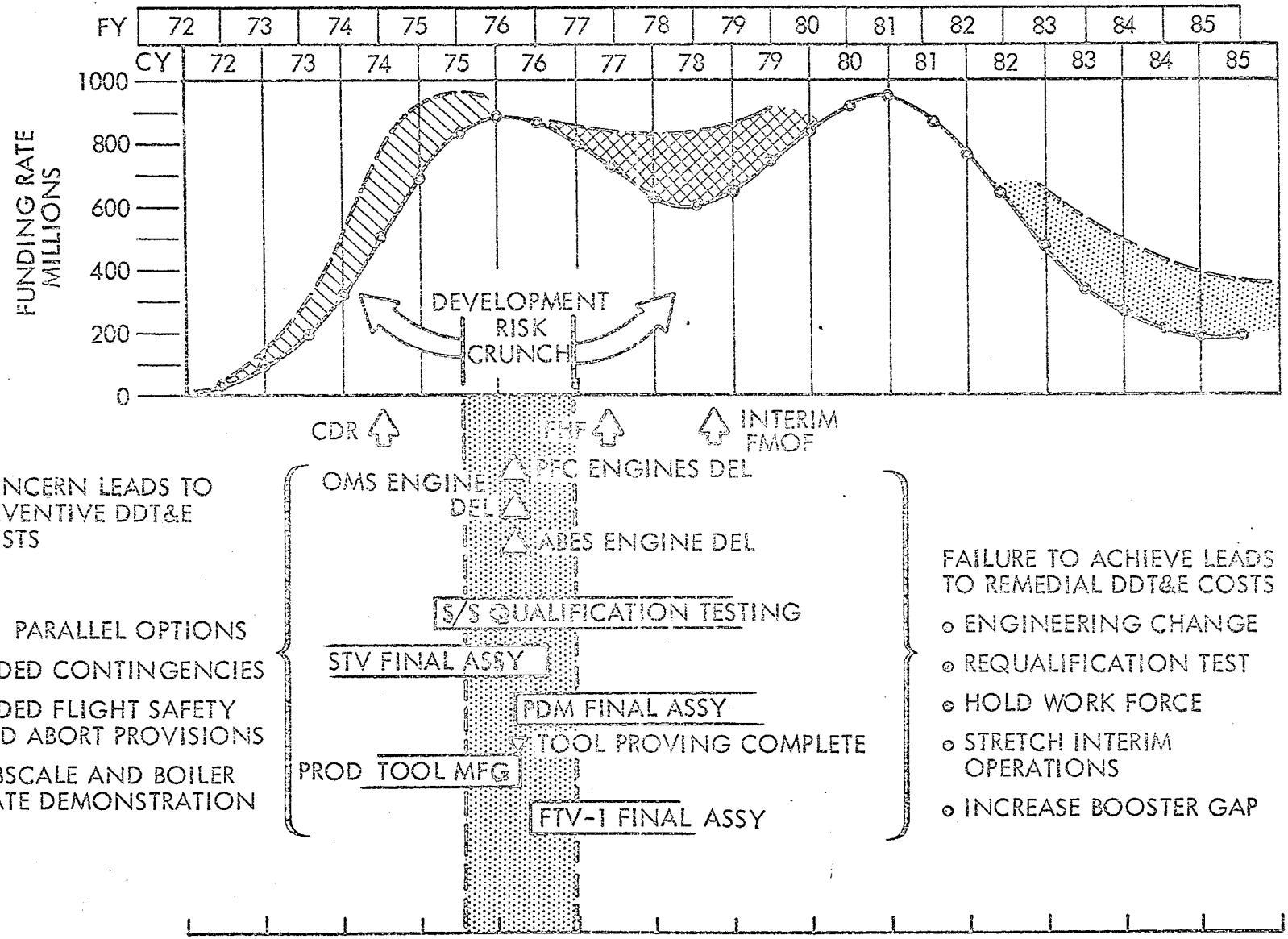

CONCERN LEADS TO PREVENTIVE DDT&E COSTS

- S/S PARALLEL OPTIONS
- ADDED CONTINGENCIES
- ADDED FLIGHT SAFETY AND ABORT PROVISIONS
- SUBSCALE AND BOILER PLATE DEMONSTRATION

FAILURE TO ACHIEVE LEADS TO REMEDIAL DDT&E COSTS

- ENGINEERING CHANGE
- REQUALIFICATION TEST
- HOLD WORK FORCE
- STRETCH INTERIM OPERATIONS
- INCREASE BOOSTER GAP

JTL-8
DO 4646(1)

RECOMMENDATIONS

1. CONTINUE DESIGN OF PHASED TWO-AND-ONE-HALF STAGE (CONFIGURATION 5B)
   - EXTERNAL H AND O
   - 15 x 60 x 65K PAYLOAD
   - TANDEM
   - FIRST STAGE 156-IN. SRM
2. ADD TO CONTRACT STUDY MATRIX:
   - 15 x 60 x 65K PAYLOAD
   - J2S-POWERED ORBITER
   - PHASED SRM BOOSTER
3. DEFINE SHUTTLE PROGRAM COST TARGETS
4. CONSIDER "SEGMENTED" CONTRACTING APPROACH THAT:
   - CONTROLS COST AND SETS MAXIMUM GOVERNMENT LIABILITY
   - PERMITS FLEXIBLE SYSTEM PERFORMANCE
   - LIMITS CONTRACTOR RISK
   - IDENTIFIES GOVERNMENT COST-RESERVES REQUIREMENT

CONCLUSIONS

1. PHASED BOOSTER DEVELOPMENT SAVES 896 M/YR PEAK ANNUAL FUNDING.

2. EXTERNAL H AND O DECOUPLES ORBITER DEVELOPMENT FROM STAGING, OFFERS LOWER SYSTEM DEVELOPMENT RISK AND MINIMIZES SIZE OF ORBITER.

3. LARGE PAYLOAD BAY RELIEVES ENTRY HEATING AND DOES NOT INCREASE COST SIGNIFICANTLY.

4. TANDEM ARRANGEMENT RESULTS IN MAXIMUM COMMONALITY BETWEEN INTERIM AND FINAL DESIGN AND RESULTS IN SIMPLER STAGING.

5. ONE-STAGE - 156-INCH SRM IS SIMPLEST LOWEST COST INTERIM BOOSTER.

6. ATTAINABLE PROGRAM COST TARGETS ARE:

   - TOTAL PROGRAM $9B
   - PEAK ANNUAL FUNDING $.9B
   - COST TO FMOF $3.5B
   - FINAL RECURRING AVERAGE COST $5M/FLT.

7. THE SECOND PEAK MAY BE THE MORE DIFFICULT PROBLEM