AI-BD-AEC-72-3

PRIMARY LOOP PUMP ASSEMBLY

PRELIMINARY DESIGN REVIEW

FOR NASA-LeRC

JANUARY 4, 1972

(AI-BD-AEC-72-3) PRIMARY LOOP PUMP ASSEMBLY PRELIMINARY DESIGN REVIEW FOR NASA-LERC (Atomics International) 98 p

N74-75930

Unclas

00/99 17061

REPRODUCED BY
NATIONAL TECHNICAL INFORMATION SERVICE
U.S. DEPARTMENT OF COMMERCE
SPRINGFIELD, VA. 22161

Atomics International
North American Rockwell

P.O. Box 309
Canoga Park, California 91304

99

LEGAL NOTICE

This report was prepared as an account of work sponsored by the United States Government. Neither the United States nor the United States Atomic Energy Commission, nor any of their employees nor any of their contractors, subcontractors, or their employees, makes any warranty, express or implied, or assumes any legal liability or responsibility for the accuracy, completeness or usefulness of any information, apparatus, product or process disclosed, or represents that its use would not infringe privately owned rights.

ACKNOWLEDGEMENT

This work was performed under NASA Contract Number NAS 3-15342, Primary Loop Pump Assembly (PLPA) Program. The presentation was given by T. A. Moss, PLPA Project Manager and the technical effort was conducted by G. Matlin, L. E. Donelan and I. Rowe. The NASA-LeRC Project Manager was J. P. Couch.

ISSUED: JANUARY 28, 1972

FIGURES

	Page
A. BACKGROUND	
Presentation Outline	8
Reactor Integrated System Test Flow Diagram	9
Nuclear Heat Source Assembly	10
Overall PLPA Program Schedule	11
PLPA EM Pump Types	12
PLPA EM Pump Options	13
B. SPECIFICATIONS	
Primary Loop Pump Assembly (PLPA) Specifications	14
SNAP 8 EGS Environmental Specification	15
Application of Boiler Code to Analysis	16
S_{mt} Values	17
PLPA Specified Materials	18
C. DC PUMP STUDY	
DC Conduction Pump Isometric	19
DC Conduction Pump Equivalent Circuit	20
Design Considerations	21
Eff & Wt vs Throat Area (Compensated & Uncompensated)	22
Eff & Wt vs Throat Aspect Ratio and Throat Area - 3 Pump Option	23
Eff & Wt vs Throat Length	24
Dual DC Pump PLPA Performance	25

FIGURES

	Page
C. DC PUMP STUDY (Cont'd)	
Head Rise, Input Power and Efficiency vs Flow Rate	26
DC vs AC Pump Comparison	27
D. RELIABILITY STUDY	
Estimated Winding Reliability	28
Estimated Weld Reliability	29
Preliminary PLPA Comparisons	30
E. HELICAL PUMP DESIGN	
Outline	31
Helical Pump Schematic	32
Electrical Analysis	
Equivalent Circuit	33
Design Assumption	34
First Computer Code Logic	35
Second Computer Code Logic	36
Design Matrix	37
Input Power vs Core Length	38
Input Power vs Gap & Bore Dia	39
Variation of Performance with Copper Depth	40
Input Power vs Slip (No. 74)	41

FIGURES

	Page
E. HELICAL PUMP DESIGN (Cont'd)	
Rated Performance of Design No. 74	42
10% Flow Requirements of Design No. 74	43
Head Rise vs Flow Rate vs Voltage, No. 74	44
Startup Performance vs Flow Rate, No. 74	45
Hydraulic Analysis	
Hydraulic Loss Calculations	46
Pressure Losses	47
Thermal Analysis	
Stator Slot	48
Thermal Analysis	49
Thermal Conductance Across Interfaces	50
Property Data	51
Thermal Analysis Program (TAP Code)	52
Stator Node Diagram	53
Slot Thermal Map with Argon & Mica	54
Thermal Map of End Turn with Argon & Mica	55
Heat Flow Map of Slot with Argon & Mica	56
Effect of Helium-Xenon Gas	57
Effect of Vacuum	58
Effect of Multi-Layer Insulation	59
Summary Table	60

FIGURES

	Page
E. HELICAL PUMP DESIGN (Cont'd)	
Stress Analysis	
Temperature & Pressure - Continuous Operation	61
Temperature & Pressure - NaK Fill & Drain	62
Temperature & Pressure - Short Term Operation	63
Duct & Throat Design Margins	64
Loop Return Stresses	65
Loop Support Design Stresses	66
Gas Containment Can Design Stresses	67
Support Bracket Design Stresses	68
Layouts	
Plan View of Pump	69
End View of PLPA	70
F. LINEAR INDUCTION PUMP DESIGN	
Outline	71
Linear Pump Schematic	72
Electrical Analysis	
Computer Code Logic	73
Design Assumptions	74
Initial Design Matrix	75
Input Power vs Gap Height (5-inch Throat)	76

FIGURES

	Page
F. LINEAR INDUCTION PUMP DESIGN (Cont'd)	
Electrical Analysis (Cont'd)	
Input Power vs Gap Height (6-inch Throat)	77
Input Power vs Gap Height (7-inch Throat)	78
Design Matrix Continued	79
Input Power vs Length	80
Design Matrix Modified for Slot Geometry	81
Input Power vs Gap Height & Slip	82
Rated Performance for Design No. 66	83
10% Flow Requirements for Design No. 66	84
Head Rise vs Flow Rate vs Voltage for Design No. 66	85
Startup Performance vs Flow Rate for Design No. 66	86
Hydraulic Analysis	
Hydraulic Pressure Loss	87
Thermal Analysis	
Linear Pump Stator Slot	88
Thermal Map of Slot	89
Thermal Map of End Turns	90
Heat Flow Map of Slot	91

FIGURES

	Page
F. LINEAR INDUCTION PUMP DESIGN (Cont'd)	
Hydraulic Analysis (Cont'd)	
Stress Analysis	
Throat Deflection & Stress	92
Stator Stack Thermal Deflection	93
Gas Containment Shell Stress	94
Layout of Pump	
Plan View	95
End View	96
G. SUMMARY PLPA COMPARISON	97

PLPA PRELIMINARY DESIGN REVIEW - JAN 4, 1972

- PROGRAM BACKGROUND
- PLPA REQUIREMENTS
- DC PUMP DESIGN
- RELIABILITY OF VARIOUS OPTIONS
- AC HELICAL PUMP DESIGN
  - ELECTRICAL/HYDRAULIC ANALYSIS
  - THERMAL ANALYSIS
  - STRESS ANALYSIS
- AC LINEAR PUMP DESIGN
  - ELECTRICAL/HYDRAULIC ANALYSIS
  - THERMAL ANALYSIS
  - STRESS ANALYSIS
- PLPA COMPARISONS

REACTOR INTEGRATED SYSTEM TEST FLOW DIAGRAM

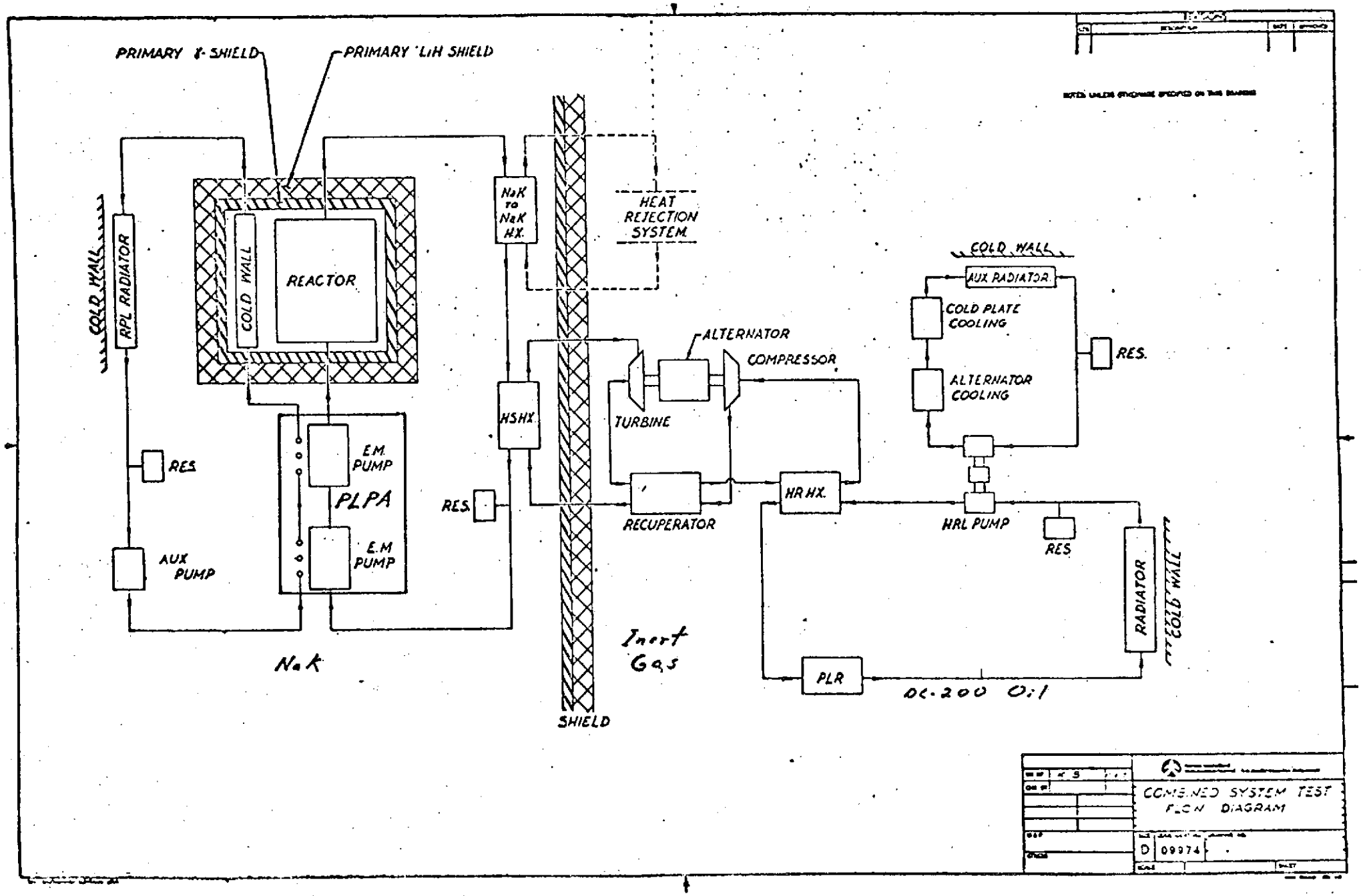

71-N8-62-5

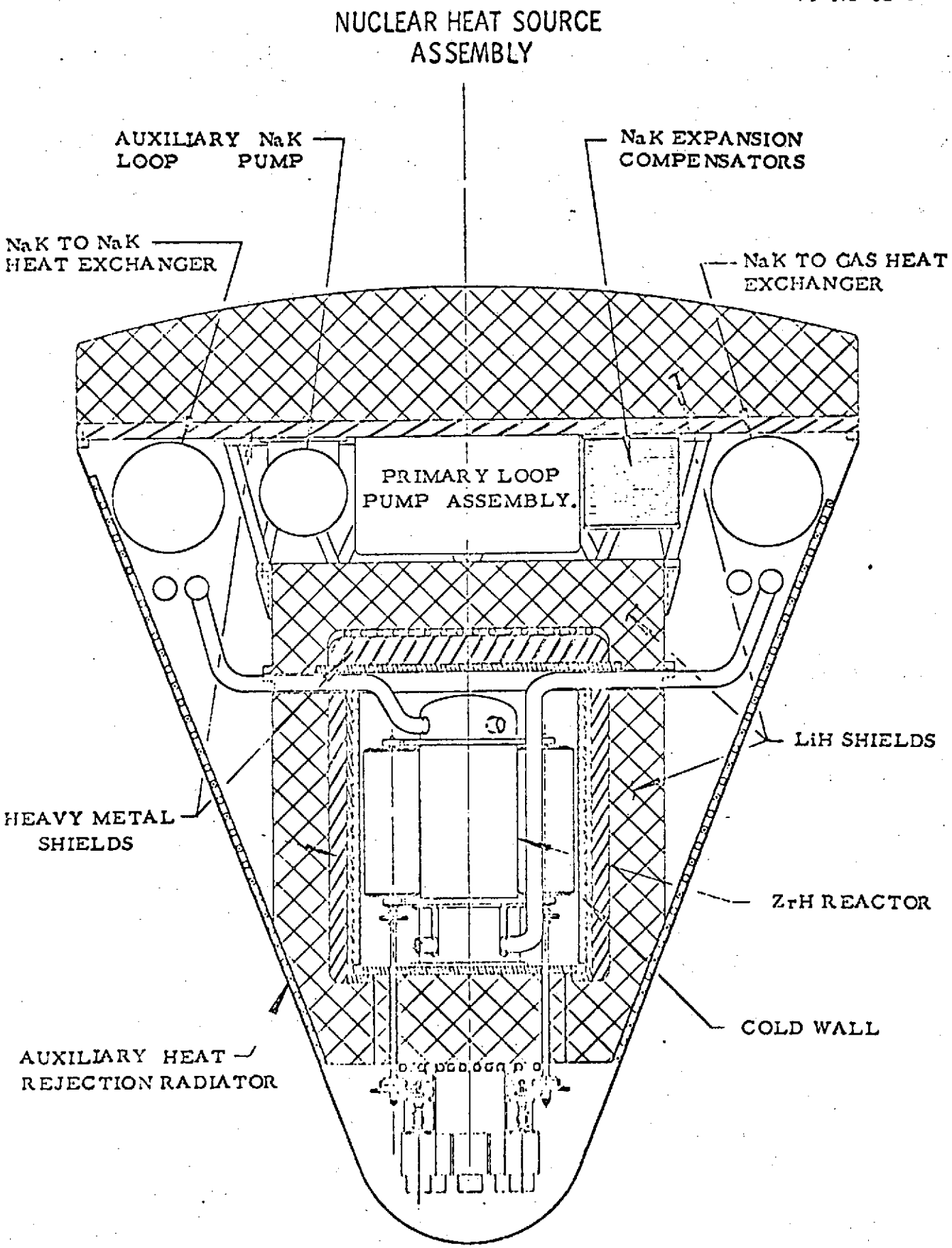
NUCLEAR HEAT SOURCE ASSEMBLY
AUXILIARY NaK LOOP PUMP
NaK EXPANSION COMPENSATORS
NaK TO NaK HEAT EXCHANGER
NaK TO GAS HEAT EXCHANGER
PRIMARY LOOP PUMP ASSEMBLY.
LiH SHIELDS
HEAVY METAL SHIELDS
ZrH REACTOR
COLD WALL
AUXILIARY HEAT REJECTION RADIATOR

OVERALL PLPA PROGRAM SCHEDULE

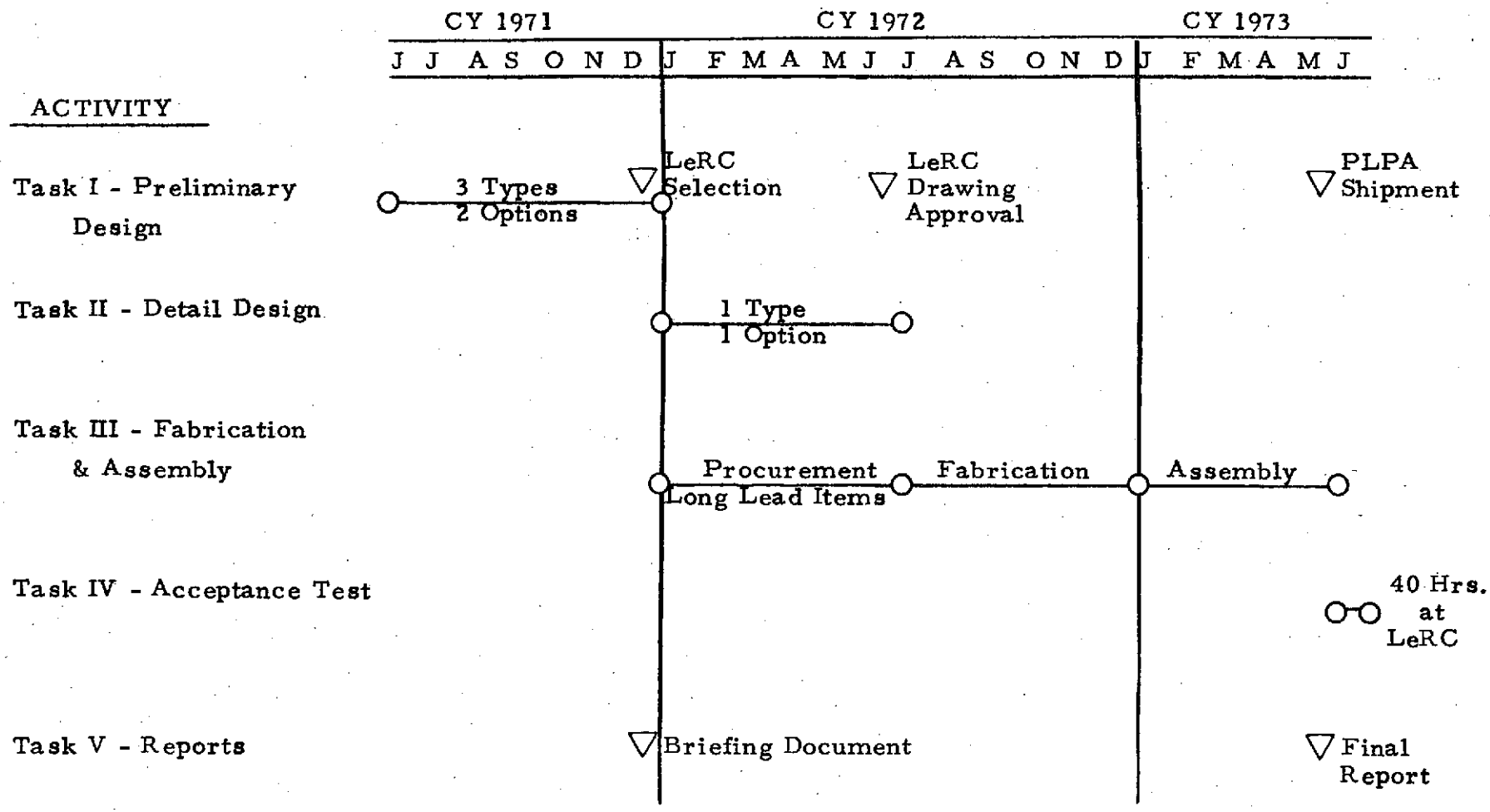

PLPA EM PUMP TYPES

D.C.
CONDUCTION

$dP = I_x B_y dZ$

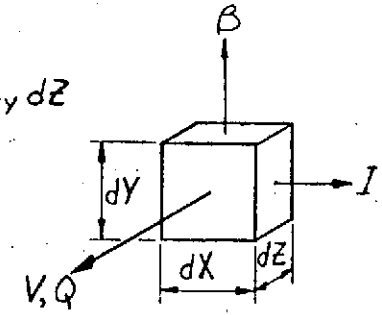

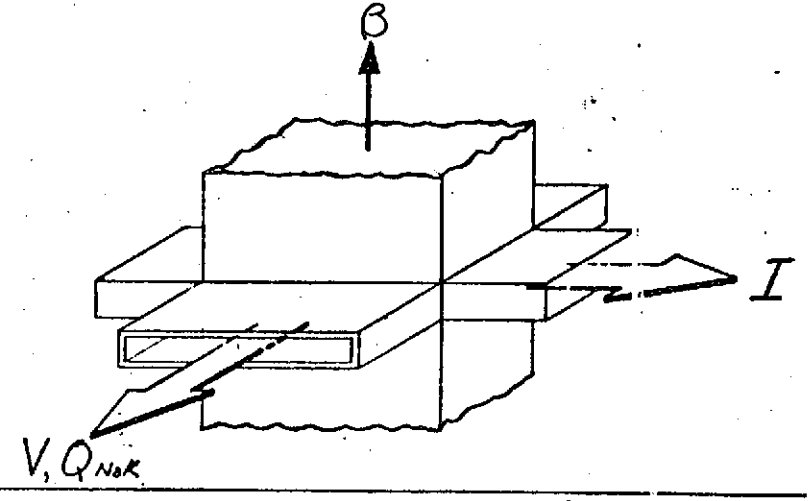

A.C.
HELICAL
INDUCTION

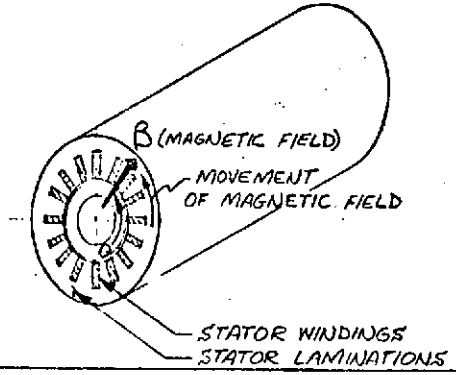

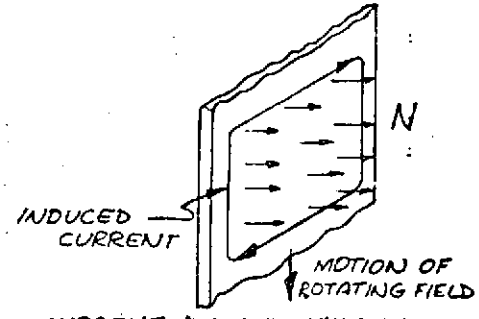

FLUX + CURRENT RELATIONSHIPS IN FLOW CHANNEL
(SHOWN FLATTENED)

A.C.
LINEAR
INDUCTION

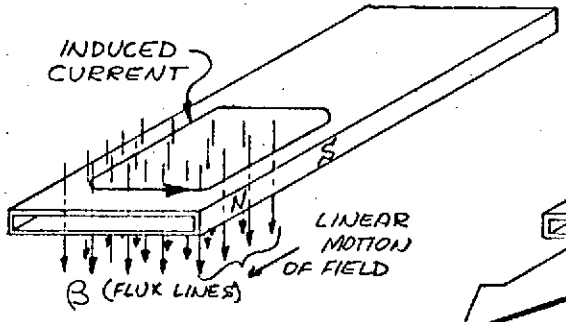

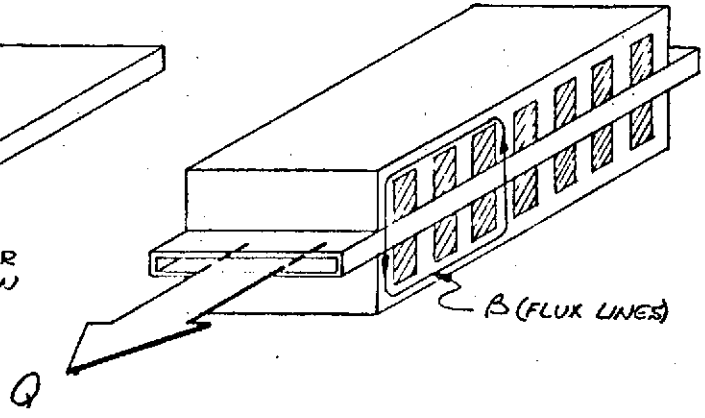

PLPA EM PUMP OPTIONS

TYPE OF PUMP	TWO PUMP OPTION	THREE PUMP OPTION
D.C. CONDUCTION	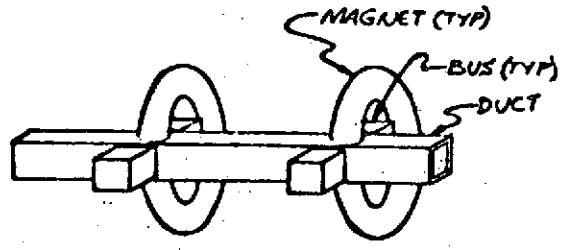	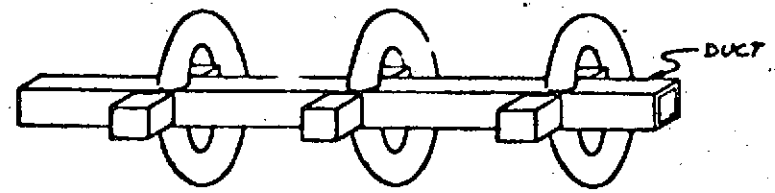
A.C. HELICAL INDUCTION	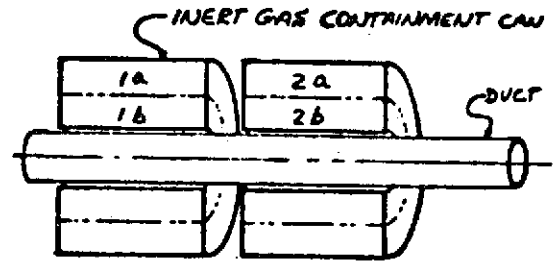 a & b DENOTE TWO ELECTRICALLY SEPARATE WINDINGS (TYP	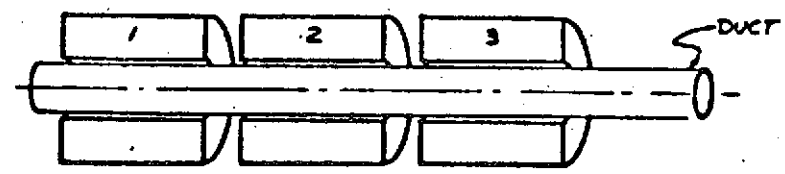
A.C. LINEAR INDUCTION	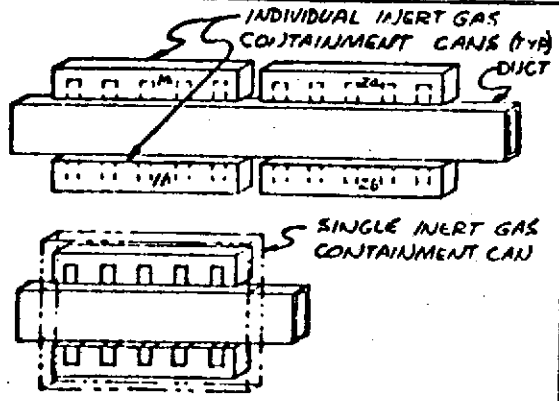	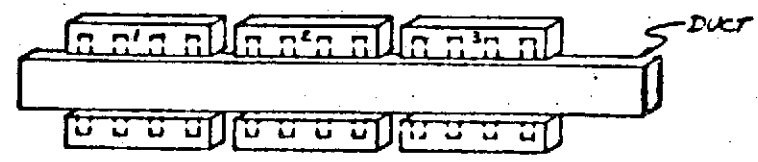

PRIMARY LOOP PUMP ASSEMBLY (PLPA) SPECIFICATIONS

	RATED OPERATION	CONTINUOUS OFF-DESIGN OPERATION	SHORT TERM OFF-DESIGN OPERATION
PRIMARY NaK FLOW RATE, LB/HR	72,000	±20% Rated	10 to 120% Rated-50 Hrs.
LIFE, YEARS	5		
HEAD RISE, PSI	7		
PLPA INPUT POWER, KWE MAX	7.6		
INLET PRESSURE, PSIA	20	5 to 30	125 psi/minutes **
PRIMARY NaK TEMP., °F	1100	1100 to 1150	50 to 1100°F in 4 Hrs. 1250°F - 100 Hrs.
COOLANT NaK INLET TEMP., °F	450	400 to 500	450°F NaK for Startup
COOLANT NaK FLOW RATE, LB/SEC*	1.11		
COOLANT NaK PRESSURE DROP, PSI*	< 2		
INPUT VOLTAGE	TBD	±10% Rated	5 to 110% Rated - 50 Hrs.
SIZE, INCHES	16H· < L· < W		
ENVIRONMENTAL SPEC.	Mod. SNAP 8 ECS Spec. 417-2 Rev. C, 6-1-69		
STARTUP/SHUTDOWNS	100		
RADIATION ENVIRONMENT	8×10^9 Rad Gamma 8×10^{17} Nvt Fast Neutrons		

* FOR ONE OF TWO REDUNDANT CIRCUITS

** EMERGENCY - BRAYTON GAS LEAK

SNAP 8 EGS ENVIRONMENTAL SPECIFICATION

NO. 417-2, REVISION C, 6/1/69

LAUNCH SHOCK AND VIBRATION IN COMBINATION (PLPA NOT OPERATING)

SHOCK:	Three 15g SHOCKS EACH DIRECTION 3 ⊥ AXIS (18 TOTAL)
SINUSOIDAL VIBRATION:	0.25g's, 4 to 35 Hz, 3 MIN, ⊥ TO MOUNT PLANE
RANDOM VIBRATION:	20-100 Hz AT 3dB/OCT INCREASE 100-600 Hz AT $0.4g^2$/CPS 600-2000 Hz AT 6dB/OCT INCREASE } 3 MIN, 3 ⊥ AXIS
ACOUSTIC NOISE:	INTEGRATED LEVEL OF 142 dB, Re 0.0002 MICROBAR FOR 3 MIN. (SPECIAL DISTRIBUTION)
ACCELERATION:	± 5g's, 3 MIN, ⊥ TO MOUNT PLANE ± 1.25g's, 2 MIN, 2 ⊥ AXIS WITHIN MOUNT PLANE

APPLICATION OF BOILER CODE TO ANALYSIS

- PRIMARY COOLANT PRESSURE BOUNDRY (1150°F)

  "INTENT" (i.e. NO CODE STAMP) OF SECTION III, CLASS 1, CODE CASE 1331-5

  PRIMARY STRESS: $P_m \leq S_{mt}; \left(P_L + P_b\right) \leq 1.5\ S_m\ \&\ k\ S_t$

  WHERE: $k = 1.25 - 0.25 \left[\frac{P_L}{S_t}\right]$

  SECONDARY STRESS (THERMAL STEADY STATE & TRANSIENT)

  1. DESIGN FOR ELASTIC (STRAIN < 1% AVG, < 2% SURFACE, < 5% DISCONTINUITIES); $\left[P_L + \frac{P_b}{k}\right]_{MAX} + Q \leq S_q = S_y\ AVG$

  2. DESIGN FOR INELASTIC ANALYSIS (TOTAL DAMAGE FACTOR)

  FATIGUE

- GAS CONTAINMENT (600 to 900°F)

  "INTENT" OF SECTION III, CLASS 2, BY REFERENCE TO SECTION VIII-DIV. 2. USE LOW TEMP RULES OR NEW CODE CASE FOR ELEVATED TEMP.

  PRIMARY STRESS: $P_m \leq S_m; \left(P_L + P_b\right) \leq 1.5\ S_m$

  SECONDARY STRESS: $(P_L + P_b + Q) \leq 3\ S_m$

  FATIGUE

S_m AT TEMP > 800°F FROM SECTION VIII, DIV. 1; $S_m \sim$ 2/3 LOWEST YIELD STRENGTH

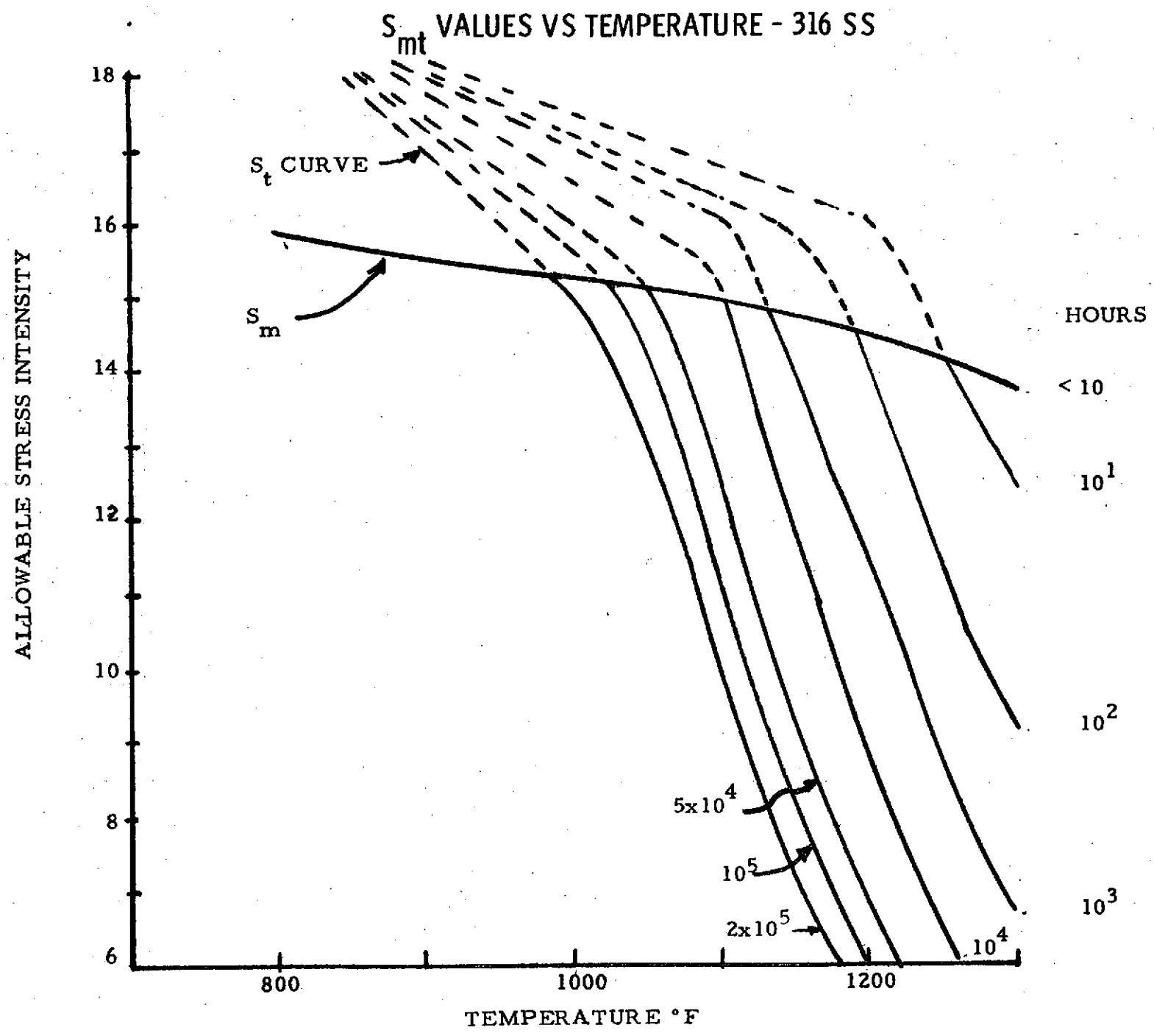
S_{mt} VALUES VS TEMPERATURE - 316 SS
ALLOWABLE STRESS INTENSITY
18
16
14
12
10
8
6
800
1000
1200
TEMPERATURE °F
S_t CURVE
S_m
HOURS
< 10
10^1
10^2
10^3
10^4
$5x10^4$
10^5
$2x10^5$

PLPA SPECIFIED MATERIALS

PRIMARY NaK PIPING AND DUCTS	316 SS
MAGNETIC MATERIAL	HIPERCO 27
CONDUCTORS*	COPPER OR COPPER ALLOY
CONDUCTOR INSULATION (END TURNS)	"S" 994 GLASS TAPE
SLOT INSULATION	99.5 + Al_2O_3
INTERLAMINAR INSULATION	PLASMA SPRAYED Al_2O_3
STATOR GAS**	ARGON OR HELIUM/XENON < 5 PPM O_2 AND H_2O

* JOINTS TO BE WELDED PER SPEC. AGC No. 10331B

** APPROXIMATELY 1 ATM AT RATED CONDITIONS

D.C. CONDUCTION PUMP

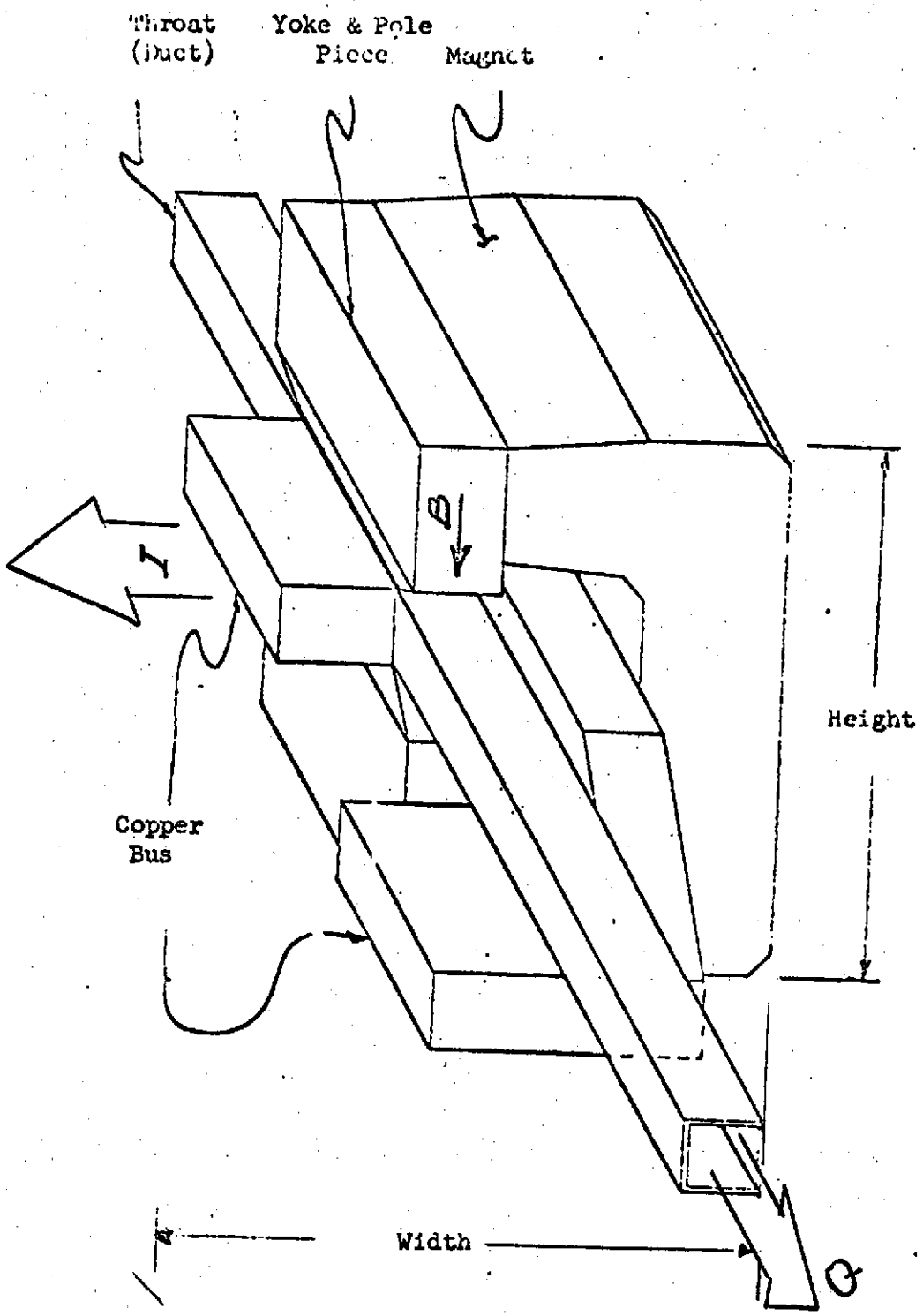

DC CONDUCTION PUMP EQUIVALENT CIRCUIT

$$P_{psi} = K_1 M_1 BI - M_2 B^2 Q - M_3 B^2 Q - M_4 Q^2 - M_5 B^2 Q$$

(Pressure Rise) (Back EMF) (Eddy Current) (Hydraulic loss) (Inactive Pump Braking)

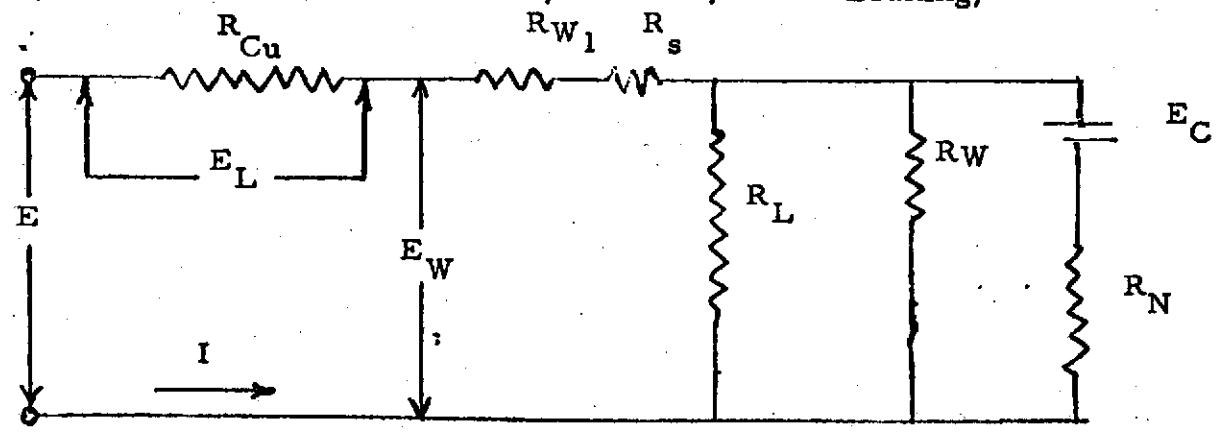

B = Pump Throat Magnetic Flux, Gauss

I = Pump Current, Amps

Q = NaK Flow, lb/sec

E = Voltage Applied to Bus, mV

R_{Cu} = Bus Resistance, ohms

E_W = Voltage Drop of Throat, mV

K_1 = Armature Reaction Factor

R_{W_1} = Perpendicular (to current) Throat Wall Resistance, ohms

R_L = Bypass Leakage Current Resistance (outside Active Throat), ohms

R_W = Parallel (to current) Throat Wall Resistance, ohms

R_S = Splitter Plate Resistance, ohms

R_N = NaK (in throat) Resistance, ohms

E_C = Induced Back EMF, mV

DC CONDUCTION PLPA DESIGN CONSIDERATIONS

CONSTANTS		VARIABLES
FLOW	20 lb/sec	THROAT LENGTH
PRESSURE	7 psi	THROAT WIDTH
THROAT WALL THICK.	0.030 in.	THROAT HEIGHT
INSULATION THICK.	0.030 in.	NUMBER OF SPLITTERS,
COOLANT	NaK 78	2 or 3 PUMPS
MATERIALS		COMPENSATED OR UNCOMPENSATED
PERM MAGNET	Alnico V-7	VOLTAGE
YOKE & POLE PIECE	Hiperco 27	CURRENT
BUS	Copper	POWER
THROAT	SS316	EFFICIENCY
MAGNET		WEIGHT
FLUX DENSITY	11250 Gauss	THROAT MAG FLUX DENSITY
FIELD INTENSITY	645 Oersteds	PLPA CONFIGURATION
TEMPERATURE	700°F	

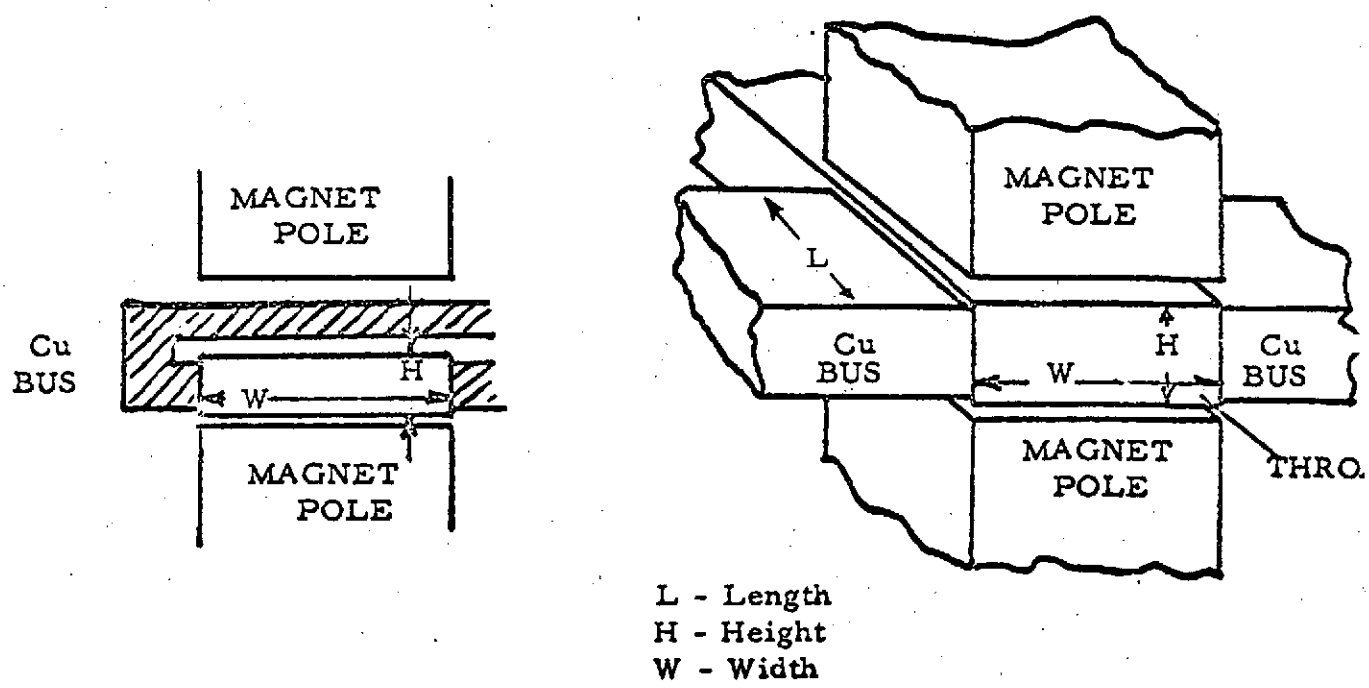

Compensated and Uncompensated DC Conduction Type Pumps

Efficiency and Pump Weight vs. Throat Area
(DC Conduction 3-Pump PLPA)

W = 2H, Compensated
W = H, Uncompensated

5 inch Throat Length

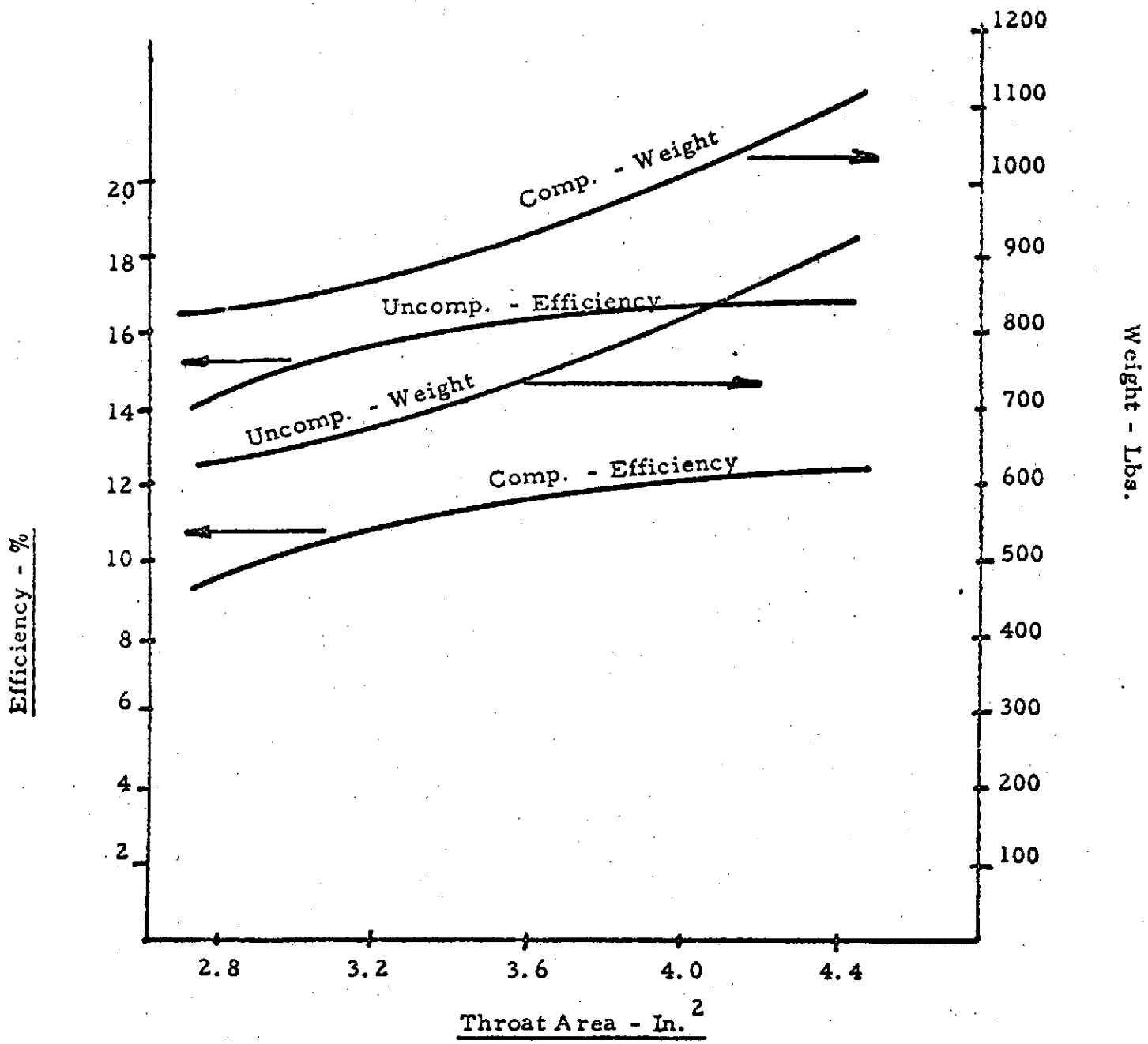

Efficiency and Pump Weight vs. Throat Aspect Ratio
(Uncompensated DC Conduction 3-Pump PLPA)
(Throat Length = 5 In)

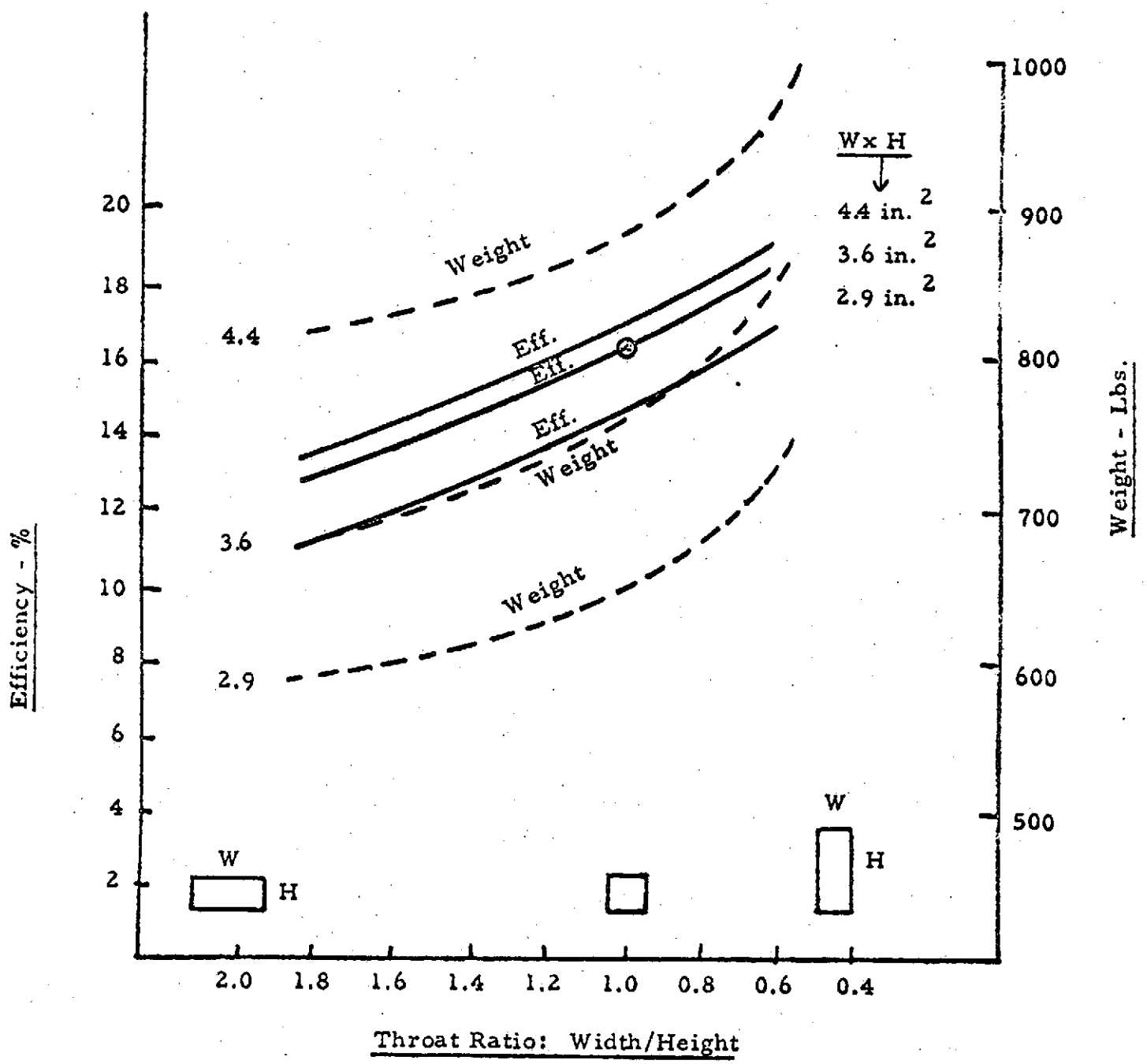

Efficiency and Pump Weight vs. Throat Length
(Uncompensated DC Conduction Pump PLPA)

Throat Width = Height = 1.9 in.

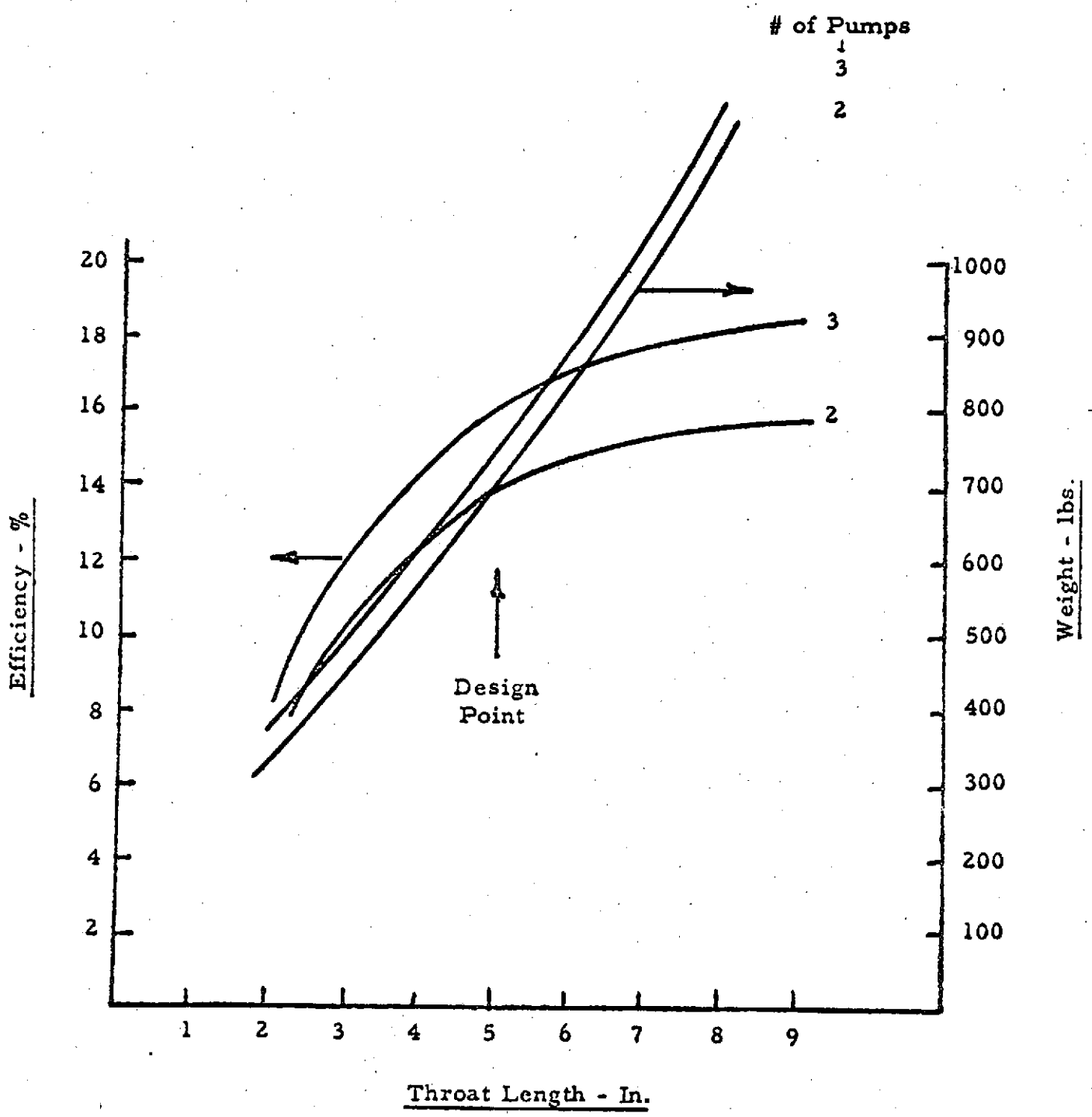

TRIPLE DC PUMP PLPA - UNCOMPENSATED
(PERMANENT MAGNET)

	3 PUMP
FLOW (lb/sec)	20
PRESSURE (psi)	7
POWER (kw)	3.8
VOLTAGE (volts)	0.179
*CURRENT (amperes)	10,530
EFFICIENCY (percent)	16.1
FLUX DENSITY	
Gauss	3,242
Lines/in.^{2}	20,916
*SIZE	
Length (in.)	7.0
Width (in.)	13.5
Height (in.)	11.5
THROAT DIMENSIONS	
Length (in.)	5.0
Width (in.)	1.9
Height (in.)	1.9
*BUS DIMENSIONS	
Length (in.)	20
Area (in.^{2})	9.5
WEIGHT (lb) (PLPA Total)	756

*Per Pump

Head Rise, Power, and Efficiency vs. NaK Flow Rate

(Uncompensated DC Conduction 3-Pump PLPA)

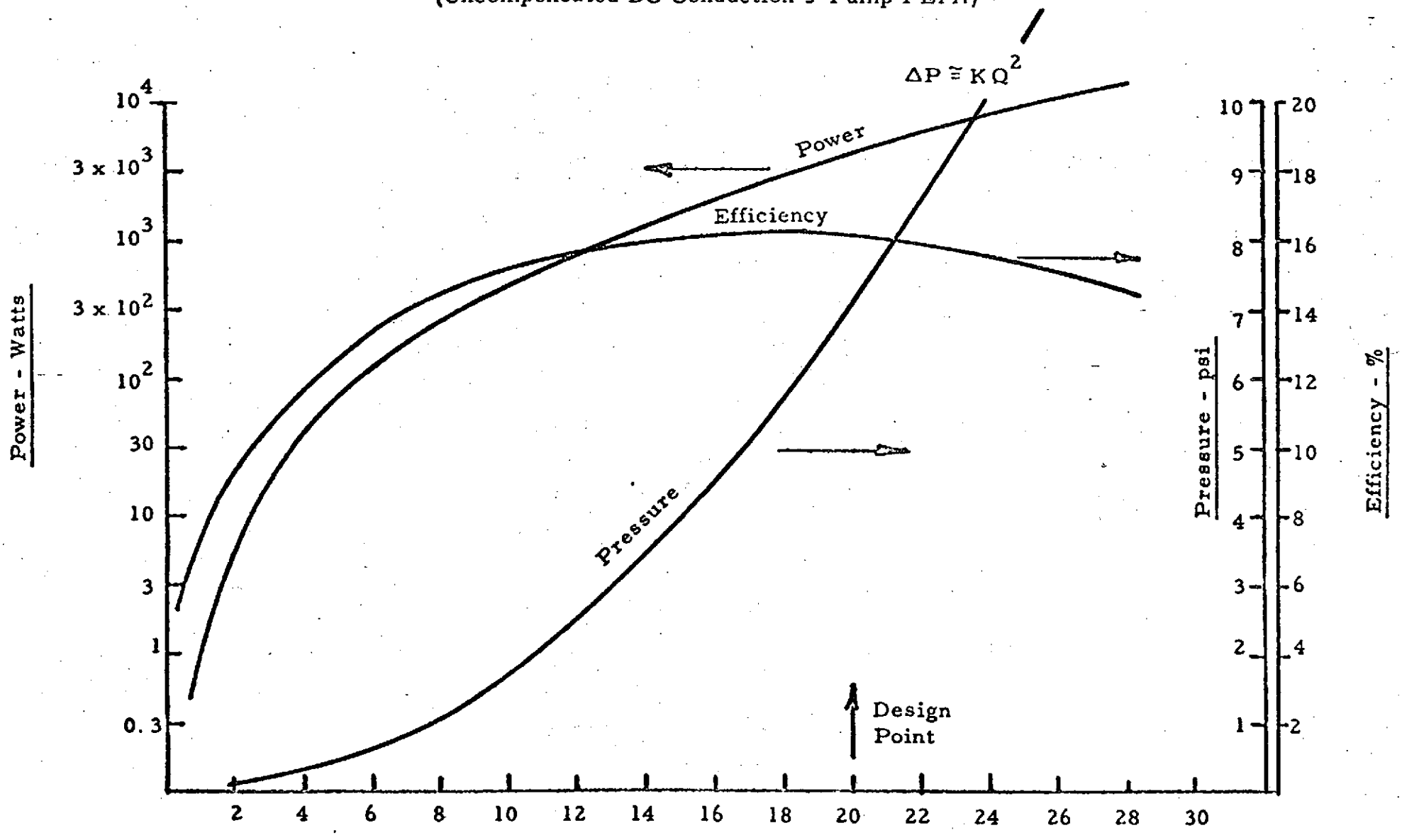

DC CONDUCTION VS AC INDUCTION PUMP COMPARISON

DC PUMPS	AC PUMPS
Brayton Power Source	**Brayton Power Source**
AC to DC Conversion Efficiency ~ 25%	Power Conditioning Efficiency ~ 85%
Pump Efficiency ~ 16% x .25 = 4%	Pump Efficiency ~ 8.7% x .85 = 7.4%
High Bus Losses	Flow Variable with Voltage for Controlled Brayton Start
Electronics Must Be Radiation Hardened	
Rapid Drop of Efficiency with Low Flow-Low Voltage	
Thermoelectric Module Power Source	
Requires 35 to 40 Modules in Gallery	
Manifolding and Pressure Drop Problems with NaK Lines	
Boot Strap Startup and Shutdown	

ESTIMATED WINDING RELIABILITIES

A. CURRENT DENSITY FACTOR, $F_c = 1 - 2.7 \times 10^{-9} \left[I^2 (1 + 10^{-7} I^2) - 10^6 \right]$

WHERE: F_c APPROACHES 1.0 AT 1000 AMPS/IN^2

0.0 AT 7500 AMPS/IN^2

B. PEAK COIL TEMP. FACTOR, $F_T = 1 - \frac{(T-600)^2}{1.11 \times 10^6}$

WHERE: F_T APPROACHES 1.0 AT 600°F

0.0 AT 1650°F

C. SPLICE FACTOR, F_s = NO. OF SPLICES x HOURS x 10^{-9} F/HR

D. FABRICATION FACTOR, F_F = .996 FOR HELICAL AND .998 FOR LINEAR

WINDING RELIABILITY = $F_c \times F_T \times F_s \times F_F$

WELD RELIABILITY ESTIMATES - NaK & GAS CONTAINMENTS

A. ACTUAL WELD LENGTH OF PARTICULAR AREA

B. WELDING METHOD FACTOR, 1.1 TO 1.3 DEPENDING ON MACHINE VS MANUAL, ETC.

C. STRESS LOADING FACTOR, 1.0 TO 1.3 DEPENDING ON PRIMARY VS SECONDARY LOADS

D. INSPECTION FACTOR, 1.0 TO 1.5

E. GEOMETRY FACTOR, 1.0 TO 1.3 DEPENDING ON DISCONTINUITY, THICKNESS, ETC.

F. WELD FAILURE RATE FACTOR, 1×10^{-10} FAILURES/HOUR/INCH OF WELD

WELD JOINT RELIABILITY = A x B x C x D x E x F

HELICAL INDUCTION PUMP

- ELECTROMAGNETIC/HYDRAULIC DESIGN
- THERMAL ANALYSIS
- STRESS ANALYSIS
- LAYOUT DESIGN

HELICAL PUMP

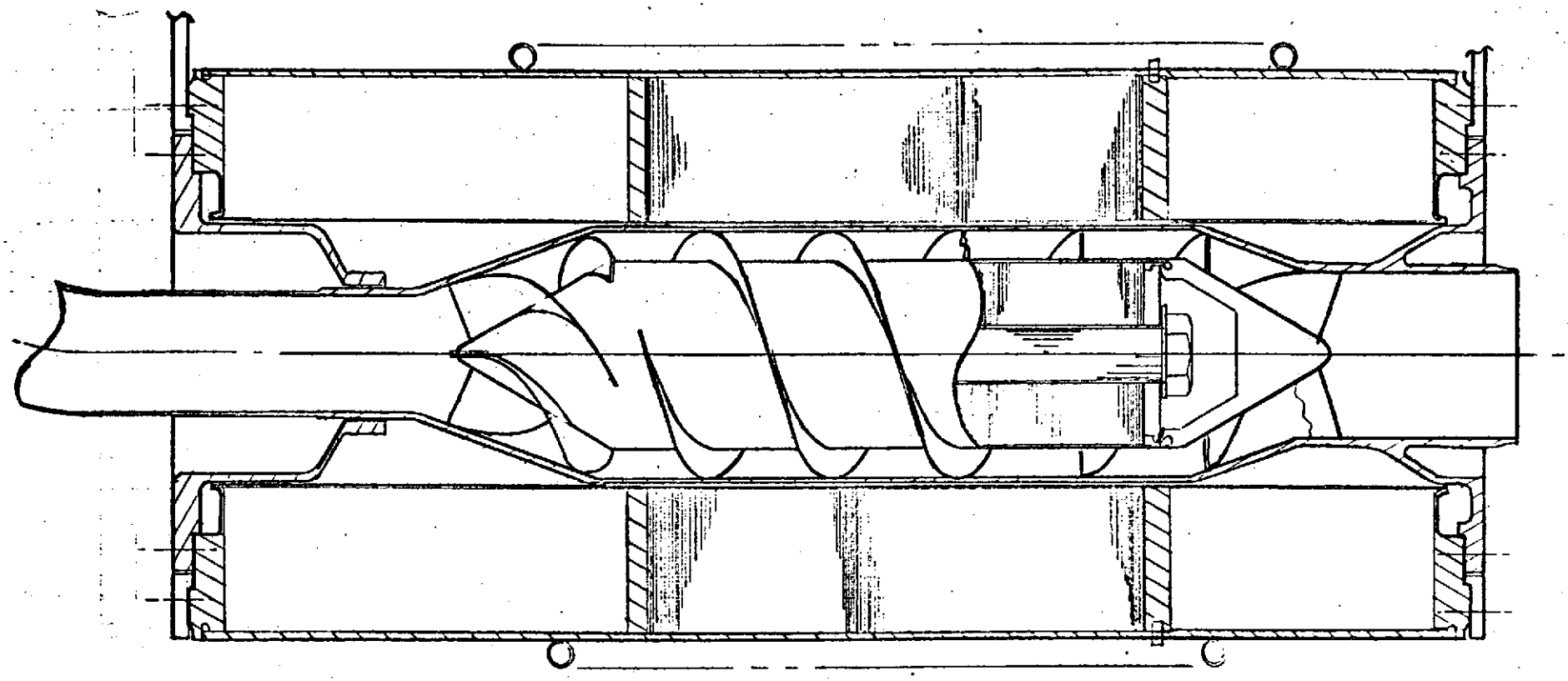

AC INDUCTION PUMP EQUIVALENT CIRCUIT

$$PSI = \frac{2.3\, I^2 R_2 \frac{(1-S)}{S}}{GPM} \text{ (PER PHASE)}$$

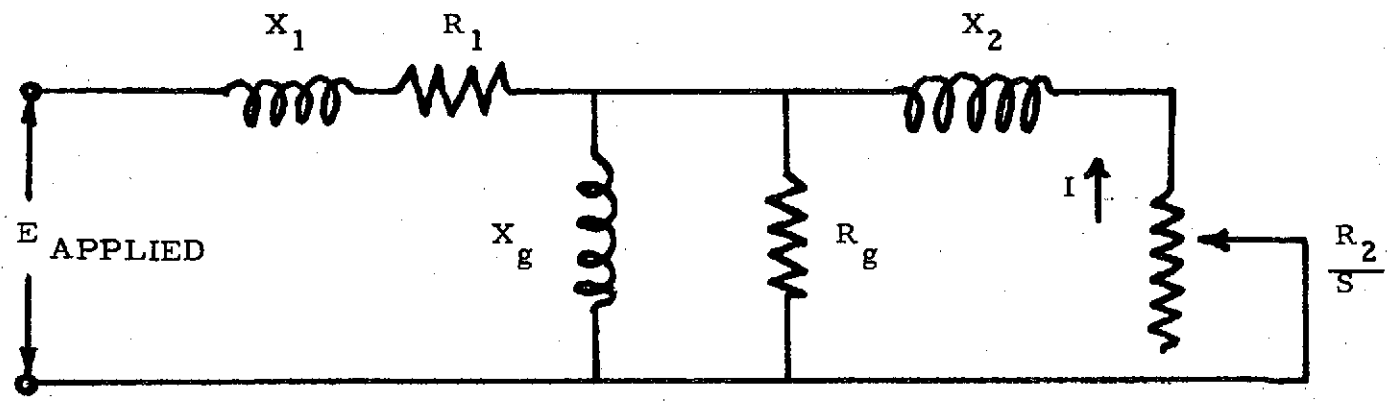

WHERE:

X_1 = STATOR REACTANCE (INCLUDING SLOT AND END TURN REACTANCE)

R_1 = STATOR RESISTANCE

X_g = MAGNETIZING REACTANCE

R_g = LOSS RESISTANCE (CORE, CAN, AND DUCT LOSS)

X_2 = FLUID REACTANCE (INCLUDES INNER DUCT REACTANCE)

R_2 = FLUID RESISTANCE

S = SLIP

I = CURRENT IN FLUID

AC HELICAL INDUCTION PUMP DESIGN ASSUMPTIONS

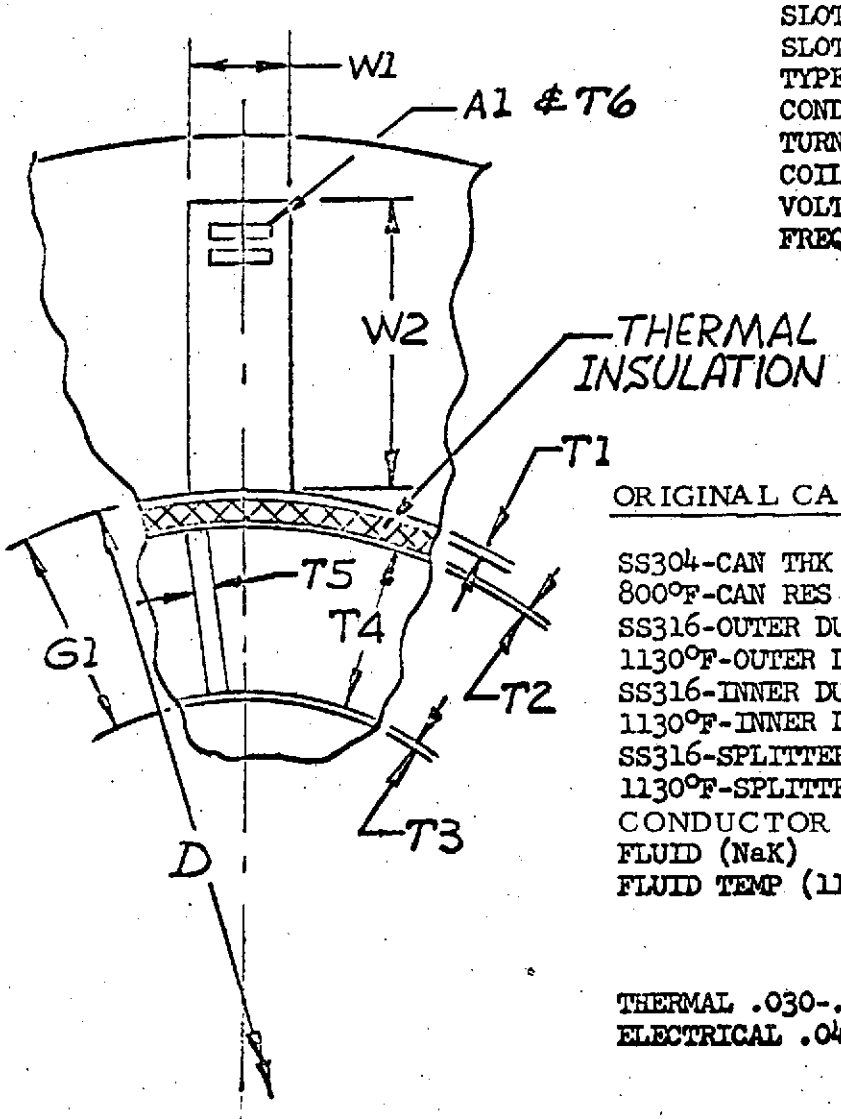

CALCULATION VARIABLES

STATOR ID	D
CORE LENGTH	CL
MAGNETIC GAP	G1
FLUID THICKNESS	T4
HELIX TURNS	F2
NUMBER SLOTS	S1
SLOT WIDTH	W1
SLOT DEPTH	W2
TYPE OF SLOT	W3
CONDUCTOR AREA	A1
TURNS /COIL	T6
COIL THROW	T7
VOLTAGE	V1
FREQUENCY	F1

ORIGINAL CALCULATION CONSTANTS

SS304-CAN THK (.025)	T1
800°F-CAN RES (40.9×10^{-6})	R1
SS316-OUTER DUCT THK (0.030)	T2
1130°F-OUTER DUCT RES(45×10^{-6})	R2
SS316-INNER DUCT THK (.035)	T3
1130°F-INNER DUCT RES (45×10^{-6})	R3
SS316-SPLITTER THK (0.060")	T5
1130°F-SPLITTER RES (45×10^{-6})	R4
CONDUCTOR RES (2.12×10^{-6})	R5
FLUID (NaK)	FL
FLUID TEMP (1130°F)	FLT

INSULATION

THERMAL .030-.035
ELECTRICAL .045 ALUMINA

ELECTRO MAGNETIC/HYDRAULIC CALCULATION CODE
LOGIC 1ST CODE

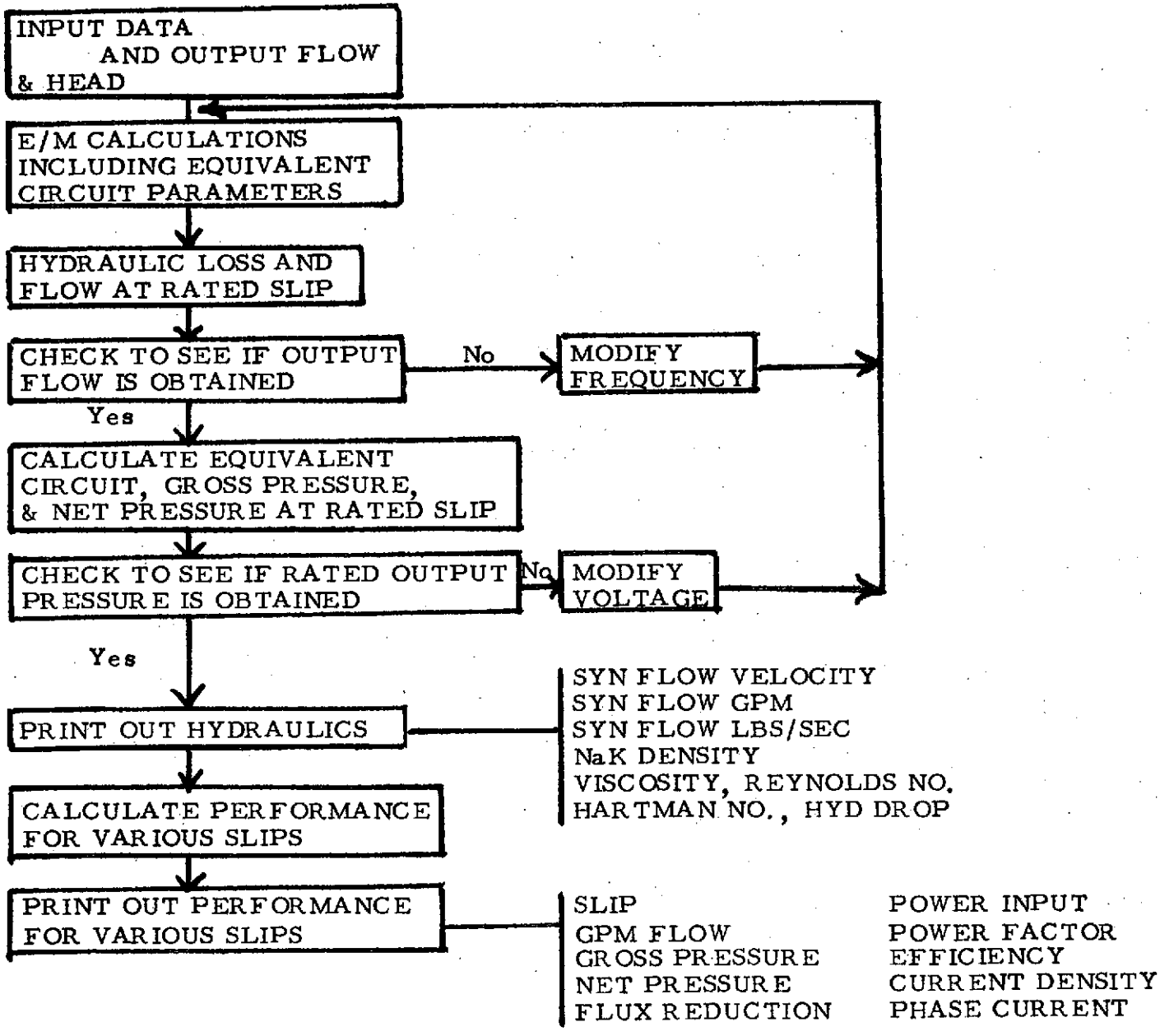

ELECTROMAGNETIC/HYDRAULIC CALCULATION CODE LOGIC 2ND CODE

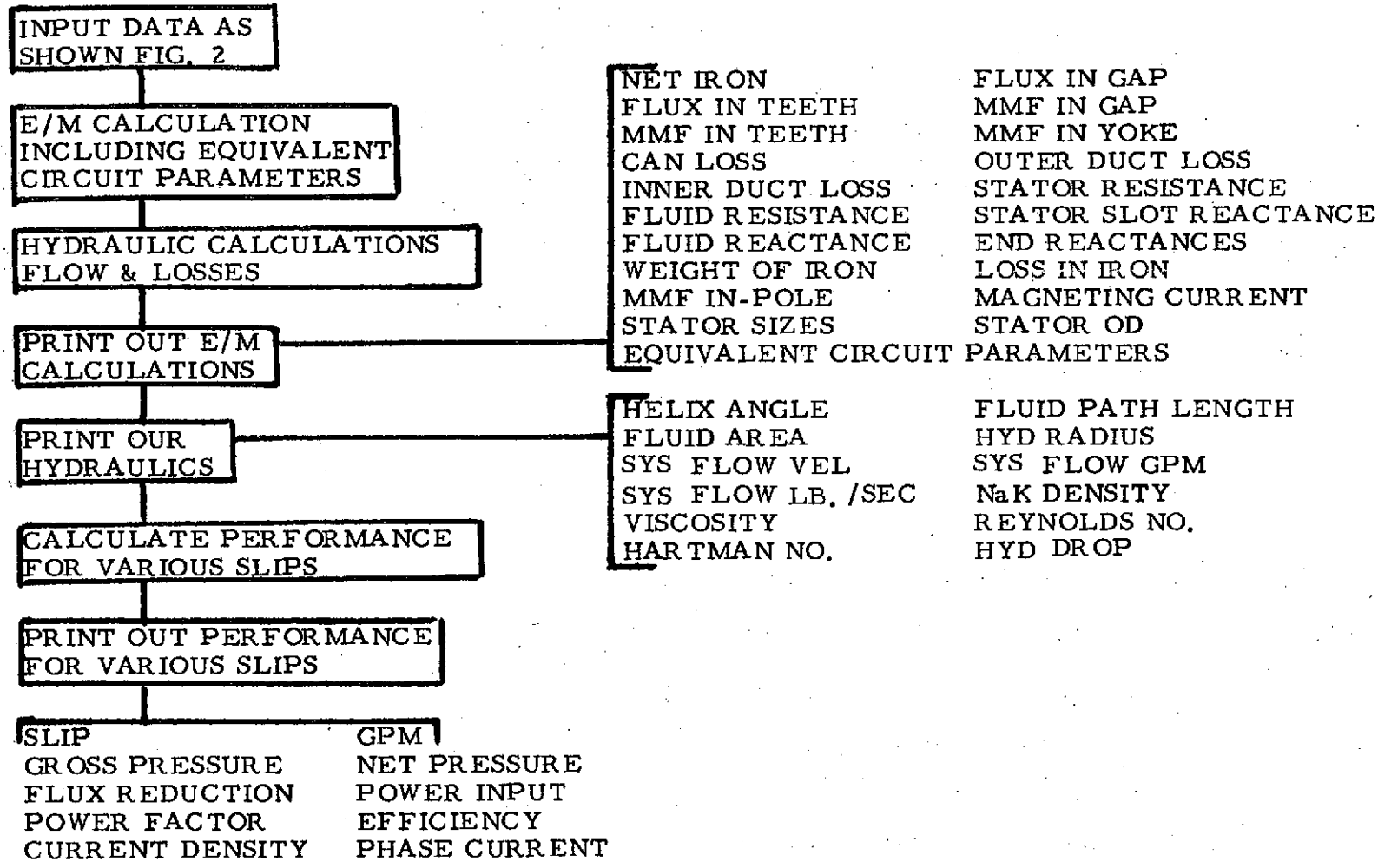

EXPANDED DESIGN MATRIX FOR AC HELICAL PLPA

TWO- AND THREE-PUMP PLPA'S

L \ D	5.0	5.1	5.2	5.3	5.4	5.5	5.9
7	G= .70 G= .840 G= .940 G=1.00	G=.840 G=.940	G=.840	G=.840	G= .840		
7.25		G=.940					
7.5		G=.940					
7.75		G=.940					
8		G=.940	G=.940	G=.940 G=.840 G=.750		G=.940	G=.940
9		G=.940					
10		G=.940	G=.840 G=.740 G=.940	G=.840 G=.740 G=.940 G=.800	G=.640 G=.740 G=,840 G=.940 G=1.040	G=.840	
13			G=.940				
17			G=.940				

POWER INPUT VS CORE LENGTH FOR AC HELICAL INDUCTION 2-PUMP PLPA

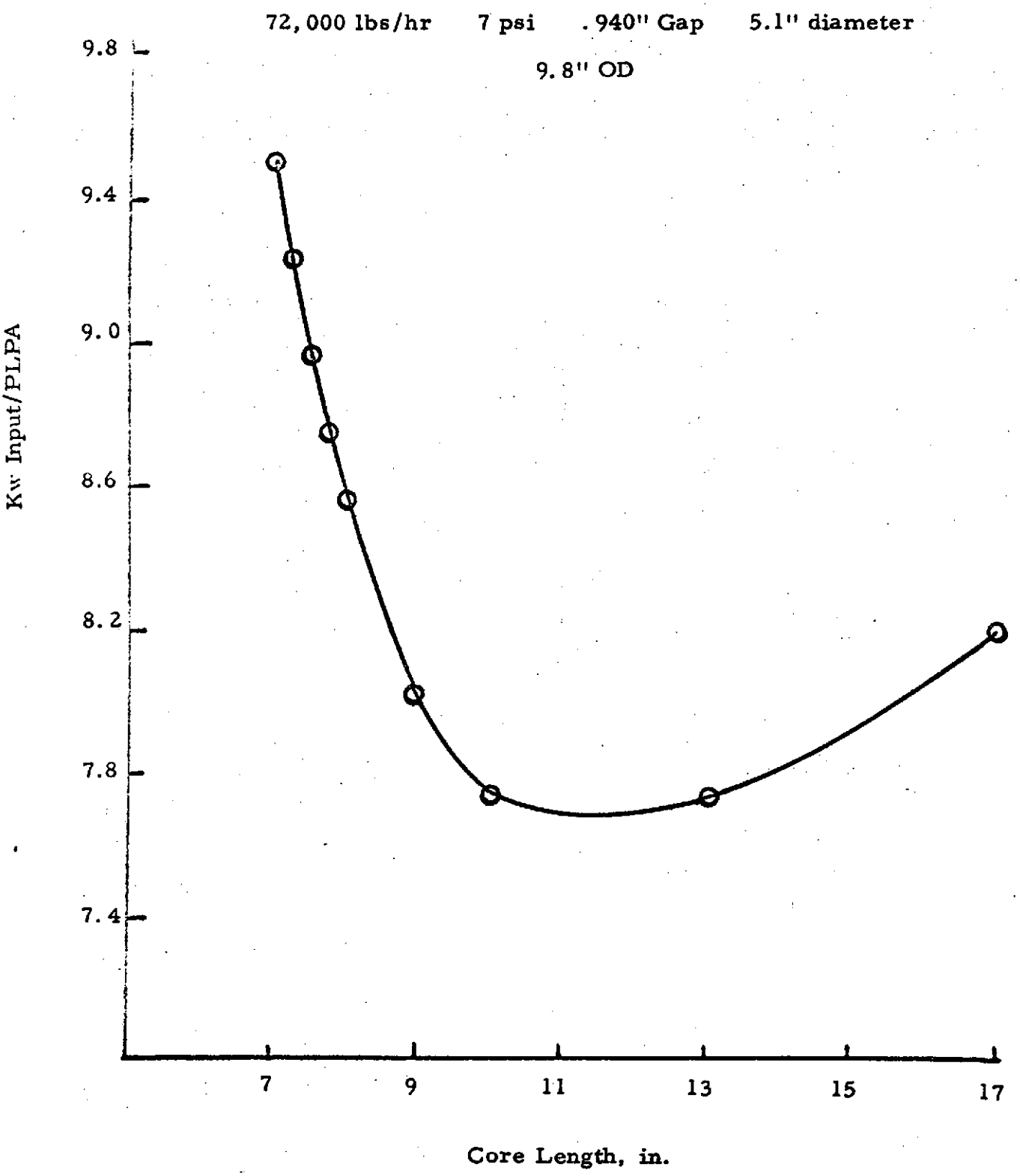

POWER INPUT VS BORE DIAMETER FOR AC HELICAL INDUCTION PUMP PLPA - 10" STACK LENGTH/9.8" OD

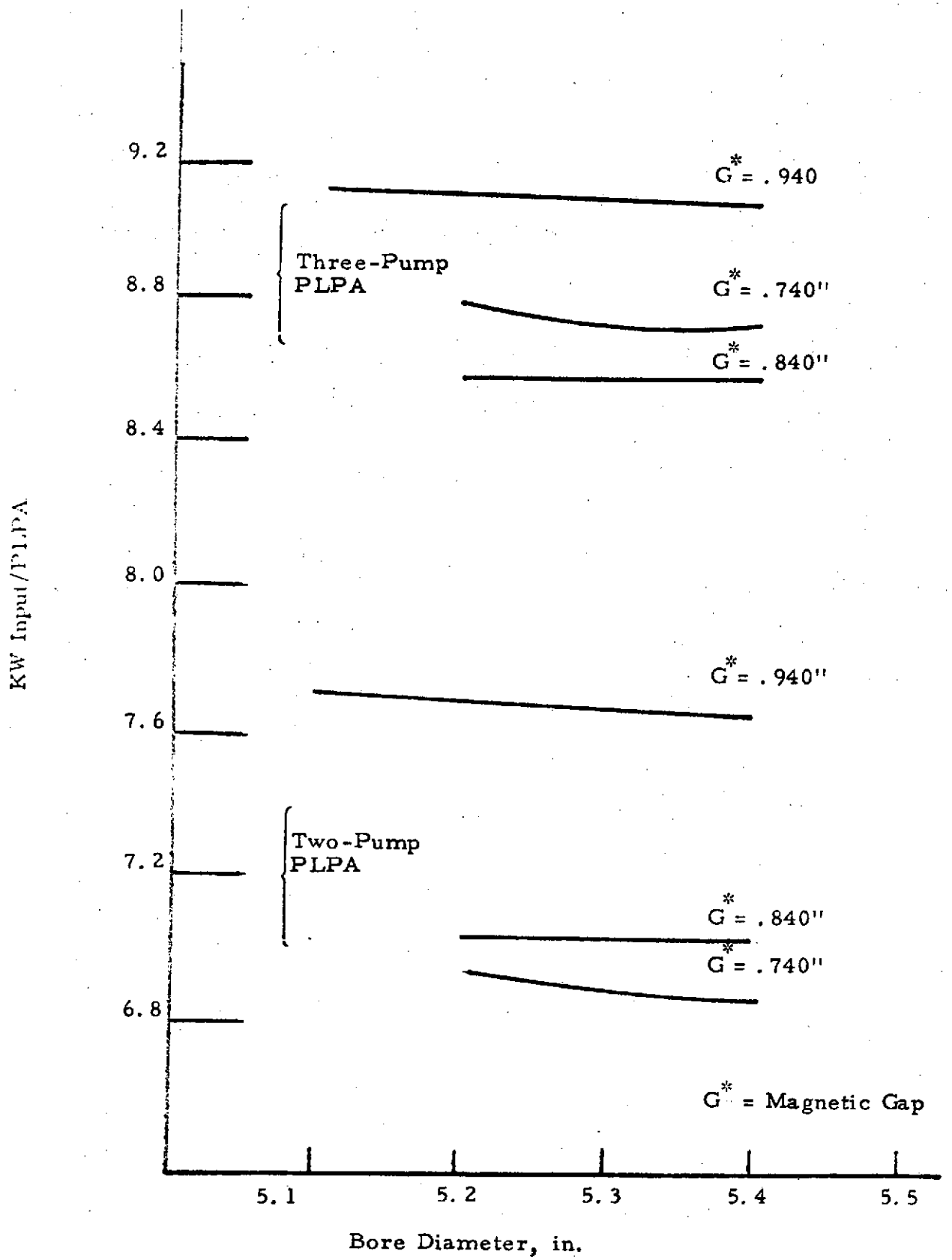

VARIATION OF PUMP PARAMETERS WITH COPPER DEPTH FOR HELICAL TWO-PUMP PLPA

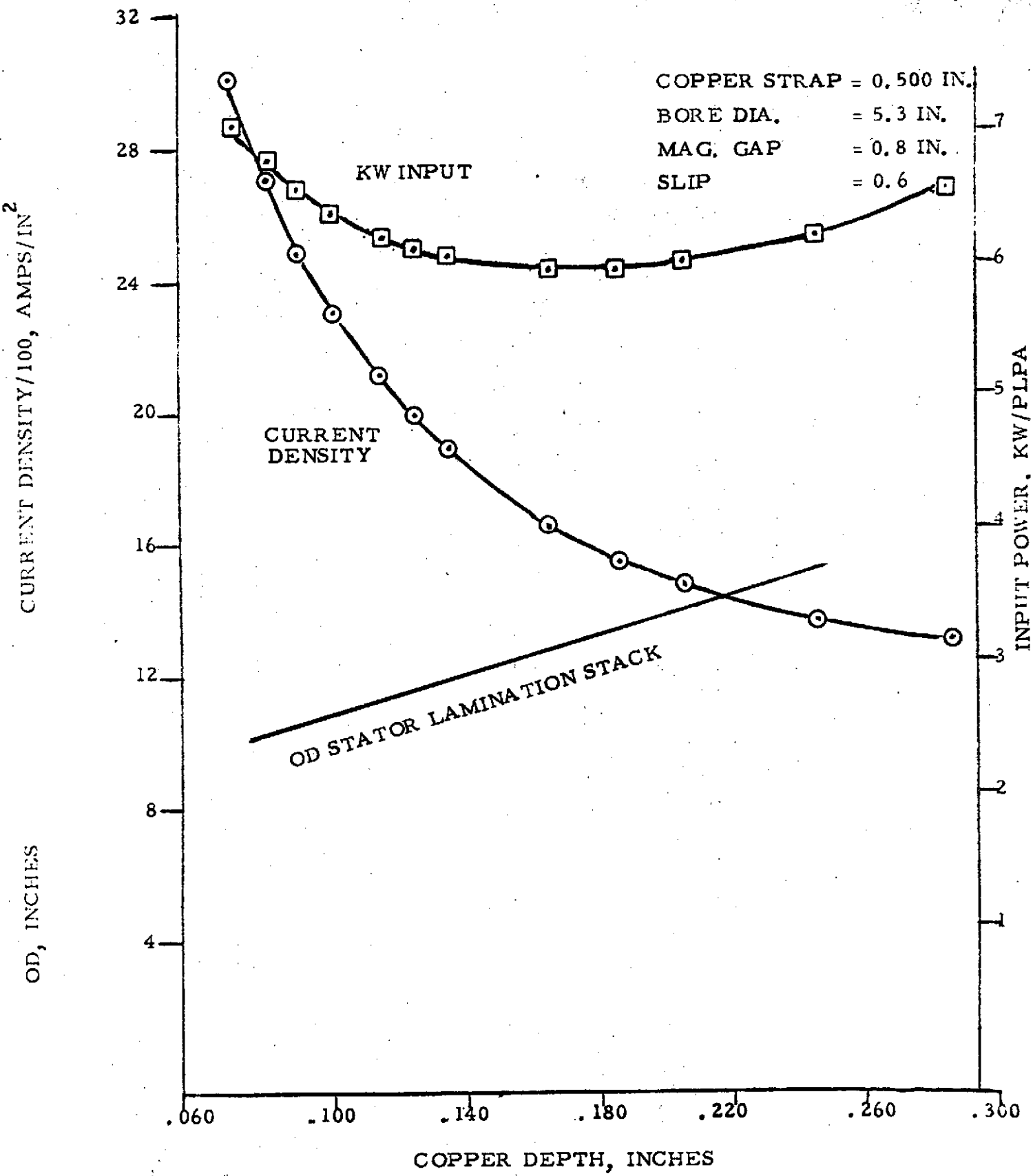

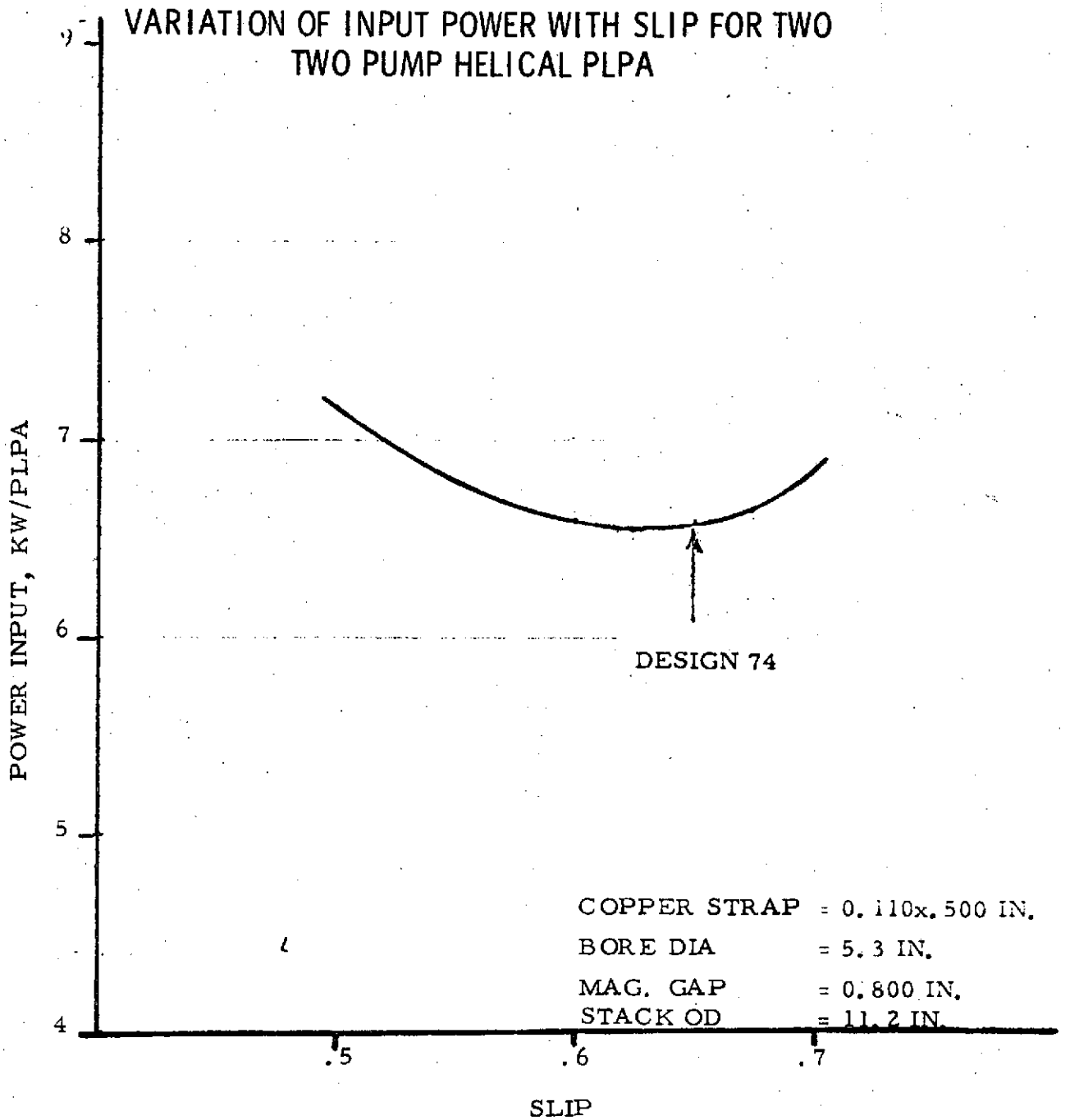
VARIATION OF INPUT POWER WITH SLIP FOR TWO
TWO PUMP HELICAL PLPA
POWER INPUT, KW/PLPA
9
8
7
6
5
4
DESIGN 74
COPPER STRAP = 0.110x.500 IN.
BORE DIA = 5.3 IN.
MAG. GAP = 0.800 IN.
STACK OD = 11.2 IN.
.5
.6
.7
SLIP

DESIGN AND PERFORMANCE SUMMARY FOR TWO-PUMP HELICAL PLPA - DESIGN 74 (Y-CONNECTED)

STACK LENGTH, INCHES	10
STATOR BORE DIA, INCHES	5.3
STATOR OD, INCHES	11.2
MAGNETIC GAP, INCHES	0.8
NO. POLES	2
NO. SLOTS	18
INPUT POWER, KW/PLPA	6.6
CURRENT AMPS/PHASE/WINDING	116
L-L VOLTAGE, VOLTS	43.4
POWER FACTOR	.37
FREQUENCY, HZ	46
PLPA EFFICIENCY, PERCENT	9.1
SLIP	.65

STARTUP CONDITIONS (10% FLOW) FOR TWO-PUMP HELICAL PLPA - DESIGN 74 (Y-CONNECTED)

FREQUENCY, HZ	46
INPUT POWER, KW/WINDING	.071
POWER FACTOR, PERCENT	36.2
CURRENT, AMPS/PHASE/PUMP	42.6
L-L VOLTAGE, VOLTS	5.2

HEAD RISE VS FLOW

RATE FOR TWO-PUMP HELICAL PLPA

DESIGN 74 - 1130°F NaK RATED at 43.4V and 46Hz

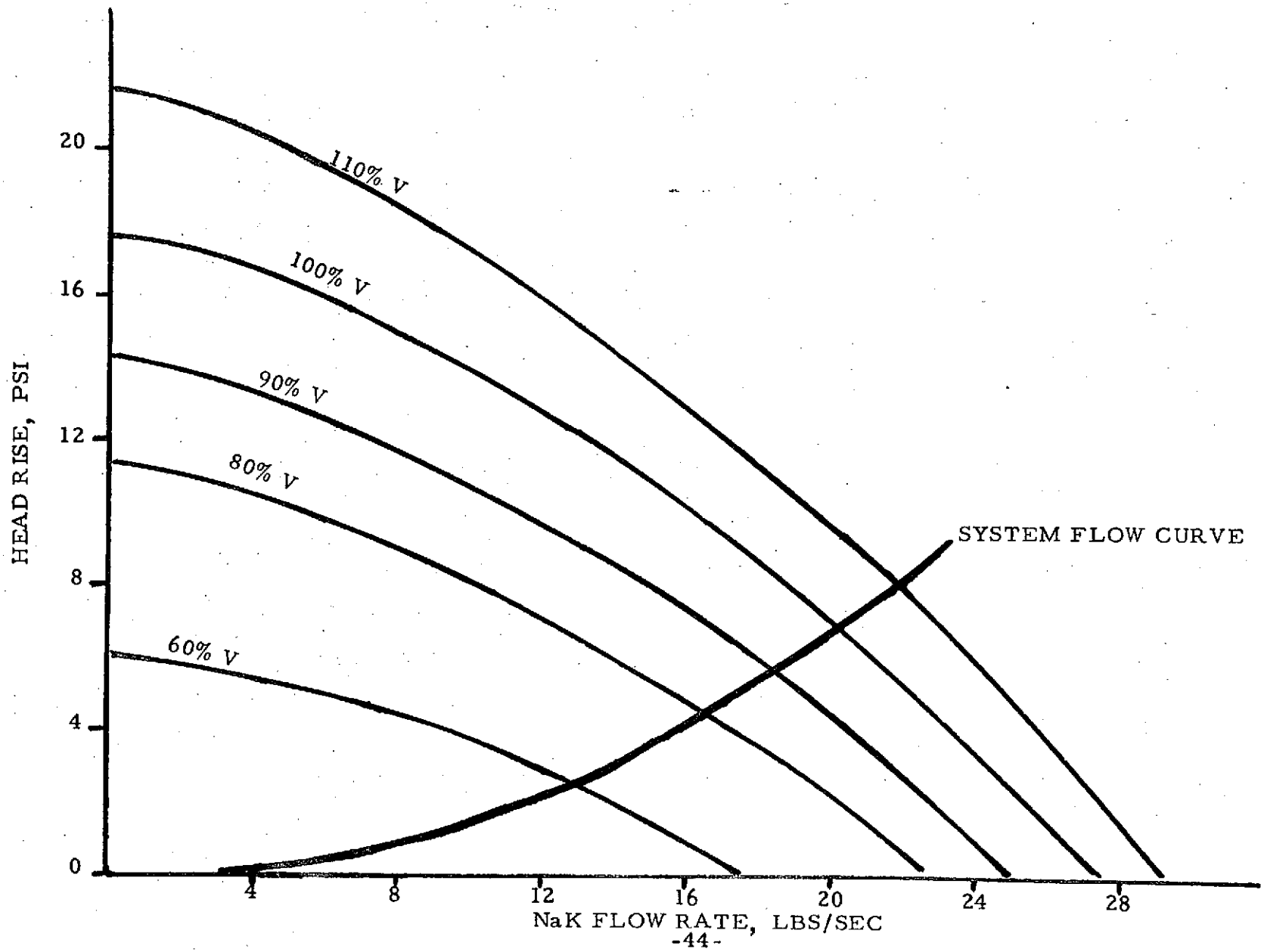

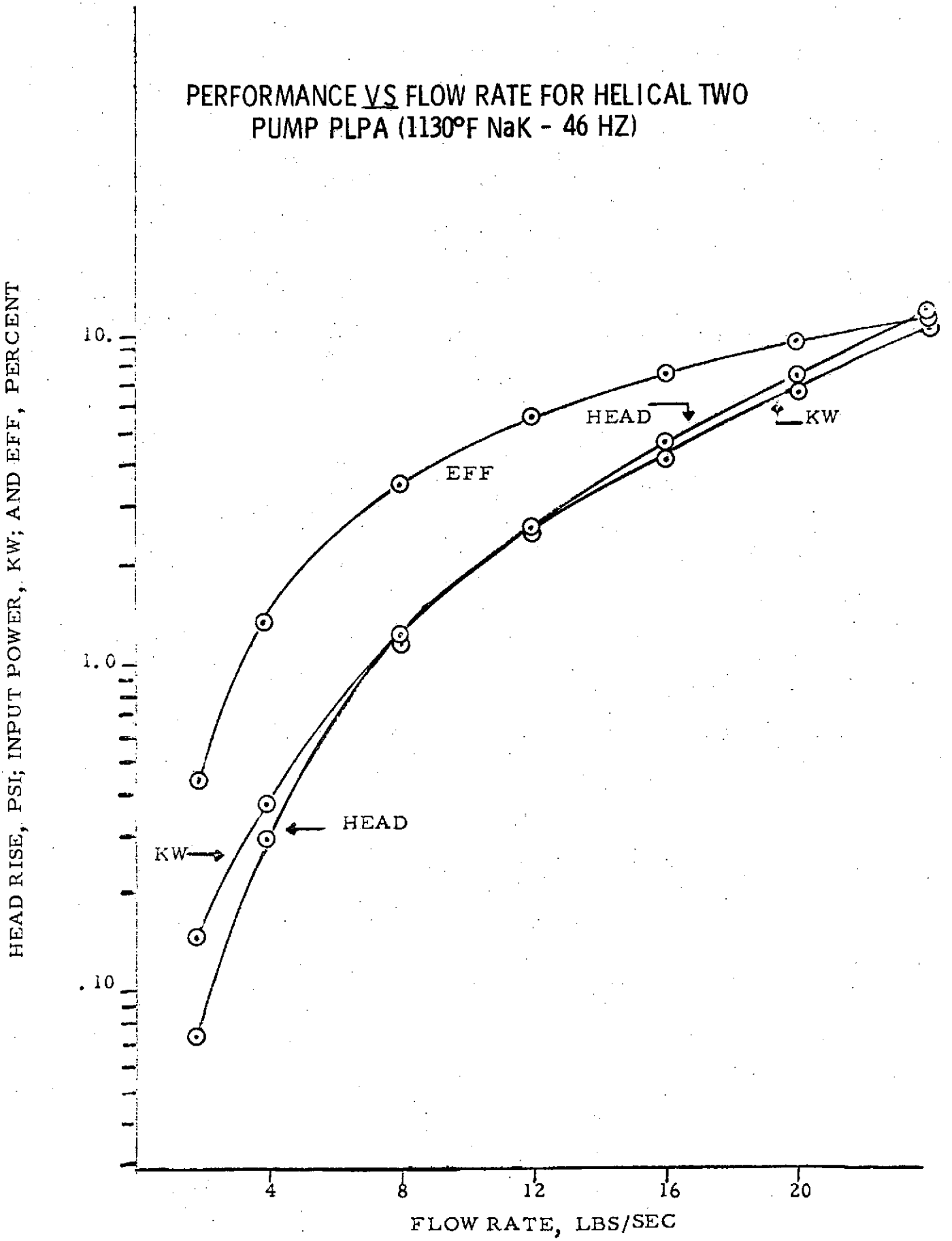
PERFORMANCE VS FLOW RATE FOR HELICAL TWO PUMP PLPA (1130°F NaK - 46 HZ)
HEAD RISE, PSI; INPUT POWER, KW; AND EFF, PERCENT
10.
1.0
.10
EFF
HEAD
KW
HEAD
KW
4
8
12
16
20
FLOW RATE, LBS/SEC

HYDRAULIC LOSS CALCULATIONS

- STRAIGHT SECTIONS

HEAD LOSS, $h_f = \frac{F\ L\ V^2}{D\ 2\ g}$

WHERE:

F = FRICTION FACTOR
L = LENGTH, FT
D = HYDRAULIC DIAMETER, FT
g = GRAVITY CONSTANT, FT/SEC^2
V = FLUID VELOCITY, FT/SEC

- EXPANDING TRANSITION SECTIONS

$$h_f = \frac{F_E\ (V_1 - V_2)^2}{2g}$$

WHERE:

V_1 = INLET VELOCITY, FT/SEC
V_2 = EXIT VELOCITY, FT/SEC
F_E = EXPANSION COEFFICIENT

- CONTRACTING TRANSITION SECTIONS

$$h_f = F_C\ \frac{V^2}{2g}$$

WHERE:

V = EXIT VELOCITY, FT/SEC
F_C = CONTRACTION COEFFICIENT

- 180° BEND SECTIONS & HELIX

$$h_f = \frac{L^1}{D^1}\ \frac{F\ V^2}{2g}$$

WHERE:

$$\frac{L^1}{D^1} = R_T + (N-1)\left[R_L + \frac{R_b}{2}\right]$$

RESISTANCES R_T, R_L, and R_b FROM CRANE CO. TECHNICAL PAPER No. 410

HYDRAULIC PRESSURE LOSS - HELICAL PUMP PLPA

(ΔP IN PSI)

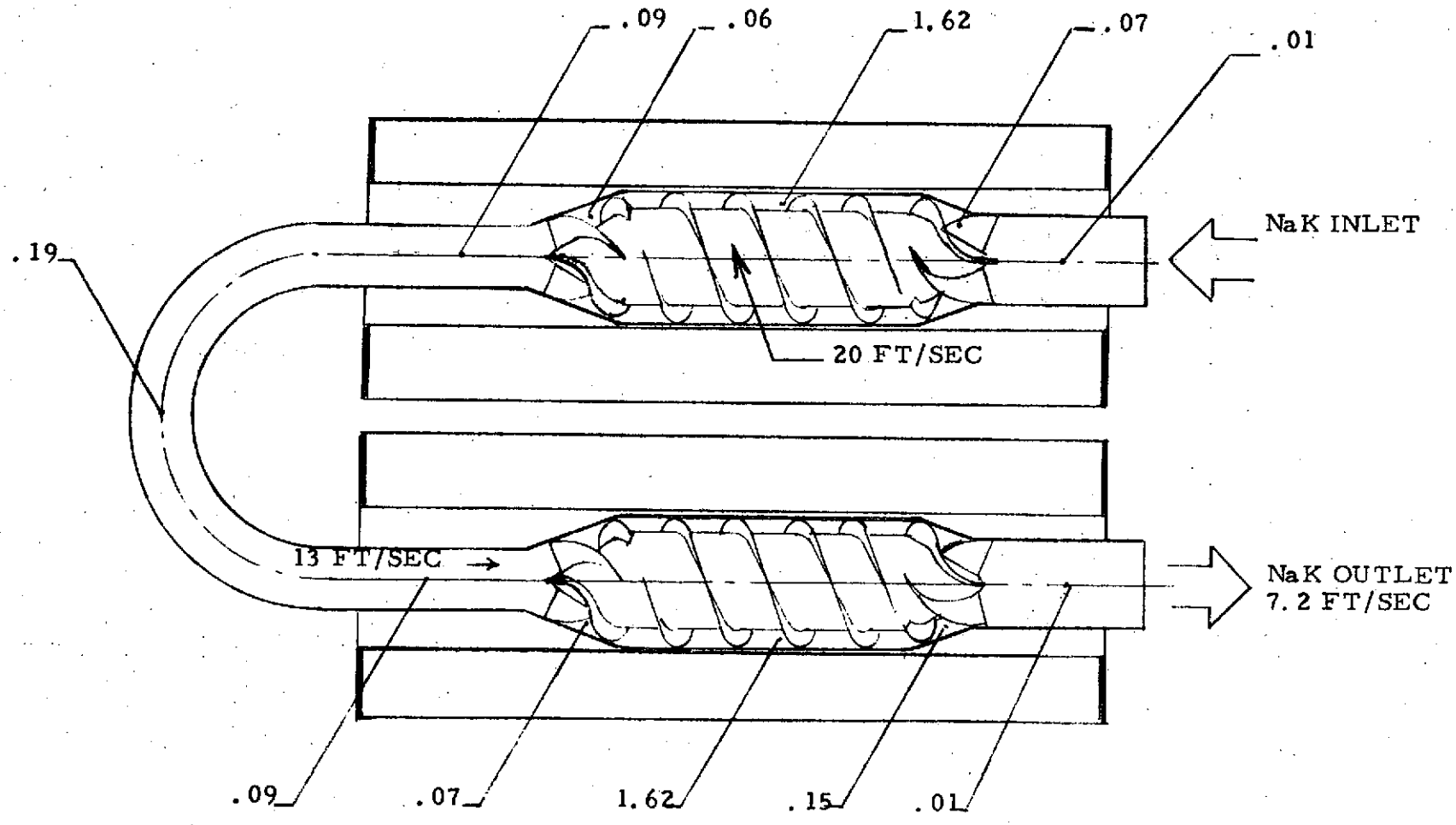

TOTAL ΔP = 3.98 PSI

HELICAL PUMP SLOT - DESIGN 74

(10 INCH STACK)

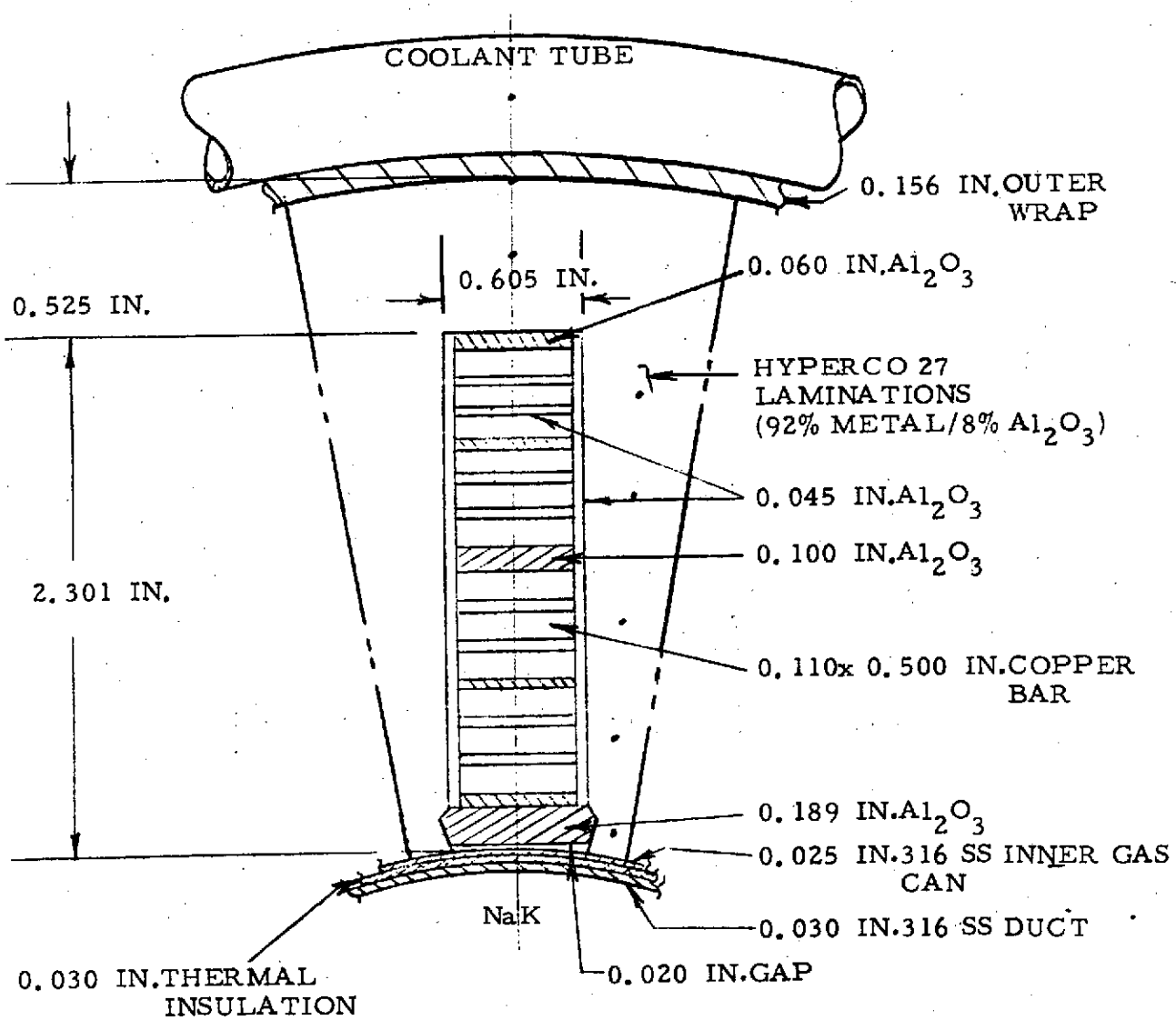

THERMAL ANALYSIS

TOTAL HEAT FLOW ACROSS INTERFACE:

$$Q_{1-2} = \left\{ \frac{A_s}{\frac{G_1}{k_1} + \frac{G_2}{k_2}} + \frac{k_{gas} A_{gas}}{G_1 + G_2} + 4\sigma A_{void} F_{1-2} \bar{T}^3 \right\} (T_1 - T_2)$$

WHERE: A_s = CONTACT AREA

A_{void} = A_{gas} = AREA TAKEN UP BY GAP

G_1 = AVG. GAP HEIGHT OF MATERIAL 1

G_2 = AVG. GAP HEIGHT OF MATERIAL 2

k_1 = THERMAL CONDUCTIVITY OF MATERIAL 1

k_2 = THERMAL CONDUCTIVITY OF MATERIAL 2

k_{gas} = THERMAL CONDUCTIVITY OF GAS IN GAP

σ = STEFAN-BULTZMANN CONSTANT

$F_{1-2} = \left[\frac{1}{\frac{1}{\epsilon_1} + \frac{1}{\epsilon_2} - 1} \right]$ WHERE: ϵ_1 = EMISSIVITY OF MAT. 1

ϵ_2 = EMISSIVITY OF MAT. 2

$\bar{T}$ = MEAN TEMPERATURE OF TWO MATERIALS

ALSO: $Q_{1-2} = h_c A_T (T_1 - T_2)$

THEREFORE: $h_c = \frac{A_s}{A_T} \left\{ \frac{1}{\frac{G_1}{k_1} + \frac{G_2}{k_2}} \right\} + \frac{A_{Gas}}{A_T} \left\{ \frac{k_{gas}}{G_1 + G_2} \right\} + \frac{A_{void}}{A_T} \left\{ 4\sigma F_{1-2} \bar{T}^3 \right\}$

THERMAL CONDUCTANCE ACROSS INTERFACES

$$h_c = \frac{A_s}{A_T}\left\{\frac{1}{\frac{G_1}{k_1} + \frac{G_2}{k_2}}\right\} + \frac{A_g}{A_T}\left\{\frac{k_{gas}}{G_1+G_2}\right\} + \frac{A_g}{A_T}\,(4\sigma F\ \bar{T}^3)$$

$A_T = A_s + A_g$

$G = G_1 + G_2$

k_1 = 8.5 BTU/HR-FT-F Al_2O_3

k_2 = 210 BTU/HR-FT-F Cu

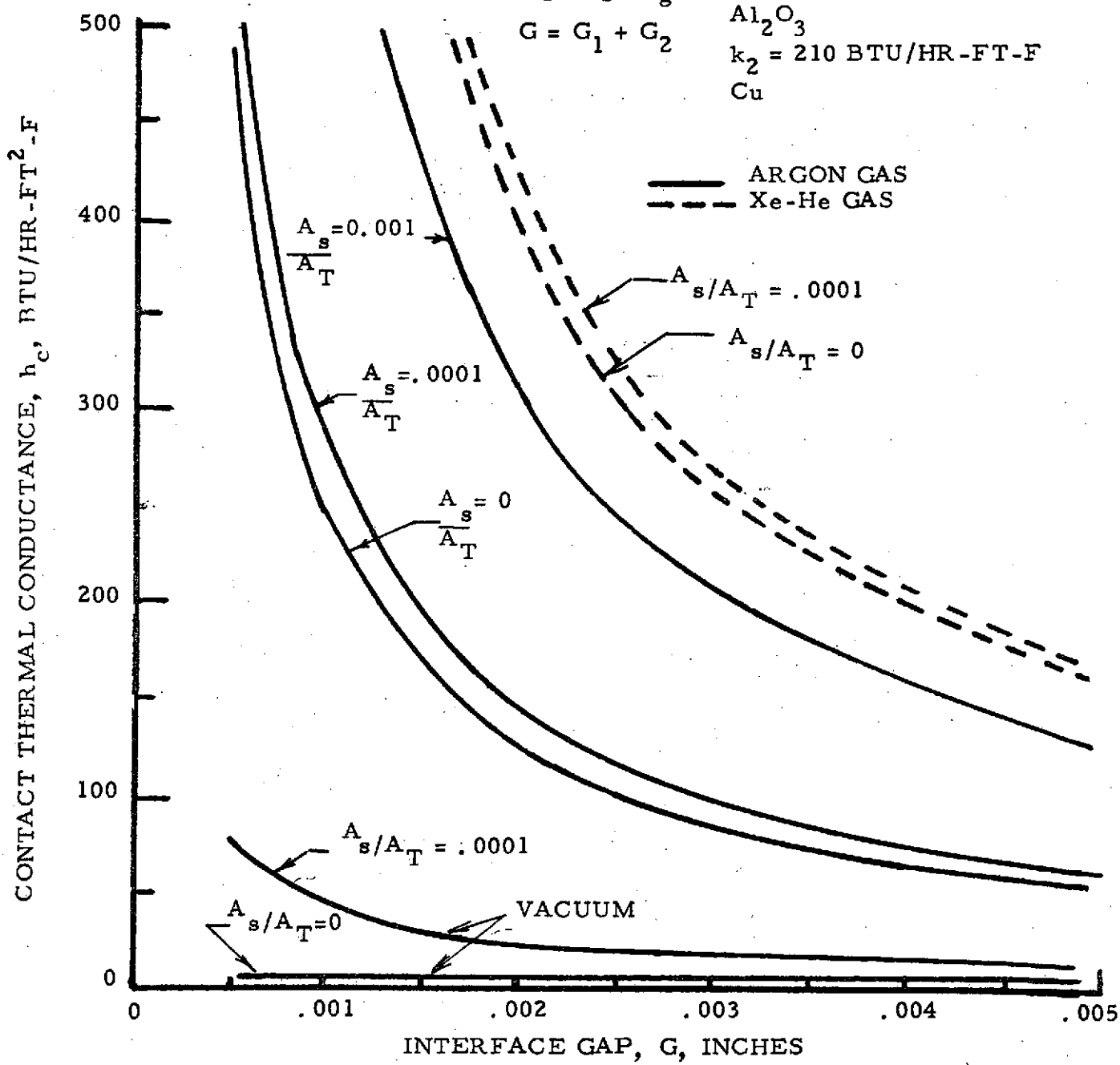

THERMAL ANALYSIS PROPERTY DATA

- THERMAL CONDUCTIVITIES (BTU/HR-FT-F)

S. GLASS	0.60
MICA	0.0683
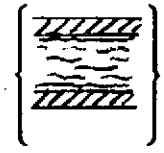 5 MILS S. S. FOIL 20 MILS MICA 5 MILS S. S. FOIL	0.0112
COPPER	210 at 700°F
LAMINATED HYPERCO-27	29.0 at 600°F
ALUMINA	8.0 at 700°F
STAINLESS STEEL	13.0 at 1000°F
ARGON	.0183 at 700°F
HELIUM-XENON MIXTURE (MW=40)	.0635 at 750°F

- EMISSIVITIES

S. GLASS	0.80
COPPER	0.40
ALUMINA	0.40
STEEL	0.50

THERMAL ANALYZER PROGRAM (TAP)

FINITE-DIFFERENCE APPROXIMATION EQUATION:

$$T_{o,\theta + \Delta\theta} = T_{o,\theta} + \frac{\Delta\theta}{C_o}\left[Q + \sum(Y_i\ T_i) - (\sum Y_i)\ T_o\right]$$

WHERE:

C = CAPACITANCE OF NODE, BTU/°F

Q = HEAT GENERATION RATE OF NODE, BTU/SEC

T = TEMPERATURE OF NODE, °F

Y = ADMITTANCE OF A HEAT FLOW PATH, BTU/SEC °F

θ = TIME, SEC

SUBSCRIPTS

o = DESIGNATES A NODE BEING ITERATED

θ = DESIGNATES A VALUE AT TIME θ

$\theta + \Delta\theta$ = DESIGNATES A VALUE AT END OF TIME STEP, $\Delta\theta$

FINITE-DIFFERENCE EQUATION FOR ITERATION OF ZERO-CAPACITANCE NODE IS:

$$T_{o,\theta + \theta\Delta\theta} = \frac{Q + \sum(Y_i\ T_i)}{\sum Y_i}$$

STATOR SLOT NODE DIAGRAM
(HELICAL PUMP, DESIGN #74)

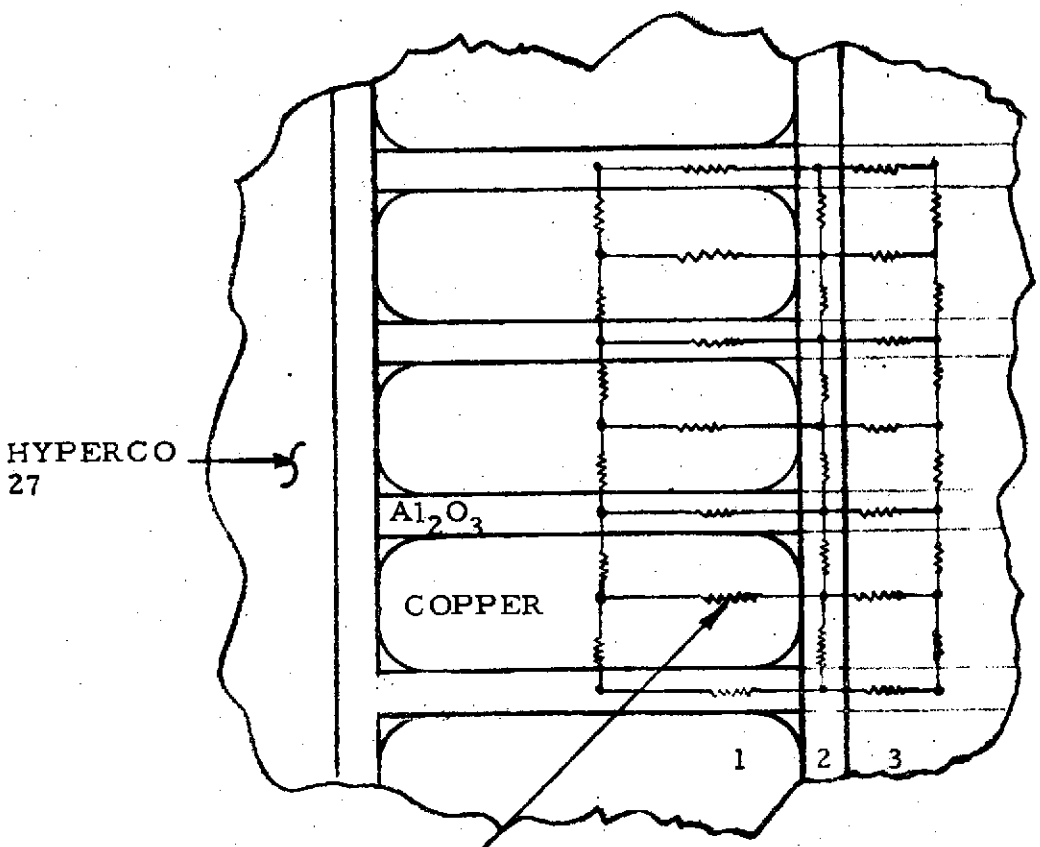

$$Y = \left[\frac{A}{\frac{L_1}{k_1} + \frac{1}{h_c} + \frac{L_2}{k_2}}\right]$$

THERMAL MAP - HELICAL PUMP SLOT WITH ARGON & MICA THERMAL INSULATION (TEMPERATURES IN °F - DESIGN #74)

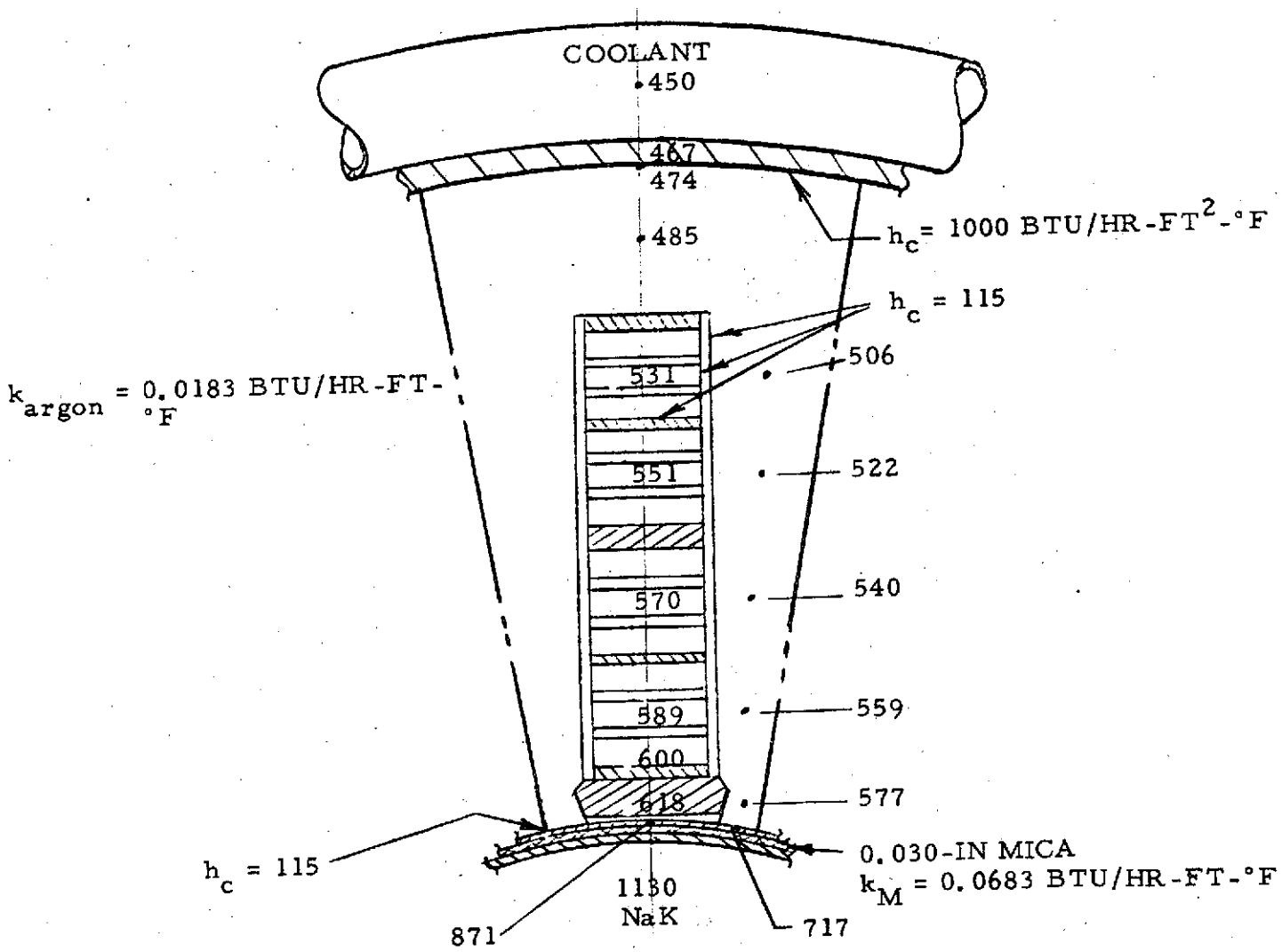

THERMAL MAP - HELICAL PUMP END TURN WITH
ARGON & MICA THERMAL INSULATION
(TEMP. IN °F - DESIGN #74)

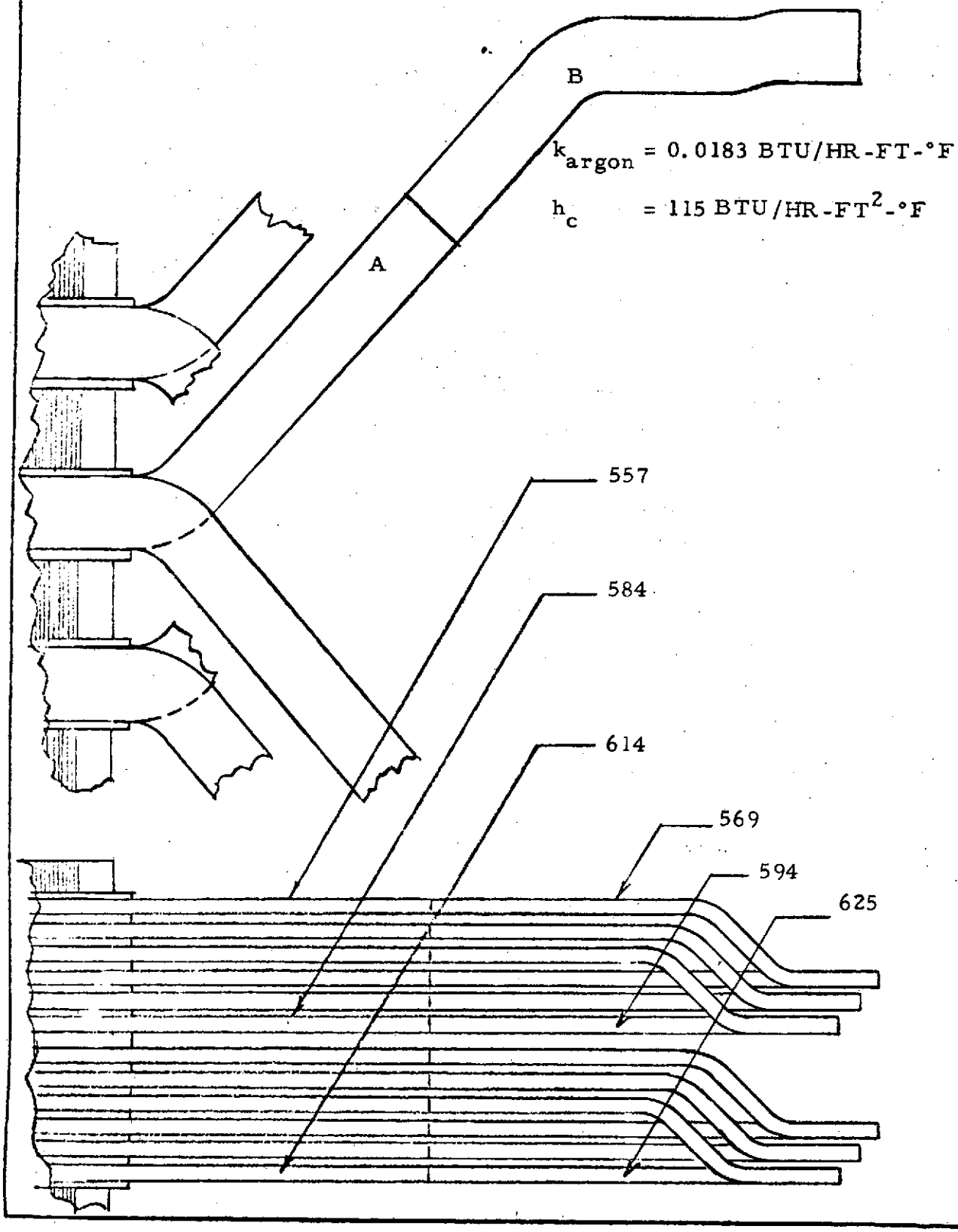

HEAT FLOW MAP - HELICAL PUMP SLOT WITH ARGON GAS & MICA THERMAL INSULATION (HEAT FLOW IN WATTS - DESIGN #74)

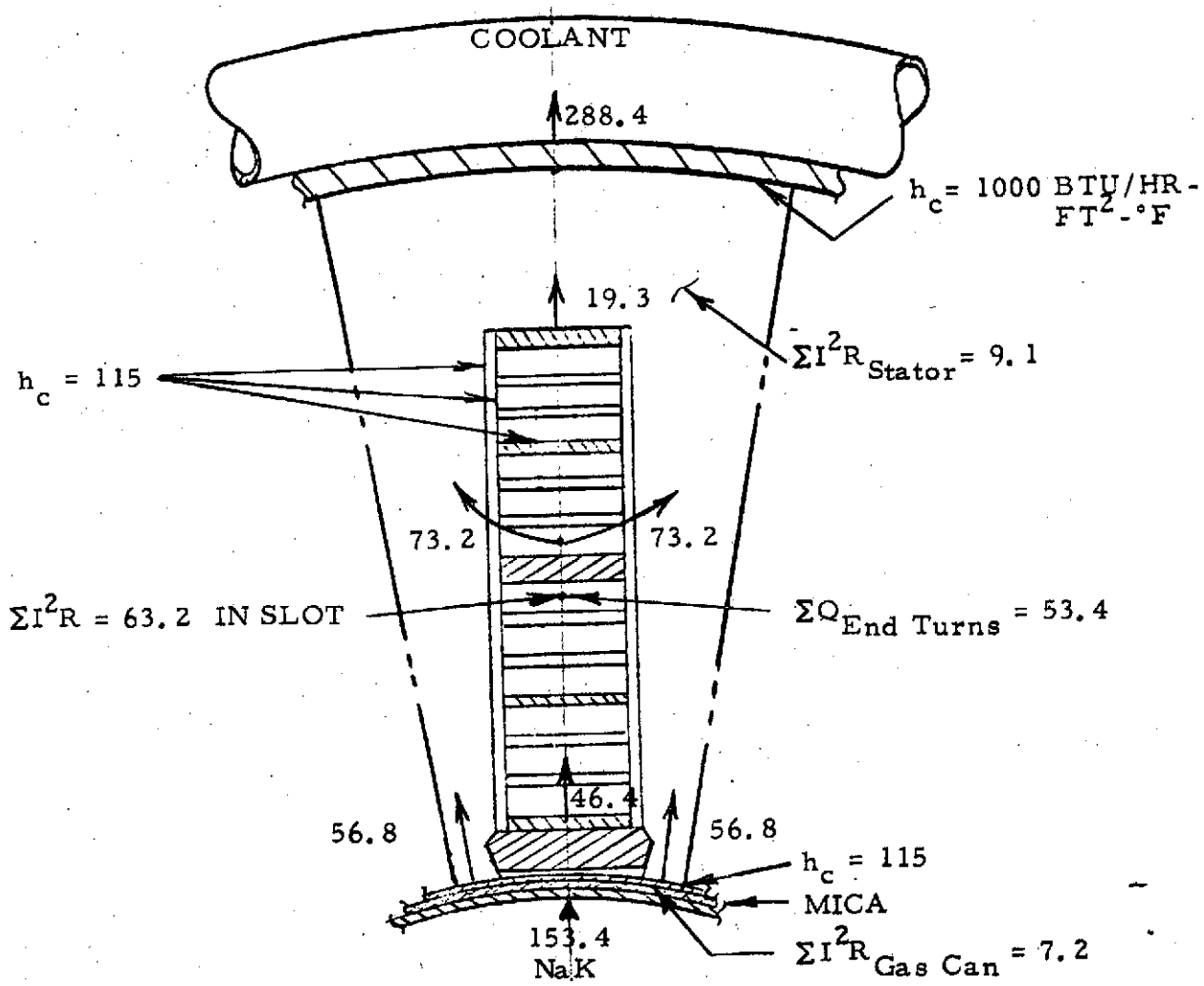

EFFECT OF HIGH THERMAL CONDUCTIVITY GAS ON HELICAL PUMP SLOT TEMPERATURES (TEMPERATURES IN °F - DESIGN #74)

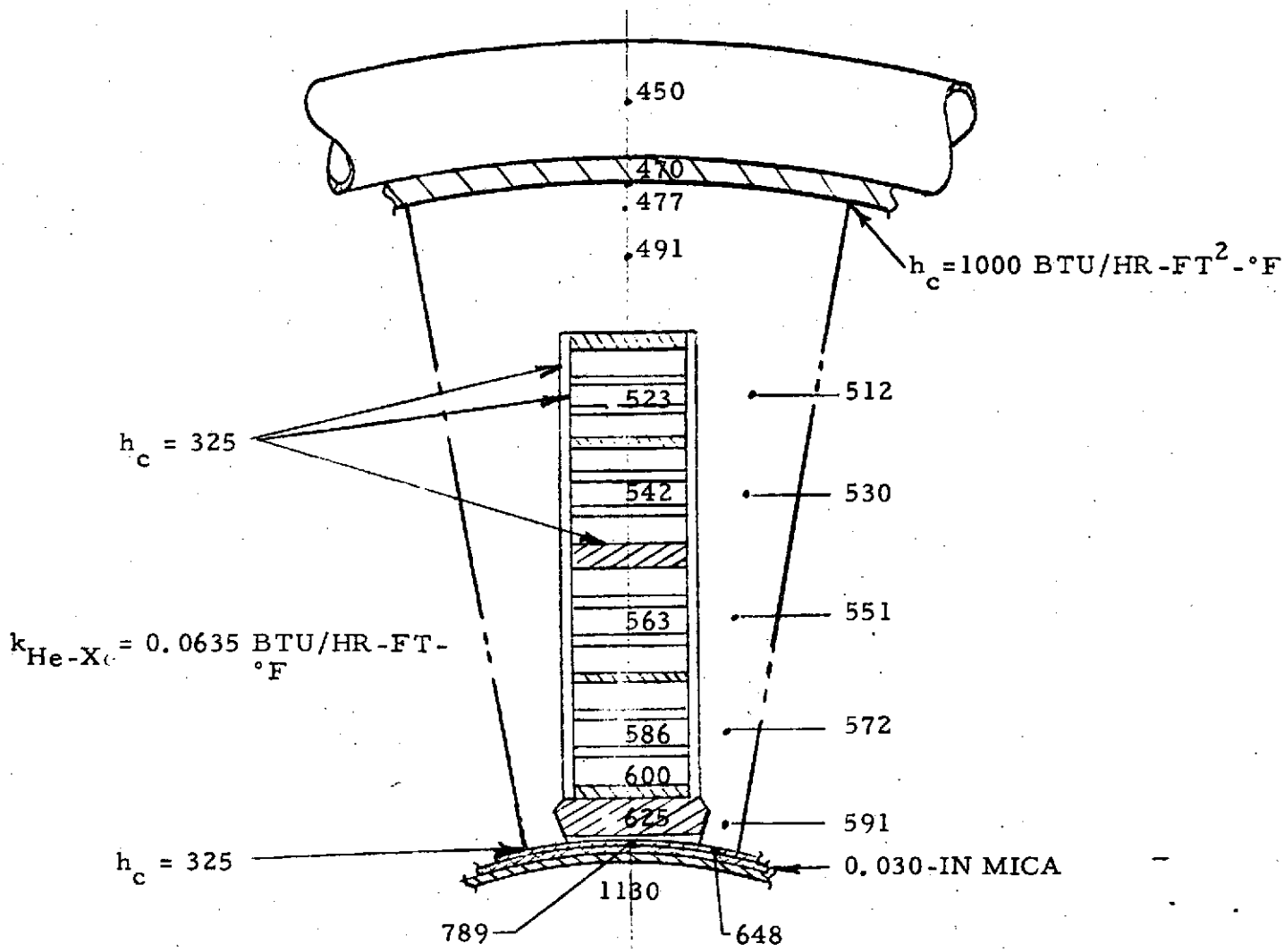

EFFECT OF VACUUM ON HELICAL PUMP SLOT TEMPERATURES

(TEMPERATURES IN °F - DESIGN #74)

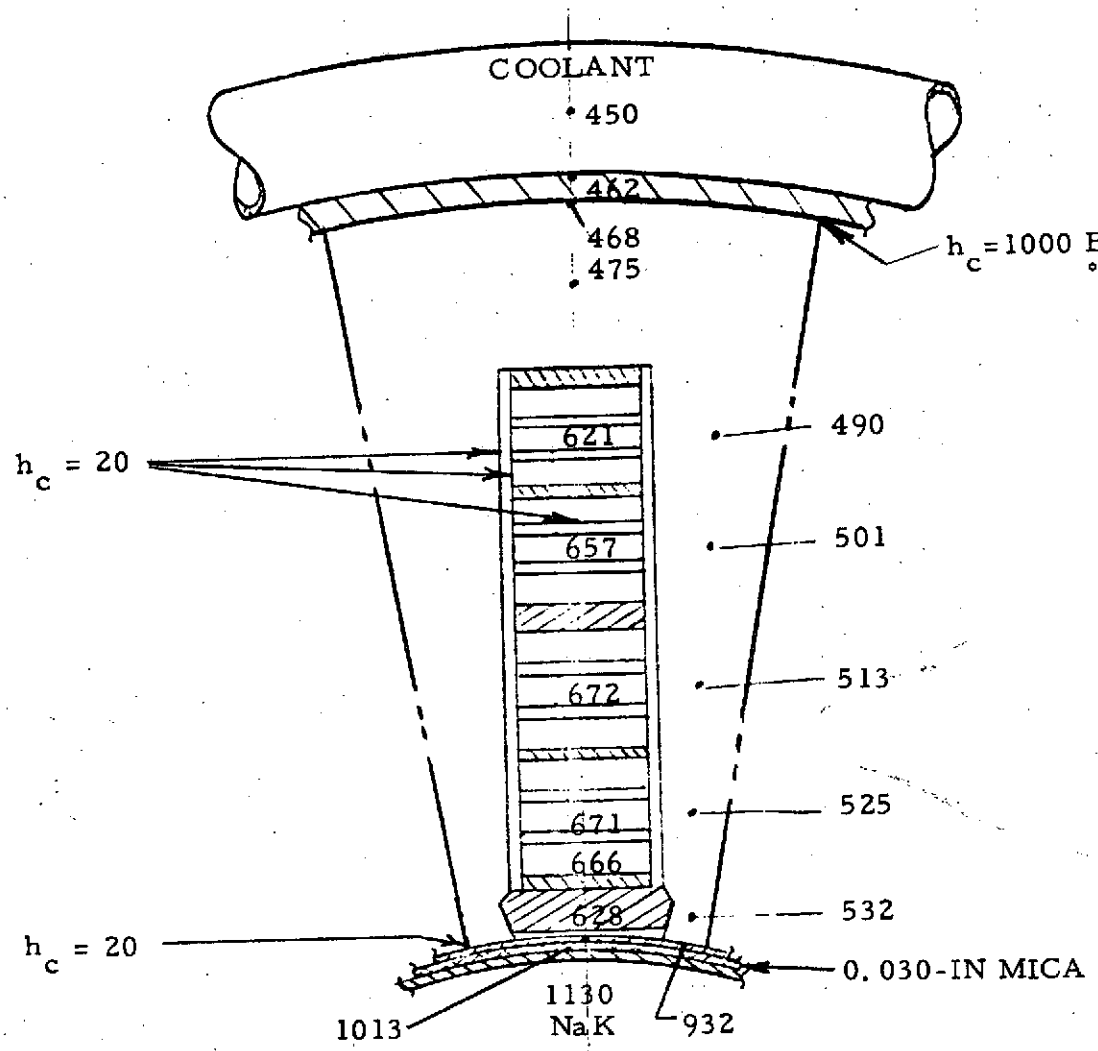

EFFECT OF MULTI-LAYER THERMAL INSULATION
ON HELICAL PUMP SLOT TEMPERATURES
(TEMPERATURES IN °F - DESIGN #74 WITH ARGON GAS)

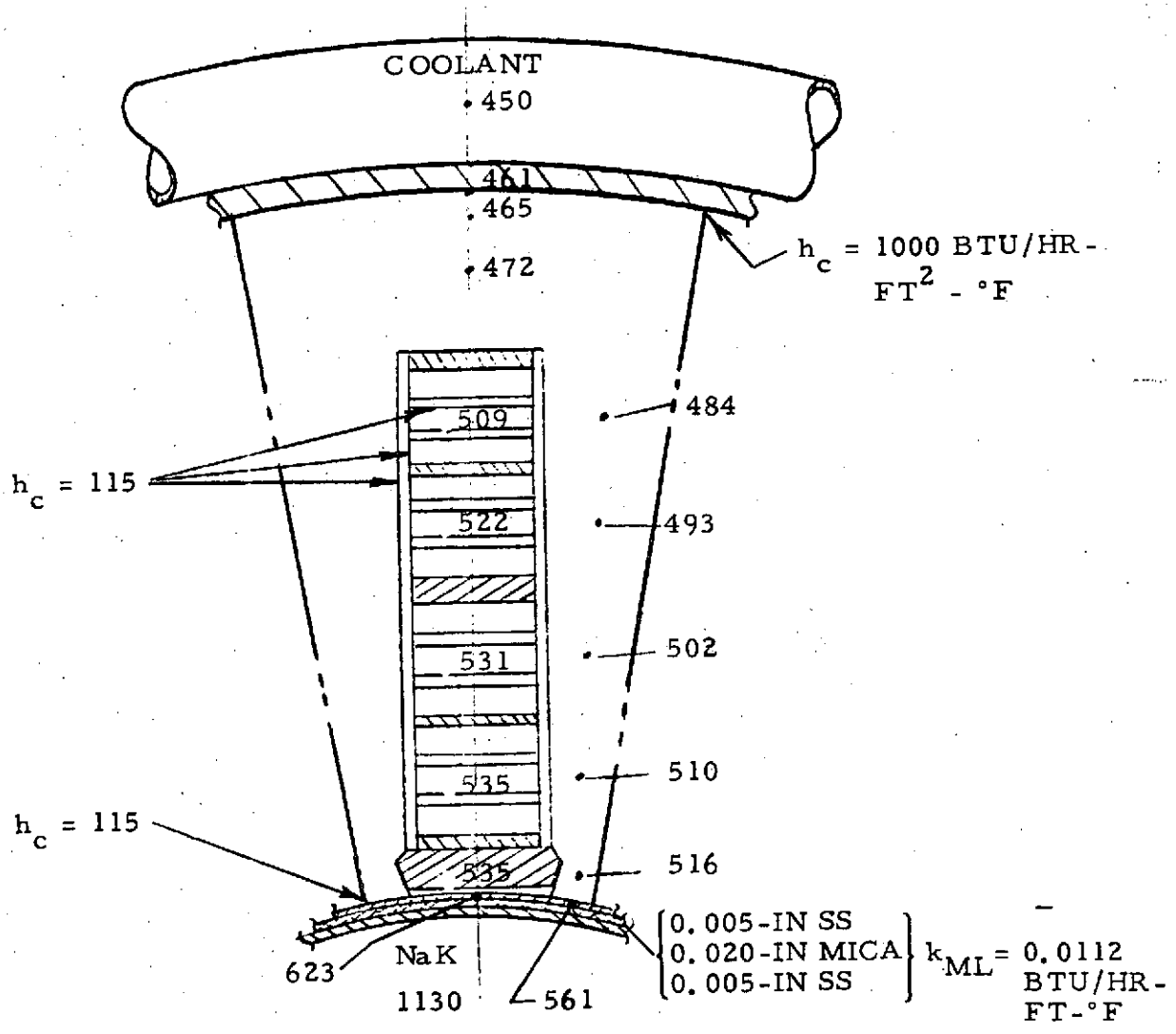

HELICAL PUMP THERMAL ANALYSIS SUMMARY - DESIGN #74

Case No.	Thermal * Insulation Type	Contact Coefficient (BTU/HR-FT^2-F)		Gas In Can	Peak Temperatures (°F)			
					Windings		Stator Can	
		Slot	Stator Can - Teeth Interface		Slot	End Turns	Below Slot	Below Teeth
1	.030" Mica	115	115	Argon	600	625	871	717
2	.030" Mica	325	325	He-Xe	600	616	789	648
3	.030" Mica	20	20	Vacuum	675	721	1013	932
4	.030" Mica S.S. Foil	115	115	Argon	536	580	623	561

* Mica Thermal Conductivity 0.0683 BTU/HR-FT-°F
S.S. /Mica Sandwich Thermal Conductivity 0.0112 BTU/HR-FT-°F

TEMPERATURE & PRESSURE CONTINUOUS OPERATION

(HELICAL PUMP)

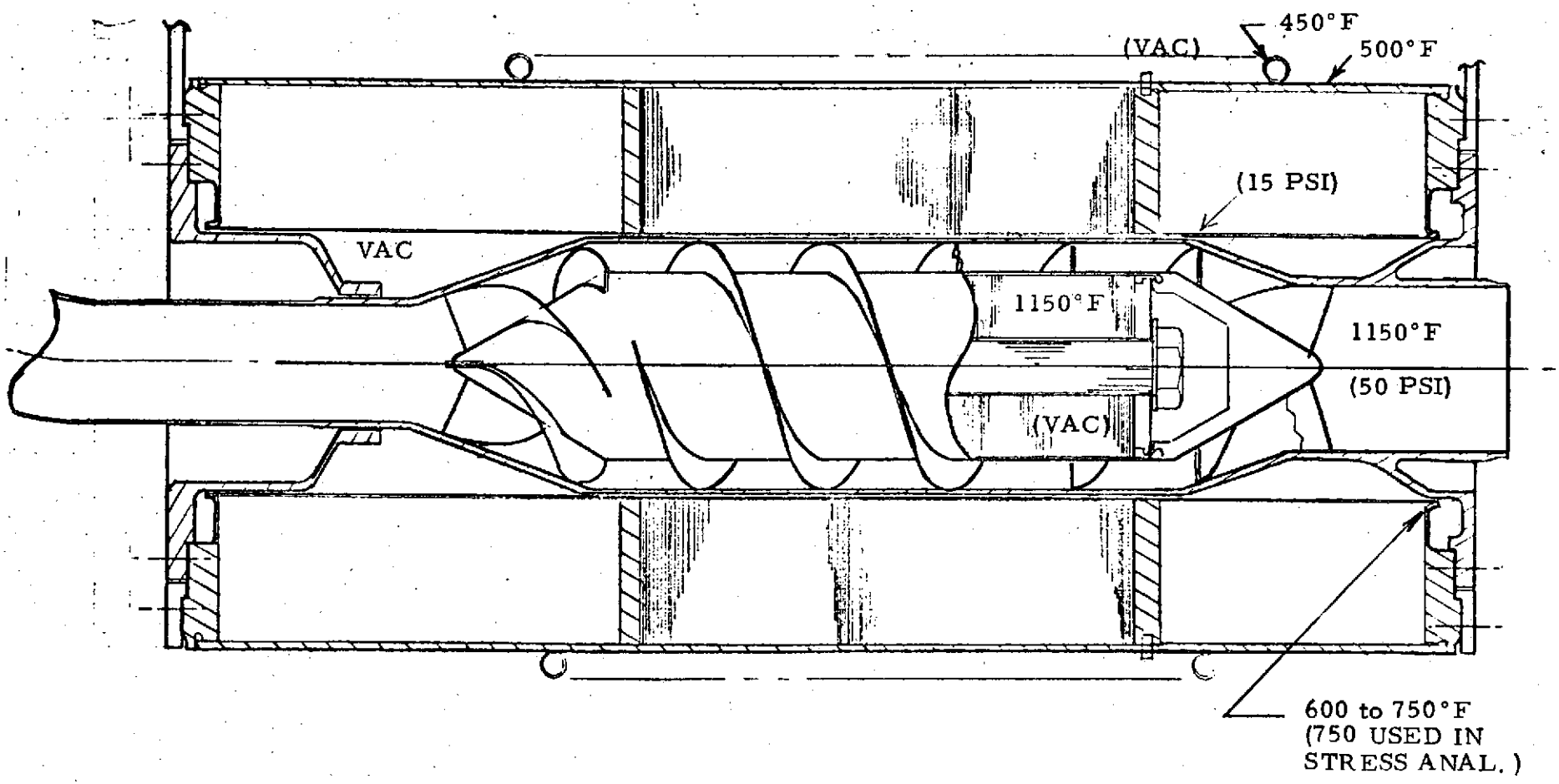

TEMPERATURE & PRESSURE - NaK FILL & DRAIN

(HELICAL PUMP)

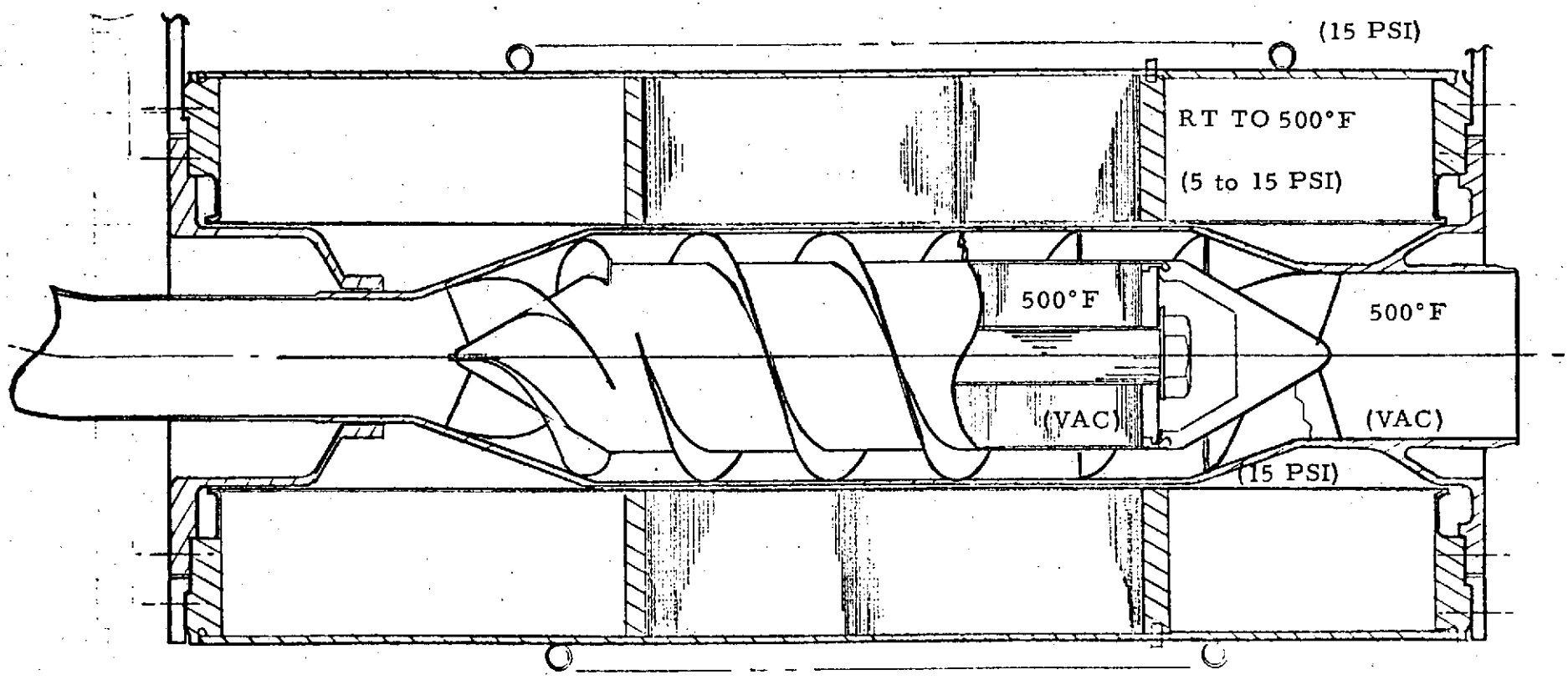

TEMPERATURE & PRESSURE - SHORT TERM OPERATION (100 HRS)

(HELICAL PUMP)

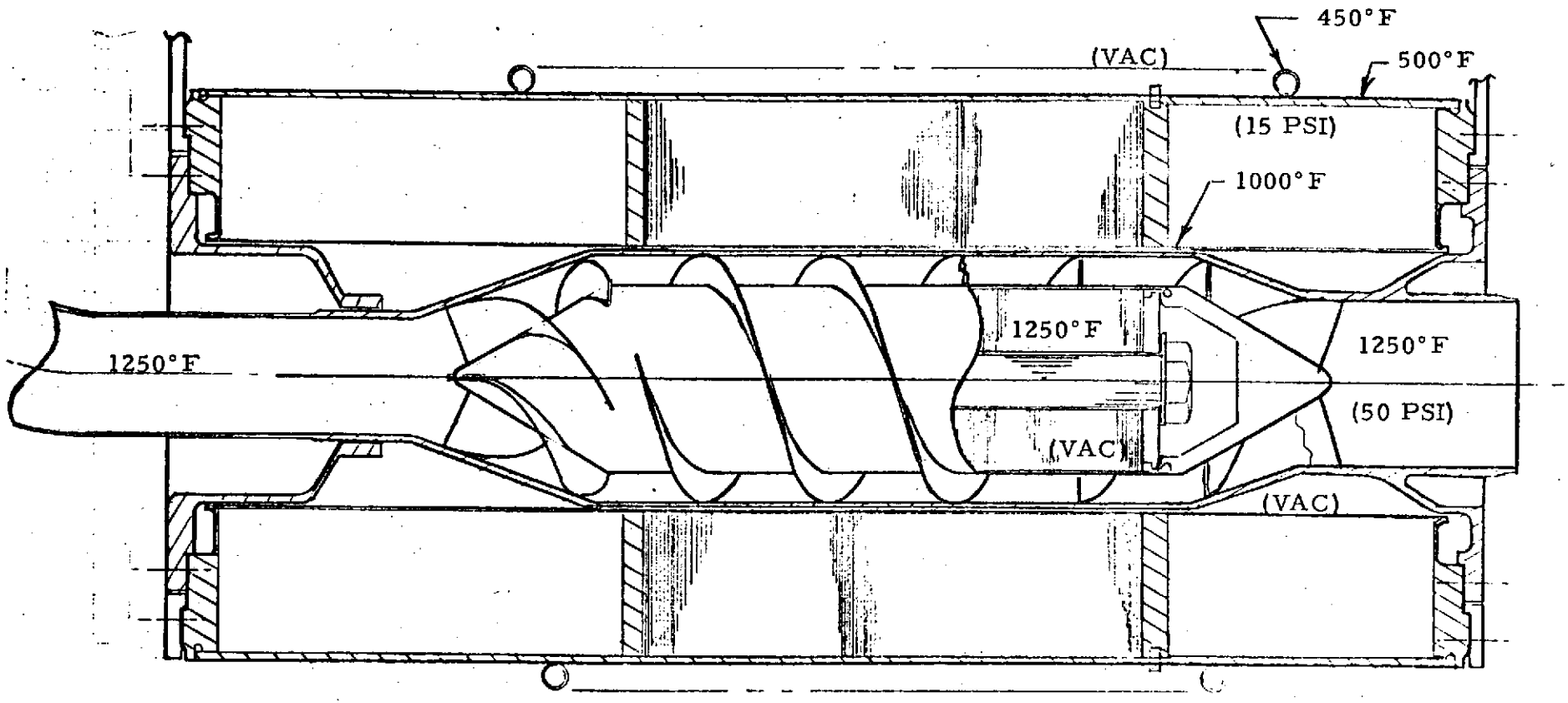

HELICAL PUMP DUCT & THROAT DESIGN MARGINS

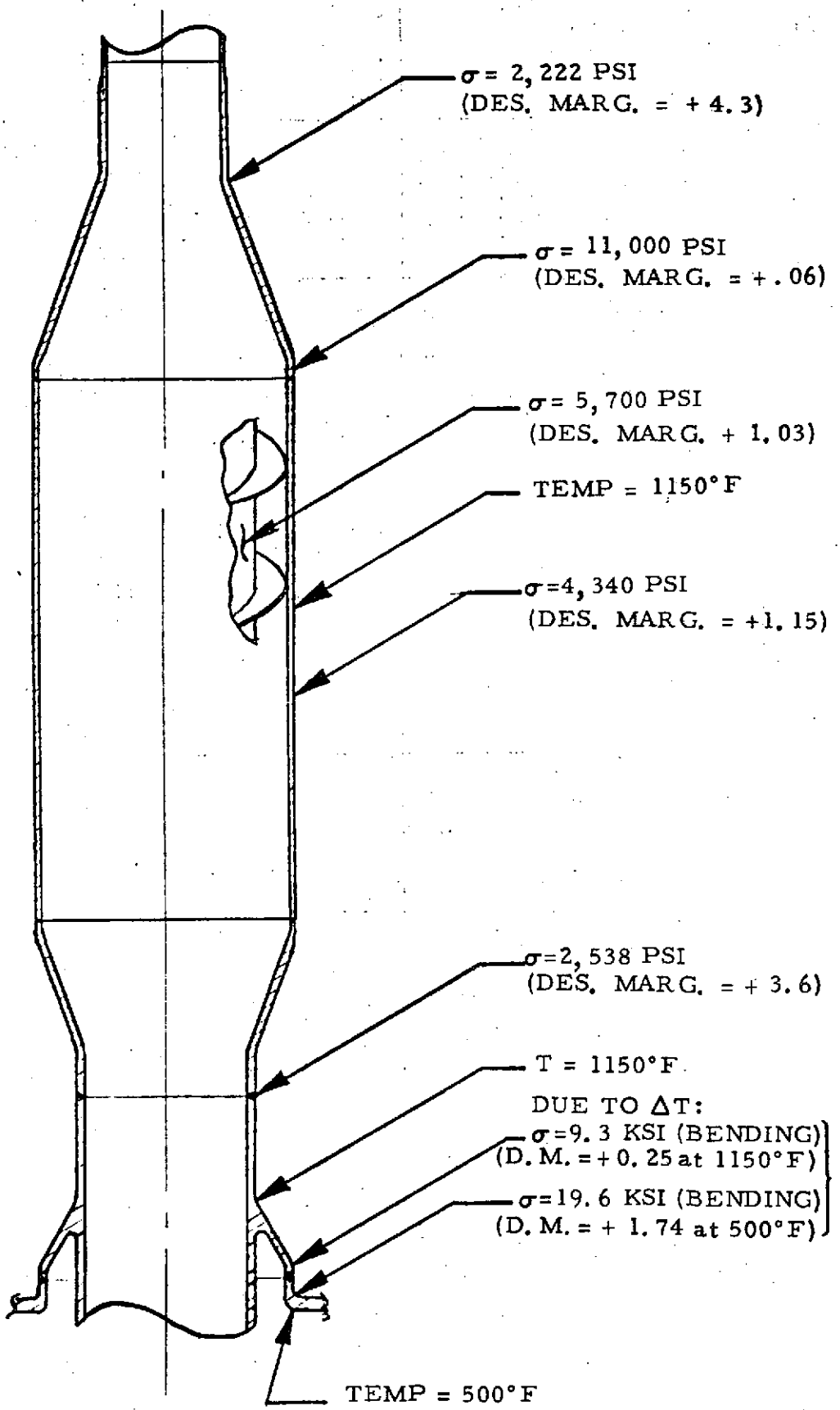

HELICAL PUMP DUCT LOOP DESIGN STRESS

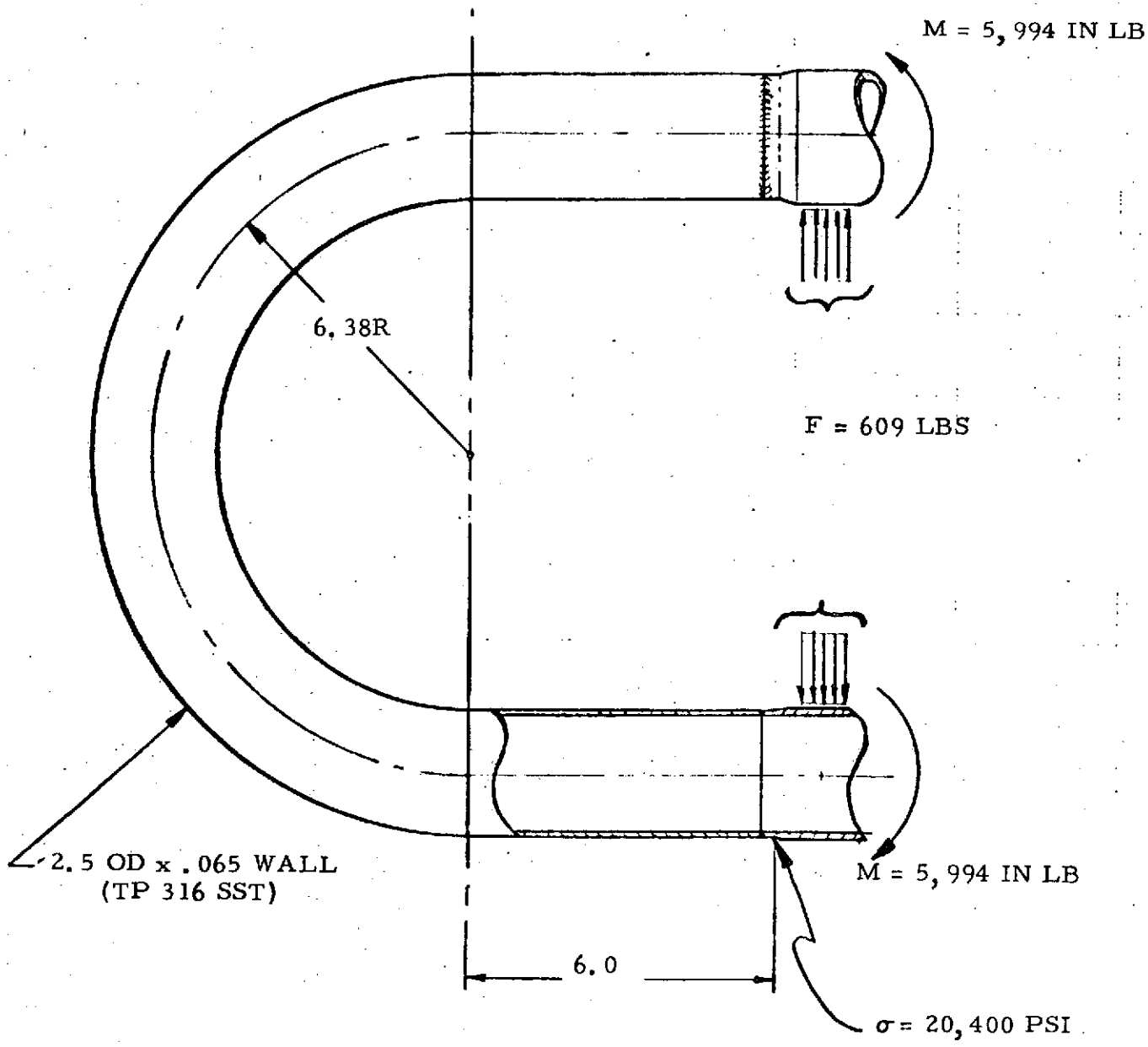

BASED UPON COMPUTER PROGRAM MEC - 21/7094

[LOOP AT 1150°F
PLPA SUPPORT AT 500°F]

HELICAL PUMP DUCT SUPPORT - SLIDING

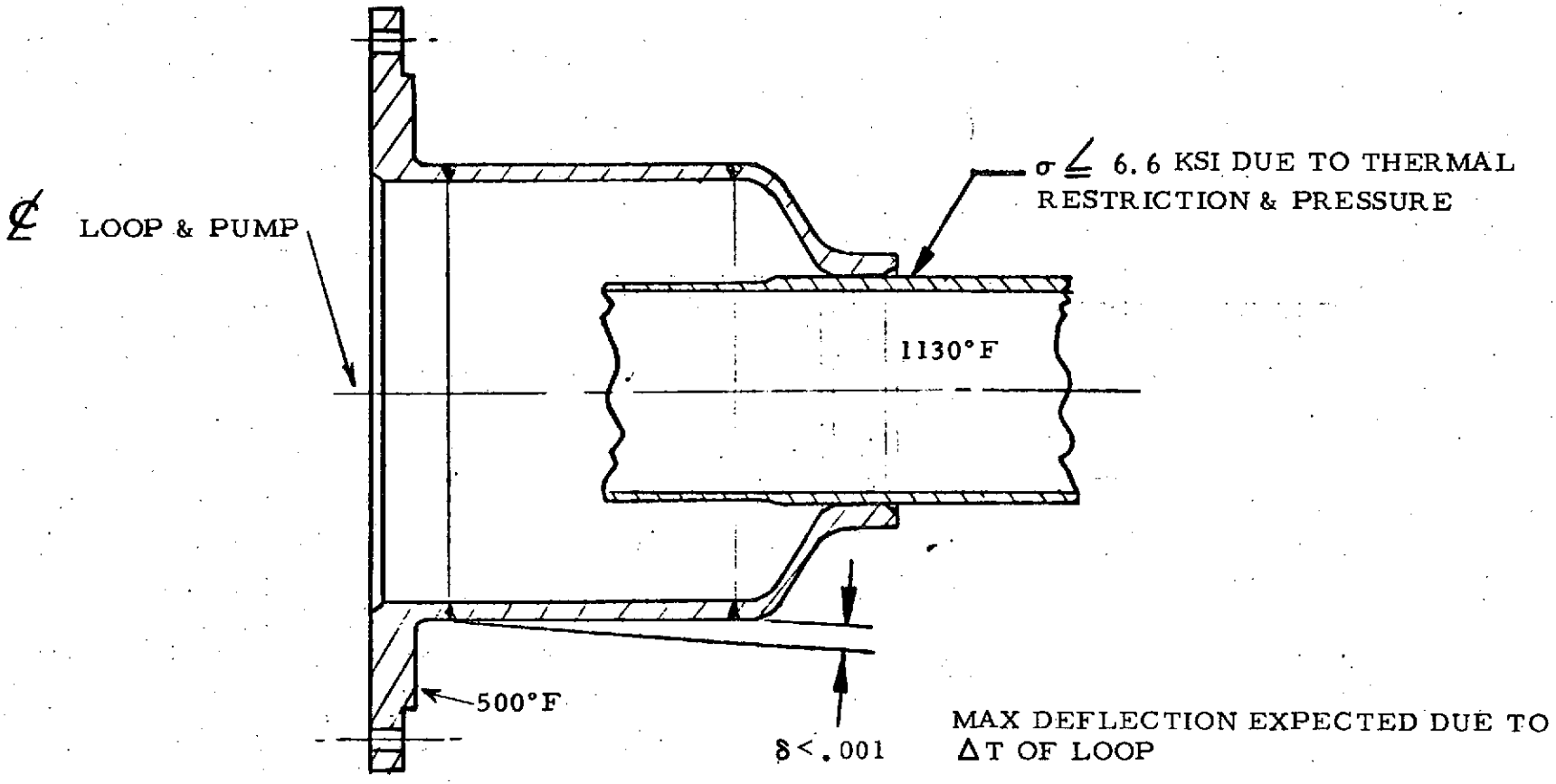

GAS CONTAINMENT CAN DESIGN MARGINS

(HELICAL PUMP)

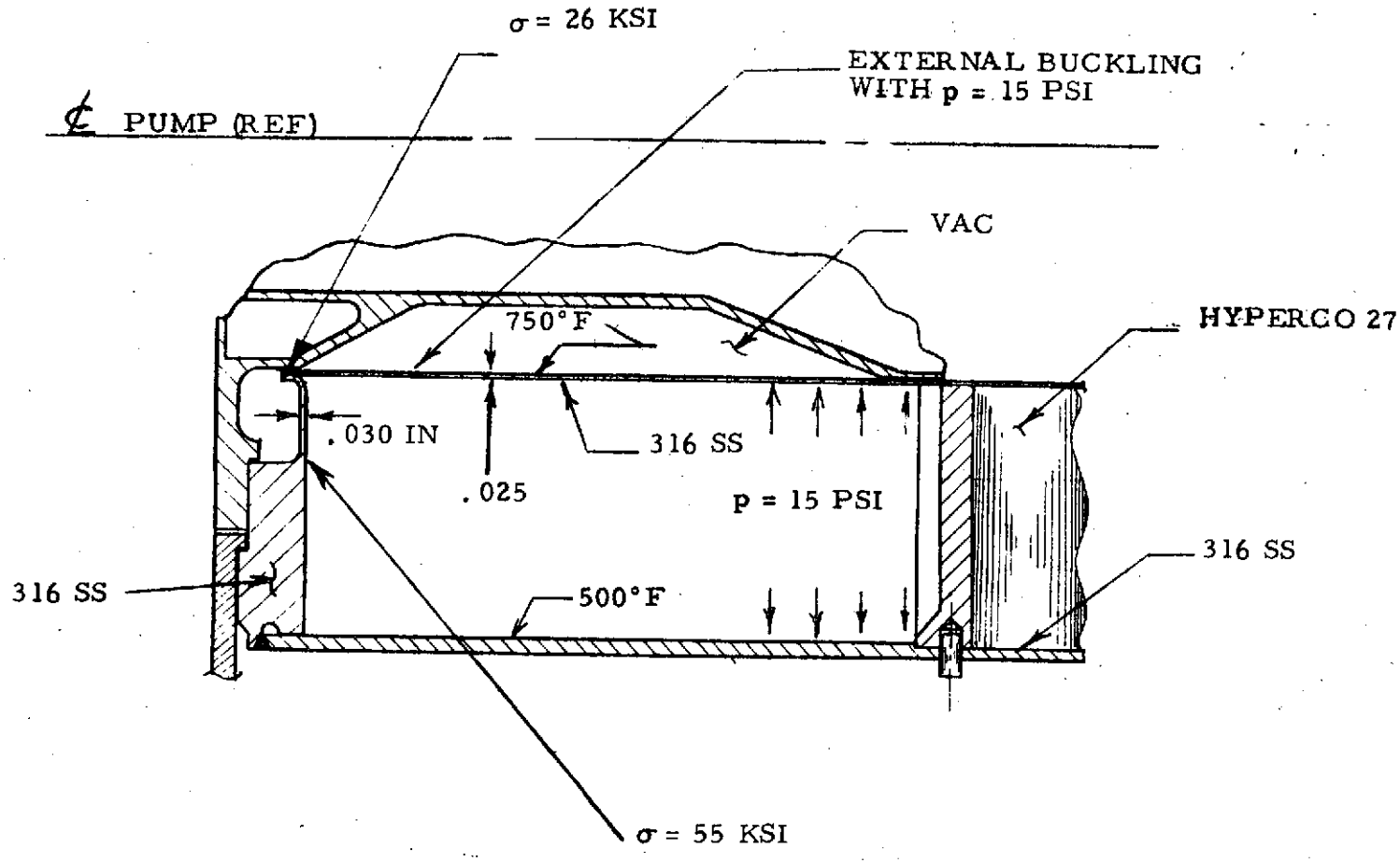

HELICAL PLPA SUPPORT BRACKET

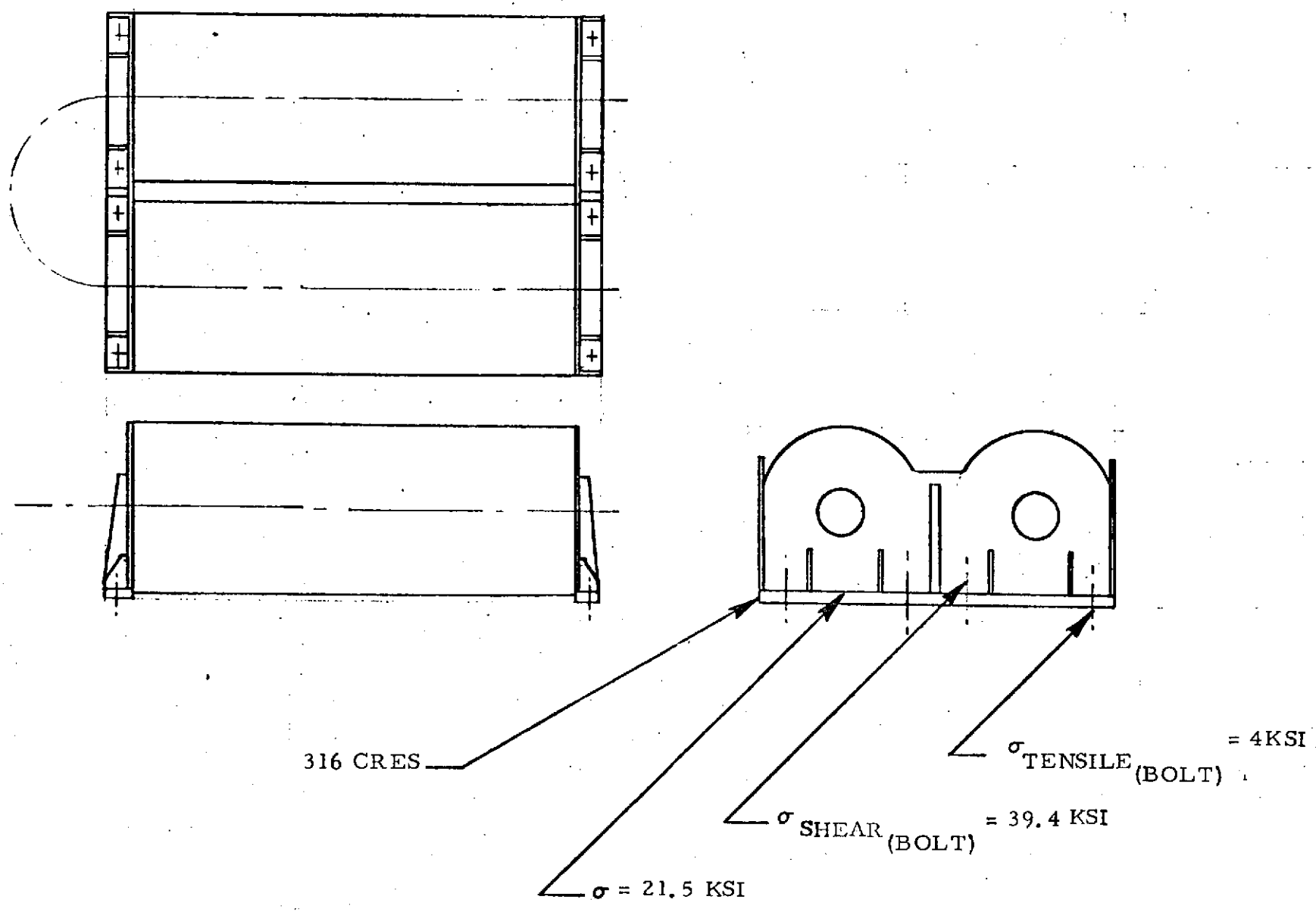

PLAN VIEW OF HELICAL PUMP

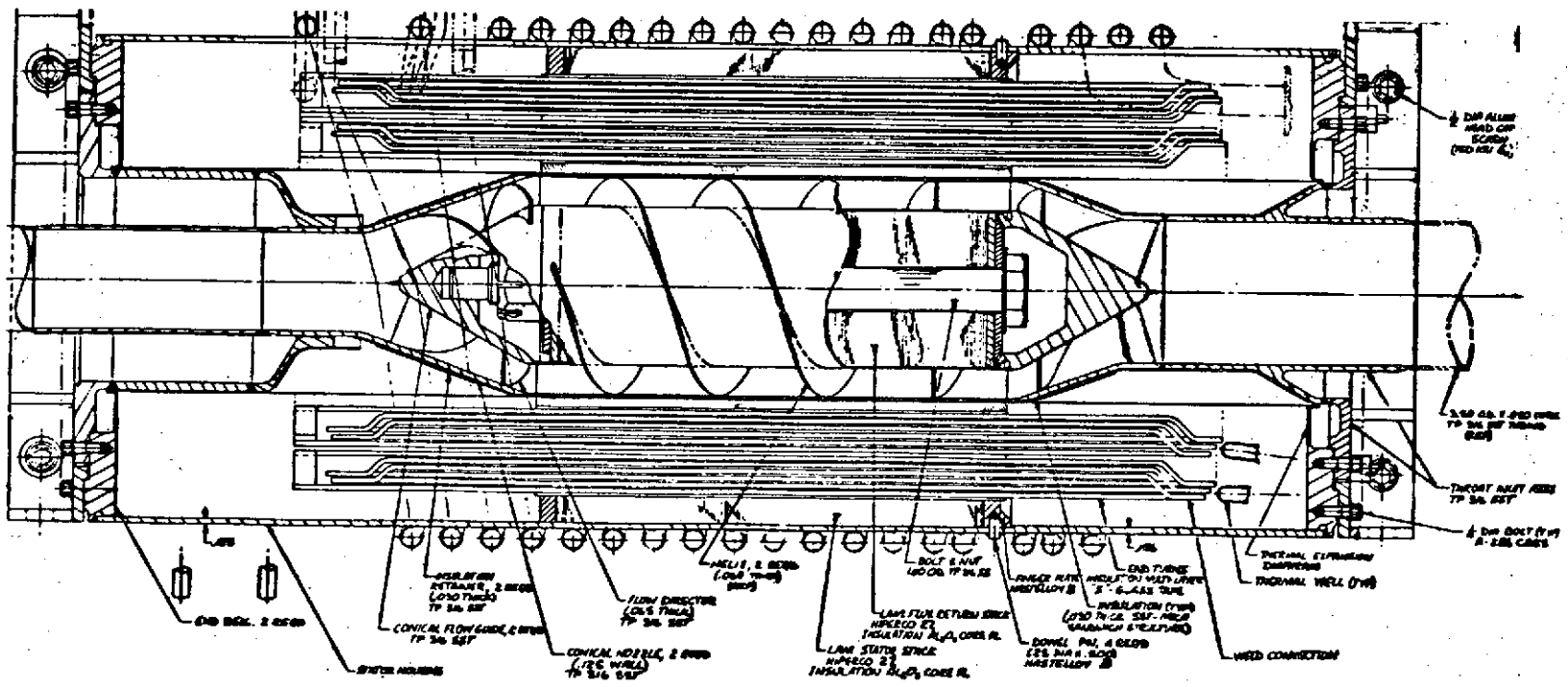

END VIEW OF HELICAL PUMP PLPA

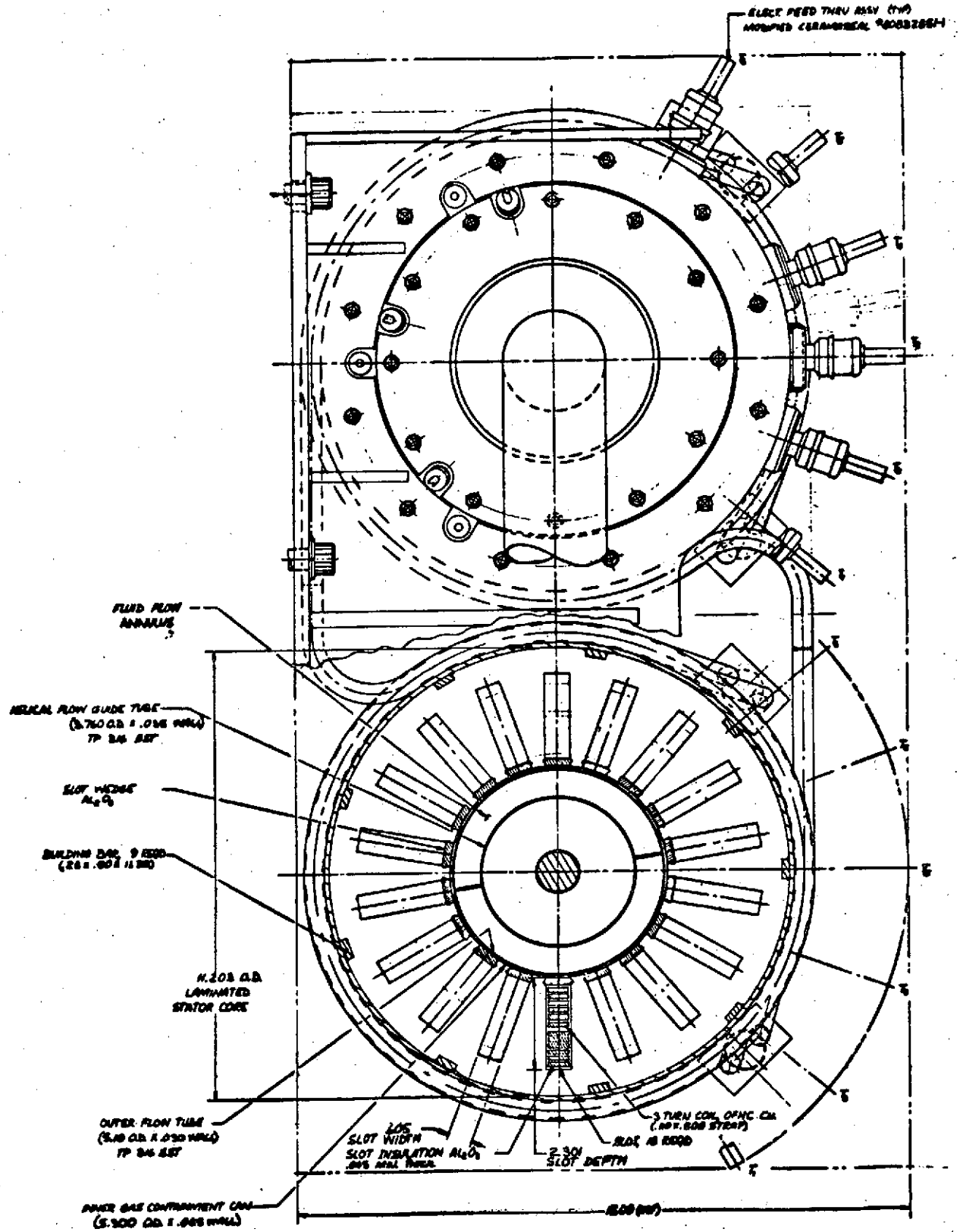

LINEAR INDUCTION PUMP

- ELECTROMAGNETIC/HYDRAULIC DESIGN
- THERMAL ANALYSIS
- STRESS ANALYSIS
- LAYOUT DESIGN

LINEAR PUMP

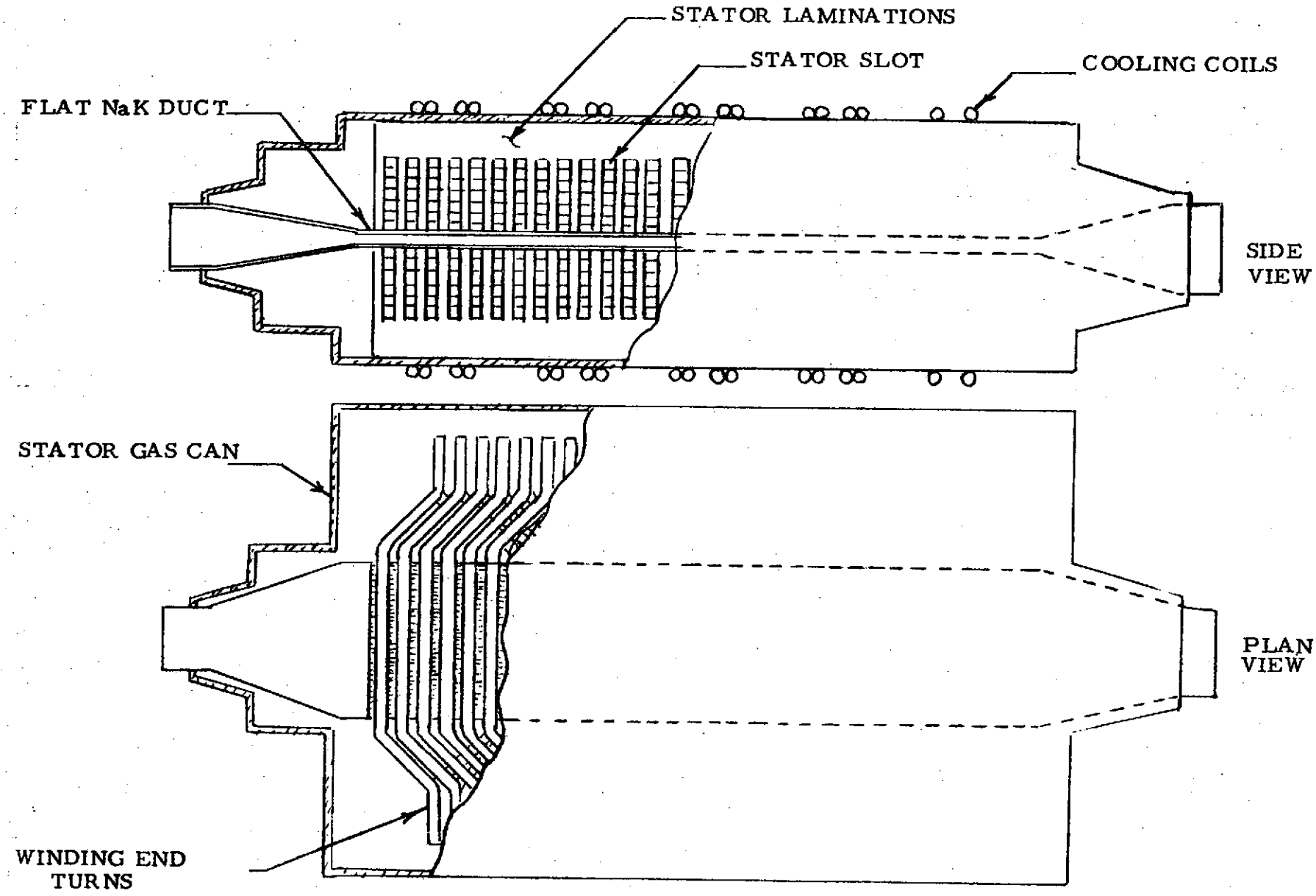
STATOR LAMINATIONS
STATOR SLOT
COOLING COILS
FLAT NaK DUCT
SIDE VIEW
STATOR GAS CAN
PLAN VIEW
WINDING END TURNS

COMPUTER CODE LOGIC FOR LINEAR PUMP

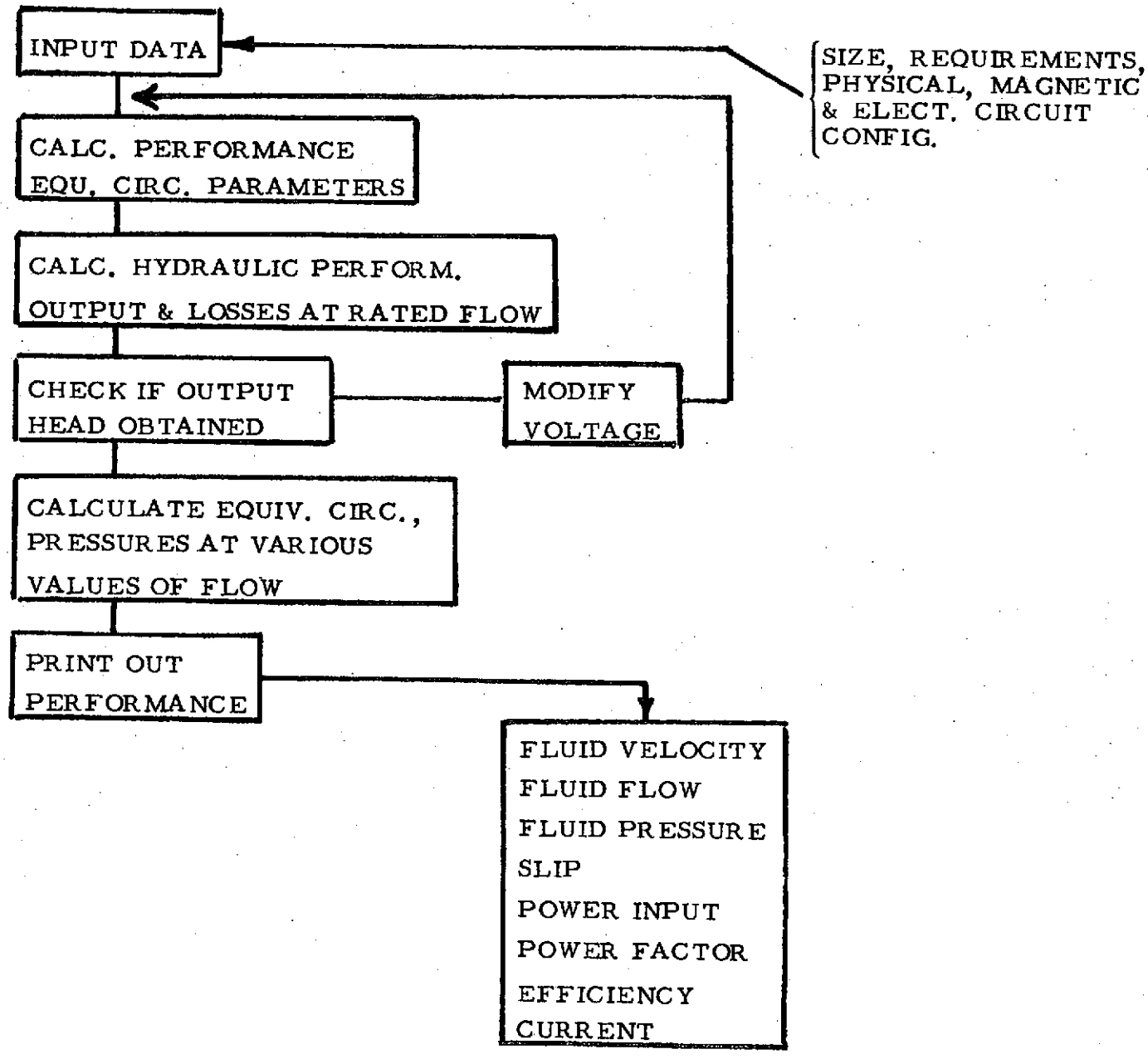

AC LINEAR INDUCTION PUMP DESIGN ASSUMPTIONS

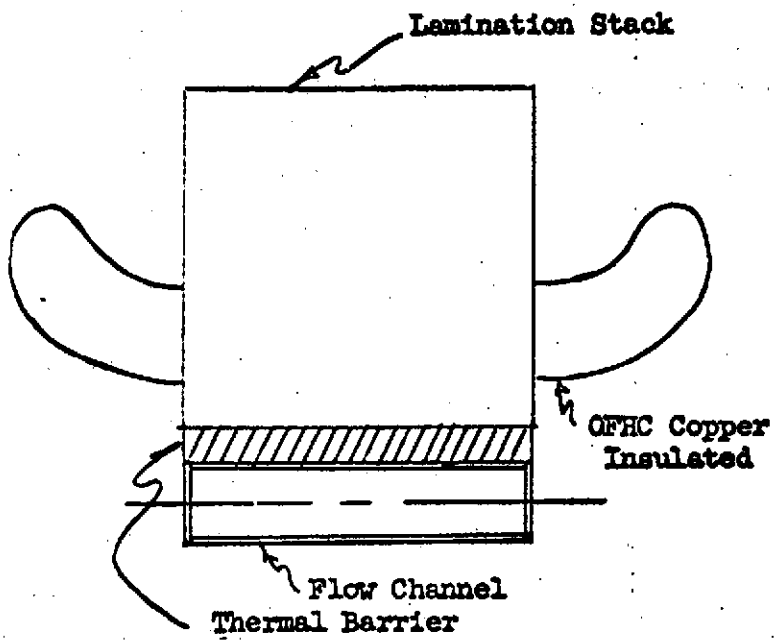

SECTIONAL VIEW

CALCULATIONAL VARIABLES

CORE LENGTH
MAGNETIC GAP
FLUID THICKNESS
NUMBER SLOTS
SLOT WIDTH
SLOT DEPTH
TYPE OF SLOT
CONDUCTOR AREA
TURNS/COIL
COIL THROW
VOLTAGE
FREQUENCY
FLUID VELOCITY
FLUX DENSITY

ORIGINAL CALCULATIONAL CONSTANTS

SS 316 DUCT (.030 in)
1130°F DUCT TEMP
1130°F NaK TEMP

THERMAL INSUL (.030 in)
ELECTRICAL INSULATION
GROUND WALL AND
TURN TO TURN (.045 in)

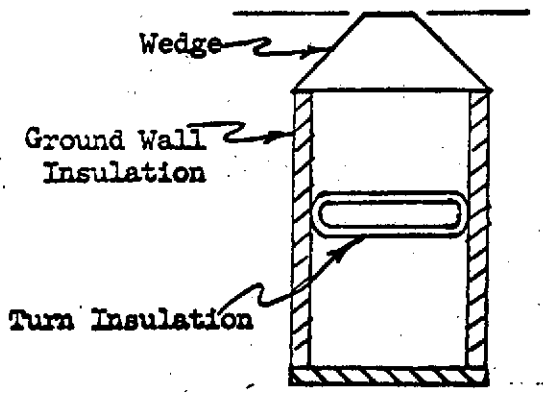

SLOT DETAIL

OTHER ASSUMPTIONS

1. END EFFECT LOSS 2-Pole 66%
   4-Pole 40%
   6 Pole 28%
2. TWO LAYER LAP WINDING
3. NEGLIGIBLE END RING RESIST.

INITIAL DESIGN MATRIX FOR AC LINEAR 2 PUMP PLPA

Length (inches)

Width (inch)	22	33	44	
5	Gap = 0.42 in. 0.46 0.50 0.54 0.58 0.47	Gap = 0.47	Gap = 0.47	Pole = 4 Slip = 0.4
6	Gap = 0.42 0.46 0.50 0.54 0.58 0.52			
7	Gap = 0.37 0.42 0.46 0.50 0.54 0.58			
5	Slip = 0.4 0.5 0.6 0.7			Pole = 4 Slip = 0.47

POWER INPUT VS GAP HEIGHT FOR AC LINEAR 2 PUMP PLPA

5 INCH WIDTH

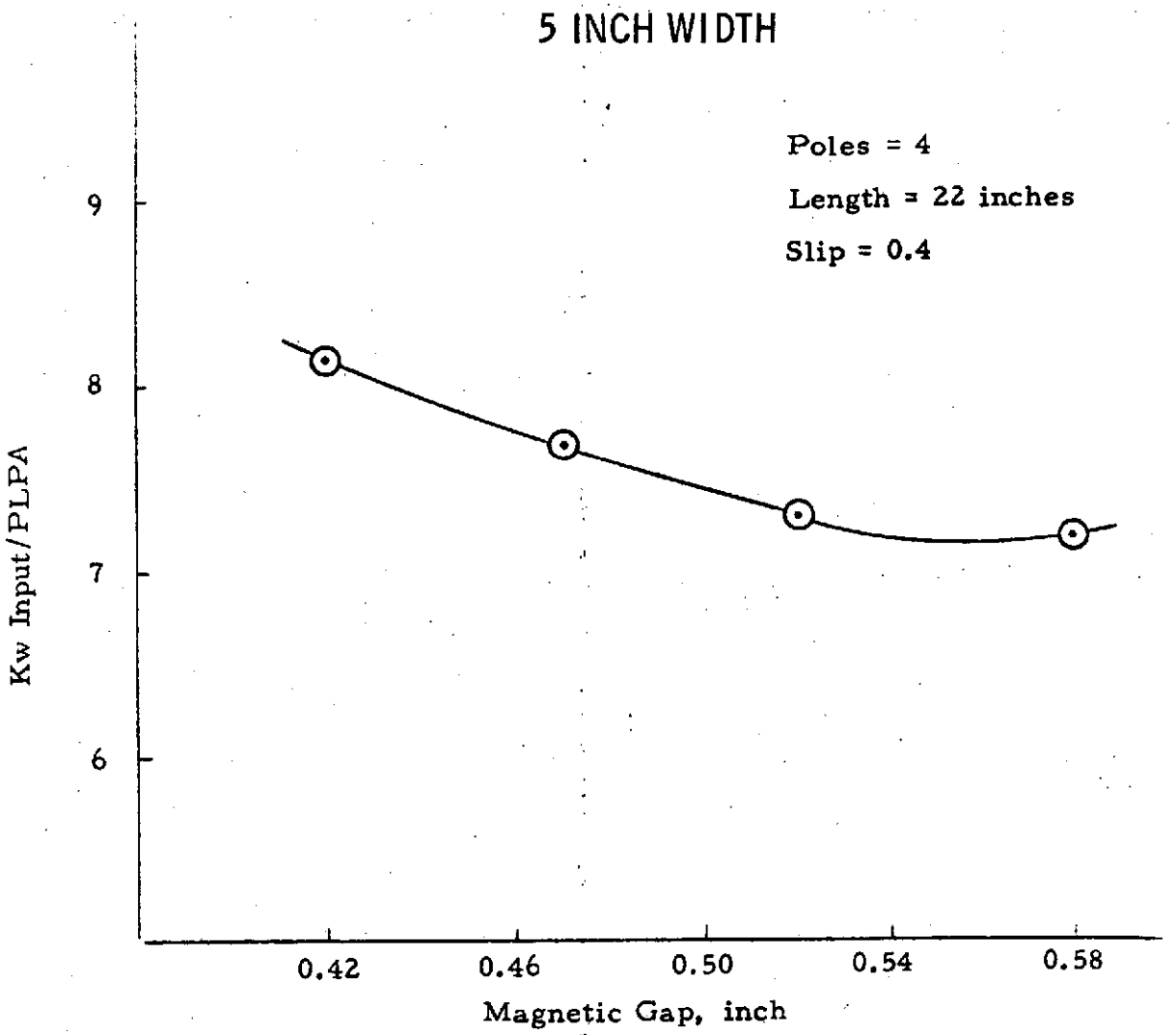

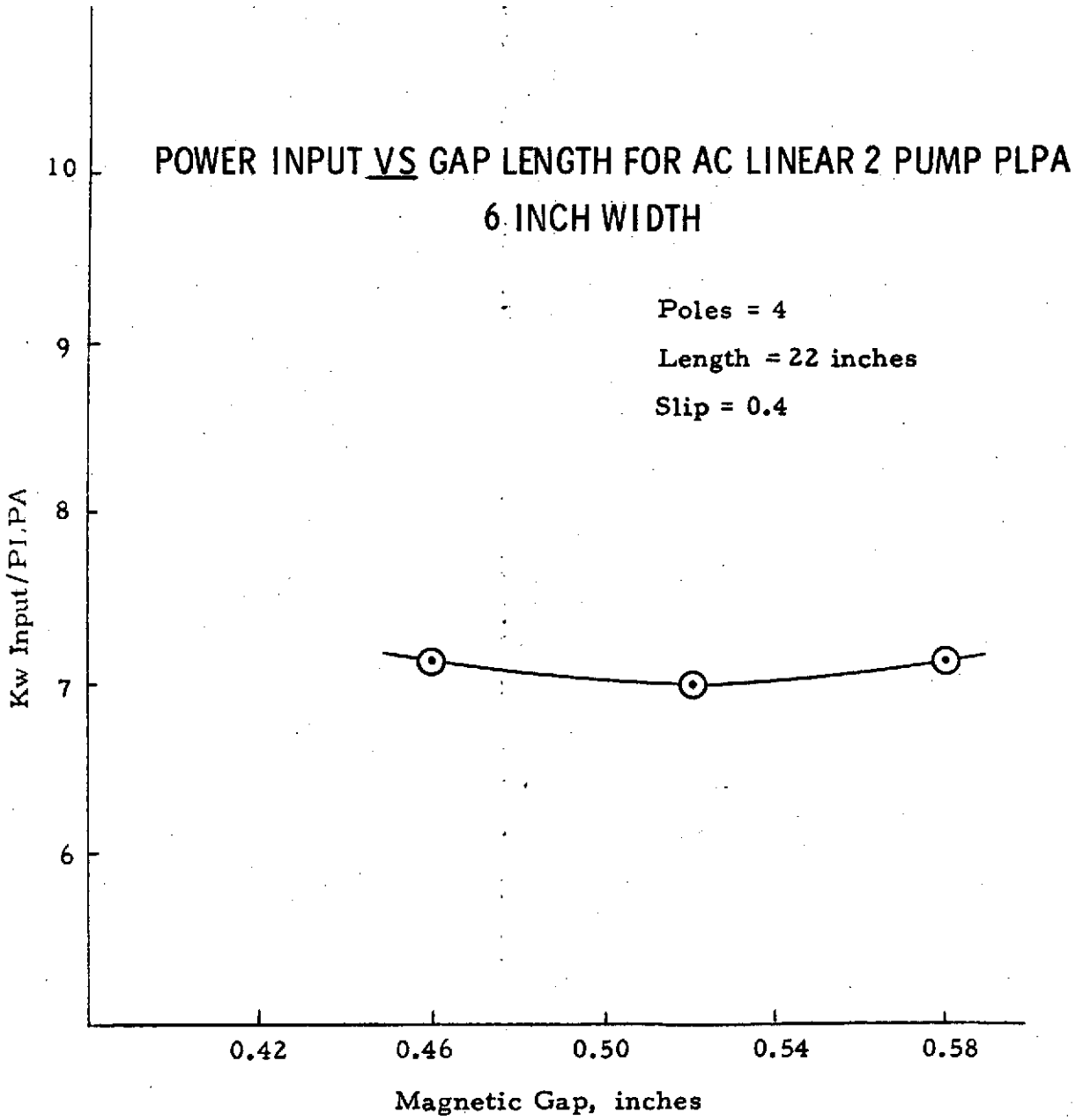
POWER INPUT VS GAP LENGTH FOR AC LINEAR 2 PUMP PLPA
6 INCH WIDTH
Poles = 4
Length = 22 inches
Slip = 0.4
Kw Input/PLPA
10
9
8
7
6
0.42
0.46
0.50
0.54
0.58
Magnetic Gap, inches

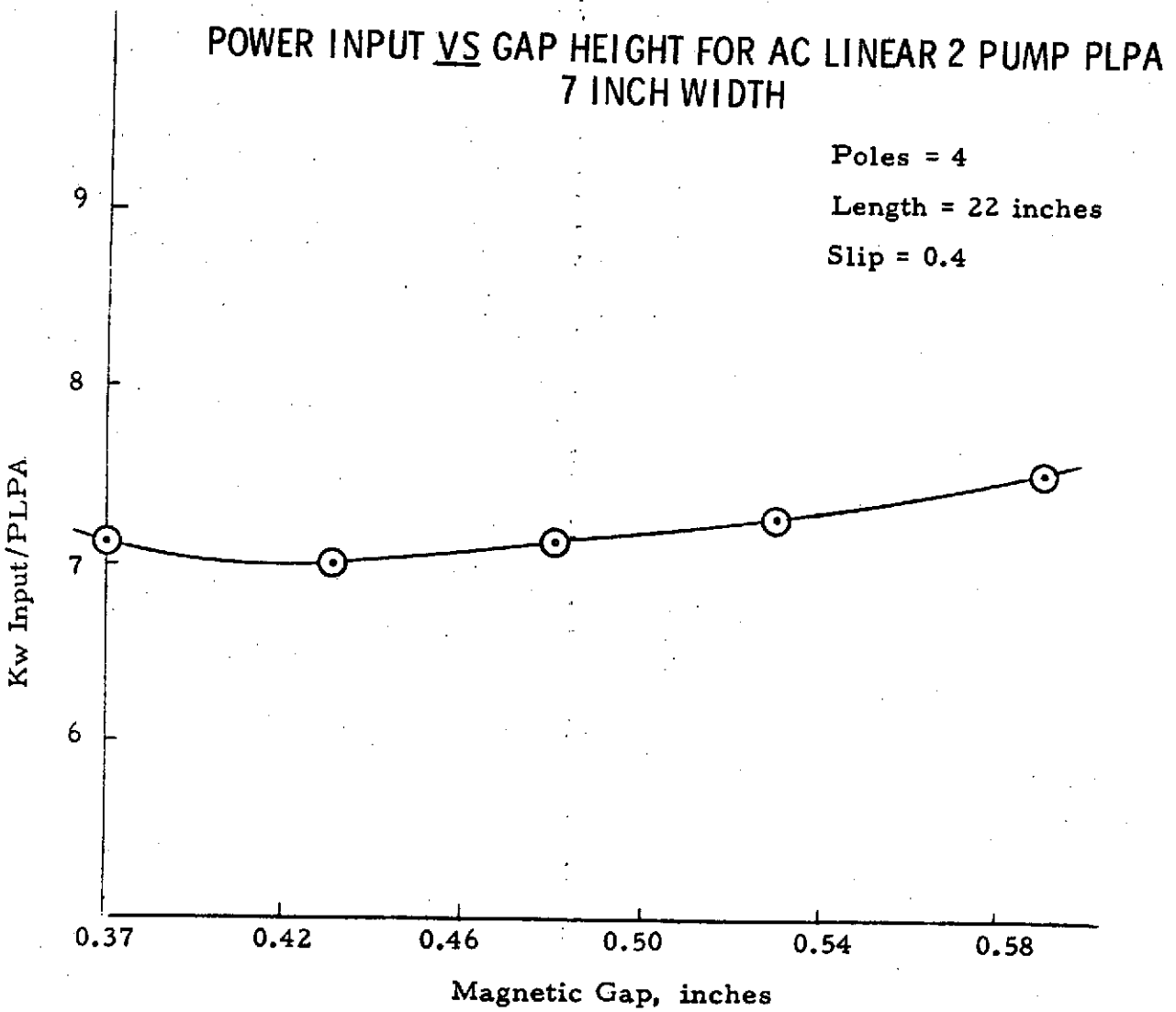
POWER INPUT VS GAP HEIGHT FOR AC LINEAR 2 PUMP PLPA
7 INCH WIDTH
Poles = 4
Length = 22 inches
Slip = 0.4
Kw Input/PLPA
9
8
7
6
0.37
0.42
0.46
0.50
0.54
0.58
Magnetic Gap, inches

INITIAL DESIGN MATRIX FOR AC LINEAR 2 PUMP PLPA

(Continued)

Width (inches) \ Length (inches)	22	24	31	40	44	
		Gap = 0.47				Pole = 2 Slip = 0.4
5			Gap = 0.47		Gap = 0.47	Pole = 6 Slip = 0.4
				Gap = 0.47		Pole = 8 Slip = 0.4
6			Gap = 0.52 = 0.42			Pole = 6 Slip = 0.4
				Gap = 0.52 = 0.42		Pole = 8 Slip = 0.4

INPUT POWER VS LENGTH FOR AC LINEAR 2 PUMP PLPA

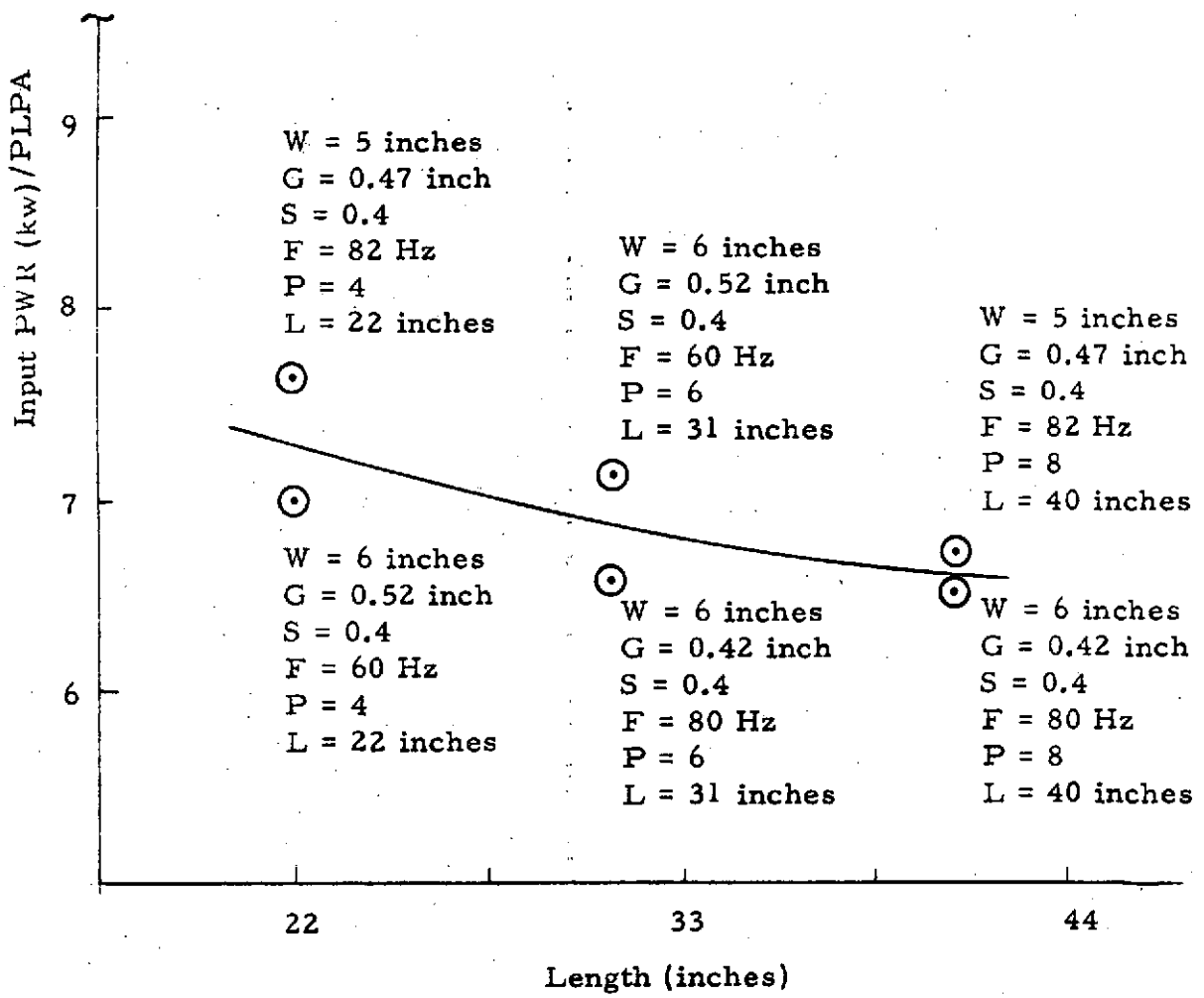

DESIGN MATRIX FOR 2-PUMP LINEAR PLPA MODIFIED FOR SLOT GEOMETRY

Length = 24.7' inches
Poles = 4

WIDTH	SLIP		
	.4	.5	.6
5 in.	G = .42 in = .47 " = .52 " = .57 "	G = .37 in = .42 " = .47 " = .52 " = .57 " = .61 "	G = .37 in = .42 " = .47 = .32 " = .57 " = .61 "
6 in.	G = .42 in = .47 " = .49 " = .52 " = .57 "	G = .42 in = .47 " = .52 " = .57 " #66	G = .42 in = .49 " = .57 "
7 in.	G = .37 in = .42 " = .47 " = .52 " = .57 "	G = .37 in = .42 " = .47 " = .57 " = .57 " = .62 "	G = .37 in = .42 " = .47 " = .57 " = .57 " = .62 "

INPUT POWER VS GAP HEIGHT AS FUNCTION OF SLIP FOR TWO PUMP LINEAR PLPA - 6 INCH WIDTH

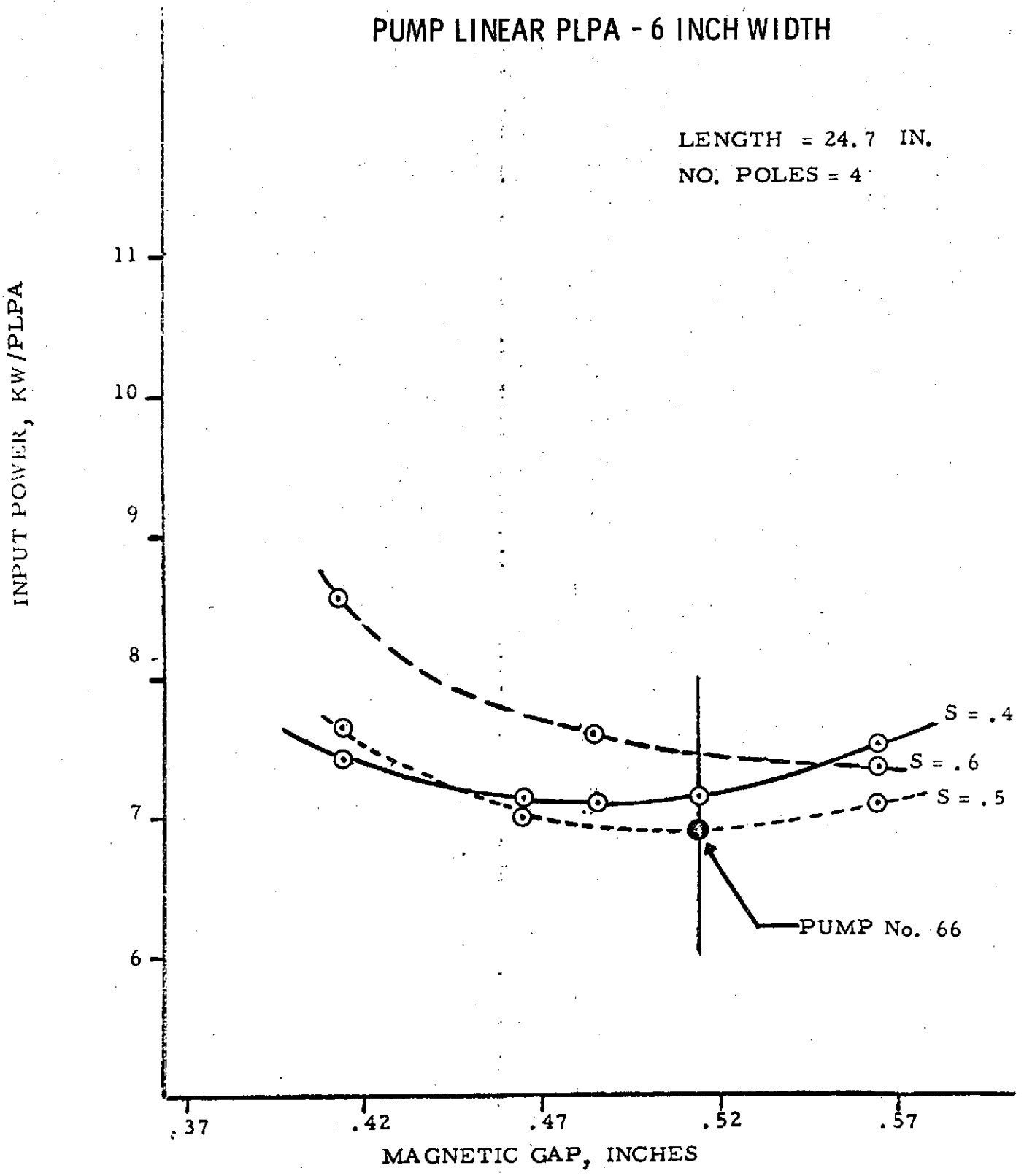

DESIGN AND PERFORMANCE SUMMARY OF TWO-PUMP LINEAR PLPA - DESIGN 66

STACK LENGTH, INCHES	24.7
STACK WIDTH, INCHES	6.0
STACK HEIGHT, INCHES	4.5
MAGNETIC GAP, INCHES	.52
CHANNEL HEIGHT, INCHES	.40
CHANNEL WIDTH, INCHES	6.0
NO. POLES	4
NO. STATOR SLOTS	29
POWER INPUT, KW/PLPA	8.6
CURRENT AMPS/PHASE/WINDING	80.5
L-L VOLTAGE, VOLTS	66
POWER FACTOR	.47
FREQUENCY, HZ	65
PLPA EFFICIENCY, PERCENT	7.0
SLIP	.5

STARTUP CONDITIONS (10% FLOW) FOR TWO-PUMP LINEAR PLPA - DESIGN 66

CURRENT, AMPS/PHASE/WINDING	7.2
L-L VOLTAGE, VOLTS	5.4
POWER INPUT, WATTS	76
POWER FACTOR	.57
FREQUENCY, HZ	65

HEAD-RISE VS NaK FLOW RATE FOR TWO-PUMP LINEAR PLPA

DESIGN NO. 66

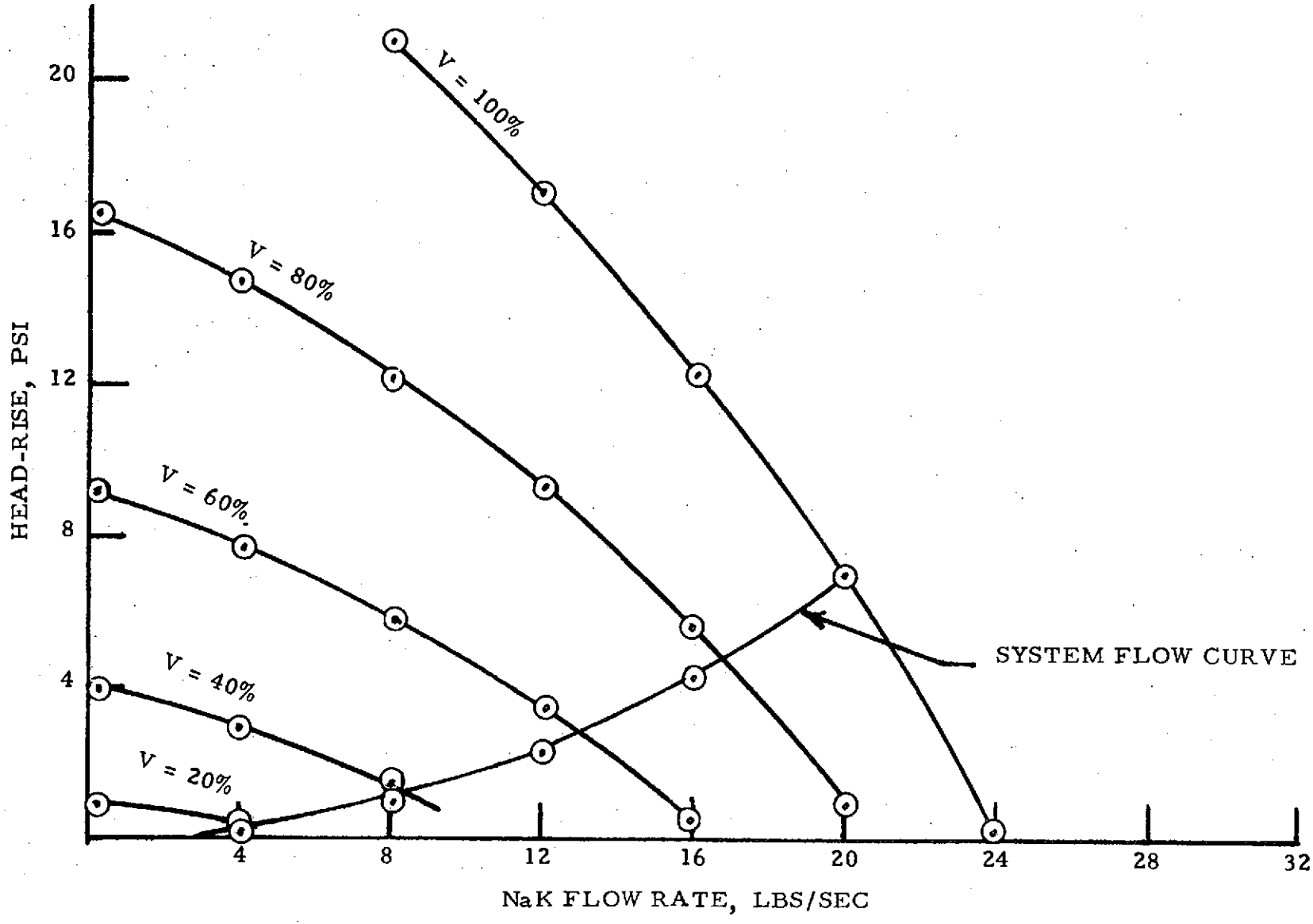

PERFORMANCE VS FLOW RATE FOR TWO-PUMP

LINEAR PLPA - DESIGN 66

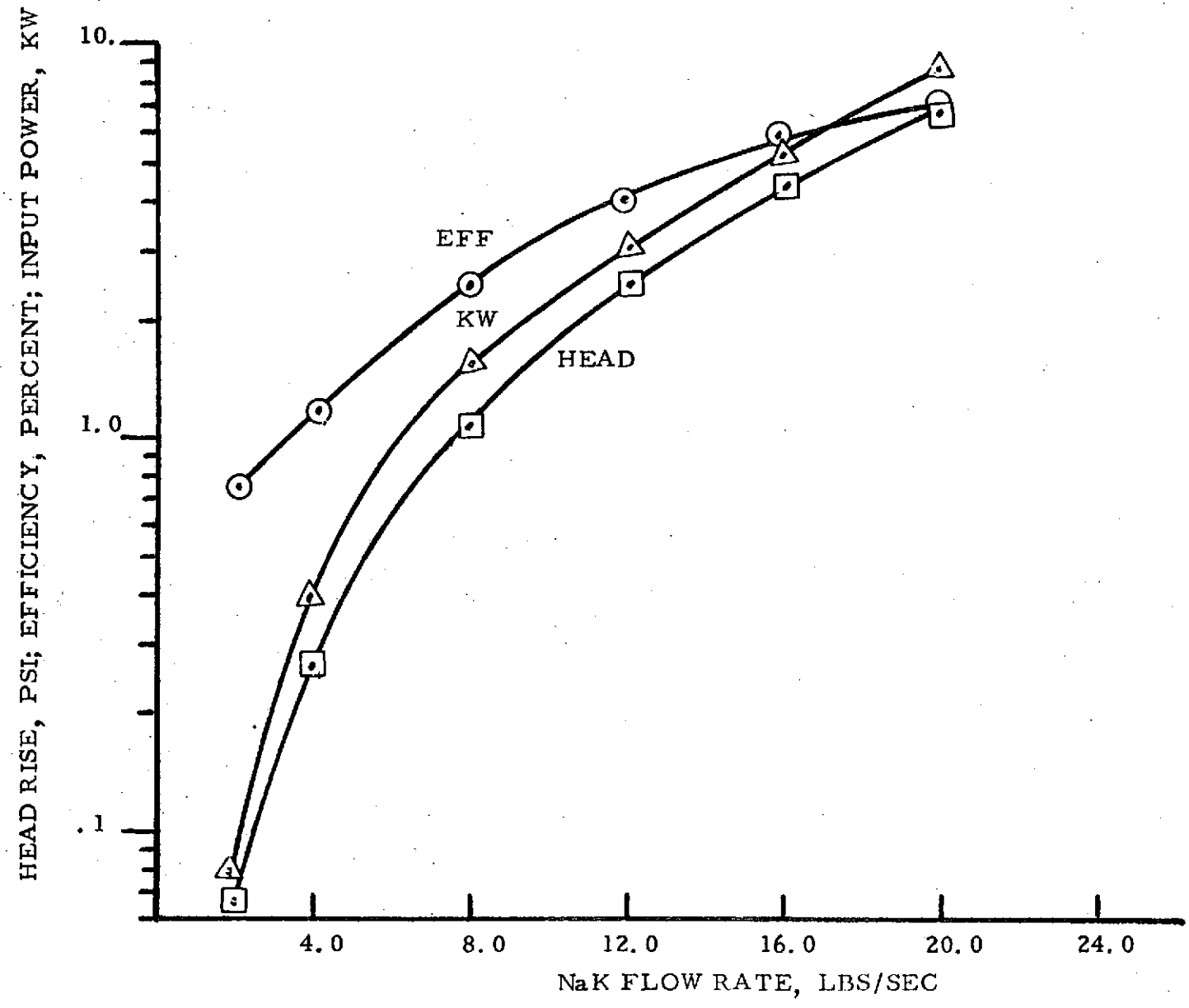

HYDRAULIC PRESSURE LOSS - LINEAR PUMP PLPA

(ΔP IN PSI)

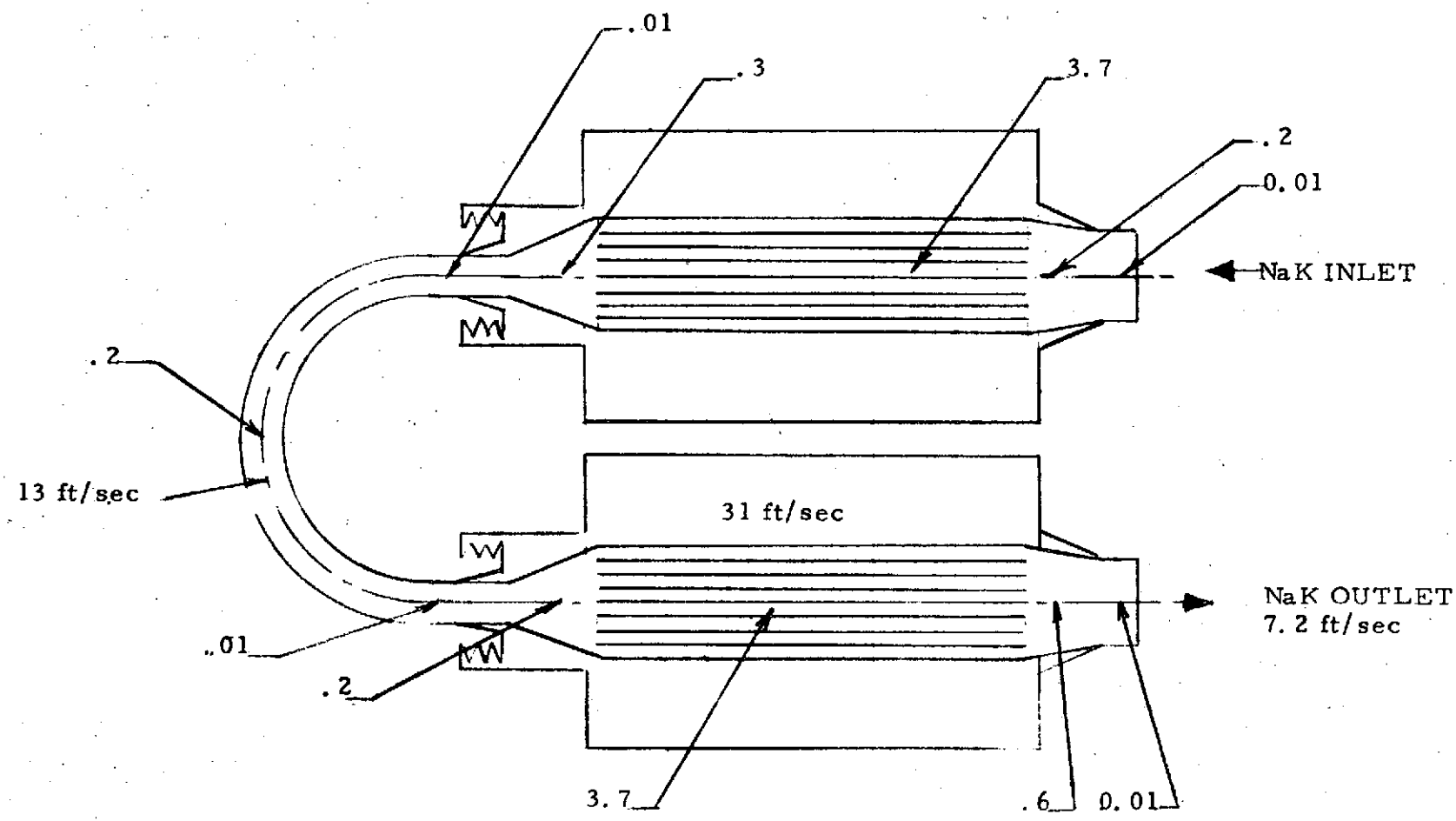

TOTAL ΔP = 8.9 PSI

LINEAR PUMP SLOT - DESIGN 66

6-INCH WIDTH

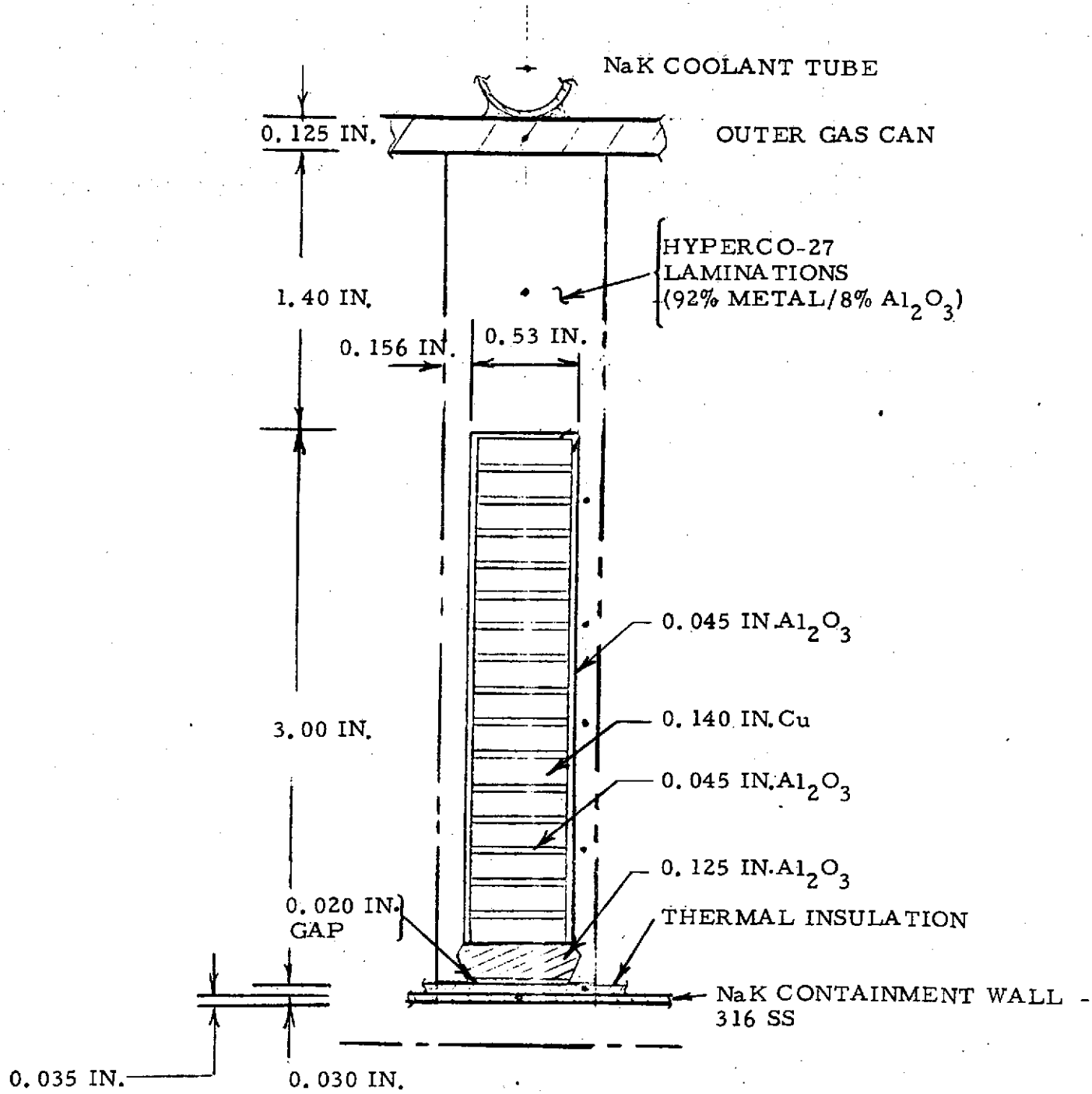

THERMAL MAP - LINEAR PUMP SLOT WITH ARGON GAS & MICA THERMAL INSULATION (TEMPERATURES IN °F - DESIGN #66)

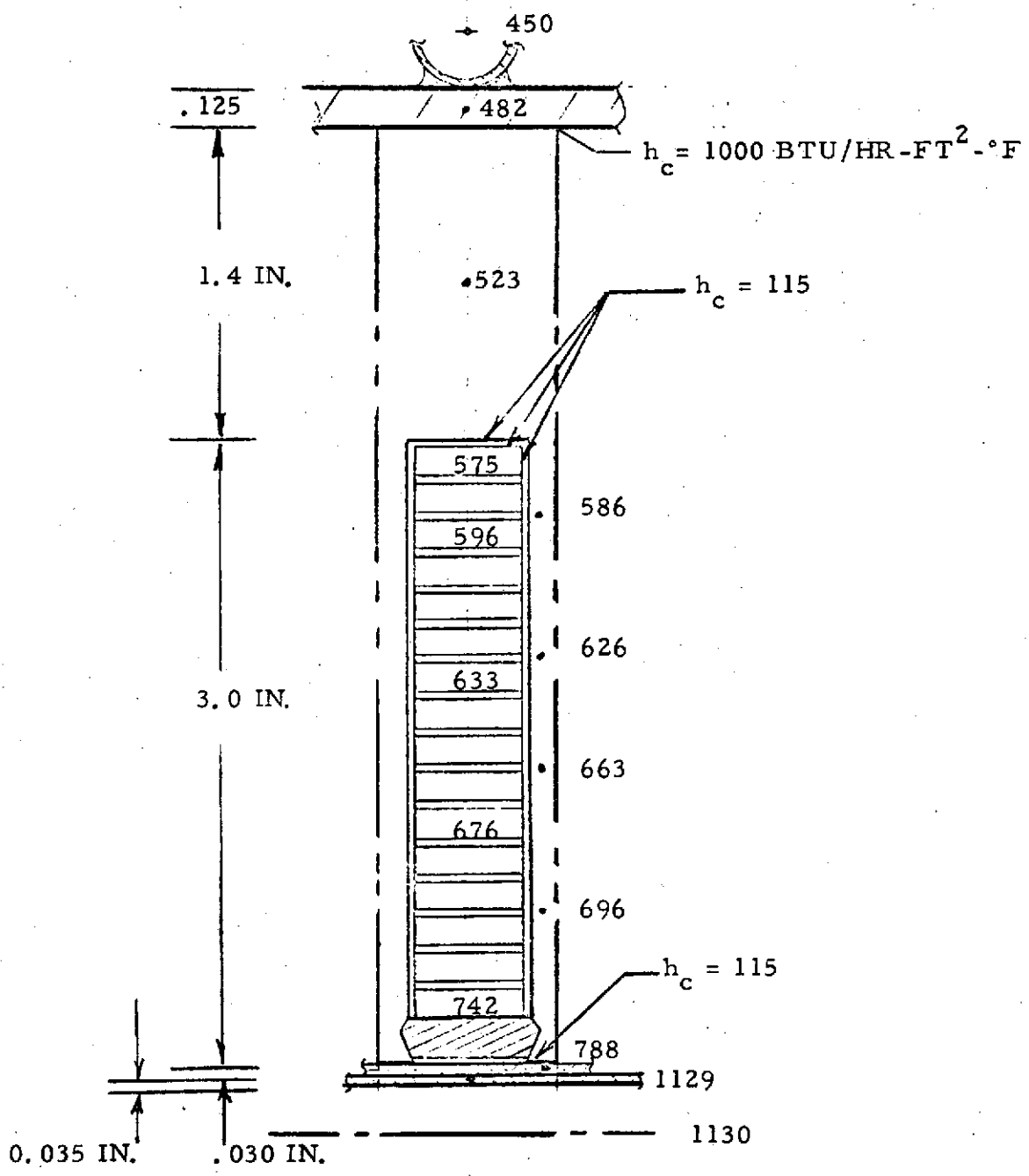

Figure 13

END TURN TEMPERATURES - LINEAR PUMP DESIGN #66

(TEMPERATURES IN °F, ARGON GAS, & MICA THERMAL INSULATION)

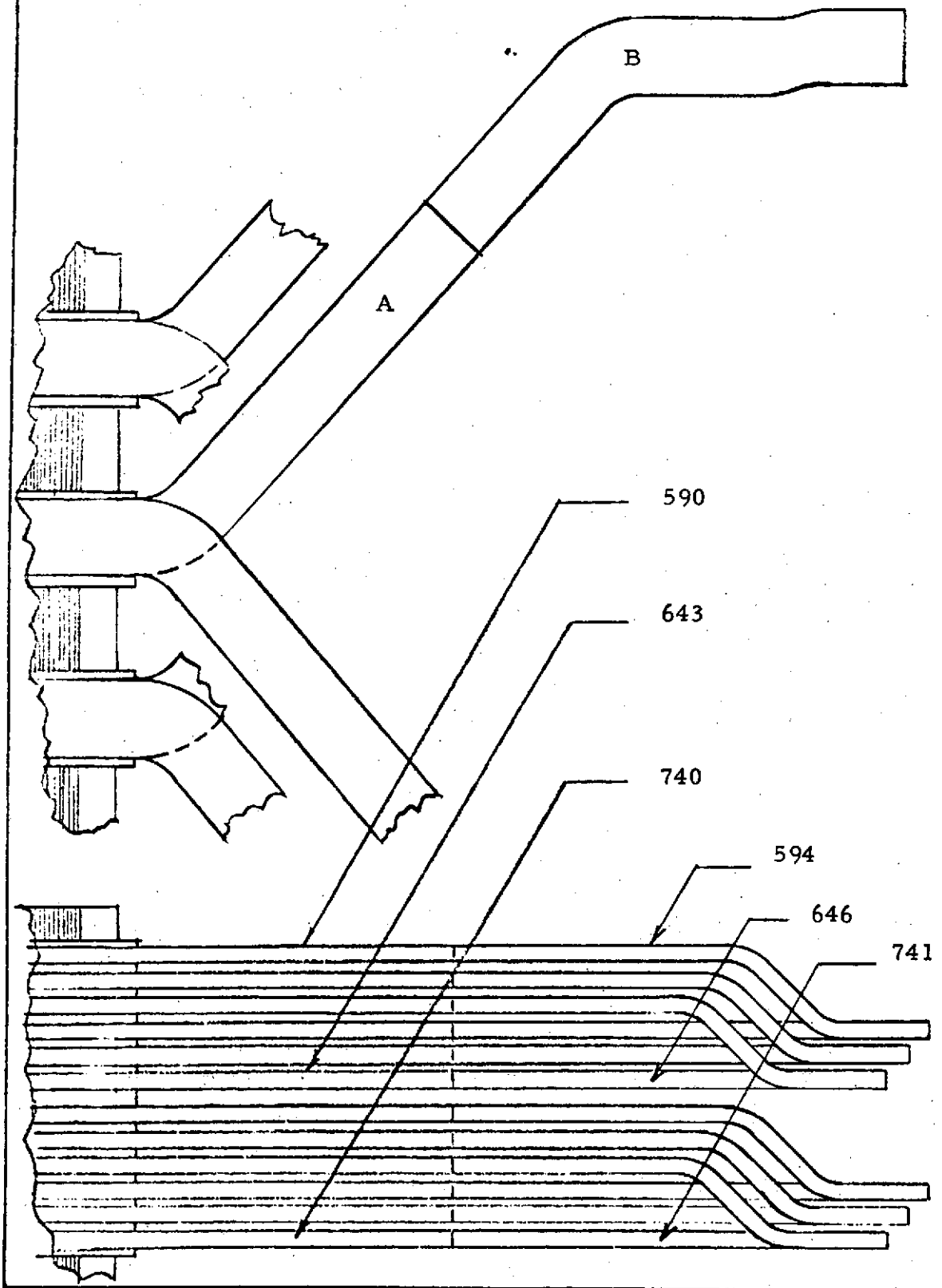

HEAT FLOW MAP - LINEAR PUMP SLOT WITH ARGON GAS & MICA THERMAL INSULATION (HEAT FLOW IN WATTS - DESIGN #66)

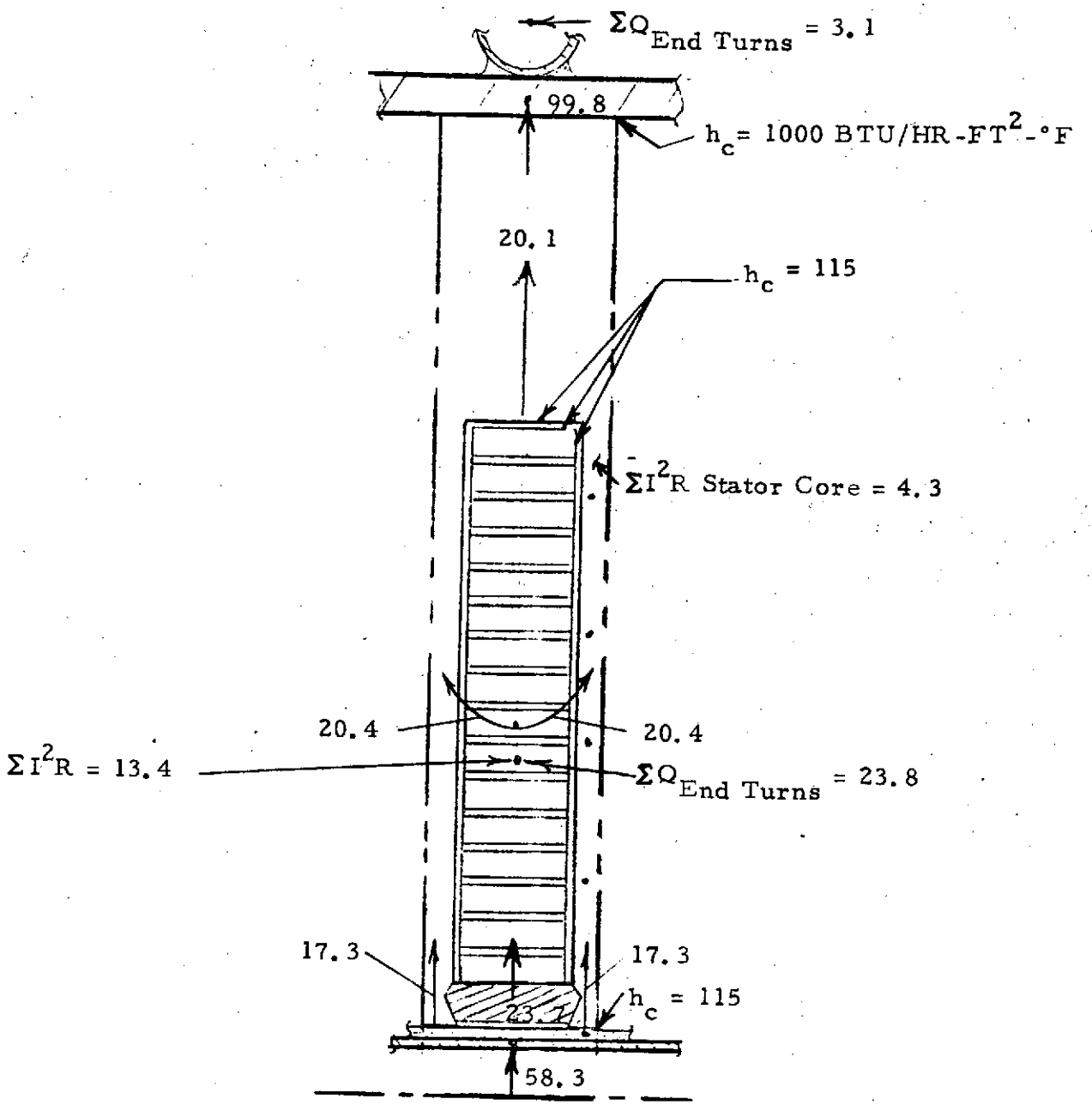

LINEAR PUMP THROAT DEFLECTION & STRESS

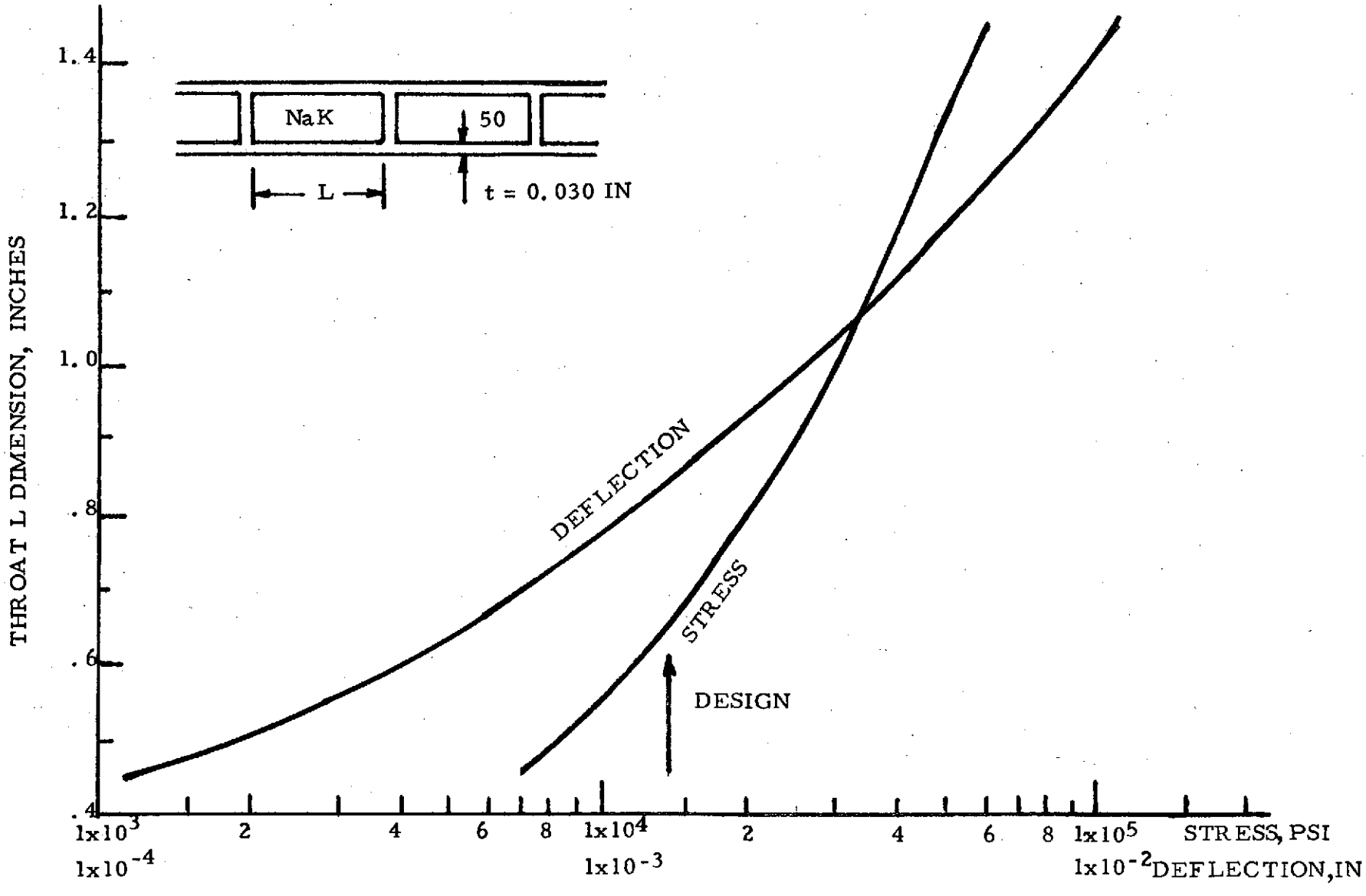

LINEAR PUMP STATOR STACK DEFLECTION
(LOADS FOR FULL RESTRAINT)

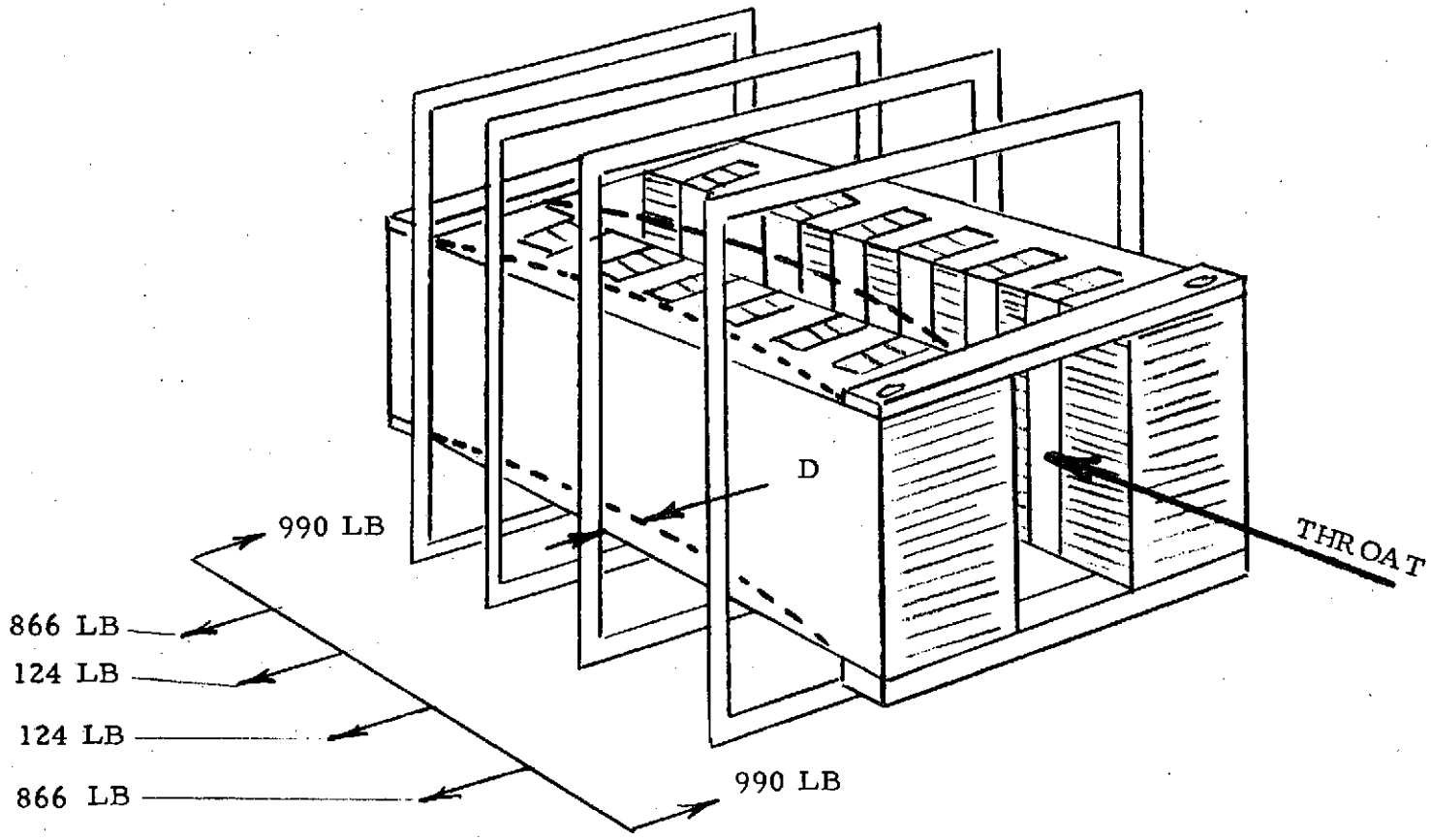

OUTER GAS SHELL STRESS FOR LINEAR PUMP

(15 PSI INTERNAL PRESSURE)

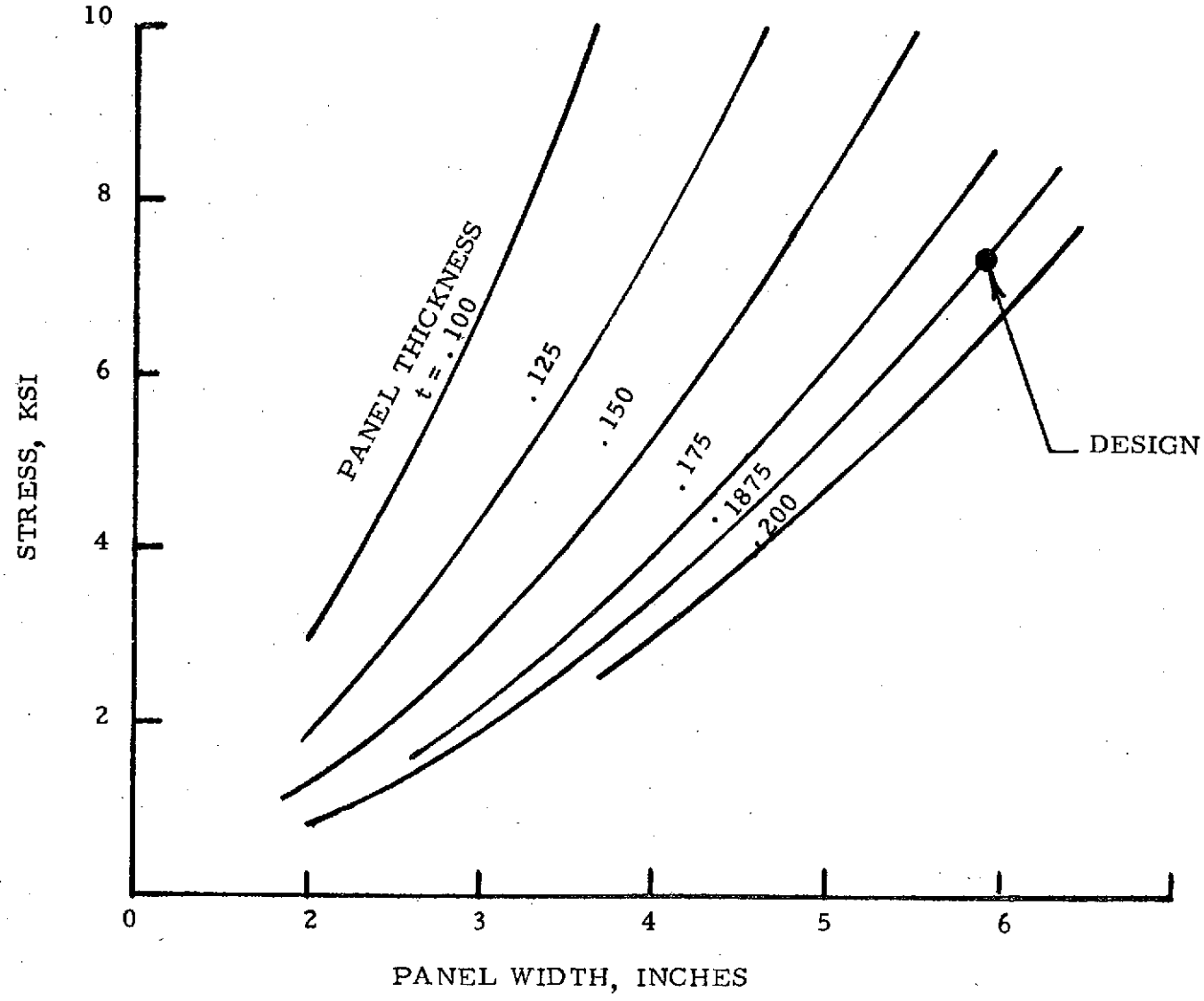

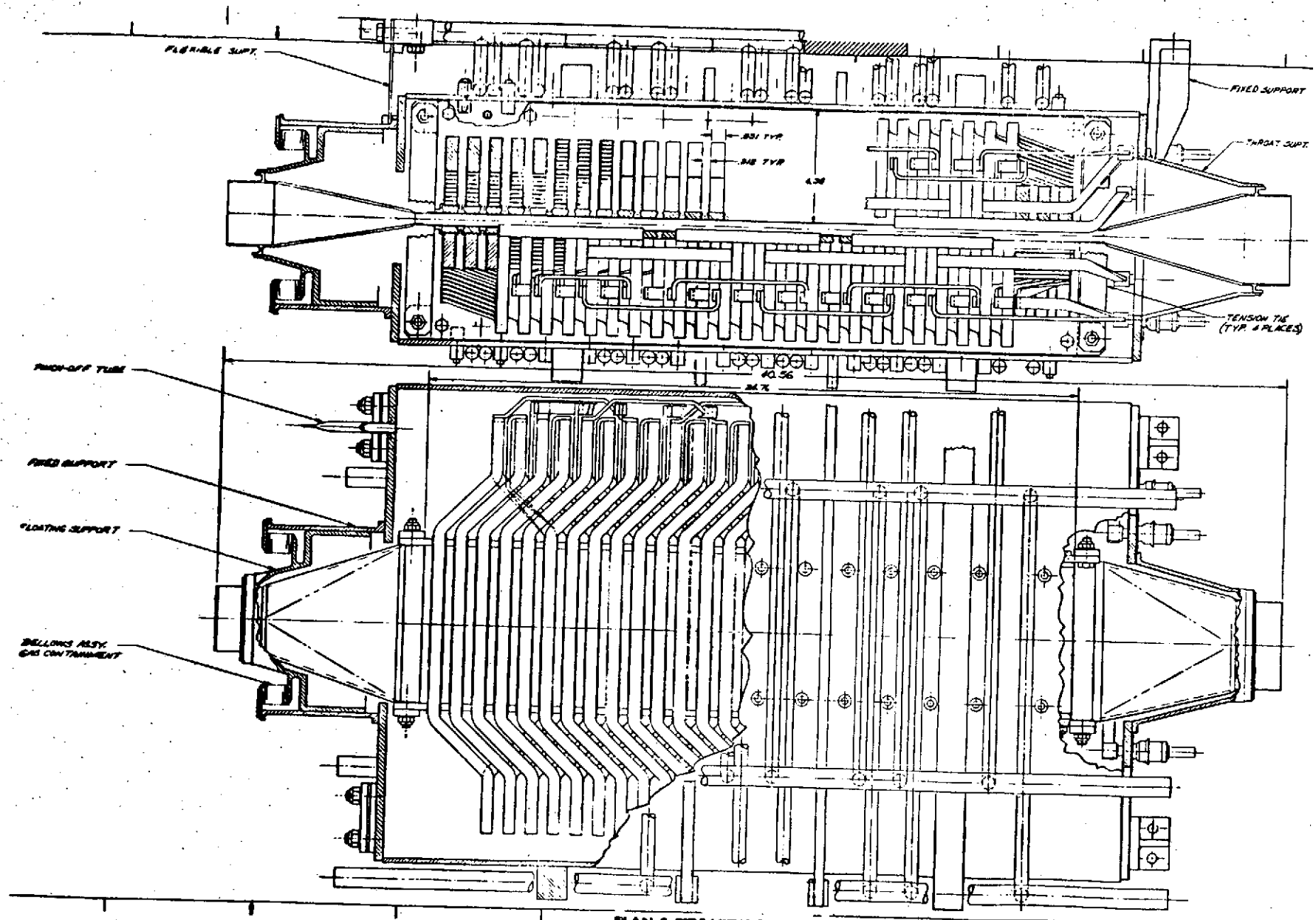

PLAN & SIDE VIEW OF LINEAR PUMP

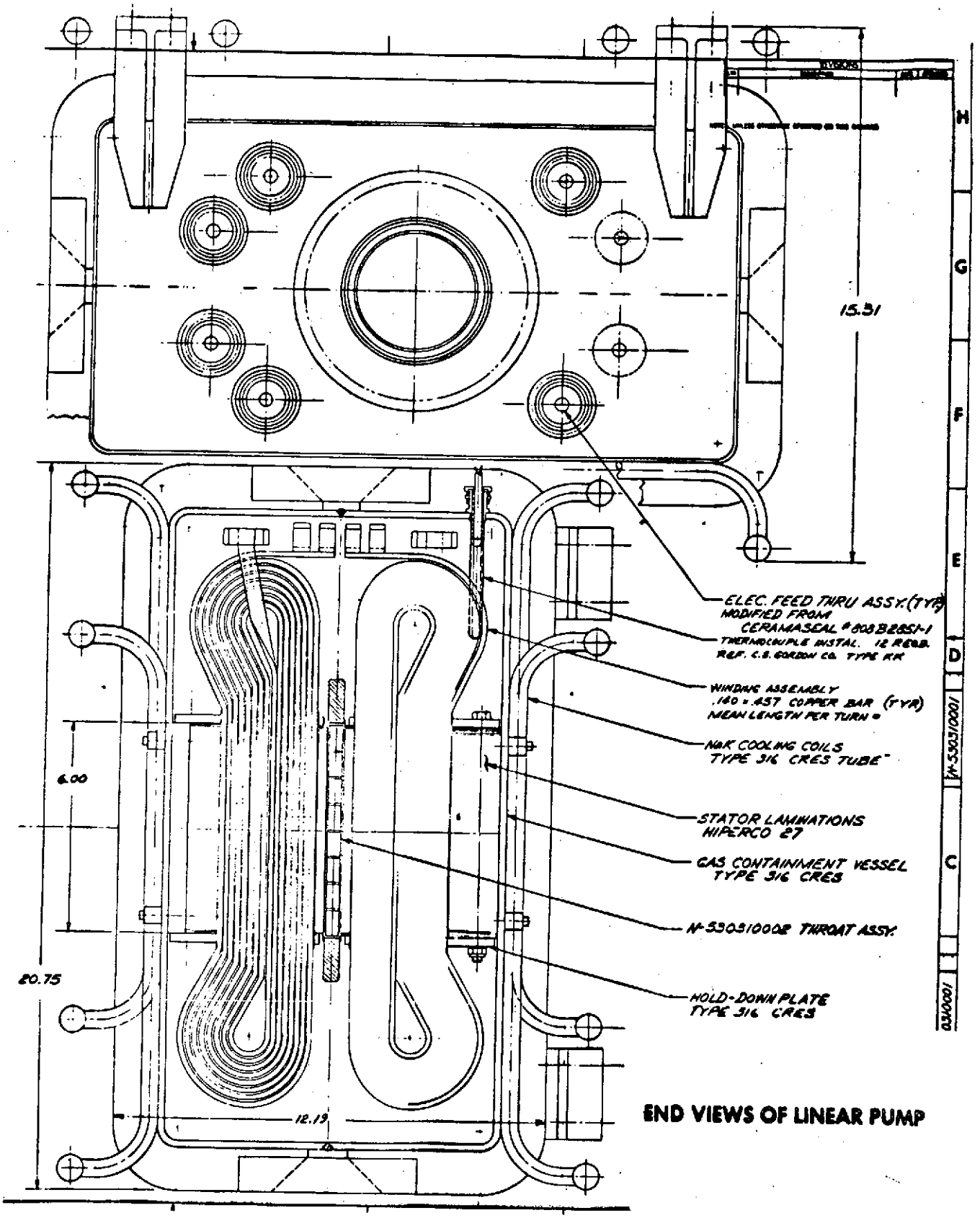

END VIEWS OF LINEAR PUMP

PLPA COMPARISON

CHARACTERISTICS	2 PUMP AC HELICAL PLPA NO. 74, 10" STACK LENGTH 11.2" STACK DIAMETER	2 PUMP AC LINEAR PLPA NO. 66, 6" STACK WIDTH 24.5" STACK HEIGHT
EFFICIENCY/PLPA, PERCENT	9.1	7.0
PUMP ENVELOPE, INCHES	33.0x15.0	40.5x20.5x13.5
PLPA ENVELOPE, INCHES	40.4x27.8x15.0	56.3x41.5x13.5
PLPA WEIGHT, LBS	880	1390
SOME FLOW 5-YR. RELIABILITY	.998	.997
FULL FLOW 5-YR. RELIABILITY	.989	.989
MAX. WINDING TEMPERATURE, °F	625	742
DESIGN PREDICTABILITY	GOOD	FAIR
FABRICATION DIFFICULTY		
WINDINGS	MORE DIFFICULT	SIMPLE
LAMINATIONS	CONVENTIONAL	MORE DIFFICULT
DUCT	MODERATE	DIFFICULT