COMPUTER CENTER

The University of Georgia
Athens, Georgia 30601

Reproduced by
NATIONAL TECHNICAL
INFORMATION SERVICE
US Department of Commerce
Springfield, VA. 22151

(NASA-CR-140612) SPACE SHUTTLE LOW PRESSURE AUXILIARY PROPULSION SUBSYSTEM DEFINITIONN, VOLUMES 1 AND 2 (McDonnell-Douglas Astronautics Co.) ~~191~~ p /93

N74-76825
THRU
N74-76827
Unclas
00/99 17037

NOTICE

This program or document is disseminated under the sponsorship of the National Aeronautics and Space Administration in the interest of information exchange. The United States Government assumes no liability for their contents or use thereof.

Any problems with either this documentation or the computer program associated with this documentation should be directed to COSMIC and not to the author of this documentation or the company with which he is affiliated.

COSMIC
112 BARROW HALL
UNIVERSITY OF GEORGIA
ATHENS, GEORGIA 30601

CUSTOMER ID No. 1087
PLEASE REFER TO THIS NUMBER
ON ALL FUTURE CORRESPONDENCE.

COMPUTER PROGRAM PRICE $ N/C
(SUBJECT TO CHANGE WITHOUT NOTICE)

N74-76825

This Document Reproduced From
Best Available Copy.

COPY NO. 2

SPACE SHUTTLE LOW PRESSURE AUXILIARY PROPULSION SUBSYSTEM DEFINITION

1 June 1971

Report MDC E0398

Volume 1

Design and Sizing Computer Program Users Manual

Prepared by: A. E. Bruns

Approved by: P.J. Kelly, Study Manager, Propulsion

CONTRACT NO. NAS 9-11012

MCDONNELL DOUGLAS ASTRONAUTICS COMPANY • EAST

Saint Louis, Missouri 63166 (314) 232-0232

MCDONNELL DOUGLAS CORPORATION

PRICES SUBJECT TO CHANGE

Reproduced by
NATIONAL TECHNICAL
INFORMATION SERVICE
US Department of Commerce
Springfield, VA. 22151

191p

ABSTRACT

This report documents a design and sizing computer program used in support of the Space Shuttle Low Pressure Auxiliary Propulsion Subsystem (APS) Definition Study (Contract No. NAS 9-11012). The study objective was to identify and evaluate APS concepts, and to perform, for the more attractive of these, an in-depth design and performance analysis. The study was performed for the National Aeronautics and Space Administration, Manned Spacecraft Center (MSC), Houston, Texas.

This is Volume I (Users Manual) of a two volume report which documents the design and sizing computer program. Volume I contains a complete technical description of the APS including a description of subsystem operation; subsystem/assembly design descriptions; delineation of the engineering analysis equations, including substantiation of data; and sample cases showing program input/output. Volume II (Program Manual) contains a program description and internal program nomenclature including a description of variable names, detailed flow charts and a program listing. The computer program evaluates APS weight for prescribed design parameters and sizes the APS and its components. Component and assembly models are included for liquid propellant storage; pressurization subassembly; propellant conditioner; liquid/vapor mixer; and propellant distribution network, including valves; and engine assemblies. In addition, engine performance and propellant property models are included. An iteration scheme is included for optimizing APS feed component weights as a function of engine chamber pressure. Total subsystem weight as well as component weights are included in the program output. APS design points and sensitivities to design parameters and mission requirements can be obtained from the program.

CONTENTS

SECTION		PAGE
1.	Introduction	1-1
2.	Technical Description	2-1
2.1	Subsystem Operation	2-1
2.1.1	Orbiter	2-1
2.1.2	Booster	2-3
2.2	Subsystem Description	2-3
2.2.1	Propellant Storage Assembly (Orbiter)	2-5
2.2.2	Propellant Conditioning Assembly (Orbiter)	2-7
2.2.3	Liquid/Vapor Mixer (Orbiter)	2-7
2.2.4	Propellant Distribution Assembly (Orbiter and Booster)	2-10
2.2.5	Engine Assemblies (Orbiter and Booster)	2-14
3.	Analysis	3-1
3.1	Approach	3-1
3.2	Component Models	3-1
3.2.1	Engine Performance	3-1
3.2.2	Engine Weight	3-10
3.2.3	Distribution Lines	3-12
3.2.4	Valves	3-14
3.2.5	Curve Interpretation	3-14
3.2.6	Liquid/Vapor Mixer	3-16
3.2.7	Passive Heat Exchanger	3-17
3.2.8	Propellant	3-19
3.2.9	APS Propellant Tanks	3-20
3.2.10	Pressurization Subassembly	3-22
3.2.11	Properties	3-26
3.3	Special Options	3-31
3.4	Variables	3-32
4.	Solution and Parametric Effects	4-1
4.1	General	4-1
4.2	Input Data (Orbiter)	4-1
4.3	Input Data (Booster)	4-8
4.4	Output Data	4-8

EFFECTIVE PAGES

Title
ii through iii
1-1 through 1-2
2-1 through 2-17
3-1 through 3-34
4-1 through 4-10
5-1 through 5-1

1. INTRODUCTION

The NASA space shuttle vehicle system for future manned space operations requires development of a number of subsystems which are either new or which represent significant extensions of state-of-the-art technology. Among these is the auxiliary propulsion subsystem (APS) used for control and maneuvering of the shuttle vehicle after main engine cut-off. Operating on the same types of propellants (i.e., oxygen and hydrogen) as the shuttle main propulsion, these subsystems will have a minimum service life of 100 mission cycles without need of major overhaul or refurbishment. Two basic design approaches have been conceived for the APS: (1) a high pressure concept, using turbopumps or turbocompressors to achieve high operating pressure levels and (2) a low pressure concept using the main engine propellant tanks as an integral part of the subsystem and operating at main engine tank ullage pressures. The latter concept was the subject of a 7-month study, titled "Space Shuttle Low Pressure Auxiliary Propulsion Subsystem Definition". The study was conducted for the National Aeronautics & Space Administration, Manned Spacecraft Center (MSC), Houston, Texas, under the technical direction of Mr. Norman Chaffee. The study objective was "to conduct preliminary auxiliary propulsion subsystem studies, which would generate information and data, for use in the overall shuttle vehicle effort", and which would, "identify attractive APS concepts, define their range of applicability and limitations and identify critical technology areas and development priorities". The study was performed by McDonnell Douglas Astronautics Company-East (MDAC-East) and its subcontractor, Aerojet Liquid Rocket Company (ALRC), under Contract NAS9-11012.

From the APS study, it was determined that orbiter requirements are best satisfied by the use of an orbit maneuvering subsystem (OMS) to perform all high total impulse maneuvers, such as orbit circularization, plane changes, and deorbit functions, while all attitude control and vernier maneuvers, such as midcourse correction and docking are best performed by the APS. APS velocity increments of approximately 40 feet per second maximum were found to provide the most favorable allocation of +x axis maneuvers between APS and OMS. By definition, the APS uses the main engine tanks as low pressure gas accumulators. Propellants from separate liquid tanks are used for main engine tank resupply. Prior to injection into the main engine tanks, the resupply propellants are circulated through tubular, passive heat exchangers where they are vaporized and superheated. Then, during major APS

operation, the warm propellant vapors from the main engine tanks are mixed with additional liquid propellants in a downstream liquid/vapor mixer and supplied to the engines at constant temperature and pressure (constant density). During periods of low APS usage, all propellants are extracted from the main engine and propellant pressures and temperatures at the engine inlets are allowed to vary. The booster APS requires no separate propellant storage, since propellant residuals, trapped in the main engine tanks following boost, are sufficient to meet APS propellant demands. The booster APS operates in a simple blowdown mode and requires no additional control. Documentation of pertinent study results are contained in Reports MDC E0303 (Subtask A - Conceptual Definition); MDC E0302 (Subtask B - Preliminary Design); MDC E0293 (Summary Report); and MDC E0301 (Design Handbook).

This report provides complete documentation of the "Low Pressure APS Design and Sizing Computer Program". The program evaluates and defines optimum design parameters and sizes of low pressure APS, as described above, for various space shuttle performance requirements. APS design points and sensitivities to design parameters and/or mission requirements can be obtained from the program. Volume I of this report is a program user's manual which provides APS technical descriptions and describes the analysis approach and math models used in program development. An example case, APS weight and sizing solutions and parametric effects are also included. APS technical descriptions can be found in Report MDC E0301 (Design Handbook) but have also been included in Volume I for the convenience of the user. Volume II, the program manual, contains program operating instructions and internal program nomenclature, including detailed flow charts, program listings and a description of program names. Together these manuals provide the user with the necessary background data, methods of analysis and instructions for efficient program utilization.

2. TECHNICAL DESCRIPTION

2.1 Subsystem Operation - The low pressure APS design and sizing computer program was written to evaluate and define optimum design parameters and size of the low pressure auxiliary propulsion subsystem (APS). Auxiliary propulsion is required on both booster and orbiter elements of a space shuttle vehicle to provide attitude control. In the case of the orbiter element, the APS is also required for low-impulse translational maneuvers. These subsystems operate on the same types of propellant (i.e., oxygen and hydrogen) as the space shuttle main propulsion and use the main engine propellant tanks as an integral part of the subsystem. Space shuttle mission requirements dictate the number of engines, engine size (thrust level) and engine location.

2.1.1 Orbiter - The orbiter APS requires separate liquid propellant storage tanks to supplement main engine tank residuals. Propellant from the storage tanks is circulated through passive heat exchangers, mounted on the main engine tanks, where it is superheated and injected into the main engine tanks. During major APS operations, warm propellant vapors from the main engine tanks are mixed with additional liquid propellants in a downstream liquid/vapor mixer, and supplied to the engines at constant temperature and pressure. During periods of low propellant demand, the APS operates entirely from main engine tank propellant vapors and no control of engine inlet conditions is employed. Isolation valves are located in the propellant distribution network to isolate a faulty engine (or groups of engines) in case of engine failure. The orbiter APS schematic is shown in Figure 2-1.

Low pressure APS mission operation is as follows. At the end of boost, liquid and gaseous propellants are trapped in the main engine tanks and feedlines. Environmental heating of the tanks warms the propellant vapor and boils off the liquid residual. If heating is sufficient to reach tank relief pressure, venting occurs and propellant is lost. APS operation during this initial phase decreases tank pressure and precludes propellant venting. Thus, during the early mission phases, the APS operates almost entirely from residual propellant contained within main engine tanks. As the mission proceeds, tank pressures decay and propellant must be resupplied from separate, liquid propellant storage tanks. The resupplied propellant is vaporized and superheated in a passive heat exchanger, mounted to the main engine tank. Main engine tanks thus serve both as heat sources (to condition the propellant) and as accumulators (to store the propellant vapor).

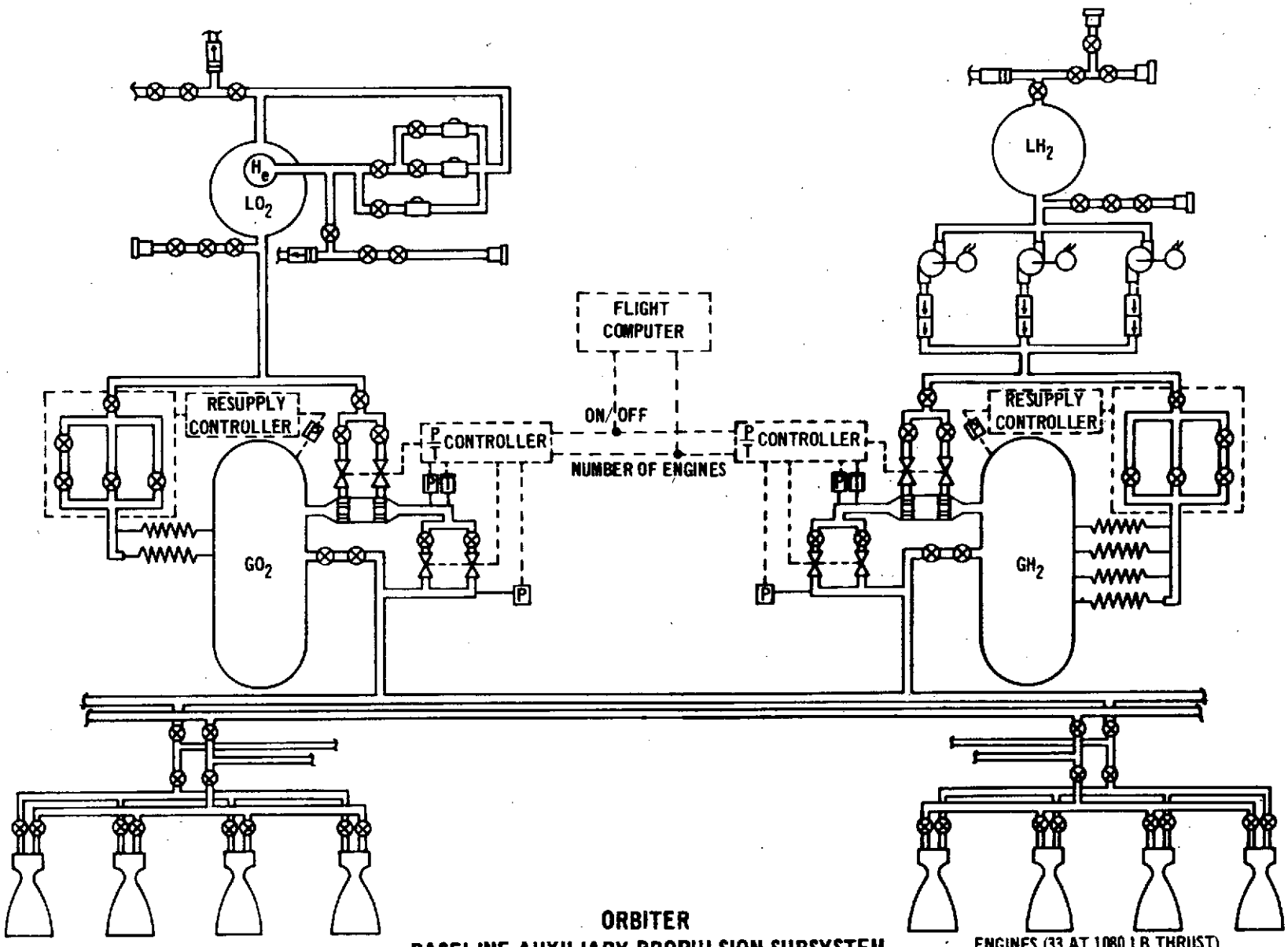

ORBITER
BASELINE AUXILIARY PROPULSION SUBSYSTEM

ENGINES (33 AT 1080 LB THRUST)

FIGURE 2-1

During low demand and initial phases of APS operation, engine inlet conditions vary since all propellant is extracted from the main engine tank. When a major APS operation is scheduled, however, engine inlet conditions are closely controlled by addition of liquid propellant (taken from the APS storage assembly) to the mixer assembly. During both modes of operation, propellants from the liquid storage tanks are supplied to the main engine tanks, via the passive heat exchanger assembly; resupply fluid flow rates are controlled to match flow rates out of the tank.

After each major APS operation, propellant vapor in the main engine tank will be relatively cool, and tank walls will be chilled because of heat removal for propellant conditioning. Tank wall temperature recovery is effected by radiation heating from the vehicle skin. Heat transfer from the tank walls to the gas inside raises gas temperature and pressure to their original condition and prepares the APS for its next major demand.

2.1.2 Booster - The booster low pressure APS operates in a simple blowdown mode, utilizing the main engine tank residual propellants. At main engine cutoff, the main engine tanks and feedlines contain sufficient liquid and gaseous propellant residuals to satisfy the entire APS mission duty cycle. Hence, the booster APS requires no additional tankage, thermal conditioning, or liquid/vapor mixing assemblies. The complete APS consists of g-sensitive tank outlet valves, a propellant distribution assembly and control engine assemblies; all are shown schematically in Figure 2-2.

When the booster APS engines are fired, propellant vapor is extracted from main engine tanks and pressure within these tanks decay. The thermodynamic process corresponding to this operation is similar to any gas storage bottle blowdown. For low flow rates, pressure decay is nearly isothermal; however, if outflow rate is high, the process is nearly isentropic. Following engine shutdown, the pressure and temperature profiles are dependent on heat transfer into the system.

2.2 Subsystem Description - The orbiter low pressure auxiliary propulsion subsystem contains five primary assemblies:

(1) propellant storage assembly, consisting of liquid propellant storage tanks and associated thermal protection, propellant positioning and pressurization subassembly,

(2) propellant conditioning assembly, consisting of main engine tanks with an integral passive heat exchanger,

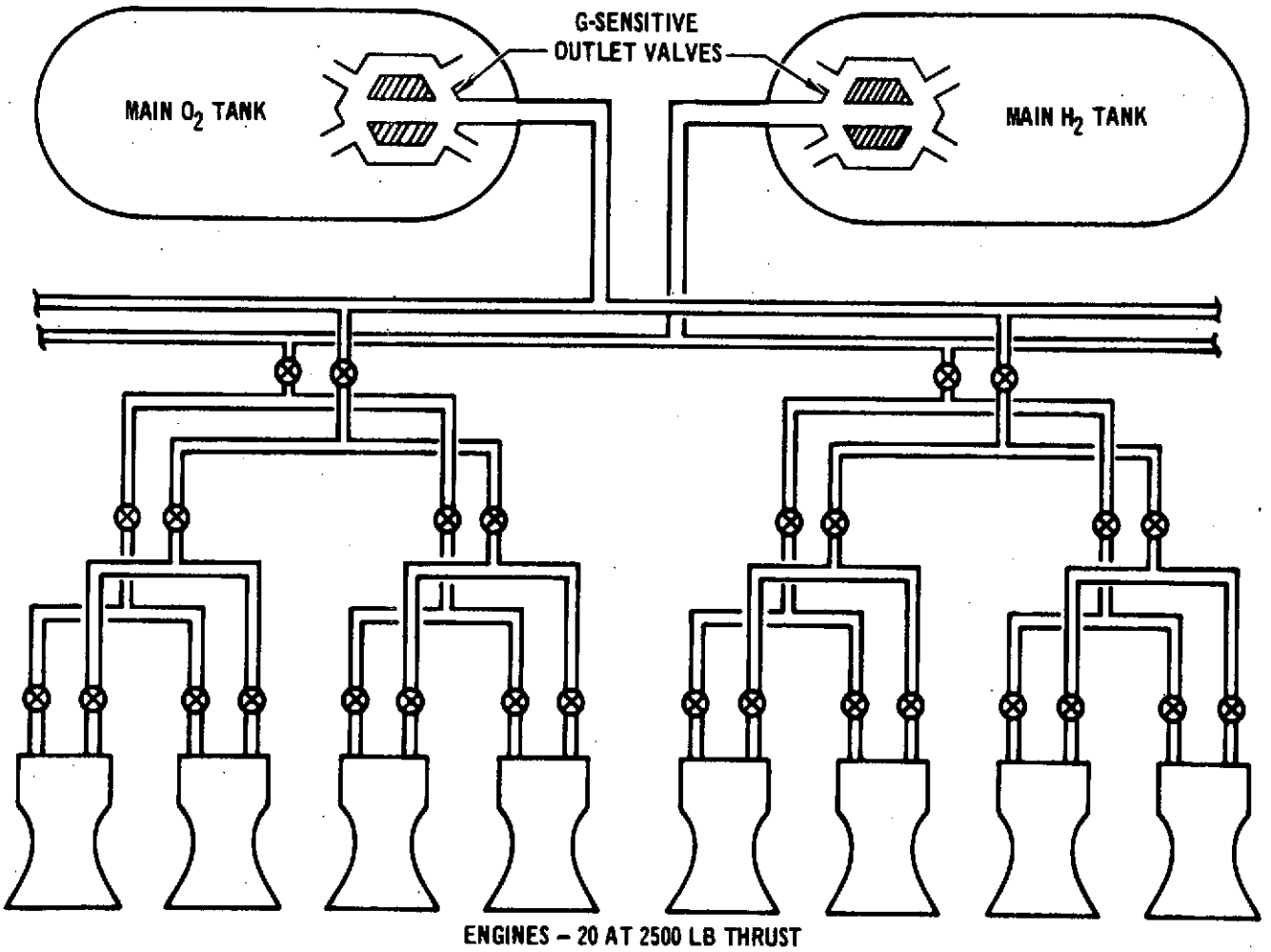

BOOSTER BASELINE AUXILIARY PROPULSION SUBSYSTEM

FIGURE 2-2

(3) liquid/vapor mixing assembly, consisting of a liquid injection/mixing chamber and constant density controls,

(4) propellant distribution assembly and associated valves and controls, and

(5) engine assemblies.

The main engine propellant tanks are also an integral part of the APS, serving primarily as gas accumulators, and secondarily as mixing chambers and heat sources.

The booster low pressure auxiliary propulsion subsystem contains two primary assemblies. These are:

(1) a propellant distribution assembly and associated valves and controls

(2) control engine assemblies.

A discussion of the design concepts is included in the following sections.

2.2.1 Propellant Storage Assembly (Orbiter) - The APS storage assembly must contain sufficient propellant, when added to the main engine tank residuals, to meet the APS impulse requirements as dictated by a specific space shuttle mission.

Oxygen and hydrogen propellant APS tank designs are similar except for pressurization subassemblies. A regulated, cold helium supply is used for liquid oxygen pressurization and submerged, low suction, head pumps are used for liquid hydrogen. The liquid hydrogen tank, shown in Figure 2-3, consists of an aluminum structural shell (or pressure vessel), insulation, and protective covering. The insulation subassembly is comprised of a 0.4 inch polyurethane foam substrate over the structural shell to prevent cryopumping during ground purge, a cooling shroud to intercept heat leaks from tank supports and surroundings, and a double-aluminized Mylar, multilayer insulation shield for space operations. The cooling shroud is a one mil aluminum foil dip-brazed to a coil of 1/8 inch aluminum tubing. A small quantity of liquid hydrogen, which is extracted from the storage tank, is circulated through the coil where it absorbs incoming heat through vaporization. The hydrogen is extracted from the propellant acquisition device, throttled to reduce its temperature, and passed through the tank insulation cooling shrouds (first the H_2 and then the O_2 tank) prior to being vented overboard. Tank insulation is fabricated in gore segments laced together and is protected from structural damage and atmospheric moisture degradation by a fiberglass outer shell. The oxygen tank is identical except that the polyurethane foam substrate is not required.

Both hydrogen and oxygen tanks incorporate a surface tension screen device for propellant acquisition. The surface tension device is made up of three annular trays, as shown in Figure 2-3. Each tray consists of an aluminum channel covered by a perforated plate, which serves as a screen support and adds to rigidity.

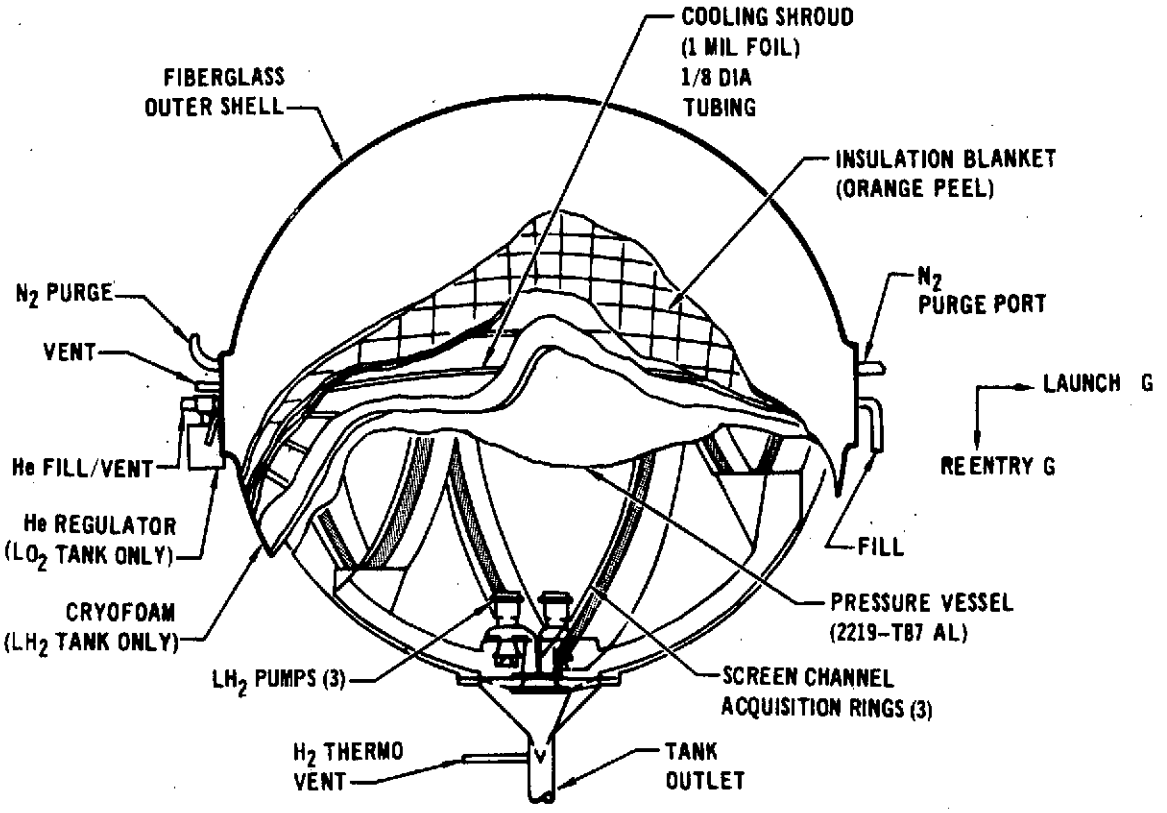

PROPELLANT TANK INSULATION/COOLING DESIGN

FIGURE 2-3

Oxygen tank pressurization is accomplished by a conventional cold helium pressurization assembly. A high pressure (3,000 lbf/in^2a) stainless steel helium storage tank is mounted inside the liquid oxygen tank. Regulators maintain tank pressure at 35 lbf/in^2a.

Hydrogen pressurization requirements are satisfied by low head rise, motor driven boost pumps submerged in the hydrogen tank outlet. The hydrogen tank is prepressurized to 40 lbf/in^2a with helium. Combined with a 10 percent initial ullage volume, this prepressurization level ensures at propellant depletion a minimum of 0.5 lbf/in^2 above propellant vapor pressure. This includes allowances for helium solubility in LH_2.

Pertinent physical and performance characteristics of the propellant storage assembly are summarized in Figure 2-4.

2.2.2 Propellant Conditioning Assembly (Orbiter) - The propellant conditioning assembly is composed of main engine tanks, multiple tube/heat exchanger, and associated controls for propellant resupply. Hydrogen and oxygen heat exchangers are constructed of aluminum tubing to achieve high heat transfer rates and low weight. Figure 2-5 defines the heat exchanger concept and shows how the tubes are attached to tank longitudinal stiffeners. The section modulus of the tube and flange adds to longitudinal rib stiffness providing a potential reduction in tank rib height and weight.

Heat exchanger design characteristics include number of panels; number of tubes per panel; and tube length, spacing, and diameter. Dimensions are presented in Figure 2-6 for a typical heat exchanger designed for an APS which provides a maximum velocity increment of 40 feet/second. Propellant gas velocities in the tubes are limited to Mach 0.3. Conditioning assemblies were sized (tube length, spacing, etc.) to maintain final main engine tank pressures of approximately 20 lbf/in^2a. Heat exchanger design inlet pressures are at 35 lbf/in^2a for oxygen and 57 to 35 lbf/in^2a for hydrogen. Resupply flow rates are established by a pressure/temperature controller which is designed to maintain a constant vapor mass within main engine tanks at all times. Flow modulation is achieved with valve-orifice assemblies.

2.2.3 Liquid-Vapor Mixer Assembly (Orbiter) - The liquid-vapor mixer assembly is used during major APS operations, to provide constant pressure and temperature at the engine inlets, thus achieving constant thrust level and mixture ratio. The mixer is located in the main propellant distribution line, downstream of the main

	OXYGEN	HYDROGEN
PRESSURIZATION		
TYPE	COLD HELIUM	PUMP
STORAGE PRESSURE, LBF/IN^{2}A	3000	(40 HE PREPRESS)
STORAGE TEMPERATURE, ^{0}R	165	–
SUPPLY PRESSURE, LBF/IN.^{2}A	35	35 MIN
PUMP HORSEPOWER, BHP	–	6.1
ELECTRICAL POWER	–	208V (23 AMPS)
PROPELLANT TANK		
VOLUME, FT^3	67	634
DESIGN PRESSURE, LBF/IN.^{2}A	35	40
MATERIAL	2219–T87 AL	2219– T87 AL
INSULATION	HPI	HPI/CRYOFOAM
THICKNESS, IN.	0.97	0.68 (HPI) / 0.42 (FOAM)
COOLING	H_2VENT	H_2VENT
VENT RATE, LB/HR	–	0.45
SHROUD	1 MIL AL FOIL	1 MIL AL FOIL
TUBING	1/8 DIA;0.010 WALL	1/8 DIA; 0.010 WALL
PROPELLANT ACQUISITION	SCREEN TRAP	SCREEN TRAP
EXTRACTION RATE, GPM	103	550
HYDROSTATIC HEAD, LBF/FT^2	41	6.4
EXPULSION EFFICIENCY	0.987	0.991

APS PROPELLANT STORAGE DESIGN SUMMARY

FIGURE 2-4

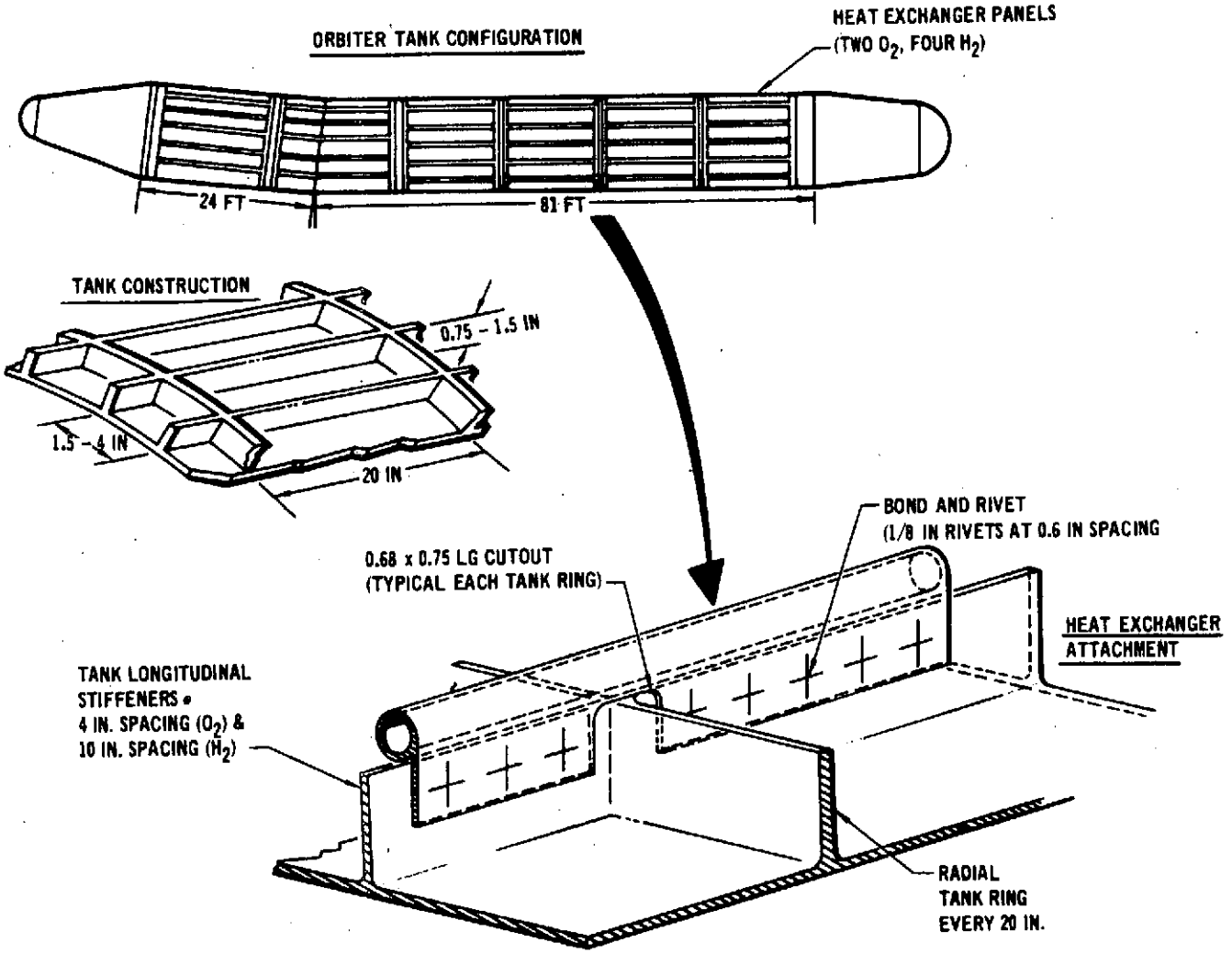

PASSIVE HEAT EXCHANGER CONCEPT

FIGURE 2-5

TYPE	MULTIPLE TUBE/HEAT SINK
LOCATION	INTEGRAL WITH MAIN ENGINE TANK WALL
ATTACHMENT	TUBE FLANGE RIVETED TO TANK LONGITUDINAL STIFFENERS
TUBE CHARACTERISTICS	
MATERIAL	2014-T6 ALUMINUM
DENSITY, LBM/IN^3	0.101
DESIGN TEMPERATURE, ^{o}R	530
ULTIMATE STRESS, LBF/IN^2	64,000
ULTIMATE SAFETY FACTOR	2.0
MINIMUM GAGE, INCHES	0.022
MAXIMUM MACH NUMBER	0.3

PANEL DIMENSIONS	OXYGEN	HYDROGEN
NUMBER OF PANELS	2	4
NUMBER OF TUBES	154	62
TUBE LENGTH, FT	17.5	15.0
TUBE SPACING, IN	4.0	10.0
TUBE DIAMETER, IN	0.394	0.298

HEAT EXCHANGER DESIGN CHARACTERISTICS

FIGURE 2-6

engine tank. This assembly consists of a liquid injection/vapor mixing chamber and two independent controls: a pressure regulator and a liquid flow rate controller. Cold liquid propellant is injected into the mixing chamber, where it is combined with warm propellant vapors (extracted from the tank) to achieve a constant propellant density corresponding to predefined mixer temperature and regulated pressure. Minimum engine inlet temperatures are 200°R for oxygen and 150°R for hydrogen, based on engine ignition criteria and maximum allowable injector temperature differential. Mixer physical characteristics required to achieve these conditions are shown in Figure 2-7 for the selected APS design.

Mixer design is similar for both oxygen and hydrogen propellants, consisting of a liquid injection element, with hyperthin vanes located normal to the gas stream, and a downstream mixing length to allow liquid vaporization. Liquid flow is controlled by a motor driven cavitating venturi throttle valve to provide a prescribed temperature at the mixing chamber outlet. This valve maintains constant liquid injection pressure and decouples liquid flow rates from mixing chamber pressure fluctuations. The pressure regulator is a motor driven IRIS or petal-type throttle valve.

2.2.4 Propellant Distribution Assembly (Orbiter and Booster) - The propellant distribution assembly supplies propellant from the liquid/vapor mixer assembly to the engine assemblies and provides engine isolation in case of failure. Ducts, valves, and linear and angular compensators make up this assembly. Each section of ducting includes linear and angular compensators as required to absorb normal manufacturing tolerances, differences in thermal expansion between ducts and vehicle structure, and load-induced structural motions. A typical line and compensator installation is shown in Figure 2-8.

Line routing and valving are typified by the oxygen distribution assembly schematically depicted in Figure 2-9 for the selected orbiter design. Isolation valves are located as shown to provide shutdown of engine groups when necessary. To minimize weight, main engine tank pressurization lines are used as primary APS distribution trunk lines. These lines extend nearly the full length of the orbiter and booster, and are of sufficient diameter to accommodate APS flow requirements. All remaining lines are sized to provide minimum subsystem weight by balancing line weight penalty (a function of friction losses) and engine weight penalty (a function of resultant chamber pressures) for the maximum number of engines that could be fired simultaneously.

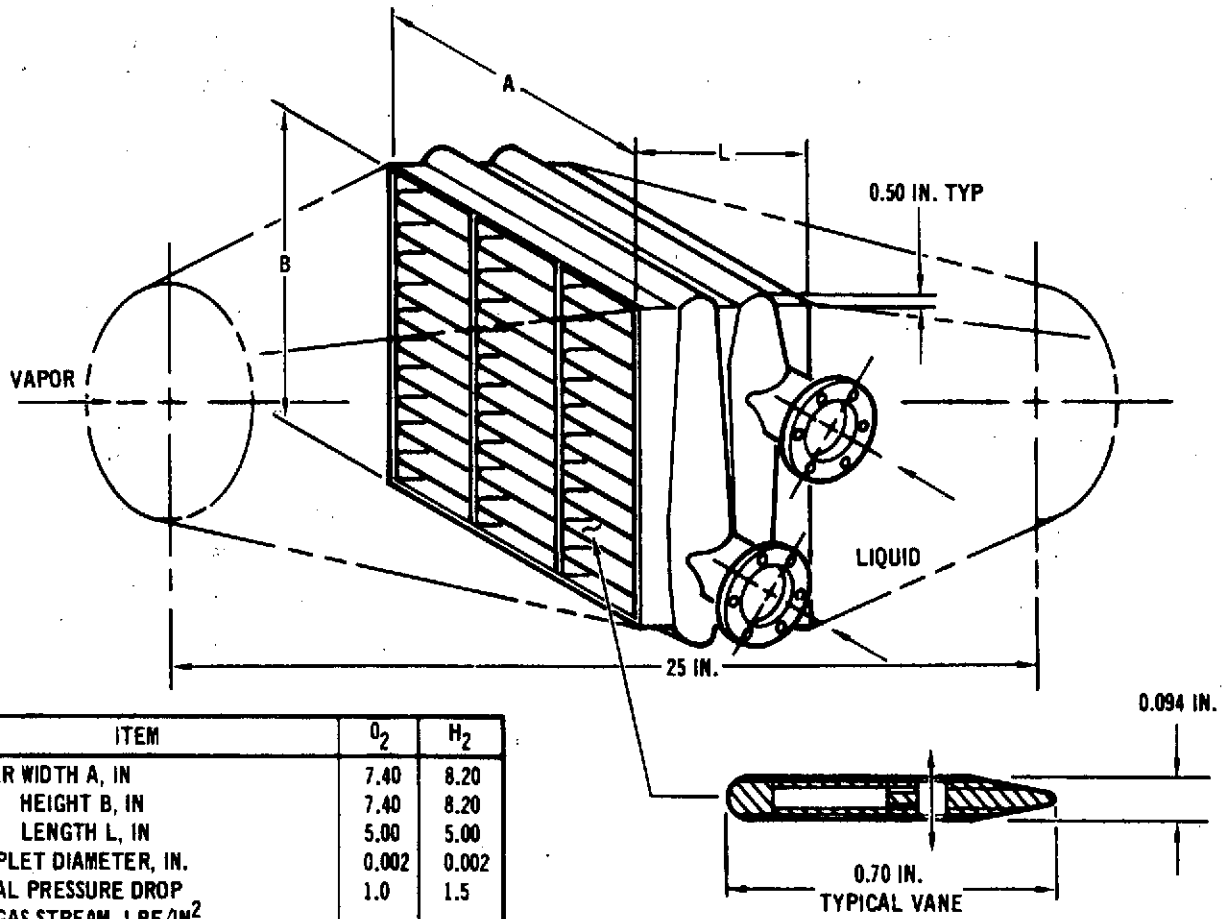

ITEM	O_2	H_2
MIXER WIDTH A, IN	7.40	8.20
HEIGHT B, IN	7.40	8.20
LENGTH L, IN	5.00	5.00
DROPLET DIAMETER, IN.	0.002	0.002
TOTAL PRESSURE DROP GAS STREAM, LBF/IN^2	1.0	1.5
PRESSURE DROP, LIQUID, LBF/IN^2	10.0	7.8
GAS STREAM MACH NO.	0.2	0.2
LIQUID DISCHARGE VELOCITY, MAX, FPS	20	47

PROPELLANT LIQUID/VAPOR MIXER

FIGURE 2-7

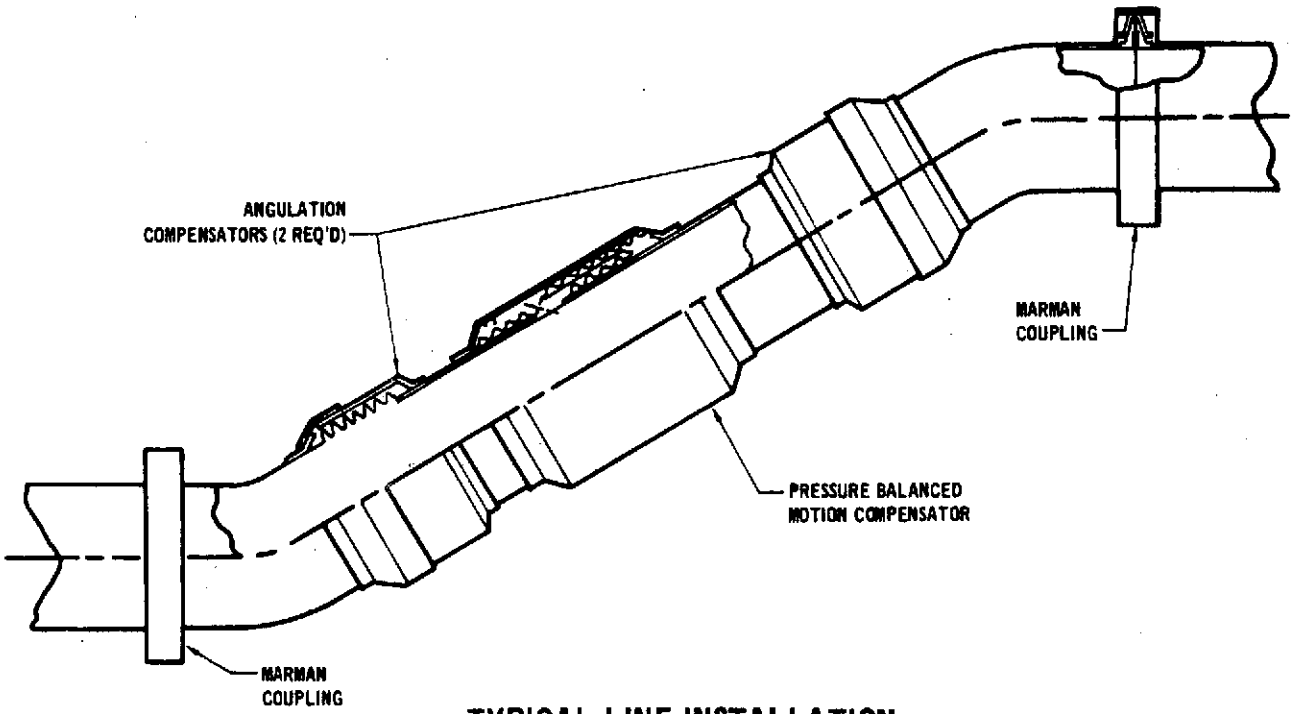

TYPICAL LINE INSTALLATION

FIGURE 2-8

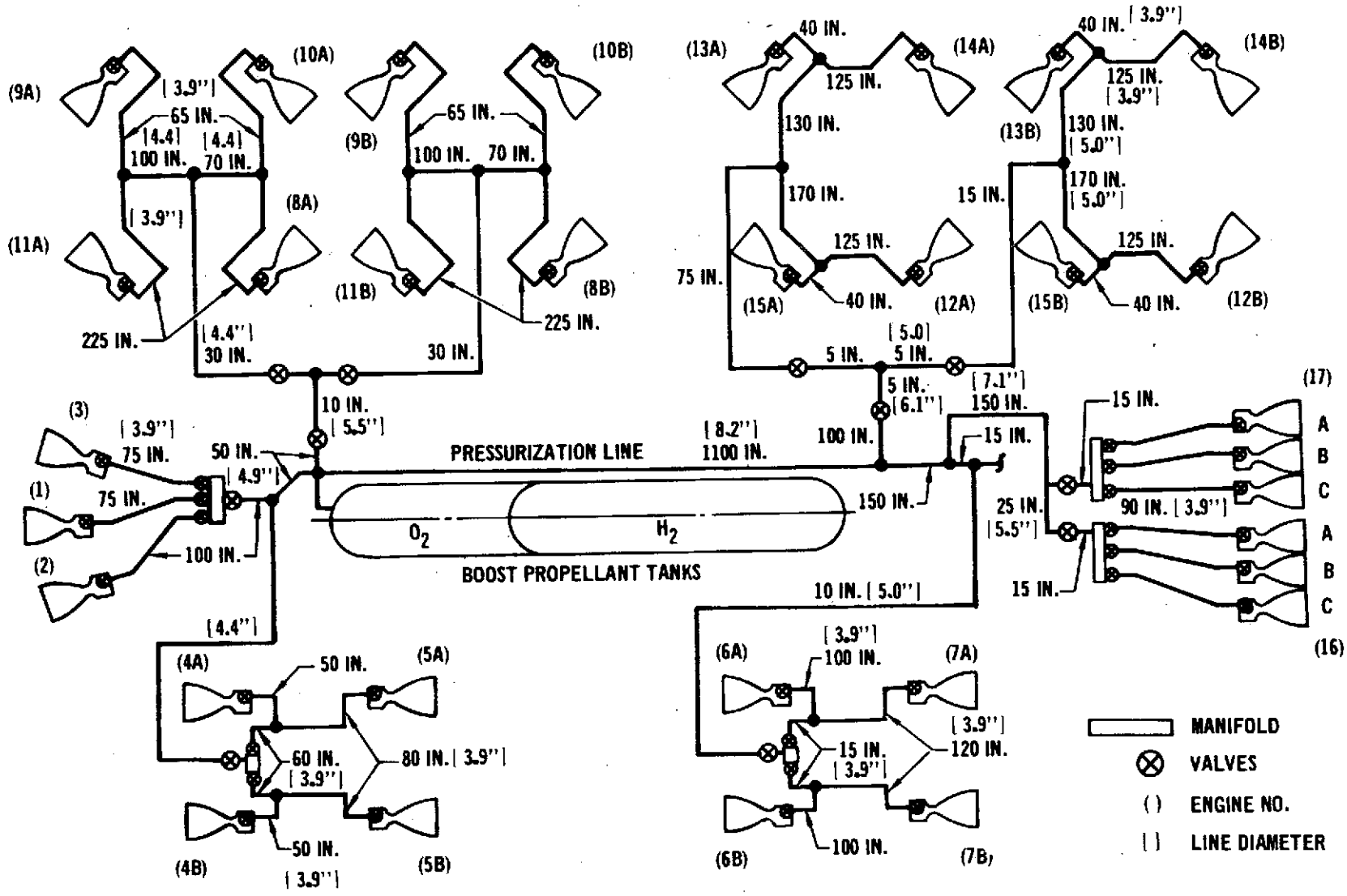

DISTRIBUTION NETWORK

ORBITER DISTRIBUTION (OXYGEN SIDE)

FIGURE 2-9

MDC E0398
1 JUNE 1971
VOLUME 1

Distribution network design characteristics are given in Figure 2-10. All lines are fabricated from minimum gage aluminum. Minimum gage dimensions are dictated by fabrication and handling requirements and were determined from a survey of current aircraft usage. The bellows-type angular and linear compensators are also constructed of aluminum. Visor type isolation valves are used to minimize envelope, weight, and pressure losses.

2.2.5 Engine Assemblies (Orbiter and Booster) - APS engine assemblies provide all attitude control for the orbiter and booster, as well as vernier translation maneuvers for the orbiter. Engine assemblies include propellant control valves, injector, combustion chamber, and nozzle. The engine design features are shown in Figure 2-11. Engine cooling is achieved by hydrogen film cooling along the interior of the combustion chamber and nozzle wall. Combustion chambers and nozzles are fabricated of thin wall, high temperature steels, while the head end is fabricated of aluminum to minimize assembly weight. The two dissimilar materials are attached by welding to a bimetallic ring. Chambers and nozzles are externally insulated with MIN-K-2000 insulation. Ignition is achieved by a sequenced electric spark torch ignitor, and propellant flow control is achieved by pneumatically actuated, pilot operated, coaxial poppet valves. Helium for the pneumatic subassembly is stored at 3500 lbf/in^2a in three titanium tanks.

The booster engine is similar to the orbiter engines. Differences result from a higher booster engine thrust level and lower expansion ratio which optimize at an expansion ratio of 2:1 and a mixture ratio of 2:1. The orbiter engine uses an expansion ratio of 8:1 at a mixture ratio of 3:1. A summary of engine physical characteristics is shown in Figure 2-12 for the selected APS orbiter and booster design.

DISTRIBUTION LINES	
MATERIAL	2219 ALUMINUM
DENSITY (LB/IN.^{3})	0.101
DESIGN TEMPERATURE (^{0}R)	530
ULTIMATE STRESS LBF/IN.^{2}	64,000
ULTIMATE SAFETY FACTOR	2.0
MINIMUM GAGE (INS)	
LINE DIAMETER 2–4	0.022
4–6	0.035
6–9	0.049
COMPENSATORS	
TYPE, ANGULAR	SOCKET/BELLOWS
LINEAR	IN LINE BELLOWS
MATERIAL	2219 ALUMINUM
ISOLATION VALVES	
TYPE	VISOR
MATERIAL	ALUMINUM
ACTUATION	DC REVERSIBLE MOTOR DRIVE WITH CLUTCH BRAKE

DISTRIBUTION ASSEMBLY DESIGN CHARACTERISTICS
(Oxygen and Hydrogen)

FIGURE 2-10

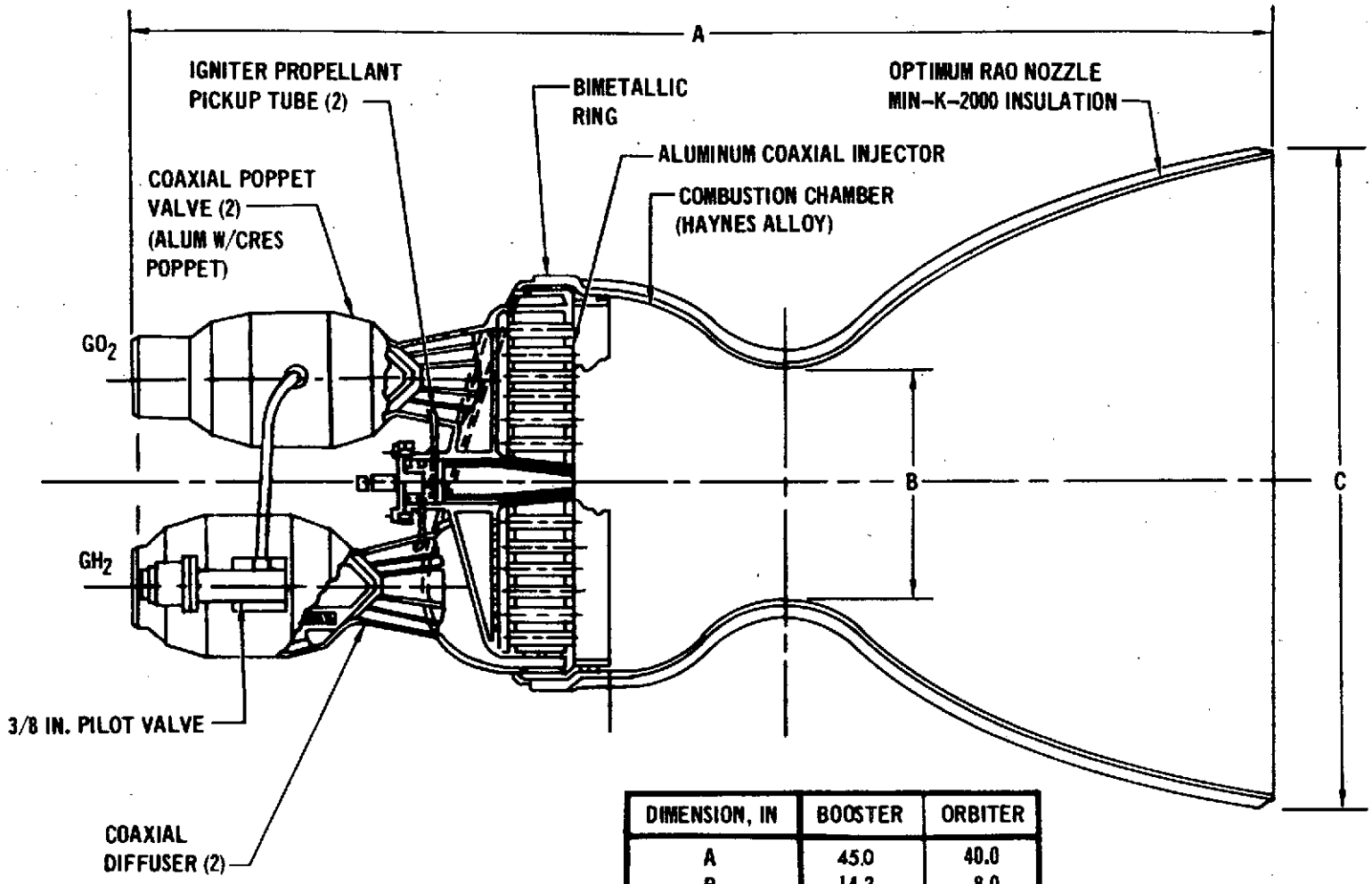

DIMENSION, IN	BOOSTER	ORBITER
A	45.0	40.0
B	14.2	8.0
C	22.0	24.0

ENGINE ASSEMBLY

FIGURE 2-11

THRUST	LB	1080
CHAMBER PRESSURE	LBF/IN.^{2}A	13.7
MIXTURE RATIO		3.0
EXPANSION RATIO		8:1
INLET PRESSURE	LBF/IN.^{2}A	15.7
INLET TEMPERATURE	O_2/H_2 – ^oR	200/150
SPECIFIC IMPULSE	SECS	376.5
FLOW RATE (TOTAL	LB/SEC	2.87
FUEL FILM COOLANT	%	15
CYCLE LIFE	CYCLES	100,000
WEIGHT – TOTAL	LB	77.0
– INJECTOR		38.7
– CHAMBER & NOZZLE		14.6
– PROPELLANT VALVES		15.7
– IGNITION & MISCELLANEOUS		8.0
DIMENSIONS	– IN.	
– OVERALL LENGTH		40.0
–THROAT DIAMETER		8.0
– INSIDE CHAMBER DIAMETER		13.0
– NOZZLE EXIT DIAMETER (O.D.)		24.0
– INTERFACE DIAMETER		19.0
– VALVE EQUIVALENT FLOW AREA – IN.^{2} (O_2/H_2)		4.15/4.90

ORBITER APS ENGINE DESIGN CHARACTERISTICS

THRUST	LB	2500
CHAMBER PRESSURE	LBF/IN.^{2}A	11.0
MIXTURE RATIO		2.0
EXPANSION RATIO		2:1
INLET PRESSURE	LBF/IN.^{2}A	14.0
INLET TEMPERATURE	O_2/H_2 – ^oR	400/150
SPECIFIC IMPULSE	SECS	342
FLOW RATE (TOTAL	LB/SEC	7.31
FUEL FILM COOLANT	%	10
CYCLE LIFE	CYCLES	100,000
WEIGHT – TOTAL	LB	149.0
– INJECTOR		83.1
– CHAMBER & NOZZLE		22.3
– PROPELLANT VALVES		34.6
– IGNITION & MISCELLANEOUS		9.0
DIMENSIONS	– IN.	
– OVERALL LENGTH		45.0
–THROAT DIAMETER		14.2
– INSIDE CHAMBER DIAMETER		23.2
– NOZZLE EXIT DIAMETER (O.D.)		22.0
– INTERFACE DIAMETER		34.0
– VALVE EQUIVALENT FLOW AREA – IN.^{2} (O_2/H_2)		13.2/16.6

BOOSTER APS ENGINE DESIGN CONDITIONS

FIGURE 2-12

3. ANALYSIS

3.1 Approach - The APS design and sizing computer model consist of a main program which controls input/output and numerous subroutines which model the subsystem components and properties of the propellant. It also contains an iteration scheme for optimizing flow and pressure balances. A simplified flow chart is shown in Figure 3-1.

The subsystem has been divided into assemblies and components which depend upon propellant flow rates (e.g., feed system), and assemblies which depend only upon the length of operation or total impulse required of the subsystem. Engines, distribution lines, valves, and the liquid/vapor mixer (all flow rate dependent components) are sized as a function of engine chamber pressure based on the minimum available main engine tank pressures. All lines are sized to provide minimum subsystem weight by balancing line/valve weight (a function of friction losses) and engine weight penalty (a function of resultant chamber pressures) for the maximum number of engines that can be fired simultaneously. Line gas velocities are limited to Mach 0.3 maximum. Adibatic line flow with friction is assumed for this analysis. Impulse dependent assemblies and components include propellant quantity, propellant tankage and pressurization subassembly, and the heat exchangers.

Mathematical models of the subsystem components are described below. Models have also been included to evaluate engine performance; thermodynamic properties of hydrogen, oxygen, and helium; and optimum engine chamber pressure (curve fit of feed system weight as a function of chamber pressure).

3.2 Component Models

3.2.1 Engine Performance - Low pressure engine performance was evaluated by ALRC for the nominal case and over the range of conditions shown in the following table. Although the nominal values are based on an ALRC/NASA-LeRC developmental engine design, they also represent an approximate average of the orbiter and booster APS engine design points tabulated in Figure 2-12.

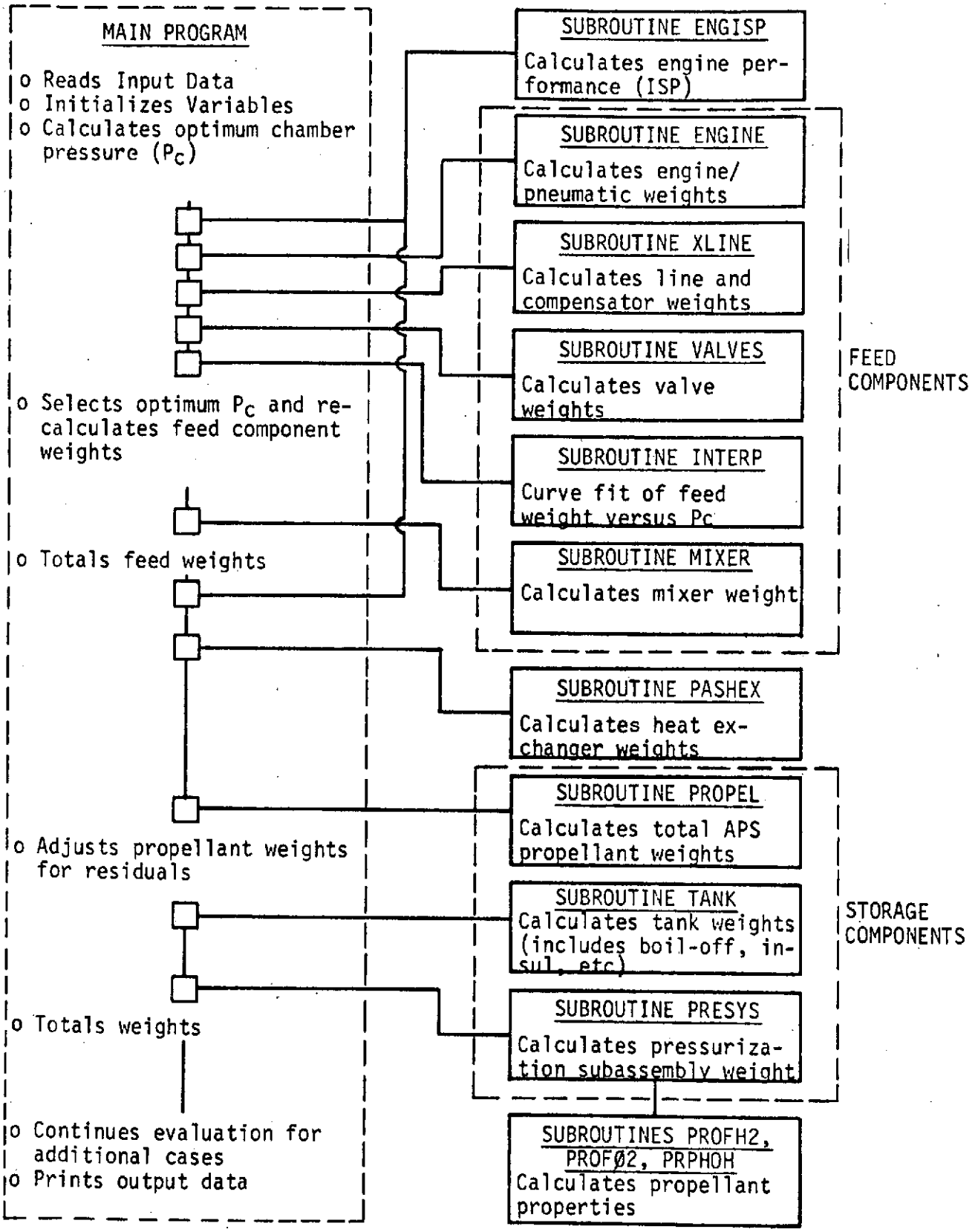

PROGRAM COMPUTATION DIAGRAM

FIGURE 3-1

Parameter	Units	Nominal	Range
Chamber Pressure	lbf/in^2a	15	10 - 30
Thrust	lbs	1500	300 - 4000
Mixture Ratio	O/F	2.5	2 - 6
Area Ratio	A_e/A_t	5.0	2 - 15
Oxygen Inlet Temperature	°R	540	200 - 800
Hydrogen Inlet Temperature	°R	540	100 - 800

ENGINE DESIGN PARAMETERS FIGURE 3-2

Based on performance analyses the following effects were evaluated over the above parametric range:

(1) theoretical specific impulse variations - due to variations in chamber pressure, area ratio, mixture ratio and inlet propellant conditions

(2) reaction kinetic losses - due to finite reaction rates which do not permit equilibrium conditions to be maintained during the expansion process

(3) mixture ratio maldistribution loss - due to hydrogen film cooling of the inner combustion chamber and nozzle wall

(4) boundary layer loss - due to shear drag and heat transfer effects along the boundary of the thrust chamber

(5) non-axial exhaust velocity (divergence loss) - due to two-dimensional flow effects which reduces nozzle thrust

Standard assessments of the magnitude of these losses were accomplished through the use of the ICRPG propellant performance evaluation technique described in Reference (a). The theoretical specific impulse was calculated for variations in chamber pressure, area ratio, mixture ratio and inlet propellant conditions using a one-dimensional shifting equilibrium performance computer model. Then with the technique of Reference (a), each of the specific impulse losses which make up the combined total of performance inefficiency is calculated over the variable ranges indicated in Figure 3-2. The sum of these losses, subtracted from theoretical, results in the engine delivered performance for any operational point.

It should be noted that cooling requirements are extrapolated from design point calculations. The cooling requirement is adjusted for changes in mixture

ratio, thrust level, chamber pressure, and inlet propellant temperature changes as stated in the following equation:

$$\%FFC = \%FFC_N \left(\frac{MR + 1}{MR_N + 1}\right)\left(\frac{F_N}{F}\right)^{.5}\left(\frac{P_c}{P_{cN}}\right)^{.5}\left(\frac{T_{PN} - T_{H2N}}{T_{PN} - T_{H_2}}\right) \qquad \text{Eq. 1}$$

The influence of the design conditions upon the required percentage of fuel film coolant is included in the performance model.

The engine delivered specific impulse is presented in Figures 3-3 through 3-6 based upon the primary variables of chamber pressure, thrust, mixture ratio, expansion ratio and propellant inlet temperatures. A negligible impact on I_{sp} was determined for different engine chamber pressures. The increased performance provided by increasing chamber pressure (thus reducing kinetic losses) is offset by a corresponding increase in percentage of film coolant required to cool the combustion chamber. This trend is considered valid for thrust-to-chamber pressure ratios of 2 to 100. Vacuum specific impulse increases with thrust as shown in Figure 3-4 due to reduction in boundary layer losses and film cooling mixture ratio maldistribution losses. The film cooling requirement decreases with increasing thrust as seen from Equation 1, thus allowing the engine core to operate at a higher overall mixture ratio closer to optimum conditions. Also shown in Figure 3-4 are performance increases with area ratio which result from the increases in exit velocity with the corresponding larger pressure ratio. For the low pressure engine, only minor performance increases are obtained for area ratios above 20. Performance increases at lower mixture ratios (Figure 3-5) reflect decreases in kinetic losses and mixture ratio maldistribution losses associated with film cooling. Increases in propellant inlet temperature result in increased performance due to the enthalpy rise of the combustion products. Since hydrogen has a high specific heat compared to oxygen, it has the most influential effect on performance as seen in Figure 3-6.

Performance trends as a function of the design and operating variables have been mathematically represented in the form of polynominal curve fits. The performance equations are as follows:

$$C_{MR} = 3.0615486E+2 + 8.236289E+1MR - 2.5341553E+1MR^2 + 2.0052997E+0MR^3$$

$$C_F = 9.5669612E-1 + 5.6185918E-5F - 2.4131457E-8F^2 + 4.8906032E-12F^3 - 4.5638046E-16F^4 + 1.5831677E-20F^5$$

$$C_\epsilon = 7.2869684E-1 + 1.2401970E-1\epsilon - 2.1588381E-2\epsilon^2 + 1.9211745E-3\epsilon^3 - 8.3143012E-5\epsilon^4 + 1.3822125E-6\epsilon^5$$

$$C_{T_{H_2}} = -1.8883830E+1 + 4.4876594E-2TH_2 - 1.8175606E-5TH_2^2$$

$$C_{T_{O_2}} = -2.8246153E+0 + 5.6461536E-3T_{O2} - 7.6923060E-7T_{O2}^2$$

$$C^* = 1 + \frac{(G - 1)\ (F - 1500)}{3500}$$

$$G = 1.02231 - 1.8563732E-2MR + 4.2676188E-3MR^2$$

$$ISP_V = (C_{MR} \times C_F \times C_\epsilon \times C^*) + C_{T_{H_2}} + C_{T_{O_2}}$$

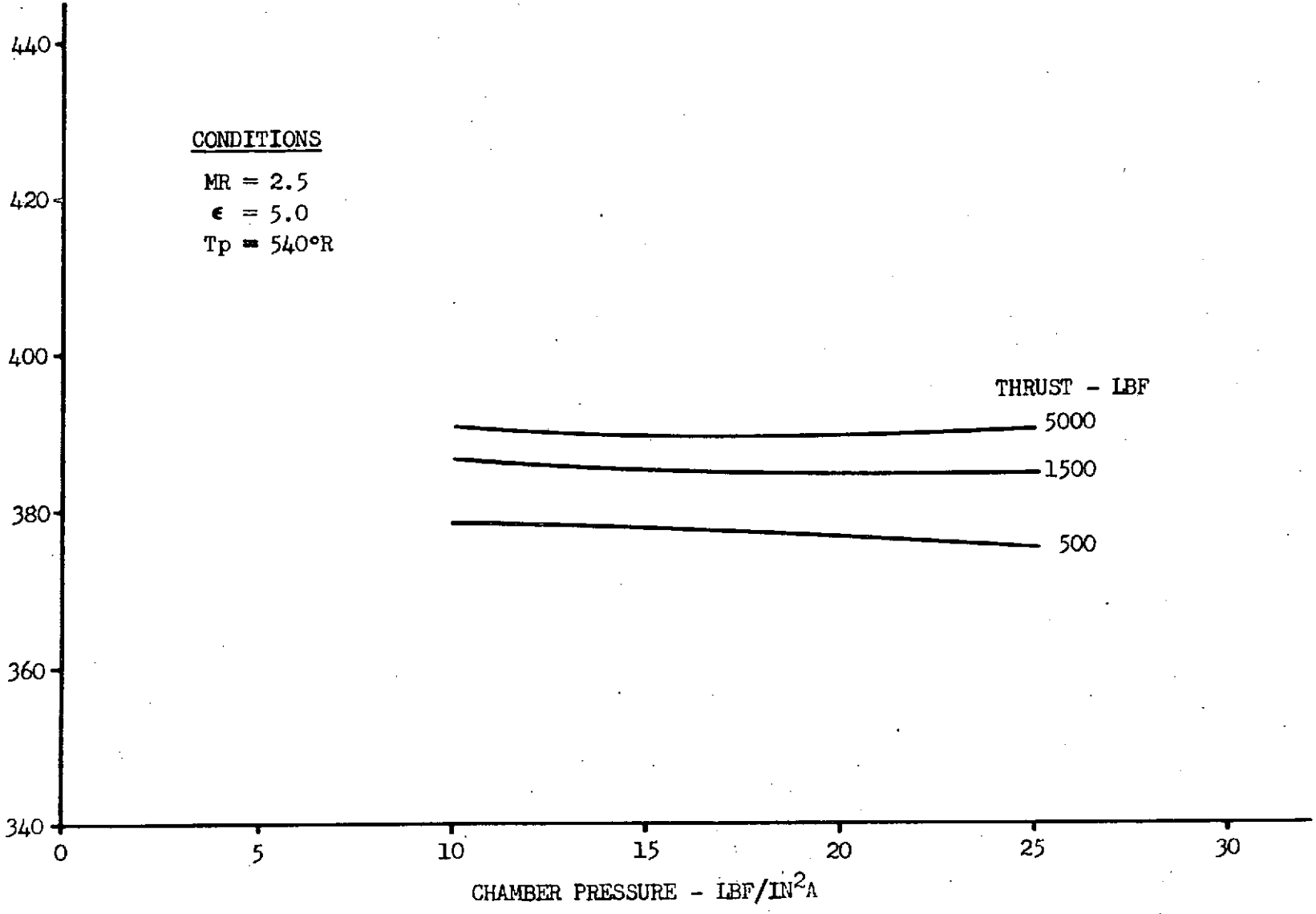

INFLUENCE OF CHAMBER PRESSURE ON PERFORMANCE

FIGURE 3-3

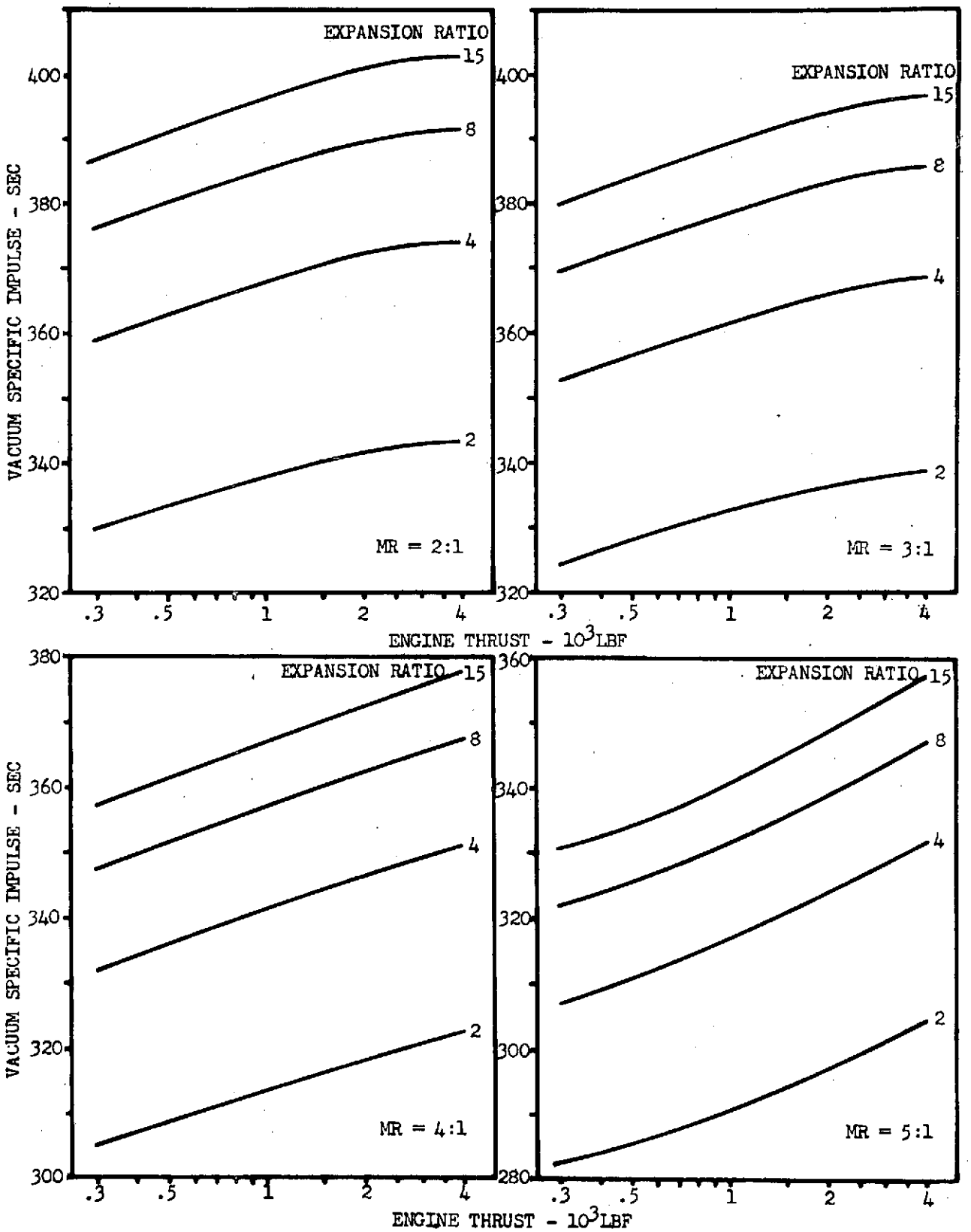

THRUST INFLUENCE ON SPECIFIC IMPULSE
(PROPELLANT INLET TEMPERATURE - 300°R)

FIGURE 3-4

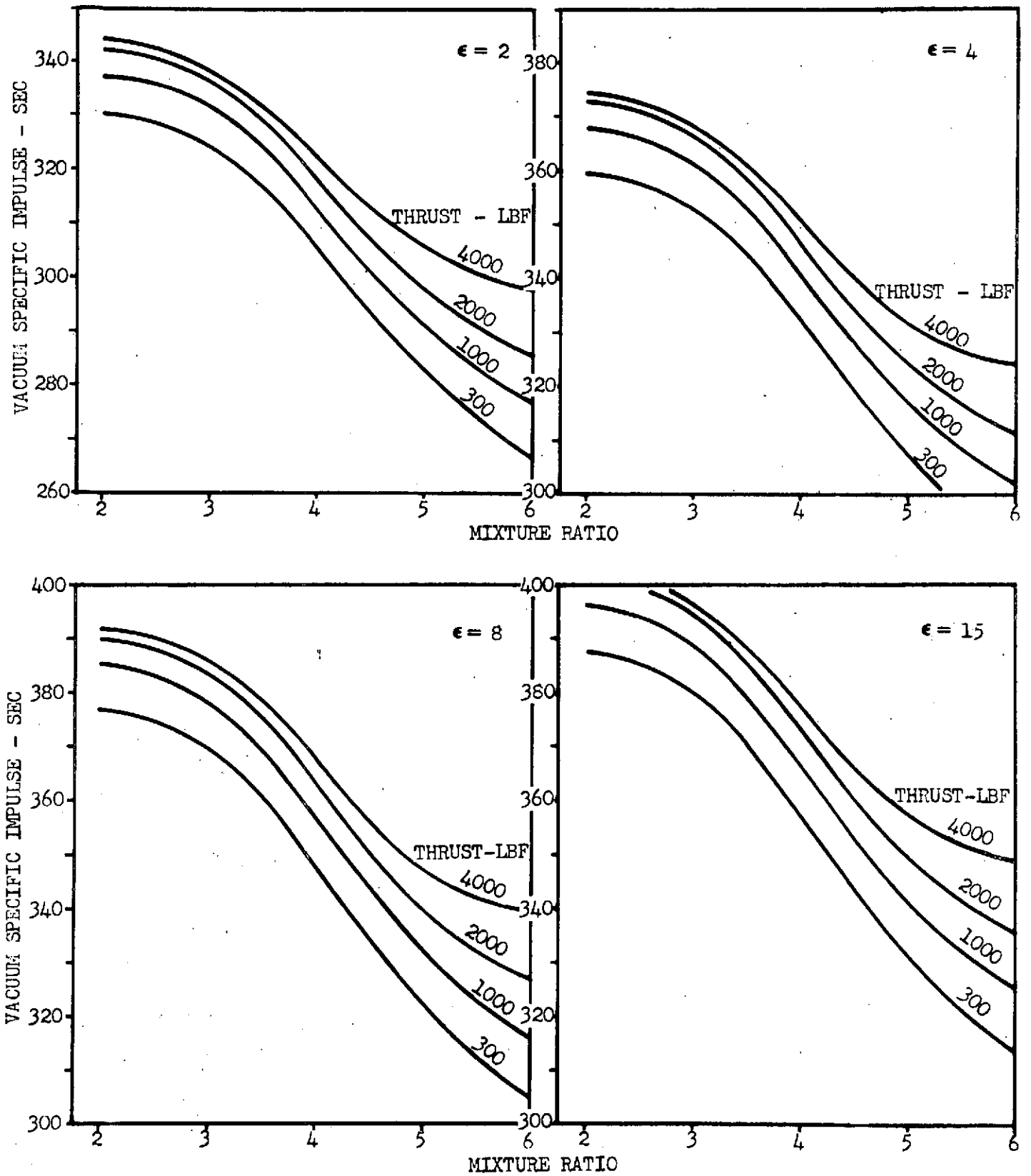

MIXTURE RATIO INFLUENCE ON PERFORMANCE
(PROPELLANT INLET TEMPERATURE-300°R)

FIGURE 3-5

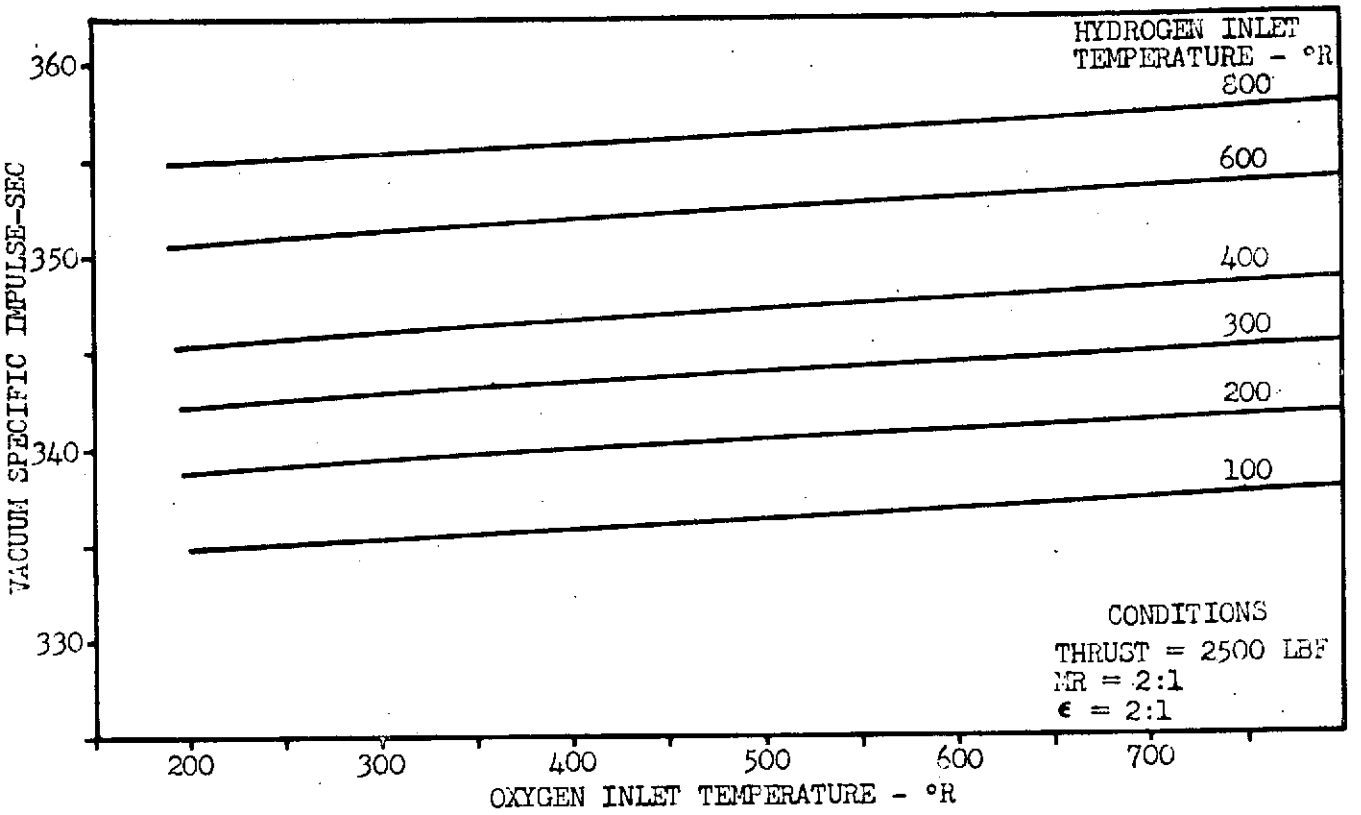

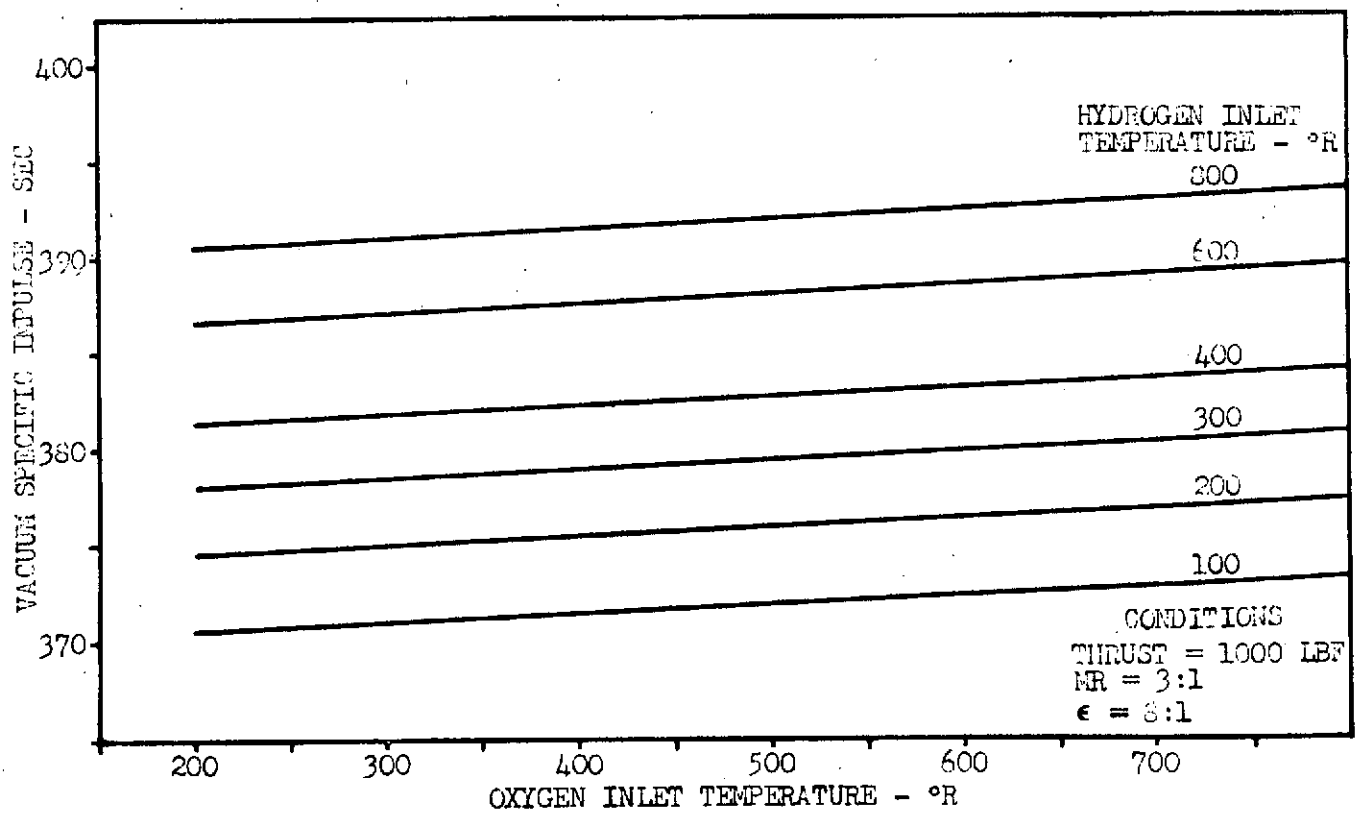

PROPELLANT INLET TEMPERATURE INFLUENCE ON PERFORMANCE

FIGURE 3-6

3.2.2 Engine Weight - Engine physical characteristics were identified by ALRC through the calculation of physical geometry and subsequent calculation of material weights for the nominal design point shown in Figure 3-2 and other sample point design engines. Igniter, propellant control valves, injector, combustion chamber, and nozzle are included in the weight analysis. Predominant contributors to the low pressure engine weight are the injector and propellant valves, which together comprise about 75 percent of the total engine weight. The weights are based on the use of a lightweight aluminum injector and structural adapters. The propellant valves are constructed of aluminum also and were sized for the equivalent flow orifice required.

The low pressure engine weight was found to be very sensitive to design point conditions. The sensitivity to thrust and chamber pressure is shown in Figure 3-7 for various nozzle expansion ratios. Also shown is engine weight sensitivity to nozzle expansion ratio for various thrust to chamber pressure ratios. Engine weight as a function of thrust, chamber pressure, and nozzle area ratio is mathematically represented in the form of polynominal curve fits. Equations representing engine weight are:

$$W(F/P_c) = 26.698 + 0.90973(F/P_c) - 1.7485\times10^{-3}(F/P_c)^2 + 4.5798\times10^{-6}(F/P_c)^3 - 2.49955\times10^{-9}(F/P_c)^4$$

$$W(\epsilon) = .703277 + 1.82569\times10^{-2}(\epsilon) + 7.274\times10^{-5}(\epsilon)^2 + 3.0347\times10^{-6}(\epsilon)^3$$

$$W_{ENG} = W(F/P_c) \times W(\epsilon)$$

These equations are applicable over the design parameter range shown in Figure 3-2.

A pneumatic assembly is required for engine valve actuation and weights for this assembly are included in the engine weight subroutine. The pneumatic subassembly consists of titanium tanks, stainless steel distribution lines, valves and regulators. Helium requirements are a function of propellant valve design and size, seat loads, opening times, and number of cycles (function of mission duty cycle). Detailed analysis for both the booster and orbiter APS indicated pneumatic assembly weight to be about 5.5 lbs. per engine. The reader is referred to Reference (b) for detailed pneumatic actuation requirements and a breakdown of the pneumatic assembly weights.

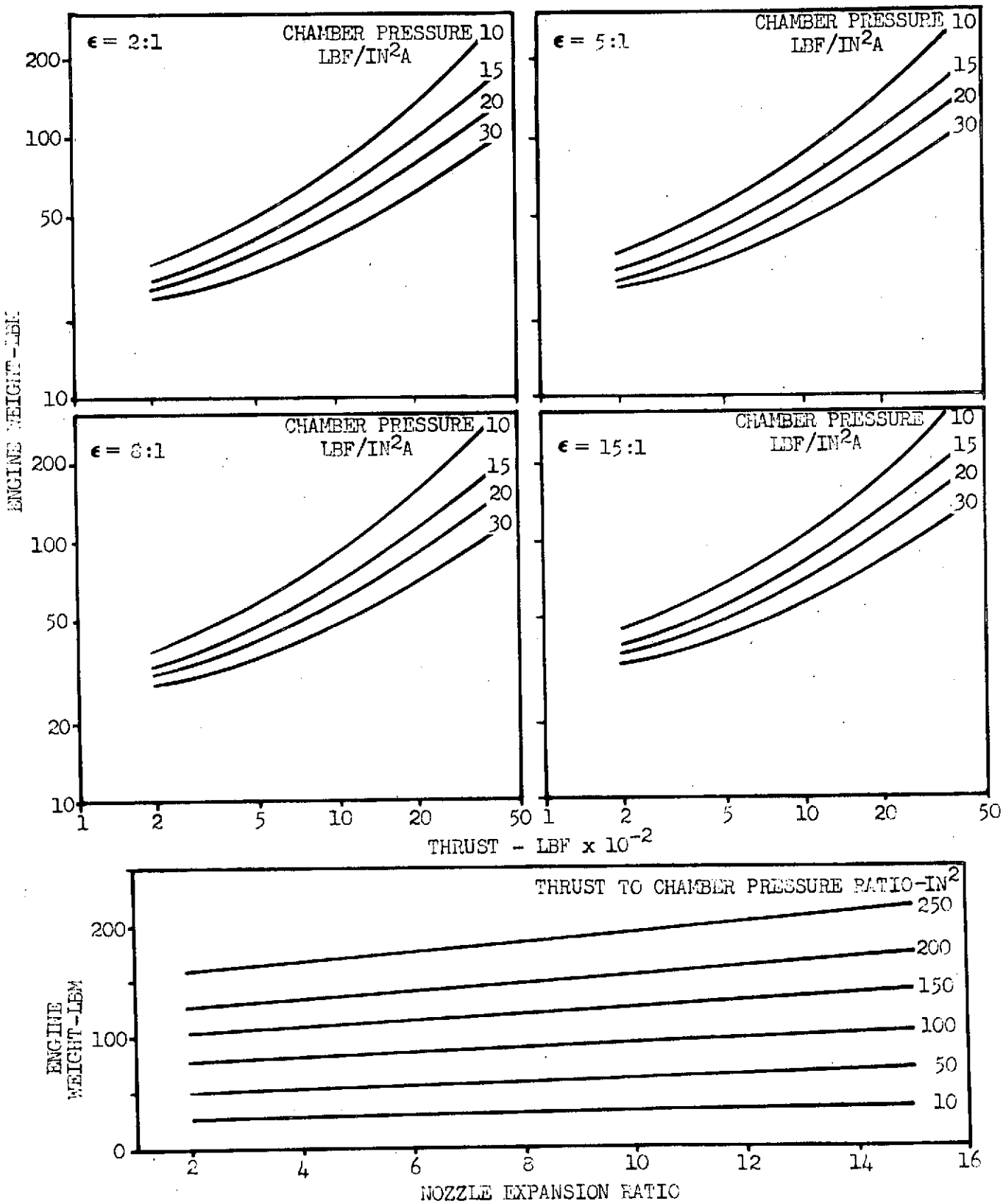

FIGURE 3-7

ENGINE WEIGHT
(LOW PRESSURE FILM-COOLED ENGINE, INCLUDES VALVES)

3.2.3 Distribution Lines - Propellant distribution lines are sized to provide minimum subsystem feed weight by optimizing line/valve weight, a function of friction losses, and engine weight penalty, a function of resultant chamber pressures. Available pressure drop for the distribution network is known based on:

(1) minimum main engine tank pressure over the entire mission duty cycle,
(2) pressure drop across the engine valves and injector, and
(3) design chamber pressures which are assumed and then iterated to determine the chamber pressure corresponding to minimum subsystem weight.

An engine valve and injector pressure drop of 2.0 lbf/in^2 is estimated to be the minimum acceptable value for good mixing performance and the avoidance of low frequency stability coupling between the combustion process and the feed network. The available line pressure drop is distributed uniformly along the distribution line length. Line diameters are then calculated for worst case conditions using the empirically derived Fanning equation given in Reference (c) as:

$$\Delta p = KfL\dot{w}^2/D^5$$

where $K = (32)\ (12)/\pi 2\rho$

$$\therefore\ D = 12\left(\frac{.00753\ \dot{w}^2 TLf}{\Delta P\ \bar{p}\ M}\right)^{1/5}$$

The Fanning friction factor (f) is graphically presented in Reference (c) as a function of flow rate and is mathematically represented as:

$$f = .0065 - .000515\ \mathrm{Ln}\ (\dot{w}T/M)$$

Worst case conditions are defined as maximum flow through the lines based on the maximum number of engines that can be fired simultaneously and using maximum gas temperature associated with major burn.

The distribution line thicknesses are first calculated based on the hoop stress equation using a safety factor (S.F.) of 2 and an ultimate strength(S) of 64000 lbf/in^2a for aluminum.

The calculated thickness is then compared to minimum gage which is a function of line diameters as shown in Figure 2-10. These dimensions were obtained in a survey of current aircraft, reported in Figure 3-8, and are primarily a function of

fabrication and handling limitations. The line weight can then be calculated knowing the length, diameter, thickness, and material density.

Line compensator weights were calculated in detail for both the selected orbiter APS and booster APS baseline design using existing hardware as a guideline. Compensator weight is, of course, a function of line length and diameter and thus, line weight. From the baseline design analysis, compensator weight was found to be approximately equal to line weight for both booster and orbiter. The detailed weight breakdown can be found in Reference (b).

MODEL	USAGE	MAXIMUM DIAMETER (INCHES)	MINIMUM GAGE (INCHES)	MATERIAL	REMARKS
F-4	ENGINE BLEED & VENT	2.0 4.5	0.016 0.020	STAINLESS STEEL	0.020 MINIMUM HANDLING
F-4	FUEL	3.0	0.035	STAINLESS STEEL	
F-4	AIR CONDITIONING	2.5	0.028	ALUMINUM	MINIMUM BASED ON BENDING, LINE PRESSURE = 25 PSI
DC-10	ANTI ICE	2.5	0.025 0.035	STAINLESS STEEL	
DC-10	PNEUMATIC BLEED, ENVIRONMENTAL CONTROL	6.0	0.025	TITANIUM	TITANIUM USED TO SATISFY 400 TO 700°F THERMAL ENVIRONMENT
DC-10	FUEL VENTS	3.5 4.5	0.028 0.035	ALUMINUM	0.035 MINIMUM GAGE FOR WELDING

AIRCRAFT DUCTING SURVEY

FIGURE 3-6

3.2.4 Valves - Both liquid and gas valves are required for the auxiliary propulsion subsystem. Cryogenic valves are required for the APS propellant tankage, thermal conditioning, and liquid/vapor mixer. Gas valves are required in the liquid/vapor mixer assembly and for engine isolation in the distribution network. Engine propellant control valves have been included in the engine weight model as discussed in Section 3.2.2. A survey of currently available cryogenic valves (including ball, blade and solenoid) has shown that all valve weights can be represented as a function of flow diameter. For the selected gas isolation valve, weight was also found to be a function of flow diameter. This valve is a visor type, constructed of aluminum, and is actuated by a DC reversible motor drive with clutch brake. Valve and actuator weights as a function of flow diameter are shown in Figure 3-9.

The cryogenic valves can be represented mathematically by:

$$W_{LIQ.\ VALVE} = (2.43)D^{1.378}$$

As seen from Figure 3-9, this equation is somewhat conservative for small flow diameters. The equation representing the gas isolation valve weight is:

$$W_{ISO.\ VALVE} = (1.59237)D^{1.21447}$$

3.2.5 Curve Interpretation - This subroutine model provides a curve fit of a single independent variable utilizing either a least square curve fit of second order or a Lagrange curve fit. The Lagrange Method is not used but was included in the model since this was an existing subroutine. Specifically for the APS program, the least square method is used to optimize the subsystem feed weight (dependent variable) as a function of chamber pressure (independent variable). The least square coefficients (C's) are returned in descending order to the main program. There the optimum chamber pressure is determined as follows:

$$W_{FEED} = C_1 P_c^2 + C_2 P_c + C_3$$

differentiating, $dW/dP_c = 2C_1P_c + C_2$

and $d^2W/dP_c^2 = 2C_1$

The optimum (minimum) chamber pressure exists at $- C_2/2C_1$ when C_1 is greater than zero.

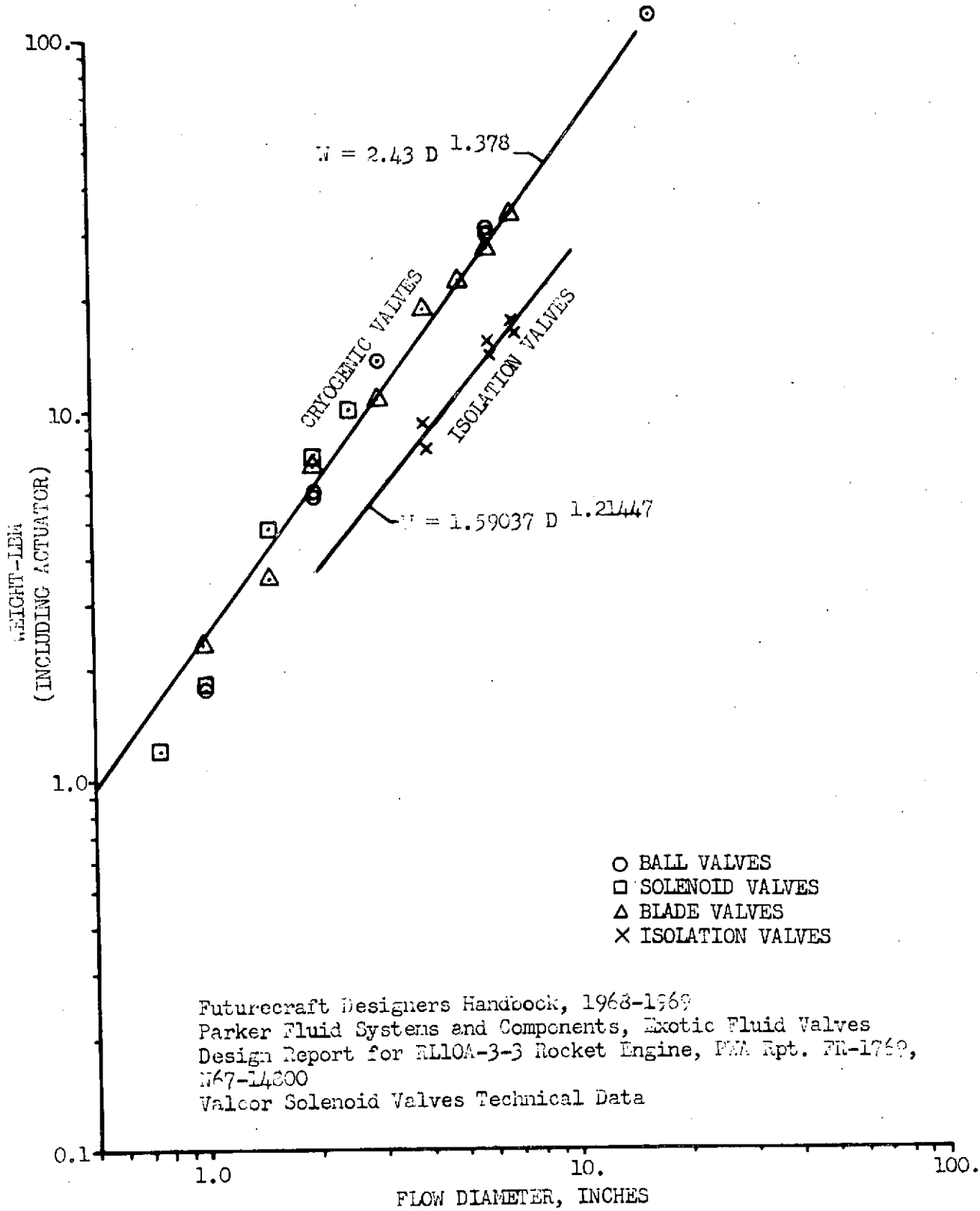

FIGURE 3-9

VALVE WEIGHTS

3.2.6 Liquid/Vapor Mixer - The mixing assembly consists of a liquid injection mixing chamber located in the propellant main distribution line, IRIS pressure regulators, gas flow control valves, liquid throttle valves and liquid control valves. A mixing assembly is required for both the fuel and oxidizer sides of the subsystem. Mixing chamber physical characteristics (see Figure 2-7) and weights are related to the maximum distribution line diameter since chamber size is a function of total propellant flow rate which also determines the size of this line. The relationship is:

$$W_{CHAM})H_2 = (.0339)\ (5.)\ (D_{H_2})^2$$

$$W_{CHAM})O_2 = (.0635)\ (5.)\ (D_{O_2})^2$$

where the numerical valves are effective injector densities and injector length (assumed constant at 5.0 inches).

For the IRIS type regulator, weights of different size units were obtained from Lundy Electronics and Systems, Incorporated. Since these units provided slow response, weights were adjusted upward to compensate for larger actuators. Inlet design conditions are 25 lbf/in^{2}a and 500°R. Regulator weights as a function of flow rate are:

$$W_{REG})H_2 = 6.39142\ (\dot{W}_{H_2})\ 0.401987$$

$$W_{REG})O_2 = 3.66081\ (\dot{W}_{O_2})\ 0.401987$$

Liquid cavitating venturi throttle valve weights (including actuator weights) are determined by means of a curve fit which relates weight to total liquid flow rate and engine specific impulse. The curve fit is based on LEM descent engine valve weights and orbiter APS valve baseline design weights. The mathematical relationship is:

$$W_{TV} = .0944\ (\dot{W}_{LIQ} * Isp/100.)^{1.115} + 2.45\ (\dot{W}_{LIQ} * Isp/100.)^{.421}$$

where the liquid flow rate is the combined fuel and oxidizer flow rates. Mixer liquid flow rates are maximum when the temperature of the gas being removed from the main engine tanks are at their maximum levels. The ratio of liquid to engine flow rate is obtained by performing a mass and energy balance about the mixing assembly which reduces to:

$$\dot{W}_{LIQ}/\dot{W}_{ENG} = (h_{GAS} - h_{ENG})\ /\ (h_{GAS} - h_{LIQ})$$

Typical hydrogen and oxygen liquid flow ratios are 0.78 and 0.48 respectively for inlet gas temperatures of 600°R, and outlet mixer temperatures of 150°R (H_2) and 200°R (O_2).

Liquid and gas valve weight models have been presented in Section 3.2.4. Three liquid and two gas valves are normally assumed to satisfy shuttle reliability requirements and each valve is sized to handle total flow required. In addition, the fuel and oxidizer liquid flow rates are limited to 50 ft/sec and 30 ft/sec respectively. As for the throttle valves, the liquid valves are sized for the maximum liquid flow rates based on inlet gas temperatures of 600° R.

3.2.7 Propellant Conditioning Assembly (Orbiter) - The heat exchanger design characteristics (i.e., number of panels; number of tubes; and tube length, spacing, and diameter) are obtained from the low pressure APS operational program (Reference (d)) since: (1) the heat exchangers are mounted on the main engine tank walls and heat removal affects internal gas temperature and pressure and (2) heat exchanger requirements are strongly dependent on the mission duty cycle (propellant usage rates) and also upon the maximum velocity increments performed by the APS. Typical results from the operation program are shown in Figure 3-10 for the orbiter APS. Shown are minimum main engine tank pressure and temperature as a function of heat exchanger design characteristics. Selection of minimum design pressure and temperature will dictate the heat exchanger design characteristics.

In addition to the tubing, the heat exchanger consists of tube attachment flanges and rivets, liquid lines, manifolds and valves.

All line and manifold weights are determined in essentially the same manner. Line sizes are based on maximum flow requirements associated with the maximum number of engines that can be fired simultaneously, i.e.

$$A_L = \dot{W}_{MAX}/\rho v$$

Liquid line velocities are limited to 50 and 30 ft/sec for hydrogen and oxygen, respectively. The liquid line flow is then equally divided among each heat exchanger panel to determine the liquid manifold size. Gas manifold flow rates and thus sizes are based on utilizing four inlet ports (per manifold) to the main engine tanks. Line thicknesses are evaluated based on hoop stress or minimum gage limitations (program input). A safety factor of 2 and ultimate strength of 64000 lbf/in^2 (aluminum) are used.

$\Sigma \Delta V = 158$ FPS

INITIAL CONDITIONS		H_2	O_2
P	LBF/IN^2-A	24.4	27.6
T	DEG R	521	468

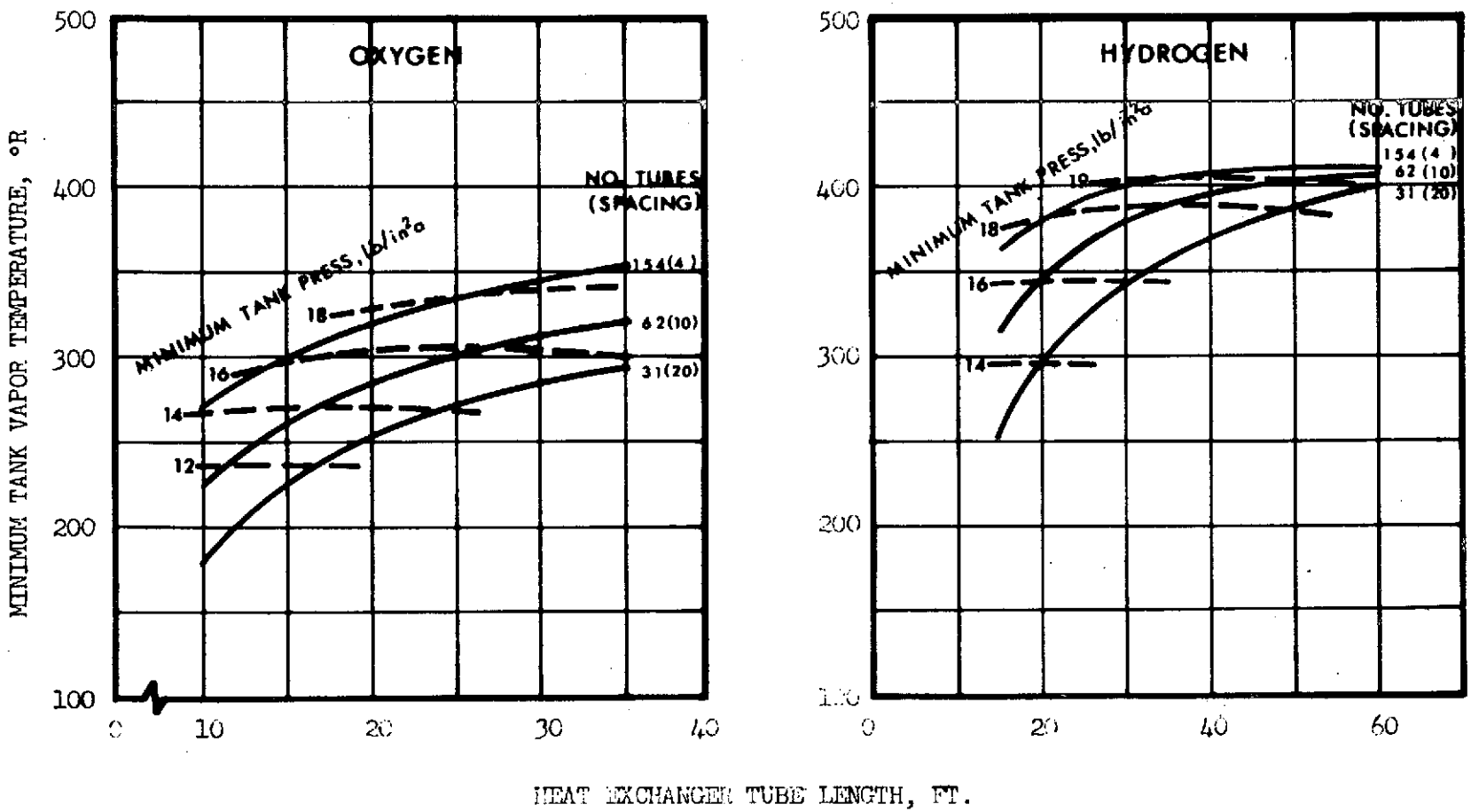

ORBITER MAIN TANK HEAT EXCHANGER

FIGURE 3-10

Line lengths are simply:

$$L_L = L_1 + (N_p)\ (L_p);\ \text{liquid lines}$$

and

$$L_M = S_T N_T;\ \text{manifolds}$$

L_1 is the distance from the APS storage tanks to the heat exchangers. The above allows calculations of line weights from:

$$W = \pi D t L \rho$$

Valve weights are based on the cryogenic valve weight models presented in Section 3.2.4. The number of liquid valves required is a function of reliability requirements. Valves are sized to handle maximum flows.

3.2.8 Propellant - The quantity of propellant required to perform a specific mission is determined as:

$$W_{H_2} = I_{TOT}/I_{S_p}/(MR+1)$$

$$W_{O_2} = (W_{H_2})(MR)$$

The space shuttle mission dictates the total impulse required. The specific impulse is determined at the thrust level, mixture ratio and expansion ratio of interest and at the hydrogen and oxygen engine inlet temperatures associated with a major burn (i.e., mixer outlet temperatures). The usable APS tanked propellant weight is then obtained by subtracting the available main engine residual propellants (a function of the shuttle mission) from the required propellant weights. The available residual propellant weights are obtained from the low pressure APS operational program Reference (d). The APS propellant tankage requirements are then computed by combining the usable propellant weight with vent, boiloff, and APS liquid residuals as discussed in Section 3.2.9.

3.2.9 APS Propellant Tanks - The tank design consists of an aluminum pressure vessel, polyurethane substrate (on the H_2 tank only), cooling shroud, insulation, protective fiberglass shell, and a propellant acquisition device. The model also adjusts the usable propellant weight by including propellant themodynamic vent and boil-off losses and liquid residuals. This gives the total propellant tankage requirement which determines the tank size. Individual component weight models are scaled from preliminary tank design points, corresponding to propellant weights of 1930 lbs. hydrogen and 5800 lbs. oxygen. The tank model is based on an 8 day shuttle mission.

The propellant vent and boil-off rates are a function of tank surface area which is related to the propellant weight ($A = fn\ (W_p)^{2/3}$). Only hydrogen is thermodynamically vented through the cooling shroud of both the hydrogen and oxygen tanks. Hydrogen vent rates are defined by heat inputs to the hydrogen tank which at the design point, amounts to 81.7 BTU/hr. This value is made up of 72 BTU/hr through the insulation and 9.7 BTU/hr through lines and supports. Designed to absorb this heat input, the vent effluent has sufficient residual cooling capacity for oxygen tank cooling. Scaled, then, on the bases of usable hydrogen weight, the vent rate is:

$$\dot{w}_v = [(W_{H_2}/1930)^{2/3}\ (72) + 9.7]/h_v$$

Calculation of the vent rate permits calculation of the hydrogen vent requirements based on an 8 day mission.

Reentry boil-off rates for both oxygen and hydrogen are scaled from the design point by the surface area as:

$$\dot{w}_{BO} = (\dot{w}_D)\ (w_p/(w_p)_D)^{2/3}$$

Combining the usable propellant based on mission requirements with the vent and boil-off requirements, and adjusting for APS residuals gives the total tanked propellant, i.e.

$$W_p\ (\text{tanked}) = \frac{W_p\ (\text{usable}) + W_p(\text{vent}) + W_p\ (\text{boil-off})}{\text{Residual Factor}}$$

The residual factors for this tank design concept are 0.991 and 0.987 for the hydrogen and oxygen tanks.

Tank volumes are based on tanked propellant requirements and 10 percent and 5 percent ullage allowance for the hydrogen and oxygen tanks respectively. Tank volumes are:

$$V = (W_p(\text{tanked})/\rho_L)\ (\text{Ullage})$$

which allows calculation of the tank radius and surface area for the spherical design. Tank wall thickness are calculated based on stress, safety factor of 2, and ultimate strength of 64000 lbf/in^2a for aluminum. For thin-wall spherical pressure vessels the stress relationship is:

$$t = (p)\ (R_T)\ (S.F.)/(2)\ (S)$$

Minimum wall gage is 0.04 inches based on fabrication techniques. The pressure vessel weight may then be calculated knowing the tank surface area, wall thickness, and material density. A 10% non-optimum factor is applied to these weights to account for bosses, welding, etc. Reference (e) suggests tank mounting weights of approximately 10 lb/ft diameter for oxygen tanks and 0.1 lb/ft^3 volume for hydrogen tanks. The weight of the hydrogen tank polyurethane substrate is calculated based on the surface area as:

$$W_F = (A_{H_2})_T (t_F)\ (\rho_F)$$

where the foam thickness and density are 0.42 inches and 2.5 lb/ft^3.

The cooling shroud consists of aluminum tubes dip-brazed to an aluminum shroud. The shroud characteristics for the design point are:

SHROUD	PASSES	TUBE I.D.	TUBE THICKNESS	SHROUD THICKNESS	VENT RATE
H_2	14	0.105 in	0.01 in	.005 in	.45 lb/hr
O_2	9	0.105 in	0.01 in	.001 in	---

For off-design cases, the number of passes is adjusted by the ratio of vent rates which in effect holds the liquid velocity in the tube constant, i.e.

$$\dot{w}_v/N = (\dot{w}_v/N)_D$$

where the tube flow area is also assumed constant. Tube material cross-sectional area including two attachment flanges (.188 long by .01 ins thick) is $7.36 \times 10^{-3}\ in^2$, and tube length is half the circumference of the tank. Tube weight is then calculated as:

$$W_{CT} = (A_{CS})\ (\pi)\ (R_T)\ (N)\ (\rho_{AL})$$

and the shroud weight as:

$$W_S = (A_T)\ (t_S)\ (\rho_{AL})$$

Both hydrogen and oxygen insulation weights are based on surface area and are calculated as:

$$W_I = (A_T)\ (t_I)\ (\rho_I)\ (1.1)$$

The insulation thicknesses are based on an eight day mission and are 0.68 and 0.97 inches for the hydrogen and oxygen tanks, respectively. Insulation density is 5.0 lb/ft^3. Insulation support weight is taken as 10 percent of insulation weight.

Likewise, the fiberglass protective shell weights are based on surface area as:

$$W_{FG} = (A_T)\ (t_{FG})\ (\rho_{FG})\ (1.45)$$

The fiberglass design thickness and density are 0.02 inches and 0.067 lb/in^3. Support weight is 45% of fiberglass weight based on design point calculations.

The propellant acquisition device is made up of three annular trays (screens) connected to a collector channel (see Figure 2-3). The annular tray portion of the component weight is related to the tank surface area and results in a unit weight of 0.25 lbs/per square foot of tank surface area. This compares well to typical values for double layer positive expulsion screens. The collector channel and inert weight is about 17 pounds for both tanks. The acquisition device weight is then:

$$W_{AD} = 17 + 0.25\ A_T$$

The above component weights are summed to give the propellant storage assembly weight excluding the pressurization subassembly. The sensitivity of tankage weight to usable propellant weight and tank design pressure is given in Figure 3-11 for both hydrogen and oxygen. Pressurization subassembly weight models are discussed in the following section.

3.2.10 Pressurization Subassembly - The hydrogen tank pressurization model consists of the helium required for prepressurization and three (3) motor driven boost pumps. The quantity of helium required is based on the tank ullage volume and the helium density evaluated at the tank temperature and helium pressure. Helium pressure is computed from tank ullage pressure minus the hydrogen vapor pressure. The propellant vapor pressures have been curve fit as a function of temperature using an Arrhenius type relationship:

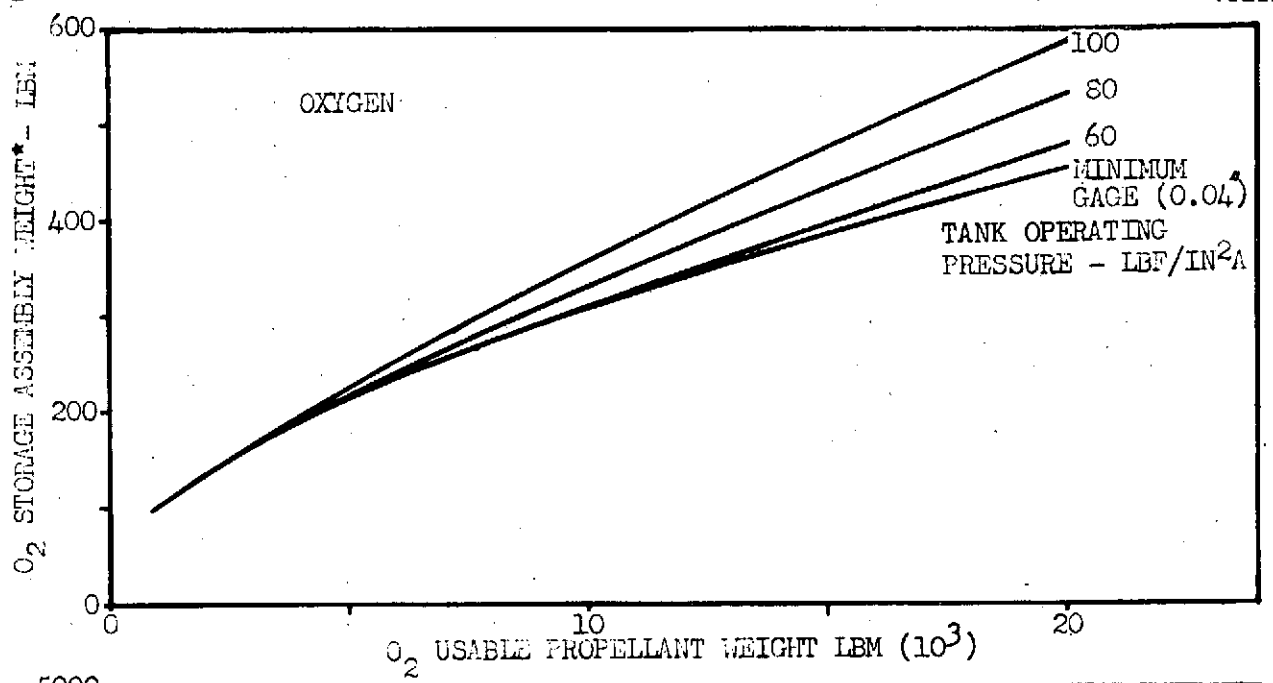

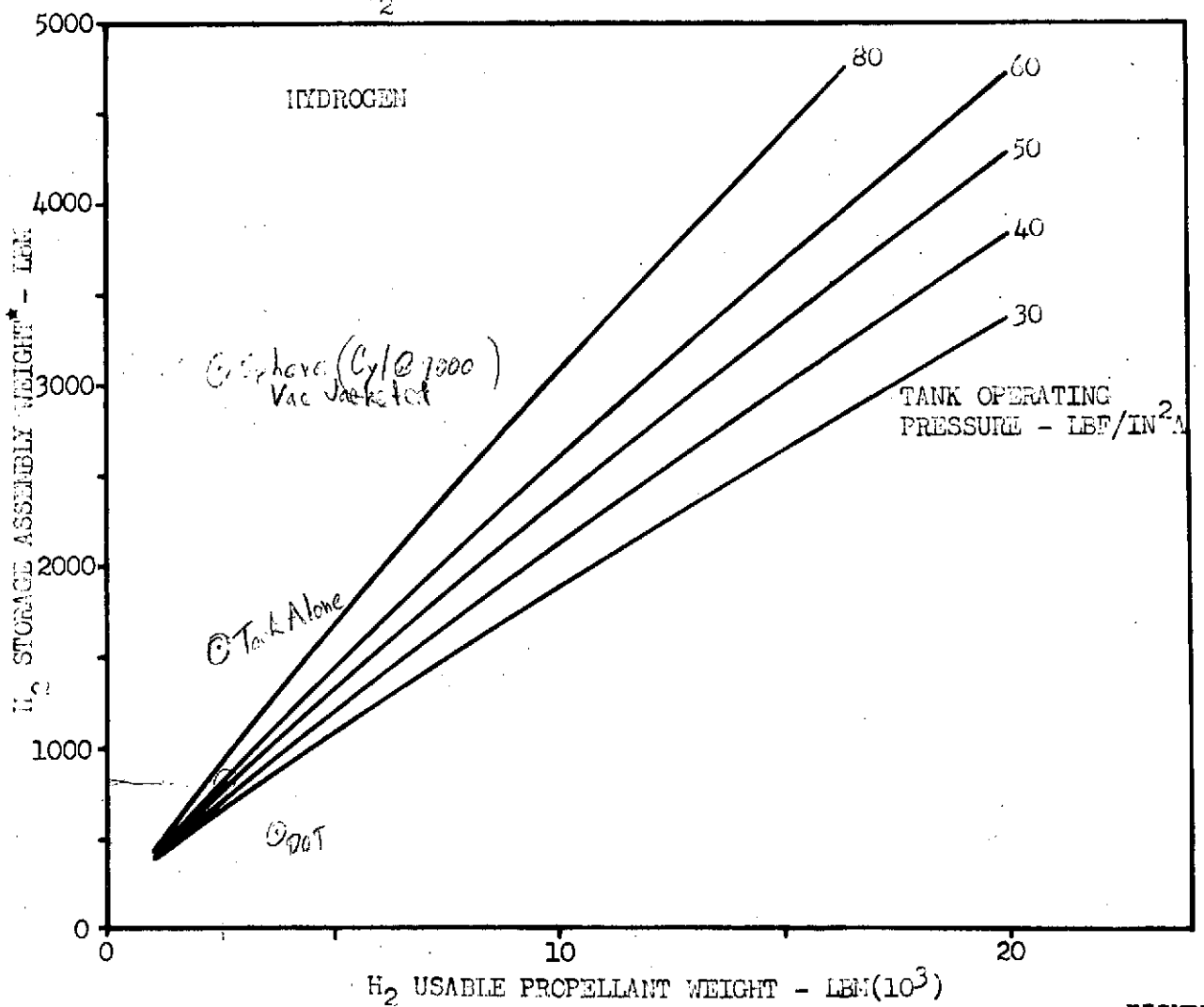

FIGURE 3-11

PROPELLANT STORAGE ASSEMBLY WEIGHT
*(EXCLUDES PRESSURIZATION SUBASSEMBLY)

$$\ln p_{H_2} = A + (A1)\ (T_{H_2}) + (A2)/T_{H_2}$$

and

$$\ln p_{O_2} = B + (B1)\ (T_{O_2}) + (B2)/T_{O_2}$$

where the coefficients are:

A = 5.61162	B = 16.6430
A1 = 4.16704E-2	B1 = -1.57154E-2
A2 = -163.182	B2 = -1855.15

The weight of the hydrogen pressurization subassembly is then:

$$(W_{PS})_{H_2} = (3)\ (Wp) + (V_T)_{H_2}\ (\text{Ullage})\ (\rho_{He})$$

Pump weight is assumed constant over the APS flow rates of interest and was obtained from design data furnished by Pesco Products. Pump unit weight is 24.2 lbs.

The oxygen tank pressurization model consists of the helium required for the total APS mission and a titanium pressure vessel. Helium is stored at 3000 lbf/in^2a initially in a separate tank submerged within the oxygen tank. Final helium storage pressure, at the completion of the APS mission, is 100 lbf/in^2a. Regulators maintain oxygen tank pressure at 35 lbf/in^2a. Helium tank requirements are computed from conservation of mass as:

$$\rho_{He})_i\ V_T)_{He} = \rho_{He})_f\ (V_T)_{He} + \rho_{He})_T\ (V_T)_{O_2}$$

rearranging gives

$$V_T)_{He} = \frac{\rho_{He})_T\ (V_T)_{O_2}}{\rho_{He})_i - \rho_{He})_f}$$

where

$\rho_{He})_i$ is evaluated at 3000 lbf/in^2a and T_{O_2}

$\rho_{He})_f$ is evaluated at 100 lbf/in^2a and T_{O_2}

and

$\rho_{He})_T$ is evaluated at $P_{He} = (P_T - P_{O_2})$ and T_{O_2}

A survey of existing pressurant tanks was conducted to determine tank weight as a function of tank parameters (Figure 3-12). As shown, tank weight is correlated to burst pressure and volume. This correlation is:

$$LN(W_T) = -12.939 + 0.9821\ LN\ [P_B(V_T)_{He}]$$

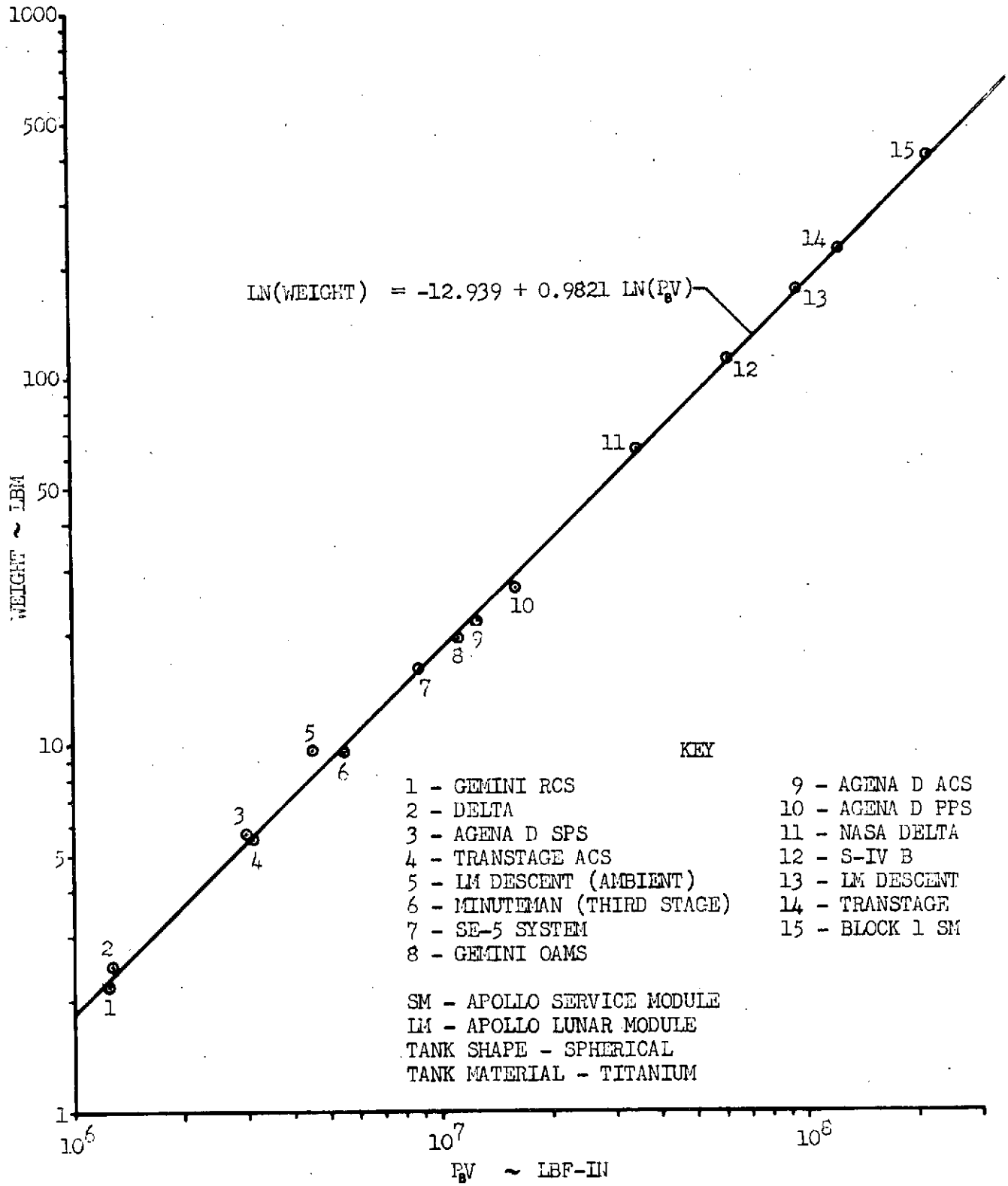

WEIGHT OF PRESSURANT TANKS

FIGURE 3-12

Burst pressure for this application is 2.22 times the design pressure (3000 lbs/in^{2}a). The oxygen pressurization subassembly weight is then:

$$W_{PS})_{O_2} = \text{EXP}\ [-\ 12.939 + 0.9821\ \text{LN}\ (P_B(V_T)_{He})] + V_T)_{He}\ \rho_{He})_i$$

3.2.11 Properties - Many of the above component models require evaluation of thermodynamic and transport properties of the gases. One of two different real gas equations of state are used depending on the temperature of the gas. The Strobridge modified Benedict-Webb-Rubin (BWR) equation of state is used for the temperatures below 540°R; the Beattie Bridgeman (BB) equation of state is used above 540°R.

The equation of state for para-hydrogen in the range 36 to 540°R and pressures up to 5,000 psia was developed under a research project by the National Bureau of Standards. This research experimentally determined the 17 constants needed for the equation. Use of this equation allows the computation of fluid density as a function of temperature and pressure. The region treated is the subcritical vapor region and the compressed liquid region up to 540°R.

The modified Benedict-Webb-Rubin equation of state used for temperatures up to and including 540°R is:

$$P = a_1\rho T + \rho^2\left(a_1a_2T + a_3 + \frac{a_4}{T} + \frac{a_5}{T^2} + \frac{a_6}{T^4}\right) + \rho^3\left[a_7a_1T + a_8 + \left(\frac{a_{10}}{T^2} + \frac{a_{11}}{T^3} + \frac{a_{12}}{T^4}\right)e^{-a_{17}\rho^2}\right]$$

$$+ a_9T\rho^4 + \rho^5\left(\frac{a_{13}}{T^2} + \frac{a_{14}}{T^3} + \frac{a_{15}}{T^4}\right)e^{-a_{17}\rho^2} + a_{16}\rho^6$$

where P = gas pressure, atm

T = gas temperature, °K

ρ = density, g mole/liter

The coefficients A_1 to A_{17} are specified in two groups for regions designated as either vapor or liquid. Combinations of temperature and density identify the two regions. The coefficients for parahydrogen are:

VAPOR

$A_1 = .8208199823 \times 10^{+2}$
$A_2 = .2062278898 \times 10^{+2}$
$A_3 = -.1292792029 \times 10^{+6}$
$A_4 = -.7237230137 \times 10^{+7}$
$A_5 = .1159242745 \times 10^{+9}$
$A_6 = -.1010879875 \times 10^{+11}$
$A_7 = .3176293970$ c 10^{+3}
$A_8 = .2581305967 \times 10^{+7}$
$A_9 = .2410669065 \times 10^{+6}$
$A_{10} = -.1070380625 \times 10^{+11}$
$A_{11} = .1016369054 \times 10^{+13}$
$A_{12} = .1938431002 \times 10^{+14}$
$A_{13} = .3857308627 \times 10^{+13}$
$A_{14} = -.6757463236 \times 10^{+15}$
$A_{15} = .1462114653 \times 10^{+17}$
$A_{16} = .5254992259 \times 10^{+11}$
$A_{17} = .1800100800 \times 10^{+4}$

LIQUID

$A_1 = .8208199823 \times 10^{+2}$
$A_2 = .6374020840 \times 10^{+2}$
$A_3 = -.3539180407 \times 10^{+6}$
$A_4 = -.4810952457 \times 10^{+7}$
$A_5 = .9127883349 \times 10^{+8}$
$A_6 = -.8816106422 \times 10^{+10}$
$A_7 = -.1283735749 \times 10^{+4}$
$A_8 = .8076213444 \times 10^{+7}$
$A_9 = .1425160973 \times 10^{+7}$
$A_{10} = .6410245277 \times 10^{+10}$
$A_{11} = .1085162913 \times 10^{+12}$
$A_{12} = -.2930340262 \times 10^{+13}$
$A_{13} = -.5235483345 \times 10^{+13}$
$A_{14} = -.2551114380 \times 10^{+15}$
$A_{15} = .4732799310 \times 10^{+16}$
$A_{16} = .3522327774 \times 10^{+11}$
$A_{17} = .1800100800 \times 10^{+4}$

The coefficients for oxygen above 153°R are:

$A_1 = 0.820797 \times 10^{-1}$
$A_2 = 0.36684115 \times 10^{-1}$
$A_3 = -0.10091340 \times 10^{1}$
$A_4 = -0.59581958 \times 10^{2}$
$A_5 = -0.39091633 \times 10^{4}$
$A_6 = 0.12405065 \times 10^{8}$
$A_7 = 0.87258515 \times 10^{-3}$
$A_8 = -0.11885929 \times 10^{-1}$
$A_9 = 0.29165708 \times 10^{-5}$
$A_{10} = 0.12473562 \times 10^{4}$
$A_{11} = -0.61007363 \times 10^{5}$
$A_{12} = -0.46185178 \times 10^{7}$
$A_{13} = -0.10379526 \times 10^{1}$
$A_{14} = 0.66183734 \times 10^{3}$
$A_{15} = -0.22051320 \times 10^{5}$
$A_{16} = 0.73071820 \times 10^{-6}$
$A_{17} = 0.37656816 \times 10^{-2}$

Below 153°R and 150 atm the following equation of state is used for the liquid oxygen.

$$\rho = a_1 + a_2T + a_3T^2 + (a_4 + a_5T)P$$

where the coefficients are:

$a_1 = 0.48926 \times 10^2$

$a_2 = -0.15300$

$a_3 = 0.66752 \times 10^{-4}$

$a_4 = -0.17219 \times 10^{-2}$

$a_5 = 0.91185 \times 10^{-4}$

The evaluation of pressure is a direct substitution of the values of density and temperature in the BWR state equation.

Temperature and density equations involve a method of successive approximations in which a sequence of trial values is generated by a Newton type iteration:

$$T_{n+1} = T_n - \frac{P(T_n, \rho) - P}{\frac{\partial P}{\partial T}(T_n, \rho)}$$

$$\rho_{n+1} = \rho_n - \frac{P(T, \rho_n) - P}{\frac{\partial P}{\partial \rho}(T, \rho_n)}$$

Indicated partial derivatives are formal evaluations of derivatives of the state equation.

The values of iterants are governed by algorithms that recognize the behavior of the particular function and its derivatives in the region of interest. This technique prevents values from exceeding the range indicated by the region finding process and guarantees convergence.

For gas temperatures above 540°R, the Beattie Bridgeman equation of state is used to evaluate the thermodynamic properties of interest. The Beattie Bridgemen equation of state can be written as follows:

$$P = \frac{RT(1-\epsilon)}{v^2} (v+B) - \frac{A}{v^2}$$

where: P = gas pressure, atm

T = gas temperature, °K

v = gas specific volume, liter/g mole

R = gas constant = .08205 atm liter/g mole °K

$A = A_o (1 - a/v)$ liter^2/g mole^2

$B = B_o (1 - b/v)$ liter/g mole

$\epsilon = c/vT^3$

and, constants (A_o, B_o, C, a and b) are tabulated below for the gases of interest.

Constants of the Beattie-Bridgemen Equation of State

Gas	A_o	a	B_o	b	$10^{-4}c$
Helium	0.0216	0.05984	0.01400	0.0	0.0040
Hydrogen	0.1975	-0.00506	0.02096	-0.04359	0.0504
Oxygen	1.4911	0.02562	0.04624	0.004208	4.80

The Beattie Bridgeman equation is implicit in pressure; thus, an iterative technique is required to determine the gas specific volume for any given pressure and temperature. The iterative technique operates to continuously solve for gas pressure, using refined estimates of gas specific volume, until the calculated pressure converges to within a specified tolerance of the given pressure. The program then converts the resultant specific volume to density. To provide an initial estimate of specific volume, an approximate solution of the equation of state is used which is implicit in specific volume. This approximate form is:

$$v = (\pi + B)(1 - \epsilon) - A/RT$$

where $\pi = RT/P$ and the other parameters are as defined previously.

The specific heats (C_p and C_v) of real gases are determined by accounting for their variation with temperature and pressure. A fourth order curve fit is used to define the ideal gas specific heat as a function of temperature. The pressure effect on the specific heat is then evaluated. The relationship for the real gas C_v is:

$$C_v\Big|_{T,v} = C^\circ_{VT} + T\int_\infty^v \left(\frac{\partial^2 P}{\partial T^2}\right) dv$$

The parameter C°_{VT} is the ideal gas specific heat. This function is evaluated by using the ideal gas C°_{PT} data in conjunction with the ideal gas relationship $C^\circ_{VT} = C^\circ_{PT} - R$. The C°_{PT} is obtained from a polynominal fit of available data from 100 to 2000°K.

The second term of the equation, $T\int_\infty^v \left(\frac{\partial^2 P}{\partial T^2}\right)dv$, is the effect of pressure on the specific heat. This term is evaluated by performing the appropriate operations (partial derivative, etc.) and evaluating the integral from a low pressure ($P \rightarrow 0$, $v \longrightarrow \infty$), to the specific volume (v) corresponding to the input pressure and temperature. These operations yield the following relationship for the second term:

$$T\int_\infty^v \left(\frac{\partial^2 P}{\partial T^2}\right) dv = \frac{K6Rc}{T^3 v}\left(1 + \frac{B_o}{2v} + \frac{B_o b}{3v^2}\right)$$

where K is a unit conversion factor.

The C_p of a real gas is defined by the following relationship:

$$C_p = C^\circ_{V_T} - \frac{T\left(\frac{\partial P}{\partial T}\right)^2_v}{\left(\frac{\partial P}{\partial v}\right)_T}$$

C°_V is defined above and the second term was evaluated by performing the appropriate operations on the Beattie-Bridgeman equation.

The enthalpy of a real gas is determined by accounting for the variation of enthalpy with both temperature and pressure. This is accomplished using the following property relationships.

$$h = u + pv$$
$$= \int du + pv$$

where h = enthalpy

p = pressure

v = specific volume for a real gas

and $\int du = \int_o^T C^\circ_{VT} dT + \int_\infty^v [T\left(\frac{\partial P}{\partial T}\right)_v - P]\, dv$

therefore, $h = pv + \int_o^T C^\circ_{V_T} dT + \int_\infty^v [\, T\left(\frac{\partial P}{\partial T}\right)_v - P]\, dv$

where h is the sensible enthalpy of a real gas evaluated from a referenced state of 0°K.

Since the C°_{VT} function was curve fitted from data limited to a minimum of 100°K, the integral of C°_{VT} from 0°K may, for some gases, introduce an error; therefore, the equation is written as:

$$h = pv + \int_{100}^{T} C^\circ_{VT}\, dT + u_{100} + \int_\infty^v [T\left(\frac{\partial P}{\partial T}\right)_v - P]dv$$

where $u_{100} = \int_o^T C^\circ_{v_T}\, dT - \int_{100}^T C^\circ_{v_T}\, dT$ Thus, u_{100} is the internal energy of a perfect gas at T = 100°K, since the $C^\circ_{v_T}$ function is based upon ideal gas data.

3.3 Special Options - In the APS definition study component models were developed to perform subsystem weight and trade-off studies, and to finally identify preferred approaches in baseline design points. These selected subsystems are described in Sections 2.1 and 2.2.

Options have been included in the program to bypass specific assemblies such as propellant tankage and pressurization, heat exchanger, and liquid/vapor mixer for specific APS configurations not requiring these components. Propellant tankage and heat exchanger assemblies may be bypassed for fuel (or oxidizer) alone. Various distribution assembly configurations may be investigated with the program including variation in line length, number of engines per line, number of lines, and number of isolation valves, all of which are included as input data to the program.

3.4 Variables - A brief description of each variable used in the above models is listed below unless the variables are defined in the discussion.

VARIABLE	DESCRIPTION
A	Area
C_1, C_2, C_3	Least squares curve fit coefficients
C*	Specific impulse curve fit coefficient (thrust and mixture ratio effects)
C_ϵ	Specific impulse curve fit coefficient (expansion ratio effect)
C_F	Specific impulse curve fit coefficient (thrust effect)
C_{MR}	Specific impulse curve fit coefficient (mixture ratio effect)
$C_{T_{H_2}}$	Specific impulse curve fit coefficient (H_2 inlet temperature effect)
$C_{T_{O_2}}$	Specific impulse curve fit coefficient (O_2 inlet temperature effect)
D	Diameter
f	Fanning friction factor
F	Engine thrust
FFC	Fuel film coolant required per engine
G	Specific impulse curve fit coefficient (mixture ratio effect)
h	Enthalpy
I_{sp}	Specific impulse
I_{TOT}	Total APS impulse required
K	Numerical constant in Fanning equation
L	Length
L_1	Liquid line length, APS tanks to heat exchanger
M	Molecular weight

VARIABLE	DESCRIPTION
MR	Engine mixture ratio
N	Number of passes in cooling shroud, APS tanks
N_p	Number of panels per heat exchanger
N_T	Number of tubes per panel, heat exchanger
P, p	Pressure
R	Radius
S	Ultimate strength of material
SF	Safety factor
S_T	Tube spacing, heat exchanger
t	Thickness
T	Temperature
v	Fluid velocity
V	Volume
W	Weight
$W(\epsilon)$	Engine weight curve fit coefficient (expansion ratio effect)
$W(F/P_c)$	Engine weight curve fit coefficient (thrust/pressure ratio effect)
$\dot{W}$	Flow rates

GREEK LETTERS

Δ Delta or change

ϵ Nozzle expansion ratio

ρ Density

SUBSCRIPTS

AD	Acquisition device
AL	Aluminum
B	Burst

SUBSCRIPTS (Cont.)

BO	Boil-off
C	Chamber
CN	Chamber nominal
CS	Cross-Section
CT	Cooling Tubes (cooling shroud), APS tanks
D	Design point
ENG	Engine conditions
f	Final conditions
F	Foam, polyurethone substrate, H_2 APS tank
FG	Fiberglass protective covering, APS tanks
H_2	Hydrogen propellant
He	Helium
i	Initial conditions
I	Insulation, APS tanks
L	Line, Liquid
M	Manifold
N	Nominal conditions
p	propellant, panel, pump
PS	Pressurization subassembly
REG	Regulator
S	Shroud (cooling), APS tanks
T	Tanks, APS propellant
TV	Throttle valves, liquid/vapor mixer
v	Vaporization, vent rate

4. SOLUTION AND PARAMETRIC EFFECTS

4.1 General - A sample case is included for an orbiter auxiliary propulsion subsystem. The sample includes determining the subsystem/component weights of the selected baseline and evaluating its sensitivity to design and performance requirements. Booster APS input is also discussed to indicate program options available to bypass specific components. A detailed discussion of program input and output requirements may be obtained from Volume II as well as a definition of program variables. In general, input consists of three namelists titled LINE, VALVE, and LOWPC and one printout indicator. A discussion follows on the input data required, where obtained and range; and also sample case output.

4.2 Input Data (Orbiter) - The orbiter APS will for most mission duty cycles require all subsystem components including propellant storage and pressurization, heat exchangers and liquid/vapor mixers. Orbiter sample data is tabulated below for each namelist.

LINE - A typical propellant distribution network to be modeled is shown in Figure 2-9. Due to the network complexity, an exact model can not be described. Simplification of the network, forward of the main engine tank, is shown in Figure 4-1. The simplified network physical characteristics are inputed using the LFN(I,J) array as follows:

	LFN(I,1) Length, Ft	LFN(I,2) No. of Engines Firing	LFN(I,3) No. of Lines	
	124.0	10	0	AFT
	12.5	6	2	AFT
	12.5	6	1	AFT
	1.5	3	2	AFT
	7.5	1	6	AFT
LMAX(1) =	158.0			
	35	8	0.5	FORWARD
	4	3	3	FORWARD
	8	3	6	FORWARD
	8	1	15	FORWARD
	0	1	0	FORWARD
LMAX(2) =	55			

It should be noted LFN(I,2) is the number of engines firing based on mission requirements and not the total number of engines on the line segment. In addition

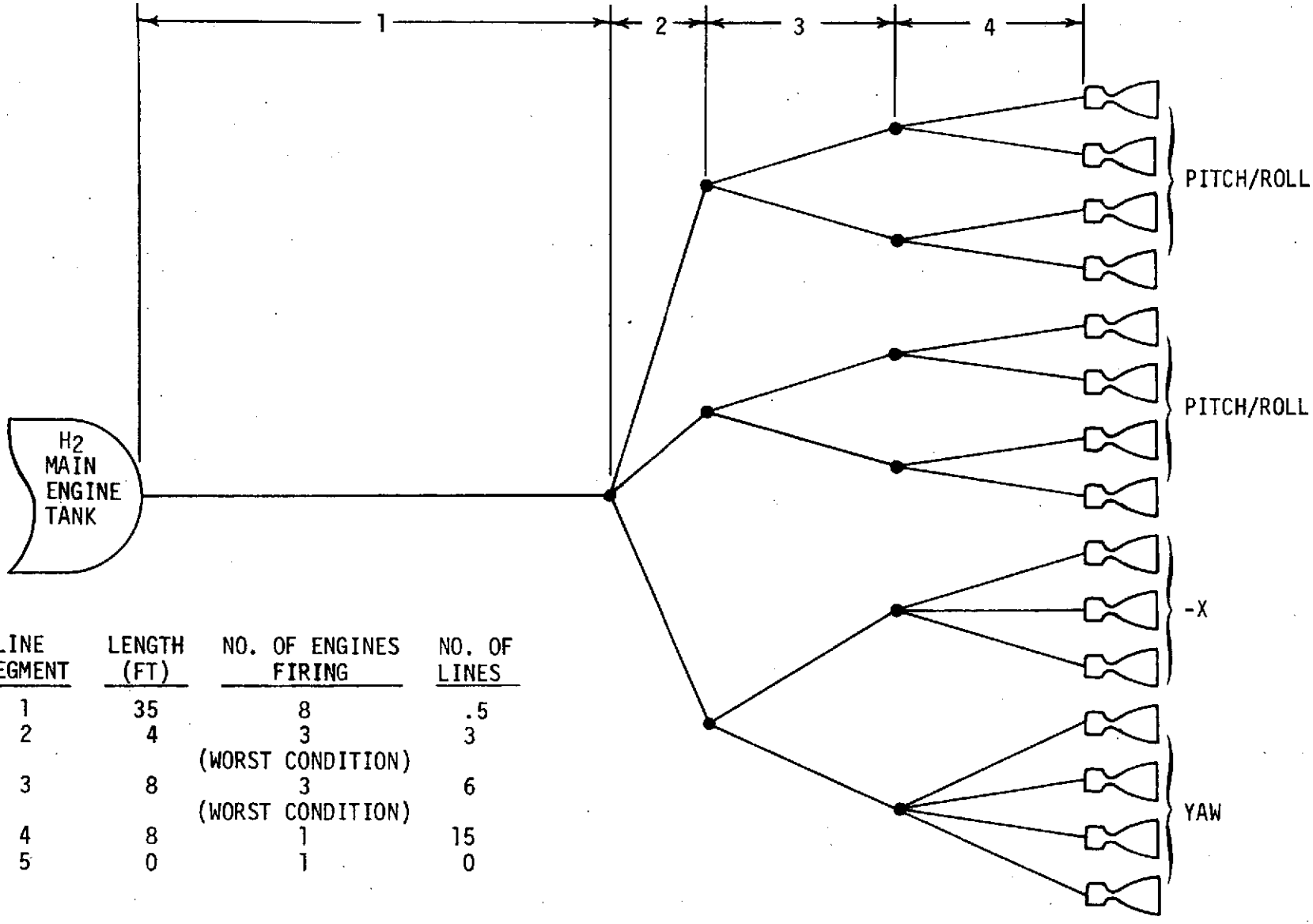

LINE SEGMENT	LENGTH (FT)	NO. OF ENGINES FIRING	NO. OF LINES
1	35	8	.5
2	4	3 (WORST CONDITION)	3
3	8	3 (WORST CONDITION)	6
4	8	1	15
5	0	1	0

PROPELLANT DISTRIBUTION NETWORK MODEL
FORWARD OF MAIN ENGINE TANKS

FIGURE 4-1

for this specific case, no weight penalty is paid for the main distribution line since the existing main engine tank pressurization line is used; therefore LFN(1,3) is set equal to zero. The remaining data required for this NAMELIST is LMAX(1) and LMAX(2), the total length of the aft and forward lines. As noted in Volume II, the network (either aft or forward) with the largest value of LMAX must be placed in the first five lines of the LFN array.

VALVE - The VALVE namelist requires knowledge of the distribution network isolation valve locations (Figure 2-9) and the APS reliability requirements. NAMELIST data is input via a 10x2 array FN(I,J) which requires the number of isolation valves and number of engines firing per valve. Inspection of Figure 2-9 gives the input data required as:

FN(I,1) No. of Engines Firing	FN(I,2) No. of Valves	Remarks
10	2	Pressurization line by-pass valves, two required for redundancy
9	0	
8	0	
7	0	
6	0	
5	0	
4	2	Pitch/roll engine rings, 1 aft and 1 forward
3	3	2 for +X engines and 1 for -X engines
2	6	2 for yaw engines (1 aft, 1 forward) 4 for pitch roll engines (2 aft, 2 forward)
1	13	6 for +X engines 3 for -X engines 4 yaw engines (2 aft, 2 forward)

It should be noted, the engine valves are included in the engine weight model.

LOWPC - The LOWPC namelist requires knowledge of the space shuttle configuration and mission requirements, and additional information obtained from the low pressure APS operational program Reference (d). This program simulates the mission duty cycle. The NAMELIST variables are listed on the following pages giving the design point values, sensitivity values and information source.

Variable	Units	Value: Sample Case	Value: Sensitivity	Remarks
F	lbf	1000	500-3000	Vehicle design requirements
XNET	--	33	--	Vehicle design requirements
XNEF	--	10	--	Vehicle design requirements
TOTI	lbf-sec	$3x10^6$	1.5 to $13x10^6$	Mission requirements and APS/OMS velocity split
TGASH2	°R	150	100-600	Exit conditions of mixer design
TGASØ2	°R	200	200-600	Exit conditions of mixer design
XMR	--	3.0	2-6	Engine design mixer ratio
EPS	--	8	2-15	Model definition
TTMAX	°R	200	200-600	Corresponds to mixer temperature, major APS burn
PTH	lbf/in^2a	20	15-40	Minimum value used that occurs during mission-obtained from operational program
PAPSH	lbf/in^2a	40	35-60	Maintain 20 lbf/in^2a pressure drop from APS tanks to main engine tanks-obtained from operational program
PTO	lbf/in^2a	20	15-40	Same as for PTH
PAPSO	lbf/in^2a	35	30-55	Same as for PAPSH except 15 lbf/in^2a pressure drop
DELPM	lbf/in^2a	14	--	May be varied to ensure obtaining an optimum chamber pressure, can not exceed tank pressure minus PAINJ

Variable	Units	Value: Sample Case	Value: Sensitivity	Remarks
PAINJ	lbf/in^2a	2	--	Engine design point
NPRTPC	--	1	0 or 1	Controls printout of chamber pressure optimization
PLOAD	lbf/in^2a	17	--	APS tank loading pressure
TUBDH	in	.298	--	All heat exchanger characteristics obtained from operational program since requirements are dependent on mission duty cycle
TUBDO	in	.394	--	
TUBSPH	in	10	--	
TUBSPO	in	4	--	
TUBLGH	ft	15.0	--	
TUBLGO	ft	17.5	--	
XNTUBH	--	62	--	
XNTUBO	--	154	--	
XNOPH	--	4	--	
XNOPO	--	2	--	
WPRCNH	--	.50	0 to 1	Operational program
WPRCNO	--	.73	0 to 1	Operational program
TIPRCN	--	1	0 or 1	Allows for bypass of heat exchanger
RITO	--	1	--	Allows for bypass of impulse dependent components if zero
WRH2	lbm	0	--	Operational program
WRO2	lbm	2200	--	Operational program
IEND	--	--	--	Controls case data

Key punch instructions for the above data are shown on FORTRAN coding forms (Figure 4-2) followed by sensitivity data for thrust, impulse, mixture ratio, expansion ratio, and tank pressures. A listing of this data is giving in Figure 1-4 of Volume II. It should be noted, a printout indicator is required following the three input namelists. If indicator is zero (blank card), full printout of subsystem and component weights are obtained; while if the indicator is set equal to one (Column 3 of card), suppressed printout of subsystem weight is obtained.

MCDONNELL DOUGLAS AUTOMATION COMPANY

FORTRAN Coding Form

PROGRAM: LOW PRESSURE APS DESIGN AND SIZING
PROGRAMMER: A. E. BRUNS
DATE: 1 JUNE 1971
PUNCHING INSTRUCTIONS: GRAPHIC / PUNCH
PAGE 1 OF 2

```
$LINE  LMAX=158,55,  LFN=124,12.5,12.5,1.5,2.5,35,4,8,8,0,10,6,6,3,1,8,3,3,1,1,
0,2,1,2,6,0,5,3,6,15,0      $END
$VALVE FN=10,9,8,7,6,5,4,3,2,1,2,0,0,0,0,0,2,3,6,13      $END
$LØWPC F=1000,XNET=33,XNEF=10,TØTI=3000000,TGASN2=150,TGASØ2=200,XMR=3,EPS=8,
TIMAX=200,PTH=20,PAPSN=40,PTØ=20,PAPSØ=35,DELPM=14,PAINJ=2,NPRTPC=1,PLØAD=17,
TUBDH=.298,TUBDØ=.394,TUBSPH=10,TUBSPØ=4,TUBLGH=15,TUBLGØ=17.5,XNTUBH=62,
XNTUBØ=154,XNØPH=4,XNØPØ=2,WPRCNH=.5,WPRCNØ=.73,TIPRCN=1,RITØ=1,WRH2=0,
WRØ2=2200,IEND=0      $END
0
$LINE      $END
$VALVE     $END
$LØWPC F=500,1000,2000,3000,XNET=33,33,33,33,XNEF=10,10,10,10,NPRTPC=0      $END
1
$LINE      $END
$VALVE     $END
$LØWPC F=1000,0,0,0,XNET=33,0,0,0,XNEF=10,0,0,0,TØTI=2.E6,3.E6,4.E6,5.E6      $END
1
$LINE      $END
$VALVE     $END
$LØWPC TØTI=3000000,0,0,0,XMR=1,2,3,4,5      $END
1
$LINE      $END
$VALVE     $END
$LØWPC XMR=3,0,0,0,0,EPS=2,4,6,8,10      $END
```

FIGURE 4-2

MCDONNELL DOUGLAS AUTOMATION COMPANY

FORTRAN Coding Form

PROGRAM: LOW PRESSURE APS DESIGN AND SIZING	PUNCHING INSTRUCTIONS	GRAPHIC	PAGE 2 OF 2
PROGRAMMER: A.E. BRUNS — DATE: 1 JUNE 1971		PUNCH	

FORTRAN STATEMENT

```
/
$LINE      $END
$VALVE     $END
$LØWPC  EPS=[illegible],0,0,0,0,PTH=15,PAPSH=35,PTØ=20,PAPSØ=35      $END
/
$LINE      $END
$VALVE     $END
$LØWPC  PTH=30,PAPSH=50,PTØ=20,PAPSØ=35      $END
/
$LINE      $END
$VALVE     $END
$LØWPC  PTH=20,PAPSH=40,PTØ=15,PAPSØ=30      $END
/
$LINE      $END
$VALVE     $END
$LØWPC  PTH=20,PAPSH=40,PTØ=30,PAPSØ=45      $END
/
```

ACF 770 (21 JAN 70)

FIGURE 4-2

4.3 Input Data (Booster) - In general, the booster APS will not require additional propellant capability since sufficient residuals remain in the main engine tanks following boost. Hence, APS propellant storage assemblies, pressurization subassemblies, heat exchangers, and liquid/vapor mixers are not required. Total impulse required from an APS propellant storage assembly is zero. The input variable TOTI is set equal to one (1.0) to avoid a fatal error in the PRESYS Subroutine (logarithm of zero), but still results in computing zero weights for propellant, tankage, and pressurization assemblies. Heat exchanger and liquid/vapor mixer assemblies are bypassed by setting TIPRCN = 0 and RITO = 0 respectively. Thus, no heat exchanger design characteristics are required and these variables may be set equal to zero. Remaining data in the LOWPC namelist, as well as for the LINE and VALVE namelists, would be obtained following the same procedure given for the orbiter case. A listing of booster input data is included in Figure 1-4 of Volume II.

4.4 Output Data - Orbiter APS sample case results are tabulated in Figure 4-3 and 4-4. Figure 4-3 gives assembly/component weights, total subsystem weight, and optimum design parameters for the selected sample case while Figure 4-4 shows the linear sensitivities of this selected design to various mission and design requirements. Program printout for this case is listed in Volume II, Figure 1-8.

SUBSYSTEM DESIGN PARAMETERS

OPTIMUM CHAMBER PRESSURE, lbf/in^2a	14
OPTIMUM MIXTURE RATIO[1]	3
OPTIMUM EXPANSION RATIO[1]	8
MAXIMUM LINE SIZE, INCHES O_2	8.2
H_2	8.7
ENGINE SPECIFIC IMPULSE, SEC	373

SUBSYSTEM WEIGHT

COMPONENT (NO)	WEIGHT, LB O_2	H_2
PROPELLANT	3927	2147
PROPELLANT STORAGE ASSEMBLY	187	596
PRESSURIZATION SUBASSEMBLY	12	84
PROPELLANT CONDITIONING ASSEMBLY	461	335
LIQUID/VAPOR MIXING ASSEMBLY	122	134
DISTRIBUTION ASSEMBLY		
LINES AND COMPENSATORS	295	316
ISOLATION VALVES (24), BYPASS VALVES (2)	207	223
ENGINE ASSEMBLIES		
ENGINES (33)	2352	
PNEUMATIC SUBASSEMBLY	181	
TOTAL	(11579)	

1 Evaluated from sensitivities FIGURE 4-4.

ORBITER APS DESIGN AND WEIGHT
SAMPLE CASE

FIGURE 4-3

PARAMETER	VARIABLE NAME	UNITS	RANGE	SUBSYSTEM WEIGHTS-LBS	
THRUST	F	LBF	500	10318	
			1000	11579	1
			2000	13357	
			3000	15238	
IMPULSE	ITOT	LBF-SEC	$2x10^6$	8618	
			$3x10^6$	11579	1
			$4x10^6$	14519	
			$5x10^6$	17457	
MIXTURE RATIO	XMR	--	1	12565	
			2	11613	
			3	11579	1,2
			4	12029	
			5	12662	
EXPANSION RATIO	EPS	--	2	12614	
			4	11816	
			6	11607	
			8	11579	1,2
			10	11592	
MAIN ENGINE TANK PRESSURE (HYDROGEN)	PTH	LBF/IN^2A	15	12238	
			20	11579	1
			30	11467	
MAIN ENGINE TANK PRESSURE (OXYGEN)	PTO	LBF/IN^2A	15	12237	
			20	11579	1
			30	11433	

1 Design Point

2 Optimum

ORBITER APS WEIGHT SENSITIVITIES
SAMPLE CASE

FIGURE 4-4

5. REFERENCES

a. "ICRPG Liquid Propellant Thrust Chamber Performance Evaluation Manual," CPIA No. 178, September 1968.

b. Bruns, A. E., Gray, J. G., "Space Shuttle Low Pressure Auxiliary Propulsion Subsystem Design Definition, Design Handbook," McDonnell Douglas Report No. MDC E0301, 29 January 1971.

c. "Design Manual for Vacuum Si Insulated Piping," Linde Company, Union Carbide Corporation, 1962.

d. Orton, G. F., "Space Shuttle Low Pressure Auxiliary Propulsion Subsystem Definition, Operational Performance Computer Program," McDonnell Douglas Report No. MDC E0413, 30 June 1971.

e. Kammermeyer, K., Atmosphere in Space Cabins and Closed Environment, TL1530.K3, Appleton Century Crofts, Division-Meredith Publishing Co., New York, 1966.

COPY NO. 2

SPACE SHUTTLE LOW PRESSURE AUXILIARY PROPULSION SUBSYSTEM DEFINITION

1 June 1971

Report MDC E0398

Volume 2

Design and Sizing Computer Program Program Manual

Prepared by: A. E. Bruns

Approved by: P.J. Kelly, Study Manager, Propulsion

CONTRACT NO. NAS 9-11012

MCDONNELL DOUGLAS ASTRONAUTICS COMPANY - EAST

Saint Louis, Missouri 63166 (314) 232-0232

MCDONNELL DOUGLAS CORPORATION

ABSTRACT

This report documents a design and sizing computer program used in support of the Space Shuttle Low Pressure Auxiliary Propulsion Subsystem (APS) Definition Study (Contract No. NAS 9-11012). The study was performed for the National Aeronautics and Space Administration, Manned Spacecraft Center (MSC), Houston, Texas.

This is Volume II (Program Manual) of a two-volume report which documents the design and sizing computer program. Volume I contains a complete technical description of the APS including a description of subsystem operation; subsystem/assembly design descriptions; delineation of the engineering analysis equations, including substantiation of data; and sample cases showing program input/output. Volume II (Program Manual) contains a program description and defines internal program nomenclature including a description of variable names, detailed flow charts, and a program listing. The computer program evaluates APS weight for prescribed design parameters and sizes the APS and its components. Component and assembly models are included for liquid propellant storage; pressurization subassembly; propellant conditioner; liquid/vapor mixer; propellant distribution network, including valves; and engine assemblies. In addition, engine performance and propellant property models are included. An iteration scheme is included for optimizing APS feed component weights as a function of engine chamber pressure. Total subsystem weight as well as component weights are included in the program output. APS design points and sensitivities to design parameters and mission requirements can be obtained from the program.

TABLE OF CONTENTS

SECTION		PAGE
1.	PROGRAMMING	1-1
1.1	Program Description	1-1
1.2	Program Subroutines	1-22
1.3	Flow Charts	1-24
1.4	Deck Setup	1-24
1.4.1	Computer Configuration/Requirements	1-24
1.4.2	Restart Procedure	1-24
1.4.3	Deck Sequence	1-24
1.4.4	Input Data	1-25
1.4.5	Restrictions and Limitations	1-27
1.4.6	Output	1-33
2.	LISTING	2-1
	APPENDICES	
	A. Program Flow Charts	A-1
	B. Program Listing	B-1

EFFECTIVE PAGES

Title

ii through iii

1-1 through 1-39

2-1 through 2-1

A-i

A-1 through A-80

B-i

B-1 through B-186

1. PROGRAMMING

1.1 Program Description - This computer program was written to facilitate design and sizing of a low chamber pressure APS. It can also be used to evaluate design point sensitivities to design parameters and mission requirements.

The APS physical model simulated by the program is defined in Volume I of this report. Basically, the APS design uses the space shuttle main engine tanks as low pressure gas accumulators. These tanks supply gaseous oxygen and hydrogen to the APS engines. For the orbiter, propellants from separate liquid storate tanks are used for main engine tank resupply. These propellants are first circulated through tubular, passive heat exchangers where they are vaporized and superheated prior to injection into the main engine tank. During major APS burns, warm propellant vapors from the main engine tanks are mixed with liquid propellants (from the APS tanks) in a downstream liquid/vapor mixer. The propellants are then supplied to the engines at constant temperature and pressure via a propellant distribution network. The booster APS requires no additional propellant storage since sufficient propellant residuals are trapped in the main engine tank, and it operates in a simple blowdown mode.

A block diagram of the computer program is shown in Figure 1-1. The program consists of a main deck and subroutines which model the various components. The main program provides executive control, controls input/output and an iteration scheme which optimizes feed component/engine weights as a function of engine chamber pressure. Component models have been included for engine and pneumatic assemblies, distribution lines and valves, liquid/vapor mixer, passive heat exchanger, liquid propellant tanks and pressurization assemblies. Subroutines are also included which model engine performance, perform curve fits and calculate gas properties.

Input to the program consists of three namelists and one indicator. The three namelists define (1) distribution network physical characteristics (2) valving, and (3) APS design and performance data. The indicator controls program output, i.e., either full printout of total subsystem and component weights or suppressed printout of subsystem weight only.

Program synthesis is accomplished by the combination of an array of components which are dependent on the rate of flow alone (feed system) and an array of components which depend on total impulse requirements. The feed and impulse dependent component weights are then combined for program printout. A simplified program flow chart is shown in Figure 1-2.

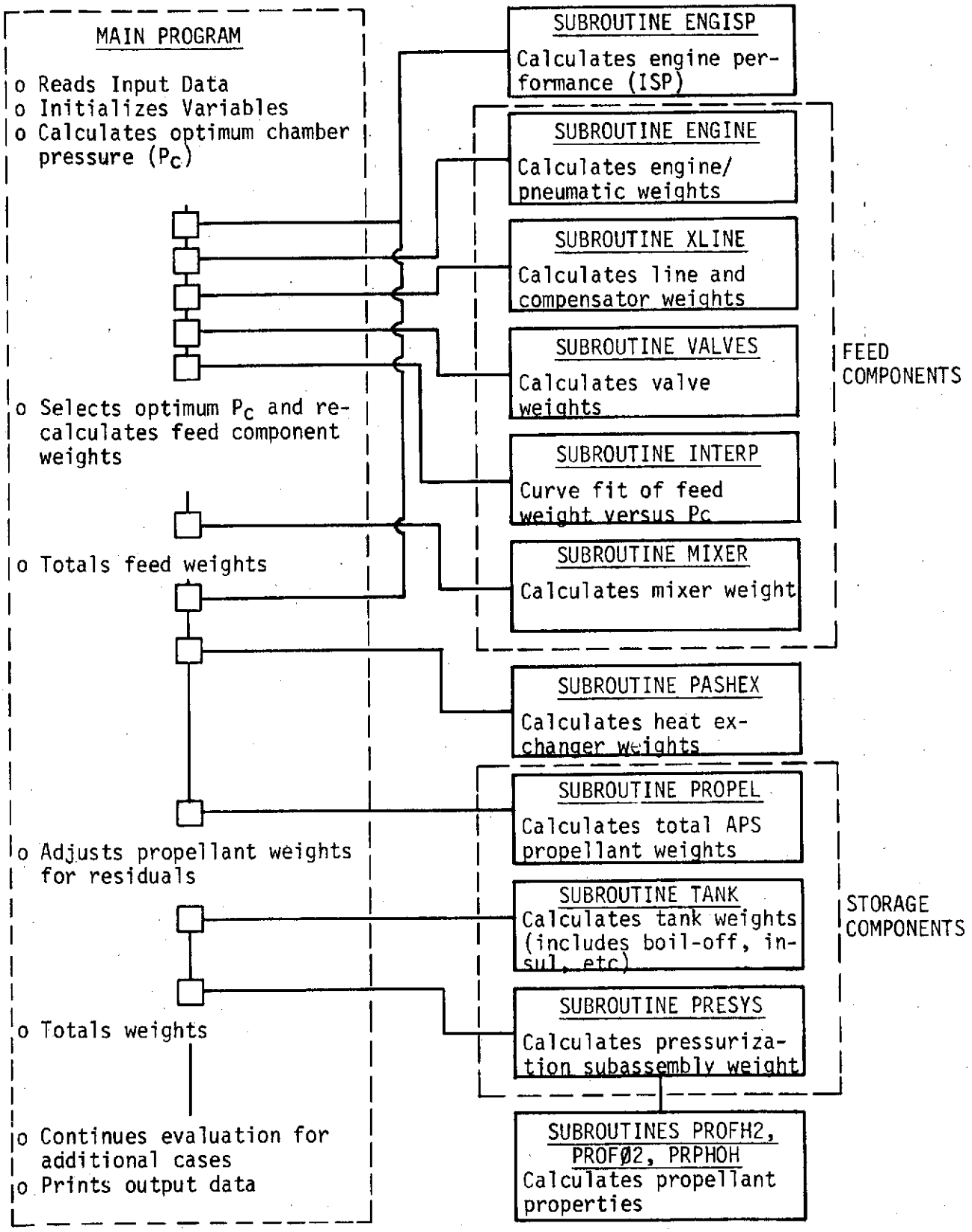

PROGRAM COMPUTATION DIAGRAM

FIGURE 1-1

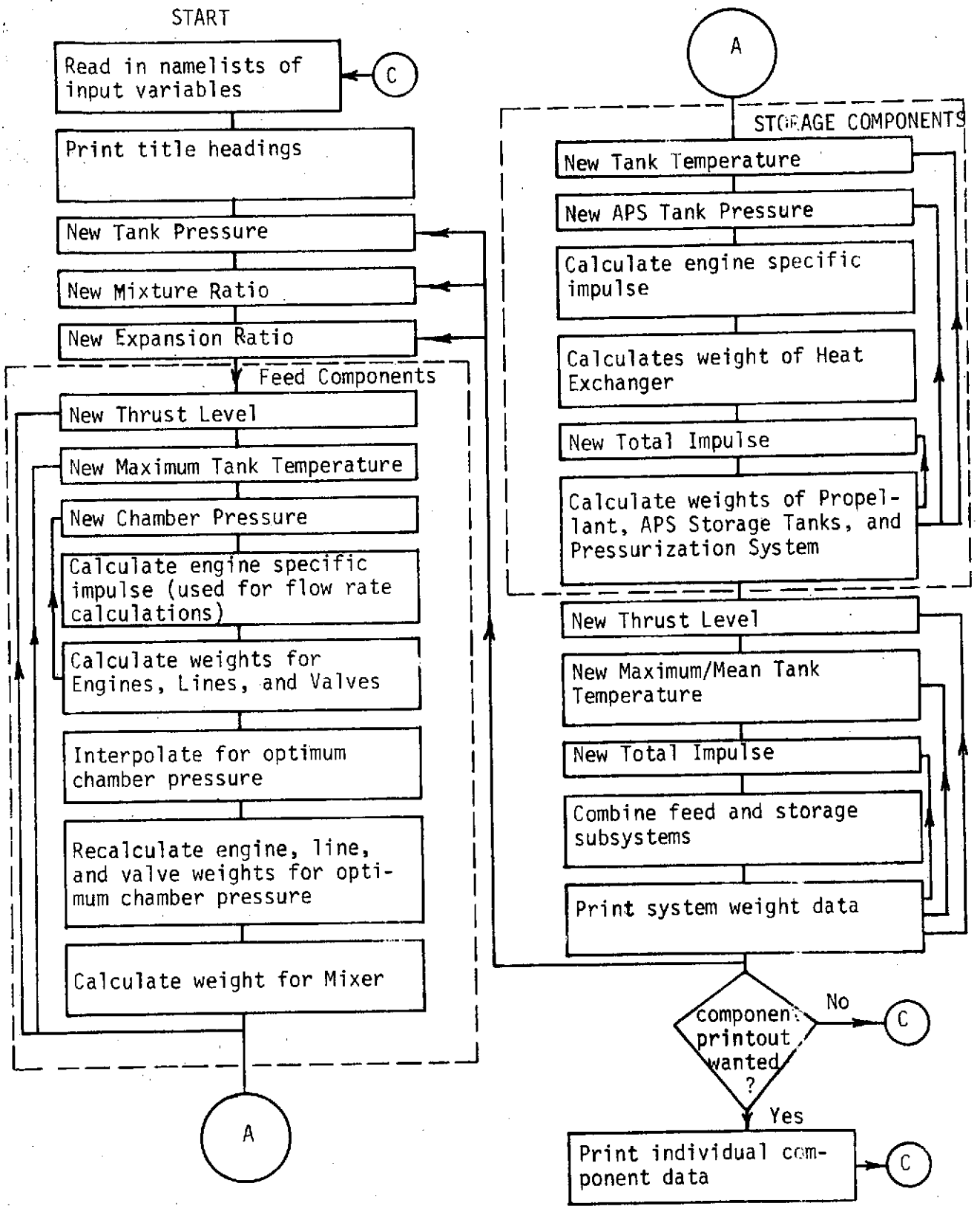

FLOW CHART
APS DESIGN AND SIZING COMPUTER PROGRAM

FIGURE 1-2

The program is written in FORTRAN IV language and is operational on the Control Data Corporation (CDC) 6600 computer. Run time for a design case and complete sensitivity to design and performance requirements requires about 20 seconds of machine time.

All variables used in the program, their type (real or integer), routines in which they are used, units of the variable and variable definition are tabulated in Figure 1-3.

VARIABLE	TYPE	ROUTINE	UNITS	DESCRIPTION
BPR	R	MAIN		PROP. BY-PASS RATIO TO HEAT EXCH.
DELP	R	MAIN		DUMMY VARIABLE
DELPM	R	MAIN	LBF/IN**2	MAXIMUM PRESSURE BUDGET IN FEED LINE
DH2	R	MAIN	INCHES	MAXIMUM FEED LINE DIAMETER-H2 SIDE
DH2	R	VALVE		
DH2	R	MIXER		
DO2	R	MAIN	INCHES	MAXIMUM FEED LINE DIAMETER-O2 SIDE
DO2	R	VALVE		
DO2	R	MIXER		
EPS	R	MAIN		NOZZLE EXPANSION RATIO
EPS	R	ENGISP		
EPS	R	ENGINE		
F	R	MAIN	LBF	THRUST LEVEL PER ENGINE
F	R	ENGISP		
F	R	ENGINE		
F	R	XLINE		
F	R	MIXER		
F	R	PASHEX		
FN	R	MAIN		ARRAY TO STORE VALUES OF NUMBER OF
		VALVE		ENGINES FIRING AND NUMBER OF VALVES
HEX	R	MAIN		COMMON BLOCK NAME
HEX	R	PASHEX		
I	I	MAIN		INDEXING VARIABLE
I	I	XLINE		
I	I	VALVE		
IEND	I	MAIN		CASE CHANGE INDICATOR
IEPS	I	MAIN		NUMBER OF EPS DATA POINTS
IF	I	MAIN		NUMBER OF THRUST (F) DATA POINTS
IF	I	PASHEX		
II	I	MAIN		NUMBER OF MAIN ENG TANK PRESSURES
II	I	PASHEX		
IL	I	MAIN		INDEXING VARIABLE FOR HEX PRINTOUT
IMR	I	MAIN		NUMBER OF MIXTURE RATIO DATA POINTS
IMR	I	PASHEX		
INO	I	MAIN		INDEX CONTROL ON PROGRAM PRINTOUT
IPAP	I	MAIN		NUMBER OF APS TANK PRESSURES-O2 SIDE
IPAPS	I	MAIN		NUMBER OF APS TANK PRESSURES-H2 SIDE
IPT	I	MAIN		NUMBER OF MAXIMUM MAIN ENG TANK PRES
ITGAS	I	MAIN		NUMBER OF ENGINE INLET TEMPERATURES
ITMAX	I	MAIN		NUMBER OF MAXIMUM GAS TEMP DATA PTS
ITOTI	I	MAIN		NUMBER OF TOTAL IMPULSE DATA POINTS
I1	I	MAIN		NUMBER OF MAXIMUM GAS TEMP DATA PTS
I2	I	MAIN		NUMBER OF THRUST DATA POINTS
I3	I	MAIN		NUMBER OF XNEF DATA POINTS
I4	I	MAIN		NUMBER OF TOTAL IMPULSE DATA POINTS
J	I	MAIN		INDEXING VARIABLE
J	I	XLINE		

FIGURE 1-3

VARIABLE	TYPE	ROUTINE	UNITS	DESCRIPTION
JJ	I	MAIN		NUMBER OF MAIN ENG TANK PRESSURES
JJ	I	PASHEX		
JL	I	MAIN		INDEXING VARIABLE
K	I	MAIN		INDEXING VARIABLE
KE	I	MAIN		INDEXING VARIABLE
KI	I	MAIN		INDEXING VARIABLE
LEN	R	MAIN		ARRAY TO STORE VALUES OF LINE
		XLINE		LENGTHS,NO OF ENGS,AND NO OF LINES
LH	I	MAIN		HEAT EXCH STORAGE ARRAY SUBSCRIPT
LINE	I	MAIN		NAME OF DISTRIBUTION LINE NAMELIST
LINE	I	XLINE		
LMAX	R	MAIN		ARRAY TO STORE TOTAL LENGTH OF AFT
		XLINE		AND FORWARD DISTRIBUTION LINES
LOWPC	I	MAIN		NAME OF DESIGN DATA INPUT NAMELIST
M	I	MAIN		INDEXING VARIABLE FOR LINE PRINTOUT
MM	I	MAIN		INDEXING VARIABLE FOR LINE PRINTOUT
N	I	MAIN		INDEXING VARIABLE
NRP	I	MAIN		VARIABLE NOT USED
NRTP	I	MAIN		NUMBER OF BOOST TANK PRESSURES
NCS	I	MAIN		INDEXING VARIABLE FOR HEAT EXCH.
NPRTPC	I	MAIN		CONTROLS PRINOUT OF CHAMBER PRESSURE
				ITERATION SCHEME
N1	I	MAIN		INDEX PARAMETER THRUST
N10	I	MAIN		INDEX PARAMETER ON APS TANK PRESSURE
N2	I	MAIN		INDEX PARAMETER ON TOTAL NO OF ENGS
N4	I	MAIN		INDEX PARAMETER ON TOTAL IMPULSE
N5	I	MAIN		INDEX PARAMETER ON INLET GAS TEMPS
N6	I	MAIN		INDEX PARAMETER ON MIXTURE RATIO
N7	I	MAIN		INDEX PARAMETER ON EXPANSION RATIO
N8	I	MAIN		INDEX PARAMETER ON MAIN TANK PRES
N9	I	MAIN		INDEX PARAMETER ON MAXIMUM GAS TEMP
PAINJ	R	MAIN	LBF/IN**2	PRESSURE DROP ACROSS INJECTOR/VALVE
PAPSH	R	MAIN	LBF/IN**2	APS PROP TANK DESIGN PRESSURE-H2
PAPSO	R	MAIN	LBF/IN**2	APS PROP TANK DESIGN PRESSURE-O2
PC	R	MAIN	LBF/IN**2	ENGINE CHAMBER PRESSURE
PC	R	ENGINE		
PD	R	MAIN	LBF/IN**2	ENGINE CHAMBER PRESSURE-ITERATION
				SCHEME,USED IN INTERP SUBROUTINE
PLOAD	R	MAIN	LBF/IN**2	APS PROPELLANT LOADING PRESSURE
PRESS	R	MAIN		DUMMY VARIABLE IN COMMON
PRESS	R	XLINE		
PT	R	MAIN	LBF/IN**2	MAXIMUM OF H2 OR O2 MAIN TANK PRES
PTH	R	MAIN	LBF/IN**2	MINIMUM MAIN ENGINE TANK PRESSURE-H2
PTO	R	MAIN	LBF/IN**2	MINIMUM MAIN ENGINE TANK PRESSURE-O2
PTT	R	MAIN	LBF/IN**2	MINIMUM OF H2 OR O2 MAIN TANK PRES
RITO	R	MAIN		RATIO OF INPUT FLOW TO OUTPUT FLOW-
RITO	R	PASHEX		
		PASHEX		MAIN ENGINE TANK

FIGURE 1-1 (Cont.)

VARIABLE	TYPE	ROUTINE	UNITS	DESCRIPTION
TEMP	R	MAIN		DUMMY VARIABLE IN COMMON
TEMP	R	XLINE		
TGASH2	R	MAIN	DEG R	ENGINE INLET TEMPERATURE-H2 SIDE
TGASO2	R	MAIN	DEG R	ENGINE INLET TEMPERATURE-O2 SIDE
TH2	R	MAIN	DEG R	H2 SATURATION TEMPERATURE AT PLOAD
TIPRCN	R	MAIN		TOTAL IMPULSE PERCENT CONDITIONED
TIPRCN	R	PASHEX		
TOTI	R	MAIN		TOTAL IMPULSE REQUIRED FROM APS
TOTI	R	PROPEL		
TO2	R	MAIN	DEG R	O2 SATURATION TEMPERATURE AT PLOAD
TPAH	R	MAIN	FT**2	TOTAL PANEL AREA H2 HEAT EXCHANGER
TPAH	R	PASHEX		
TPAO	R	MAIN	FT**2	TOTAL PANEL AREA O2 HEAT EXCHANGER
TPAO	R	PASHEX		
TTMAX	R	MAIN	DEG R	TEMPERATURE TANK(MAIN ENG) MAXIMUM
TUBDH	R	MAIN	INS	TUBE DIAMETER H2 HEAT EXCHANGER
TUBDH	R	PASHEX		
TUBDO	R	MAIN	INS	TUBE DIAMETER O2 HEAT EXCHANGER
TUBDO	R	PASHEX		
TUBLGH	R	MAIN	FT	TUBE LENGTH PER PANEL H2 HEAT EXCH
TUBLGH	R	PASHEX		
TUBLGO	R	MAIN	FT	TUBE LENGTH PER PANEL O2 HEAT EXCH
TUBLGO	R	PASHEX		
TUBSPH	R	MAIN	INS	TUBE SPACING H2 HEAT EXCHANGER
TUBSPH	R	PASHEX		
TUBSPO	R	MAIN	INS	TUBE SPACING O2 HEAT EXCHANGER
TUBSPO	R	PASHEX		
TWTHSC	R	MAIN		VARIABLE NOT USED
TWTOSC	R	MAIN		VARIABLE NOT USED
VALVE	R	MAIN		NAME OF VALVE DATA NAMELIST
VALVE	R	VALVE		
WE	R	MAIN	LBM	THRUST DEPENDENT COMPONENT WEIGHTS
WE0	R	MAIN	LBM	WEIGHT OF ENGINES,LINES AND VALVES FOR CHAMBER PRESSURE OPTIMIZATION
WE1	R	MAIN	LBM	WEIGHT OF ENGS,LINES AND VALVES USED IN INTERP SUBROUTINE
WGGSC	R	MAIN		VARIABLE NOT USED
WHEXH	R	MAIN	LBM	WEIGHT OF H2 HEAT EXCHANGER
WHEXH	R	PASHEX		
WHEXO	R	MAIN	LBM	WEIGHT OF O2 HEAT EXCHANGER
WHEXO	R	PASHEX		
WH2	R	MAIN	LBM	H2 PROPELLANT WEIGHT
WH2	R	PROPEL		
WH2	R	TANK		
WI	R	MAIN	LBM	IMPULSE DEPENDENT COMPONENT WEIGHTS
WK	R	MAIN		STORAGE ARRAY FOR DESIGN DATA
WO2	R	MAIN	LBM	O2 PROPELLANT WEIGHT
WO2	R	PROPEL		
WO2	R	TANK		

FIGURE 1-3 (Cont'd)

VARIABLE	TYPE	ROUTINE	UNITS	DESCRIPTION
WPRCNH	R	MAIN		PERCENT OF H2 LIQ FLOW RATE THROUGH
		PASHEX		PASSIVE HEAT EXCHANGER
WPRCNO	R	MAIN		PERCENT OF O2 LIQ FLOW RATE THROUGH
		PASHEX		PASSIVE HEAT EXCHANGER
WRH2	R	MAIN	LBM	WEIGHT RESIDUAL-H2 (MAIN ENG TANK)
WRO2	R	MAIN	LBM	WEIGHT RESIDUAL-O2 (MAIN ENG TANK)
WS	R	MAIN	LBM	TOTAL APS WEIGHT
WSC	R	MAIN		STORAGE ARRAY
WTC	R	MAIN	LBM	WEIGHT OF THERMAL CONDITIONERS,H2+O2
WTSH	R	MAIN		STORAGE ARRAY
WW	R	MAIN		STORAGE ARRAY FOR HEAT EXCHANGER
WWT	R	MAIN		STORAGE ARRAY FOR COMPONENT WEIGHTS
WWW	R	MAIN		STORAGE ARRAY
XISP	R	MAIN	LBF-SEC/LBM	ENGINE SPECIFIC IMPULSE
XISP	R	ENGISP		
XISP	R	XLINE		
XISP	R	MIXER		
XISP	R	PASHEX		
XISP	R	PROPEL		
XL	R	MAIN	FT	TOTAL LINE LENGTH
XL	R	XLINE		
XMR	R	MAIN		ENGINE MIXTURE RATIO (O/F)
XMR	R	ENGISP		
XMR	R	XLINE		
XMR	R	MIXER		
XMR	R	PASHEX		
XMR	R	PROPEL		
XNEE	R	MAIN		MAXIMUM NO. OF ENGINES FIRING
		VALVE		SIMULTANEOUSLY
XNEE	R	MIXER		
XNEE	R	PASHEX		
XNET	R	MAIN		TOTAL NO.OF ENGINES IN APS
XNET	R	ENGINE		
XNET	R	VALVE		
XNOPH	R	MAIN		NUMBER OF PANELS H2 HEAT EXCHANGER
XNOPH	R	PASHEX		
XNOPO	R	MAIN		NUMBER OF PANELS O2 HEAT EXCHANGER
XNOPO	R	PASHEX		
XNTUBH	R	MAIN		NUMBER OF TUBES PER PANEL H2 HEAT EXCH
XNTUBH	R	PASHEX		
XNTUBO	R	MAIN		NUMBER OF TUBES PER PANEL O2 HEAT EXCH
XNTUBO	R	PASHEX		
X1	R	MAIN		DUMMY VARIABLE IN COMMON
X2	R	MAIN		DUMMY VARIABLE IN COMMON
X3	R	MAIN		DUMMY VARIABLE IN COMMON
5	R	MAIN		INPUT TAPE
6	R	MAIN		OUTPUT TAPE
6	R	PROFH2		
6	R	PRPHOH		

FIGURE 2-2 (Cont.)

VARIABLE	TYPE	ROUTINE	UNITS	DESCRIPTION
AA	R	ENGISP		DUMMY VARIABLE IN COMMON
A0	R	ENGISP		CURVE FIT COEFFICIENTS,MR EFFECTS
A1	R	ENGISP		CURVE FIT COEFFICIENTS,MR EFFECTS
A2	R	ENGISP		CURVE FIT COEFFICIENTS,MR EFFECTS
A3	R	ENGISP		CURVE FIT COEFFICIENTS,MR EFFECTS
A4	R	ENGISP		CURVE FIT COEFFICIENTS,MR EFFECTS
B0	R	ENGISP		CURVE FIT COEFFICIENTS,THRUST EFFECT
B1	R	ENGISP		CURVE FIT COEFFICIENTS,THRUST EFFECT
B2	R	ENGISP		CURVE FIT COEFFICIENTS,THRUST EFFECT
B3	R	ENGISP		CURVE FIT COEFFICIENTS,THRUST EFFECT
B4	R	ENGISP		CURVE FIT COEFFICIENTS,THRUST EFFECT
B5	R	ENGISP		CURVE FIT COEFFICIENTS,THRUST EFFECT
CEPS	R	ENGISP		EXPANSION RATIO EFFECT ON ISP
CF	R	ENGISP		THRUST EFFECT ON ENGINE ISP
CMR	R	ENGISP		MIXTURE RATIO EFFECT ON ENGINE ISP
CSTAR	R	ENGISP		MIXTURE RATIO/THRUST COEFFIECIENT
CTH	R	ENGISP		H2 INLET TEMP COEFFICIENT,EFFECT-ISP
CTO	R	ENGISP		O2 INLET TEMP COEFFICIENT,EFFECT-ISP
C0	R	ENGISP		CURVE FIT COEFFICIENTS,EPS EFFECT
C1	R	ENGISP		CURVE FIT COEFFICIENTS,EPS EFFECT
C2	R	ENGISP		CURVE FIT COEFFICIENTS,EPS EFFECT
C3	R	ENGISP		CURVE FIT COEFFICIENTS,EPS EFFECT
C4	R	ENGISP		CURVE FIT COEFFICIENTS,EPS EFFECT
C5	R	ENGISP		CURVE FIT COEFFICIENTS,EPS EFFECT
D0	R	ENGISP		CURVE FIT COEFFICIENT,H2 TEMP EFFECT
D1	R	ENGISP		CURVE FIT COEFFICIENT,H2 TEMP EFFECT
D2	R	ENGISP		CURVE FIT COEFFICIENT,H2 TEMP EFFECT
E0	R	ENGISP		CURVE FIT COEFFICIENT,O2 TEMP EFFECT
E1	R	ENGISP		CURVE FIT COEFFICIENT,O2 TEMP EFFECT
E2	R	ENGISP		CURVE FIT COEFFICIENT,O2 TEMP EFFECT
G	R	ENGISP		MIXTURE RATIO EFFECT COEFFICIENT
H0	R	ENGISP		CURVE FIT COEFFICIENT,MR EFFECT
H1	R	ENGISP		CURVE FIT COEFFICIENT,MR EFFECT
H2	R	ENGISP		CURVE FIT COEFFICIENT,MR EFFECT
TH	R	ENGISP	DEG R	TEMPERATURE HYDROGEN,ENGINE INLET
TO	R	ENGISP	DEG R	TEMPERATURE OXYGEN,ENGINE INLET
AA	R	ENGINE		DUMMY VARIABLE IN COMMON
AA	R	PROPEL		
AB	R	ENGINE		DUMMY VARIABLE
AB	R	PROPEL		
AB	R	TANK		
A0	R	ENGINE		CURVE FIT COEFF'S,F/P EFFECT-ENG WT.
A1	R	ENGINE		CURVE FIT COEFF'S,F/P EFFECT-ENG WT.
A2	R	ENGINE		CURVE FIT COEFF'S,F/P EFFECT-ENG WT.
A3	R	ENGINE		CURVE FIT COEFF'S,F/P EFFECT-ENG WT.
A4	R	ENGINE		CURVE FIT COEFF'S,F/P EFFECT-ENG WT.
B0	R	ENGINE		CURVE FIT COEFF'S,EPS EFFECT-ENG WT.

FIGURE 1-2 (Cont.)

VARIABLE	TYPE	ROUTINE	UNITS	DESCRIPTION
B1	R	ENGINE		CURVE FIT COEFF'S,EPS EFFECT-ENG WT.
B2	R	ENGINE		CURVE FIT COEFF'S,EPS EFFECT-ENG WT.
B3	R	ENGINE		CURVE FIT COEFF'S,EPS EFFECT-ENG WT.
RFTP	R	ENGINE		RATIO OF THRUST TO PRESSURE
WT	R	ENGINE	LBM	WEIGHT OF ONE ENGINE
WTA	R	ENGINE		THRUST/PRESSURE COEFFICIENT-ENG.WT.
WTB	R	ENGINE		NOZZLE EXPANSION RATIO COEFF-ENG.WT.
WTPSA	R	ENGINE	LBM	WEIGHT PNEUMATIC SUBASSEMBLY
DELP	R	XLINE	LBF/IN**2	PRESSURE BUDGET FOR FEED LINES
DH2	R	XLINE	INS	LINE DIAMETER-H2 SIDE
DMAXH2	R	XLINE	INS	MAXIMUM FEED LINE DIAMETER-H2 SIDE
DMAXO2	R	XLINE	INS	MAXIMUM FEED LINE DIAMETER-O2 SIDE
DO2	R	XLINE	INS	LINE DIAMETER-O2 SIDE
DPDL	R	XLINE	PSIA/FT	PRESSURE DROP PER UNIT LINE LENGTH
ISP	R	XLINE	LBF-SEC/LBM	ENGINE SPECIFIC IMPULSE
ISP	R	MIXER		
MR	R	XLINE		ENGINE MIXTURE RATIO
MR	R	MIXER		
N	I	XLINE		LEN ARRAY SUBSCRIPT
P	R	XLINE	LBF/IN**2	TEMPORARY PRESSURE VARIABLE
PI	R	XLINE		NUMERICAL CONSTANT
PI	R	MIXER		
PI	R	PASHEX		
RHO	R	XLINE	LBM/IN**3	DENSITY OF TUBING MATERIAL
S	R	XLINE	LBF/IN**2	ULTIMATE STRENGTH OF TUBING MATERIAL
THH2	R	XLINE	INS	TUBING THICKNESS H2 LINE
THH2S	R	XLINE	INS	H2 TUBE THICKNESS BASED ON STRENGTH
THO2	R	XLINE	INS	TUBING THICKNESS O2 LINE
THO2S	R	XLINE	INS	O2 TUBE THICKNESS BASED ON STRENGTH
THRUST	R	XLINE	LBF	THRUST PER ENGINE
THRUST	R	MIXER		
TH2	R	XLINE	DEG R	H2 GAS TEMPERATURE
TO2	R	XLINE	DEG R	O2 GAS TEMPERATURE
TWH2	R	XLINE	LBM/SEC	TEMPORARY FLOW RATE VARIABLE-H2 SIDE
TWO2	R	XLINE	LBM/SEC	TEMPORARY FLOW RATE VARIABLE-O2 SIDE
WDOTH2	R	XLINE	LBM/SEC	H2 PROPELLANT FLOW RATE PER ENGINE
WDOTO2	R	XLINE	LBM/SEC	O2 PROPELLANT FLOW RATE PER ENGINE
WH2	R	XLINE	LBM	H2 LINE WEIGHTS
WO2	R	XLINE	LBM	O2 LINE WEIGHTS
AC	R	VALVE		DUMMY VARIABLE IN COMMON
AC	R	PROPEL		
AC	R	TANK		
AD	R	VALVE		DUMMY VARIABLE IN COMMON
DVALH2	R	VALVE	INS	TEMPORARY VALVE FLOW DIAMETER-H2
DVALO2	R	VALVE	INS	TEMPORARY VALVE FLOW DIAMETER-O2
WH2	R	VALVE	LBM	H2 VALVE WEIGHT
WO2	R	VALVE	LBM	O2 VALVE WEIGHT

FIGURE 1-3 (cont.)

VARIABLE	TYPE	ROUTINE	UNITS	DESCRIPTION
WTVALH	R	VALVE	LBM	TEMPORARY H2 VALVE WEIGHT
WTVALO	R	VALVE	LBM	TEMPORARY O2 VALVE WEIGHT
A	R	INTERP		TEMPORARY VARIABLE
B	R	INTERP		TEMPORARY VARIABLE
C	R	INTERP		TEMPORARY VARIABLE
D	R	INTERP		TEMPORARY VARIABLE
E	R	INTERP		TEMPORARY VARIABLE
I	I	INTERP		TEMPORARY VARIABLE
ID	I	INTERP		TEMPORARY VARIABLE
J	I	INTERP		TEMPORARY VARIABLE
J1	I	INTERP		TEMPORARY VARIABLE
M	I	INTERP		TEMPORARY VARIABLE
MZ	I	INTERP		TEMPORARY VARIABLE
MO	I	INTERP		TEMPORARY VARIABLE
M1	I	INTERP		TEMPORARY VARIABLE
N	I	INTERP		NUMBER OF DATA POINTS
NO	I	INTERP		INDICATOR
N1	I	INTERP		ORDER OF LEAST SQUARE CURVE FIT
N2	I	INTERP		TEMPORARY VARIABLE
N3	I	INTERP		TEMPORARY VARIABLE
X	R	INTERP		IN=INDEPENDENT VARIABLE ARRAY OUT=LAGRANGE COEFFICIENTS
XK	R	INTERP		TEMPORARY VARIABLE
XN	R	INTERP		TEMPORARY VARIABLE
Y	R	INTERP		IN=DEPENDENDENT VARIABLE ARRAY OUT=LEAST SQUARE COEFFICIENTS
ALH2	R	MIXER	IN**2	LIQUID FLOW AREA-HYDROGEN
ALO2	R	MIXER	IN**2	LIQUID FLOW AREA-OXYGEN
DIALH2	R	MIXER	INS	LIQUID FLOW DIAMETER-HYDROGEN
DIALO2	R	MIXER	INS	LIQUID FLOW DIAMETER-OXYGEN
LFRH2	R	MIXER		MAXIMUM RATIO OF MIXER LIQUID FLOW TO TOTAL ENGINE FLOW-HYDROGEN
LFRO2	R	MIXER		MAXIMUM RATIO OF MIXER LIQUID FLOW TO TOTAL ENGINE FLOW-OXYGEN
LVELH2	R	MIXER	FT/SEC	MAXIMUM H2 LIQUID LINE VELOCITY
LVELH2	R	PASHEX		
LVELO2	R	MIXER	FT/SEC	MAXIMUM O2 LIQUID LINE VELOCITY
LVELO2	R	PASHEX		
NEF	R	MIXER		NUMBER OF ENGINES FIRING
RHOH2	R	MIXER	LBM/FT**3	LIQUID H2 DENSITY
RHOH2	R	PASHEX		
RHOO2	R	MIXER	LBM/FT**3	LIQUID O2 DENSITY
RHOO2	R	PASHEX		
WDOTH2	R	MIXER	LBM/SEC	H2 PROPELLANT FLOW RATE-ALL ENGINES
WDOTLH	R	MIXER	LBM/SEC	H2 LIQUID FLOW RATE INTO MIXER
WDOTLO	R	MIXER	LBM/SEC	O2 LIQUID FLOW RATE INTO MIXER
WDOTO2	R	MIXER	LBM/SEC	O2 PROPELLANT FLOW RATE-ALL ENGINES

FIGURE 1-3 (Cont.)

VARIABLE	TYPE	ROUTINE	UNITS	DESCRIPTION
WGVH2	R	MIXER	LBM	WEIGHT GAS VALVE-HYDROGEN
WGVO2	R	MIXER	LBM	WEIGHT GAS VALVE-OXYGEN
WLT	R	MIXER	LBM/SEC	TOTAL H2 AND O2 LIQUID FLOW RATE
WLVH2	R	MIXER	LBM	WEIGHT OF LIQUID VALVES-HYDROGEN
WLVO2	R	MIXER	LBM	WEIGHT OF LIQUID VALVES-OXYGEN
WMAH2	R	MIXER	LBM	TOTAL MIXER ASSEMBLY WEIGHT-H2
WMAO2	R	MIXER	LBM	TOTAL MIXER ASSEMBLY WEIGHT-O2
WMCH2	R	MIXER	LBM	WEIGHT MIXING CHAMBER-H2
WMCO2	R	MIXER	LBM	WEIGHT MIXING CHAMBER-O2
WPRH2	R	MIXER	LBM	WEIGHT PRESSURE REGULATORS-H2
WPRO2	R	MIXER	LBM	WEIGHT PRESSURE REGULATORS-O2
WTV	R	MIXER	LBM	WEIGHT LIQUID THROTTLE VALVES
ALLH	R	PASHEX	INS**2	LIQUID FLOW AREA-H2
ALLO	R	PASHEX	INS**2	LIQUID FLOW AREA-O2
DLLH	R	PASHEX	INS	DIAMETER LIQUID LINE-H2
DLLO	R	PASHEX	INS	DIAMETER LIQUID LINE-O2
DLMH	R	PASHEX	INS	DIAMETER LIQUID MANIFOLD-H2
DLMO	R	PASHEX	INS	DIAMETER LIQUID MANIFOLD-O2
GMAH	R	PASHEX	INS**2	GAS MANIFOLD FLOW AREA-H2
GMAO	R	PASHEX	INS**2	GAS MANIFOLD FLOW AREA-O2
GMDH	R	PASHEX	INS	GAS MANIFOLD DIAMETER-H2
GMDO	R	PASHEX	INS	GAS MANIFOLD DIAMETER-O2
GMLGH	R	PASHEX	INS	GAS MANIFOLD LENGTH-H2
GMLGO	R	PASHEX	INS	GAS MANIFOLD LENGTH-O2
GMTH	R	PASHEX	INS	GAS MANIFOLD THICKNESS-H2
GMTO	R	PASHEX	INS	GAS MANIFOLD THICKNESS-O2
PTH	R	PASHEX	LBF/IN**2	APS PROP TANK DESIGN PRESSURE-H2
PTH	R	TANK		
PTO	R	PASHEX	LBF/IN**2	APS PROP TANK DESIGN PRESSURE-O2
PTO	R	TANK		
RHOTU	R	PASHEX	LBM/IN**3	DENSITY OF TUBE AND LINE MATERIAL
RIVWH	R	PASHEX	LBM	TUBE ATTACHMENT (RIVET) WEIGHT-H2
RIVWO	R	PASHEX	LBM	TUBE ATTACHMENT (RIVET) WEIGHT-O2
TLLH	R	PASHEX	INS	THICKNESS LIQUID LINE-H2
TLLO	R	PASHEX	INS	THICKNESS LIQUID LINE-O2
TLMH	R	PASHEX	INS	THICKNESS LIQUID MANIFOLD-H2
TLMO	R	PASHEX	INS	THICKNESS LIQUID MANIFOLD-O2
TTHH2	R	PASHEX	INS	HEAT EXCH TUBE THICKNESS-H2
TTHO2	R	PASHEX	INS	HEAT EXCH TUBE THICKNESS-O2
TUBAH	R	PASHEX	INS**2	TUBE CROSS SECTIONAL AREA-H2
TUBAO	R	PASHEX	INS**2	TUBE CROSS SECTIONAL AREA-O2
TUBODH	R	PASHEX	INS	TUBE OUTSIDE DIAMETER-H2
TUBODO	R	PASHEX	INS	TUBE OUTSIDE DIAMETER-O2
TUBWH	R	PASHEX	LBM	HEAT EXCH TUBE WEIGHT-H2
TUBWO	R	PASHEX	LBM	HEAT EXCH TUBE WEIGHT-O2
ULTS	R	PASHEX	LBF/IN**2	ULTIMATE STRENGTH OF MATERIAL
WDOTH2	R	PASHEX	LBM/SEC	H2 FLOW RATE THROUGH HEAT EXCHANGER
WDOTO2	R	PASHEX	LBM/SEC	O2 FLOW RATE THROUGH HEAT EXCHANGER

FIGURE 1-3 (Cont.)

VARIABLE	TYPE	ROUTINE	UNITS	DESCRIPTION
WGMH	R	PASHEX	LBM	WEIGHT GAS MANIFOLD-H2
WGMO	R	PASHEX	LBM	WEIGHT GAS MANIFOLD-O2
WLLH	R	PASHEX	LBM	WEIGHT LIQUID FEED LINES-H2
WLLO	R	PASHEX	LBM	WEIGHT LIQUID FEED LINES-O2
WLMH	R	PASHEX	LBM	WEIGHT LIQUID MANIFOLDS-H2
WLMO	R	PASHEX	LBM	WEIGHT LIQUID MANIFOLDS-O2
WVH	R	PASHEX	LBM	LIQUID VALVE WEIGHTS-H2
WVO	R	PASHEX	LBM	LIQUID VALVE WEIGHTS-O2
XLGH	R	PASHEX	FT	LENGTH FROM APS TANK TO HEAT EXCH-H2
XLGO	R	PASHEX	FT	LENGTH FROM APS TANK TO HEAT EXCH-O2
XLLLH	R	PASHEX	FT	TOTAL LIQUID FEED LINE LENGTH-H2
XLLLO	R	PASHEX	FT	TOTAL LIQUID FEED LINE LENGTH-O2
XLLMH	R	PASHEX	INS	LENGTH LIQUID MANIFOLD-H2
XLLMO	R	PASHEX	INS	LENGTH LIQUID MANIFOLD-O2
N1	R	TANK		NUMBER OF PASSES COOLING SHROUD-H2
N2	R	TANK		NUMBER OF PASSES COOLING SHROUD-O2
PBH2	R	TANK	LBF/IN**2	BURST PRESSURE H2 TANK
PBO2	R	TANK	LBF/IN**2	BURST PRESSURE O2 TANK
RADH2	R	TANK	INS	RADIUS H2 TANK
RADO2	R	TANK	INS	RADIUS O2 TANK
SURAH2	R	TANK	INS**2	SURFACE AREA H2 TANK
SURAO2	R	TANK	INS**2	SURFACE AREA O2 TANK
TH2	R	TANK	INS	TANK WALL THICKNESS-H2 TANK
TO2	R	TANK	INS	TANK WALL THICKNESS-O2 TANK
TUBCSA	R	TANK	INS**2	COOLING SHROUD TUBING CROSS-SECTIONAL AREA INCLUDING FLANGES
VOLH2	R	TANK	INS**3	VOLUME HYDROGEN TANK
VOLO2	R	TANK	INS**3	VOLUME OXYGEN TANK
WADH2	R	TANK	LBM	WEIGHT H2 PROP ACQUISITION DEVICE
WADO2	R	TANK	LBM	WEIGHT O2 PROP ACQUISITION DEVICE
WBOH2	R	TANK	LBM	H2 PROPELLANT BOIL-OFF WEIGHT
WBOO2	R	TANK	LBM	O2 PROPELLANT BOIL-OFF WEIGHT
WCSH2	R	TANK	LBM	WEIGHT COOLING SHROUD-H2 TANK
WCSO2	R	TANK	LBM	WEIGHT COOLING SHROUD-O2 TANK
WCTH2	R	TANK	LBM	WEIGHT COOLING SHROUD TUBES-H2 TANK
WCTO2	R	TANK	LBM	WEIGHT COOLING SHROUD TUBES-O2 TANK
WFGH2	R	TANK	LBM	WEIGHT FIBERGLASS COVER-H2 TANK
WFGO2	R	TANK	LBM	WEIGHT FIBERGLASS COVER-O2 TANK
WFH2	R	TANK	LBM	WEIGHT FOAM-H2 TANK
WIH2	R	TANK	LBM	WEIGHT INSULATION-H2 TANK
WIO2	R	TANK	LBM	WEIGHT INSULATION-O2 TANK
WTH2	R	TANK	LBM	WEIGHT H2 TANK
WTO2	R	TANK	LBM	WEIGHT O2 TANK
WTSH2	R	TANK	LBM	WEIGHT OF H2 TANK SUPPORT
WTSO2	R	TANK	LBM	WEIGHT OF O2 TANK SUPPORT
WTTH2	R	TANK	LBM	TOTAL H2 STORAGE ASSEMBLY WEIGHT

FIGURE 1-3 (Cont.)

VARIABLE	TYPE	ROUTINE	UNITS	DESCRIPTION
WTTO2	R	TANK	LBM	TOTAL O2 STORAGE ASSEMBLY WEIGHT
WVH2	R	TANK	LBM	H2 PROPELLANT VENTED-TOTAL
WVO2	R	TANK	LBM	O2 PROPELLANT VENTED-TOTAL
WVRH2	R	TANK	LBM/HR	H2 PROPELLANT VENT RATE
P	R	PRESYS	LBF/IN**2	PRESSURE OF HELIUM
PRVO2	R	PRESYS	LBF*INS	PRODUCT OF BURST PRESSURE AND VOLUME-HELIUM TANK,OXYGEN SIDE
PTH2	R	PRESYS	LBF/IN**2	APS H2 TANK DESIGN PRESSURE
PTO2	R	PRESYS	LBF/IN**2	APS O2 TANK DESIGN PRESSURE
RHEHTI	R	PRESYS	LBM/IN**3	DENSITY OF HELIUM,H2 TANK INITIALLY
RHEOF	R	PRESYS	LBM/IN**3	DENSITY OF HELIUM,O2 SIDE FINAL COND
RHEOI	R	PRESYS	LBM/IN**3	DENSITY OF HELIUM,O2 SIDE INITIALLY
RHEOTF	R	PRESYS	LBM/IN**3	DENSITY OF HELIUM,O2 TANK FINAL COND
RHO	R	PRESYS		DUMMY VARIABLE
RO2	R	PRESYS		DUMMY VARIABLE
TH2	R	PRESYS	DEG R	H2 TANK SATURATION TEMPERATURE
TO2	R	PRESYS	DEG R	O2 TANK SATURATION TEMPERATURE
VOLHEH	R	PRESYS	IN**3	H2 TANK ULLAGE VOLUME OR HELIUM VOL.
VOLHEO	R	PRESYS	IN**3	VOLUME OF HELIUM TANK-O2 SIDE
VPH	R	PRESYS	LBF/IN**2	VAPOR PRESSURE HYDROGEN
VPH0	R	PRESYS		NUMERICAL CONSTANTS,CURVE FIT OF H2
VPH1	R	PRESYS		VAPOR PRESSURE VERSUS TEMPERATURE,
VPH2	R	PRESYS		USING ARRHENIUS RELATIONSHIP,
VPO	R	PRESYS	LBF/IN**2	VAPOR PRESSURE OXYGEN
VPO0	R	PRESYS		NUMERICAL CONSTANTS,CURVE FIT OF O2
VPO1	R	PRESYS		VAPOR PRESSURE VERSUS TEMPERATURE,
VPO2	R	PRESYS		USING ARRHENIUS RELATIONSHIP
WH2	R	PRESYS	LBM	WEIGHT OF H2 PRESSURIZATION ASS'Y
WO2	R	PRESYS	LBM	WEIGHT OF O2 PRESSURIZATION ASS'Y
VOLH2	R	PRESYS	IN**3	VOLUME H2 TANK ULLAGE
VOLO2	R	PRESYS	IN**3	VOLUME O2 TANK
A	R	PROFH2		TEMPORARY VARIABLE
A	R	PROFO2		
A	R	HINT		
A	R	SINT		
A	R	FUNCT		
A	R	DFDR		
A	R	DFDT		
A	R	CVINT		
AL1	R	PROFH2		LIQUID HYDROGEN CURVE FIT COEFF
AL1	R	PROFO2		
AL2	R	PROFH2		LIQUID HYDROGEN CURVE FIT COEFF
AL2	R	PROFO2		
AL3	R	PROFH2		LIQUID HYDROGEN CURVE FIT COEFF
AL3	R	PROFO2		
AL4	R	PROFH2		LIQUID HYDROGEN CURVE FIT COEFF
AL4	R	PROFO2		

FIGURE 1-3 (Cont.)

VARIABLE	TYPE	ROUTINE	UNITS	DESCRIPTION
AL5	R	PROFH2		LIQUID HYDROGEN CURVE FIT COEFF
AL5	R	PROFO2		
AP	R	PROFH2		CONSTANT
AP	R	PROFO2		
AS	R	PROFH2		CONSTANT
AS	R	PROFO2		
AS1	R	PROFH2		CONSTANT
AS2	R	PROFH2		CONSTANT
AS3	R	PROFH2		CONSTANT
AS4	R	PROFH2		CONSTANT
AT1	R	PROFH2		CONSTANT
AT1	R	PROFO2		
AT2	R	PROFH2		CONSTANT
AT2	R	PROFO2		
AT3	R	PROFH2		CONSTANT
AT4	R	PROFH2		CONSTANT
AT5	R	PROFH2		CONSTANT
A0	R	PROFH2		CONSTANT FOR HYDROGEN
A0	R	PROFO2		
A1	R	PROFH2		TEMPORARY VARIABLE
A1	R	PROFO2		
B	R	PROFH2		CONSTANT
B	R	PROFO2		
BLK1	R	PROFH2		COMMON BLOCK
BLK1	R	PROFO2		
BLK1	R	HINT		
BLK1	R	SINT		
BLK1	R	FUNCT		
BLK1	R	DFDR		
BLK1	R	DFDT		
BLK1	R	CVINT		
BP	R	PROFH2		CONSTANT
BP	R	PROFO2		
BS	R	PROFH2		CONSTANT
BS	R	PROFO2		
C	R	PROFH2		CONSTANT FOR HYDROGEN
C	R	PROFO2		
CP	R	PROFH2		CONSTANT
CP	R	PROFO2		
CPP	R	PROFH2	BTU/LB-*R	CONSTANT PRESSURE SPECIFIC HEAT
CPP	R	PROFO2		
CPO	R	PROFH2		TEMPORARY VARIABLE
CPO	R	PROFO2		
CS	R	PROFH2		CONSTANT
CS	R	PROFO2		
CV	R	PROFH2	BTU/LB-*R	CONSTANT VOLUME SPECIFIC HEAT
CV	R	PROFO2		
CVO	R	PROFH2		TEMPORARY VARIABLE
CVO	R	PROFO2		

FIGURE 1-3 (Cont.

VARIABLE	TYPE	ROUTINE	UNITS	DESCRIPTION
CO	R	PROFH2	FT/SEC	SONIC VELOCITY
CO	R	PROFO2		
C1	R	PROFH2		TEMPORARY VARIABLE
C1	R	PROFO2		
C2	R	PROFH2		TEMPORARY VARIABLE
C2	R	PROFO2		
C3	R	PROFH2		TEMPORARY VARIABLE
C3	R	PROFO2		
C4	R	PROFH2		TEMPORARY VARIABLE
C4	R	PROFO2		
C5	R	PROFH2		TEMPORARY VARIABLE
C5	R	PROFO2		
C6	R	PROFH2		CONSTANT
C6	R	PROFO2		
C7	R	PROFH2		CONSTANT
C7	R	PROFO2		
D	R	PROFH2		CONSTANT FOR HYDROGEN
D	R	PROFO2		
DP	R	PROFH2		CONSTANT
DP	R	PROFO2		
DPDR	R	PROFH2	BTU/LBM	PARTIAL OF PRESSURE W/R TO DENSITY
DPDR	R	PROFO2		
DPDT	R	PROFH2	ATM/*K	PARTIAL OF PRESSURE W/R TO TEMPERATURE
DPDT	R	PROFO2		
DS	R	PROFH2		CONSTANT
DS	R	PROFO2		
E	R	PROFH2		CONSTANT FOR HYDROGEN
E	R	PROFO2		
EP	R	PROFH2		CONSTANT
EP	R	PROFO2		
ES	R	PROFH2		CONSTANT
ES	R	PROFO2		
EX	R	PROFH2		TEMPORARY VARIABLE
EX	R	PROFO2		
EX	R	HINT		
EX	R	SINT		
EX	R	FUNCT		
EX	R	DFDR		
EX	R	DFDT		
EX	R	CVINT		
F	R	PROFH2		CONSTANT FOR HYDROGEN
F	R	PROFO2		
FS	R	PROFH2		CONSTANT
FS	R	PROFO2		
G	R	PROFH2		CONSTANT FOR HYDROGEN
GAMMA	R	PROFH2		RATIO OF SPECIFIC HEATS
GAMMA	R	PROFO2		

FIGURE 1-3 (Cont.)

VARIABLE	TYPE	ROUTINE	UNITS	DESCRIPTION
GS	R	PROFH2		CONSTANT
H	R	PROFH2	EXTERNAL BTU/LBM INTERNAL J/GR-MOLE	ENTHALPY
H	R	PROFO2		
HSAT	R	PROFH2	J/GR-MOLE	SATURATED LIQUID ENTHALPY
HSAT	R	PROFO2		
H1	R	PROFH2		CONSTANT FOR LIQUID HYDROGEN
H1	R	PROFO2		
H2	R	PROFH2		CONSTANT FOR LIQUID HYDROGEN
H2	R	PROFO2		
H3	R	PROFH2		CONSTANT FOR LIQUID HYDROGEN
H3	R	PROFO2		
H4	R	PROFH2		CONSTANT FOR LIQUID HYDROGEN
H4	R	PROFO2		
H5	R	PROFH2		CONSTANT FOR LIQUID HYDROGEN
H5	R	PROFO2		
I	I	PROFH2		TEMPORARY VARIABLE
I	I	PROFO2		
IND	I	PROFH2		FLAG
IND	I	PROFO2		
K	I	PROFH2		INDEXING VARIABLE
K	I	PROFO2		
P	R	PROFH2	EXTERNAL LB/IN**2 INTERNAL ATM	PRESSURE
P	R	PROFO2		
P	R	FUNCT		
P	R	DFDR		
P	R	DFDT		
P	R	CVINT		
P	R	HSAT		
P	R	OSAT		
PC	R	PROFH2	ATM	CRITICAL PRESSURE
PC	R	PROFO2		
PP	R	PROFH2		TEMPORARY VARIABLE
PP	R	PROFO2		
PROPS	R	PROFH2		COMMON BLOCK
PROPS	R	PROFO2		
PSAT	R	PROFH2	ATM	SATURATED LIQUID PRESSURE
PSAT	R	PROFO2		

FIGURE 1-3 (Cont

VARIABLE	TYPE	ROUTINE	UNITS	DESCRIPTION
RHO	R	PROFH2	EXTERNAL LBM/IN**3 INTERNAL GR-MOLE/CM**3	DENSITY
RHO	R	PROFO2		
RHO	R	HINT		
RHO	R	SINT		
RHO	R	FUNCT		
RHO	R	DFDR		
RHO	R	DFDT		
RHO	R	CVINT		
RHOC	R	PROFH2		CONSTANT
RHOC	R	PROFO2		
RHOS	R	PROFH2	GR-MOLE/CM**3	SATURATED LIQUID DENSITY
RHOS	R	PROFO2		
RHOO	R	PROFH2		TEMPORARY VARIABLE
RHOO	R	PROFO2		
RHO2	R	PROFH2		TEMPORARY VARIABLE
RHO2	R	PROFO2		
RHO2	R	HINT		
RHO2	R	SINT		
RHO2	R	FUNCT		
RHO2	R	DFDR		
RHO2	R	DFDT		
S	R	PROFH2	BTU/LB-*R	ENTROPY
S	R	PROFO2		
SA	R	PROFH2		TEMPORARY VARIABLE
SA	R	PROFO2		
SB	R	PROFH2		TEMPORARY VARIABLE
SB	R	PROFO2		
SC	R	PROFH2		TEMPORARY VARIABLE
SC	R	PROFO2		
SSAT	R	PROFH2	JOULE/GR-MOLE-*K	SATURATED LIQUID ENTROPY
SSAT	R	PROFO2		
S1	R	PROFH2		TEMPORARY VARIABLE
S1	R	PROFO2		
S2	R	PROFH2		TEMPORARY VARIABLE
S2	R	PROFO2		

FIGURE 1-3 (Cont.)

VARIABLE	TYPE	ROUTINE	UNITS	DESCRIPTION
T	R	PROFH2	EXTERNAL *R INTERNAL *K	TEMPERATURE
T	R	PROFO2		
T	R	HINT		
T	R	SINT		
T	R	FUNCT		
T	R	DFDR		
T	R	DFDT		
T	R	CVINT		
T	R	HSAT		
T	R	OSAT		
TA	R	PROFH2		TEMPORARY VARIABLE
TA	R	PROFO2		
TB	R	PROFH2		TEMPORARY VARIABLE
TB	R	PROFO2		
TC	R	PROFH2		CONSTANT
TC	R	PROFO2		
TO	R	PROFH2	*K	PREVIOUSLY CALCULATED TEMPERATURE
TO	R	PROFO2		
T1	R	PROFH2		TEMPORARY VARIABLE
T1	R	PROFO2		
T18	R	PROFH2	*R	TEMPERATURE
U	R	PROFH2	BTU/LBM	INTERNAL ENERGY
U	R	PROFO2		
VWA	R	PROFH2		VAN DER WAAL CONSTANT
VWA	R	PROFO2		
VWB	R	PROFH2		VAN DER WAAL CONSTANT
VWB	R	PROFO2		
Z	R	PROFH2		COMPRESSIBILITY
Z	R	PROFO2		
HINT	R	HINT		TEMPORARY VARIABLE
SINT	R	SINT		TEMPORARY VARIABLE
F	R	FUNCT		TEMPORARY VARIABLE
FUNCT	R	FUNCT		TEMPORARY VARIABLE
RHO3	R	FUNCT		TEMPORARY VARIABLE
RHO3	R	DFDR		
RHO3	R	DFDT		
RHO5	R	FUNCT		TEMPORARY VARIABLE
RHO5	R	DFDR		
RHO5	R	DFDT		
DFDR	R	DFDR		TEMPORARY VARIABLE
FR	R	DFDR		TEMPORARY VARIABLE
DFDT	R	DFDT		TEMPORARY VARIABLE
FT	R	DFDT		TEMPORARY VARIABLE

FIGURE 1-3 (Cont.)

VARIABLE	TYPE	ROUTINE	UNITS	DESCRIPTION
AAA	R	PROFO2		TEMPORARY VARIABLE
P0	R	PROFO2		TEMPORARY VARIABLE
P1	R	PROFO2		TEMPORARY VARIABLE
P2	R	PROFO2		TEMPORARY VARIABLE
RHOSO	R	PROFO2		TEMPORARY VARIABLE
RHO1	R	PROFO2		TEMPORARY VARIABLE
RSW	R	PROFO2		TEMPORARY VARIABLE
T2	R	PROFO2		TEMPORARY VARIABLE
T2	R	HINT		
T2	R	SINT		
T2	R	CVINT		
A	R	PRPHOH		STOPAGE ARRAY
AA	R	PRPHOH		VARIABLE FOR BEATTIE BRIDEGEMAN EQ
ABB	R	PRPHOH		CONSTANT FOR BEATTIE BRIDGEMAN EQ
ACAP	R	PRPHOH		TEMPORARY VARIABLE
ALPHA	R	PRPHOH		TEMPORARY VARIABLE
ANOT	R	PRPHOH		CONSTANT FOR BEATTIE BRIDGEMAN EQ
A1	R	PRPHOH		SPECIFIC HEAT CONSTANT FOR CALC
A2	R	PRPHOH		SPECIFIC HEAT CONSTANT FOR CALC
A3	R	PRPHOH		SPECIFIC HEAT CONSTANT FOR CALC
A4	R	PRPHOH		SPECIFIC HEAT CONSTANT FOR CALC
A5	R	PRPHOH		SPECIFIC HEAT CONSTANT FOR CALC
B	R	PRPHOH		STORAGE ARRAY
BB	R	PRPHOH		VARIABLE FOR BEATTIE BRIDGEMAN EQ
BBB	R	PRPHOH		VARIABLE FOR BEATTIE BRIDGEMAN EQ
BCAP	R	PRPHOH		TEMPORARY VARIABLE
BETA	R	PRPHOH		TEMPORARY VARIABLE
BNOT	R	PRPHOH		CONSTANT FOR BEATTIE BRIDGEMAN EQ
CBB	R	PRPHOH		CONSTANT FOR BEATTIE BRIDGEMAN EQ
CP	R	PRPHOH	BTU/LB-*R	CONSTANT PRESSURE SPECIFIC HEAT
CV	R	PRPHOH	BTU/LB-*R	CONSTANT VOLUME SPECIFIC HEAT
CVTNOT	R	PRPHOH	BTU/LB-*R	IDEAL GAS CONSTANT VOL SPECIFIC HEAT
CO	R	PRPHOH	FT/SEC	SONIC VELOCITY
DPDR	R	PRPHOH	BTU/LBM	PARTIAL OF PRESSURE W/R TO DENSITY
ENOT	R	PRPHOH	BTU/LBM	IDEAL GAS INTERNAL ENERGY AT 100*K
EPS	R	PRPHOH		VARIABLE FOR BEATTIE BRIDGEMAN EQ
GAMMA	R	PRPHOH		RATIO OF SPECIFIC HEATS
H	R	PRPHOH	BTU/LBM	ENTHALPY
HHELIU	R	PRPHOH		HOLLERITH LABEL
HH2	R	PRPHOH		HOLLERITH LABEL
HH2O	R	PRPHOH		HOLLERITH LABEL
HNOT	R	PRPHOH	BTU/LBM	IDEAL GAS ENTHALPY AT 100*K
HO2	R	PRPHOH		HOLLERITH LABEL
I	I	PRPHOH		TEMPORARY VARIABLE
IGAS	I	PRPHOH		FLAG
JPRINT	I	PRPHOH		FLAG
K	I	PRPHOH		TEMPORARY VARIABLE
M	I	PRPHOH		TEMPORARY VARIABLE
N	I	PRPHOH		INDEXING VARIABLE

FIGURE 1-3 (Cont.)

VARIABLE	TYPE	ROUTINE	UNITS	DESCRIPTION
NAME	I	PRPHOH		NAME OF GAS BEING CONSIDERED
P	R	PRPHOH	ATM	PRESSURE
PCP	R	PRPHOH	BTU/LB-*R	PRESS CONTRIBUTION TO SPECIFIC HEAT
PCRIT	R	PRPHOH	LB/IN**2	CRITICAL PRESSURE
PI	R	PRPHOH		TEMPORARY VARIABLE
PRESS	R	PRPHOH	LB/IN**2	PRESSURE OF GAS
PROPS	R	PRPHOH		COMMON LABEL
PSAT	R	PRPHOH	LB/IN**2	SATURATION PRESSURE OF GAS
P1	R	PRPHOH		TEMPORARY PRESSURE VARIABLE
P2	R	PRPHOH		TEMPORARY PRESSURE VARIABLE
R	R	PRPHOH		UNIVERSAL GAS CONSTANT
RHO	R	PRPHOH	EXTERNAL LBM/IN**3 INTERNAL LBM/FT**3	DENSITY
S	R	PRPHOH	BTU/LB-*R	ENTROPY
SAT1	R	PRPHOH		CONSTANT TO CALCULATE PSAT
SAT2	R	PRPHOH		CONSTANT TO CALCULATE PSAT
SNOT	R	PRPHOH	BTU/LB-*R	IDEAL GAS ENTROPY AT 100*K
T	R	PRPHOH	*K	TEMPERATURE
TAN	R	PRPHOH		TEMPORARY VARIABLE
TCRIT	R	PRPHOH	*R	CRITICAL TEMPERATURE
TEMP	R	PRPHOH	*R	TEMPERATURE
TQ	R	PRPHOH		TEMPORARY VARIABLE
TO	R	PRPHOH	*R	BASE TEMPERATURE
T3	R	PRPHOH	*R**3	TEMPERATURE**3
U	R	PRPHOH	BTU/LBM	INTERNAL ENERGY
V	R	PRPHOH	LITER/GR-MOL	SPECIFIC VOLUME OF GAS
V1	R	PRPHOH		TEMPORARY VARIABLE
V2	R	PRPHOH		TEMPORARY VARIABLE
WM	R	PRPHOH	GR/GR-MOLE	MOLECULAR WEIGHT
CVINT	R	CVINT		TEMPORARY VARIABLE
INT	R	CVINT		TEMPORARY VARIABLE
T3	R	CVINT		TEMPORARY VARIABLE
T4	R	CVINT		TEMPORARY VARIABLE
T5	R	CVINT		TEMPORARY VARIABLE

FIGURE 1-3 (Cont.)

1.2 Program Subroutines - The program calls the following library subroutines:

(1) ALOG10

(2) ALOG

(3) EXP

(4) SQRT

Characteristics of the program subroutines are as follows:

NAME	CALLING SEQUENCE	USE
LSC	Main Program	Controls input and output, executive routine, chamber pressure optimization sequence and adjusts propellant weights.
ENGISP	CALL ENGISP	Calculates engine performance as a function of thrust, pressure, inlet temperatures, mixture ratio and expansion ratio.
ENGINE	CALL ENGINE	Calculates engine weight as a function of thrust, pressure, and expansion ratio.
XLINE	CALL XLINE	Calculates propellant distribution line weight as a function of line length, flow rates and allowable pressure budget.
VALVE	CALL VALVE	Calculates valve weights for known flow rates.
INTERP	CALL INTERP (N, NQ, N1, X, Y)	Provides curve fit (least square or Lagrange) of feed weight as a function of chamber pressure.
MIXER	CALL MIXER	Calculates mixer weight as function of flow rates and maximum line size.
PASHEX	CALL PASHEX	Calculates passive heat exchanger weight as a function of design characteristics.
PROPEL	CALL PROPEL	Calculates total APS propellant requirements based on total impulse and engine specific impulse.

NAME	CALLING SEQUENCE	USE
TANK	CALL TANK	Calculates propellant storage requirements and weights based on propellant weight and tank pressure.
HSAT	CALL HSAT (P, T)	Calculates hydrogen saturation temperature as a function of pressure.
OSAT	CALL OSAT (P, T)	Calculates oxygen saturation temperature as a function of pressure.
PRESYS	CALL PRESYS (P_{O_2}, P_{H_2}, T_{H_2}, T_{O_2}, W_{H_2}, W_{O_2})	Calculates pressurization subassembly weight as a function of pressure, temperature, and propellant weight.
PROFH2	CALL PROFH2 (T, P, RHO, H, S)	Calculates thermodynamic properties of hydrogen below 540°R using modified Benedict-Webb-Rubin equation.
HINT	HINT (RHO, T)	A PVT integration subprogram which calculates hydrogen and oxygen liquid enthalpy.
SINT	SINT (RHO, T)	A PVT integration subprogram which calculates hydrogen and oxygen liquid entropy.
FUNCT	FUNCT (P, T, RHO)	A function subprogram which calculates error in p)actual and p)calc. for iteration procedure, [-p + p calc. (T, RHO)]
DFDR	DFDR (P, T, RHO)	A function subprogram which calculates $[(\frac{\partial p}{\partial \rho})_T]$ for gases.
DFDT	DFDT (P, T, RHO)	A function subprogram which calculates $[(\frac{\partial p}{\partial T})_V]$ for gases.
PROFO2	CALL PROFO2 (T, P, RHO, H, S)	Calculates thermodynamic properties of oxygen below 540°F using modified Benedict-Webb-Rubin equations.

NAME	CALLING SEQUENCE	USE
PRPHOH	CALL (T, P, RHO, H, S, U)	Calculates thermodynamic properties of water, hydrogen, oxygen, and helium above 540°R using Beattie Bridgeman equation.
CVINT	CVINT (P, T, RHO)	A PVT integration subprogram which calculates heat capacity at constant volume (C_v).

1.3 Flow Charts - Detailed flow charts of the complete program were obtained using the McDonnell Automation Company computer program called "AUTOFLOW." The AUTOFLOW program is leased by the McDonnell Automation Company from Applied Data Research, Inc. The flow charts are enclosed in Appendix A of this volume. In addition to the flow charts, the AUTOFLOW program provides a table of contents and references to facilitate finding statement numbers, etc. in the flow chart. Following each specific flow chart, a list of nonprocedural statements is given.

1.4 Deck Setup

1.4.1 Computer Configuration/Requirements

1. The program is operational on the CDC 6600.
2. The program requires 46700_8 core locations to load and 40400_8 core locations to run.
3. The program is written in FORTRAN IV.
4. The program operates under the MACE operating system and was compiled under the SCOPE 3.2 compiler.
5. No plots or punch are generated by the program.
6. The only tapes used are TAPE 5 for input and TAPE 6 for output.

1.4.2 Restart Procedure - There is no restart procedure in the program but multiple cases can be run without requiring a full set of input data.

1.4.3 Deck Sequence - The sequence for running this program is as follows:

1. Control cards
2. End of record card
3. Program
4. End of record card
5. First case data
6. Second case data, etc.
7. End of file card

The sequence is illustrated by the following listing (Figure 1-4) showing control cards and the input data for two cases, the first case being an orbiter APS and the second a booster APS.

1.4.4 Input Data - The input to the low pressure design and sizing program is by use of the NAMELIST option of FORTRAN IV with the exception of the last card. Three NAMELISTS are used, these being:

LINE -- distribution line assembly array which describes line length, number of engines firing per line, and number of lines.

VALVE -- valve subassembly array which describes number of engines firing per valve and number of valves.

LOWPC -- describes auxiliary propulsion subsystem being investigated.

NAMELIST input is as follows:

1. Use columns 2-80.
2. First card must start with a $ sign followed by the NAMELIST name, i.e., $LINE, etc.
3. Last card for each NAMELIST must be $END.

The last input card contains the value of IND. Input format is I3 (Column 3 of card) where if:

IND = 0 complete subsystem weights are printed including component weights.

IND = 1 suppressed printout of total subsystem weight only.

A detailed description of the three NAMELIST's follows. It should be noted, the order of variables within a NAMELIST does not matter, but the NAMELIST's themselves must follow the above order.

1.4.4.1 LINE NAMELIST - The LINE NAMELIST describes the propellant distribution assembly located forward and aft of the main engine tanks. Oxygen and hydrogen distribution networks are assumed to be parallel. Forward and aft distribution subassemblies may consist of five line segments each. For each of the five line segments, the segment length, maximum number of engines firing per segment, and quantity (number) of segments are given in a 10 x 3 array named LFN (I, J). The first five lines of this array describe the distribution subassembly (either aft or forward) with the largest total line length. This maximum overall length is defined as LMAX(1). The second five lines in the LFN array describe the remaining subassembly. This subassembly overall line length is defined as LMAX(2). If five line lengths are not required per subassembly, the number of engines firing LFN (I, 2)

```
                    LISTING OF TEST CASE INPUT
12345678901234567890123456789012345678901234567890123456789012345678901234567890

LSC01,C,100,50000.      $BRUNS
ACC. E242 1253557                                  AEBRUNS       59240   96902002
     FORTRAN 029
RUN20(S,,,,,,46000)
MAP.
LOAD(LGO,SCPLTS)
EXECUTE.
        END OF RECORD
```

ORBITER CASE

```
$LINE LMAX=158,55, LFN=124,12.5,12.5,1.5,7.5,35,4,8,8,0,10,6,6,3,1,8,3,3,1,1,
0,2,1,2,6,0.5,3,6,15,0     $END
$VALVE FN=10,9,8,7,6,5,4,3,2,1,2,0,0,0,0,0,2,3,6,13     $END
$LOWPC F=1000,XNET=33,XNEF=10,TOTI=3000000,TGASH2=150,TGASO2=200,XMR=3,EPS=8,
TTMAX=200,PTH=20,PAPSH=40,PTO=20,PAPSC=35,DELPM=14,PAINJ=2,NPRTPC=1,PLOAD=17,
TUBDH=.298,TUBDO=.394,TUBSPH=10,TUBSPC=4,TUBLGH=15,TUBLGO=17.5,XNTUBH=62,
XNTUBO=154,XNOPH=4,XNOPC=2,WPRCNH=.5,WPRCNO=.73,TIPRCN=1,RITO=1,WRH2=0,
WRO2=2200,IEND=0     $END
 0
$LINE     $END
$VALVE    $END
$LOWPC F=500,1000,2000,3000,XNET=33,33,33,33,XNEF=10,10,10,10,NPRTPC=0     $END
 1
$LINE     $END
$VALVE    $END
$LOWPC F=1000,0,0,0,XNET=33,0,0,0,XNEF=10,0,0,0,TOTI=2.E6,3.E6,4.E6,5.E6   $END
 1
$LINE     $END
$VALVE    $END
$LOWPC TOTI=3000000,0,0,0,XMR=1,2,3,4,5     $END
 1
$LINE     $END
$VALVE    $END
$LOWPC XMR=3,0,0,0,0,EPS=2,4,6,8,10     $END
 1
$LINE     $END
$VALVE    $END
$LOWPC EPS=8,0,0,0,0,PTH=15,PAPSH=35,PTC=20,PAPSO=35     $END
 1
$LINE     $END
$VALVE    $END
$LOWPC PTH=30,PAPSH=50,PTC=20,PAPSC=35     $END
 1
$LINE     $END
$VALVE    $END
$LOWPC PTH=20,PAPSH=40,PTC=15,PAPSC=30     $END
 1
$LINE     $END
$VALVE    $END
$LOWPC PTH=20,PAPSH=40,PTC=30,PAPSC=45     $END
 1
```

BOOSTER CASE

```
$LINE LMAX=70,41,LFN=55,3,9,3,0,10,6,25,0,0,4,2,1,1,1,6,1,1,1,1,.5,2,4,8,0,
0,6,12,0,0     $END
$VALVE FN=10,9,8,7,6,5,4,3,2,1,0,0,0,0,2,0,0,0,11,10          $END
$LOWPC F=2500,XNET=20,XNEF=6,TOTI=1,TGASH2=180,TGASO2=420,XMR=2,EPS=2,PTH=17.5,
PAPSH=26,PTO=17.5,PAPSC=26,TTMAX=385,DELPM=11,PAINJ=2,NPRTPC=1,PLOAD=17,
TUBDH=0,TUBDO=0,TUBSPH=0,TUBSPC=0,TUBLGH=0,TUBLGO=0,XNTUBH=0,XNTUBO=0,
XNOPH=0,XNOPO=0,WPRCNH=0,WPRCNO=0,TIPRCN=0,RITO=0,WRH2=0,WRO2=0,IEND=0      $END
        END OF FILE
```

FIGURE 1-4

should not be set equal to zero as this will result in a fatal error in the XLINE subroutine (logarithm of zero). Line weights are correctly calculated as zero by inputting line length (LFN (I, 1)) and number of lines (LFN (I, 3)) equal to zero. Figure 1-5 tabulates the LINE NAMELIST variables.

1.4.4.2 VALVE NAMELIST - The VALVE NAMELIST describes the valve size and number required in the propellant distribution assembly. The size of the valve is based on the maximum propellant flow through the valve as determined by the number of engines firing. Thus, the number of engines firing and the quantity (number) of this size valve required are given in a 10 x 2 array named FN(I, J). Figure 1-6 tabulates the VALVE NAMELIST variables.

1.4.4.3 LOWPC NAMELIST - The LOWPC NAMELIST describes the auxiliary propulsion subsystem design variables. Included in the NAMELIST are:

(1) thrust level, impulse and number of engines required for a specific space shuttle mission

(2) engine design parameters such as inlet temperatures, mixture ratio, and expansion ratio

(3) distribution assembly design parameters such as main engine tank pressures and temperatures, allowable pressure drop, and engine valve and injector pressure drop.

(4) heat exchanger design parameters such as tube length, diameter, spacing and number and

(5) propellant tank parameters such as available propellant residuals from the main engine tanks and design pressures.

Figure 1-7 tabulates the LOWPC NAMELIST variables.

1.4.5 Restrictions and Limitations - A maximum of ten data inputs can be made for each of the variables F, XNET, XNEF, TOTI, TGASH2, TGASO2, XMR, EPS, PTO, PAPSO, PTH, PAPSH, and TTMAX. The actual number of inputs may vary but the number must be identical for the following variable sets:

(1) thrust level (F), total number of engines (XNET) and number of engines firing (XNEF)

(2) hydrogen main engine tank pressure (PTH) and oxygen main engine tank pressure (PTO)

(3) hydrogen APS tank pressure (PAPSH) and oxygen APS tank pressure (PAPSO)

(4) hydrogen inlet temperature (TGASH2), oxygen inlet temperature (TGASO2), and maximum main engine tank temperature (TTMAX).

VARIABLE	UNITS	NO OF VALUES REQ'D	DESCRIPTION
LMAX(1)	ft	1	Total distribution line length, maximum value of aft or forward lines from main tanks to engines
LMAX(2)	ft	1	Total distribution line length for remainder of feed system (forward or aft)
LFN(I,1)	ft	10	Length of distribution lines, first five values correspond to LMAX(1) and second five values to LMAX(2)
LFN(I,2)	--	10	Number of engines that can be fired simultaneously on each individual line segment LFN(I,1)
LFN(I,3)	--	10	Number of lines of type and length LFN(I,1)

LINE NAMELIST VARIABLES FIGURE 1-5

VARIABLE	UNITS	NO OF VALUES REQ'D	DESCRIPTION
FN(I,1)	--	10	Number of engines firing which dictates flow rate through valve
FN(I,2)	--	10	Number of valves of each type described by FN(I,1)

VALVE NAMELIST VARIABLES FIGURE 1-6

LOWPC NAMELIST VARIABLES

VARIABLE	UNITS	NO. OF VALUES	DESCRIPTION
F	lbf	1 to 10	Thrust level per engine
XNET	--	1 to 10	Number of engines in auxiliary propulsion subsystem (APS)
XNEF	--	1 to 10	Maximum number of engines that can be fired simultaneously
TOTI	lbf-sec	1 to 10	Total impulse of APS
TGASH2	°R	1 to 10	Hydrogen temperature at engine inlet
TGASO2	°R	1 to 10	Oxygen temperature at engine inlet
XMR	--	1 to 10	Engine mixture ratio
EPS	--	1 to 10	Nozzle expansion ratio
PTO	lbf/in^2A	1 to 10	Minimum value of oxygen main engine tank pressure
PAPSO	lb/in^2A	1 to 10	Maximum value of oxygen APS propellant storage pressure
PTH	lbf/in^2A	1 to 10	Minimum value of hydrogen main engine tank pressure
PAPSH	lbf/in^2A	1 to 10	Maximum value of hydrogen APS propellant storage pressure
WRH2	lbm	1	Weight of main engine tank hydrogen residuals available for APS usage
WRO2	lbm	1	Weight of main engine tank oxygen residuals available for APS usage
DELPM	lbf/in^2A	1	Pressure drop available from main engine tank to engines
PAINJ	lbf/in^2A	1	Pressure drop across engine valve and injector
NPRTPC	--	1	Index which controls print-out of chamber pressure optimization, if 0 - no print-out

FIGURE 1-7

LOWPC NAMELIST VARIABLES
(Continued)

VARIABLE	UNITS	NO. OF VALUES	DESCRIPTION
			of P_c optimization, 1 - print-out of P_c optimization
PLOAD	lbf/in^2A	1	Loading pressure of APS propellant storage tanks
TMAX	°R	1 to 10	Maximum temperature of propellant during major APS burn
PRCNH	--	1	Percent of hydrogen liquid flow rate being conditioned in passive heat exchanger
PRCNO	--	1	Percent of oxygen liquid flow rate being conditioned in passive heat exchanger
IPRCN	--	1	Index percent of total impulse being conditioned, if 0-no thermal conditioning required
TUBDH	ins	1	Tube diameter of hydrogen heat exchanger
TUBDO	ins	1	Tube diameter of oxygen heat exchanger
TUBSPH	ins	1	Tube spacing of hydrogen heat exchanger
TUBSPO	ins	1	Tube spacing of oxygen heat exchanger
TUBLGH	ft	1	Tube length per panel of hydrogen heat exchanger
TUBLGO	ft	1	Tube length per panel of oxygen heat exchanger
NTUBH	--	1	Number of tubes per panel for hydrogen heat exchanger
NTUBO	--	1	Number of tubes per panel for oxygen heat exchanger
NOPH	--	1	Number of panels in hydrogen heat exchanger
NOPO	--	1	Number of panels in oxygen heat exchanger
RITO	--	1	Ratio of makeup flow from APS storage tanks to engine flow

FIGURE 1-7 Cont.

LOWPC NAMELIST VARIABLES
(Continued)

VARIABLE	UNITS	NO. OF VALUES	DESCRIPTION
IEND	--	1	Case change indicator, i.e. if 0-change value of data parameters if 1-start complete new case and read in dimensional variables that have no assumed values.

FIGURE 1-7 Cont.

In addition, the total number of cases per run cannot exceed 60 as defined by:

$$(N_{MR})\ (N_{\varepsilon})\ (N_{P_T})\ (N_F)\ (N_{P_{APS}})\ (N_T)\ (N_I) < 60$$

where N_{MR} = number of mixture ratio data points

N_{ε} = number of expansion ratio data points

N_{P_T} = number of main engine tank pressure data points

N_F = number of thrust level data points

$N_{P_{APS}}$ = number of APS storage tank pressure data points

N_T = number of engine inlet temperature data points

N_I = number of total impulse data points

Sixty cases was selected as a maximum to maintain core storage requirements at a reasonable size and thus reduce run cost and turn-around time. Multiple runs may be accomplished by simply placing another set of data after the previous set or run.

Diagnostic messages are contained in the program concerning the engine chamber pressure optimization scheme and the gas properties subroutines. In the main program, three messages may be printed concerning selection of the optimum engine chamber pressure. These messages and suggestions for correction are listed below:

MESSAGE	CORRECTION
IDEAL PC ABOVE RANGE	Indicates optimum chamber pressure is above range of chamber pressures evaluated in iteration scheme. Correction is to decrease the value of the maximum allowable line pressure drop (DELPM) thereby evaluating higher chamber pressures.
IDEAL PC BELOW RANGE	Indicates optimum chamber pressure is below range of chamber pressures evaluated in iteration scheme. Correction is to increase the value of the maximum allowable line pressure drop (DELPM) thereby evaluating lower chamber pressures.

MESSAGE	CORRECTION
NO MINIMUM FOR PC	No optimum exists because of linear curve fit of feed component weight versus chamber pressure.

Subroutines (PROFH2, PROFO2, PRPHOH) contain the message "SUBROUTINE DID NOT CONVERGE." This message is printed whenever a problem occurs in solving the low temperature equation of state. The case is not terminated by this error. The error occurs when a zero or negative value of pressure, temperature, or density has been input to the subroutine. Subroutine PRPHOH (gas properties above 540°R) also contains the message "PROPERTIES ARE IN LIQUID REGION AT TEMP = XXX" which is self-explanatory.

1.4.6 Output - Output consists of the input data contained in NAMELIST's LINE, VALVE, and LOWPC and computed values of subsystem and component weights. If the input variable NPRTPC equals one (1), the chamber pressure/feed system optimization is printed for all ten (10) chamber pressures evaluated as well as for the optimum pressure. If a blank card (IND = 0) follows the input NAMELISTS of LINE, VALVE, and LOWPC, the printed output consists of total subsystem weights, and engine, line/valve, mixer, propellant, propellant storage tanks, pressurization, and passive conditioning weights. If IND equal 1, only the subsystem weights are printed. For all computed output data, the parameter and units are defined in the printout. An example is given in Figure 1-8 for a complete output (NPRTPC = 1, IND = 0). For a suppressed output (NPRTPC = 0, IND = 1) only page 6 of Figure 1-8 would be printed. This output corresponds to the sample case discussed in Section 4.0 of Volume I. Only the output for the design case is included here, sensitivity case output is omitted to reduce volume size.

SAMPLE OUTPUT – ORBITER APS

PAGE 1

```
$LINE

LMAX    =  0.158E+03,  0.55E+02,

LFN     =  0.124E+03,  0.125E+02,  0.125E+02,  0.15E+01,  0.75E+01,  0.35E+02,  0.4E+01,  0.8E+01,  0.8E+01,  0.0,
           0.1E+02,  0.6E+01,  0.6E+01,  0.3E+01,  0.1E+01,  0.8E+01,  0.3E+01,  0.3E+01,  0.1E+01,  0.1E+01,  0.0,
           0.2E+01,  0.1E+01,  0.2E+01,  0.6E+01,  0.5E+00,  0.3E+01,  0.6E+01,  0.15E+02,  0.0,

$END
```

PAGE 2

```
$VALVE

FN      =  0.1E+02,  0.9E+01,  0.8E+01,  0.7E+01,  0.6E+01,  0.5E+01,  0.4E+01,  0.3E+01,  0.2E+01,  0.1E+01,  0.2E+01,
           0.0,  0.0,  0.0,  0.0,  0.0,  0.2E+01,  0.3E+01,  0.6E+01,  0.13E+02,

$END

TOO FEW CONSTANTS FOR UNSUBSCRIPTED ARRAY
ERROR NUMBER   0049 DETECTED BY INPUTN  AT ADDRESS 032746
CALLED FROM LSC      AT 000372

TOO FEW CONSTANTS FOR UNSUBSCRIPTED ARRAY
ERROR NUMBER   0049 DETECTED BY INPUTN  AT ADDRESS 032746
CALLED FROM LSC      AT 000372

TOO FEW CONSTANTS FOR UNSUBSCRIPTED ARRAY
ERROR NUMBER   0049 DETECTED BY INPUTN  AT ADDRESS 032746
CALLED FROM LSC      AT 000372

TOO FEW CONSTANTS FOR UNSUBSCRIPTED ARRAY
ERROR NUMBER   0049 DETECTED BY INPUTN  AT ADDRESS 032746
CALLED FROM LSC      AT 000372

TOO FEW CONSTANTS FOR UNSUBSCRIPTED ARRAY
ERROR NUMBER   0049 DETECTED BY INPUTN  AT ADDRESS 032746
CALLED FROM LSC      AT 000372

TOO FEW CONSTANTS FOR UNSUBSCRIPTED ARRAY
ERROR NUMBER   0049 DETECTED BY INPUTN  AT ADDRESS 032746
CALLED FROM LSC      AT 000372

TOO FEW CONSTANTS FOR UNSUBSCRIPTED ARRAY
ERROR NUMBER   0049 DETECTED BY INPUTN  AT ADDRESS 032746
CALLED FROM LSC      AT 000372
```

FIGURE 1-8

```
$LCWFC
F        = 0.1E+04,  0.0,  0.0,  0.0,  0.0,  0.0,  0.0,  0.0,  0.0,  0.0,
XNET     = 0.33E+02,  0.0,  0.0,  0.0,  0.0,  0.0,  0.0,  0.0,  0.0,  0.0,
XNEF     = 0.1E+02,  0.0,  0.0,  0.0,  0.0,  0.0,  0.0,  0.0,  0.0,  0.0,
TOTI     = 0.3E+07,  0.0,  0.0,  0.0,  0.0,  0.0,  0.0,  0.0,  0.0,  0.0,
TGASF2   = 0.15E+03,  0.0,  0.0,  0.0,  0.0,  0.0,  0.0,  0.0,  0.0,  0.0,
TGASC2   = 0.2E+33,  0.0,  0.0,  0.0,  0.0,  0.0,  0.0,  0.0,  0.0,  0.0,
XMR      = 0.3E+01,  0.0,  0.0,  0.0,  0.0,  0.0,  0.0,  0.0,  0.0,  0.0,
EPS      = 0.8E+01,  0.0,  0.0,  0.0,  0.0,  0.0,  0.0,  0.0,  0.0,  0.0,
FTC      = 0.2E+02,  0.0,  0.0,  0.0,  0.0,  0.0,  0.0,  0.0,  0.0,  0.0,
FAFSC    = 0.35E+02,  0.0,  0.0,  0.0,  0.0,  0.0,  0.0,  0.0,  0.0,  0.0,
PTF      = 0.2E+02,  0.0,  0.0,  0.0,  0.0,  0.0,  0.0,  0.0,  0.0,  0.0,
FAFSF    = 0.4E+02,  0.0,  0.0,  0.0,  0.0,  0.0,  0.0,  0.0,  0.0,  0.0,
WRF2     = 0.0,
WRC2     = 0.22E+04,
DELFM    = 0.14E+02,
FAINJ    = 0.2E+01,
NPRTFC   = 1,
FLOAD    = 0.17E+02,
TTMAX    = 0.3E+03,  0.0,  0.0,  0.0,  0.0,  0.0,  0.0,  0.0,  0.0,  0.0,
WPRCNC   = 0.73E+00,
WPRCNF   = 0.5E+00,
```

FIGURE 1-8 Cont.

PAGE 3

```
TIFRCN  =  0.1E+01,
TUEDH   =  0.298E+00,
TLEDC   =  0.394E+00,
TUESFH  =  0.1E+02,
TLESFC  =  0.4E+01,
TUELGH  =  0.15E+02,
TUELGC  =  0.175E+02,
XNTUEH  =  0.62E+02,
XNTUEC  =  0.194E+03,
XNCFH   =  0.4E+01,
XNCFC   =  0.2E+01,

RITO    =  0.1E+01,
IEND    =  0,
$END
```

PAGE 4

LOW PRESSURE APS SYNTHESIS PROGRAM

```
PERCENT OF FLOW CONDITIONED IS  1.0000
RATIO OF INFLOW TO ENGINE FLOW IS  1.000

PERCENT OF HYDROGEN FLOW CONDITIONED IS  .500
PERCENT OF OXYGEN FLOW CONDITIONED IS  .730
```

FIGURE 1-8 Cont.

PAGE 5

CHAMBER PRESSURE PSIA	ENGINE WEIGHT LBF	LINE WEIGHTS LBF	LBF	VALVE WEIGHTS LBF	LBF	TOTAL WEIGHT LBF	ECOST TANK PRESSURES PSIA	PSIA
5.38	4568.56	261.97	226.90	173.94	161.93	5393.12	20.00	20.00
6.76	3857.72	261.96	226.85	177.37	165.13	4689.04	20.00	20.00
8.14	3387.71	268.21	228.11	181.60	169.06	4234.68	20.00	20.00
9.52	3048.27	271.39	230.77	186.87	173.97	3911.26	20.00	20.00
10.90	2789.47	276.55	235.12	193.59	180.23	3674.95	20.00	20.00
12.28	2584.66	299.59	265.74	202.50	188.52	3537.02	20.00	20.00
13.66	2418.16	306.10	276.88	214.97	200.13	3418.24	20.00	20.00
15.04	2279.66	328.37	306.93	234.25	218.07	3367.50	20.00	20.00
16.42	2163.11	386.83	354.67	270.96	252.25	3427.62	20.00	20.00
17.80	2063.12	821.13	760.21	444.66	413.96	4503.07	20.00	20.00
OPTIMUM CHAMBER PRESSURE VALUES FOR MR= 3.00 AND EPS= 8.00								
14.29	2352.05	316.02	295.38	222.58	207.22	3393.25	20.00	20.00

PAGE 6

TOTAL LOW PRESSURE SYSTEM WEIGHTS, H2 ECOST TANK PRESSURE = 20.00 O2 ECOST TANK PRESSURE= 20.00

MR	AREA RATIO	PRESSURE APS H2 PSIA	TANK C2 PSIA	THRUST LBF	NO. ENG IGT FIRE		(1)TANK DESIGN DEG R	CHAMBER PRESSURE PSIA	LINE DIAMETERS H2 INCHES	O2 INCHES	FEED WEIGHT LBM	TOTAL IMPULSE LB-SEC	IMP DEP WEIGHT LBM	TOTAL WEIGHT LBM
3.0	8.0	40.0	35.0	1000.00	33	10	200.00	14.29	8.74	8.24	3830.34	3.00E+06	7748.78	11579.12

PAGE 7

ENGINE WEIGHTS

MR	AREA RATIO	THRUST LBS	NUMBER ENGINES	CHAMBER PRESSURE PSIA	ECOST TANK PRESSURE H2 PSIA	O2 PSIA	ENGINE WEIGHT LBS	PNEUMATIC WEIGHT LBS
3.00	8	1000.00	33	14.29	20.0	20.0	2352.05	181.50

FIGURE 1-8 Cont.

LINE VALVES

LINE LENGTH 0.00

PAGE 8

MR	AREA RATIO	PRESSURE BOOST TANK H2 PSIA	PRESSURE BOOST TANK C2 PSIA	(T) TANK DESIGN DEG R	THRUST LBF	NO. ENG FIRE	NO. ENG TOT	CHAMBER PRESSURE PSIA	LINE DIAMETERS H2 INCHES	LINE DIAMETERS O2 INCHES	LINE WEIGHTS H2 LBM	LINE WEIGHTS O2 LBM	VALVE WEIGHTS H2 LBM	VALVE WEIGHTS C2 LBM
3.00	8.00	20.00	20.00	200.00	1000.00	10	33	14.29	8.739	8.239	316.02	295.38	222.58	207.22

MIXER ASSY

PAGE 9

MR	AREA RATIO	PRESSURE BOOST TANK H2 PSIA	PRESSURE BOOST TANK C2 PSIA	(T) TANK DESIGN DEG R	THRUST LBF	NO. ENG FIRE	NO. ENG TOT	CHAMBER PRESSURE PSIA	LINE DIAMETER H2 INCHES	LINE DIAMETER O2 INCHES	MIXER ASSY WEIGHTS H2 LBM	MIXER ASSY WEIGHTS C2 LBM
3.00	8.00	20.00	20.00	200.00	1000.00	10	33	14.29	8.739	8.239	133.80	121.79

PAGE 10

PROPELLANT WEIGHTS

MR	AREA	(T)TANK H2 DEG R	(T)TANK C2 DEG R	TOTAL IMPULSE LB-SEC	PROPELLANT WEIGHTS H2 LBM	PROPELLANT WEIGHTS C2 LBM	PROPELLANT WEIGHTS TOTAL LBM	ENGISP	SYSMR	EFR	SISP
3.00	8.00	150.00	200.00	3.00E+06	2146.99	3926.84	6073.83	372.56	3.00	0.00000	372.56

FIGURE 1-8 Cont.

PAGE 11

APS PROPELLANT TANK WEIGHTS

MR	AREA RATIO	PRESSURE APS PSIA	PRESSURE TANKS PSIA	(T) TANK H2 DEG R	(T) TANK O2 DEG R	TOTAL IMPULSE LBS-SEC	TANK WEIGHTS H2 LBS	TANK WEIGHTS O2 LBS
3.00	8.0	40.00	35.00	150.00	200.00	3.00E+06	596.30	187.45

PAGE 12

PRESSURIZATION SYSTEM WEIGHT

MR	AREA RATIO	PRESSURE APS PSIA	PRESSURE TANKS PSIA	(T) TANK H2 DEG R	(T) TANK O2 DEG R	TOTAL IMPULSE LB-SEC	PROPELLANT WEIGHTS H2 LBM	PROPELLANT WEIGHTS O2 LBM	PRESSURIZATION WEIGHT H2 LBM	PRESSURIZATION WEIGHT O2 LBM
3.00	8.00	40.00	35.00	150.00	200.00	3.00E+06	2146.99	3926.84	83.80	11.93

PAGE 13

PASSIVE CONDITIONING SYSTEM

SURFACE HEAT EXCHANGERS ON MAIN ENGINE TANKS

MR	IMPULSE TOTAL LB-SEC	TANK PRES H2 PSIA	TANK PRES O2 PSIA	HEX TUBES H2 NUMBER	HEX TUBES O2 NUMBER	HEX LENGTH H2 FEET	HEX LENGTH O2 FEET	HEX PANELS H2 NUMBER	HEX PANELS O2 NUMBER	PANEL AREA H2 SQ FT	PANEL AREA O2 SQ FT	HEX WEIGHT H2 LBS	HEX WEIGHT O2 LBS
3.0	3.00E+06	40.0	35.0	62	154	15.0	17.5	4	2	3100	1797	335	461

FIGURE 1-8 Cont.

2.0 LISTING

2.1 Program Listing - Appendix B herein contains a complete listing of the program, including all of its subroutines. The listing was obtained using a McDonnell Automation Company computer program called "DISSECT." In addition to the listing, the DISSECT program gives each statement a number, lists all variables in alphabetical order, traces all references to each variable, identifies the type of each reference, and indicates whether or not a particular type of reference appears. Statement numbers are listed separately in a similar manner. All functions and subroutines referenced are listed alphabetically under appropriate headings. All routines listed and all routines referenced are tabulated separately. Cross references and common information are listed and the page where each routine appears is indicated.

APPENDIX A

PROGRAM FLOW CHARTS

05/18/71 TABLE OF CONTENTS AND REFERENCES AUTOFLOW CHART SET - PAGE 1

CARD ID	PAGE/BOX	NAME	REFERENCES (SOURCE SEQUENCE NO. AND PAGE/BOX)					
FORTRAN MODULE								
CHART TITLE - INTRODUCTORY COMMENTS								
CHART TITLE - PROCEDURES								
LSC 250	2.01	100	LSC 3270	8.17	LSC 4150	9.12		
LSC 260	2.02		LSC 350	2.05				
LSC 350	2.04	110						
LSC 360	2.06	120	LSC 3260	8.16	LSC 4140	9.12		
LSC 440	2.12	130						
LSC 440	2.12		LSC 440	2.13				
LSC 460	2.15		LSC 470	2.18				
LSC 470	2.16	140						
LSC 470	2.16		LSC 470	2.17				
LSC 490	2.20		LSC 510	2.24				
LSC 500	2.21		LSC 510	2.23				
LSC 510	2.22	150						
LSC 550	2.28		LSC 610	3.07				
LSC 560	2.30		LSC 550	2.28				
LSC 570	2.32		LSC 560	2.30				
LSC 580	2.34		LSC 570	2.32				
LSC 590	3.01		LSC 580	2.34				
LSC 600	3.03		LSC 590	3.01				
LSC 610	3.05	160						
LSC 610	3.05		LSC 600	3.03				
LSC 610	3.07		LSC 610	3.05				
LSC 870	3.13		LSC 720	3.11				
LSC 4160	3.16	680	LSC 930	3.14				
LSC 950	3.19		LSC 3180	8.10				
LSC 970	3.22	200	LSC 950	3.19				
LSC 980	3.23		LSC 3180	8.09				
LSC 990	3.24		LSC 3180	8.08				
LSC 1080	4.01		LSC 1030	3.25				
LSC 1090	4.02		LSC 2190	6.14				
LSC 1100	4.03		LSC 2190	6.13				
LSC 1140	4.04	220	LSC 1610	4.29				
LSC 1170	4.05	230	LSC 1780	5.18	LSC 1840	5.23	LSC 1890	5.26
LSC 1370	4.15		LSC 1360	4.13				
LSC 1550	4.23	240						
LSC 1550	4.23		LSC 1550	4.24				
LSC 1600	4.28	260	LSC 1560	4.25				
LSC 1630	4.31	270						
LSC 1630	4.31		LSC 1630	4.33				
LSC 1630	4.33		LSC 1630	4.31				
LSC 1650	5.03		LSC 1640	5.01				
LSC 1660	5.05		LSC 1650	5.03				
LSC 1670	5.06		LSC 1680	5.08				
LSC 1680	5.07	280						
LSC 1730	5.14		LSC 1700	5.11				
LSC 1900	5.19	350	LSC 1740	5.15				
LSC 1790	5.21	300	LSC 1750	5.16				
LSC 1850	5.24	330	LSC 1760	5.17				
LSC 1950	6.01	370	LSC 1600	4.28	LSC 1930	5.20		
LSC 2060	6.06	380	LSC 1950	6.01				

05/18/71 TABLE OF CONTENTS AND REFERENCES AUTOFLOW CHART SET - PAGE 2

CARD ID	PAGE/BOX	NAME	REFERENCES (SOURCE SEQUENCE NO. AND PAGE/BOX)			
LSC 2190	6.13 390					
LSC 2190	6.13		LSC 2180	6.10		
LSC 2230	6.18		LSC 2950	7.19		
LSC 2240	6.19		LSC 2950	7.18		
LSC 2930	6.30		LSC 2950	7.17		
LSC 2830	7.11 440					
LSC 2830	7.11		LSC 2830	7.12		
LSC 2950	7.16 450					
LSC 3010	7.24		LSC 3130	8.06		
LSC 3030	7.26		LSC 3130	8.05		
LSC 3050	7.29		LSC 3040	7.27		
LSC 3100	7.33		LSC 3130	8.04		
LSC 3130	8.02 480					
LSC 3130	8.02		LSC 3120	7.34		
LSC 3180	8.08 500					
LSC 3260	8.16		LSC 3240	8.14		
LSC 4130	9.11 670		LSC 4200	3.18	LSC 4000	9.08

CHART TITLE - NON-PROCEDURAL STATEMENTS

CHART TITLE - SUBROUTINE ENGISP

ENGI 10	13.01 ENGISP		LSC 1220	4.07-X	LSC 2310	6.22-X

CHART TITLE - NON-PROCEDURAL STATEMENTS

CHART TITLE - SUBROUTINE ENGINE

ENGI 10	15.01 ENGINE		LSC 1290	4.10-X

CHART TITLE - NON-PROCEDURAL STATEMENTS

CHART TITLE - SUBROUTINE XLINE(XL)

XLIN 10	17.01 XLINE		LSC 1400	4.16-X
XLIN 250	17.04		XLIN 560	18.07
XLIN 280	17.06		XLIN 560	18.06
XLIN 390	17.13 100		XLIN 360	17.11
XLIN 410	17.16		XLIN 400	17.14
XLIN 420	17.18		XLIN 410	17.16
XLIN 430	17.20		XLIN 420	17.18
XLIN 440	17.22		XLIN 430	17.20
XLIN 450	17.24		XLIN 440	17.22
XLIN 480	17.27		XLIN 470	17.25
XLIN 490	17.29		XLIN 480	17.27
XLIN 500	17.31		XLIN 490	17.29
XLIN 510	18.01		XLIN 500	17.31
XLIN 520	18.03		XLIN 510	18.01
XLIN 560	18.05 110			

CHART TITLE - NON-PROCEDURAL STATEMENTS

CHART TITLE - SUBROUTINE VALVE

VALV 10	20.01 VALVE		LSC 1500	4.20-X
VALV 80	20.03		VALV 130	20.06

05/18/71 TABLE OF CONTENTS AND REFERENCES AUTOFLOW CHART SET - PAGE 3

CARD ID	PAGE/BOX	NAME	REFERENCES (SOURCE SEQUENCE NO. AND PAGE/BOX)			
VALV 130	20.05	100				

CHART TITLE - NON-PROCEDURAL STATEMENTS

CHART TITLE - SUBROUTINE INTERP(N,NO,N1,X,Y)

INTE 13	22.01	INTERP	LSC 1690	5.09-X		
INTE 60	22.03		INTE 90	22.08		
INTE 80	22.05		INTE 90	22.07		
INTE 90	22.06	100				
INTE 160	22.12		INTE 250	22.22		
INTE 190	22.14	110	INTE 160	22.12		
INTE 200	22.15		INTE 250	22.21		
INTE 230	22.18	120				
INTE 230	22.18		INTE 230	22.19		
INTE 240	22.20	130	INTE 200	22.15	INTE 210	22.16
INTE 250	22.21	140				
INTE 260	22.24		INTE 330	22.30		
INTE 300	22.26		INTE 330	22.29		
INTE 320	22.28	150	INTE 300	22.26		
INTE 330	22.29	160				
INTE 350	22.32		INTE 360	23.02		
INTE 360	22.33	170				
INTE 360	22.33		INTE 360	23.01		
INTE 390	23.04		INTE 410	23.08		
INTE 410	23.06	180				
INTE 410	23.06		INTE 410	23.07		
INTE 460	23.11	190	INTE 100	22.09		
INTE 470	23.12		INTE 490	23.16		
INTE 490	23.14	200				
INTE 490	23.14		INTE 490	23.15		
INTE 520	23.19		INTE 540	23.23		
INTE 540	23.21	210				
INTE 540	23.21		INTE 540	23.22		
INTE 570	23.25		INTE 630	24.04		
INTE 580	23.26		INTE 630	24.03		
INTE 590	23.27	220				
INTE 610	24.01	230	INTE 580	23.26		
INTE 620	24.02	240	INTE 600	23.27		
INTE 630	24.03	250				
INTE 650	24.06	260				
INTE 650	24.06		INTE 650	24.07		
INTE 680	24.09		INTE 880	24.28		
INTE 720	24.12		INTE 750	24.15		
INTE 740	24.14	270	INTE 720	24.12		
INTE 750	24.15	280				
INTE 800	24.19		INTE 820	24.21		
INTE 820	24.20	290				
INTE 840	24.22	300	INTE 770	24.14		
INTE 850	24.23		INTE 870	24.27		
INTE 870	24.25	310				
INTE 870	24.25		INTE 870	24.26		
INTE 880	24.26	320				
INTE 910	24.30		INTE1020	25.07		
INTE 960	25.01	330	INTE 920	24.31		
INTE 990	25.03	340				

05/18/71 TABLE OF CONTENTS AND REFERENCES AUTOFLOW CHART SET - PAGE 4

CARD ID	PAGE/BOX	NAME	REFERENCES (SOURCE SEQUENCE NO. AND PAGE/BOX)	
INTE 990	25.03		INTE 990	25.04
INTE1010	25.06	350	INTE 950	24.32
INTE1020	25.07	360		
INTE1040	25.08	370	INTE 420	23.09
INTE1080	25.12	380		
INTE1080	25.12		INTE1080	25.13
INTE1100	25.14	390	INTE1060	25.10
INTE1120	25.16	400		
INTE1120	25.16		INTE1120	25.17
INTE1130	25.18	410	INTE1100	25.14

CHART TITLE - NON-PROCEDURAL STATEMENTS

CHART TITLE - SUBROUTINE MIXER

MIXE 10	27.01	MIXER	LSC 2020	6.04-X

CHART TITLE - NON-PROCEDURAL STATEMENTS

CHART TITLE - SUBROUTINE PASHEX

PASH 10	29.01	PASHEX	LSC 2340	6.24-X
PASH 150	29.04		PASH 140	29.02
PASH 250	29.10		PASH 240	29.08
PASH 350	29.16		PASH 340	29.14
PASH 410	30.03		PASH 400	30.01
PASH 480	30.07		PASH 470	30.05
PASH 570	30.12	100	PASH 210	29.06
PASH 580	30.14		PASH 570	30.12
PASH 610	30.17		PASH 600	30.15
PASH 710	31.03		PASH 700	31.01
PASH 770	31.07		PASH 760	31.05
PASH 840	31.12		PASH 830	31.10

CHART TITLE - NON-PROCEDURAL STATEMENTS

CHART TITLE - SUBROUTINE PROPEL

PROP 10	33.01	PROPEL	LSC 2590	6.32-X

CHART TITLE - NON-PROCEDURAL STATEMENTS

CHART TITLE - SUBROUTINE TANK

TANK 10	35.01	TANK	LSC 2670	7.02-X
TANK 280	35.10		TANK 270	35.08
TANK 300	35.13		TANK 290	35.11

CHART TITLE - NON-PROCEDURAL STATEMENTS

CHART TITLE - SUBROUTINE PRESYS(PTO2,PTH2,TH2,TO2,WH2,WO2)

PRES 10	37.01	PRESYS	LSC 2780	7.08-X

CHART TITLE - NON-PROCEDURAL STATEMENTS

05/18/71 TABLE OF CONTENTS AND REFERENCES AUTOFLOW CHART SET - PAGE 5

CARD ID PAGE/BOX NAME REFERENCES (SOURCE SEQUENCE NO. AND PAGE/BOX)

CHART TITLE - SUBROUTINE PROFH2(T,P,RHO,H,S)

PROF 10	39.01	PROFH2											
PROF 280	39.02	PROPH2											
PROF 300	39.04	100	PROF 270	39.01									
PROF 670	40.01	170	PROF 620	40.05									
PROF 610	40.04	160	PROF 390	40.14									
PROF 330	40.09	110	PROF 300	39.04									
PROF 370	40.11	120											
PROF 370	40.11		PROF 370	40.12									
PROF 800	40.16	210	PROF 380	40.13									
PROF 450	41.01	140	PROF 410	40.15	PROF 430	40.19							
PROF 520	41.06		PROF 510	41.04									
PROF 540	41.08	150	PROF 500	41.03	PROF 590	41.12							
PROF 540	41.08		PROF 520	41.06									
PROF1300	41.13	250	PROF 570	41.11	PROF 760	41.19	PROF 850	42.03	PROF1480	43.05	PROF1590	43.19	
PROF 710	41.15	180	PROF 670	40.01	PROF 690	40.03							
PROF 730	41.16	190	PROF 780	41.20									
PROF 830	42.01	220	PROF 800	40.16	PROF 810	40.17							
PROF 840	42.02	230	PROF 550	41.09	PROF 740	41.17							
PROF1080	42.14	240	PROF 900	42.05									
PROF1450	43.02	290	PROF1500	43.06									
PROF1330	43.07	PROSH2											
PROF1380	43.09	270	PROF 700	40.03	PROF 820	40.17	PROF 440	40.19					
PROF1390	43.10	280											
PROF1390	43.10		PROF1390	43.11									
PROF1520	43.14	300	PROF1410	43.13									
PROF1560	43.16	310	PROF1610	43.20									
PROF1630	43.21	330	PROF1400	43.12									
PROF1640	43.22	340	PROF1460	43.03	PROF1570	43.17							
PROF1810	44.02	350	PROF1320	41.14	PROF1070	42.13	PROF1290	42.22					
PROF1900	44.06	360	PROF1810	44.02									
PROF1970	44.09	PROLH2											
PROF2060	44.14	370	PROF2020	44.11									
PROF2100	44.15	380	PROF2030	44.12									
PROF2110	44.16	390	PROF2050	44.13	PROF2090	44.14							

CHART TITLE - NON-PROCEDURAL STATEMENTS

CHART TITLE - FUNCTION HINT(RHO,T)

CHART TITLE - NON-PROCEDURAL STATEMENTS

CHART TITLE - FUNCTION SINT(RHO,T)

CHART TITLE - NON-PROCEDURAL STATEMENTS

CHART TITLE - FUNCTION FUNCT(P,T,RHO)

CHART TITLE - NON-PROCEDURAL STATEMENTS

CHART TITLE - FUNCTION DFDR(P,T,RHO)

05/18/71 TABLE OF CONTENTS AND REFERENCES AUTOFLOW CHART SET - PAGE 6

CARD ID PAGE/BOX NAME REFERENCES (SOURCE SEQUENCE NO. AND PAGE/BOX)

CHART TITLE - NON-PROCEDURAL STATEMENTS

CHART TITLE - FUNCTION DFDT(P,T,RHO)

CHART TITLE - NON-PROCEDURAL STATEMENTS

CHART TITLE - SUBROUTINE PROFO2(T,P,RHO,H,S)

PROF 10	56.01	PROFO2																	
PROF 250	56.02	PROPO2																	
PROF 270	56.04	100	PROF 240	56.01															
PROF1170	57.01	200	PROF 360	57.11															
PROF 300	57.06	110	PROF 270	56.04															
PROF 340	57.08	120																	
PROF 340	57.08		PROF 340	57.09															
PROF 730	57.13	190	PROF 350	57.10															
PROF 790	57.18	200	PROF 740	57.14															
PROF 430	58.01	140	PROF 400	57.04	PROF 380	57.12													
PROF 480	58.05		PROF 470	58.03															
PROF 490	58.06	150	PROF 540	58.10															
PROF1660	58.11	350	PROF 520 PROF1510	58.09 61.13	PROF 640	59.05	PROF 940	59.17	PROF1070	60.05	PROF1260	61.06							
PROF 350	59.01	160	PROF 410	57.05															
PROF 600	59.02	170	PROF 680	59.07	PROF 710	59.08													
PROF 690	59.08	180	PROF 650	59.06															
PROF 830	59.09	210	PROF 790	57.18															
PROF 890	59.13	220	PROF 820	57.20	PROF 840	59.10	PROF1150	60.09											
PROF 910	59.14	230	PROF 960	59.18															
PROF 980	60.01	240	PROF 880	59.12															
PROF1030	60.02	250	PROF1110	60.07	PROF1140	60.08													
PROF1120	60.08	260	PROF1080	60.06															
PROF1150	60.09	270	PROF 810	57.20															
PROF1200	61.01	290	PROF1170	57.01	PROF1180	57.02													
PROF1220	61.02	300	PROF 500	58.07	PROF 620	59.03	PROF 920	59.15	PROF1050	60.03									
PROF1250	61.05	310	PROF1230	61.03															
PROF1450	61.08	320	PROF1240	61.04															
PROF1480	61.10	330	PROF1530	61.14															
PROF1540	61.15	340	PROF1490	61.11															
PROF1690	62.08	PROLO2	PRES 280	37.12-X															
PROF1770	62.13	370	PROF1730	62.10															
PROF1810	62.14	380	PROF1740	62.11															
PROF1820	62.15	390	PROF1760	62.12	PROF1800	62.13													
PROF1850	63.01	PROSO2																	
PROF1890	63.03	400	PROF1190	57.02	PROF 420	57.05	PROF 870	59.12											
PROF1940	63.07	410	PROF1900	63.04															
PROF1980	63.08	420	PROF1910	63.05															
PROF1990	63.09	430	PROF1930	63.06	PROF1970	63.07													
PROF2120	63.16	440	PROF1680	58.12	PROF1650	61.19	PROF1440	62.07	PROF1840	62.15									
PROF2220	63.20	450	PROF2120	63.16															

CHART TITLE - NON-PROCEDURAL STATEMENTS

CHART TITLE - SUBROUTINE PRPHOH(TEMP,PRESS,RHO,H,S,U)

PRPH 10	65.01	PRPHOH				
PRPH 160	65.02	PRPH2	PROF 310	39.05-X	PROF 650	40.07-X

05/18/71 TABLE OF CONTENTS AND REFERENCES AUTOFLOW CHART SET - PAGE 7

CARD ID	PAGE/BOX	NAME	REFERENCES (SOURCE SEQUENCE NO. AND PAGE/BOX)							
PRPH 260	65.04	PRPD2	PROF 280	56.05-X	PROF 770	57.16-X				
PRPH 360	65.06	TRDPHE	PRES 90	37.02-X	PRES 140	37.05-X	PRES 180	37.07-X	PRES 230	37.09-X
PRPH 480	66.05	100	PRPH 150	65.01	PRPH 250	65.03	PRPH 350	65.05	PRPH 440	65.07
PRPH1010	66.12	140	PRPH 700	66.11						
PRPH1050	66.16	150	PRPH1020	66.13						
PRPH1120	66.19	170	PRPH1010	66.12	PRPH1040	66.15				
PRPH1200	66.23	180	PRPH1290	67.13	PRPH1370	67.17				
PRPH 820	67.01	110	PRPH 720	66.02						
PRPH 880	67.03	120	PRPH 930	67.07						
PRPH 940	67.08	130	PRPH 890	67.04						
PRPH1800	67.09	220	PRPH 910	67.06	PRPH1360	67.16				
PRPH1250	67.12	190	PRPH1240	66.25						
PRPH1300	67.14	200	PRPH1240	66.25						
PRPH1380	67.18	210	PRPH 800	66.04	PRPH 970	67.08				

CHART TITLE - NON-PROCEDURAL STATEMENTS

CHART TITLE - FUNCTION CVINT(P,T,RHO)

CHART TITLE - NON-PROCEDURAL STATEMENTS

CHART TITLE - SUBROUTINE HSAT(P,T)

HSAT 10 72.01 HSAT LSC 2740 7.05-X

CHART TITLE - SUBROUTINE OSAT(P,T)

OSAT 10 73.02 OSAT LSC 2750 7.06-X

05/16/71 AUTOFLOW CHART SET - PAGE 01

CHART TITLE - INTRODUCTORY COMMENTS

```
LOW CHAMBER PRESSURE SYSTEM SYNTHESIS PROGRAM
INPUT VARIABLES IN FPS UNITS,TEMP IN RANKINE,PRESS IN PSIA
```

05/18/71 AUTOFLOW CHART SET - PAGE 02

CHART TITLE - PROCEDURES

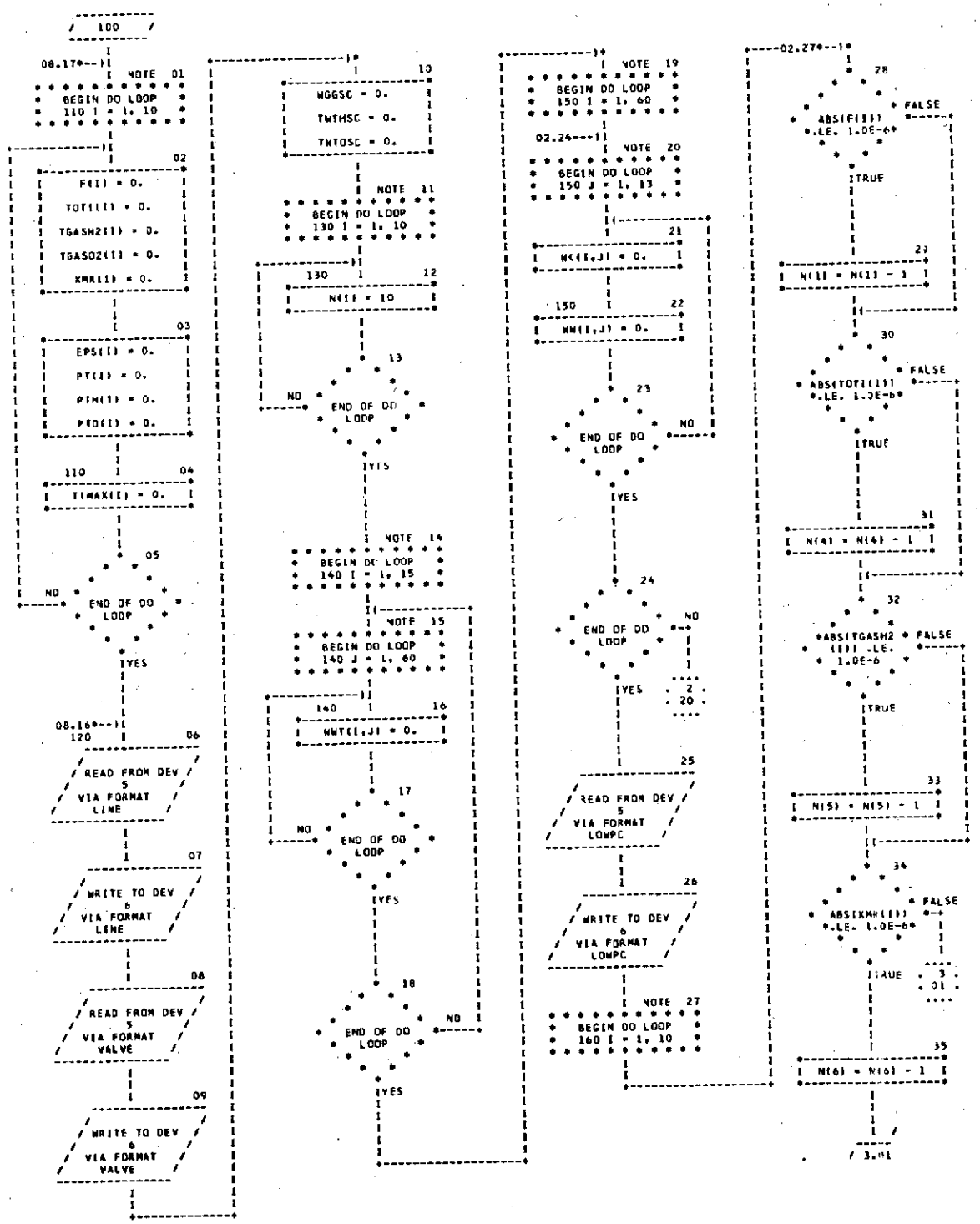

05/18/71 AUTOFLOW CHART SET - PAGE 03

CHART TITLE - PROCEDURES

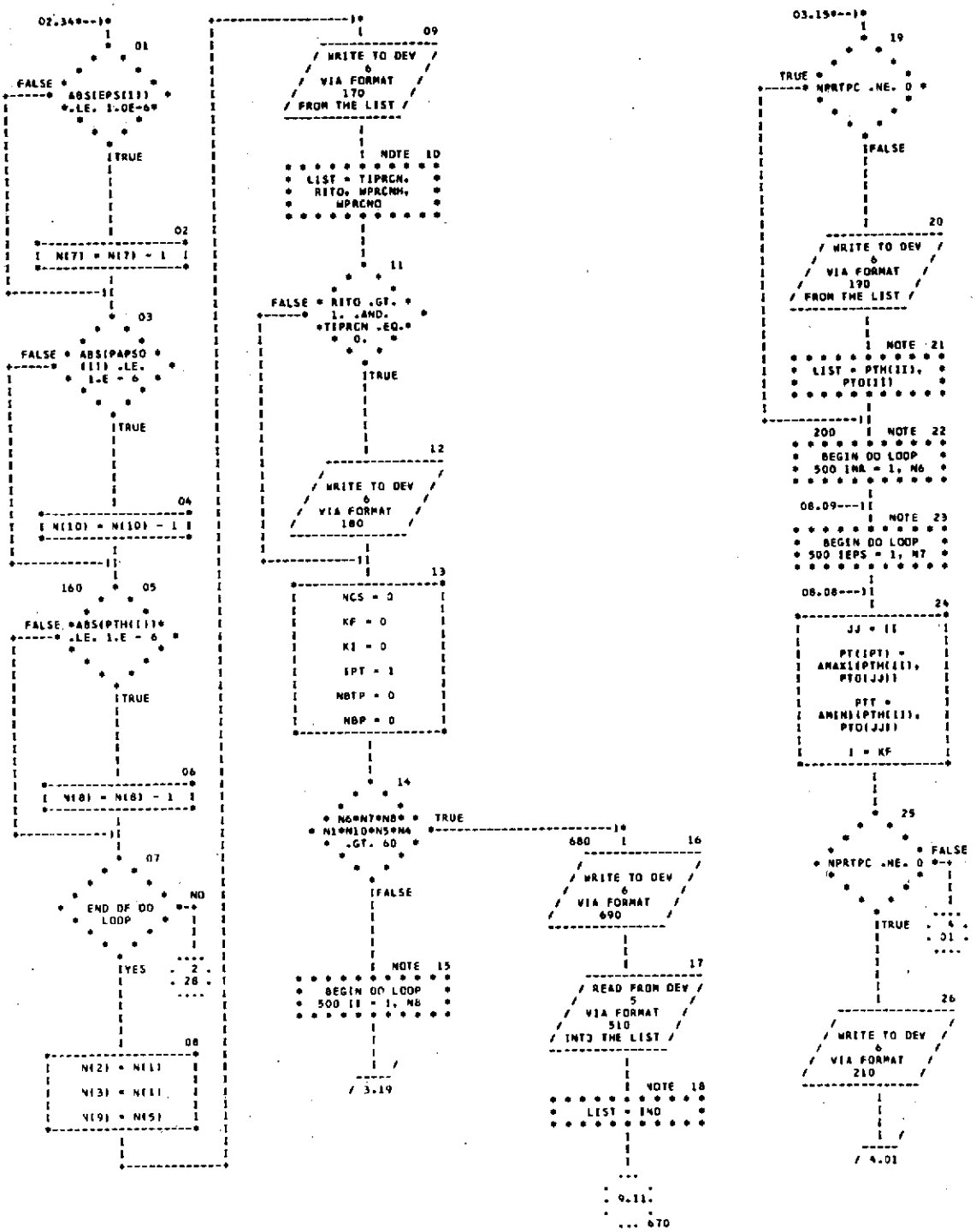

05/18/71 AUTOFLOW CHART SET - PAGE 04

CHART TITLE - PROCEDURES

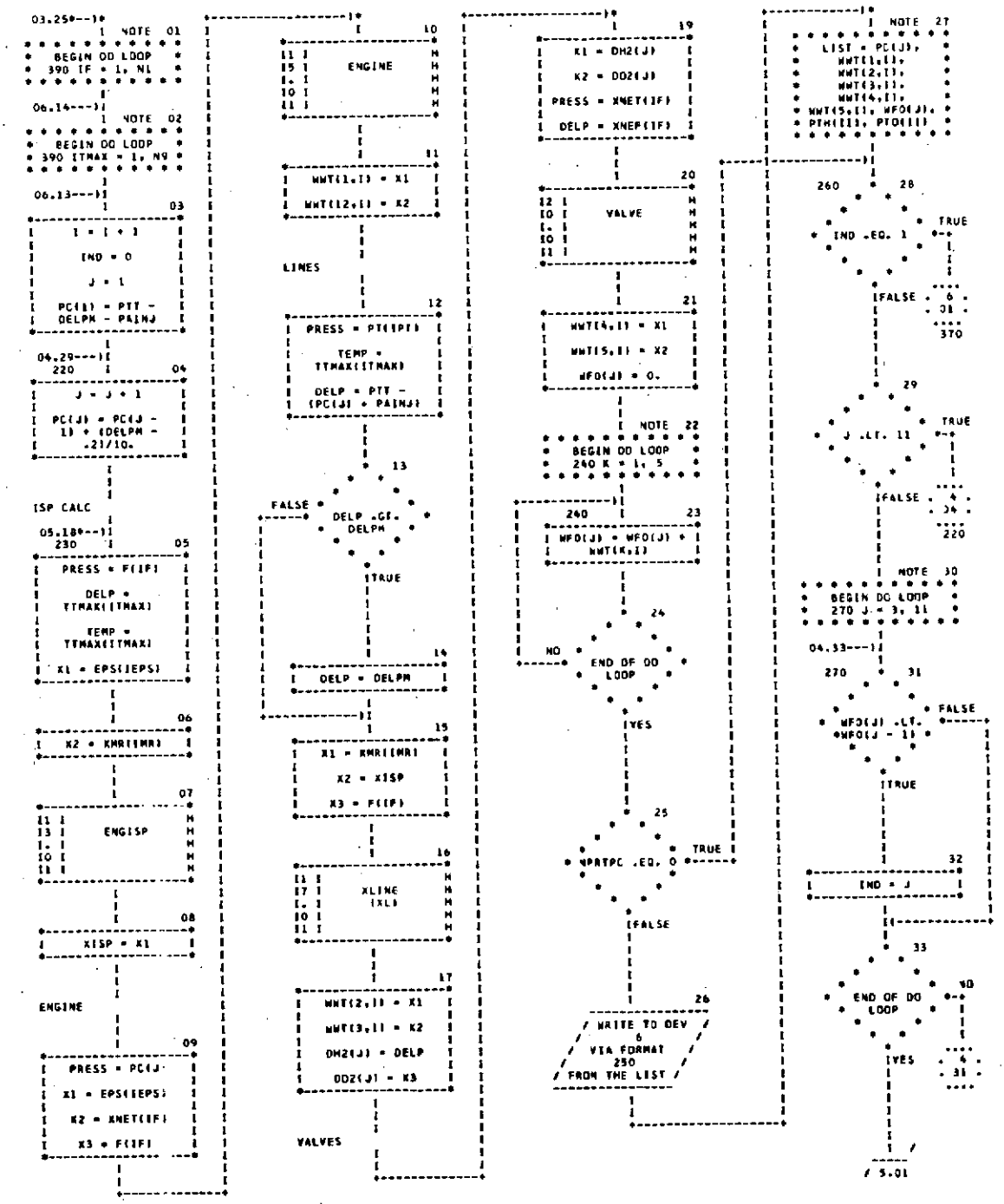

05/18/71 AUTOFLOW CHART SET - PAGE 05

CHART TITLE - PROCEDURES

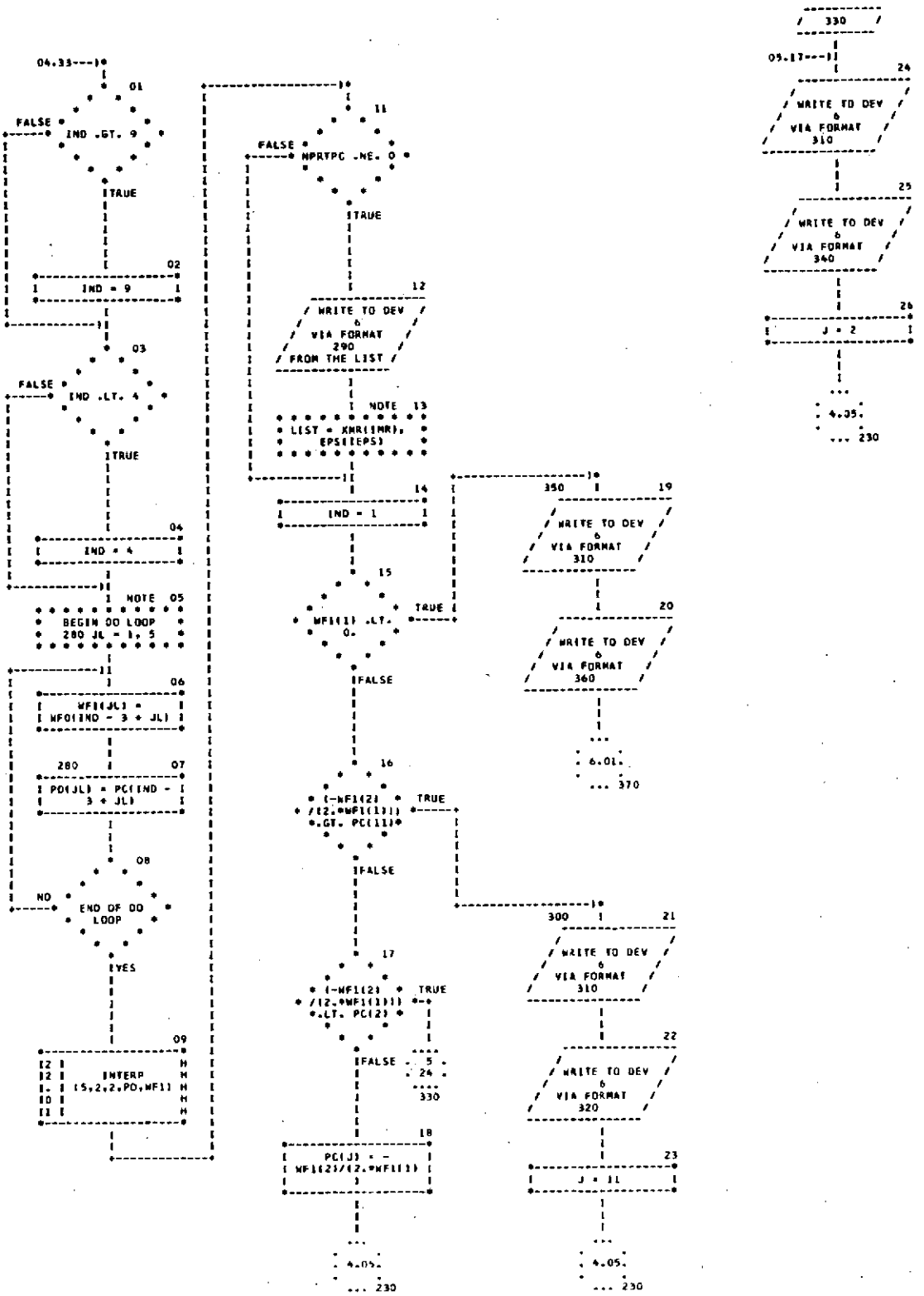

05/18/71 AUTOFLOW CHART SET - PAGE 06

CHART TITLE - PROCEDURES

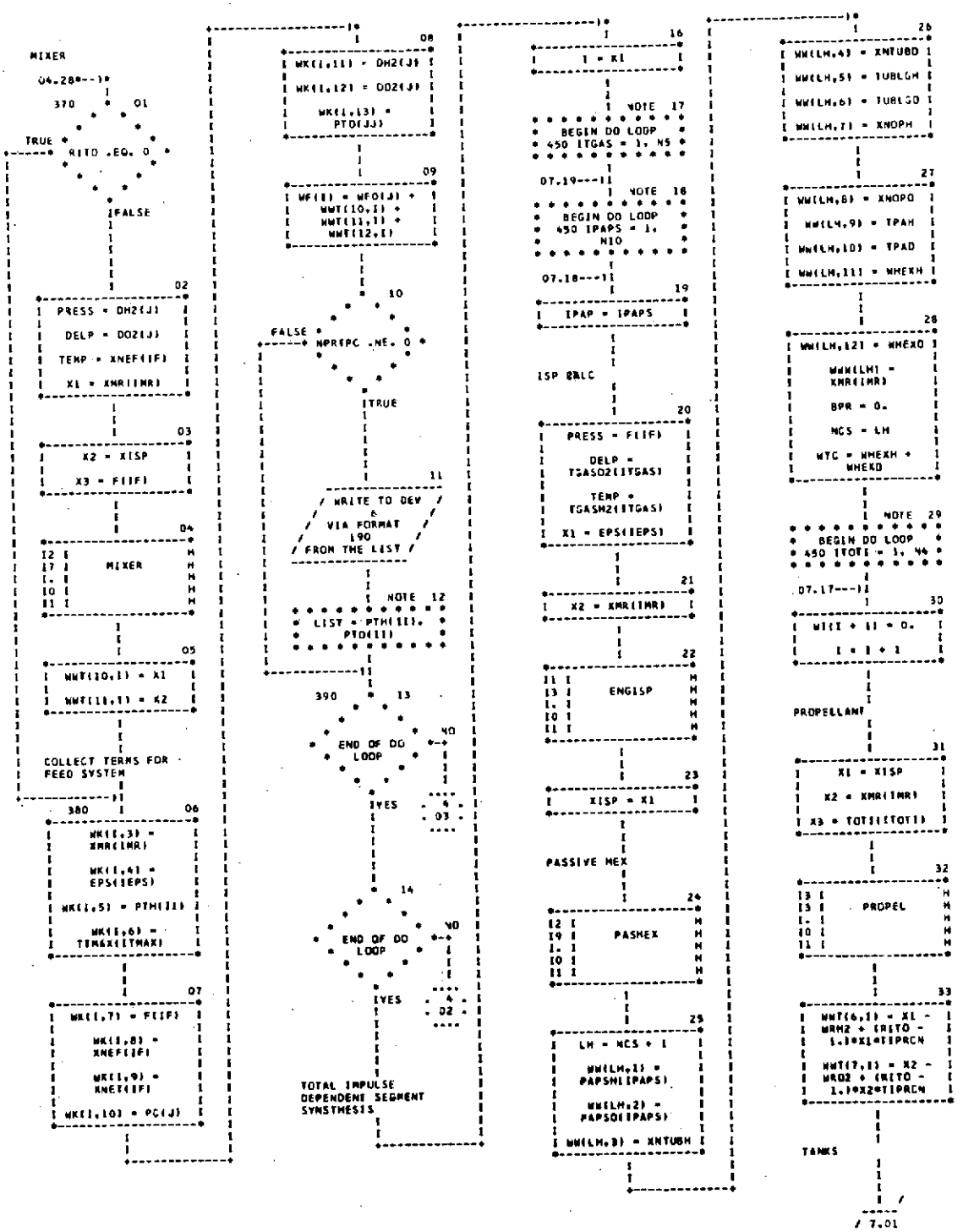

05/18/71 AUTOFLOW CHART SET - PAGE 07

CHART TITLE - PROCEDURES

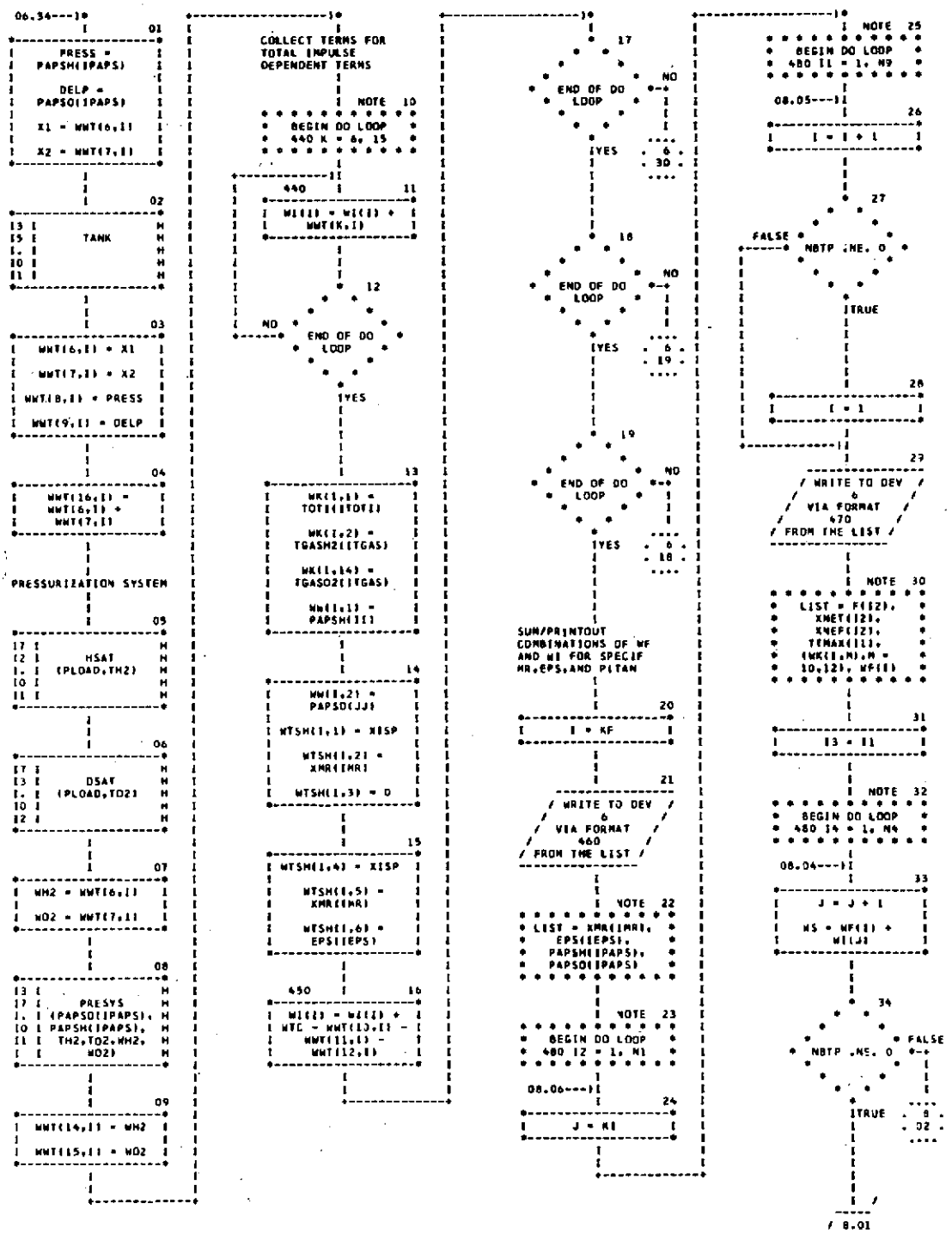

05/18/71 AUTOFLOW CHART SET - PAGE 08

CHART TITLE - PROCEDURES

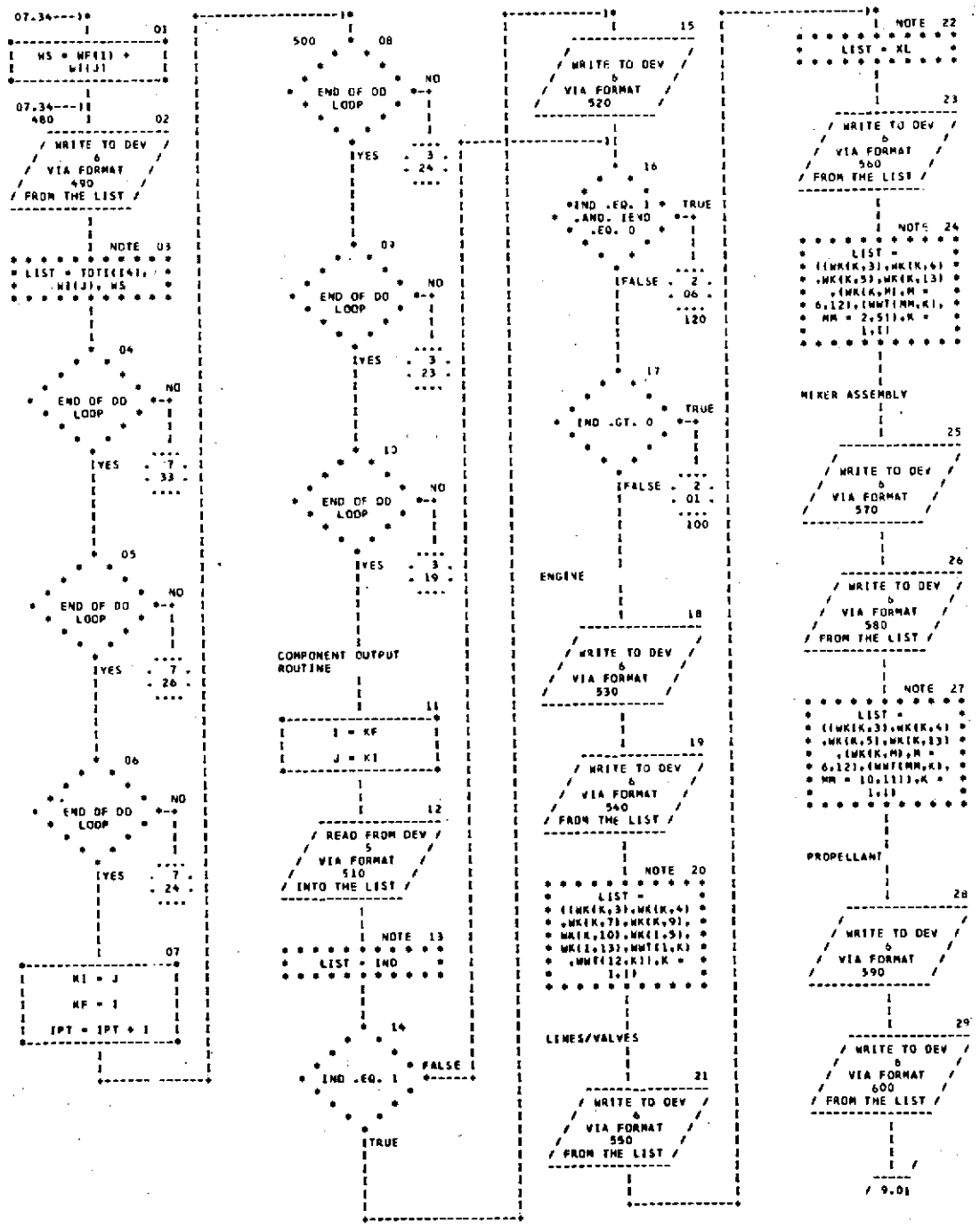

05/18/71 AUTOFLOW CHART SET - PAGE 09

CHART TITLE - PROCEDURES

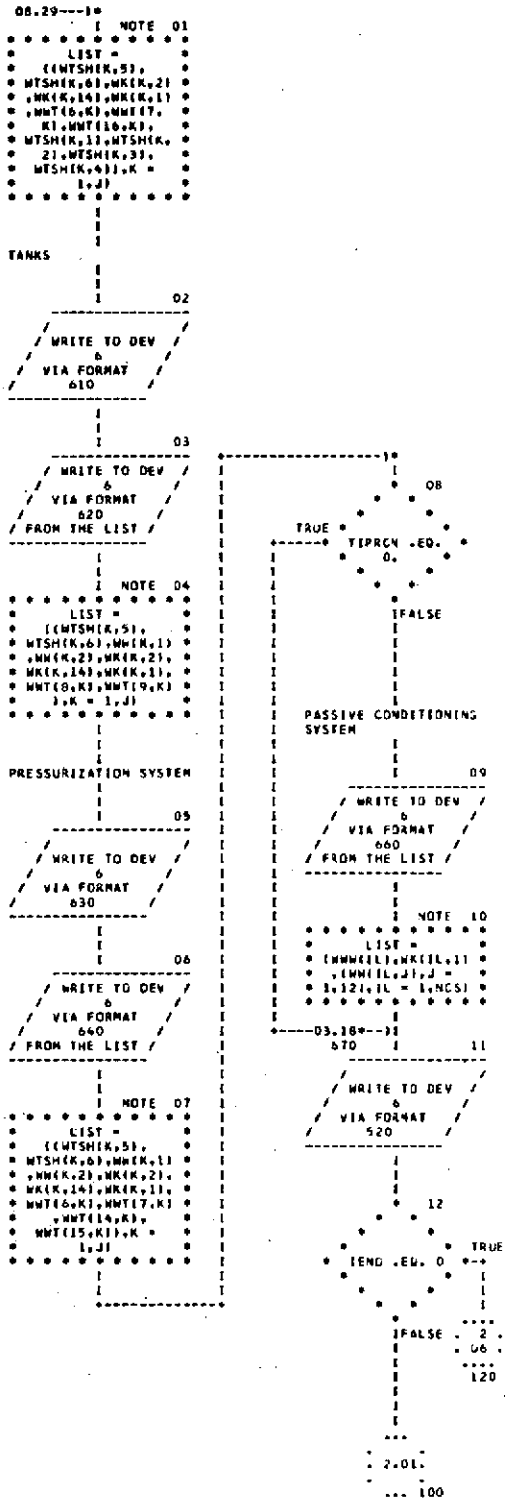

CHART TITLE - NON-PROCEDURAL STATEMENTS

```
      PROGRAM LSC(INPUT,OUTPUT,TAPE5=INPUT,TAPE6=OUTPUT)
      DIMENSION TGT(10),TGASH2(10),TGASO2(10),XMR(10),EPS(10), F(10),XN
      EF(10),XNEF(10),N(10),PC(11),WWT(16,60),WK(60,14), WF(60),WI(60),O
      H2(11),DO2(11),WFO(11),PD(5),WFI(51,WTSH(60,6), PTO(10),PTH(10),PT
      (60),TTMAX(10)
      DIMENSION WSC(60,8),WW(60,13)
      DIMENSION PAPSO(10),PAPSH(10)
      DIMENSION WWW(60)
      REAL LMAX, LFN
      EQUIVALENCE (N4,N(41),(N5,N(51),(N6,N(61),(N7,N(71),(N8,N(81),(N9,
      N(91),(N1,N(1)),(N10,N(101),(N(2),N2)
      COMMON PRESS,DELP,TEMP,X1,X2,X3
      COMMON/HEX/TUBDH,TUBDO,TUBSPH,TUBSPO,TUBLGH,TUBLGO,XNTUBH,XNTUBO ,
      XNOPH,XNOPO,PAPSH,PAPSO,IPAPS,IPAP,F,IF,XMR,IMR,XISP ,XNEF,TPAH,TP
      AO,WHEXH,WHEXO,WPRCNO,WPRCNH,TIPRCN,RITO
      NAMELIST/LOWPC/F,XNET,XNEF,TOTI,TGASH2,TGASO2,XMR,EPS,PTO,PAPSO, P
      TH,PAPSH,WRH2,WRO2,DELPR,PAINJ,NPRTPC,PLOAD ,TTMAX,WPRCNO,WPRCNH,T
      IPRCN ,TUBDH,TUBDO,TUBSPH,TUBSPO,TUBLGH,TUBLGO,XNTUBH,XNTUBO,XNOPH
       ,XNOPO,RITO,IEND
      COMMON/LINE/LMAX(2),LFN(10,3)
      NAMELIST/LINE/LMAX,LFN
      COMMON/VALVE/FN(10,2)
      NAMELIST/VALVE/FN
170   FORMAT(1H1,///////
      50X,34HLOW PRESSURE APS SYNTHESIS PROGRAM///////
      10X,31HPERCENT OF FLOW CONDITIONED IS F7.4/
      10X,34HRATIO OF INFLOW TO ENGINE FLOW IS F6.3///
      10X,40HPERCENT OF HYDROGEN FLOW CONDITIONED IS F6.3/
      10X,38HPERCENT OF OXYGEN FLOW CONDITIONED IS F6.3//)
180   FORMAT(///20X,78HPERCENT OF CONDITIONED FLOW IS ZERO,RATIO OF INPU
      T TO OUTPUT FLOW IS SET TO 1. )
190   FORMAT(1H1,/,1X,
            59HTOTAL LOW PRESSURE SYSYEM WEIGHTS, H2 BOOST TANK PRESSUR
      E = ,F7.2,5X,23HO2 BOOST TANK PRESSURE= ,F7.2//,1X,2HMR ,3X,4HAREA
       ,3X, 9H PRESSURE,3X,6HTHRUST,3X,7HNO. ENG,3X,7HITITANK,3X,7HCHAMB
      ER,4X,14HLINE DIAMETERS,7X,4HFEED,4X,5HTOTAL,4X,7HIMP DEP,
            4X,5HTOTAL /,6X,5HRATIO ,3X,8HAPS TANK ,14X,8HTOT FIRE ,3X,6
      HDESIGN ,  3X,
                 8HPRESSURE,4X,2HH2,8X,2HO2,7X,6HWEIGHT,4X,7HIMPULSE,4X,
                 6HWEIGHT ,4X,6HWEIGHT /,15X,6HH2  O2 /,13X,10HPSIA  PSI
      A ,3X,3HLBF ,16X,5HDEG R ,5X,4HPSIA ,
                        6X,6HINCHES,4X,6HINCHES,5X,3HLBM,5X,6HLB-SEC,6X
      ,3HLBM,           6X,3HLBM//)
210   FORMAT(1H1,1X,16HCHAMBER PRESSURE ,2X,13HENGINE WEIGHT ,6X,12HLINE
       WEIGHTS ,13X,13HVALVE WEIGHTS ,6X12HTOTAL WEIGHT ,3X,20HBOOST TAN
      K PRESSURES /6X,4HPSIA ,13X,3HLBM ,10X,3HLBM ,9X,3HLBM ,9X,3HLBM ,
      8X,3HLBM ,        9X,3HLBM ,10X,4HPSIA ,8X,4HPSIA //)
```

CHART TITLE - NON-PROCEDURAL STATEMENTS

```
250     FORMAT(1X,F10.2,6X,6F12.2)
290     FORMAT(1X,39HOPTIMUM CHAMBER PRESSURE VALUES FOR MR= ,F5.2,10H  AN
        D EPS= ,F5.2)
310     FORMAT(51HO NO ABSOLUTE MINIMUM FOUND FOR CHAMBER PRESS VS WT)
320     FORMAT(1H+,53X,20H(IDEAL PC ABOVE RANGE)
340     FORMAT(1H+,53X,20H(IDEAL PC BELOW RANGE)
360     FORMAT(1H+,53X,47HNO MINIMUM FOR PC   LAST VALUES WILL BE PRINTED)
460     FORMAT(2F4.1,2F6.1)
470     FORMAT(1H+,21X,F10.2,2F5.0,5F10.2)
490     FORMAT(1H+,90X,E12.2,2F10.2/)
510     FORMAT(I3)
520     FORMAT(1H1)
530     FORMAT(1H1,3X,14HENGINE WEIGHTS//
        ,4X,2HMR ,9X,4HAREA ,8X,6HTHRUST ,6X,6HNUMBER ,6X,7HCHAMBER ,6X
             ,19HBOOST TANK PRESSURE ,6X,6HENGINE ,6X,9HPNEUMATIC /
                 ,14X,5HRATIO ,19X,7HENGINES ,5X,8HPRESSURE ,8X2HH2 ,11X,2
        HO2 ,8X        ,6HWEIGHT ,7X,6HWEIGHT //
                        ,28X,3HLBS ,21X,4HPSIA ,9X,4HPSIA ,9X,4HPSIA ,8X,3
        HLBS ,10X,3HLBS //)
540     FORMAT(3X,F5.2,4X,F5.0,7X,F10.2,4X,F5.0,3X,F10.2,3X,F10.1,3X ,F10.
        1,3X,F10.2,3X,F10.2)
550     FORMAT(1H1,11HLINE VALVES //,11HLINE LENGTH ,F8.2//,1X,2HMR ,3X,4H
        AREA ,9X,8HPRESSURE ,6X,8H(T) TANK ,5X,6HTHRUST ,4X,7HNO. ENG ,3X,
                 7HCHAMBER,4X,14HLINE DIAMETERS,5X,13HLINE  WEIGHTS,
                 4X,13HVALVE WEIGHTS /,6X,5HRATIO ,7X,10HBOOST TANK ,6X,
                      6HDESIGN,13X,9HFIRE  TOT,3X,8HPRESSURE,4X,2HH2,7X,2
        HO2,             7X,2HH2,5X,2HO2,10X,2HH2,6X,2HO2/,
                         19X,2HH2 ,4X,2HO2 /,
                           18X,4HPSIA ,2X,4HPSIA ,5X,5HDEG R ,6X,3HLBF ,18X,
        4HPSIA ,9X,6HINCHES ,14X,3HLBM ,14X,3HLBM //)
560     FORMAT(F5.2,2X,F5.2,1X,2F9.2,F10.2,F11.2,2F5.0,F10.2,2F9.3,4F10.2)
570     FORMAT(1H1,10HMIXER ASSY //,1X,2HMR ,4X,4HAREA ,8X,8HPRESSURE ,7X,
        8H(T) TANK ,4X,6HTHRUST ,4X,7HNO. ENG ,3X,7HCHAMBER ,4X,13HLINE DI
        AMETER ,6X,18HMIXER ASSY WEIGHTS /,7X,5HRATIO ,6X,10HBOOST TANK ,7
        X,6HDESIGN ,14X, 8HFIRE TOT ,3X,8HPRESSURE ,4X,2HH2 ,7X,2HO2 ,9X,2
        HH2 ,9X,2HO2 /,19X,2HH2 ,4X,2HO2 /,18X,4HPSIA ,2X,4HPSIA ,8X,5HDEG
         R ,6X,3HLBF ,18X,4HPSIA ,8X, 6HINCHES ,14X,3HLBM /)
580     FORMAT(F5.2,2X,F5.2,1X,2F9.2,F10.2,F11.2,2F5.0,F10.2,2F9.3,2F10.2)
590     FORMAT(1H1,18HPROPELLANT WEIGHTS //,
          4X,2HMR ,6X,4HAREA ,12X 7HITITANK ,
             9X,5HTOTAL ,12X,18HPROPELLANT WEIGHTS ,11X,6HENGISP ,6X,5HSYS
        MR ,6X, 3HBPR,6X,4HSISP /,27X,9HH2      O2 ,7X,7HIMPULSE ,8X,2HH2 ,
        7X,2HO2 ,7X,   5HTOTAL /25X,12HDEG R  DEG R ,6X,6HLB-SEC ,18X,3HLB
        M //)
600     FORMAT(3X,F5.2,F8.2,2F12.2,E11.2,5F11.2,F11.5,F11.2)
610     FORMAT(1H1,27HAPS PROPELLANT TANK WEIGHTS //
          ,2X,2HMR ,4X,4HAREA ,7X,8HPRESSURE ,11X,8H(T) TANK ,11X,5HTOTAL
```

CHART TITLE - NON-PROCEDURAL STATEMENTS

```
                ,8X,12HTANK WEIGHTS /,8X,5HRATIO ,5X,10HAPS  TANKS ,9X,2HH2
 ,6X,2HO2      ,9X,7HIMPULSE ,7X,2HH2 ,8X,2HO2 /,17X,4HPSIA ,4X,4HP
SIA ,7X,5HDEG R      ,2X,5HDEG R ,8X,7HLBS-SEC ,6X,3HLBS ,8X,3HLPS
//1
620     FORMAT(F5.2,F7.1,2F9.2,F11.2,F8.2,E14.2,F10.2,F12.2)
630     FORMAT(1H1,28HPRESSURIZATION SYSTEM WEIGHT //,1X,2HNR ,3X,4HAREA ,
9X, 8HPRESSURE ,11X,8HITI TANK ,11X,5HTOTAL ,6X,18HPROPELLANT WEIG
HTS ,4X, 21HPRESSURIZATION WEIGHT ,
                /,6X,5HRATIO ,8X,9HAPS TANKS ,11X,11HH2        O2 ,7X,7H
IMPULSE ,8X,    2HH2 ,8X,2HO2 ,10X,2HH2 ,6X,2HO2 ,//21X,4HPSIA ,2X
,4HPSIA ,7X,12HDEG R  DEG R ,6X,6HLB-SEC ,12X,3HLBM ,17X,3HLBM //)
640     FORMAT(F5.2,F7.2,F9.2,3F11.2,E11.2,4F11.2)
660     FORMAT(1H1,/52X,27HPASSIVE CONDITIONING SYSTEM//
43X,44HSURFACE HEAT EXCHANGERS ON MAIN ENGINE TANKS //
  4X,2HNR ,5X,7HIMPULSE ,4X,10HTANK  PRES ,5X,10HHEX  TUBES ,5X
        ,10HHEX LENGTH ,5X,10HHEX PANELS ,5X,10HPANEL AREA ,5X,10H
HEX WEIGHT /    ,11X,6HTOTAL  ,5X,2HH2 ,6X,2HO2 ,5X,2HH2 ,6X,2HO2
,5X,2HH2 ,6X,2HO2      ,5X,2HH2 ,6X,2HO2 ,5X,2HH2 ,6X,2HO2 ,5X,2HH
2 ,6X,2HO2 //                ,11X,6HLB-SEC ,8X,4HPSIA ,10X,6HNUMBE
R ,10X,4HFEET ,10X,6HNUMBER       ,9X,5HSQ FT ,11X,3HLBS //
                                        ,(F6.1,E12.2,F8.1,F6.1,F8.0,F7
.0,2F8.1,F5.0,F9.0,2F8.0,2F7.0))
690     FORMAT(///40X,49HTOTAL NUMBER OF CASES GT 60,NEXT SET OF CASES RUN
)
```

05/18/71 AUTOFLOW CHART SET - PAGE 13

CHART TITLE - SUBROUTINE ENGISP

```
          ----------
         / ENGISP  /
          ----------

 04.07*--1*

.........VERSION 28
AUG 1970 ............

          *
          I          01
*-------------------*
I    CMR = A0 +     I
I     XMR*(A1 +     I
I     XMR*(A2 +     I
I     XMR*(A3 +     I
I     XMR*A4)))     I
I                   I
I CF = B0 + F*(B1 + I
I  F*(B2 + F*(B3 +  I
I F*(B4 + F*B5))))  I
*-------------------*
          I
          I
          I          02
*-------------------*
I    CEPS = C0 +    I
I     EPS*(C1 +     I
I     EPS*(C2 +     I
I     EPS*(C3 +     I
I     EPS*(C4 +     I
I    EPS*C5))))     I
I                   I
I    CTH = D0 +     I
I  TH*(D1 + TH*D2)  I
*-------------------*
          I
          I
          I          03
*-------------------*
I    CTO = E0 +     I
I  TO*(E1 + TO*E2)  I
I                   I
I G = H0 + H1*XMR + I
I    H2*XMR**2.     I
I                   I
I CSTAR = 1. + (G - I
I     1.)*(F -      I
I   1500.)/3500.    I
*-------------------*
          I
          I
          I          04
*-------------------*
I      XISP =       I
I   (CMR*CF*CEPS*   I
I  CSTAR) + CTH +   I
I        CTO        I
I                   I
I    EPS = XISP     I
*-------------------*
          I
          I
          I 05
         ---------
        * EXIT    *
         ---------
```

CHART TITLE - NON-PROCEDURAL STATEMENTS

```
COMMON F,TO,TH,EPS,XMR,AA
DATA A0,A1,A2,A3,A4/3.0615486E2,8.236289E1,-2.5341553E1,2.0052997,
0./
DATA B0,B1,B2,B3,B4,B5/9.5669612E-1,5.6185918E-5,-2.4131457E-8 ,4.
8906032E-12,-4.5638046E-16,1.5831677E-20/
DATA C0,C1,C2,C3,C4,C5/7.2869684E-1,1.2401970E-1,-2.1580381E-2 ,1.
9211745E-3,-8.3143012E-5,1.3822115E-6/
DATA D0,D1,D2/-1.888383E1,4.4876594E-2,-1.8175606E-5/
DATA E0,E1,E2/-2.8246153,5.6461536E-3,-7.6923060E-7/
DATA H0,H1,H2/1.02231,-1.8563732E-2,4.2676188E-3/
```

05/18/71 AUTOFLOW CHART SET - PAGE 15

CHART TITLE - SUBROUTINE ENGINE

```
      ----------
     / ENGINE  /
     ----------

 04.10---1*

SUBROUTINE FOR LOW
CHAMBER PRESSURE
ENGINES
-------VERSION 21 DEC
1970-------
ENGINE WEIGHTS

          *
          I          01
*--------------------*
I    RFTP = F/PC     I
I                    I
I    WTA = A0 +      I
I    RFTP*(A1 +      I
I    RFTP*(A2 +      I
I    RFTP*(A3 +      I
I    RFTP*A4)))      I
I                    I
I    WTB = B0 +      I
I     EPS*(B1 +      I
I     EPS*(B2 +      I
I     EPS*B3)))      I
*--------------------*
          I
          I
          I          02
*--------------------*
I   WT = WTA+WTB     I
I                    I
I   EPS = WT*XNET    I
*--------------------*
          I
          I
          I
PNEUMATIC SUBASSY
WEIGHTS
          I
          I
          I          03
*--------------------*
I WTPSA = 5.5*XNET   I
I                    I
I   XNET = WTPSA     I
*--------------------*
          I
          I
          I 04
       ---------
      * EXIT   *
       ---------
```

05/18/71 AUTOFLOW CHART SET - PAGE 16

CHART TITLE - NON-PROCEDURAL STATEMENTS

```
COMMON PC,AA,AB,EPS,XNET,F
DATA A0,A1,A2,A3,A4/26.698,0.90973,-1.7485E-3,4.5798E-6, -2.49955E
-9/
DATA B0,B1,B2,B3/.703277,1.82569E-2,7.274E-5,3.03479E-6/
```

05/18/71 AUTOFLOW CHART SET - PAGE 17

CHART TITLE - SUBROUTINE XLENE(XL)

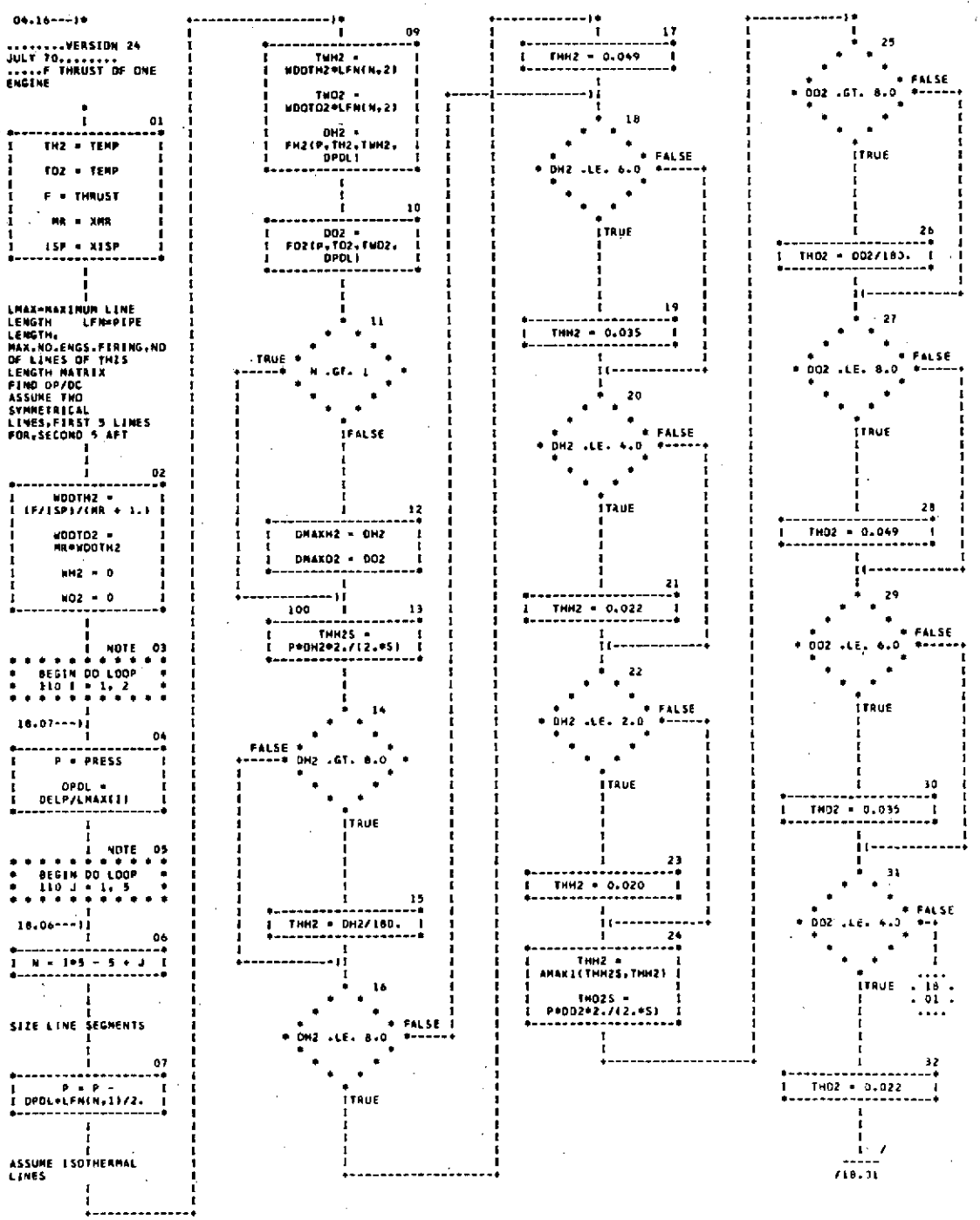

05/18/71 AUTOFLOW CHART SET - PAGE 18

CHART TITLE - SUBROUTINE XLINE(XL)

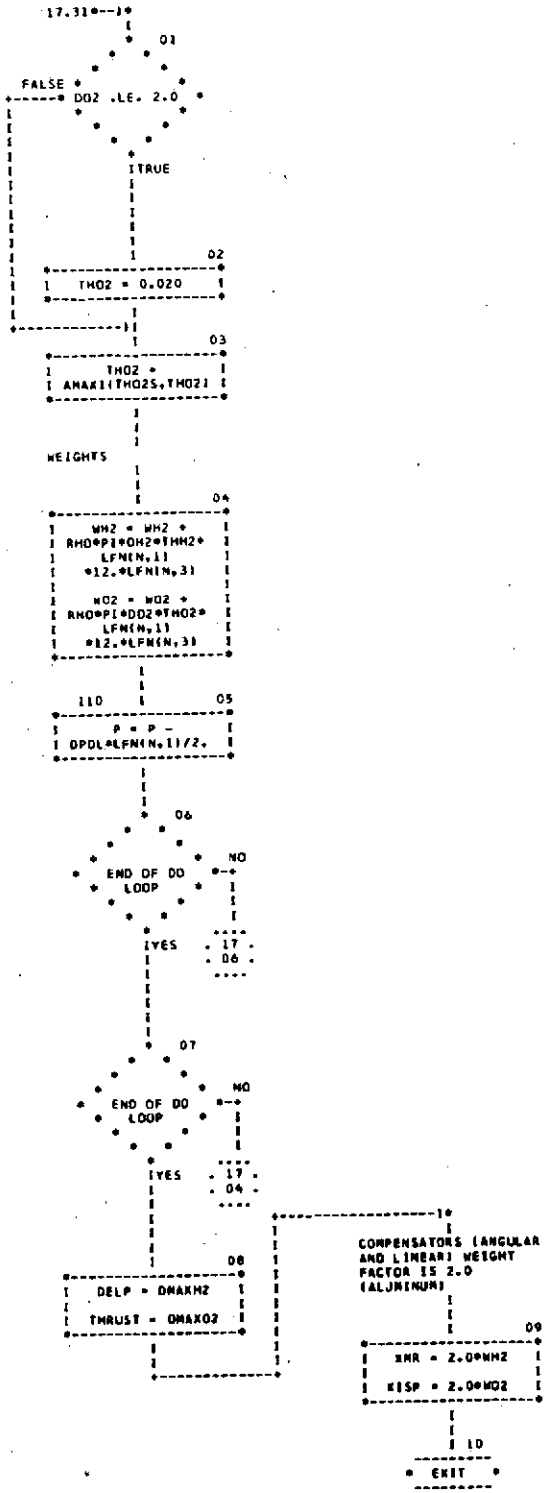

CHART TITLE - NON-PROCEDURAL STATEMENTS

```
COMMON PRESS,DELP,TEMP,XMR,XISP,THRUST
COMMON/LINE/LMAX(2),LFN(10,3)
DATA S,RHO/64000.,.101/,PI/3.14159/
REAL MR,ISP,LMAX,LFN
STATEMENT FUNCTION DEFINITION   FH2(P,TH2,TWH2,DPDL)=((1.00753*TWH2**2.*TH2/(DPDL*2.*P))*(1.0065-
00515*ALOG(TWH2*520./2.)))**.2*12.
STATEMENT FUNCTION DEFINITION   FO2(P,TO2,TWO2,DPDL)=((1.00753*TWO2**2.*TO2/(DPDL*32.*P))*(1.0065-
00515*ALOG(TWO2*520./32.)))**.2*12.
```

05/18/71 AUTOFLOW CHART SET - PAGE 23

CHART TITLE - SUBROUTINE VALVE

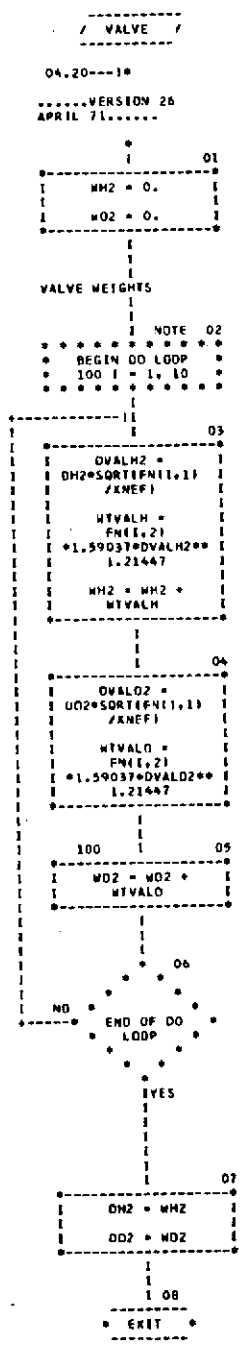

CHART TITLE - NON-PROCEDURAL STATEMENTS

```
COMMON XNET,XNEF,AC,DH2,DO2,AD
COMMON/VALVE/FN(10,2)
```

05/18/71 AUTOFLOW CHART SET - PAGE 22

CHART TITLE - SUBROUTINE INTERP(N,NO,N1,X,Y)

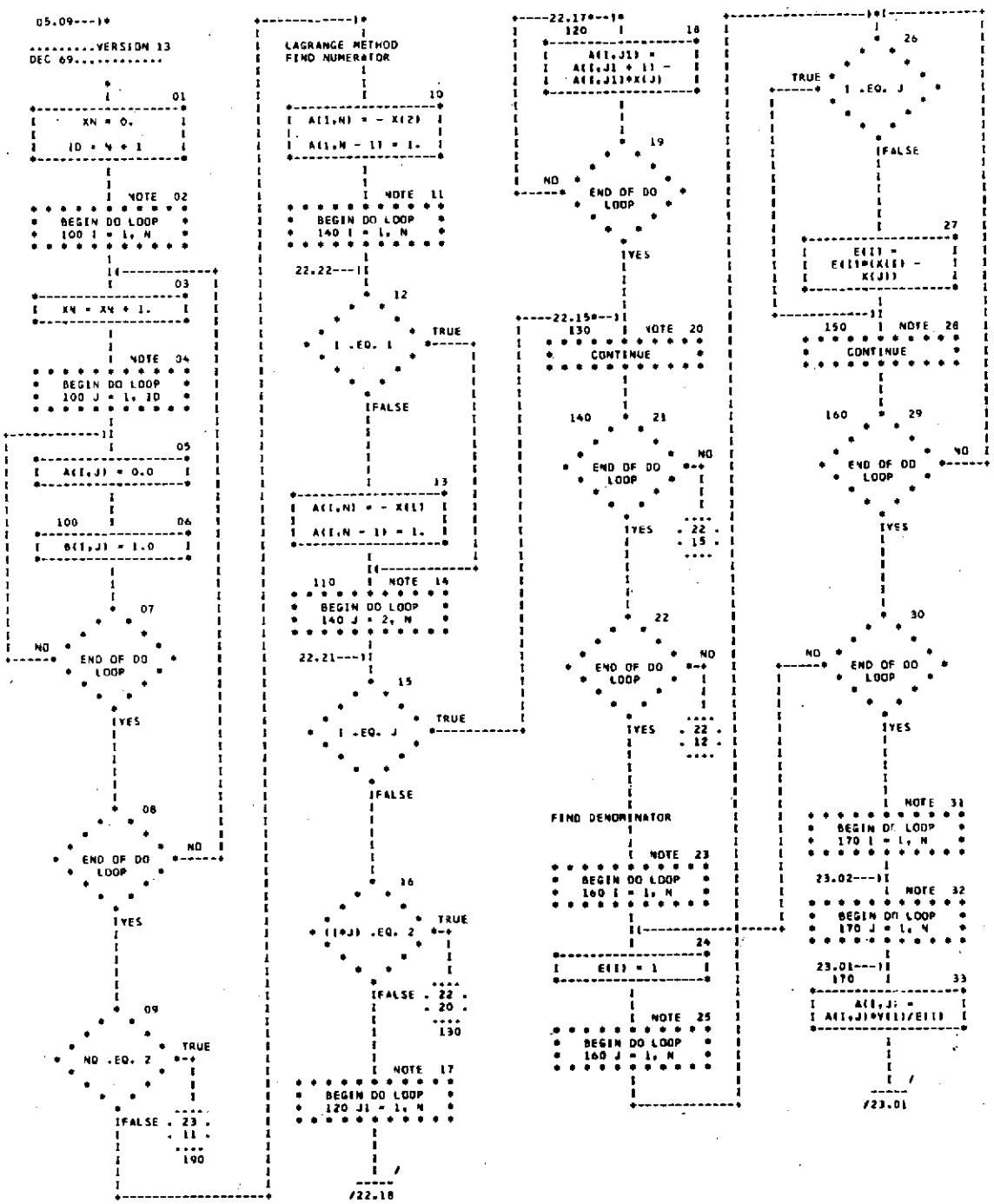

05/18/71 AUTOFLOW CHART SET - PAGE 23

CHART TITLE - SUBROUTINE INTERP(N,NQ,N1,X,Y)

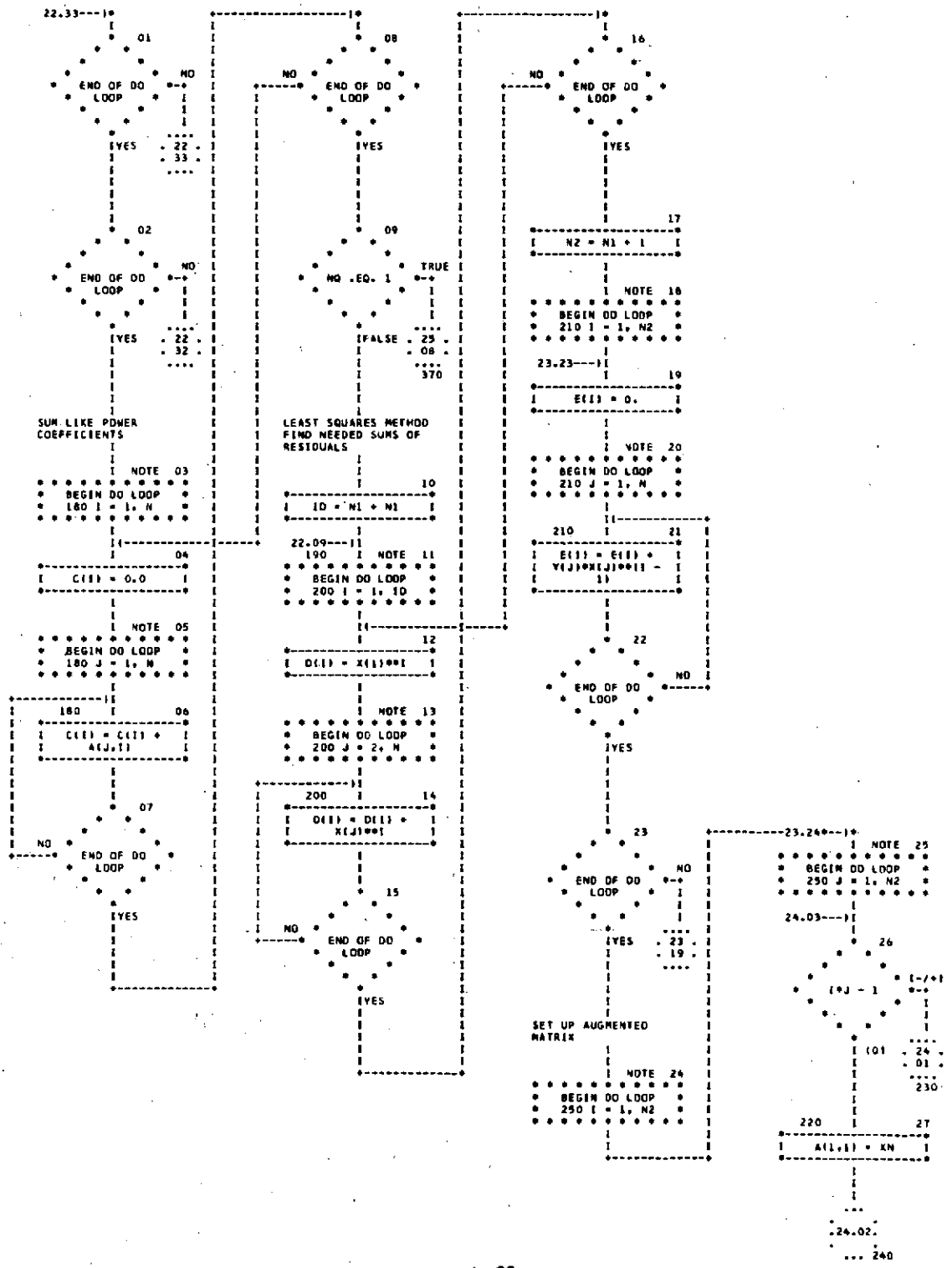

05/18/71 AUTOFLOW CHART SET - PAGE 24

CHART TITLE - SUBROUTINE INTERP(N,NO,N1,X,Y)

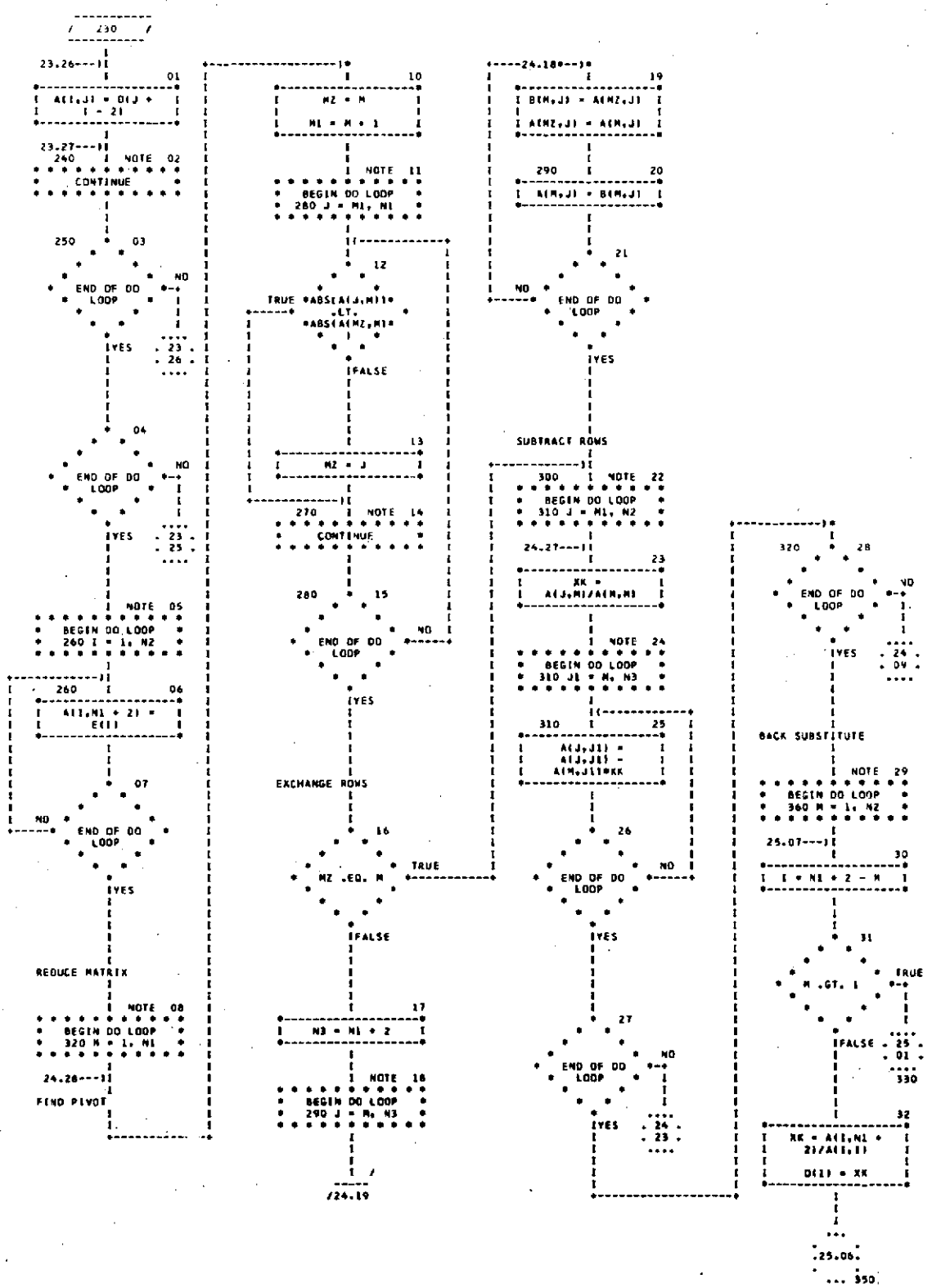

05/18/71 AUTOFLOW CHART SET - PAGE 25

CHART TITLE - SUBROUTINE INTERP(N,NQ,N1,X,Y)

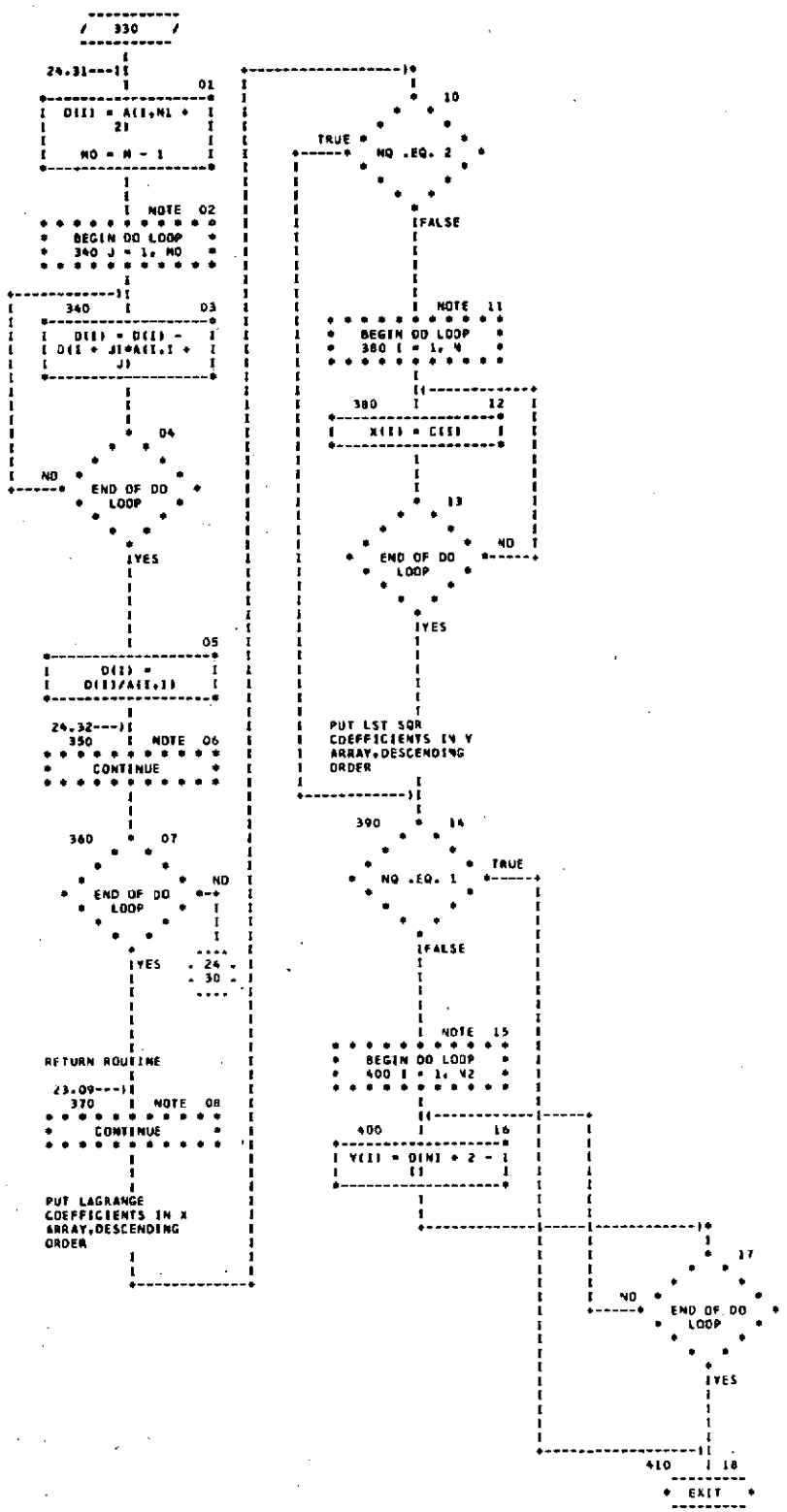

05/18/71 AUTOFLOW CHART SET - PAGE 26

CHART TITLE - NON-PROCEDURAL STATEMENTS

```
DIMENSION A(10,11),B(10,11),C(10),D(11),E(10),X(N),Y(N)
```

05/18/71 AUTOFLOW CHART SET - PAGE 27

CHART TITLE - SUBROUTINE MIXER

```
/ MIXER /

06.04---I*

......VERSION 26 APR
71......

        *
        I        01
*-------------------*
I    F = THRUST     I
I                   I
I     MR = XMR      I
I                   I
I    ISP = XISP     I
I                   I
I    NEF = XNEF     I
*-------------------*
        I
        I
GAS OR ENGINE FLOW
RATE (MAXIMUM)
        I
        I
        I        02
*-------------------*
I     WDOTH2 =      I
I   ((F*NEF)/ISP)   I
I    /(MR + 1.)     I
I                   I
I     WDOTO2 =      I
I     MR*WDOTH2     I
*-------------------*
        I
        I
LIQUID FLOW RATE
(MAXIMUM,TGAS=600 R)
        I
        I
        I        03
*-------------------*
I     WDOTLH =      I
I   LFRH2*WDOTH2    I
I                   I
I     WDOTLO =      I
I   LFRO2*WDOTO2    I
*-------------------*
        I
        I
MIXER CHAMBER (MC)
WEIGHT
        I
        I
        I        04
*-------------------*
I      WMCH2 =      I
I 0.0339*5.*DH2**2. I
I                   I
I      WMCO2 =      I
I 0.0635*5.*DO2**2. I
*-------------------*
        I
        I
PRESSURE REGULATOR
(PR) WEIGHT,IRIS
TYPE,2 REQD.
        I
        I
        I        05
*-------------------*
I      WPRH2 =      I
I    2.*6.39142*    I
I WDOTH2**0.401987  I
I                   I
I      WPRO2 =      I
I    2.*3.66081*    I
I WDOTO2**0.401987  I
*-------------------*
        I
        I
THROTTLE VALVE (TV)
WEIGHT,CAVITATING
VENTURI VALVE AND
ACTUATOR
        I
        I
        *-------------*

*-------------------I*
I                   I        07
*-------------------*
I  WLT = WDOTLH +   I
I      WDOTLO       I
I                   I
I       WTV =       I
I  2.*(.0944*(WLT*  I
I     ISP/100.)     I
I     **1.115 +     I
I  1.5*2.45*(WLT*   I
I ISP/100.)**.421)  I
*-------------------*
        I
        I
LIQUID VALVE (LV)
WEIGHT,3 REQD.
        I
        I
        I        08
*-------------------*
I      ALH2 =       I
I   WDOTLH*144/     I
I  (RHOH2*LVELH2)   I
I                   I
I     DIALH2 =      I
I (ALH2*4./PI)**0.5 I
I                   I
I      WLVH2 =      I
I 3.*(2.43*DIALH2** I
I      1.378)       I
*-------------------*
        I
        I
        I        09
*-------------------*
I      ALO2 =       I
I   WDOTLO*144./    I
I  (RHOO2*LVELO2)   I
I                   I
I     DIALO2 =      I
I (ALO2*4./PI)**0.5 I
I                   I
I      WLVO2 =      I
I 3.*(2.43*DIALO2** I
I      1.378)       I
*-------------------*
        I
        I
GAS VALVE (GV)
WEIGHT,VISOR TYPE,2
REQD.
        I
        I
        I        10
*-------------------*
I      WGVH2 =      I
I 2.*(1.59037*DH2** I
I      1.21447)     I
I                   I
I      WGVO2 =      I
I 2.*(1.59037*DO2** I
I      1.21447)     I
*-------------------*
        I
        I
TOTAL MIXER ASSEMBLY
(MA) WEIGHT
        I
        I
        I        11
*-------------------*
I  WMAH2 = WMCH2 +  I
I WPRH2 + WTV/2. +  I
I   WLVH2 + WGVH2   I
I                   I
I  WMAO2 = WMCO2 +  I
I WPRO2 + WTV/2. +  I
I   WLVO2 + WGVO2   I
I                   I
I    XMR = WMAH2    I
*-------------------*
        I
        I
        I        12
*-------------------*
I   KISP = WMAO2    I
*-------------------*
        I
        I
        I 13
      ---------
      * EXIT *
      ---------
```

05/18/71 AUTOFLOW CHART SET - PAGE .28

CHART TITLE - NON-PROCEDURAL STATEMENTS

```
COMMON DH2,DO2,XNEF,XMR,XISP,THRUST
REAL MR,ISP,NEF,LFRM2,LFRO2,LVELH2,LVELO2
DATA LFRH2,LFRO2/0.76,0.48/,LVELH2,LVELO2/50.,30./ ,RHOM2,RHOO2/4.
13,71.6/,PI/3.14159/
```

05/18/71 AUTOFLOW CHART SET - PAGE 29

CHART TITLE - SUBROUTINE PASMEX

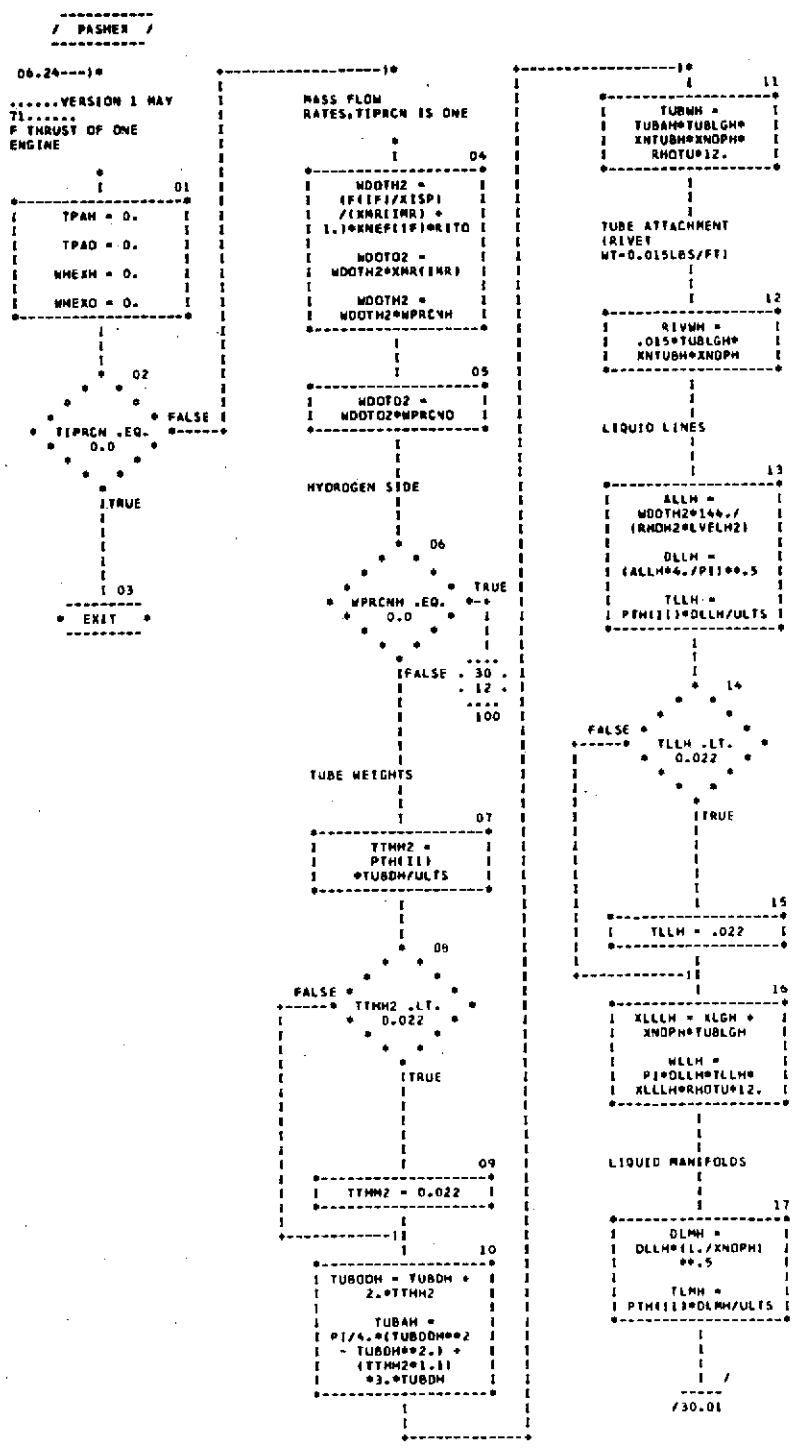

05/18/71 AUTOFLOW CHART SET - PAGE 30

CHART TITLE - SUBROUTINE PASMEX

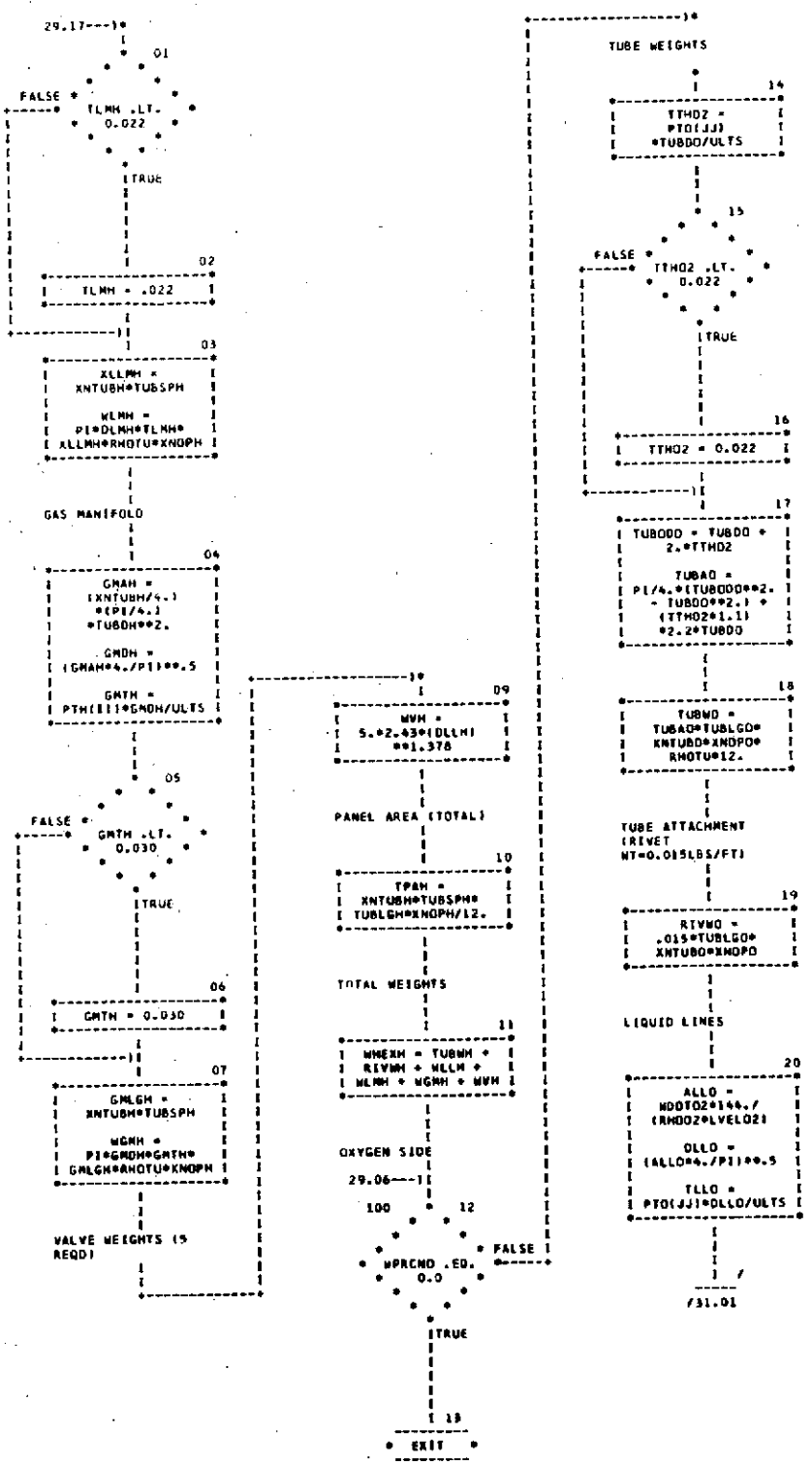

05/18/71 AUTOFLOW CHART SET - PAGE 31

CHART TITLE - SUBROUTINE PASHER

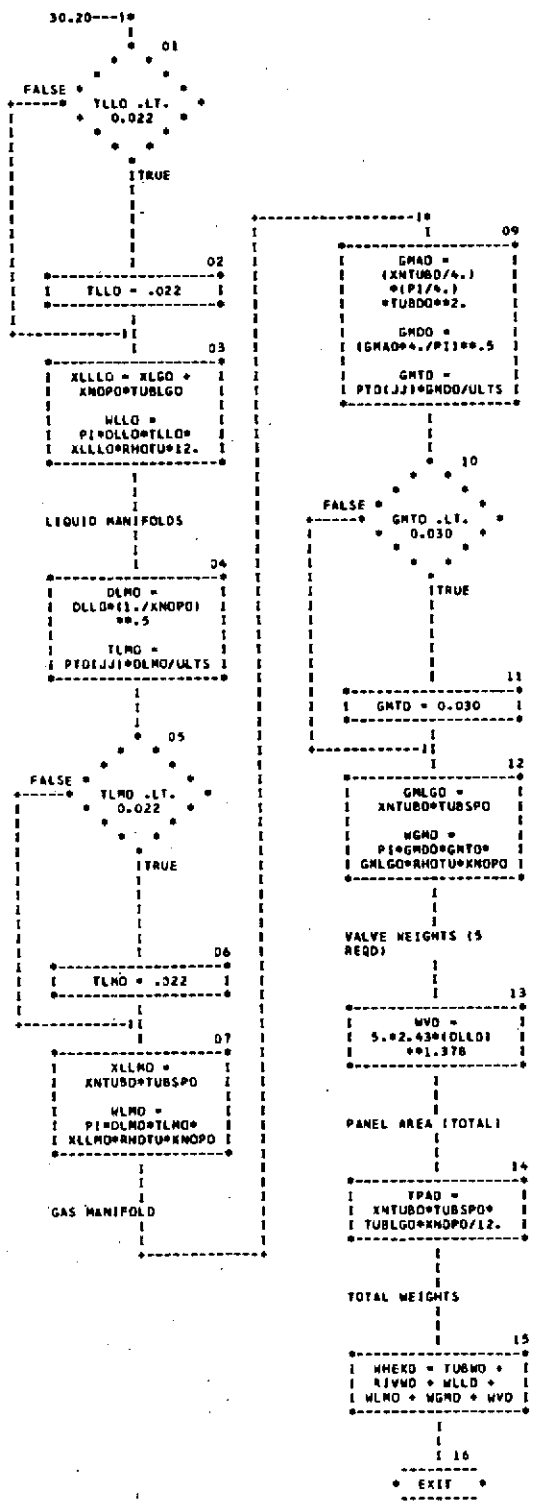

05/18/71 AUTOFLOW CHART SET - PAGE 32

CHART TITLE - NON-PROCEDURAL STATEMENTS

```
DIMENSION F(10),XMR(10),PTH(10),PTO(10),XNEF(10)
COMMON/HEK/TUBOH,TUBDO,TUBSPH,TUBSPD,TUBLGH,TUBLGD,XNTUBH,XNTUBD ,
XNOPH,XNOPO,PTH,PTO,II,JJ,F,IF,XMR,IMR,XISP ,XNEF,TPAH,TPAO,WHEXH,
WHEXO,WPRCND,WPRCNH,TIPRCN,RITO
REAL LVELH2,LVELO2
DATA RHOTU,ULTS/.101,64000./,LVELH2,LVELO2/50.,30./,PI/3.14159/ ,R
HOH2,RHOO2/4.13,71.6/,XLGH,XLGO/33..20./
```

05/18/71 AUTOFLOW CHART SET - PAGE 33

CHART TITLE - SUBROUTINE PROPEL

```
          ----------
         /  PROPEL  /
         ----------

 06.32---1*

.........VERSION 13
DEC 69............

          *
          I          01
*-------------------*
I       WH2 =       I
I  TOTI/XISP*(1./   I
I    (XMR + 1.))    I
I                   I
I       WO2 =       I
I  TOTI/XISP*(XMR/  I
I    (XMR + 1.))    I
I                   I
I    XISP = WH2     I
I                   I
I     XMR = WO2     I
*-------------------*
          I
          I
          I 02
        ---------
       *  EXIT   *
        ---------
```

05/18/71 AUTOFLOW CHART SET - PAGE 34

CHART TITLE - NON-PROCEDURAL STATEMENTS

```
COMMON AA,AB,AC,XISP,XMR,TOTI
```

05/10/71 AUTOFLOW CHART SET - PAGE 35

CHART TITLE - SUBROUTINE TANK

```
 ----------
/   TANK   /
----------

07.02---)*
.......VERSION 5 MAR
71.........
.....INCLUDES TANK
AND
SUPPORTS,FOAM(H2),
COOLING
SHROUD,INSULATION AND
SUPPORTS,FIBERGLASS
AND SUPPORTS,AND
PROPELLANT
ACQUISITION DEVICE
TANK BURST PRESSURE

          *
          I        01
*-------------------*
I  PBH2 = PTH*2.0   I
I                   I
I  PBO2 = PTO*2.0   I
*-------------------*
          I
          I
          I
PROPELLANT VENT,BOIL
OFF,AND LIQUID
RESIDUALS (8 DAY
MISSION)
          I
          I
          I        02
*-------------------*
I      WVH2 =       I
I   (((WH2/1930.)   I
I   **.667)*72. +   I
I 9.7)/181.*8.*24.  I
I                   I
I    WVO2 = 0.0     I
I                   I
I      WBOH2 =      I
I 25.*((WH2/1930.)  I
I      **.667)      I
*-------------------*
          I
          I
          I        03
*-------------------*
I      WBOO2 =      I
I 48.*((WO2/5800.)  I
I      **.667)      I
I                   I
I    WH2 = WH2 +    I
I  WVH2 + WBOH2     I
I                   I
I    WO2 = WO2 +    I
I   WVO2 + WBOO2    I
I                   I
I  WH2 = WH2/.991   I
*-------------------*
          I
          I
          I        04
*-------------------*
I  WO2 = WO2/.987   I
*-------------------*
          I
          I
          I
TANK SIZE
          I
          I
          I        05
*-------------------*
I      VOLH2 =      I
I WH2*.2240*1728.*  I
I        1.1        I
I                   I
I      VOLO2 =      I
I WO2*.0140*1728.*  I
I        1.05       I
I                   I
I      RADH2 =      I
I (3.*VOLH2/(4.*3.  I
I   1416))**.3333   I
*-------------------*
          I
          I
          *--------------*

*-------------------)*
I                   I        06
*-------------------*
I      RADO2 =      I
I (3.*VOL02/(4.*3.  I
I   1416))**.3333   I
I                   I
I      SURAH2 =     I
I 4.*3.1416*RADH2** I
I        2.         I
I                   I
I      SURAO2 =     I
I 4.*3.1416*RADO2** I
I        2.         I
*-------------------*
          I
          I
          I
TANK THICKNESS
          I
          I
          I        07
*-------------------*
I      TH2 =        I
I  PBH2*RADH2/(2.*  I
I      64000.)      I
*-------------------*
          I
          I
          I
          *   08
        *   *
      *       *
FALSE *         *
+-----* TH2 .LT. 0.04 *
I       *       *
          *   *
            *
            ITRUE
            I
            I
            I
            I
            I
            I        09
*-------------------*
I    TH2 = 0.04     I
*-------------------*
            I
+-----------)I
            I        10
*-------------------*
I      TO2 =        I
I  PBO2*RADO2/(2.*  I
I      64000.)      I
*-------------------*
            I
            I
            I
            *   11
        *   *
      *       *
FALSE *         *
+-----* TO2 .LT. 0.04 *
I       *       *
          *   *
            *
            ITRUE
            I
            I
            I
            I
            I
            I        12
*-------------------*
I    TO2 = 0.04     I
*-------------------*
            I
+-----------)I
            I
TANK WEIGHT AND
SUPPORT (NON-OPTIMUM
FACTOR IS 1.1)
            I
            I
            *--------------*

*-------------------)*
I                   I        14
*-------------------*
I      WTH2 =       I
I SURAH2*TH2*.101*  I
I        1.1        I
I                   I
I      WTSH2 =      I
I  0.1*VOLH2/1728.  I
I                   I
I      WTO2 =       I
I SURAO2*TO2*.101*  I
I        1.1        I
*-------------------*
          I
          I
          I        15
*-------------------*
I      WTSO2 =      I
I 10.*2.*RADO2/     I
*-------------------*
          I
          I
          I
H2 TANK FOAM
          I
          I
          I        16
*-------------------*
I      WFH2 =       I
I  SURAH2*.42*2.5/  I
I      1728.        I
*-------------------*
          I
          I
          I
COOLING SHROUD (8 DAY
MISSION)
          I
          I
          I        17
*-------------------*
I      WVRH2 =      I
I   WVH2/(8.*24.)   I
I                   I
I      N1 =         I
I   WVRH2/.45*14.   I
I                   I
I  N1 = AINT(N1) +  I
I        1.0        I
I                   I
I N2 = WVRH2/.45*9. I
*-------------------*
          I
          I
          I        18
*-------------------*
I   N2 = AINT(N2) + I
I        1.0        I
I                   I
I     TUBCSA =      I
I 3.1416/4.*((.125* I
I      *2.) -       I
I   (.105**2.)) +   I
I    2.*.188*.01    I
*-------------------*
          I
          I
          I        19
*-------------------*
I      WCTH2 =      I
I  TUBCSA*(3.1416*  I
I  RADH2*N1)*.101   I
I                   I
I   WCTH2 = 4. +    I
I       WCTH2       I
I                   I
I      WCTO2 =      I
I  TUBCSA*(3.1416*  I
I  RADO2*N2)*.101   I
*-------------------*
          I
          I
          I        20
*-------------------*
I   WCTO2 = 4. +    I
I       WCTO2       I
I                   I
I      WCSH2 =      I
I SURAH2*.005*.101  I
I                   I
I      WCSO2 =      I
I SURAO2*.001*.101  I
*-------------------*
          I
          I
          *--------------*

*-------------------)*
I                   I
INSULATION AND
SUPPORT
          I
          I
          I        21
*-------------------*
I      WIH2 =       I
I  SURAH2*.68*5./   I
I      1728.*1.1    I
I                   I
I      WIO2 =       I
I  SURAO2*.97*5./   I
I      1728.*1.1    I
*-------------------*
          I
          I
          I
FIBERGLASS AND
SUPPORT
          I
          I
          I        22
*-------------------*
I      WFGH2 =      I
I SURAH2*.02*.067*  I
I        1.45       I
I                   I
I      WFGO2 =      I
I SURAO2*.02*.067*  I
I        1.45       I
*-------------------*
          I
          I
          I
ACQUISITION DEVICE
          I
          I
          I        23
*-------------------*
I   WADH2 = 17. +   I
I .250*SURAH2/144.  I
I                   I
I   WADO2 = 17. +   I
I .250*SURAO2/144.  I
*-------------------*
          I
          I
          I
TOTAL TANK WEIGHT
          I
          I
          I        24
*-------------------*
I  WTTH2 = WTH2 +   I
I  WTSH2 + WFH2 +   I
I  WCTH2 + WCSH2 +  I
I  WIH2 + WFGH2 +   I
I       WADH2       I
I                   I
I  WTTO2 = WTO2 +   I
I  WTSO2 + WCTO2 +  I
I  WCSO2 + WIO2 +   I
I   WFGO2 + WADO2   I
*-------------------*
          I
          I
          I        25
*-------------------*
I    PTH = WTTH2    I
I                   I
I    PTO = WTTO2    I
I                   I
I     WH2 = WH2     I
I                   I
I     WO2 = WO2     I
*-------------------*
          I
          I
          I 26
 ---------
*  EXIT   *
 ---------
```

05/18/71 AUTOFLOW CHART SET - PAGE 36

CHART TITLE - NON-PROCEDURAL STATEMENTS

```
COMMON PTH,PTO,AB,MH2,MO2,AC
REAL N1,N2
```

05/18/71 AUTOFLOW CHART SET - PAGE 37

CHART TITLE - SUBROUTINE PRESVS(PTO2,PTH2,TH2,TO2,WH2,WO2)

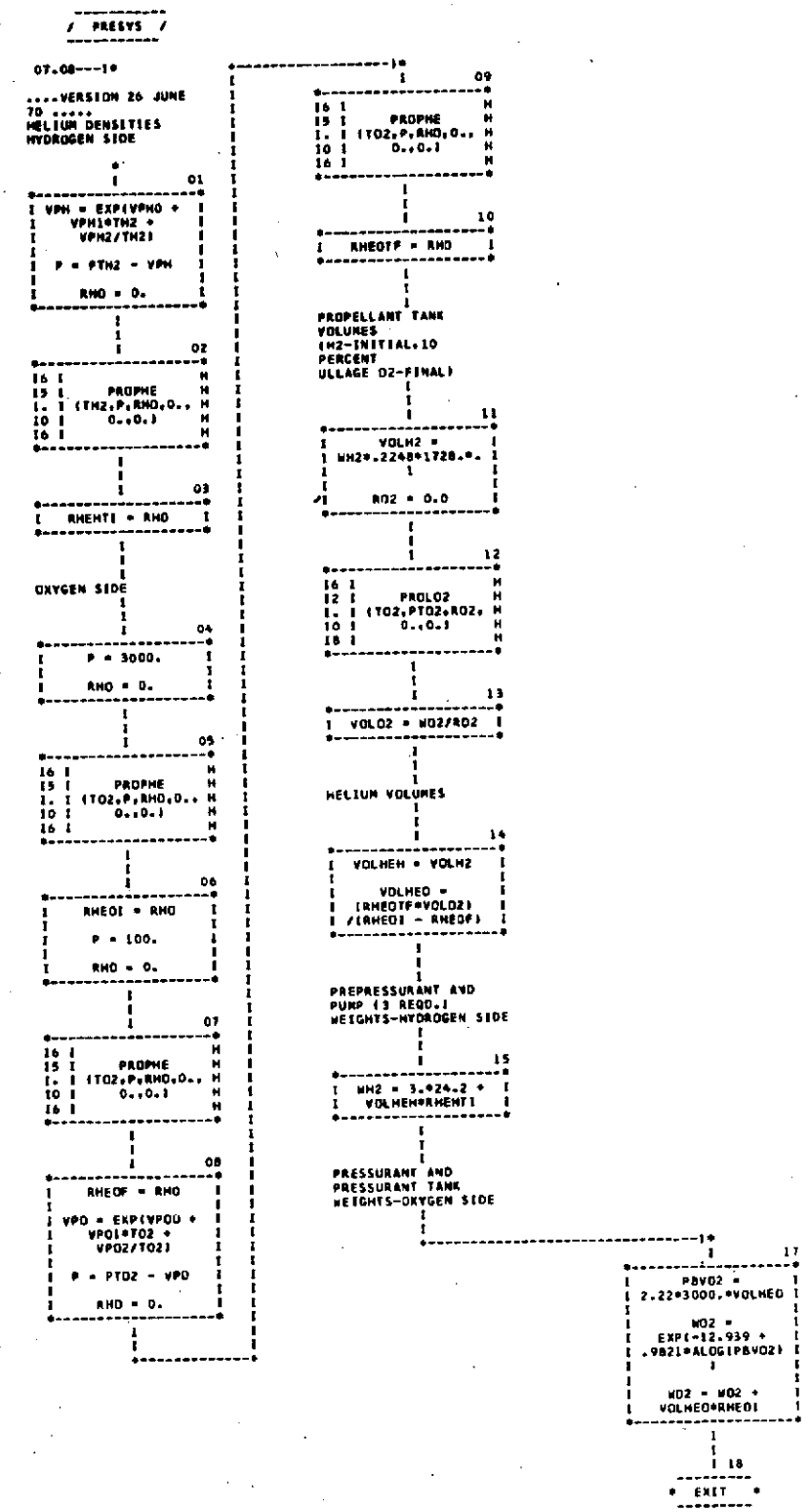

05/18/71 AUTOFLOW CHART SET - PAGE 38

CHART TITLE - NON-PROCEDURAL STATEMENTS

```
DATA VPD0,VPD1,VPD2/16.6430,-1.57154E-2,-1855.15/ ,VPH0,VPH1,VPH2/
5.61162,4.16704E-2,-163.182/
```

05/14/71 AUTOPLOT CHART SET - PAGE 39

CHART TITLE - SUBROUTINE PROPH2(T,P,RHO,H,S)

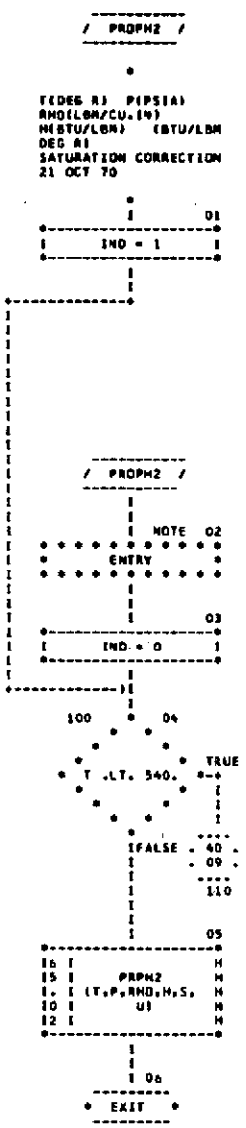

05/18/71 AUTOFLOW CHART SET - PAGE 40

CHART TITLE - SUBROUTINE PROPH2(T,P,RHO,H,S)

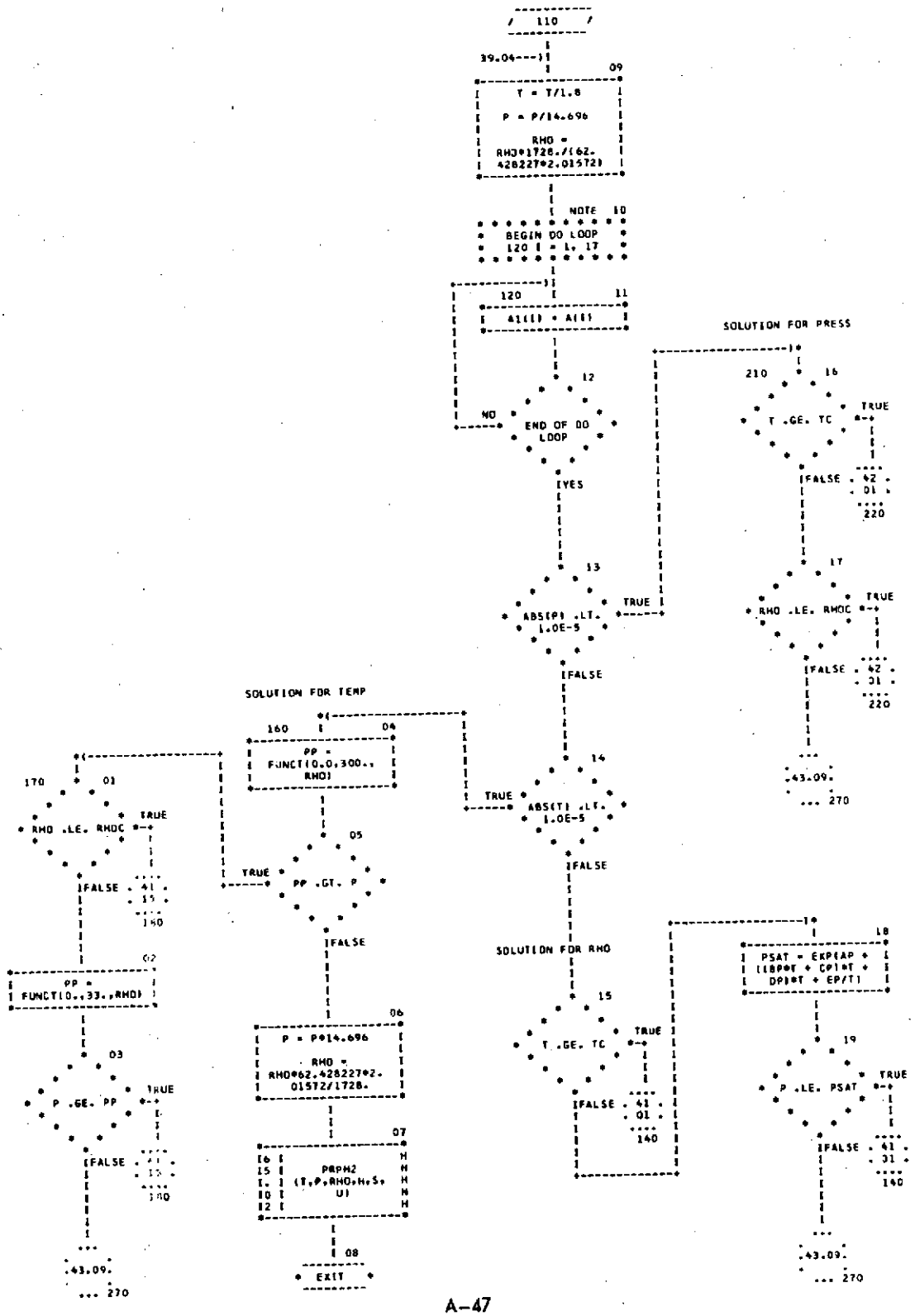

05/18/71 AUTOFLOW CHART SET - PAGE 41

CHART TITLE - SUBROUTINE PROPHZ(T,P,RHO,H,S)

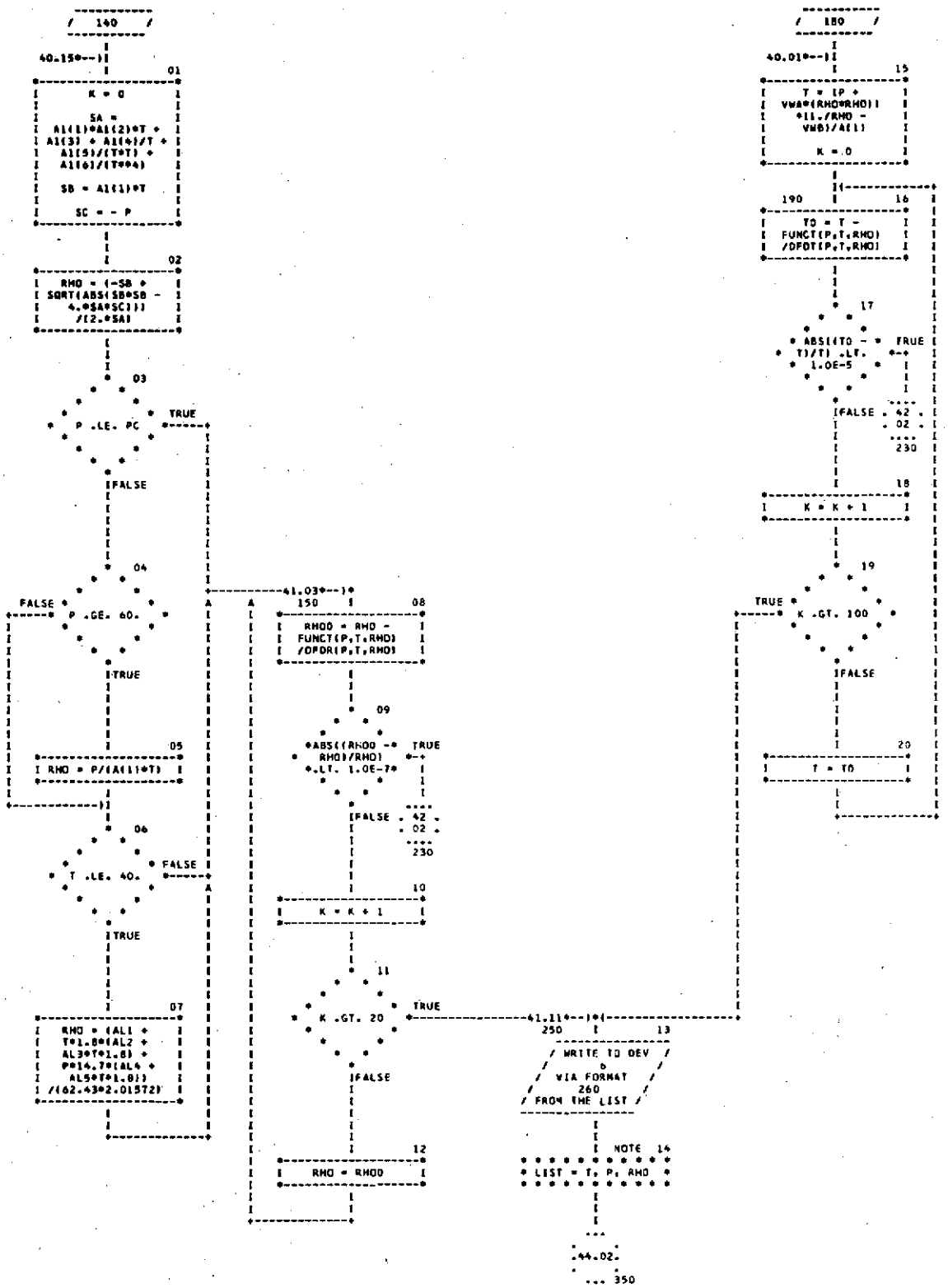

05/18/71 AUTOFLOW CHART SET - PAGE 42

CHART TITLE - SUBROUTINE PROFHZ(T,P,RHO,H,S)

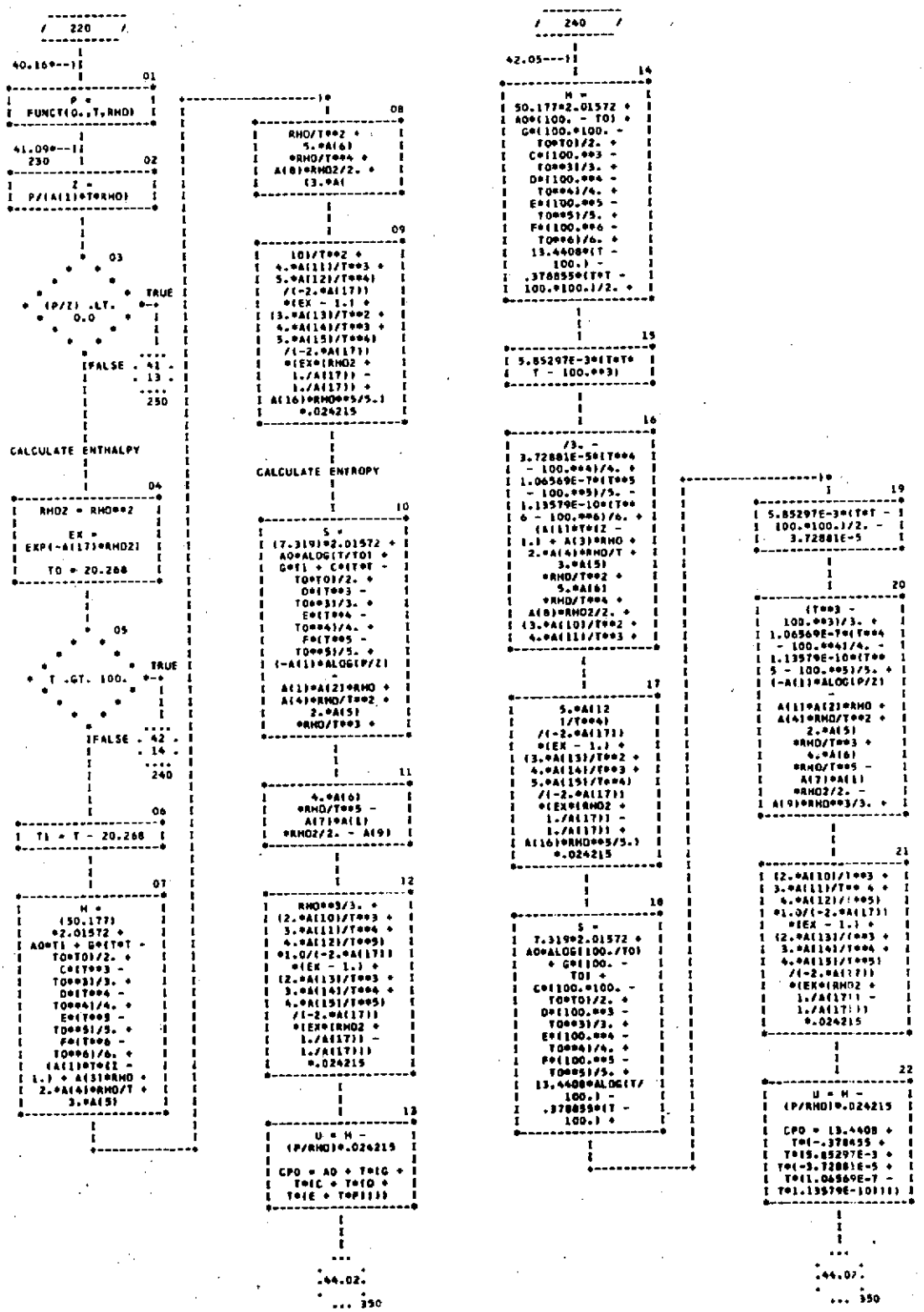

05/18/71 AUTOFLOW CHART SET - PAGE 43

CHART TITLE - SUBROUTINE PROPH2(T,P,RHO,H,S)

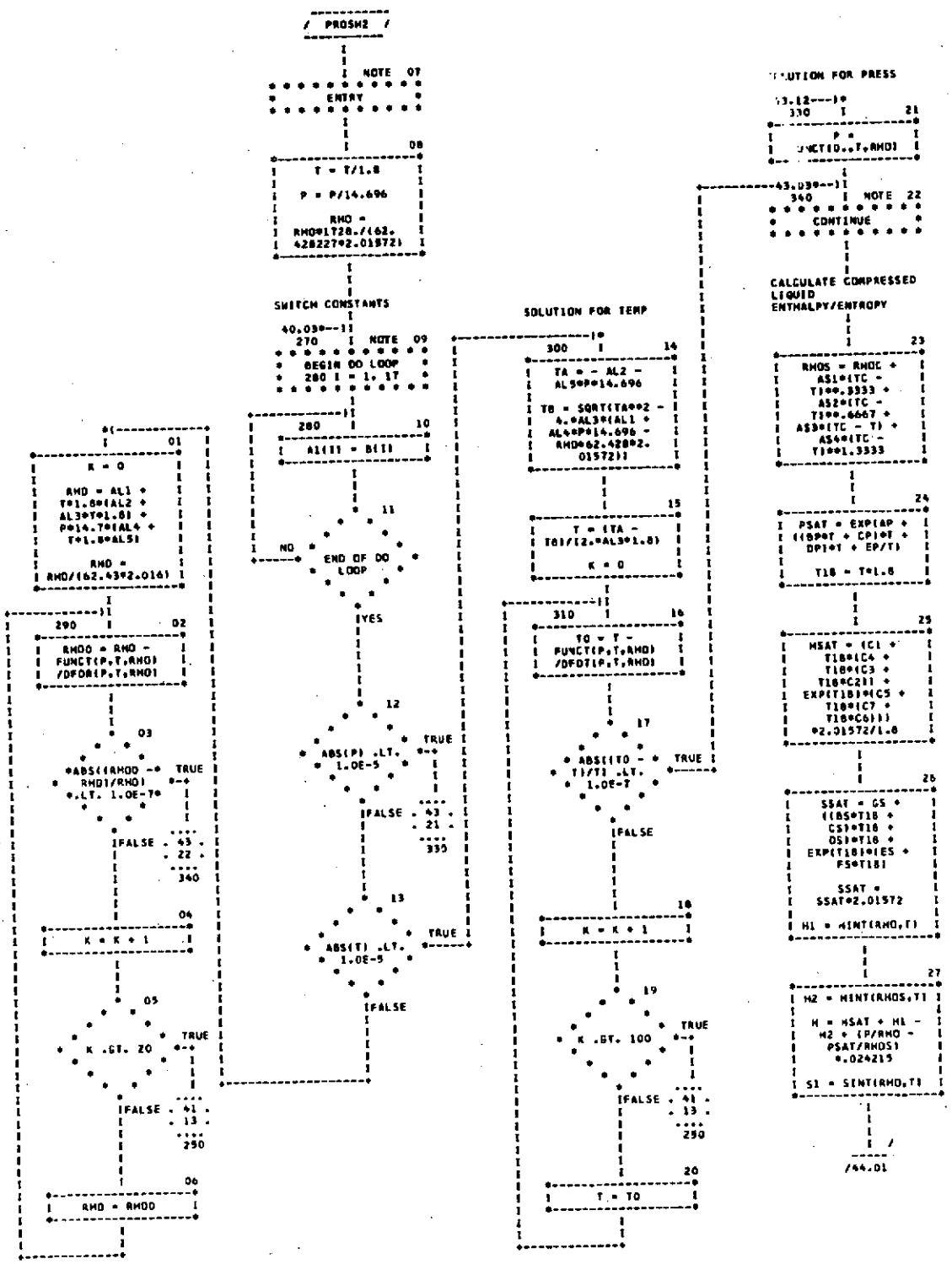

05/10//1 AUTOFLOW CHART SET - PAGE 44

CHART TITLE - SUBROUTINE PROFH2(T,P,RHO,H,S)

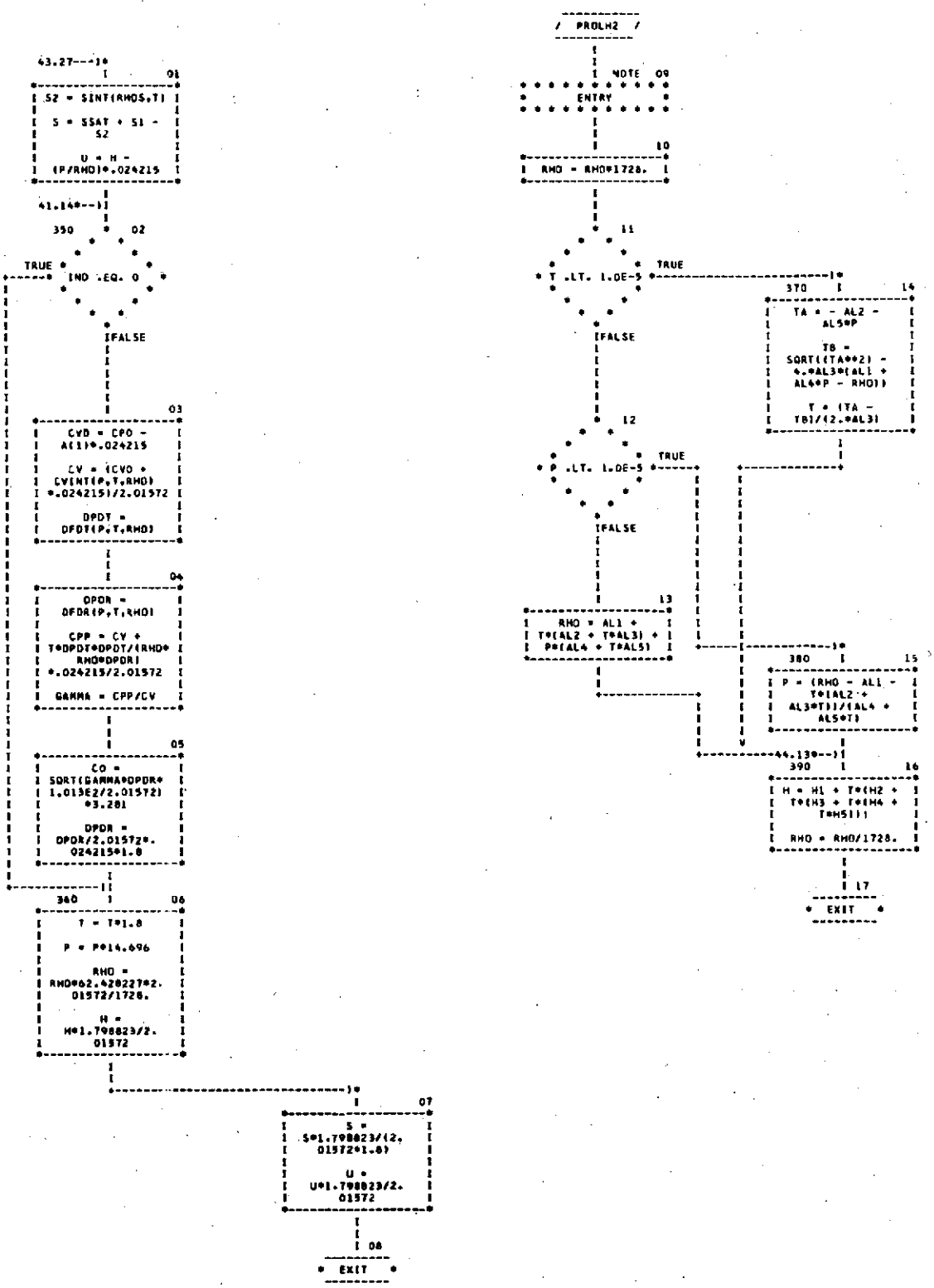

CHART TITLE - NON-PROCEDURAL STATEMENTS

```
      DIMENSION A(17),B(17),AS(4),AI(17)
      COMMON/BLK1/A1
      COMMON/PROPS/GAMMA,CPP,CV,CO,DPDR
      DATA A0,G,C,D,E,F/4.977816011,-.003384077923,.0003521443738, -.143
      5633176E-4,.2303247905E-6,-.1038316229E-8/
      DATA (A(I),I=1,17)/82.08199823,20.62278898,-129279.2029,-7237230.1
      37,115924274.5,-.1010879879E11,317.6293970,2581305.967,241066.9065
      ,-.1070380625E11,.1016369054E13,-.1938431002E14,.3857308627E13, -.
      6757463236E15,.1462114653E17,.9254992259E11,1800.1008/
      DATA (B(I),I=1,17)/82.08199823,63.74020840,-353918.0407,-4810952.4
      57,91278833.49,-8816106422.,-1283.735749,8076213.444,1425160.973,
      6410245277.,.1085162913E12,-.2930340262E13,-.5235483345E13, -.2551
      114380E15,.4732799310E16,.3922927774E11,.1800100800E04/
      DATA PC,TC,RHOC/12.770,32.984,0.0152672/,AP,BP,CP,DP,EP/1.89865, 3
      .60610E-5,-3.61339E-3,.181318,-88.9613/,AS1,AS2,AS3,AS4/.62675345E
      -2,.14973511E-2,-.18306903E-3,-.20693181E-4/
      DATA C1,C2,C3,C4,C5,C6,C7/-253.29,1.87850E-3,-.177648,7.91029, 2.5
      3018E-22,7.18905E-26,-8.52463E-24/
      DATA G5,B5,C5,D5,E5,F5/-2.07580,3.16280E-5,-3.57256E-3,.197685, 9.
      58870E-26,-1.55441E-27/
      DATA AT1,AT2,AT3,AT4,AT5/.147246,-1.00145E10,9.31575E7,-223720, 27
      2.870/
      DATA VWA,VWB/2.4483E5,26.661 /
260   FORMAT (35H SUBROUTINE PROPH2 DID NOT CONVERGE,3E13.4/)
      DATA AL1,AL2,AL3,AL4,AL5/4.29069,4.77330E-2,-1.21856E-3, -7.35483E
      -4,3.67721E-5/,H1,H2,H3,H4,H5/-880.99,101.419,-3.57316, 0.056438 ,
      -3.45366E-4/
```

05/18/71 AUTOFLOW CHART SET - PAGE 46

CHART TITLE - FUNCTION HINT(RHO,T)

```
                 ----------
                /          /
                ----------
                     I
                     I
                     I          01
*-------------------------------*
I  RHO2 = RHO*RHO                I
I                                I
I       EX =                     I
I  EXP(-A(17)*RHO2)              I
I                                I
I      T2 = T*T                  I
*-------------------------------*
                     I
                     I
                     I          02
*-------------------------------*
I HINT = A(3)*RHO +              I
I  2.*A(4)*RHO/T +               I
I 3.*A(5)*RHO/T2 +               I
I       5.*A(6)                  I
I  *RHO/(T2*T2) +                I
I  A(8)*RHO2/2. +                I
I  (3.*A(10)/T2 +                I
I 4.*A(11)/(T*T2) +              I
I 5.*A(12)/(T2*T2))              I
I /(-2.*A(17))*EX +              I
I  (3.*A(13)/T2 +                I
I 4.*A(14)/(T*T2) +              I
I 5.*A(15)/(T2*T2))              I
I   /(-2.*A(17))                 I
I     *EX*(RHO2 +                I
I  1./A(17)) + A(1               I
I   6)*RHO**5/5.                 I
*-------------------------------*
                     I
                     I
                     I          03
*-------------------------------*
I       HINT =                   I
I   HINT*.024215                 I
*-------------------------------*
                     I
                     I
                     I 04
                 ---------
                * EXIT    *
                 ---------
```

05/18/71 AUTOFLOW CHART SET - PAGE 47

CHART TITLE - NON-PROCEDURAL STATEMENTS

```
COMMON/BLK1/A(17)
```

05/18/71 AUTOFLOW CHART SET - PAGE 48

CHART TITLE - FUNCTION SINT(RHO,T)

```
                 ----------
                /          /
                ----------
                     I
                     I
                     I          01
*-------------------*
I  RHO2 = RHO*RHO   I
I                   I
I       EX =        I
I EXP(-A(17)*RHO2)  I
I                   I
I     T2 = T*T      I
*-------------------*
                     I
                     I
                     I          02
*-------------------*
I      SINT =       I
I   (-A(1)*A(2) +   I
I  ((4.*A(6)/T2 +   I
I   2.*A(5))/T +    I
I  A(4))/T2)*RHO -  I
I A(1)*ALOG(RHO) -  I
I  RHO2*(A(7)*A(1)  I
I       /2. +       I
I  A(9)*RHO/3.) +   I
I  (((4.*A(12)/T +  I
I   3.*A(11))/T +   I
I 2.*A(10))/(T*T2)) I
I *EX/(-2.*A(17)) + I
I  (((4.*A(15)/T +  I
I   3.*A(14))/T +   I
I 2.*A(13))/(T*T2)) I
I  *EX/(-2.*A(17))  I
*-------------------*
                     I
                     I
                     I          03
*-------------------*
I (RHO2 + 1./A(17)) I
*-------------------*
                     I
                     I
                     I          04
*-------------------*
I      SINT =       I
I   SINT*.024215    I
*-------------------*
                     I
                     I
                     I 05
                 ---------
                * EXIT   *
                 ---------
```

05/10/71 AUTOFLOW CHART SET - PAGE 49

CHART TITLE - NON-PROCEDURAL STATEMENTS

```
COMMON/BLK1/A(17)
```

05/18/71 AUTOFLOW CHART SET - PAGE 50

CHART TITLE - FUNCTION FUNCT(P,T,RHO)

```
..............VERSION
23 JAN
70.................

          *
          I         01
*-------------------*
I   RHO2 = RHO**2   I
I                   I
I   RHO3 = RHO**3   I
I                   I
I   RHO5 = RHO**5   I
I                   I
I       EX =        I
I EXP(-A(17)*RHO2)  I
*-------------------*
          I
          I
          I         02
*-------------------*
I     F = - P +     I
I   A(1)*T*RHO +    I
I     A(1)*A(2)     I
I     *T*RHO2 +     I
I    A(3)*RHO2 +    I
I   A(4)*RHO2/T +   I
I A(5)*RHO2/(T*T) + I
I A(6)*RHO2/T**4 +  I
I     A(7)*A(1)     I
I     *T*RHO3 +     I
I    A(8)*RHO3 +    I
I       A(9)        I
I  *T*RHO2*RHO2 +   I
I       A(10)       I
I  *RHO3*EX/T**2 +  I
I       A(11)       I
I  *RHO3*EX/T**3 +  I
*-------------------*
          I
          I
          I         03
*-------------------*
I       A(12)       I
I  *RHO3*EX/T**4 +  I
I       A(13)       I
I *RHO5*EX/(T*T) +  I
I      A(14)*R      I
I   HO5*EX/T**3 +   I
I       A(15)       I
I  *RHO5*EX/T**4 +  I
I   A(16)*RHO**6    I
*-------------------*
          I
          I
          I         04
*-------------------*
I     FUNCT = F     I
*-------------------*
          I
          I
          I 05
      ---------
     *  EXIT   *
      ---------
```

CHART TITLE - NON-PROCEDURAL STATEMENTS

```
DIMENSION A(17)
COMMON/BLK1/A
```

05/18/71 AUTOFLOW CHART SET - PAGE 52

CHART TITLE - FUNCTION DFDR(P,T,RHO)

```
..............VERSION
23 JAN
70.................

          *
          I          01
*-------------------*
I   RHO2 = RHO**2   I
I                   I
I   RHO3 = RHO**3   I
I                   I
I   RHO5 = RHO**5   I
I                   I
I       EX =        I
I EXP(-A(17)*RHO2)  I
*-------------------*
          I
          I
          I          02
*-------------------*
I   FR = A(1)*T +   I
I   2.*A(1)*A(2)    I
I     *T*RHO +      I
I   2.*A(3)*RHO +   I
I  2.*A(4)*RHO/T +  I
I 2.*A(5)*RHO/(T*T) I
I          +        I
I      2.*A(6)      I
I    *RHO/T**4 +    I
I     A(7)*A(1)     I
I   *T*3.*RHO2 +    I
I  3.*A(8)*RHO2 +   I
I 4.*A(9)*T*RHO3 +  I
I  (A(10)/(T*T) +   I
I   A(11)/T**3 +    I
I    A(12)/T**4)    I
I  *RHO2*EX*(3. -   I
*-------------------*
          I
          I
          I          03
*-------------------*
I 2.*A(17)*RHO2) +  I
I (A(13)/(T*T) + A  I
I    (14)/T**3 +    I
I    A(15)/T**4)    I
I *RHO2*RHO2*EX*(5. I
I          -        I
I 2.*A(17)*RHO2) +  I
I   6.*RHO5*A(16)   I
*-------------------*
          I
          I
          I          04
*-------------------*
I     DFDR = FR     I
*-------------------*
          I
          I
          I 05
       ---------
      *  EXIT   *
       ---------
```

CHART TITLE - NON-PROCEDURAL STATEMENTS

```
DIMENSION A(17)
COMMON/BLK1/A
```

05/18/71 AUTOFLOW CHART SET - PAGE 54

CHART TITLE - FUNCTION DFDT(P,T,RHO)

```
..............VERSION
23 JAN
70.................

          *
          I        01
*-------------------*
I   RHO2 = RHO**2   I
I                   I
I   RHO3 = RHO**3   I
I                   I
I   RHO5 = RHO**5   I
I                   I
I       EX =        I
I EXP(-A(17)*RHO2)  I
*-------------------*
          I
          I
          I        02
*-------------------*
I  FT = A(1)*RHO +  I
I A(1)*A(2)*RHO2 -  I
I A(4)*RHO2/(T*T) - I
I      2.*A(5)      I
I   *RHO2/T**3 -    I
I      4.*A(6)      I
I   *RHO2/T**5 +    I
I A(7)*A(1)*RHO3 +  I
I A(9)*RHO2*RHO2 -  I
I     2.*A(10)      I
I  *RHO3*EX/T**3 -  I
I     3.*A(11)      I
I  *RHO3*EX/T**4 -  I
I     4.*A(12)      I
I  *RHO3*EX/T**5 -  I
I     2.*A(13)      I
I  *RHO5*EX/T**3 -  I
*-------------------*
          I
          I
          I        03
*-------------------*
I     3.*A(14)      I
I  *RHO5*EX/T**4 -  I
I     4.*A(15)      I
I   *RHO5*EX/T**5   I
*-------------------*
          I
          I
          I        04
*-------------------*
I     DFDT = FT     I
*-------------------*
          I
          I
          I 05
      ---------
     *  EXIT   *
      ---------
```

05/18/71 AUTOFLOW CHART SET - PAGE 55

CHART TITLE - NON-PROCEDURAL STATEMENTS

```
DIMENSION A(17)
COMMON/BLK1/A
```

05/18/71 AUTOFLOW CHART SET - PAGE 56

CHART TITLE - SUBROUTINE PROFO2(T,P,RHO,H,S)

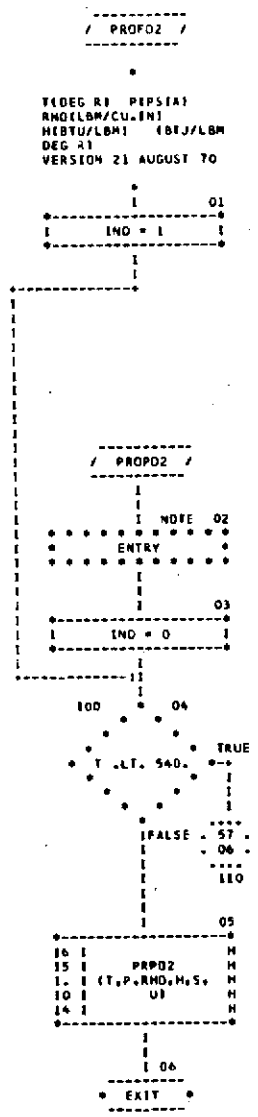

09/10/71 AUTOFLOW CHART SET - PAGE 57

CHART TITLE - SUBROUTINE PROPO2(T,P,RHO,H,S)

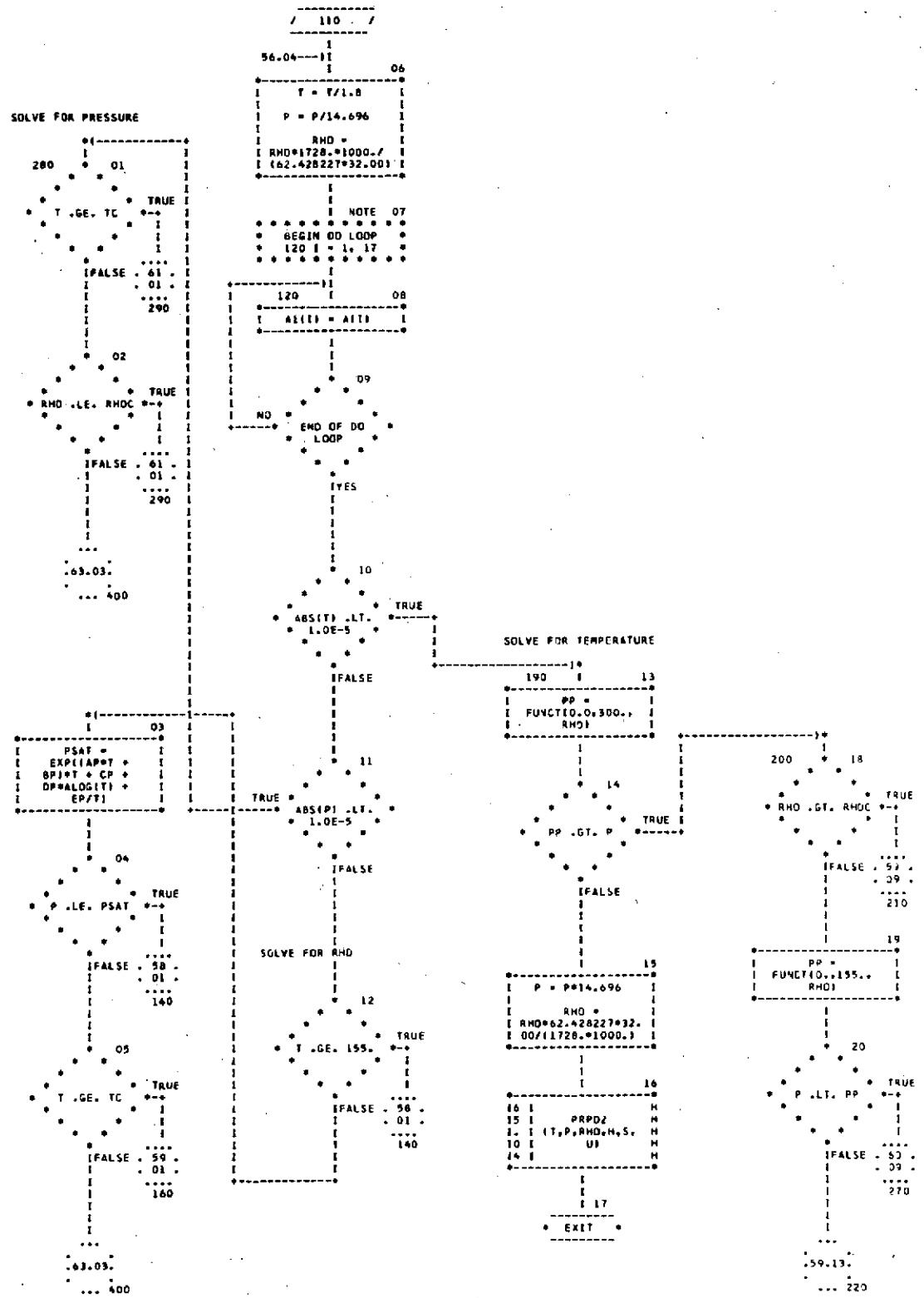

05/18/71 AUTOFLOW CHART SET - PAGE 58

CHART TITLE - SUBROUTINE PROFO2(T,P,RHO,H,S)

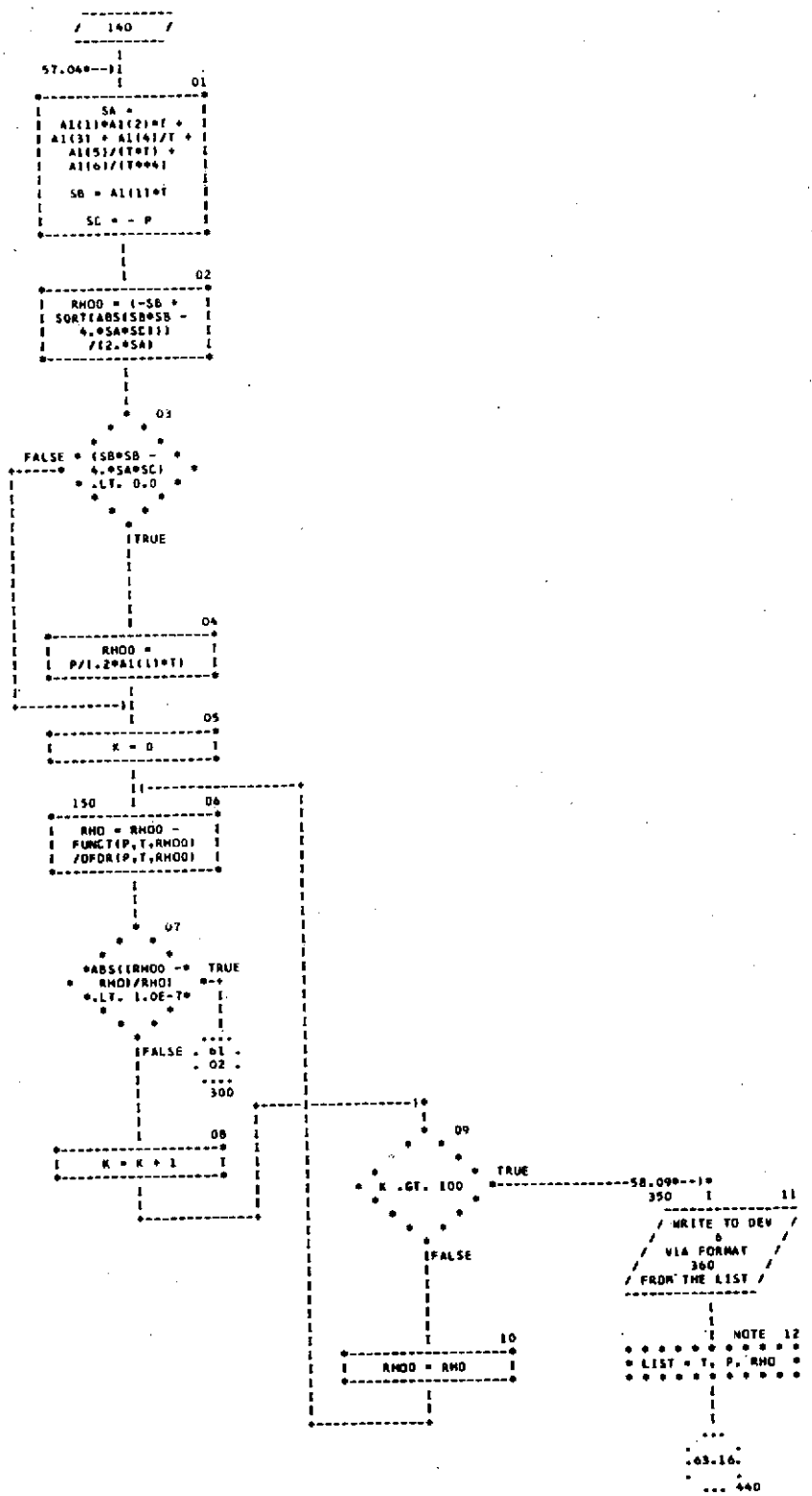

05/18/71 AUTOFLOW CHART SET - PAGE 59

CHART TITLE - SUBROUTINE PROFO2(T,P,RHO,H,S)

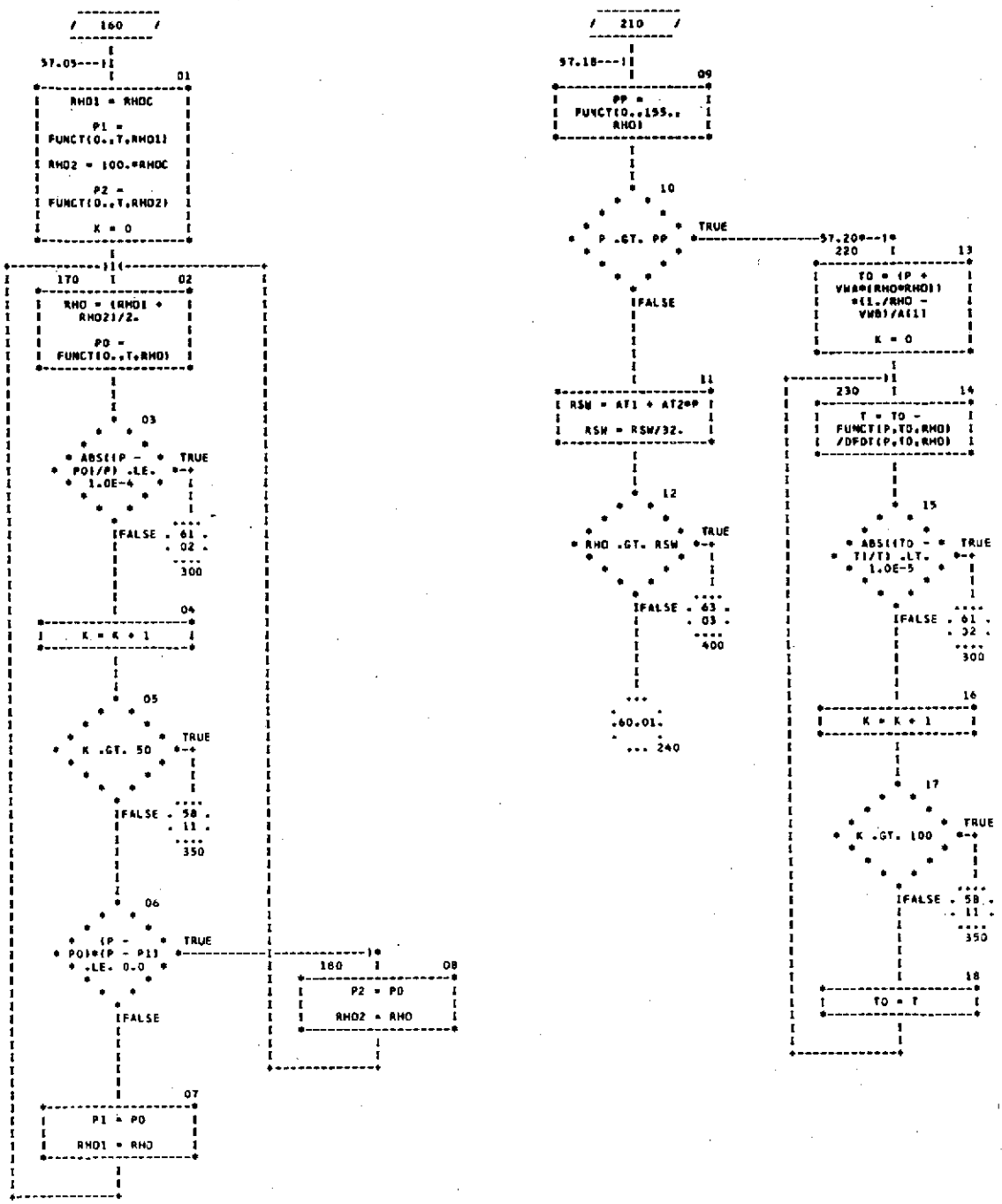

05/18/71 AUTOFLOW CHART SET - PAGE 60

CHART TITLE - SUBROUTINE PROFO2(T,P,RHO,H,S)

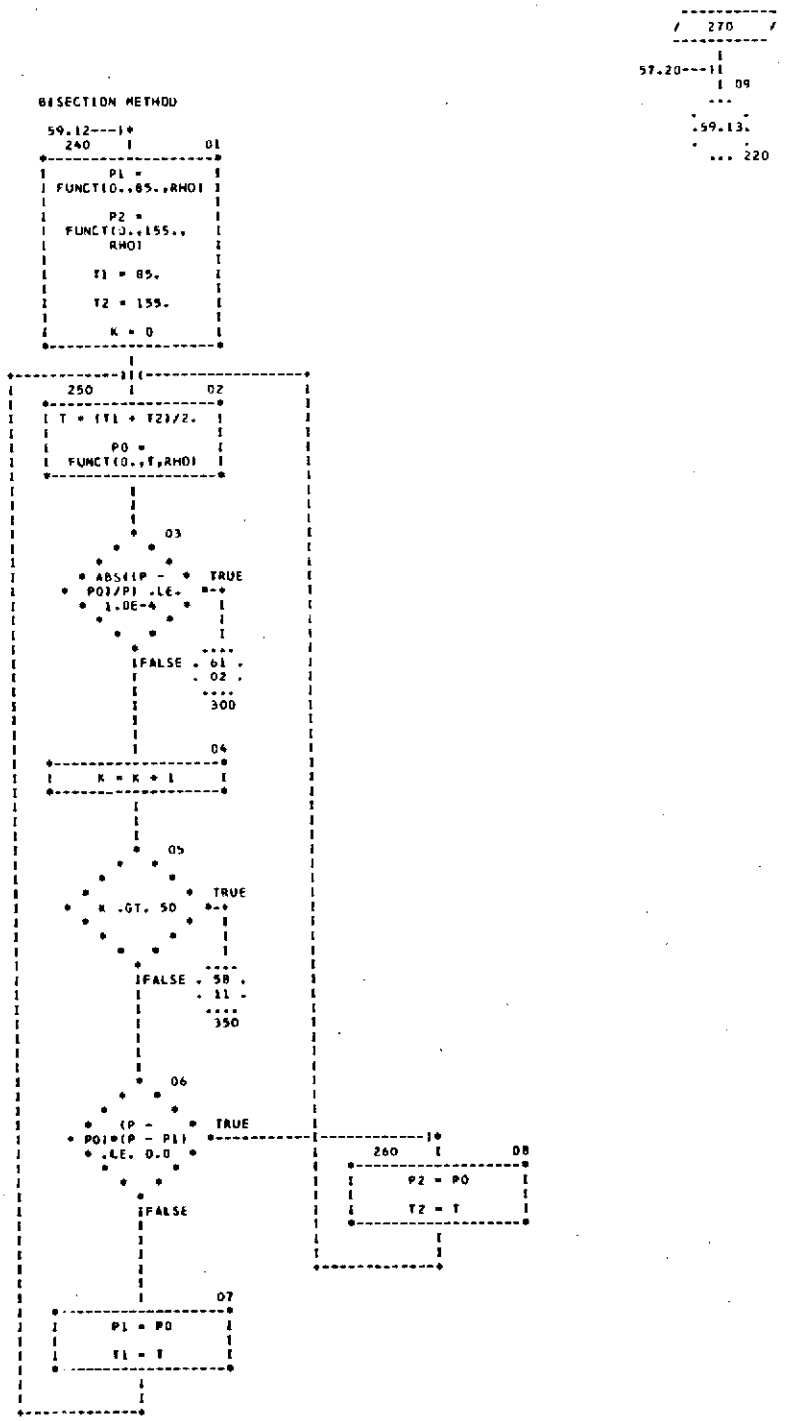

05/18/71 AUTOFLOW CHART SET - PAGE 61

CHART TITLE - SUBROUTINE PROFO2(T,P,RHO,H,S)

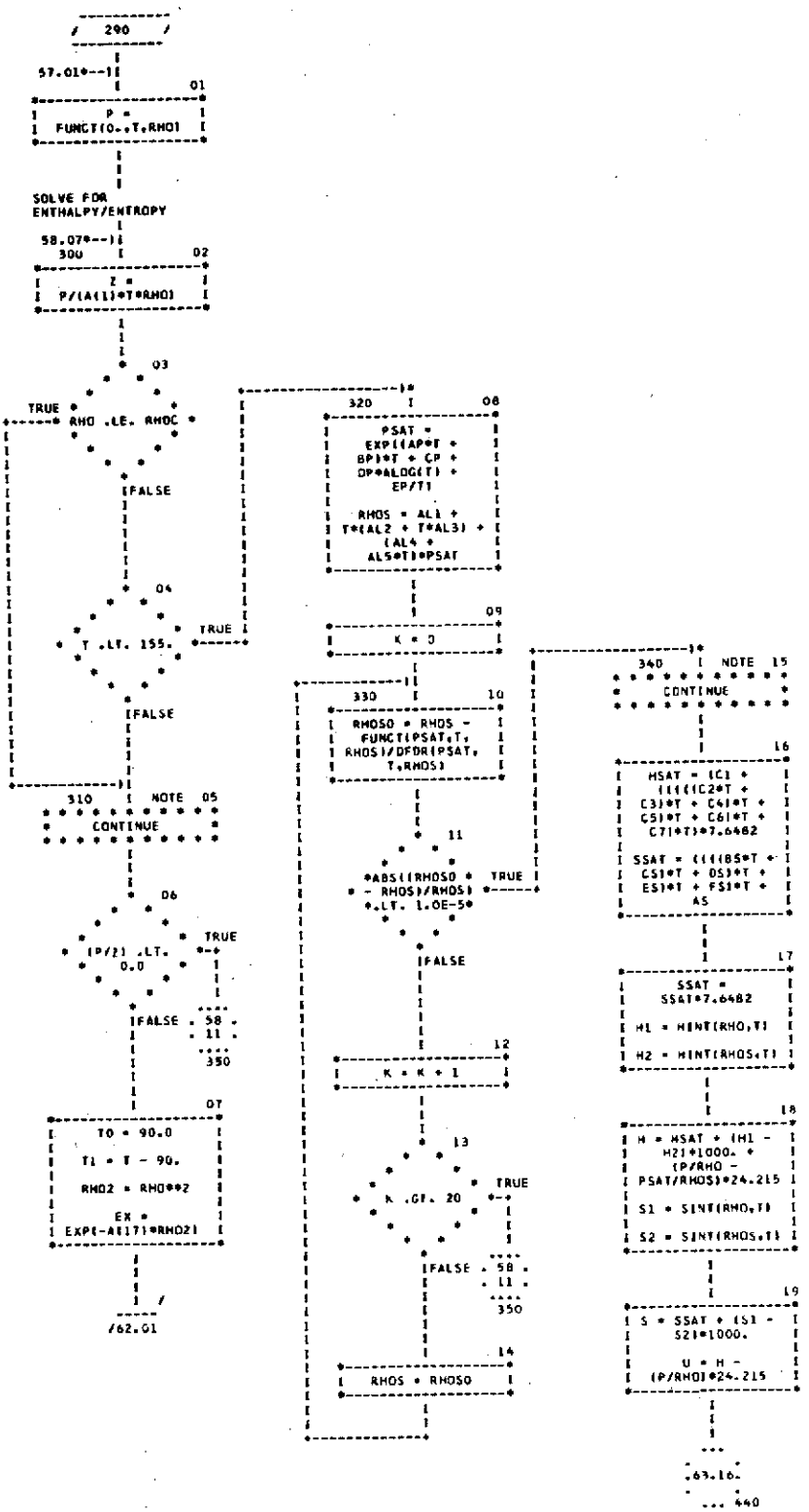

05/18/71 AUTOFLOW CHART SET - PAGE 62

CHART TITLE - SUBROUTINE PROFO2(T,P,RHO,H,S)

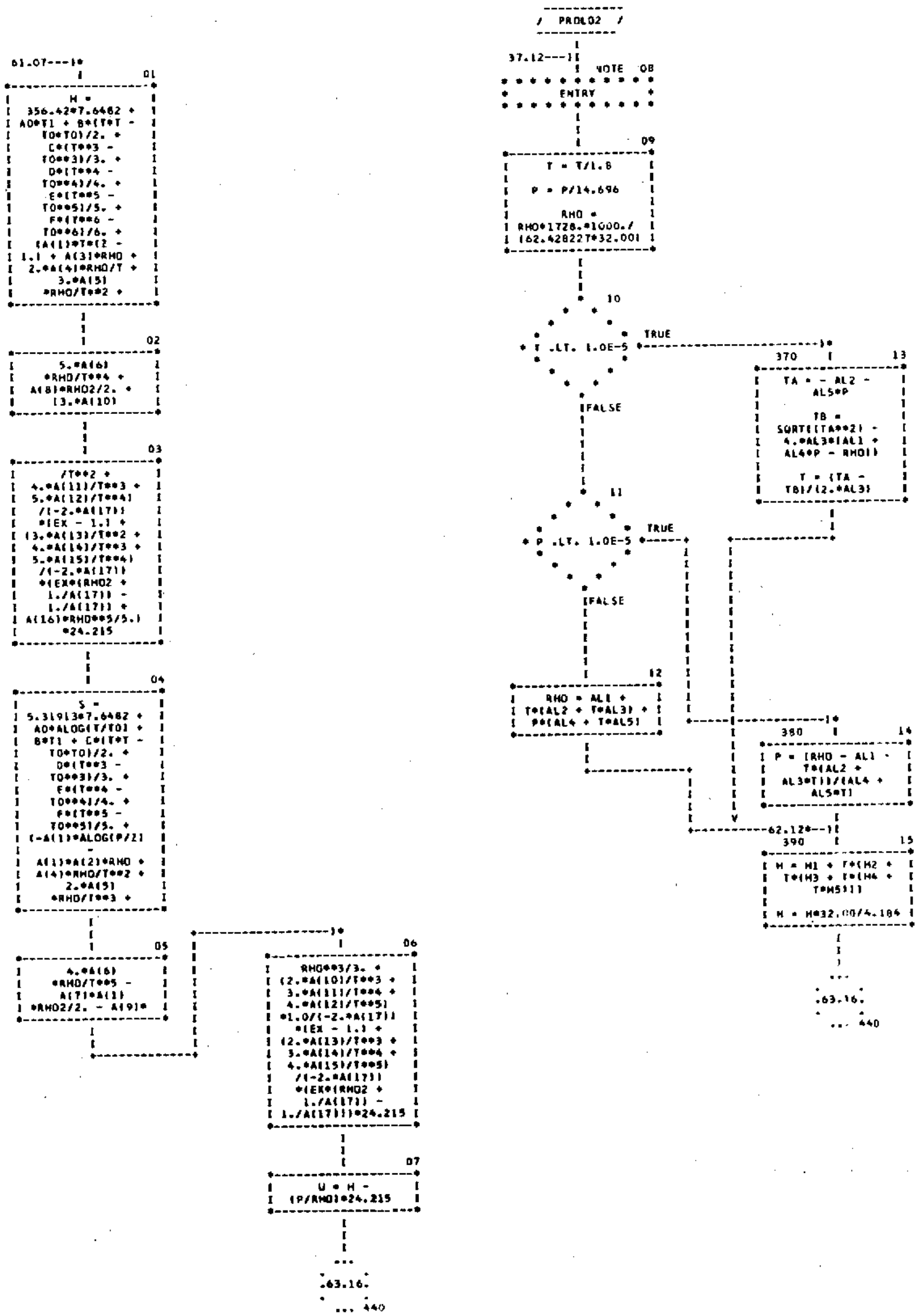

05/18/71 AUTOFLOW CHART SET - PAGE 63

CHART TITLE - SUBROUTINE PROF02(T,P,RHO,H,S)

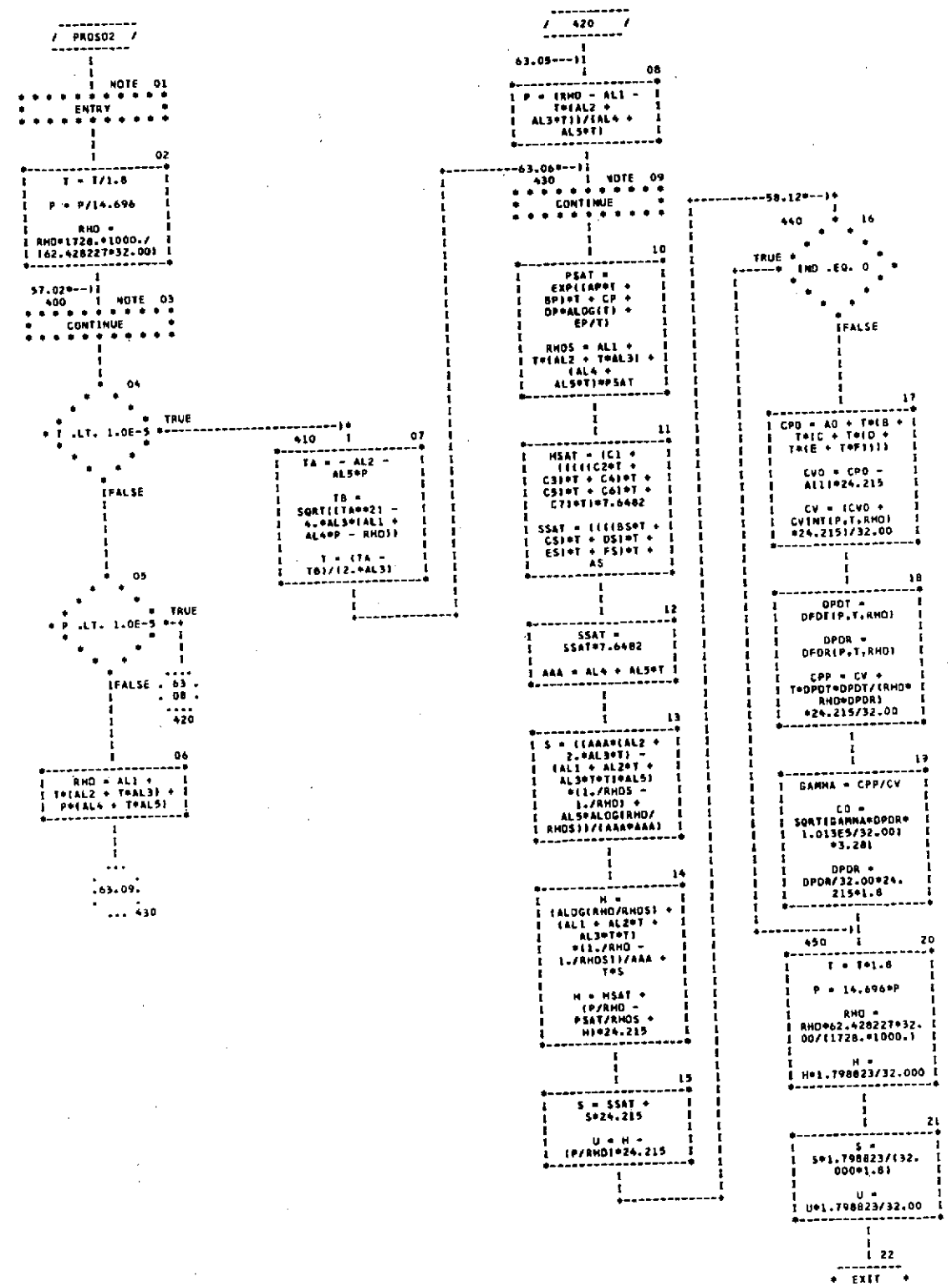

05/18/71 AUTOFLOW CHART SET - PAGE 64

CHART TITLE - NON-PROCEDURAL STATEMENTS

```
      DIMENSION A(17)
      COMMON/BLK1/A1(17)
      COMMON/PROPS/GAMMA,CPP,CV,CO,DPDR
      DATA A0,B,C,D,E,F/6.91726,-5.58681E-4,4.83537E-6,-3.70490E-9, 8.48
      173E-13,0.0/
      DATA (A1(I),I=1,17)/0.0820797,.036684115,-1.0091340,-59.581958, -39
      09.1633,12405065.,.87258515E-3,-.011885929,0.29165708E-5, 1247.356
      2,-61007.363,-4610517.8,-1.0379526,661.83734,-22051.320, .73071820
      E-6,.0037656816/
      DATA AL1,AL2,AL3,AL4,AL5/0.48926E02,-.15300,0.86752E-4, -0.17219E-
      2,0.91185E-4/,H1,H2,H3,H4,H5/634.733,-15.0716,.217438, -1.43307E-3
      ,3.34014E-6/
      DATA AP,BP,CP,DP,EP/.13750055E-3,-0.054998814,6.6564191,1.7023470,
      -945.12173/,PC,TC/49.735,85.00/,RHOC/13.5/
      DATA C1,C2,C3,C4,C5,C6,C7/ 892.824,1.34216E-9,-7.76702E-7, 1.84527
      E-4,-2.3049E-2,1.60151,-57.2877/
      DATA A5,B5,C5,D5,E5,F5/-2.42682,4.63751E-10,-2.23106E-7,4.21121E-5
      ,-3.95735E-3,.206805/
      DATA AT1,AT2/1164.87,.192944/
      DATA VWA,VWB/1.3645,.03184/
360   FORMAT (35H SUBROUTINE PROPO2 DID NOT CONVERGE,3E13.4/)
```

05/18/71 AUTOFLOW CHART SET - PAGE 65

CHART TITLE - SUBROUTINE PRPHOH(TEMP,PRESS,RHO,H,S,U)

```
      ----------
     /  PRPHOH  /
     ----------

          *

I/O UNITS= T(DEG R)
P(PSIA),RHO(LBM/CU
IN),H+U(BTU/LBM),
S(BTU/LBM DE
INTERNAL UNITS=T(DEG
K),P(ATM),
RHO(GR-MOLE/LITER),
H+U(CAL/GR-MOLE),
S(CAL/GR-MOLE DEG K)
THERMODYNAMIC
PROPERTIES OF WATER
VAPOR


CONSTANTS FOR WATER

          *
          I        01
*-------------------*
I     IGAS = 1      I
I                   I
I   NAME = 10HH2O   I
*-------------------*
          I
          I
          I
         ...
       .     .
       .66.05.
       .     .
         ... 100
```

```
      ----------
     /  PRPO2   /
     ----------
          I
 56.05*--)I
          I  NOTE  04
* * * * * * * * * * *
*       ENTRY       *
* * * * * * * * * * *
          I
          I
          I
THERMODYNAMIC
PROPERTIES OF OXYGEN
ABOVE 540 DEG R
          I
          I
          I
CONSTANTS FOR O2
          I
          I
          I        05
*-------------------*
I     IGAS = 3      I
I                   I
I   NAME = 10HO2    I
*-------------------*
          I
          I
          I
         ...
       .     .
       .66.05.
       .     .
         ... 100
```

```
      ----------
     /  PRPH2   /
     ----------
          I
 39.05*--)I
          I  NOTE  02
* * * * * * * * * * *
*       ENTRY       *
* * * * * * * * * * *
          I
          I
          I
THERMODYNAMIC
PROPERTIES OF
HYDROGEN ABOVE 540
DEG R
          I
          I
          I
CONSTANTS FOR H2
          I
          I
          I        03
*-------------------*
I     IGAS = 2      I
I                   I
I   NAME = 10HH2    I
*-------------------*
          I
          I
          I
         ...
       .     .
       .66.05.
       .     .
         ... 100
```

```
      ----------
     /  PROPHE  /
     ----------
          I
 37.02*--)I
          I  NOTE  06
* * * * * * * * * * *
*       ENTRY       *
* * * * * * * * * * *
          I
          I
          I
THERMODYNAMIC
PROPERTIES FOR HELIUM
          I
          I
          I
CONSTANTS FOR HE
          I
          I
          I        07
*-------------------*
I     IGAS = 4      I
I                   I
I NAME = 10HHELIUM  I
*-------------------*
          I
          I
          I
         ...
       .     .
       .66.05.
       .     .
         ... 100
```

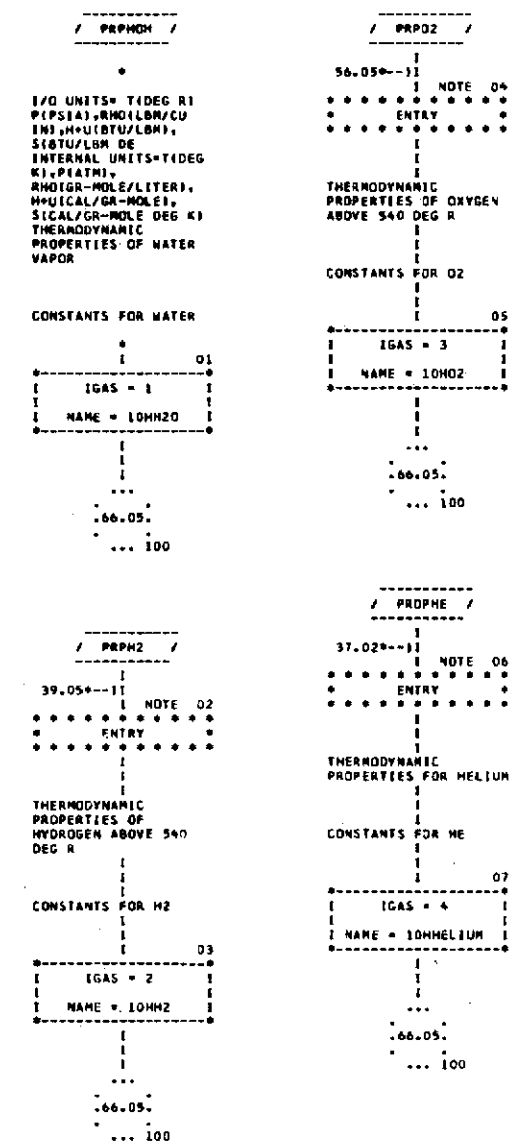

05/18/71 AUTOFLOW CHART SET - PAGE 66

CHART TITLE - SUBROUTINE PRPHOH(TEMP,PRESS,RHO,H,S,U)

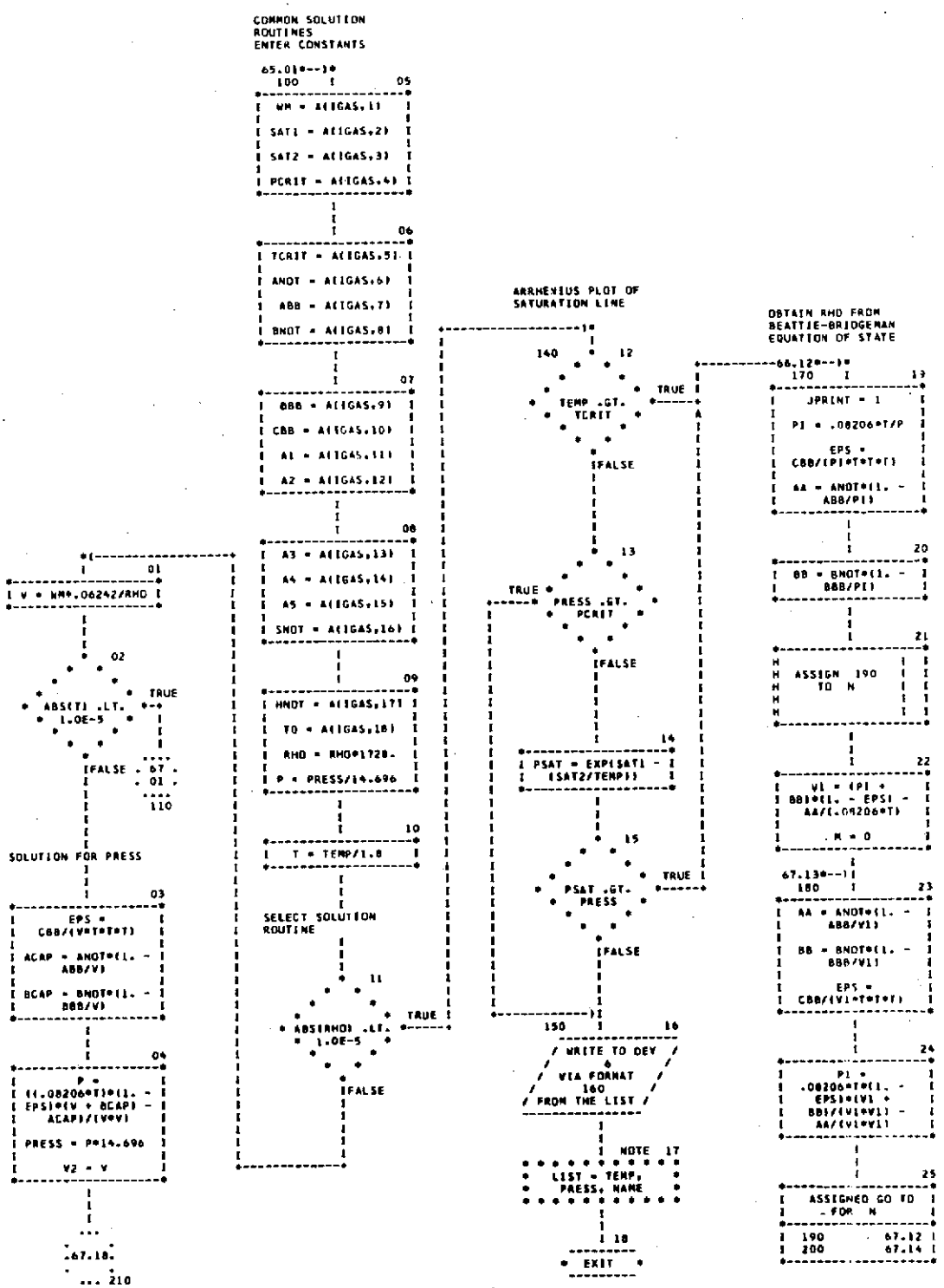

09/18/71 AUTOFLOW CHART SET - PAGE 67

CHART TITLE - SUBROUTINE PRPHON(TEMP,PRESS,RHO,H,S,U)

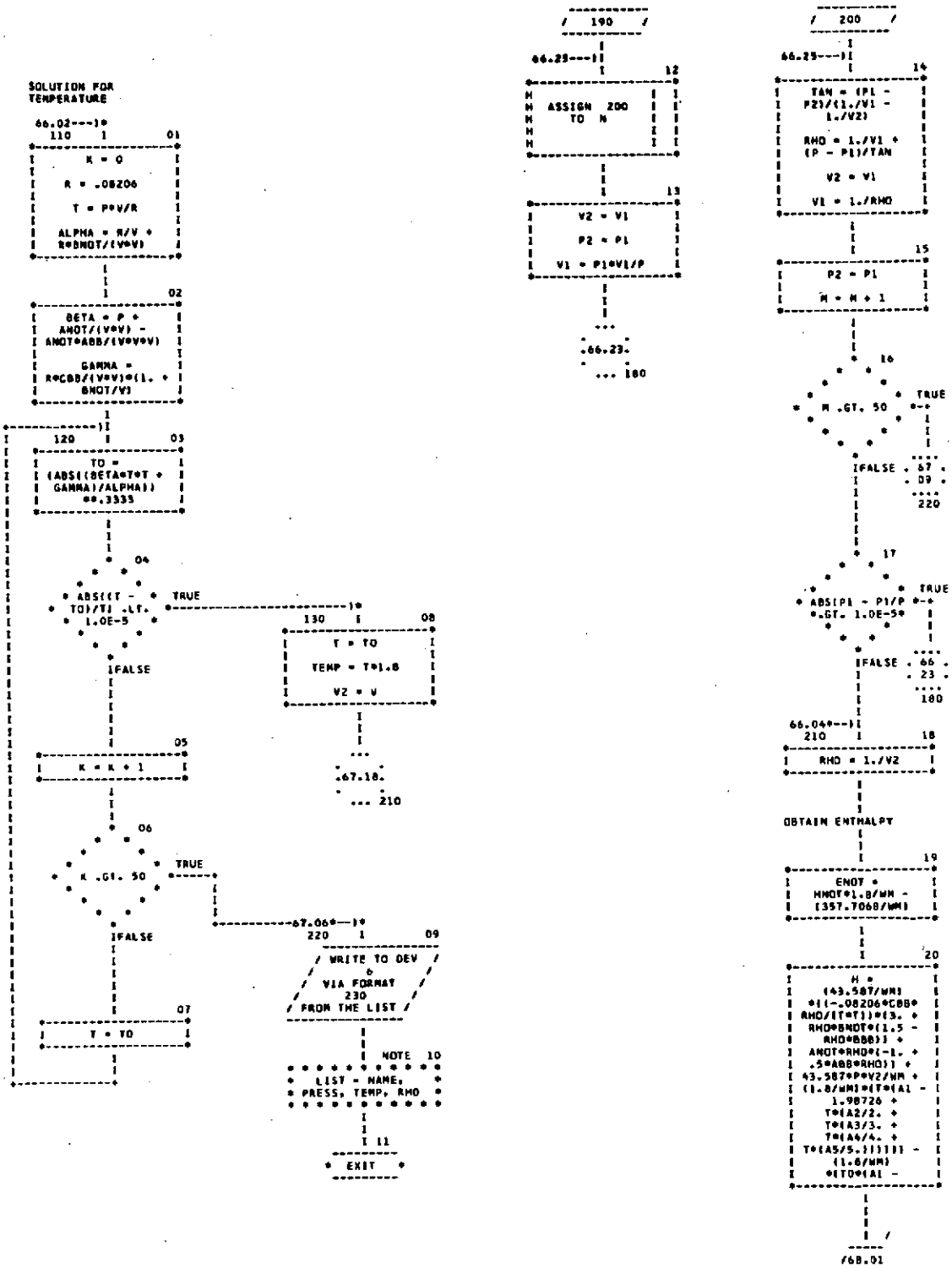

05/18/71 AUTOFLOW CHART SET - PAGE 68

CHART TITLE - SUBROUTINE PRPHOH(TEMP,PRESS,RHO,H,S,U)

```
67.20---I*
        I          01
*-------------------*
I     1.98726 +     I
I  TO*(A2/2. + TO*  I
I     (A3/3. +      I
I    TO*(A4/4. +    I
I  TO*A5/5.))))) +  I
I       ENOT        I
*-------------------*
        I
        I
        I
OBTAIN ENTROPY
        I
        I
        I          02
*-------------------*
I    T3 = T*T*T     I
*-------------------*
        I
        I
        I          03
*-------------------*
I        S =        I
I    (43.587/WM)    I
I  *((-.08206*CBB*  I
I RHO/(T3))*(-2. -  I
I  BNOT*RHO*(1. -   I
I 2.*BBB/(3.*V2)))  I
I        +          I
I .08206*BNOT*RHO*  I
I      (-1. +       I
I  BBB*RHO/2.)) -   I
I 43.587/WM*.08206* I
I ALOG(.08206*T/V2) I
I        +          I
I  1.8/WM*(A1*ALOG  I
I (T/TO) + T*(A2 +  I
I    T*(A3/2. +     I
I    T*(A4/3. +     I
*-------------------*
        I
        I
        I          04
*-------------------*
I   T*A5/4.))) -    I
I     TO*(A2 +      I
I   TO*(A3/2. + T   I
I    O*(A4/3. +     I
I   TO*A5/4.)))     I
*-------------------*
        I
        I
        I          05
*-------------------*
I S = S/1.8 + SNOT  I
*-------------------*
        I
        I
        I
CONSTANT VOLUME
SPECIFIC HEAT
        I
        I
        I          06
*-------------------*
I     CVTNOT =      I
I   (1./WM)*(A1 -   I
I 1.98726 + T*(A2 + I
I  T*(A3 + T*(A4 +  I
I     T*A5))))      I
*-------------------*
        I
        I
        I          07
*-------------------*
I   CV = CVTNOT +   I
I 11.922*CBB/(WM*T* I
I   T*T*V2)*(1. +   I
I    BNOT*(1. -     I
I   BBB*.666/V2)    I
I     /(2.*V2))     I
*-------------------*
        I
        I
        I
CONSTANT PRESSURE
SPECIFIC HEAT
        I
        I
        I
        +-------------+
```

```
+-------------------I*
I                   I          09
I          *-------------------*
I          I    PCP = 1. +     I
I          I 2.*CBB/(V2*T*T*T) I
I          I      *(1. +       I
I          I   BNOT/V2*(1. -   I
I          I    BBB/V2)) +     I
I          I   BNOT/V2*(1. -   I
I          I      BBB/V2)      I
I          *-------------------*
I                   I
I                   I
I                   I          10
I          *-------------------*
I          I       PCP =       I
I          I  (-1.98701/WM)    I
I          I  *PCP*PCP/(-1. +  I
I          I RHO*(CBB/(T*T*T)  I
I          I      *(2. +       I
I          I  BNOT*RHO*(3. -   I
I          I  4.*BBB*RHO)) +   I
I          I  ANOT/(.08206*T)  I
I          I      *(2. -       I
I          I   3.*ABB*RHO) +   I
I          I    BNOT*(-2. +    I
I          I   3.*BBB*RHO)))   I
I          *-------------------*
I                   I
I                   I
I                   I          11
I          *-------------------*
I          I   CP = CV + PCP   I
I          I                   I
I          I   GAMMA = CP/CV   I
I          *-------------------*
I                   I
I                   I
I                   I          12
I          *-------------------*
I          I      DPDR =       I
I          I .08206*T*((-RHO*  I
I          I   CBB/(T*T*T))    I
I          I      *(2. +       I
I          I   3.*BNOT*RHO -   I
I          I 4.*BNOT*RHO*RHO*  I
I          I    BBB) + 1. +    I
I          I   2.*BNOT*RHO -   I
I          I 3.*BNOT*RHO*RHO*  I
I          I      BBB) +       I
I          I ANOT*RHO*(3.*RHO* I
I          I     ABB - 2.)     I
I          *-------------------*
I                   I
I                   I
I                   I          13
I          *-------------------*
I          I       CO =        I
I          I SQRT(GAMMA*DPDR*  I
I          I 1.013E5/WM)*3.281 I
I          I                   I
I          I      DPDR =       I
I          I DPDR/WM*24.215*1. I
I          I         8         I
I          I                   I
I          I       RHO =       I
I          I   RHO*WM*.06242   I
I          *-------------------*
I                   I
I                   I
I                   I          14
I          *-------------------*
I          I      U = H -      I
I          I  PRESS/RHO*144./  I
I          I       777.5       I
I          I                   I
I          I  RHO = RHO/1728.  I
I          *-------------------*
I                   I
I                   I
I                   I 15
I                 ---------
I                *  EXIT   *
I                 ---------
```

CHART TITLE - NON-PROCEDURAL STATEMENTS

```
      COMMON/PROPS/GAMMA,CP,CV,CO,DPDR
      DIMENSION A(4,181),B(72)
      EQUIVALENCE (A,B)
      DATA (B(I),I=1,72,4)/18.016,15.39,8.53E3,3209.,1165.,5.0,.0706, .0
      60,.1042,1.0E7,8.04974475,-1.50957077E-3,5.89708921E-6, -3.1097462
      3E-9,5.33183423E-13,0.,786.1,100./
      DATA (B(I),I=2,72,4)/2.016,9.7389,2.6810E2,190.75,59.72,.1975, -.0
      0506,.02096,-.04359,.0504E+4,4.81154,9.88900E-3,-1.49773E-5, 9.513
      16E-9,-2.04376E-12,17.455,2801.5,540./
      DATA (B(I),I=3,72,4)/32.00,12.06750,1.52254E3,736.9,278.59, 1.4911
      ,.02562,.04624,.004208,4.80E+4,6.91726,-5.58781E-4, 4.83537E-6,-3.
      70490E-9,8.48173E-13,1.665,5067.5,540./
      DATA (B(I),I=4,72,4)/4.003,6.96448,3.233E1,33.34,9.349,.0216, .059
      84,.01400,0.0,.0040E+4,4.9681,0.,0.,0.,0.,0.,496.8,100./
160   FORMAT(1H0,9(1H*),*  PROPERTIES ARE IN LIQUID REGION AT TEMP =*,
       G12.5,* PRESS =*,G12.5,* FOR *,A10,9(1H*))
230   FORMAT (1H0,6(1H*),A10,39HPROPERTY SUBROUTINE DID NOT CONVERGE,P=,
      F10.4,3H T=,F10.4,5H RHO=,F10.4,6(1H*)/)
```

05/18/71 AUTOFLOW CHART SET - PAGE 70

CHART TITLE - FUNCTION CVINT(P,T,RHO)

```
VERSION 24 JULY 70

          *
          I          01
*-------------------*
I   T2 = 1./(1*T)   I
I                   I
I     T3 = T2/T     I
I                   I
I     T4 = T3/T     I
I                   I
I     T5 = T4/T     I
I                   I
I       EX =        I
I    EXP(-A(17)     I
I     *RHO*RHO)     I
I    /(2.*A(17))    I
*-------------------*
          I
          I
          I          02
*-------------------*
I       INT = -     I
I   (2.*A(4)*T2 +   I
I   6.*A(5)*T3 +    I
I   20.*A(6)*T5)    I
I      *RHO +       I
I  (6.*A(10)*T3 +   I
I  12.*A(11)*T4 +   I
I   20.*A(12)*T5)   I
I      *(EX -       I
I    .5/A(17)) +    I
I  (6.*A(13)*T3 +   I
I  12.*A(14)*T4 +   I
I   20.*A(15)*T5)   I
I   *(EX*(RHO*RHO +  I
I    1./A(17)) -    I
I .5/(A(17)*A(17))) I
*-------------------*
          I
          I
          I          03
*-------------------*
I    CVINT = INT    I
*-------------------*
          I
          I
          I 04
      ---------
     *  EXIT   *
      ---------
```

05/18/71 AUTOFLOW CHART SET - PAGE 71

CHART TITLE - NON-PROCEDURAL STATEMENTS

```
COMMON/BLK1/A(17)
REAL INT
```

05/18/71 AUTOFLOW CHART SET - PAGE 72

CHART TITLE - SUBROUTINE HSAT(P,T)

```
          ------------
         /   HSAT   /
         ------------
              I
   07.05---)I
              I          01
   *-------------------*
   I   T = 20.9703 +    I
   I    0.06039*P +     I
   I  5.46077*ALOG(P)   I
   *-------------------*
              I
              I
              I 02
          ---------
         *  EXIT   *
          ---------
```

05/18/71 AUTOFLOW CHART SET - PAGE 73

CHART TITLE - SUBROUTINE OSAT(P,T)

```
      ----------
     /   OSAT   /
     ----------
          |
 07,06---)|
          |          02
+-------------------+
|   T = 126.386 +   |
|   0.213792*P +    |
|  12.4675*ALOG(P)  |
+-------------------+
          |
          |
          | 03
      ---------
     *  EXIT   *
      ---------
```