68-FM-63

NATIONAL AERONAUTICS AND SPACE ADMINISTRATION

MSC INTERNAL NOTE NO. 68-FM-63

March 13, 1968

APOLLO 6 (A-2 OR AS-502/CSM-020) SPACECRAFT OPERATIONAL TRAJECTORY VOLUME II - TRAJECTORY LISTING

By William J. Bennett and Ronny H. Moore,
Orbital Mission Analysis Branch,
and Jon C. Harpold, Lunar Mission Analysis Branch

BELLCOMM, INC.
TECHNICAL LIBRARY
1100 - 17TH STREET, N. W.
WASHINGTON, D. C. 20036
MAY 16 1968

MISSION PLANNING AND ANALYSIS DIVISION

MANNED SPACECRAFT CENTER
HOUSTON, TEXAS

(NASA-TM-X-72055) APOLLO 6 (A-2 OR AS-502/CSM-020) SPACECRAFT OPERATIONAL TRAJECTORY. VOLUME 2: TRAJECTORY LISTING (NASA) 372 p

N74-77033

Unclas
00/99 17350

RECEIVED
NOV 1974

MSC INTERNAL NOTE NO. 68-FM-63

PROJECT APOLLO

APOLLO 6 (A-2 OR AS-502/CSM-020/LTA-2R) SPACECRAFT OPERATIONAL TRAJECTORY VOLUME II - TRAJECTORY LISTING

By William J. Bennett and Ronny H. Moore, Orbital Mission Analysis Branch, and Jon C. Harpold, Lunar Mission Analysis Branch

March 13, 1968

MISSION PLANNING AND ANALYSIS DIVISION
NATIONAL AERONAUTICS AND SPACE ADMINISTRATION
MANNED SPACECRAFT CENTER
HOUSTON, TEXAS

Approved: Edgar C. Lineberry
Edgar C. Lineberry, Chief
Orbital Mission Analysis Branch

Approved: M P Frank
M. P. Frank III, Chief
Lunar Mission Analysis Branch

Approved: Carl R. Huss for
John P. Mayer, Chief
Mission Planning and Analysis Division

CONTENTS

Section		Page
1.0	SUMMARY AND INTRODUCTION	1
2.0	SUMMARY OF INPUT DATA	2
	2.1 Saturn V Launch Vehicle	2
	2.2 Spacecraft (CSM-020)	2
	2.2.1 Weight and propulsion characteristics	2
	2.2.2 Guidance logic and constants	2
	2.2.3 Entry aerodynamics	3
	2.3 MSFN Ground Stations	3
	2.4 Earth Constants and Conversion Factors	3
3.0	EXPLANATION OF TRAJECTORY LISTING	4
	3.1 Spacecraft Reference Coordinate Systems	4
	3.1.1 Spacecraft body coordinate system (X_B, Y_B, Z_B)	4
	3.1.2 Launch site inertial attitude reference system (X_I, Y_I, Z_I)	4
	3.1.3 Earth-referenced rotating attitude coordinate system (X_R, Y_R, Z_R)	4
	3.1.4 Platform coordinate system (X_P, Y_P, Z_P)	4
	3.1.5 Navigation base coordinate system (X_{NB}, Y_{NB}, Z_{NB})	5
	3.1.6 Spacecraft look angles (ϕ, θ)	5
	3.2 Table Headings	5
	3.2.1 Appendix A - earth orbit	5
	3.2.2 Appendix B - reentry	9
	REFERENCES	36
	APPENDIX A - EARTH ORBITAL PHASE	A-1
	APPENDIX B - REENTRY PHASE	B-1

TABLES

Table		Page
1-I	APOLLO 6 MISSION/DISCRETE EVENTS SUMMARY	
	(a) Saturn V operations.	13
	(b) Spacecraft operations.	14
2-I	APOLLO 6 LAUNCH VEHICLE WEIGHT SUMMARY	15
2-II	SPACECRAFT WEIGHT SUMMARY	18
2-III	APOLLO SM PROPULSION PERFORMANCE SUMMARY	19
2-IV	CRITERIA FOR SERVICE MODULE RCS PROPELLANT EXPENDITURES	20
2-V	CROSS-PRODUCT STEERING GUIDANCE CONSTANTS.	21
2-VI	ENTRY GUIDANCE CONSTANTS	
	(a) Constants and gains.	23
	(b) Conversion factors and scaling constants	25
2-VII	APOLLO COMMAND MODULE - PARACHUTE DESCENT EVENTS AND AERODYNAMICS	26

FIGURES

Figure		Page
2-1	Saturn V reference dimensions.	27
2-2	Command and service module reference dimensions. . .	28
2-3	Apollo 6 aerodynamic coefficients at trim angle of attack as a function of Mach number	29
2-4	Spacecraft look angles	30
3-1	Spacecraft body coordinate system.	31
3-2	Launch site inertial attitude reference coordinate system	32
3-3	Earth reference rotating attitude reference coordinate system.	33
3-4	Platform coordinate system	34
3-5	Navigation base coordinate system relative to spacecraft body coordinate system.	35

APOLLO 6 (A-2 OR AS-502/CSM-020/LTA-2R)

SPACECRAFT OPERATIONAL TRAJECTORY

VOLUME II - TRAJECTORY LISTING

By William J. Bennett, and Ronny H. Moore, OMAB

and Jon C. Harpold, LMAB

1.0 SUMMARY AND INTRODUCTION

This volume, Volume II, of the Apollo 6 (A-2 or AS-502/CSM-020) Spacecraft Operational Trajectory presents the trajectory listing of the nominal spacecraft mission profile and all data specifications necessary to describe the spacecraft and the mission simulation. The trajectory listing presents data from the second S-IVB translunar orbit injection to CM splash. Trajectory data for those events occurring prior to waiting orbit injection are available in the Marshall Space Flight Center launch vehicle operational trajectory (ref. 1). Discrete events for the mission are summarized in table 1-I.

Section 2 of this volume presents the pertinent spacecraft data specifications and the input data used in the generation of the trajectory profile. The coordinate system definitions and a brief explanation of the table headings in the listing are given in section 3.

The trajectory data are presented in the appendices. Appendix A contains all data pertaining to the earth orbit, i.e., from translunar orbit injection to atmospheric entry. Appendix B presents the entry phase from 400 000-ft altitude to command module splash.

An initial print block for the launch pad at lift-off is included in each table in appendix A. The trajectory state of S-IVB translunar injection orbit is then presented. This initial print block is presented for launch site reference.

Volume I (ref. 2) of this report summarizes the mission's objectives, the mission guidelines, and provides a detailed description of the nominal mission profile.

Volume III (ref. 3) presents a detailed tracking time history for the MSFN ground stations available for the Apollo 6 Mission. The consumables analysis report is presented in Volume IV (ref. 4).

2.0 SUMMARY OF INPUT DATA

The data presented in this section were obtained from references 5 through 9. These data include all input necessary to describe the spacecraft, spacecraft performance, and pertinent communications specifications for the MSFN stations available for the Apollo 6 Mission. These data form the basis for the spacecraft trajectory listing presented in the appendices.

2.1 Saturn V Launch Vehicle

The configuration of the Saturn V LV (AS-502) is shown in figure 2-1. The Saturn V vehicle is composed of three major stages with a payload. The S-IC, S-II and S-IVB are, respectively, the first, second, and third stages of the Saturn V vehicle. A detailed description of the Saturn V LV is presented in reference 1. The Saturn V vehicle weight summary is presented in table 2-I.

2.2 Spacecraft (CSM-020)

The Apollo spacecraft to be injected into a translunar orbit by the Saturn V LV consists of CSM-020, LM Test Article 2R (LTA-2R), and an operational spacecraft LM adapter (SLA). The initial state vector for the spacecraft trajectory simulation was the conditions at S-IVB translunar injection (10 seconds after second S-IVB cutoff). These data were obtained from the launch vehicle operational trajectory (ref. 1).

2.2.1 Weight and propulsion characteristics.- The CSM weight characteristics were obtained from references 5 through 7 and are summarized in table 2-II. The SPS engine steady state of performance was simulated according to the data presented in table 2-III. The SMRCS performance was simulated using the data presented in table 2-IV.

2.2.2 Guidance logic and constants.- The cross-product steering guidance logic of reference 8 was used in the simulation of this trajectory profile. The guidance constants used during the SPS burn maneuvers and the atmospheric entry phase are presented in tables 2-V and 2-VI, respectively. Definition of the parameters and symbols used in these tables are consistent with the MIT nomenclature in the above reference.

The two SPS burn maneuvers were simulated with a thrust tail-off bias on the time-to-go calculation in the cross-product steering logic. From the thrust tail-off profile presented in reference 7, a bias of 0.389 was calculated to be near optimum to account for the thrust tail-off impulse.

This value, which was used in the trajectory simulation, allows the guidance scheme to more accurately achieve the target ellipse.

2.2.3 Entry aerodynamics.- The CM entry aerodynamics are presented in figure 2-3 as a function of Mach number. The aerodynamic coefficients were derived from the data of reference 7. Parachute drag data for the drogue and main chute phases were also obtained from reference 7 and are presented in table 2-VI.

2.3 MSFN Ground Stations

The MSFN stations available for the support of the Apollo 6 Mission, their tracking capabilities, and site locations were obtained from reference 6. The station coordinates are based upon the Fischer ellipsoid earth model, reference 8. This model is characterized as follows:

Earth equatorial radius, a, m.	6 378 166.000
Earth polar radius, b, m	6 356 784.284
Flattening ratio, f.	1/298.3

2.4 Earth Constants and Conversion Factors

The earth constants used are as follows:

Earth rotational rate,	rad/sec	$0.729211505 \times 10^{-4}$
	rad/min	$4.37526904 \times 10^{-3}$
	deg/sec	$4.17807416 \times 10^{-3}$
Earth equatorial radius, ft.		$2.092574147 \times 10^{7}$
Average earth radius, ft		2.09098410×10^{7}
Gravitational parameter (μ)	ft^3/sec^2.	$1.407653916 \times 10^{16}$
	km^3/sec^2.	3.986032×10^{5}
	er^3/min^2.	$5.53039344 \times 10^{-3}$
	er^3/day^2.	$11.46782384 \times 10^{3}$
Coefficients of potential harmonics		
J-term (second harmonic)		1.62345×10^{-3}
H-term (third harmonic).		-0.575×10^{-5}
D-term (fourth harmonic)		0.7875×10^{-5}
Earth flattening ratio (f)		$3.35232987 \times 10^{-3}$

The following conversions factors were used:

Kilometers per feet, km/ft	0.3048×10^{-3}
Kilometers per n. mi., km/n. mi.	1.852
Feet per n. mi., ft/n. mi.	6076.115485
Weight-to-mass ratio, lb/slug.	32.174049

Mass-to-weight ratio, slug/lb.	0.031080950
Feet per earth equatorial radius, ft	2.092574147×10^7
Nautical mile per earth equatorial radius, n. mi./er.	3443.933585

3.0 EXPLANATION OF TRAJECTORY LISTING

3.1 Spacecraft Reference Coordinate Systems

The basic coordinate systems used in the generation of the spacecraft operational trajectory are illustrated in figures 3-1 to 3-5 and are explained below.

3.1.1 Spacecraft body coordinate system (X_B, Y_B, Z_B).- This right-handed, orthogonal coordinate system, illustrated in figure 3-1, has its origin at the current vehicle position. The positive X_B axis extends through the apex of the CSM. The Z_B axis is normal to X_B, and its positive direction extends in the direction of the foot end of the astronaut's couches. The positive Y_B axis completes the right-handed coordinate system.

3.1.2 Launch site inertial attitude reference system (X_I, Y_I, Z_I).- This inertial right-handed, orthogonal coordinate system (fig. 3.2) coincides with the launch site at the instant of lift-off. The positive X_I axis extends down-range in the direction of the launch azimuth and lies in the local horizontal plane. The positive Z_I axis extends upward along the reference ellipsoid normal passing through the launch site. The positive Y_I completes the right-handed coordinate system.

3.1.3 Earth-referenced rotating attitude coordinate system (X_R, Y_R, Z_R).- This right-handed, orthogonal coordinate system (fig. 3.3) coincides with the current subvehicle point. The positive Z_R axis extends downward along the reference ellipsoid normal passing through the subvehicle point. The positive X_R axis extends north along the local meridian and is normal to Z_R. The positive Y_R axis completes the right-handed coordinate system.

3.1.4 Platform coordinate system (X_P, Y_P, Z_P).- This right-handed, orthogonal coordinate system (fig. 3.4) coincides with the launch site at the instant of lift-off. The positive X_P axis extends upward along the reference ellipsoid normal passing through the launch site. The positive Z_P axis extends down-range in the direction of the flight azimuth and lies in the local horizontal plane. The positive Y_P completes the right-handed

coordinate system. This system does not rotate with the earth, but does move with the earth with respect to inertial space.

3.1.5 Navigation base coordinate system (X_{NB}, Y_{NB}, Z_{NB}).- This right-handed, orthogonal coordinate system (fig. 3.5) has its origin coinciding with the origin of the spacecraft body coordinate system at all times. The positive X_{NB} axis makes a 33° angle with the positive X_B axis, has a component lying along the negative Z_B axis, and lies in the X_B-Z_B plane. The positive Z_{NB} axis makes a 33° angle with the positive Z_B axis, has a component lying along the positive X_B axis, and lies in X_B-Z_B plane.

3.1.6 Spacecraft look angles (ϕ, θ).- The spacecraft orientation with respect to the sun or to the radar vector is illustrated in figure 2-4 and is defined by the following two angles:

1. Theta — The angle between the spacecraft roll axis ($+X_B$ axis) and the spacecraft-to-sun or radar vector.

2. Phi — The angle between the spacecraft negative yaw axis ($-Z_B$ axis) and the spacecraft-to-sun or radar vector projected on the roll plane (Y_B-Z_B plane). From the rear of the spacecraft, this angle is measured positive clockwise from the negative yaw axis.

3.2 Table Headings

3.2.1 Appendix A - earth orbit.- A brief description of each of the table headings in appendix A follows:

Table I

Time	Ground elapsed time from lift-off.
Geodetic latitude	Angle between equatorial plane and the vector normal to the ellipsoid at the subsatellite point.
Longitude	The angular distance from the Greenwich meridian to the meridian of the subsatellite point measured in the equatorial plane. Longitude is positive if measured in an easterly direction from the Greenwich meridian.
Altitude	Distance from vehicle to subsatellite point.
Radius	Length of geocentric radius vector.

Table II

Time	Ground elapsed time from lift-off
Inertial velocity	Velocity referenced to a space-fixed system.
Inertial flight-path angle	Angle between the local horizontal plane and the inertial velocity vector.
Inertial azimuth	Angle measured from north to the projection of the inertial velocity vector on the local horizontal plane.
Relative velocity	Velocity relative to a rotating earth.
Relative flight-path angle	Angle between the local horizontal plane and the relative velocity vector.
Relative azimuth	Angle measured from north to the projection of the relative velocity vector on the local horizontal plane.

Table III

Time	Ground elapsed time from lift-off.
X, Y, Z	Position components in an earth-centered inertial (ECI) system with the +X-axis through the vernal equinox, the +Z-axis along the earth's mean rotational axis, and the +Y-axis completing a right-handed coordinate system.
DX, DY, DZ	Velocity components in the ECI system.

Table IV

Time	Ground elapsed time from lift-off.
Space fixed attitudes (inertial pitch, yaw, roll)	The attitude of the spacecraft body coordinate system (fig. 3-1) relative to the launch site inertial attitude reference coordinate system (fig. 3-2).

Earth relative (pitch, yaw, and roll)	The attitude of the spacecraft body coordinate system (fig. 3-1) relative to the earth rotating attitude reference coordinate system (fig. 3-3). The zero yaw, pitch, and roll position occurs when X_B is colinear with X_R, but X_B and Z_B are 180° from Y_R and Z_R, respectively.
IMU gimbal angles	The attitude of the navigation base coordinate system (fig. 3-5) relative to the platform coordinate system (fig. 3-4).

Table V

Time	Ground elapsed time from lift-off.
Angle of attack	Angle of attack in the pitch plane
Angle of sideslip	Angle of attack in the yaw plane.
Sun look angle, θ	Angle between the vehicle-to-sun vector and the vehicle positive X_B axis.
Sun look angle, ϕ	Angle between the negative Z_B-axis and the projection of the vehicle-to-sun vector in the Y_B Z_B plane. Measured positive in the direction of Y_B.

Table VI

Time	Ground elapsed time from lift-off.
L_{11}, L_{21}, L_{31}	Direction cosines of X_B relative to the ECI system.
L_{12}, L_{22}, L_{32}	Direction cosines of Y_B relative to the ECI system.

L_{13}, L_{23}, L_{33}	Direction cosines of Z_B relative to the ECI system.

Table VII

Time	Ground elapsed time from lift-off.
Vehicle declination	Angle between equatorial plane and the geocentric radius vector.
Vehicle right ascension	Angle eastward from the vernal equinox to the projection of the geocentric radius vector on the equatorial plane.
True anomaly	Angle in the orbit plane from perigee to the satellite measured positive in the direction of motion.
Semilatus rectum	Perpendicular distance from the conic to the semimajor axis through a focus.
Eccentricity	Ratio of the distance between the center and focus of an ellipse to its semimajor axis.
Inclination	Angle between the orbital plane and the equatorial plane.
Apogee altitude	Predicted altitude at apogee.
Perigee altitude	Predicted altitude at perigee.
Predicted velocity at entry	Predicted inertial velocity at 400 000 ft.
Predicted flight-path angle at entry	Predicted inertial flight-path angle at 400 000 ft
TFF to 400K	Time of free flight to 400 000 ft based on the earth radius at entry as stored in the AGC onboard. (Re = 20 925 738 ft)

Table VIII

Time	Ground elapsed time in seconds.
SPS propellant	Tanked SPS propellant remaining.
SMRCS propellant	Available SMRCS propellant remaining.
CMRCS propellant	Available CMRCS propellant remaining.
Total propellant	SPS propellant plus SMRCS propellant plus CMRCS propellant.
Total spacecraft weight	Current total weight of spacecraft.
Propellant flow rate	Current propellant flow rate.
Thrust	Total thrust during each thrusting phase.
ΔV	Current change in velocity for each phase in the mission due to thrust and aerodynamic forces.

3.2.2 Appendix B - reentry.- A brief description of each of the table headings in appendix B is presented as follows:

Table I

Time	Ground elapsed time from lift-off.
Geodetic latitude	Angle between equatorial plane and the vector normal to the ellipsoid at the subsatellite point.
Longitude	The angular distance from the Greenwich meridian to the meridian of the subsatellite point measured in the equatorial plane. Longitude is positive if measured in a easterly direction from the Greenwich meridian.
Altitude	Distance from vehicle to subsatellite point.
Radius	Length of geocentric radius vector.

Table II

Time	Ground elapsed time from lift-off.
Inertial velocity	Velocity referenced to a space-fixed system.
Inertial flight-path angle	Angle between the local horizontal plane and the inertial velocity vector.
Inertial azimuth	Angle measured from north to the projection of the inertial velocity vector on the local horizontal plane.
Relative velocity	Velocity relative to a rotating earth.
Relative flight-path angle	Angle between the local horizontal plane and the relative velocity vector.
Relative azimuth	Angle measured from north to the projection of the relative velocity vector on the local horizontal plane.

Table III

Time	Ground elapsed time from lift-off.
X, Y, Z	Position components in an ECI system with the positive X-axis through the vernal equinox, the positive Z-axis along the earth's mean rotational axis and the positive Y-axis completing a right-handed coordinate system.
DX, DY, DZ	Velocity components in the ECI system.

Table IV

Time	Ground elapsed time from lift-off.
IMU gimbal angles	The attitude of the navigation base coordinate system (fig. 3-5) relative to the platform coordinate system (fig. 3-4).

Table V

Time	Ground elapsed time from lift-off.
Angle of attack	Angle of attack in the pitch plane.
Angle of sideslip	Angle of attack in the yaw plane.
Total G-units	Total load factor.
Load factors at the center of gravity	Components of total G-units along the spacecraft body coordinate system.

Table VI

Time	Ground elapsed time from lift-off.
L_{11}, L_{21}, L_{31}	Direction cosines of X_B relative to the ECI system.
L_{12}, L_{22}, L_{32}	Direction cosines of Y_B relative to the ECI system.
L_{13}, L_{23}, L_{33}	Direction cosines of Z_B relative to the ECI system.

Table VII

Time	Ground elapsed time from lift-off.
Convective heating rate	Heating rate due to convective properties.
Radiative heating rate	Heating rate due to radiative properties.
Total heating rate	Total heating rate.

Convective heat load	Heat load due to convective properties.
Radiative heat load	Heat load due to radiative properties.
Total head load	Total heat load.

Table VIII

Time	Ground elapsed time from lift-off.
Altitude	Distance from vehicle to subsatellite point.
Mach number	Ratio of spacecraft aerodynamic velocity to the velocity of sound.
Dynamic pressure	Pressure due to velocity of spacecraft.
RCS fuel	CMRCS fuel used during reentry.
Roll command	Commanded roll angle.

TABLE 1-I.- APOLLO 6 MISSION/DISCRETE EVENTS SUMMARY

(a) Saturn V operations

Event	Time from lift-off, hr:min:sec	Revolution number	Geodetic latitude, deg	Longitude, deg	Altitude, ft	Inertial velocity, fps	Inertial flight-path angle, deg	Inertial azimuth, deg
Guidance reference release	-0:00:16.70	1	28.608	-80.604	197	1 340.674	0.000	90.000
Lift-off	0:00:00.00	1	28.608	-80.604	197	1 340.674	0.000	90.000
Maximum dynamic pressure	0:01:19.00	1	28.627	-80.535	44 293	2 814.324	28.165	81.725
S-IC engine cutoff (timebase 3)	0:02:28.38	1	28.836	-79.778	194 430	9 084.694	19.524	75.489
S-IC/S-II separation	0:02:29.15	1	28.840	-79.761	196 772	9 114.038	19.408	75.485
S-II ignition	0:02:30.88	1	28.850	-79.724	201 982	9 103.195	19.125	75.504
Jettison launch escape tower	0:03:04.78	1	29.055	-78.956	292 864	9 661.785	14.322	75.688
S-II engine cutoff (timebase 4)	0:08:38.60	1	31.759	-65.283	619 872	22 594.630	0.733	81.683
S-II/S-IVB separation	0:08:39.48	1	31.767	-65.226	620 133	22 610.176	0.724	81.715
S-IVB ignition	0:08:43.10	1	31.798	-64.988	621 159	22 610.747	0.664	81.848
S-IVB cutoff	0:10:52.07	1	32.605	-55.852	628 229	25 560.818	-0.001	86.974
Parking orbit insertion	0:11:02.07	1	32.639	-55.088	628 270	25 569.913	0.001	87.407
S-IVB reignition	3:10:09.40	2	32.468	-87.991	670 356	25 554.615	-0.017	94.367
Second S-IVB cutoff	3:15:36.74	3	27.107	-60.239	1 059 929	35 557.026	6.929	108.850
Timebase 7	3:15:36.94	3	27.101	-60.221	1 060 781	35 566.018	6.938	108.859
Translunar injection	3:15:46.74	3	26.805	-59.308	1 103 924	35 539.005	7.383	109.289

TABLE 1-I.- APOLLO 6 MISSION/DISCRETE EVENTS SUMMARY (Concluded)

(b) Spacecraft operations

Event	Time from lift-off, hr:min:sec	Revolution number	Geodetic latitude, deg	Longitude, deg	Altitude, ft	Inertial velocity, fps	Inertial flight-path angle, deg	Inertial azimuth, deg
Translunar injection	3:15:46.74	3	26.805	-59.308	1 103 924	33 539.005	7.383	109.289
S-IVB/CSM separation	3:18:38.64	3	21.013	-44.829	2 291 920	34 625.335	14.810	115.462
First SPS ignition	3:20:16.94	3	17.482	-37.855	3 260 446	33 912.735	18.663	117.891
First SPS cutoff	3:24:30.94	3	9.273	-24.243	6 221 917	28 151.262	24.495	121.294
Apogee	6:21:52.50	3	-32.224	44.731	72 847 244	7 415.190	-0.000	85.348
+X translation	9:21:43.84	3	20.602	116.889	4 545 281	29 336.372	-21.458	64.231
Second SPS ignition	9:22:13.84	3	21.409	118.568	4 227 353	29 583.373	-20.797	64.876
Second SPS cutoff	9:25:22.33	3	26.626	131.525	2 211 843	35 039.649	-17.553	70.471
CM/SM separation	9:27:53.98	3	30.366	145.507	888 789	36 090.975	-10.814	77.451
Entry	9:29:23.59	3	31.867	154.963	400 000	36 499.859	-6.501	82.523
Drogue chute deployment	9:43:33.99	3	27.351	-157.140	23 349	1 511.099	-14.842	84.239
Main chute deployment	9:44:23.19	3	27.354	-157.138	10 114	1 375.737	-9.402	90.018
CM splash	9:49:45.20	3	27.354	-157.138	0	1 356.500	-1.202	90.004

TABLE 2-I.- APOLLO 6 LAUNCH VEHICLE WEIGHT SUMMARY

	Weight change, lb	Weight, lb
Vehicle at ignition		6 208 949
Holddown propellant used	100 262	
Vehicle weight at first motion		6 108 687
LOX	2 931 384	
Fuel	1 266 369	
Ice drop and GN2	1 557	
Vehicle weight at CECO signal		1 909 377
Center-engine decay propellant	2 669	
LOX	80 996	
Fuel	35 098	
Vehicle weight at OECO signal		1 790 614
Decay propellant	7 220	
S-II ullage propellant	180	
Vehicle weight at S-IC/S-II Separation signal		1 783 214
S-IC stage drop weight	365 870	
S-IC/S-II small interstage	1 477	
Vehicle weight at S-IC/S-II Separation		1 415 867
S-II ullage propellant	1 080	
Vehicle weight at S-II start		1 414 787
Thrust buildup propellant	1 649	
S-II ullage propellant	1 460	
Vehicle weight at S-II 90% thrust		1 411 678
LOX	567 250	
Fuel	103 728	
S-II aft interstage	10 751	
Launch escape tower	8 660	
S-II cameras	120	
Vehicle weight at PMR signal		721 169
LOX	214 229	
Fuel	44 340	

TABLE 2-I.- APOLLO 6 LAUNCH VEHICLE WEIGHT SUMMARY - Continued

	Weight change, lb	Weight, lb
Vehicle weight at S-II ECO signal		462 600
Thrust decay propellant	386	
S-IVB ullage propellant	60	
S-II stage drop weight	108 938	
Vehicle weight at S-II/S-IVB Separation		353 216
S-IVB start fuel	4	
Thrust buildup propellant	378	
S-IVB ullage propellant	62	
Vehicle weight at S-IVB 90% Thrust		352 722
Propellant	68 429	
Ullage rocket cases	127	
APS propellant	2	
Vehicle weight at S-IVB cutoff Signal		284 214
Thrust decay propellant	136	
APS propellant	0	
Vehicle weight at parking orbit Insertion		284 078
GH2 and helium vented in P.O.	2 465	
APS propellant	233	
S-IVB propellant	40	
Vehicle weight at S-IVB lead Thrust initiation		281 340
APS propellant	0	
LOX	233	
Fuel	110	
Vehicle weight at S-IVB 90% Thrust (2nd burn)		280 997
S-IVB propellant	148 049	

TABLE 2-I.- APOLLO 6 LAUNCH VEHICLE WEIGHT SUMMARY-
Concluded

	Weight change, lb	Weight, lb
Vehicle weight at S-IVB cutoff Signal (2nd burn)		132 948
LOX decay propellant	96	
Fuel decay propellant	18	
LOX blowdown	56	
Vehicle weight at translunar Injection		132 778

TABLE 2-II.- SPACECRAFT WEIGHT SUMMARY[a]

Event	Event weight, lb	Weight losses, lb
Spacecraft at lift-off	93 776	
LES jettison		8 776
Spacecraft in earth orbit	85 000	
SLA jettison		3 795
LTA-2R jettison		26 000
CSM alone	55 205	
Service module		9 084
SM-RCS propellant		780
SPS propellant		32 850
SLA ring attachment		91
CM alone	12 400	
Ablator burnoff		261
CM RCS propellant		57
Forward heat shield		413
Drogue chute deployment	11 669	
Drogue chutes		63
CSM/RCS propellant		178
Main chute deployment	11 428	
Main chutes		424
CM Splash	11 004	

[a]The constants contained herein apply only to the data in this report. The latest data specifications will be used to revise data when necessary.

TABLE 2.-III.- APOLLO SM PROPULSION PERFORMANCE SUMMARY[a]

System	Specific impulse, I_{sp}, sec	Thrust per engine, F, lb	Propellant flow rate, lb/sec	Mixture ratio, O/F
RCS[b,c]	$276.7^{+20.7}_{-12.0}$	$99.7^{+5.8}_{-4.2}$	$0.360^{+0.017}_{-0.025}$	$2.05^{+0.13}_{-0.20}$
SPS	309.7 ± 2.2	21 292 ± 215	68.75 ± 2.063	2.0

[a]The constants contained herein apply only to the data in this report. The latest data specifications will be used to revise data when necessary.

[b]At 5 seconds.

[c]The tolerances include engine-to-engine variations, instrumentation error, propellant inlet condition variations, and propellant inlet temperature range of 40,° to 100° F. The nominal propellant inlet pressure is 170 psia.

TABLE 2-IV.- CRITERIA FOR SERVICE MODULE RCS PROPELLANT EXPENDITURES

RCS operation	Propellant expenditure criteria
Translation maneuvers:	
CSM/S-IVB separation	Plus X-axis translation for 10.0 sec (ΔV = 2.09 fps)
CM/SM separation	Minus X-axis translation until RCS propellant depletion or SM atmospheric entry
Attitude orientation maneuvers:	
Pitch orientation	3.8 lb/maneuver (4.0 deg/sec rate)
Yaw orientation	3.8 lb/maneuver (4.0 deg/sec rate)
Roll orientation	1.3 lb/maneuver (4.0 deg/sec rate)
SPS cutoff damping	1.0 lb/maneuver
Attitude hold maneuvers (four jet operation) 3 axis hold (0.2 deg deadband)	22.5 lb/hr

TABLE 2-V.- CROSS-PRODUCT STEERING GUIDANCE CONSTANTS

Parameter Description	Symbol	Value
First SPS burn		
Guidance scaling constant	c	0.50
Desired orbit eccentricity	e	0.63429326
Desired semilatus rectum of orbit	p	34 340 227 ft
Limit on time-to-go calculation	T_L	4.0 sec
Bias on time-to-go calculation		0.389 sec
Earth gravitational parameter	μ	$1.407653916 \times 10^{16}$ ft^3/sec^2
Pitch rate limit	$\dot{\xi}_{max}$	4.0 deg/sec
Yaw rate limit	$\dot{\eta}_{max}$	4.0 deg/sec
Roll rate limit	$\dot{\zeta}_{max}$	7.2 deg/sec
Computing increment	τ	2.0 sec
Second SPS burn		
Guidance scaling constant	c	0.50
Desired orbit eccentricity	e	1.0164386
Desired semilatus rectum of orbit	p	42 418 422
Limit on time-to-go calculation	T_L	4.0 sec
Bias on time-to-go calculation		0.389 sec
Earth gravitational parameter	μ	$1.047653916 \times 10^{6}$ ft^3/sec^2

TABLE 2-V.- CROSS-PRODUCT STEERING GUIDANCE CONSTANTS - Concluded

Parameter Description	Symbol	Value
Pitch rate limit	$\dot{\xi}_{max}$	4.0 deg/sec
Yaw rate limit	$\dot{\eta}_{max}$	4.0 deg/sec
Roll rate limit	$\dot{\zeta}_{max}$	7.2 deg/sec
Computing increment	τ	2.0 sec

TABLE 2-VI.- ENTRY GUIDANCE CONSTANTS

(a) Constants and Gains			
Symbol	Definition	Value	Units
TN	Nominal time of flight	35 014	sec
C1	Factor in ALP computation	1.25	
C16	Drag gain	0.01	
C17	RDOT gain	0.001	
C18	Bias velocity for FINAL PHASE start	500.	ft/sec
C20	Maximum drag for down-lift	175.	ft/sec^2
CH1	Factor in GAMMAL computation	0.75	
CHOOK	Factor in AHOOK computation	0.25	
D0	Controlled constant drag value	130.	ft/sec^2
D2	Drag to change LEWD	175.	ft/sec^2
DT	Computation cycle time interval	2.	sec
GMAX	Maximum acceleration	322.	ft/sec^2
KA	Drag to roll up if down initially	64.4	ft/sec^2
KB1	Optimized UPCONTROL gain	3.4	
KB2	Optimized UPCONTROL gain	0.0034	
KDMIN	Increment on Q7 to detect end of KEPLER PHASE	0.5	ft/sec^2
KLAT	Lateral switch gain	0.0125	rad
KTETA	Time of flight constant	1000.	sec
K44	Gain used in INITIAL ROLL	29 342 088	ft/sec

TABLE 2-VI.- ENTRY GUIDANCE CONSTANTS - Continued

(a) Constants and Gains - Continued			
Symbol	Definition	Value	Units
LAD	Maximum L/D (minimum actual vehicle L/D)	0.3	
LATBIAS	Lateral switch bias term	0.4	n. mi.
L/DCMIRN	LAD COS (15 deg)	0.2895	
LEWD1	Nominal UPCONTROL L/D	0.1	
LEWD2	UPCONTROL L/D high drag cases	0.2	
LOD	FINAL PHASE L/D	0.18	
K13P	Constant in FINAL PHASE	4.	
Q2	FINAL PHASE range - 23 500 Q3	-1002.	n. mi.
Q3	FINAL PHASE partial of RANGE/V	0.07	n. mi./ft/sec
Q5	FINAL PHASE partial of RANGE/GAMMA	7050.	n. mi./rad
Q6	FINAL PHASE initial flight-path angle	0.0349	rad
Q7F	Minimum drag for UPCONTROL	6.	ft/sec^2
Q7MIN	Minimum value for Q7 in FACTOR calculation	35.	ft/sec^2
Q19	Factor in GAMMAL1 calculation	0.2	
VFINAL	Velocity to start FINAL PHASE on initial entry	25 000.	ft/sec
VLMIN	Minimum VL	18 000.	ft/sec
VMIN	Velocity to switch to relative velocity	VSAT/2	
VRCONTRL	RDOT to start into HUNTEST	700.	ft/sec
VCORLIM	Maximum value of VCORR	1000.	ft/sec

TABLE 2-VI.- ENTRY GUIDANCE CONSTANTS - Concluded

(a) Constants and Gains - Continued			
Symbol	Definition		
25NM	Tolerance to stop range iteration	25.	n. mi.
VQUIT	Velocity to stop steering	1000.	ft/sec
(b) Conversion Factors and Scaling Constants			
ATK	Angle in rad to n. mi.	3437.7568	n. mi./rad
GS	Nominal g value for scaling	32.2	ft/sec^2
J	Gravity harmonic coefficient	0.00162345	
KWE	Equatorial earth rate	1546.70168	ft/s4c
MUE	Earth gravitational constant	$1.40765392 \times 10^{16}$	ft^3/sec^2
RE	Earth radius	21 202 900.	ft
VSAT	Satellite velocity at RE	25 766.197	ft/sec
WIE	Earth rate	$0.729211505 \times 10^{-4}$	rad/sec
HS	Atmospheric scale height	28 500.	ft

TABLE 2-VII.- APOLLO COMMAND MODULE - PARACHUTE DESCENT EVENTS AND AERODYNAMICS[a]

Event	Altitude, ft	Time, sec	$C_D S$ (per chute), ft^2
High altitude baroswitch closed (actuate ELS)	23 500	0.0	0.0
Deploy drogue chutes		2.0	0.0
Drogue line stretch		2.7	0.0
Drogue chute reefed inflation		2.8	40.0
Drogue chute disreef		10.8	40.0
Drogue chutes full open		11.0	68.0
Low altitude baroswitch closed	10 200	0.0	0.0
Deploy main chutes		1.0	0.0
Main line stretch		2.0	0.0
Main chute reefed inflation		3.5	300.0
Begin main chute disreef		10.0	300.0
Mains full open		13.0	4000.0

[a]There are two drogue and three main parachutes.

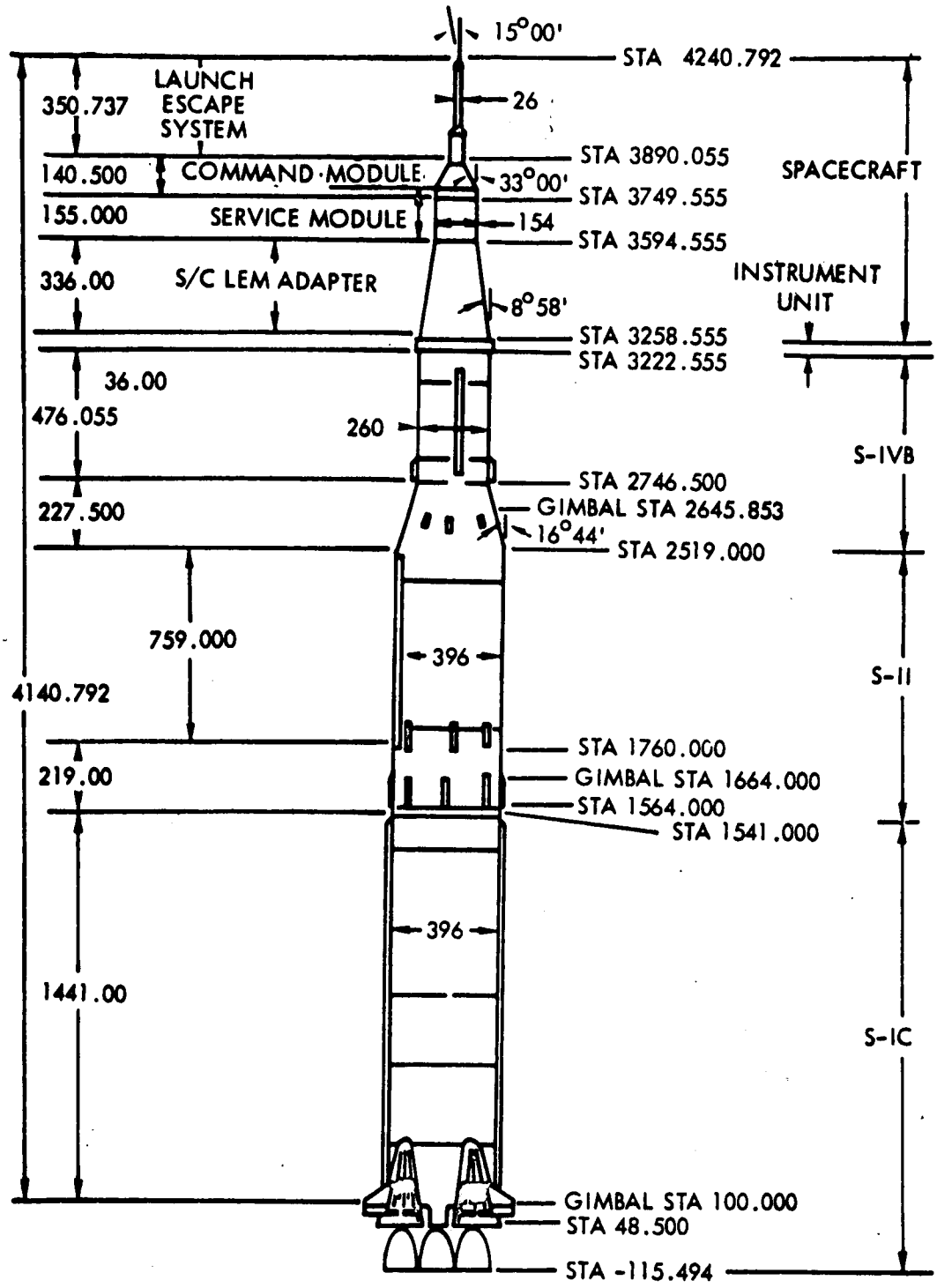

Figure 2-1.- Saturn V reference dimensions.

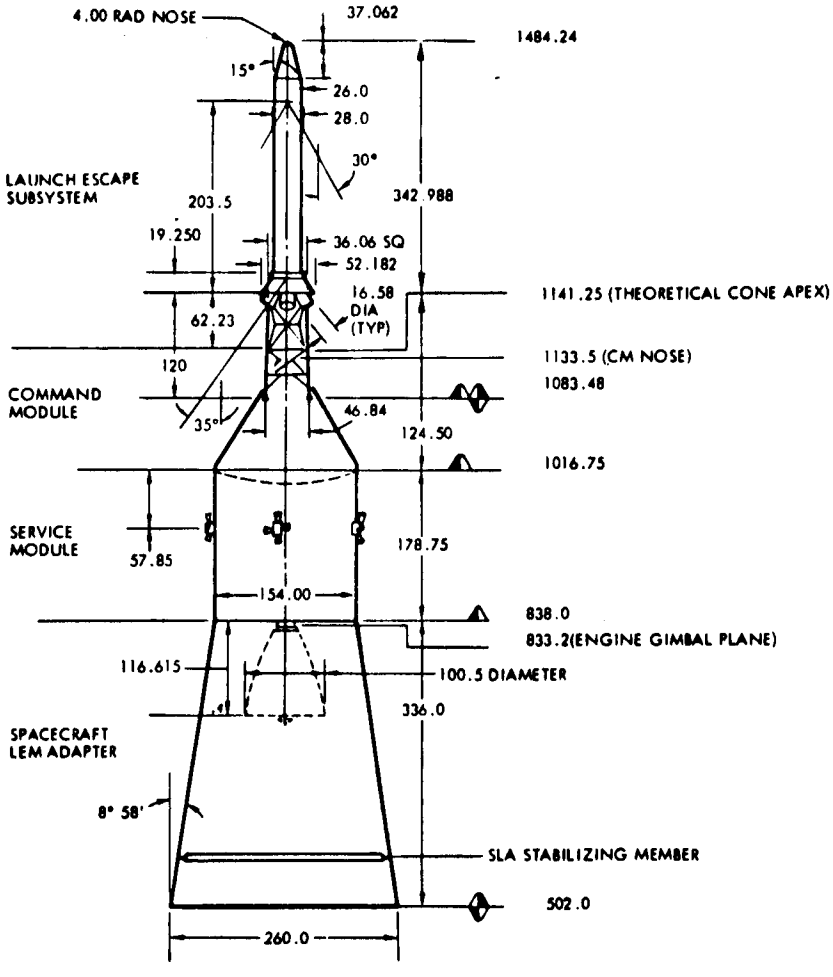

Notes: Separation Plane

Field Splice

All linear dimensions are in inches.

Figure 2-2.- Command and service module reference dimensions.

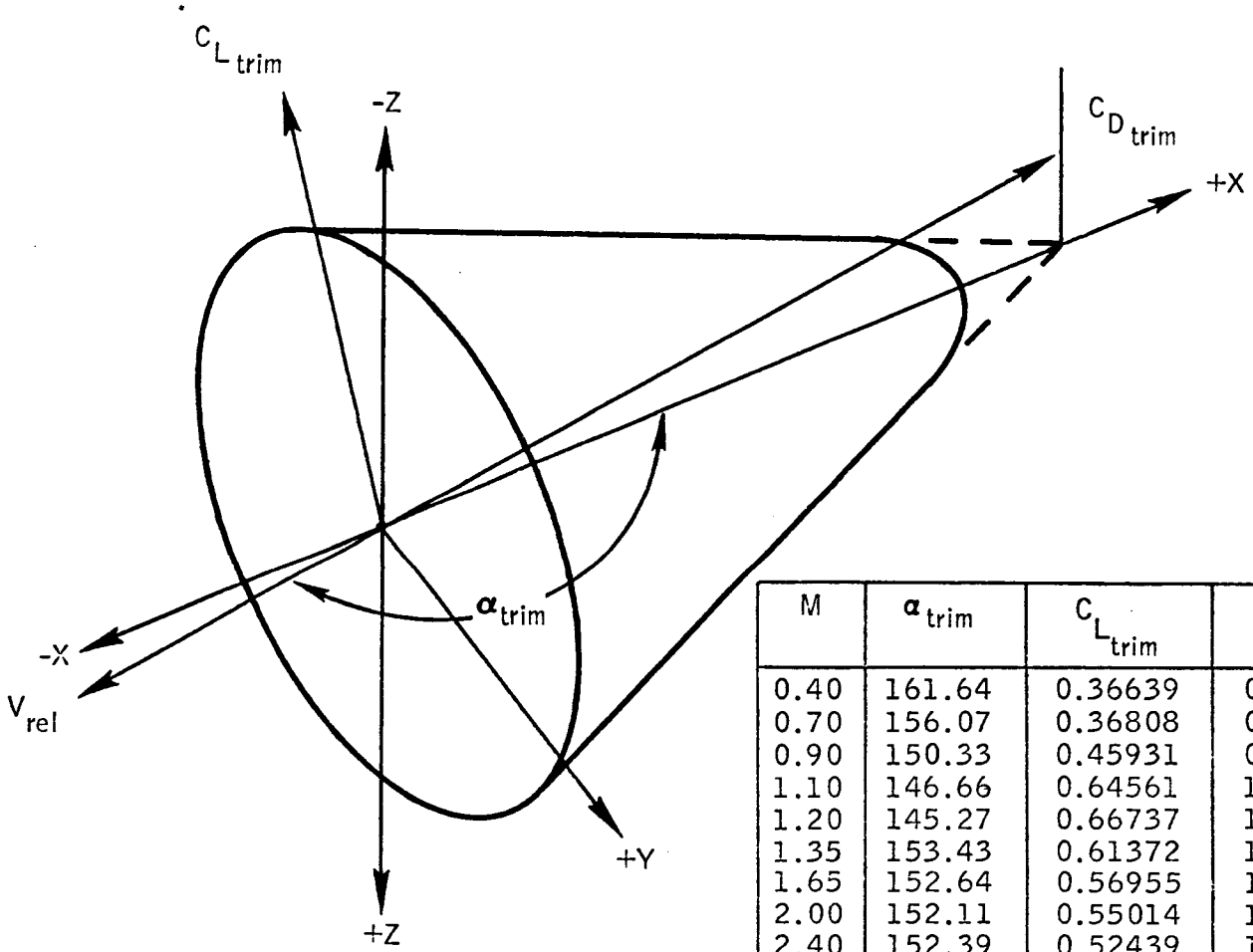

M	α_{trim}	$C_{L_{trim}}$	$C_{D_{trim}}$	L/D_{trim}
0.40	161.64	0.36639	0.87887	0.41689
0.70	156.07	0.36808	0.94610	0.38905
0.90	150.33	0.45931	0.99520	0.46152
1.10	146.66	0.64561	1.07238	0.60204
1.20	145.27	0.66737	1.04722	0.63728
1.35	153.43	0.61372	1.27534	0.48122
1.65	152.64	0.56955	1.28498	0.44324
2.00	152.11	0.55014	1.27225	0.43242
2.40	152.39	0.52439	1.26508	0.41451
3.00	152.91	0.50320	1.22086	0.41217
4.00	153.56	0.47077	1.17335	0.40122
6.00	157.53	0.42246	1.24948	0.33811

Figure 2-3.- Apollo 6 aerodynamic coefficients at trim angle of attack as a function of Mach number.

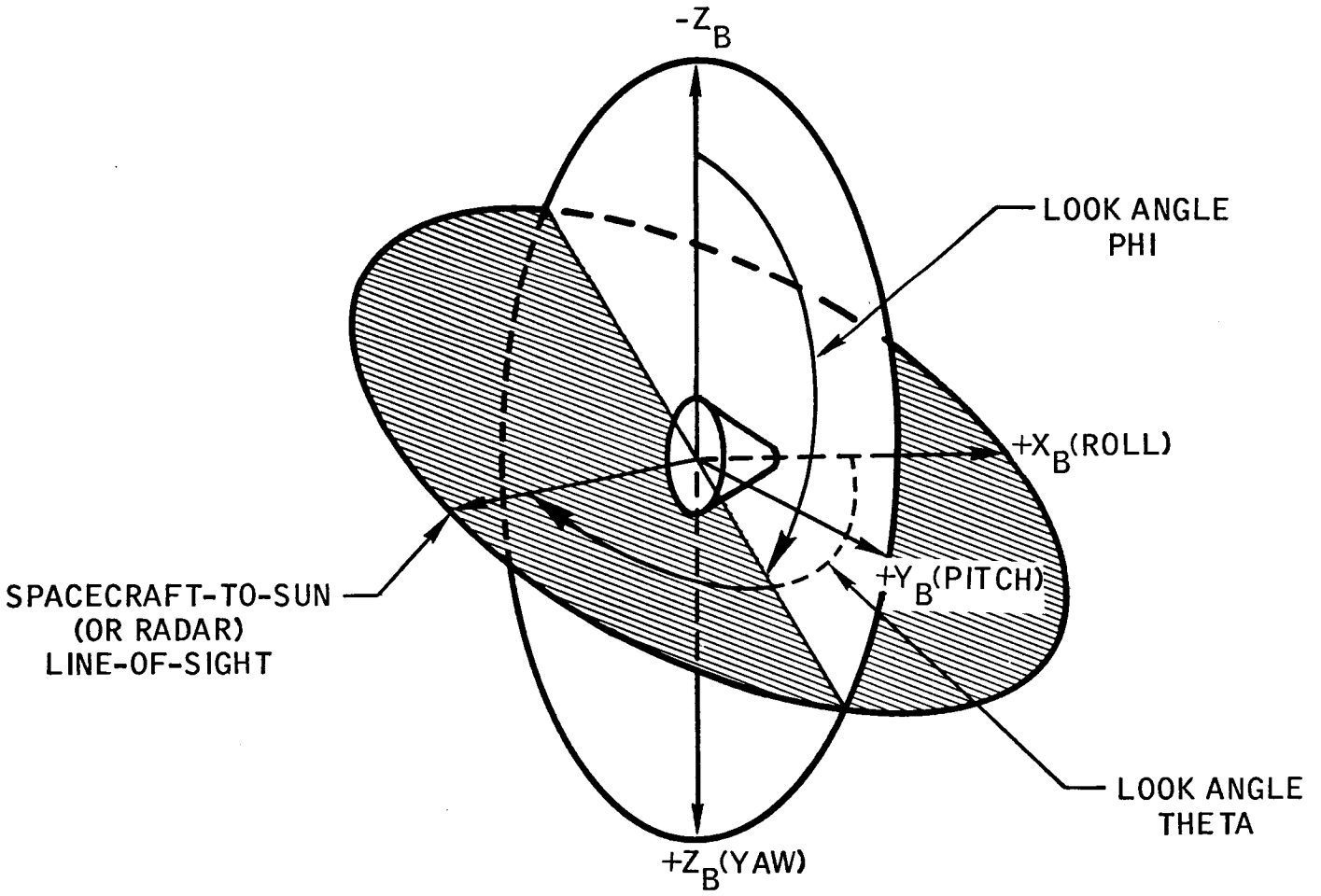

Figure 2-4.- Spacecraft look angles.

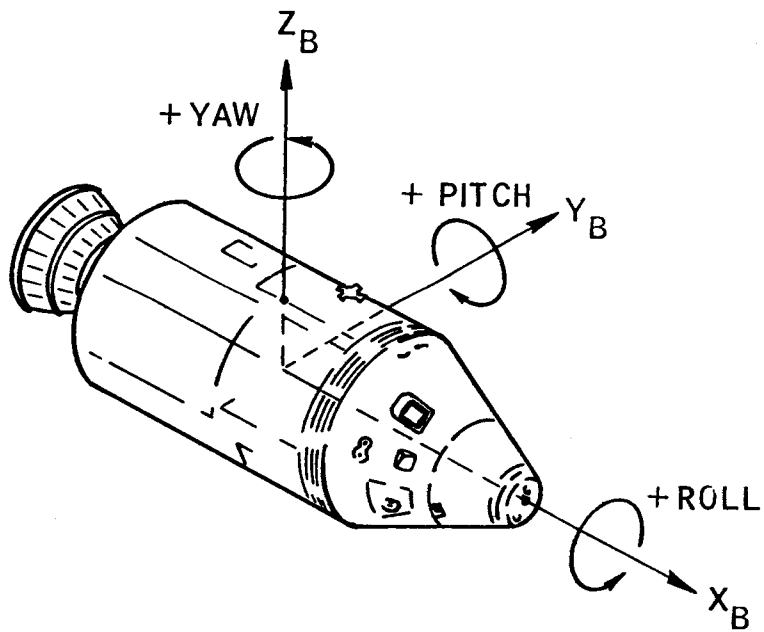

Figure 3-1.- Spacecraft body coordinate system.

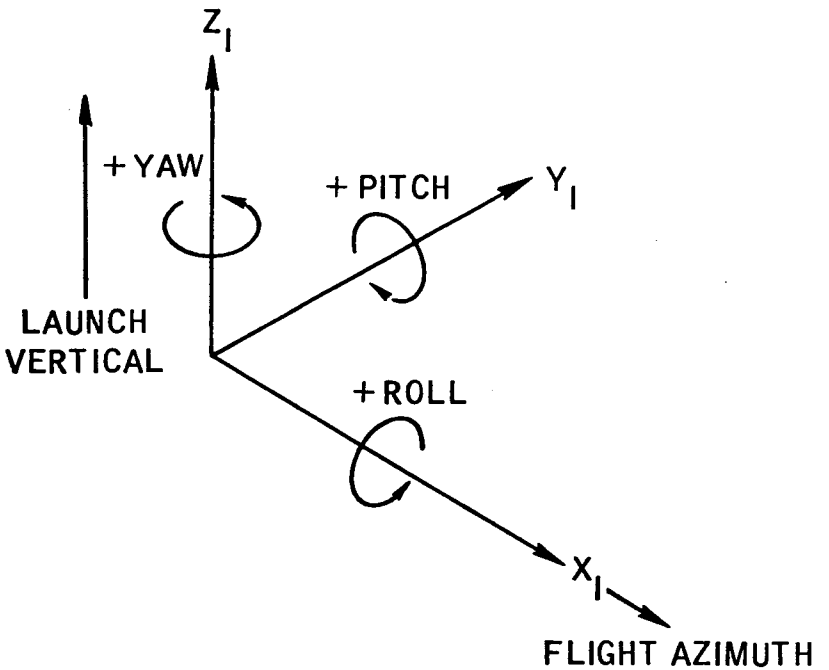

Figure 3-2.- Launch site inertial attitude reference coordinate system.

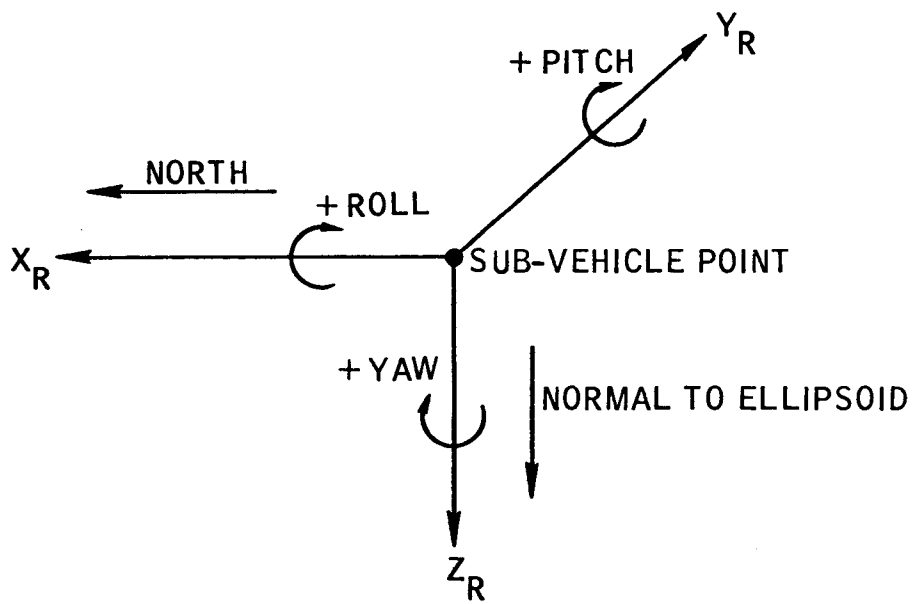

Figure 3-3.- Earth reference rotating attitude reference coordinate system.

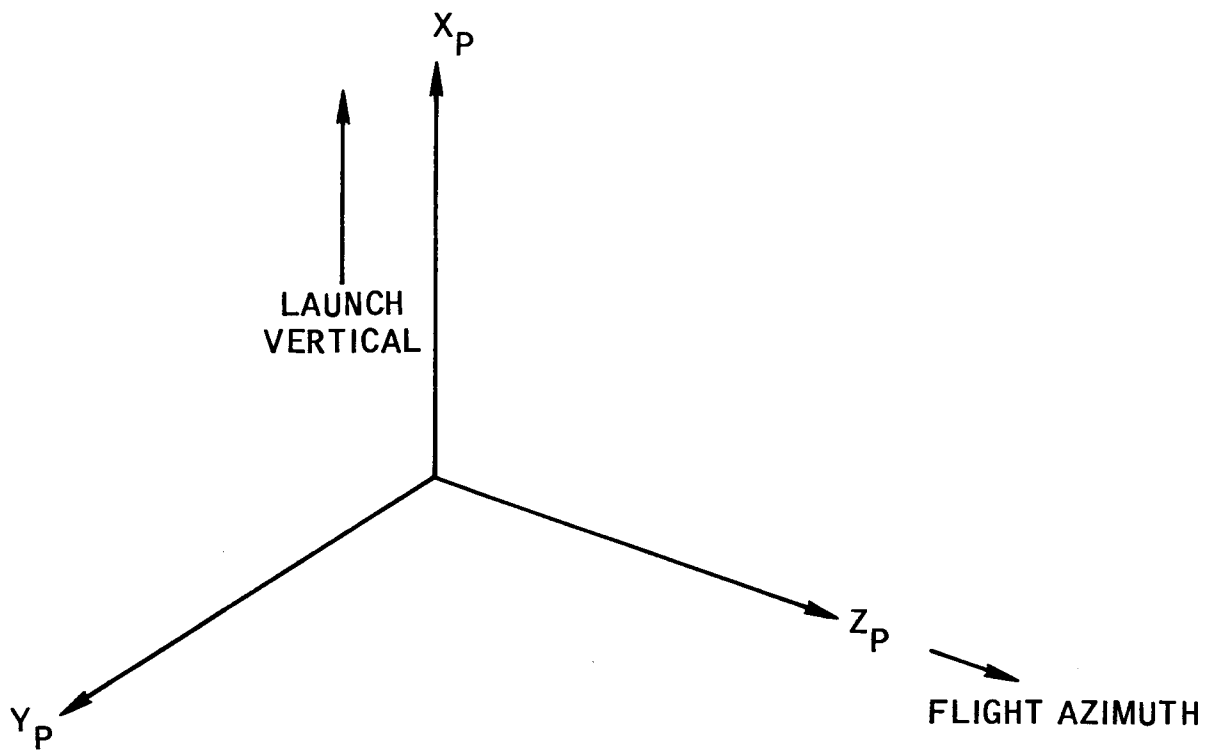

Figure 3-4.- Platform coordinate system.

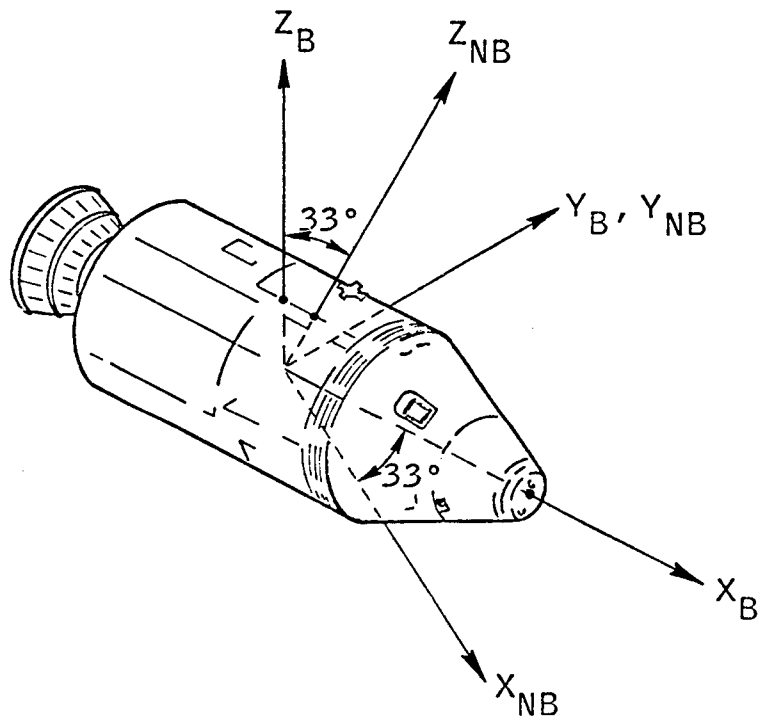

Figure 3-5.- Navigation base coordinate system relative to spacecraft body coordinate system.

REFERENCES

1. Boeing Company: Saturn V AS-502 Launch Vehicle Operational Flight Trajectory Final, Volume 1 and 2. December 12, 1967.

2. Bennett, William J.: Moore, Ronny H.; and Harpold, Jon C.: Apollo 6 (AS-502/CSM-020/LTA-2R) Spacecraft Operational Trajectory. Volume I - Mission Profile. MSC IN 68-FM-62. To be published.

3. Bennett, William J.; Moore, Ronny H.; and Harpold, Jon C.: Apollo 6 (AS-502/CSM-020/LTA-2R) Spacecraft Operational Trajectory. Volume III - Tracking Time History. MSC IN 68-FM-61. March 5, 1968.

4. Consumables Analysis Section: Apollo 6 (AS-502/CSM-020/LTA-2R) Spacecraft Operational Trajectory. Volume IV - Consumables Analysis. MSC IN 68-FM-65. March 6, 1968.

5. MSC Memo: The latest on AS-502/020, Apollo 6. MSC Memo No. 68-FM-H-12 January 21, 1968.

6. MSC Memo: Revision #2 to the Apollo Mission Data Specification (AMDS) "D" for AS-502. MSC Memo No. PD7/M-283/67.

7. TRW: Apollo Mission Data Specification "D". Apollo Saturn 501 (U). TRW No. 2131-H009-R8-000, Confidential.

8. MIT: Guidance System Operational Plan, AS-501. Volume I, MIT R-537, Revision 1. December, 1966.

9. Directory of Standard Geodetic and Geophysical Constants for Gemini and Apollo. NASA General Working Paper No. 10,020B. April 6, 1966.

APPENDIX A

EARTH ORBIT PHASE

Position vector

Velocity vector

Position and velocity vector (ECI)

Body attitudes

Aerodynamic and sun attitudes

Direction cosines

Orbital elements

Weight and performance

TABLES

Table		Page
I	POSITION VECTOR	A-1
II	VELOCITY VECTOR	A-23
III	POSITION AND VELOCITY VECTOR - EARTH-CENTERED INERTIAL COORDINATE SYSTEM	A-45
IV	BODY ATTITUDES	A-67
V	AERODYNAMIC AND SUN ATTITUDES	A-89
VI	DIRECTION COSINES	A-111
VII	ORBITAL ELEMENTS	A-132
VIII	WEIGHT AND PERFORMANCE	A-154

TABLE I
APOLLO MISSION AS-502
SPACECRAFT OPERATIONAL TRAJECTORY
-POSITION VECTOR-

TIME SECONDS	TIME DAY	HR	MIN	SEC	GEODETIC LATITUDE DEGREES	GEODETIC LATITUDE DEG	MIN	SEC	LONGITUDE DEGREES	LONGITUDE DEG	MIN	SEC	ALTITUDE FEET	ALTITUDE METERS	RADIUS FEET
									LIFTOFF CONDITIONS						
.000	0.	0.	0.	.000	28.60824	28.	36.	29.7	-80.60413	-80.	36.	14.9	197.0	60.	20909958.
									TRANSLUNAR INJECTION						
11746.739	0.	3.	15.	46.739	26.80529	26.	48.	19.0	-59.30779	-59.	18.	28.0	1130923.9	344706.	22092489.
11748.739	0.	3.	15.	48.739	26.74936	26.	44.	39.7	-59.12282	-59.	7.	22.1	1140051.2	347488.	22051676.
11750.739	0.	3.	15.	50.739	26.68323	26.	40.	59.6	-58.93821	-58.	56.	17.6	1149287.7	350304.	22060974.
11752.739	0.	3.	15.	52.739	26.62189	26.	37.	18.8	-58.75398	-58.	45.	14.3	1158635.5	353153.	22070380.
11754.739	0.	3.	15.	54.739	26.56034	26.	33.	37.2	-58.57011	-58.	34.	12.4	1168090.5	356035.	22079895.
11756.739	0.	3.	15.	56.739	26.49858	26.	29.	54.9	-58.38662	-58.	23.	11.8	1177654.0	358950.	22089519.
11756.939	0.	3.	15.	56.939	26.49239	26.	29.	32.6	-58.36828	-58.	22.	5.8	1178616.7	359243.	22090487.
									BEGIN ORIENTATION TO S-IVB/CSM SEPARATION ATTITUDE						
11756.939	0.	3.	15.	56.939	26.49239	26.	29.	32.6	-58.36828	-58.	22.	5.8	1178616.7	359243.	22090488.
11757.098	0.	3.	15.	57.098	26.48747	26.	29.	14.9	-58.35371	-58.	21.	13.4	1179382.7	359477.	22091259.
11762.139	0.	3.	16.	2.139	26.33083	26.	19.	51.0	-57.89306	-57.	53.	35.0	1204016.0	366985.	22114044.
11772.139	0.	3.	16.	12.139	26.01640	26.	0.	59.1	-56.98626	-56.	59.	10.6	1254909.5	382497.	22167241.
11782.139	0.	3.	16.	22.139	25.69732	25.	41.	50.3	-56.08898	-56.	5.	20.3	1308477.0	398825.	22221112.
11792.139	0.	3.	16.	32.139	25.37384	25.	22.	25.8	-55.20133	-55.	12.	4.8	1364690.0	415958.	22277632.
11802.139	0.	3.	16.	42.139	25.04623	25.	2.	46.4	-54.32340	-54.	19.	24.2	1423522.2	433890.	22334771.
11812.139	0.	3.	16.	52.139	24.71478	24.	42.	53.2	-53.45528	-53.	27.	19.0	1484945.7	452612.	22390503.
11822.139	0.	3.	17.	2.139	24.37973	24.	22.	47.0	-52.59705	-52.	35.	49.4	1548933.5	472116.	22469799.
11832.139	0.	3.	17.	12.139	24.04137	24.	2.	28.9	-51.74875	-51.	44.	55.5	1615454.0	492391.	22529628.
11842.139	0.	3.	17.	22.139	23.69993	23.	41.	59.8	-50.91043	-50.	54.	37.5	1684478.4	513430.	22598960.
11852.139	0.	3.	17.	32.139	23.35569	23.	21.	20.5	-50.08212	-50.	4.	55.6	1755973.7	535222.	22670742.
11862.139	0.	3.	17.	42.139	23.00889	23.	0.	32.0	-49.26383	-49.	15.	49.8	1829911.2	557758.	22745004.
11872.139	0.	3.	17.	52.139	22.65978	22.	39.	35.2	-48.45558	-48.	27.	20.1	1906256.0	581028.	22821653.
11876.184	0.	3.	17.	56.184	22.51795	22.	31.	4.6	-48.13147	-48.	7.	53.3	1937815.7	590647.	22853336.
11878.139	0.	3.	17.	58.139	22.44930	22.	26.	57.5	-47.97545	-47.	58.	31.6	1953204.5	595338.	22868784.
11880.139	0.	3.	18.	.139	22.37898	22.	22.	44.3	-47.81621	-47.	48.	58.3	1969044.2	600166.	22884683.

Position vector

TABLE I
APOLLO MISSION AS-502
SPACECRAFT OPERATIONAL TRAJECTORY
-POSITION VECTOR-

TIME SECONDS	TIME DAY	HR	MIN	SEC	GEODETIC LATITUDE DEGREES	GEODETIC LATITUDE DEG	MIN	SEC	LONGITUDE DEGREES	LONGITUDE DEG	MIN	SEC	ALTITUDE FEET	ALTITUDE METERS	RADIUS FEET
11881.058	0.	3.	18.	1.058	22.34663	22.	20.	47.9	-47.74312	-47.	44.	35.2	1976354.7	602395.	22892024.
END ORIENTATION TO S-IVB/CSM SEPARATION ATTITUDE															
11881.058	0.	3.	18.	1.058	22.34663	22.	20.	47.9	-47.74312	-47.	44.	35.2	1976354.7	602395.	22892024.
11882.139	0.	3.	18.	2.139	22.30859	22.	18.	30.9	-47.65736	-47.	39.	26.5	1984975.9	605022.	22900675.
11884.139	0.	3.	18.	4.139	22.23813	22.	14.	17.3	-47.49892	-47.	29.	56.1	2001001.2	609906.	22916762.
11886.139	0.	3.	18.	6.139	22.16759	22.	10.	3.3	-47.34087	-47.	20.	27.1	2017120.7	614820.	22932941.
11888.139	0.	3.	18.	8.139	22.09699	22.	5.	49.2	-47.18323	-47.	10.	59.6	2033334.4	619762.	22949214.
11890.139	0.	3.	18.	10.139	22.02631	22.	1.	34.7	-47.02599	-47.	1.	33.6	2049639.2	624731.	22965579.
11892.139	0.	3.	18.	12.139	21.95557	21.	57.	20.1	-46.86914	-46.	52.	8.9	2066037.4	629729.	22982036.
11894.139	0.	3.	18.	14.139	21.88477	21.	53.	5.2	-46.71270	-46.	42.	45.7	2082527.7	634756.	22998586.
11896.139	0.	3.	18.	16.139	21.81390	21.	48.	50.1	-46.55665	-46.	33.	23.9	2099109.0	639810.	23015228.
11898.139	0.	3.	18.	18.139	21.74298	21.	44.	34.7	-46.40101	-46.	24.	3.6	2115783.7	644892.	23031961.
11900.139	0.	3.	18.	20.139	21.67199	21.	40.	19.2	-46.24576	-46.	14.	44.7	2132548.7	650002.	23048787.
11902.139	0.	3.	18.	22.139	21.60095	21.	36.	3.4	-46.09091	-46.	5.	27.3	2149406.4	655140.	23065703.
11904.139	0.	3.	18.	24.139	21.52986	21.	31.	47.5	-45.93646	-45.	56.	11.3	2166353.7	660306.	23082709.
11906.139	0.	3.	18.	26.139	21.45870	21.	27.	31.3	-45.78241	-45.	46.	56.7	2183392.2	665499.	23099807.
11908.139	0.	3.	18.	28.139	21.38750	21.	23.	15.0	-45.62875	-45.	37.	43.5	2200520.7	670720.	23116995.
11910.139	0.	3.	18.	30.139	21.31625	21.	18.	58.5	-45.47549	-45.	28.	31.8	2217739.7	675968.	23134273.
11912.139	0.	3.	18.	32.139	21.24495	21.	14.	41.8	-45.32263	-45.	19.	21.5	2235048.5	681244.	23151640.
11914.139	0.	3.	18.	34.139	21.17360	21.	10.	25.0	-45.17016	-45.	10.	12.6	2252446.5	686547.	23169097.
11916.139	0.	3.	18.	36.139	21.10221	21.	6.	8.0	-45.01809	-45.	1.	5.1	2269933.7	691877.	23186642.
11916.939	0.	3.	18.	36.939	21.07364	21.	4.	25.1	-44.95736	-44.	57.	26.5	2276956.4	694018.	23193687.
START RCS THRUST FOR S-IVB/CSM SEPARATION															
11916.939	0.	3.	18.	36.939	21.07364	21.	4.	25.1	-44.95736	-44.	57.	26.5	2276956.4	694018.	23193687.
11917.938	0.	3.	18.	37.938	21.03793	21.	2.	16.6	-44.88158	-44.	52.	53.7	2285747.8	696697.	23202508.
11918.639	0.	3.	18.	38.639	21.01291	21.	0.	46.5	-44.82855	-44.	49.	42.8	2291919.7	698579.	23208701.
SEPARATION AND 8.3 SECS OF +X TRANSLATION															
11918.639	0.	3.	18.	38.639	21.01291	21.	0.	46.5	-44.82855	-44.	49.	42.8	2291919.7	698579.	23208701.

TABLE I
APOLLO MISSION AS-502
SPACECRAFT OPERATIONAL TRAJECTORY
-POSITION VECTOR-

TIME SECONDS	TIME DAY HR MIN SEC	GEODETIC LATITUDE DEGREES	GEODETIC LATITUDE DEG MIN SEC	LONGITUDE DEGREES	LONGITUDE DEG MIN SEC	ALTITUDE FEET	ALTITUDE METERS	RADIUS FEET
11926.939	0. 3. 18. 46.939	20.71600	20. 42. 57.6	-44.20374	-44. 12. 13.5	2345895.4	721126.	23282917.
			COAST FIVE SECONDS					
11926.939	0. 3. 18. 46.939	20.71600	20. 42. 57.6	-44.20374	-44. 12. 13.5	2345895.4	721126.	23282917.
11931.939	0. 3. 18. 51.939	20.53686	20. 32. 12.7	-43.83064	-43. 49. 50.3	2411186.7	734931.	23328351.
			ORIENTATION TO FIRST SPS IGNITION ATTITUDE					
11931.939	0. 3. 18. 51.939	20.53686	20. 32. 12.7	-43.83064	-43. 49. 50.3	2411186.7	734931.	23328351.
11932.827	0. 3. 18. 52.827	20.50503	20. 30. 18.1	-43.74465	-43. 45. 52.7	2419284.4	737399.	23334475.
			COAST TO FIRST SPS BURN					
11932.827	0. 3. 18. 52.827	20.50503	20. 30. 18.1	-43.74465	-43. 45. 52.7	2419284.4	737399.	23334475.
11933.239	0. 3. 18. 53.239	20.49027	20. 29. 25.0	-43.73407	-43. 44. 2.6	2423046.8	738546.	23340248.
11943.239	0. 3. 19. 3.239	20.13136	20. 7. 52.9	-42.99646	-42. 59. 47.2	2515531.0	766735.	23433016.
11953.239	0. 3. 19. 13.239	19.77192	19. 46. 18.9	-42.26857	-42. 16. 6.8	2610142.2	795573.	23527908.
11963.238	0. 3. 19. 23.239	19.41215	19. 24. 43.8	-41.55032	-41. 33. 1.2	2706846.0	825048.	23624890.
11973.238	0. 3. 19. 33.239	19.05223	19. 3. 8.0	-40.84165	-40. 50. 29.9	2805608.4	855151.	23723925.
11983.238	0. 3. 19. 43.239	18.69233	18. 41. 32.4	-40.14247	-40. 8. 32.9	2906392.7	885870.	23824976.
11993.238	0. 3. 19. 53.239	18.33263	18. 19. 57.5	-39.45268	-39. 27. 9.6	3009161.5	917194.	23928008.
12003.238	0. 3. 20. 3.239	17.97328	17. 58. 23.8	-38.77220	-38. 46. 19.9	3113879.7	949112.	24032985.
12013.239	0. 3. 20. 13.239	17.61445	17. 36. 52.0	-38.10093	-38. 6. 3.3	3220512.2	981614.	24139871.
12016.939	0. 3. 20. 16.939	17.48183	17. 28. 54.6	-37.85485	-37. 51. 17.5	3260446.2	993786.	24179898.
			FIRST SPS IGNITION					
12016.939	0. 3. 20. 16.939	17.48183	17. 28. 54.6	-37.85485	-37. 51. 17.5	3260446.2	993786.	24179898.

TABLE I
APOLLO MISSION AS-502
SPACECRAFT OPERATIONAL TRAJECTORY
-POSITION VECTOR-

TIME SECONDS	TIME DAY HR MIN SEC	GEODETIC LATITUDE DEGREES	GEODETIC LATITUDE DEG MIN SEC	LONGITUDE DEGREES	LONGITUDE DEG MIN SEC	ALTITUDE FEET	ALTITUDE METERS	RADIUS FEET
12017.314	0. 3. 20. 17.314	17.46840	17. 28. 6.2	-37.82999	-37. 49. 48.0	3264504.5	995024.	24183968.

FIRST SPS BURN

12017.314	0. 3. 20. 17.314	17.46840	17. 28. 6.2	-37.82999	-37. 49. 48.0	3264504.5	995024.	24183968.
12018.333	0. 3. 20. 18.333	17.43190	17. 25. 54.9	-37.76249	-37. 45. 45.0	3275554.0	998391.	24195041.
12020.333	0. 3. 20. 20.333	17.36034	17. 21. 37.2	-37.63035	-37. 37. 49.3	3297275.8	1005012.	24216812.
12022.333	0. 3. 20. 22.333	17.28885	17. 17. 19.9	-37.49868	-37. 29. 55.3	3319049.7	1011648.	24238635.
12024.333	0. 3. 20. 24.333	17.21745	17. 13. 2.8	-37.36746	-37. 22. 2.9	3340873.0	1018300.	24260508.
12026.333	0. 3. 20. 26.333	17.14613	17. 8. 46.1	-37.23670	-37. 14. 12.1	3362748.0	1024968.	24282433.
12028.333	0. 3. 20. 28.333	17.07489	17. 4. 29.6	-37.10640	-37. 6. 23.0	3384674.0	1031651.	24304406.
12030.333	0. 3. 20. 30.333	17.00373	17. 0. 13.4	-36.97654	-36. 58. 35.6	3406648.5	1038349.	24326430.
12032.333	0. 3. 20. 32.333	16.93267	16. 55. 57.6	-36.84714	-36. 50. 49.7	3428670.2	1045061.	24348500.
12034.333	0. 3. 20. 34.333	16.86169	16. 51. 42.1	-36.71819	-36. 43. 5.5	3450742.4	1051788.	24370619.
12036.333	0. 3. 20. 36.333	16.79080	16. 47. 26.9	-36.58969	-36. 35. 22.9	3472860.5	1058530.	24392785.
12038.333	0. 3. 20. 38.333	16.72000	16. 43. 12.0	-36.46163	-36. 27. 41.9	3495026.0	1065286.	24414998.
12040.333	0. 3. 20. 40.333	16.64928	16. 38. 57.4	-36.33402	-36. 20. 2.5	3517235.4	1072055.	24437255.
12042.333	0. 3. 20. 42.333	16.57866	16. 34. 43.2	-36.20685	-36. 12. 24.7	3539492.2	1078839.	24459559.
12044.333	0. 3. 20. 44.333	16.50814	16. 30. 29.3	-36.08013	-36. 4. 48.5	3561791.5	1085636.	24481907.
12046.333	0. 3. 20. 46.333	16.43770	16. 26. 15.7	-35.95385	-35. 57. 13.9	3584138.0	1092447.	24504298.
12048.333	0. 3. 20. 48.333	16.36736	16. 22. 2.5	-35.82801	-35. 49. 40.8	3606524.7	1099271.	24526732.
12050.333	0. 3. 20. 50.333	16.29712	16. 17. 49.6	-35.70261	-35. 42. 9.4	3628957.9	1106109.	24549210.
12052.333	0. 3. 20. 52.333	16.22697	16. 13. 37.1	-35.57765	-35. 34. 39.5	3651429.5	1112958.	24571729.
12054.333	0. 3. 20. 54.333	16.15692	16. 9. 24.9	-35.45312	-35. 27. 11.2	3673945.0	1119821.	24594290.
12056.333	0. 3. 20. 56.333	16.08696	16. 5. 13.1	-35.32903	-35. 19. 44.5	3696500.2	1126695.	24616890.
12058.333	0. 3. 20. 58.333	16.01711	16. 1. 1.6	-35.20536	-35. 12. 19.3	3719097.5	1133583.	24639532.
12060.333	0. 3. 21. .333	15.94735	15. 56. 50.5	-35.08214	-35. 4. 55.7	3741731.7	1140482.	24662212.
12062.333	0. 3. 21. 2.333	15.87770	15. 52. 39.7	-34.95934	-34. 57. 33.6	3764407.0	1147394.	24684931.
12064.333	0. 3. 21. 4.333	15.80814	15. 48. 29.3	-34.83697	-34. 50. 13.1	3787120.2	1154317.	24707688.
12066.333	0. 3. 21. 6.333	15.73869	15. 44. 19.3	-34.71502	-34. 42. 54.1	3809869.4	1161251.	24730483.
12068.333	0. 3. 21. 8.333	15.66934	15. 40. 9.6	-34.59351	-34. 35. 36.6	3832657.5	1168196.	24753314.
12070.333	0. 3. 21. 10.333	15.60010	15. 36. .4	-34.47241	-34. 28. 20.7	3855482.0	1175153.	24774182.
12072.333	0. 3. 21. 12.333	15.53096	15. 31. 51.5	-34.35174	-34. 21. 6.3	3878340.0	1182120.	24799085.
12074.333	0. 3. 21. 14.333	15.46193	15. 27. 42.9	-34.23150	-34. 13. 53.4	3901234.7	1189099.	24822023.
12076.333	0. 3. 21. 16.333	15.39300	15. 23. 34.8	-34.11167	-34. 6. 42.0	3924164.0	1196088.	24844994.
12078.333	0. 3. 21. 18.333	15.32418	15. 19. 27.0	-33.99226	-33. 59. 32.1	3947125.4	1203086.	24868000.
12080.333	0. 3. 21. 20.333	15.25547	15. 15. 19.7	-33.87327	-33. 52. 23.8	3970123.2	1210096.	24891039.
12082.333	0. 3. 21. 22.333	15.18686	15. 11. 12.7	-33.75469	-33. 45. 16.9	3993153.7	1217116.	24914110.
12084.333	0. 3. 21. 24.333	15.11837	15. 7. 6.1	-33.63653	-33. 38. 11.5	4016211.0	1224144.	24937212.
12086.333	0. 3. 21. 26.333	15.04998	15. 2. 59.9	-33.51878	-33. 31. 7.6	4039304.0	1231182.	24960347.

TABLE I
APOLLO MISSION AS-502
SPACECRAFT OPERATIONAL TRAJECTORY
-POSITION VECTOR-

TIME SECONDS	TIME DAY HR MIN SEC	GEODETIC LATITUDE DEGREES	GEODETIC LATITUDE DEG MIN SEC	LONGITUDE DEGREES	LONGITUDE DEG MIN SEC	ALTITUDE FEET	ALTITUDE METERS	RADIUS FEET
12088.333	0. 3. 21. 28.333	14.98171	14. 58. 54.1	-33.40145	-33. 24. 5.2	4042425.7	1238230.	24983611.
12090.333	0. 3. 21. 30.333	14.91354	14. 54. 48.8	-33.28452	-33. 17. 4.3	4085579.7	1245287.	25004704.
12092.333	0. 3. 21. 32.333	14.84549	14. 50. 43.8	-33.16800	-33. 10. 4.8	4108762.0	1252353.	25029928.
12094.333	0. 3. 21. 34.333	14.77755	14. 46. 39.2	-33.05189	-33. 3. 6.8	4131975.0	1259428.	25053180.
12096.333	0. 3. 21. 36.333	14.70973	14. 42. 35.0	-32.93619	-32. 56. 10.3	4155211.4	1266511.	25076460.
12098.333	0. 3. 21. 38.333	14.64201	14. 38. 31.3	-32.82089	-32. 49. 15.2	4178480.0	1273603.	25099767.
12100.333	0. 3. 21. 40.333	14.57442	14. 34. 27.9	-32.70599	-32. 42. 21.6	4201772.5	1280703.	25123101.
12102.333	0. 3. 21. 42.333	14.50694	14. 30. 25.0	-32.59150	-32. 35. 29.4	4225093.7	1287811.	25146461.
12104.333	0. 3. 21. 44.333	14.43957	14. 26. 22.5	-32.47740	-32. 28. 38.6	4248438.5	1294927.	25169846.
12106.333	0. 3. 21. 46.333	14.37232	14. 22. 20.4	-32.36370	-32. 21. 49.3	4271807.4	1302050.	25193255.
12108.333	0. 3. 21. 48.333	14.30519	14. 18. 18.7	-32.25040	-32. 15. 1.5	4295205.5	1309181.	25216690.
12110.333	0. 3. 21. 50.333	14.23817	14. 14. 17.4	-32.13750	-32. 8. 15.0	4318622.2	1316319.	25240147.
12112.333	0. 3. 21. 52.333	14.17127	14. 10. 16.6	-32.02499	-32. 1. 30.0	4342064.7	1323464.	25263628.
12114.333	0. 3. 21. 54.333	14.10449	14. 6. 16.2	-31.91288	-31. 54. 46.4	4365527.5	1330615.	25287131.
12116.333	0. 3. 21. 56.333	14.03783	14. 2. 16.2	-31.80115	-31. 48. 4.2	4389016.3	1337775.	25310655.
12118.333	0. 3. 21. 58.333	13.97129	13. 58. 16.7	-31.68982	-31. 41. 23.4	4412521.9	1344939.	25334201.
12120.333	0. 3. 22. .333	13.90487	13. 54. 17.5	-31.57888	-31. 34. 44.0	4436050.5	1352111.	25357767.
12122.333	0. 3. 22. 2.333	13.83857	13. 50. 18.9	-31.46832	-31. 28. 5.9	4459601.2	1359289.	25381353.
12124.333	0. 3. 22. 4.333	13.77239	13. 46. 20.6	-31.35815	-31. 21. 29.3	4483167.8	1366472.	25404958.
12126.333	0. 3. 22. 6.333	13.70634	13. 42. 22.8	-31.24836	-31. 14. 54.1	4506754.5	1373661.	25428581.
12128.333	0. 3. 22. 8.333	13.64040	13. 38. 25.4	-31.13896	-31. 8. 20.3	4530357.7	1380856.	25452223.
12130.333	0. 3. 22. 10.333	13.57459	13. 34. 28.5	-31.02994	-31. 1. 47.8	4553980.0	1388056.	25475882.
12132.333	0. 3. 22. 12.333	13.50890	13. 30. 32.0	-30.92130	-30. 55. 16.7	4577620.5	1395262.	25499558.
12134.333	0. 3. 22. 14.333	13.44333	13. 26. 36.0	-30.81304	-30. 48. 46.9	4601275.7	1402472.	25523249.
12136.333	0. 3. 22. 16.333	13.37789	13. 22. 40.4	-30.70515	-30. 42. 18.6	4624948.5	1409687.	25546956.
12138.333	0. 3. 22. 18.333	13.31257	13. 18. 45.2	-30.59765	-30. 35. 51.5	4648631.4	1416906.	25570678.
12140.333	0. 3. 22. 20.333	13.24738	13. 14. 50.6	-30.49052	-30. 29. 25.9	4672331.2	1424129.	25594414.
12142.333	0. 3. 22. 22.333	13.18231	13. 10. 56.3	-30.38376	-30. 23. 1.5	4696046.0	1431358.	25618163.
12144.333	0. 3. 22. 24.333	13.11736	13. 7. 2.5	-30.27737	-30. 16. 38.5	4719776.0	1438591.	25641927.
12146.333	0. 3. 22. 26.333	13.05254	13. 3. 9.2	-30.17136	-30. 10. 16.9	4743517.5	1445827.	25665702.
12148.333	0. 3. 22. 28.333	12.98785	12. 59. 16.3	-30.06571	-30. 3. 56.6	4767269.2	1453067.	25689489.
12150.333	0. 3. 22. 30.333	12.92329	12. 55. 23.8	-29.96044	-29. 57. 37.6	4791030.5	1460309.	25713287.
12152.333	0. 3. 22. 32.333	12.85885	12. 51. 31.9	-29.85553	-29. 51. 19.9	4814808.0	1467556.	25737096.
12154.333	0. 3. 22. 34.333	12.79454	12. 47. 40.3	-29.75098	-29. 45. 3.5	4838592.7	1474806.	25760914.
12156.333	0. 3. 22. 36.333	12.73035	12. 43. 49.3	-29.64680	-29. 38. 48.5	4862385.5	1482058.	25784742.
12158.333	0. 3. 22. 38.333	12.66630	12. 39. 58.7	-29.54299	-29. 32. 34.8	4886188.5	1489313.	25808579.
12160.333	0. 3. 22. 40.333	12.60237	12. 36. 8.5	-29.43953	-29. 26. 22.3	4910002.7	1496572.	25832424.
12162.333	0. 3. 22. 42.333	12.53857	12. 32. 18.9	-29.33644	-29. 20. 11.2	4933820.0	1503831.	25856276.
12164.333	0. 3. 22. 44.333	12.47490	12. 28. 29.6	-29.23370	-29. 14. 1.3	4957647.5	1511094.	25880136.
12166.333	0. 3. 22. 46.333	12.41136	12. 24. 40.9	-29.13132	-29. 7. 52.8	4981479.5	1518358.	25904001.
12168.333	0. 3. 22. 48.333	12.34795	12. 20. 52.6	-29.02930	-29. 1. 45.5	5005321.0	1525625.	25927872.
12170.333	0. 3. 22. 50.333	12.28466	12. 17. 4.8	-28.92763	-28. 55. 39.5	5029163.7	1532892.	25951748.

TABLE I
APOLLO MISSION AS-502
SPACECRAFT OPERATIONAL TRAJECTORY
-POSITION VECTOR-

TIME SECONDS	TIME DAY HR MIN SEC	GEODETIC LATITUDE DEGREES	GEODETIC LATITUDE DEG MIN SEC	LONGITUDE DEGREES	LONGITUDE DEG MIN SEC	ALTITUDE FEET	ALTITUDE METERS	RADIUS FEET
12172.333	0. 3. 22. 52.333	12.22151	12. 13. 17.4	-28.82632	-28. 49. 34.7	5053012.7	1540161.	25976629.
12174.333	0. 3. 22. 54.333	12.15849	12. 9. 30.6	-28.72536	-28. 43. 31.3	5076867.7	1547432.	25999513.
12176.333	0. 3. 22. 56.333	12.09560	12. 5. 44.2	-28.62475	-28. 37. 29.1	5100722.5	1554703.	26023401.
12178.333	0. 3. 22. 58.333	12.03284	12. 1. 58.2	-28.52449	-28. 31. 28.2	5124582.2	1561976.	26047292.
12180.333	0. 3. 23. .333	11.97021	11. 58. 12.7	-28.42457	-28. 25. 28.5	5148441.2	1569248.	26071185.
12182.333	0. 3. 23. 2.333	11.90771	11. 54. 27.8	-28.32501	-28. 19. 30.0	5172304.5	1576522.	26095078.
12184.333	0. 3. 23. 4.333	11.84534	11. 50. 43.2	-28.22579	-28. 13. 32.8	5196170.2	1583796.	26118973.
12186.333	0. 3. 23. 6.333	11.78310	11. 46. 59.2	-28.12692	-28. 7. 36.9	5220034.9	1591070.	26142868.
12188.333	0. 3. 23. 8.333	11.72100	11. 43. 15.6	-28.02838	-28. 1. 42.2	5243900.2	1598344.	26166762.
12190.333	0. 3. 23. 10.333	11.65903	11. 39. 32.5	-27.93020	-27. 55. 48.7	5267761.5	1605617.	26190656.
12192.333	0. 3. 23. 12.333	11.59719	11. 35. 49.9	-27.83235	-27. 49. 56.4	5291624.7	1612890.	26214548.
12194.333	0. 3. 23. 14.333	11.53548	11. 32. 7.7	-27.73484	-27. 44. 5.4	5315484.3	1620163.	26238438.
12196.333	0. 3. 23. 16.333	11.47390	11. 28. 26.1	-27.63767	-27. 38. 15.6	5339342.0	1627436.	26262326.
12198.333	0. 3. 23. 18.333	11.41246	11. 24. 44.9	-27.54083	-27. 32. 27.0	5363198.7	1634706.	26286209.
12200.333	0. 3. 23. 20.333	11.35115	11. 21. 4.1	-27.44434	-27. 26. 39.6	5387047.8	1641975.	26310089.
12202.333	0. 3. 23. 22.333	11.28997	11. 17. 23.9	-27.34817	-27. 20. 53.4	5410896.8	1649245.	26333965.
12204.333	0. 3. 23. 24.333	11.22893	11. 13. 44.1	-27.25234	-27. 15. 8.4	5434737.2	1656511.	26357834.
12206.333	0. 3. 23. 26.333	11.16802	11. 10. 4.9	-27.15684	-27. 9. 24.6	5458574.7	1663777.	26381698.
12208.333	0. 3. 23. 28.333	11.10725	11. 6. 26.1	-27.06168	-27. 3. 42.0	5482403.7	1671040.	26405556.
12210.333	0. 3. 23. 30.333	11.04660	11. 2. 47.8	-26.96684	-26. 58. .6	5506228.7	1678302.	26429407.
12212.333	0. 3. 23. 32.333	10.98609	10. 59. 9.9	-26.87233	-26. 52. 20.4	5530043.5	1685561.	26453251.
12214.333	0. 3. 23. 34.333	10.92572	10. 55. 32.6	-26.77815	-26. 46. 41.3	5553850.0	1692817.	26477086.
12216.333	0. 3. 23. 36.333	10.86547	10. 51. 55.7	-26.68429	-26. 41. 3.4	5577648.0	1700071.	26500912.
12218.333	0. 3. 23. 38.333	10.80537	10. 48. 19.3	-26.59076	-26. 35. 26.7	5601436.9	1707321.	26524729.
12220.333	0. 3. 23. 40.333	10.74539	10. 44. 43.4	-26.49755	-26. 29. 51.2	5625218.0	1714570.	26548535.
12222.333	0. 3. 23. 42.333	10.68556	10. 41. 8.0	-26.40466	-26. 24. 16.8	5648988.7	1721815.	26572332.
12224.333	0. 3. 23. 44.333	10.62585	10. 37. 33.1	-26.31209	-26. 18. 43.5	5672747.5	1729057.	26596117.
12226.333	0. 3. 23. 46.333	10.56628	10. 33. 58.6	-26.21985	-26. 13. 11.5	5696494.7	1736295.	26619890.
12228.333	0. 3. 23. 48.333	10.50685	10. 30. 24.6	-26.12792	-26. 7. 40.5	5720227.5	1743529.	26643652.
12230.333	0. 3. 23. 50.333	10.44754	10. 26. 51.2	-26.03631	-26. 2. 10.7	5743951.0	1750760.	26667400.
12232.333	0. 3. 23. 52.333	10.38838	10. 23. 18.2	-25.94502	-25. 56. 42.1	5767660.2	1757986.	26691134.
12234.333	0. 3. 23. 54.333	10.32935	10. 19. 45.6	-25.85404	-25. 51. 14.6	5791355.0	1765208.	26714855.
12236.333	0. 3. 23. 56.333	10.27045	10. 16. 13.6	-25.76338	-25. 45. 48.2	5815033.5	1772426.	26738560.
12238.333	0. 3. 23. 58.333	10.21169	10. 12. 42.1	-25.67303	-25. 40. 22.9	5838703.0	1779640.	26762250.
12240.333	0. 3. 24. .333	10.15306	10. 9. 11.0	-25.58299	-25. 34. 58.8	5862354.0	1786849.	26785925.
12242.333	0. 3. 24. 2.333	10.09457	10. 5. 40.5	-25.49326	-25. 29. 35.7	5885987.0	1794052.	26809582.
12244.333	0. 3. 24. 4.333	10.03622	10. 2. 10.4	-25.40384	-25. 24. 13.8	5909598.7	1801249.	26833223.
12246.333	0. 3. 24. 6.333	9.97800	9. 58. 40.8	-25.31473	-25. 18. 53.0	5933198.0	1808442.	26856846.
12248.333	0. 3. 24. 8.333	9.91991	9. 55. 11.7	-25.22592	-25. 13. 33.3	5956778.2	1815630.	26880451.
12250.333	0. 3. 24. 10.333	9.86196	9. 51. 43.1	-25.13743	-25. 8. 14.7	5980340.5	1822811.	26904036.
12252.333	0. 3. 24. 12.333	9.80415	9. 48. 14.9	-25.04923	-25. 2. 57.2	6003882.2	1829987.	26927602.
12254.333	0. 3. 24. 14.333	9.74647	9. 44. 47.3	-24.96134	-24. 57. 40.8	6027405.3	1837157.	26951148.

TABLE I
APOLLO MISSION AS-502
SPACECRAFT OPERATIONAL TRAJECTORY
-POSITION VECTOR-

TIME SECONDS	TIME DAY HR MIN SEC	GEODETIC LATITUDE DEGREES	GEODETIC LATITUDE DEG MIN SEC	LONGITUDE DEGREES	LONGITUDE DEG MIN SEC	ALTITUDE FEET	ALTITUDE METERS	RADIUS FEET
12256.333	0. 3. 24. 16.333	9.68892	9. 41. 20.1	-24.87376	-24. 52. 25.5	6050907.0	1844320.	26974674.
12258.333	0. 3. 24. 18.333	9.63151	9. 37. 53.4	-24.78647	-24. 47. 11.3	6074388.0	1851477.	26998177.
12260.333	0. 3. 24. 20.333	9.57424	9. 34. 27.3	-24.69948	-24. 41. 58.1	6097846.7	1858627.	27021660.
12262.333	0. 3. 24. 22.333	9.51710	9. 31. 1.6	-24.61280	-24. 36. 46.1	6121284.2	1865771.	27045120.
12264.333	0. 3. 24. 24.333	9.46009	9. 27. 36.3	-24.52641	-24. 31. 35.1	6144698.3	1872908.	27068556.
12266.333	0. 3. 24. 26.333	9.40323	9. 24. 11.6	-24.44032	-24. 26. 25.2	6168088.5	1880037.	27091969.
12268.333	0. 3. 24. 28.333	9.34649	9. 20. 47.4	-24.35453	-24. 21. 16.3	6191455.7	1887159.	27115358.
12270.333	0. 3. 24. 30.333	9.28990	9. 17. 23.6	-24.26903	-24. 16. 8.5	6214797.7	1894274.	27138721.
12270.943	0. 3. 24. 30.943	9.27265	9. 16. 21.5	-24.24299	-24. 14. 34.8	6221917.0	1896444.	27145848.
FIRST SPS SHUTDOWN								
12270.943	0. 3. 24. 30.943	9.27265	9. 16. 21.5	-24.24299	-24. 14. 34.8	6221917.0	1896444.	27145848.
12271.630	0. 3. 24. 31.630	9.25325	9. 15. 11.7	-24.21372	-24. 12. 49.4	6229926.2	1898885.	27153865.
COAST FIVE SECONDS								
12271.630	0. 3. 24. 31.630	9.25325	9. 15. 11.7	-24.21372	-24. 12. 49.4	6229926.2	1898885.	27153865.
12276.630	0. 3. 24. 36.630	9.11236	9. 6. 44.5	-24.00137	-24. 0. 4.9	6288289.9	1916675.	27212282.
CSM ATTITUDE ORIENTAION FOR SOLAR SOAK								
12276.630	0. 3. 24. 36.630	9.11236	9. 6. 44.5	-24.00137	-24. 0. 4.9	6288289.9	1916675.	27212282.
12285.643	0. 3. 24. 45.643	8.85953	8. 51. 34.3	-23.62158	-23. 37. 17.7	6393810.0	1948837.	27317897.
12290.177	0. 3. 24. 50.177	8.73292	8. 43. 58.5	-23.43196	-23. 25. 55.0	6447042.0	1965062.	27371176.
12295.643	0. 3. 24. 55.643	8.58078	8. 34. 50.8	-23.20462	-23. 12. 16.6	6511347.5	1984663.	27435536.
12305.643	0. 3. 25. 5.643	8.30388	8. 18. 14.0	-22.79223	-22. 47. 32.0	6629359.0	2020633.	27553646.
12315.643	0. 3. 25. 15.643	8.02885	8. 1. 43.9	-22.38436	-22. 23. 3.7	6747829.8	2056743.	27672210.
12318.207	0. 3. 25. 18.207	7.95865	7. 57. 31.1	-22.28052	-22. 16. 49.9	6778272.0	2066021.	27702676.
12325.643	0. 3. 25. 25.643	7.75569	7. 45. 20.5	-21.98093	-21. 58. 51.3	6886745.9	2092988.	27791216.
12335.643	0. 3. 25. 35.643	7.48442	7. 29. 3.9	-21.58186	-21. 34. 54.7	6986092.7	2129365.	27910650.

TABLE I
APOLLO MISSION AS-502
SPACECRAFT OPERATIONAL TRAJECTORY
-POSITION VECTOR-

TIME SECONDS	TIME DAY HR MIN SEC	GEODETIC LATITUDE DEGREES	GEODETIC LATITUDE DEG MIN SEC	LONGITUDE DEGREES	LONGITUDE DEG MIN SEC	ALTITUDE FEET	ALTITUDE METERS	RADIUS FEET
12337.521	0. 3. 25. 37.521	7.43369	7. 26. 1.3	-21.50740	-21. 30. 26.6	7008553.0	2136211.	27933127.
			START SOLAR SOAK					
12337.521	0. 3. 25. 37.521	7.43369	7. 26. 1.3	-21.50740	-21. 30. 26.6	7008553.0	2136211.	27933127.
12340.643	0. 3. 25. 40.643	7.34949	7. 20. 58.2	-21.38395	-21. 23. 2.2	7045922.7	2147601.	27970523.
12400.643	0. 3. 26. 40.643	5.76741	5. 46. 2.7	-19.08975	-19. 5. 23.1	7771475.0	2368750.	28696511.
12460.643	0. 3. 27. 40.643	4.25383	4. 15. 13.8	-16.93526	-16. 56. 6.9	8509219.2	2593615.	29434576.
12520.643	0. 3. 28. 40.643	2.80812	2. 48. 29.2	-14.90794	-14. 54. 28.6	9256790.5	2821475.	30182365.
12580.643	0. 3. 29. 40.643	1.42881	1. 25. 43.7	-12.99656	-12. 59. 47.6	10012098.7	3051694.	30937795.
12640.643	0. 3. 30. 40.643	.11387	0. 6. 49.9	-11.19107	-11. 11. 27.9	10773291.0	3283706.	31699029.
12700.643	0. 3. 31. 40.643	-1.13913	-1. 8. 20.9	-9.48250	-9. 28. 57.0	11538735.9	3517014.	32464448.
12760.643	0. 3. 32. 40.643	-2.33281	-2. 19. 58.1	-7.86281	-7. 51. 46.1	12307003.1	3751182.	33232628.
12820.643	0. 3. 33. 40.643	-3.46996	-3. 28. 11.9	-6.32481	-6. 19. 29.3	13076836.9	3985828.	34002321.
12880.643	0. 3. 34. 40.643	-4.55337	-4. 33. 12.1	-4.86205	-4. 51. 43.4	13847135.9	4220615.	34772436.
12940.643	0. 3. 35. 40.643	-5.58584	-5. 35. 9.0	-3.46876	-3. 28. 7.5	14616937.9	4455252.	35542017.
13000.643	0. 3. 36. 40.643	-6.57009	-6. 34. 12.3	-2.13971	-2. 8. 23.0	15385401.4	4689480.	36310229.
13060.643	0. 3. 37. 40.643	-7.50877	-7. 30. 31.6	-.87024	0. 52. 12.9	16151795.5	4923077.	37076344.
13120.643	0. 3. 38. 40.643	-8.40441	-8. 24. 15.9	.34390	0. 20. 38.0	16915478.0	5155848.	37839727.
13180.643	0. 3. 39. 40.643	-9.25943	-9. 15. 34.0	1.50654	1. 30. 23.5	17675893.0	5387623.	38599827.
13240.643	0. 3. 40. 40.643	-10.07612	-10. 4. 34.0	2.62114	2. 37. 16.1	18432561.0	5618256.	39356163.
13300.643	0. 3. 41. 40.643	-10.85666	-10. 51. 24.0	3.69088	3. 41. 27.2	19185057.0	5847617.	40108322.
13360.643	0. 3. 42. 40.643	-11.60307	-11. 36. 11.0	4.71862	4. 43. 7.0	19933029.0	6075599.	40855940.
13420.643	0. 3. 43. 40.643	-12.31728	-12. 19. 2.2	5.70697	5. 42. 25.1	20676146.0	6302102.	41598709.
13480.643	0. 3. 44. 40.643	-13.00110	-13. 0. 4.0	6.65835	6. 39. 30.1	21414156.0	6527048.	42336360.
13540.643	0. 3. 45. 40.643	-13.65622	-13. 39. 22.4	7.57495	7. 34. 29.8	22146819.0	6750364.	43068664.
13600.643	0. 3. 46. 40.643	-14.28421	-14. 17. 3.2	8.45878	8. 27. 31.6	22873940.0	6971991.	43795424.
13660.643	0. 3. 47. 40.643	-14.88657	-14. 53. 11.6	9.31169	9. 18. 42.1	23595344.0	7191875.	44516473.
13720.643	0. 3. 48. 40.643	-15.46467	-15. 27. 52.8	10.13540	10. 8. 7.5	24310898.0	7409977.	45231671.
13780.643	0. 3. 49. 40.643	-16.01982	-16. 1. 11.4	10.93149	10. 55. 53.4	25020480.0	7626258.	45940898.
13840.643	0. 3. 50. 40.643	-16.55324	-16. 33. 11.7	11.70140	11. 42. 5.0	25723989.0	7840687.	46644057.
13900.643	0. 3. 51. 40.643	-17.06605	-17. 3. 57.8	12.44649	12. 26. 47.4	26421344.0	8053242.	47341067.
13960.643	0. 3. 52. 40.643	-17.55933	-17. 33. 33.6	13.16801	13. 10. 4.9	27112480.0	8263901.	48031861.
14020.643	0. 3. 53. 40.643	-18.03407	-18. 2. 2.6	13.86714	13. 52. 1.7	27797346.0	8472648.	48716389.
14080.643	0. 3. 54. 40.643	-18.49120	-18. 29. 28.3	14.54494	14. 32. 41.8	28475900.0	8679472.	49394612.
14140.643	0. 3. 55. 40.643	-18.93160	-18. 55. 53.8	15.20242	15. 12. 8.7	29148112.0	8884362.	50066499.
14200.643	0. 3. 56. 40.643	-19.35610	-19. 21. 21.9	15.84055	15. 50. 26.0	29813968.0	9087316.	50732032.
14260.643	0. 3. 57. 40.643	-19.76545	-19. 45. 55.6	16.46018	16. 27. 36.6	30473449.0	9288326.	51391199.
14320.643	0. 3. 58. 40.643	-20.16038	-20. 9. 37.4	17.06215	17. 3. 43.7	31126560.0	9487394.	52043997.
14380.643	0. 3. 59. 40.643	-20.54158	-20. 32. 29.7	17.64722	17. 38. 50.0	31773290.0	9684518.	52690426.

TABLE I
APOLLO MISSION AS-502
SPACECRAFT OPERATIONAL TRAJECTORY
-POSITION VECTOR-

TIME SECONDS	TIME DAY	HR	MIN	SEC	GEODETIC LATITUDE DEGREES	GEODETIC LATITUDE DEG	MIN	SEC	LONGITUDE DEGREES	LONGITUDE DEG	MIN	SEC	ALTITUDE FEET	ALTITUDE METERS	RADIUS FEET
14440.643	0.	4.	0.	40.643	-20.90968	-20.	54.	34.8	18.21613	18.	12.	58.1	32413657.0	9879702.	53330494.
14500.643	0.	4.	1.	40.643	-21.26528	-21.	15.	55.0	18.76955	18.	46.	10.4	33047669.0	10072949.	53964215.
14560.643	0.	4.	2.	40.643	-21.60894	-21.	36.	32.2	19.30813	19.	18.	29.3	33675344.0	10264265.	54591604.
14620.643	0.	4.	3.	40.643	-21.94120	-21.	56.	28.3	19.83246	19.	49.	56.9	34296702.0	10453656.	55212682.
14680.643	0.	4.	4.	40.643	-22.26256	-22.	15.	45.2	20.34311	20.	20.	35.2	34911767.0	10641128.	55827473.
14740.643	0.	4.	5.	40.643	-22.57349	-22.	34.	24.6	20.84063	20.	50.	26.3	35520565.0	10826690.	56436002.
14800.643	0.	4.	6.	40.643	-22.87444	-22.	52.	28.0	21.32551	21.	19.	31.8	36123122.0	11010350.	57038300.
14860.643	0.	4.	7.	40.643	-23.16583	-23.	9.	57.0	21.79824	21.	47.	53.7	36719476.0	11192119.	57634396.
14920.643	0.	4.	8.	40.643	-23.44805	-23.	26.	53.0	22.25927	22.	15.	33.4	37309656.0	11372006.	58224324.
14980.643	0.	4.	9.	40.643	-23.72148	-23.	43.	17.3	22.70902	22.	42.	32.5	37893693.0	11550021.	58808117.
15040.643	0.	4.	10.	40.643	-23.98648	-23.	59.	11.3	23.14792	23.	8.	52.5	38471626.0	11726175.	59385811.
15100.643	0.	4.	11.	40.643	-24.24339	-24.	14.	36.2	23.57633	23.	34.	34.8	39043491.0	11900480.	59957443.
15160.643	0.	4.	12.	40.643	-24.49252	-24.	29.	33.1	23.99464	23.	59.	40.7	39609326.0	12072947.	60523049.
15220.643	0.	4.	13.	40.643	-24.73418	-24.	44.	3.1	24.40318	24.	24.	11.4	40169169.0	12243587.	61082669.
15280.643	0.	4.	14.	40.643	-24.96865	-24.	58.	7.1	24.80229	24.	48.	8.3	40723060.0	12412414.	61636339.
15340.643	0.	4.	15.	40.643	-25.19621	-25.	11.	46.3	25.19229	25.	11.	32.3	41271035.0	12579437.	62184101.
15400.643	0.	4.	16.	40.643	-25.41711	-25.	25.	1.6	25.57348	25.	34.	24.5	41813134.0	12744669.	62725992.
15460.643	0.	4.	17.	40.643	-25.63159	-25.	37.	53.7	25.94615	25.	56.	46.1	42349398.0	12908122.	63262063.
15520.643	0.	4.	18.	40.643	-25.83990	-25.	50.	23.6	26.31057	26.	18.	38.0	42879870.0	13069810.	63792323.
15580.643	0.	4.	19.	40.643	-26.04226	-26.	2.	32.1	26.66699	26.	40.	1.2	43404581.0	13229743.	64316842.
15640.643	0.	4.	20.	40.643	-26.23886	-26.	14.	19.9	27.01569	27.	0.	56.5	43923578.0	13387934.	64835650.
15700.643	0.	4.	21.	40.643	-26.42993	-26.	25.	47.7	27.35688	27.	21.	24.8	44436902.0	13544395.	65348786.
15760.643	0.	4.	22.	40.643	-26.61564	-26.	36.	56.3	27.69081	27.	41.	26.9	44944586.0	13699137.	65856289.
15820.643	0.	4.	23.	40.643	-26.79618	-26.	47.	46.3	28.01769	28.	1.	3.7	45446673.0	13852174.	66358199.
15880.643	0.	4.	24.	40.643	-26.97173	-26.	58.	18.2	28.33773	28.	20.	15.8	45943202.0	14003516.	66854554.
15940.643	0.	4.	25.	40.643	-27.14244	-27.	8.	32.8	28.65113	28.	39.	4.1	46434209.0	14153176.	67345394.
16000.643	0.	4.	26.	40.643	-27.30849	-27.	18.	30.6	28.95810	28.	57.	29.1	46919740.0	14301165.	67830756.
16060.643	0.	4.	27.	40.643	-27.47001	-27.	28.	12.0	29.25880	29.	15.	31.7	47399825.0	14447495.	68310679.
16120.643	0.	4.	28.	40.643	-27.62716	-27.	37.	37.8	29.55343	29.	33.	12.3	47874501.0	14592177.	68785200.
16180.643	0.	4.	29.	40.643	-27.78007	-27.	46.	48.3	29.84215	29.	50.	31.7	48343812.0	14735223.	69254355.
16240.643	0.	4.	30.	40.643	-27.92888	-27.	55.	44.0	30.12513	30.	7.	30.5	48807789.0	14876644.	69718183.
16300.643	0.	4.	31.	40.643	-28.07371	-28.	4.	25.3	30.40253	30.	24.	9.1	49266475.0	15016452.	70176720.
16360.643	0.	4.	32.	40.643	-28.21468	-28.	12.	52.8	30.67449	30.	40.	28.2	49719896.0	15154655.	70629999.
16420.643	0.	4.	33.	40.643	-28.35191	-28.	21.	6.9	30.94118	30.	56.	28.2	50168095.0	15291266.	71078059.
16480.643	0.	4.	34.	40.643	-28.48550	-28.	29.	7.8	31.20272	31.	12.	9.8	50611105.0	15426296.	71520932.
16540.643	0.	4.	35.	40.643	-28.61558	-28.	36.	56.1	31.45926	31.	27.	33.3	51048961.0	15559755.	71958655.
16600.643	0.	4.	36.	40.643	-28.74223	-28.	44.	32.0	31.71092	31.	42.	39.3	51481696.0	15691652.	72391260.
16660.643	0.	4.	37.	40.643	-28.86555	-28.	51.	56.0	31.95784	31.	57.	28.2	51909346.0	15822000.	72818781.
16720.643	0.	4.	38.	40.643	-28.98565	-28.	59.	8.3	32.20014	32.	12.	.5	52331939.0	15950807.	73241250.
16780.643	0.	4.	39.	40.643	-29.10260	-29.	6.	9.4	32.43793	32.	26.	16.6	52749512.0	16078083.	73658701.
16840.643	0.	4.	40.	40.643	-29.21650	-29.	12.	59.4	32.67134	32.	40.	16.8	53162095.0	16203839.	74071165.
16900.643	0.	4.	41.	40.643	-29.32743	-29.	19.	38.8	32.90046	32.	54.	1.7	53569718.0	16328083.	74478674.

TABLE I
APOLLO MISSION AS-502
SPACECRAFT OPERATIONAL TRAJECTORY
-POSITION VECTOR-

TIME SECONDS	TIME DAY	HR	MIN	SEC	GEODETIC LATITUDE DEGREES	GEODETIC LATITUDE DEG	MIN	SEC	LONGITUDE DEGREES	LONGITUDE DEG	MIN	SEC	ALTITUDE FEET	ALTITUDE METERS	RADIUS FEET
16960.643	0.	4.	42.	40.643	-29.43547	-29.	26.	7.7	33.18542	33.	7.	31.5	53972416.0	16450825.	74881258.
17020.643	0.	4.	43.	40.643	-29.54069	-29.	32.	26.5	33.34630	33.	20.	46.7	54370216.0	16572075.	75278949.
17080.643	0.	4.	44.	40.643	-29.64318	-29.	38.	35.4	33.56323	33.	33.	47.6	54763151.0	16691842.	75671775.
17140.643	0.	4.	45.	40.643	-29.74299	-29.	44.	34.8	33.77628	33.	46.	34.6	55151248.0	16810134.	76059766.
17200.643	0.	4.	46.	40.643	-29.84020	-29.	50.	24.7	33.98555	33.	59.	8.0	55534538.0	16926961.	76442953.
17260.643	0.	4.	47.	40.643	-29.93488	-29.	56.	5.6	34.19114	34.	11.	28.1	55913045.0	17042330.	76821360.
17320.643	0.	4.	48.	40.643	-30.02708	-30.	1.	37.5	34.39313	34.	23.	35.3	56286804.0	17156252.	77195019.
17380.643	0.	4.	49.	40.643	-30.11687	-30.	7.	.7	34.59162	34.	35.	29.8	56655835.0	17268733.	77563956.
17440.643	0.	4.	50.	40.643	-30.20430	-30.	12.	15.5	34.78667	34.	47.	12.0	57020171.0	17379782.	77928198.
17500.643	0.	4.	51.	40.643	-30.28944	-30.	17.	22.0	34.97838	34.	58.	42.2	57379835.0	17489409.	78287773.
17560.643	0.	4.	52.	40.643	-30.37234	-30.	22.	20.4	35.16682	35.	10.	.6	57734855.0	17597619.	78642703.
17620.643	0.	4.	53.	40.643	-30.45305	-30.	27.	11.0	35.35208	35.	21.	7.5	58085256.0	17704421.	78993018.
17680.643	0.	4.	54.	40.643	-30.53162	-30.	31.	53.8	35.53421	35.	32.	3.1	58431064.0	17809824.	79338741.
17740.643	0.	4.	55.	40.643	-30.60809	-30.	36.	29.1	35.71329	35.	42.	47.9	58772301.0	17913833.	79679897.
17800.643	0.	4.	56.	40.643	-30.68253	-30.	40.	57.1	35.88940	35.	53.	21.9	59108994.0	18016457.	80016511.
17860.643	0.	4.	57.	40.643	-30.75496	-30.	45.	17.9	36.06261	36.	3.	45.4	59441166.0	18117703.	80348605.
17920.643	0.	4.	58.	40.643	-30.82544	-30.	49.	31.6	36.23297	36.	13.	58.7	59768843.0	18217579.	80676205.
17980.643	0.	4.	59.	40.643	-30.89401	-30.	53.	38.4	36.40055	36.	24.	2.0	60092043.0	18316091.	80999331.
18040.643	0.	5.	0.	40.643	-30.96071	-30.	57.	38.5	36.56542	36.	33.	55.5	60410791.0	18413246.	81318007.
18100.643	0.	5.	1.	40.643	-31.02557	-31.	1.	32.1	36.72764	36.	43.	39.5	60725110.0	18509050.	81632255.
18160.643	0.	5.	2.	40.643	-31.08864	-31.	5.	19.1	36.88726	36.	53.	14.1	61035020.0	18603511.	81942097.
18220.643	0.	5.	3.	40.643	-31.14996	-31.	8.	59.9	37.04434	37.	2.	39.6	61340542.0	18696634.	82247554.
18280.643	0.	5.	4.	40.643	-31.20955	-31.	12.	34.4	37.19895	37.	11.	56.2	61641700.0	18788427.	82548647.
18340.643	0.	5.	5.	40.643	-31.26746	-31.	16.	2.9	37.35113	37.	21.	4.1	61938512.0	18878896.	82845396.
18400.643	0.	5.	6.	40.643	-31.32371	-31.	19.	25.4	37.50094	37.	30.	3.4	62230999.0	18968046.	83137821.
18460.643	0.	5.	7.	40.643	-31.37834	-31.	22.	42.0	37.64843	37.	38.	54.4	62519178.0	19055884.	83425943.
18520.643	0.	5.	8.	40.643	-31.43138	-31.	25.	53.0	37.79366	37.	47.	37.2	62803073.0	19142415.	83709779.
18580.643	0.	5.	9.	40.643	-31.48286	-31.	28.	58.3	37.93667	37.	56.	12.0	63082698.0	19227645.	83989350.
18640.643	0.	5.	10.	40.643	-31.53280	-31.	31.	58.1	38.07751	38.	4.	39.0	63358076.0	19311580.	84264473.
18700.643	0.	5.	11.	40.643	-31.58125	-31.	34.	52.5	38.21623	38.	12.	58.4	63629224.0	19394226.	84535766.
18760.643	0.	5.	12.	40.643	-31.62821	-31.	37.	41.6	38.35288	38.	21.	10.4	63896158.0	19475587.	84802650.
18820.643	0.	5.	13.	40.643	-31.67373	-31.	40.	25.4	38.48750	38.	29.	15.0	64158897.0	19555671.	85065339.
18880.643	0.	5.	14.	40.643	-31.71782	-31.	43.	4.2	38.62013	38.	37.	12.5	64417459.0	19634481.	85323851.
18940.643	0.	5.	15.	40.643	-31.76051	-31.	45.	37.8	38.75083	38.	45.	3.0	64671857.0	19712021.	85578204.
19000.643	0.	5.	16.	40.643	-31.80182	-31.	48.	6.6	38.87962	38.	52.	46.6	64922112.0	19788299.	85828413.
19060.643	0.	5.	17.	40.643	-31.84178	-31.	50.	30.4	39.00656	39.	0.	23.6	65168236.0	19863318.	86074494.
19120.643	0.	5.	18.	40.643	-31.88041	-31.	52.	49.5	39.13169	39.	7.	54.1	65410251.0	19937084.	86316464.
19180.643	0.	5.	19.	40.643	-31.91773	-31.	55.	3.8	39.25504	39.	15.	18.1	65648165.0	20009600.	86554337.
19240.643	0.	5.	20.	40.643	-31.95376	-31.	57.	13.5	39.37666	39.	22.	36.0	65881996.0	20080872.	86788130.
19300.643	0.	5.	21.	40.643	-31.98851	-31.	59.	18.7	39.49657	39.	29.	47.7	66111758.0	20150904.	87017856.
19360.643	0.	5.	22.	40.643	-32.02202	-32.	1.	19.3	39.61483	39.	36.	53.4	66337472.0	20219702.	87243530.
19420.643	0.	5.	23.	40.643	-32.05430	-32.	3.	15.5	39.73147	39.	43.	53.3	66559144.0	20287267.	87465166.

TABLE I
APOLLO MISSION AS-502
SPACECRAFT OPERATIONAL TRAJECTORY
-POSITION VECTOR-

TIME SECONDS	TIME DAY HR MIN SEC	GEODETIC LATITUDE DEGREES	GEODETIC LATITUDE DEG MIN SEC	LONGITUDE DEGREES	LONGITUDE DEG MIN SEC	ALTITUDE FEET	ALTITUDE METERS	RADIUS FEET
19480.643	0. 5. 24. 40.643	-32.08537	-32. 5. 7.3	39.84651	39. 50. 47.5	66776789.0	20353606.	87682778.
19540.643	0. 5. 25. 40.643	-32.11524	-32. 6. 54.9	39.96001	39. 57. 36.0	66990422.0	20418721.	87896379.
19600.643	0. 5. 26. 40.643	-32.14394	-32. 8. 38.2	40.07199	40. 4. 19.2	67200058.0	20482618.	88105983.
19660.643	0. 5. 27. 40.643	-32.17147	-32. 10. 17.3	40.18249	40. 10. 57.0	67405708.0	20545301.	88311603.
19720.643	0. 5. 28. 40.643	-32.19786	-32. 11. 52.3	40.29154	40. 17. 29.5	67607387.0	20606773.	88513252.
19780.643	0. 5. 29. 40.643	-32.22312	-32. 13. 23.2	40.39918	40. 23. 57.0	67805104.0	20667037.	88710942.
19840.643	0. 5. 30. 40.643	-32.24727	-32. 14. 50.2	40.50543	40. 30. 19.5	67998872.0	20726097.	88904683.
19900.643	0. 5. 31. 40.643	-32.27031	-32. 16. 13.1	40.61032	40. 36. 37.2	68188704.0	20783959.	89094489.
19960.643	0. 5. 32. 40.643	-32.29227	-32. 17. 32.2	40.71390	40. 42. 50.1	68374611.0	20840622.	89280372.
20020.643	0. 5. 33. 40.643	-32.31315	-32. 18. 47.4	40.81619	40. 48. 58.3	68556602.0	20896094.	89462341.
20080.643	0. 5. 34. 40.643	-32.33298	-32. 19. 58.7	40.91722	40. 55. 2.0	68734694.0	20950376.	89640409.
20140.643	0. 5. 35. 40.643	-32.35176	-32. 21. 6.3	41.01702	41. 1. 1.3	68908890.0	21003471.	89814585.
20200.643	0. 5. 36. 40.643	-32.36951	-32. 22. 10.2	41.11562	41. 6. 56.2	69079205.0	21055383.	89984881.
20260.643	0. 5. 37. 40.643	-32.38623	-32. 23. 10.4	41.21305	41. 12. 47.0	69245649.0	21106116.	90151306.
20320.643	0. 5. 38. 40.643	-32.40194	-32. 24. 7.0	41.30934	41. 18. 33.6	69408232.0	21155671.	90313870.
20380.643	0. 5. 39. 40.643	-32.41665	-32. 24. 59.9	41.40451	41. 24. 16.2	69566961.0	21204051.	90472584.
20440.643	0. 5. 40. 40.643	-32.43037	-32. 25. 49.3	41.49859	41. 29. 54.9	69721850.0	21251262.	90627456.
20500.643	0. 5. 41. 40.643	-32.44311	-32. 26. 35.2	41.59161	41. 35. 29.8	69872902.0	21297303.	90778495.
20560.643	0. 5. 42. 40.643	-32.45489	-32. 27. 17.6	41.68359	41. 41. .9	70020131.0	21342178.	90925711.
20620.643	0. 5. 43. 40.643	-32.46570	-32. 27. 56.5	41.77457	41. 46. 28.5	70163544.0	21385891.	91069111.
20680.643	0. 5. 44. 40.643	-32.47556	-32. 28. 32.0	41.86457	41. 51. 52.5	70303148.0	21428442.	91208704.
20740.643	0. 5. 45. 40.643	-32.48448	-32. 29. 4.1	41.95361	41. 57. 13.0	70438951.0	21469835.	91344500.
20800.643	0. 5. 46. 40.643	-32.49246	-32. 29. 32.9	42.04172	42. 2. 30.2	70570965.0	21510073.	91476504.
20860.643	0. 5. 47. 40.643	-32.49952	-32. 29. 58.3	42.12893	42. 7. 44.2	70699195.0	21549158.	91604725.
20920.643	0. 5. 48. 40.643	-32.50567	-32. 30. 20.4	42.21525	42. 12. 54.9	70823647.0	21587090.	91729171.
20980.643	0. 5. 49. 40.643	-32.51090	-32. 30. 39.2	42.30072	42. 18. 2.6	70944330.0	21623874.	91849848.
21040.643	0. 5. 50. 40.643	-32.51523	-32. 30. 54.8	42.38536	42. 23. 7.3	71061252.0	21659513.	91966765.
21100.643	0. 5. 51. 40.643	-32.51867	-32. 31. 7.2	42.46919	42. 28. 9.1	71174414.0	21694005.	92079925.
21160.643	0. 5. 52. 40.643	-32.52121	-32. 31. 16.4	42.55223	42. 33. 8.0	71283830.0	21727355.	92189337.
21220.643	0. 5. 53. 40.643	-32.52287	-32. 31. 22.3	42.63451	42. 38. 4.2	71389505.0	21759564.	92295008.
21280.643	0. 5. 54. 40.643	-32.52366	-32. 31. 25.2	42.71605	42. 42. 57.8	71491439.0	21790634.	92396943.
21340.643	0. 5. 55. 40.643	-32.52357	-32. 31. 24.9	42.79687	42. 47. 48.7	71589642.0	21820566.	92495146.
21400.643	0. 5. 56. 40.643	-32.52262	-32. 31. 21.4	42.87701	42. 52. 37.2	71684121.0	21849363.	92589626.
21460.643	0. 5. 57. 40.643	-32.52081	-32. 31. 14.9	42.95647	42. 57. 23.3	71774880.0	21877027.	92680387.
21520.643	0. 5. 58. 40.643	-32.51815	-32. 31. 5.3	43.03528	43. 2. 7.0	71861923.0	21903558.	92767432.
21580.643	0. 5. 59. 40.643	-32.51463	-32. 30. 52.7	43.11347	43. 6. 48.5	71945255.0	21928957.	92850769.
21640.643	0. 6. 0. 40.643	-32.51027	-32. 30. 37.0	43.19105	43. 11. 27.8	72024882.0	21953227.	92930401.
21700.643	0. 6. 1. 40.643	-32.50507	-32. 30. 18.2	43.26804	43. 16. 5.0	72100809.0	21976370.	93006333.
21760.643	0. 6. 2. 40.643	-32.49903	-32. 29. 56.5	43.34448	43. 20. 40.1	72173038.0	21998386.	93078570.
21820.643	0. 6. 3. 40.643	-32.49215	-32. 29. 31.8	43.42037	43. 25. 13.3	72241575.0	22019276.	93147114.
21880.643	0. 6. 4. 40.643	-32.48445	-32. 29. 4.0	43.49574	43. 29. 44.7	72306424.0	22039042.	93211971.
21940.643	0. 6. 5. 40.643	-32.47592	-32. 28. 33.3	43.57062	43. 34. 14.2	72367589.0	22057685.	93273144.

TABLE I
APOLLO MISSION AS-502
SPACECRAFT OPERATIONAL TRAJECTORY
-POSITION VECTOR-

TIME SECONDS	TIME DAY	HR	MIN	SEC	GEODETIC LATITUDE DEGREES	GEODETIC LATITUDE DEG	MIN	SEC	LONGITUDE DEGREES	LONGITUDE DEG	MIN	SEC	ALTITUDE FEET	ALTITUDE METERS	RADIUS FEET
22000.643	0.	6.	6.	40.643	-32.46656	-32.	27.	59.6	43.64501	43.	38.	42.0	72425070.0	22075205.	93330635.
22060.643	0.	6.	7.	40.643	-32.45638	-32.	27.	23.0	43.71895	43.	43.	8.2	72478872.0	22091604.	93384450.
22120.643	0.	6.	8.	40.643	-32.44539	-32.	26.	43.4	43.79245	43.	47.	32.8	72529000.0	22106883.	93434589.
22180.643	0.	6.	9.	40.643	-32.43358	-32.	26.	.9	43.86554	43.	51.	55.9	72575452.0	22121042.	93481057.
22240.643	0.	6.	10.	40.643	-32.42095	-32.	25.	15.4	43.93823	43.	56.	17.6	72618239.0	22134084.	93523855.
22300.643	0.	6.	11.	40.643	-32.40751	-32.	24.	27.0	44.01054	44.	0.	37.9	72657353.0	22146005.	93562987.
22360.643	0.	6.	12.	40.643	-32.39326	-32.	23.	35.7	44.08250	44.	4.	57.0	72692806.0	22156812.	93598454.
22420.643	0.	6.	13.	40.643	-32.37820	-32.	22.	41.5	44.15412	44.	9.	14.8	72724595.0	22166500.	93630258.
22480.643	0.	6.	14.	40.643	-32.36234	-32.	21.	44.4	44.22542	44.	13.	31.5	72752721.0	22175074.	93658401.
22540.643	0.	6.	15.	40.643	-32.34566	-32.	20.	44.4	44.29643	44.	17.	47.1	72777187.0	22182531.	93682866.
22600.643	0.	6.	16.	40.643	-32.32818	-32.	19.	41.5	44.36716	44.	22.	1.8	72797993.0	22188872.	93703712.
22660.643	0.	6.	17.	40.643	-32.30990	-32.	18.	35.6	44.43763	44.	26.	15.5	72815139.0	22194099.	93720880.
22720.643	0.	6.	18.	40.643	-32.29081	-32.	17.	26.9	44.50787	44.	30.	28.3	72828632.0	22198211.	93734394.
22780.643	0.	6.	19.	40.643	-32.27091	-32.	16.	15.3	44.57789	44.	34.	40.4	72838469.0	22201210.	93744252.
22840.643	0.	6.	20.	40.643	-32.25021	-32.	15.	.8	44.64771	44.	38.	51.8	72844649.0	22203093.	93750455.
22900.643	0.	6.	21.	40.643	-32.22870	-32.	13.	43.3	44.71736	44.	43.	2.5	72847175.0	22203863.	93753005.
22912.502	0.	6.	21.	52.502	-32.22436	-32.	13.	27.7	44.73110	44.	43.	52.0	72847244.0	22203884.	93753076.

APOGEE

22912.502	0.	6.	21.	52.502	-32.22436	-32.	13.	27.7	44.73110	44.	43.	52.0	72847244.0	22203884.	93753076.
22960.643	0.	6.	22.	40.643	-32.20639	-32.	12.	23.0	44.78683	44.	47.	12.6	72846045.0	22203518.	93751899.
23020.643	0.	6.	23.	40.643	-32.18327	-32.	10.	59.8	44.85618	44.	51.	22.3	72841261.0	22202060.	93747141.
23080.643	0.	6.	24.	40.643	-32.15934	-32.	9.	33.6	44.92540	44.	55.	31.5	72832820.0	22199488.	93738727.
23140.643	0.	6.	25.	40.643	-32.13461	-32.	8.	4.6	44.99453	44.	59.	40.3	72820727.0	22195802.	93726660.
23200.643	0.	6.	26.	40.643	-32.10906	-32.	6.	32.6	45.06357	45.	3.	48.9	72804975.0	22191001.	93710936.
23260.643	0.	6.	27.	40.643	-32.08271	-32.	4.	57.7	45.13255	45.	7.	57.2	72785566.0	22185084.	93691565.
23320.643	0.	6.	28.	40.643	-32.05554	-32.	3.	19.9	45.20149	45.	12.	5.4	72762498.0	22178054.	93668518.
23380.643	0.	6.	29.	40.643	-32.02755	-32.	1.	39.2	45.27041	45.	16.	13.5	72735769.0	22169907.	93641821.
23440.643	0.	6.	30.	40.643	-31.99875	-31.	59.	55.5	45.33932	45.	20.	21.5	72705382.0	22160645.	93611464.
23500.643	0.	6.	31.	40.643	-31.96912	-31.	58.	8.8	45.40825	45.	24.	29.7	72671330.0	22150265.	93577444.
23560.643	0.	6.	32.	40.643	-31.93868	-31.	56.	19.2	45.47722	45.	28.	38.0	72633613.0	22138769.	93539762.
23620.643	0.	6.	33.	40.643	-31.90740	-31.	54.	26.7	45.54624	45.	32.	46.4	72592231.0	22126156.	93498413.
23680.643	0.	6.	34.	40.643	-31.87530	-31.	52.	31.1	45.61533	45.	36.	55.2	72547178.0	22112424.	93453397.
23740.643	0.	6.	35.	40.643	-31.84237	-31.	50.	32.5	45.68453	45.	41.	4.3	72498453.0	22097573.	93404709.
23800.643	0.	6.	36.	40.643	-31.80860	-31.	48.	31.0	45.75383	45.	45.	13.8	72446057.0	22081602.	93352348.
23860.643	0.	6.	37.	40.643	-31.77399	-31.	46.	26.4	45.82328	45.	49.	23.8	72389981.0	22064510.	93296310.
23920.643	0.	6.	38.	40.643	-31.73854	-31.	44.	18.8	45.89287	45.	53.	34.3	72330225.0	22046296.	93236593.
23980.643	0.	6.	39.	40.643	-31.70225	-31.	42.	8.1	45.96265	45.	57.	45.5	72266784.0	22026960.	93173193.
24040.643	0.	6.	40.	40.643	-31.66509	-31.	39.	54.3	46.03261	46.	1.	57.4	72199659.0	22006500.	93106107.

TABLE I
APOLLO MISSION AS-502
SPACECRAFT OPERATIONAL TRAJECTORY
-POSITION VECTOR-

TIME SECONDS	TIME DAY HR MIN SEC	GEODETIC LATITUDE DEGREES	GEODETIC LATITUDE DEG MIN SEC	LONGITUDE DEGREES	LONGITUDE DEG MIN SEC	ALTITUDE FEET	ALTITUDE METERS	RADIUS FEET
24100.643	0. 6. 41. 40.643	-31.62709	-31. 37. 37.5	46.10280	46. 6. 10.1	72128840.0	21984914.	93035331.
24160.643	0. 6. 42. 40.643	-31.58822	-31. 35. 17.6	46.17322	46. 10. 23.6	72054328.0	21962203.	92960860.
24220.643	0. 6. 43. 40.643	-31.54848	-31. 32. 54.5	46.24389	46. 14. 38.0	71976115.0	21938363.	92882691.
24280.643	0. 6. 44. 40.643	-31.50787	-31. 30. 28.3	46.31485	46. 18. 53.5	71894199.0	21913396.	92800818.
24340.643	0. 6. 45. 40.643	-31.46638	-31. 27. 59.0	46.38611	46. 23. 10.0	71808573.0	21887296.	92715239.
24400.643	0. 6. 46. 40.643	-31.42401	-31. 25. 26.4	46.45768	46. 27. 27.6	71719238.0	21860068.	92625947.
24460.643	0. 6. 47. 40.643	-31.38075	-31. 22. 50.7	46.52959	46. 31. 46.5	71626181.0	21831703.	92532939.
24520.643	0. 6. 48. 40.643	-31.33659	-31. 20. 11.7	46.60187	46. 36. 6.7	71529401.0	21802205.	92436207.
24580.643	0. 6. 49. 40.643	-31.29153	-31. 17. 29.5	46.67452	46. 40. 28.3	71428893.0	21771570.	92335748.
24640.643	0. 6. 50. 40.643	-31.24556	-31. 14. 44.0	46.74759	46. 44. 51.3	71324651.0	21739797.	92231555.
24700.643	0. 6. 51. 40.643	-31.19867	-31. 11. 55.2	46.82108	46. 49. 15.9	71216666.0	21706883.	92123622.
24760.643	0. 6. 52. 40.643	-31.15085	-31. 9. 3.1	46.89502	46. 53. 42.1	71104936.0	21672828.	92011944.
24820.643	0. 6. 53. 40.643	-31.10210	-31. 6. 7.6	46.96943	46. 58. 9.9	70989453.0	21637628.	91896514.
24880.643	0. 6. 54. 40.643	-31.05241	-31. 3. 8.7	47.04433	47. 2. 39.6	70870210.0	21601283.	91777323.
24940.643	0. 6. 55. 40.643	-31.00177	-31. 0. 6.4	47.11975	47. 7. 11.1	70747198.0	21563789.	91654369.
25000.643	0. 6. 56. 40.643	-30.95017	-30. 57. .6	47.19572	47. 11. 44.6	70620416.0	21525145.	91527640.
25060.643	0. 6. 57. 40.643	-30.89760	-30. 53. 51.4	47.27224	47. 16. 20.1	70489850.0	21485349.	91397131.
25120.644	0. 6. 58. 40.643	-30.84405	-30. 50. 38.6	47.34935	47. 20. 57.7	70355497.0	21444398.	91262836.
25180.643	0. 6. 59. 40.643	-30.78952	-30. 47. 22.3	47.42707	47. 25. 37.4	70217348.0	21402290.	91124745.
25240.643	0. 7. 0. 40.643	-30.73399	-30. 44. 2.4	47.50542	47. 30. 19.5	70075394.0	21359023.	90982850.
25300.643	0. 7. 1. 40.643	-30.67745	-30. 40. 38.8	47.58444	47. 35. 4.0	69929626.0	21314592.	90837144.
25360.643	0. 7. 2. 40.643	-30.61989	-30. 37. 11.6	47.66413	47. 39. 50.9	69780038.0	21268998.	90687617.
25420.643	0. 7. 3. 40.643	-30.56131	-30. 33. 40.7	47.74454	47. 44. 40.3	69626618.0	21222235.	90534260.
25480.643	0. 7. 4. 40.643	-30.50168	-30. 30. 6.0	47.82568	47. 49. 32.4	69469358.0	21174303.	90377066.
25540.643	0. 7. 5. 40.643	-30.44100	-30. 26. 27.6	47.90757	47. 54. 27.3	69308253.0	21125197.	90216025.
25600.643	0. 7. 6. 40.643	-30.37925	-30. 22. 45.3	47.99026	47. 59. 24.9	69143291.0	21074917.	90051124.
25660.643	0. 7. 7. 40.643	-30.31642	-30. 18. 59.1	48.07375	48. 4. 25.5	68974458.0	21023457.	89882361.
25720.643	0. 7. 8. 40.643	-30.25251	-30. 15. 9.0	48.15808	48. 9. 29.1	68801748.0	20970815.	89709720.
25780.644	0. 7. 9. 40.643	-30.18749	-30. 11. 15.0	48.24328	48. 14. 35.8	68625151.0	20916987.	89533192.
25840.643	0. 7. 10. 40.643	-30.12135	-30. 7. 16.9	48.32938	48. 19. 45.8	68444654.0	20861972.	89352765.
25900.643	0. 7. 11. 40.643	-30.05408	-30. 3. 14.7	48.41639	48. 24. 59.0	68260247.0	20805764.	89168430.
25960.643	0. 7. 12. 40.643	-29.98566	-29. 59. 8.4	48.50435	48. 30. 15.7	68071915.0	20748361.	88980176.
26020.643	0. 7. 13. 40.643	-29.91608	-29. 54. 57.9	48.59330	48. 35. 35.9	67879658.0	20689761.	88787991.
26080.643	0. 7. 14. 40.643	-29.84531	-29. 50. 43.1	48.68325	48. 40. 59.7	67683458.0	20629959.	88591863.
26140.643	0. 7. 15. 40.643	-29.77336	-29. 46. 24.1	48.77424	48. 46. 27.3	67483299.0	20568950.	88391781.
26200.643	0. 7. 16. 40.643	-29.70019	-29. 42. .7	48.86630	48. 51. 58.7	67279171.0	20506732.	88187732.
26260.643	0. 7. 17. 40.643	-29.62579	-29. 37. 32.8	48.95947	48. 57. 34.1	67071064.0	20443301.	87979704.
26320.643	0. 7. 18. 40.643	-29.55014	-29. 33. .5	49.05376	49. 3. 13.5	66858966.0	20378653.	87767683.
26380.643	0. 7. 19. 40.643	-29.47324	-29. 28. 23.7	49.14922	49. 8. 57.2	66642856.0	20312782.	87551657.
26440.644	0. 7. 20. 40.643	-29.39504	-29. 23. 42.1	49.24587	49. 14. 45.1	66422733.0	20245689.	87331613.
26500.643	0. 7. 21. 40.643	-29.31554	-29. 18. 56.0	49.34376	49. 20. 37.5	66198569.0	20177364.	87107537.
26560.643	0. 7. 22. 40.643	-29.23472	-29. 14. 5.0	49.44291	49. 26. 34.5	65970366.0	20107807.	86879413.

TABLE I
APOLLO MISSION AS-502
SPACECRAFT OPERATIONAL TRAJECTORY
-POSITION VECTOR-

TIME SECONDS	TIME DAY HR MIN SEC	GEODETIC LATITUDE DEGREES	GEODETIC LATITUDE DEG MIN SEC	LONGITUDE DEGREES	LONGITUDE DEG MIN SEC	ALTITUDE FEET	ALTITUDE METERS	RADIUS FEET
26620.643	0. 7. 23. 40.643	-29.15255	-29. 9. 9.2	49.54336	49. 32. 36.1	65738096.0	20037012.	86647230.
26680.643	0. 7. 24. 40.643	-29.06902	-29. 4. 8.5	49.64514	49. 38. 42.5	65501752.0	19964974.	86410970.
26740.643	0. 7. 25. 40.643	-28.98410	-28. 59. 2.8	49.74830	49. 44. 53.9	65261315.0	19891688.	86170621.
26800.643	0. 7. 26. 40.643	-28.89777	-28. 53. 52.0	49.85286	49. 51. 10.3	65016769.0	19817150.	85926166.
26860.643	0. 7. 27. 40.643	-28.81000	-28. 48. 36.0	49.95887	49. 57. 31.9	64768103.0	19741357.	85677589.
26920.643	0. 7. 28. 40.643	-28.72078	-28. 43. 14.8	50.06637	50. 3. 58.9	64515295.0	19664301.	85424876.
26980.643	0. 7. 29. 40.643	-28.63007	-28. 37. 48.3	50.17539	50. 10. 31.4	64258332.0	19585978.	85168008.
27040.643	0. 7. 30. 40.643	-28.53785	-28. 32. 16.3	50.28598	50. 17. 9.5	63997204.0	19506387.	84906971.
27100.644	0. 7. 31. 40.643	-28.44410	-28. 26. 38.8	50.39817	50. 23. 53.4	63731882.0	19425517.	84641748.
27160.643	0. 7. 32. 40.643	-28.34878	-28. 20. 55.6	50.51201	50. 30. 43.2	63462356.0	19343364.	84372319.
27220.643	0. 7. 33. 40.643	-28.25187	-28. 15. 6.7	50.62754	50. 37. 39.1	63188608.0	19259926.	84098669.
27280.643	0. 7. 34. 40.643	-28.15334	-28. 9. 12.0	50.74480	50. 44. 41.3	62910615.0	19175193.	83820777.
27340.643	0. 7. 35. 40.643	-28.05316	-28. 3. 11.4	50.86385	50. 51. 49.9	62628364.0	19089163.	83538629.
27400.643	0. 7. 36. 40.643	-27.95129	-27. 57. 4.7	50.98472	50. 59. 5.0	62341837.0	19001830.	83252203.
27460.643	0. 7. 37. 40.643	-27.84772	-27. 50. 51.8	51.10747	51. 6. 26.9	62051007.0	18913184.	82961480.
27520.643	0. 7. 38. 40.643	-27.74239	-27. 44. 32.6	51.23214	51. 13. 55.7	61755861.0	18823224.	82666442.
27580.643	0. 7. 39. 40.643	-27.63529	-27. 38. 7.0	51.35879	51. 21. 31.6	61456381.0	18731942.	82367067.
27640.643	0. 7. 40. 40.643	-27.52636	-27. 31. 34.9	51.48745	51. 29. 14.8	61152540.0	18639331.	82063336.
27700.643	0. 7. 41. 40.643	-27.41558	-27. 24. 56.1	51.61820	51. 37. 5.5	60844321.0	18545385.	81755229.
27760.644	0. 7. 42. 40.643	-27.30291	-27. 18. 10.5	51.75107	51. 45. 3.9	60531704.0	18450100.	81442723.
27820.643	0. 7. 43. 40.643	-27.18832	-27. 11. 17.9	51.88614	51. 53. 10.1	60214663.0	18353466.	81125798.
27880.643	0. 7. 44. 40.643	-27.07174	-27. 4. 18.3	52.02345	52. 1. 24.4	59893185.0	18255479.	80804432.
27940.643	0. 7. 45. 40.643	-26.95316	-26. 57. 11.4	52.18305	52. 9. 47.0	59567238.0	18156130.	80478602.
28000.643	0. 7. 46. 40.643	-26.83252	-26. 49. 57.1	52.30502	52. 18. 18.1	59236801.0	18055413.	80148285.
28060.643	0. 7. 47. 40.643	-26.70978	-26. 42. 35.2	52.44942	52. 26. 57.9	58901855.0	17953321.	79813460.
28120.643	0. 7. 48. 40.643	-26.58489	-26. 35. 5.6	52.59630	52. 35. 46.7	58562372.0	17849846.	79474101.
28180.643	0. 7. 49. 40.643	-26.45781	-26. 27. 28.1	52.74573	52. 44. 44.6	58218332.0	17744983.	79130184.
28240.643	0. 7. 50. 40.643	-26.32849	-26. 19. 42.6	52.89779	52. 53. 52.0	57869709.0	17638722.	78781686.
28300.643	0. 7. 51. 40.643	-26.19687	-26. 11. 48.7	53.05253	53. 3. 9.1	57516475.0	17531056.	78428580.
28360.643	0. 7. 52. 40.643	-26.06290	-26. 3. 46.4	53.21003	53. 12. 36.1	57158608.0	17421978.	78070843.
28420.644	0. 7. 53. 40.643	-25.92653	-25. 55. 35.5	53.37037	53. 22. 13.3	56796083.0	17311481.	77708447.
28480.643	0. 7. 54. 40.643	-25.78770	-25. 47. 15.7	53.53362	53. 32. 1.0	56428867.0	17199553.	77341366.
28540.643	0. 7. 55. 40.643	-25.64635	-25. 38. 46.9	53.69986	53. 41. 59.5	56056942.0	17086190.	76969575.
28600.643	0. 7. 56. 40.643	-25.50242	-25. 30. 8.7	53.86917	53. 52. 9.0	55680273.0	16971381.	76593045.
28660.643	0. 7. 57. 40.643	-25.35585	-25. 21. 21.0	54.04163	54. 2. 29.9	55298837.0	16855119.	76211749.
28720.643	0. 7. 58. 40.643	-25.20657	-25. 12. 23.6	54.21733	54. 13. 2.4	54912605.0	16737396.	75825658.
28780.643	0. 7. 59. 40.643	-25.05451	-25. 3. 16.2	54.39636	54. 23. 46.9	54521547.0	16618201.	75434743.
28840.643	0. 8. 0. 40.643	-24.89960	-24. 53. 58.6	54.57881	54. 34. 43.7	54125638.0	16497528.	75038977.
28900.643	0. 8. 1. 40.643	-24.74177	-24. 44. 30.4	54.76477	54. 45. 53.2	53724840.0	16375364.	74638328.
28960.643	0. 8. 2. 40.643	-24.58095	-24. 34. 51.4	54.95436	54. 57. 15.7	53319130.0	16251703.	74232766.
29020.643	0. 8. 3. 40.643	-24.41704	-24. 25. 1.3	55.14765	55. 8. 51.5	52908476.0	16126536.	73822262.
29080.644	0. 8. 4. 40.643	-24.24998	-24. 14. 59.9	55.34477	55. 20. 41.2	52492844.0	15999851.	73406782.

TABLE I
APOLLO MISSION AS-502
SPACECRAFT OPERATIONAL TRAJECTORY
-POSITION VECTOR-

TIME SECONDS	TIME DAY HR MIN SEC	GEODETIC LATITUDE DEGREES	GEODETIC LATITUDE DEG MIN SEC	LONGITUDE DEGREES	LONGITUDE DEG MIN SEC	ALTITUDE FEET	ALTITUDE METERS	RADIUS FEET
29140.643	0. 8. 5. 40.643	-24.07967	-24. 4. 46.8	55.54582	55. 32. 44.9	52072201.0	15871639.	72986297.
29200.643	0. 8. 6. 40.643	-23.90603	-23. 54. 21.7	55.75091	55. 45. 3.3	51646520.0	15741891.	72560773.
29260.643	0. 8. 7. 40.643	-23.72896	-23. 43. 44.3	55.96017	55. 57. 36.6	51215768.0	15610597.	72130179.
29320.643	0. 8. 8. 40.643	-23.54837	-23. 32. 54.1	56.17371	56. 10. 25.4	50779904.0	15477746.	71694480.
29380.643	0. 8. 9. 40.643	-23.36416	-23. 21. 51.0	56.39166	56. 23. 30.0	50338904.0	15343329.	71253643.
29440.643	0. 8. 10. 40.643	-23.17622	-23. 10. 34.4	56.61416	56. 36. 51.0	49892728.0	15207334.	70807633.
29500.643	0. 8. 11. 40.643	-22.98444	-22. 59. 4.0	56.84133	56. 50. 28.8	49441341.0	15069751.	70356417.
29560.643	0. 8. 12. 40.643	-22.78871	-22. 47. 19.4	57.07333	57. 4. 24.0	48984710.0	14930570.	69899959.
29620.643	0. 8. 13. 40.643	-22.58892	-22. 35. 20.1	57.31029	57. 18. 37.0	48522803.0	14789780.	69438222.
29680.643	0. 8. 14. 40.643	-22.38493	-22. 23. 5.7	57.55238	57. 33. 8.6	48055574.0	14647368.	68971173.
29740.644	0. 8. 15. 40.643	-22.17662	-22. 10. 35.8	57.79975	57. 47. 59.1	47582996.0	14503326.	68498772.
29800.643	0. 8. 16. 40.643	-21.96386	-21. 57. 49.9	58.05257	58. 3. 9.2	47105027.0	14357641.	68020984.
29860.643	0. 8. 17. 40.643	-21.74650	-21. 44. 47.4	58.31101	58. 18. 39.7	46621631.0	14210301.	67537772.
29920.644	0. 8. 18. 40.643	-21.52440	-21. 31. 27.9	58.57526	58. 34. 31.0	46132770.0	14061297.	67049097.
29980.643	0. 8. 19. 40.643	-21.29741	-21. 17. 50.7	58.84551	58. 50. 43.8	45638406.0	13910614.	66554921.
30040.643	0. 8. 20. 40.643	-21.06536	-21. 3. 55.3	59.12195	59. 7. 19.0	45138497.0	13758241.	66055205.
30100.643	0. 8. 21. 40.643	-20.82809	-20. 49. 41.1	59.40479	59. 24. 17.2	44633013.0	13604170.	65549912.
30160.643	0. 8. 22. 40.643	-20.58542	-20. 35. 7.5	59.69424	59. 41. 39.3	44121905.0	13448383.	65039001.
30220.643	0. 8. 23. 40.643	-20.33717	-20. 20. 13.8	59.99054	59. 59. 25.9	43605138.0	13290872.	64522434.
30280.643	0. 8. 24. 40.643	-20.08315	-20. 4. 59.3	60.29392	60. 17. 38.1	43082675.0	13131626.	64000171.
30340.643	0. 8. 25. 40.643	-19.82314	-19. 49. 23.3	60.60462	60. 36. 16.6	42554469.0	12970628.	63472171.
30400.643	0. 8. 26. 40.643	-19.55695	-19. 33. 25.0	60.92292	60. 55. 22.5	42020490.0	12807871.	62938398.
30460.643	0. 8. 27. 40.643	-19.28435	-19. 17. 3.7	61.24907	61. 14. 56.7	41480696.0	12643342.	62398808.
30520.643	0. 8. 28. 40.643	-19.00511	-19. 0. 18.4	61.58338	61. 35. .2	40935041.0	12477026.	61853365.
30580.644	0. 8. 29. 40.643	-18.71898	-18. 43. 8.3	61.92614	61. 55. 34.1	40383485.0	12308911.	61302026.
30640.643	0. 8. 30. 40.643	-18.42569	-18. 25. 32.5	62.27767	62. 16. 39.6	39826002.0	12138990.	60744756.
30700.643	0. 8. 31. 40.643	-18.12500	-18. 7. 30.0	62.63830	62. 38. 17.9	39262538.0	11967246.	60181510.
30760.643	0. 8. 32. 40.643	-17.81660	-17. 48. 59.8	63.00839	63. 0. 30.2	38692061.0	11793669.	59612256.
30820.643	0. 8. 33. 40.643	-17.50020	-17. 30. .7	63.38831	63. 23. 17.9	38117535.0	11618248.	59036955.
30880.643	0. 8. 34. 40.643	-17.17548	-17. 10. 31.7	63.77844	63. 46. 42.4	37535921.0	11440972.	58455567.
30940.643	0. 8. 35. 40.643	-16.84211	-16. 50. 31.6	64.17921	64. 10. 45.2	36948189.0	11261830.	57868058.
31000.643	0. 8. 36. 40.643	-16.49974	-16. 29. 59.1	64.59106	64. 35. 27.8	36354291.0	11080810.	57274394.
31060.643	0. 8. 37. 40.643	-16.14800	-16. 8. 52.8	65.01444	65. 0. 52.0	35754206.0	10897904.	56674540.
31120.643	0. 8. 38. 40.643	-15.78649	-15. 47. 11.4	65.44986	65. 26. 59.5	35147902.0	10713102.	56068467.
31180.643	0. 8. 39. 40.643	-15.41480	-15. 24. 53.3	65.89782	65. 53. 52.1	34535345.0	10526394.	55456142.
31240.644	0. 8. 40. 40.643	-15.03250	-15. 1. 57.0	66.35889	66. 21. 32.0	33916503.0	10337771.	54837541.
31300.643	0. 8. 41. 40.643	-14.63913	-14. 38. 20.9	66.83365	66. 50. 1.1	33291359.0	10147227.	54212636.
31360.643	0. 8. 42. 40.643	-14.23419	-14. 14. 3.1	67.32273	67. 19. 21.8	32659896.0	9954756.	53581408.
31420.643	0. 8. 43. 40.643	-13.81716	-13. 49. 1.8	67.82680	67. 49. 36.5	32022081.0	9760350.	52943836.
31480.643	0. 8. 44. 40.643	-13.38751	-13. 23. 15.0	68.34657	68. 20. 47.7	31377918.0	9564008.	52299909.
31540.643	0. 8. 45. 40.643	-12.94464	-12. 56. 40.7	68.88280	68. 52. 58.1	30727385.0	9365726.	51649615.
31600.643	0. 8. 46. 40.643	-12.48795	-12. 29. 16.6	69.43631	69. 26. 10.7	30070475.0	9165499.	50992949.

TABLE I
APOLLO MISSION AS-502
SPACECRAFT OPERATIONAL TRAJECTORY
-POSITION VECTOR-

TIME SECONDS	TIME DAY HR MIN SEC	GEODETIC LATITUDE DEGREES	GEODETIC LATITUDE DEG MIN SEC	LONGITUDE DEGREES	LONGITUDE DEG MIN SEC	ALTITUDE FEET	ALTITUDE METERS	RADIUS FEET
31660.643	0. 8. 47. 40.643	-12.01678	-12. 1. .4	70.00796	70. 0. 28.7	29407207.0	8963335.	50329916.
31720.643	0. 8. 48. 40.643	-11.53044	-11. 31. 49.6	70.69869	70. 35. 55.3	28737573.0	8759230.	49660522.
31780.643	0. 8. 49. 40.643	-11.02818	-11. 1. 41.5	71.28950	71. 12. 34.2	28061603.0	8553194.	48984783.
31840.643	0. 8. 50. 40.643	-10.50924	-10. 30. 33.2	71.84148	71. 50. 29.3	27379306.0	8345229.	48302724.
31900.644	0. 8. 51. 40.643	-9.97277	-9. 58. 22.0	72.49578	72. 29. 44.8	26690736.0	8135353.	47614382.
31960.643	0. 8. 52. 40.643	-9.41790	-9. 25. 4.4	73.17365	73. 10. 25.1	25995933.0	7923576.	46919803.
32020.643	0. 8. 53. 40.643	-8.84369	-8. 50. 37.3	73.87645	73. 52. 35.2	25294957.0	7709918.	46219046.
32080.643	0. 8. 54. 40.643	-8.24914	-8. 14. 56.9	74.60565	74. 36. 20.3	24587883.0	7494402.	45512185.
32140.643	0. 8. 55. 40.643	-7.63320	-7. 37. 59.5	75.36282	75. 21. 46.2	23874805.0	7277055.	44799312.
32200.643	0. 8. 56. 40.643	-6.99474	-6. 59. 41.1	76.14970	76. 8. 58.9	23155832.0	7057912.	44080538.
32260.643	0. 8. 57. 40.643	-6.33258	-6. 19. 57.3	76.96816	76. 58. 5.4	22431100.0	6837013.	43355992.
32320.643	0. 8. 58. 40.643	-5.64544	-5. 38. 43.6	77.82024	77. 49. 12.9	21700767.0	6614407.	42625833.
32380.643	0. 8. 59. 40.643	-4.93198	-4. 55. 55.1	78.70818	78. 42. 29.4	20965018.0	6390160.	41890243.
32440.643	0. 9. 0. 40.643	-4.19079	-4. 11. 26.9	79.63440	79. 38. 3.9	20224072.0	6164310.	41149440.
32500.643	0. 9. 1. 40.643	-3.42038	-3. 25. 13.4	80.60160	80. 36. 5.8	19478183.0	5936962.	40403675.
32560.644	0. 9. 2. 40.643	-2.61916	-2. 37. 9.0	81.61270	81. 36. 45.7	18727648.0	5708198.	39653242.
32620.643	0. 9. 3. 40.643	-1.78547	-1. 47. 7.7	82.67093	82. 40. 15.3	17972808.0	5478123.	38898481.
32680.643	0. 9. 4. 40.643	-.91760	0. 55. 3.4	83.77986	83. 46. 47.5	17214062.0	5246857.	38139789.
32740.643	0. 9. 5. 40.643	-.01373	0. 0. 49.4	84.94343	84. 56. 36.4	16451868.0	5014539.	37377604.
32800.643	0. 9. 6. 40.643	.92799	0. 55. 40.7	86.16600	86. 9. 57.6	15686744.0	4781329.	36612465.
32860.643	0. 9. 7. 40.643	1.90946	1. 54. 34.1	87.45241	87. 27. 8.7	14919304.4	4547413.	35844966.
32866.102	0. 9. 7. 46.102	2.00079	2. 0. 2.8	87.57278	87. 34. 22.0	14849396.5	4526105.	35775051.

CSM ATTITUDE ORIENTATION FOR SECOND SPS BURN

32866.102	0. 9. 7. 46.102	2.00079	2. 0. 2.8	87.57278	87. 34. 22.0	14849396.5	4526105.	35775051.
32874.643	0. 9. 7. 54.643	2.14440	2. 8. 39.8	87.76231	87. 45. 44.3	14739975.5	4492753.	35665618.
32880.029	0. 9. 8. -.029	2.23538	2. 14. 7.4	87.88254	87. 52. 57.1	14670973.0	4471722.	35596606.
32888.643	0. 9. 8. 8.643	2.38162	2. 22. 53.8	88.07605	88. 4. 33.8	14560573.0	4438071.	35486192.
32898.643	0. 9. 8. 18.643	2.55249	2. 33. 9.0	88.30255	88. 18. 9.2	14432379.9	4398998.	35357981.
32906.184	0. 9. 8. 26.185	2.68214	2. 40. 55.7	88.47470	88. 28. 28.9	14335683.4	4369525.	35261271.
32914.643	0. 9. 8. 34.643	2.82836	2. 49. 42.1	88.66917	88. 40. 9.0	14227209.5	4336462.	35152780.
32924.643	0. 9. 8. 44.643	3.00235	3. 0. 8.5	88.90099	88. 54. 3.5	14098942.4	4297366.	35024490.
32925.220	0. 9. 8. 45.220	3.01242	3. 0. 44.7	88.91442	88. 54. 51.9	14091545.9	4295112.	35017093.

COAST TO +X TRANSLATION

32925.220	0. 9. 8. 45.220	3.01242	3. 0. 44.7	88.91442	88. 54. 51.9	14091545.9	4295112.	35017093.

TABLE I
APOLLO MISSION AS-502
SPACECRAFT OPERATIONAL TRAJECTORY
-POSITION VECTOR-

TIME SECONDS	TIME DAY HR MIN SEC	GEODETIC LATITUDE DEGREES	GEODETIC LATITUDE DEG MIN SEC	LONGITUDE DEGREES	LONGITUDE DEG MIN SEC	ALTITUDE FEET	ALTITUDE METERS	RADIUS FEET
32946.643	0. 9. 9. 6.643	3.38941	3. 23. 21.9	89.41842	89. 25. 6.3	13816684.0	4211334.	34742180.
32971.643	0. 9. 9. 31.643	3.83651	3. 50. 11.4	90.01916	90. 1. 9.0	13495865.0	4113548.	34421292.
32996.643	0. 9. 9. 56.643	4.29145	4. 17. 29.2	90.63393	90. 38. 2.1	13175032.0	4015758.	34100382.
33021.643	0. 9. 10. 21.643	4.75437	4. 45. 15.7	91.26323	91. 15. 47.6	12854259.9	3917986.	33779521.
33046.643	0. 9. 10. 46.643	5.22540	5. 13. 31.4	91.90761	91. 54. 27.4	12533621.9	3820256.	33458783.
33071.643	0. 9. 11. 11.643	5.70466	5. 42. 16.8	92.54763	92. 34. 3.5	12213196.5	3722590.	33138248.
33096.643	0. 9. 11. 36.643	6.19227	6. 11. 32.2	93.24389	93. 14. 38.0	11893069.7	3625015.	32817998.
33121.643	0. 9. 12. 1.643	6.68833	6. 41. 18.0	93.93699	93. 56. 13.2	11573327.9	3527557.	32498122.
33146.643	0. 9. 12. 26.643	7.19296	7. 11. 34.6	94.64759	94. 38. 51.3	11254067.4	3430247.	32178714.
33171.643	0. 9. 12. 51.643	7.70623	7. 42. 22.4	95.37637	95. 22. 34.9	10935383.9	3333112.	31859870.
33196.643	0. 9. 13. 16.643	8.22824	8. 13. 41.7	96.12404	96. 7. 26.6	10617384.8	3236185.	31541696.
33221.643	0. 9. 13. 41.643	8.75905	8. 45. 32.6	96.89135	96. 53. 28.9	10300177.2	3139500.	31224301.
33246.643	0. 9. 14. 6.643	9.29871	9. 17. 55.3	97.67908	97. 40. 44.7	9983880.2	3043093.	30907800.
33271.643	0. 9. 14. 31.643	9.84725	9. 50. 50.1	98.48805	98. 29. 17.0	9668615.2	2947000.	30592316.
33296.643	0. 9. 14. 56.643	10.40469	10. 24. 16.9	99.31912	99. 19. 8.8	9354510.8	2851261.	30277976.
33321.643	0. 9. 15. 21.643	10.97102	10. 58. 15.7	100.19320	100. 10. 23.5	9041705.0	2756917.	29964918.
33346.643	0. 9. 15. 46.643	11.54620	11. 32. 46.3	101.05122	101. 3. 4.4	8730336.2	2661012.	29653284.
33371.643	0. 9. 16. 11.643	12.13016	12. 7. 48.6	101.95417	101. 57. 15.0	8420562.5	2566593.	29343224.
33396.643	0. 9. 16. 36.643	12.72281	12. 43. 22.1	102.88309	102. 52. 59.1	8112540.0	2472707.	29034895.
33421.643	0. 9. 17. 1.643	13.32400	13. 19. 26.4	103.83904	103. 50. 20.6	7806431.7	2379405.	28728467.
33446.643	0. 9. 17. 26.643	13.93357	13. 56. .9	104.82317	104. 49. 23.4	7502414.7	2286741.	28424113.
33471.643	0. 9. 17. 51.643	14.55127	14. 33. 4.6	105.83664	105. 50. 11.9	7200678.2	2194771.	28122017.
33496.643	0. 9. 18. 16.643	15.17684	15. 10. 36.6	106.88067	106. 52. 50.4	6901411.3	2103554.	27822372.
33521.643	0. 9. 18. 41.643	15.80992	15. 48. 35.7	107.95654	107. 57. 23.5	6604815.5	2013152.	27525380.
33546.643	0. 9. 19. 6.643	16.45012	16. 27. .5	109.06556	109. 3. 56.0	6311105.5	1923629.	27231254.
33571.643	0. 9. 19. 31.643	17.09698	17. 5. 49.1	110.20911	110. 12. 32.8	6020502.2	1835053.	26940217.
33596.643	0. 9. 19. 56.643	17.74992	17. 44. 59.7	111.38860	111. 23. 19.0	5733238.8	1747495.	26652499.
33621.643	0. 9. 20. 21.643	18.40832	18. 24. 30.0	112.60548	112. 36. 19.7	5449553.0	1661027.	26368342.
33646.643	0. 9. 20. 46.643	19.07145	19. 4. 17.2	113.86124	113. 51. 40.5	5169703.0	1575729.	26088001.
33671.643	0. 9. 21. 11.643	19.73848	19. 44. 18.5	115.15741	115. 9. 26.7	4893948.5	1491678.	25811737.
33696.643	0. 9. 21. 36.643	20.40846	20. 24. 30.4	116.49555	116. 29. 44.0	4622562.2	1408960.	25539825.
33703.841	0. 9. 21. 43.840	20.60174	20. 36. 6.3	116.88880	116. 53. 19.7	4545280.7	1385404.	25462388.
			+X TRANSLATION					
33703.841	0. 9. 21. 43.840	20.60174	20. 36. 6.3	116.88880	116. 53. 19.7	4545280.7	1385404.	25462388.
33726.643	0. 9. 22. 6.643	21.21490	21. 12. 53.6	118.15907	118. 9. 32.6	4302999.2	1311557.	25219410.

TABLE I
APOLLO MISSION AS-502
SPACECRAFT OPERATIONAL TRAJECTORY
-POSITION VECTOR-

TIME SECONDS	TIME DAY HR MIN SEC	GEODETIC LATITUDE DEGREES	GEODETIC LATITUDE DEG MIN SEC	LONGITUDE DEGREES	LONGITUDE DEG MIN SEC	ALTITUDE FEET	ALTITUDE METERS	RADIUS FEET
33733.840	0. 9. 22. 13.840	21.40858	21. 24. 30.9	118.56785	118. 34. 4.3	4227353.0	1288500.	25143806.
			SECOND SPS IGNITION					
33733.840	0. 9. 22. 13.840	21.40858	21. 24. 30.9	118.56785	118. 34. 4.3	4227353.0	1288500.	25143806.
33734.215	0. 9. 22. 14.215	21.41868	21. 25. 7.2	118.58927	118. 35. 21.4	4223420.2	1287301.	25139864.
			SECOND SPS BURN					
33734.215	0. 9. 22. 14.215	21.41868	21. 25. 7.2	118.58927	118. 35. 21.4	4223420.2	1287301.	25139864.
33735.234	0. 9. 22. 15.234	21.44610	21. 26. 45.9	118.64748	118. 38. 50.9	4212745.5	1284047.	25129166.
33737.234	0. 9. 22. 17.234	21.49997	21. 29. 59.9	118.76207	118. 45. 43.5	4191767.2	1277663.	25108144.
33739.234	0. 9. 22. 19.234	21.55390	21. 33. 14.0	118.87707	118. 52. 37.5	4170769.8	1271253.	25087102.
33741.233	0. 9. 22. 21.234	21.60787	21. 36. 28.3	118.99249	118. 59. 33.0	4149752.3	1264847.	25066039.
33743.234	0. 9. 22. 23.234	21.66189	21. 39. 42.8	119.10831	119. 6. 29.9	4128713.2	1258434.	25044956.
33745.234	0. 9. 22. 25.234	21.71596	21. 42. 57.5	119.22455	119. 13. 28.4	4107655.7	1252016.	25023852.
33747.233	0. 9. 22. 27.234	21.77007	21. 46. 12.3	119.34120	119. 20. 28.3	4086578.0	1245591.	25002729.
33749.234	0. 9. 22. 29.234	21.82423	21. 49. 27.2	119.45827	119. 27. 29.8	4065481.7	1239161.	24981586.
33751.234	0. 9. 22. 31.234	21.87844	21. 52. 42.4	119.57577	119. 34. 32.8	4044363.5	1232724.	24960424.
33753.234	0. 9. 22. 33.234	21.93270	21. 55. 57.7	119.69370	119. 41. 37.3	4023228.7	1226283.	24939243.
33755.234	0. 9. 22. 35.234	21.98700	21. 59. 13.2	119.81204	119. 48. 43.4	4002075.7	1219835.	24918044.
33757.234	0. 9. 22. 37.234	22.04134	22. 2. 28.8	119.93083	119. 55. 51.0	3980904.0	1213382.	24896826.
33759.234	0. 9. 22. 39.234	22.09573	22. 5. 44.6	120.05004	120. 3. .1	3959713.0	1206923.	24875590.
33761.234	0. 9. 22. 41.234	22.15017	22. 9. .6	120.16969	120. 10. 10.9	3938506.7	1200459.	24854337.
33763.234	0. 9. 22. 43.234	22.20464	22. 12. 16.7	120.28978	120. 17. 23.2	3917283.5	1193990.	24833067.
33765.234	0. 9. 22. 45.234	22.25917	22. 15. 33.0	120.41031	120. 24. 37.1	3896041.4	1187516.	24811780.
33767.234	0. 9. 22. 47.234	22.31373	22. 18. 49.4	120.53128	120. 31. 52.6	3874785.2	1181037.	24790476.
33769.234	0. 9. 22. 49.234	22.36834	22. 22. 6.0	120.65270	120. 39. 9.7	3853511.0	1174552.	24769156.
33771.234	0. 9. 22. 51.234	22.42299	22. 25. 22.8	120.77457	120. 46. 28.5	3832222.4	1168064.	24747820.
33773.234	0. 9. 22. 53.234	22.47769	22. 28. 39.7	120.89690	120. 53. 48.8	3810918.3	1161570.	24726469.
33775.233	0. 9. 22. 55.234	22.53242	22. 31. 56.7	121.01968	121. 1. 10.9	3789600.0	1155072.	24705103.
33777.234	0. 9. 22. 57.234	22.58720	22. 35. 13.9	121.14292	121. 8. 34.5	3768265.5	1148570.	24683722.
33779.234	0. 9. 22. 59.234	22.64202	22. 38. 31.3	121.26662	121. 15. 59.8	3746917.7	1142063.	24662327.
33781.234	0. 9. 23. 1.234	22.69688	22. 41. 48.8	121.39079	121. 23. 26.8	3725556.5	1135552.	24640918.
33783.234	0. 9. 23. 3.234	22.75178	22. 45. 6.4	121.51542	121. 30. 55.5	3704181.7	1129037.	24619495.
33785.234	0. 9. 23. 5.234	22.80672	22. 48. 24.2	121.64052	121. 38. 25.9	3682792.7	1122517.	24598059.
33787.234	0. 9. 23. 7.234	22.86170	22. 51. 42.1	121.76610	121. 45. 58.0	3661393.0	1115995.	24576610.
33789.234	0. 9. 23. 9.234	22.91671	22. 55. .2	121.89215	121. 53. 31.7	3639979.4	1109468.	24555149.

TABLE I
APOLLO MISSION AS-502
SPACECRAFT OPERATIONAL TRAJECTORY
-POSITION VECTOR-

TIME SECONDS	TIME DAY HR MIN SEC	GEODETIC LATITUDE DEGREES	GEODETIC LATITUDE DEG MIN SEC	LONGITUDE DEGREES	LONGITUDE DEG MIN SEC	ALTITUDE FEET	ALTITUDE METERS	RADIUS FEET
33791.234	0. 9. 23. 11.234	22.97177	22. 58. 18.4	122.01868	122. 1. 7.3	3618553.7	1102937.	24533676.
33793.234	0. 9. 23. 13.234	23.02686	23. 1. 36.7	122.14570	122. 8. 44.5	3597117.7	1096404.	24512192.
33795.234	0. 9. 23. 15.234	23.08199	23. 4. 55.2	122.27320	122. 16. 23.5	3575669.5	1089866.	24490695.
33797.234	0. 9. 23. 17.234	23.13715	23. 8. 13.8	122.40119	122. 24. 4.3	3554210.4	1083326.	24469189.
33799.234	0. 9. 23. 19.234	23.19236	23. 11. 32.5	122.52967	122. 31. 46.8	3532743.0	1076782.	24447671.
33801.234	0. 9. 23. 21.234	23.24759	23. 14. 51.3	122.65865	122. 39. 31.1	3511265.0	1070236.	24426144.
33803.234	0. 9. 23. 23.234	23.30286	23. 18. 10.3	122.78812	122. 47. 17.2	3489777.7	1063686.	24404608.
33805.234	0. 9. 23. 25.234	23.35817	23. 21. 29.4	122.91810	122. 55. 5.2	3468280.7	1057134.	24383062.
33807.234	0. 9. 23. 27.234	23.41351	23. 24. 48.6	123.04858	123. 2. 54.9	3446775.0	1050579.	24361508.
33809.233	0. 9. 23. 29.234	23.46888	23. 28. 8.0	123.17957	123. 10. 46.4	3425261.5	1044022.	24339946.
33811.234	0. 9. 23. 31.234	23.52429	23. 31. 27.4	123.31107	123. 18. 39.8	3403739.7	1037462.	24318375.
33813.234	0. 9. 23. 33.234	23.57972	23. 34. 47.0	123.44308	123. 26. 35.1	3382211.0	1030900.	24296797.
33815.234	0. 9. 23. 35.234	23.63519	23. 38. 6.7	123.57561	123. 34. 32.2	3360676.5	1024336.	24275212.
33817.234	0. 9. 23. 37.234	23.69069	23. 41. 26.5	123.70866	123. 42. 31.2	3339134.5	1017770.	24253621.
33819.234	0. 9. 23. 39.234	23.74622	23. 44. 46.4	123.84224	123. 50. 32.1	3317587.2	1011203.	24232024.
33821.234	0. 9. 23. 41.234	23.80177	23. 48. 6.4	123.97634	123. 58. 34.8	3296035.8	1004634.	24210422.
33823.234	0. 9. 23. 43.234	23.85735	23. 51. 26.5	124.11098	124. 6. 39.5	3274477.9	998063.	24188814.
33825.234	0. 9. 23. 45.234	23.91297	23. 54. 46.7	124.24614	124. 14. 46.1	3252916.7	991491.	24167202.
33827.234	0. 9. 23. 47.234	23.96860	23. 58. 7.0	124.38185	124. 22. 54.7	3231349.2	984917.	24145585.
33829.234	0. 9. 23. 49.234	24.02427	24. 1. 27.4	124.51809	124. 31. 5.1	3209780.8	978343.	24123965.
33831.234	0. 9. 23. 51.234	24.07996	24. 4. 47.9	124.65489	124. 39. 17.6	3188206.7	971767.	24102342.
33833.234	0. 9. 23. 53.234	24.13567	24. 8. 8.4	124.79223	124. 47. 32.0	3166632.2	965191.	24080716.
33835.234	0. 9. 23. 55.234	24.19141	24. 11. 29.1	124.93012	124. 55. 48.4	3145054.2	958614.	24059089.
33837.233	0. 9. 23. 57.234	24.24717	24. 14. 49.8	125.06856	125. 4. 6.8	3123475.7	952037.	24037459.
33839.234	0. 9. 23. 59.234	24.30295	24. 18. 10.6	125.20757	125. 12. 27.3	3101896.0	945460.	24015828.
33841.234	0. 9. 24. 1.234	24.35875	24. 21. 31.5	125.34713	125. 20. 49.7	3080316.0	938882.	23994197.
33843.234	0. 9. 24. 3.234	24.41458	24. 24. 52.5	125.48726	125. 29. 14.1	3058736.0	932305.	23972566.
33845.234	0. 9. 24. 5.234	24.47042	24. 28. 13.5	125.62797	125. 37. 40.7	3037155.5	925727.	23950935.
33847.234	0. 9. 24. 7.234	24.52628	24. 31. 34.6	125.76924	125. 46. 9.3	3015577.9	919150.	23929305.
33849.234	0. 9. 24. 9.234	24.58215	24. 34. 55.7	125.91109	125. 54. 39.9	2994000.5	912573.	23907677.
33851.234	0. 9. 24. 11.234	24.63805	24. 38. 17.0	126.05352	126. 3. 12.7	2972426.2	905997.	23886050.
33853.234	0. 9. 24. 13.234	24.69395	24. 41. 38.2	126.19653	126. 11. 47.5	2950854.7	899422.	23864427.
33855.234	0. 9. 24. 15.234	24.74988	24. 44. 59.6	126.34013	126. 20. 24.5	2929286.2	892848.	23842806.
33857.234	0. 9. 24. 17.234	24.80581	24. 48. 20.9	126.48433	126. 29. 3.6	2907721.3	886275.	23821190.
33859.234	0. 9. 24. 19.234	24.86176	24. 51. 42.3	126.62912	126. 37. 44.8	2886159.9	879703.	23799577.
33861.234	0. 9. 24. 21.234	24.91772	24. 55. 3.8	126.77450	126. 46. 28.2	2864605.2	873133.	23777970.
33863.234	0. 9. 24. 23.234	24.97369	24. 58. 25.3	126.92049	126. 55. 13.8	2843054.8	866565.	23756368.
33865.234	0. 9. 24. 25.234	25.02967	25. 1. 46.8	127.06708	127. 4. 1.5	2821511.5	859998.	23734771.
33867.234	0. 9. 24. 27.234	25.08566	25. 5. 8.4	127.21429	127. 12. 51.4	2799972.7	853433.	23713183.
33869.234	0. 9. 24. 29.234	25.14165	25. 8. 30.0	127.36211	127. 21. 43.6	2778442.7	846871.	23691600.
33871.233	0. 9. 24. 31.234	25.19765	25. 11. 51.5	127.51055	127. 30. 38.0	2756921.9	840312.	23670025.
33873.234	0. 9. 24. 33.234	25.25366	25. 15. 13.2	127.65961	127. 39. 34.6	2735409.2	833754.	23648459.

TABLE I
APOLLO MISSION AS-502
SPACECRAFT OPERATIONAL TRAJECTORY
-POSITION VECTOR-

TIME SECONDS	TIME DAY HR MIN SEC	GEODETIC LATITUDE DEGREES	GEODETIC LATITUDE DEG MIN SEC	LONGITUDE DEGREES	LONGITUDE DEG MIN SEC	ALTITUDE FEET	ALTITUDE METERS	RADIUS FEET
33875.234	0. 9. 24. 35.234	25.30967	25. 18. 34.8	127.88929	127. 48. 33.4	2713903.7	827200.	23626903.
33877.234	0. 9. 24. 37.234	25.36567	25. 21. 56.4	127.95961	127. 57. 34.6	2692409.8	820648.	23605356.
33879.234	0. 9. 24. 39.234	25.42168	25. 25. 18.1	128.11056	128. 6. 38.0	2670925.5	814100.	23583819.
33881.234	0. 9. 24. 41.234	25.47769	25. 28. 39.7	128.26214	128. 15. 43.7	2649452.7	807555.	23562293.
33883.234	0. 9. 24. 43.234	25.53370	25. 32. 1.3	128.41436	128. 24. 51.7	2627991.2	801013.	23540778.
33885.234	0. 9. 24. 45.234	25.58971	25. 35. 23.0	128.56724	128. 34. 2.1	2606542.5	794476.	23519277.
33887.234	0. 9. 24. 47.234	25.64571	25. 38. 44.6	128.72077	128. 43. 14.8	2585106.0	787942.	23497787.
33889.234	0. 9. 24. 49.234	25.70171	25. 42. 6.1	128.87494	128. 52. 29.8	2563683.2	781412.	23476312.
33891.234	0. 9. 24. 51.234	25.75770	25. 45. 27.7	129.02978	129. 1. 47.2	2542275.9	774887.	23454850.
33893.234	0. 9. 24. 53.234	25.81368	25. 48. 49.2	129.18527	129. 11. 7.0	2520883.2	768367.	23433404.
33895.234	0. 9. 24. 55.234	25.86965	25. 52. 10.7	129.34144	129. 20. 29.2	2499504.5	761850.	23411973.
33897.234	0. 9. 24. 57.234	25.92561	25. 55. 32.2	129.49827	129. 29. 53.8	2478143.9	755340.	23390558.
33899.233	0. 9. 24. 59.234	25.98156	25. 58. 53.6	129.65579	129. 39. 20.8	2456799.2	748834.	23369161.
33901.234	0. 9. 25. 1.234	26.03749	26. 2. 15.0	129.81397	129. 48. 50.3	2435475.0	742334.	23347781.
33903.234	0. 9. 25. 3.234	26.09341	26. 5. 36.3	129.97285	129. 58. 22.3	2414166.2	735839.	23326419.
33905.233	0. 9. 25. 5.234	26.14931	26. 8. 57.5	130.13241	130. 7. 56.7	2392877.9	729351.	23305077.
33907.234	0. 9. 25. 7.234	26.20519	26. 12. 18.7	130.29265	130. 17. 33.6	2371609.4	722868.	23283755.
33909.234	0. 9. 25. 9.234	26.26105	26. 15. 39.8	130.45360	130. 27. 13.0	2350361.2	716392.	23262453.
33911.234	0. 9. 25. 11.234	26.31689	26. 19. .8	130.61525	130. 36. 54.9	2329134.9	709922.	23241172.
33913.234	0. 9. 25. 13.234	26.37271	26. 22. 21.7	130.77760	130. 46. 39.4	2307930.4	703459.	23219914.
33915.234	0. 9. 25. 15.234	26.42850	26. 25. 42.6	130.94067	130. 56. 26.4	2286749.0	697003.	23198679.
33917.234	0. 9. 25. 17.234	26.48426	26. 29. 3.3	131.10444	131. 6. 16.0	2265590.7	690553.	23177467.
33919.234	0. 9. 25. 19.234	26.54000	26. 32. 24.0	131.26893	131. 16. 8.2	2244457.8	684112.	23156279.
33921.234	0. 9. 25. 21.234	26.59570	26. 35. 44.5	131.43415	131. 26. 3.0	2223349.7	677678.	23135117.
33922.325	0. 9. 25. 22.325	26.62609	26. 37. 33.9	131.52461	131. 31. 28.6	2211843.2	674171.	23123581.
SECOND SPS SHUTDOWN								
33922.325	0. 9. 25. 22.325	26.62609	26. 37. 33.9	131.52461	131. 31. 28.6	2211843.2	674171.	23123581.
33923.012	0. 9. 25. 23.012	26.64520	26. 38. 42.7	131.58163	131. 34. 53.9	2204609.0	671966.	23116329.
HOLD INERTIAL ATTITUDE								
33923.012	0. 9. 25. 23.012	26.64520	26. 38. 42.7	131.58163	131. 34. 53.9	2204609.0	671966.	23116329.
33932.023	0. 9. 25. 32.023	26.89474	26. 53. 41.1	132.33533	132. 20. 7.2	2110612.2	643316.	23022087.
33942.023	0. 9. 25. 42.023	27.16879	27. 10. 7.6	133.18338	133. 11. .2	2008422.5	612168.	22919427.
33952.023	0. 9. 25. 52.023	27.43953	27. 26. 22.3	134.04367	134. 2. 37.2	1908508.2	581714.	22819445.

TABLE I
APOLLO MISSION AS-502
SPACECRAFT OPERATIONAL TRAJECTORY
-POSITION VECTOR-

TIME SECONDS	TIME DAY HR MIN SEC	GEODETIC LATITUDE DEGREES	GEODETIC LATITUDE DEG MIN SEC	LONGITUDE DEGREES	LONGITUDE DEG MIN SEC	ALTITUDE FEET	ALTITUDE METERS	RADIUS FEET
33959.022	0. 9. 25. 59.022	27.62690	27. 37. 36.8	134.65307	134. 39. 11.1	1839956.5	560820.	22750705.
CSM ATTITUDE ORIENTATION FOR CM/SM SEPERATION								
33959.022	0. 9. 25. 59.022	27.62690	27. 37. 36.8	134.65307	134. 39. 11.1	1839956.5	560820.	22750705.
33959.109	0. 9. 25. 59.109	27.62921	27. 37. 45.1	134.66065	134. 39. 38.4	1839115.7	560564.	22749862.
33969.109	0. 9. 26. 9.109	27.89366	27. 53. 37.2	135.54189	135. 32. 30.8	1743188.9	531325.	22653670.
33976.606	0. 9. 26. 16.605	28.08925	28. 5. 21.3	136.21051	136. 12. 37.8	1672899.0	509884.	22583128.
33976.696	0. 9. 26. 16.697	28.09162	28. 5. 29.8	136.21871	136. 13. 7.4	1671994.7	509625.	22582275.
33976.797	0. 9. 26. 16.797	28.09421	28. 5. 39.2	136.22767	136. 13. 39.6	1671065.5	509342.	22581344.
33976.814	0. 9. 26. 16.814	28.09465	28. 5. 40.8	136.22919	136. 13. 45.1	1670907.2	509294.	22581186.
COAST TO CM/SM SEPARATION								
33976.814	0. 9. 26. 16.814	28.09465	28. 5. 40.8	136.22919	136. 13. 45.1	1670907.2	509294.	22581186.
33981.816	0. 9. 26. 21.817	28.22382	28. 13. 25.8	136.67938	136. 40. 45.8	1624740.4	495222.	22534889.
33991.817	0. 9. 26. 31.817	28.47865	28. 28. 43.1	137.58837	137. 35. 18.1	1534298.4	467655.	22444187.
34001.817	0. 9. 26. 41.817	28.72875	28. 43. 43.5	138.50951	138. 30. 34.2	1446338.0	440845.	22355970.
34011.817	0. 9. 26. 51.817	28.97386	28. 58. 25.9	139.44272	139. 26. 33.8	1360900.3	414803.	22270279.
34021.817	0. 9. 27. 1.817	29.21364	29. 12. 49.1	140.38791	140. 23. 16.5	1278023.2	389542.	22187155.
34031.817	0. 9. 27. 11.817	29.44782	29. 26. 52.1	141.34496	141. 20. 41.9	1197748.5	365074.	22106637.
34041.817	0. 9. 27. 21.817	29.67607	29. 40. 33.9	142.31373	142. 18. 49.4	1120114.5	341412.	22028764.
34051.817	0. 9. 27. 31.817	29.89811	29. 53. 53.2	143.29406	143. 17. 38.6	1045157.5	318565.	21953574.
34061.817	0. 9. 27. 41.817	30.11361	30. 6. 49.0	144.28576	144. 17. 8.7	972915.3	296545.	21881104.
34071.817	0. 9. 27. 51.817	30.32228	30. 19. 20.2	145.28862	145. 17. 19.1	903426.0	275365.	21811393.
34073.976	0. 9. 27. 53.976	30.36640	30. 21. 59.0	145.50656	145. 30. 23.6	888789.0	270903.	21796709.
CM/SM SEPARATION AND FIVE SECOND COAST								
34073.976	0. 9. 27. 53.976	30.36640	30. 21. 59.0	145.50656	145. 30. 23.6	888789.0	270903.	21796709.
34078.976	0. 9. 27. 58.976	30.46729	30. 28. 2.2	146.01325	146. 0. 47.7	855390.5	260724.	21763203.

TABLE I
APOLLO MISSION AS-502
SPACECRAFT OPERATIONAL TRAJECTORY
-POSITION VECTOR-

TIME SECONDS	TIME DAY HR MIN SEC	GEODETIC LATITUDE DEGREES	GEODETIC LATITUDE DEG MIN SEC	LONGITUDE DEGREES	LONGITUDE DEG MIN SEC	ALTITUDE FEET	ALTITUDE METERS	RADIUS FEET
CM ATTITUDE ORIENTATION FOR ENTRY								
34078.976	0. 9. 27. 58.976	30.46729	30. 28. 2.2	146.01326	146. 0. 47.7	855390.5	260724.	21763203.
34079.367	0. 9. 27. 59.367	30.47510	30. 28. 30.4	146.05299	146. 3. 10.8	852807.8	259936.	21760613.
34088.408	0. 9. 28. 8.408	30.65259	30. 39. 9.3	146.97645	146. 58. 35.2	794299.0	242103.	21701914.
34098.408	0. 9. 28. 18.408	30.84162	30. 50. 29.8	148.00776	148. 0. 27.9	732296.5	223204.	21639709.
34102.683	0. 9. 28. 22.683	30.92002	30. 55. 12.1	148.45173	148. 27. 6.2	706668.3	215393.	21613997.
34102.692	0. 9. 28. 22.692	30.92019	30. 55. 12.7	148.45271	148. 27. 9.8	706611.8	215376.	21613941.
34102.694	0. 9. 28. 22.694	30.92022	30. 55. 12.8	148.45287	148. 27. 10.3	706603.3	215373.	21613932.
COAST TO ENTRY								
34102.694	0. 9. 28. 22.694	30.92022	30. 55. 12.8	148.45287	148. 27. 10.3	706603.3	215373.	21613932.
34111.694	0. 9. 28. 31.694	31.08045	31. 4. 49.6	149.39363	149. 23. 37.1	654374.8	199454.	21561531.
34121.694	0. 9. 28. 41.694	31.25058	31. 15. 2.1	150.44809	150. 26. 53.1	599120.3	182612.	21506093.
34131.694	0. 9. 28. 51.694	31.41212	31. 24. 43.6	151.51189	151. 30. 42.8	546815.3	166670.	21453613.
34141.694	0. 9. 29. 1.694	31.56480	31. 33. 53.3	152.58464	152. 35. 4.7	497488.5	151635.	21404120.
34151.694	0. 9. 29. 11.694	31.70836	31. 42. 30.1	153.66592	153. 39. 57.3	451166.5	137516.	21357642.
34161.694	0. 9. 29. 21.694	31.84256	31. 50. 33.2	154.75528	154. 45. 19.0	407876.3	124321.	21314206.
34163.594	0. 9. 29. 23.594	31.86697	31. 52. 1.1	154.96304	154. 57. 46.9	400000.0	121920.	21306302.
ENTRY								

TABLE II
APOLLO MISSION AS-502
SPACECRAFT OPERATIONAL TRAJECTORY
-VELOCITY VECTOR-

TIME SECONDS	-INERTIAL- VELOCITY FT/SEC	VELOCITY M/SEC	PATH ANGLE DEG	AZIMUTH DEG	-EARTH FIXED- VELOCITY FT/SEC	VELOCITY M/SEC	PATH ANGLE DEG	AZIMUTH DEG
				LIFTOFF CONDITIONS				
remove line .000	1340.674	408.6	.000	90.000	.000	.0	.000	00.000
				TRANSLUNAR INJECTION				
11746.739	35539.005	10832.3	7.383	109.289	34198.123	10423.6	7.623	110.110
11748.739	35531.534	10830.0	7.473	109.376	34190.418	10421.3	7.717	110.201
11750.739	35523.980	10827.7	7.563	109.462	34182.625	10418.9	7.811	110.292
11752.739	35516.343	10825.4	7.654	109.548	34174.745	10416.5	7.906	110.383
11754.739	35508.621	10823.0	7.744	109.634	34166.779	10414.1	7.999	110.474
11756.739	35500.816	10820.7	7.834	109.719	34158.727	10411.6	8.093	110.564
11756.939	35500.029	10820.4	7.843	109.728	34157.913	10411.4	8.102	110.573
				BEGIN ORIENTATION TO S-IVB/CSM SEPARATION ATTITUDE				
11756.939	35500.029	10820.4	7.843	109.728	34157.913	10411.4	8.102	110.573
11757.098	35499.404	10820.2	7.850	109.734	34157.267	10411.2	8.110	110.580
11762.139	35479.325	10814.1	8.077	109.948	34136.552	10404.8	8.346	110.805
11772.139	35437.954	10801.5	8.526	110.365	34093.859	10391.8	8.813	111.246
11782.139	35394.572	10788.3	8.972	110.773	34049.083	10378.2	9.278	111.678
11792.139	35349.219	10774.5	9.416	111.172	34002.264	10363.9	9.741	112.101
11802.139	35301.940	10760.1	9.858	111.562	33953.450	10349.0	10.201	112.516
11812.139	35252.783	10745.1	10.298	111.943	33902.688	10333.6	10.660	112.922
11822.139	35201.795	10729.5	10.735	112.316	33850.027	10317.5	11.116	113.318
11832.139	35149.022	10713.4	11.169	112.679	33795.515	10300.9	11.569	113.706
11842.139	35094.515	10696.8	11.601	113.034	33739.203	10283.7	12.020	114.086
11852.139	35038.323	10679.7	12.030	113.380	33681.141	10266.0	12.469	114.456
11862.139	34980.495	10662.1	12.456	113.717	33621.382	10247.8	12.915	114.819
11872.139	34921.083	10644.0	12.880	114.046	33559.977	10229.1	13.358	115.172
11876.184	34896.611	10636.5	13.050	114.176	33534.680	10221.4	13.537	115.313
11878.139	34884.695	10632.9	13.132	114.239	33522.364	10217.6	13.623	115.380
11880.139	34872.446	10629.1	13.216	114.302	33509.702	10213.8	13.711	115.449

[redacted] Velocity vector

TABLE II
APOLLO MISSION AS-502
SPACECRAFT OPERATIONAL TRAJECTORY
-VELOCITY VECTOR-

TIME SECONDS	-INERTIAL- VELOCITY FT/SEC	VELOCITY M/SEC	PATH ANGLE DEG	AZIMUTH DEG	-EARTH FIXED- VELOCITY FT/SEC	VELOCITY M/SEC	PATH ANGLE DEG	AZIMUTH DEG
11881.058	34864.794	10627.4	13.255	114.332	33503.859	10212.0	13.752	115.480
END ORIENTATION TO S-IVB/CSM SEPARATION ATTITUDE								
11881.058	34864.794	10627.4	13.255	114.332	33503.858	10212.0	13.752	115.480
11882.139	34860.135	10625.4	13.300	114.366	33496.977	10209.9	13.799	115.517
11884.139	34847.768	10621.6	13.384	114.429	33484.191	10206.0	13.887	115.585
11886.139	34835.340	10617.8	13.468	114.491	33471.343	10202.1	13.975	115.653
11888.139	34822.854	10614.0	13.551	114.554	33458.435	10198.2	14.062	115.720
11890.139	34810.310	10610.2	13.635	114.615	33445.466	10194.2	14.150	115.787
11892.139	34797.709	10606.4	13.718	114.677	33432.438	10190.2	14.237	115.854
11894.139	34785.050	10602.5	13.801	114.738	33419.350	10186.2	14.324	115.920
11896.139	34772.336	10598.6	13.884	114.799	33406.203	10182.2	14.411	115.986
11898.139	34759.563	10594.7	13.967	114.860	33392.998	10178.2	14.498	116.051
11900.139	34746.736	10590.8	14.050	114.920	33379.734	10174.2	14.585	116.117
11902.139	34733.853	10586.9	14.132	114.980	33366.413	10170.1	14.672	116.182
11904.139	34720.914	10583.0	14.215	115.040	33353.034	10166.0	14.759	116.246
11906.139	34707.921	10579.0	14.297	115.099	33339.597	10161.9	14.845	116.311
11908.139	34694.874	10575.0	14.380	115.158	33326.105	10157.8	14.931	116.375
11910.139	34681.772	10571.0	14.462	115.217	33312.556	10153.7	15.018	116.438
11912.139	34668.618	10567.0	14.544	115.275	33298.952	10149.5	15.104	116.502
11914.139	34655.410	10563.0	14.626	115.333	33285.293	10145.4	15.190	116.565
11916.139	34642.149	10558.9	14.708	115.390	33271.578	10141.2	15.276	116.628
11916.939	34636.830	10557.3	14.740	115.413	33266.076	10139.5	15.310	116.653
START RCS THRUST FOR S-IVB/CSM SEPARATION								
11916.939	34636.830	10557.3	14.740	115.413	33266.076	10139.5	15.310	116.653
11917.938	34630.075	10555.3	14.781	115.442	33259.095	10137.4	15.353	116.684
11918.639	34625.335	10553.8	14.810	115.462	33254.194	10135.9	15.383	116.706
SEPARATION AND 8.3 SECS OF +X TRANSLATION								
11918.639	34625.335	10553.8	14.810	115.462	33254.194	10135.9	15.383	116.706

TABLE II
APOLLO MISSION AS-502
SPACECRAFT OPERATIONAL TRAJECTORY
-VELOCITY VECTOR-

TIME SECONDS	-INERTIAL- VELOCITY FT/SEC	VELOCITY M/SEC	PATH ANGLE DEG	AZIMUTH DEG	-EARTH FIXED- VELOCITY FT/SEC	VELOCITY M/SEC	PATH ANGLE DEG	AZIMUTH DEG
11926.939	34567.557	10536.2	15.147	115.696	33194.499	10117.7	15.738	116.961
COAST FIVE SECONDS								
11926.939	34567.557	10536.2	15.147	115.696	33194.499	10117.7	15.738	116.961
11931.939	34533.495	10525.8	15.350	115.834	33159.263	10107.0	15.951	117.112
ORIENTATION TO FIRST SPS IGNITION ATTITUDE								
11931.939	34533.495	10525.8	15.350	115.834	33159.263	10107.0	15.951	117.112
11932.827	34527.415	10524.0	15.385	115.858	33152.974	10105.0	15.989	117.138
COAST TO FIRST SPS BURN								
11932.827	34527.415	10524.0	15.385	115.858	33152.974	10105.0	15.989	117.138
11933.239	34524.592	10523.1	15.402	115.870	33150.054	10104.2	16.006	117.151
11943.239	34455.400	10502.0	15.804	114.139	33078.472	10082.3	16.429	117.496
11953.239	34385.043	10480.6	16.202	116.401	33005.673	10060.1	16.849	117.733
11963.238	34313.568	10458.8	16.597	114.655	32931.709	10037.6	17.265	118.013
11973.238	34241.027	10436.7	16.989	114.901	32856.632	10014.7	17.679	118.286
11983.238	34167.469	10414.3	17.378	117.139	32780.492	9991.5	18.089	118.551
11993.238	34092.945	10391.6	17.763	117.371	32703.340	9968.0	18.496	118.808
12003.238	34017.501	10368.6	18.145	117.595	32625.226	9944.2	18.900	119.059
12013.239	33941.186	10345.3	18.523	117.812	32546.200	9920.1	19.301	119.303
12016.939	33912.735	10336.6	18.663	117.891	32516.736	9911.1	19.449	119.391
FIRST SPS IGNITION								
12016.939	33912.735	10336.6	18.663	117.891	32516.736	9911.1	19.449	119.391

TABLE II
APOLLO MISSION AS-502
SPACECRAFT OPERATIONAL TRAJECTORY
-VELOCITY VECTOR-

TIME SECONDS	-INERTIAL- VELOCITY FT/SEC	VELOCITY M/SEC	PATH ANGLE DEG	AZIMUTH DEG	-EARTH FIXED- VELOCITY FT/SEC	VELOCITY M/SEC	PATH ANGLE DEG	AZIMUTH DEG
12017.314	33909.717	10335.7	18.677	117.898	32513.613	9910.2	19.464	119.400
FIRST SPS BURN								
12017.314	33909.717	10335.7	18.677	117.898	32513.613	9910.2	19.464	119.400
12018.333	33889.275	10329.5	18.712	117.920	32492.874	9903.8	19.502	119.425
12020.333	33849.101	10317.2	18.782	117.961	32452.115	9891.4	19.577	119.473
12022.333	33808.872	10305.0	18.852	118.003	32411.297	9879.0	19.651	119.521
12024.333	33768.559	10292.7	18.920	118.044	32370.391	9866.5	19.725	119.569
12026.333	33728.161	10280.4	18.989	118.085	32329.397	9854.0	19.798	119.616
12028.333	33687.675	10268.0	19.057	118.126	32288.313	9841.5	19.871	119.663
12030.333	33647.102	10255.7	19.125	118.166	32247.140	9828.9	19.944	119.710
12032.333	33606.443	10243.3	19.192	118.206	32205.878	9816.4	20.016	119.757
12034.333	33565.697	10230.8	19.259	118.246	32164.527	9803.8	20.088	119.803
12036.333	33524.864	10218.4	19.326	118.285	32123.087	9791.1	20.160	119.849
12038.333	33483.946	10205.9	19.392	118.325	32081.559	9778.5	20.231	119.895
12040.333	33442.941	10193.4	19.458	118.363	32089.943	9765.8	20.302	119.940
12042.333	33401.851	10180.9	19.524	118.402	31998.237	9753.1	20.373	119.985
12044.333	33360.674	10168.4	19.589	118.440	31956.445	9740.3	20.443	120.030
12046.333	33319.412	10155.8	19.654	118.478	31914.564	9727.6	20.513	120.075
12048.333	33278.067	10143.2	19.719	118.516	31872.596	9714.8	20.582	120.119
12050.333	33236.634	10130.5	19.783	118.554	31830.541	9702.0	20.652	120.164
12052.333	33195.118	10117.9	19.847	118.591	31788.398	9689.1	20.721	120.207
12054.333	33153.517	10105.2	19.910	118.628	31746.168	9676.3	20.789	120.251
12056.333	33111.830	10092.5	19.974	118.664	31703.851	9663.4	20.857	120.294
12058.333	33070.059	10079.8	20.036	118.701	31661.447	9650.4	20.925	120.337
12060.333	33028.205	10067.0	20.099	118.737	31618.957	9637.5	20.993	120.380
12062.333	32986.265	10054.2	20.161	118.773	31576.380	9624.5	21.060	120.423
12064.333	32944.243	10041.4	20.223	118.808	31533.717	9611.5	21.127	120.465
12066.333	32902.135	10028.6	20.284	118.843	31490.967	9598.5	21.193	120.507
12068.333	32859.945	10015.7	20.346	118.878	31448.132	9585.4	21.259	120.549
12070.333	32817.670	10002.8	20.406	118.913	31405.209	9572.3	21.325	120.590
12072.333	32775.313	9989.9	20.467	118.948	31362.201	9559.2	21.391	120.632
12074.333	32732.871	9977.0	20.527	118.982	31319.108	9546.1	21.456	120.673
12076.333	32690.346	9964.0	20.586	119.016	31275.929	9532.9	21.521	120.714
12078.333	32647.738	9951.1	20.646	119.049	31232.663	9519.7	21.585	120.754
12080.333	32605.047	9938.0	20.705	119.083	31189.313	9506.5	21.649	120.795
12082.333	32562.273	9925.0	20.763	119.116	31145.877	9493.3	21.713	120.835
12084.333	32519.416	9911.9	20.821	119.149	31102.356	9480.0	21.776	120.874

TABLE II
APOLLO MISSION AS-502
SPACECRAFT OPERATIONAL TRAJECTORY
-VELOCITY VECTOR-

TIME SECONDS	-INERTIAL- VELOCITY FT/SEC	VELOCITY M/SEC	PATH ANGLE DEG	AZIMUTH DEG	-EARTH FIXED- VELOCITY FT/SEC	VELOCITY M/SEC	PATH ANGLE DEG	AZIMUTH DEG
12086.333	32476.476	9898.8	20.879	119.182	31058.750	9466.7	21.839	120.914
12088.333	32433.453	9885.7	20.937	119.214	31015.058	9453.4	21.901	120.953
12090.333	32390.348	9872.6	20.994	119.246	30971.280	9440.1	21.964	120.993
12092.333	32347.160	9859.4	21.051	119.278	30927.419	9426.7	22.025	121.031
12094.333	32303.889	9846.2	21.107	119.310	30883.472	9413.3	22.087	121.070
12096.333	32260.536	9833.0	21.163	119.341	30839.440	9399.9	22.148	121.109
12098.333	32217.100	9819.8	21.219	119.373	30795.323	9386.4	22.209	121.147
12100.333	32173.583	9806.5	21.274	119.403	30751.122	9373.0	22.269	121.185
12102.333	32129.982	9793.2	21.329	119.434	30706.835	9359.5	22.329	121.223
12104.333	32086.299	9779.9	21.383	119.465	30662.464	9345.9	22.389	121.260
12106.333	32042.535	9766.6	21.437	119.495	30618.009	9332.4	22.448	121.297
12108.333	31998.687	9753.2	21.491	119.525	30573.467	9318.8	22.507	121.334
12110.333	31954.758	9739.8	21.545	119.555	30528.842	9305.2	22.566	121.371
12112.333	31910.747	9726.4	21.598	119.584	30484.132	9291.6	22.624	121.408
12114.333	31866.653	9713.0	21.650	119.613	30439.337	9277.9	22.682	121.444
12116.333	31822.477	9699.5	21.703	119.643	30394.458	9264.2	22.739	121.481
12118.333	31778.219	9686.0	21.754	119.671	30349.494	9250.5	22.796	121.517
12120.333	31733.879	9672.5	21.806	119.700	30304.445	9236.8	22.853	121.553
12122.333	31689.457	9659.0	21.857	119.728	30259.312	9223.1	22.909	121.588
12124.333	31644.953	9645.4	21.908	119.756	30214.094	9209.3	22.965	121.624
12126.333	31600.367	9631.8	21.958	119.784	30168.792	9195.5	23.021	121.659
12128.333	31555.697	9618.2	22.008	119.812	30123.404	9181.6	23.076	121.694
12130.333	31510.947	9604.6	22.058	119.840	30077.931	9167.8	23.130	121.728
12132.333	31466.114	9590.9	22.107	119.867	30032.375	9153.9	23.185	121.763
12134.333	31421.198	9577.2	22.156	119.894	29986.732	9140.0	23.239	121.797
12136.333	31376.200	9563.5	22.204	119.921	29941.005	9126.0	23.292	121.832
12138.333	31331.120	9549.7	22.252	119.947	29895.194	9112.1	23.346	121.865
12140.333	31285.958	9536.0	22.300	119.974	29849.297	9098.1	23.399	121.899
12142.333	31240.714	9522.2	22.347	120.000	29803.315	9084.1	23.451	121.933
12144.333	31195.386	9508.4	22.394	120.026	29757.248	9070.0	23.503	121.966
12146.333	31149.975	9494.5	22.440	120.052	29711.095	9056.0	23.555	121.999
12148.333	31104.483	9480.7	22.486	120.077	29664.858	9041.9	23.606	122.032
12150.333	31058.908	9466.8	22.532	120.103	29618.535	9027.7	23.657	122.065
12152.333	31013.250	9452.9	22.577	120.128	29572.126	9013.6	23.707	122.098
12154.333	30967.509	9438.9	22.622	120.153	29525.632	8999.4	23.757	122.130
12156.333	30921.685	9424.9	22.667	120.177	29479.053	8985.2	23.807	122.162
12158.333	30875.779	9411.0	22.711	120.202	29432.388	8971.0	23.856	122.194
12160.333	30829.789	9396.9	22.754	120.226	29385.636	8956.8	23.905	122.226
12162.333	30783.715	9382.9	22.798	120.250	29338.798	8942.5	23.954	122.258
12164.333	30737.558	9368.8	22.840	120.274	29291.875	8928.2	24.002	122.290
12166.333	30691.318	9354.7	22.883	120.298	29244.865	8913.9	24.049	122.321

TABLE II
APOLLO MISSION AS-502
SPACECRAFT OPERATIONAL TRAJECTORY
-VELOCITY VECTOR-

TIME SECONDS	-INERTIAL- VELOCITY FT/SEC	VELOCITY M/SEC	PATH ANGLE DEG	AZIMUTH DEG	-EARTH FIXED- VELOCITY FT/SEC	VELOCITY M/SEC	PATH ANGLE DEG	AZIMUTH DEG
12168.333	30644.994	9340.6	22.925	120.322	29197.769	8899.5	24.097	122.352
12170.333	30598.588	9326.5	22.966	120.345	29150.587	8885.1	24.144	122.383
12172.333	30552.096	9312.3	23.008	120.368	29103.317	8870.7	24.190	122.414
12174.333	30505.520	9298.1	23.048	120.391	29055.960	8856.3	24.236	122.444
12176.333	30458.861	9283.9	23.089	120.414	29008.517	8841.8	24.282	122.475
12178.333	30412.117	9269.6	23.129	120.437	28960.986	8827.3	24.327	122.505
12180.333	30365.289	9255.4	23.168	120.459	28913.368	8812.8	24.372	122.535
12182.333	30318.376	9241.1	23.207	120.481	28865.664	8798.3	24.416	122.565
12184.333	30271.379	9226.7	23.246	120.503	28817.870	8783.7	24.460	122.595
12186.333	30224.296	9212.4	23.284	120.525	28769.989	8769.1	24.504	122.625
12188.333	30177.128	9198.0	23.322	120.547	28722.020	8754.5	24.547	122.654
12190.333	30129.875	9183.6	23.360	120.568	28673.963	8739.8	24.589	122.683
12192.333	30082.537	9169.2	23.397	120.589	28625.817	8725.2	24.632	122.712
12194.333	30035.113	9154.7	23.433	120.610	28577.583	8710.5	24.674	122.741
12196.333	29987.603	9140.2	23.469	120.631	28529.260	8695.7	24.715	122.770
12198.333	29940.006	9125.7	23.505	120.652	28480.846	8681.0	24.756	122.799
12200.333	29892.324	9111.2	23.540	120.673	28432.345	8666.2	24.796	122.827
12202.333	29844.555	9096.6	23.575	120.693	28383.753	8651.4	24.837	122.855
12204.333	29796.699	9082.1	23.609	120.713	28335.071	8636.5	24.876	122.884
12206.333	29748.756	9067.4	23.643	120.733	28286.300	8621.7	24.916	122.912
12208.333	29700.726	9052.8	23.677	120.753	28237.438	8606.8	24.954	122.939
12210.333	29652.609	9038.1	23.710	120.773	28188.485	8591.9	24.993	122.967
12212.333	29604.404	9023.4	23.743	120.792	28139.441	8576.9	25.031	122.995
12214.333	29554.111	9008.7	23.775	120.812	28090.307	8561.9	25.068	123.022
12216.333	29507.729	8994.0	23.807	120.831	28041.081	8546.9	25.105	123.049
12218.333	29459.260	8979.2	23.838	120.850	27991.763	8531.9	25.142	123.076
12220.333	29410.701	8964.4	23.869	120.869	27942.353	8516.8	25.178	123.103
12222.333	29362.053	8949.6	23.899	120.888	27892.851	8501.8	25.214	123.130
12224.333	29313.315	8934.7	23.929	120.906	27843.256	8486.6	25.249	123.157
12226.333	29264.489	8919.8	23.959	120.925	27793.568	8471.5	25.284	123.183
12228.333	29215.572	8904.9	23.988	120.943	27743.786	8456.3	25.318	123.210
12230.333	29166.565	8890.0	24.016	120.961	27693.910	8441.1	25.352	123.236
12232.333	29117.467	8875.0	24.044	120.979	27643.941	8425.9	25.385	123.262
12234.333	29068.279	8860.0	24.072	120.996	27593.878	8410.6	25.418	123.288
12236.333	29018.998	8845.0	24.099	121.014	27543.719	8395.3	25.451	123.314
12238.333	28969.626	8830.0	24.126	121.031	27493.466	8380.0	25.483	123.339
12240.333	28920.162	8814.9	24.152	121.049	27443.116	8364.7	25.514	123.365
12242.333	28870.606	8799.8	24.178	121.066	27392.671	8349.3	25.545	123.390
12244.333	28820.957	8784.6	24.203	121.083	27342.130	8333.9	25.576	123.416
12246.333	28771.215	8769.5	24.228	121.099	27291.492	8318.5	25.606	123.441
12248.333	28721.379	8754.3	24.253	121.116	27240.756	8303.0	25.636	123.466

TABLE II
APOLLO MISSION AS-502
SPACECRAFT OPERATIONAL TRAJECTORY
-VELOCITY VECTOR-

TIME SECONDS	-INERTIAL- VELOCITY FT/SEC	M/SEC	PATH ANGLE DEG	AZIMUTH DEG	-EARTH FIXED- VELOCITY FT/SEC	M/SEC	PATH ANGLE DEG	AZIMUTH DEG
12250.333	28671.449	8739.1	24.276	121.133	27189.923	8287.5	25.665	123.491
12252.333	28621.425	8723.8	24.300	121.149	27138.992	8272.0	25.694	123.515
12254.333	28571.305	8708.6	24.323	121.165	27087.962	8256.4	25.722	123.540
12256.333	28521.090	8693.2	24.345	121.181	27036.833	8240.8	25.749	123.565
12258.333	28470.779	8677.9	24.367	121.197	26985.604	8225.2	25.777	123.589
12260.333	28420.371	8662.5	24.389	121.213	26934.274	8209.6	25.803	123.613
12262.333	28369.865	8647.2	24.410	121.228	26882.844	8193.9	25.830	123.637
12264.333	28319.261	8631.7	24.430	121.244	26831.311	8178.2	25.855	123.661
12266.333	28268.558	8616.3	24.450	121.259	26779.674	8162.5	25.881	123.685
12268.333	28217.753	8600.8	24.470	121.274	26727.933	8146.7	25.906	123.709
12270.333	28166.842	8585.3	24.489	121.289	26676.083	8130.9	25.930	123.733
12270.943	28151.262	8580.5	24.495	121.294	26660.217	8126.1	25.938	123.740
FIRST SPS SHUTDOWN								
12270.943	28151.262	8580.5	24.495	121.294	26660.217	8126.1	25.938	123.740
12271.630	28138.943	8576.8	24.504	121.299	26647.608	8122.2	25.949	123.747
COAST FIVE SECONDS								
12271.630	28138.943	8576.8	24.504	121.299	26647.608	8122.2	25.949	123.747
12276.630	28099.345	8564.7	24.597	121.336	26606.157	8109.6	26.053	123.799
CSM ATTITUDE ORIENTAION FOR SOLAR SOAK								
12276.630	28099.345	8564.7	24.597	121.336	26606.157	8109.6	26.053	123.799
12285.643	28028.042	8543.0	24.763	121.401	26531.505	8086.8	26.238	123.890
12290.177	27992.213	8532.0	24.846	121.433	26493.987	8075.4	26.331	123.935
12295.643	27949.056	8518.9	24.946	121.470	26448.791	8061.6	26.443	123.988
12305.643	27870.209	8494.9	25.126	121.537	26366.205	8036.4	26.645	124.084
12315.643	27791.512	8470.9	25.304	121.600	26283.757	8011.3	26.846	124.177
12318.207	27771.364	8464.7	25.350	121.616	26262.645	8004.9	26.897	124.200
12325.643	27712.975	8446.9	25.480	121.661	26201.459	7986.2	27.045	124.267
12335.643	27634.607	8423.0	25.655	121.720	26119.319	7961.2	27.241	124.355

TABLE II
APOLLO MISSION AS-502
SPACECRAFT OPERATIONAL TRAJECTORY
-VELOCITY VECTOR-

TIME SECONDS	-INERTIAL- VELOCITY FT/SEC	VELOCITY M/SEC	PATH ANGLE DEG	AZIMUTH DEG	-EARTH FIXED- VELOCITY FT/SEC	VELOCITY M/SEC	PATH ANGLE DEG	AZIMUTH DEG
12337.521	27619.909	8418.6	25.687	121.730	26103.911	7956.5	27.278	124.371
			START SOLAR SOAK					
12337.521	27619.909	8418.6	25.687	121.730	26103.911	7956.5	27.278	124.371
12340.643	27595.490	8411.1	25.741	121.748	26078.311	7948.7	27.339	124.398
12400.643	27129.889	8269.2	26.741	122.038	25589.851	7799.8	28.476	124.865
12460.643	26672.354	8129.7	27.675	122.247	25109.179	7653.3	29.551	125.254
12520.643	26224.054	7993.1	28.548	122.387	24637.534	7509.5	30.567	125.575
12580.643	25785.828	7859.5	29.363	122.467	24175.812	7368.8	31.529	125.838
12640.643	25358.246	7729.2	30.123	122.494	23724.633	7231.3	32.440	126.050
12700.643	24941.655	7602.2	30.833	122.477	23284.390	7097.1	33.303	126.218
12760.643	24536.235	7478.7	31.496	122.420	22855.292	6966.3	34.122	126.349
12820.643	24142.022	7358.5	32.116	122.330	22437.408	6838.9	34.899	126.446
12880.643	23758.949	7241.7	32.694	122.210	22030.694	6715.0	35.639	126.515
12940.643	23386.867	7128.3	33.233	122.065	21635.021	6594.4	36.342	126.559
13000.643	23025.562	7018.2	33.737	121.899	21250.193	6477.1	37.012	126.581
13060.643	22674.780	6911.3	34.207	121.713	20875.967	6363.0	37.652	126.585
13120.643	22334.233	6807.5	34.646	121.511	20512.065	6252.1	38.262	126.572
13180.643	22003.610	6706.7	35.056	121.294	20158.186	6144.2	38.845	126.545
13240.643	21682.589	6608.9	35.437	121.065	19814.012	6039.3	39.403	126.506
13300.643	21370.839	6513.8	35.793	120.826	19479.218	5937.3	39.938	126.456
13360.643	21068.028	6421.5	36.125	120.578	19153.476	5838.0	40.450	126.396
13420.643	20773.829	6331.9	36.434	120.321	18836.456	5741.4	40.942	126.328
13480.643	20487.914	6244.7	36.721	120.059	18527.836	5647.3	41.414	126.253
13540.643	20209.966	6160.0	36.988	119.790	18227.294	5555.7	41.869	126.171
13600.643	19939.676	6077.6	37.236	119.517	17934.524	5466.5	42.306	126.084
13660.643	19676.743	5997.5	37.466	119.239	17649.223	5379.5	42.727	125.992
13720.643	19420.879	5919.5	37.678	118.959	17371.099	5294.7	43.133	125.896
13780.643	19171.805	5843.6	37.874	118.675	17099.871	5212.1	43.524	125.797
13840.643	18929.254	5769.6	38.055	118.390	16835.271	5131.4	43.902	125.693
13900.643	18692.968	5697.6	38.221	118.102	16577.037	5052.7	44.268	125.588
13960.643	18462.703	5627.4	38.373	117.813	16324.920	4975.8	44.621	125.479
14020.643	18238.224	5559.0	38.511	117.524	16078.683	4900.8	44.963	125.369
14080.643	18019.307	5492.3	38.637	117.233	15838.097	4827.5	45.294	125.256
14140.643	17805.738	5427.2	38.751	116.942	15602.946	4755.8	45.614	125.142
14200.643	17597.312	5363.7	38.853	116.651	15373.020	4685.7	45.925	125.027
14260.643	17393.837	5301.7	38.944	116.360	15148.122	4617.2	46.227	124.910
14320.643	17195.126	5241.1	39.024	116.070	14928.061	4550.1	46.520	124.792

TABLE II
APOLLO MISSION AS-502
SPACECRAFT OPERATIONAL TRAJECTORY
-VELOCITY VECTOR-

TIME SECONDS	-INERTIAL- VELOCITY FT/SEC	VELOCITY M/SEC	PATH ANGLE DEG	AZIMUTH DEG	-EARTH FIXED- VELOCITY FT/SEC	VELOCITY M/SEC	PATH ANGLE DEG	AZIMUTH DEG
14380.643	17001.002	5181.9	39.094	115.780	14712.657	4484.4	46.804	124.673
14440.643	16811.298	5124.1	39.154	115.490	14501.738	4420.1	47.080	124.553
14500.643	16625.852	5067.6	39.205	115.201	14295.138	4357.2	47.349	124.432
14560.643	16444.512	5012.3	39.247	114.913	14092.700	4295.5	47.610	124.311
14620.643	16267.134	4958.2	39.280	114.626	13894.275	4235.0	47.865	124.188
14680.643	16093.578	4905.3	39.304	114.340	13699.720	4175.7	48.112	124.066
14740.643	15923.711	4853.6	39.320	114.055	13508.897	4117.5	48.353	123.942
14800.643	15757.408	4802.9	39.329	113.771	13321.678	4060.5	48.588	123.818
14860.643	15594.548	4753.2	39.329	113.489	13137.936	4004.5	48.816	123.694
14920.643	15436.017	4704.6	39.322	113.208	12957.553	3949.5	49.039	123.569
14980.643	15278.706	4657.0	39.308	112.928	12780.416	3895.5	49.257	123.443
15040.643	15125.511	4610.3	39.287	112.649	12606.416	3842.4	49.469	123.317
15100.643	14975.331	4564.5	39.259	112.372	12435.449	3790.3	49.676	123.190
15160.643	14828.072	4519.6	39.225	112.097	12267.416	3739.1	49.878	123.063
15220.643	14683.643	4475.6	39.184	111.823	12102.221	3688.8	50.075	122.935
15280.643	14541.957	4432.4	39.137	111.550	11939.774	3639.3	50.267	122.806
15340.643	14402.932	4390.0	39.083	111.279	11779.988	3590.5	50.455	122.677
15400.643	14266.488	4348.4	39.024	111.009	11622.779	3542.6	50.638	122.547
15460.643	14132.549	4307.6	38.959	110.741	11468.067	3495.5	50.818	122.417
15520.643	14001.043	4267.5	38.888	110.474	11315.776	3449.1	50.993	122.286
15580.643	13871.900	4228.2	38.811	110.209	11165.832	3403.4	51.163	122.153
15640.643	13745.055	4189.5	38.729	109.945	11018.164	3358.3	51.330	122.020
15700.643	13620.444	4151.5	38.641	109.683	10872.706	3314.0	51.493	121.887
15760.643	13498.005	4114.2	38.549	109.422	10729.393	3270.3	51.652	121.752
15820.643	13377.681	4077.5	38.451	109.163	10588.161	3227.3	51.808	121.616
15880.643	13259.416	4041.5	38.347	108.905	10448.952	3184.8	51.960	121.479
15940.643	13143.157	4006.0	38.239	108.648	10311.707	3143.0	52.108	121.341
16000.643	13028.851	3971.2	38.126	108.394	10176.371	3101.8	52.253	121.201
16060.643	12916.450	3936.9	38.008	108.140	10042.891	3061.1	52.394	121.061
16120.643	12805.907	3903.2	37.885	107.888	9911.217	3020.9	52.532	120.919
16180.643	12697.176	3870.1	37.758	107.638	9781.297	2981.3	52.667	120.775
16240.643	12590.215	3837.5	37.625	107.389	9653.087	2942.3	52.798	120.630
16300.643	12484.980	3805.4	37.488	107.141	9526.539	2903.7	52.926	120.484
16360.643	12381.433	3773.9	37.347	106.895	9401.610	2865.6	53.050	120.335
16420.643	12279.535	3742.8	37.201	106.650	9278.257	2828.0	53.172	120.185
16480.643	12179.249	3712.2	37.050	106.406	9156.441	2790.9	53.290	120.034
16540.643	12080.539	3682.2	36.895	106.164	9036.120	2754.2	53.406	119.880
16600.643	11983.373	3652.5	36.736	105.924	8917.259	2718.0	53.517	119.724
16660.643	11887.715	3623.4	36.572	105.684	8799.819	2682.2	53.626	119.566
16720.643	11793.537	3594.7	36.404	105.446	8683.766	2646.8	53.731	119.406
16780.643	11700.806	3566.4	36.232	105.209	8569.065	2611.9	53.834	119.244

TABLE II
APOLLO MISSION AS-502
SPACECRAFT OPERATIONAL TRAJECTORY
-VELOCITY VECTOR-

TIME SECONDS	-INERTIAL- VELOCITY FT/SEC	VELOCITY M/SEC	PATH ANGLE DEG	AZIMUTH DEG	-EARTH FIXED- VELOCITY FT/SEC	VELOCITY M/SEC	PATH ANGLE DEG	AZIMUTH DEG
16840.643	11609.495	3538.6	36.056	104.973	8455.685	2577.3	53.933	119.079
16900.643	11519.575	3511.2	35.875	104.739	8343.592	2543.1	54.029	118.912
16960.643	11431.019	3484.2	35.690	104.506	8232.758	2509.3	54.122	118.742
17020.643	11343.803	3457.6	35.501	104.274	8123.151	2475.9	54.212	118.569
17080.643	11257.899	3431.4	35.308	104.043	8014.743	2442.9	54.298	118.394
17140.643	11173.286	3405.6	35.111	103.814	7907.508	2410.2	54.382	118.215
17200.643	11089.941	3380.2	34.909	103.585	7801.418	2377.9	54.462	118.034
17260.643	11007.840	3355.2	34.704	103.358	7696.447	2345.9	54.538	117.849
17320.643	10926.963	3330.5	34.494	103.132	7592.571	2314.2	54.612	117.661
17380.643	10847.290	3306.3	34.281	102.907	7489.766	2282.9	54.682	117.470
17440.643	10768.800	3282.3	34.063	102.684	7388.008	2251.9	54.749	117.275
17500.643	10691.476	3258.8	33.842	102.461	7287.275	2221.2	54.812	117.076
17560.643	10615.298	3235.5	33.617	102.239	7187.546	2190.8	54.872	116.874
17620.643	10540.251	3212.7	33.387	102.019	7088.799	2160.7	54.928	116.668
17680.643	10466.316	3190.1	33.154	101.800	6991.015	2130.9	54.980	116.457
17740.643	10393.477	3167.9	32.917	101.581	6894.173	2101.3	55.029	116.242
17800.643	10321.721	3146.1	32.676	101.364	6798.255	2072.1	55.074	116.023
17860.643	10251.030	3124.5	32.430	101.148	6703.243	2043.2	55.115	115.800
17920.643	10181.392	3103.3	32.182	100.932	6609.119	2014.5	55.152	115.572
17980.643	10112.792	3082.4	31.929	100.718	6515.867	1986.0	55.185	115.339
18040.643	10045.218	3061.8	31.672	100.504	6423.469	1957.9	55.214	115.101
18100.643	9978.656	3041.5	31.412	100.292	6331.911	1930.0	55.238	114.857
18160.643	9913.095	3021.5	31.147	100.081	6241.177	1902.3	55.258	114.609
18220.643	9848.523	3001.8	30.879	99.870	6151.252	1874.9	55.274	114.355
18280.643	9784.929	2982.5	30.607	99.660	6062.123	1847.7	55.285	114.096
18340.643	9722.302	2963.4	30.331	99.452	5973.775	1820.8	55.291	113.830
18400.643	9660.632	2944.6	30.051	99.244	5886.197	1794.1	55.292	113.559
18460.643	9599.909	2926.1	29.768	99.037	5799.376	1767.7	55.288	113.282
18520.643	9540.124	2907.8	29.481	98.831	5713.299	1741.4	55.279	112.998
18580.643	9481.268	2889.9	29.190	98.625	5627.956	1715.4	55.264	112.708
18640.643	9423.332	2872.2	28.895	98.421	5543.335	1689.6	55.244	112.411
18700.643	9366.307	2854.9	28.597	98.217	5459.427	1664.0	55.218	112.107
18760.643	9310.187	2837.8	28.294	98.014	5376.222	1638.7	55.185	111.797
18820.643	9254.964	2820.9	27.988	97.812	5293.710	1613.5	55.147	111.479
18880.643	9200.630	2804.4	27.679	97.611	5211.883	1588.6	55.102	111.153
18940.643	9147.178	2788.1	27.365	97.411	5130.732	1563.9	55.050	110.820
19000.643	9094.602	2772.0	27.048	97.211	5050.251	1539.3	54.991	110.479
19060.643	9042.897	2756.3	26.728	97.012	4970.431	1515.0	54.924	110.131
19120.643	8992.055	2740.8	26.403	96.814	4891.266	1490.9	54.850	109.774
19180.643	8942.072	2725.5	26.075	96.616	4812.751	1466.9	54.768	109.408
19240.643	8892.942	2710.6	25.744	96.420	4734.880	1443.2	54.678	109.035

TABLE II
APOLLO MISSION AS-502
SPACECRAFT OPERATIONAL TRAJECTORY
-VELOCITY VECTOR-

TIME SECONDS	-INERTIAL- VELOCITY FT/SEC	VELOCITY M/SEC	PATH ANGLE DEG	AZIMUTH DEG	-EARTH FIXED- VELOCITY FT/SEC	VELOCITY M/SEC	PATH ANGLE DEG	AZIMUTH DEG
19300.643	8844.660	2695.9	25.408	96.224	4657.647	1419.7	54.579	108.652
19360.643	8797.220	2681.4	25.070	96.028	4581.050	1396.3	54.471	108.260
19420.643	8750.620	2667.2	24.727	95.834	4505.083	1373.2	54.353	107.860
19480.643	8704.854	2653.2	24.381	95.639	4429.746	1350.2	54.226	107.450
19540.643	8659.919	2639.5	24.032	98.446	4355.033	1327.4	54.088	107.030
19600.643	8615.810	2626.1	23.679	95.253	4280.945	1304.8	53.939	106.601
19660.643	8572.524	2612.9	23.322	95.061	4207.481	1282.4	53.779	106.162
19720.643	8530.057	2600.0	22.962	94.870	4134.639	1260.2	53.607	105.713
19780.643	8488.407	2587.3	22.599	94.679	4062.422	1238.2	53.423	105.254
19840.643	8447.571	2574.8	22.232	94.489	3990.829	1216.4	53.225	104.785
19900.643	8407.545	2562.6	21.862	94.299	3919.864	1194.8	53.014	104.305
19960.643	8368.327	2550.7	21.488	94.110	3849.530	1173.3	52.788	103.815
20020.643	8329.914	2539.0	21.111	93.922	3779.830	1152.1	52.548	103.314
20080.643	8292.306	2527.5	20.731	93.734	3710.770	1131.0	52.291	102.803
20140.643	8255.498	2516.3	20.348	93.546	3642.356	1110.2	52.018	102.280
20200.643	8219.490	2505.3	19.961	93.360	3574.595	1089.5	51.727	101.746
20260.643	8184.280	2494.6	19.571	93.173	3507.495	1069.1	51.418	101.202
20320.643	8149.865	2484.1	19.178	92.987	3441.067	1048.8	51.089	100.646
20380.643	8116.246	2473.8	18.782	92.802	3375.321	1028.8	50.740	100.079
20440.643	8083.419	2463.8	18.383	92.618	3310.270	1009.0	50.369	99.502
20500.643	8051.385	2454.1	17.981	92.433	3245.928	989.4	49.976	98.913
20560.643	8020.141	2444.5	17.575	92.250	3182.310	970.0	49.559	98.313
20620.643	7989.687	2435.3	17.167	92.066	3119.433	950.8	49.117	97.701
20680.643	7960.022	2426.2	16.756	91.884	3057.317	931.9	48.649	97.079
20740.643	7931.146	2417.4	16.342	91.701	2995.984	913.2	48.153	96.446
20800.643	7903.057	2408.9	15.926	91.520	2935.454	894.7	47.628	95.803
20860.643	7875.755	2400.5	15.506	91.338	2875.756	876.5	47.072	95.149
20920.643	7849.240	2392.5	15.084	91.157	2816.915	858.6	46.484	94.484
20980.643	7823.511	2384.6	14.659	90.977	2758.962	840.9	45.862	93.809
21040.643	7798.567	2377.0	14.232	90.797	2701.931	823.6	45.204	93.125
21100.643	7774.409	2369.6	13.802	90.617	2645.856	806.5	44.509	92.430
21160.643	7751.036	2362.5	13.370	90.438	2590.777	789.7	43.775	91.726
21220.643	7728.449	2355.6	12.935	90.259	2536.735	773.2	43.000	91.014
21280.643	7706.646	2349.0	12.498	90.080	2483.775	757.1	42.182	90.292
21340.643	7685.629	2342.6	12.059	89.902	2431.946	741.3	41.318	89.563
21400.643	7665.396	2336.4	11.618	89.724	2381.301	725.8	40.408	88.825
21460.643	7645.949	2330.5	11.174	89.547	2331.895	710.8	39.449	88.081
21520.643	7627.287	2324.8	10.728	89.370	2283.787	696.1	38.439	87.329
21580.643	7609.410	2319.4	10.281	89.193	2237.041	681.9	37.376	86.571
21640.643	7592.318	2314.1	9.831	89.017	2191.726	668.0	36.259	85.807
21700.643	7576.012	2309.2	9.380	88.841	2147.911	654.7	35.086	85.038

TABLE II
APOLLO MISSION AS-502
SPACECRAFT OPERATIONAL TRAJECTORY
-VELOCITY VECTOR-

TIME SECONDS	-INERTIAL- VELOCITY FT/SEC	VELOCITY M/SEC	PATH ANGLE DEG	AZIMUTH DEG	-EARTH FIXED- VELOCITY FT/SEC	VELOCITY M/SEC	PATH ANGLE DEG	AZIMUTH DEG
21760.643	7560.492	2304.4	8.927	88.666	2105.673	641.8	33.865	84.265
21820.643	7545.758	2300.0	8.472	88.490	2065.090	629.4	32.565	83.487
21880.643	7531.810	2295.7	8.015	88.315	2026.244	617.6	31.214	82.707
21940.643	7518.649	2291.7	7.557	88.140	1989.219	606.3	29.803	81.923
22000.643	7506.274	2287.9	7.098	87.966	1954.104	595.6	28.331	81.138
22060.643	7494.687	2284.4	6.637	87.792	1920.989	585.5	26.798	80.351
22120.643	7483.886	2281.1	6.175	87.618	1889.962	576.1	25.205	79.564
22180.643	7473.873	2278.0	5.712	87.445	1861.116	567.3	23.551	78.776
22240.643	7464.647	2275.2	5.248	87.271	1834.539	559.2	21.841	77.990
22300.643	7456.210	2272.7	4.782	87.098	1810.320	551.8	20.075	77.205
22360.643	7448.560	2270.3	4.316	86.926	1788.542	545.1	18.257	76.423
22420.643	7441.699	2268.2	3.849	86.753	1769.285	539.3	16.391	75.643
22480.643	7435.626	2266.4	3.381	86.581	1752.624	534.2	14.481	74.868
22540.643	7430.342	2264.8	2.913	86.409	1738.623	529.9	12.532	74.096
22600.643	7425.847	2263.4	2.444	86.237	1727.339	526.5	10.551	73.330
22660.643	7422.140	2262.3	1.974	86.065	1718.820	523.9	8.543	72.570
22720.643	7419.223	2261.4	1.504	85.894	1713.100	522.2	6.516	71.816
22780.643	7417.094	2260.7	1.034	85.723	1710.204	521.3	4.476	71.068
22840.643	7415.755	2260.3	.564	85.552	1710.140	521.3	2.431	70.329
22900.643	7415.205	2260.2	.093	85.381	1712.907	522.1	.389	69.598
22912.502	7415.190	2260.2	.000	85.348	1713.789	522.4	-.014	69.454
			APOGEE					
22912.502	7415.190	2260.2	.000	85.348	1713.789	522.4	-.014	69.454
22960.643	7415.444	2260.2	-.378	85.211	1718.490	523.8	-1.643	68.875
23020.643	7416.473	2260.5	-.848	85.040	1726.860	526.3	-3.659	68.162
23080.643	7418.290	2261.1	-1.318	84.870	1737.977	529.7	-5.651	67.459
23140.643	7420.897	2261.9	-1.788	84.700	1751.790	533.9	-7.612	66.766
23200.643	7424.293	2262.9	-2.258	84.530	1768.237	539.0	-9.538	66.083
23260.643	7428.477	2264.2	-2.727	84.360	1787.249	544.8	-11.423	65.412
23320.643	7433.451	2265.7	-3.196	84.191	1808.749	551.3	-13.263	64.752
23380.643	7439.213	2267.5	-3.664	84.021	1832.655	558.6	-15.053	64.104
23440.643	7445.764	2269.5	-4.132	83.852	1858.878	566.6	-16.791	63.468
23500.643	7453.103	2271.7	-4.598	83.683	1887.330	575.3	-18.474	62.844
23560.643	7461.230	2274.2	-5.064	83.514	1917.917	584.6	-20.101	62.233
23620.643	7470.145	2276.9	-5.529	83.345	1950.548	594.5	-21.671	61.634
23680.643	7479.848	2279.9	-5.992	83.176	1985.131	605.1	-23.182	61.049
23740.643	7490.339	2283.1	-6.455	83.007	2021.575	616.2	-24.635	60.476

TABLE II
APOLLO MISSION AS-502
SPACECRAFT OPERATIONAL TRAJECTORY
-VELOCITY VECTOR-

TIME SECONDS	-INERTIAL- VELOCITY FT/SEC	-INERTIAL- VELOCITY M/SEC	-INERTIAL- PATH ANGLE DEG	-INERTIAL- AZIMUTH DEG	-EARTH FIXED- VELOCITY FT/SEC	-EARTH FIXED- VELOCITY M/SEC	-EARTH FIXED- PATH ANGLE DEG	-EARTH FIXED- AZIMUTH DEG
23800.643	7501.616	2286.5	-6.916	82.839	2059.791	627.8	-26.031	59.917
23860.643	7513.681	2290.2	-7.376	82.670	2099.695	640.0	-27.368	59.371
23920.643	7526.533	2294.1	-7.835	82.502	2141.202	652.6	-28.650	58.839
23980.643	7540.171	2298.2	-8.292	82.334	2184.234	665.8	-29.877	58.320
24040.643	7554.595	2302.6	-8.747	82.166	2228.716	679.3	-31.050	57.814
24100.643	7569.806	2307.3	-9.201	81.997	2274.575	693.3	-32.171	57.322
24160.643	7585.802	2312.2	-9.653	81.829	2321.744	707.7	-33.241	56.843
24220.643	7602.585	2317.3	-10.103	81.661	2370.160	722.4	-34.263	56.378
24280.643	7620.152	2322.6	-10.552	81.493	2419.762	737.5	-35.239	55.926
24340.643	7638.505	2328.2	-10.998	81.325	2470.494	753.0	-36.169	55.487
24400.643	7657.643	2334.1	-11.442	81.157	2522.305	768.8	-37.056	55.061
24460.643	7677.567	2340.1	-11.885	80.989	2575.146	784.9	-37.902	54.648
24520.643	7698.275	2346.4	-12.325	80.821	2628.971	801.3	-38.708	54.248
24580.643	7719.768	2353.0	-12.763	80.653	2683.740	818.0	-39.477	53.861
24640.643	7742.047	2359.8	-13.198	80.485	2739.413	835.0	-40.210	53.486
24700.643	7765.111	2366.8	-13.632	80.317	2795.954	852.2	-40.908	53.124
24760.643	7788.959	2374.1	-14.062	80.149	2853.331	869.7	-41.574	52.773
24820.643	7813.593	2381.6	-14.491	79.981	2911.513	887.4	-42.208	52.435
24880.643	7839.013	2389.3	-14.917	79.813	2970.473	905.4	-42.813	52.109
24940.643	7865.219	2397.3	-15.340	79.645	3030.185	923.6	-43.389	51.794
25000.643	7892.211	2405.6	-15.760	79.477	3090.627	942.0	-43.939	51.491
25060.643	7919.990	2414.0	-16.178	79.309	3151.776	960.7	-44.462	51.199
25120.644	7948.556	2422.7	-16.593	79.141	3213.615	979.5	-44.962	50.919
25180.643	7977.910	2431.7	-17.005	78.973	3276.125	998.6	-45.437	50.649
25240.643	8008.054	2440.9	-17.414	78.805	3339.290	1017.8	-45.891	50.389
25300.643	8038.986	2450.3	-17.821	78.637	3403.098	1037.3	-46.323	50.140
25360.643	8070.709	2460.0	-18.224	78.469	3467.535	1056.9	-46.735	49.901
25420.643	8103.224	2469.9	-18.625	78.300	3532.589	1076.7	-47.128	49.673
25480.643	8136.531	2480.0	-19.022	78.132	3598.252	1096.7	-47.502	49.454
25540.643	8170.632	2490.4	-19.416	77.963	3664.515	1116.9	-47.859	49.244
25600.643	8205.529	2501.1	-19.807	77.795	3731.369	1137.3	-48.199	49.044
25660.643	8241.223	2511.9	-20.195	77.626	3798.809	1157.9	-48.523	48.853
25720.643	8277.715	2523.1	-20.580	77.457	3866.830	1178.6	-48.832	48.670
25780.644	8315.009	2534.4	-20.961	77.288	3935.427	1199.5	-49.126	48.497
25840.643	8353.104	2546.0	-21.340	77.119	4004.596	1220.6	-49.405	48.332
25900.643	8392.005	2557.9	-21.714	76.950	4074.336	1241.9	-49.672	48.175
25960.643	8431.712	2570.0	-22.086	76.781	4144.644	1263.3	-49.925	48.026
26020.643	8472.229	2582.3	-22.454	76.611	4215.519	1284.9	-50.167	47.885
26080.643	8513.559	2594.9	-22.819	76.442	4286.962	1306.7	-50.396	47.752
26140.643	8555.703	2607.8	-23.180	76.272	4358.973	1328.6	-50.614	47.626
26200.643	8598.667	2620.9	-23.538	76.102	4431.552	1350.7	-50.821	47.507

TABLE II
APOLLO MISSION AS-502
SPACECRAFT OPERATIONAL TRAJECTORY
-VELOCITY VECTOR-

TIME SECONDS	-INERTIAL- VELOCITY FT/SEC	VELOCITY M/SEC	PATH ANGLE DEG	AZIMUTH DEG	-EARTH FIXED- VELOCITY FT/SEC	VELOCITY M/SEC	PATH ANGLE DEG	AZIMUTH DEG
26260.643	8642.451	2634.2	-23.892	75.932	4504.703	1373.0	-51.018	47.395
26320.643	8687.061	2647.8	-24.243	75.762	4578.428	1395.5	-51.204	47.290
26380.643	8732.500	2661.7	-24.591	75.592	4652.729	1418.2	-51.381	47.192
26440.644	8778.771	2675.8	-24.934	75.421	4727.611	1441.0	-51.548	47.100
26500.643	8825.879	2690.1	-25.275	75.250	4803.078	1464.0	-51.707	47.015
26560.643	8873.829	2704.7	-25.611	75.079	4879.134	1487.2	-51.856	46.935
26620.643	8922.625	2719.6	-25.944	74.908	4955.786	1510.5	-51.998	46.862
26680.643	8972.272	2734.8	-26.274	74.737	5033.039	1534.1	-52.131	46.794
26740.643	9022.775	2750.1	-26.600	74.565	5110.900	1557.8	-52.256	46.731
26800.643	9074.140	2765.8	-26.922	74.394	5189.375	1581.7	-52.374	46.675
26860.643	9126.373	2781.7	-27.240	74.222	5268.473	1605.8	-52.485	46.623
26920.643	9179.479	2797.9	-27.555	74.049	5348.201	1630.1	-52.588	46.576
26980.643	9233.465	2814.4	-27.866	73.877	5428.568	1654.6	-52.684	46.534
27040.643	9288.338	2831.1	-28.174	73.704	5509.582	1679.3	-52.774	46.497
27100.644	9344.104	2848.1	-28.477	73.531	5591.254	1704.2	-52.858	46.465
27160.643	9400.772	2865.4	-28.777	73.358	5673.594	1729.3	-52.935	46.437
27220.643	9458.348	2882.9	-29.074	73.185	5756.611	1754.6	-53.006	46.413
27280.643	9516.842	2900.7	-29.366	73.011	5840.317	1780.1	-53.071	46.394
27340.643	9576.260	2918.8	-29.655	72.837	5924.723	1805.9	-53.130	46.378
27400.643	9636.613	2937.2	-29.940	72.663	6009.841	1831.8	-53.184	46.367
27460.643	9697.909	2955.9	-30.221	72.488	6095.684	1858.0	-53.232	46.359
27520.643	9760.159	2974.9	-30.498	72.313	6182.265	1884.4	-53.275	46.354
27580.643	9823.371	2994.2	-30.772	72.138	6269.597	1911.0	-53.313	46.354
27640.643	9887.557	3013.7	-31.041	71.963	6357.694	1937.8	-53.345	46.356
27700.643	9952.727	3033.6	-31.307	71.787	6446.570	1964.9	-53.373	46.362
27760.644	10018.894	3053.8	-31.569	71.611	6536.241	1992.3	-53.395	46.371
27820.643	10086.069	3074.2	-31.828	71.434	6626.723	2019.8	-53.413	46.382
27880.643	10154.263	3095.0	-32.082	71.257	6718.030	2047.7	-53.426	46.397
27940.643	10223.491	3116.1	-32.332	71.080	6810.182	2075.7	-53.435	46.415
28000.643	10293.767	3137.5	-32.579	70.903	6903.194	2104.1	-53.439	46.435
28060.643	10365.102	3159.3	-32.822	70.725	6997.084	2132.7	-53.438	46.458
28120.643	10437.513	3181.4	-33.060	70.547	7091.871	2161.6	-53.434	46.483
28180.643	10511.015	3203.8	-33.295	70.369	7187.575	2190.8	-53.425	46.510
28240.643	10585.623	3226.5	-33.526	70.190	7284.215	2220.2	-53.411	46.540
28300.643	10661.355	3249.6	-33.753	70.010	7381.812	2250.0	-53.394	46.572
28360.643	10738.226	3273.0	-33.976	69.831	7480.386	2280.0	-53.372	46.606
28420.644	10816.255	3296.8	-34.195	69.651	7579.961	2310.4	-53.346	46.642
28480.643	10895.460	3320.9	-34.410	69.471	7680.558	2341.0	-53.317	46.680
28540.643	10975.861	3345.4	-34.621	69.290	7782.202	2372.0	-53.283	46.719
28600.643	11057.478	3370.3	-34.828	69.109	7884.916	2403.3	-53.245	46.761
28660.643	11140.332	3395.6	-35.031	68.927	7988.725	2435.0	-53.204	46.804

TABLE II
APOLLO MISSION AS-502
SPACECRAFT OPERATIONAL TRAJECTORY
-VELOCITY VECTOR-

TIME SECONDS	-INERTIAL- VELOCITY FT/SEC	VELOCITY M/SEC	PATH ANGLE DEG	AZIMUTH DEG	-EARTH FIXED- VELOCITY FT/SEC	VELOCITY M/SEC	PATH ANGLE DEG	AZIMUTH DEG
28720.643	11224.444	3421.2	-35.230	68.745	8093.656	2467.0	-53.158	46.848
28780.643	11309.837	3447.2	-35.425	68.563	8199.736	2499.3	-53.109	46.894
28840.643	11396.535	3473.7	-35.616	68.380	8306.991	2532.0	-53.056	46.942
28900.643	11484.561	3500.5	-35.802	68.197	8415.452	2565.0	-52.999	46.990
28960.643	11573.941	3527.7	-35.985	68.014	8525.147	2598.5	-52.938	47.040
29020.643	11664.702	3555.4	-36.163	67.830	8636.107	2632.3	-52.874	47.091
29080.644	11756.871	3583.5	-36.337	67.646	8748.365	2666.5	-52.806	47.144
29140.643	11850.477	3612.0	-36.506	67.461	8861.953	2701.1	-52.734	47.197
29200.643	11945.549	3641.0	-36.672	67.276	8976.906	2736.2	-52.658	47.252
29260.643	12042.119	3670.4	-36.833	67.090	9093.258	2771.6	-52.578	47.307
29320.643	12140.218	3700.3	-36.989	66.904	9211.047	2807.5	-52.495	47.363
29380.643	12239.880	3730.7	-37.142	66.718	9330.310	2843.9	-52.407	47.420
29440.643	12341.141	3761.6	-37.289	66.531	9451.087	2880.7	-52.316	47.478
29500.643	12444.035	3792.9	-37.433	66.344	9573.419	2918.0	-52.222	47.536
29560.643	12548.601	3824.8	-37.571	66.157	9697.348	2955.8	-52.123	47.596
29620.643	12654.879	3857.2	-37.706	65.969	9822.917	8994.0	-52.020	47.656
29680.643	12762.910	3890.1	-37.835	65.780	9950.173	3032.8	-51.914	47.716
29740.644	12872.735	3923.6	-37.960	65.592	10079.163	3072.1	-51.803	47.777
29800.643	12984.400	3957.7	-38.080	65.403	10209.936	3112.0	-51.689	47.839
29860.643	13097.951	3992.3	-38.195	65.214	10342.543	3152.4	-51.570	47.901
29920.644	13213.437	4027.5	-38.305	65.024	10477.037	3193.4	-51.448	47.963
29980.643	13330.908	4063.3	-38.410	64.834	10613.473	3235.0	-51.321	48.026
30040.643	13450.416	4099.7	-38.510	64.644	10751.908	3277.2	-51.190	48.089
30100.643	13572.016	4136.8	-38.605	64.453	10892.403	3320.0	-51.055	48.153
30160.643	13695.766	4174.5	-38.695	64.263	11035.019	3363.5	-50.915	48.217
30220.643	13821.726	4212.9	-38.779	64.072	11179.821	3407.6	-50.771	48.281
30280.643	13949.958	4252.0	-38.858	63.881	11326.876	3452.4	-50.622	48.346
30340.643	14080.527	4291.8	-38.931	63.689	11476.254	3498.0	-50.469	48.411
30400.643	14213.501	4332.3	-38.999	63.498	11628.028	3544.2	-50.311	48.476
30460.643	14348.952	4373.6	-39.060	63.306	11782.275	3591.2	-50.148	48.541
30520.643	14486.954	4415.6	-39.116	63.115	11939.074	3639.0	-49.981	48.607
30580.644	14627.585	4458.5	-39.166	62.923	12098.507	3687.6	-49.808	48.673
30640.643	14770.925	4502.2	-39.209	62.732	12260.661	3737.1	-49.630	48.740
30700.643	14917.061	4546.7	-39.246	62.540	12425.626	3787.3	-49.447	48.807
30760.643	15066.082	4592.2	-39.277	62.349	12593.497	3838.5	-49.258	48.874
30820.643	15218.081	4638.5	-39.301	62.158	12764.372	3890.6	-49.064	48.941
30880.643	15373.155	4685.7	-39.318	61.967	12938.354	3943.6	-48.864	49.009
30940.643	15531.407	4734.0	-39.327	61.777	13115.550	3997.6	-48.658	49.078
31000.643	15692.945	4783.2	-39.330	61.587	13296.074	4052.7	-48.445	49.147
31060.643	15857.880	4833.5	-39.324	61.398	13480.043	4108.7	-48.226	49.216
31120.643	16026.331	4884.8	-39.311	61.210	13667.580	4165.9	-48.001	49.287

TABLE II
APOLLO MISSION AS-502
SPACECRAFT OPERATIONAL TRAJECTORY
-VELOCITY VECTOR-

TIME SECONDS	-INERTIAL- VELOCITY FT/SEC	VELOCITY M/SEC	PATH ANGLE DEG	AZIMUTH DEG	-EARTH FIXED- VELOCITY FT/SEC	VELOCITY M/SEC	PATH ANGLE DEG	AZIMUTH DEG
31180.643	16198.422	4937.3	-39.290	61.022	13858.814	4224.2	-47.769	49.358
31240.644	16374.282	4990.9	-39.261	60.835	14053.880	4283.6	-47.529	49.430
31300.643	16554.047	5045.7	-39.223	60.650	14252.921	4344.3	-47.282	49.503
31360.643	16737.860	5101.7	-39.176	60.466	14456.083	4406.2	-47.028	49.577
31420.643	16925.871	5159.0	-39.119	60.283	14663.523	4469.5	-46.765	49.652
31480.643	17118.238	5217.6	-39.053	60.102	14875.403	4534.0	-46.494	49.729
31540.643	17315.124	5277.7	-38.977	59.923	15091.894	4600.0	-46.214	49.807
31600.643	17516.704	5339.1	-38.890	59.747	15313.173	4667.5	-45.925	49.888
31660.643	17723.159	5402.0	-38.793	59.573	15539.430	4736.4	-45.627	49.970
31720.643	17934.681	5466.5	-38.684	59.401	15770.859	4807.0	-45.318	50.055
31780.643	18151.470	5532.6	-38.563	59.233	16007.666	4879.1	-44.999	50.142
31840.643	18373.734	5600.3	-38.429	59.068	16250.068	4953.0	-44.669	50.232
31900.644	18601.694	5669.8	-38.283	58.908	16498.286	5028.7	-44.327	50.326
31960.643	18835.580	5741.1	-38.122	58.752	16752.560	5106.2	-43.973	50.423
32020.643	19076.635	5814.3	-37.948	58.601	17013.133	5185.6	-43.606	50.525
32080.643	19322.109	5889.4	-37.758	58.455	17280.263	5267.0	-43.226	50.632
32140.643	19575.266	5966.6	-37.552	58.316	17554.215	5350.5	-42.831	50.744
32200.643	19838.380	6045.8	-37.329	58.185	17835.271	5436.2	-42.421	50.862
32260.643	20102.735	6127.3	-37.089	58.061	18123.718	5524.1	-41.995	50.987
32320.643	20377.628	6211.1	-36.830	57.946	18419.854	5614.4	-41.552	51.120
32380.643	20660.363	6297.3	-36.551	57.841	18723.987	5707.1	-41.091	51.262
32440.643	20951.257	6386.0	-36.250	57.748	19036.435	5802.3	-40.610	51.414
32500.643	21250.629	6477.2	-35.928	57.667	19357.521	5900.2	-40.109	51.577
32560.644	21558.809	6571.1	-35.582	57.601	19687.574	6000.8	-39.587	51.753
32620.643	21876.129	6667.9	-35.210	57.551	20026.921	6104.2	-39.041	51.943
32680.643	22202.917	6767.5	-34.812	57.519	20375.895	6210.6	-38.470	52.150
32740.643	22539.501	6870.1	-34.385	57.507	20734.816	6320.0	-37.872	52.375
32800.643	22886.195	6975.7	-33.927	57.519	21103.993	6432.5	-37.247	52.622
32860.643	23243.298	7084.6	-33.437	57.557	21483.718	6548.3	-36.590	52.892
32866.102	23276.311	7094.6	-33.391	57.562	21518.794	6558.9	-36.529	52.918

CSM ATTITUDE ORIENTATION FOR SECOND SPS BURN

32866.102	23276.311	7094.6	-33.391	57.562	21518.794	6558.9	-36.529	52.918
32874.643	23328.149	7110.4	-33.318	57.570	21573.865	6575.7	-36.433	52.959
32880.029	23360.943	7120.4	-33.272	57.576	21608.699	6586.3	-36.372	52.985
32888.643	23413.581	7136.5	-33.197	57.585	21664.602	6603.4	-36.273	53.028
32898.643	23474.967	7155.2	-33.109	57.594	21729.779	6623.3	-36.158	53.078
32906.184	23521.458	7169.4	-33.042	57.606	21779.134	6638.3	-36.071	53.116

TABLE II
APOLLO MISSION AS-502
SPACECRAFT OPERATIONAL TRAJECTORY
-VELOCITY VECTOR-

TIME SECONDS	-INERTIAL- VELOCITY FT/SEC	VELOCITY M/SEC	PATH ANGLE DEG	AZIMUTH DEG	-EARTH FIXED- VELOCITY FT/SEC	VELOCITY M/SEC	PATH ANGLE DEG	AZIMUTH DEG
32914.643	23573.808	7185.3	-32.966	57.617	21834.697	6655.2	-35.972	53.159
32924.643	23635.978	7204.3	-32.876	57.630	21900.667	6675.3	-35.855	53.211
32925.220	23639.572	7205.4	-32.871	57.631	21904.480	6676.5	-35.848	53.214
			COAST TO +X TRANSLATION					
32925.220	23639.572	7205.4	-32.871	57.631	21904.480	6676.5	-35.848	53.214
32946.643	23773.821	7246.3	-32.673	57.664	22046.884	6719.9	-35.593	53.329
32971.643	23932.255	7294.6	-32.437	57.709	22214.852	6771.1	-35.289	53.468
32996.643	24092.611	7343.4	-32.193	57.759	22384.758	6822.9	-34.979	53.613
33021.643	24254.897	7392.9	-31.943	57.817	22556.613	6875.3	-34.662	53.764
33046.643	24419.124	7443.0	-31.685	57.882	22730.421	6928.2	-34.339	53.923
33071.643	24585.293	7493.6	-31.419	57.955	22906.185	6981.8	-34.008	54.088
33096.643	24753.410	7544.9	-31.146	58.035	23083.907	7036.0	-33.670	54.261
33121.643	24928.471	7596.7	-30.865	58.125	23263.583	7090.8	-33.325	54.442
33146.643	25095.471	7649.1	-30.576	58.223	23445.206	7146.1	-32.972	54.632
33171.643	25269.403	7702.1	-30.279	58.330	23628.765	7202.1	-32.611	54.830
33196.643	25445.253	7755.7	-29.973	58.448	23814.245	7258.6	-32.242	55.038
33221.643	25623.003	7809.9	-29.658	58.577	24001.624	7315.7	-31.865	55.256
33246.643	25802.627	7864.7	-29.334	58.716	24190.874	7373.4	-31.479	55.485
33271.643	25984.098	7920.0	-29.000	58.868	24381.964	7431.6	-31.084	55.725
33296.643	26167.377	7975.8	-28.657	59.032	24574.853	7490.4	-30.680	55.976
33321.643	26352.421	8032.2	-28.304	59.209	24769.493	7549.8	-30.267	56.241
33346.643	26539.180	8089.2	-27.940	59.400	24965.831	7609.6	-29.844	56.519
33371.643	26727.592	8146.6	-27.566	59.606	25163.800	7669.9	-29.411	56.810
33396.643	26917.588	8204.5	-27.182	59.828	25363.328	7730.8	-28.967	57.117
33421.643	27109.088	8262.9	-26.786	60.066	25564.328	7792.0	-28.514	57.440
33446.643	27302.001	8321.7	-26.379	60.322	25766.706	7853.7	-28.049	57.780
33471.643	27496.226	8380.9	-25.960	60.596	25970.354	7915.8	-27.574	58.137
33496.643	27691.646	8440.4	-25.529	60.889	26175.150	7978.2	-27.087	58.513
33521.643	27888.131	8500.3	-25.086	61.204	26380.958	8040.9	-26.588	58.909
33546.643	28085.539	8560.5	-24.630	61.540	26587.627	8103.9	-26.078	59.326
33571.643	28283.710	8620.9	-24.161	61.899	26794.993	8167.1	-25.555	59.765
33596.643	28482.466	8681.5	-23.680	62.282	27002.870	8230.5	-25.020	60.228
33621.643	28681.615	8742.2	-23.184	62.690	27211.056	8293.9	-24.473	60.716
33646.643	28880.943	8802.9	-22.675	63.126	27419.330	8357.4	-23.912	61.229
33671.643	29080.217	8863.7	-22.152	63.590	27627.451	8420.9	-23.338	61.770
33696.643	29279.184	8924.3	-21.615	64.083	27835.156	8484.2	-22.750	62.340

TABLE II
APOLLO MISSION AS-502
SPACECRAFT OPERATIONAL TRAJECTORY
-VELOCITY VECTOR-

TIME SECONDS	-INERTIAL- VELOCITY FT/SEC	VELOCITY M/SEC	PATH ANGLE DEG	AZIMUTH DEG	-EARTH FIXED- VELOCITY FT/SEC	VELOCITY M/SEC	PATH ANGLE DEG	AZIMUTH DEG
33703.841	29336.372	8941.7	-21.458	64.231	27894.837	8502.4	-22.579	62.510
+X TRANSLATION								
33703.841	29336.372	8941.7	-21.458	64.231	27894.837	8502.4	-22.579	62.510
33726.693	29524.212	8999.0	-20.958	64.717	28090.575	8562.0	-22.034	63.065
33733.840	29583.373	9017.0	-20.797	64.876	28152.205	8580.8	-21.859	63.246
SECOND SPS IGNITION								
33733.840	29583.373	9017.0	-20.797	64.876	28152.205	8580.8	-21.859	63.246
33734.215	29586.516	9018.0	-20.789	64.884	28155.477	8581.8	-21.850	63.255
SECOND SPS BURN								
33734.215	29586.516	9018.0	-20.789	64.884	28155.477	8581.8	-21.850	63.255
33735.234	29611.578	9025.6	-20.781	64.907	28181.023	8589.6	-21.840	63.282
33737.234	29660.521	9040.5	-20.765	64.952	28230.933	8604.8	-21.821	63.334
33739.234	29709.303	9056.4	-20.751	64.997	28280.693	8620.0	-21.803	63.387
33741.233	29758.207	9070.3	-20.737	65.042	28330.576	8635.2	-21.785	63.439
33743.234	29807.279	9085.3	-20.722	65.088	28380.625	8650.4	-21.766	63.492
33745.234	29856.528	9100.3	-20.707	65.134	28430.848	8665.7	-21.748	63.546
33747.233	29905.954	9115.4	-20.691	65.180	28481.247	8681.1	-21.728	63.599
33749.234	29955.559	9130.5	-20.675	65.226	28531.822	8696.5	-21.709	63.653
33751.234	30005.344	9145.6	-20.658	65.273	28582.574	8712.0	-21.688	63.707
33753.234	30055.309	9160.9	-20.642	65.320	28633.506	8727.5	-21.668	63.762
33755.234	30105.456	9176.2	-20.624	65.367	28684.615	8743.1	-21.647	63.816
33757.234	30155.784	9191.5	-20.607	65.415	28735.904	8758.7	-21.626	63.871
33759.234	30206.295	9206.9	-20.589	65.462	28787.374	8774.4	-21.604	63.926
33761.234	30256.989	9222.3	-20.570	65.510	28839.025	8790.2	-21.582	63.982
33763.234	30307.867	9237.9	-20.551	65.559	28890.858	8806.0	-21.559	64.037
33765.234	30358.931	9253.4	-20.532	65.607	28942.873	8821.8	-21.536	64.093
33767.234	30410.181	9269.0	-20.512	65.656	28995.073	8837.7	-21.512	64.150
33769.234	30461.618	9284.7	-20.492	65.705	29047.456	8853.7	-21.489	64.206
33771.234	30513.241	9300.5	-20.471	65.755	29100.025	8869.7	-21.464	64.263

TABLE II
APOLLO MISSION AS-502
SPACECRAFT OPERATIONAL TRAJECTORY
-VELOCITY VECTOR-

TIME SECONDS	-INERTIAL- VELOCITY FT/SEC	VELOCITY M/SEC	PATH ANGLE DEG	AZIMUTH DEG	-EARTH FIXED- VELOCITY FT/SEC	VELOCITY M/SEC	PATH ANGLE DEG	AZIMUTH DEG
33773.234	30565.053	9316.2	-20.450	65.804	29152.780	8885.8	-21.439	64.320
33775.233	30617.055	9332.1	-20.429	65.854	29205.721	8901.9	-21.414	64.378
33777.234	30669.246	9348.0	-20.407	65.905	29258.850	8918.1	-21.388	64.435
33779.234	30721.629	9364.0	-20.385	65.955	29312.167	8934.4	-21.362	64.493
33781.234	30774.203	9380.0	-20.362	66.006	29365.675	8950.7	-21.336	64.551
33783.234	30826.970	9396.1	-20.339	66.057	29419.372	8967.0	-21.309	64.610
33785.234	30879.931	9412.2	-20.316	66.109	29473.262	8983.5	-21.281	64.669
33787.234	30933.087	9428.4	-20.292	66.161	29527.342	9000.0	-21.254	64.728
33789.234	30986.438	9444.7	-20.267	66.213	29581.617	9016.5	-21.225	64.787
33791.234	31039.987	9461.0	-20.242	66.265	29636.086	9033.1	-21.196	64.847
33793.234	31093.731	9477.4	-20.217	66.318	29690.748	9049.8	-21.167	64.907
33795.234	31147.675	9493.8	-20.191	66.371	29745.608	9066.5	-21.138	64.968
33797.234	31201.819	9510.3	-20.165	66.424	29800.665	9083.3	-21.107	65.028
33799.234	31256.162	9526.9	-20.138	66.478	29855.918	9100.1	-21.077	65.089
33801.234	31310.707	9543.5	-20.111	66.532	29911.372	9117.0	-21.046	65.150
33803.234	31365.456	9560.2	-20.084	66.586	29967.025	9134.0	-21.014	65.212
33805.234	31420.407	9577.0	-20.056	66.640	30022.879	9151.0	-20.982	65.274
33807.234	31475.563	9593.8	-20.027	66.695	30078.936	9168.1	-20.950	65.336
33809.233	31530.925	9610.6	-19.998	66.751	30135.195	9185.2	-20.917	65.399
33811.234	31586.494	9627.6	-19.969	66.806	30191.658	9202.4	-20.884	65.462
33813.234	31642.271	9644.6	-19.939	66.862	30248.328	9219.7	-20.850	65.525
33815.234	31698.257	9661.6	-19.909	66.918	30305.203	9237.0	-20.815	65.588
33817.234	31754.453	9678.8	-19.878	66.975	30362.286	9254.4	-20.781	65.652
33819.234	31810.861	9696.0	-19.847	67.031	30419.578	9271.9	-20.745	65.716
33821.234	31867.480	9713.2	-19.815	67.089	30477.080	9289.4	-20.710	65.781
33823.234	31924.315	9730.6	-19.783	67.146	30534.793	9307.0	-20.673	65.846
33825.234	31981.364	9747.9	-19.750	67.204	30592.718	9324.7	-20.637	65.911
33827.234	32038.629	9765.4	-19.717	67.262	30650.856	9342.4	-20.599	65.976
33829.234	32096.111	9782.9	-19.684	67.321	30709.209	9360.2	-20.562	66.042
33831.234	32153.813	9800.5	-19.650	67.380	30767.779	9378.0	-20.524	66.108
33833.234	32211.734	9818.2	-19.615	67.439	30826.565	9396.0	-20.485	66.175
33835.234	32269.877	9835.9	-19.580	67.499	30885.570	9413.9	-20.446	66.242
33837.233	32328.241	9853.7	-19.545	67.558	30944.795	9432.0	-20.406	66.309
33839.234	32386.831	9871.5	-19.509	67.619	31004.241	9450.1	-20.366	66.376
33841.234	32445.645	9889.5	-19.472	67.679	31063.910	9468.3	-20.325	66.444
33843.234	32504.687	9907.4	-19.435	67.740	31123.802	9486.6	-20.284	66.513
33845.234	32563.957	9925.5	-19.398	67.802	31183.920	9504.9	-20.243	66.581
33847.234	32623.456	9943.6	-19.360	67.864	31244.265	9523.3	-20.201	66.650
33849.234	32683.185	9961.9	-19.321	67.926	31304.837	9541.7	-20.158	66.720
33851.234	32743.148	9980.1	-19.282	67.988	31365.638	9560.3	-20.115	66.789
33853.234	32803.344	9998.5	-19.243	68.051	31426.672	9578.9	-20.071	66.859

TABLE II
APOLLO MISSION AS-502
SPACECRAFT OPERATIONAL TRAJECTORY
-VELOCITY VECTOR-

TIME SECONDS	-INERTIAL- VELOCITY FT/SEC	M/SEC	PATH ANGLE DEG	AZIMUTH DEG	-EARTH FIXED- VELOCITY FT/SEC	M/SEC	PATH ANGLE DEG	AZIMUTH DEG
33855.234	32863.776	10016.9	-19.203	68.114	31487.937	9597.5	-20.027	66.930
33857.234	32924.995	10035.4	-19.162	68.178	31549.437	9616.3	-19.982	67.001
33859.234	32985.352	10054.0	-19.121	68.242	31611.173	9635.1	-19.937	67.072
33861.234	33046.500	10072.6	-19.080	68.306	31673.145	9654.0	-19.891	67.144
33863.234	33107.889	10091.3	-19.038	68.371	31735.357	9673.0	-19.845	67.215
33865.234	33169.522	10110.1	-18.995	68.436	31797.808	9692.0	-19.798	67.288
33867.234	33231.399	10129.0	-18.952	68.502	31860.502	9711.1	-19.751	67.361
33869.234	33293.524	10147.9	-18.909	68.568	31923.440	9730.3	-19.703	67.434
33871.233	33355.898	10166.9	-18.865	68.634	31986.624	9749.5	-19.655	67.507
33873.234	33418.521	10186.0	-18.820	68.701	32050.054	9768.9	-19.606	67.581
33875.234	33481.397	10205.2	-18.775	68.768	32113.733	9788.3	-19.557	67.655
33877.234	33544.526	10224.4	-18.729	68.836	32177.663	9807.8	-19.507	67.730
33879.234	33607.911	10243.7	-18.683	68.904	32241.846	9827.3	-19.456	67.805
33881.234	33671.554	10263.1	-18.636	68.972	32306.284	9847.0	-19.405	67.881
33883.234	33735.456	10282.6	-18.589	69.041	32370.977	9866.7	-19.354	67.957
33885.234	33799.619	10302.1	-18.541	69.110	32435.930	9886.5	-19.301	68.033
33887.234	33864.047	10321.8	-18.493	69.180	32501.142	9906.4	-19.249	68.110
33889.234	33928.739	10341.5	-18.444	69.250	32566.616	9926.3	-19.196	68.187
33891.234	33993.699	10361.3	-18.395	69.320	32632.355	9946.4	-19.142	68.264
33893.234	34058.928	10381.2	-18.345	69.391	32698.359	9966.5	-19.087	68.342
33895.234	34124.429	10401.1	-18.294	69.462	32764.633	9986.7	-19.032	68.421
33897.234	34190.203	10421.2	-18.243	69.534	32831.177	10007.0	-18.977	68.499
33899.233	34256.254	10441.3	-18.191	69.606	32897.994	10027.3	-18.921	68.579
33901.234	34322.583	10461.5	-18.139	69.679	32965.086	10047.8	-18.864	68.658
33903.234	34389.193	10481.8	-18.086	69.752	33032.455	10068.3	-18.807	68.738
33905.233	34456.085	10502.2	-18.033	69.825	33100.103	10088.9	-18.749	68.819
33907.234	34523.263	10522.7	-17.979	69.899	33168.034	10109.6	-18.691	68.900
33909.234	34590.728	10543.3	-17.924	69.973	33236.249	10130.4	-18.632	68.981
33911.234	34658.483	10563.9	-17.869	70.048	33304.752	10151.3	-18.573	69.063
33913.234	34726.531	10584.7	-17.813	70.124	33373.542	10172.3	-18.512	69.145
33915.234	34794.874	10605.5	-17.757	70.199	33442.625	10193.3	-18.452	69.228
33917.234	34863.516	10626.4	-17.700	70.275	33512.004	10214.5	-18.390	69.311
33919.234	34932.458	10647.4	-17.643	70.352	33581.680	10235.7	-18.329	69.395
33921.234	35001.706	10668.5	-17.585	70.429	33651.658	10257.0	-18.266	69.478
33922.325	35039.649	10680.1	-17.553	70.471	33689.997	10268.7	-18.232	69.524

SECOND SPS SHUTDOWN

33922.325	35039.649	10680.1	-17.553	70.471	33689.997	10268.7	-18.232	69.524

TABLE II
APOLLO MISSION AS-502
SPACECRAFT OPERATIONAL TRAJECTORY
-VELOCITY VECTOR-

TIME SECONDS	-INERTIAL- VELOCITY FT/SEC	VELOCITY M/SEC	PATH ANGLE DEG	AZIMUTH DEG	-EARTH FIXED- VELOCITY FT/SEC	VELOCITY M/SEC	PATH ANGLE DEG	AZIMUTH DEG
33923.012	35055.493	10684.9	-17.529	70.498	33706.065	10273.6	-18.206	69.553
HOLD INERTIAL ATTITUDE								
33923.012	35055.493	10684.9	-17.529	70.498	33706.065	10273.6	-18.206	69.553
33932.023	35126.485	10706.6	-17.151	70.853	33779.474	10296.0	-17.809	69.934
33942.023	35204.165	10730.3	-16.728	71.256	33859.792	10320.5	-17.365	70.365
33952.023	35280.621	10753.6	-16.301	71.668	33938.836	10344.6	-16.918	70.806
33959.022	35333.372	10769.6	-16.000	71.962	33993.369	10361.2	-16.602	71.119
CSM ATTITUDE ORIENTATION FOR CM/SM SEPERATION								
33959.022	35333.372	10769.6	-16.000	71.962	33993.369	10361.2	-16.602	71.119
33959.109	35334.021	10769.8	-15.997	71.966	33994.039	10361.4	-16.598	71.123
33969.109	35408.246	10792.5	-15.564	72.394	34070.764	10384.8	-16.145	71.579
33976.606	35462.978	10809.1	-15.237	72.721	34127.336	10402.0	-15.803	71.928
33976.696	35463.641	10809.3	-15.233	72.726	34128.020	10402.2	-15.798	71.932
33976.797	35464.365	10809.6	-15.228	72.730	34128.769	10402.5	-15.794	71.936
33976.814	35464.489	10809.6	-15.228	72.731	34128.896	10402.5	-15.793	71.937
COAST TO CM/SM SEPARATION								
33976.814	35464.489	10809.6	-15.228	72.731	34128.896	10402.5	-15.793	71.937
33981.816	35500.554	10820.6	-15.008	72.952	34166.171	10413.9	-15.564	72.173
33991.817	35571.532	10842.2	-14.567	73.402	34239.525	10436.2	-15.102	72.650
34001.817	35640.979	10863.4	-14.122	73.861	34311.289	10458.1	-14.638	73.136
34011.817	35708.830	10884.1	-13.674	74.330	34381.399	10479.5	-14.170	73.632
34021.817	35775.023	10904.2	-13.222	74.808	34449.790	10500.3	-13.699	74.137
34031.817	35839.496	10923.9	-12.767	75.296	34516.399	10520.6	-13.224	74.652
34041.817	35902.185	10943.0	-12.309	75.792	34581.159	10540.4	-12.747	75.175
34051.817	35963.030	10961.6	-11.848	74.298	34644.010	10559.5	-12.267	75.708
34061.817	36021.968	10979.5	-11.383	74.813	34704.886	10578.1	-11.783	76.249
34071.817	36078.940	10996.9	-10.916	77.337	34763.727	10596.0	-11.297	76.799

TABLE II
APOLLO MISSION AS-502
SPACECRAFT OPERATIONAL TRAJECTORY
-VELOCITY VECTOR-

TIME SECONDS	-INERTIAL- VELOCITY FT/SEC	VELOCITY M/SEC	PATH ANGLE DEG	AZIMUTH DEG	-EARTH FIXED- VELOCITY FT/SEC	VELOCITY M/SEC	PATH ANGLE DEG	AZIMUTH DEG
34073.976	36090.975	11000.6	-10.814	77.451	34776.156	10599.8	-11.192	76.919
CM/SM SEPARATION AND FIVE SECOND COAST								
34073.976	36090.975	11000.6	-10.814	77.451	34776.156	10599.8	-11.192	76.919
34078.976	36118.482	11008.9	-10.579	77.718	34804.565	10608.5	-10.948	77.198
CM ATTITUDE ORIENTATION FOR ENTRY								
34078.976	36118.482	11008.9	-10.579	77.718	34804.565	10608.5	-10.948	77.198
34079.367	36120.612	11009.6	-10.561	77.738	34806.764	10609.1	-10.929	77.220
34088.408	36168.963	11024.3	-10.133	78.225	34856.696	10624.3	-10.485	77.731
34098.408	36220.414	11040.0	-9.658	78.772	34909.827	10640.5	-9.992	78.303
34102.683	36241.747	11046.5	-9.454	79.008	34931.854	10647.3	-9.780	78.551
34102.692	36241.794	11046.5	-9.454	79.009	34931.903	10647.3	-9.779	78.551
34102.694	36241.801	11046.5	-9.454	79.009	34931.909	10647.3	-9.779	78.551
COAST TO ENTRY								
34102.694	36241.801	11046.5	-9.454	79.009	34931.909	10647.3	-9.779	78.551
34111.694	36285.391	11059.8	-9.023	79.511	34976.918	10661.0	-9.332	79.077
34121.694	36331.677	11073.9	-8.542	80.076	35024.711	10675.6	-8.833	79.668
34131.695	36375.657	11087.3	-8.058	80.649	35070.117	10689.4	-8.332	80.266
34141.694	36417.275	11100.0	-7.572	81.229	35113.084	10702.5	-7.829	80.872
34151.694	36456.473	11112.0	-7.084	81.816	35153.551	10714.8	-7.323	81.484
34161.694	36493.180	11123.1	-6.594	82.410	35191.446	10726.4	-6.816	82.103
34163.694	36499.859	11125.2	-6.501	82.523	35198.342	10728.5	-6.719	82.221
ENTRY								

TABLE III
APOLLO MISSION AS-502
SPACECRAFT OPERATIONAL TRAJECTORY
-POSITION AND VELOCITY VECTOR-
-EARTH CENTERED INERTIAL COORDINATE SYSTEM-

TIME SECONDS	X FEET	Y FEET	Z FEET	DX FT/SEC	DY FT/SEC	DZ FT/SEC
			LIFTOFF CONDITIONS			
.000	7040797.	-16983697.	9960299.	1238.	513.	-0.
			TRANSLUNAR INJECTION			
11746.739	19674181.	993943.	9889894.	7614.	33693.	-8356.
11748.739	19689358.	1061326.	9873156.	7563.	33690.	-8382.
11750.739	19704432.	1128704.	9856367.	7511.	33687.	-8408.
11752.739	19719402.	1196076.	9839525.	7459.	33684.	-8434.
11754.739	19734269.	1263442.	9822632.	7408.	33681.	-8459.
11756.739	19749033.	1330801.	9806687.	7356.	33678.	-8485.
11756.939	19750504.	1337539.	9803989.	7351.	33677.	-8488.
			BEGIN ORIENTATION TO S-IVB/CSM SEPARATION ATTITUDE			
11756.939	19750505.	1337539.	9803989.	7351.	33677.	-8488.
11757.098	19751674.	1342894.	9802639.	7347.	33677.	-8490.
11762.139	19788380.	1512630.	9759681.	7217.	33668.	-8554.
11772.139	19859263.	1849203.	9673505.	6960.	33646.	-8681.
11782.139	19927580.	2185537.	9586075.	6704.	33620.	-8805.
11792.139	19993339.	2521590.	9497411.	6449.	33590.	-8927.
11802.139	20056554.	2857323.	9407535.	6195.	33556.	-9048.
11812.139	20117234.	3192695.	9316467.	5942.	33518.	-9166.
11822.139	20175394.	3527666.	9224228.	5690.	33476.	-9282.
11832.139	20231048.	3862200.	9130841.	5441.	33430.	-9396.
11842.139	20284212.	4196258.	9034326.	5192.	33381.	-9507.
11852.139	20334900.	4529804.	8940705.	4946.	33328.	-9617.
11862.139	20383132.	4862803.	8844001.	4701.	33271.	-9724.
11872.139	20428924.	5195220.	8746236.	4458.	33211.	-9829.
11876.184	20446760.	5329518.	8706391.	4360.	33186.	-9871.
11878.139	20455237.	5394375.	8687077.	4313.	33174.	-9891.
11880.139	20463815.	5460711.	8667275.	4265.	33161.	-9911.

Position and velocity vector (ECI)

TABLE III
APOLLO MISSION AS-502
SPACECRAFT OPERATIONAL TRAJECTORY
-POSITION AND VELOCITY VECTOR-
-EARTH CENTERED INERTIAL COORDINATE SYSTEM-

TIME SECONDS	X FEET	Y FEET	Z FEET	DX FT/SEC	DY FT/SEC	DZ FT/SEC
11881.058	20467726.	5491202.	8658156.	4243.	33155.	-9921.
END ORIENTATION TO S-IVB/CSM SEPARATION ATTITUDE						
11881.058	20467726.	5491202.	8658155.	4243.	33155.	-9921.
11882.139	20472296.	5527020.	8647431.	4217.	33148.	-9932.
11884.139	20480682.	5593304.	8627547.	4169.	33135.	-9952.
11886.139	20488972.	5659561.	8607623.	4121.	33122.	-9972.
11888.139	20497166.	5725792.	8587659.	4073.	33109.	-9992.
11890.139	20505264.	5791997.	8567654.	4025.	33096.	-10012.
11892.139	20513268.	5858174.	8547610.	3978.	33082.	-10032.
11894.139	20521176.	5924324.	8527526.	3930.	33068.	-10052.
11896.139	20528989.	5990447.	8507402.	3883.	33054.	-10072.
11898.139	20536707.	6056542.	8487239.	3835.	33041.	-10091.
11900.139	20544331.	6122609.	8467036.	3788.	33027.	-10111.
11902.139	20551860.	6188648.	8446795.	3741.	33012.	-10130.
11904.139	20559295.	6254659.	8426514.	3694.	32998.	-10150.
11906.139	20566635.	6320641.	8406195.	3647.	32984.	-10169.
11908.139	20573881.	6386594.	8385838.	3600.	32969.	-10188.
11910.139	20581034.	6452518.	8365442.	3553.	32955.	-10208.
11912.139	20588093.	6518412.	8345007.	3506.	32940.	-10227.
11914.139	20595059.	6584277.	8324535.	3459.	32925.	-10246.
11916.139	20601931.	6650112.	8304025.	3413.	32910.	-10264.
11916.939	20604654.	6676444.	8295809.	3394.	32904.	-10272.
START RCS THRUST FOR S-IVB/CSM SEPARATION						
11916.939	20604654.	6676444.	8295809.	3394.	32904.	-10272.
11917.938	20608035.	6709331.	8285537.	3371.	32896.	-10281.
11918.639	20610391.	6732368.	8278334.	3355.	32891.	-10288.
SEPARATION AND 8.3 SECS OF +X TRANSLATION						
11918.639	20610391.	6732368.	8278334.	3355.	32891.	-10288.

TABLE III
APOLLO MISSION AS-502
SPACECRAFT OPERATIONAL TRAJECTORY
-POSITION AND VELOCITY VECTOR-
-EARTH CENTERED INERTIAL COORDINATE SYSTEM-

TIME SECONDS	X FEET	Y FEET	Z FEET	DX FT/SEC	DY FT/SEC	DZ FT/SEC
11926.939	20637436.	7005091.	8199629.	3163.	32825.	-10364.
			COAST FIVE SECONDS			
11926.939	20637436.	7005091.	8199629.	3163.	32825.	-10364.
11931.939	20652962.	7169119.	8140694.	3048.	32786.	-10410.
			ORIENTATION TO FIRST SPS IGNITION ATTITUDE			
11931.939	20652962.	7169119.	8140694.	3048.	32786.	-10410.
11932.827	20655658.	7198220.	8131450.	3027.	32779.	-10418.
			COAST TO FIRST SPS BURN			
11932.827	20655658.	7198220.	8131450.	3027.	32779.	-10418.
11933.239	20656903.	7211716.	8127160.	3018.	32776.	-10421.
11943.239	20685942.	7539067.	8022499.	2790.	32694.	-10510.
11953.239	20712718.	7865594.	7914958.	2565.	32611.	-10597.
11963.238	20737255.	8191269.	7810559.	2342.	32524.	-10682.
11973.238	20759576.	8516070.	7703323.	2122.	32436.	-10765.
11983.238	20779707.	8839973.	7595272.	1904.	32345.	-10845.
11993.238	20797674.	9162955.	7486429.	1689.	32251.	-10923.
12003.238	20813502.	9484995.	7376813.	1477.	32156.	-10999.
12013.239	20827219.	9806073.	7266448.	1267.	32059.	-11073.
12016.939	20831764.	9924634.	7225423.	1190.	32023.	-11100.
			FIRST SPS IGNITION			
12016.939	20831764.	9924634.	7225423.	1190.	32023.	-11100.

TABLE III
APOLLO MISSION AS-502
SPACECRAFT OPERATIONAL TRAJECTORY
-POSITION AND VELOCITY VECTOR-
-EARTH CENTERED INERTIAL COORDINATE SYSTEM-

TIME SECONDS	X FEET	Y FEET	Z FEET	DX FT/SEC	DY FT/SEC	DZ FT/SEC
12017.314	20832209.	9936639.	7221261.	1182.	32019.	-11103.
			FIRST SPS BURN			
12017.314	20832209.	9936639.	7221261.	1182.	32019.	-11103.
12018.333	20833402.	9969256.	7209944.	1159.	31997.	-11107.
12020.333	20835676.	10033206.	7187724.	1115.	31953.	-11114.
12022.333	20837860.	10097068.	7166488.	1070.	31909.	-11121.
12024.333	20839954.	10160843.	7143238.	1025.	31866.	-11129.
12026.333	20841959.	10224530.	7120973.	980.	31822.	-11136.
12028.333	20843875.	10288130.	7098693.	936.	31778.	-11143.
12030.333	20845702.	10351641.	7074400.	891.	31733.	-11150.
12032.333	20847440.	10415063.	7054092.	847.	31689.	-11157.
12034.333	20849089.	10478396.	7031771.	803.	31645.	-11164.
12036.333	20850649.	10541641.	7009436.	758.	31600.	-11171.
12038.333	20852122.	10604796.	6987088.	714.	31555.	-11177.
12040.333	20853508.	10667862.	6964727.	671.	31510.	-11184.
12042.333	20854805.	10730838.	6942353.	627.	31465.	-11190.
12044.333	20856015.	10793723.	6919967.	583.	31420.	-11196.
12046.333	20857137.	10856519.	6897568.	540.	31375.	-11203.
12048.333	20858174.	10919224.	6875157.	496.	31330.	-11209.
12050.333	20859123.	10981838.	6852734.	453.	31284.	-11215.
12052.333	20859986.	11044360.	6830299.	410.	31239.	-11220.
12054.333	20860762.	11106792.	6807852.	367.	31193.	-11226.
12056.333	20861454.	11169132.	6785395.	324.	31147.	-11232.
12058.333	20862059.	11231380.	6762926.	281.	31101.	-11237.
12060.333	20862578.	11293536.	6740446.	238.	31055.	-11243.
12062.333	20863012.	11355600.	6717955.	196.	31009.	-11248.
12064.333	20863361.	11417571.	6695454.	153.	30962.	-11253.
12066.333	20863625.	11479449.	6672943.	111.	30916.	-11258.
12068.333	20863806.	11541234.	6650422.	69.	30869.	-11263.
12070.333	20863901.	11602926.	6627891.	27.	30823.	-11268.
12072.333	20863912.	11664525.	6605350.	-15.	30776.	-11273.
12074.333	20863840.	11726029.	6582800.	-57.	30729.	-11277.
12076.333	20863684.	11787439.	6560240.	-99.	30682.	-11282.
12078.333	20863444.	11848756.	6537672.	-141.	30634.	-11286.
12080.333	20863121.	11909977.	6515094.	-182.	30587.	-11291.
12082.333	20862716.	11971104.	6492509.	-224.	30540.	-11295.
12084.333	20862227.	12032136.	6469914.	-265.	30492.	-11299.
12086.333	20861654.	12093073.	6447312.	-306.	30444.	-11303.

TABLE III
APOLLO MISSION AS-502
SPACECRAFT OPERATIONAL TRAJECTORY
-POSITION AND VELOCITY VECTOR-
-EARTH CENTERED INERTIAL COORDINATE SYSTEM-

TIME SECONDS	X FEET	Y FEET	Z FEET	DX FT/SEC	DY FT/SEC	DZ FT/SEC
12088.333	20861003.	12153914.	6424701.	-347.	30397.	-11307.
12090.333	20860267.	12214659.	6402083.	-388.	30349.	-11311.
12092.333	20859450.	12275309.	6379457.	-429.	30301.	-11315.
12094.333	20858552.	12335862.	6356824.	-470.	30253.	-11318.
12096.333	20857571.	12396318.	6334184.	-510.	30204.	-11322.
12098.333	20856510.	12456678.	6311537.	-551.	30156.	-11325.
12100.333	20855367.	12516942.	6288882.	-591.	30107.	-11329.
12102.333	20854144.	12577108.	6266222.	-632.	30059.	-11332.
12104.333	20852841.	12637176.	6243555.	-672.	30010.	-11335.
12106.333	20851456.	12697147.	6220882.	-712.	29961.	-11338.
12108.333	20849992.	12757020.	6198203.	-752.	29912.	-11341.
12110.333	20848449.	12816795.	6175518.	-792.	29863.	-11344.
12112.333	20846825.	12876472.	6152827.	-832.	29814.	-11347.
12114.333	20845122.	12936050.	6130131.	-871.	29764.	-11349.
12116.333	20843339.	12995530.	6107431.	-911.	29715.	-11352.
12118.333	20841478.	13054910.	6084725.	-950.	29665.	-11354.
12120.333	20839538.	13114191.	6062014.	-990.	29616.	-11356.
12122.333	20837519.	13173373.	6039299.	-1029.	29566.	-11359.
12124.333	20835422.	13232455.	6016579.	-1068.	29516.	-11361.
12126.333	20833247.	13291437.	5993855.	-1107.	29466.	-11363.
12128.333	20830994.	13350319.	5971127.	-1146.	29416.	-11365.
12130.333	20828663.	13409100.	5948396.	-1185.	29366.	-11367.
12132.333	20826255.	13467781.	5925661.	-1224.	29315.	-11368.
12134.333	20823769.	13526360.	5902922.	-1262.	29265.	-11370.
12136.333	20821206.	13584839.	5880180.	-1301.	29214.	-11372.
12138.333	20818566.	13643216.	5857436.	-1339.	29163.	-11373.
12140.333	20815849.	13701492.	5834688.	-1377.	29112.	-11374.
12142.333	20813056.	13759666.	5811938.	-1416.	29061.	-11376.
12144.333	20810187.	13817738.	5789185.	-1454.	29010.	-11377.
12146.333	20807241.	13875708.	5766430.	-1492.	28959.	-11378.
12148.333	20804220.	13933575.	5743673.	-1530.	28908.	-11379.
12150.333	20801122.	13991339.	5720914.	-1567.	28857.	-11380.
12152.333	20797950.	14049001.	5698154.	-1605.	28805.	-11381.
12154.333	20794702.	14106559.	5675392.	-1643.	28753.	-11381.
12156.333	20791379.	14164014.	5652628.	-1680.	28702.	-11382.
12158.333	20787981.	14221365.	5629864.	-1718.	28650.	-11382.
12160.333	20784508.	14278612.	5607099.	-1755.	28598.	-11383.
12162.333	20780961.	14335756.	5584333.	-1792.	28546.	-11383.
12164.333	20777340.	14392795.	5561566.	-1829.	28493.	-11383.
12166.333	20773645.	14449729.	5538799.	-1866.	28441.	-11384.
12168.333	20769875.	14506558.	5516032.	-1903.	28389.	-11384.
12170.333	20766032.	14563283.	5493265.	-1940.	28336.	-11384.

TABLE III
APOLLO MISSION AS-502
SPACECRAFT OPERATIONAL TRAJECTORY
-POSITION AND VELOCITY VECTOR-
-EARTH CENTERED INERTIAL COORDINATE SYSTEM-

TIME SECONDS	X FEET	Y FEET	Z FEET	DX FT/SEC	DY FT/SEC	DZ FT/SEC
12172.333	20762115.	14619902.	5470498.	-1977.	28283.	-11383.
12174.333	20758125.	14676416.	5447731.	-2013.	28230.	-11383.
12176.333	20754062.	14732824.	5424965.	-2050.	28178.	-11383.
12178.333	20749926.	14789126.	5402200.	-2086.	28124.	-11382.
12180.333	20745717.	14845322.	5379436.	-2123.	28071.	-11382.
12182.333	20741436.	14901411.	5356673.	-2159.	28018.	-11381.
12184.333	20737081.	14957394.	5333911.	-2195.	27965.	-11381.
12186.333	20732655.	15013269.	5311151.	-2231.	27911.	-11380.
12188.333	20728157.	15069038.	5288392.	-2267.	27858.	-11379.
12190.333	20723587.	15124699.	5265636.	-2303.	27804.	-11378.
12192.333	20718946.	15180253.	5242881.	-2339.	27750.	-11377.
12194.333	20714232.	15235699.	5220128.	-2374.	27696.	-11376.
12196.333	20709448.	15291037.	5197378.	-2410.	27642.	-11374.
12198.333	20704592.	15346266.	5174631.	-2446.	27588.	-11373.
12200.333	20699666.	15401387.	5151886.	-2481.	27533.	-11372.
12202.333	20694669.	15456399.	5129144.	-2516.	27479.	-11370.
12204.333	20689600.	15511303.	5106406.	-2552.	27424.	-11368.
12206.333	20684462.	15566096.	5083671.	-2587.	27370.	-11367.
12208.333	20679253.	15620781.	5060939.	-2622.	27315.	-11365.
12210.333	20673975.	15675355.	5038211.	-2657.	27260.	-11363.
12212.333	20668627.	15729820.	5015487.	-2692.	27205.	-11361.
12214.333	20663209.	15784175.	4992766.	-2726.	27150.	-11359.
12216.333	20657721.	15838418.	4970050.	-2761.	27094.	-11357.
12218.333	20652165.	15892552.	4947339.	-2796.	27039.	-11355.
12220.333	20646538.	15946574.	4924632.	-2830.	26983.	-11352.
12222.333	20640843.	16000485.	4901930.	-2865.	26928.	-11350.
12224.333	20635079.	16054285.	4879233.	-2899.	26872.	-11347.
12226.333	20629247.	16107973.	4856540.	-2933.	26816.	-11345.
12228.333	20623345.	16161549.	4833854.	-2968.	26760.	-11342.
12230.333	20617376.	16215013.	4811172.	-3002.	26704.	-11339.
12232.333	20611338.	16268365.	4788497.	-3036.	26648.	-11336.
12234.333	20605233.	16321604.	4765827.	-3070.	26591.	-11333.
12236.333	20599060.	16374730.	4743163.	-3104.	26535.	-11330.
12238.333	20592818.	16427743.	4720505.	-3137.	26478.	-11327.
12240.333	20586510.	16480642.	4697854.	-3171.	26421.	-11324.
12242.333	20580134.	16533428.	4675209.	-3205.	26364.	-11321.
12244.333	20573691.	16586100.	4652571.	-3238.	26307.	-11317.
12246.333	20567181.	16638657.	4629940.	-3272.	26250.	-11314.
12248.333	20560604.	16691101.	4607317.	-3305.	26193.	-11310.
12250.333	20553960.	16743429.	4584700.	-3338.	26136.	-11306.
12252.333	20547250.	16795643.	4562091.	-3372.	26078.	-11303.
12254.333	20540474.	16847742.	4539489.	-3405.	26020.	-11299.

TABLE III
APOLLO MISSION AS-502
SPACECRAFT OPERATIONAL TRAJECTORY
-POSITION AND VELOCITY VECTOR-
-EARTH CENTERED INERTIAL COORDINATE SYSTEM-

TIME SECONDS	X FEET	Y FEET	Z FEET	DX FT/SEC	DY FT/SEC	DZ FT/SEC
12256.333	20533631.	16899724.	4516895.	-3438.	25963.	-11295.
12258.333	20526722.	16951592.	4494310.	-3471.	25905.	-11291.
12260.333	20519748.	17003343.	4471732.	-3504.	25847.	-11287.
12262.333	20512707.	17054979.	4449163.	-3537.	25789.	-11282.
12264.333	20505601.	17106497.	4426602.	-3569.	25730.	-11278.
12266.333	20498430.	17157899.	4404050.	-3602.	25672.	-11274.
12268.333	20491193.	17209184.	4381507.	-3635.	25613.	-11269.
12270.333	20483892.	17260352.	4358974.	-3667.	25555.	-11265.
12270.943	20481650.	17275946.	4352098.	-3677.	25537.	-11263.
FIRST SPS SHUTDOWN						
12270.943	20481650.	17275946.	4352098.	-3677.	25537.	-11263.
12271.630	20479121.	17293482.	4344361.	-3687.	25522.	-11263.
COAST FIVE SECONDS						
12271.630	20479121.	17293482.	4344361.	-3687.	25522.	-11263.
12276.630	20460505.	17420937.	4288008.	-3759.	25461.	-11278.
CSM ATTITUDE ORIENTAION FOR SOLAR SOAK						
12276.630	20460505.	17420937.	4288008.	-3759.	25461.	-11278.
12285.643	20426046.	17649917.	4186237.	-3887.	25351.	-11305.
12290.177	20408277.	17764731.	4134952.	-3951.	25295.	-11318.
12295.643	20386472.	17902812.	4073047.	-4027.	25229.	-11333.
12305.643	20345508.	18154489.	3959578.	-4165.	25107.	-11360.
12315.643	20303173.	18404943.	3845841.	-4301.	24984.	-11387.
12318.207	20292102.	18468949.	3814643.	-4336.	24953.	-11393.
12325.643	20259488.	18654173.	3731848.	-4435.	24862.	-11412.
12335.643	20214473.	18902179.	3617610.	-4567.	24739.	-11436.

TABLE III
APOLLO MISSION AS-502
SPACECRAFT OPERATIONAL TRAJECTORY
-POSITION AND VELOCITY VECTOR-
-EARTH CENTERED INERTIAL COORDINATE SYSTEM-

TIME SECONDS	X FEET	Y FEET	Z FEET	DX FT/SEC	DY FT/SEC	DZ FT/SEC
12337.521	20205873.	18948618.	3596129.	-4592.	24716.	-11440.
			START SOLAR SOAK			
12337.521	20205873.	18948618.	3596129.	-4592.	24716.	-11440.
12340.643	20191474.	19025721.	3560403.	-4633.	24678.	-11447.
12400.643	19890819.	20484369.	2869788.	-5378.	23944.	-11567.
12460.643	19547452.	21899076.	2172983.	-6057.	23214.	-11654.
12520.643	19165186.	23270249.	1471830.	-6675.	22493.	-11713.
12580.643	18747546.	24598516.	767941.	-7237.	21784.	-11746.
12640.643	18297777.	25884666.	62719.	-7747.	21090.	-11758.
12700.643	17818855.	27129611.	-642617.	-8209.	20411.	-11750.
12760.643	17313506.	28334355.	-1347010.	-8629.	19750.	-11727.
12820.643	16784218.	29499953.	-2049551.	-9008.	19107.	-11689.
12880.643	16233265.	30627504.	-2749454.	-9351.	18482.	-11639.
12940.643	15662718.	31718118.	-3446046.	-9662.	17875.	-11579.
13000.643	15074471.	32772914.	-4138749.	-9942.	17288.	-11510.
13060.643	14470246.	83792997.	-4827069.	-10195.	16718.	-11433.
13120.643	13851615.	84779464.	-5510589.	-10422.	16167.	-11350.
13180.643	13220012.	35733385.	-6188951.	-10627.	15633.	-11261.
13240.643	12576746.	86655805.	-6861857.	-10811.	15117.	-11168.
13300.643	11923013.	37547737.	-7529054.	-10977.	14617.	-11071.
13360.643	11259904.	38410166.	-8190334.	-11124.	14133.	-10971.
13420.643	10588418.	39244041.	-8845523.	-11256.	13665.	-10868.
13480.643	9909470.	40050277.	-9494480.	-11373.	13212.	-10763.
13540.643	9223896.	40829756.	-10137092.	-11477.	12773.	-10657.
13600.643	8532464.	41583325.	-10773269.	-11569.	12348.	-10549.
13660.643	7835879.	42311800.	-11402941.	-11649.	11936.	-10440.
13720.643	7134786.	43015961.	-12026058.	-11719.	11538.	-10330.
13780.643	6429783.	43696557.	-12642585.	-11780.	11151.	-10220.
13840.643	5721414.	44354310.	-13252499.	-11831.	10776.	-10110.
13900.643	5010184.	44989907.	-13855791.	-11875.	10412.	-10000.
13960.643	4296558.	45604009.	-14452460.	-11911.	10059.	-9889.
14020.643	3580965.	46197251.	-15042515.	-11941.	9717.	-9779.
14080.643	2863799.	46770240.	-15625973.	-11964.	9384.	-9669.
14140.643	2145426.	47323556.	-16202856.	-11981.	9061.	-9560.
14200.643	1426184.	47857760.	-16773192.	-11993.	8747.	-9451.
14260.643	706388.	48373386.	-17337015.	-12000.	8442.	-9343.
14320.643	-13674.	48870946.	-17894360.	-12002.	8145.	-9235.
14380.643	-733734.	49350935.	-18445268.	-12000.	7856.	-9128.

TABLE III
APOLLO MISSION AS-502
SPACECRAFT OPERATIONAL TRAJECTORY
-POSITION AND VELOCITY VECTOR-
-EARTH CENTERED INERTIAL COORDINATE SYSTEM-

TIME SECONDS	X FEET	Y FEET	Z FEET	DX FT/SEC	DY FT/SEC	DZ FT/SEC
14440.643	-1453540.	49813824.	-18989784.	-11993.	7575.	-9022.
14500.643	-2172862.	50240068.	-19527950.	-11983.	7301.	-8917.
14560.643	-2891484.	50690101.	-20059817.	-11970.	7034.	-8812.
14620.643	-3609207.	51104344.	-20586432.	-11954.	6775.	-8708.
14680.643	-4325845.	51503197.	-21104846.	-11934.	6521.	-8606.
14740.643	-5041223.	51887049.	-21610110.	-11912.	6275.	-8503.
14800.643	-5755181.	52256270.	-22125277.	-11887.	6034.	-8402.
14860.643	-6467568.	52611219.	-22626399.	-11859.	5799.	-8302.
14920.643	-7178244.	52952240.	-23121528.	-11830.	5569.	-8203.
14980.643	-7887077.	53279665.	-23610719.	-11798.	5346.	-8104.
15040.643	-8593946.	53593812.	-24094024.	-11764.	5127.	-8006.
15100.643	-9298736.	53894991.	-24571496.	-11729.	4913.	-7910.
15160.643	-10001341.	54183497.	-25043189.	-11691.	4704.	-7814.
15220.643	-10701659.	54459617.	-25509156.	-11652.	4500.	-7719.
15280.643	-11399599.	54723627.	-25969447.	-11612.	4301.	-7625.
15340.643	-12095072.	54975793.	-26424117.	-11570.	4105.	-7531.
15400.643	-12787997.	55216371.	-26873215.	-11527.	3914.	-7439.
15460.643	-13478296.	55445611.	-27316794.	-11483.	3728.	-7347.
15520.643	-14165897.	55663753.	-27754903.	-11437.	3545.	-7257.
15580.643	-14850733.	55871027.	-28187592.	-11391.	3365.	-7167.
15640.643	-15532742.	56067660.	-28614909.	-11343.	3190.	-7077.
15700.643	-16211862.	56253866.	-29036906.	-11294.	3018.	-6989.
15760.643	-16888040.	56429858.	-29453626.	-11245.	2849.	-6902.
15820.643	-17561220.	56595837.	-29865120.	-11194.	2684.	-6815.
15880.643	-18231355.	56752000.	-30271433.	-11143.	2522.	-6729.
15940.643	-18898399.	56898538.	-30672611.	-11091.	2363.	-6644.
16000.643	-19562308.	57035636.	-31068697.	-11039.	2207.	-6559.
16060.643	-20223041.	57163472.	-31459737.	-10986.	2054.	-6476.
16120.643	-20880558.	57282220.	-31845775.	-10932.	1904.	-6393.
16180.643	-21534825.	57392048.	-32226852.	-10877.	1757.	-6310.
16240.643	-22185807.	57493120.	-32603011.	-10822.	1612.	-6229.
16300.643	-22833470.	57585595.	-32974292.	-10767.	1470.	-6148.
16360.643	-23477786.	57669625.	-33340738.	-10711.	1331.	-6067.
16420.643	-24118726.	57745361.	-33702388.	-10654.	1194.	-5988.
16480.643	-24756262.	57812948.	-34059279.	-10597.	1059.	-5909.
16540.643	-25390369.	57872526.	-34411452.	-10540.	927.	-5830.
16600.643	-26021024.	57924233.	-34758943.	-10482.	797.	-5753.
16660.643	-26648203.	57968203.	-35101790.	-10424.	669.	-5676.
16720.643	-27271883.	58004564.	-35440029.	-10365.	543.	-5599.
16780.643	-27892047.	58033445.	-35773696.	-10307.	420.	-5523.
16840.643	-28508675.	58054966.	-36102826.	-10248.	298.	-5448.
16900.643	-29121748.	58069248.	-36427452.	-10188.	178.	-5373.

TABLE III
APOLLO MISSION AS-502
SPACECRAFT OPERATIONAL TRAJECTORY
-POSITION AND VELOCITY VECTOR-
-EARTH CENTERED INERTIAL COORDINATE SYSTEM-

TIME SECONDS	X FEET	Y FEET	Z FEET	DX FT/SEC	DY FT/SEC	DZ FT/SEC
16960.643	-29731248.	58076407.	-36747609.	-10128.	61.	-5299.
17020.643	-30337160.	58076557.	-37061330.	-10069.	-55.	-5225.
17080.643	-30939469.	58069808.	-37374648.	-10008.	-169.	-5152.
17140.643	-31538160.	58056267.	-37681593.	-9948.	-282.	-5079.
17200.643	-32133219.	58036041.	-37984198.	-9887.	-392.	-5007.
17260.643	-32724632.	58009230.	-38282492.	-9826.	-501.	-4936.
17320.643	-33312388.	57975935.	-38574507.	-9765.	-608.	-4865.
17380.643	-33896475.	57936253.	-38866271.	-9704.	-714.	-4794.
17440.643	-34476879.	57890280.	-39151813.	-9643.	-818.	-4724.
17500.643	-35053594.	57838108.	-39433162.	-9581.	-921.	-4654.
17560.643	-35626605.	57779828.	-39710345.	-9519.	-1022.	-4585.
17620.643	-36195905.	57715527.	-39983390.	-9457.	-1121.	-4516.
17680.643	-36761484.	57645293.	-40252324.	-9395.	-1220.	-4448.
17740.643	-37323333.	57569209.	-40517171.	-9333.	-1316.	-4380.
17800.643	-37881442.	57487358.	-40777961.	-9271.	-1412.	-4313.
17860.643	-38435806.	57399821.	-41034715.	-9208.	-1506.	-4246.
17920.643	-38986414.	57306677.	-41287460.	-9145.	-1599.	-4179.
17980.643	-39533260.	57208002.	-41536219.	-9083.	-1690.	-4113.
18040.643	-40076336.	57103872.	-41781017.	-9020.	-1781.	-4047.
18100.643	-40615636.	56994361.	-42021877.	-8957.	-1870.	-3982.
18160.643	-41151153.	56879541.	-42258821.	-8894.	-1958.	-3917.
18220.643	-41682879.	56759481.	-42491873.	-8830.	-2044.	-3852.
18280.643	-42210809.	56634252.	-42721053.	-8767.	-2130.	-3788.
18340.643	-42734937.	56503920.	-42946384.	-8704.	-2214.	-3724.
18400.643	-43255255.	56368554.	-43167888.	-8640.	-2298.	-3660.
18460.643	-43771759.	56228216.	-43385583.	-8577.	-2380.	-3597.
18520.643	-44284444.	56082971.	-43599491.	-8513.	-2461.	-3534.
18580.643	-44793303.	55932880.	-43809632.	-8449.	-2542.	-3471.
18640.643	-45298330.	55778006.	-44016025.	-8385.	-2621.	-3409.
18700.643	-45799521.	55618408.	-44218689.	-8321.	-2699.	-3347.
18760.643	-46296871.	55454145.	-44417644.	-8257.	-2776.	-3285.
18820.643	-46790374.	55285273.	-44612908.	-8193.	-2853.	-3224.
18880.643	-47280024.	55111850.	-44804497.	-8129.	-2928.	-3163.
18940.643	-47765818.	54933932.	-44992431.	-8064.	-3002.	-3102.
19000.643	-48247750.	54751571.	-45176727.	-8000.	-3076.	-3041.
19060.643	-48725815.	54564822.	-45357401.	-7935.	-3149.	-2981.
19120.643	-49200008.	54373738.	-45534470.	-7871.	-3221.	-2921.
19180.643	-49670324.	54178369.	-45707950.	-7806.	-3292.	-2862.
19240.643	-50136759.	53978766.	-45877858.	-7742.	-3362.	-2802.
19300.643	-50599307.	53774978.	-46044209.	-7677.	-3431.	-2743.
19360.643	-51057964.	53567056.	-46207018.	-7612.	-3500.	-2684.
19420.643	-51512724.	53355044.	-46366300.	-7547.	-3567.	-2625.

TABLE III
APOLLO MISSION AS-502
SPACECRAFT OPERATIONAL TRAJECTORY
-POSITION AND VELOCITY VECTOR-
-EARTH CENTERED INERTIAL COORDINATE SYSTEM-

TIME SECONDS	X FEET	Y FEET	Z FEET	DX FT/SEC	DY FT/SEC	DZ FT/SEC
19480.643	-51963584.	53138993.	-46522070.	-7482.	-3634.	-2567.
19540.643	-52410537.	52918947.	-46674343.	-7417.	-3700.	-2509.
19600.643	-52853579.	52694952.	-46823132.	-7351.	-3766.	-2451.
19660.643	-53292706.	52467053.	-46968451.	-7286.	-3831.	-2393.
19720.643	-53727911.	52235293.	-47110314.	-7221.	-3895.	-2336.
19780.643	-54159191.	51999716.	-47248733.	-7155.	-3958.	-2278.
19840.643	-54586539.	51760365.	-47383723.	-7090.	-4020.	-2221.
19900.643	-55009950.	51517282.	-47515295.	-7024.	-4082.	-2164.
19960.643	-55429421.	51270507.	-47643461.	-6958.	-4143.	-2108.
20020.643	-55844944.	51020081.	-47768234.	-6892.	-4204.	-2051.
20080.643	-56256515.	50766043.	-47889627.	-6827.	-4264.	-1995.
20140.643	-56664128.	50508435.	-48007649.	-6761.	-4323.	-1939.
20200.643	-57067778.	50247294.	-48122314.	-6694.	-4382.	-1883.
20260.643	-57467460.	49982658.	-48233630.	-6628.	-4440.	-1827.
20320.643	-57863166.	49714566.	-48341610.	-6562.	-4497.	-1772.
20380.643	-58254893.	49443054.	-48446264.	-6496.	-4554.	-1717.
20440.643	-58642633.	49168158.	-48547603.	-6429.	-4610.	-1661.
20500.643	-59026381.	48889915.	-48645636.	-6362.	-4665.	-1606.
20560.643	-59406130.	48608360.	-48740374.	-6296.	-4720.	-1552.
20620.643	-59781875.	48323529.	-48831825.	-6229.	-4774.	-1497.
20680.643	-60153609.	48035455.	-48919999.	-6162.	-4828.	-1442.
20740.643	-60521326.	47744174.	-49004906.	-6095.	-4881.	-1388.
20800.643	-60885019.	47449718.	-49086554.	-6028.	-4934.	-1334.
20860.643	-61244681.	47152121.	-49164952.	-5961.	-4986.	-1280.
20920.643	-61600306.	46851415.	-49240108.	-5893.	-5037.	-1226.
20980.643	-61951887.	46547633.	-49312031.	-5826.	-5088.	-1172.
21040.643	-62299416.	46240808.	-49380729.	-5758.	-5139.	-1118.
21100.643	-62642887.	45930970.	-49446208.	-5691.	-5189.	-1065.
21160.643	-62982291.	45618150.	-49508478.	-5623.	-5238.	-1011.
21220.643	-63317623.	45302381.	-49567546.	-5555.	-5287.	-958.
21280.643	-63648873.	44983692.	-49623418.	-5487.	-5336.	-905.
21340.643	-63976034.	44662112.	-49676102.	-5419.	-5384.	-852.
21400.643	-64299099.	44337672.	-49725604.	-5350.	-5431.	-799.
21460.643	-64618059.	44010402.	-49771931.	-5282.	-5478.	-746.
21520.643	-64932905.	43680331.	-49816090.	-5213.	-5524.	-693.
21580.643	-65243630.	43347487.	-49855086.	-5144.	-5570.	-640.
21640.643	-65550225.	43011899.	-49891926.	-5075.	-5616.	-588.
21700.643	-65852681.	42673595.	-49925614.	-5006.	-5661.	-535.
21760.643	-66150989.	42332603.	-49956157.	-4937.	-5705.	-483.
21820.643	-66445140.	41988951.	-49983561.	-4868.	-5750.	-431.
21880.643	-66735125.	41642667.	-50007831.	-4798.	-5793.	-378.
21940.643	-67020935.	41293776.	-50028970.	-4729.	-5836.	-326.

TABLE III
APOLLO MISSION AS-502
SPACECRAFT OPERATIONAL TRAJECTORY
-POSITION AND VELOCITY VECTOR-
-EARTH CENTERED INERTIAL COORDINATE SYSTEM-

TIME SECONDS	X FEET	Y FEET	Z FEET	DX FT/SEC	DY FT/SEC	DZ FT/SEC
22000.643	-67302559.	40942307.	-50046986.	-4659.	-5879.	-274.
22060.643	-67579988.	40588286.	-50061880.	-4589.	-5921.	-222.
22120.643	-67853212.	40231739.	-50073659.	-4519.	-5963.	-170.
22180.643	-68122220.	39872693.	-50082328.	-4448.	-6005.	-119.
22240.643	-68387003.	39511174.	-50087889.	-4378.	-6046.	-67.
22300.643	-68647549.	39147207.	-50090346.	-4307.	-6086.	-15.
22360.643	-68903849.	38780818.	-50089705.	-4236.	-6127.	37.
22420.643	-69155890.	38412032.	-50086967.	-4165.	-6166.	88.
22480.643	-69403662.	38040875.	-50079136.	-4094.	-6206.	140.
22540.643	-69647153.	37667372.	-50069217.	-4022.	-6244.	191.
22600.643	-69886351.	37291547.	-50056210.	-3951.	-6283.	242.
22660.643	-70121245.	36913425.	-50040121.	-3879.	-6321.	294.
22720.643	-70351823.	36533031.	-50020950.	-3807.	-6359.	345.
22780.643	-70578072.	36150389.	-49998701.	-3735.	-6396.	396.
22840.643	-70799979.	35765523.	-49973376.	-3662.	-6433.	448.
22900.643	-71017533.	35378458.	-49944977.	-3590.	-6469.	499.
22912.502	-71060016.	35301697.	-49939001.	-3575.	-6476.	509.

APOGEE

22912.502	-71060016.	35301697.	-49939001.	-3575.	-6476.	509.
22960.643	-71230718.	34989219.	-49913508.	-3517.	-6505.	550.
23020.643	-71439524.	34597827.	-49878967.	-3444.	-6541.	601.
23080.643	-71643936.	34204306.	-49841359.	-3370.	-6576.	652.
23140.643	-71843941.	33808682.	-49800683.	-3297.	-6611.	703.
23200.643	-72039524.	33410977.	-49756942.	-3223.	-6646.	755.
23260.643	-72230670.	33011214.	-49710137.	-3149.	-6680.	806.
23320.643	-72417367.	32609417.	-49660268.	-3074.	-6713.	857.
23380.643	-72599598.	32205610.	-49607337.	-3000.	-6747.	908.
23440.643	-72777348.	31799816.	-49551343.	-2925.	-6780.	959.
23500.643	-72950603.	31392056.	-49492289.	-2850.	-6812.	1010.
23560.643	-73119347.	30982355.	-49430173.	-2775.	-6844.	1061.
23620.643	-73283564.	30570737.	-49364996.	-2699.	-6876.	1112.
23680.643	-73443237.	30157223.	-49296758.	-2623.	-6908.	1163.
23740.643	-73598350.	29741836.	-49225459.	-2547.	-6939.	1214.
23800.643	-73748887.	29324600.	-49151099.	-2471.	-6969.	1265.
23860.643	-73894829.	28905538.	-49073676.	-2394.	-6999.	1316.
23920.643	-74036161.	28484672.	-48993191.	-2317.	-7029.	1367.
23980.643	-74172864.	28062025.	-48909643.	-2240.	-7059.	1418.
24040.643	-74304920.	27637620.	-48823028.	-2162.	-7088.	1469.

TABLE III
APOLLO MISSION AS-502
SPACECRAFT OPERATIONAL TRAJECTORY
-POSITION AND VELOCITY VECTOR-
-EARTH CENTERED INERTIAL COORDINATE SYSTEM-

TIME SECONDS	X FEET	Y FEET	Z FEET	DX FT/SEC	DY FT/SEC	DZ FT/SEC
24100.643	-74432311.	27211479.	-48733349.	-2084.	-7117.	1520.
24160.643	-74555018.	26783627.	-48640603.	-2006.	-7145.	1571.
24220.643	-74673022.	26354084.	-48544788.	-1927.	-7173.	1623.
24280.643	-74786304.	25922875.	-48448901.	-1849.	-7201.	1674.
24340.643	-74894843.	25490022.	-48343943.	-1769.	-7228.	1725.
24400.643	-74998621.	25055550.	-48238911.	-1690.	-7255.	1776.
24460.643	-75097617.	24619479.	-48130802.	-1610.	-7281.	1827.
24520.643	-75191809.	24181833.	-48019615.	-1530.	-7307.	1879.
24580.643	-75281177.	23742637.	-47905345.	-1449.	-7333.	1930.
24640.643	-75365700.	23301911.	-47787993.	-1368.	-7358.	1982.
24700.643	-75445354.	22859681.	-47667552.	-1287.	-7383.	2033.
24760.643	-75520119.	22415970.	-47544021.	-1205.	-7407.	2085.
24820.643	-75589971.	21970800.	-47417398.	-1123.	-7432.	2136.
24880.643	-75654887.	21524195.	-47287677.	-1041.	-7455.	2188.
24940.643	-75714844.	21076179.	-47154857.	-958.	-7479.	2240.
25000.643	-75769817.	20626776.	-47018932.	-875.	-7501.	2291.
25060.643	-75819783.	20176011.	-46879899.	-791.	-7524.	2343.
25120.644	-75864717.	19723906.	-46737754.	-707.	-7546.	2395.
25180.643	-75904593.	19270486.	-46592493.	-622.	-7568.	2447.
25240.643	-75939386.	18815775.	-46444111.	-537.	-7589.	2499.
25300.643	-75969069.	18359799.	-46292603.	-452.	-7610.	2551.
25360.643	-75993616.	17902581.	-46137965.	-366.	-7630.	2603.
25420.643	-76012999.	17444147.	-45980193.	-280.	-7651.	2656.
25480.643	-76027192.	16984522.	-45819279.	-193.	-7670.	2708.
25540.643	-76036166.	16523731.	-45655219.	-106.	-7689.	2761.
25600.643	-76039892.	16061800.	-45488008.	-18.	-7708.	2813.
25660.643	-76038342.	15598754.	-45317640.	70.	-7727.	2866.
25720.643	-76031485.	15134619.	-45144109.	159.	-7745.	2919.
25780.644	-76019292.	14669423.	-44967409.	248.	-7762.	2971.
25840.643	-76001731.	14203190.	-44787534.	338.	-7779.	3024.
25900.643	-75978771.	13735949.	-44604475.	428.	-7796.	3078.
25960.643	-75950381.	13267725.	-44418229.	519.	-7812.	3131.
26020.643	-75916527.	12798548.	-44228787.	610.	-7827.	3184.
26080.643	-75877178.	12328444.	-44036142.	702.	-7843.	3237.
26140.643	-75832298.	11857442.	-43840288.	794.	-7857.	3291.
26200.643	-75781854.	11385569.	-43641215.	887.	-7872.	3345.
26260.643	-75725811.	10912855.	-43438918.	981.	-7885.	3399.
26320.643	-75664133.	10439329.	-43233387.	1075.	-7899.	3452.
26380.643	-75596783.	9965021.	-43024617.	1170.	-7911.	3507.
26440.644	-75523726.	9489961.	-42812596.	1265.	-7924.	3561.
26500.643	-75444922.	9014179.	-42597317.	1361.	-7936.	3615.
26560.643	-75360334.	8537705.	-42378772.	1458.	-7947.	3670.

TABLE III
APOLLO MISSION AS-502
SPACECRAFT OPERATIONAL TRAJECTORY
-POSITION AND VELOCITY VECTOR-
-EARTH CENTERED INERTIAL COORDINATE SYSTEM-

TIME SECONDS	X FEET	Y FEET	Z FEET	DX FT/SEC	DY FT/SEC	DZ FT/SEC
26620.643	-75269922.	8060571.	-42156951.	1556.	-7958.	3724.
26680.643	-75173647.	7582811.	-41931846.	1654.	-7968.	3779.
26740.643	-75071468.	7104454.	-41703448.	1752.	-7977.	3834.
26800.643	-74963343.	6625534.	-41471745.	1852.	-7986.	3889.
26860.643	-74849230.	6146086.	-41236729.	1952.	-7995.	3945.
26920.643	-74729087.	5666142.	-40998390.	2053.	-8003.	4000.
26980.643	-74602868.	5185738.	-40756718.	2155.	-8010.	4056.
27040.643	-74470530.	4704909.	-40511701.	2257.	-8017.	4112.
27100.644	-74332027.	4223690.	-40263331.	2360.	-8023.	4168.
27160.643	-74187312.	3742118.	-40011594.	2464.	-8029.	4224.
27220.643	-74036338.	3260230.	-39756482.	2569.	-8034.	4280.
27280.643	-73879055.	2778065.	-39497981.	2674.	-8038.	4337.
27340.643	-73715416.	2295661.	-39236081.	2781.	-8042.	4393.
27400.643	-73545369.	1813057.	-38970770.	2888.	-8045.	4450.
27460.643	-73368863.	1330294.	-38702035.	2996.	-8047.	4508.
27520.643	-73185846.	847414.	-38429866.	3105.	-8049.	4565.
27580.643	-72996263.	364457.	-38154248.	3215.	-8050.	4622.
27640.643	-72800060.	-118533.	-37876169.	3326.	-8050.	4680.
27700.643	-72597183.	-601512.	-37592617.	3437.	-8049.	4738.
27760.644	-72387572.	-1084434.	-37306577.	3550.	-8048.	4796.
27820.643	-72171171.	-1567255.	-37017037.	3664.	-8046.	4855.
27880.643	-71947920.	-2049928.	-36723983.	3778.	-8043.	4914.
27940.643	-71717759.	-2532403.	-36427401.	3894.	-8039.	4973.
28000.643	-71480624.	-3014632.	-36127277.	4011.	-8035.	5032.
28060.643	-71236455.	-3496564.	-35823596.	4128.	-8029.	5091.
28120.643	-70985185.	-3978148.	-35516344.	4247.	-8023.	5151.
28180.643	-70726749.	-4459329.	-35205505.	4367.	-8016.	5211.
28240.643	-70461079.	-4940055.	-34891064.	4488.	-8008.	5271.
28300.643	-70188106.	-5420268.	-34573008.	4611.	-7999.	5331.
28360.643	-69907760.	-5899912.	-34251318.	4734.	-7989.	5392.
28420.644	-69619969.	-6378928.	-33925980.	4859.	-7978.	5453.
28480.643	-69324659.	-6857255.	-33594977.	4985.	-7966.	5514.
28540.643	-69021756.	-7334830.	-33264293.	5112.	-7953.	5576.
28600.643	-68711181.	-7811590.	-32927911.	5241.	-7939.	5637.
28660.643	-68392858.	-8287468.	-32587815.	5370.	-7924.	5699.
28720.643	-68066704.	-8762399.	-32243987.	5502.	-7907.	5762.
28780.643	-67732638.	-9236309.	-31896410.	5634.	-7890.	5824.
28840.643	-67390576.	-9709130.	-31545067.	5768.	-7871.	5887.
28900.643	-67040431.	-10180786.	-31189939.	5904.	-7851.	5950.
28960.643	-66682115.	-10651201.	-30831009.	6041.	-7829.	6014.
29020.643	-66315539.	-11120296.	-30468259.	6179.	-7807.	6078.
29080.644	-65940608.	-11587991.	-30101670.	6319.	-7783.	6142.

TABLE III
APOLLO MISSION AS-502
SPACECRAFT OPERATIONAL TRAJECTORY
-POSITION AND VELOCITY VECTOR-
-EARTH CENTERED INERTIAL COORDINATE SYSTEM-

TIME SECONDS	X FEET	Y FEET	Z FEET	DX FT/SEC	DY FT/SEC	DZ FT/SEC
29140.643	-65557230.	-12054199.	-29731223.	6461.	-7757.	6206.
29200.643	-65165306.	-12518837.	-29356899.	6604.	-7730.	6271.
29260.643	-64764739.	-12981815.	-28978681.	6749.	-7702.	6336.
29320.643	-64355425.	-13443038.	-28596548.	6895.	-7672.	6402.
29380.643	-63937261.	-13902413.	-28210482.	7044.	-7640.	6467.
29440.643	-63510140.	-14359840.	-27820463.	7194.	-7607.	6533.
29500.643	-63073953.	-14815217.	-27426471.	7346.	-7572.	6600.
29560.643	-62628588.	-15268438.	-27028488.	7500.	-7535.	6666.
29620.643	-62173929.	-15719393.	-26626492.	7656.	-7496.	6733.
29680.643	-61709860.	-16167969.	-26220465.	7814.	-7456.	6801.
29740.644	-61236258.	-16614046.	-25810387.	7973.	-7413.	6869.
29800.643	-60753001.	-17057503.	-25396238.	8135.	-7368.	6937.
29860.643	-60259961.	-17498214.	-24977998.	8300.	-7322.	7005.
29920.644	-59757007.	-17936045.	-24555648.	8466.	-7272.	7074.
29980.643	-59244006.	-18370861.	-24129168.	8634.	-7221.	7143.
30040.643	-58720821.	-18802518.	-23698539.	8805.	-7167.	7212.
30100.643	-58187310.	-19230868.	-23263741.	8979.	-7111.	7281.
30160.643	-57643329.	-19655757.	-22824757.	9154.	-7052.	7351.
30220.643	-57088730.	-20077026.	-22381566.	9333.	-6990.	7422.
30280.643	-56523359.	-20494506.	-21934152.	9513.	-6925.	7492.
30340.643	-55947061.	-20908023.	-21482495.	9697.	-6858.	7563.
30400.643	-55359675.	-21317396.	-21026580.	9883.	-6787.	7634.
30460.643	-54761034.	-21722434.	-20566389.	10072.	-6713.	7706.
30520.643	-54150971.	-22122941.	-20101906.	10264.	-6636.	7777.
30580.644	-53529309.	-22518709.	-19633117.	10459.	-6555.	7849.
30640.643	-52895872.	-22909523.	-19160007.	10656.	-6471.	7921.
30700.643	-52250473.	-23295154.	-18682563.	10857.	-6383.	7994.
30760.643	-51592925.	-23675369.	-18200774.	11061.	-6290.	8066.
30820.643	-50923034.	-24049920.	-17714629.	11269.	-6194.	8139.
30880.643	-50240599.	-24418545.	-17224117.	11480.	-6093.	8212.
30940.643	-49545416.	-24780973.	-16729236.	11694.	-5987.	8285.
31000.643	-48837275.	-25136919.	-16229977.	11912.	-5877.	8357.
31060.643	-48115959.	-25486083.	-15726337.	12133.	-5761.	8430.
31120.643	-47381247.	-25828149.	-15218318.	12358.	-5640.	8503.
31180.643	-46632909.	-26162788.	-14705921.	12587.	-5513.	8576.
31240.644	-45870713.	-26489650.	-14189153.	12820.	-5381.	8649.
31300.643	-45094418.	-26808368.	-13668021.	13057.	-5242.	8722.
31360.643	-44303778.	-27118558.	-13142540.	13298.	-5097.	8794.
31420.643	-43498540.	-27419810.	-12612727.	13544.	-4944.	8866.
31480.643	-42678446.	-27711696.	-12078604.	13794.	-4784.	8938.
31540.643	-41843230.	-27993761.	-11540200.	14048.	-4617.	9009.
31600.643	-40992620.	-28265525.	-10997550.	14307.	-4441.	9079.

TABLE III
APOLLO MISSION AS-502
SPACECRAFT OPERATIONAL TRAJECTORY
-POSITION AND VELOCITY VECTOR-
-EARTH CENTERED INERTIAL COORDINATE SYSTEM-

TIME SECONDS	X FEET	Y FEET	Z FEET	DX FT/SEC	DY FT/SEC	DZ FT/SEC
31660.643	-40126341.	-28526483.	-10450694.	14570.	-4256.	9149.
31720.643	-39244108.	-28776097.	-9899681.	14838.	-4063.	9218.
31780.643	-38345632.	-29013799.	-9344570.	15112.	-3859.	9286.
31840.643	-37430619.	-29238985.	-8785427.	15390.	-3645.	9352.
31900.644	-36498772.	-29451017.	-8222331.	15673.	-3421.	9417.
31960.643	-35549784.	-29649216.	-7655374.	15961.	-3184.	9481.
32020.643	-34583352.	-29832862.	-7084658.	16254.	-2935.	9543.
32080.643	-33599164.	-30001187.	-6510304.	16553.	-2673.	9602.
32140.643	-32596909.	-30153375.	-5932449.	16857.	-2397.	9659.
32200.643	-31576276.	-30288558.	-5351248.	17166.	-2106.	9714.
32260.643	-30536955.	-30405810.	-4766879.	17479.	-1799.	9765.
32320.643	-29478640.	-30504144.	-4179546.	17799.	-1475.	9812.
32380.643	-28401030.	-30582505.	-3589478.	18123.	-1133.	9856.
32440.643	-27303835.	-30639768.	-2996935.	18451.	-772.	9895.
32500.643	-26186775.	-30674732.	-2402212.	18785.	-390.	9928.
32560.644	-25049589.	-30686110.	-1805646.	19122.	14.	9956.
32620.643	-23892037.	-30672529.	-1207614.	19463.	442.	9977.
32680.643	-22713908.	-30632518.	-608546.	19808.	896.	9991.
32740.643	-21515024.	-30564505.	-8926.	20155.	1376.	9995.
32800.643	-20295256.	-30466806.	590697.	20504.	1886.	9990.
32860.643	-19054527.	-30337621.	1189701.	20854.	2426.	9974.
32866.102	-18940615.	-30324240.	1244140.	20885.	2477.	9972.

CSM ATTITUDE ORIENTATION FOR SECOND SPS BURN

32866.102	-18940615.	-30324240.	1244140.	20885.	2477.	9972.
32874.643	-18762009.	-30302744.	1329305.	20935.	2557.	9969.
32880.029	-18649183.	-30288839.	1382985.	20967.	2608.	9967.
32888.643	-18468355.	-30266024.	1468825.	21017.	2689.	9963.
32898.643	-18257897.	-30238652.	1568431.	21075.	2785.	9958.
32906.184	-18098798.	-30217373.	1643514.	21119.	2858.	9954.
32914.643	-17919958.	-30192849.	1727692.	21168.	2941.	9950.
32924.643	-17707987.	-30162951.	1827160.	21224.	3039.	9944.
32925.220	-17695747.	-30161197.	1832893.	21229.	3045.	9943.

COAST TO +X TRANSLATION

32925.220	-17695747.	-30161197.	1832893.	21229.	3045.	9943.

TABLE III
APOLLO MISSION AS-502
SPACECRAFT OPERATIONAL TRAJECTORY
-POSITION AND VELOCITY VECTOR-
-EARTH CENTERED INERTIAL COORDINATE SYSTEM-

TIME SECONDS	X FEET	Y FEET	Z FEET	DX FT/SEC	DY FT/SEC	DZ FT/SEC
32946.643	-17239612.	-30093683.	2045771.	21354.	3259.	9930.
32971.643	-16703966.	-30009023.	2293786.	21498.	3515.	9911.
32996.643	-16164714.	-29917886.	2541306.	21642.	3777.	9890.
33021.643	-15621873.	-29820106.	2788261.	21785.	4046.	9866.
33046.643	-15075465.	-29715516.	3034577.	21927.	4322.	9839.
33071.643	-14525514.	-29603941.	3280179.	22069.	4605.	9809.
33096.643	-13972050.	-29485205.	3524987.	22208.	4895.	9775.
33121.643	-13415106.	-29359125.	3768914.	22347.	5193.	9738.
33146.643	-12854722.	-29225513.	4011874.	22484.	5498.	9698.
33171.643	-12290942.	-29084180.	4253771.	22618.	5810.	9653.
33196.643	-11723817.	-28934929.	4494509.	22751.	6131.	9605.
33221.643	-11153403.	-28777561.	4733983.	22881.	6460.	9552.
33246.643	-10579765.	-28611869.	4972086.	23009.	6797.	9495.
33271.643	-10002972.	-28437646.	5208704.	23134.	7142.	9433.
33296.643	-9423105.	-28254680.	5443717.	23255.	7496.	9367.
33321.643	-8840250.	-28062750.	5677001.	23373.	7859.	9295.
33346.643	-8254502.	-27861640.	5908424.	23486.	8231.	9218.
33371.643	-7665970.	-27651121.	6137848.	23596.	8612.	9135.
33396.643	-7074766.	-27430968.	6365129.	23700.	9002.	9046.
33421.643	-6481019.	-27200948.	6590116.	23799.	9401.	8952.
33446.643	-5884867.	-26960830.	6812652.	23892.	9810.	8850.
33471.643	-5286459.	-26710375.	7032571.	23979.	10228.	8742.
33496.643	-4685961.	-26449348.	7249701.	24059.	10656.	8627.
33521.643	-4083548.	-26177510.	7463861.	24132.	11093.	8505.
33546.643	-3479413.	-25894621.	7674864.	24197.	11540.	8374.
33571.643	-2873762.	-25600445.	7882514.	24253.	11996.	8236.
33596.643	-2266819.	-25294742.	8086608.	24300.	12462.	8090.
33621.643	-1658824.	-24977280.	8286934.	24337.	12937.	7935.
33646.643	-1050034.	-24647826.	8483272.	24364.	13421.	7771.
33671.643	-440724.	-24306153.	8675395.	24379.	13914.	7598.
33696.643	168809.	-23952040.	8863068.	24382.	14416.	7415.
33703.841	344292.	-23847754.	8916240.	24380.	14562.	7360.

+X TRANSLATION

33703.841	344292.	-23847754.	8916240.	24380.	14562.	7360.
33726.643	900159.	-23510309.	9082061.	24372.	15036.	7182.

TABLE III
APOLLO MISSION AS-502
SPACECRAFT OPERATIONAL TRAJECTORY
-POSITION AND VELOCITY VECTOR-
-EARTH CENTERED INERTIAL COORDINATE SYSTEM-

TIME SECONDS	X FEET	Y FEET	Z FEET	DX FT/SEC	DY FT/SEC	DZ FT/SEC
33733.840	1075558.	-23401549.	9133546.	24368.	15187.	7124.
			SECOND SPS IGNITION			
33733.840	1075558.	-23401549.	9133546.	24368.	15187.	7124.
33734.215	1084703.	-23395848.	9136219.	24367.	15195.	7121.
			SECOND SPS BURN			
33734.215	1084703.	-23395848.	9136219.	24367.	15195.	7121.
33735.234	1109528.	-23380353.	9143469.	24378.	15231.	7114.
33737.234	1158303.	-23349821.	9157680.	24397.	15302.	7098.
33739.234	1207117.	-23319146.	9171859.	24416.	15373.	7081.
33741.233	1255968.	-23288327.	9186005.	24435.	15445.	7065.
33743.234	1304858.	-23257364.	9200118.	24454.	15517.	7048.
33745.234	1353785.	-23226257.	9214198.	24473.	15590.	7031.
33747.233	1402750.	-23195005.	9228244.	24492.	15662.	7015.
33749.234	1451753.	-23163608.	9242256.	24511.	15735.	6998.
33751.234	1500794.	-23132066.	9256236.	24530.	15807.	6981.
33753.234	1549872.	-23100379.	9270181.	24549.	15880.	6964.
33755.234	1598988.	-23068545.	9284092.	24568.	15953.	6947.
33757.234	1648142.	-23036565.	9297970.	24586.	16027.	6930.
33759.234	1697334.	-23004439.	9311813.	24605.	16100.	6913.
33761.234	1746564.	-22972165.	9325622.	24624.	16174.	6896.
33763.234	1795831.	-22939745.	9339397.	24643.	16247.	6879.
33765.234	1845136.	-22907177.	9353137.	24662.	16321.	6861.
33767.234	1894478.	-22874460.	9366842.	24681.	16395.	6844.
33769.234	1943858.	-22841596.	9380513.	24700.	16469.	6827.
33771.234	1993276.	-22808582.	9394149.	24718.	16544.	6809.
33773.234	2042732.	-22775421.	9407750.	24737.	16618.	6792.
33775.233	2092225.	-22742109.	9421315.	24756.	16693.	6774.
33777.234	2141756.	-22708648.	9434846.	24775.	16768.	6756.
33779.234	2191324.	-22675037.	9448341.	24794.	16843.	6739.
33781.234	2240930.	-22641277.	9461800.	24812.	16918.	6721.
33783.234	2290574.	-22607365.	9475224.	24831.	16994.	6703.
33785.234	2340255.	-22573302.	9488612.	24850.	17069.	6685.
33787.234	2389974.	-22539088.	9501964.	24869.	17145.	6667.
33789.234	2439731.	-22504722.	9515280.	24888.	17221.	6649.

TABLE III
APOLLO MISSION AS-502
SPACECRAFT OPERATIONAL TRAJECTORY
-POSITION AND VELOCITY VECTOR-
-EARTH CENTERED INERTIAL COORDINATE SYSTEM-

TIME SECONDS	X FEET	Y FEET	Z FEET	DX FT/SEC	DY FT/SEC	DZ FT/SEC
33791.234	2489525.	-22470205.	9528560.	24906.	17297.	6631.
33793.234	2539354.	-22435534.	9541804.	24925.	17373.	6613.
33795.234	2589225.	-22400711.	9555010.	24944.	17450.	6594.
33797.234	2639132.	-22365735.	9568181.	24963.	17526.	6576.
33799.234	2689076.	-22330605.	9581314.	24981.	17603.	6558.
33801.234	2739058.	-22295322.	9594411.	25000.	17680.	6539.
33803.234	2789077.	-22259884.	9607471.	25019.	17757.	6521.
33805.234	2839133.	-22224292.	9620493.	25038.	17835.	6502.
33807.234	2889227.	-22188545.	9633479.	25056.	17912.	6483.
33809.233	2939359.	-22152642.	9646426.	25075.	17990.	6465.
33811.234	2989528.	-22116584.	9659337.	25094.	18068.	6446.
33813.234	3039735.	-22080370.	9672209.	25113.	18146.	6427.
33815.234	3089979.	-22043999.	9685044.	25131.	18225.	6408.
33817.234	3140260.	-22007472.	9697840.	25150.	18303.	6389.
33819.234	3190579.	-21970787.	9710599.	25169.	18382.	6370.
33821.234	3240935.	-21933945.	9723319.	25188.	18461.	6350.
33823.234	3291329.	-21896944.	9736001.	25206.	18540.	6331.
33825.234	3341760.	-21859785.	9748644.	25225.	18619.	6312.
33827.234	3392229.	-21822468.	9761248.	25244.	18699.	6293.
33829.234	3442735.	-21784991.	9773814.	25262.	18778.	6273.
33831.234	3493279.	-21747355.	9786341.	25281.	18858.	6254.
33833.234	3543859.	-21709558.	9798828.	25300.	18938.	6234.
33835.234	3594478.	-21671602.	9811276.	25319.	19018.	6214.
33837.233	3645134.	-21633485.	9823685.	25337.	19099.	6194.
33839.234	3695827.	-21595206.	9836054.	25356.	19180.	6175.
33841.234	3746557.	-21556766.	9848383.	25375.	19261.	6155.
33843.234	3797325.	-21518164.	9860673.	25393.	19342.	6135.
33845.234	3848131.	-21479400.	9872922.	25412.	19423.	6115.
33847.234	3898973.	-21440472.	9885131.	25431.	19504.	6095.
33849.234	3949854.	-21401381.	9897300.	25449.	19586.	6074.
33851.234	4000771.	-21362127.	9909428.	25468.	19668.	6054.
33853.234	4051726.	-21322709.	9921516.	25487.	19750.	6034.
33855.234	4102719.	-21283126.	9933563.	25506.	19833.	6013.
33857.234	4153749.	-21243379.	9945569.	25524.	19915.	5993.
33859.234	4204816.	-21203465.	9957534.	25543.	19998.	5972.
33861.234	4255921.	-21163386.	9969457.	25562.	20081.	5951.
33863.234	4307063.	-21123141.	9981339.	25580.	20164.	5931.
33865.234	4358243.	-21082729.	9993180.	25599.	20248.	5910.
33867.234	4409460.	-21042150.	10004979.	25618.	20331.	5889.
33869.234	4460715.	-21001404.	10016736.	25637.	20415.	5868.
33871.233	4512007.	-20960489.	10028451.	25655.	20499.	5847.
33873.234	4563337.	-20919406.	10040124.	25674.	20584.	5826.

TABLE III
APOLLO MISSION AS-502
SPACECRAFT OPERATIONAL TRAJECTORY
-POSITION AND VELOCITY VECTOR-
-EARTH CENTERED INERTIAL COORDINATE SYSTEM-

TIME SECONDS	X FEET	Y FEET	Z FEET	DX FT/SEC	DY FT/SEC	DZ FT/SEC
33875.234	4614704.	-20878153.	10051754.	25693.	20668.	5805.
33877.234	4666109.	-20836732.	10063342.	25712.	20753.	5783.
33879.234	4717551.	-20795140.	10074888.	25731.	20838.	5762.
33881.234	4769031.	-20753379.	10086390.	25749.	20924.	5741.
33883.234	4820548.	-20711447.	10097850.	25768.	21009.	5719.
33885.234	4872103.	-20669343.	10109266.	25787.	21095.	5697.
33887.234	4923696.	-20627067.	10120639.	25806.	21181.	5676.
33889.234	4975326.	-20584620.	10131969.	25825.	21267.	5654.
33891.234	5026994.	-20541999.	10143255.	25843.	21353.	5632.
33893.234	5078699.	-20499206.	10154497.	25862.	21440.	5610.
33895.234	5130443.	-20456238.	10165696.	25881.	21527.	5588.
33897.234	5182224.	-20413096.	10176850.	25900.	21614.	5566.
33899.233	5234043.	-20369781.	10187960.	25919.	21702.	5544.
33901.234	5285899.	-20326289.	10199026.	25938.	21790.	5522.
33903.234	5337793.	-20282622.	00200047.	25957.	20878.	5499.
33905.233	5389726.	-20238779.	10221023.	25976.	21966.	5477.
33907.234	5441696.	-20194759.	10231955.	25995.	22054.	5455.
33909.234	5493704.	-20150562.	10242841.	26014.	22143.	5432.
33911.234	5545750.	-20106187.	10253683.	26032.	22232.	5409.
33913.234	5597834.	-20061634.	10264479.	26051.	22321.	5387.
33915.234	5649956.	-20016902.	10275229.	26071.	22411.	5364.
33917.234	5702116.	-19971991.	10285934.	26090.	22501.	5341.
33919.234	5754314.	-19926900.	10296593.	26109.	22591.	5318.
33921.234	5806550.	-19881628.	10307206.	26128.	22681.	5295.
33922.325	5835070.	-19856849.	10312978.	26138.	22730.	5283.

SECOND SPS SHUTDOWN

33922.325	5835070.	-19856849.	10312978.	26138.	22730.	5283.
33923.012	5853018.	-19841233.	10316603.	26140.	22755.	5275.

HOLD INERTIAL ATTITUDE

33923.012	5853018.	-19841233.	10316603.	26140.	22755.	5275.
33932.023	6088281.	-19635278.	10363649.	26078.	22959.	5167.
33942.023	6348704.	-19404558.	10414720.	26006.	23185.	5046.
33952.023	6608385.	-19171569.	10464571.	25930.	23412.	4923.

TABLE III
APOLLO MISSION AS-502
SPACECRAFT OPERATIONAL TRAJECTORY
-POSITION AND VELOCITY VECTOR-
-EARTH CENTERED INERTIAL COORDINATE SYSTEM-

TIME SECONDS	X FEET	Y FEET	Z FEET	DX FT/SEC	DY FT/SEC	DZ FT/SEC
33959.022	6789669.	-19007153.	10498722.	25874.	23571.	4836.
CSM ATTITUDE ORIENTATION FOR CM/SM SEPERATION						
33959.022	6789669.	-19007153.	10498722.	25874.	23571.	4836.
33959.109	6791911.	-19005111.	10499141.	25873.	23573.	4835.
33969.109	7050229.	-18768242.	10546854.	25790.	23801.	4708.
33976.606	7243312.	-18589190.	10581783.	25725.	23971.	4611.
33976.696	7245665.	-18586997.	10582204.	25724.	23973.	4610.
33976.797	7248238.	-18584600.	10582665.	25723.	23975.	4609.
33976.814	7248674.	-18584193.	10582743.	25723.	23976.	4608.
COAST TO CM/SM SEPARATION						
33976.814	7248674.	-18584193.	10582743.	25723.	23976.	4608.
33981.816	7377251.	-18463961.	10605636.	25678.	24089.	4543.
33991.817	7633570.	-18221934.	10650411.	25585.	24316.	4411.
34001.817	7888939.	-17977639.	10693856.	25488.	24543.	4277.
34011.817	8143314.	-17731079.	10735950.	25386.	24769.	4141.
34021.817	8396652.	-17482261.	10776673.	25280.	24995.	4003.
34031.817	8648907.	-17231189.	10816002.	25170.	25219.	3863.
34041.817	8900036.	-16977874.	10853919.	25055.	25443.	3720.
34051.817	9149994.	-16722324.	10890403.	24936.	25666.	3576.
34061.817	9398734.	-16464550.	10925435.	24812.	25888.	3430.
34071.817	9646212.	-16204565.	10958995.	24683.	26109.	3282.
34073.976	9699468.	-16148150.	10966045.	24655.	26156.	3250.
CM/SM SEPARATION AND FIVE SECOND COAST						
34073.976	9699468.	-16148150.	10966045.	24655.	26156.	3250.
34078.976	9822570.	-16017102.	10982104.	24588.	26266.	3175.

TABLE III
APOLLO MISSION AS-502
SPACECRAFT OPERATIONAL TRAJECTORY
-POSITION AND VELOCITY VECTOR-
-EARTH CENTERED INERTIAL COORDINATE SYSTEM-

TIME SECONDS	X FEET	Y FEET	Z FEET	DX FT/SEC	DY FT/SEC	DZ FT/SEC
			CM ATTITUDE ORIENTATION FOR ENTRY			
34078.976	9822570.	-16017102.	10982104.	24588.	26266.	3175.
34079.367	9832184.	-16006829.	10983344.	24583.	26274.	3169.
34088.408	10053898.	-15768381.	11011377.	24460.	26471.	3032.
34098.408	10297796.	-15502588.	11040933.	24319.	26687.	2879.
34102.683	10401621.	-15388312.	11053099.	24258.	26779.	2813.
34102.692	10401851.	-15388058.	11053126.	24257.	26779.	2813.
34102.694	10401887.	-15388019.	11053130.	24257.	26779.	2813.
			COAST TO ENTRY			
34102.694	10401887.	-15388019.	11053130.	24257.	26779.	2813.
34111.694	10619623.	-15146126.	11077821.	24125.	26971.	2673.
34121.694	10860121.	-14875352.	11103771.	23974.	27183.	2517.
34131.695	11099084.	-14602474.	11128146.	23818.	27392.	2358.
34141.694	11336465.	-14327516.	11150931.	23658.	27599.	2198.
34151.694	11572219.	-14050502.	11172110.	23493.	27803.	2037.
34161.694	11806302.	-13771460.	11191672.	23323.	28005.	1875.
34163.594	11850566.	-13718239.	11195203.	23291.	28043.	1844.
			ENTRY			

TABLE IV
APOLLO MISSION AS-502
SPACECRAFT OPERATIONAL TRAJECTORY
-BODY ATTITUDES-

TIME SECONDS	SPACE FIXED PITCH DEG	SPACE FIXED YAW DEG	SPACE FIXED ROLL DEG	EARTH RELATIVE PITCH DEG	EARTH RELATIVE YAW DEG	EARTH RELATIVE ROLL DEG	IMU GIMBAL ANGLES INNER DEG	IMU GIMBAL ANGLES MIDDLE DEG	IMU GIMBAL ANGLES OUTER DEG
LIFTOFF CONDITIONS									
.000	270.00	.00	-18.00	89.99	-.62	-90.61	-31.701	9.689	164.757
TRANSLUNAR INJECTION									
11746.739	53.68	.62	.00	7.67	108.20	-1.23	-176.682	-.520	179.662
11748.739	53.68	.62	.00	7.86	108.29	-1.23	-176.682	-.520	179.662
11750.739	53.68	.62	.00	8.04	108.37	-1.23	-176.682	-.520	179.662
11752.739	53.68	.62	.00	8.22	108.46	-1.24	-176.682	-.520	179.662
11754.739	53.68	.62	.00	8.40	108.54	-1.24	-176.682	-.520	179.662
11756.739	53.68	.62	.00	8.59	108.63	-1.25	-176.682	-.520	179.662
11756.939	53.68	.62	.00	8.60	108.64	-1.25	-176.682	-.520	179.662
BEGIN ORIENTATION TO S-IVB/CSM SEPARATION ATTITUDE									
11756.939	53.68	.62	.00	8.60	108.64	-1.25	-176.682	-.520	179.662
11757.098	53.45	.85	.23	8.84	108.41	-1.06	-176.455	-.837	179.730
11762.139	46.19	.85	7.49	16.56	108.44	6.04	-169.004	-4.784	-174.171
11772.139	31.79	.85	21.89	31.86	108.39	20.01	-152.969	-12.441	-161.828
11782.139	17.39	.85	36.29	47.15	108.04	33.67	-135.160	-19.656	-148.794
11792.139	2.99	.85	50.69	62.42	106.89	46.55	-115.509	-25.707	-134.673
11802.139	348.59	.85	65.09	77.62	102.05	55.74	-94.021	-30.420	-119.237
11812.139	334.19	.85	79.49	86.32	-34.95	-67.22	-71.014	-33.221	-102.595
11822.139	319.79	.85	93.89	71.53	-61.63	-79.85	-47.246	-33.763	-85.322
11832.139	305.39	.85	108.29	56.30	-64.16	-68.31	-23.770	-31.972	-68.293
11842.139	290.99	.85	122.69	41.05	-64.93	-55.00	-1.517	-28.084	-52.261
11852.139	276.59	.85	137.09	25.79	-65.21	-41.18	18.994	-22.533	-37.548
11862.139	262.19	.85	151.49	10.53	-65.28	-27.14	37.635	-15.806	-24.056
11872.139	247.79	.85	165.89	-4.72	-65.27	-12.98	54.474	-8.349	-11.449
11876.184	241.97	.85	171.71	-10.89	-65.25	-7.23	60.798	-5.216	-6.504
11878.139	241.97	.85	174.53	-11.06	-65.18	-4.42	60.940	-3.690	-4.132
11880.139	241.97	.85	177.41	-11.23	-65.12	-1.54	61.021	-2.124	-1.712

Body attitudes

TABLE IV
APOLLO MISSION AS-502
SPACECRAFT OPERATIONAL TRAJECTORY
-BODY ATTITUDES-

TIME SECONDS	SPACE FIXED PITCH DEG	SPACE FIXED YAW DEG	SPACE FIXED ROLL DEG	EARTH RELATIVE PITCH DEG	EARTH RELATIVE YAW DEG	EARTH RELATIVE ROLL DEG	IMU GIMBAL ANGLES INNER DEG	IMU GIMBAL ANGLES MIDDLE DEG	IMU GIMBAL ANGLES OUTER DEG
11881.058	241.97	.85	178.73	-11.30	-65.09	-.22	61.035	-1.403	-.601
END ORIENTATION TO S-IVB/CSM SEPARATION ATTITUDE									
11881.058	241.97	.85	178.73	-11.30	-65.09	-.22	61.035	-1.403	-.601
11882.139	241.97	.85	178.73	-11.40	-65.06	-.22	61.035	-1.403	-.601
11884.139	241.97	.85	178.73	-11.57	-64.99	-.22	61.035	-1.403	-.601
11886.139	241.97	.85	178.73	-11.73	-64.93	-.22	61.035	-1.403	-.601
11888.139	241.97	.85	178.73	-11.90	-64.87	-.22	61.035	-1.403	-.601
11890.139	241.97	.85	178.73	-12.07	-64.80	-.22	61.035	-1.403	-.601
11892.139	241.97	.85	178.73	-12.24	-64.74	-.22	61.035	-1.403	-.601
11894.139	241.97	.85	178.73	-12.41	-64.68	-.23	61.035	-1.403	-.601
11896.139	241.97	.85	178.73	-12.58	-64.62	-.23	61.035	-1.403	-.601
11898.139	241.97	.85	178.73	-12.75	-64.56	-.23	61.035	-1.403	-.601
11900.139	241.97	.85	178.73	-12.91	-64.50	-.23	61.035	-1.403	-.601
11902.139	241.97	.85	178.73	-13.08	-64.44	-.23	61.035	-1.403	-.601
11904.139	241.97	.85	178.73	-13.25	-64.38	-.23	61.035	-1.403	-.601
11906.139	241.97	.85	178.73	-13.42	-64.32	-.23	61.035	-1.403	-.601
11908.139	241.97	.85	178.73	-13.58	-64.26	-.24	61.035	-1.403	-.601
11910.139	241.97	.85	178.73	-13.75	-64.20	-.24	61.035	-1.403	-.601
11912.139	241.97	.85	178.73	-13.92	-64.14	-.24	61.035	-1.403	-.601
11914.139	241.97	.85	178.73	-14.08	-64.08	-.24	61.035	-1.403	-.601
11916.139	241.97	.85	178.73	-14.25	-64.02	-.24	61.035	-1.403	-.601
11916.939	241.97	.85	178.73	-14.31	-64.00	-.24	61.035	-1.403	-.601
START RCS THRUST FOR S-IVB/CSM SEPARATION									
11916.939	241.97	.85	178.73	-14.31	-64.00	-.24	61.035	-1.403	-.601
11917.938	241.97	.85	178.73	-14.40	-63.97	-.24	61.035	-1.403	-.601
11918.639	241.97	.85	178.73	-14.45	-63.95	-.24	61.035	-1.403	-.601
SEPARATION AND 8.3 SECS OF +X TRANSLATION									
11918.639	241.97	.85	178.73	-14.45	-63.95	-.24	61.035	-1.403	-.601

TABLE IV
APOLLO MISSION AS-502
SPACECRAFT OPERATIONAL TRAJECTORY
-BODY ATTITUDES-

TIME SECONDS	SPACE FIXED PITCH DEG	SPACE FIXED YAW DEG	SPACE FIXED ROLL DEG	EARTH RELATIVE PITCH DEG	EARTH RELATIVE YAW DEG	EARTH RELATIVE ROLL DEG	IMU GIMBAL ANGLES INNER DEG	IMU GIMBAL ANGLES MIDDLE DEG	IMU GIMBAL ANGLES OUTER DEG
11926.939	241.97	.85	178.73	-15.14	-63.71	-.25	61.035	-1.403	-.601
COAST FIVE SECONDS									
11926.939	241.97	.85	178.73	-15.14	-63.71	-.25	61.035	-1.403	-.601
11931.939	241.97	.85	178.73	-15.55	-63.57	-.25	61.035	-1.403	-.601
ORIENTATION TO FIRST SPS IGNITION ATTITUDE									
11931.939	241.97	.85	178.73	-15.55	-63.57	-.25	61.035	-1.403	-.601
11932.827	238.42	.85	178.73	-19.17	-63.61	-.28	64.586	-1.403	-.601
COAST TO FIRST SPS BURN									
11932.827	238.42	.85	178.73	-19.17	-63.61	-.28	64.586	-1.403	-.601
11933.239	238.42	.85	178.73	-19.20	-63.60	-.29	64.586	-1.403	-.601
11943.239	238.42	.85	178.73	-20.02	-63.33	-.29	64.586	-1.403	-.601
11953.239	238.42	.85	178.73	-20.83	-63.07	-.30	64.586	-1.403	-.601
11963.238	238.42	.85	178.73	-21.63	-62.81	-.30	64.586	-1.403	-.601
11973.238	238.42	.85	178.73	-22.42	-62.56	-.31	64.586	-1.403	-.601
11983.238	238.42	.85	178.73	-23.21	-62.32	-.31	64.586	-1.403	-.601
11993.238	238.42	.85	178.73	-23.99	-62.08	-.32	64.586	-1.403	-.601
12003.238	238.42	.85	178.73	-24.77	-61.85	-.33	64.586	-1.403	-.601
12013.239	238.42	.85	178.73	-25.53	-61.63	-.33	64.586	-1.403	-.601
12016.939	238.42	.85	178.73	-25.82	-61.55	-.33	64.586	-1.403	-.601
FIRST SPS IGNITION									
12016.939	238.42	.85	178.73	-25.82	-61.55	-.33	64.586	-1.403	-.601

TABLE IV
APOLLO MISSION AS-502
SPACECRAFT OPERATIONAL TRAJECTORY
-BODY ATTITUDES-

TIME SECONDS	SPACE FIXED PITCH DEG	SPACE FIXED YAW DEG	SPACE FIXED ROLL DEG	EARTH RELATIVE PITCH DEG	EARTH RELATIVE YAW DEG	EARTH RELATIVE ROLL DEG	IMU GIMBAL ANGLES INNER DEG	IMU GIMBAL ANGLES MIDDLE DEG	IMU GIMBAL ANGLES OUTER DEG
12017.314	238.42	.85	178.73	-25.85	-61.55	-.33	64.586	-1.403	-.601

FIRST SPS BURN

12017.314	238.42	.85	178.73	-25.85	-61.55	-.33	64.586	-1.403	-.601
12018.333	240.10	.54	178.80	-24.24	-61.83	-.12	62.897	-1.108	-.709
12020.333	238.63	.41	178.80	-25.86	-61.97	-.06	64.370	-.996	-.787
12022.333	238.49	.39	178.80	-26.16	-61.95	-.05	64.510	-.981	-.798
12024.333	238.52	.38	178.80	-26.27	-61.91	-.05	64.477	-.978	-.801
12026.333	238.57	.38	178.80	-26.37	-61.87	-.05	64.424	-.977	-.802
12028.333	238.63	.38	178.80	-26.47	-61.83	-.05	64.367	-.977	-.802
12030.333	238.69	.38	178.79	-26.56	-61.79	-.05	64.310	-.976	-.803
12032.333	238.74	.38	178.79	-26.65	-61.75	-.05	64.256	-.976	-.804
12034.333	238.80	.38	178.79	-26.75	-61.71	-.05	64.201	-.975	-.805
12036.333	238.85	.38	178.79	-26.84	-61.67	-.04	64.147	-.975	-.805
12038.333	238.90	.38	178.79	-26.94	-61.63	-.04	64.095	-.975	-.806
12040.333	238.95	.38	178.79	-27.04	-61.59	-.04	64.043	-.974	-.807
12042.333	239.01	.38	178.79	-27.13	-61.55	-.04	63.992	-.974	-.807
12044.333	239.06	.38	178.79	-27.23	-61.51	-.04	63.941	-.973	-.808
12046.333	239.10	.38	178.79	-27.33	-61.48	-.04	63.892	-.973	-.808
12048.333	239.15	.37	178.79	-27.42	-61.44	-.04	63.843	-.972	-.809
12050.333	239.20	.37	178.79	-27.52	-61.40	-.04	63.795	-.972	-.809
12052.333	239.25	.37	178.79	-27.62	-61.36	-.04	63.748	-.972	-.810
12054.333	239.30	.37	178.79	-27.72	-61.33	-.04	63.701	-.971	-.811
12056.333	239.34	.37	178.79	-27.82	-61.29	-.04	63.655	-.971	-.811
12058.333	239.39	.37	178.79	-27.92	-61.25	-.04	63.610	-.971	-.812
12060.333	239.43	.37	178.79	-28.02	-61.22	-.04	63.565	-.970	-.812
12062.333	239.47	.37	178.79	-28.12	-61.18	-.04	63.522	-.970	-.813
12064.333	239.52	.37	178.79	-28.22	-61.14	-.04	63.479	-.970	-.813
12066.333	239.56	.37	178.79	-28.32	-61.11	-.04	63.436	-.969	-.814
12068.333	239.60	.37	178.79	-28.42	-61.07	-.04	63.395	-.969	-.814
12070.333	239.64	.37	178.79	-28.53	-61.04	-.04	63.353	-.969	-.815
12072.333	239.68	.37	178.79	-28.63	-61.00	-.04	63.314	-.969	-.815
12074.333	239.72	.37	178.79	-28.73	-60.97	-.04	63.274	-.968	-.816
12076.333	239.76	.37	178.79	-28.83	-60.93	-.04	63.235	-.968	-.816
12078.333	239.80	.37	178.79	-28.94	-60.90	-.04	63.197	-.968	-.817
12080.333	239.84	.37	178.79	-29.04	-60.87	-.04	63.158	-.967	-.817
12082.333	239.88	.37	178.79	-29.14	-60.83	-.04	63.121	-.967	-.817
12084.333	239.91	.37	178.79	-29.25	-60.80	-.04	63.085	-.967	-.818
12086.333	239.95	.37	178.79	-29.35	-60.77	-.04	63.049	-.967	-.818

TABLE IV
APOLLO MISSION AS-502
SPACECRAFT OPERATIONAL TRAJECTORY
-BODY ATTITUDES-

TIME SECONDS	SPACE FIXED PITCH DEG	SPACE FIXED YAW DEG	SPACE FIXED ROLL DEG	EARTH RELATIVE PITCH DEG	EARTH RELATIVE YAW DEG	EARTH RELATIVE ROLL DEG	IMU GIMBAL ANGLES INNER DEG	IMU GIMBAL ANGLES MIDDLE DEG	IMU GIMBAL ANGLES OUTER DEG
12088.333	239.98	.36	178.79	-29.45	-60.73	-.04	63.013	-.967	-.818
12090.333	240.02	.36	178.79	-29.56	-60.70	-.04	62.978	-.967	-.819
12092.333	240.05	.36	178.79	-29.66	-60.67	-.04	62.945	-.966	-.819
12094.333	240.09	.36	178.79	-29.77	-60.64	-.04	62.911	-.966	-.819
12096.333	240.12	.36	178.79	-29.87	-60.60	-.04	62.878	-.966	-.819
12098.333	240.15	.36	178.79	-29.98	-60.57	-.04	62.846	-.966	-.820
12100.333	240.18	.36	178.79	-30.08	-60.54	-.04	62.814	-.966	-.820
12102.333	240.21	.36	178.79	-30.19	-60.51	-.04	62.782	-.966	-.821
12104.333	240.25	.36	178.79	-30.29	-60.48	-.04	62.751	-.965	-.821
12106.333	240.28	.36	178.79	-30.40	-60.45	-.04	62.721	-.966	-.821
12108.333	240.30	.36	178.79	-30.50	-60.42	-.04	62.692	-.966	-.821
12110.333	240.33	.36	178.79	-30.61	-60.39	-.04	62.663	-.965	-.822
12112.333	240.36	.36	178.78	-30.72	-60.36	-.04	62.634	-.965	-.822
12114.333	240.39	.36	178.78	-30.82	-60.33	-.04	62.606	-.965	-.822
12116.333	240.42	.36	178.78	-30.93	-60.30	-.04	62.578	-.965	-.822
12118.333	240.45	.36	178.78	-31.04	-60.27	-.04	62.551	-.965	-.823
12120.333	240.47	.36	178.78	-31.14	-60.24	-.04	62.525	-.965	-.823
12122.333	240.50	.36	178.78	-31.25	-60.21	-.04	62.498	-.965	-.823
12124.333	240.52	.36	178.78	-31.36	-60.18	-.04	62.473	-.965	-.823
12126.333	240.55	.36	178.78	-31.47	-60.15	-.04	62.447	-.965	-.823
12128.333	240.57	.36	178.78	-31.57	-60.12	-.04	62.423	-.965	-.823
12130.333	240.60	.36	178.78	-31.68	-60.10	-.04	62.398	-.965	-.824
12132.333	240.62	.36	178.78	-31.79	-60.07	-.04	62.375	-.965	-.824
12134.333	240.65	.36	178.78	-31.90	-60.04	-.04	62.352	-.965	-.824
12136.333	240.67	.36	178.78	-32.00	-60.01	-.04	62.329	-.965	-.824
12138.333	240.69	.36	178.78	-32.11	-59.99	-.04	62.306	-.965	-.824
12140.333	240.71	.36	178.78	-32.22	-59.96	-.04	62.284	-.965	-.824
12142.333	240.73	.36	178.78	-32.33	-59.93	-.04	62.263	-.965	-.825
12144.333	240.76	.36	178.78	-32.44	-59.91	-.04	62.241	-.965	-.825
12146.333	240.78	.36	178.78	-32.54	-59.88	-.04	62.221	-.965	-.825
12148.333	240.80	.36	178.78	-32.65	-59.85	-.04	62.200	-.966	-.825
12150.333	240.82	.36	178.78	-32.76	-59.83	-.04	62.180	-.966	-.825
12152.333	240.84	.36	178.78	-32.87	-59.80	-.04	62.161	-.966	-.825
12154.333	240.86	.36	178.78	-32.98	-59.78	-.04	62.142	-.966	-.825
12156.333	240.87	.36	178.78	-33.09	-59.75	-.04	62.123	-.966	-.825
12158.333	240.89	.36	178.78	-33.19	-59.73	-.04	62.105	-.966	-.825
12160.333	240.91	.36	178.78	-33.30	-59.70	-.04	62.087	-.966	-.825
12162.333	240.93	.36	178.78	-33.41	-59.68	-.04	62.069	-.966	-.825
12164.333	240.95	.36	178.78	-33.52	-59.65	-.04	62.052	-.966	-.825
12166.333	240.96	.36	178.78	-33.63	-59.63	-.04	62.035	-.967	-.825
12168.333	240.98	.36	178.78	-33.74	-59.61	-.04	62.018	-.967	-.825
12170.333	240.99	.36	178.78	-33.85	-59.58	-.04	62.002	-.967	-.825

TABLE IV
APOLLO MISSION AS-502
SPACECRAFT OPERATIONAL TRAJECTORY
-BODY ATTITUDES-

TIME SECONDS	SPACE FIXED PITCH DEG	SPACE FIXED YAW DEG	SPACE FIXED ROLL DEG	EARTH RELATIVE PITCH DEG	EARTH RELATIVE YAW DEG	EARTH RELATIVE ROLL DEG	IMU GIMBAL ANGLES INNER DEG	IMU GIMBAL ANGLES MIDDLE DEG	IMU GIMBAL ANGLES OUTER DEG
12172.333	241.01	.36	178.78	-33.95	-59.56	-.04	61.987	-.967	-.825
12174.333	241.03	.36	178.78	-34.06	-59.53	-.04	61.971	-.967	-.825
12176.333	241.04	.36	178.78	-34.17	-59.51	-.04	61.956	-.968	-.825
12178.333	241.06	.36	178.78	-34.28	-59.49	-.04	61.941	-.968	-.825
12180.333	241.07	.36	178.78	-34.39	-59.46	-.04	61.927	-.968	-.825
12182.333	241.08	.36	178.78	-34.50	-59.44	-.04	61.912	-.968	-.825
12184.333	241.10	.36	178.78	-34.61	-59.42	-.04	61.898	-.969	-.825
12186.333	241.11	.36	178.78	-34.71	-59.40	-.04	61.885	-.969	-.825
12188.333	241.13	.36	178.78	-34.82	-59.37	-.04	61.871	-.969	-.825
12190.333	241.14	.36	178.78	-34.93	-59.35	-.04	61.858	-.969	-.825
12192.333	241.15	.36	178.78	-35.04	-59.33	-.04	61.846	-.970	-.824
12194.333	241.16	.36	178.78	-35.15	-59.31	-.04	61.834	-.970	-.824
12196.333	241.18	.36	178.78	-35.26	-59.29	-.04	61.821	-.970	-.824
12198.333	241.19	.37	178.78	-35.36	-59.26	-.04	61.810	-.971	-.824
12200.333	241.20	.37	178.78	-35.47	-59.24	-.04	61.798	-.971	-.824
12202.333	241.21	.37	178.78	-35.58	-59.22	-.04	61.786	-.971	-.824
12204.333	241.22	.37	178.78	-35.69	-59.20	-.04	61.775	-.972	-.823
12206.333	241.23	.37	178.78	-35.80	-59.18	-.04	61.764	-.972	-.823
12208.333	241.24	.37	178.78	-35.90	-59.16	-.04	61.753	-.973	-.823
12210.333	241.25	.37	178.78	-36.01	-59.14	-.05	61.743	-.973	-.823
12212.333	241.26	.37	178.78	-36.12	-59.12	-.05	61.732	-.974	-.823
12214.333	241.27	.37	178.78	-36.23	-59.10	-.05	61.723	-.974	-.823
12216.333	241.28	.37	178.78	-36.33	-59.08	-.05	61.713	-.974	-.822
12218.333	241.29	.37	178.78	-36.44	-59.06	-.05	61.704	-.975	-.822
12220.333	241.30	.37	178.78	-36.55	-59.04	-.05	61.694	-.975	-.822
12222.333	241.31	.37	178.78	-36.66	-59.02	-.05	61.684	-.976	-.822
12224.333	241.32	.37	178.78	-36.76	-59.00	-.05	61.676	-.977	-.821
12226.333	241.33	.37	178.78	-36.87	-58.98	-.05	61.666	-.977	-.821
12228.333	241.34	.37	178.78	-36.98	-58.96	-.05	61.658	-.978	-.820
12230.333	241.35	.37	178.78	-37.08	-58.94	-.05	61.649	-.978	-.820
12232.333	241.36	.37	178.78	-37.19	-58.92	-.05	61.640	-.979	-.820
12234.333	241.37	.38	178.78	-37.29	-58.90	-.05	61.632	-.980	-.819
12236.333	241.37	.38	178.78	-37.40	-58.88	-.05	61.623	-.981	-.819
12238.333	241.38	.38	178.78	-37.50	-58.86	-.05	61.614	-.981	-.819
12240.333	241.39	.38	178.78	-37.61	-58.85	-.05	61.606	-.982	-.818
12242.333	241.40	.38	178.78	-37.71	-58.83	-.05	61.597	-.983	-.818
12244.333	241.41	.38	178.78	-37.82	-58.81	-.05	61.588	-.984	-.817
12246.333	241.42	.38	178.78	-37.92	-58.79	-.06	61.580	-.985	-.816
12248.333	241.43	.38	178.78	-38.02	-58.77	-.06	61.570	-.986	-.816
12250.333	241.44	.38	178.78	-38.12	-58.75	-.06	61.561	-.987	-.815
12252.333	241.45	.39	178.78	-38.23	-58.73	-.06	61.551	-.989	-.814
12254.333	241.46	.39	178.78	-38.33	-58.72	-.06	61.541	-.990	-.813

TABLE IV
APOLLO MISSION AS-502
SPACECRAFT OPERATIONAL TRAJECTORY
-BODY ATTITUDES-

TIME SECONDS	SPACE FIXED PITCH DEG	SPACE FIXED YAW DEG	SPACE FIXED ROLL DEG	EARTH RELATIVE PITCH DEG	EARTH RELATIVE YAW DEG	EARTH RELATIVE ROLL DEG	IMU GIMBAL ANGLES INNER DEG	IMU GIMBAL ANGLES MIDDLE DEG	IMU GIMBAL ANGLES OUTER DEG
12256.333	241.47	.39	178.78	-38.43	-58.70	-.06	61.529	-.992	-.812
12258.333	241.48	.39	178.78	-38.52	-58.68	-.06	61.517	-.994	-.811
12260.333	241.49	.39	178.78	-38.62	-58.66	-.07	61.503	-.995	-.810
12262.333	241.51	.40	178.78	-38.71	-58.64	-.07	61.487	-.998	-.809
12264.333	241.53	.40	178.78	-38.80	-58.62	-.07	61.468	-1.001	-.807
12266.333	241.55	.40	178.78	-38.89	-58.60	-.08	61.443	-1.005	-.804
12268.333	241.59	.41	178.78	-38.96	-58.57	-.08	61.406	-1.012	-.800
12270.333	241.67	.43	178.78	-38.99	-58.53	-.10	61.327	-1.025	-.793
12270.943	242.92	.42	178.77	-37.77	-58.51	-.11	60.073	-1.021	-.807
FIRST SPS SHUTDOWN									
12270.943	242.92	.42	178.77	-37.77	-58.51	-.11	60.073	-1.021	-.807
12271.630	242.92	.42	178.77	-37.80	-58.50	-.11	60.073	-1.021	-.807
COAST FIVE SECONDS									
12271.630	242.92	.42	178.77	-37.79	-58.50	-.11	60.073	-1.021	-.807
12276.630	242.92	.42	178.77	-38.06	-58.47	-.11	60.073	-1.021	-.807
CSM ATTITUDE ORIENTAION FOR SOLAR SOAK									
12276.630	242.92	.42	178.77	-38.06	-58.47	-.11	60.073	-1.021	-.807
12285.643	242.92	36.47	178.77	-30.85	-15.14	-25.61	66.283	-30.525	21.036
12290.177	242.92	54.60	178.77	-22.27	2.81	-33.87	75.904	-43.666	36.820
12295.643	221.06	54.60	178.77	-31.49	12.79	-56.52	97.768	-43.666	36.820
12305.643	181.06	54.60	178.77	-35.71	40.28	-105.40	137.768	-43.666	36.820
12315.643	141.06	54.60	178.77	-21.88	61.66	-149.33	177.768	-43.666	36.820
12318.207	130.81	54.60	178.77	-16.53	64.59	-158.76	-171.978	-43.666	36.820
12325.643	130.81	54.60	232.31	-16.32	64.73	-105.55	160.885	-25.724	66.854
12335.643	130.81	54.60	304.31	-16.04	64.91	-34.00	119.389	-25.030	111.120

TABLE IV
APOLLO MISSION AS-502
SPACECRAFT OPERATIONAL TRAJECTORY
-BODY ATTITUDES-

TIME SECONDS	SPACE FIXED PITCH DEG	SPACE FIXED YAW DEG	SPACE FIXED ROLL DEG	EARTH RELATIVE PITCH DEG	EARTH RELATIVE YAW DEG	EARTH RELATIVE ROLL DEG	IMU GIMBAL ANGLES INNER DEG	IMU GIMBAL ANGLES MIDDLE DEG	IMU GIMBAL ANGLES OUTER DEG
12337.521	130.81	54.60	317.83	-15.99	64.95	-20.57	111.944	-28.157	119.138
				START SOLAR SOAK					
12337.521	130.81	54.60	317.83	-15.99	64.95	-20.57	111.944	-28.157	119.138
12340.643	130.81	54.60	317.83	-15.90	65.00	-20.70	111.944	-28.157	119.138
12400.643	130.81	54.60	317.83	-14.26	65.96	-23.28	111.944	-28.157	119.138
12460.643	130.81	54.60	317.83	-12.67	66.74	-25.69	111.944	-28.157	119.138
12520.643	130.81	54.60	317.83	-11.14	67.34	-27.96	111.944	-28.157	119.138
12580.643	130.81	54.60	317.83	-9.67	67.81	-30.10	111.944	-28.157	119.138
12640.643	130.81	54.60	317.83	-8.25	68.15	-32.11	111.944	-28.157	119.138
12700.643	130.81	54.60	317.83	-6.90	68.38	-34.02	111.944	-28.157	119.138
12760.643	130.81	54.60	317.83	-5.60	68.53	-35.82	111.944	-28.157	119.138
12820.643	130.81	54.60	317.83	-4.35	68.58	-37.54	111.944	-28.157	119.138
12880.643	130.81	54.60	317.83	-3.15	68.57	-39.18	111.944	-28.157	119.138
12940.643	130.81	54.60	317.83	-2.01	68.50	-40.74	111.944	-28.157	119.138
13000.643	130.81	54.60	317.83	-.91	68.37	-42.23	111.944	-28.157	119.138
13060.643	130.81	54.60	317.83	.15	68.19	-43.66	111.944	-28.157	119.138
13120.643	130.81	54.60	317.83	1.16	67.97	-45.03	111.944	-28.157	119.138
13180.643	130.81	54.60	317.83	2.13	67.72	-46.35	111.944	-28.157	119.138
13240.643	130.81	54.60	317.83	3.06	67.43	-47.62	111.944	-28.157	119.138
13300.643	130.81	54.60	317.83	3.96	67.11	-48.85	111.944	-28.157	119.138
13360.643	130.81	54.60	317.83	4.82	66.78	-50.03	111.944	-28.157	119.138
13420.643	130.81	54.60	317.83	5.65	66.41	-51.17	111.944	-28.157	119.138
13480.643	130.81	54.60	317.83	6.44	66.03	-52.28	111.944	-28.157	119.138
13540.643	130.81	54.60	317.83	7.21	65.64	-53.35	111.944	-28.157	119.138
13600.643	130.81	54.60	317.83	7.95	65.23	-54.38	111.944	-28.157	119.138
13660.643	130.81	54.60	317.83	8.67	64.80	-55.39	111.944	-28.157	119.138
13720.643	130.81	54.60	317.83	9.36	64.37	-56.37	111.944	-28.157	119.138
13780.643	130.81	54.60	317.83	10.02	63.92	-57.32	111.944	-28.157	119.138
13840.643	130.81	54.60	317.83	10.66	63.47	-58.25	111.944	-28.157	119.138
13900.643	130.81	54.60	317.83	11.28	63.01	-59.15	111.944	-28.157	119.138
13960.643	130.81	54.60	317.83	11.88	62.55	-60.03	111.944	-28.157	119.138
14020.643	130.81	54.60	317.83	12.46	62.07	-60.89	111.944	-28.157	119.138
14080.643	130.81	54.60	317.83	13.02	61.60	-61.73	111.944	-28.157	119.138
14140.643	130.81	54.60	317.83	13.57	61.12	-62.56	111.944	-28.157	119.138
14200.643	130.81	54.60	317.83	14.09	60.63	-63.36	111.944	-28.157	119.138
14260.643	130.81	54.60	317.83	14.61	60.15	-64.14	111.944	-28.157	119.138
14320.643	130.81	54.60	317.83	15.10	59.66	-64.91	111.944	-28.157	119.138
14380.643	130.81	54.60	317.83	15.58	59.17	-65.67	111.944	-28.157	119.138

TABLE IV
APOLLO MISSION AS-502
SPACECRAFT OPERATIONAL TRAJECTORY
-BODY ATTITUDES-

TIME SECONDS	SPACE FIXED PITCH DEG	SPACE FIXED YAW DEG	SPACE FIXED ROLL DEG	EARTH RELATIVE PITCH DEG	EARTH RELATIVE YAW DEG	EARTH RELATIVE ROLL DEG	IMU GIMBAL ANGLES INNER DEG	IMU GIMBAL ANGLES MIDDLE DEG	IMU GIMBAL ANGLES OUTER DEG
14440.643	130.81	54.60	317.83	16.05	58.68	-66.41	111.944	-28.157	119.138
14500.643	130.81	54.60	317.83	16.50	58.19	-67.13	111.944	-28.157	119.138
14560.643	130.81	54.60	317.83	16.94	57.69	-67.84	111.944	-28.157	119.138
14620.643	130.81	54.60	317.83	17.37	57.20	-68.54	111.944	-28.157	119.138
14680.643	130.81	54.60	317.83	17.79	56.71	-69.23	111.944	-28.157	119.138
14740.643	130.81	54.60	317.83	18.19	56.21	-69.90	111.944	-28.157	119.138
14800.643	130.81	54.60	317.83	18.58	55.72	-70.56	111.944	-28.157	119.138
14860.643	130.81	54.60	317.83	18.97	55.23	-71.22	111.944	-28.157	119.138
14920.643	130.81	54.60	317.83	19.34	54.73	-71.86	111.944	-28.157	119.138
14980.643	130.81	54.60	317.83	19.70	54.24	-72.49	111.944	-28.157	119.138
15040.643	130.81	54.60	317.83	20.06	53.75	-73.11	111.944	-28.157	119.138
15100.643	130.81	54.60	317.83	20.40	53.26	-73.72	111.944	-28.157	119.138
15160.643	130.81	54.60	317.83	20.74	52.77	-74.33	111.944	-28.157	119.138
15220.643	130.81	54.60	317.83	21.07	52.29	-74.92	111.944	-28.157	119.138
15280.643	130.81	54.60	317.83	21.39	51.80	-75.51	111.944	-28.157	119.138
15340.643	130.81	54.60	317.83	21.70	51.32	-76.09	111.944	-28.157	119.138
15400.643	130.81	54.60	317.83	22.01	50.83	-76.66	111.944	-28.157	119.138
15460.643	130.81	54.60	317.83	22.31	50.35	-77.23	111.944	-28.157	119.138
15520.643	130.81	54.60	317.83	22.60	49.87	-77.78	111.944	-28.157	119.138
15580.643	130.81	54.60	317.83	22.88	49.39	-78.33	111.944	-28.157	119.138
15640.643	130.81	54.60	317.83	23.16	48.92	-78.88	111.944	-28.157	119.138
15700.643	130.81	54.60	317.83	23.43	48.44	-79.42	111.944	-28.157	119.138
15760.643	130.81	54.60	317.83	23.70	47.97	-79.95	111.944	-28.157	119.138
15820.643	130.81	54.60	317.83	23.96	47.50	-80.47	111.944	-28.157	119.138
15880.643	130.81	54.60	317.83	24.22	47.03	-80.99	111.944	-28.157	119.138
15940.643	130.81	54.60	317.83	24.47	46.56	-81.51	111.944	-28.157	119.138
16000.643	130.81	54.60	317.83	24.71	46.09	-82.02	111.944	-28.157	119.138
16060.643	130.81	54.60	317.83	24.95	45.63	-82.52	111.944	-28.157	119.138
16120.643	130.81	54.60	317.83	25.18	45.16	-83.02	111.944	-28.157	119.138
16180.643	130.81	54.60	317.83	25.41	44.70	-83.51	111.944	-28.157	119.138
16240.643	130.81	54.60	317.83	25.64	44.24	-84.00	111.944	-28.157	119.138
16300.643	130.81	54.60	317.83	25.86	43.78	-84.48	111.944	-28.157	119.138
16360.643	130.81	54.60	317.83	26.07	43.33	-84.96	111.944	-28.157	119.138
16420.643	130.81	54.60	317.83	26.28	42.87	-85.44	111.944	-28.157	119.138
16480.643	130.81	54.60	317.83	26.49	42.42	-85.91	111.944	-28.157	119.138
16540.643	130.81	54.60	317.83	26.69	41.97	-86.38	111.944	-28.157	119.138
16600.643	130.81	54.60	317.83	26.89	41.52	-86.84	111.944	-28.157	119.138
16660.643	130.81	54.60	317.83	27.09	41.07	-87.30	111.944	-28.157	119.138
16720.643	130.81	54.60	317.83	27.28	40.62	-87.75	111.944	-28.157	119.138
16780.643	130.81	54.60	317.83	27.46	40.18	-88.20	111.944	-28.157	119.138
16840.643	130.81	54.60	317.83	27.65	39.74	-88.65	111.944	-28.157	119.138
16900.643	130.81	54.60	317.83	27.83	39.29	-89.10	111.944	-28.157	119.138

TABLE IV
APOLLO MISSION AS-502
SPACECRAFT OPERATIONAL TRAJECTORY
-BODY ATTITUDES-

TIME SECONDS	SPACE FIXED PITCH DEG	SPACE FIXED YAW DEG	SPACE FIXED ROLL DEG	EARTH RELATIVE PITCH DEG	EARTH RELATIVE YAW DEG	EARTH RELATIVE ROLL DEG	INU GIMBAL ANGLES INNER DEG	INU GIMBAL ANGLES MIDDLE DEG	INU GIMBAL ANGLES OUTER DEG
16960.643	130.81	54.60	317.83	28.01	38.85	-89.54	111.944	-28.157	119.138
17020.643	130.81	54.60	317.83	28.18	38.42	-89.98	111.944	-28.157	119.138
17080.643	130.81	54.60	317.83	28.35	37.98	-90.41	111.944	-28.157	119.138
17140.643	130.81	54.60	317.83	28.52	37.54	-90.84	111.944	-28.157	119.138
17200.643	130.81	54.60	317.83	28.68	37.11	-91.27	111.944	-28.157	119.138
17260.643	130.81	54.60	317.83	28.85	36.68	-91.70	111.944	-28.157	119.138
17320.643	130.81	54.60	317.83	29.01	36.25	-92.12	111.944	-28.157	119.138
17380.643	130.81	54.60	317.83	29.16	35.82	-92.54	111.944	-28.157	119.138
17440.643	130.81	54.60	317.83	29.31	35.39	-92.96	111.944	-28.157	119.138
17500.643	130.81	54.60	317.83	29.46	34.96	-93.37	111.944	-28.157	119.138
17560.643	130.81	54.60	317.83	29.61	34.54	-93.78	111.944	-28.157	119.138
17620.643	130.81	54.60	317.83	29.76	34.12	-94.19	111.944	-28.157	119.138
17680.643	130.81	54.60	317.83	29.90	33.69	-94.60	111.944	-28.157	119.138
17740.643	130.81	54.60	317.83	30.04	33.27	-95.01	111.944	-28.157	119.138
17800.643	130.81	54.60	317.83	30.18	32.85	-95.41	111.944	-28.157	119.138
17860.643	130.81	54.60	317.83	30.31	32.43	-95.81	111.944	-28.157	119.138
17920.643	130.81	54.60	317.83	30.45	32.02	-96.21	111.944	-28.157	119.138
17980.643	130.81	54.60	317.83	30.58	31.60	-96.60	111.944	-28.157	119.138
18040.643	130.81	54.60	317.83	30.71	31.19	-97.00	111.944	-28.157	119.138
18100.643	130.81	54.60	317.83	30.83	30.77	-97.39	111.944	-28.157	119.138
18160.643	130.81	54.60	317.83	30.96	30.36	-97.78	111.944	-28.157	119.138
18220.643	130.81	54.60	317.83	31.08	29.95	-98.17	111.944	-28.157	119.138
18280.643	130.81	54.60	317.83	31.20	29.54	-98.55	111.944	-28.157	119.138
18340.643	130.81	54.60	317.83	31.32	29.13	-98.94	111.944	-28.157	119.138
18400.643	130.81	54.60	317.83	31.44	28.73	-99.32	111.944	-28.157	119.138
18460.643	130.81	54.60	317.83	31.55	28.32	-99.70	111.944	-28.157	119.138
18520.643	130.81	54.60	317.83	31.66	27.91	-100.08	111.944	-28.157	119.138
18580.643	130.81	54.60	317.83	31.77	27.51	-100.46	111.944	-28.157	119.138
18640.643	130.81	54.60	317.83	31.88	27.11	-100.84	111.944	-28.157	119.138
18700.643	130.81	54.60	317.83	31.99	26.71	-101.21	111.944	-28.157	119.138
18760.643	130.81	54.60	317.83	32.09	26.30	-101.58	111.944	-28.157	119.138
18820.643	130.81	54.60	317.83	32.20	25.91	-101.95	111.944	-28.157	119.138
18880.643	130.81	54.60	317.83	32.30	25.51	-102.32	111.944	-28.157	119.138
18940.643	130.81	54.60	317.83	32.40	25.11	-102.69	111.944	-28.157	119.138
19000.643	130.81	54.60	317.83	32.50	24.71	-103.06	111.944	-28.157	119.138
19060.643	130.81	54.60	317.83	32.60	24.32	-103.43	111.944	-28.157	119.138
19120.643	130.81	54.60	317.83	32.69	23.92	-103.79	111.944	-28.157	119.138
19180.643	130.81	54.60	317.83	32.78	23.53	-104.16	111.944	-28.157	119.138
19240.643	130.81	54.60	317.83	32.88	23.13	-104.52	111.944	-28.157	119.138
19300.643	130.81	54.60	317.83	32.97	22.74	-104.88	111.944	-28.157	119.138
19360.643	130.81	54.60	317.83	33.06	22.35	-105.24	111.944	-28.157	119.138
19420.643	130.81	54.60	317.83	33.14	21.96	-105.60	111.944	-28.157	119.138

TABLE IV
APOLLO MISSION AS-502
SPACECRAFT OPERATIONAL TRAJECTORY
-BODY ATTITUDES-

TIME SECONDS	SPACE FIXED PITCH DEG	SPACE FIXED YAW DEG	SPACE FIXED ROLL DEG	EARTH RELATIVE PITCH DEG	EARTH RELATIVE YAW DEG	EARTH RELATIVE ROLL DEG	IMU GIMBAL ANGLES INNER DEG	IMU GIMBAL ANGLES MIDDLE DEG	IMU GIMBAL ANGLES OUTER DEG
19480.643	130.81	54.60	317.83	33.23	21.57	-105.95	111.944	-28.157	119.138
19540.643	130.81	54.60	317.83	33.31	21.18	-106.31	111.944	-28.157	119.138
19600.643	130.81	54.60	317.83	33.40	20.79	-106.67	111.944	-28.157	119.138
19660.643	130.81	54.60	317.83	33.48	20.40	-107.02	111.944	-28.157	119.138
19720.643	130.81	54.60	317.83	33.56	20.02	-107.38	111.944	-28.157	119.138
19780.643	130.81	54.60	317.83	33.64	19.63	-107.73	111.944	-28.157	119.138
19840.643	130.81	54.60	317.83	33.72	19.24	-108.08	111.944	-28.157	119.138
19900.643	130.81	54.60	317.83	33.79	18.86	-108.43	111.944	-28.157	119.138
19960.643	130.81	54.60	317.83	33.87	18.48	-108.78	111.944	-28.157	119.138
20020.643	130.81	54.60	317.83	33.94	18.09	-109.13	111.944	-28.157	119.138
20080.643	130.81	54.60	317.83	34.01	17.71	-109.48	111.944	-28.157	119.138
20140.643	130.81	54.60	317.83	34.08	17.33	-109.83	111.944	-28.157	119.138
20200.643	130.81	54.60	317.83	34.15	16.95	-110.17	111.944	-28.157	119.138
20260.643	130.81	54.60	317.83	34.22	16.56	-110.52	111.944	-28.157	119.138
20320.643	130.81	54.60	317.83	34.29	16.18	-110.86	111.944	-28.157	119.138
20380.643	130.81	54.60	317.83	34.36	15.80	-111.21	111.944	-28.157	119.138
20440.643	130.81	54.60	317.83	34.42	15.43	-111.55	111.944	-28.157	119.138
20500.643	130.81	54.60	317.83	34.49	15.05	-111.90	111.944	-28.157	119.138
20560.643	130.81	54.60	317.83	34.55	14.67	-112.24	111.944	-28.157	119.138
20620.643	130.81	54.60	317.83	34.61	14.29	-112.58	111.944	-28.157	119.138
20680.643	130.81	54.60	317.83	34.67	13.91	-112.92	111.944	-28.157	119.138
20740.643	130.81	54.60	317.83	34.73	13.54	-113.26	111.944	-28.157	119.138
20800.643	130.81	54.60	317.83	34.79	13.16	-113.61	111.944	-28.157	119.138
20860.643	130.81	54.60	317.83	34.85	12.78	-113.95	111.944	-28.157	119.138
20920.643	130.81	54.60	317.83	34.90	12.41	-114.29	111.944	-28.157	119.138
20980.643	130.81	54.60	317.83	34.96	12.03	-114.62	111.944	-28.157	119.138
21040.643	130.81	54.60	317.83	35.01	11.66	-114.96	111.944	-28.157	119.138
21100.643	130.81	54.60	317.83	35.06	11.29	-115.30	111.944	-28.157	119.138
21160.643	130.81	54.60	317.83	35.11	10.91	-115.64	111.944	-28.157	119.138
21220.643	130.81	54.60	317.83	35.17	10.54	-115.98	111.944	-28.157	119.138
21280.643	130.81	54.60	317.83	35.21	10.17	-116.32	111.944	-28.157	119.138
21340.643	130.81	54.60	317.83	35.26	9.79	-116.65	111.944	-28.157	119.138
21400.643	130.81	54.60	317.83	35.31	9.42	-116.99	111.944	-28.157	119.138
21460.643	130.81	54.60	317.83	35.36	9.05	-117.33	111.944	-28.157	119.138
21520.643	130.81	54.60	317.83	35.40	8.68	-117.66	111.944	-28.157	119.138
21580.643	130.81	54.60	317.83	35.45	8.31	-118.00	111.944	-28.157	119.138
21640.643	130.81	54.60	317.83	35.49	7.93	-118.33	111.944	-28.157	119.138
21700.643	130.81	54.60	317.83	35.53	7.56	-118.67	111.944	-28.157	119.138
21760.643	130.81	54.60	317.83	35.57	7.19	-119.00	111.944	-28.157	119.138
21820.643	130.81	54.60	317.83	35.61	6.82	-119.34	111.944	-28.157	119.138
21880.643	130.81	54.60	317.83	35.65	6.45	-119.67	111.944	-28.157	119.138
21940.643	130.81	54.60	317.83	35.69	6.08	-120.01	111.944	-28.157	119.138

TABLE IV
APOLLO MISSION AS-502
SPACECRAFT OPERATIONAL TRAJECTORY
-BODY ATTITUDES-

TIME SECONDS	SPACE FIXED PITCH DEG	SPACE FIXED YAW DEG	SPACE FIXED ROLL DEG	EARTH RELATIVE PITCH DEG	EARTH RELATIVE YAW DEG	EARTH RELATIVE ROLL DEG	IMU GIMBAL ANGLES INNER DEG	IMU GIMBAL ANGLES MIDDLE DEG	IMU GIMBAL ANGLES OUTER DEG
22000.643	130.81	54.60	317.83	35.73	5.71	-120.34	111.944	-28.157	119.138
22060.643	130.81	54.60	317.83	35.77	5.34	-120.68	111.944	-28.157	119.138
22120.643	130.81	54.60	317.83	35.80	4.97	-121.01	111.944	-28.157	119.138
22180.643	130.81	54.60	317.83	35.84	4.60	-121.35	111.944	-28.157	119.138
22240.643	130.81	54.60	317.83	35.87	4.23	-121.68	111.944	-28.157	119.138
22300.643	130.81	54.60	317.83	35.90	3.86	-122.02	111.944	-28.157	119.138
22360.643	130.81	54.60	317.83	35.93	3.49	-122.35	111.944	-28.157	119.138
22420.643	130.81	54.60	317.83	35.97	3.13	-122.69	111.944	-28.157	119.138
22480.643	130.81	54.60	317.83	36.00	2.76	-123.02	111.944	-28.157	119.138
22540.643	130.81	54.60	317.83	36.02	2.39	-123.36	111.944	-28.157	119.138
22600.643	130.81	54.60	317.83	36.05	2.02	-123.69	111.944	-28.157	119.138
22660.643	130.81	54.60	317.83	36.08	1.65	-124.03	111.944	-28.157	119.138
22720.643	130.81	54.60	317.83	36.11	1.28	-124.36	111.944	-28.157	119.138
22780.643	130.81	54.60	317.83	36.13	.91	-124.70	111.944	-28.157	119.138
22840.643	130.81	54.60	317.83	36.15	.54	-125.03	111.944	-28.157	119.138
22900.643	130.81	54.60	317.83	36.18	.17	-125.37	111.944	-28.157	119.138
22912.502	130.81	54.60	317.83	36.18	.10	-125.43	111.944	-28.157	119.138
				APOGEE					
22912.502	130.81	54.60	317.83	36.18	.10	-125.43	111.944	-28.157	119.138
22960.643	130.81	54.60	317.83	36.20	-.19	-125.70	111.944	-28.157	119.138
23020.643	130.81	54.60	317.83	36.22	-.56	-126.04	111.944	-28.157	119.138
23080.643	130.81	54.60	317.83	36.24	-.93	-126.37	111.944	-28.157	119.138
23140.643	130.81	54.60	317.83	36.26	-1.30	-126.71	111.944	-28.157	119.138
23200.643	130.81	54.60	317.83	36.28	-1.67	-127.05	111.944	-28.157	119.138
23260.643	130.81	54.60	317.83	36.30	-2.04	-127.38	111.944	-28.157	119.138
23320.643	130.81	54.60	317.83	36.31	-2.41	-127.72	111.944	-28.157	119.138
23380.643	130.81	54.60	317.83	36.33	-2.78	-128.06	111.944	-28.157	119.138
23440.643	130.81	54.60	317.83	36.34	-3.15	-128.40	111.944	-28.157	119.138
23500.643	130.81	54.60	317.83	36.36	-3.52	-128.73	111.944	-28.157	119.138
23560.643	130.81	54.60	317.83	36.37	-3.89	-129.07	111.944	-28.157	119.138
23620.643	130.81	54.60	317.83	36.38	-4.26	-129.41	111.944	-28.157	119.138
23680.643	130.81	54.60	317.83	36.39	-4.63	-129.75	111.944	-28.157	119.138
23740.643	130.81	54.60	317.83	36.40	-5.00	-130.09	111.944	-28.157	119.138
23800.643	130.81	54.60	317.83	36.41	-5.37	-130.43	111.944	-28.157	119.138
23860.643	130.81	54.60	317.83	36.42	-5.74	-130.77	111.944	-28.157	119.138
23920.643	130.81	54.60	317.83	36.43	-6.11	-131.11	111.944	-28.157	119.138
23980.643	130.81	54.60	317.83	36.43	-6.48	-131.45	111.944	-28.157	119.138
24040.643	130.81	54.60	317.83	36.44	-6.85	-131.80	111.944	-28.157	119.138

TABLE IV
APOLLO MISSION AS-502
SPACECRAFT OPERATIONAL TRAJECTORY
-BODY ATTITUDES-

TIME SECONDS	SPACE FIXED PITCH DEG	SPACE FIXED YAW DEG	SPACE FIXED ROLL DEG	EARTH RELATIVE PITCH DEG	EARTH RELATIVE YAW DEG	EARTH RELATIVE ROLL DEG	IMU GIMBAL ANGLES INNER DEG	IMU GIMBAL ANGLES MIDDLE DEG	IMU GIMBAL ANGLES OUTER DEG
24100.643	130.81	54.60	317.83	36.44	-7.23	-132.14	111.944	-28.157	119.138
24160.643	130.81	54.60	317.83	36.45	-7.60	-132.48	111.944	-28.157	119.138
24220.643	130.81	54.60	317.83	36.45	-7.97	-132.83	111.944	-28.157	119.138
24280.643	130.81	54.60	317.83	36.45	-8.34	-133.17	111.944	-28.157	119.138
24340.643	130.81	54.60	317.83	36.45	-8.72	-133.52	111.944	-28.157	119.138
24400.643	130.81	54.60	317.83	36.45	-9.09	-133.86	111.944	-28.157	119.138
24460.643	130.81	54.60	317.83	36.45	-9.46	-134.21	111.944	-28.157	119.138
24520.643	130.81	54.60	317.83	36.45	-9.84	-134.56	111.944	-28.157	119.138
24580.643	130.81	54.60	317.83	36.44	-10.21	-134.90	111.944	-28.157	119.138
24640.643	130.81	54.60	317.83	36.44	-10.59	-135.25	111.944	-28.157	119.138
24700.643	130.81	54.60	317.83	36.43	-10.96	-135.60	111.944	-28.157	119.138
24760.643	130.81	54.60	317.83	36.42	-11.34	-135.95	111.944	-28.157	119.138
24820.643	130.81	54.60	317.83	36.42	-11.72	-136.30	111.944	-28.157	119.138
24880.643	130.81	54.60	317.83	36.41	-12.09	-136.65	111.944	-28.157	119.138
24940.643	130.81	54.60	317.83	36.40	-12.47	-137.01	111.944	-28.157	119.138
25000.643	130.81	54.60	317.83	36.39	-12.85	-137.36	111.944	-28.157	119.138
25060.643	130.81	54.60	317.83	36.38	-13.23	-137.72	111.944	-28.157	119.138
25120.644	130.81	54.60	317.83	36.36	-13.61	-138.07	111.944	-28.157	119.138
25180.643	130.81	54.60	317.83	36.35	-13.99	-138.43	111.944	-28.157	119.138
25240.643	130.81	54.60	317.83	36.33	-14.37	-138.78	111.944	-28.157	119.138
25300.643	130.81	54.60	317.83	36.32	-14.75	-139.14	111.944	-28.157	119.138
25360.643	130.81	54.60	317.83	36.30	-15.13	-139.50	111.944	-28.157	119.138
25420.643	130.81	54.60	317.83	36.28	-15.51	-139.86	111.944	-28.157	119.138
25480.643	130.81	54.60	317.83	36.26	-15.89	-140.22	111.944	-28.157	119.138
25540.643	130.81	54.60	317.83	36.24	-16.27	-140.59	111.944	-28.157	119.138
25600.643	130.81	54.60	317.83	36.22	-16.66	-140.95	111.944	-28.157	119.138
25660.643	130.81	54.60	317.83	36.19	-17.04	-141.31	111.944	-28.157	119.138
25720.643	130.81	54.60	317.83	36.17	-17.43	-141.68	111.944	-28.157	119.138
25780.644	130.81	54.60	317.83	36.14	-17.81	-142.05	111.944	-28.157	119.138
25840.643	130.81	54.60	317.83	36.11	-18.20	-142.41	111.944	-28.157	119.138
25900.643	130.81	54.60	317.83	36.09	-18.59	-142.78	111.944	-28.157	119.138
25960.643	130.81	54.60	317.83	36.06	-18.97	-143.15	111.944	-28.157	119.138
26020.643	130.81	54.60	317.83	36.03	-19.36	-143.53	111.944	-28.157	119.138
26080.643	130.81	54.60	317.83	35.99	-19.75	-143.90	111.944	-28.157	119.138
26140.643	130.81	54.60	317.83	35.96	-20.14	-144.27	111.944	-28.157	119.138
26200.643	130.81	54.60	317.83	35.93	-20.53	-144.65	111.944	-28.157	119.138
26260.643	130.81	54.60	317.83	35.89	-20.92	-145.03	111.944	-28.157	119.138
26320.643	130.81	54.60	317.83	35.85	-21.32	-145.41	111.944	-28.157	119.138
26380.643	130.81	54.60	317.83	35.81	-21.71	-145.79	111.944	-28.157	119.138
26440.644	130.81	54.60	317.83	35.77	-22.10	-146.17	111.944	-28.157	119.138
26500.643	130.81	54.60	317.83	35.73	-22.50	-146.55	111.944	-28.157	119.138
26560.643	130.81	54.60	317.83	35.69	-22.89	-146.94	111.944	-28.157	119.138

TABLE IV
APOLLO MISSION AS-502
SPACECRAFT OPERATIONAL TRAJECTORY
-BODY ATTITUDES-

TIME SECONDS	SPACE FIXED PITCH DEG	SPACE FIXED YAW DEG	SPACE FIXED ROLL DEG	EARTH RELATIVE PITCH DEG	EARTH RELATIVE YAW DEG	EARTH RELATIVE ROLL DEG	IMU GIMBAL ANGLES INNER DEG	IMU GIMBAL ANGLES MIDDLE DEG	IMU GIMBAL ANGLES OUTER DEG
26620.643	130.81	54.60	317.83	35.64	-23.29	-147.32	111.944	-28.157	119.138
26680.643	130.81	54.60	317.83	35.60	-23.69	-147.71	111.944	-28.157	119.138
26740.643	130.81	54.60	317.83	35.55	-24.09	-148.10	111.944	-28.157	119.138
26800.643	130.81	54.60	317.83	35.50	-24.49	-148.50	111.944	-28.157	119.138
26860.643	130.81	54.60	317.83	35.45	-24.89	-148.89	111.944	-28.157	119.138
26920.643	130.81	54.60	317.83	35.40	-25.29	-149.28	111.944	-28.157	119.138
26980.643	130.81	54.60	317.83	35.34	-25.69	-149.68	111.944	-28.157	119.138
27040.643	130.81	54.60	317.83	35.29	-26.09	-150.08	111.944	-28.157	119.138
27100.644	130.81	54.60	317.83	35.23	-26.50	-150.48	111.944	-28.157	119.138
27160.643	130.81	54.60	317.83	35.17	-26.90	-150.88	111.944	-28.157	119.138
27220.643	130.81	54.60	317.83	35.11	-27.31	-151.29	111.944	-28.157	119.138
27280.643	130.81	54.60	317.83	35.05	-27.72	-151.70	111.944	-28.157	119.138
27340.643	130.81	54.60	317.83	34.98	-28.13	-152.11	111.944	-28.157	119.138
27400.643	130.81	54.60	317.83	34.92	-28.54	-152.52	111.944	-28.157	119.138
27460.643	130.81	54.60	317.83	34.85	-28.95	-152.93	111.944	-28.157	119.138
27520.643	130.81	54.60	317.83	34.78	-29.36	-153.35	111.944	-28.157	119.138
27580.643	130.81	54.60	317.83	34.71	-29.78	-153.76	111.944	-28.157	119.138
27640.643	130.81	54.60	317.83	34.63	-30.19	-154.18	111.944	-28.157	119.138
27700.643	130.81	54.60	317.83	34.56	-30.61	-154.61	111.944	-28.157	119.138
27760.644	130.81	54.60	317.83	34.48	-31.02	-155.03	111.944	-28.157	119.138
27820.643	130.81	54.60	317.83	34.40	-31.44	-155.46	111.944	-28.157	119.138
27880.643	130.81	54.60	317.83	34.32	-31.86	-155.89	111.944	-28.157	119.138
27940.643	130.81	54.60	317.83	34.24	-32.28	-156.32	111.944	-28.157	119.138
28000.643	130.81	54.60	317.83	34.15	-32.70	-156.76	111.944	-28.157	119.138
28060.643	130.81	54.60	317.83	34.06	-33.13	-157.20	111.944	-28.157	119.138
28120.643	130.81	54.60	317.83	33.97	-33.55	-157.64	111.944	-28.157	119.138
28180.643	130.81	54.60	317.83	33.88	-33.98	-158.08	111.944	-28.157	119.138
28240.643	130.81	54.60	317.83	33.78	-34.41	-158.53	111.944	-28.157	119.138
28300.643	130.81	54.60	317.83	33.68	-34.84	-158.98	111.944	-28.157	119.138
28360.643	130.81	54.60	317.83	33.58	-35.27	-159.43	111.944	-28.157	119.138
28420.644	130.81	54.60	317.83	33.48	-35.70	-159.89	111.944	-28.157	119.138
28480.643	130.81	54.60	317.83	33.37	-36.13	-160.35	111.944	-28.157	119.138
28540.643	130.81	54.60	317.83	33.26	-36.57	-160.81	111.944	-28.157	119.138
28600.643	130.81	54.60	317.83	33.15	-37.00	-161.27	111.944	-28.157	119.138
28660.643	130.81	54.60	317.83	33.04	-37.44	-161.74	111.944	-28.157	119.138
28720.643	130.81	54.60	317.83	32.92	-37.88	-162.21	111.944	-28.157	119.138
28780.643	130.81	54.60	317.83	32.80	-38.32	-162.69	111.944	-28.157	119.138
28840.643	130.81	54.60	317.83	32.68	-38.76	-163.17	111.944	-28.157	119.138
28900.643	130.81	54.60	317.83	32.55	-39.21	-163.65	111.944	-28.157	119.138
28960.643	130.81	54.60	317.83	32.42	-39.65	-164.14	111.944	-28.157	119.138
29020.643	130.81	54.60	317.83	32.29	-40.10	-164.63	111.944	-28.157	119.138
29080.644	130.81	54.60	317.83	32.15	-40.55	-165.13	111.944	-28.157	119.138

TABLE IV
APOLLO MISSION AS-502
SPACECRAFT OPERATIONAL TRAJECTORY
-BODY ATTITUDES-

TIME SECONDS	SPACE FIXED PITCH DEG	SPACE FIXED YAW DEG	SPACE FIXED ROLL DEG	EARTH RELATIVE PITCH DEG	EARTH RELATIVE YAW DEG	EARTH RELATIVE ROLL DEG	IMU GIMBAL ANGLES INNER DEG	IMU GIMBAL ANGLES MIDDLE DEG	IMU GIMBAL ANGLES OUTER DEG
29140.643	130.81	54.60	317.83	32.01	-41.00	-165.63	111.944	-28.157	119.138
29200.643	130.81	54.60	317.83	31.87	-41.45	-166.13	111.944	-28.157	119.138
29260.643	130.81	54.60	317.83	31.72	-41.90	-166.64	111.944	-28.157	119.138
29320.643	130.81	54.60	317.83	31.57	-42.36	-167.15	111.944	-28.157	119.138
29380.643	130.81	54.60	317.83	31.41	-42.82	-167.67	111.944	-28.157	119.138
29440.643	130.81	54.60	317.83	31.25	-43.28	-168.19	111.944	-28.157	119.138
29500.643	130.81	54.60	317.83	31.09	-43.74	-168.72	111.944	-28.157	119.138
29560.643	130.81	54.60	317.83	30.92	-44.20	-169.25	111.944	-28.157	119.138
29620.643	130.81	54.60	317.83	30.75	-44.66	-169.79	111.944	-28.157	119.138
29680.643	130.81	54.60	317.83	30.57	-45.13	-170.33	111.944	-28.157	119.138
29740.644	130.81	54.60	317.83	30.39	-45.59	-170.88	111.944	-28.157	119.138
29800.643	130.81	54.60	317.83	30.20	-46.06	-171.43	111.944	-28.157	119.138
29860.643	130.81	54.60	317.83	30.01	-46.53	-171.99	111.944	-28.157	119.138
29920.644	130.81	54.60	317.83	29.82	-47.00	-172.56	111.944	-28.157	119.138
29980.643	130.81	54.60	317.83	29.61	-47.48	-173.13	111.944	-28.157	119.138
30040.643	130.81	54.60	317.83	29.41	-47.95	-173.70	111.944	-28.157	119.138
30100.643	130.81	54.60	317.83	29.19	-48.43	-174.29	111.944	-28.157	119.138
30160.643	130.81	54.60	317.83	28.97	-48.90	-174.88	111.944	-28.157	119.138
30220.643	130.81	54.60	317.83	28.75	-49.38	-175.48	111.944	-28.157	119.138
30280.643	130.81	54.60	317.83	28.52	-49.86	-176.08	111.944	-28.157	119.138
30340.643	130.81	54.60	317.83	28.28	-50.35	-176.69	111.944	-28.157	119.138
30400.643	130.81	54.60	317.83	28.03	-50.83	-177.31	111.944	-28.157	119.138
30460.643	130.81	54.60	317.83	27.78	-51.32	-177.94	111.944	-28.157	119.138
30520.643	130.81	54.60	317.83	27.52	-51.80	-178.57	111.944	-28.157	119.138
30580.644	130.81	54.60	317.83	27.26	-52.29	-179.21	111.944	-28.157	119.138
30640.643	130.81	54.60	317.83	26.98	-52.78	-179.87	111.944	-28.157	119.138
30700.643	130.81	54.60	317.83	26.70	-53.27	179.47	111.944	-28.157	119.138
30760.643	130.81	54.60	317.83	26.41	-53.76	178.80	111.944	-28.157	119.138
30820.643	130.81	54.60	317.83	26.11	-54.25	178.12	111.944	-28.157	119.138
30880.643	130.81	54.60	317.83	25.80	-54.74	177.43	111.944	-28.157	119.138
30940.643	130.81	54.60	317.83	25.48	-55.24	176.74	111.944	-28.157	119.138
31000.643	130.81	54.60	317.83	25.15	-55.73	176.03	111.944	-28.157	119.138
31060.643	130.81	54.60	317.83	24.81	-56.22	175.30	111.944	-28.157	119.138
31120.643	130.81	54.60	317.83	24.46	-56.72	174.57	111.944	-28.157	119.138
31180.643	130.81	54.60	317.83	24.10	-57.21	173.83	111.944	-28.157	119.138
31240.644	130.81	54.60	317.83	23.72	-57.71	173.07	111.944	-28.157	119.138
31300.643	130.81	54.60	317.83	23.34	-58.20	172.30	111.944	-28.157	119.138
31360.643	130.81	54.60	317.83	22.94	-58.69	171.52	111.944	-28.157	119.138
31420.643	130.81	54.60	317.83	22.53	-59.18	170.72	111.944	-28.157	119.138
31480.643	130.81	54.60	317.83	22.10	-59.67	169.91	111.944	-28.157	119.138
31540.643	130.81	54.60	317.83	21.66	-60.16	169.08	111.944	-28.157	119.138
31600.643	130.81	54.60	317.83	21.20	-60.64	168.24	111.944	-28.157	119.138

TABLE IV
APOLLO MISSION AS-502
SPACECRAFT OPERATIONAL TRAJECTORY
-BODY ATTITUDES-

TIME SECONDS	SPACE FIXED PITCH DEG	SPACE FIXED YAW DEG	SPACE FIXED ROLL DEG	EARTH RELATIVE PITCH DEG	EARTH RELATIVE YAW DEG	EARTH RELATIVE ROLL DEG	IMU GIMBAL ANGLES INNER DEG	IMU GIMBAL ANGLES MIDDLE DEG	IMU GIMBAL ANGLES OUTER DEG
31660.643	130.81	54.60	317.83	20.73	-61.13	167.38	111.944	-28.157	119.138
31720.643	130.81	54.60	317.83	20.24	-61.60	166.50	111.944	-28.157	119.138
31780.643	130.81	54.60	317.83	19.73	-62.08	165.61	111.944	-28.157	119.138
31840.643	130.81	54.60	317.83	19.21	-62.55	164.69	111.944	-28.157	119.138
31900.644	130.81	54.60	317.83	18.66	-63.01	163.76	111.944	-28.157	119.138
31960.643	130.81	54.60	317.83	18.09	-63.47	162.80	111.944	-28.157	119.138
32020.643	130.81	54.60	317.83	17.50	-63.92	161.82	111.944	-28.157	119.138
32080.643	130.81	54.60	317.83	16.89	-64.36	160.82	111.944	-28.157	119.138
32140.643	130.81	54.60	317.83	16.25	-64.80	159.79	111.944	-28.157	119.138
32200.643	130.81	54.60	317.83	15.59	-65.22	158.74	111.944	-28.157	119.138
32260.643	130.81	54.60	317.83	14.90	-65.63	157.66	111.944	-28.157	119.138
32320.643	130.81	54.60	317.83	14.18	-66.02	156.55	111.944	-28.157	119.138
32380.643	130.81	54.60	317.83	13.43	-66.40	155.40	111.944	-28.157	119.138
32440.643	130.81	54.60	317.83	12.65	-66.76	154.23	111.944	-28.157	119.138
32500.643	130.81	54.60	317.83	11.83	-67.10	153.01	111.944	-28.157	119.138
32560.644	130.81	54.60	317.83	10.98	-67.41	151.76	111.944	-28.157	119.138
32620.643	130.81	54.60	317.83	10.09	-67.70	150.47	111.944	-28.157	119.138
32680.643	130.81	54.60	317.83	9.16	-67.95	149.14	111.944	-28.157	119.138
32740.643	130.81	54.60	317.83	8.19	-68.17	147.75	111.944	-28.157	119.138
32800.643	130.81	54.60	317.83	7.17	-68.35	146.32	111.944	-28.157	119.138
32860.643	130.81	54.60	317.83	6.10	-68.48	144.83	111.944	-28.157	119.138
32866.102	130.81	54.60	317.83	6.00	-68.49	144.69	111.944	-28.157	119.138
CSM ATTITUDE ORIENTATION FOR SECOND SPS BURN									
32866.102	130.81	54.60	317.83	6.00	-68.49	144.69	111.944	-28.157	119.138
32874.643	130.81	20.44	317.83	8.56	-102.85	140.04	115.354	2.851	134.057
32880.029	130.81	-1.10	317.83	8.60	-124.64	136.72	113.297	22.440	143.297
32888.643	96.35	-1.10	317.83	-26.12	-124.15	137.34	147.754	22.440	143.297
32898.643	56.35	-1.10	317.83	-66.43	-124.02	138.06	-172.246	22.440	143.297
32906.184	26.18	-1.10	317.83	-83.17	58.26	-43.67	-142.080	22.440	143.297
32914.643	26.18	-1.10	256.93	-82.89	58.24	-104.54	-107.726	33.134	74.336
32924.643	26.18	-1.10	184.93	-82.57	58.22	-176.51	-83.248	3.610	3.537
32925.220	26.18	-1.10	180.78	-82.55	58.22	179.34	-83.177	1.350	.052
COAST TO +X TRANSLATION									
32925.220	26.18	-1.10	180.78	-82.55	58.22	179.34	-83.177	1.350	.052

TABLE IV
APOLLO MISSION AS-502
SPACECRAFT OPERATIONAL TRAJECTORY
-BODY ATTITUDES-

TIME SECONDS	SPACE FIXED PITCH DEG	SPACE FIXED YAW DEG	SPACE FIXED ROLL DEG	EARTH RELATIVE PITCH DEG	EARTH RELATIVE YAW DEG	EARTH RELATIVE ROLL DEG	IMU GIMBAL ANGLES INNER DEG	IMU GIMBAL ANGLES MIDDLE DEG	IMU GIMBAL ANGLES OUTER DEG
32946.643	26.18	-1.10	180.78	-81.85	58.19	179.40	-83.177	1.350	.052
32971.643	26.18	-1.10	180.78	-81.01	58.18	179.46	-83.177	1.350	.052
32996.643	26.18	-1.10	180.78	-80.17	58.18	179.51	-83.177	1.350	.052
33021.643	26.18	-1.10	180.78	-79.30	58.19	179.56	-83.177	1.350	.052
33046.643	26.18	-1.10	180.78	-78.42	58.22	179.60	-83.177	1.350	.052
33071.643	26.18	-1.10	180.78	-77.52	58.26	179.63	-83.177	1.350	.052
33096.643	26.18	-1.10	180.78	-76.60	58.31	179.66	-83.177	1.350	.052
33121.643	26.18	-1.10	180.78	-75.67	58.38	179.69	-83.177	1.350	.052
33146.643	26.18	-1.10	180.78	-74.71	58.45	179.71	-83.177	1.350	.052
33171.643	26.18	-1.10	180.78	-73.74	58.54	179.73	-83.177	1.350	.052
33196.643	26.18	-1.10	180.78	-72.75	58.64	179.75	-83.177	1.350	.052
33221.643	26.18	-1.10	180.78	-71.74	58.75	179.77	-83.177	1.350	.052
33246.643	26.18	-1.10	180.78	-70.70	58.88	179.79	-83.177	1.350	.052
33271.643	26.18	-1.10	180.78	-69.65	59.01	179.80	-83.177	1.350	.052
33296.643	26.18	-1.10	180.78	-68.57	59.16	179.82	-83.177	1.350	.052
33321.643	26.18	-1.10	180.78	-67.47	59.33	179.83	-83.177	1.350	.052
33346.643	26.18	-1.10	180.78	-66.35	59.51	179.84	-83.177	1.350	.052
33371.643	26.18	-1.10	180.78	-65.20	59.71	179.85	-83.177	1.350	.052
33396.643	26.18	-1.10	180.78	-64.03	59.92	179.87	-83.177	1.350	.052
33421.643	26.18	-1.10	180.78	-62.84	60.15	179.88	-83.177	1.350	.052
33446.643	26.18	-1.10	180.78	-61.62	60.39	179.89	-83.177	1.350	.052
33471.643	26.18	-1.10	180.78	-60.37	60.66	179.90	-83.177	1.350	.052
33496.643	26.18	-1.10	180.78	-59.10	60.95	179.90	-83.177	1.350	.052
33521.643	26.18	-1.10	180.78	-57.79	61.26	179.91	-83.177	1.350	.052
33546.643	26.18	-1.10	180.78	-56.46	61.59	179.92	-83.177	1.350	.052
33571.643	26.18	-1.10	180.78	-55.11	61.94	179.93	-83.177	1.350	.052
33596.643	26.18	-1.10	180.78	-53.72	62.32	179.94	-83.177	1.350	.052
33621.643	26.18	-1.10	180.78	-52.30	62.72	179.95	-83.177	1.350	.052
33646.643	26.18	-1.10	180.78	-50.85	63.15	179.95	-83.177	1.350	.052
33671.643	26.18	-1.10	180.78	-49.37	63.61	179.96	-83.177	1.350	.052
33696.643	26.18	-1.10	180.78	-47.86	64.10	179.97	-83.177	1.350	.052
33703.841	26.18	-1.10	180.78	-47.42	64.25	179.97	-83.177	1.350	.052
				+X TRANSLATION					
33703.841	26.18	-1.10	-179.22	-47.42	64.25	179.97	-83.177	1.350	.052
33726.643	26.18	-1.10	-179.22	-46.00	64.73	179.97	-83.177	1.350	.052

TABLE IV
APOLLO MISSION AS-502
SPACECRAFT OPERATIONAL TRAJECTORY
-BODY ATTITUDES-

TIME SECONDS	SPACE FIXED PITCH DEG	SPACE FIXED YAW DEG	SPACE FIXED ROLL DEG	EARTH RELATIVE PITCH DEG	EARTH RELATIVE YAW DEG	EARTH RELATIVE ROLL DEG	IMU GIMBAL ANGLES INNER DEG	IMU GIMBAL ANGLES MIDDLE DEG	IMU GIMBAL ANGLES OUTER DEG
33733.840	26.18	-1.10	-179.22	-45.55	64.89	179.98	-83.177	1.350	.052
				SECOND SPS IGNITION					
33733.840	26.18	-1.10	-179.22	-45.55	64.89	179.98	-83.177	1.349	.051
33734.215	26.18	-1.10	-179.22	-45.53	64.90	179.98	-83.177	1.349	.051
				SECOND SPS BURN					
33734.215	26.18	-1.10	-179.22	-45.53	64.90	179.98	-83.177	1.349	.051
33735.234	25.18	-1.08	-179.23	-44.49	64.87	-179.98	-82.176	1.323	.057
33737.234	27.87	-1.00	-179.18	-47.05	64.85	-179.94	-84.863	1.285	.138
33739.234	28.27	-.99	-179.18	-47.33	64.89	-179.93	-85.263	1.279	.150
33741.233	28.31	-.99	-179.18	-47.25	64.93	-179.93	-85.307	1.277	.152
33743.234	28.30	-.99	-179.18	-47.11	64.98	-179.93	-85.299	1.277	.152
33745.234	28.29	-.99	-179.18	-46.96	65.02	-179.93	-85.283	1.277	.152
33747.233	28.27	-.99	-179.18	-46.82	65.07	-179.93	-85.265	1.276	.151
33749.234	28.25	-.99	-179.18	-46.67	65.11	-179.93	-85.248	1.276	.151
33751.234	28.24	-.99	-179.18	-46.53	65.16	-179.92	-85.231	1.276	.151
33753.234	28.22	-.99	-179.18	-46.38	65.21	-179.92	-85.214	1.275	.151
33755.234	28.20	-.99	-179.18	-46.23	65.25	-179.92	-85.197	1.275	.151
33757.234	28.19	-.99	-179.18	-46.09	65.30	-179.92	-85.181	1.275	.151
33759.234	28.17	-.99	-179.18	-45.94	65.35	-179.92	-85.164	1.274	.151
33761.234	28.15	-.99	-179.18	-45.79	65.39	-179.92	-85.148	1.274	.151
33763.234	28.14	-.99	-179.18	-45.65	65.44	-179.92	-85.132	1.273	.150
33765.234	28.12	-.99	-179.18	-45.50	65.49	-179.92	-85.115	1.273	.150
33767.234	28.11	-.98	-179.18	-45.35	65.54	-179.92	-85.100	1.273	.150
33769.234	28.09	-.98	-179.18	-45.21	65.59	-179.92	-85.085	1.272	.150
33771.234	28.07	-.98	-179.18	-45.06	65.64	-179.92	-85.069	1.272	.150
33773.234	28.06	-.98	-179.18	-44.91	65.68	-179.92	-85.054	1.271	.150
33775.233	28.04	-.98	-179.18	-44.76	65.73	-179.92	-85.039	1.271	.150
33777.234	28.03	-.98	-179.18	-44.61	65.78	-179.92	-85.025	1.270	.150
33779.234	28.02	-.98	-179.18	-44.47	65.83	-179.92	-85.010	1.270	.150
33781.234	28.00	-.98	-179.18	-44.32	65.88	-179.92	-84.996	1.269	.150
33783.234	27.99	-.98	-179.18	-44.17	65.93	-179.92	-84.983	1.269	.150
33785.234	27.97	-.98	-179.18	-44.02	65.99	-179.91	-84.968	1.268	.150
33787.234	27.96	-.98	-179.18	-43.87	66.04	-179.91	-84.955	1.268	.150
33789.234	27.95	-.98	-179.18	-43.72	66.09	-179.91	-84.941	1.267	.150

TABLE IV
APOLLO MISSION AS-502
SPACECRAFT OPERATIONAL TRAJECTORY
-BODY ATTITUDES-

TIME SECONDS	SPACE FIXED PITCH DEG	SPACE FIXED YAW DEG	SPACE FIXED ROLL DEG	EARTH RELATIVE PITCH DEG	EARTH RELATIVE YAW DEG	EARTH RELATIVE ROLL DEG	IMU GIMBAL ANGLES INNER DEG	IMU GIMBAL ANGLES MIDDLE DEG	IMU GIMBAL ANGLES OUTER DEG
33791.234	27.93	-.98	-179.18	-43.57	66.14	-179.91	-84.928	1.267	.150
33793.234	27.92	-.98	-179.18	-43.42	66.19	-179.91	-84.915	1.266	.150
33795.234	27.91	-.98	-179.18	-43.27	66.24	-179.91	-84.901	1.266	.150
33797.234	27.89	-.98	-179.18	-43.12	66.30	-179.91	-84.888	1.265	.150
33799.234	27.88	-.98	-179.18	-42.97	66.35	-179.91	-84.877	1.264	.151
33801.234	27.87	-.98	-179.19	-42.82	66.40	-179.91	-84.864	1.264	.151
33803.234	27.86	-.98	-179.19	-42.67	66.46	-179.91	-84.852	1.263	.151
33805.234	27.85	-.98	-179.19	-42.52	66.51	-179.91	-84.840	1.263	.151
33807.234	27.83	-.98	-179.19	-42.37	66.56	-179.91	-84.828	1.262	.151
33809.233	27.82	-.98	-179.19	-42.22	66.62	-179.91	-84.817	1.262	.151
33811.234	27.81	-.97	-179.19	-42.07	66.67	-179.91	-84.806	1.261	.151
33813.234	27.80	-.97	-179.19	-41.92	66.73	-179.91	-84.795	1.260	.152
33815.234	27.79	-.97	-179.19	-41.77	66.78	-179.90	-84.784	1.260	.152
33817.234	27.78	-.97	-179.19	-41.61	66.84	-179.90	-84.773	1.259	.152
33819.234	27.77	-.97	-179.19	-41.46	66.89	-179.90	-84.762	1.258	.152
33821.234	27.76	-.97	-179.19	-41.31	66.95	-179.90	-84.752	1.257	.153
33823.234	27.75	-.97	-179.19	-41.16	67.01	-179.90	-84.742	1.257	.153
33825.234	27.74	-.97	-179.19	-41.01	67.06	-179.90	-84.732	1.256	.153
33827.234	27.73	-.97	-179.19	-40.85	67.12	-179.90	-84.722	1.255	.153
33829.234	27.72	-.97	-179.19	-40.70	67.18	-179.90	-84.713	1.254	.154
33831.234	27.71	-.97	-179.19	-40.55	67.24	-179.90	-84.703	1.254	.154
33833.234	27.70	-.97	-179.19	-40.39	67.29	-179.90	-84.695	1.252	.154
33835.234	27.69	-.96	-179.19	-40.24	67.35	-179.90	-84.685	1.252	.155
33837.233	27.68	-.96	-179.19	-40.08	67.41	-179.90	-84.676	1.251	.155
33839.234	27.67	-.96	-179.19	-39.93	67.47	-179.89	-84.668	1.250	.156
33841.234	27.66	-.96	-179.19	-39.78	67.53	-179.89	-84.660	1.249	.156
33843.234	27.66	-.96	-179.19	-39.62	67.59	-179.89	-84.651	1.248	.156
33845.234	27.65	-.96	-179.19	-39.47	67.65	-179.89	-84.643	1.247	.157
33847.234	27.64	-.96	-179.19	-39.31	67.71	-179.89	-84.635	1.246	.157
33849.234	27.63	-.96	-179.19	-39.16	67.77	-179.89	-84.628	1.245	.158
33851.234	27.63	-.96	-179.19	-39.00	67.83	-179.89	-84.620	1.244	.159
33853.234	27.62	-.96	-179.19	-38.84	67.89	-179.89	-84.613	1.243	.159
33855.234	27.61	-.95	-179.19	-38.69	67.96	-179.89	-84.606	1.241	.160
33857.234	27.60	-.95	-179.19	-38.53	68.02	-179.89	-84.599	1.240	.160
33859.234	27.60	-.95	-179.19	-38.38	68.08	-179.88	-84.593	1.239	.161
33861.234	27.59	-.95	-179.19	-38.22	68.14	-179.88	-84.586	1.238	.162
33863.234	27.58	-.95	-179.19	-38.06	68.21	-179.88	-84.579	1.236	.163
33865.234	27.58	-.95	-179.19	-37.90	68.27	-179.88	-84.573	1.235	.163
33867.234	27.57	-.94	-179.19	-37.75	68.33	-179.88	-84.568	1.233	.164
33869.234	27.57	-.94	-179.19	-37.59	68.40	-179.88	-84.562	1.232	.165
33871.233	27.56	-.94	-179.19	-37.43	68.46	-179.88	-84.556	1.230	.166
33873.234	27.55	-.94	-179.19	-37.27	68.53	-179.88	-84.550	1.229	.167

TABLE IV
APOLLO MISSION AS-502
SPACECRAFT OPERATIONAL TRAJECTORY
-BODY ATTITUDES-

TIME SECONDS	SPACE FIXED PITCH DEG	SPACE FIXED YAW DEG	SPACE FIXED ROLL DEG	EARTH RELATIVE PITCH DEG	EARTH RELATIVE YAW DEG	EARTH RELATIVE ROLL DEG	IMU GIMBAL ANGLES INNER DEG	IMU GIMBAL ANGLES MIDDLE DEG	IMU GIMBAL ANGLES OUTER DEG
33875.234	27.55	-.94	-179.19	-37.11	68.59	-179.87	-84.545	1.227	.168
33877.234	27.54	-.93	-179.19	-36.95	68.66	-179.87	-84.540	1.225	.169
33879.234	27.54	-.93	-179.19	-36.79	68.72	-179.87	-84.535	1.223	.170
33881.234	27.53	-.93	-179.19	-36.63	68.79	-179.87	-84.530	1.221	.171
33883.234	27.53	-.93	-179.19	-36.47	68.85	-179.87	-84.525	1.219	.172
33885.234	27.53	-.93	-179.19	-36.31	68.92	-179.87	-84.520	1.217	.174
33887.234	27.52	-.92	-179.19	-36.15	68.99	-179.86	-84.516	1.215	.175
33889.234	27.52	-.92	-179.19	-35.99	69.05	-179.86	-84.512	1.212	.177
33891.234	27.51	-.92	-179.19	-35.83	69.12	-179.86	-84.507	1.210	.178
33893.234	27.51	-.91	-179.19	-35.67	69.19	-179.86	-84.504	1.207	.180
33895.234	27.50	-.91	-179.19	-35.50	69.26	-179.86	-84.499	1.204	.182
33897.234	27.50	-.91	-179.19	-35.34	69.32	-179.85	-84.496	1.200	.184
33899.233	27.50	-.90	-179.19	-35.18	69.39	-179.85	-84.492	1.197	.186
33901.234	27.49	-.90	-179.19	-35.01	69.46	-179.85	-84.488	1.193	.189
33903.234	27.49	-.89	-179.19	-34.85	69.53	-179.84	-84.485	1.189	.191
33905.233	27.49	-.89	-179.19	-34.69	69.59	-179.84	-84.481	1.184	.194
33907.234	27.48	-.88	-179.19	-34.52	69.66	-179.84	-84.477	1.178	.198
33909.234	27.48	-.87	-179.19	-34.36	69.73	-179.83	-84.473	1.172	.202
33911.234	27.47	-.86	-179.19	-34.19	69.79	-179.83	-84.469	1.165	.206
33913.234	27.47	-.85	-179.19	-34.02	69.86	-179.82	-84.465	1.157	.212
33915.234	27.46	-.84	-179.19	-33.85	69.92	-179.81	-84.460	1.146	.218
33917.234	27.46	-.83	-179.19	-33.68	69.97	-179.80	-84.454	1.132	.227
33919.234	27.45	-.80	-179.19	-33.51	70.02	-179.79	-84.446	1.112	.240
33921.234	27.43	-.76	-179.19	-33.33	70.05	-179.76	-84.432	1.074	.265
33922.325	28.35	-.70	-179.21	-34.17	70.04	-179.76	-85.349	1.023	.281
SECOND SPS SHUTDOWN									
33922.325	28.35	-.70	-179.21	-34.14	70.04	-179.76	-85.349	1.023	.281
33923.012	28.35	-.70	-179.21	-34.08	70.07	-179.76	-85.349	1.023	.281
HOLD INERTIAL ATTITUDE									
33923.012	28.35	-.70	-179.21	-34.08	70.07	-179.75	-85.349	1.023	.281
33932.023	28.35	-.70	-179.21	-33.33	70.42	-179.76	-85.349	1.023	.281
33942.023	28.35	-.70	-179.21	-32.49	70.83	-179.76	-85.349	1.023	.281
33952.023	28.35	-.70	-179.21	-31.65	71.25	-179.77	-85.349	1.023	.281

TABLE IV
APOLLO MISSION AS-502
SPACECRAFT OPERATIONAL TRAJECTORY
-BODY ATTITUDES-

TIME SECONDS	SPACE FIXED PITCH DEG	SPACE FIXED YAW DEG	SPACE FIXED ROLL DEG	EARTH RELATIVE PITCH DEG	EARTH RELATIVE YAW DEG	EARTH RELATIVE ROLL DEG	IMU GIMBAL ANGLES INNER DEG	IMU GIMBAL ANGLES MIDDLE DEG	IMU GIMBAL ANGLES OUTER DEG
33959.022	28.35	-.70	-179.21	-31.05	71.55	-179.77	-85.349	1.023	.281
CSM ATTITUDE ORIENTATION FOR CM/SM SEPERATION									
33959.022	28.35	-.70	-179.21	-31.05	71.55	-179.77	-85.349	1.023	.281
33959.109	28.35	-1.05	-179.21	-31.04	71.95	-179.98	-85.345	1.314	.092
33969.109	348.35	-1.05	-179.21	9.81	72.13	-179.17	-45.345	1.314	.092
33976.606	318.37	-1.05	-179.21	40.44	72.67	-178.51	-15.359	1.314	.092
33976.696	318.37	-1.05	-179.86	40.45	72.67	-179.17	-15.360	.956	-.459
33976.797	318.37	-1.05	-180.59	40.46	72.68	-179.89	-15.365	.564	-1.064
33976.814	318.37	-1.05	-180.71	40.46	72.68	179.99	-15.366	.497	-1.167
COAST TO CM/SM SEPARATION									
33976.814	318.37	-1.05	-180.71	40.46	72.68	179.99	-15.366	.497	-1.167
33981.816	318.37	-1.05	-180.71	40.89	72.90	179.99	-15.366	.497	-1.167
33991.817	318.37	-1.05	-180.71	41.77	73.35	179.99	-15.366	.497	-1.167
34001.817	318.37	-1.05	-180.71	42.65	73.81	179.99	-15.366	.497	-1.167
34011.817	318.37	-1.05	-180.71	43.54	74.28	179.99	-15.366	.497	-1.167
34021.817	318.37	-1.05	-180.71	44.43	74.76	179.99	-15.366	.497	-1.167
34031.817	318.37	-1.05	-180.71	45.34	75.26	179.99	-15.366	.497	-1.167
34041.817	318.37	-1.05	-180.71	46.24	75.75	180.00	-15.366	.497	-1.167
34051.817	318.37	-1.05	-180.71	47.16	76.24	180.00	-15.366	.497	-1.167
34061.817	318.37	-1.05	-180.71	48.08	76.78	180.00	-15.366	.497	-1.167
34071.817	318.37	-1.05	-180.71	49.00	77.31	180.00	-15.366	.497	-1.167
34073.976	318.37	-1.05	-180.71	49.21	77.42	-180.00	-15.366	.497	-1.167
CM/SM SEPARATION AND FIVE SECOND COAST									
34073.976	318.37	-1.05	179.29	49.22	77.42	-180.00	-15.366	.497	-1.167
34078.976	318.37	-1.05	179.29	49.46	77.69	-180.00	-15.366	.497	-1.167

TABLE IV
APOLLO MISSION AS-502
SPACECRAFT OPERATIONAL TRAJECTORY
-BODY ATTITUDES-

TIME SECONDS	SPACE FIXED PITCH DEG	SPACE FIXED YAW DEG	SPACE FIXED ROLL DEG	EARTH RELATIVE PITCH DEG	EARTH RELATIVE YAW DEG	EARTH RELATIVE ROLL DEG	IMU GIMBAL ANGLES INNER DEG	IMU GIMBAL ANGLES MIDDLE DEG	IMU GIMBAL ANGLES OUTER DEG
				CM ATTITUDE ORIENTATION FOR ENTRY					
34078.976	318.37	-1.05	179.29	49.46	77.69	-180.00	-15.366	.497	-1.167
34079.367	318.37	.51	179.29	49.49	75.30	178.17	-15.366	-.812	-.311
34088.408	282.42	.51	179.29	86.40	62.94	165.28	20.585	-.812	-.311
34098.408	242.42	.51	179.29	52.54	-101.12	.59	60.585	-.812	-.311
34102.683	225.32	.51	179.29	35.04	-101.32	.13	77.685	-.812	-.311
34102.692	225.32	.51	179.16	35.04	-101.32	-.01	77.685	-.888	-.428
34102.694	225.32	.51	179.14	35.04	-101.32	-.03	77.684	-.900	-.446
				COAST TO ENTRY					
34102.694	225.32	.51	179.14	35.04	-101.32	-.03	77.684	-.900	-.446
34111.694	225.32	.51	179.14	34.19	-100.82	-.03	77.684	-.900	-.446
34121.694	225.32	.51	179.14	33.23	-100.25	-.02	77.684	-.900	-.446
34131.695	225.32	.51	179.14	32.28	-99.67	-.02	77.684	-.900	-.446
34141.694	225.32	.51	179.14	31.31	-99.08	-.01	77.684	-.900	-.446
34151.694	225.32	.51	179.14	30.35	-98.49	-.01	77.684	-.900	-.446
34161.694	225.32	.51	179.14	29.37	-97.89	-.00	77.684	-.900	-.446
34163.594	225.32	.51	179.14	29.19	-97.78	-.00	77.684	-.900	-.446
				ENTRY					

TABLE V
APOLLO MISSION AS-502
SPACECRAFT OPERATIONAL TRAJECTORY
-AERODYNAMIC AND SUN ATTITUDES-

TIME DAY	HR	MIN	SEC	AERODYNAMIC ANGLE OF ATTACK DEGREES	AERODYNAMIC ANGLE OF SIDESLIP DEGREES	SUN LOOK ANGLES THETA DEGREES	SUN LOOK ANGLES PHI DEGREES
				LIFTOFF CONDITIONS			
0.	0.	0.	.000	00.00	00.00	70.36	348.76
				TRANSLUNAR INJECTION			
0.	3.	15.	46.739	-.09	-1.89	77.72	208.14
0.	3.	15.	48.739	-.17	-1.89	77.72	208.14
0.	3.	15.	50.739	-.26	-1.90	77.72	208.14
0.	3.	15.	52.739	-.35	-1.90	77.72	208.14
0.	3.	15.	54.739	-.44	-1.90	77.72	208.14
0.	3.	15.	56.739	-.53	-1.90	77.72	208.14
0.	3.	15.	56.939	-.54	-1.90	77.72	208.14
				BEGIN ORIENTATION TO S-IVB/CSM SEPARATION ATTITUDE			
0.	3.	15.	56.939	-.54	-1.90	77.72	208.14
0.	3.	15.	57.098	-.77	-2.14	77.63	207.98
0.	3.	16.	2.139	-7.92	-3.19	71.26	201.81
0.	3.	16.	12.139	-20.87	-10.37	58.92	191.10
0.	3.	16.	22.139	-31.07	-23.06	47.28	183.35
0.	3.	16.	32.139	-38.42	-39.51	37.10	180.57
0.	3.	16.	42.139	-43.65	-58.27	29.98	185.56
0.	3.	16.	52.139	-49.87	-78.26	28.36	197.38
0.	3.	17.	2.139	144.87	-81.08	33.07	206.44
0.	3.	17.	12.139	140.68	-60.89	42.02	207.16
0.	3.	17.	22.139	143.49	-41.63	53.07	201.52
0.	3.	17.	32.139	149.52	-24.33	65.14	192.10
0.	3.	17.	42.139	158.85	-10.37	77.69	180.31
0.	3.	17.	52.139	171.48	-1.52	90.46	166.82
0.	3.	17.	56.184	177.30	.21	95.62	160.94
0.	3.	17.	58.139	177.40	.35	95.62	158.13
0.	3.	18.	.139	177.50	.48	95.62	155.25

TABLE V
APOLLO MISSION AS-502
SPACECRAFT OPERATIONAL TRAJECTORY
-AERODYNAMIC AND SUN ATTITUDES-

TIME DAY	HR	MIN	SEC	AERODYNAMIC ANGLE OF ATTACK DEGREES	AERODYNAMIC ANGLE OF SIDESLIP DEGREES	SUN LOOK ANGLES THETA DEGREES	SUN LOOK ANGLES PHI DEGREES
0.	3.	18.	1.058	177.55	.54	95.62	153.92
END ORIENTATION TO S-IVB/CSM SEPARATION ATTITUDE							
0.	3.	18.	1.058	177.55	.54	95.62	153.92
0.	3.	18.	2.139	177.59	.55	95.62	153.92
0.	3.	18.	4.139	177.68	.55	95.62	153.92
0.	3.	18.	6.139	177.76	.56	95.62	153.92
0.	3.	18.	8.139	177.84	.56	95.62	153.92
0.	3.	18.	10.139	177.92	.56	95.62	153.92
0.	3.	18.	12.139	178.00	.57	95.62	153.92
0.	3.	18.	14.139	178.08	.57	95.62	153.92
0.	3.	18.	16.139	178.16	.58	95.62	153.92
0.	3.	18.	18.139	178.24	.58	95.62	153.92
0.	3.	18.	20.139	178.33	.59	95.62	153.92
0.	3.	18.	22.139	178.41	.59	95.62	153.92
0.	3.	18.	24.139	178.49	.60	95.62	153.92
0.	3.	18.	26.139	178.57	.60	95.62	153.92
0.	3.	18.	28.139	178.65	.60	95.62	153.92
0.	3.	18.	30.139	178.73	.61	95.62	153.92
0.	3.	18.	32.139	178.81	.61	95.62	153.92
0.	3.	18.	34.139	178.89	.62	95.62	153.92
0.	3.	18.	36.139	178.97	.62	95.62	153.92
0.	3.	18.	36.939	179.00	.62	95.62	153.92
START RCS THRUST FOR S-IVB/CSM SEPARATION							
0.	3.	18.	36.939	179.00	.62	95.62	153.92
0.	3.	18.	37.938	179.04	.63	95.62	153.92
0.	3.	18.	38.639	179.07	.63	95.62	153.92
SEPARATION AND 8.3 SECS OF +X TRANSLATION							
0.	3.	18.	38.639	179.07	.63	95.62	153.92

TABLE V
APOLLO MISSION AS-502
SPACECRAFT OPERATIONAL TRAJECTORY
-AERODYNAMIC AND SUN ATTITUDES-

TIME DAY HR MIN SEC	AERODYNAMIC ANGLE OF ATTACK DEGREES	AERODYNAMIC ANGLE OF SIDESLIP DEGREES	SUN LOOK ANGLES THETA DEGREES	SUN LOOK ANGLES PHI DEGREES
0. 3. 18. 46.939	179.40	.65	95.62	153.92
COAST FIVE SECONDS				
0. 3. 18. 46.939	179.40	.65	95.62	153.92
0. 3. 18. 51.939	179.59	.66	95.62	153.92
ORIENTATION TO FIRST SPS IGNITION ATTITUDE				
0. 3. 18. 51.939	179.59	.66	95.62	153.92
0. 3. 18. 52.827	-176.82	.74	98.77	153.77
COAST TO FIRST SPS BURN				
0. 3. 18. 52.827	-176.82	.74	98.77	153.77
0. 3. 18. 53.239	-176.81	.74	98.77	153.77
0. 3. 19. 3.239	-176.42	.76	98.77	153.77
0. 3. 19. 13.239	-176.03	.78	98.77	153.77
0. 3. 19. 23.239	-175.64	.81	98.77	153.77
0. 3. 19. 33.239	-175.26	.83	98.77	153.77
0. 3. 19. 43.239	-174.89	.85	98.77	153.77
0. 3. 19. 53.239	-174.51	.88	98.77	153.77
0. 3. 20. 3.239	-174.14	.90	98.77	153.77
0. 3. 20. 13.239	-173.77	.92	98.77	153.77
0. 3. 20. 16.939	-173.64	.93	98.77	153.77
FIRST SPS IGNITION				
0. 3. 20. 16.939	-173.64	.93	98.77	153.77

Aerodynamic and sun attitudes

TABLE V
APOLLO MISSION AS-502
SPACECRAFT OPERATIONAL TRAJECTORY
-AERODYNAMIC AND SUN ATTITUDES-

TIME DAY	HR	MIN	SEC	AERODYNAMIC ANGLE OF ATTACK DEGREES	AERODYNAMIC ANGLE OF SIDESLIP DEGREES	SUN LOOK ANGLES THETA DEGREES	SUN LOOK ANGLES PHI DEGREES
0.	3.	20.	17.314	-173.63	.93	98.77	153.77
				FIRST SPS BURN			
0.	3.	20.	17.314	-173.63	.93	98.77	153.77
0.	3.	20.	18.333	-175.28	1.19	97.14	153.76
0.	3.	20.	20.333	-173.73	1.37	98.38	153.67
0.	3.	20.	22.333	-173.51	1.39	98.50	153.66
0.	3.	20.	24.333	-173.47	1.40	98.47	153.66
0.	3.	20.	26.333	-173.44	1.41	98.42	153.66
0.	3.	20.	28.333	-173.42	1.41	98.37	153.67
0.	3.	20.	30.333	-173.40	1.42	98.32	153.67
0.	3.	20.	32.333	-173.38	1.42	98.27	153.67
0.	3.	20.	34.333	-173.36	1.43	98.22	153.68
0.	3.	20.	36.333	-173.33	1.43	98.17	153.68
0.	3.	20.	38.333	-173.31	1.44	98.13	153.68
0.	3.	20.	40.333	-173.28	1.44	98.08	153.69
0.	3.	20.	42.333	-173.26	1.45	98.03	153.69
0.	3.	20.	44.333	-173.23	1.45	97.99	153.69
0.	3.	20.	46.333	-173.20	1.46	97.94	153.70
0.	3.	20.	48.333	-173.17	1.46	97.90	153.70
0.	3.	20.	50.333	-173.14	1.47	97.86	153.70
0.	3.	20.	52.333	-173.12	1.47	97.82	153.71
0.	3.	20.	54.333	-173.09	1.48	97.77	153.71
0.	3.	20.	56.333	-173.05	1.48	97.73	153.71
0.	3.	20.	58.333	-173.02	1.49	97.69	153.71
0.	3.	21.	.333	-172.99	1.50	97.65	153.72
0.	3.	21.	2.333	-172.96	1.50	97.61	153.72
0.	3.	21.	4.333	-172.92	1.51	97.58	153.72
0.	3.	21.	6.333	-172.89	1.51	97.54	153.72
0.	3.	21.	8.333	-172.85	1.52	97.50	153.73
0.	3.	21.	10.333	-172.82	1.52	97.46	153.73
0.	3.	21.	12.333	-172.78	1.53	97.43	153.73
0.	3.	21.	14.333	-172.74	1.53	97.39	153.73
0.	3.	21.	16.333	-172.71	1.54	97.36	153.74
0.	3.	21.	18.333	-172.67	1.54	97.32	153.74
0.	3.	21.	20.333	-172.63	1.55	97.29	153.74
0.	3.	21.	22.333	-172.59	1.55	97.26	153.74
0.	3.	21.	24.333	-172.55	1.56	97.22	153.74
0.	3.	21.	26.333	-172.51	1.56	97.19	153.75

TABLE V
APOLLO MISSION AS-502
SPACECRAFT OPERATIONAL TRAJECTORY
-AERODYNAMIC AND SUN ATTITUDES-

TIME				AERODYNAMIC		SUN LOOK ANGLES	
DAY	HR	MIN	SEC	ANGLE OF ATTACK DEGREES	ANGLE OF SIDESLIP DEGREES	THETA DEGREES	PHI DEGREES
0.	3.	21.	28.333	-172.47	1.57	97.16	153.75
0.	3.	21.	30.333	-172.43	1.58	97.13	153.75
0.	3.	21.	32.333	-172.38	1.58	97.10	153.75
0.	3.	21.	34.333	-172.34	1.59	97.07	153.75
0.	3.	21.	36.333	-172.30	1.59	97.04	153.76
0.	3.	21.	38.333	-172.25	1.60	97.01	153.76
0.	3.	21.	40.333	-172.21	1.60	96.98	153.76
0.	3.	21.	42.333	-172.16	1.61	96.95	153.76
0.	3.	21.	44.333	-172.12	1.61	96.93	153.76
0.	3.	21.	46.333	-172.07	1.62	96.90	153.77
0.	3.	21.	48.333	-172.02	1.62	96.87	153.77
0.	3.	21.	50.333	-171.98	1.63	96.85	153.77
0.	3.	21.	52.333	-171.93	1.64	96.82	153.77
0.	3.	21.	54.333	-171.88	1.64	96.80	153.77
0.	3.	21.	56.333	-171.83	1.65	96.77	153.77
0.	3.	21.	58.333	-171.78	1.65	96.75	153.77
0.	3.	22.	.333	-171.73	1.66	96.73	153.78
0.	3.	22.	2.333	-171.68	1.66	96.70	153.78
0.	3.	22.	4.333	-171.63	1.67	96.68	153.78
0.	3.	22.	6.333	-171.58	1.67	96.66	153.78
0.	3.	22.	8.333	-171.53	1.68	96.63	153.78
0.	3.	22.	10.333	-171.47	1.68	96.61	153.78
0.	3.	22.	12.333	-171.42	1.69	96.59	153.78
0.	3.	22.	14.333	-171.37	1.70	96.57	153.79
0.	3.	22.	16.333	-171.31	1.70	96.55	153.79
0.	3.	22.	18.333	-171.26	1.71	96.53	153.79
0.	3.	22.	20.333	-171.20	1.71	96.51	153.79
0.	3.	22.	22.333	-171.15	1.72	96.49	153.79
0.	3.	22.	24.333	-171.09	1.72	96.47	153.79
0.	3.	22.	26.333	-171.03	1.73	96.46	153.79
0.	3.	22.	28.333	-170.98	1.74	96.44	153.79
0.	3.	22.	30.333	-170.92	1.74	96.42	153.79
0.	3.	22.	32.333	-170.86	1.75	96.40	153.80
0.	3.	22.	34.333	-170.80	1.75	96.39	153.80
0.	3.	22.	36.333	-170.75	1.76	96.37	153.80
0.	3.	22.	38.333	-170.69	1.76	96.35	153.80
0.	3.	22.	40.333	-170.63	1.77	96.34	153.80
0.	3.	22.	42.333	-170.57	1.78	96.32	153.80
0.	3.	22.	44.333	-170.51	1.78	96.31	153.80
0.	3.	22.	46.333	-170.45	1.79	96.29	153.80
0.	3.	22.	48.333	-170.39	1.79	96.28	153.80
0.	3.	22.	50.333	-170.32	1.80	96.26	153.80

TABLE V
APOLLO MISSION AS-502
SPACECRAFT OPERATIONAL TRAJECTORY
-AERODYNAMIC AND SUN ATTITUDES-

TIME				AERODYNAMIC		SUN LOOK ANGLES	
DAY	HR	MIN	SEC	ANGLE OF ATTACK DEGREES	ANGLE OF SIDESLIP DEGREES	THETA DEGREES	PHI DEGREES
0.	3.	22.	52.333	-170.26	1.81	96.25	153.80
0.	3.	22.	54.333	-170.20	1.81	96.23	153.81
0.	3.	22.	56.333	-170.14	1.82	96.22	153.81
0.	3.	22.	58.333	-170.07	1.82	96.21	153.81
0.	3.	23.	.333	-170.01	1.83	96.20	153.81
0.	3.	23.	2.333	-169.95	1.83	96.18	153.81
0.	3.	23.	4.333	-169.88	1.84	96.17	153.81
0.	3.	23.	6.333	-169.82	1.85	96.16	153.81
0.	3.	23.	8.333	-169.75	1.85	96.15	153.81
0.	3.	23.	10.333	-169.69	1.86	96.14	153.81
0.	3.	23.	12.333	-169.62	1.86	96.12	153.81
0.	3.	23.	14.333	-169.55	1.87	96.11	153.81
0.	3.	23.	16.333	-169.49	1.88	96.10	153.81
0.	3.	23.	18.333	-169.42	1.88	96.09	153.81
0.	3.	23.	20.333	-169.35	1.89	96.08	153.81
0.	3.	23.	22.333	-169.28	1.89	96.07	153.81
0.	3.	23.	24.333	-169.22	1.90	96.06	153.82
0.	3.	23.	26.333	-169.15	1.91	96.05	153.82
0.	3.	23.	28.333	-169.08	1.91	96.04	153.82
0.	3.	23.	30.333	-169.01	1.92	96.04	153.82
0.	3.	23.	32.333	-168.94	1.92	96.03	153.82
0.	3.	23.	34.333	-168.87	1.93	96.02	153.82
0.	3.	23.	36.333	-168.80	1.94	96.01	153.82
0.	3.	23.	38.333	-168.73	1.94	96.00	153.82
0.	3.	23.	40.333	-168.66	1.95	95.99	153.82
0.	3.	23.	42.333	-168.59	1.95	95.98	153.82
0.	3.	23.	44.333	-168.52	1.96	95.98	153.82
0.	3.	23.	46.333	-168.45	1.97	95.97	153.82
0.	3.	23.	48.333	-168.37	1.97	95.96	153.82
0.	3.	23.	50.333	-168.30	1.98	95.95	153.82
0.	3.	23.	52.333	-168.23	1.98	95.95	153.82
0.	3.	23.	54.333	-168.16	1.99	95.94	153.82
0.	3.	23.	56.333	-168.09	1.99	95.93	153.82
0.	3.	23.	58.333	-168.01	2.00	95.93	153.82
0.	3.	24.	.333	-167.94	2.01	95.92	153.82
0.	3.	24.	2.333	-167.87	2.01	95.91	153.83
0.	3.	24.	4.333	-167.79	2.02	95.90	153.83
0.	3.	24.	6.333	-167.72	2.02	95.90	153.83
0.	3.	24.	8.333	-167.65	2.03	95.89	153.83
0.	3.	24.	10.333	-167.57	2.03	95.88	153.83
0.	3.	24.	12.333	-167.50	2.04	95.87	153.83
0.	3.	24.	14.333	-167.43	2.05	95.86	153.83

TABLE V
APOLLO MISSION AS-502
SPACECRAFT OPERATIONAL TRAJECTORY
-AERODYNAMIC AND SUN ATTITUDES-

TIME DAY HR MIN SEC	AERODYNAMIC ANGLE OF ATTACK DEGREES	AERODYNAMIC ANGLE OF SIDESLIP DEGREES	SUN LOOK ANGLES THETA DEGREES	SUN LOOK ANGLES PHI DEGREES
0. 3. 24. 16.333	-167.36	2.05	95.86	153.83
0. 3. 24. 18.333	-167.29	2.06	95.85	153.83
0. 3. 24. 20.333	-167.22	2.06	95.83	153.83
0. 3. 24. 22.333	-167.15	2.06	95.82	153.83
0. 3. 24. 24.333	-167.09	2.07	95.81	153.83
0. 3. 24. 26.333	-167.03	2.07	95.79	153.84
0. 3. 24. 28.333	-166.98	2.07	95.76	153.84
0. 3. 24. 30.333	-166.97	2.06	95.69	153.84
0. 3. 24. 30.943	-168.20	2.05	94.57	153.89
FIRST SPS SHUTDOWN				
0. 3. 24. 30.943	-168.20	2.05	94.57	153.89
0. 3. 24. 31.630	-168.18	2.05	94.57	153.89
COAST FIVE SECONDS				
0. 3. 24. 31.630	-168.18	2.05	94.57	153.89
0. 3. 24. 36.630	-168.01	2.06	94.57	153.89
CSM ATTITUDE ORIENTAION FOR SOLAR SOAK				
0. 3. 24. 36.630	-168.01	2.06	94.57	153.89
0. 3. 24. 45.643	-164.43	-32.98	109.61	161.17
0. 3. 24. 50.177	-158.72	-50.17	114.71	168.30
0. 3. 24. 55.643	-131.25	-39.51	127.29	186.63
0. 3. 25. 5.643	-100.72	-9.75	147.87	230.06
0. 3. 25. 15.643	-76.58	22.87	160.06	302.20
0. 3. 25. 18.207	-69.27	30.89	146.32	318.03
0. 3. 25. 25.643	-71.06	-19.68	146.32	264.48
0. 3. 25. 35.643	7.42	-71.91	146.32	192.48

TABLE V
APOLLO MISSION AS-502
SPACECRAFT OPERATIONAL TRAJECTORY
-AERODYNAMIC AND SUN ATTITUDES-

TIME DAY	HR	MIN	SEC	AERODYNAMIC ANGLE OF ATTACK DEGREES	AERODYNAMIC ANGLE OF SIDESLIP DEGREES	SUN LOOK ANGLES THETA DEGREES	SUN LOOK ANGLES PHI DEGREES
0.	3.	25.	37.521	40.17	-66.20	146.32	178.96
				START SOLAR SOAK			
0.	3.	25.	37.521	40.17	-66.20	146.32	178.96
0.	3.	25.	40.643	39.93	-66.23	146.32	178.96
0.	3.	26.	40.643	35.45	-66.67	146.32	178.96
0.	3.	27.	40.643	31.05	-66.98	146.32	178.96
0.	3.	28.	40.643	26.77	-67.16	146.32	178.96
0.	3.	29.	40.643	22.65	-67.23	146.32	178.96
0.	3.	30.	40.643	18.70	-67.21	146.32	178.96
0.	3.	31.	40.643	14.95	-67.11	146.32	178.96
0.	3.	32.	40.643	11.40	-66.94	146.32	178.96
0.	3.	33.	40.643	8.05	-66.70	146.32	178.96
0.	3.	34.	40.643	4.91	-66.42	146.32	178.96
0.	3.	35.	40.643	1.97	-66.09	146.32	178.96
0.	3.	36.	40.643	-.78	-65.73	146.32	178.96
0.	3.	37.	40.643	-3.35	-65.34	146.32	178.96
0.	3.	38.	40.643	-5.76	-64.94	146.32	178.96
0.	3.	39.	40.643	-8.01	-64.51	146.31	178.96
0.	3.	40.	40.643	-10.11	-64.07	146.31	178.96
0.	3.	41.	40.643	-12.08	-63.63	146.31	178.96
0.	3.	42.	40.643	-13.92	-63.18	146.31	178.96
0.	3.	43.	40.643	-15.65	-62.72	146.31	178.96
0.	3.	44.	40.643	-17.28	-62.26	146.31	178.96
0.	3.	45.	40.643	-18.81	-61.81	146.31	178.96
0.	3.	46.	40.643	-20.25	-61.35	146.31	178.96
0.	3.	47.	40.643	-21.60	-60.90	146.31	178.96
0.	3.	48.	40.643	-22.89	-60.44	146.31	178.96
0.	3.	49.	40.643	-24.10	-60.00	146.31	178.96
0.	3.	50.	40.643	-25.25	-59.55	146.31	178.96
0.	3.	51.	40.643	-26.35	-59.11	146.31	178.96
0.	3.	52.	40.643	-27.38	-58.68	146.31	178.96
0.	3.	53.	40.643	-28.37	-58.25	146.31	178.96
0.	3.	54.	40.643	-29.31	-57.83	146.31	178.96
0.	3.	55.	40.643	-30.21	-57.41	146.30	178.96
0.	3.	56.	40.643	-31.06	-57.00	146.30	178.96
0.	3.	57.	40.643	-31.88	-56.59	146.30	178.97
0.	3.	58.	40.643	-32.67	-56.19	146.30	178.97
0.	3.	59.	40.643	-33.42	-55.80	146.30	178.97

TABLE V
APOLLO MISSION AS-502
SPACECRAFT OPERATIONAL TRAJECTORY
-AERODYNAMIC AND SUN ATTITUDES-

TIME DAY	HR	MIN	SEC	AERODYNAMIC ANGLE OF ATTACK DEGREES	AERODYNAMIC ANGLE OF SIDESLIP DEGREES	SUN LOOK ANGLES THETA DEGREES	SUN LOOK ANGLES PHI DEGREES
0.	4.	0.	40.643	-34.14	-55.40	146.30	178.97
0.	4.	1.	40.643	-34.83	-55.02	146.30	178.97
0.	4.	2.	40.643	-35.50	-54.64	146.30	178.97
0.	4.	3.	40.643	-36.14	-54.27	146.30	178.97
0.	4.	4.	40.643	-36.75	-53.90	146.30	178.97
0.	4.	5.	40.643	-37.35	-53.53	146.30	178.97
0.	4.	6.	40.643	-37.92	-53.17	146.30	178.97
0.	4.	7.	40.643	-38.47	-52.82	146.30	178.97
0.	4.	8.	40.643	-39.01	-52.47	146.30	178.97
0.	4.	9.	40.643	-39.52	-52.12	146.30	178.97
0.	4.	10.	40.643	-40.02	-51.78	146.29	178.97
0.	4.	11.	40.643	-40.51	-51.44	146.29	178.97
0.	4.	12.	40.643	-40.97	-51.10	146.29	178.97
0.	4.	13.	40.643	-41.43	-50.77	146.29	178.97
0.	4.	14.	40.643	-41.87	-50.45	146.29	178.97
0.	4.	15.	40.643	-42.30	-50.12	146.29	178.97
0.	4.	16.	40.643	-42.71	-49.80	146.29	178.97
0.	4.	17.	40.643	-43.11	-49.49	146.29	178.97
0.	4.	18.	40.643	-43.51	-49.17	146.29	178.97
0.	4.	19.	40.643	-43.89	-48.86	146.29	178.97
0.	4.	20.	40.643	-44.26	-48.55	146.29	178.97
0.	4.	21.	40.643	-44.62	-48.25	146.29	178.97
0.	4.	22.	40.643	-44.97	-47.94	146.29	178.97
0.	4.	23.	40.643	-45.31	-47.64	146.29	178.97
0.	4.	24.	40.643	-45.65	-47.34	146.29	178.97
0.	4.	25.	40.643	-45.97	-47.05	146.28	178.97
0.	4.	26.	40.643	-46.29	-46.75	146.28	178.97
0.	4.	27.	40.643	-46.60	-46.46	146.28	178.97
0.	4.	28.	40.643	-46.90	-46.17	146.28	178.97
0.	4.	29.	40.643	-47.20	-45.88	146.28	178.97
0.	4.	30.	40.643	-47.48	-45.59	146.28	178.97
0.	4.	31.	40.643	-47.77	-45.31	146.28	178.97
0.	4.	32.	40.643	-48.04	-45.02	146.28	178.97
0.	4.	33.	40.643	-48.31	-44.73	146.28	178.98
0.	4.	34.	40.643	-48.57	-44.45	146.28	178.98
0.	4.	35.	40.643	-48.83	-44.17	146.28	178.98
0.	4.	36.	40.643	-49.08	-43.89	146.28	178.98
0.	4.	37.	40.643	-49.33	-43.60	146.28	178.98
0.	4.	38.	40.643	-49.57	-43.32	146.28	178.98
0.	4.	39.	40.643	-49.81	-43.04	146.28	178.98
0.	4.	40.	40.643	-50.04	-42.76	146.27	178.98
0.	4.	41.	40.643	-50.27	-42.48	146.27	178.98

TABLE V
APOLLO MISSION AS-502
SPACECRAFT OPERATIONAL TRAJECTORY
-AERODYNAMIC AND SUN ATTITUDES-

TIME				AERODYNAMIC		SUN LOOK ANGLES	
DAY	HR	MIN	SEC	ANGLE OF ATTACK DEGREES	ANGLE OF SIDESLIP DEGREES	THETA DEGREES	PHI DEGREES
0.	4.	42.	40.643	-50.49	-42.20	146.27	178.98
0.	4.	43.	40.643	-50.71	-41.92	146.27	178.98
0.	4.	44.	40.643	-50.92	-41.63	146.27	178.98
0.	4.	45.	40.643	-51.13	-41.35	146.27	178.98
0.	4.	46.	40.643	-51.34	-41.07	146.27	178.98
0.	4.	47.	40.643	-51.54	-40.78	146.27	178.98
0.	4.	48.	40.643	-51.74	-40.50	146.27	178.98
0.	4.	49.	40.643	-51.93	-40.21	146.27	178.98
0.	4.	50.	40.643	-52.12	-39.93	146.27	178.98
0.	4.	51.	40.643	-52.31	-39.64	146.27	178.98
0.	4.	52.	40.643	-52.49	-39.35	146.27	178.98
0.	4.	53.	40.643	-52.67	-39.05	146.27	178.98
0.	4.	54.	40.643	-52.85	-38.76	146.26	178.98
0.	4.	55.	40.643	-53.02	-38.46	146.26	178.98
0.	4.	56.	40.643	-53.20	-38.17	146.26	178.98
0.	4.	57.	40.643	-53.36	-37.87	146.26	178.98
0.	4.	58.	40.643	-53.53	-37.56	146.26	178.98
0.	4.	59.	40.643	-53.69	-37.26	146.26	178.98
0.	5.	0.	40.643	-53.85	-36.95	146.26	178.98
0.	5.	1.	40.643	-54.01	-36.64	146.26	178.98
0.	5.	2.	40.643	-54.17	-36.32	146.26	178.99
0.	5.	3.	40.643	-54.32	-36.00	146.26	178.99
0.	5.	4.	40.643	-54.47	-35.68	146.26	178.99
0.	5.	5.	40.643	-54.62	-35.35	146.26	178.99
0.	5.	6.	40.643	-54.76	-35.02	146.26	178.99
0.	5.	7.	40.643	-54.91	-34.69	146.26	178.99
0.	5.	8.	40.643	-55.05	-34.35	146.26	178.99
0.	5.	9.	40.643	-55.19	-34.00	146.25	178.99
0.	5.	10.	40.643	-55.32	-33.65	146.25	178.99
0.	5.	11.	40.643	-55.46	-33.30	146.25	178.99
0.	5.	12.	40.643	-55.59	-32.94	146.25	178.99
0.	5.	13.	40.643	-55.73	-32.57	146.25	178.99
0.	5.	14.	40.643	-55.86	-32.20	146.25	178.99
0.	5.	15.	40.643	-55.98	-31.82	146.25	178.99
0.	5.	16.	40.643	-56.11	-31.43	146.25	178.99
0.	5.	17.	40.643	-56.24	-31.04	146.25	178.99
0.	5.	18.	40.643	-56.36	-30.64	146.25	178.99
0.	5.	19.	40.643	-56.48	-30.23	146.25	178.99
0.	5.	20.	40.643	-56.60	-29.81	146.25	178.99
0.	5.	21.	40.643	-56.72	-29.38	146.25	178.99
0.	5.	22.	40.643	-56.84	-28.94	146.25	178.99
0.	5.	23.	40.643	-56.96	-28.50	146.25	178.99

TABLE V
APOLLO MISSION AS-502
SPACECRAFT OPERATIONAL TRAJECTORY
-AERODYNAMIC AND SUN ATTITUDES-

TIME DAY	HR	MIN	SEC	AERODYNAMIC ANGLE OF ATTACK DEGREES	AERODYNAMIC ANGLE OF SIDESLIP DEGREES	SUN LOOK ANGLES THETA DEGREES	SUN LOOK ANGLES PHI DEGREES
0.	5.	24.	40.643	-57.08	-28.04	146.24	178.99
0.	5.	25.	40.643	-57.19	-27.58	146.24	178.99
0.	5.	26.	40.643	-57.31	-27.10	146.24	178.99
0.	5.	27.	40.643	-57.42	-26.61	146.24	178.99
0.	5.	28.	40.643	-57.53	-26.11	146.24	179.00
0.	5.	29.	40.643	-57.64	-25.59	146.24	179.00
0.	5.	30.	40.643	-57.75	-25.06	146.24	179.00
0.	5.	31.	40.643	-57.86	-24.52	146.24	179.00
0.	5.	32.	40.643	-57.97	-23.96	146.24	179.00
0.	5.	33.	40.643	-58.08	-23.39	146.24	179.00
0.	5.	34.	40.643	-58.19	-22.80	146.24	179.00
0.	5.	35.	40.643	-58.30	-22.19	146.24	179.00
0.	5.	36.	40.643	-58.41	-21.56	146.24	179.00
0.	5.	37.	40.643	-58.52	-20.92	146.24	179.00
0.	5.	38.	40.643	-58.62	-20.25	146.23	179.00
0.	5.	39.	40.643	-58.73	-19.57	146.23	179.00
0.	5.	40.	40.643	-58.84	-18.86	146.23	179.00
0.	5.	41.	40.643	-58.95	-18.13	146.23	179.00
0.	5.	42.	40.643	-59.06	-17.37	146.23	179.00
0.	5.	43.	40.643	-59.16	-16.59	146.23	179.00
0.	5.	44.	40.643	-59.27	-15.78	146.23	179.00
0.	5.	45.	40.643	-59.38	-14.94	146.23	179.00
0.	5.	46.	40.643	-59.49	-14.08	146.23	179.00
0.	5.	47.	40.643	-59.60	-13.18	146.23	179.00
0.	5.	48.	40.643	-59.72	-12.25	146.23	179.00
0.	5.	49.	40.643	-59.83	-11.28	146.23	179.00
0.	5.	50.	40.643	-59.95	-10.28	146.23	179.00
0.	5.	51.	40.643	-60.06	-9.24	146.23	179.00
0.	5.	52.	40.643	-60.18	-8.16	146.23	179.01
0.	5.	53.	40.643	-60.30	-7.04	146.22	179.01
0.	5.	54.	40.643	-60.42	-5.88	146.22	179.01
0.	5.	55.	40.643	-60.55	-4.67	146.22	179.01
0.	5.	56.	40.643	-60.67	-3.42	146.22	179.01
0.	5.	57.	40.643	-60.80	-2.11	146.22	179.01
0.	5.	58.	40.643	-60.93	-.76	146.22	179.01
0.	5.	59.	40.643	-61.07	.65	146.22	179.01
0.	6.	0.	40.643	-61.21	2.11	146.22	179.01
0.	6.	1.	40.643	-61.35	3.63	146.22	179.01
0.	6.	2.	40.643	-61.50	5.20	146.22	179.01
0.	6.	3.	40.643	-61.65	6.84	146.22	179.01
0.	6.	4.	40.643	-61.81	8.53	146.22	179.01
0.	6.	5.	40.643	-61.97	10.28	146.22	179.01

TABLE V
APOLLO MISSION AS-502
SPACECRAFT OPERATIONAL TRAJECTORY
-AERODYNAMIC AND SUN ATTITUDES-

TIME DAY	HR	MIN	SEC	AERODYNAMIC ANGLE OF ATTACK DEGREES	AERODYNAMIC ANGLE OF SIDESLIP DEGREES	SUN LOOK ANGLES THETA DEGREES	SUN LOOK ANGLES PHI DEGREES
0.	6.	6.	40.643	-62.14	12.09	146.22	179.01
0.	6.	7.	40.643	-62.32	13.97	146.21	179.01
0.	6.	8.	40.643	-62.50	15.90	146.21	179.01
0.	6.	9.	40.643	-62.69	17.89	146.21	179.01
0.	6.	10.	40.643	-62.89	19.94	146.21	179.01
0.	6.	11.	40.643	-63.10	22.04	146.21	179.01
0.	6.	12.	40.643	-63.32	24.19	146.21	179.01
0.	6.	13.	40.643	-63.55	26.38	146.21	179.01
0.	6.	14.	40.643	-63.80	28.62	146.21	179.01
0.	6.	15.	40.643	-64.06	30.90	146.21	179.02
0.	6.	16.	40.643	-64.33	33.21	146.21	179.02
0.	6.	17.	40.643	-64.62	35.54	146.21	179.02
0.	6.	18.	40.643	-64.93	37.88	146.21	179.02
0.	6.	19.	40.643	-65.27	40.24	146.21	179.02
0.	6.	20.	40.643	-65.63	42.60	146.21	179.02
0.	6.	21.	40.643	-66.01	44.96	146.21	179.02
0.	6.	21.	52.502	-66.09	45.42	146.21	179.02
				APOGEE			
0.	6.	21.	52.502	-66.09	45.42	146.21	179.02
0.	6.	22.	40.643	-66.43	47.30	146.20	179.02
0.	6.	23.	40.643	-66.88	49.62	146.20	179.02
0.	6.	24.	40.643	-67.37	51.91	146.20	179.02
0.	6.	25.	40.643	-67.90	54.17	146.20	179.02
0.	6.	26.	40.643	-68.49	56.39	146.20	179.02
0.	6.	27.	40.643	-69.14	58.57	146.20	179.02
0.	6.	28.	40.643	-69.86	60.69	146.20	179.02
0.	6.	29.	40.643	-70.66	62.76	146.20	179.02
0.	6.	30.	40.643	-71.55	64.77	146.20	179.02
0.	6.	31.	40.643	-72.56	66.72	146.20	179.02
0.	6.	32.	40.643	-73.71	68.61	146.20	179.02
0.	6.	33.	40.643	-75.03	70.42	146.20	179.02
0.	6.	34.	40.643	-76.55	72.17	146.20	179.02
0.	6.	35.	40.643	-78.32	73.85	146.20	179.02
0.	6.	36.	40.643	-80.41	75.45	146.19	179.02
0.	6.	37.	40.643	-82.91	76.98	146.19	179.02
0.	6.	38.	40.643	-85.93	78.42	146.19	179.03
0.	6.	39.	40.643	-89.63	79.77	146.19	179.03
0.	6.	40.	40.643	-94.22	81.02	146.19	179.03

TABLE V
APOLLO MISSION AS-502
SPACECRAFT OPERATIONAL TRAJECTORY
-AERODYNAMIC AND SUN ATTITUDES-

TIME DAY HR MIN SEC	AERODYNAMIC ANGLE OF ATTACK DEGREES	AERODYNAMIC ANGLE OF SIDESLIP DEGREES	SUN LOOK ANGLES THETA DEGREES	SUN LOOK ANGLES PHI DEGREES
0. 6. 41. 40.643	-99.98	82.16	146.19	179.03
0. 6. 42. 40.643	-107.27	83.15	146.19	179.03
0. 6. 43. 40.643	-116.41	83.97	146.19	179.03
0. 6. 44. 40.643	-127.54	84.58	146.19	179.03
0. 6. 45. 40.643	-140.30	84.93	146.19	179.03
0. 6. 46. 40.643	-153.64	85.00	146.19	179.03
0. 6. 47. 40.643	-166.20	84.81	146.19	179.03
0. 6. 48. 40.643	-177.02	84.42	146.19	179.03
0. 6. 49. 40.643	174.16	83.87	146.19	179.03
0. 6. 50. 40.643	167.15	83.24	146.19	179.03
0. 6. 51. 40.643	161.60	82.54	146.19	179.03
0. 6. 52. 40.643	157.17	81.82	146.18	179.03
0. 6. 53. 40.643	153.60	81.08	146.18	179.03
0. 6. 54. 40.643	150.69	80.33	146.18	179.03
0. 6. 55. 40.643	148.27	79.59	146.18	179.03
0. 6. 56. 40.643	146.25	78.86	146.18	179.03
0. 6. 57. 40.643	144.53	78.14	146.18	179.03
0. 6. 58. 40.643	143.06	77.44	146.18	179.03
0. 6. 59. 40.643	141.78	76.74	146.18	179.03
0. 7. 0. 40.643	140.67	76.07	146.18	179.04
0. 7. 1. 40.643	139.70	75.41	146.18	179.04
0. 7. 2. 40.643	138.83	74.76	146.18	179.04
0. 7. 3. 40.643	138.06	74.13	146.18	179.04
0. 7. 4. 40.643	137.38	73.51	146.18	179.04
0. 7. 5. 40.643	136.76	72.91	146.18	179.04
0. 7. 6. 40.643	136.20	72.32	146.18	179.04
0. 7. 7. 40.643	135.69	71.75	146.17	179.04
0. 7. 8. 40.643	135.23	71.19	146.17	179.04
0. 7. 9. 40.643	134.81	70.64	146.17	179.04
0. 7. 10. 40.643	134.42	70.10	146.17	179.04
0. 7. 11. 40.643	134.06	69.58	146.17	179.04
0. 7. 12. 40.643	133.74	69.06	146.17	179.04
0. 7. 13. 40.643	133.43	68.56	146.17	179.04
0. 7. 14. 40.643	133.15	68.07	146.17	179.04
0. 7. 15. 40.643	132.89	67.59	146.17	179.04
0. 7. 16. 40.643	132.65	67.11	146.17	179.04
0. 7. 17. 40.643	132.42	66.65	146.17	179.04
0. 7. 18. 40.643	132.21	66.19	146.17	179.04
0. 7. 19. 40.643	132.01	65.74	146.17	179.04
0. 7. 20. 40.643	131.83	65.30	146.16	179.05
0. 7. 21. 40.643	131.65	64.87	146.16	179.05
0. 7. 22. 40.643	131.49	64.44	146.16	179.05

TABLE V
APOLLO MISSION AS-502
SPACECRAFT OPERATIONAL TRAJECTORY
-AERODYNAMIC AND SUN ATTITUDES-

TIME DAY	HR	MIN	SEC	AERODYNAMIC ANGLE OF ATTACK DEGREES	AERODYNAMIC ANGLE OF SIDESLIP DEGREES	SUN LOOK ANGLES THETA DEGREES	SUN LOOK ANGLES PHI DEGREES
0.	7.	23.	40.643	131.33	64.02	146.16	179.05
0.	7.	24.	40.643	131.19	63.61	146.16	179.05
0.	7.	25.	40.643	131.05	63.20	146.16	179.05
0.	7.	26.	40.643	130.92	62.80	146.16	179.05
0.	7.	27.	40.643	130.80	62.40	146.16	179.05
0.	7.	28.	40.643	130.68	62.01	146.16	179.05
0.	7.	29.	40.643	130.57	61.62	146.16	179.05
0.	7.	30.	40.643	130.47	61.24	146.16	179.05
0.	7.	31.	40.643	130.37	60.86	146.16	179.05
0.	7.	32.	40.643	130.27	60.49	146.16	179.05
0.	7.	33.	40.643	130.18	60.12	146.16	179.05
0.	7.	34.	40.643	130.09	59.75	146.16	179.05
0.	7.	35.	40.643	130.01	59.39	146.15	179.05
0.	7.	36.	40.643	129.93	59.03	146.15	179.05
0.	7.	37.	40.643	129.85	58.67	146.15	179.05
0.	7.	38.	40.643	129.78	58.32	146.15	179.05
0.	7.	39.	40.643	129.71	57.97	146.15	179.05
0.	7.	40.	40.643	129.64	57.62	146.15	179.04
0.	7.	41.	40.643	129.57	57.27	146.15	179.04
0.	7.	42.	40.643	129.51	56.92	146.15	179.04
0.	7.	43.	40.643	129.45	56.58	146.15	179.04
0.	7.	44.	40.643	129.39	56.24	146.15	179.04
0.	7.	45.	40.643	129.33	55.90	146.15	179.04
0.	7.	46.	40.643	129.27	55.56	146.15	179.04
0.	7.	47.	40.643	129.22	55.22	146.15	179.04
0.	7.	48.	40.643	129.16	54.88	146.15	179.04
0.	7.	49.	40.643	129.11	54.55	146.15	179.04
0.	7.	50.	40.643	129.06	54.21	146.14	179.04
0.	7.	51.	40.643	129.01	53.87	146.14	179.04
0.	7.	52.	40.643	128.96	53.54	146.14	179.04
0.	7.	53.	40.643	128.91	53.20	146.14	179.04
0.	7.	54.	40.643	128.86	52.87	146.14	179.04
0.	7.	55.	40.643	128.81	52.53	146.14	179.04
0.	7.	56.	40.643	128.76	52.20	146.14	179.04
0.	7.	57.	40.643	128.71	51.86	146.14	179.04
0.	7.	58.	40.643	128.66	51.52	146.14	179.04
0.	7.	59.	40.643	128.61	51.19	146.14	179.04
0.	8.	0.	40.643	128.57	50.85	146.14	179.07
0.	8.	1.	40.643	128.52	50.51	146.14	179.07
0.	8.	2.	40.643	128.47	50.17	146.14	179.07
0.	8.	3.	40.643	128.42	49.83	146.14	179.07
0.	8.	4.	40.643	128.37	49.48	146.14	179.07

TABLE V
APOLLO MISSION AS-502
SPACECRAFT OPERATIONAL TRAJECTORY
-AERODYNAMIC AND SUN ATTITUDES-

TIME DAY	HR	MIN	SEC	AERODYNAMIC ANGLE OF ATTACK DEGREES	AERODYNAMIC ANGLE OF SIDESLIP DEGREES	SUN LOOK ANGLES THETA DEGREES	SUN LOOK ANGLES PHI DEGREES
0.	8.	5.	40.643	128.32	49.14	146.13	179.07
0.	8.	6.	40.643	128.27	48.79	146.13	179.07
0.	8.	7.	40.643	128.22	48.44	146.13	179.07
0.	8.	8.	40.643	128.17	48.09	146.13	179.07
0.	8.	9.	40.643	128.12	47.74	146.13	179.07
0.	8.	10.	40.643	128.06	47.38	146.13	179.07
0.	8.	11.	40.643	128.01	47.03	146.13	179.07
0.	8.	12.	40.643	127.95	46.66	146.13	179.07
0.	8.	13.	40.643	127.90	46.30	146.13	179.07
0.	8.	14.	40.643	127.84	45.93	146.13	179.07
0.	8.	15.	40.643	127.78	45.56	146.13	179.07
0.	8.	16.	40.643	127.72	45.19	146.13	179.07
0.	8.	17.	40.643	127.66	44.81	146.13	179.07
0.	8.	18.	40.643	127.60	44.43	146.13	179.07
0.	8.	19.	40.643	127.53	44.05	146.13	179.07
0.	8.	20.	40.643	127.46	43.66	146.12	179.08
0.	8.	21.	40.643	127.40	43.27	146.12	179.08
0.	8.	22.	40.643	127.33	42.87	146.12	179.08
0.	8.	23.	40.643	127.25	42.47	146.12	179.08
0.	8.	24.	40.643	127.18	42.06	146.12	179.08
0.	8.	25.	40.643	127.10	41.65	146.12	179.08
0.	8.	26.	40.643	127.02	41.23	146.12	179.08
0.	8.	27.	40.643	126.94	40.81	146.12	179.08
0.	8.	28.	40.643	126.86	40.38	146.12	179.08
0.	8.	29.	40.643	126.77	39.94	146.12	179.08
0.	8.	30.	40.643	126.68	39.50	146.12	179.08
0.	8.	31.	40.643	126.59	39.05	146.12	179.08
0.	8.	32.	40.643	126.49	38.60	146.12	179.08
0.	8.	33.	40.643	126.40	38.14	146.12	179.08
0.	8.	34.	40.643	126.29	37.67	146.12	179.08
0.	8.	35.	40.643	126.19	37.19	146.11	179.08
0.	8.	36.	40.643	126.08	36.70	146.11	179.08
0.	8.	37.	40.643	125.97	36.20	146.11	179.08
0.	8.	38.	40.643	125.85	35.70	146.11	179.08
0.	8.	39.	40.643	125.73	35.19	146.11	179.09
0.	8.	40.	40.643	125.61	34.66	146.11	179.09
0.	8.	41.	40.643	125.48	34.13	146.11	179.09
0.	8.	42.	40.643	125.35	33.58	146.11	179.09
0.	8.	43.	40.643	125.21	33.02	146.11	179.09
0.	8.	44.	40.643	125.07	32.46	146.11	179.09
0.	8.	45.	40.643	124.92	31.87	146.11	179.09
0.	8.	46.	40.643	124.76	31.28	146.11	179.09

TABLE V
APOLLO MISSION AS-502
SPACECRAFT OPERATIONAL TRAJECTORY
-AERODYNAMIC AND SUN ATTITUDES-

TIME DAY	HR	MIN	SEC	AERODYNAMIC ANGLE OF ATTACK DEGREES	AERODYNAMIC ANGLE OF SIDESLIP DEGREES	SUN LOOK ANGLES THETA DEGREES	SUN LOOK ANGLES PHI DEGREES
0.	8.	47.	40.643	124.60	30.67	146.11	179.09
0.	8.	48.	40.643	124.44	30.05	146.11	179.09
0.	8.	49.	40.643	124.27	29.41	146.11	179.09
0.	8.	50.	40.643	124.09	28.76	146.11	179.09
0.	8.	51.	40.643	123.90	28.09	146.10	179.09
0.	8.	52.	40.643	123.71	27.40	146.10	179.09
0.	8.	53.	40.643	123.51	26.69	146.10	179.09
0.	8.	54.	40.643	123.30	25.97	146.10	179.09
0.	8.	55.	40.643	123.08	25.22	146.10	179.09
0.	8.	56.	40.643	122.86	24.45	146.10	179.09
0.	8.	57.	40.643	122.62	23.66	146.10	179.09
0.	8.	58.	40.643	122.38	22.85	146.10	179.09
0.	8.	59.	40.643	122.12	22.01	146.10	179.10
0.	9.	0.	40.643	121.85	21.14	146.10	179.10
0.	9.	1.	40.643	121.57	20.24	146.10	179.10
0.	9.	2.	40.643	121.28	19.32	146.10	179.10
0.	9.	3.	40.643	120.98	18.36	146.10	179.10
0.	9.	4.	40.643	120.66	17.36	146.10	179.10
0.	9.	5.	40.643	120.32	16.33	146.10	179.10
0.	9.	6.	40.643	119.97	15.27	146.10	179.10
0.	9.	7.	40.643	119.60	14.16	146.09	179.10
0.	9.	7.	46.102	119.57	14.05	146.09	179.10
CSM ATTITUDE ORIENTATION FOR SECOND SPS BURN							
0.	9.	7.	46.102	119.57	14.05	146.09	179.10
0.	9.	7.	54.643	144.62	-3.11	154.24	242.49
0.	9.	8.	.029	157.72	-17.17	141.47	271.31
0.	9.	8.	8.643	124.29	-34.82	114.39	252.80
0.	9.	8.	18.643	73.82	-38.41	79.09	249.60
0.	9.	8.	26.185	40.32	-26.82	52.93	256.01
0.	9.	8.	34.643	-9.42	-46.22	52.93	316.91
0.	9.	8.	44.643	-46.39	-6.59	52.93	28.91
0.	9.	8.	45.220	-46.63	-3.58	52.93	33.06
COAST TO +X TRANSLATION							
0.	9.	8.	45.220	-46.63	-3.58	52.93	33.06

TABLE V
APOLLO MISSION AS-502
SPACECRAFT OPERATIONAL TRAJECTORY
-AERODYNAMIC AND SUN ATTITUDES-

TIME DAY	HR	MIN	SEC	AERODYNAMIC ANGLE OF ATTACK DEGREES	AERODYNAMIC ANGLE OF SIDESLIP DEGREES	SUN LOOK ANGLES THETA DEGREES	SUN LOOK ANGLES PHI DEGREES
0.	9.	9.	6.643	-46.18	-3.52	52.93	33.06
0.	9.	9.	31.643	-45.66	-3.46	52.93	33.06
0.	9.	9.	56.643	-45.12	-3.40	52.93	33.06
0.	9.	10.	21.643	-44.58	-3.33	52.93	33.06
0.	9.	10.	46.643	-44.02	-3.27	52.93	33.06
0.	9.	11.	11.643	-43.45	-3.20	52.93	33.06
0.	9.	11.	36.643	-42.88	-3.14	52.93	33.06
0.	9.	12.	1.643	-42.29	-3.08	52.93	33.06
0.	9.	12.	26.643	-41.69	-3.01	52.93	33.06
0.	9.	12.	51.643	-41.08	-2.95	52.93	33.06
0.	9.	13.	16.643	-40.46	-2.88	52.93	33.06
0.	9.	13.	41.643	-39.83	-2.82	52.93	33.06
0.	9.	14.	6.643	-39.19	-2.76	52.93	33.06
0.	9.	14.	31.643	-38.53	-2.69	52.93	33.06
0.	9.	14.	56.643	-37.86	-2.63	52.93	33.06
0.	9.	15.	21.643	-37.18	-2.56	52.93	33.06
0.	9.	15.	46.643	-36.48	-2.50	52.93	33.06
0.	9.	16.	11.643	-35.77	-2.44	52.93	33.06
0.	9.	16.	36.643	-35.04	-2.37	52.93	33.06
0.	9.	17.	1.643	-34.30	-2.31	52.93	33.06
0.	9.	17.	26.643	-33.55	-2.24	52.93	33.06
0.	9.	17.	51.643	-32.78	-2.18	52.93	33.06
0.	9.	18.	16.643	-31.99	-2.12	52.93	33.06
0.	9.	18.	41.643	-31.19	-2.05	52.93	33.06
0.	9.	19.	6.643	-30.37	-1.99	52.93	33.06
0.	9.	19.	31.643	-29.54	-1.93	52.93	33.06
0.	9.	19.	56.643	-28.68	-1.86	52.93	33.06
0.	9.	20.	21.643	-27.81	-1.80	52.93	33.06
0.	9.	20.	46.643	-26.93	-1.74	52.93	33.06
0.	9.	21.	11.643	-26.02	-1.67	52.93	33.06
0.	9.	21.	36.643	-25.10	-1.61	52.93	33.06
0.	9.	21.	43.840	-24.83	-1.59	52.93	33.06
				+X TRANSLATION			
0.	9.	21.	43.840	-24.83	-1.59	52.93	33.06
0.	9.	22.	6.643	-23.96	-1.54	52.93	33.06

TABLE V
APOLLO MISSION AS-502
SPACECRAFT OPERATIONAL TRAJECTORY
-AERODYNAMIC AND SUN ATTITUDES-

TIME DAY	HR	MIN	SEC	AERODYNAMIC ANGLE OF ATTACK DEGREES	AERODYNAMIC ANGLE OF SIDESLIP DEGREES	SUN LOOK ANGLES THETA DEGREES	SUN LOOK ANGLES PHI DEGREES
0.	9.	22.	13.840	-23.68	-1.52	52.93	33.06
				SECOND SPS IGNITION			
0.	9.	22.	13.840	-23.68	-1.52	52.93	33.06
0.	9.	22.	14.215	-23.67	-1.52	52.93	33.06
				SECOND SPS BURN			
0.	9.	22.	14.215	-23.67	-1.52	52.93	33.06
0.	9.	22.	15.234	-22.61	-1.48	52.11	33.49
0.	9.	22.	17.234	-25.19	-1.44	54.38	32.42
0.	9.	22.	19.234	-25.48	-1.42	54.72	32.27
0.	9.	22.	21.234	-25.42	-1.42	54.76	32.26
0.	9.	22.	23.234	-25.30	-1.41	54.75	32.26
0.	9.	22.	25.234	-25.18	-1.40	54.74	32.27
0.	9.	22.	27.234	-25.05	-1.39	54.73	32.27
0.	9.	22.	29.234	-24.92	-1.39	54.71	32.28
0.	9.	22.	31.234	-24.80	-1.38	54.70	32.29
0.	9.	22.	33.234	-24.67	-1.37	54.68	32.29
0.	9.	22.	35.234	-24.55	-1.37	54.67	32.30
0.	9.	22.	37.234	-24.42	-1.36	54.66	32.31
0.	9.	22.	39.234	-24.30	-1.35	54.64	32.31
0.	9.	22.	41.234	-24.17	-1.34	54.63	32.32
0.	9.	22.	43.234	-24.05	-1.34	54.62	32.33
0.	9.	22.	45.234	-23.93	-1.33	54.60	32.33
0.	9.	22.	47.234	-23.80	-1.32	54.59	32.34
0.	9.	22.	49.234	-23.68	-1.32	54.58	32.34
0.	9.	22.	51.234	-23.56	-1.31	54.56	32.35
0.	9.	22.	53.234	-23.43	-1.30	54.55	32.36
0.	9.	22.	55.234	-23.31	-1.29	54.54	32.36
0.	9.	22.	57.234	-23.19	-1.29	54.53	32.37
0.	9.	22.	59.234	-23.07	-1.28	54.52	32.37
0.	9.	23.	1.234	-22.94	-1.27	54.50	32.38
0.	9.	23.	3.234	-22.82	-1.27	54.49	32.39
0.	9.	23.	5.234	-22.70	-1.26	54.48	32.39
0.	9.	23.	7.234	-22.58	-1.25	54.47	32.40
0.	9.	23.	9.234	-22.46	-1.24	54.46	32.40

TABLE V
APOLLO MISSION AS-502
SPACECRAFT OPERATIONAL TRAJECTORY
-AERODYNAMIC AND SUN ATTITUDES-

TIME DAY	HR	MIN	SEC	AERODYNAMIC ANGLE OF ATTACK DEGREES	AERODYNAMIC ANGLE OF SIDESLIP DEGREES	SUN LOOK ANGLES THETA DEGREES	SUN LOOK ANGLES PHI DEGREES
0.	9.	23.	11.234	-22.34	-1.24	54.45	32.41
0.	9.	23.	13.234	-22.22	-1.23	54.44	32.41
0.	9.	23.	15.234	-22.10	-1.22	54.43	32.42
0.	9.	23.	17.234	-21.98	-1.22	54.42	32.42
0.	9.	23.	19.234	-21.86	-1.21	54.41	32.43
0.	9.	23.	21.234	-21.74	-1.20	54.40	32.44
0.	9.	23.	23.234	-21.62	-1.19	54.39	32.44
0.	9.	23.	25.234	-21.51	-1.19	54.38	32.45
0.	9.	23.	27.234	-21.39	-1.18	54.37	32.45
0.	9.	23.	29.234	-21.27	-1.17	54.36	32.45
0.	9.	23.	31.234	-21.15	-1.16	54.35	32.46
0.	9.	23.	33.234	-21.03	-1.16	54.34	32.46
0.	9.	23.	35.234	-20.92	-1.15	54.33	32.47
0.	9.	23.	37.234	-20.80	-1.14	54.32	32.47
0.	9.	23.	39.234	-20.68	-1.14	54.31	32.48
0.	9.	23.	41.234	-20.57	-1.13	54.31	32.48
0.	9.	23.	43.234	-20.45	-1.12	54.30	32.49
0.	9.	23.	45.234	-20.34	-1.11	54.29	32.49
0.	9.	23.	47.234	-20.22	-1.11	54.28	32.50
0.	9.	23.	49.234	-20.11	-1.10	54.27	32.50
0.	9.	23.	51.234	-19.99	-1.09	54.27	32.50
0.	9.	23.	53.234	-19.88	-1.08	54.26	32.51
0.	9.	23.	55.234	-19.76	-1.08	54.25	32.51
0.	9.	23.	57.234	-19.65	-1.07	54.25	32.52
0.	9.	23.	59.234	-19.53	-1.06	54.24	32.52
0.	9.	24.	1.234	-19.42	-1.05	54.23	32.53
0.	9.	24.	3.234	-19.31	-1.05	54.23	32.53
0.	9.	24.	5.234	-19.19	-1.04	54.22	32.53
0.	9.	24.	7.234	-19.08	-1.03	54.21	32.54
0.	9.	24.	9.234	-18.97	-1.02	54.21	32.54
0.	9.	24.	11.234	-18.86	-1.02	54.20	32.54
0.	9.	24.	13.234	-18.74	-1.01	54.20	32.55
0.	9.	24.	15.234	-18.63	-1.00	54.19	32.55
0.	9.	24.	17.234	-18.52	-.99	54.19	32.55
0.	9.	24.	19.234	-18.41	-.98	54.18	32.56
0.	9.	24.	21.234	-18.30	-.98	54.18	32.56
0.	9.	24.	23.234	-18.19	-.97	54.17	32.57
0.	9.	24.	25.234	-18.08	-.96	54.17	32.57
0.	9.	24.	27.234	-17.97	-.95	54.17	32.57
0.	9.	24.	29.234	-17.86	-.94	54.16	32.58
0.	9.	24.	31.234	-17.75	-.94	54.16	32.58
0.	9.	24.	33.234	-17.64	-.93	54.15	32.58

TABLE V
APOLLO MISSION AS-502
SPACECRAFT OPERATIONAL TRAJECTORY
-AERODYNAMIC AND SUN ATTITUDES-

TIME DAY	HR	MIN	SEC	AERODYNAMIC ANGLE OF ATTACK DEGREES	AERODYNAMIC ANGLE OF SIDESLIP DEGREES	SUN LOOK ANGLES THETA DEGREES	SUN LOOK ANGLES PHI DEGREES
0.	9.	24.	35.234	-17.53	-.92	54.15	32.59
0.	9.	24.	37.234	-17.42	-.91	54.15	32.59
0.	9.	24.	39.234	-17.31	-.90	54.14	32.59
0.	9.	24.	41.234	-17.20	-.89	54.14	32.60
0.	9.	24.	43.234	-17.09	-.89	54.14	32.60
0.	9.	24.	45.234	-16.98	-.88	54.14	32.60
0.	9.	24.	47.234	-16.88	-.87	54.13	32.61
0.	9.	24.	49.234	-16.77	-.86	54.13	32.61
0.	9.	24.	51.234	-16.66	-.85	54.13	32.61
0.	9.	24.	53.234	-16.55	-.84	54.13	32.62
0.	9.	24.	55.234	-16.45	-.83	54.13	32.62
0.	9.	24.	57.234	-16.34	-.82	54.13	32.62
0.	9.	24.	59.234	-16.23	-.81	54.12	32.63
0.	9.	25.	1.234	-16.13	-.80	54.12	32.63
0.	9.	25.	3.234	-16.02	-.79	54.12	32.64
0.	9.	25.	5.234	-15.91	-.78	54.12	32.64
0.	9.	25.	7.234	-15.81	-.76	54.12	32.65
0.	9.	25.	9.234	-15.70	-.75	54.12	32.65
0.	9.	25.	11.234	-15.59	-.74	54.13	32.66
0.	9.	25.	13.234	-15.49	-.72	54.13	32.67
0.	9.	25.	15.234	-15.38	-.70	54.13	32.68
0.	9.	25.	17.234	-15.27	-.68	54.13	32.69
0.	9.	25.	19.234	-15.16	-.65	54.14	32.71
0.	9.	25.	21.234	-15.04	-.60	54.15	32.74
0.	9.	25.	22.325	-15.90	-.55	54.94	32.43
				SECOND SPS -HUTDOWN			
0.	9.	25.	22.325	-15.90	-.56	54.95	32.45
0.	9.	25.	23.012	-15.87	-.55	54.95	32.45
				HOLD INERTIAL ATTITUDE			
0.	9.	25.	23.012	-15.87	-.55	54.95	32.45
0.	9.	25.	32.023	-15.52	-.53	54.95	32.45
0.	9.	25.	42.023	-15.13	-.51	54.95	32.45
0.	9.	25.	52.023	-14.73	-.48	54.95	32.45

TABLE V
APOLLO MISSION AS-502
SPACECRAFT OPERATIONAL TRAJECTORY
-AERODYNAMIC AND SUN ATTITUDES-

TIME DAY HR MIN SEC	AERODYNAMIC ANGLE OF ATTACK DEGREES	AERODYNAMIC ANGLE OF SIDESLIP DEGREES	SUN LOOK ANGLES THETA DEGREES	SUN LOOK ANGLES PHI DEGREES
0. 9. 25. 59.022	-14.45	-.46	54.95	32.45
CSM ATTITUDE ORIENTATION FOR CM/SM SEPERATION				
0. 9. 25. 59.022	-14.45	-.46	54.95	32.45
0. 9. 25. 59.109	-14.44	-.80	54.76	32.25
0. 9. 26. 9.109	25.96	-.16	27.87	69.33
0. 9. 26. 16.605	56.25	.53	32.20	123.48
0. 9. 26. 16.697	56.25	-.02	32.20	124.13
0. 9. 26. 16.797	56.25	-.62	32.20	124.85
0. 9. 26. 16.814	56.25	-.72	32.20	124.98
COAST TO CM/SM SEPARATION				
0. 9. 26. 16.814	56.25	-.72	32.20	124.98
0. 9. 26. 21.817	56.46	-.71	32.20	124.98
0. 9. 26. 31.817	56.87	-.69	32.20	124.98
0. 9. 26. 41.817	57.29	-.66	32.20	124.98
0. 9. 26. 51.817	57.71	-.64	32.20	124.98
0. 9. 27. 1.817	58.13	-.62	32.20	124.98
0. 9. 27. 11.817	58.56	-.59	32.20	124.98
0. 9. 27. 21.817	58.99	-.57	32.20	124.98
0. 9. 27. 31.817	59.43	-.55	32.20	124.98
0. 9. 27. 41.817	59.86	-.52	32.20	124.98
0. 9. 27. 51.817	60.30	-.50	32.20	124.98
0. 9. 27. 53.976	60.40	-.49	32.20	124.98
CM/SM SEPARATION AND FIVE SECOND COAST				
0. 9. 27. 53.976	60.41	-.49	32.21	126.00
0. 9. 27. 58.976	60.40	-.48	32.08	124.69

TABLE V
APOLLO MISSION AS-502
SPACECRAFT OPERATIONAL TRAJECTORY
-AERODYNAMIC AND SUN ATTITUDES-

TIME DAY	HR	MIN	SEC	AERODYNAMIC ANGLE OF ATTACK DEGREES	AERODYNAMIC ANGLE OF SIDESLIP DEGREES	SUN LOOK ANGLES THETA DEGREES	SUN LOOK ANGLES PHI DEGREES
				CM ATTITUDE ORIENTATION FOR ENTRY			
0.	9.	27.	58.976	60.40	-.48	32.08	124.69
0.	9.	27.	59.367	60.44	.29	33.38	123.36
0.	9.	28.	8.408	97.00	-.09	60.12	148.64
0.	9.	28.	18.408	137.45	-.17	95.26	153.51
0.	9.	28.	22.683	154.74	-.07	110.38	151.83
0.	9.	28.	22.692	154.74	-.13	110.38	151.96
0.	9.	28.	22.694	154.74	-.14	110.38	151.99
				COAST TO ENTRY			
0.	9.	28.	22.694	154.74	-.14	110.38	151.99
0.	9.	28.	31.694	155.15	-.12	110.38	151.99
0.	9.	28.	41.694	155.60	-.09	110.38	151.99
0.	9.	28.	51.694	156.06	-.07	110.38	151.99
0.	9.	29.	1.694	156.52	-.05	110.38	151.99
0.	9.	29.	11.694	156.98	-.03	110.38	151.99
0.	9.	29.	21.694	157.44	-.00	110.38	151.99
0.	9.	29.	23.694	157.53	.00	110.38	151.99
				ENTRY			

TABLE VI
APOLLO MISSION AS-502
SPACECRAFT OPERATIONAL TRAJECTORY
-DIRECTION COSINES-

TIME FROM LIFTOFF DAY	HR	MIN	SEC	ROLL AXIS L 11	L 21	L 31	PITCH AXIS L 12	L 22	L 32	YAW AXIS L 13	L 23	L 33
LIFTOFF CONDITIONS												
0.	0.	0.	.000	.3362038	-.8109855	.4788209	-.1833684	.4423183	.8779126	-.9237657	-.3829582	-.0000000
TRANSLUNAR INJECTION												
0.	3.	15.	46.739	.2109252	.9533239	-.2160648	-.4621624	.2920304	.8373315	.8613457	-.0767573	.5021871
0.	3.	15.	48.739	.2109252	.9533239	-.2160648	-.4621624	.2920304	.8373315	.8613457	-.0767573	.5021871
0.	3.	15.	50.739	.2109252	.9533239	-.2160648	-.4621624	.2920304	.8373315	.8613457	-.0767573	.5021871
0.	3.	15.	52.739	.2109252	.9533239	-.2160648	-.4621624	.2920304	.8373315	.8613457	-.0767573	.5021871
0.	3.	15.	54.739	.2109252	.9533239	-.2160648	-.4621624	.2920304	.8373315	.8613457	-.0767573	.5021871
0.	3.	15.	56.739	.2109252	.9533239	-.2160648	-.4621624	.2920304	.8373315	.8613457	-.0767573	.5021871
0.	3.	15.	56.939	.2109252	.9533239	-.2160648	-.4621624	.2920304	.8373315	.8613457	-.0767573	.5021871
BEGIN ORIENTATION TO S-IVB/CSM SEPARATION ATTITUDE												
0.	3.	15.	56.939	.2109252	.9533239	-.2160648	-.4621624	.2920304	.8373315	.8613457	-.0767573	.5021871
0.	3.	15.	57.098	.2125172	.9541693	-.2107068	-.4596094	.2878975	.8401632	.8623199	-.0817063	.4997284
0.	3.	16.	2.139	.2125172	.9541693	-.2107068	-.4596094	.2878975	.8401632	.8623199	-.0817063	.4997284
0.	3.	16.	12.139	.2125172	.9541693	-.2107068	-.4596094	.2878975	.8401632	.8623199	-.0817063	.4997284
0.	3.	16.	22.139	.2125172	.9541693	-.2107068	-.4596094	.2878975	.8401632	.8623199	-.0817063	.4997284
0.	3.	16.	32.139	.2125172	.9541693	-.2107068	-.4596094	.2878975	.8401632	.8623199	-.0817063	.4997284
0.	3.	16.	42.139	.8652404	.3350420	.3729691	-.0476646	-.6865778	.7264373	.4990863	-.6463203	-.5772199
0.	3.	16.	52.139	.8652404	.3350420	.3729691	-.0476646	-.6865778	.7264373	.4990863	-.6463203	-.5772199
0.	3.	17.	2.139	.8652404	.3350420	.3729691	-.0476646	-.6865778	.7264373	.4990863	-.6463203	-.5772199
0.	3.	17.	12.139	.8652404	.3350420	.3729691	-.0476646	-.6865778	.7264373	.4990863	-.6463203	-.5772199
0.	3.	17.	22.139	.8652404	.3350420	.3729691	-.0476646	-.6865778	.7264373	.4990863	-.6463203	-.5772199
0.	3.	17.	32.139	.4214749	-.7435569	.5191165	-.1882194	-.6317075	-.7520100	.8870921	.2192455	-.4062007
0.	3.	17.	42.139	.4214749	-.7435569	.5191165	-.1882194	-.6317075	-.7520100	.8870921	.2192455	-.4062007
0.	3.	17.	52.139	.4214749	-.7435569	.5191165	-.1882194	-.6317075	-.7520100	.8870921	.2192455	-.4062007
0.	3.	17.	56.184	-.0963160	-.9466663	.3074835	.3243521	-.3218779	-.8887569	.9403284	.0147463	.3399485
0.	3.	17.	58.139	-.0963160	-.9466663	.3074835	.3243521	-.3218779	-.8887569	.9403284	.0147463	.3399485
0.	3.	18.	.139	-.0963160	-.9466663	.3074835	.3243521	-.3218779	-.8887569	.9403284	.0147463	.3399485

Direction cosines

TABLE VI
APOLLO MISSION AS-502
SPACECRAFT OPERATIONAL TRAJECTORY
-DIRECTION COSINES-

TIME FROM LIFTOFF DAY	HR	MIN	SEC	ROLL AXIS L 11	L 21	L 31	PITCH AXIS L 12	L 22	L 32	YAW AXIS L 13	L 23	L 33
0.	3.	18.	1.058	-.0963160	-.9966663	.3074835	.4308121	-.3176637	-.8905556	.8934020	.0539685	.4460047
END ORIENTATION TO S-IVB/CSM SEPARATION ATTITUDE												
0.	3.	18.	1.058	-.0963160	-.9966663	.3074835	.4308121	-.3176637	-.8905556	.8934020	.0539685	.4460047
0.	3.	18.	2.139	-.0963160	-.9966663	.3074835	.4308121	-.3176637	-.8905556	.8934020	.0539685	.4460047
0.	3.	18.	4.139	-.0963160	-.9966663	.3074835	.4308121	-.3176637	-.8905556	.8934020	.0539685	.4460047
0.	3.	18.	6.139	-.0963160	-.9966663	.3074835	.4308121	-.3176637	-.8905556	.8934020	.0539685	.4460047
0.	3.	18.	8.139	-.0963160	-.9966663	.3074835	.4308121	-.3176637	-.8905556	.8934020	.0539685	.4460047
0.	3.	18.	10.139	-.0963160	-.9966663	.3074835	.4308121	-.3176637	-.8905556	.8934020	.0539685	.4460047
0.	3.	18.	12.139	-.0963160	-.9966663	.3074835	.4308121	-.3176637	-.8905556	.8934020	.0539685	.4460047
0.	3.	18.	14.139	-.0963160	-.9966663	.3074835	.4308121	-.3176637	-.8905556	.8934020	.0539685	.4460047
0.	3.	18.	16.139	-.0963160	-.9966663	.3074835	.4308121	-.3176637	-.8905556	.8934020	.0539685	.4460047
0.	3.	18.	18.139	-.0963160	-.9966663	.3074835	.4308121	-.3176637	-.8905556	.8934020	.0539685	.4460047
0.	3.	18.	20.139	-.0963160	-.9966663	.3074835	.4308121	-.3176637	-.8905556	.8934020	.0539685	.4460047
0.	3.	18.	22.139	-.0963160	-.9966663	.3074835	.4308121	-.3176637	-.8905556	.8934020	.0539685	.4460047
0.	3.	18.	24.139	-.0963160	-.9966663	.3074835	.4308121	-.3176637	-.8905556	.8934020	.0539685	.4460047
0.	3.	18.	26.139	-.0963160	-.9966663	.3074835	.4308121	-.3176637	-.8905556	.8934020	.0539685	.4460047
0.	3.	18.	28.139	-.0963160	-.9966663	.3074835	.4308121	-.3176637	-.8905556	.8934020	.0539685	.4460047
0.	3.	18.	30.139	-.0963160	-.9966663	.3074835	.4308121	-.3176637	-.8905556	.8934020	.0539685	.4460047
0.	3.	18.	32.139	-.0963160	-.9966663	.3074835	.4308121	-.3176637	-.8905556	.8934020	.0539685	.4460047
0.	3.	18.	34.139	-.0963160	-.9966663	.3074835	.4308121	-.3176637	-.8905556	.8934020	.0539685	.4460047
0.	3.	18.	36.139	-.0963160	-.9966663	.3074835	.4308121	-.3176637	-.8905556	.8934020	.0539685	.4460047
0.	3.	18.	36.939	-.0963160	-.9966663	.3074835	.4308121	-.3176637	-.8905556	.8934020	.0539685	.4460047
START RCS THRUST FOR S-IVB/CSM SEPARATION												
0.	3.	18.	36.939	-.0963162	-.9966666	.3074826	.4308135	-.3176629	-.8905551	.8934013	.0539684	.4460062
0.	3.	18.	37.938	-.0963162	-.9966666	.3074826	.4308135	-.3176629	-.8905551	.8934013	.0539684	.4460062
0.	3.	18.	38.639	-.0963162	-.9966666	.3074826	.4308135	-.3176629	-.8905551	.8934013	.0539684	.4460062
SEPARATION AND 8.3 SECS OF +X TRANSLATION												
0.	3.	18.	38.639	-.0963162	-.9966666	.3074826	.4308135	-.3176629	-.8905551	.8934013	.0539684	.4460062

TABLE VI
APOLLO MISSION AS-502
SPACECRAFT OPERATIONAL TRAJECTORY
-DIRECTION COSINES-

TIME FROM LIFTOFF DAY	HR	MIN	SEC	ROLL AXIS L 11	L 21	L 31	PITCH AXIS L 12	L 22	L 32	YAW AXIS L 13	L 23	L 33
0.	3.	18.	46.939	-.0963162	-.9466666	.3074826	.4388135	-.3176629	-.8405551	.8934013	.0539684	.4460062
				COAST FIVE SECONDS								
0.	3.	18.	46.939	-.0963162	-.9466666	.3074826	.4388135	-.3176629	-.8405551	.8934013	.0539684	.4460062
0.	3.	18.	51.939	-.0963162	-.9466666	.3074826	.4388135	-.3176629	-.8405551	.8934013	.0539684	.4460062
				ORIENTATION TO FIRST SPS IGNITION ATTITUDE								
0.	3.	18.	51.939	-.0963162	-.9466666	.3074826	.4388135	-.3176629	-.8405551	.8934013	.0539684	.4460062
0.	3.	18.	52.827	-.1508546	-.9486172	.2781514	.4381657	-.3143855	-.8413744	.8861454	-.0050488	.4633798
				COAST TO FIRST SPS BURN								
0.	3.	18.	52.827	-.1508546	-.9486172	.2781514	.4381657	-.3143855	-.8413744	.8861454	-.0050488	.4633798
0.	3.	18.	53.239	-.1508546	-.9486172	.2781514	.4381657	-.3143855	-.8413744	.8861454	-.0050488	.4633798
0.	3.	19.	3.239	-.1508546	-.9486172	.2781514	.4381657	-.3143855	-.8413744	.8861454	-.0050488	.4633798
0.	3.	19.	13.239	-.1508546	-.9486172	.2781514	.4381657	-.3143855	-.8413744	.8861454	-.0050488	.4633798
0.	3.	19.	23.239	-.1508546	-.9486172	.2781514	.4381657	-.3143855	-.8413744	.8861454	-.0050488	.4633798
0.	3.	19.	33.239	-.1508546	-.9486172	.2781514	.4381657	-.3143855	-.8413744	.8861454	-.0050488	.4633798
0.	3.	19.	43.239	-.1508546	-.9486172	.2781514	.4381657	-.3143855	-.8413744	.8861454	-.0050488	.4633798
0.	3.	19.	53.239	-.1508546	-.9486172	.2781514	.4381657	-.3143855	-.8413744	.8861454	-.0050488	.4633798
0.	3.	20.	3.239	-.1508546	-.9486172	.2781514	.4381657	-.3143855	-.8413744	.8861454	-.0050488	.4633798
0.	3.	20.	13.239	-.1508546	-.9486172	.2781514	.4381657	-.3143855	-.8413744	.8861454	-.0050488	.4633798
0.	3.	20.	16.939	-.1508546	-.9486172	.2781514	.4381657	-.3143855	-.8413744	.8861454	-.0050488	.4633798
				FIRST SPS IGNITION								
0.	3.	20.	16.939	-.1508546	-.9486172	.2781514	.4381657	-.3143855	-.8413744	.8861454	-.0050488	.4633798
0.	3.	20.	17.314	-.1508546	-.9486172	.2781514	.4381657	-.3143855	-.8413744	.8861454	-.0050488	.4633798

TABLE VI
APOLLO MISSION AS-502
SPACECRAFT OPERATIONAL TRAJECTORY
-DIRECTION COSINES-

TIME FROM LIFTOFF DAY	HR	MIN	SEC	ROLL AXIS L 11	L 21	L 31	PITCH AXIS L 12	L 22	L 32	YAW AXIS L 13	L 23	L 33
							FIRST SPS BURN					
0.	3.	20.	17.314	-.1508546	-.9486172	.2781514	.4381657	-.3143855	-.8413744	.8861454	-.0050488	.4633798
0.	3.	20.	18.333	-.1508546	-.9486172	.2781514	.4381657	-.3143855	-.8413744	.8861454	-.0050488	.4633798
0.	3.	20.	20.333	-.1508546	-.9486172	.2781514	.4381657	-.3143855	-.8413744	.8861454	-.0050488	.4633798
0.	3.	20.	22.333	-.1508546	-.9486172	.2781514	.4381657	-.3143855	-.8413744	.8861454	-.0050488	.4633798
0.	3.	20.	24.333	-.1508546	-.9486172	.2781514	.4381657	-.3143855	-.8413744	.8861454	-.0050488	.4633798
0.	3.	20.	26.333	-.1508546	-.9486172	.2781514	.4381657	-.3143855	-.8413744	.8861454	-.0050488	.4633798
0.	3.	20.	28.333	-.1508546	-.9486172	.2781514	.4381657	-.3143855	-.8413744	.8861454	-.0050488	.4633798
0.	3.	20.	30.333	-.1508546	-.9486172	.2781514	.4381657	-.3143855	-.8413744	.8861454	-.0050488	.4633798
0.	3.	20.	32.333	-.1508546	-.9486172	.2781514	.4381657	-.3143855	-.8413744	.8861454	-.0050488	.4633798
0.	3.	20.	34.333	-.1508546	-.9486172	.2781514	.4381657	-.3143855	-.8413744	.8861454	-.0050488	.4633798
0.	3.	20.	36.333	-.1508546	-.9486172	.2781514	.4381657	-.3143855	-.8413744	.8861454	-.0050488	.4633798
0.	3.	20.	38.333	-.1508546	-.9486172	.2781514	.4381657	-.3143855	-.8413744	.8861454	-.0050488	.4633798
0.	3.	20.	40.333	-.1508546	-.9486172	.2781514	.4381657	-.3143855	-.8413744	.8861454	-.0050488	.4633798
0.	3.	20.	42.333	-.1508546	-.9486172	.2781514	.4381657	-.3143855	-.8413744	.8861454	-.0050488	.4633798
0.	3.	20.	44.333	-.1508546	-.9486172	.2781514	.4381657	-.3143855	-.8413744	.8861454	-.0050488	.4633798
0.	3.	20.	46.333	-.1508546	-.9486172	.2781514	.4381657	-.3143855	-.8413744	.8861454	-.0050488	.4633798
0.	3.	20.	48.333	-.1508546	-.9486172	.2781514	.4381657	-.3143855	-.8413744	.8861454	-.0050488	.4633798
0.	3.	20.	50.333	-.1508546	-.9486172	.2781514	.4381657	-.3143855	-.8413744	.8861454	-.0050488	.4633798
0.	3.	20.	52.333	-.1508546	-.9486172	.2781514	.4381657	-.3143855	-.8413744	.8861454	-.0050488	.4633798
0.	3.	20.	54.333	-.1508546	-.9486172	.2781514	.4381657	-.3143855	-.8413744	.8861454	-.0050488	.4633798
0.	3.	20.	56.333	-.1508546	-.9486172	.2781514	.4381657	-.3143855	-.8413744	.8861454	-.0050488	.4633798
0.	3.	20.	58.333	-.1508546	-.9486172	.2781514	.4381657	-.3143855	-.8413744	.8861454	-.0050488	.4633798
0.	3.	21.	.333	-.1508546	-.9486172	.2781514	.4381657	-.3143855	-.8413744	.8861454	-.0050488	.4633798
0.	3.	21.	2.333	-.1508546	-.9486172	.2781514	.4381657	-.3143855	-.8413744	.8861454	-.0050488	.4633798
0.	3.	21.	4.333	-.1508546	-.9486172	.2781514	.4381657	-.3143855	-.8413744	.8861454	-.0050488	.4633798
0.	3.	21.	6.333	-.1508546	-.9486172	.2781514	.4381657	-.3143855	-.8413744	.8861454	-.0050488	.4633798
0.	3.	21.	8.333	-.1508546	-.9486172	.2781514	.4381657	-.3143855	-.8413744	.8861454	-.0050488	.4633798
0.	3.	21.	10.333	-.1508546	-.9486172	.2781514	.4381657	-.3143855	-.8413744	.8861454	-.0050488	.4633798
0.	3.	21.	12.333	-.1508546	-.9486172	.2781514	.4381657	-.3143855	-.8413744	.8861454	-.0050488	.4633798
0.	3.	21.	14.333	-.1508546	-.9486172	.2781514	.4381657	-.3143855	-.8413744	.8861454	-.0050488	.4633798
0.	3.	21.	16.333	-.1264154	-.9512176	.2824935	.4403238	-.3088703	-.8430388	.8891464	.0178284	.4579259
0.	3.	21.	18.333	-.1264154	-.9512176	.2824935	.4403238	-.3088703	-.8430388	.8891464	.0178284	.4579259
0.	3.	21.	20.333	-.1264154	-.9512176	.2824935	.4403238	-.3088703	-.8430388	.8891464	.0178284	.4579259
0.	3.	21.	22.333	-.1264154	-.9512176	.2824935	.4403238	-.3088703	-.8430388	.8891464	.0178284	.4579259
0.	3.	21.	24.333	-.1264154	-.9512176	.2824935	.4403238	-.3088703	-.8430388	.8891464	.0178284	.4579259
0.	3.	21.	26.333	-.1264154	-.9512176	.2824935	.4403238	-.3088703	-.8430388	.8891464	.0178284	.4579259
0.	3.	21.	28.333	-.1264154	-.9512176	.2824935	.4403238	-.3088703	-.8430388	.8891464	.0178284	.4579259
0.	3.	21.	30.333	-.1264154	-.9512176	.2824935	.4403238	-.3088703	-.8430388	.8891464	.0178284	.4579259
0.	3.	21.	32.333	-.1264154	-.9512176	.2824935	.4403238	-.3088703	-.8430388	.8891464	.0178284	.4579259
0.	3.	21.	34.333	-.1264154	-.9512176	.2824935	.4403238	-.3088703	-.8430388	.8891464	.0178284	.4579259
0.	3.	21.	36.333	-.1264154	-.9512176	.2824935	.4403238	-.3088703	-.8430388	.8891464	.0178284	.4579259
0.	3.	21.	38.333	-.1264154	-.9512176	.2824935	.4403238	-.3088703	-.8430388	.8891464	.0178284	.4579259
0.	3.	21.	40.333	-.1264154	-.9512176	.2824935	.4403238	-.3088703	-.8430388	.8891464	.0178284	.4579259

TABLE VI
APOLLO MISSION AS-502
SPACECRAFT OPERATIONAL TRAJECTORY
-DIRECTION COSINES-

TIME FROM LIFTOFF DAY	HR	MIN	SEC	ROLL AXIS L 11	L 21	L 31	PITCH AXIS L 12	L 22	L 32	YAW AXIS L 13	L 23	L 33
0.	3.	21.	42.333	-.1264154	-.9512176	.2824935	.4403238	-.3088703	-.8430388	.8891464	.0178284	.4579259
0.	3.	21.	44.333	-.1264154	-.9512176	.2824935	.4403238	-.3088703	-.8430388	.8891464	.0178284	.4579259
0.	3.	21.	46.333	-.1264154	-.9512176	.2824935	.4403238	-.3088703	-.8430388	.8891464	.0178284	.4579259
0.	3.	21.	48.333	-.1264154	-.9512176	.2824935	.4403238	-.3088703	-.8430388	.8891464	.0178284	.4579259
0.	3.	21.	50.333	-.1264154	-.9512176	.2824935	.4403238	-.3088703	-.8430388	.8891464	.0178284	.4579259
0.	3.	21.	52.333	-.1264154	-.9512176	.2824935	.4403238	-.3088703	-.8430388	.8891464	.0178284	.4579259
0.	3.	21.	54.333	-.1264154	-.9512176	.2824935	.4403238	-.3088703	-.8430388	.8891464	.0178284	.4579259
0.	3.	21.	56.333	-.1264154	-.9512176	.2824935	.4403238	-.3088703	-.8430388	.8891464	.0178284	.4579259
0.	3.	21.	58.333	-.1264154	-.9512176	.2824935	.4403238	-.3088703	-.8430388	.8891464	.0178284	.4579259
0.	3.	22.	.333	-.1264154	-.9512176	.2824935	.4403238	-.3088703	-.8430388	.8891464	.0178284	.4579259
0.	3.	22.	2.333	-.1264154	-.9512176	.2824935	.4403238	-.3088703	-.8430388	.8891464	.0178284	.4579259
0.	3.	22.	4.333	-.1264154	-.9512176	.2824935	.4403238	-.3088703	-.8430388	.8891464	.0178284	.4579259
0.	3.	22.	6.333	-.1264154	-.9512176	.2824935	.4403238	-.3088703	-.8430388	.8891464	.0178284	.4579259
0.	3.	22.	8.333	-.1264154	-.9512176	.2824935	.4403238	-.3088703	-.8430388	.8891464	.0178284	.4579259
0.	3.	22.	10.333	-.1264154	-.9512176	.2824935	.4403238	-.3088703	-.8430388	.8891464	.0178284	.4579259
0.	3.	22.	12.333	-.1264154	-.9512176	.2824935	.4403238	-.3088703	-.8430388	.8891464	.0178284	.4579259
0.	3.	22.	14.333	-.1264154	-.9512176	.2824935	.4403238	-.3088703	-.8430388	.8891464	.0178284	.4579259
0.	3.	22.	16.333	-.1124466	-.9507623	.2898763	.4403069	-.3090728	-.8429735	.8910395	.0328579	.4534174
0.	3.	22.	18.333	-.1124466	-.9507623	.2898763	.4403069	-.3090728	-.8429735	.8910395	.0328579	.4534174
0.	3.	22.	20.333	-.1124466	-.9507623	.2898763	.4403069	-.3090728	-.8429735	.8910395	.0328579	.4534174
0.	3.	22.	22.333	-.1124466	-.9507623	.2898763	.4403069	-.3090728	-.8429735	.8910395	.0328579	.4534174
0.	3.	22.	24.333	-.1124466	-.9507623	.2898763	.4403069	-.3090728	-.8429735	.8910395	.0328579	.4534174
0.	3.	22.	26.333	-.1124466	-.9507623	.2898763	.4403069	-.3090728	-.8429735	.8910395	.0328579	.4534174
0.	3.	22.	28.333	-.1124466	-.9507623	.2898763	.4403069	-.3090728	-.8429735	.8910395	.0328579	.4534174
0.	3.	22.	30.333	-.1124466	-.9507623	.2898763	.4403069	-.3090728	-.8429735	.8910395	.0328579	.4534174
0.	3.	22.	32.333	-.1124466	-.9507623	.2898763	.4403069	-.3090728	-.8429735	.8910395	.0328579	.4534174
0.	3.	22.	34.333	-.1124466	-.9507623	.2898763	.4403069	-.3090728	-.8429735	.8910395	.0328579	.4534174
0.	3.	22.	36.333	-.1124466	-.9507623	.2898763	.4403069	-.3090728	-.8429735	.8910395	.0328579	.4534174
0.	3.	22.	38.333	-.1124466	-.9507623	.2898763	.4403069	-.3090728	-.8429735	.8910395	.0328579	.4534174
0.	3.	22.	40.333	-.1124466	-.9507623	.2898763	.4403069	-.3090728	-.8429735	.8910395	.0328579	.4534174
0.	3.	22.	42.333	-.1124466	-.9507623	.2898763	.4403069	-.3090728	-.8429735	.8910395	.0328579	.4534174
0.	3.	22.	44.333	-.1124466	-.9507623	.2898763	.4403069	-.3090728	-.8429735	.8910395	.0328579	.4534174
0.	3.	22.	46.333	-.1124466	-.9507623	.2898763	.4403069	-.3090728	-.8429735	.8910395	.0328579	.4534174
0.	3.	22.	48.333	-.1124466	-.9507623	.2898763	.4403069	-.3090728	-.8429735	.8910395	.0328579	.4534174
0.	3.	22.	50.333	-.1124466	-.9507623	.2898763	.4403069	-.3090728	-.8429735	.8910395	.0328579	.4534174
0.	3.	22.	52.333	-.1124466	-.9507623	.2898763	.4403069	-.3090728	-.8429735	.8910395	.0328579	.4534174
0.	3.	22.	54.333	-.1124466	-.9507623	.2898763	.4403069	-.3090728	-.8429735	.8910395	.0328579	.4534174
0.	3.	22.	56.333	-.1124466	-.9507623	.2898763	.4403069	-.3090728	-.8429735	.8910395	.0328579	.4534174
0.	3.	22.	58.333	-.1124466	-.9507623	.2898763	.4403069	-.3090728	-.8429735	.8910395	.0328579	.4534174
0.	3.	23.	.333	-.1124466	-.9507623	.2898763	.4403069	-.3090728	-.8429735	.8910395	.0328579	.4534174
0.	3.	23.	2.333	-.1124466	-.9507623	.2898763	.4403069	-.3090728	-.8429735	.8910395	.0328579	.4534174
0.	3.	23.	4.333	-.1124466	-.9507623	.2898763	.4403069	-.3090728	-.8429735	.8910395	.0328579	.4534174
0.	3.	23.	6.333	-.1124466	-.9507623	.2898763	.4403069	-.3090728	-.8429735	.8910395	.0328579	.4534174

TABLE VI
APOLLO MISSION AS-502
SPACECRAFT OPERATIONAL TRAJECTORY
-DIRECTION COSINES-

TIME FROM LIFTOFF DAY	HR	MIN	SEC	ROLL AXIS L 11	L 21	L 31	PITCH AXIS L 12	L 22	L 32	YAW AXIS L 13	L 23	L 33
0.	3.	23.	8.333	-.1124466	-.9507623	.2898763	.4403069	-.3090728	-.8429735	.8910395	.0328579	.4534174
0.	3.	23.	10.333	-.1124466	-.9507623	.2898763	.4403069	-.3090728	-.8429735	.8910395	.0328579	.4534174
0.	3.	23.	12.333	-.1124466	-.9507623	.2898763	.4403069	-.3090728	-.8429735	.8910395	.0328579	.4534174
0.	3.	23.	14.333	-.1124466	-.9507623	.2898763	.4403069	-.3090728	-.8429735	.8910395	.0328579	.4534174
0.	3.	23.	16.333	-.1096634	-.9503598	.2941045	.4402832	-.3093209	-.8428948	.8920053	.0412819	.4508381
0.	3.	23.	18.333	-.1096634	-.9503598	.2941045	.4402832	-.3093209	-.8428948	.8920053	.0412819	.4508381
0.	3.	23.	20.333	-.1096634	-.9503598	.2941045	.4402832	-.3093209	-.8428948	.8920053	.0412819	.4508381
0.	3.	23.	22.333	-.1096634	-.9503598	.2941045	.4402832	-.3093209	-.8428948	.8920053	.0412819	.4508381
0.	3.	23.	24.333	-.1096634	-.9503598	.2941045	.4402832	-.3093209	-.8428948	.8920053	.0412819	.4508381
0.	3.	23.	26.333	-.1096634	-.9503598	.2941045	.4402832	-.3093209	-.8428948	.8920053	.0412819	.4508381
0.	3.	23.	28.333	-.1096634	-.9503598	.2941045	.4402832	-.3093209	-.8428948	.8920053	.0412819	.4508381
0.	3.	23.	30.333	-.1096634	-.9503598	.2941045	.4402832	-.3093209	-.8428948	.8920053	.0412819	.4508381
0.	3.	23.	32.333	-.1096634	-.9503598	.2941045	.4402832	-.3093209	-.8428948	.8920053	.0412819	.4508381
0.	3.	23.	34.333	-.1096634	-.9503598	.2941045	.4402832	-.3093209	-.8428948	.8920053	.0412819	.4508381
0.	3.	23.	36.333	-.1096634	-.9503598	.2941045	.4402832	-.3093209	-.8428948	.8920053	.0412819	.4508381
0.	3.	23.	38.333	-.1096634	-.9503598	.2941045	.4402832	-.3093209	-.8428948	.8920053	.0412819	.4508381
0.	3.	23.	40.333	-.1096634	-.9503598	.2941045	.4402832	-.3093209	-.8428948	.8920053	.0412819	.4508381
0.	3.	23.	42.333	-.1096634	-.9503598	.2941045	.4402832	-.3093209	-.8428948	.8920053	.0412819	.4508381
0.	3.	23.	44.333	-.1096634	-.9503598	.2941045	.4402832	-.3093209	-.8428948	.8920053	.0412819	.4508381
0.	3.	23.	46.333	-.1096634	-.9503598	.2941045	.4402832	-.3093209	-.8428948	.8920053	.0412819	.4508381
0.	3.	23.	48.333	-.1096634	-.9503598	.2941045	.4402832	-.3093209	-.8428948	.8920053	.0412819	.4508381
0.	3.	23.	50.333	-.1096634	-.9503598	.2941045	.4402832	-.3093209	-.8428948	.8920053	.0412819	.4508381
0.	3.	23.	52.333	-.1096634	-.9503598	.2941045	.4402832	-.3093209	-.8428948	.8920053	.0412819	.4508381
0.	3.	23.	54.333	-.1096634	-.9503598	.2941045	.4402832	-.3093209	-.8428948	.8920053	.0412819	.4508381
0.	3.	23.	56.333	-.1096634	-.9503598	.2941045	.4402832	-.3093209	-.8428948	.8920053	.0412819	.4508381
0.	3.	23.	58.333	-.1096634	-.9503598	.2941045	.4402832	-.3093209	-.8428948	.8920053	.0412819	.4508381
0.	3.	24.	.333	-.1096634	-.9503598	.2941045	.4402832	-.3093209	-.8428948	.8920053	.0412819	.4508381
0.	3.	24.	2.333	-.1096634	-.9503598	.2941045	.4402832	-.3093209	-.8428948	.8920053	.0412819	.4508381
0.	3.	24.	4.333	-.1096634	-.9503598	.2941045	.4402832	-.3093209	-.8428948	.8920053	.0412819	.4508381
0.	3.	24.	6.333	-.1096634	-.9503598	.2941045	.4402832	-.3093209	-.8428948	.8920053	.0412819	.4508381
0.	3.	24.	8.333	-.1096634	-.9503598	.2941045	.4402832	-.3093209	-.8428948	.8920053	.0412819	.4508381
0.	3.	24.	10.333	-.1096634	-.9503598	.2941045	.4402832	-.3093209	-.8428948	.8920053	.0412819	.4508381
0.	3.	24.	12.333	-.1096634	-.9503598	.2941045	.4402832	-.3093209	-.8428948	.8920053	.0412819	.4508381
0.	3.	24.	14.333	-.1096634	-.9503598	.2941045	.4402832	-.3093209	-.8428948	.8920053	.0412819	.4508381
0.	3.	24.	16.333	-.1003581	-.9499768	.2968433	.4402316	-.3098254	-.8427365	.8925290	.0461172	.4493393
0.	3.	24.	18.333	-.1003581	-.9499768	.2968433	.4402316	-.3098254	-.8427365	.8925290	.0461172	.4493393
0.	3.	24.	20.333	-.1003581	-.9499768	.2968433	.4402316	-.3098254	-.8427365	.8925290	.0461172	.4493393
0.	3.	24.	22.333	-.1003581	-.9499768	.2968433	.4402316	-.3098254	-.8427365	.8925290	.0461172	.4493393
0.	3.	24.	24.333	-.1003581	-.9499768	.2968433	.4402316	-.3098254	-.8427365	.8925290	.0461172	.4493393
0.	3.	24.	26.333	-.1003581	-.9499768	.2968433	.4402316	-.3098254	-.8427365	.8925290	.0461172	.4493393
0.	3.	24.	28.333	-.1003581	-.9499768	.2968433	.4402316	-.3098254	-.8427365	.8925290	.0461172	.4493393
0.	3.	24.	30.333	-.1003581	-.9499768	.2968433	.4402316	-.3098254	-.8427365	.8925290	.0461172	.4493393

TABLE VI
APOLLO MISSION AS-502
SPACECRAFT OPERATIONAL TRAJECTORY
-DIRECTION COSINES-

TIME FROM LIFTOFF DAY	HR	MIN	SEC	ROLL AXIS L 11	L 21	L 31	PITCH AXIS L 12	L 22	L 32	YAW AXIS L 13	L 23	L 33
0.	3.	24.	30.943	-.0781031	-.9481103	.3090085	.4401160	-.3108072	-.8424352	.8947434	.0702153	.4415886
						FIRST SPS SHUTDOWN						
0.	3.	24.	30.943	-.0781031	-.9481103	.3090085	.4401160	-.3108072	-.8424352	.8947434	.0702153	.4415886
0.	3.	24.	31.630	-.0781031	-.9481103	.3090085	.4401160	-.3108072	-.8424352	.8947434	.0702153	.4415886
						COAST FIVE SECONDS						
0.	3.	24.	31.630	-.0780836	-.9478736	.3089314	.4401478	-.3108183	-.8424143	.8945238	.0701968	.4414743
0.	3.	24.	36.630	-.0780836	-.9478736	.3089314	.4401478	-.3108183	-.8424143	.8945238	.0701968	.4414743
						CSM ATTITUDE ORIENTAION FOR SOLAR SOAK						
0.	3.	24.	36.630	-.0780836	-.9478736	.3089314	.4401478	-.3108183	-.8424143	.8945238	.0701968	.4414743
0.	3.	24.	45.643	-.0780836	-.9478736	.3089314	.4401478	-.3108183	-.8424143	.8945238	.0701968	.4414743
0.	3.	24.	50.177	-.4181516	-.3038552	.8560498	.1863359	-.9510464	-.2465554	.8890603	.0564152	.4543007
0.	3.	24.	55.643	-.4181516	-.3038552	.8560498	.1863359	-.9510464	-.2465554	.8890603	.0564152	.4543007
0.	3.	25.	5.643	-.4181516	-.3038552	.8560498	.1863359	-.9510464	-.2465554	.8890603	.0564152	.4543007
0.	3.	25.	15.643	-.4181516	-.3038552	.8560498	.1863359	-.9510464	-.2465554	.8890603	.0564152	.4543007
0.	3.	25.	18.207	-.8333597	.4124010	.3680176	-.3701882	.0779953	-.9256767	-.4104536	-.9076575	.0876678
0.	3.	25.	25.643	-.8333597	.4124010	.3680176	-.3701882	.0779953	-.9256767	-.4104536	-.9076575	.0876678
0.	3.	25.	35.643	-.8333597	.4124010	.3680176	-.3701882	.0779953	-.9256767	-.4104536	-.9076575	.0876678
0.	3.	25.	37.521	-.8333597	.4124010	.3680176	.0107291	-.6536219	.7567451	.5526268	.6345894	.5402775
						START SOLAR SOAK						
0.	3.	25.	37.521	-.8333597	.4124010	.3680176	.0107291	-.6536219	.7567451	.5526268	.6345894	.5402775
0.	3.	25.	40.643	-.8333597	.4124010	.3680176	.0107291	-.6536219	.7567451	.5526268	.6345894	.5402775
0.	3.	26.	40.643	-.8333597	.4124010	.3680176	.0107291	-.6536219	.7567451	.5526268	.6345894	.5402775
0.	3.	27.	40.643	-.8333597	.4124010	.3680176	.0107291	-.6536219	.7567451	.5526268	.6345894	.5402775
0.	3.	28.	40.643	-.8333597	.4124010	.3680176	.0107291	-.6536219	.7567451	.5526268	.6345894	.5402775
0.	3.	29.	40.643	-.8333597	.4124010	.3680176	.0107291	-.6536219	.7567451	.5526268	.6345894	.5402775
0.	3.	30.	40.643	-.8333597	.4124010	.3680176	.0107291	-.6536219	.7567451	.5526268	.6345894	.5402775
0.	3.	31.	40.643	-.8333597	.4124010	.3680176	.0107291	-.6536219	.7567451	.5526268	.6345894	.5402775

TABLE VI
APOLLO MISSION AS-502
SPACECRAFT OPERATIONAL TRAJECTORY
-DIRECTION COSINES-

TIME FROM LIFTOFF DAY	HR	MIN	SEC	ROLL AXIS L 11	L 21	L 31	PITCH AXIS L 12	L 22	L 32	YAW AXIS L 13	L 23	L 33
0.	3.	32.	40.643	-.8333597	.4124010	.3680176	.0107291	-.6536219	.7567451	.5526268	.6345894	.5402775
0.	3.	33.	40.643	-.8333597	.4124010	.3680176	.0107291	-.6536219	.7567451	.5526268	.6345894	.5402775
0.	3.	34.	40.643	-.8333597	.4124010	.3680176	.0107291	-.6536219	.7567451	.5526268	.6345894	.5402775
0.	3.	35.	40.643	-.8333597	.4124010	.3680176	.0107291	-.6536219	.7567451	.5526268	.6345894	.5402775
0.	3.	36.	40.643	-.8333597	.4124010	.3680176	.0107291	-.6536219	.7567451	.5526268	.6345894	.5402775
0.	3.	37.	40.643	-.8333597	.4124010	.3680176	.0107291	-.6536219	.7567451	.5526268	.6345894	.5402775
0.	3.	38.	40.643	-.8333597	.4124010	.3680176	.0107291	-.6536219	.7567451	.5526268	.6345894	.5402775
0.	3.	39.	40.643	-.8333597	.4124010	.3680176	.0107291	-.6536219	.7567451	.5526268	.6345894	.5402775
0.	3.	40.	40.643	-.8333597	.4124010	.3680176	.0107291	-.6536219	.7567451	.5526268	.6345894	.5402775
0.	3.	41.	40.643	-.8333597	.4124010	.3680176	.0107291	-.6536219	.7567451	.5526268	.6345894	.5402775
0.	3.	42.	40.643	-.8333597	.4124010	.3680176	.0107291	-.6536219	.7567451	.5526268	.6345894	.5402775
0.	3.	43.	40.643	-.8333597	.4124010	.3680176	.0107291	-.6536219	.7567451	.5526268	.6345894	.5402775
0.	3.	44.	40.643	-.8333597	.4124010	.3680176	.0107291	-.6536219	.7567451	.5526268	.6345894	.5402775
0.	3.	45.	40.643	-.8333597	.4124010	.3680176	.0107291	-.6536219	.7567451	.5526268	.6345894	.5402775
0.	3.	46.	40.643	-.8333597	.4124010	.3680176	.0107291	-.6536219	.7567451	.5526268	.6345894	.5402775
0.	3.	47.	40.643	-.8333597	.4124010	.3680176	.0107291	-.6536219	.7567451	.5526268	.6345894	.5402775
0.	3.	48.	40.643	-.8333597	.4124010	.3680176	.0107291	-.6536219	.7567451	.5526268	.6345894	.5402775
0.	3.	49.	40.643	-.8333597	.4124010	.3680176	.0107291	-.6536219	.7567451	.5526268	.6345894	.5402775
0.	3.	50.	40.643	-.8333597	.4124010	.3680176	.0107291	-.6536219	.7567451	.5526268	.6345894	.5402775
0.	3.	51.	40.643	-.8333597	.4124010	.3680176	.0107291	-.6536219	.7567451	.5526268	.6345894	.5402775
0.	3.	52.	40.643	-.8333597	.4124010	.3680176	.0107291	-.6536219	.7567451	.5526268	.6345894	.5402775
0.	3.	53.	40.643	-.8333597	.4124010	.3680176	.0107291	-.6536219	.7567451	.5526268	.6345894	.5402775
0.	3.	54.	40.643	-.8333597	.4124010	.3680176	.0107291	-.6536219	.7567451	.5526268	.6345894	.5402775
0.	3.	55.	40.643	-.8333597	.4124010	.3680176	.0107291	-.6536219	.7567451	.5526268	.6345894	.5402775
0.	3.	56.	40.643	-.8333597	.4124010	.3680176	.0107291	-.6536219	.7567451	.5526268	.6345894	.5402775
0.	3.	57.	40.643	-.8333597	.4124010	.3680176	.0107291	-.6536219	.7567451	.5526268	.6345894	.5402775
0.	3.	58.	40.643	-.8333597	.4124010	.3680176	.0107291	-.6536219	.7567451	.5526268	.6345894	.5402775
0.	3.	59.	40.643	-.8333597	.4124010	.3680176	.0107291	-.6536219	.7567451	.5526268	.6345894	.5402775
0.	4.	0.	40.643	-.8333597	.4124010	.3680176	.0107291	-.6536219	.7567451	.5526268	.6345894	.5402775
0.	4.	1.	40.643	-.8333597	.4124010	.3680176	.0107291	-.6536219	.7567451	.5526268	.6345894	.5402775
0.	4.	2.	40.643	-.8333597	.4124010	.3680176	.0107291	-.6536219	.7567451	.5526268	.6345894	.5402775
0.	4.	3.	40.643	-.8333597	.4124010	.3680176	.0107291	-.6536219	.7567451	.5526268	.6345894	.5402775
0.	4.	4.	40.643	-.8333597	.4124010	.3680176	.0107291	-.6536219	.7567451	.5526268	.6345894	.5402775
0.	4.	5.	40.643	-.8333597	.4124010	.3680176	.0107291	-.6536219	.7567451	.5526268	.6345894	.5402775
0.	4.	6.	40.643	-.8333597	.4124010	.3680176	.0107291	-.6536219	.7567451	.5526268	.6345894	.5402775
0.	4.	7.	40.643	-.8333597	.4124010	.3680176	.0107291	-.6536219	.7567451	.5526268	.6345894	.5402775
0.	4.	8.	40.643	-.8333597	.4124010	.3680176	.0107291	-.6536219	.7567451	.5526268	.6345894	.5402775
0.	4.	9.	40.643	-.8333597	.4124010	.3680176	.0107291	-.6536219	.7567451	.5526268	.6345894	.5402775
0.	4.	10.	40.643	-.8333597	.4124010	.3680176	.0107291	-.6536219	.7567451	.5526268	.6345894	.5402775
0.	4.	11.	40.643	-.8333597	.4124010	.3680176	.0107291	-.6536219	.7567451	.5526268	.6345894	.5402775
0.	4.	12.	40.643	-.8333597	.4124010	.3680176	.0107291	-.6536219	.7567451	.5526268	.6345894	.5402775
0.	4.	13.	40.643	-.8333597	.4124010	.3680176	.0107291	-.6536219	.7567451	.5526268	.6345894	.5402775
0.	4.	14.	40.643	-.8333597	.4124010	.3680176	.0107291	-.6536219	.7567451	.5526268	.6345894	.5402775

TABLE VI
APOLLO MISSION AS-502
SPACECRAFT OPERATIONAL TRAJECTORY
-DIRECTION COSINES-

TIME FROM LIFTOFF DAY	HR	MIN	SEC	ROLL AXIS L 11	L 21	L 31	PITCH AXIS L 12	L 22	L 32	YAW AXIS L 13	L 23	L 33
0.	4.	15.	40.643	-.8333597	.4124010	.3680176	.0107291	-.6536219	.7567451	.5526268	.6345894	.5402775
0.	4.	16.	40.643	-.8333597	.4124010	.3680176	.0107291	-.6536219	.7567451	.5526268	.6345894	.5402775
0.	4.	17.	40.643	-.8333597	.4124010	.3680176	.0107291	-.6536219	.7567451	.5526268	.6345894	.5402775
0.	4.	18.	40.643	-.8333597	.4124010	.3680176	.0107291	-.6536219	.7567451	.5526268	.6345894	.5402775
0.	4.	19.	40.643	-.8333597	.4124010	.3680176	.0107291	-.6536219	.7567451	.5526268	.6345894	.5402775
0.	4.	20.	40.643	-.8333597	.4124010	.3680176	.0107291	-.6536219	.7567451	.5526268	.6345894	.5402775
0.	4.	21.	40.643	-.8333597	.4124010	.3680176	.0107291	-.6536219	.7567451	.5526268	.6345894	.5402775
0.	4.	22.	40.643	-.8333597	.4124010	.3680176	.0107291	-.6536219	.7567451	.5526268	.6345894	.5402775
0.	4.	23.	40.643	-.8333597	.4124010	.3680176	.0107291	-.6536219	.7567451	.5526268	.6345894	.5402775
0.	4.	24.	40.643	-.8333597	.4124010	.3680176	.0107291	-.6536219	.7567451	.5526268	.6345894	.5402775
0.	4.	25.	40.643	-.8333597	.4124010	.3680176	.0107291	-.6536219	.7567451	.5526268	.6345894	.5402775
0.	4.	26.	40.643	-.8333597	.4124010	.3680176	.0107291	-.6536219	.7567451	.5526268	.6345894	.5402775
0.	4.	27.	40.643	-.8333597	.4124010	.3680176	.0107291	-.6536219	.7567451	.5526268	.6345894	.5402775
0.	4.	28.	40.643	-.8333597	.4124010	.3680176	.0107291	-.6536219	.7567451	.5526268	.6345894	.5402775
0.	4.	29.	40.643	-.8333597	.4124010	.3680176	.0107291	-.6536219	.7567451	.5526268	.6345894	.5402775
0.	4.	30.	40.643	-.8333597	.4124010	.3680176	.0107291	-.6536219	.7567451	.5526268	.6345894	.5402775
0.	4.	31.	40.643	-.8333597	.4124010	.3680176	.0107291	-.6536219	.7567451	.5526268	.6345894	.5402775
0.	4.	32.	40.643	-.8333597	.4124010	.3680176	.0107291	-.6536219	.7567451	.5526268	.6345894	.5402775
0.	4.	33.	40.643	-.8333597	.4124010	.3680176	.0107291	-.6536219	.7567451	.5526268	.6345894	.5402775
0.	4.	34.	40.643	-.8333597	.4124010	.3680176	.0107291	-.6536219	.7567451	.5526268	.6345894	.5402775
0.	4.	35.	40.643	-.8333597	.4124010	.3680176	.0107291	-.6536219	.7567451	.5526268	.6345894	.5402775
0.	4.	36.	40.643	-.8333597	.4124010	.3680176	.0107291	-.6536219	.7567451	.5526268	.6345894	.5402775
0.	4.	37.	40.643	-.8333597	.4124010	.3680176	.0107291	-.6536219	.7567451	.5526268	.6345894	.5402775
0.	4.	38.	40.643	-.8333597	.4124010	.3680176	.0107291	-.6536219	.7567451	.5526268	.6345894	.5402775
0.	4.	39.	40.643	-.8333597	.4124010	.3680176	.0107291	-.6536219	.7567451	.5526268	.6345894	.5402775
0.	4.	40.	40.643	-.8333597	.4124010	.3680176	.0107291	-.6536219	.7567451	.5526268	.6345894	.5402775
0.	4.	41.	40.643	-.8333597	.4124010	.3680176	.0107291	-.6536219	.7567451	.5526268	.6345894	.5402775
0.	4.	42.	40.643	-.8333597	.4124010	.3680176	.0107291	-.6536219	.7567451	.5526268	.6345894	.5402775
0.	4.	43.	40.643	-.8333597	.4124010	.3680176	.0107291	-.6536219	.7567451	.5526268	.6345894	.5402775
0.	4.	44.	40.643	-.8333597	.4124010	.3680176	.0107291	-.6536219	.7567451	.5526268	.6345894	.5402775
0.	4.	45.	40.643	-.8333597	.4124010	.3680176	.0107291	-.6536219	.7567451	.5526268	.6345894	.5402775
0.	4.	46.	40.643	-.8333597	.4124010	.3680176	.0107291	-.6536219	.7567451	.5526268	.6345894	.5402775
0.	4.	47.	40.643	-.8333597	.4124010	.3680176	.0107291	-.6536219	.7567451	.5526268	.6345894	.5402775
0.	4.	48.	40.643	-.8333597	.4124010	.3680176	.0107291	-.6536219	.7567451	.5526268	.6345894	.5402775
0.	4.	49.	40.643	-.8333597	.4124010	.3680176	.0107291	-.6536219	.7567451	.5526268	.6345894	.5402775
0.	4.	50.	40.643	-.8333597	.4124010	.3680176	.0107291	-.6536219	.7567451	.5526268	.6345894	.5402775
0.	4.	51.	40.643	-.8333597	.4124010	.3680176	.0107291	-.6536219	.7567451	.5526268	.6345894	.5402775
0.	4.	52.	40.643	-.8333597	.4124010	.3680176	.0107291	-.6536219	.7567451	.5526268	.6345894	.5402775
0.	4.	53.	40.643	-.8333597	.4124010	.3680176	.0107291	-.6536219	.7567451	.5526268	.6345894	.5402775
0.	4.	54.	40.643	-.8333597	.4124010	.3680176	.0107291	-.6536219	.7567451	.5526268	.6345894	.5402775
0.	4.	55.	40.643	-.8333597	.4124010	.3680176	.0107291	-.6536219	.7567451	.5526268	.6345894	.5402775
0.	4.	56.	40.643	-.8333597	.4124010	.3680176	.0107291	-.6536219	.7567451	.5526268	.6345894	.5402775
0.	4.	57.	40.643	-.8333597	.4124010	.3680176	.0107291	-.6536219	.7567451	.5526268	.6345894	.5402775

TABLE VI
APOLLO MISSION AS-502
SPACECRAFT OPERATIONAL TRAJECTORY
-DIRECTION COSINES-

TIME FROM LIFTOFF DAY	HR	MIN	SEC	ROLL AXIS L 11	L 21	L 31	PITCH AXIS L 12	L 22	L 32	YAW AXIS L 13	L 23	L 33
0.	4.	58.	40.643	-.8333597	.4124010	.3680176	.0107291	-.6536219	.7567451	.5526268	.6345894	.5402775
0.	4.	59.	40.643	-.8333597	.4124010	.3680176	.0107291	-.6536219	.7567451	.5526268	.6345894	.5402775
0.	5.	0.	40.643	-.8333597	.4124010	.3680176	.0107291	-.6536219	.7567451	.5526268	.6345894	.5402775
0.	5.	1.	40.643	-.8333597	.4124010	.3680176	.0107291	-.6536219	.7567451	.5526268	.6345894	.5402775
0.	5.	2.	40.643	-.8333597	.4124010	.3680176	.0107291	-.6536219	.7567451	.5526268	.6345894	.5402775
0.	5.	3.	40.643	-.8333597	.4124010	.3680176	.0107291	-.6536219	.7567451	.5526268	.6345894	.5402775
0.	5.	4.	40.643	-.8333597	.4124010	.3680176	.0107291	-.6536219	.7567451	.5526268	.6345894	.5402775
0.	5.	5.	40.643	-.8333597	.4124010	.3680176	.0107291	-.6536219	.7567451	.5526268	.6345894	.5402775
0.	5.	6.	40.643	-.8333597	.4124010	.3680176	.0107291	-.6536219	.7567451	.5526268	.6345894	.5402775
0.	5.	7.	40.643	-.8333597	.4124010	.3680176	.0107291	-.6536219	.7567451	.5526268	.6345894	.5402775
0.	5.	8.	40.643	-.8333597	.4124010	.3680176	.0107291	-.6536219	.7567451	.5526268	.6345894	.5402775
0.	5.	9.	40.643	-.8333597	.4124010	.3680176	.0107291	-.6536219	.7567451	.5526268	.6345894	.5402775
0.	5.	10.	40.643	-.8333597	.4124010	.3680176	.0107291	-.6536219	.7567451	.5526268	.6345894	.5402775
0.	5.	11.	40.643	-.8333597	.4124010	.3680176	.0107291	-.6536219	.7567451	.5526268	.6345894	.5402775
0.	5.	12.	40.643	-.8333597	.4124010	.3680176	.0107291	-.6536219	.7567451	.5526268	.6345894	.5402775
0.	5.	13.	40.643	-.8333597	.4124010	.3680176	.0107291	-.6536219	.7567451	.5526268	.6345894	.5402775
0.	5.	14.	40.643	-.8333597	.4124010	.3680176	.0107291	-.6536219	.7567451	.5526268	.6345894	.5402775
0.	5.	15.	40.643	-.8333597	.4124010	.3680176	.0107291	-.6536219	.7567451	.5526268	.6345894	.5402775
0.	5.	16.	40.643	-.8333597	.4124010	.3680176	.0107291	-.6536219	.7567451	.5526268	.6345894	.5402775
0.	5.	17.	40.643	-.8333597	.4124010	.3680176	.0107291	-.6536219	.7567451	.5526268	.6345894	.5402775
0.	5.	18.	40.643	-.8333597	.4124010	.3680176	.0107291	-.6536219	.7567451	.5526268	.6345894	.5402775
0.	5.	19.	40.643	-.8333597	.4124010	.3680176	.0107291	-.6536219	.7567451	.5526268	.6345894	.5402775
0.	5.	20.	40.643	-.8333597	.4124010	.3680176	.0107291	-.6536219	.7567451	.5526268	.6345894	.5402775
0.	5.	21.	40.643	-.8333597	.4124010	.3680176	.0107291	-.6536219	.7567451	.5526268	.6345894	.5402775
0.	5.	22.	40.643	-.8333597	.4124010	.3680176	.0107291	-.6536219	.7567451	.5526268	.6345894	.5402775
0.	5.	23.	40.643	-.8333597	.4124010	.3680176	.0107291	-.6536219	.7567451	.5526268	.6345894	.5402775
0.	5.	24.	40.643	-.8333597	.4124010	.3680176	.0107291	-.6536219	.7567451	.5526268	.6345894	.5402775
0.	5.	25.	40.643	-.8333597	.4124010	.3680176	.0107291	-.6536219	.7567451	.5526268	.6345894	.5402775
0.	5.	26.	40.643	-.8333597	.4124010	.3680176	.0107291	-.6536219	.7567451	.5526268	.6345894	.5402775
0.	5.	27.	40.643	-.8333597	.4124010	.3680176	.0107291	-.6536219	.7567451	.5526268	.6345894	.5402775
0.	5.	28.	40.643	-.8333597	.4124010	.3680176	.0107291	-.6536219	.7567451	.5526268	.6345894	.5402775
0.	5.	29.	40.643	-.8333597	.4124010	.3680176	.0107291	-.6536219	.7567451	.5526268	.6345894	.5402775
0.	5.	30.	40.643	-.8333597	.4124010	.3680176	.0107291	-.6536219	.7567451	.5526268	.6345894	.5402775
0.	5.	31.	40.643	-.8333597	.4124010	.3680176	.0107291	-.6536219	.7567451	.5526268	.6345894	.5402775
0.	5.	32.	40.643	-.8333597	.4124010	.3680176	.0107291	-.6536219	.7567451	.5526268	.6345894	.5402775
0.	5.	33.	40.643	-.8333597	.4124010	.3680176	.0107291	-.6536219	.7567451	.5526268	.6345894	.5402775
0.	5.	34.	40.643	-.8333597	.4124010	.3680176	.0107291	-.6536219	.7567451	.5526268	.6345894	.5402775
0.	5.	35.	40.643	-.8333597	.4124010	.3680176	.0107291	-.6536219	.7567451	.5526268	.6345894	.5402775
0.	5.	36.	40.643	-.8333597	.4124010	.3680176	.0107291	-.6536219	.7567451	.5526268	.6345894	.5402775
0.	5.	37.	40.643	-.8333597	.4124010	.3680176	.0107291	-.6536219	.7567451	.5526268	.6345894	.5402775
0.	5.	38.	40.643	-.8333597	.4124010	.3680176	.0107291	-.6536219	.7567451	.5526268	.6345894	.5402775
0.	5.	39.	40.643	-.8333597	.4124010	.3680176	.0107291	-.6536219	.7567451	.5526268	.6345894	.5402775
0.	5.	40.	40.643	-.8333597	.4124010	.3680176	.0107291	-.6536219	.7567451	.5526268	.6345894	.5402775

TABLE VI
APOLLO MISSION AS-502
SPACECRAFT OPERATIONAL TRAJECTORY
-DIRECTION COSINES-

TIME FROM LIFTOFF DAY	HR	MIN	SEC	ROLL AXIS L 11	L 21	L 31	PITCH AXIS L 12	L 22	L 32	YAW AXIS L 13	L 23	L 33
0.	5.	41.	40.643	-.8333597	.4124010	.3680176	.0107291	-.6536219	.7567451	.5526268	.6345894	.5402775
0.	5.	42.	40.643	-.8333597	.4124010	.3680176	.0107291	-.6536219	.7567451	.5526268	.6345894	.5402775
0.	5.	43.	40.643	-.8333597	.4124010	.3680176	.0107291	-.6536219	.7567451	.5526268	.6345894	.5402775
0.	5.	44.	40.643	-.8333597	.4124010	.3680176	.0107291	-.6536219	.7567451	.5526268	.6345894	.5402775
0.	5.	45.	40.643	-.8333597	.4124010	.3680176	.0107291	-.6536219	.7567451	.5526268	.6345894	.5402775
0.	5.	46.	40.643	-.8333597	.4124010	.3680176	.0107291	-.6536219	.7567451	.5526268	.6345894	.5402775
0.	5.	47.	40.643	-.8333597	.4124010	.3680176	.0107291	-.6536219	.7567451	.5526268	.6345894	.5402775
0.	5.	48.	40.643	-.8333597	.4124010	.3680176	.0107291	-.6536219	.7567451	.5526268	.6345894	.5402775
0.	5.	49.	40.643	-.8333597	.4124010	.3680176	.0107291	-.6536219	.7567451	.5526268	.6345894	.5402775
0.	5.	50.	40.643	-.8333597	.4124010	.3680176	.0107291	-.6536219	.7567451	.5526268	.6345894	.5402775
0.	5.	51.	40.643	-.8333597	.4124010	.3680176	.0107291	-.6536219	.7567451	.5526268	.6345894	.5402775
0.	5.	52.	40.643	-.8333597	.4124010	.3680176	.0107291	-.6536219	.7567451	.5526268	.6345894	.5402775
0.	5.	53.	40.643	-.8333597	.4124010	.3680176	.0107291	-.6536219	.7567451	.5526268	.6345894	.5402775
0.	5.	54.	40.643	-.8333597	.4124010	.3680176	.0107291	-.6536219	.7567451	.5526268	.6345894	.5402775
0.	5.	55.	40.643	-.8333597	.4124010	.3680176	.0107291	-.6536219	.7567451	.5526268	.6345894	.5402775
0.	5.	56.	40.643	-.8333597	.4124010	.3680176	.0107291	-.6536219	.7567451	.5526268	.6345894	.5402775
0.	5.	57.	40.643	-.8333597	.4124010	.3680176	.0107291	-.6536219	.7567451	.5526268	.6345894	.5402775
0.	5.	58.	40.643	-.8333597	.4124010	.3680176	.0107291	-.6536219	.7567451	.5526268	.6345894	.5402775
0.	5.	59.	40.643	-.8333597	.4124010	.3680176	.0107291	-.6536219	.7567451	.5526268	.6345894	.5402775
0.	6.	0.	40.643	-.8333597	.4124010	.3680176	.0107291	-.6536219	.7567451	.5526268	.6345894	.5402775
0.	6.	1.	40.643	-.8333597	.4124010	.3680176	.0107291	-.6536219	.7567451	.5526268	.6345894	.5402775
0.	6.	2.	40.643	-.8333597	.4124010	.3680176	.0107291	-.6536219	.7567451	.5526268	.6345894	.5402775
0.	6.	3.	40.643	-.8333597	.4124010	.3680176	.0107291	-.6536219	.7567451	.5526268	.6345894	.5402775
0.	6.	4.	40.643	-.8333597	.4124010	.3680176	.0107291	-.6536219	.7567451	.5526268	.6345894	.5402775
0.	6.	5.	40.643	-.8333597	.4124010	.3680176	.0107291	-.6536219	.7567451	.5526268	.6345894	.5402775
0.	6.	6.	40.643	-.8333597	.4124010	.3680176	.0107291	-.6536219	.7567451	.5526268	.6345894	.5402775
0.	6.	7.	40.643	-.8333597	.4124010	.3680176	.0107291	-.6536219	.7567451	.5526268	.6345894	.5402775
0.	6.	8.	40.643	-.8333597	.4124010	.3680176	.0107291	-.6536219	.7567451	.5526268	.6345894	.5402775
0.	6.	9.	40.643	-.8333597	.4124010	.3680176	.0107291	-.6536219	.7567451	.5526268	.6345894	.5402775
0.	6.	10.	40.643	-.8333597	.4124010	.3680176	.0107291	-.6536219	.7567451	.5526268	.6345894	.5402775
0.	6.	11.	40.643	-.8333597	.4124010	.3680176	.0107291	-.6536219	.7567451	.5526268	.6345894	.5402775
0.	6.	12.	40.643	-.8333597	.4124010	.3680176	.0107291	-.6536219	.7567451	.5526268	.6345894	.5402775
0.	6.	13.	40.643	-.8333597	.4124010	.3680176	.0107291	-.6536219	.7567451	.5526268	.6345894	.5402775
0.	6.	14.	40.643	-.8333597	.4124010	.3680176	.0107291	-.6536219	.7567451	.5526268	.6345894	.5402775
0.	6.	15.	40.643	-.8333597	.4124010	.3680176	.0107291	-.6536219	.7567451	.5526268	.6345894	.5402775
0.	6.	16.	40.643	-.8333597	.4124010	.3680176	.0107291	-.6536219	.7567451	.5526268	.6345894	.5402775
0.	6.	17.	40.643	-.8333597	.4124010	.3680176	.0107291	-.6536219	.7567451	.5526268	.6345894	.5402775
0.	6.	18.	40.643	-.8333597	.4124010	.3680176	.0107291	-.6536219	.7567451	.5526268	.6345894	.5402775
0.	6.	19.	40.643	-.8333597	.4124010	.3680176	.0107291	-.6536219	.7567451	.5526268	.6345894	.5402775
0.	6.	20.	40.643	-.8333597	.4124010	.3680176	.0107291	-.6536219	.7567451	.5526268	.6345894	.5402775
0.	6.	21.	40.643	-.8333597	.4124010	.3680176	.0107291	-.6536219	.7567451	.5526268	.6345894	.5402775

TABLE VI
APOLLO MISSION AS-502
SPACECRAFT OPERATIONAL TRAJECTORY
-DIRECTION COSINES-

TIME FROM LIFTOFF DAY	HR	MIN	SEC	ROLL AXIS L 11	L 21	L 31	PITCH AXIS L 12	L 22	L 32	YAW AXIS L 13	L 23	L 33
0.	6.	21.	52.502	-.8333597	.4124010	.3680176	.0107291	-.6536219	.7567451	.5526268	.6345894	.5402775
							APOGEE					
0.	6.	21.	52.502	-.8333597	.4124010	.3680176	.0107291	-.6536219	.7567451	.5526268	.6345894	.5402775
0.	6.	22.	40.643	-.8333597	.4124010	.3680176	.0107291	-.6536219	.7567451	.5526268	.6345894	.5402775
0.	6.	23.	40.643	-.8333597	.4124010	.3680176	.0107291	-.6536219	.7567451	.5526268	.6345894	.5402775
0.	6.	24.	40.643	-.8333597	.4124010	.3680176	.0107291	-.6536219	.7567451	.5526268	.6345894	.5402775
0.	6.	25.	40.643	-.8333597	.4124010	.3680176	.0107291	-.6536219	.7567451	.5526268	.6345894	.5402775
0.	6.	26.	40.643	-.8333597	.4124010	.3680176	.0107291	-.6536219	.7567451	.5526268	.6345894	.5402775
0.	6.	27.	40.643	-.8333597	.4124010	.3680176	.0107291	-.6536219	.7567451	.5526268	.6345894	.5402775
0.	6.	28.	40.643	-.8333597	.4124010	.3680176	.0107291	-.6536219	.7567451	.5526268	.6345894	.5402775
0.	6.	29.	40.643	-.8333597	.4124010	.3680176	.0107291	-.6536219	.7567451	.5526268	.6345894	.5402775
0.	6.	30.	40.643	-.8333597	.4124010	.3680176	.0107291	-.6536219	.7567451	.5526268	.6345894	.5402775
0.	6.	31.	40.643	-.8333597	.4124010	.3680176	.0107291	-.6536219	.7567451	.5526268	.6345894	.5402775
0.	6.	32.	40.643	-.8333597	.4124010	.3680176	.0107291	-.6536219	.7567451	.5526268	.6345894	.5402775
0.	6.	33.	40.643	-.8333597	.4124010	.3680176	.0107291	-.6536219	.7567451	.5526268	.6345894	.5402775
0.	6.	34.	40.643	-.8333597	.4124010	.3680176	.0107291	-.6536219	.7567451	.5526268	.6345894	.5402775
0.	6.	35.	40.643	-.8333597	.4124010	.3680176	.0107291	-.6536219	.7567451	.5526268	.6345894	.5402775
0.	6.	36.	40.643	-.8333597	.4124010	.3680176	.0107291	-.6536219	.7567451	.5526268	.6345894	.5402775
0.	6.	37.	40.643	-.8333597	.4124010	.3680176	.0107291	-.6536219	.7567451	.5526268	.6345894	.5402775
0.	6.	38.	40.643	-.8333597	.4124010	.3680176	.0107291	-.6536219	.7567451	.5526268	.6345894	.5402775
0.	6.	39.	40.643	-.8333597	.4124010	.3680176	.0107291	-.6536219	.7567451	.5526268	.6345894	.5402775
0.	6.	40.	40.643	-.8333597	.4124010	.3680176	.0107291	-.6536219	.7567451	.5526268	.6345894	.5402775
0.	6.	41.	40.643	-.8333597	.4124010	.3680176	.0107291	-.6536219	.7567451	.5526268	.6345894	.5402775
0.	6.	42.	40.643	-.8333597	.4124010	.3680176	.0107291	-.6536219	.7567451	.5526268	.6345894	.5402775
0.	6.	43.	40.643	-.8333597	.4124010	.3680176	.0107291	-.6536219	.7567451	.5526268	.6345894	.5402775
0.	6.	44.	40.643	-.8333597	.4124010	.3680176	.0107291	-.6536219	.7567451	.5526268	.6345894	.5402775
0.	6.	45.	40.643	-.8333597	.4124010	.3680176	.0107291	-.6536219	.7567451	.5526268	.6345894	.5402775
0.	6.	46.	40.643	-.8333597	.4124010	.3680176	.0107291	-.6536219	.7567451	.5526268	.6345894	.5402775
0.	6.	47.	40.643	-.8333597	.4124010	.3680176	.0107291	-.6536219	.7567451	.5526268	.6345894	.5402775
0.	6.	48.	40.643	-.8333597	.4124010	.3680176	.0107291	-.6536219	.7567451	.5526268	.6345894	.5402775
0.	6.	49.	40.643	-.8333597	.4124010	.3680176	.0107291	-.6536219	.7567451	.5526268	.6345894	.5402775
0.	6.	50.	40.643	-.8333597	.4124010	.3680176	.0107291	-.6536219	.7567451	.5526268	.6345894	.5402775
0.	6.	51.	40.643	-.8333597	.4124010	.3680176	.0107291	-.6536219	.7567451	.5526268	.6345894	.5402775
0.	6.	52.	40.643	-.8333597	.4124010	.3680176	.0107291	-.6536219	.7567451	.5526268	.6345894	.5402775
0.	6.	53.	40.643	-.8333597	.4124010	.3680176	.0107291	-.6536219	.7567451	.5526268	.6345894	.5402775
0.	6.	54.	40.643	-.8333597	.4124010	.3680176	.0107291	-.6536219	.7567451	.5526268	.6345894	.5402775
0.	6.	55.	40.643	-.8333597	.4124010	.3680176	.0107291	-.6536219	.7567451	.5526268	.6345894	.5402775
0.	6.	56.	40.643	-.8333597	.4124010	.3680176	.0107291	-.6536219	.7567451	.5526268	.6345894	.5402775
0.	6.	57.	40.643	-.8333597	.4124010	.3680176	.0107291	-.6536219	.7567451	.5526268	.6345894	.5402775

TABLE VI
APOLLO MISSION AS-502
SPACECRAFT OPERATIONAL TRAJECTORY
-DIRECTION COSINES-

TIME FROM LIFTOFF DAY	HR	MIN	SEC	ROLL AXIS L 11	L 21	L 31	PITCH AXIS L 12	L 22	L 32	YAW AXIS L 13	L 23	L 33
0.	6.	58.	40.643	-.8333597	.4124010	.3680176	.0107291	-.6536219	.7567451	.5526268	.6345894	.5402775
0.	6.	59.	40.643	-.8333597	.4124010	.3680176	.0107291	-.6536219	.7567451	.5526268	.6345894	.5402775
0.	7.	0.	40.643	-.8333597	.4124010	.3680176	.0107291	-.6536219	.7567451	.5526268	.6345894	.5402775
0.	7.	1.	40.643	-.8333597	.4124010	.3680176	.0107291	-.6536219	.7567451	.5526268	.6345894	.5402775
0.	7.	2.	40.643	-.8333597	.4124010	.3680176	.0107291	-.6536219	.7567451	.5526268	.6345894	.5402775
0.	7.	3.	40.643	-.8333597	.4124010	.3680176	.0107291	-.6536219	.7567451	.5526268	.6345894	.5402775
0.	7.	4.	40.643	-.8333597	.4124010	.3680176	.0107291	-.6536219	.7567451	.5526268	.6345894	.5402775
0.	7.	5.	40.643	-.8333597	.4124010	.3680176	.0107291	-.6536219	.7567451	.5526268	.6345894	.5402775
0.	7.	6.	40.643	-.8333597	.4124010	.3680176	.0107291	-.6536219	.7567451	.5526268	.6345894	.5402775
0.	7.	7.	40.643	-.8333597	.4124010	.3680176	.0107291	-.6536219	.7567451	.5526268	.6345894	.5402775
0.	7.	8.	40.643	-.8333597	.4124010	.3680176	.0107291	-.6536219	.7567451	.5526268	.6345894	.5402775
0.	7.	9.	40.643	-.8333597	.4124010	.3680176	.0107291	-.6536219	.7567451	.5526268	.6345894	.5402775
0.	7.	10.	40.643	-.8333597	.4124010	.3680176	.0107291	-.6536219	.7567451	.5526268	.6345894	.5402775
0.	7.	11.	40.643	-.8333597	.4124010	.3680176	.0107291	-.6536219	.7567451	.5526268	.6345894	.5402775
0.	7.	12.	40.643	-.8333597	.4124010	.3680176	.0107291	-.6536219	.7567451	.5526268	.6345894	.5402775
0.	7.	13.	40.643	-.8333597	.4124010	.3680176	.0107291	-.6536219	.7567451	.5526268	.6345894	.5402775
0.	7.	14.	40.643	-.8333597	.4124010	.3680176	.0107291	-.6536219	.7567451	.5526268	.6345894	.5402775
0.	7.	15.	40.643	-.8333597	.4124010	.3680176	.0107291	-.6536219	.7567451	.5526268	.6345894	.5402775
0.	7.	16.	40.643	-.8333597	.4124010	.3680176	.0107291	-.6536219	.7567451	.5526268	.6345894	.5402775
0.	7.	17.	40.643	-.8333597	.4124010	.3680176	.0107291	-.6536219	.7567451	.5526268	.6345894	.5402775
0.	7.	18.	40.643	-.8333597	.4124010	.3680176	.0107291	-.6536219	.7567451	.5526268	.6345894	.5402775
0.	7.	19.	40.643	-.8333597	.4124010	.3680176	.0107291	-.6536219	.7567451	.5526268	.6345894	.5402775
0.	7.	20.	40.643	-.8333597	.4124010	.3680176	.0107291	-.6536219	.7567451	.5526268	.6345894	.5402775
0.	7.	21.	40.643	-.8333597	.4124010	.3680176	.0107291	-.6536219	.7567451	.5526268	.6345894	.5402775
0.	7.	22.	40.643	-.8333597	.4124010	.3680176	.0107291	-.6536219	.7567451	.5526268	.6345894	.5402775
0.	7.	23.	40.643	-.8333597	.4124010	.3680176	.0107291	-.6536219	.7567451	.5526268	.6345894	.5402775
0.	7.	24.	40.643	-.8333597	.4124010	.3680176	.0107291	-.6536219	.7567451	.5526268	.6345894	.5402775
0.	7.	25.	40.643	-.8333597	.4124010	.3680176	.0107291	-.6536219	.7567451	.5526268	.6345894	.5402775
0.	7.	26.	40.643	-.8333597	.4124010	.3680176	.0107291	-.6536219	.7567451	.5526268	.6345894	.5402775
0.	7.	27.	40.643	-.8333597	.4124010	.3680176	.0107291	-.6536219	.7567451	.5526268	.6345894	.5402775
0.	7.	28.	40.643	-.8333597	.4124010	.3680176	.0107291	-.6536219	.7567451	.5526268	.6345894	.5402775
0.	7.	29.	40.643	-.8333597	.4124010	.3680176	.0107291	-.6536219	.7567451	.5526268	.6345894	.5402775
0.	7.	30.	40.643	-.8333597	.4124010	.3680176	.0107291	-.6536219	.7567451	.5526268	.6345894	.5402775
0.	7.	31.	40.643	-.8333597	.4124010	.3680176	.0107291	-.6536219	.7567451	.5526268	.6345894	.5402775
0.	7.	32.	40.643	-.8333597	.4124010	.3680176	.0107291	-.6536219	.7567451	.5526268	.6345894	.5402775
0.	7.	33.	40.643	-.8333597	.4124010	.3680176	.0107291	-.6536219	.7567451	.5526268	.6345894	.5402775
0.	7.	34.	40.643	-.8333597	.4124010	.3680176	.0107291	-.6536219	.7567451	.5526268	.6345894	.5402775
0.	7.	35.	40.643	-.8333597	.4124010	.3680176	.0107291	-.6536219	.7567451	.5526268	.6345894	.5402775
0.	7.	36.	40.643	-.8333597	.4124010	.3680176	.0107291	-.6536219	.7567451	.5526268	.6345894	.5402775
0.	7.	37.	40.643	-.8333597	.4124010	.3680176	.0107291	-.6536219	.7567451	.5526268	.6345894	.5402775
0.	7.	38.	40.643	-.8333597	.4124010	.3680176	.0107291	-.6536219	.7567451	.5526268	.6345894	.5402775
0.	7.	39.	40.643	-.8333597	.4124010	.3680176	.0107291	-.6536219	.7567451	.5526268	.6345894	.5402775
0.	7.	40.	40.643	-.8333597	.4124010	.3680176	.0107291	-.6536219	.7567451	.5526268	.6345894	.5402775

TABLE VI
APOLLO MISSION AS-502
SPACECRAFT OPERATIONAL TRAJECTORY
-DIRECTION COSINES-

TIME FROM LIFTOFF DAY	HR	MIN	SEC	ROLL AXIS L 11	L 21	L 31	PITCH AXIS L 12	L 22	L 32	YAW AXIS L 13	L 23	L 33
0.	7.	41.	40.643	-.8333597	.4124010	.3680176	.0107291	-.6536219	.7567451	.5526268	.6345894	.5402775
0.	7.	42.	40.643	-.8333597	.4124010	.3680176	.0107291	-.6536219	.7567451	.5526268	.6345894	.5402775
0.	7.	43.	40.643	-.8333597	.4124010	.3680176	.0107291	-.6536219	.7567451	.5526268	.6345894	.5402775
0.	7.	44.	40.643	-.8333597	.4124010	.3680176	.0107291	-.6536219	.7567451	.5526268	.6345894	.5402775
0.	7.	45.	40.643	-.8333597	.4124010	.3680176	.0107291	-.6536219	.7567451	.5526268	.6345894	.5402775
0.	7.	46.	40.643	-.8333597	.4124010	.3680176	.0107291	-.6536219	.7567451	.5526268	.6345894	.5402775
0.	7.	47.	40.643	-.8333597	.4124010	.3680176	.0107291	-.6536219	.7567451	.5526268	.6345894	.5402775
0.	7.	48.	40.643	-.8333597	.4124010	.3680176	.0107291	-.6536219	.7567451	.5526268	.6345894	.5402775
0.	7.	49.	40.643	-.8333597	.4124010	.3680176	.0107291	-.6536219	.7567451	.5526268	.6345894	.5402775
0.	7.	50.	40.643	-.8333597	.4124010	.3680176	.0107291	-.6536219	.7567451	.5526268	.6345894	.5402775
0.	7.	51.	40.643	-.8333597	.4124010	.3680176	.0107291	-.6536219	.7567451	.5526268	.6345894	.5402775
0.	7.	52.	40.643	-.8333597	.4124010	.3680176	.0107291	-.6536219	.7567451	.5526268	.6345894	.5402775
0.	7.	53.	40.643	-.8333597	.4124010	.3680176	.0107291	-.6536219	.7567451	.5526268	.6345894	.5402775
0.	7.	54.	40.643	-.8333597	.4124010	.3680176	.0107291	-.6536219	.7567451	.5526268	.6345894	.5402775
0.	7.	55.	40.643	-.8333597	.4124010	.3680176	.0107291	-.6536219	.7567451	.5526268	.6345894	.5402775
0.	7.	56.	40.643	-.8333597	.4124010	.3680176	.0107291	-.6536219	.7567451	.5526268	.6345894	.5402775
0.	7.	57.	40.643	-.8333597	.4124010	.3680176	.0107291	-.6536219	.7567451	.5526268	.6345894	.5402775
0.	7.	58.	40.643	-.8333597	.4124010	.3680176	.0107291	-.6536219	.7567451	.5526268	.6345894	.5402775
0.	7.	59.	40.643	-.8333597	.4124010	.3680176	.0107291	-.6536219	.7567451	.5526268	.6345894	.5402775
0.	8.	0.	40.643	-.8333597	.4124010	.3680176	.0107291	-.6536219	.7567451	.5526268	.6345894	.5402775
0.	8.	1.	40.643	-.8333597	.4124010	.3680176	.0107291	-.6536219	.7567451	.5526268	.6345894	.5402775
0.	8.	2.	40.643	-.8333597	.4124010	.3680176	.0107291	-.6536219	.7567451	.5526268	.6345894	.5402775
0.	8.	3.	40.643	-.8333597	.4124010	.3680176	.0107291	-.6536219	.7567451	.5526268	.6345894	.5402775
0.	8.	4.	40.643	-.8333597	.4124010	.3680176	.0107291	-.6536219	.7567451	.5526268	.6345894	.5402775
0.	8.	5.	40.643	-.8333597	.4124010	.3680176	.0107291	-.6536219	.7567451	.5526268	.6345894	.5402775
0.	8.	6.	40.643	-.8333597	.4124010	.3680176	.0107291	-.6536219	.7567451	.5526268	.6345894	.5402775
0.	8.	7.	40.643	-.8333597	.4124010	.3680176	.0107291	-.6536219	.7567451	.5526268	.6345894	.5402775
0.	8.	8.	40.643	-.8333597	.4124010	.3680176	.0107291	-.6536219	.7567451	.5526268	.6345894	.5402775
0.	8.	9.	40.643	-.8333597	.4124010	.3680176	.0107291	-.6536219	.7567451	.5526268	.6345894	.5402775
0.	8.	10.	40.643	-.8333597	.4124010	.3680176	.0107291	-.6536219	.7567451	.5526268	.6345894	.5402775
0.	8.	11.	40.643	-.8333597	.4124010	.3680176	.0107291	-.6536219	.7567451	.5526268	.6345894	.5402775
0.	8.	12.	40.643	-.8333597	.4124010	.3680176	.0107291	-.6536219	.7567451	.5526268	.6345894	.5402775
0.	8.	13.	40.643	-.8333597	.4124010	.3680176	.0107291	-.6536219	.7567451	.5526268	.6345894	.5402775
0.	8.	14.	40.643	-.8333597	.4124010	.3680176	.0107291	-.6536219	.7567451	.5526268	.6345894	.5402775
0.	8.	15.	40.643	-.8333597	.4124010	.3680176	.0107291	-.6536219	.7567451	.5526268	.6345894	.5402775
0.	8.	16.	40.643	-.8333597	.4124010	.3680176	.0107291	-.6536219	.7567451	.5526268	.6345894	.5402775
0.	8.	17.	40.643	-.8333597	.4124010	.3680176	.0107291	-.6536219	.7567451	.5526268	.6345894	.5402775
0.	8.	18.	40.643	-.8333597	.4124010	.3680176	.0107291	-.6536219	.7567451	.5526268	.6345894	.5402775
0.	8.	19.	40.643	-.8333597	.4124010	.3680176	.0107291	-.6536219	.7567451	.5526268	.6345894	.5402775
0.	8.	20.	40.643	-.8333597	.4124010	.3680176	.0107291	-.6536219	.7567451	.5526268	.6345894	.5402775
0.	8.	21.	40.643	-.8333597	.4124010	.3680176	.0107291	-.6536219	.7567451	.5526268	.6345894	.5402775
0.	8.	22.	40.643	-.8333597	.4124010	.3680176	.0107291	-.6536219	.7567451	.5526268	.6345894	.5402775
0.	8.	23.	40.643	-.8333597	.4124010	.3680176	.0107291	-.6536219	.7567451	.5526268	.6345894	.5402775

TABLE VI
APOLLO MISSION AS-502
SPACECRAFT OPERATIONAL TRAJECTORY
-DIRECTION COSINES-

TIME FROM LIFTOFF DAY	HR	MIN	SEC	ROLL AXIS L 11	L 21	L 31	PITCH AXIS L 12	L 22	L 32	YAW AXIS L 13	L 23	L 33
0.	8.	24.	40.643	-.8333597	.4124010	.3680176	.0107291	-.6536219	.7567451	.5526268	.6345894	.5402775
0.	8.	25.	40.643	-.8333597	.4124010	.3680176	.0107291	-.6536219	.7567451	.5526268	.6345894	.5402775
0.	8.	26.	40.643	-.8333597	.4124010	.3680176	.0107291	-.6536219	.7567451	.5526268	.6345894	.5402775
0.	8.	27.	40.643	-.8333597	.4124010	.3680176	.0107291	-.6536219	.7567451	.5526268	.6345894	.5402775
0.	8.	28.	40.643	-.8333597	.4124010	.3680176	.0107291	-.6536219	.7567451	.5526268	.6345894	.5402775
0.	8.	29.	40.643	-.8333597	.4124010	.3680176	.0107291	-.6536219	.7567451	.5526268	.6345894	.5402775
0.	8.	30.	40.643	-.8333597	.4124010	.3680176	.0107291	-.6536219	.7567451	.5526268	.6345894	.5402775
0.	8.	31.	40.643	-.8333597	.4124010	.3680176	.0107291	-.6536219	.7567451	.5526268	.6345894	.5402775
0.	8.	32.	40.643	-.8333597	.4124010	.3680176	.0107291	-.6536219	.7567451	.5526268	.6345894	.5402775
0.	8.	33.	40.643	-.8333597	.4124010	.3680176	.0107291	-.6536219	.7567451	.5526268	.6345894	.5402775
0.	8.	34.	40.643	-.8333597	.4124010	.3680176	.0107291	-.6536219	.7567451	.5526268	.6345894	.5402775
0.	8.	35.	40.643	-.8333597	.4124010	.3680176	.0107291	-.6536219	.7567451	.5526268	.6345894	.5402775
0.	8.	36.	40.643	-.8333597	.4124010	.3680176	.0107291	-.6536219	.7567451	.5526268	.6345894	.5402775
0.	8.	37.	40.643	-.8333597	.4124010	.3680176	.0107291	-.6536219	.7567451	.5526268	.6345894	.5402775
0.	8.	38.	40.643	-.8333597	.4124010	.3680176	.0107291	-.6536219	.7567451	.5526268	.6345894	.5402775
0.	8.	39.	40.643	-.8333597	.4124010	.3680176	.0107291	-.6536219	.7567451	.5526268	.6345894	.5402775
0.	8.	40.	40.643	-.8333597	.4124010	.3680176	.0107291	-.6536219	.7567451	.5526268	.6345894	.5402775
0.	8.	41.	40.643	-.8333597	.4124010	.3680176	.0107291	-.6536219	.7567451	.5526268	.6345894	.5402775
0.	8.	42.	40.643	-.8333597	.4124010	.3680176	.0107291	-.6536219	.7567451	.5526268	.6345894	.5402775
0.	8.	43.	40.643	-.8333597	.4124010	.3680176	.0107291	-.6536219	.7567451	.5526268	.6345894	.5402775
0.	8.	44.	40.643	-.8333597	.4124010	.3680176	.0107291	-.6536219	.7567451	.5526268	.6345894	.5402775
0.	8.	45.	40.643	-.8333597	.4124010	.3680176	.0107291	-.6536219	.7567451	.5526268	.6345894	.5402775
0.	8.	46.	40.643	-.8333597	.4124010	.3680176	.0107291	-.6536219	.7567451	.5526268	.6345894	.5402775
0.	8.	47.	40.643	-.8333597	.4124010	.3680176	.0107291	-.6536219	.7567451	.5526268	.6345894	.5402775
0.	8.	48.	40.643	-.8333597	.4124010	.3680176	.0107291	-.6536219	.7567451	.5526268	.6345894	.5402775
0.	8.	49.	40.643	-.8333597	.4124010	.3680176	.0107291	-.6536219	.7567451	.5526268	.6345894	.5402775
0.	8.	50.	40.643	-.8333597	.4124010	.3680176	.0107291	-.6536219	.7567451	.5526268	.6345894	.5402775
0.	8.	51.	40.643	-.8333597	.4124010	.3680176	.0107291	-.6536219	.7567451	.5526268	.6345894	.5402775
0.	8.	52.	40.643	-.8333597	.4124010	.3680176	.0107291	-.6536219	.7567451	.5526268	.6345894	.5402775
0.	8.	53.	40.643	-.8333597	.4124010	.3680176	.0107291	-.6536219	.7567451	.5526268	.6345894	.5402775
0.	8.	54.	40.643	-.8333597	.4124010	.3680176	.0107291	-.6536219	.7567451	.5526268	.6345894	.5402775
0.	8.	55.	40.643	-.8333597	.4124010	.3680176	.0107291	-.6536219	.7567451	.5526268	.6345894	.5402775
0.	8.	56.	40.643	-.8333597	.4124010	.3680176	.0107291	-.6536219	.7567451	.5526268	.6345894	.5402775
0.	8.	57.	40.643	-.8333597	.4124010	.3680176	.0107291	-.6536219	.7567451	.5526268	.6345894	.5402775
0.	8.	58.	40.643	-.8333597	.4124010	.3680176	.0107291	-.6536219	.7567451	.5526268	.6345894	.5402775
0.	8.	59.	40.643	-.8333597	.4124010	.3680176	.0107291	-.6536219	.7567451	.5526268	.6345894	.5402775
0.	9.	0.	40.643	-.8333597	.4124010	.3680176	.0107291	-.6536219	.7567451	.5526268	.6345894	.5402775
0.	9.	1.	40.643	-.8333597	.4124010	.3680176	.0107291	-.6536219	.7567451	.5526268	.6345894	.5402775
0.	9.	2.	40.643	-.8333597	.4124010	.3680176	.0107291	-.6536219	.7567451	.5526268	.6345894	.5402775
0.	9.	3.	40.643	-.8333597	.4124010	.3680176	.0107291	-.6536219	.7567451	.5526268	.6345894	.5402775
0.	9.	4.	40.643	-.8333597	.4124010	.3680176	.0107291	-.6536219	.7567451	.5526268	.6345894	.5402775
0.	9.	5.	40.643	-.8333597	.4124010	.3680176	.0107291	-.6536219	.7567451	.5526268	.6345894	.5402775
0.	9.	6.	40.643	-.8333597	.4124010	.3680176	.0107291	-.6536219	.7567451	.5526268	.6345894	.5402775

TABLE VI
APOLLO MISSION AS-502
SPACECRAFT OPERATIONAL TRAJECTORY
-DIRECTION COSINES-

TIME FROM LIFTOFF DAY	HR	MIN	SEC	ROLL AXIS L 11	L 21	L 31	PITCH AXIS L 12	L 22	L 32	YAW AXIS L 13	L 23	L 33
0.	9.	7.	40.643	-.8333597	.4124010	.3680176	.0107291	-.6536219	.7567451	.5526268	.6345894	.5402775
0.	9.	7.	46.102	-.8333597	.4124010	.3680176	.0107291	-.6536219	.7567451	.5526268	.6345894	.5402775
CSM ATTITUDE ORIENTATION FOR SECOND SPS BURN												
0.	9.	7.	46.102	-.8333597	.4124010	.3680176	.0107291	-.6536219	.7567451	.5526268	.6345894	.5402775
0.	9.	7.	59.643	-.8333597	.4124010	.3680176	.0107291	-.6536219	.7567451	.5526268	.6345894	.5402775
0.	9.	8.	.029	-.7825837	.2806306	-.5557060	-.6222030	-.3821756	.6832314	-.0206416	.8804477	.4736936
0.	9.	8.	8.643	-.7825837	.2806306	-.5557060	-.6222030	-.3821756	.6832314	-.0206416	.8804477	.4736936
0.	9.	8.	18.643	.1843883	.9466501	-.2643000	-.9226153	.2594067	.2854631	.3387948	.1912111	.9212254
0.	9.	8.	26.185	.5979521	.8013705	.0160789	-.7783478	.5757498	.2503735	.1913845	-.1622263	.9680158
0.	9.	8.	34.643	.5979521	.8013705	.0160789	-.7783478	.5757498	.2503735	.1913845	-.1622263	.9680158
0.	9.	8.	44.643	.5979521	.8013705	.0160789	.3896545	-.2730980	-.8795379	-.7004446	.5321867	-.4755571
0.	9.	8.	45.220	.5979521	.8013705	.0160789	.4393453	-.3109126	-.8427983	-.6703946	.5110172	-.5379892
COAST TO +X TRANSLATION												
0.	9.	8.	45.220	.5979521	.8013705	.0160789	.4393453	-.3109126	-.8427983	-.6703946	.5110172	-.5379892
0.	9.	9.	6.643	.5979521	.8013705	.0160789	.4393453	-.3109126	-.8427983	-.6703946	.5110172	-.5379892
0.	9.	9.	31.643	.5979521	.8013705	.0160789	.4393453	-.3109126	-.8427983	-.6703946	.5110172	-.5379892
0.	9.	9.	56.643	.5979521	.8013705	.0160789	.4393453	-.3109126	-.8427983	-.6703946	.5110172	-.5379892
0.	9.	10.	21.643	.5979521	.8013705	.0160789	.4393453	-.3109126	-.8427983	-.6703946	.5110172	-.5379892
0.	9.	10.	46.643	.5979521	.8013705	.0160789	.4393453	-.3109126	-.8427983	-.6703946	.5110172	-.5379892
0.	9.	11.	11.643	.5979521	.8013705	.0160789	.4393453	-.3109126	-.8427983	-.6703946	.5110172	-.5379892
0.	9.	11.	36.643	.5979521	.8013705	.0160789	.4393453	-.3109126	-.8427983	-.6703946	.5110172	-.5379892
0.	9.	12.	1.643	.5979521	.8013705	.0160789	.4393453	-.3109126	-.8427983	-.6703946	.5110172	-.5379892
0.	9.	12.	26.643	.5979521	.8013705	.0160789	.4393453	-.3109126	-.8427983	-.6703946	.5110172	-.5379892
0.	9.	12.	51.643	.5979521	.8013705	.0160789	.4393453	-.3109126	-.8427983	-.6703946	.5110172	-.5379892
0.	9.	13.	16.643	.5979521	.8013705	.0160789	.4393453	-.3109126	-.8427983	-.6703946	.5110172	-.5379892
0.	9.	13.	41.643	.5979521	.8013705	.0160789	.4393453	-.3109126	-.8427983	-.6703946	.5110172	-.5379892
0.	9.	14.	6.643	.5979521	.8013705	.0160789	.4393453	-.3109126	-.8427983	-.6703946	.5110172	-.5379892
0.	9.	14.	31.643	.5979621	.8013705	.0160789	.4393453	-.3109126	-.8427983	-.6703946	.5110172	-.5379892
0.	9.	14.	56.643	.5979521	.8013705	.0160789	.4393453	-.3109126	-.8427983	-.6703946	.5110172	-.5379892
0.	9.	15.	21.643	.5979521	.8013705	.0160789	.4393453	-.3109126	-.8427983	-.6703946	.5110172	-.5379892
0.	9.	15.	46.643	.5979521	.8013705	.0160789	.4393453	-.3109126	-.8427983	-.6703946	.5110172	-.5379892
0.	9.	16.	11.643	.5979521	.8013705	.0160789	.4393453	-.3109126	-.8427983	-.6703946	.5110172	-.5379892
0.	9.	16.	36.643	.5979521	.8013705	.0160789	.4393453	-.3109126	-.8427983	-.6703946	.5110172	-.5379892
0.	9.	17.	1.643	.5979521	.8013705	.0160789	.4393453	-.3109126	-.8427983	-.6703946	.5110172	-.5379892
0.	9.	17.	26.643	.5979521	.8013705	.0160789	.4393453	-.3109126	-.8427983	-.6703946	.5110172	-.5379892

TABLE VI
APOLLO MISSION AS-502
SPACECRAFT OPERATIONAL TRAJECTORY
-DIRECTION COSINES-

TIME FROM LIFTOFF DAY	HR	MIN	SEC	ROLL AXIS L 11	L 21	L 31	PITCH AXIS L 12	L 22	L 32	YAW AXIS L 13	L 23	L 33
0.	9.	17.	51.643	.5979521	.8013705	.0160789	.4393453	-.3109126	-.8427983	-.6703946	.5110172	-.5379892
0.	9.	18.	16.643	.5979521	.8013705	.0160789	.4393453	-.3109126	-.8427983	-.6703946	.5110172	-.5379892
0.	9.	18.	41.643	.5979521	.8013705	.0160789	.4393453	-.3109126	-.8427983	-.6703946	.5110172	-.5379892
0.	9.	19.	6.643	.5979521	.8013705	.0160789	.4393453	-.3109126	-.8427983	-.6703946	.5110172	-.5379892
0.	9.	19.	31.643	.5979521	.8013705	.0160789	.4393453	-.3109126	-.8427983	-.6703946	.5110172	-.5379892
0.	9.	19.	56.643	.5979521	.8013705	.0160789	.4393453	-.3109126	-.8427983	-.6703946	.5110172	-.5379892
0.	9.	20.	21.643	.5979521	.8013705	.0160789	.4393453	-.3109126	-.8427983	-.6703946	.5110172	-.5379892
0.	9.	20.	46.643	.5979521	.8013705	.0160789	.4393453	-.3109126	-.8427983	-.6703946	.5110172	-.5379892
0.	9.	21.	11.643	.5979521	.8013705	.0160789	.4393453	-.3109126	-.8427983	-.6703946	.5110172	-.5379892
0.	9.	21.	36.643	.5979521	.8013705	.0160789	.4393453	-.3109126	-.8427983	-.6703946	.5110172	-.5379892
0.	9.	21.	43.840	.5979521	.8013705	.0160789	.4393453	-.3109126	-.8427983	-.6703946	.5110172	-.5379892
						+X TRANSLATION						
0.	9.	21.	43.840	.5979521	.8013705	.0160789	.4393453	-.3109126	-.8427983	-.6703946	.5110172	-.5379892
0.	9.	22.	6.643	.5979521	.8013705	.0160789	.4393453	-.3109126	-.8427983	-.6703946	.5110172	-.5379892
0.	9.	22.	13.840	.5979521	.8013705	.0160789	.4393453	-.3109126	-.8427983	-.6703946	.5110172	-.5379892
						SECOND SPS IGNITION						
0.	9.	22.	13.840	.5979409	.8013786	.0160899	.4393690	-.3109096	-.8427870	-.6703890	.5110063	-.5380066
0.	9.	22.	14.215	.5979409	.8013786	.0160899	.4393690	-.3109096	-.8427870	-.6703890	.5110063	-.5380066
						SECOND SPS BURN						
0.	9.	22.	14.215	.5979409	.8013786	.0160899	.4393690	-.3109096	-.8427870	-.6703890	.5110063	-.5380066
0.	9.	22.	15.234	.5979409	.8013786	.0160899	.4393690	-.3109096	-.8427870	-.6703890	.5110063	-.5380066
0.	9.	22.	17.234	.5979409	.8013786	.0160899	.4393690	-.3109096	-.8427870	-.6703890	.5110063	-.5380066
0.	9.	22.	19.234	.5979409	.8013786	.0160899	.4393690	-.3109096	-.8427870	-.6703890	.5110063	-.5380066
0.	9.	22.	21.234	.5979409	.8013786	.0160899	.4393690	-.3109096	-.8427870	-.6703890	.5110063	-.5380066
0.	9.	22.	23.234	.5979409	.8013786	.0160899	.4393690	-.3109096	-.8427870	-.6703890	.5110063	-.5380066
0.	9.	22.	25.234	.5979409	.8013786	.0160899	.4393690	-.3109096	-.8427870	-.6703890	.5110063	-.5380066
0.	9.	22.	27.234	.5979409	.8013786	.0160899	.4393690	-.3109096	-.8427870	-.6703890	.5110063	-.5380066
0.	9.	22.	29.234	.5979409	.8013786	.0160899	.4393690	-.3109096	-.8427870	-.6703890	.5110063	-.5380066
0.	9.	22.	31.234	.5979409	.8013786	.0160899	.4393690	-.3109096	-.8427870	-.6703890	.5110063	-.5380066
0.	9.	22.	33.234	.5979409	.8013786	.0160899	.4393690	-.3109096	-.8427870	-.6703890	.5110063	-.5380066
0.	9.	22.	35.234	.5979409	.8013786	.0160899	.4393690	-.3109096	-.8427870	-.6703890	.5110063	-.5380066

TABLE VI
APOLLO MISSION AS-602
SPACECRAFT OPERATIONAL TRAJECTORY
-DIRECTION COSINES-

TIME FROM LIFTOFF DAY	HR	MIN	SEC	ROLL AXIS L 11	L 21	L 31	PITCH AXIS L 12	L 22	L 32	YAW AXIS L 13	L 23	L 33
0.	9.	22.	37.234	.5979409	.8013786	.0160899	.4393690	-.3109096	-.8427870	-.6703890	.5110063	-.5380066
0.	9.	22.	39.234	.5979409	.8013786	.0160899	.4393690	-.3109096	-.8427870	-.6703890	.5110063	-.5380066
0.	9.	22.	41.234	.5979409	.8013786	.0160899	.4393690	-.3109096	-.8427870	-.6703890	.5110063	-.5380066
0.	9.	22.	43.234	.5979409	.8013786	.0160899	.4393690	-.3109096	-.8427870	-.6703890	.5110063	-.5380066
0.	9.	22.	45.234	.5979409	.8013786	.0160899	.4393690	-.3109096	-.8427870	-.6703890	.5110063	-.5380066
0.	9.	22.	47.234	.5979409	.8013786	.0160899	.4393690	-.3109096	-.8427870	-.6703890	.5110063	-.5380066
0.	9.	22.	49.234	.5979409	.8013786	.0160899	.4393690	-.3109096	-.8427870	-.6703890	.5110063	-.5380066
0.	9.	22.	51.234	.5979409	.8013786	.0160899	.4393690	-.3109096	-.8427870	-.6703890	.5110063	-.5380066
0.	9.	22.	53.234	.5979409	.8013786	.0160899	.4393690	-.3109096	-.8427870	-.6703890	.5110063	-.5380066
0.	9.	22.	55.234	.5979409	.8013786	.0160899	.4393690	-.3109096	-.8427870	-.6703890	.5110063	-.5380066
0.	9.	22.	57.234	.5979409	.8013786	.0160899	.4393690	-.3109096	-.8427870	-.6703890	.5110063	-.5380066
0.	9.	22.	59.234	.5979409	.8013786	.0160899	.4393690	-.3109096	-.8427870	-.6703890	.5110063	-.5380066
0.	9.	23.	1.234	.5979409	.8013786	.0160899	.4393690	-.3109096	-.8427870	-.6703890	.5110063	-.5380066
0.	9.	23.	3.234	.5979409	.8013786	.0160899	.4393690	-.3109096	-.8427870	-.6703890	.5110063	-.5380066
0.	9.	23.	5.234	.5979409	.8013786	.0160899	.4393690	-.3109096	-.8427870	-.6703890	.5110063	-.5380066
0.	9.	23.	7.234	.5979409	.8013786	.0160899	.4393690	-.3109096	-.8427870	-.6703890	.5110063	-.5380066
0.	9.	23.	9.234	.5979409	.8013786	.0160899	.4393690	-.3109096	-.8427870	-.6703890	.5110063	-.5380066
0.	9.	23.	11.234	.5979409	.8013786	.0160899	.4393690	-.3109096	-.8427870	-.6703890	.5110063	-.5380066
0.	9.	23.	13.234	.5768887	.8174767	.0012342	.4403215	-.3094582	-.8428242	-.6886131	.4867633	-.5384642
0.	9.	23.	15.234	.5768887	.8174767	.0012342	.4403215	-.3094582	-.8428242	-.6886131	.4867633	-.5384642
0.	9.	23.	17.234	.5768887	.8174767	.0012342	.4403215	-.3094582	-.8428242	-.6886131	.4867633	-.5384642
0.	9.	23.	19.234	.5768887	.8174767	.0012342	.4403215	-.3094582	-.8428242	-.6886131	.4867633	-.5384642
0.	9.	23.	21.234	.5768887	.8174767	.0012342	.4403215	-.3094582	-.8428242	-.6886131	.4867633	-.5384642
0.	9.	23.	23.234	.5768887	.8174767	.0012342	.4403215	-.3094582	-.8428242	-.6886131	.4867633	-.5384642
0.	9.	23.	25.234	.5768887	.8174767	.0012342	.4403215	-.3094582	-.8428242	-.6886131	.4867633	-.5384642
0.	9.	23.	27.234	.5768887	.8174767	.0012342	.4403215	-.3094582	-.8428242	-.6886131	.4867633	-.5384642
0.	9.	23.	29.234	.5768887	.8174767	.0012342	.4403215	-.3094582	-.8428242	-.6886131	.4867633	-.5384642
0.	9.	23.	31.234	.5768887	.8174767	.0012342	.4403215	-.3094582	-.8428242	-.6886131	.4867633	-.5384642
0.	9.	23.	33.234	.5768887	.8174767	.0012342	.4403215	-.3094582	-.8428242	-.6886131	.4867633	-.5384642
0.	9.	23.	35.234	.5768887	.8174767	.0012342	.4403215	-.3094582	-.8428242	-.6886131	.4867633	-.5384642
0.	9.	23.	37.234	.5768887	.8174767	.0012342	.4403215	-.3094582	-.8428242	-.6886131	.4867633	-.5384642
0.	9.	23.	39.234	.5768887	.8174767	.0012342	.4403215	-.3094582	-.8428242	-.6886131	.4867633	-.5384642
0.	9.	23.	41.234	.5768887	.8174767	.0012342	.4403215	-.3094582	-.8428242	-.6886131	.4867633	-.5384642
0.	9.	23.	43.234	.5768887	.8174767	.0012342	.4403215	-.3094582	-.8428242	-.6886131	.4867633	-.5384642
0.	9.	23.	45.234	.5768887	.8174767	.0012342	.4403215	-.3094582	-.8428242	-.6886131	.4867633	-.5384642
0.	9.	23.	47.234	.5768887	.8174767	.0012342	.4403215	-.3094582	-.8428242	-.6886131	.4867633	-.5384642
0.	9.	23.	49.234	.5768887	.8174767	.0012342	.4403215	-.3094582	-.8428242	-.6886131	.4867633	-.5384642
0.	9.	23.	51.234	.5768887	.8174767	.0012342	.4403215	-.3094582	-.8428242	-.6886131	.4867633	-.5384642
0.	9.	23.	53.234	.5768887	.8174767	.0012342	.4403215	-.3094582	-.8428242	-.6886131	.4867633	-.5384642
0.	9.	23.	55.234	.5768887	.8174767	.0012342	.4403215	-.3094582	-.8428242	-.6886131	.4867633	-.5384642
0.	9.	23.	57.234	.5768887	.8174767	.0012342	.4403215	-.3094582	-.8428242	-.6886131	.4867633	-.5384642
0.	9.	23.	59.234	.5768887	.8174767	.0012342	.4403215	-.3094582	-.8428242	-.6886131	.4867633	-.5384642
0.	9.	24.	1.234	.5768887	.8174767	.0012342	.4403215	-.3094582	-.8428242	-.6886131	.4867633	-.5384642

TABLE VI
APOLLO MISSION AS-502
SPACECRAFT OPERATIONAL TRAJECTORY
-DIRECTION COSINES-

TIME FROM LIFTOFF DAY	HR	MIN	SEC	ROLL AXIS L 11	L 21	L 31	PITCH AXIS L 12	L 22	L 32	YAW AXIS L 13	L 23	L 33
0.	9.	24.	3.234	.5768887	.8174767	.0012342	.4403215	-.3094582	-.8428242	-.6886131	.4867633	-.5384642
0.	9.	24.	5.234	.5768887	.8174767	.0012342	.4403215	-.3094582	-.8428242	-.6886131	.4867633	-.5384642
0.	9.	24.	7.234	.5768887	.8174767	.0012342	.4403215	-.3094582	-.8428242	-.6886131	.4867633	-.5384642
0.	9.	24.	9.234	.5768887	.8174767	.0012342	.4403215	-.3094582	-.8428242	-.6886131	.4867633	-.5384642
0.	9.	24.	11.234	.5768887	.8174767	.0012342	.4403215	-.3094582	-.8428242	-.6886131	.4867633	-.5384642
0.	9.	24.	13.234	.5802768	.8150637	.0044894	.4406187	-.3090497	-.8428188	-.6855694	.4910504	-.5384553
0.	9.	24.	15.234	.5802768	.8150637	.0044894	.4406187	-.3090497	-.8428188	-.6855694	.4910504	-.5384553
0.	9.	24.	17.234	.5802768	.8150637	.0044894	.4406187	-.3090497	-.8428188	-.6855694	.4910504	-.5384553
0.	9.	24.	19.234	.5802768	.8150637	.0044894	.4406187	-.3090497	-.8428188	-.6855694	.4910504	-.5384553
0.	9.	24.	21.234	.5802768	.8150637	.0044894	.4406187	-.3090497	-.8428188	-.6855694	.4910504	-.5384553
0.	9.	24.	23.234	.5802768	.8150637	.0044894	.4406187	-.3090497	-.8428188	-.6855694	.4910504	-.5384553
0.	9.	24.	25.234	.5802768	.8150637	.0044894	.4406187	-.3090497	-.8428188	-.6855694	.4910504	-.5384553
0.	9.	24.	27.234	.5802768	.8150637	.0044894	.4406187	-.3090497	-.8428188	-.6855694	.4910504	-.5384553
0.	9.	24.	29.234	.5802768	.8150637	.0044894	.4406187	-.3090497	-.8428188	-.6855694	.4910504	-.5384553
0.	9.	24.	31.234	.5802768	.8150637	.0044894	.4406187	-.3090497	-.8428188	-.6855694	.4910504	-.5384553
0.	9.	24.	33.234	.5802768	.8150637	.0044894	.4406187	-.3090497	-.8428188	-.6855694	.4910504	-.5384553
0.	9.	24.	35.234	.5802768	.8150637	.0044894	.4406187	-.3090497	-.8428188	-.6855694	.4910504	-.5384553
0.	9.	24.	37.234	.5802768	.8150637	.0044894	.4406187	-.3090497	-.8428188	-.6855694	.4910504	-.5384553
0.	9.	24.	39.234	.5802768	.8150637	.0044894	.4406187	-.3090497	-.8428188	-.6855694	.4910504	-.5384553
0.	9.	24.	41.234	.5802768	.8150637	.0044894	.4406187	-.3090497	-.8428188	-.6855694	.4910504	-.5384553
0.	9.	24.	43.234	.5802768	.8150637	.0044894	.4406187	-.3090497	-.8428188	-.6855694	.4910504	-.5384553
0.	9.	24.	45.234	.5802768	.8150637	.0044894	.4406187	-.3090497	-.8428188	-.6855694	.4910504	-.5384553
0.	9.	24.	47.234	.5802768	.8150637	.0044894	.4406187	-.3090497	-.8428188	-.6855694	.4910504	-.5384553
0.	9.	24.	49.234	.5802768	.8150637	.0044894	.4406187	-.3090497	-.8428188	-.6855694	.4910504	-.5384553
0.	9.	24.	51.234	.5802768	.8150637	.0044894	.4406187	-.3090497	-.8428188	-.6855694	.4910504	-.5384553
0.	9.	24.	53.234	.5802768	.8150637	.0044894	.4406187	-.3090497	-.8428188	-.6855694	.4910504	-.5384553
0.	9.	24.	55.234	.5802768	.8150637	.0044894	.4406187	-.3090497	-.8428188	-.6855694	.4910504	-.5384553
0.	9.	24.	57.234	.5802768	.8150637	.0044894	.4406187	-.3090497	-.8428188	-.6855694	.4910504	-.5384553
0.	9.	24.	59.234	.5802768	.8150637	.0044894	.4406187	-.3090497	-.8428188	-.6855694	.4910504	-.5384553
0.	9.	25.	1.234	.5802768	.8150637	.0044894	.4406187	-.3090497	-.8428188	-.6855694	.4910504	-.5384553
0.	9.	25.	3.234	.5802768	.8150637	.0044894	.4406187	-.3090497	-.8428188	-.6855694	.4910504	-.5384553
0.	9.	25.	5.234	.5802768	.8150637	.0044894	.4406187	-.3090497	-.8428188	-.6855694	.4910504	-.5384553
0.	9.	25.	7.234	.5802768	.8150637	.0044894	.4406187	-.3090497	-.8428188	-.6855694	.4910504	-.5384553
0.	9.	25.	9.234	.5802768	.8150637	.0044894	.4406187	-.3090497	-.8428188	-.6855694	.4910504	-.5384553
0.	9.	25.	11.234	.5802768	.8150637	.0044894	.4406187	-.3090497	-.8428188	-.6855694	.4910504	-.5384553
0.	9.	25.	13.234	.5812487	.8143497	.0073892	.4416649	-.3075910	-.8428049	-.6840709	.4931469	-.5384451
0.	9.	25.	15.234	.5812487	.8143497	.0073892	.4416649	-.3075910	-.8428049	-.6840709	.4931469	-.5384451
0.	9.	25.	17.234	.5812487	.8143497	.0073892	.4416649	-.3075910	-.8428049	-.6840709	.4931469	-.5384451
0.	9.	25.	19.234	.5812487	.8143497	.0073892	.4416649	-.3075910	-.8428049	-.6840709	.4931469	-.5384451
0.	9.	25.	21.234	.5812487	.8143497	.0073892	.4416649	-.3075910	-.8428049	-.6840709	.4931469	-.5384451

TABLE VI
APOLLO MISSION AS-502
SPACECRAFT OPERATIONAL TRAJECTORY
-DIRECTION COSINES-

TIME FROM LIFTOFF DAY HR MIN SEC	ROLL AXIS L 11	L 21	L 31	PITCH AXIS L 12	L 22	L 32	YAW AXIS L 13	L 23	L 33
0. 9. 25. 22.325	.5697786	.8229041	.0011021	.4433655	-.3058540	-.8425440	-.6930009	.4806556	-.5391069
SECOND SPS SHUTDOWN									
0. 9. 25. 22.325	.5692608	.8221562	.0011011	.4433472	-.3058451	-.8425568	-.6923766	.4801227	-.5386063
0. 9. 25. 23.012	.5692608	.8221562	.0011011	.4433472	-.3058451	-.8425568	-.6923766	.4801227	-.5386063
HOLD INERTIAL ATTITUDE									
0. 9. 25. 23.012	.5692608	.8221562	.0011011	.4433472	-.3058451	-.8425568	-.6923766	.4801227	-.5386063
0. 9. 25. 32.023	.5692608	.8221562	.0011011	.4433472	-.3058451	-.8425568	-.6923766	.4801227	-.5386063
0. 9. 25. 42.023	.5692608	.8221562	.0011011	.4433472	-.3058451	-.8425568	-.6923766	.4801227	-.5386063
0. 9. 25. 52.023	.5692608	.8221562	.0011011	.4433472	-.3058451	-.8425568	-.6923766	.4801227	-.5386063
0. 9. 25. 59.022	.5692608	.8221562	.0011011	.4433472	-.3058451	-.8425568	-.6923766	.4801227	-.5386063
CSM ATTITUDE ORIENTATION FOR CM/SM SEPERATION									
0. 9. 25. 59.022	.5692608	.8221562	.0011011	.4433472	-.3058451	-.8425568	-.6923766	.4801227	-.5386063
0. 9. 25. 59.109	.5719983	.8202452	-.0039656	.4398851	-.3108275	-.8425481	-.6923287	.4801917	-.5386064
0. 9. 26. 9.109	.8811413	.3212308	.3469881	.4414449	-.2958564	-.8471100	-.1694591	.8995998	-.4024969
0. 9. 26. 16.605	.8459450	-.1699596	.5054610	.4484319	-.2862343	-.8467459	.2885929	.9429653	-.1659232
0. 9. 26. 16.697	.8459450	-.1699596	.5054610	.4460911	-.2970350	-.8447864	.2937192	.9396190	-.1756278
0. 9. 26. 16.797	.8459450	-.1699596	.5054610	.4413614	-.3088303	-.8425105	.2992944	.9358085	-.1862399
0. 9. 26. 16.814	.8459450	-.1699596	.5054610	.4407176	-.3108393	-.8421085	.3002416	.9351431	-.1880488
COAST TO CM/SM SEPARATION									
0. 9. 26. 16.814	.8459450	-.1699596	.5054610	.4407176	-.3108393	-.8421085	.3002416	.9351431	-.1880488
0. 9. 26. 21.817	.8459450	-.1699596	.5054610	.4407176	-.3108393	-.8421085	.3002416	.9351431	-.1880488
0. 9. 26. 31.817	.8459450	-.1699596	.5054610	.4407176	-.3108393	-.8421085	.3002416	.9351431	-.1880488
0. 9. 26. 41.817	.8459450	-.1699596	.5054610	.4407176	-.3108393	-.8421085	.3002416	.9351431	-.1880488
0. 9. 26. 51.817	.8459450	-.1699596	.5054610	.4407176	-.3108393	-.8421085	.3002416	.9351431	-.1880488
0. 9. 27. 1.817	.8459450	-.1699596	.5054610	.4407176	-.3108393	-.8421085	.3002416	.9351431	-.1880488
0. 9. 27. 11.817	.8459450	-.1699596	.5054610	.4407176	-.3108393	-.8421085	.3002416	.9351431	-.1880488
0. 9. 27. 21.817	.8459450	-.1699596	.5054610	.4407176	-.3108393	-.8421085	.3002416	.9351431	-.1880488

TABLE VI
APOLLO MISSION AS-502
SPACECRAFT OPERATIONAL TRAJECTORY
-DIRECTION COSINES-

TIME FROM LIFTOFF DAY	HR	MIN	SEC	ROLL AXIS L 11	L 21	L 31	PITCH AXIS L 12	L 22	L 32	YAW AXIS L 13	L 23	L 33
0.	9.	27.	31.817	.8459450	-.1699596	.5054610	.4407176	-.3108393	-.8421085	.3002416	.9351431	-.1880488
0.	9.	27.	41.817	.8459450	-.1699596	.5054610	.4407176	-.3108393	-.8421085	.3002416	.9351431	-.1880488
0.	9.	27.	51.817	.8459450	-.1699596	.5054610	.4407176	-.3108393	-.8421085	.3002416	.9351431	-.1880488
0.	9.	27.	53.976	.8459450	-.1699596	.5054610	.4407176	-.3108393	-.8421085	.3002416	.9351431	-.1880488
CM/SM SEPARATION AND FIVE SECOND COAST												
0.	9.	27.	53.976	.8458573	-.1701974	.5055276	.4407411	-.3108248	-.8421017	.3004541	.9351047	-.1879006
0.	9.	27.	58.976	.8470592	-.1664152	.5047739	.4407507	-.3108263	-.8420961	.2970346	.9357847	-.1899406
CM ATTITUDE ORIENTATION FOR ENTRY												
0.	9.	27.	58.976	.8470592	-.1664151	.5047739	.4407507	-.3108264	-.8420960	.2970346	.9357847	-.1899407
0.	9.	27.	59.367	.8346117	-.1581812	.5276381	.4637093	-.3162578	-.8280013	.2973163	.9357303	-.1897678
0.	9.	28.	8.408	.5009229	-.6815999	.5333833	.4553470	-.3165442	-.8321411	.7360267	.6597131	.1518002
0.	9.	28.	18.408	-.0866946	-.9480073	.3062126	.4482149	-.3116206	-.8378520	.8897120	.0646118	.4519268
0.	9.	28.	22.683	-.3430021	-.9261014	.1571170	.4467044	-.3079581	-.8400101	.8263200	-.2179404	.5193238
0.	9.	28.	22.692	-.3430021	-.9261014	.1571170	.4446961	-.3074278	-.8412689	.8274025	-.2186877	.5172821
0.	9.	28.	22.694	-.3430021	-.9261014	.1571170	.4443788	-.3073439	-.8414673	.8275730	-.2188055	.5169594
COAST TO ENTRY												
0.	9.	28.	22.694	-.3430021	-.9261014	.1571170	.4443788	-.3073439	-.8414673	.8275730	-.2188055	.5169594
0.	9.	28.	31.694	-.3430021	-.9261014	.1571170	.4443788	-.3073439	-.8414673	.8275730	-.2188055	.5169594
0.	9.	28.	41.694	-.3430021	-.9261014	.1571170	.4443788	-.3073439	-.8414673	.8275730	-.2188055	.5169594
0.	9.	28.	51.694	-.3430021	-.9261014	.1571170	.4443788	-.3073439	-.8414673	.8275730	-.2188055	.5169594
0.	9.	29.	1.694	-.3430021	-.9261014	.1571170	.4443788	-.3073439	-.8414673	.8275730	-.2188055	.5169594
0.	9.	29.	11.694	-.3430021	-.9261014	.1571170	.4443788	-.3073439	-.8414673	.8275730	-.2188055	.5169594
0.	9.	29.	21.694	-.3430021	-.9261014	.1571170	.4443788	-.3073439	-.8414673	.8275730	-.2188055	.5169594
0.	9.	29.	23.594	-.3430021	-.9261014	.1571170	.4443788	-.3073439	-.8414673	.8275730	-.2188055	.5169594
ENTRY												

TABLE VII
APOLLO MISSION AS-502
SPACECRAFT OPERATIONAL TRAJECTORY
-ORBITAL ELEMENTS-

TIME SECONDS	VEH DECL DEG	VEH RT ASC DEG	TRUE ANOM DEG	SEMILATUS RECTUM FEET	ECCENTRICITY	INCLINATION DEGREES	APOGEE ALTITUDE N. MILES	PERIGEE ALTITUDE N. MILES	PREDICTED VELOCITY AT ENTRY FT/SEC	PREDICTED GAMMA AT ENTRY DEGREES	TFF TO 400K SEC
LIFTOFF CONDITIONS											
.000	28.45	-67.48	.00	0.	.0000000	.000	0.	.0	.000	.00	.00
TRANSLUNAR INJECTION											
11746.739	26.66	2.89	14.93	42875128.	.9781386	32.485	319335.	126.2	36154.552	.00	.00
11748.739	26.60	3.09	15.11	42875184.	.9781406	32.485	319364.	126.2	36154.573	.00	.00
11750.739	26.54	3.28	15.30	42875256.	.9781425	32.486	319394.	126.2	36154.591	.00	.00
11752.739	26.48	3.47	15.48	42875332.	.9781445	32.486	319424.	126.2	36154.608	.00	.00
11754.739	26.41	3.66	15.66	42875367.	.9781464	32.486	319452.	126.2	36154.625	.00	.00
11756.739	26.35	3.86	15.84	42875414.	.9781483	32.486	319481.	126.2	36154.642	.00	.00
11756.939	26.35	3.87	15.86	42875431.	.9781485	32.486	319484.	126.2	36154.642	.00	.00
BEGIN ORIENTATION TO S-IVB/CSM SEPARATION ATTITUDE											
11756.939	26.35	3.87	15.86	42875424.	.9781484	32.486	319482.	126.2	36154.642	.00	.00
11757.098	26.34	3.89	15.88	42875440.	.9781484	32.486	319483.	126.2	36154.642	.00	.00
11762.139	26.19	4.37	16.34	42875567.	.9781533	32.486	319555.	126.2	36154.685	.00	.00
11772.139	25.87	5.32	17.24	42875846.	.9781627	32.486	319697.	126.3	36154.772	.00	.00
11782.139	25.56	6.26	18.15	42876125.	.9781720	32.486	319836.	126.3	36154.854	.00	.00
11792.139	25.23	7.19	19.04	42876368.	.9781810	32.487	319972.	126.3	36154.935	.00	.00
11802.139	24.91	8.11	19.94	42876679.	.9781897	32.487	320103.	126.3	36155.013	.00	.00
11812.139	24.58	9.02	20.83	42876952.	.9781981	32.487	320230.	126.3	36155.090	.00	.00
11822.139	24.25	9.92	21.71	42877229.	.9782062	32.488	320353.	126.3	36155.163	.00	.00
11832.139	23.91	10.81	22.59	42877521.	.9782140	32.488	320470.	126.3	36155.232	.00	.00
11842.139	23.57	11.69	23.46	42877785.	.9782215	32.488	320584.	126.3	36155.302	.00	.00
11852.139	23.23	12.56	24.33	42878054.	.9782286	32.488	320691.	126.3	36155.366	.00	.00
11862.139	22.88	13.42	25.19	42878302.	.9782353	32.489	320794.	126.3	36155.427	.00	.00
11872.139	22.53	14.27	26.05	42878577.	.9782417	32.489	320890.	126.3	36155.487	.00	.00
11876.184	22.39	14.61	26.40	42878711.	.9782440	32.489	320927.	126.3	36155.508	.00	.00
11878.139	22.33	14.77	26.56	42878778.	.9782452	32.489	320945.	126.3	36155.517	.00	.00
11880.139	22.26	14.94	26.73	42878814.	.9782464	32.489	320963.	126.3	36155.530	.00	.00

remove line

Orbital elements

TABLE VII
APOLLO MISSION AS-502
SPACECRAFT OPERATIONAL TRAJECTORY
-ORBITAL ELEMENTS-

TIME SECONDS	VEH DECL DEG	VEH RT ASC DEG	TRUE ANOM DEG	SEMILATUS RECTUM FEET	ECCENTRICITY	INCLINATION DEGREES	APOGEE ALTITUDE N. MILES	PERIGEE ALTITUDE N. MILES	PREDICTED VELOCITY AT ENTRY FT/SEC	PREDICTED GAMMA AT ENTRY DEGREES	TFF TO 400K SEC
11881.058	22.22	15.02	26.81	42878862.	.9782470	32.489	320972.	126.4	36155.534	.00	.00
END ORIENTATION TO S-IVB/CSM SEPARATION ATTITUDE											
11881.058	22.22	15.02	26.81	42878829.	.9782467	32.489	320968.	126.3	36155.530	.00	.00
11882.139	22.19	15.11	26.90	42878851.	.9782474	32.489	320978.	126.3	36155.538	.00	.00
11884.139	22.12	15.28	27.07	42878924.	.9782486	32.489	320996.	126.4	36155.547	.00	.00
11886.139	22.05	15.44	27.24	42878948.	.9782497	32.489	321012.	126.4	36155.555	.00	.00
11888.139	21.98	15.61	27.41	42879013.	.9782508	32.489	321030.	126.4	36155.569	.00	.00
11890.139	21.90	15.77	27.58	42879090.	.9782519	32.490	321047.	126.4	36155.578	.00	.00
11892.139	21.83	15.94	27.75	42879145.	.9782530	32.490	321063.	126.4	36155.586	.00	.00
11894.139	21.76	16.10	27.92	42879176.	.9782541	32.490	321080.	126.4	36155.599	.00	.00
11896.139	21.69	16.27	28.08	42879223.	.9782551	32.490	321096.	126.4	36155.608	.00	.00
11898.139	21.62	16.43	28.25	42879283.	.9782561	32.490	321111.	126.4	36155.616	.00	.00
11900.139	21.55	16.60	28.42	42879344.	.9782572	32.490	321128.	126.4	36155.625	.00	.00
11902.139	21.48	16.76	28.59	42879408.	.9782581	32.490	321142.	126.4	36155.633	.00	.00
11904.139	21.41	16.92	28.75	42879447.	.9782592	32.490	321158.	126.4	36155.646	.00	.00
11906.139	21.34	17.08	28.92	42879497.	.9782602	32.490	321173.	126.4	36155.654	.00	.00
11908.139	21.27	17.25	29.09	42879582.	.9782611	32.490	321188.	126.4	36155.663	.00	.00
11910.139	21.20	17.41	29.25	42879594.	.9782621	32.490	321202.	126.4	36155.672	.00	.00
11912.139	21.13	17.57	29.42	42879678.	.9782629	32.490	321216.	126.4	36155.681	.00	.00
11914.139	21.06	17.73	29.58	42879704.	.9782639	32.490	321230.	126.4	36155.690	.00	.00
11916.139	20.99	17.89	29.75	42879750.	.9782648	32.490	321244.	126.4	36155.694	.00	.00
11916.939	20.96	17.95	29.82	42879788.	.9782651	32.490	321249.	126.4	36155.698	.00	.00
START RCS THRUST FOR S-IVB/CSM SEPARATION											
11916.939	20.96	17.95	29.82	42879788.	.9782651	32.490	321249.	126.4	36155.698	.00	.00
11917.938	20.92	18.03	29.90	42879564.	.9782552	32.490	321100.	126.4	36155.612	.00	.00
11918.639	20.90	18.09	29.96	42879421.	.9782483	32.490	320996.	126.4	36155.547	.00	.00
SEPARATION AND 8.3 SECS OF +X TRANSLATION											
11918.639	20.90	18.09	29.96	42879421.	.9782483	32.490	320996.	126.4	36155.547	.00	.00

TABLE VII
APOLLO MISSION AS-502
SPACECRAFT OPERATIONAL TRAJECTORY
-ORBITAL ELEMENTS-

TIME SECONDS	VEH DECL DEG	VEH RT ASC DEG	TRUE ANOM DEG	SEMILATUS RECTUM FEET	ECCENTRICITY	INCLINATION DEGREES	APOGEE ALTITUDE N. MILES	PERIGEE ALTITUDE N. MILES	PREDICTED VELOCITY AT ENTRY FT/SEC	PREDICTED GAMMA AT ENTRY DEGREES	TFF TO 400K SEC
11926.939	20.60	18.75	30.64	42874850.	.9780464	32.491	317978.	126.4	36153.733	.00	.00
COAST FIVE SECONDS											
11926.939	20.60	18.75	30.64	42874850.	.9780464	32.491	317978.	126.4	36153.733	.00	.00
11931.939	20.42	19.14	31.05	42874940.	.9780483	32.491	318006.	126.4	36153.750	.00	.00
ORIENTATION TO FIRST SPS IGNITION ATTITUDE											
11931.939	20.42	19.14	31.05	42874940.	.9780483	32.491	318006.	126.4	36153.750	.00	.00
11932.827	20.39	19.21	31.12	42874979.	.9780487	32.491	318012.	126.4	36153.755	.00	.00
COAST TO FIRST SPS BURN											
11932.827	20.39	19.21	31.12	42874979.	.9780487	32.491	318012.	126.4	36153.755	.00	.00
11933.239	20.38	19.25	31.16	42875001.	.9780489	32.491	318015.	126.4	36153.755	.00	.00
11943.239	20.02	20.02	31.97	42875264.	.9780524	32.491	318068.	126.4	36153.789	.00	.00
11953.239	19.66	20.79	32.78	42875466.	.9780555	32.491	318116.	126.4	36153.819	.00	.00
11963.238	19.31	21.55	33.58	42875704.	.9780582	32.491	318157.	126.4	36153.840	.00	.00
11973.238	18.95	22.30	34.37	42875963.	.9780606	32.492	318193.	126.4	36153.866	.00	.00
11983.238	18.59	23.05	35.16	42876165.	.9780625	32.492	318223.	126.5	36153.883	.00	.00
11993.238	18.23	23.78	35.94	42876405.	.9780640	32.492	318247.	126.5	36153.896	.00	.00
12003.238	17.88	24.50	36.71	42876614.	.9780652	32.492	318266.	126.5	36153.910	.00	.00
12013.239	17.52	25.21	37.48	42876859.	.9780660	32.493	318280.	126.5	36153.918	.00	.00
12016.939	17.39	25.47	37.76	42876926.	.9780662	32.493	318283.	126.5	36153.918	.00	.00
FIRST SPS IGNITION											
12016.939	17.39	25.47	37.76	42876926.	.9780662	32.493	318283.	126.5	36153.918	.00	.00

TABLE VII
APOLLO MISSION AS-502
SPACECRAFT OPERATIONAL TRAJECTORY
-ORBITAL ELEMENTS-

TIME SECONDS	VEH DECL DEG	VEH RT ASC DEG	TRUE ANOM DEG	SEMILATUS RECTUM FEET	ECCENTRICITY	INCLINATION DEGREES	APOGEE ALTITUDE N. MILES	PERIGEE ALTITUDE N. MILES	PREDICTED VELOCITY AT ENTRY FT/SEC	PREDICTED GAMMA AT ENTRY DEGREES	TFF TO 400K SEC
12017.314	17.37	25.50	37.79	42876606.	.9780526	32.493	318082.	126.5	36153.797	.00	.00
					FIRST SPS BURN						
12017.314	17.37	25.50	37.79	42876606.	.9780526	32.493	318082.	126.5	36153.797	.00	.00
12018.333	17.34	25.57	37.89	42845953.	.9767399	32.493	299720.	126.3	36141.995	.00	.00
12020.333	17.27	25.71	38.08	42785948.	.9741629	32.493	269100.	126.0	36118.814	.00	.00
12022.333	17.19	25.85	38.28	42726092.	.9715864	32.493	244040.	125.7	36095.614	.00	.00
12024.333	17.12	25.99	38.47	42666204.	.9690077	32.493	223130.	125.3	36072.376	.00	.00
12026.333	17.05	26.13	38.66	42606200.	.9664263	32.493	205415.	125.0	36049.099	.00	.00
12028.333	16.98	26.27	38.86	42546062.	.9638421	32.493	190215.	124.6	36025.771	.00	.00
12030.333	16.91	26.41	39.05	42485803.	.9612553	32.493	177029.	124.3	36002.403	.00	.00
12032.333	16.84	26.55	39.25	42425477.	.9586657	32.493	165482.	123.9	35978.986	.00	.00
12034.333	16.77	26.68	39.44	42364989.	.9560734	32.493	155287.	123.6	35955.529	.00	.00
12036.333	16.70	26.82	39.63	42304391.	.9534784	32.493	146219.	123.2	35932.022	.00	.00
12038.333	16.63	26.96	39.83	42243683.	.9508807	32.493	138100.	122.8	35908.471	.00	.00
12040.333	16.56	27.09	40.02	42182858.	.9482803	32.493	130790.	122.4	35884.876	.00	.00
12042.333	16.49	27.23	40.22	42121930.	.9456773	32.493	124174.	122.1	35861.235	.00	.00
12044.333	16.42	27.36	40.41	42060882.	.9430716	32.493	118156.	121.7	35837.547	.00	.00
12046.333	16.35	27.50	40.61	41999719.	.9404633	32.493	112660.	121.3	35813.814	.00	.00
12048.333	16.28	27.63	40.80	41938432.	.9378523	32.493	107620.	120.9	35790.034	.00	.00
12050.333	16.21	27.77	41.00	41877022.	.9352387	32.493	102982.	120.5	35766.209	.00	.00
12052.333	16.14	27.90	41.19	41815506.	.9326224	32.493	98699.	120.0	35742.336	.00	.00
12054.333	16.07	28.03	41.39	41753887.	.9300036	32.493	94733.	119.6	35718.420	.00	.00
12056.333	16.00	28.16	41.59	41692122.	.9273822	32.493	91049.	119.2	35694.455	.00	.00
12058.333	15.93	28.30	41.78	41630270.	.9247582	32.493	87618.	118.8	35670.444	.00	.00
12060.333	15.86	28.43	41.98	41568280.	.9221316	32.493	84416.	118.3	35646.383	.00	.00
12062.333	15.79	28.56	42.18	41506170.	.9195024	32.493	81419.	117.9	35622.281	.00	.00
12064.333	15.72	28.69	42.37	41443964.	.9168707	32.493	78610.	117.4	35598.126	.00	.00
12066.333	15.65	28.82	42.57	41381631.	.9142364	32.493	75970.	117.0	35573.929	.00	.00
12068.333	15.59	28.95	42.77	41319182.	.9115996	32.494	73485.	116.5	35549.681	.00	.00
12070.333	15.52	29.08	42.96	41256614.	.9089603	32.494	71142.	116.0	35525.389	.00	.00
12072.333	15.45	29.21	43.16	41193924.	.9063185	32.494	68928.	115.5	35501.042	.00	.00
12074.333	15.38	29.34	43.36	41131131.	.9036742	32.494	66834.	115.0	35476.653	.00	.00
12076.333	15.31	29.47	43.56	41068207.	.9010274	32.494	64850.	114.5	35452.217	.00	.00
12078.333	15.24	29.59	43.75	41005170.	.8983781	32.494	62968.	114.0	35427.730	.00	.00
12080.333	15.17	29.72	43.95	40942015.	.8957263	32.494	61179.	113.5	35403.192	.00	.00
12082.333	15.11	29.85	44.15	40878742.	.8930721	32.494	59478.	113.0	35378.609	.00	.00
12084.333	15.04	29.97	44.35	40815350.	.8904155	32.494	57857.	112.5	35353.974	.00	.00

TABLE VII
APOLLO MISSION AS-502
SPACECRAFT OPERATIONAL TRAJECTORY
-ORBITAL ELEMENTS-

TIME SECONDS	VEH DECL DEG	VEH RT ASC DEG	TRUE ANOM DEG	SEMILATUS RECTUM FEET	ECCENTRICITY	INCLINATION DEGREES	APOGEE ALTITUDE N. MILES	PERIGEE ALTITUDE N. MILES	PREDICTED VELOCITY AT ENTRY FT/SEC	PREDICTED GAMMA AT ENTRY DEGREES	TFF TO 400K SEC
12086.333	14.97	30.10	44.55	40751845.	.8877565	32.494	56312.	112.0	35329.294	.00	.00
12088.333	14.90	30.23	44.75	40688217.	.8850951	32.494	54837.	111.4	35304.564	.00	.00
12090.333	14.83	30.35	44.95	40624470.	.8824312	32.494	53427.	110.9	35279.784	.00	.00
12092.333	14.77	30.48	45.15	40560608.	.8797650	32.494	52079.	110.3	35254.954	.00	.00
12094.333	14.70	30.60	45.35	40496627.	.8770964	32.494	50788.	109.8	35230.075	.00	.00
12096.333	14.63	30.72	45.55	40432526.	.8744255	32.494	49550.	109.2	35205.145	.00	.00
12098.333	14.56	30.85	45.75	40368301.	.8717522	32.494	48363.	108.6	35180.171	.00	.00
12100.333	14.50	30.97	45.95	40303960.	.8690766	32.494	47224.	108.1	35155.138	.00	.00
12102.333	14.43	31.09	46.15	40239511.	.8663986	32.494	46129.	107.5	35130.061	.00	.00
12104.333	14.36	31.22	46.35	40174929.	.8637185	32.494	45076.	106.9	35104.930	.00	.00
12106.333	14.30	31.34	46.55	40110231.	.8610360	32.494	44063.	106.3	35079.751	.00	.00
12108.333	14.23	31.46	46.76	40045419.	.8583512	32.494	43087.	105.6	35054.523	.00	.00
12110.333	14.16	31.58	46.96	39980474.	.8556642	32.494	42147.	105.0	35029.241	.00	.00
12112.333	14.10	31.70	47.16	39915423.	.8529750	32.494	41240.	104.4	35003.908	.00	.00
12114.333	14.03	31.82	47.37	39850250.	.8502836	32.494	40365.	103.8	34978.522	.00	.00
12116.333	13.96	31.94	47.57	39784947.	.8475900	32.494	39521.	103.1	34953.087	.00	.00
12118.333	13.90	32.06	47.77	39719536.	.8448942	32.494	38705.	102.5	34927.600	.00	.00
12120.333	13.83	32.18	47.98	39653996.	.8421962	32.494	37916.	101.8	34902.061	.00	.00
12122.333	13.77	32.30	48.18	39588343.	.8394961	32.494	37153.	101.1	34876.470	.00	.00
12124.333	13.70	32.42	48.39	39522564.	.8367939	32.494	36414.	100.4	34850.827	.00	.00
12126.333	13.63	32.54	48.59	39456666.	.8340896	32.494	35699.	99.7	34825.132	.00	.00
12128.333	13.57	32.66	48.80	39390645.	.8313832	32.494	35006.	99.1	34799.382	.00	.00
12130.333	13.50	32.77	49.01	39324503.	.8286747	32.494	34335.	98.3	34773.580	.00	.00
12132.333	13.44	32.89	49.21	39258243.	.8259642	32.494	33684.	97.6	34747.726	.00	.00
12134.333	13.37	33.01	49.42	39191856.	.8232517	32.494	33053.	96.9	34721.819	.00	.00
12136.333	13.31	33.12	49.63	39125349.	.8205371	32.494	32440.	96.2	34695.859	.00	.00
12138.333	13.24	33.24	49.84	39058723.	.8178205	32.494	31844.	95.4	34669.845	.00	.00
12140.333	13.18	33.35	50.04	38991974.	.8151021	32.494	31266.	94.7	34643.775	.00	.00
12142.333	13.11	33.47	50.25	38925100.	.8123816	32.494	30704.	93.9	34617.656	.00	.00
12144.333	13.05	33.58	50.46	38858109.	.8096593	32.494	30158.	93.1	34591.477	.00	.00
12146.333	12.98	33.70	50.67	38790986.	.8069350	32.494	29627.	92.3	34565.248	.00	.00
12148.333	12.92	33.81	50.88	38723746.	.8042088	32.494	29110.	91.6	34538.961	.00	.00
12150.333	12.86	33.93	51.09	38656382.	.8014809	32.494	28607.	90.8	34512.620	.00	.00
12152.333	12.79	34.04	51.31	38588894.	.7987510	32.494	28117.	89.9	34486.225	.00	.00
12154.333	12.73	34.15	51.52	38521282.	.7960194	32.494	27640.	89.1	34459.776	.00	.00
12156.333	12.66	34.26	51.73	38453550.	.7932860	32.494	27175.	88.3	34433.270	.00	.00
12158.333	12.60	34.38	51.94	38385693.	.7905509	32.494	26722.	87.4	34406.706	.00	.00
12160.333	12.54	34.49	52.16	38317709.	.7878140	32.494	26280.	86.6	34380.089	.00	.00
12162.333	12.47	34.60	52.37	38249601.	.7850754	32.494	25849.	85.7	34353.414	.00	.00
12164.333	12.41	34.71	52.59	38181369.	.7823352	32.494	25429.	84.8	34326.687	.00	.00
12166.333	12.35	34.82	52.80	38113012.	.7795933	32.494	25018.	84.0	34299.898	.00	.00

TABLE VII
APOLLO MISSION AS-502
SPACECRAFT OPERATIONAL TRAJECTORY
-ORBITAL ELEMENTS-

TIME SECONDS	VEH DECL DEG	VEH RT ASC DEG	TRUE ANOM DEG	SEMILATUS RECTUM FEET	ECCENTRICITY	INCLINATION DEGREES	APOGEE ALTITUDE N. MILES	PERIGEE ALTITUDE N. MILES	PREDICTED VELOCITY AT ENTRY FT/SEC	PREDICTED GAMMA AT ENTRY DEGREES	TPF TO 400K SEC
12168.333	12.28	34.93	53.02	38044534.	.7768498	32.494	24618.	83.1	34273.057	.00	.00
12170.333	12.22	35.04	53.24	37975926.	.7741047	32.494	24227.	82.1	34246.156	.00	.00
12172.333	12.16	35.15	53.45	37907193.	.7713580	32.494	23845.	81.2	34219.198	.00	.00
12174.333	12.09	35.26	53.67	37838334.	.7686099	32.494	23472.	80.3	34192.183	.00	.00
12176.333	12.03	35.37	53.89	37769347.	.7658602	32.494	23108.	79.4	34165.113	.00	.00
12178.333	11.97	35.48	54.11	37700239.	.7631090	32.494	22751.	78.4	34137.982	.00	.00
12180.333	11.91	35.59	54.33	37631001.	.7603564	32.494	22403.	77.4	34110.793	.00	.00
12182.333	11.85	35.69	54.55	37561637.	.7576024	32.494	22062.	76.4	34083.546	.00	.00
12184.333	11.78	35.80	54.77	37492146.	.7548470	32.494	21729.	75.5	34056.242	.00	.00
12186.333	11.72	35.91	54.99	37422527.	.7520903	32.494	21403.	74.5	34028.877	.00	.00
12188.333	11.66	36.02	55.22	37352780.	.7493323	32.494	21084.	73.4	34001.453	.00	.00
12190.333	11.60	36.12	55.44	37282904.	.7465731	32.494	20771.	72.4	33973.971	.00	.00
12192.333	11.54	36.23	55.66	37212902.	.7438125	32.494	20465.	71.4	33946.430	.00	.00
12194.333	11.48	36.34	55.89	37142771.	.7410508	32.494	20166.	70.3	33918.826	.00	.00
12196.333	11.41	36.44	56.11	37072508.	.7382880	32.494	19872.	69.2	33891.165	.00	.00
12198.333	11.35	36.55	56.34	37002120.	.7355240	32.494	19585.	68.2	33863.445	.00	37592.13
12200.333	11.29	36.65	56.57	36931602.	.7327589	32.494	19303.	67.1	33835.662	.00	36966.37
12202.333	11.23	36.76	56.80	36860953.	.7299928	32.494	19027.	65.9	33807.819	.00	36358.54
12204.333	11.17	36.86	57.03	36790171.	.7272257	32.494	18757.	64.8	33779.912	-.89	35766.71
12206.333	11.11	36.96	57.26	36719263.	.7244576	32.494	18491.	63.7	33751.945	-1.30	35189.88
12208.333	11.05	37.07	57.49	36648223.	.7216886	32.494	18231.	62.5	33723.921	-1.61	34627.32
12210.333	10.99	37.17	57.72	36577051.	.7189187	32.494	17976.	61.4	33695.831	-1.87	34078.43
12212.333	10.93	37.27	57.95	36505745.	.7161480	32.494	17725.	60.2	33667.681	-2.10	33542.69
12214.333	10.87	37.38	58.19	36434308.	.7133765	32.494	17480.	59.0	33639.466	-2.31	33019.59
12216.333	10.81	37.48	58.42	36362739.	.7106043	32.494	17239.	57.8	33611.190	-2.51	32508.71
12218.333	10.75	37.58	58.66	36291036.	.7078314	32.494	17002.	56.6	33582.850	-2.69	32009.61
12220.333	10.69	37.68	58.89	36219199.	.7050579	32.494	16770.	55.3	33554.446	-2.86	31521.90
12222.333	10.63	37.78	59.13	36147232.	.7022837	32.494	16542.	54.1	33525.982	-3.02	31045.21
12224.333	10.57	37.88	59.37	36075130.	.6995091	32.494	16318.	52.8	33497.461	-3.18	30579.17
12226.333	10.51	37.98	59.61	36002889.	.6967339	32.494	16098.	51.5	33468.860	-3.33	30123.43
12228.333	10.45	38.08	59.85	35930517.	.6939583	32.494	15881.	50.2	33440.201	-3.47	29677.68
12230.333	10.39	38.18	60.09	35858009.	.6911822	32.494	15669.	48.9	33411.475	-3.61	29241.60
12232.333	10.34	38.28	60.33	35785362.	.6884059	32.494	15461.	47.5	33382.687	-3.75	28814.88
12234.333	10.28	38.38	60.58	35712580.	.6856293	32.494	15255.	46.2	33353.836	-3.88	28397.25
12236.333	10.22	38.48	60.82	35639662.	.6828525	32.494	15054.	44.8	33324.919	-4.01	27988.43
12238.333	10.16	38.58	61.07	35566603.	.6800755	32.494	14856.	43.4	33295.935	-4.13	27588.15
12240.333	10.10	38.68	61.32	35493408.	.6772984	32.494	14661.	42.0	33266.885	-4.25	27196.16
12242.333	10.04	38.78	61.57	35420069.	.6745213	32.494	14470.	40.5	33237.766	-4.37	26812.20
12244.333	9.98	38.88	61.82	35346594.	.6717442	32.494	14281.	39.1	33208.581	-4.49	26436.05
12246.333	9.93	38.97	62.07	35272978.	.6689673	32.494	14096.	37.6	33179.331	-4.61	26067.48
12248.333	9.87	39.07	62.32	35199222.	.6661904	32.494	13914.	36.1	33150.011	-4.72	25706.27

TABLE VII
APOLLO MISSION AS-502
SPACECRAFT OPERATIONAL TRAJECTORY
-ORBITAL ELEMENTS-

TIME SECONDS	VEH DECL DEG	VEH RT ASC DEG	TRUE ANOM DEG	SEMILATUS RECTUM FEET	ECCENTRICITY	INCLINATION DEGREES	APOGEE ALTITUDE N. MILES	PERIGEE ALTITUDE N. MILES	PREDICTED VELOCITY AT ENTRY FT/SEC	PREDICTED GAMMA AT ENTRY DEGREES	TFF TO 400K SEC
12250.333	9.81	39.17	62.57	35125319.	.6634138	32.493	13734.	34.6	33120.627	-4.84	25352.21
12252.333	9.75	39.26	62.83	35051274.	.6606375	32.493	13558.	33.1	33091.170	-4.95	25005.09
12254.333	9.70	39.36	63.08	34977084.	.6578615	32.493	13384.	31.6	33061.648	-5.06	24664.72
12256.333	9.64	39.46	63.34	34902746.	.6550860	32.493	13213.	30.0	33032.055	-5.16	24330.91
12258.333	9.58	39.55	63.60	34828264.	.6523110	32.493	13045.	28.4	33002.394	-5.27	24003.48
12260.333	9.53	39.65	63.86	34753630.	.6495366	32.493	12880.	26.8	32972.661	-5.38	23682.25
12262.333	9.47	39.74	64.12	34678841.	.6467628	32.493	12717.	25.2	32942.856	-5.48	23367.05
12264.333	9.41	39.84	64.39	34603897.	.6439898	32.493	12556.	23.5	32912.984	-5.58	23057.71
12266.333	9.36	39.93	64.65	34528793.	.6412176	32.493	12398.	21.8	32883.038	-5.69	22754.07
12268.333	9.30	40.02	64.92	34453516.	.6384462	32.493	12243.	20.1	32853.017	-5.79	22455.96
12270.333	9.24	40.12	65.19	34378045.	.6356758	32.493	12089.	18.4	32822.918	-5.89	22163.20
12270.943	9.23	40.15	65.27	34354828.	.6348300	32.493	12043.	17.9	32813.700	-5.92	22074.70
FIRST SPS SHUTDOWN											
12270.943	9.23	40.15	65.27	34354828.	.6348300	32.493	12043.	17.9	32813.700	-5.92	22074.70
12271.630	9.21	40.18	65.34	34339859.	.6342907	32.493	12013.	17.5	32807.798	-5.94	22018.02
COAST FIVE SECONDS											
12271.630	9.21	40.18	65.34	34339859.	.6342907	32.493	12013.	17.5	32807.798	-5.94	22018.02
12276.630	9.07	40.41	65.61	34339900.	.6342878	32.493	12013.	17.5	32807.779	-5.94	22012.87
CSM ATTITUDE ORIENTAION FOR SOLAR SOAK											
12276.630	9.07	40.41	65.61	34339900.	.6342878	32.493	12013.	17.5	32807.779	-5.94	22012.87
12285.643	8.81	40.83	66.09	34339971.	.6342826	32.493	12013.	17.5	32807.747	-5.94	22003.58
12290.177	8.69	41.04	66.33	34340005.	.6342799	32.493	12013.	17.5	32807.728	-5.94	21998.90
12295.643	8.54	41.29	66.62	34340045.	.6342767	32.493	12013.	17.5	32807.709	-5.94	21993.26
12305.643	8.26	41.74	67.15	34340119.	.6342709	32.493	12012.	17.6	32807.669	-5.94	21982.94
12315.643	7.99	42.19	67.67	34340186.	.6342650	32.493	12012.	17.6	32807.630	-5.93	21972.60
12318.207	7.92	42.31	67.81	34340203.	.6342635	32.493	12012.	17.6	32807.618	-5.93	21969.95
12325.643	7.72	42.64	68.19	34340252.	.6342591	32.493	12012.	17.6	32807.591	-5.93	21962.27
12335.643	7.45	43.08	68.70	34340316.	.6342532	32.493	12012.	17.6	32807.551	-5.93	21951.93

TABLE VII
APOLLO MISSION AS-502
SPACECRAFT OPERATIONAL TRAJECTORY
-ORBITAL ELEMENTS-

TIME SECONDS	VEH DECL DEG	VEH RT ASC DEG	TRUE ANOM DEG	SEMILATUS RECTUM FEET	ECCENTRICITY	INCLINATION DEGREES	APOGEE ALTITUDE N. MILES	PERIGEE ALTITUDE N. MILES	PREDICTED VELOCITY AT ENTRY FT/SEC	PREDICTED GAMMA AT ENTRY DEGREES	TFF TO 400K SEC
12337.521	7.40	43.16	68.80	34340327.	.6342521	32.493	12012.	17.6	32807.544	-5.93	21949.99
				START SOLAR SOAK							
12337.521	7.40	43.16	68.80	34340327.	.6342521	32.493	12012.	17.6	32807.544	-5.93	21949.99
12340.643	7.31	43.30	68.96	34340346.	.6342502	32.493	12012.	17.6	32807.528	-5.93	21946.76
12400.643	5.74	45.84	71.93	34340659.	.6342148	32.494	12010.	17.7	32807.282	-5.92	21884.64
12460.643	4.23	48.25	74.76	34340882.	.6341799	32.494	12009.	17.8	32807.032	-5.92	21822.46
12520.643	2.80	50.53	77.45	34341028.	.6341463	32.494	12008.	17.9	32806.781	-5.91	21760.26
12580.643	1.42	52.69	80.01	34341112.	.6341143	32.494	12006.	18.0	32806.535	-5.91	21698.11
12640.643	.11	54.74	82.45	34341137.	.6340842	32.494	12005.	18.1	32806.300	-5.90	21636.02
12700.643	-1.13	56.70	84.77	34341121.	.6340561	32.494	12004.	18.1	32806.078	-5.90	21574.02
12760.643	-2.32	58.57	86.98	34341069.	.6340302	32.494	12003.	18.2	32805.866	-5.90	21512.11
12820.643	-3.46	60.36	89.10	34340985.	.6340062	32.494	12002.	18.2	32805.667	-5.89	21450.32
12880.643	-4.54	62.08	91.12	34340875.	.6339843	32.494	12001.	18.3	32805.483	-5.89	21388.64
12940.643	-5.56	63.72	93.06	34340747.	.6339643	32.494	12000.	18.3	32805.311	-5.89	21327.06
13000.643	-6.54	65.30	94.91	34340605.	.6339461	32.494	11999.	18.3	32805.151	-5.89	21265.60
13060.643	-7.48	66.82	96.68	34340452.	.6339296	32.493	11998.	18.3	32805.002	-5.89	21204.24
13120.643	-8.37	68.28	98.39	34340290.	.6339146	32.493	11998.	18.3	32804.865	-5.89	21142.98
13180.643	-9.23	69.70	100.03	34340122.	.6339010	32.493	11997.	18.4	32804.740	-5.89	21081.81
13240.643	-10.04	71.06	101.60	34339951.	.6338888	32.493	11996.	18.4	32804.623	-5.89	21020.73
13300.643	-10.82	72.38	103.11	34339777.	.6338777	32.492	11996.	18.4	32804.517	-5.89	20959.74
13360.643	-11.56	73.66	104.57	34339603.	.6338677	32.492	11995.	18.4	32804.419	-5.88	20898.81
13420.643	-12.28	74.90	105.98	34339430.	.6338587	32.492	11995.	18.4	32804.330	-5.88	20837.96
13480.643	-12.96	76.10	107.34	34339258.	.6338505	32.492	11994.	18.4	32804.248	-5.88	20777.17
13540.643	-13.61	77.27	108.65	34339088.	.6338432	32.492	11994.	18.4	32804.169	-5.88	20716.44
13600.643	-14.24	78.40	109.92	34338923.	.6338366	32.491	11994.	18.4	32804.099	-5.89	20655.77
13660.643	-14.84	79.51	111.14	34338758.	.6338306	32.491	11993.	18.4	32804.032	-5.89	20595.14
13720.643	-15.42	80.58	112.33	34338596.	.6338253	32.491	11993.	18.4	32803.974	-5.89	20534.57
13780.643	-15.97	81.63	113.48	34338439.	.6338205	32.491	11993.	18.4	32803.919	-5.89	20474.03
13840.643	-16.51	82.65	114.60	34338285.	.6338161	32.491	11992.	18.3	32803.868	-5.89	20413.53
13900.643	-17.02	83.65	115.68	34338135.	.6338122	32.490	11992.	18.3	32803.822	-5.89	20353.07
13960.643	-17.51	84.62	116.73	34337988.	.6338087	32.490	11992.	18.3	32803.778	-5.89	20292.64
14020.643	-17.99	85.57	117.75	34337849.	.6338055	32.490	11992.	18.3	32803.735	-5.89	20232.25
14080.643	-18.44	86.50	118.75	34337712.	.6338027	32.490	11992.	18.3	32803.699	-5.89	20171.88
14140.643	-18.88	87.40	119.71	34337578.	.6338001	32.490	11991.	18.3	32803.664	-5.89	20111.53
14200.643	-19.31	88.29	120.66	34337448.	.6337978	32.489	11991.	18.3	32803.629	-5.89	20051.21
14260.643	-19.72	89.16	121.57	34337322.	.6337958	32.489	11991.	18.3	32803.602	-5.89	19990.91
14320.643	-20.11	90.02	122.47	34337202.	.6337939	32.489	11991.	18.3	32803.575	-5.89	19930.63

TABLE VII
APOLLO MISSION AS-502
SPACECRAFT OPERATIONAL TRAJECTORY
-ORBITAL ELEMENTS-

TIME SECONDS	VEH DECL DEG	VEH RT ASC DEG	TRUE ANOM DEG	SEMILATUS RECTUM FEET	ECCENTRICITY	INCLINATION DEGREES	APOGEE ALTITUDE N. MILES	PERIGEE ALTITUDE N. MILES	PREDICTED VELOCITY AT ENTRY FT/SEC	PREDICTED GAMMA AT ENTRY DEGREES	TFF TO 400K SEC
14380.643	-20.49	90.85	123.34	34337085.	.6337922	32.489	11991.	18.3	32803.547	-5.89	19870.37
14440.643	-20.86	91.67	124.19	34336973.	.6337908	32.489	11991.	18.3	32803.524	-5.89	19810.12
14500.643	-21.21	92.48	125.02	34336861.	.6337894	32.489	11991.	18.3	32803.500	-5.89	19749.89
14560.643	-21.56	93.26	125.83	34336752.	.6337883	32.489	11991.	18.2	32803.481	-5.89	19689.68
14620.643	-21.89	94.04	126.63	34336652.	.6337872	32.488	11990.	18.2	32803.462	-5.89	19629.48
14680.643	-22.21	94.80	127.40	34336551.	.6337862	32.488	11990.	18.2	32803.442	-5.89	19569.29
14740.643	-22.52	95.55	128.16	34336465.	.6337854	32.488	11990.	18.2	32803.426	-5.89	19509.11
14800.643	-22.82	96.28	128.90	34336360.	.6337847	32.488	11990.	18.2	32803.407	-5.89	19448.94
14860.643	-23.12	97.01	129.63	34336272.	.6337840	32.488	11990.	18.2	32803.395	-5.89	19388.78
14920.643	-23.40	97.72	130.34	34336181.	.6337834	32.488	11990.	18.2	32803.379	-5.89	19328.64
14980.643	-23.67	98.42	131.04	34336096.	.6337829	32.488	11990.	18.2	32803.368	-5.90	19268.50
15040.643	-23.94	99.11	131.72	34336015.	.6337825	32.488	11990.	18.2	32803.352	-5.90	19208.37
15100.643	-24.19	99.79	132.40	34335936.	.6337821	32.487	11990.	18.2	32803.340	-5.90	19148.24
15160.643	-24.44	100.46	133.05	34335856.	.6337818	32.487	11990.	18.2	32803.333	-5.90	19088.12
15220.643	-24.68	101.12	133.70	34335784.	.6337815	32.487	11990.	18.2	32803.320	-5.90	19028.01
15280.643	-24.92	101.77	134.34	34335711.	.6337813	32.487	11990.	18.2	32803.313	-5.90	18967.91
15340.643	-25.15	102.41	134.96	34335642.	.6337811	32.487	11990.	18.2	32803.301	-5.90	18907.81
15400.643	-25.37	103.04	135.57	34335573.	.6337809	32.487	11990.	18.1	32803.293	-5.90	18847.72
15460.643	-25.58	103.66	136.18	34335507.	.6337808	32.487	11990.	18.1	32803.285	-5.90	18787.62
15520.643	-25.79	104.28	136.77	34335444.	.6337807	32.487	11990.	18.1	32803.277	-5.90	18727.54
15580.643	-25.99	104.89	137.35	34335382.	.6337806	32.487	11990.	18.1	32803.269	-5.90	18667.46
15640.643	-26.19	105.48	137.92	34335324.	.6337806	32.487	11990.	18.1	32803.261	-5.90	18607.39
15700.643	-26.38	106.08	138.49	34335267.	.6337805	32.487	11990.	18.1	32803.258	-5.90	18547.31
15760.643	-26.57	106.66	139.04	34335209.	.6337805	32.487	11990.	18.1	32803.250	-5.90	18487.24
15820.643	-26.75	107.24	139.59	34335157.	.6337805	32.486	11990.	18.1	32803.246	-5.90	18427.18
15880.643	-26.92	107.81	140.13	34335101.	.6337806	32.486	11990.	18.1	32803.238	-5.90	18367.12
15940.643	-27.09	108.37	140.66	34335050.	.6337806	32.486	11989.	18.1	32803.234	-5.90	18307.06
16000.643	-27.26	108.93	141.18	34335000.	.6337807	32.486	11989.	18.1	32803.226	-5.90	18247.00
16060.643	-27.42	109.48	141.70	34334952.	.6337807	32.486	11989.	18.1	32803.223	-5.90	18186.95
16120.643	-27.58	110.03	142.21	34334906.	.6337808	32.486	11989.	18.1	32803.219	-5.90	18126.90
16180.643	-27.73	110.57	142.71	34334859.	.6337809	32.486	11989.	18.1	32803.215	-5.90	18066.85
16240.643	-27.88	111.10	143.20	34334814.	.6337810	32.486	11989.	18.1	32803.211	-5.90	18006.80
16300.643	-28.03	111.63	143.69	34334774.	.6337811	32.486	11989.	18.1	32803.207	-5.90	17946.76
16360.643	-28.17	112.15	144.18	34334730.	.6337812	32.486	11989.	18.1	32803.203	-5.90	17886.71
16420.643	-28.30	112.67	144.65	34334694.	.6337813	32.486	11989.	18.1	32803.199	-5.90	17826.67
16480.643	-28.44	113.18	145.12	34334652.	.6337814	32.486	11989.	18.1	32803.195	-5.90	17766.63
16540.643	-28.57	113.69	145.59	34334615.	.6337815	32.486	11989.	18.0	32803.195	-5.90	17706.60
16600.643	-28.70	114.19	146.05	34334579.	.6337817	32.486	11989.	18.0	32803.191	-5.90	17646.56
16660.643	-28.82	114.69	146.50	34334544.	.6337818	32.486	11989.	18.0	32803.188	-5.90	17586.53
16720.643	-28.94	115.18	146.95	34334508.	.6337819	32.486	11989.	18.0	32803.184	-5.91	17526.50
16780.643	-29.06	115.67	147.39	34334476.	.6337820	32.486	11989.	18.0	32803.184	-5.91	17466.46

TABLE VII
APOLLO MISSION AS-502
SPACECRAFT OPERATIONAL TRAJECTORY
-ORBITAL ELEMENTS-

TIME SECONDS	VEH DECL DEG	VEH RT ASC DEG	TRUE ANOM DEG	SEMILATUS RECTUM FEET	ECCENTRICITY	INCLINATION DEGREES	APOGEE ALTITUDE N. MILES	PERIGEE ALTITUDE N. MILES	PREDICTED VELOCITY AT ENTRY FT/SEC	PREDICTED GAMMA AT ENTRY DEGREES	TFF TO 400K SEC
16840.643	-29.17	116.15	147.83	34334442.	.6337822	32.486	11989.	18.0	32803.179	-5.91	17406.43
16900.643	-29.28	116.63	148.26	34334413.	.6337823	32.485	11989.	18.0	32803.176	-5.91	17346.41
16960.643	-29.39	117.11	148.69	34334379.	.6337824	32.485	11989.	18.0	32803.176	-5.91	17286.38
17020.643	-29.49	117.58	149.11	34334351.	.6337826	32.485	11989.	18.0	32803.172	-5.91	17226.35
17080.643	-29.60	118.05	149.53	34334321.	.6337827	32.485	11989.	18.0	32803.172	-5.91	17166.33
17140.643	-29.70	118.51	149.95	34334294.	.6337828	32.485	11989.	18.0	32803.168	-5.91	17106.30
17200.643	-29.79	118.97	150.36	34334267.	.6337830	32.485	11989.	18.0	32803.168	-5.91	17046.28
17260.643	-29.89	119.43	150.77	34334239.	.6337831	32.485	11989.	18.0	32803.164	-5.91	16986.26
17320.643	-29.98	119.88	151.17	34334213.	.6337833	32.485	11989.	18.0	32803.164	-5.91	16926.23
17380.643	-30.07	120.33	151.57	34334188.	.6337834	32.485	11989.	18.0	32803.160	-5.91	16866.21
17440.643	-30.16	120.78	151.96	34334163.	.6337835	32.485	11989.	18.0	32803.160	-5.91	16806.19
17500.643	-30.24	121.22	152.36	34334141.	.6337836	32.485	11989.	18.0	32803.160	-5.91	16746.18
17560.643	-30.33	121.66	152.74	34334116.	.6337838	32.485	11989.	18.0	32803.156	-5.91	16686.16
17620.643	-30.41	122.09	153.13	34334096.	.6337839	32.485	11989.	18.0	32803.156	-5.91	16626.14
17680.643	-30.49	122.53	153.51	34334075.	.6337840	32.485	11989.	18.0	32803.156	-5.91	16566.12
17740.643	-30.56	122.96	153.89	34334053.	.6337842	32.485	11989.	18.0	32803.153	-5.91	16506.10
17800.643	-30.64	123.38	154.26	34334034.	.6337843	32.485	11989.	18.0	32803.153	-5.91	16446.09
17860.643	-30.71	123.81	154.64	34334014.	.6337844	32.485	11989.	18.0	32803.153	-5.91	16386.07
17920.643	-30.78	124.23	155.00	34333995.	.6337845	32.485	11989.	18.0	32803.148	-5.91	16326.06
17980.643	-30.85	124.65	155.37	34333976.	.6337846	32.485	11989.	18.0	32803.148	-5.91	16266.05
18040.643	-30.92	125.06	155.73	34333956.	.6337848	32.485	11989.	18.0	32803.148	-5.91	16206.03
18100.643	-30.98	125.47	156.09	34333941.	.6337848	32.485	11989.	18.0	32803.144	-5.91	16146.02
18160.643	-31.05	125.88	156.45	34333922.	.6337850	32.485	11989.	18.0	32803.144	-5.91	16086.01
18220.643	-31.11	126.29	156.80	34333907.	.6337851	32.485	11989.	18.0	32803.144	-5.91	16025.99
18280.643	-31.17	126.70	157.16	34333893.	.6337852	32.485	11989.	18.0	32803.144	-5.91	15965.98
18340.643	-31.22	127.10	157.51	34333875.	.6337853	32.485	11989.	18.0	32803.141	-5.91	15905.97
18400.643	-31.28	127.50	157.85	34333859.	.6337854	32.485	11989.	18.0	32803.141	-5.91	15845.96
18460.643	-31.34	127.90	158.20	34333846.	.6337855	32.485	11989.	18.0	32803.141	-5.91	15785.95
18520.643	-31.39	128.30	158.54	34333833.	.6337856	32.485	11989.	18.0	32803.141	-5.91	15725.94
18580.643	-31.44	128.69	158.88	34333819.	.6337857	32.485	11989.	18.0	32803.141	-5.91	15665.93
18640.643	-31.49	129.08	159.22	34333808.	.6337857	32.485	11989.	18.0	32803.141	-5.91	15605.92
18700.643	-31.54	129.47	159.55	34333791.	.6337859	32.485	11989.	18.0	32803.137	-5.91	15545.91
18760.643	-31.59	129.86	159.89	34333781.	.6337859	32.485	11989.	18.0	32803.137	-5.91	15485.90
18820.643	-31.63	130.24	160.22	34333768.	.6337860	32.485	11989.	18.0	32803.137	-5.91	15425.89
18880.643	-31.68	130.63	160.55	34333758.	.6337861	32.485	11989.	18.0	32803.137	-5.91	15365.89
18940.643	-31.72	131.01	160.87	34333746.	.6337862	32.485	11989.	18.0	32803.137	-5.91	15305.88
19000.643	-31.76	131.39	161.20	34333736.	.6337862	32.485	11989.	17.9	32803.137	-5.91	15245.87
19060.643	-31.80	131.76	161.52	34333725.	.6337863	32.485	11989.	17.9	32803.132	-5.91	15185.86
19120.643	-31.84	132.14	161.84	34333714.	.6337864	32.485	11989.	17.9	32803.132	-5.91	15125.86
19180.643	-31.88	132.51	162.16	34333707.	.6337865	32.485	11989.	17.9	32803.132	-5.91	15065.85
19240.643	-31.91	132.89	162.48	34333696.	.6337866	32.485	11989.	17.9	32803.132	-5.91	15005.84

TABLE VII
APOLLO MISSION AS-502
SPACECRAFT OPERATIONAL TRAJECTORY
-ORBITAL ELEMENTS-

TIME SECONDS	VEH DECL DEG	VEH RT ASC DEG	TRUE ANOM DEG	SEMILATUS RECTUM FEET	ECCENTRICITY	INCLINATION DEGREES	APOGEE ALTITUDE N. MILES	PERIGEE ALTITUDE N. MILES	PREDICTED VELOCITY AT ENTRY FT/SEC	PREDICTED GAMMA AT ENTRY DEGREES	TFF TO 400K SEC
19300.643	-31.95	133.26	162.80	34333688.	.6337866	32.485	11989.	17.9	32803.132	-5.91	14945.84
19360.643	-31.98	133.63	163.11	34333678.	.6337867	32.485	11989.	17.9	32803.132	-5.91	14885.83
19420.643	-32.01	133.99	163.43	34333672.	.6337867	32.484	11989.	17.9	32803.132	-5.91	14825.83
19480.643	-32.04	134.36	163.74	34333663.	.6337868	32.484	11989.	17.9	32803.132	-5.91	14765.82
19540.643	-32.07	134.72	164.05	34333656.	.6337868	32.484	11989.	17.9	32803.132	-5.91	14705.81
19600.643	-32.10	135.09	164.36	34333647.	.6337869	32.484	11989.	17.9	32803.129	-5.91	14645.81
19660.643	-32.13	135.45	164.66	34333638.	.6337870	32.484	11989.	17.9	32803.129	-5.91	14585.80
19720.643	-32.16	135.81	164.97	34333634.	.6337870	32.484	11989.	17.9	32803.129	-5.91	14525.80
19780.643	-32.18	136.17	165.28	34333629.	.6337870	32.484	11989.	17.9	32803.129	-5.91	14465.80
19840.643	-32.21	136.52	165.58	34333622.	.6337871	32.484	11989.	17.9	32803.129	-5.91	14405.79
19900.643	-32.23	136.88	165.88	34333616.	.6337871	32.484	11989.	17.9	32803.129	-5.91	14345.79
19960.643	-32.25	137.23	166.18	34333608.	.6337872	32.484	11989.	17.9	32803.129	-5.91	14285.78
20020.643	-32.27	137.59	166.48	34333605.	.6337872	32.484	11989.	17.9	32803.129	-5.91	14225.78
20080.643	-32.29	137.94	166.78	34333602.	.6337873	32.484	11989.	17.9	32803.129	-5.91	14165.78
20140.643	-32.31	138.29	167.07	34333596.	.6337873	32.484	11989.	17.9	32803.129	-5.91	14105.77
20200.643	-32.33	138.64	167.37	34333592.	.6337873	32.484	11989.	17.9	32803.129	-5.91	14045.77
20260.643	-32.35	138.98	167.66	34333585.	.6337874	32.484	11989.	17.9	32803.129	-5.91	13985.76
20320.643	-32.36	139.33	167.96	34333581.	.6337874	32.484	11989.	17.9	32803.129	-5.91	13925.76
20380.643	-32.38	139.68	168.25	34333579.	.6337874	32.484	11989.	17.9	32803.129	-5.91	13865.76
20440.643	-32.39	140.02	168.54	34333576.	.6337874	32.484	11989.	17.9	32803.125	-5.91	13805.75
20500.643	-32.40	140.37	168.83	34333573.	.6337875	32.484	11989.	17.9	32803.125	-5.91	13745.75
20560.643	-32.41	140.71	169.12	34333570.	.6337875	32.484	11989.	17.9	32803.125	-5.91	13685.75
20620.643	-32.43	141.05	169.41	34333570.	.6337875	32.484	11989.	17.9	32803.125	-5.91	13625.75
20680.643	-32.44	141.39	169.70	34333564.	.6337875	32.484	11989.	17.9	32803.125	-5.91	13565.74
20740.643	-32.44	141.73	169.99	34333564.	.6337875	32.484	11989.	17.9	32803.125	-5.91	13505.74
20800.643	-32.45	142.07	170.27	34333560.	.6337875	32.484	11989.	17.9	32803.125	-5.91	13445.74
20860.643	-32.46	142.41	170.56	34333558.	.6337875	32.484	11989.	17.9	32803.125	-5.91	13385.74
20920.643	-32.47	142.74	170.84	34333558.	.6337875	32.484	11989.	17.9	32803.125	-5.91	13325.74
20980.643	-32.47	143.08	171.12	34333553.	.6337876	32.484	11989.	17.9	32803.125	-5.91	13265.73
21040.643	-32.48	143.42	171.41	34333555.	.6337876	32.484	11989.	17.9	32803.125	-5.91	13205.73
21100.643	-32.48	143.75	171.69	34333553.	.6337876	32.484	11989.	17.9	32803.125	-5.91	13145.73
21160.643	-32.48	144.08	171.97	34333551.	.6337876	32.484	11989.	17.9	32803.125	-5.91	13085.73
21220.643	-32.48	144.42	172.25	34333554.	.6337875	32.484	11989.	17.9	32803.125	-5.91	13025.73
21280.643	-32.48	144.75	172.53	34333552.	.6337876	32.484	11989.	17.9	32803.125	-5.91	12965.73
21340.643	-32.48	145.08	172.81	34333550.	.6337876	32.484	11989.	17.9	32803.125	-5.91	12905.72
21400.643	-32.48	145.41	173.09	34333552.	.6337875	32.484	11989.	17.9	32803.125	-5.91	12845.72
21460.643	-32.48	145.74	173.37	34333554.	.6337875	32.484	11989.	17.9	32803.125	-5.91	12785.72
21520.643	-32.48	146.07	173.65	34333553.	.6337875	32.484	11989.	17.9	32803.125	-5.91	12725.72
21580.643	-32.48	146.40	173.93	34333553.	.6337875	32.484	11989.	17.9	32803.125	-5.91	12665.72
21640.643	-32.47	146.73	174.20	34333555.	.6337875	32.484	11989.	17.9	32803.125	-5.91	12605.72
21700.643	-32.47	147.06	174.48	34333554.	.6337875	32.484	11989.	17.9	32803.125	-5.91	12545.72

TABLE VII
APOLLO MISSION AS-502
SPACECRAFT OPERATIONAL TRAJECTORY
-ORBITAL ELEMENTS-

TIME SECONDS	VEH DECL DEG	VEH RT ASC DEG	TRUE ANOM DEG	SEMILATUS RECTUM FEET	ECCENTRICITY	INCLINATION DEGREES	APOGEE ALTITUDE N. MILES	PERIGEE ALTITUDE N. MILES	PREDICTED VELOCITY AT ENTRY FT/SEC	PREDICTED GAMMA AT ENTRY DEGREES	TFF TO 400K SEC
21760.643	-32.46	147.38	174.75	34333560.	.6337874	32.484	11989.	17.9	32803.125	-5.91	12485.72
21820.643	-32.45	147.71	175.03	34333558.	.6337874	32.484	11989.	17.9	32803.125	-5.91	12425.72
21880.643	-32.45	148.04	175.31	34333561.	.6337874	32.484	11989.	17.9	32803.125	-5.91	12365.72
21940.643	-32.44	148.36	175.58	34333564.	.6337874	32.484	11989.	17.9	32803.125	-5.91	12305.72
22000.643	-32.43	148.69	175.86	34333566.	.6337873	32.484	11989.	17.9	32803.125	-5.91	12245.72
22060.643	-32.42	149.01	176.13	34333570.	.6337873	32.484	11989.	17.9	32803.125	-5.91	12185.71
22120.643	-32.41	149.34	176.40	34333570.	.6337873	32.484	11989.	17.9	32803.125	-5.91	12125.71
22180.643	-32.39	149.66	176.68	34333574.	.6337872	32.484	11989.	17.9	32803.125	-5.91	12065.72
22240.643	-32.38	149.98	176.95	34333576.	.6337872	32.484	11989.	17.9	32803.125	-5.91	12005.71
22300.643	-32.37	150.31	177.22	34333581.	.6337872	32.484	11989.	17.9	32803.125	-5.91	11945.71
22360.643	-32.35	150.63	177.50	34333584.	.6337871	32.484	11989.	17.9	32803.125	-5.91	11885.71
22420.643	-32.34	150.95	177.77	34333588.	.6337871	32.484	11989.	17.9	32803.125	-5.91	11825.71
22480.643	-32.32	151.27	178.04	34333589.	.6337871	32.484	11989.	17.9	32803.125	-5.91	11765.71
22540.643	-32.31	151.59	178.31	34333596.	.6337870	32.484	11989.	17.9	32803.125	-5.91	11705.71
22600.643	-32.29	151.92	178.59	34333600.	.6337870	32.484	11989.	17.9	32803.125	-5.91	11645.71
22660.643	-32.27	152.24	178.86	34333602.	.6337869	32.484	11989.	17.9	32803.125	-5.91	11585.71
22720.643	-32.25	152.56	179.13	34333610.	.6337868	32.484	11989.	17.9	32803.125	-5.91	11525.72
22780.643	-32.23	152.88	179.40	34333612.	.6337868	32.484	11989.	17.9	32803.125	-5.91	11465.72
22840.643	-32.21	153.20	179.67	34333620.	.6337867	32.484	11989.	17.9	32803.125	-5.91	11405.72
22900.643	-32.19	153.52	179.95	34333622.	.6337867	32.484	11989.	17.9	32803.125	-5.91	11345.72
22912.502	-32.19	153.58	180.00	34333625.	.6337867	32.484	11989.	17.9	32803.125	-5.91	11333.86
				APOGEE							
22912.502	-32.19	153.58	180.00	34333625.	.6337867	32.484	11989.	17.9	32803.125	-5.91	11333.86
22960.643	-32.17	153.84	-179.78	34333631.	.6337866	32.484	11989.	17.9	32803.125	-5.91	11285.72
23020.643	-32.14	154.16	-179.51	34333636.	.6337866	32.484	11989.	17.9	32803.125	-5.91	11225.72
23080.643	-32.12	154.48	-179.24	34333640.	.6337865	32.484	11989.	17.9	32803.125	-5.91	11165.72
23140.643	-32.10	154.80	-178.97	34333649.	.6337864	32.484	11989.	17.9	32803.125	-5.91	11105.72
23200.643	-32.07	155.12	-178.69	34333652.	.6337864	32.484	11989.	17.9	32803.129	-5.91	11045.72
23260.643	-32.04	155.44	-178.42	34333660.	.6337863	32.484	11989.	17.9	32803.129	-5.91	10985.72
23320.643	-32.02	155.76	-178.15	34333666.	.6337863	32.484	11989.	17.9	32803.129	-5.91	10925.72
23380.643	-31.99	156.08	-177.88	34333672.	.6337862	32.484	11989.	17.9	32803.129	-5.91	10865.72
23440.643	-31.96	156.40	-177.60	34333681.	.6337861	32.485	11989.	17.9	32803.129	-5.91	10805.73
23500.643	-31.93	156.72	-177.33	34333686.	.6337860	32.485	11989.	17.9	32803.129	-5.91	10745.72
23560.643	-31.90	157.04	-177.06	34333692.	.6337860	32.485	11989.	17.9	32803.129	-5.91	10685.73
23620.643	-31.87	157.36	-176.79	34333701.	.6337859	32.485	11989.	17.9	32803.129	-5.91	10625.73
23680.643	-31.84	157.68	-176.51	34333708.	.6337858	32.485	11989.	17.9	32803.129	-5.91	10565.78
23740.643	-31.80	158.00	-176.24	34333717.	.6337857	32.485	11989.	17.9	32803.129	-5.91	10505.75

TABLE VII
APOLLO MISSION AS-502
SPACECRAFT OPERATIONAL TRAJECTORY
-ORBITAL ELEMENTS-

TIME SECONDS	VEH DECL DEG	VEH RT ASC DEG	TRUE ANOM DEG	SEMILATUS RECTUM FEET	ECCENTRICITY	INCLINATION DEGREES	APOGEE ALTITUDE N. MILES	PERIGEE ALTITUDE N. MILES	PREDICTED VELOCITY AT ENTRY FT/SEC	PREDICTED GAMMA AT ENTRY DEGREES	TFF TO 400K SEC
23800.643	-31.77	158.32	-175.96	34333724.	.6337857	32.485	11989.	17.9	32803.129	-5.91	10445.73
23860.643	-31.74	158.64	-175.69	34333731.	.6337856	32.485	11989.	18.0	32803.129	-5.91	10385.73
23920.643	-31.70	158.96	-175.41	34333742.	.6337855	32.485	11989.	18.0	32803.129	-5.91	10325.73
23980.643	-31.66	159.28	-175.14	34333750.	.6337854	32.485	11989.	18.0	32803.129	-5.91	10265.74
24040.643	-31.63	159.60	-174.86	34333760.	.6337853	32.485	11989.	18.0	32803.129	-5.91	10205.73
24100.643	-31.59	159.92	-174.59	34333768.	.6337852	32.485	11989.	18.0	32803.129	-5.91	10145.74
24160.643	-31.55	160.24	-174.31	34333775.	.6337852	32.485	11989.	18.0	32803.129	-5.91	10085.74
24220.643	-31.51	160.56	-174.03	34333787.	.6337850	32.485	11989.	18.0	32803.132	-5.91	10025.74
24280.643	-31.47	160.88	-173.76	34333795.	.6337849	32.485	11989.	18.0	32803.132	-5.91	9965.74
24340.643	-31.43	161.20	-173.48	34333806.	.6337848	32.485	11989.	18.0	32803.132	-5.91	9905.75
24400.643	-31.39	161.53	-173.20	34333814.	.6337848	32.485	11989.	18.0	32803.132	-5.91	9845.75
24460.643	-31.34	161.85	-172.92	34333827.	.6337847	32.485	11989.	18.0	32803.132	-5.91	9785.75
24520.643	-31.30	162.17	-172.64	34333834.	.6337846	32.485	11989.	18.0	32803.132	-5.91	9725.75
24580.643	-31.25	162.50	-172.36	34333847.	.6337845	32.485	11989.	18.0	32803.132	-5.91	9665.75
24640.643	-31.21	162.82	-172.08	34333859.	.6337843	32.485	11989.	18.0	32803.132	-5.91	9605.76
24700.643	-31.16	163.14	-171.80	34333869.	.6337842	32.485	11989.	18.0	32803.132	-5.91	9545.76
24760.643	-31.11	163.47	-171.52	34333881.	.6337841	32.485	11989.	18.0	32803.132	-5.91	9485.76
24820.643	-31.06	163.79	-171.24	34333893.	.6337840	32.485	11989.	18.0	32803.132	-5.91	9425.76
24880.643	-31.01	164.12	-170.95	34333906.	.6337839	32.485	11989.	18.0	32803.132	-5.91	9365.76
24940.643	-30.96	164.44	-170.67	34333917.	.6337838	32.485	11989.	18.0	32803.137	-5.91	9305.77
25000.643	-30.91	164.77	-170.38	34333929.	.6337837	32.485	11989.	18.0	32803.137	-5.91	9245.77
25060.643	-30.86	165.10	-170.10	34333941.	.6337836	32.485	11989.	18.0	32803.137	-5.91	9185.77
25120.644	-30.81	165.43	-169.81	34333955.	.6337834	32.485	11989.	18.0	32803.137	-5.91	9125.77
25180.643	-30.75	165.75	-169.52	34333970.	.6337833	32.485	11989.	18.0	32803.137	-5.91	9065.77
25240.643	-30.70	166.08	-169.24	34333979.	.6337832	32.485	11989.	18.0	32803.137	-5.91	9005.78
25300.643	-30.64	166.41	-168.95	34333994.	.6337831	32.485	11989.	18.0	32803.137	-5.91	8945.78
25360.643	-30.58	166.74	-168.66	34334008.	.6337829	32.485	11989.	18.0	32803.137	-5.91	8885.78
25420.643	-30.52	167.08	-168.37	34334021.	.6337828	32.485	11989.	18.0	32803.141	-5.91	8825.78
25480.643	-30.46	167.41	-168.07	34334037.	.6337827	32.485	11989.	18.0	32803.141	-5.91	8765.79
25540.643	-30.40	167.74	-167.78	34334050.	.6337826	32.485	11989.	18.0	32803.141	-5.91	8705.79
25600.643	-30.34	168.07	-167.49	34334067.	.6337824	32.485	11989.	18.0	32803.141	-5.91	8645.79
25660.643	-30.28	168.41	-167.19	34334079.	.6337823	32.485	11989.	18.0	32803.141	-5.91	8585.80
25720.643	-30.21	168.74	-166.89	34334099.	.6337821	32.485	11989.	18.0	32803.141	-5.91	8525.80
25780.644	-30.15	169.08	-166.60	34334112.	.6337820	32.485	11989.	18.0	32803.141	-5.91	8465.80
25840.643	-30.08	169.41	-166.30	34334126.	.6337819	32.485	11989.	18.0	32803.144	-5.91	8405.80
25900.643	-30.02	169.75	-166.00	34334144.	.6337817	32.485	11989.	18.0	32803.144	-5.91	8345.81
25960.643	-29.95	170.09	-165.70	34334159.	.6337816	32.485	11989.	18.0	32803.144	-5.91	8285.81
26020.643	-29.88	170.43	-165.39	34334178.	.6337815	32.485	11989.	18.0	32803.144	-5.91	8225.81
26080.643	-29.81	170.77	-165.09	34334195.	.6337813	32.485	11989.	18.0	32803.144	-5.91	8165.82
26140.643	-29.73	171.11	-164.79	34334213.	.6337811	32.485	11989.	18.0	32803.148	-5.91	8105.82
26200.643	-29.66	171.46	-164.48	34334229.	.6337810	32.485	11989.	18.0	32803.148	-5.91	8045.82

TABLE VII
APOLLO MISSION AS-502
SPACECRAFT OPERATIONAL TRAJECTORY
-ORBITAL ELEMENTS-

TIME SECONDS	VEH DECL DEG	VEH RT ASC DEG	TRUE ANOM DEG	SEMILATUS RECTUM FEET	ECCENTRICITY	INCLINATION DEGREES	APOGEE ALTITUDE N. MILES	PERIGEE ALTITUDE N. MILES	PREDICTED VELOCITY AT ENTRY FT/SEC	PREDICTED GAMMA AT ENTRY DEGREES	TFF TO 400K SEC
26260.643	-29.59	171.80	-164.17	34334247.	.6337809	32.485	11989.	18.0	32803.148	-5.91	7985.83
26320.643	-29.51	172.14	-163.86	34334267.	.6337807	32.485	11989.	18.0	32803.148	-5.91	7925.83
26380.643	-29.43	172.49	-163.55	34334283.	.6337806	32.485	11989.	18.0	32803.148	-5.91	7865.83
26440.644	-29.36	172.84	-163.24	34334303.	.6337804	32.485	11989.	18.0	32803.153	-5.91	7805.84
26500.643	-29.28	173.19	-162.92	34334324.	.6337802	32.485	11989.	18.0	32803.153	-5.91	7745.84
26560.643	-29.20	173.54	-162.61	34334341.	.6337801	32.485	11989.	18.0	32803.153	-5.91	7685.84
26620.643	-29.11	173.89	-162.29	34334365.	.6337799	32.485	11989.	18.0	32803.153	-5.91	7625.85
26680.643	-29.03	174.24	-161.97	34334384.	.6337798	32.485	11989.	18.0	32803.156	-5.91	7565.85
26740.643	-28.94	174.59	-161.65	34334404.	.6337796	32.485	11989.	18.0	32803.156	-5.91	7505.85
26800.643	-28.86	174.95	-161.33	34334427.	.6337794	32.485	11989.	18.0	32803.156	-5.91	7445.86
26860.643	-28.77	175.31	-161.00	34334445.	.6337793	32.486	11989.	18.0	32803.156	-5.91	7385.86
26920.643	-28.68	175.66	-160.68	34334468.	.6337791	32.486	11989.	18.0	32803.160	-5.91	7325.86
26980.643	-28.59	176.02	-160.35	34334489.	.6337790	32.486	11989.	18.0	32803.160	-5.90	7265.87
27040.643	-28.50	176.38	-160.02	34334512.	.6337788	32.486	11989.	18.0	32803.160	-5.90	7205.87
27100.644	-28.40	176.75	-159.68	34334538.	.6337786	32.486	11989.	18.0	32803.160	-5.90	7145.88
27160.643	-28.31	177.11	-159.35	34334558.	.6337785	32.486	11989.	18.0	32803.164	-5.90	7085.88
27220.643	-28.21	177.48	-159.01	34334583.	.6337783	32.486	11989.	18.1	32803.164	-5.90	7025.88
27280.643	-28.11	177.85	-158.67	34334606.	.6337781	32.486	11989.	18.1	32803.164	-5.90	6965.89
27340.643	-28.01	178.22	-158.33	34334631.	.6337780	32.486	11989.	18.1	32803.168	-5.90	6905.89
27400.643	-27.91	178.59	-157.99	34334658.	.6337778	32.486	11989.	18.1	32803.168	-5.90	6845.90
27460.643	-27.81	178.96	-157.64	34334684.	.6337776	32.486	11989.	18.1	32803.168	-5.90	6785.90
27520.643	-27.70	179.34	-157.29	34334709.	.6337774	32.486	11989.	18.1	32803.172	-5.90	6725.91
27580.643	-27.60	179.71	-156.94	34334736.	.6337773	32.486	11989.	18.1	32803.172	-5.90	6665.91
27640.643	-27.49	-179.91	-156.59	34334763.	.6337771	32.486	11989.	18.1	32803.176	-5.90	6605.91
27700.643	-27.38	-179.53	-156.23	34334791.	.6337769	32.486	11989.	18.1	32803.176	-5.90	6545.92
27760.644	-27.26	-179.14	-155.87	34334818.	.6337768	32.486	11989.	18.1	32803.176	-5.90	6485.92
27820.643	-27.15	-178.76	-155.51	34334846.	.6337766	32.486	11989.	18.1	32803.179	-5.90	6425.93
27880.643	-27.03	-178.37	-155.15	34334873.	.6337764	32.486	11989.	18.1	32803.179	-5.90	6365.93
27940.643	-26.91	-177.98	-154.78	34334905.	.6337762	32.486	11989.	18.1	32803.184	-5.90	6305.94
28000.643	-26.79	-177.59	-154.41	34334934.	.6337761	32.486	11989.	18.1	32803.184	-5.90	6245.94
28060.643	-26.67	-177.19	-154.04	34334967.	.6337759	32.486	11989.	18.1	32803.188	-5.90	6185.95
28120.643	-26.54	-176.79	-153.66	34334998.	.6337757	32.486	11989.	18.1	32803.188	-5.90	6125.95
28180.643	-26.42	-176.39	-153.28	34335028.	.6337756	32.486	11989.	18.1	32803.191	-5.90	6065.96
28240.643	-26.29	-175.99	-152.90	34335063.	.6337754	32.486	11989.	18.1	32803.195	-5.90	6005.96
28300.643	-26.16	-175.58	-152.51	34335095.	.6337752	32.486	11989.	18.1	32803.195	-5.90	5945.97
28360.643	-26.02	-175.18	-152.12	34335129.	.6337751	32.486	11989.	18.1	32803.199	-5.90	5885.97
28420.644	-25.89	-174.76	-151.72	34335162.	.6337749	32.486	11989.	18.1	32803.199	-5.90	5825.98
28480.643	-25.75	-174.35	-151.33	34335196.	.6337748	32.486	11989.	18.1	32803.203	-5.90	5765.98
28540.643	-25.61	-173.93	-150.93	34335233.	.6337746	32.487	11989.	18.1	32803.207	-5.90	5705.99
28600.643	-25.46	-173.51	-150.52	34335269.	.6337745	32.487	11989.	18.1	32803.207	-5.90	5645.99
28660.643	-25.32	-173.09	-150.11	34335306.	.6337744	32.487	11989.	18.1	32803.211	-5.90	5586.00

TABLE VII
APOLLO MISSION AS-502
SPACECRAFT OPERATIONAL TRAJECTORY
-ORBITAL ELEMENTS-

TIME SECONDS	VEH DECL DEG	VEH RT ASC DEG	TRUE ANOM DEG	SEMILATUS RECTUM FEET	ECCENTRICITY	INCLINATION DEGREES	APOGEE ALTITUDE N. MILES	PERIGEE ALTITUDE N. MILES	PREDICTED VELOCITY AT ENTRY FT/SEC	PREDICTED GAMMA AT ENTRY DEGREES	TFF TO 400K SEC
28720.643	-25.17	-172.66	-149.70	34335346.	.6337742	32.487	11989.	18.1	32803.215	-5.90	5524.00
28780.643	-25.01	-172.23	-149.28	34335381.	.6337741	32.487	11989.	18.1	32803.219	-5.90	5464.01
28840.643	-24.86	-171.80	-148.86	34335420.	.6337739	32.487	11989.	18.1	32803.223	-5.90	5404.01
28900.643	-24.70	-171.37	-148.43	34335461.	.6337738	32.487	11989.	18.1	32803.223	-5.90	5344.02
28960.643	-24.54	-170.92	-148.00	34335501.	.6337737	32.487	11989.	18.2	32803.226	-5.90	5284.03
29020.643	-24.38	-170.48	-147.56	34335542.	.6337736	32.487	11989.	18.2	32803.231	-5.90	5224.03
29080.644	-24.21	-170.03	-147.12	34335583.	.6337735	32.487	11989.	18.2	32803.234	-5.90	5164.04
29140.643	-24.04	-169.58	-146.67	34335628.	.6337734	32.487	11989.	18.2	32803.238	-5.90	5104.04
29200.643	-23.87	-169.13	-146.22	34335671.	.6337733	32.487	11989.	18.2	32803.242	-5.90	5044.05
29260.643	-23.69	-168.67	-145.77	34335718.	.6337732	32.487	11989.	18.2	32803.246	-5.90	4984.05
29320.643	-23.51	-168.20	-145.30	34335763.	.6337732	32.487	11990.	18.2	32803.254	-5.90	4924.06
29380.643	-23.32	-167.73	-144.84	34335808.	.6337731	32.487	11990.	18.2	32803.258	-5.90	4864.07
29440.643	-23.14	-167.26	-144.36	34335856.	.6337731	32.487	11990.	18.2	32803.261	-5.90	4804.07
29500.643	-22.94	-166.78	-143.88	34335905.	.6337731	32.487	11990.	18.2	32803.266	-5.90	4744.08
29560.643	-22.75	-166.30	-143.40	34335954.	.6337731	32.487	11990.	18.2	32803.273	-5.90	4684.08
29620.643	-22.55	-165.81	-142.90	34336004.	.6337731	32.488	11990.	18.2	32803.277	-5.89	4624.09
29680.643	-22.34	-165.32	-142.41	34336058.	.6337731	32.488	11990.	18.2	32803.285	-5.89	4564.10
29740.644	-22.14	-164.82	-141.90	34336111.	.6337731	32.488	11990.	18.2	32803.289	-5.89	4504.10
29800.643	-21.92	-164.32	-141.39	34336165.	.6337732	32.488	11990.	18.2	32803.297	-5.89	4444.11
29860.643	-21.71	-163.81	-140.87	34336219.	.6337733	32.488	11990.	18.2	32803.301	-5.89	4384.11
29920.644	-21.48	-163.29	-140.34	34336275.	.6337734	32.488	11990.	18.2	32803.308	-5.89	4324.12
29980.643	-21.26	-162.77	-139.80	34336334.	.6337735	32.488	11990.	18.2	32803.316	-5.89	4264.13
30040.643	-21.02	-162.24	-139.26	34336392.	.6337737	32.488	11990.	18.2	32803.325	-5.89	4204.13
30100.643	-20.79	-161.71	-138.71	34336451.	.6337739	32.488	11990.	18.2	32803.333	-5.89	4144.14
30160.643	-20.54	-161.17	-138.15	34336510.	.6337741	32.488	11990.	18.3	32803.340	-5.89	4084.14
30220.643	-20.30	-160.62	-137.58	34336574.	.6337743	32.488	11990.	18.3	32803.352	-5.89	4024.15
30280.643	-20.04	-160.07	-137.00	34336638.	.6337746	32.488	11990.	18.3	32803.360	-5.89	3964.15
30340.643	-19.78	-159.51	-136.41	34336703.	.6337750	32.488	11990.	18.3	32803.368	-5.89	3904.16
30400.643	-19.52	-158.94	-135.81	34336770.	.6337754	32.489	11990.	18.3	32803.379	-5.89	3844.16
30460.643	-19.24	-158.36	-135.20	34336836.	.6337758	32.489	11990.	18.3	32803.391	-5.89	3784.17
30520.643	-18.97	-157.78	-134.58	34336905.	.6337763	32.489	11990.	18.3	32803.403	-5.89	3724.17
30580.644	-18.68	-157.18	-133.95	34336974.	.6337769	32.489	11990.	18.3	32803.415	-5.89	3664.18
30640.643	-18.39	-156.58	-133.31	34337049.	.6337775	32.489	11990.	18.3	32803.426	-5.89	3604.18
30700.643	-18.09	-155.97	-132.66	34337117.	.6337782	32.489	11990.	18.3	32803.438	-5.89	3544.19
30760.643	-17.78	-155.35	-131.99	34337195.	.6337789	32.489	11990.	18.3	32803.454	-5.89	3484.19
30820.643	-17.46	-154.72	-131.31	34337274.	.6337797	32.489	11990.	18.3	32803.469	-5.89	3424.20
30880.643	-17.14	-154.08	-130.62	34337348.	.6337807	32.489	11991.	18.3	32803.485	-5.89	3364.20
30940.643	-16.80	-153.43	-129.91	34337428.	.6337817	32.489	11991.	18.3	32803.500	-5.89	3304.20
31000.643	-16.46	-152.76	-129.19	34337510.	.6337828	32.490	11991.	18.3	32803.520	-5.89	3244.21
31060.643	-16.11	-152.09	-128.45	34337594.	.6337840	32.490	11991.	18.3	32803.539	-5.89	3184.21
31120.643	-15.75	-151.40	-127.70	34337676.	.6337854	32.490	11991.	18.3	32803.559	-5.89	3124.21

TABLE VII
APOLLO MISSION AS-502
SPACECRAFT OPERATIONAL TRAJECTORY
-ORBITAL ELEMENTS-

TIME SECONDS	VEH DECL DEG	VEH RT ASC DEG	TRUE ANOM DEG	SEMILATUS RECTUM FEET	ECCENTRICITY	INCLINATION DEGREES	APOGEE ALTITUDE N. MILES	PERIGEE ALTITUDE N. MILES	PREDICTED VELOCITY AT ENTRY FT/SEC	PREDICTED GAMMA AT ENTRY DEGREES	TFF TO 400K SEC
31180.643	-15.38	-150.71	-126.93	34337763.	.6337868	32.490	11991.	18.4	32803.579	-5.89	3066.21
31240.644	-15.00	-149.99	-126.14	34337851.	.6337885	32.490	11991.	18.4	32803.602	-5.89	3006.21
31300.643	-14.60	-149.27	-125.34	34337937.	.6337903	32.490	11991.	18.4	32803.626	-5.88	2946.21
31360.643	-14.20	-148.53	-124.52	34338026.	.6337922	32.490	11991.	18.4	32803.649	-5.88	2886.21
31420.643	-13.78	-147.77	-123.67	34338118.	.6337943	32.490	11991.	18.4	32803.674	-5.88	2826.21
31480.643	-13.35	-147.00	-122.81	34338209.	.6337967	32.490	11992.	18.4	32803.704	-5.88	2766.21
31540.643	-12.91	-146.22	-121.93	34338304.	.6337992	32.491	11992.	18.4	32803.735	-5.88	2706.20
31600.643	-12.45	-145.41	-121.02	34338398.	.6338020	32.491	11992.	18.4	32803.766	-5.88	2646.20
31660.643	-11.98	-144.59	-120.09	34338493.	.6338051	32.491	11992.	18.4	32803.801	-5.88	2586.19
31720.643	-11.50	-143.75	-119.13	34338589.	.6338084	32.491	11992.	18.4	32803.841	-5.88	2526.19
31780.643	-11.00	-142.89	-118.15	34338687.	.6338121	32.491	11992.	18.4	32803.880	-5.88	2466.18
31840.643	-10.48	-142.00	-117.14	34338782.	.6338160	32.491	11993.	18.4	32803.919	-5.88	2406.17
31900.644	-9.94	-141.10	-116.10	34338880.	.6338204	32.491	11993.	18.4	32803.966	-5.88	2346.15
31960.643	-9.39	-140.17	-115.03	34338978.	.6338251	32.491	11993.	18.4	32804.012	-5.88	2286.14
32020.643	-8.82	-139.22	-113.92	34339072.	.6338303	32.492	11993.	18.4	32804.064	-5.88	2226.12
32080.643	-8.22	-138.24	-112.79	34339166.	.6338360	32.492	11994.	18.4	32804.122	-5.88	2166.10
32140.643	-7.61	-137.23	-111.61	34339257.	.6338422	32.492	11994.	18.4	32804.181	-5.88	2106.08
32200.643	-6.97	-136.19	-110.40	34339348.	.6338489	32.492	11994.	18.4	32804.243	-5.88	2046.06
32260.643	-6.31	-135.12	-109.15	34339435.	.6338563	32.492	11995.	18.4	32804.310	-5.88	1986.03
32320.643	-5.63	-134.02	-107.86	34339517.	.6338644	32.492	11995.	18.4	32804.384	-5.89	1926.00
32380.643	-4.92	-132.88	-106.52	34339591.	.6338731	32.492	11995.	18.4	32804.462	-5.89	1865.96
32440.643	-4.18	-131.70	-105.13	34339661.	.6338827	32.492	11996.	18.3	32804.544	-5.89	1805.92
32500.643	-3.41	-130.49	-103.70	34339724.	.6338931	32.492	11996.	18.3	32804.634	-5.89	1745.87
32560.644	-2.61	-129.23	-102.20	34339777.	.6339044	32.492	11997.	18.3	32804.728	-5.89	1685.82
32620.643	-1.78	-127.92	-100.65	34339816.	.6339167	32.493	11997.	18.3	32804.830	-5.89	1625.76
32680.643	-.91	-126.56	-99.04	34339843.	.6339301	32.493	11998.	18.3	32804.939	-5.89	1565.70
32740.643	-.01	-125.14	-97.37	34339851.	.6339446	32.493	11999.	18.2	32805.057	-5.89	1505.63
32800.643	.92	-123.67	-95.62	34339844.	.6339603	32.493	11999.	18.2	32805.178	-5.90	1445.55
32860.643	1.90	-122.13	-93.80	34339809.	.6339772	32.493	12000.	18.2	32805.307	-5.90	1385.47
32866.102	1.99	-121.99	-93.63	34339806.	.6339788	32.493	12000.	18.2	32805.323	-5.90	1380.00

CSM ATTITUDE ORIENTATION FOR SECOND SPS BURN

32866.102	1.99	-121.99	-93.63	34339806.	.6339788	32.493	12000.	18.2	32805.323	-5.90	1380.00
32874.643	2.14	-121.76	-93.36	34339797.	.6339813	32.493	12000.	18.1	32805.339	-5.90	1371.45
32880.029	2.23	-121.62	-93.19	34339795.	.6339829	32.493	12000.	18.1	32805.354	-5.90	1366.05
32888.643	2.37	-121.39	-92.92	34339785.	.6339855	32.492	12000.	18.1	32805.374	-5.90	1357.42
32898.643	2.54	-121.12	-92.60	34339775.	.6339886	32.492	12000.	18.1	32805.397	-5.90	1347.41
32906.184	2.67	-120.92	-92.36	34339765.	.6339909	32.492	12000.	18.1	32805.412	-5.90	1339.85

TABLE VII
APOLLO MISSION AS-502
SPACECRAFT OPERATIONAL TRAJECTORY
-ORBITAL ELEMENTS-

TIME SECONDS	VEH DECL DEG	VEH RT ASC DEG	TRUE ANOM DEG	SEMILATUS RECTUM FEET	ECCENTRICITY	INCLINATION DEGREES	APOGEE ALTITUDE N. MILES	PERIGEE ALTITUDE N. MILES	PREDICTED VELOCITY AT ENTRY FT/SEC	PREDICTED GAMMA AT ENTRY DEGREES	TFF TO 400K SEC
32914.643	2.82	-120.69	-92.09	34339758.	.6339935	32.492	12001.	18.1	32805.432	-5.90	1331.38
32924.643	2.99	-120.42	-91.77	34339745.	.6339966	32.492	12001.	18.1	32805.465	-5.90	1321.37
32925.220	3.00	-120.40	-91.75	34339743.	.6339968	32.492	12001.	18.1	32805.455	-5.90	1320.79
					COAST TO +X TRANSLATION						
32925.220	3.00	-120.40	-91.75	34339743.	.6339968	32.492	12001.	18.1	32805.455	-5.90	1320.79
32946.643	3.38	-119.81	-91.05	34339713.	.6340037	32.492	12001.	18.1	32805.506	-5.90	1299.33
32971.643	3.82	-119.10	-90.21	34339675.	.6340118	32.492	12001.	18.1	32805.569	-5.90	1274.29
32996.643	4.27	-118.38	-89.37	34339628.	.6340203	32.492	12002.	18.0	32805.632	-5.91	1249.24
33021.643	4.73	-117.65	-88.50	34339575.	.6340289	32.492	12002.	18.0	32805.694	-5.91	1224.19
33046.643	5.20	-116.90	-87.62	34339516.	.6340377	32.492	12002.	18.0	32805.756	-5.91	1199.15
33071.643	5.68	-116.14	-86.72	34339449.	.6340468	32.492	12003.	18.0	32805.819	-5.91	1174.10
33096.643	6.17	-115.35	-85.81	34339372.	.6340560	32.492	12003.	17.9	32805.885	-5.91	1149.04
33121.643	6.66	-114.56	-84.87	34339291.	.6340655	32.492	12003.	17.9	32805.952	-5.91	1123.99
33146.643	7.16	-113.74	-83.92	34339197.	.6340751	32.492	12004.	17.9	32806.019	-5.92	1098.93
33171.643	7.67	-112.91	-82.95	34339096.	.6340849	32.492	12004.	17.9	32806.085	-5.92	1073.88
33196.643	8.19	-112.06	-81.96	34338984.	.6340949	32.491	12005.	17.8	32806.152	-5.92	1048.82
33221.643	8.72	-111.18	-80.95	34338864.	.6341050	32.491	12005.	17.8	32806.218	-5.92	1023.76
33246.643	9.26	-110.29	-79.92	34338731.	.6341153	32.491	12005.	17.8	32806.285	-5.92	998.70
33271.643	9.80	-109.38	-78.87	34338588.	.6341256	32.491	12006.	17.7	32806.351	-5.93	973.63
33296.643	10.36	-108.44	-77.79	34338431.	.6341360	32.491	12006.	17.7	32806.418	-5.93	948.57
33321.643	10.92	-107.49	-76.69	34338259.	.6341464	32.491	12006.	17.6	32806.481	-5.93	923.50
33346.643	11.49	-106.50	-75.57	34338079.	.6341568	32.490	12007.	17.6	32806.543	-5.93	898.43
33371.643	12.07	-105.50	-74.43	34337883.	.6341672	32.490	12007.	17.6	32806.605	-5.94	873.36
33396.643	12.66	-104.46	-73.26	34337672.	.6341775	32.490	12007.	17.5	32806.664	-5.94	848.29
33421.643	13.26	-103.40	-72.07	34337448.	.6341877	32.489	12008.	17.5	32806.718	-5.94	823.22
33446.643	13.87	-102.31	-70.85	34337208.	.6341977	32.489	12008.	17.4	32806.773	-5.94	798.15
33471.643	14.48	-101.20	-69.61	34336951.	.6342075	32.489	12008.	17.4	32806.820	-5.95	773.08
33496.643	15.10	-100.05	-68.34	34336678.	.6342169	32.488	12009.	17.3	32806.867	-5.95	748.00
33521.643	15.73	-98.87	-67.04	34336390.	.6342261	32.488	12009.	17.3	32806.907	-5.95	722.93
33546.643	16.37	-97.65	-65.71	34336080.	.6342347	32.488	12009.	17.2	32806.942	-5.96	697.86
33571.643	17.01	-96.40	-64.35	34335757.	.6342428	32.487	12009.	17.2	32806.973	-5.96	672.78
33596.643	17.66	-95.12	-62.97	34335414.	.6342504	32.487	12009.	17.1	32806.996	-5.96	647.71
33621.643	18.32	-93.80	-61.55	34335053.	.6342572	32.486	12010.	17.1	32807.012	-5.97	622.64
33646.643	18.98	-92.44	-60.11	34334674.	.6342633	32.486	12010.	17.0	32807.016	-5.97	597.56
33671.643	19.64	-91.04	-58.63	34334277.	.6342686	32.485	12010.	17.0	32807.016	-5.97	572.49
33696.643	20.31	-89.60	-57.12	34333865.	.6342729	32.485	12010.	16.9	32807.004	-5.97	547.43

TABLE VII
APOLLO MISSION AS-502
SPACECRAFT OPERATIONAL TRAJECTORY
-ORBITAL ELEMENTS-

TIME SECONDS	VEH DECL DEG	VEH RT ASC DEG	TRUE ANOM DEG	SEMILATUS RECTUM FEET	ECCENTRICITY	INCLINATION DEGREES	APOGEE ALTITUDE N. MILES	PERIGEE ALTITUDE N. MILES	PREDICTED VELOCITY AT ENTRY FT/SEC	PREDICTED GAMMA AT ENTRY DEGREES	TFF TO 400K SEC
33703.841	20.50	-89.17	-56.68	34333741.	.6342740	32.485	12010.	16.9	32807.001	-5.98	540.21
					+X TRANSLATION						
33703.841	20.50	-89.17	-56.68	34333741.	.6342740	32.485	12010.	16.9	32807.001	-5.98	540.21
33726.643	21.11	-87.81	-55.25	34346712.	.6348892	32.484	12042.	16.9	32813.286	-5.98	517.13
33733.840	21.30	-87.37	-54.79	34350850.	.6350850	32.484	12052.	16.9	32815.289	-5.98	509.86
					SECOND SPS IGNITION						
33733.840	21.30	-87.37	-54.79	34350850.	.6350850	32.484	12052.	16.9	32815.289	-5.98	509.86
33734.215	21.31	-87.35	-54.77	34351180.	.6351004	32.484	12053.	16.9	32815.445	-5.98	509.47
					SECOND SPS BURN						
33734.215	21.31	-87.35	-54.77	34351180.	.6351004	32.484	12053.	16.9	32815.445	-5.98	509.47
33735.234	21.34	-87.28	-54.65	34383972.	.6365866	32.484	12131.	17.1	32830.784	-5.97	508.02
33737.234	21.39	-87.16	-54.44	34446982.	.6394969	32.484	12285.	17.3	32860.667	-5.97	505.02
33739.234	21.44	-87.04	-54.22	34508999.	.6424068	32.484	12442.	17.4	32890.412	-5.97	501.90
33741.233	21.50	-86.91	-54.01	34571204.	.6453326	32.484	12602.	17.4	32920.271	-5.98	498.78
33743.234	21.55	-86.79	-53.80	34633782.	.6482773	32.484	12765.	17.5	32950.295	-5.98	495.65
33745.234	21.61	-86.66	-53.59	34696764.	.6512412	32.484	12933.	17.6	32980.483	-5.98	492.54
33747.233	21.66	-86.54	-53.38	34760159.	.6542247	32.484	13104.	17.6	33010.841	-5.99	489.42
33749.234	21.71	-86.41	-53.17	34823969.	.6572279	32.483	13280.	17.7	33041.369	-5.99	486.32
33751.234	21.77	-86.29	-52.96	34888197.	.6602509	32.483	13460.	17.8	33072.067	-6.00	483.22
33753.234	21.82	-86.16	-52.75	34952850.	.6632940	32.483	13644.	17.9	33102.939	-6.00	480.12
33755.234	21.88	-86.03	-52.54	35017926.	.6663572	32.483	13833.	17.9	33133.987	-6.00	477.03
33757.234	21.93	-85.91	-52.32	35083432.	.6694408	32.483	14027.	18.0	33165.210	-6.01	473.95
33759.234	21.98	-85.78	-52.11	35149372.	.6725449	32.483	14225.	18.1	33196.608	-6.01	470.87
33761.234	22.04	-85.65	-51.90	35215744.	.6756697	32.483	14429.	18.1	33228.183	-6.02	467.80
33763.234	22.09	-85.52	-51.69	35282557.	.6788153	32.483	14639.	18.2	33259.938	-6.02	464.73
33765.234	22.15	-85.39	-51.48	35349811.	.6819820	32.483	14853.	18.3	33291.870	-6.02	461.67
33767.234	22.20	-85.27	-51.27	35417508.	.6851698	32.483	15074.	18.4	33323.985	-6.03	458.61
33769.234	22.25	-85.14	-51.06	35485656.	.6883790	32.483	15301.	18.4	33356.281	-6.03	455.56
33771.234	22.31	-85.01	-50.85	35554256.	.6916098	32.483	15534.	18.5	33388.761	-6.04	452.51

TABLE VII
APOLLO MISSION AS-502
SPACECRAFT OPERATIONAL TRAJECTORY
-ORBITAL ELEMENTS-

TIME SECONDS	VEH DECL DEG	VEH RT ASC DEG	TRUE ANOM DEG	SEMILATUS RECTUM FEET	ECCENTRICITY	INCLINATION DEGREES	APOGEE ALTITUDE N. MILES	PERIGEE ALTITUDE N. MILES	PREDICTED VELOCITY AT ENTRY FT/SEC	PREDICTED GAMMA AT ENTRY DEGREES	TFF TO 400K SEC
33773.234	22.36	-84.87	-50.64	35623311.	.6948622	32.483	15773.	18.6	33421.423	-6.04	449.47
33775.233	22.42	-84.74	-50.43	35692827.	.6981366	32.483	16019.	18.6	33454.272	-6.04	446.44
33777.234	22.47	-84.61	-50.22	35762806.	.7014331	32.483	16273.	18.7	33487.310	-6.05	443.41
33779.234	22.53	-84.48	-50.01	35833250.	.7047518	32.483	16534.	18.8	33520.535	-6.05	440.38
33781.234	22.58	-84.35	-49.79	35904168.	.7080930	32.483	16802.	18.8	33553.960	-6.06	437.37
33783.234	22.64	-84.21	-49.58	35975557.	.7114569	32.483	17079.	18.9	33587.555	-6.06	434.35
33785.234	22.69	-84.08	-49.37	36047426.	.7148436	32.483	17364.	19.0	33621.353	-6.07	431.34
33787.234	22.74	-83.95	-49.16	36119775.	.7182534	32.483	17658.	19.0	33655.345	-6.07	428.34
33789.234	22.80	-83.81	-48.95	36192610.	.7216863	32.483	17962.	19.1	33689.533	-6.07	425.34
33791.234	22.85	-83.68	-48.74	36265936.	.7251427	32.483	18275.	19.2	33723.917	-6.08	422.35
33793.234	22.91	-83.54	-48.53	36339757.	.7286228	32.483	18598.	19.2	33758.496	-6.08	419.36
33795.234	22.96	-83.41	-48.32	36414077.	.7321267	32.483	18932.	19.3	33793.277	-6.09	416.38
33797.234	23.02	-83.27	-48.11	36488897.	.7356546	32.483	19277.	19.3	33828.257	-6.09	413.40
33799.234	23.07	-83.13	-47.90	36564224.	.7392069	32.483	19634.	19.4	33863.440	-6.10	410.43
33801.234	23.13	-83.00	-47.69	36640064.	.7427836	32.483	20003.	19.5	33898.826	-6.10	407.46
33803.234	23.18	-82.86	-47.48	36716416.	.7463850	32.482	20386.	19.5	33934.417	-6.11	404.50
33805.234	23.24	-82.72	-47.26	36793289.	.7500113	32.482	20782.	19.6	33970.213	-6.11	401.54
33807.234	23.29	-82.58	-47.05	36870686.	.7536627	32.482	21193.	19.7	34006.221	-6.11	398.59
33809.233	23.35	-82.44	-46.84	36948610.	.7573394	32.482	21619.	19.7	34042.437	-6.12	395.64
33811.234	23.40	-82.30	-46.63	37027072.	.7610418	32.482	22061.	19.8	34078.863	-6.12	392.70
33813.234	23.46	-82.16	-46.42	37106062.	.7647699	32.482	22521.	19.8	34115.501	-6.13	389.76
33815.234	23.51	-82.02	-46.21	37185603.	.7685242	32.482	22998.	19.9	34152.355	-6.13	386.83
33817.234	23.57	-81.88	-46.00	37265689.	.7723047	32.482	23495.	19.9	34189.424	-6.14	383.90
33819.234	23.62	-81.74	-45.79	37346328.	.7761117	32.482	24012.	20.0	34226.708	-6.14	380.98
33821.234	23.68	-81.59	-45.58	37427520.	.7799455	32.482	24551.	20.0	34264.217	-6.15	378.06
33823.234	23.73	-81.45	-45.37	37509276.	.7838062	32.482	25114.	20.1	34301.943	-6.15	375.15
33825.234	23.79	-81.31	-45.15	37591600.	.7876943	32.482	25700.	20.2	34339.891	-6.16	372.24
33827.234	23.85	-81.16	-44.94	37674495.	.7916098	32.482	26313.	20.2	34378.064	-6.16	369.34
33829.234	23.90	-81.02	-44.73	37757970.	.7955531	32.482	26954.	20.3	34416.465	-6.17	366.44
33831.234	23.96	-80.87	-44.52	37842023.	.7995244	32.482	27625.	20.3	34455.094	-6.17	363.55
33833.234	24.01	-80.73	-44.31	37926668.	.8035241	32.482	28329.	20.4	34493.951	-6.18	360.69
33835.234	24.07	-80.58	-44.10	38011902.	.8075522	32.482	29067.	20.4	34533.037	-6.18	357.71
33837.233	24.12	-80.44	-43.89	38097738.	.8116091	32.482	29842.	20.5	34572.357	-6.19	354.83
33839.234	24.18	-80.29	-43.68	38184178.	.8156953	32.482	30657.	20.5	34611.914	-6.20	351.95
33841.234	24.23	-80.14	-43.46	38271229.	.8198107	32.482	31515.	20.5	34651.709	-6.20	349.08
33843.234	24.29	-79.99	-43.25	38358894.	.8239558	32.482	32420.	20.6	34691.744	-6.21	346.22
33845.234	24.34	-79.84	-43.04	38447181.	.8281309	32.482	33376.	20.6	34732.015	-6.21	343.36
33847.234	24.40	-79.69	-42.83	38536093.	.8323361	32.482	34386.	20.7	34772.531	-6.22	340.51
33849.234	24.46	-79.54	-42.62	38625647.	.8365719	32.482	35457.	20.7	34813.294	-6.22	337.66
33851.234	24.51	-79.39	-42.41	38715827.	.8408386	32.482	36593.	20.8	34854.304	-6.23	334.82
33853.234	24.57	-79.24	-42.20	38806667.	.8451363	32.482	37801.	20.8	34895.562	-6.24	331.98

TABLE VII
APOLLO MISSION AS-502
SPACECRAFT OPERATIONAL TRAJECTORY
-ORBITAL ELEMENTS-

TIME SECONDS	VEH DECL DEG	VEH RT ASC DEG	TRUE ANOM DEG	SEMILATUS RECTUM FEET	ECCENTRICITY	INCLINATION DEGREES	APOGEE ALTITUDE N. MILES	PERIGEE ALTITUDE N. MILES	PREDICTED VELOCITY AT ENTRY FT/SEC	PREDICTED GAMMA AT ENTRY DEGREES	TFF TO 400K SEC
33855.234	24.62	-79.09	-41.98	38898148.	.8494655	32.482	39087.	20.8	34937.070	-6.24	329.15
33857.234	24.68	-78.94	-41.77	38990294.	.8538264	32.482	40459.	20.9	34978.830	-6.25	326.32
33859.234	24.73	-78.78	-41.56	39083102.	.8582194	32.482	41927.	20.9	35020.845	-6.25	323.50
33861.234	24.79	-78.63	-41.35	39176588.	.8626448	32.482	43501.	20.9	35063.119	-6.26	320.68
33863.234	24.84	-78.48	-41.14	39270750.	.8671029	32.482	45192.	21.0	35105.655	-6.27	317.87
33865.234	24.90	-78.32	-40.92	39365593.	.8715940	32.482	47015.	21.0	35148.451	-6.27	315.06
33867.234	24.96	-78.16	-40.71	39461128.	.8761186	32.482	48984.	21.1	35191.508	-6.28	312.26
33869.234	25.01	-78.01	-40.50	39557367.	.8806768	32.482	51120.	21.1	35234.837	-6.29	309.46
33871.233	25.07	-77.85	-40.29	39654304.	.8852691	32.482	53443.	21.1	35278.430	-6.29	306.66
33873.234	25.12	-77.69	-40.07	39751962.	.8898958	32.482	55979.	21.1	35322.296	-6.30	303.88
33875.234	25.18	-77.54	-39.86	39850336.	.8945573	32.482	58759.	21.2	35366.439	-6.31	301.09
33877.234	25.23	-77.38	-39.65	39949450.	.8992539	32.482	61821.	21.2	35410.853	-6.31	298.31
33879.234	25.29	-77.22	-39.44	40049286.	.9039860	32.482	65208.	21.2	35455.547	-6.32	295.54
33881.234	25.35	-77.06	-39.22	40149868.	.9087541	32.482	68977.	21.3	35500.521	-6.33	292.77
33883.234	25.40	-76.90	-39.01	40251201.	.9135583	32.482	73195.	21.3	35545.782	-6.33	290.00
33885.234	25.46	-76.74	-38.80	40353298.	.9183993	32.482	77947.	21.3	35591.324	-6.34	287.24
33887.234	25.51	-76.57	-38.59	40456163.	.9232773	32.482	83342.	21.3	35637.160	-6.35	284.49
33889.234	25.57	-76.41	-38.37	40559798.	.9281927	32.482	89520.	21.3	35683.283	-6.36	281.73
33891.234	25.62	-76.25	-38.16	40664230.	.9331459	32.482	96665.	21.4	35729.705	-6.36	278.99
33893.234	25.68	-76.09	-37.95	40769456.	.9381375	32.482	105022.	21.4	35776.422	-6.37	276.24
33895.234	25.73	-75.92	-37.73	40875468.	.9431676	32.482	114929.	21.4	35823.435	-6.38	273.51
33897.234	25.79	-75.76	-37.52	40982296.	.9482370	32.482	126861.	21.4	35870.753	-6.39	270.77
33899.233	25.85	-75.59	-37.31	41089956.	.9533459	32.482	141510.	21.4	35918.378	-6.39	268.04
33901.234	25.90	-75.42	-37.09	41198435.	.9584947	32.482	159921.	21.4	35966.310	-6.40	265.32
33903.234	25.96	-75.26	-36.88	41307746.	.9636840	32.482	183760.	21.5	36014.555	-6.41	262.60
33905.233	26.01	-75.09	-36.66	41417912.	.9689142	32.483	215840.	21.5	36063.111	-6.42	259.88
33907.234	26.07	-74.92	-36.45	41528954.	.9741857	32.483	261327.	21.5	36111.990	-6.42	257.17
33909.234	26.12	-74.75	-36.24	41640846.	.9794991	32.483	330847.	21.5	36161.185	-6.43	254.46
33911.234	26.18	-74.58	-36.02	41753589.	.9848548	32.483	450284.	21.5	36210.702	-6.44	251.76
33913.234	26.24	-74.41	-35.81	41867284.	.9902533	32.483	703515.	21.5	36260.550	-6.45	249.06
33915.234	26.29	-74.24	-35.59	41981960.	.9956952	32.483	1601577.	21.5	36310.727	-6.46	246.37
33917.234	26.35	-74.07	-35.38	42097288.	1.0011809	32.483	0.	21.5	36361.242	-6.47	243.68
33919.234	26.40	-73.89	-35.16	42213684.	1.0067111	32.483	0.	21.5	36412.092	-6.47	241.00
33921.234	26.46	-73.72	-34.95	42331021.	1.0122862	32.483	0.	21.5	36463.283	-6.48	238.32
33922.325	26.49	-73.62	-34.83	42395589.	1.0153505	32.483	0.	21.5	36491.391	-6.49	236.86

SECOND SPS SHUTDOWN

33922.325	26.49	-73.62	-34.83	42395589.	1.0153505	32.483	0.	21.5	36491.391	-6.49	236.86

TABLE VII
APOLLO MISSION AS-502
SPACECRAFT OPERATIONAL TRAJECTORY
-ORBITAL ELEMENTS-

TIME SECONDS	VEH DECL DEG	VEH RT ASC DEG	TRUE ANOM DEG	SEMILATUS RECTUM FEET	ECCENTRICITY	INCLINATION DEGREES	APOGEE ALTITUDE N. MILES	PERIGEE ALTITUDE N. MILES	PREDICTED VELOCITY AT ENTRY FT/SEC	PREDICTED GAMMA AT ENTRY DEGREES	TFF TO 400K SEC
33923.012	26.51	-73.56	-34.77	42418361.	1.0164392	32.483	0.	21.5	36501.372	-6.49	236.04
HOLD INERTIAL ATTITUDE											
33923.012	26.51	-73.56	-34.77	42418361.	1.0164392	32.483	0.	21.5	36501.372	-6.49	236.04
33932.023	26.75	-72.77	-34.02	42418148.	1.0164347	32.483	0.	21.5	36501.328	-6.49	227.02
33942.023	27.03	-71.88	-33.18	42417910.	1.0164294	32.483	0.	21.5	36501.280	-6.49	217.01
33952.023	27.30	-70.98	-32.33	42417672.	1.0164239	32.483	0.	21.5	36501.233	-6.49	207.00
33959.022	27.48	-70.34	-31.74	42417506.	1.0164199	32.483	0.	21.5	36501.193	-6.49	200.00
CSM ATTITUDE ORIENTATION FOR CM/SM SEPERATION											
33959.022	27.48	-70.34	-31.74	42417506.	1.0164199	32.483	0.	21.5	36501.193	-6.49	200.00
33959.109	27.48	-70.33	-31.73	42417505.	1.0164199	32.483	0.	21.5	36501.193	-6.49	199.91
33969.109	27.75	-69.41	-30.87	42417268.	1.0164140	32.482	0.	21.4	36501.141	-6.49	189.91
33976.606	27.94	-68.71	-30.22	42417091.	1.0164095	32.482	0.	21.4	36501.102	-6.49	182.41
33976.696	27.94	-68.70	-30.21	42417090.	1.0164095	32.482	0.	21.4	36501.102	-6.49	182.32
33976.797	27.95	-68.69	-30.20	42417087.	1.0164094	32.482	0.	21.4	36501.098	-6.49	182.22
33976.814	27.95	-68.69	-30.20	42417088.	1.0164094	32.482	0.	21.4	36501.098	-6.49	182.20
COAST TO CM/SM SEPARATION											
33976.814	27.95	-68.69	-30.20	42417088.	1.0164094	32.482	0.	21.4	36501.098	-6.49	182.20
33981.816	28.08	-68.22	-29.77	42416970.	1.0164063	32.482	0.	21.4	36501.072	-6.49	177.19
33991.817	28.33	-67.27	-28.89	42416736.	1.0164001	32.482	0.	21.4	36501.015	-6.50	167.19
34001.817	28.58	-66.31	-28.01	42416506.	1.0163936	32.481	0.	21.4	36500.958	-6.50	157.18
34011.817	28.82	-65.33	-27.12	42416278.	1.0163871	32.481	0.	21.4	36500.897	-6.50	147.18
34021.817	29.06	-64.35	-26.23	42416050.	1.0163805	32.481	0.	21.4	36500.836	-6.50	137.17
34031.817	29.29	-63.35	-25.33	42415829.	1.0163738	32.481	0.	21.4	36500.776	-6.50	127.17
34041.817	29.52	-62.34	-24.42	42415611.	1.0163670	32.481	0.	21.4	36500.715	-6.50	117.17
34051.817	29.74	-61.31	-23.50	42415396.	1.0163602	32.480	0.	21.4	36500.654	-6.50	107.16
34061.817	29.95	-60.28	-22.58	42415188.	1.0163534	32.480	0.	21.4	36500.589	-6.50	97.16
34071.817	30.16	-59.24	-21.65	42414984.	1.0163467	32.480	0.	21.4	36500.528	-6.50	87.16

TABLE VII
APOLLO MISSION AS-502
SPACECRAFT OPERATIONAL TRAJECTORY
-ORBITAL ELEMENTS-

TIME SECONDS	VEH DECL DEG	VEH RT ASC DEG	TRUE ANOM DEG	SEMILATUS RECTUM FEET	ECCENTRICITY	INCLINATION DEGREES	APOGEE ALTITUDE N. MILES	PERIGEE ALTITUDE N. MILES	PREDICTED VELOCITY AT ENTRY FT/SEC	PREDICTED GAMMA AT ENTRY DEGREES	TFF TO 400K SEC
34073.976	30.21	-59.01	-21.45	42414939.	1.0163452	32.480	0.	21.4	36500.514	-6.50	85.00
CM/SM SEPARATION AND FIVE SECOND COAST											
34073.976	30.21	-59.01	-21.45	42414939.	1.0163452	32.480	0.	21.4	36500.514	-6.50	85.00
34078.976	30.31	-58.48	-20.99	42414841.	1.0163419	32.480	0.	21.4	36500.484	-6.50	80.00
CM ATTITUDE ORIENTATION FOR ENTRY											
34078.976	30.31	-58.48	-20.99	42414841.	1.0163419	32.480	0.	21.4	36500.484	-6.50	80.00
34079.367	30.31	-58.44	-20.95	42414832.	1.0163416	32.480	0.	21.4	36500.480	-6.50	79.61
34088.408	30.49	-57.48	-20.10	42414658.	1.0163356	32.480	0.	21.4	36500.428	-6.50	70.57
34098.408	30.68	-56.41	-19.16	42414467.	1.0163288	32.479	0.	21.4	36500.367	-6.50	60.56
34102.683	30.76	-55.94	-18.76	42414385.	1.0163259	32.479	0.	21.4	36500.336	-6.50	56.29
34102.692	30.76	-55.94	-18.75	42414385.	1.0163259	32.479	0.	21.4	36500.336	-6.50	56.28
34102.694	30.76	-55.94	-18.75	42414385.	1.0163259	32.479	0.	21.4	36500.336	-6.50	56.28
COAST TO ENTRY											
34102.694	30.76	-55.94	-18.75	42414385.	1.0163259	32.479	0.	21.4	36500.336	-6.50	56.28
34111.694	30.92	-54.96	-17.90	42414217.	1.0163198	32.479	0.	21.4	36500.284	-6.50	47.28
34121.694	31.08	-53.87	-16.95	42414034.	1.0163129	32.479	0.	21.4	36500.219	-6.50	37.28
34131.695	31.25	-52.76	-15.99	42413852.	1.0163059	32.479	0.	21.3	36500.153	-6.50	27.28
34141.694	31.40	-51.65	-15.02	42413665.	1.0162986	32.479	0.	21.3	36500.088	-6.50	17.28
34151.694	31.54	-50.52	-14.05	42413453.	1.0162898	32.478	0.	21.3	36500.010	-6.50	7.28
34161.694	31.67	-49.39	-13.08	42413163.	1.0162770	32.478	0.	21.3	36499.892	-6.50	.00
34163.594	31.70	-49.18	-12.90	42413085.	1.0162734	32.478	0.	21.3	36499.857	-6.50	.00
ENTRY											

TABLE VIII
APOLLO MISSION AS-502
SPACECRAFT OPERATIONAL TRAJECTORY
-WEIGHT AND PERFORMANCE-

TIME SECONDS	SPS PROPELLANT POUNDS	SM/RCS PROPELLANT POUNDS	CM/RCS PROPELLANT POUNDS	TOTAL PROPELLANT POUNDS	TOTAL SC WEIGHT POUNDS	PROPELLANT FLOW RATE POUNDS/SEC	THRUST POUNDS	DELTA V FT/SEC
			LIFTOFF CONDITIONS					
.000	32850.000	780.000	225.000	33855.000		.000	.000	.000
			TRANSLUNAR INJECTION					
11746.739	32850.000	780.000	225.000	33855.000	132776.700	.000	.000	.000
11748.739	32850.000	780.000	225.000	33855.000	132776.700	.000	.000	.000
11750.739	32850.000	780.000	225.000	33855.000	132776.700	.000	.000	.000
11752.739	32850.000	780.000	225.000	33855.000	132776.700	.000	.000	.000
11754.739	32850.000	780.000	225.000	33855.000	132776.700	.000	.000	.000
11756.739	32850.000	780.000	225.000	33855.000	132776.700	.000	.000	.000
11756.939	32850.000	780.000	225.000	33855.000	132776.700	.000	.000	.000
			BEGIN ORIENTATION TO S-IVB/CSM SEPARATION ATTITUDE					
11756.939	32850.000	780.000	225.000	33855.000	132776.700	.000	.000	.000
11757.098	32850.000	780.000	225.000	33855.000	132776.700	.000	.000	.000
11762.139	32850.000	780.000	225.000	33855.000	132776.700	.000	.000	.000
11772.139	32850.000	780.000	225.000	33855.000	132776.700	.000	.000	.000
11782.139	32850.000	780.000	225.000	33855.000	132776.700	.000	.000	.000
11792.139	32850.000	780.000	225.000	33855.000	132776.700	.000	.000	.000
11802.139	32850.000	780.000	225.000	33855.000	132776.700	.000	.000	.000
11812.139	32850.000	780.000	225.000	33855.000	132776.700	.000	.000	.000
11822.139	32850.000	780.000	225.000	33855.000	132776.700	.000	.000	.000
11832.139	32850.000	780.000	225.000	33855.000	132776.700	.000	.000	.000
11842.139	32850.000	780.000	225.000	33855.000	132776.700	.000	.000	.000
11852.139	32850.000	780.000	225.000	33855.000	132776.700	.000	.000	.000
11862.139	32850.000	780.000	225.000	33855.000	132776.700	.000	.000	.000
11872.139	32850.000	780.000	225.000	33855.000	132776.700	.000	.000	.000
11876.184	32850.000	780.000	225.000	33855.000	132776.700	.000	.000	.000
11878.139	32850.000	780.000	225.000	33855.000	132776.700	.000	.000	.000
11880.139	32850.000	780.000	225.000	33855.000	132776.700	.000	.000	.000

TABLE VIII
APOLLO MISSION AS-502
SPACECRAFT OPERATIONAL TRAJECTORY
-WEIGHT AND PERFORMANCE-

TIME SECONDS	SPS PROPELLANT POUNDS	SM/RCS PROPELLANT POUNDS	CM/RCS PROPELLANT POUNDS	TOTAL PROPELLANT POUNDS	TOTAL SC WEIGHT POUNDS	PROPELLANT FLOW RATE POUNDS/SEC	THRUST POUNDS	DELTA V FT/SEC
11881.058	32850.000	780.000	225.000	33855.000	132776.700	.000	.000	.000
END ORIENTATION TO S-IVB/CSM SEPARATION ATTITUDE								
11881.058	32850.000	780.000	225.000	33855.000	132776.700	.000	.000	.000
11882.139	32850.000	780.000	225.000	33855.000	132776.700	.000	.000	.000
11884.139	32850.000	780.000	225.000	33855.000	132776.700	.000	.000	.000
11886.139	32850.000	780.000	225.000	33855.000	132776.700	.000	.000	.000
11888.139	32850.000	780.000	225.000	33855.000	132776.700	.000	.000	.000
11890.139	32850.000	780.000	225.000	33855.000	132776.700	.000	.000	.000
11892.139	32850.000	780.000	225.000	33855.000	132776.700	.000	.000	.000
11894.139	32850.000	780.000	225.000	33855.000	132776.700	.000	.000	.000
11896.139	32850.000	780.000	225.000	33855.000	132776.700	.000	.000	.000
11898.139	32850.000	780.000	225.000	33855.000	132776.700	.000	.000	.000
11900.139	32850.000	780.000	225.000	33855.000	132776.700	.000	.000	.000
11902.139	32850.000	780.000	225.000	33855.000	132776.700	.000	.000	.000
11904.139	32850.000	780.000	225.000	33855.000	132776.700	.000	.000	.000
11906.139	32850.000	780.000	225.000	33855.000	132776.700	.000	.000	.000
11908.139	32850.000	780.000	225.000	33855.000	132776.700	.000	.000	.000
11910.139	32850.000	780.000	225.000	33855.000	132776.700	.000	.000	.000
11912.139	32850.000	780.000	225.000	33855.000	132776.700	.000	.000	.000
11914.139	32850.000	780.000	225.000	33855.000	132776.700	.000	.000	.000
11916.139	32850.000	780.000	225.000	33855.000	132776.700	.000	.000	.000
11916.939	32850.000	780.000	225.000	33855.000	132776.700	.000	.000	.000
START RCS THRUST FOR S-IVB/CSM SEPARATION								
11916.939	32850.000	780.000	225.000	33855.000	132776.700	1.440	398.800	.000
11917.938	32850.000	778.561	225.000	33853.561	132775.250	1.440	398.800	.097
11918.639	32850.000	777.552	225.000	33852.552	132774.250	1.440	398.800	.164
SEPARATION AND 8.3 SECS OF +X TRANSLATION								
11918.639	32850.000	777.552	225.000	33852.552	55202.552	1.440	398.800	.000

TABLE VIII
APOLLO MISSION AS-502
SPACECRAFT OPERATIONAL TRAJECTORY
-WEIGHT AND PERFORMANCE-

TIME SECONDS	SPS PROPELLANT POUNDS	SM/RCS PROPELLANT POUNDS	CM/RCS PROPELLANT POUNDS	TOTAL PROPELLANT POUNDS	TOTAL SC WEIGHT POUNDS	PROPELLANT FLOW RATE POUNDS/SEC	THRUST POUNDS	DELTA V FT/SEC
11926.939	32850.000	765.600	225.000	33840.600	55190.600	1.440	398.800	1.929
			COAST FIVE SECONDS					
11926.939	32850.000	765.600	225.000	33840.600	55190.600	.000	.000	.000
11931.939	32850.000	765.600	225.000	33840.600	55190.600	.000	.000	.000
			ORIENTATION TO FIRST SPS IGNITION ATTITUDE					
11931.939	32850.000	765.600	225.000	33840.600	55190.600	.000	.000	.000
11932.827	32850.000	765.600	225.000	33840.600	55190.600	.000	.000	.000
			COAST TO FIRST SPS BURN					
11932.827	32850.000	761.800	225.000	33836.800	55186.800	.000	.000	.000
11933.239	32850.000	761.800	225.000	33836.800	55186.800	.000	.000	.000
11943.239	32850.000	761.800	225.000	33836.800	55186.800	.000	.000	.000
11953.239	32850.000	761.800	225.000	33836.800	55186.800	.000	.000	.000
11963.238	32850.000	761.800	225.000	33836.800	55186.800	.000	.000	.000
11973.238	32850.000	761.800	225.000	33836.800	55186.800	.000	.000	.000
11983.238	32850.000	761.800	225.000	33836.800	55186.800	.000	.000	.000
11993.238	32850.000	761.800	225.000	33836.800	55186.800	.000	.000	.000
12003.238	32850.000	761.800	225.000	33836.800	55186.800	.000	.000	.000
12013.239	32850.000	761.800	225.000	33836.800	55186.800	.000	.000	.000
12016.939	32850.000	761.800	225.000	33836.800	55186.800	.000	.000	.000
			FIRST SPS IGNITION					
12016.939	32850.000	761.800	225.000	33836.800	55186.800	18.400	600.000	.000

TABLE VIII
APOLLO MISSION AS-502
SPACECRAFT OPERATIONAL TRAJECTORY
-WEIGHT AND PERFORMANCE-

TIME SECONDS	SPS PROPELLANT POUNDS	SM/RCS PROPELLANT POUNDS	CM/RCS PROPELLANT POUNDS	TOTAL PROPELLANT POUNDS	TOTAL SC WEIGHT POUNDS	PROPELLANT FLOW RATE POUNDS/SEC	THRUST POUNDS	DELTA V FT/SEC
12017.314	32835.602	761.800	225.000	33822.402	55172.402	38.400	600.000	.131
			FIRST SPS BURN					
12017.314	32835.602	761.800	225.000	33822.402	55172.402	68.750	21292.000	.000
12018.333	32765.543	761.800	225.000	33752.343	55102.343	68.750	21292.000	12.669
12020.333	32628.043	761.800	225.000	33614.843	54964.843	68.750	21292.000	37.580
12022.333	32490.543	761.800	225.000	33477.343	54827.343	68.750	21292.000	62.554
12024.333	32353.043	761.800	225.000	33339.842	54689.843	68.750	21292.000	87.590
12026.333	32215.543	761.800	225.000	33202.343	54552.343	68.750	21292.000	112.690
12028.333	32078.043	761.800	225.000	33064.843	54414.843	68.750	21292.000	137.853
12030.333	31940.543	761.800	225.000	32927.343	54277.343	68.750	21292.000	163.079
12032.333	31803.043	761.800	225.000	32789.843	54139.843	68.750	21292.000	188.370
12034.333	31665.543	761.800	225.000	32652.342	54002.343	68.750	21292.000	213.725
12036.333	31528.043	761.800	225.000	32514.843	53864.843	68.750	21292.000	239.144
12038.333	31390.543	761.800	225.000	32377.343	53727.343	68.750	21292.000	264.629
12040.333	31253.043	761.800	225.000	32239.842	53589.843	68.750	21292.000	290.179
12042.333	31115.543	761.800	225.000	32102.343	53452.343	68.750	21292.000	315.795
12044.333	30978.043	761.800	225.000	31964.843	53314.843	68.750	21292.000	341.477
12046.333	30840.543	761.800	225.000	31827.343	53177.343	68.750	21292.000	367.225
12048.333	30703.043	761.800	225.000	31689.843	53039.843	68.750	21292.000	393.040
12050.333	30565.543	761.800	225.000	31552.342	52902.343	68.750	21292.000	418.921
12052.333	30428.043	761.800	225.000	31414.843	52764.843	68.750	21292.000	444.871
12054.333	30290.543	761.800	225.000	31277.343	52627.343	68.750	21292.000	470.888
12056.333	30153.043	761.800	225.000	31139.842	52489.843	68.750	21292.000	496.973
12058.333	30015.543	761.800	225.000	31002.343	52352.343	68.750	21292.000	523.126
12060.333	29878.043	761.800	225.000	30864.843	52214.843	68.750	21292.000	549.349
12062.333	29740.543	761.800	225.000	30727.343	52077.343	68.750	21292.000	575.640
12064.333	29603.043	761.800	225.000	30589.843	51939.843	68.750	21292.000	602.001
12066.333	29465.543	761.800	225.000	30452.342	51802.343	68.750	21292.000	628.432
12068.333	29328.043	761.800	225.000	30314.843	51664.843	68.750	21292.000	654.934
12070.333	29190.543	761.800	225.000	30177.343	51527.343	68.750	21292.000	681.506
12072.333	29053.043	761.800	225.000	30039.842	51389.843	68.750	21292.000	708.149
12074.333	28915.543	761.800	225.000	29902.343	51252.343	68.750	21292.000	734.864
12076.333	28778.043	761.800	225.000	29764.843	51114.843	68.750	21292.000	761.650
12078.333	28640.543	761.800	225.000	29627.343	50977.343	68.750	21292.000	788.508
12080.333	28503.043	761.800	225.000	29489.843	50839.843	68.750	21292.000	815.439
12082.333	28365.543	761.800	225.000	29352.342	50702.343	68.750	21292.000	842.444
12084.333	28228.043	761.800	225.000	29214.843	50564.843	68.750	21292.000	869.521
12086.333	28090.543	761.800	225.000	29077.343	50427.343	68.750	21292.000	896.672

TABLE VIII
APOLLO MISSION AS-502
SPACECRAFT OPERATIONAL TRAJECTORY
-WEIGHT AND PERFORMANCE-

TIME SECONDS	SPS PROPELLANT POUNDS	SM/RCS PROPELLANT POUNDS	CM/RCS PROPELLANT POUNDS	TOTAL PROPELLANT POUNDS	TOTAL SC WEIGHT POUNDS	PROPELLANT FLOW RATE POUNDS/SEC	THRUST POUNDS	DELTA V FT/SEC
12088.333	27953.043	761.800	225.000	28939.842	50289.842	68.750	21292.000	923.898
12090.333	27815.543	761.800	225.000	28802.343	50152.343	68.750	21292.000	951.198
12092.333	27678.043	761.800	225.000	28664.843	50014.843	68.750	21292.000	978.573
12094.333	27540.543	761.800	225.000	28527.343	49877.343	68.750	21292.000	1006.023
12096.333	27403.043	761.800	225.000	28389.843	49739.843	68.750	21292.000	1033.550
12098.333	27265.543	761.800	225.000	28252.342	49602.343	68.750	21292.000	1061.152
12100.333	27128.043	761.800	225.000	28114.843	49464.843	68.750	21292.000	1088.831
12102.333	26990.543	761.800	225.000	27977.343	49327.343	68.750	21292.000	1116.588
12104.333	26853.043	761.800	225.000	27839.842	49189.842	68.750	21292.000	1144.422
12106.333	26715.543	761.800	225.000	27702.343	49052.343	68.750	21292.000	1172.333
12108.333	26578.043	761.800	225.000	27564.843	48914.843	68.750	21292.000	1200.324
12110.333	26440.543	761.800	225.000	27427.343	48777.343	68.750	21292.000	1228.393
12112.333	26303.042	761.800	225.000	27289.843	48639.843	68.750	21292.000	1256.541
12114.333	26165.543	761.800	225.000	27152.342	48502.343	68.750	21292.000	1284.769
12116.333	26028.043	761.800	225.000	27014.843	48364.843	68.750	21292.000	1313.078
12118.333	25890.543	761.800	225.000	26877.343	48227.343	68.750	21292.000	1341.466
12120.333	25753.043	761.800	225.000	26739.842	48089.842	68.750	21292.000	1369.937
12122.333	25615.543	761.800	225.000	26602.343	47952.343	68.750	21292.000	1398.488
12124.333	25478.043	761.800	225.000	26464.843	47814.843	68.750	21292.000	1427.122
12126.333	25340.543	761.800	225.000	26327.343	47677.343	68.750	21292.000	1455.838
12128.333	25203.042	761.800	225.000	26189.843	47539.843	68.750	21292.000	1484.637
12130.333	25065.543	761.800	225.000	26052.342	47402.343	68.750	21292.000	1513.520
12132.333	24928.043	761.800	225.000	25914.843	47264.843	68.750	21292.000	1542.487
12134.333	24790.543	761.800	225.000	25777.343	47127.343	68.750	21292.000	1571.538
12136.333	24653.043	761.800	225.000	25639.842	46989.843	68.750	21292.000	1600.674
12138.333	24515.543	761.800	225.000	25502.343	46852.343	68.750	21292.000	1629.895
12140.333	24378.043	761.800	225.000	25364.842	46714.843	68.750	21292.000	1659.203
12142.333	24240.543	761.800	225.000	25227.343	46577.343	68.750	21292.000	1688.597
12144.333	24103.042	761.800	225.000	25089.843	46439.843	68.750	21292.000	1718.077
12146.333	23965.543	761.800	225.000	24952.342	46302.343	68.750	21292.000	1747.646
12148.333	23828.043	761.800	225.000	24814.843	46164.843	68.750	21292.000	1777.302
12150.333	23690.543	761.800	225.000	24677.343	46027.343	68.750	21292.000	1807.047
12152.333	23553.043	761.800	225.000	24539.842	45889.843	68.750	21292.000	1836.881
12154.333	23415.543	761.800	225.000	24402.343	45752.343	68.750	21292.000	1866.804
12156.333	23278.043	761.800	225.000	24264.842	45614.843	68.750	21292.000	1896.818
12158.333	23140.543	761.800	225.000	24127.343	45477.343	68.750	21292.000	1926.922
12160.333	23003.042	761.800	225.000	23989.843	45339.843	68.750	21292.000	1957.118
12162.333	22865.543	761.800	225.000	23852.342	45202.343	68.750	21292.000	1987.405
12164.333	22728.043	761.800	225.000	23714.843	45064.843	68.750	21292.000	2017.785
12166.333	22590.543	761.800	225.000	23577.343	44927.343	68.750	21292.000	2048.258
12168.333	22453.043	761.800	225.000	23439.842	44789.843	68.750	21292.000	2078.824
12170.333	22315.543	761.800	225.000	23302.343	44652.343	68.750	21292.000	2109.484

TABLE VIII
APOLLO MISSION AS-502
SPACECRAFT OPERATIONAL TRAJECTORY
-WEIGHT AND PERFORMANCE-

TIME SECONDS	SPS PROPELLANT POUNDS	SM/RCS PROPELLANT POUNDS	CM/RCS PROPELLANT POUNDS	TOTAL PROPELLANT POUNDS	TOTAL SC WEIGHT POUNDS	PROPELLANT FLOW RATE POUNDS/SEC	THRUST POUNDS	DELTA V FT/SEC
12172.333	22178.043	761.800	225.000	23164.842	44514.843	68.750	21292.000	2140.238
12174.333	22040.543	761.800	225.000	23027.343	44377.343	68.750	21292.000	2171.088
12176.333	21903.042	761.800	225.000	22889.843	44239.843	68.750	21292.000	2202.034
12178.333	21765.543	761.800	225.000	22752.342	44102.342	68.750	21292.000	2233.076
12180.333	21628.043	761.800	225.000	22614.843	43964.843	68.750	21292.000	2264.216
12182.333	21490.543	761.800	225.000	22477.343	43827.343	68.750	21292.000	2295.452
12184.333	21353.043	761.800	225.000	22339.842	43689.843	68.750	21292.000	2326.787
12186.333	21215.543	761.800	225.000	22202.343	43552.343	68.750	21292.000	2358.221
12188.333	21078.043	761.800	225.000	22064.842	43414.843	68.750	21292.000	2389.755
12190.333	20940.543	761.800	225.000	21927.343	43277.343	68.750	21292.000	2421.388
12192.333	20803.043	761.800	225.000	21789.843	43139.843	68.750	21292.000	2453.122
12194.333	20665.543	761.800	225.000	21652.342	43002.342	68.750	21292.000	2484.958
12196.333	20528.043	761.800	225.000	21514.843	42864.843	68.750	21292.000	2516.895
12198.333	20390.543	761.800	225.000	21377.343	42727.343	68.750	21292.000	2548.936
12200.333	20253.043	761.800	225.000	21239.842	42589.843	68.750	21292.000	2581.079
12202.333	20115.542	761.800	225.000	21102.343	42452.343	68.750	21292.000	2613.327
12204.333	19978.043	761.800	225.000	20964.842	42314.843	68.750	21292.000	2645.680
12206.333	19840.543	761.800	225.000	20827.343	42177.343	68.750	21292.000	2678.137
12208.333	19703.043	761.800	225.000	20689.843	42039.843	68.750	21292.000	2710.701
12210.333	19565.543	761.800	225.000	20552.342	41902.342	68.750	21292.000	2743.372
12212.333	19428.043	761.800	225.000	20414.843	41764.843	68.750	21292.000	2776.150
12214.333	19290.543	761.800	225.000	20277.343	41627.343	68.750	21292.000	2809.036
12216.333	19153.043	761.800	225.000	20139.842	41489.843	68.750	21292.000	2842.031
12218.333	19015.542	761.800	225.000	20002.343	41352.343	68.750	21292.000	2875.136
12220.333	18878.043	761.800	225.000	19864.842	41214.843	68.750	21292.000	2908.351
12222.333	18740.543	761.800	225.000	19727.343	41077.343	68.750	21292.000	2941.678
12224.333	18603.043	761.800	225.000	19589.843	40939.843	68.750	21292.000	2975.116
12226.333	18465.543	761.800	225.000	19452.342	40802.342	68.750	21292.000	3008.667
12228.333	18328.043	761.800	225.000	19314.843	40664.843	68.750	21292.000	3042.331
12230.333	18190.543	761.800	225.000	19177.342	40527.343	68.750	21292.000	3076.109
12232.333	18053.043	761.800	225.000	19039.842	40389.843	68.750	21292.000	3110.002
12234.333	17915.542	761.800	225.000	18902.343	40252.343	68.750	21292.000	3144.010
12236.333	17778.043	761.800	225.000	18764.842	40114.843	68.750	21292.000	3178.136
12238.333	17640.543	761.800	225.000	18627.343	39977.343	68.750	21292.000	3212.378
12240.333	17503.043	761.800	225.000	18489.843	39839.843	68.750	21292.000	3246.739
12242.333	17365.543	761.800	225.000	18352.342	39702.342	68.750	21292.000	3281.218
12244.333	17228.043	761.800	225.000	18214.843	39564.843	68.750	21292.000	3315.817
12246.333	17090.543	761.800	225.000	18077.342	39427.343	68.750	21292.000	3350.537
12248.333	16953.043	761.800	225.000	17939.842	39289.843	68.750	21292.000	3385.378
12250.333	16815.542	761.800	225.000	17802.343	39152.343	68.750	21292.000	3420.341
12252.333	16678.043	761.800	225.000	17664.842	39014.843	68.750	21292.000	3455.428
12254.333	16540.543	761.800	225.000	17527.343	38877.343	68.750	21292.000	3490.638

TABLE VIII
APOLLO MISSION AS-502
SPACECRAFT OPERATIONAL TRAJECTORY
-WEIGHT AND PERFORMANCE-

TIME SECONDS	SPS PROPELLANT POUNDS	SM/RCS PROPELLANT POUNDS	CM/RCS PROPELLANT POUNDS	TOTAL PROPELLANT POUNDS	TOTAL SC WEIGHT POUNDS	PROPELLANT FLOW RATE POUNDS/SEC	THRUST POUNDS	DELTA V FT/SEC
12256.333	16403.043	761.800	225.000	17389.843	38739.843	68.750	21292.000	3525.974
12258.333	16265.543	761.800	225.000	17252.342	38602.342	68.750	21292.000	3561.435
12260.333	16128.043	761.800	225.000	17114.843	38464.843	68.750	21292.000	3597.022
12262.333	15990.543	761.800	225.000	16977.342	38327.343	68.750	21292.000	3632.738
12264.333	15853.043	761.800	225.000	16839.842	38189.843	68.750	21292.000	3668.581
12266.333	15715.543	761.800	225.000	16702.343	38052.343	68.750	21292.000	3704.555
12268.333	15578.043	761.800	225.000	16564.842	37914.842	68.750	21292.000	3740.658
12270.333	15440.543	761.800	225.000	16427.343	37777.343	68.750	21292.000	3776.893
12270.943	15398.581	761.800	225.000	16385.381	37735.381	68.750	21292.000	3787.973
FIRST SPS SHUTDOWN								
12270.943	15398.581	761.800	225.000	16385.381	37735.381	53.280	12055.313	.000
12271.630	15361.978	761.800	225.000	16348.778	37698.779	53.280	12055.313	7.065
COAST FIVE SECONDS								
12271.630	15361.978	761.800	225.000	16348.778	37698.779	.000	.000	.000
12276.630	15361.978	761.800	225.000	16348.978	37698.779	.000	.000	.000
CSM ATTITUDE ORIENTAION FOR SOLAR SOAK								
12276.630	15361.978	761.800	225.000	16348.978	37698.779	.000	.000	.000
12285.643	15361.978	761.800	225.000	16348.778	37698.779	.000	.000	.000
12290.177	15361.978	758.000	225.000	16344.978	37694.978	.000	.000	.000
12295.643	15361.978	758.000	225.000	16344.978	37694.978	.000	.000	.000
12305.643	15361.978	758.000	225.000	16344.978	37694.978	.000	.000	.000
12315.643	15361.978	758.000	225.000	16344.978	37694.978	.000	.000	.000
12318.207	15361.978	754.200	225.000	16341.178	37691.178	.000	.000	.000
12325.643	15361.978	754.200	225.000	16341.178	37691.178	.000	.000	.000
12335.643	15361.978	754.200	225.000	16341.178	37691.178	.000	.000	.000

TABLE VIII
APOLLO MISSION AS-502
SPACECRAFT OPERATIONAL TRAJECTORY
-WEIGHT AND PERFORMANCE-

TIME SECONDS	SPS PROPELLANT POUNDS	SM/RCS PROPELLANT POUNDS	CM/RCS PROPELLANT POUNDS	TOTAL PROPELLANT POUNDS	TOTAL SC WEIGHT POUNDS	PROPELLANT FLOW RATE POUNDS/SEC	THRUST POUNDS	DELTA V FT/SEC
12337.521	15361.978	754.200	225.000	14341.178	37691.178	.000	.000	.000
			START SOLAR SOAK					
12337.521	15361.978	752.900	225.000	14339.878	37689.878	.006	.000	.000
12340.643	15361.978	752.880	225.000	14339.859	37689.859	.006	.000	.000
12400.643	15361.978	752.505	225.000	14339.484	37689.484	.006	.000	.000
12460.643	15361.978	752.131	225.000	14339.109	37689.109	.006	.000	.000
12520.643	15361.978	751.756	225.000	14338.734	37688.734	.006	.000	.000
12580.643	15361.978	751.381	225.000	14338.359	37688.359	.006	.000	.000
12640.643	15361.978	751.006	225.000	14337.984	37687.984	.006	.000	.000
12700.643	15361.978	750.631	225.000	14337.609	37687.609	.006	.000	.000
12760.643	15361.978	750.256	225.000	14337.234	37687.234	.006	.000	.000
12820.643	15361.978	749.881	225.000	14336.859	37686.859	.006	.000	.000
12880.643	15361.978	749.506	225.000	14336.484	37686.484	.006	.000	.000
12940.643	15361.978	749.131	225.000	14336.109	37686.109	.006	.000	.000
13000.643	15361.978	748.756	225.000	14335.734	37685.734	.006	.000	.000
13060.643	15361.978	748.381	225.000	14335.359	37685.359	.006	.000	.000
13120.643	15361.978	748.006	225.000	14334.984	37684.984	.006	.000	.000
13180.643	15361.978	747.631	225.000	14334.609	37684.609	.006	.000	.000
13240.643	15361.978	747.256	225.000	14334.234	37684.233	.006	.000	.000
13300.643	15361.978	746.881	225.000	14333.859	37683.859	.006	.000	.000
13360.643	15361.978	746.506	225.000	14333.484	37683.484	.006	.000	.000
13420.643	15361.978	746.131	225.000	14333.109	37683.109	.006	.000	.000
13480.643	15361.978	745.756	225.000	14332.734	37682.734	.006	.000	.000
13540.643	15361.978	745.381	225.000	14332.359	37682.359	.006	.000	.000
13600.643	15361.978	745.006	225.000	14331.984	37681.984	.006	.000	.000
13660.643	15361.978	744.631	225.000	14331.609	37681.609	.006	.000	.000
13720.643	15361.978	744.256	225.000	14331.234	37681.234	.006	.000	.000
13780.643	15361.978	743.881	225.000	14330.859	37680.859	.006	.000	.000
13840.643	15361.978	743.506	225.000	14330.484	37680.484	.006	.000	.000
13900.643	15361.978	743.131	225.000	14330.109	37680.109	.006	.000	.000
13960.643	15361.978	742.756	225.000	14329.734	37679.734	.006	.000	.000
14020.643	15361.978	742.381	225.000	14329.359	37679.359	.006	.000	.000
14080.643	15361.978	742.006	225.000	14328.984	37678.984	.006	.000	.000
14140.643	15361.978	741.631	225.000	14328.609	37678.609	.006	.000	.000
14200.643	15361.978	741.256	225.000	14328.234	37678.234	.006	.000	.000
14260.643	15361.978	740.881	225.000	14327.859	37677.859	.006	.000	.000
14320.643	15361.978	740.506	225.000	14327.484	37677.484	.006	.000	.000
14380.643	15361.978	740.131	225.000	14327.109	37677.108	.006	.000	.000

TABLE VIII
APOLLO MISSION AS-502
SPACECRAFT OPERATIONAL TRAJECTORY
-WEIGHT AND PERFORMANCE-

TIME SECONDS	SPS PROPELLANT POUNDS	SM/RCS PROPELLANT POUNDS	CM/RCS PROPELLANT POUNDS	TOTAL PROPELLANT POUNDS	TOTAL SC WEIGHT POUNDS	PROPELLANT FLOW RATE POUNDS/SEC	THRUST POUNDS	DELTA V FT/SEC
14440.643	15361.978	739.756	225.000	14326.734	37676.734	.006	.000	.000
14500.643	15361.978	739.381	225.000	14326.359	37676.359	.006	.000	.000
14560.643	15361.978	739.006	225.000	14325.984	37675.984	.006	.000	.000
14620.643	15361.978	738.631	225.000	14325.609	37675.609	.006	.000	.000
14680.643	15361.978	738.256	225.000	14325.234	37675.234	.006	.000	.000
14740.643	15361.978	737.881	225.000	14324.859	37674.859	.006	.000	.000
14800.643	15361.978	737.506	225.000	14324.484	37674.484	.006	.000	.000
14860.643	15361.978	737.131	225.000	14324.109	37674.109	.006	.000	.000
14920.643	15361.978	736.756	225.000	14323.734	37673.734	.006	.000	.000
14980.643	15361.978	736.381	225.000	14323.359	37673.359	.006	.000	.000
15040.643	15361.978	736.006	225.000	14322.984	37672.984	.006	.000	.000
15100.643	15361.978	735.631	225.000	14322.609	37672.609	.006	.000	.000
15160.643	15361.978	735.256	225.000	14322.234	37672.234	.006	.000	.000
15220.643	15361.978	734.881	225.000	14321.859	37671.859	.006	.000	.000
15280.643	15361.978	734.506	225.000	14321.484	37671.484	.006	.000	.000
15340.643	15361.978	734.131	225.000	14321.109	37671.109	.006	.000	.000
15400.643	15361.978	733.756	225.000	14320.734	37670.734	.006	.000	.000
15460.643	15361.978	733.381	225.000	14320.359	37670.359	.006	.000	.000
15520.643	15361.978	733.006	225.000	14319.984	37669.984	.006	.000	.000
15580.643	15361.978	732.631	225.000	14319.609	37669.609	.006	.000	.000
15640.643	15361.978	732.256	225.000	14319.234	37669.234	.006	.000	.000
15700.643	15361.978	731.881	225.000	14318.859	37668.859	.006	.000	.000
15760.643	15361.978	731.506	225.000	14318.484	37668.484	.006	.000	.000
15820.643	15361.978	731.131	225.000	14318.109	37668.109	.006	.000	.000
15880.643	15361.978	730.756	225.000	14317.734	37667.734	.006	.000	.000
15940.643	15361.978	730.381	225.000	14317.359	37667.359	.006	.000	.000
16000.643	15361.978	730.006	225.000	14316.984	37666.984	.006	.000	.000
16060.643	15361.978	729.631	225.000	14316.609	37666.609	.006	.000	.000
16120.643	15361.978	729.256	225.000	14316.234	37666.234	.006	.000	.000
16180.643	15361.978	728.881	225.000	14315.859	37665.859	.006	.000	.000
16240.643	15361.978	728.506	225.000	14315.484	37665.484	.006	.000	.000
16300.643	15361.978	728.131	225.000	14315.109	37665.109	.006	.000	.000
16360.643	15361.978	727.756	225.000	14314.734	37664.735	.006	.000	.000
16420.643	15361.978	727.381	225.000	14314.359	37664.359	.006	.000	.000
16480.643	15361.978	727.006	225.000	14313.984	37663.984	.006	.000	.000
16540.643	15361.978	726.631	225.000	14313.609	37663.610	.006	.000	.000
16600.643	15361.978	726.256	225.000	14313.234	37663.234	.006	.000	.000
16660.643	15361.978	725.881	225.000	14312.859	37662.859	.006	.000	.000
16720.643	15361.978	725.506	225.000	14312.484	37662.484	.006	.000	.000
16780.643	15361.978	725.131	225.000	14312.109	37662.109	.006	.000	.000
16840.643	15361.978	724.756	225.000	14311.734	37661.734	.006	.000	.000
16900.643	15361.978	724.381	225.000	14311.359	37661.359	.006	.000	.000

TABLE VIII
APOLLO MISSION AS-502
SPACECRAFT OPERATIONAL TRAJECTORY
-WEIGHT AND PERFORMANCE-

TIME SECONDS	SPS PROPELLANT POUNDS	SM/RCS PROPELLANT POUNDS	CM/RCS PROPELLANT POUNDS	TOTAL PROPELLANT POUNDS	TOTAL SC WEIGHT POUNDS	PROPELLANT FLOW RATE POUNDS/SEC	THRUST POUNDS	DELTA V FT/SEC
16960.643	15361.978	724.006	225.000	16310.984	37660.985	.006	.000	.000
17020.643	15361.978	723.631	225.000	16310.609	37660.609	.006	.000	.000
17080.643	15361.978	723.256	225.000	16310.234	37660.234	.006	.000	.000
17140.643	15361.978	722.881	225.000	16309.859	37659.860	.006	.000	.000
17200.643	15361.978	722.506	225.000	16309.484	37659.484	.006	.000	.000
17260.643	15361.978	722.131	225.000	16309.109	37659.109	.006	.000	.000
17320.643	15361.978	721.756	225.000	16308.734	37658.735	.006	.000	.000
17380.643	15361.978	721.381	225.000	16308.360	37658.359	.006	.000	.000
17440.643	15361.978	721.006	225.000	16307.984	37657.984	.006	.000	.000
17500.643	15361.978	720.631	225.000	16307.610	37657.610	.006	.000	.000
17560.643	15361.978	720.256	225.000	16307.234	37657.234	.006	.000	.000
17620.643	15361.978	719.881	225.000	16306.859	37656.859	.006	.000	.000
17680.643	15361.978	719.506	225.000	16306.484	37656.485	.006	.000	.000
17740.643	15361.978	719.131	225.000	16306.109	37656.109	.006	.000	.000
17800.643	15361.978	718.756	225.000	16305.735	37655.734	.006	.000	.000
17860.643	15361.978	718.381	225.000	16305.359	37655.360	.006	.000	.000
17920.643	15361.978	718.006	225.000	16304.984	37654.984	.006	.000	.000
17980.643	15361.978	717.631	225.000	16304.609	37654.609	.006	.000	.000
18040.643	15361.978	717.256	225.000	16304.234	37654.234	.006	.000	.000
18100.643	15361.978	716.881	225.000	16303.860	37653.860	.006	.000	.000
18160.643	15361.978	716.506	225.000	16303.485	37653.484	.006	.000	.000
18220.643	15361.978	716.131	225.000	16303.110	37653.109	.006	.000	.000
18280.643	15361.978	715.756	225.000	16302.735	37652.735	.006	.000	.000
18340.643	15361.978	715.381	225.000	16302.360	37652.359	.006	.000	.000
18400.643	15361.978	715.006	225.000	16301.985	37651.984	.006	.000	.000
18460.643	15361.978	714.631	225.000	16301.610	37651.610	.006	.000	.000
18520.643	15361.978	714.256	225.000	16301.235	37651.234	.006	.000	.000
18580.643	15361.978	713.881	225.000	16300.860	37650.859	.006	.000	.000
18640.643	15361.978	713.506	225.000	16300.485	37650.485	.006	.000	.000
18700.643	15361.978	713.131	225.000	16300.110	37650.109	.006	.000	.000
18760.643	15361.978	712.756	225.000	16299.735	37649.734	.006	.000	.000
18820.643	15361.978	712.381	225.000	16299.360	37649.360	.006	.000	.000
18880.643	15361.978	712.006	225.000	16298.985	37648.984	.006	.000	.000
18940.643	15361.978	711.631	225.000	16298.610	37648.609	.006	.000	.000
19000.643	15361.978	711.256	225.000	16298.235	37648.235	.006	.000	.000
19060.643	15361.978	710.881	225.000	16297.860	37647.859	.006	.000	.000
19120.643	15361.978	710.506	225.000	16297.485	37647.484	.006	.000	.000
19180.643	15361.978	710.131	225.000	16297.110	37647.109	.006	.000	.000
19240.643	15361.978	709.756	225.000	16296.735	37646.734	.006	.000	.000
19300.643	15361.978	709.381	225.000	16296.360	37646.359	.006	.000	.000
19360.643	15361.978	709.006	225.000	16295.985	37645.984	.006	.000	.000
19420.643	15361.978	708.631	225.000	16295.610	37645.610	.006	.000	.000

TABLE VIII
APOLLO MISSION AS-502
SPACECRAFT OPERATIONAL TRAJECTORY
-WEIGHT AND PERFORMANCE-

TIME SECONDS	SPS PROPELLANT POUNDS	SM/RCS PROPELLANT POUNDS	CM/RCS PROPELLANT POUNDS	TOTAL PROPELLANT POUNDS	TOTAL SC WEIGHT POUNDS	PROPELLANT FLOW RATE POUNDS/SEC	THRUST POUNDS	DELTA V FT/SEC
19480.643	15361.978	708.256	225.000	16295.235	37645.234	.006	.000	.000
19540.643	15361.978	707.881	225.000	16294.860	37644.859	.006	.000	.000
19600.643	15361.978	707.506	225.000	16294.485	37644.485	.006	.000	.000
19660.643	15361.978	707.131	225.000	16294.110	37644.109	.006	.000	.000
19720.643	15361.978	706.756	225.000	16293.735	37643.734	.006	.000	.000
19780.643	15361.978	706.381	225.000	16293.360	37643.360	.006	.000	.000
19840.643	15361.978	706.006	225.000	16292.985	37642.984	.006	.000	.000
19900.643	15361.978	705.631	225.000	16292.610	37642.609	.006	.000	.000
19960.643	15361.978	705.256	225.000	16292.235	37642.235	.006	.000	.000
20020.643	15361.978	704.881	225.000	16291.860	37641.859	.006	.000	.000
20080.643	15361.978	704.506	225.000	16291.485	37641.485	.006	.000	.000
20140.643	15361.978	704.131	225.000	16291.110	37641.110	.006	.000	.000
20200.643	15361.978	703.756	225.000	16290.735	37640.735	.006	.000	.000
20260.643	15361.978	703.381	225.000	16290.360	37640.360	.006	.000	.000
20320.643	15361.978	703.006	225.000	16289.985	37639.984	.006	.000	.000
20380.643	15361.978	702.632	225.000	16289.610	37639.610	.006	.000	.000
20440.643	15361.978	702.257	225.000	16289.235	37639.235	.006	.000	.000
20500.643	15361.978	701.882	225.000	16288.860	37638.860	.006	.000	.000
20560.643	15361.978	701.507	225.000	16288.485	37638.485	.006	.000	.000
20620.643	15361.978	701.132	225.000	16288.110	37638.110	.006	.000	.000
20680.643	15361.978	700.757	225.000	16287.735	37637.735	.006	.000	.000
20740.643	15361.978	700.382	225.000	16287.360	37637.360	.006	.000	.000
20800.643	15361.978	700.007	225.000	16286.985	37636.985	.006	.000	.000
20860.643	15361.978	699.632	225.000	16286.610	37636.610	.006	.000	.000
20920.643	15361.978	699.257	225.000	16286.235	37636.235	.006	.000	.000
20980.643	15361.978	698.882	225.000	16285.860	37635.860	.006	.000	.000
21040.643	15361.978	698.507	225.000	16285.485	37635.485	.006	.000	.000
21100.643	15361.978	698.132	225.000	16285.110	37635.110	.006	.000	.000
21160.643	15361.978	697.757	225.000	16284.735	37634.735	.006	.000	.000
21220.643	15361.978	697.382	225.000	16284.360	37634.360	.006	.000	.000
21280.643	15361.978	697.007	225.000	16283.985	37633.985	.006	.000	.000
21340.643	15361.978	696.632	225.000	16283.610	37633.610	.006	.000	.000
21400.643	15361.978	696.257	225.000	16283.235	37633.235	.006	.000	.000
21460.643	15361.978	695.882	225.000	16282.860	37632.859	.006	.000	.000
21520.643	15361.978	695.507	225.000	16282.485	37632.485	.006	.000	.000
21580.643	15361.978	695.132	225.000	16282.110	37632.110	.006	.000	.000
21640.643	15361.978	694.757	225.000	16281.735	37631.734	.006	.000	.000
21700.643	15361.978	694.382	225.000	16281.360	37631.360	.006	.000	.000
21760.643	15361.978	694.007	225.000	16280.985	37630.985	.006	.000	.000
21820.643	15361.978	693.632	225.000	16280.610	37630.610	.006	.000	.000
21880.643	15361.978	693.257	225.000	16280.235	37630.235	.006	.000	.000
21940.643	15361.978	692.882	225.000	16279.860	37629.860	.006	.000	.000

TABLE VIII
APOLLO MISSION AS-502
SPACECRAFT OPERATIONAL TRAJECTORY
-WEIGHT AND PERFORMANCE-

TIME SECONDS	SPS PROPELLANT POUNDS	SM/RCS PROPELLANT POUNDS	CM/RCS PROPELLANT POUNDS	TOTAL PROPELLANT POUNDS	TOTAL SC WEIGHT POUNDS	PROPELLANT FLOW RATE POUNDS/SEC	THRUST POUNDS	DELTA V FT/SEC
22000.643	15361.978	692.507	225.000	16279.485	37629.485	.006	.000	.000
22060.643	15361.978	692.132	225.000	16279.110	37629.110	.006	.000	.000
22120.643	15361.978	691.757	225.000	16278.735	37628.735	.006	.000	.000
22180.643	15361.978	691.382	225.000	16278.360	37628.360	.006	.000	.000
22240.643	15361.978	691.007	225.000	16277.985	37627.985	.006	.000	.000
22300.643	15361.978	690.632	225.000	16277.610	37627.610	.006	.000	.000
22360.643	15361.978	690.257	225.000	16277.235	37627.235	.006	.000	.000
22420.643	15361.978	689.882	225.000	16276.860	37626.860	.006	.000	.000
22480.643	15361.978	689.507	225.000	16276.485	37626.485	.006	.000	.000
22540.643	15361.978	689.132	225.000	16276.110	37626.110	.006	.000	.000
22600.643	15361.978	688.757	225.000	16275.735	37625.735	.006	.000	.000
22660.643	15361.978	688.382	225.000	16275.360	37625.360	.006	.000	.000
22720.643	15361.978	688.007	225.000	16274.985	37624.985	.006	.000	.000
22780.643	15361.978	687.632	225.000	16274.610	37624.609	.006	.000	.000
22840.643	15361.978	687.257	225.000	16274.235	37624.235	.006	.000	.000
22900.643	15361.978	686.882	225.000	16273.860	37623.860	.006	.000	.000
22912.502	15361.978	686.808	225.000	16273.786	37623.785	.006	.000	.000
			APOGEE					
22912.502	15361.978	686.808	225.000	16273.786	37623.785	.006	.000	.000
22960.643	15361.978	686.507	225.000	16273.485	37623.485	.006	.000	.000
23020.643	15361.978	686.132	225.000	16273.110	37623.110	.006	.000	.000
23080.643	15361.978	685.757	225.000	16272.735	37622.735	.006	.000	.000
23140.643	15361.978	685.382	225.000	16272.360	37622.360	.006	.000	.000
23200.643	15361.978	685.007	225.000	16271.985	37621.985	.006	.000	.000
23260.643	15361.978	684.632	225.000	16271.610	37621.610	.006	.000	.000
23320.643	15361.978	684.257	225.000	16271.235	37621.235	.006	.000	.000
23380.643	15361.978	683.882	225.000	16270.860	37620.860	.006	.000	.000
23440.643	15361.978	683.507	225.000	16270.485	37620.485	.006	.000	.000
23500.643	15361.978	683.132	225.000	16270.110	37620.110	.006	.000	.000
23560.643	15361.978	682.757	225.000	16269.735	37619.735	.006	.000	.000
23620.643	15361.978	682.382	225.000	16269.360	37619.360	.006	.000	.000
23680.643	15361.978	682.007	225.000	16268.985	37618.985	.006	.000	.000
23740.643	15361.978	681.632	225.000	16268.610	37618.610	.006	.000	.000
23800.643	15361.978	681.257	225.000	16268.235	37618.235	.006	.000	.000
23860.643	15361.978	680.882	225.000	16267.860	37617.860	.006	.000	.000
23920.643	15361.978	680.507	225.000	16267.485	37617.485	.006	.000	.000
23980.643	15361.978	680.132	225.000	16267.110	37617.110	.006	.000	.000
24040.643	15361.978	679.757	225.000	16266.735	37616.735	.006	.000	.000

TABLE VIII
APOLLO MISSION AS-502
SPACECRAFT OPERATIONAL TRAJECTORY
-WEIGHT AND PERFORMANCE-

TIME SECONDS	SPS PROPELLANT POUNDS	SM/RCS PROPELLANT POUNDS	CM/RCS PROPELLANT POUNDS	TOTAL PROPELLANT POUNDS	TOTAL SC WEIGHT POUNDS	PROPELLANT FLOW RATE POUNDS/SEC	THRUST POUNDS	DELTA V FT/SEC
24100.643	15361.978	679.382	225.000	14266.360	37616.360	.006	.000	.000
24160.643	15361.978	679.007	225.000	14265.985	37615.985	.006	.000	.000
24220.643	15361.978	678.632	225.000	14265.610	37615.611	.006	.000	.000
24280.643	15361.978	678.257	225.000	14265.235	37615.235	.006	.000	.000
24340.643	15361.978	677.882	225.000	14264.860	37614.860	.006	.000	.000
24400.643	15361.978	677.507	225.000	14264.485	37614.486	.006	.000	.000
24460.643	15361.978	677.132	225.000	14264.110	37614.110	.006	.000	.000
24520.643	15361.978	676.757	225.000	14263.735	37613.735	.006	.000	.000
24580.643	15361.978	676.382	225.000	14263.360	37613.361	.006	.000	.000
24640.643	15361.978	676.007	225.000	14262.985	37612.985	.006	.000	.000
24700.643	15361.978	675.632	225.000	14262.610	37612.610	.006	.000	.000
24760.643	15361.978	675.257	225.000	14262.235	37612.236	.006	.000	.000
24820.643	15361.978	674.882	225.000	14261.860	37611.860	.006	.000	.000
24880.643	15361.978	674.507	225.000	14261.485	37611.485	.006	.000	.000
24940.643	15361.978	674.132	225.000	14261.110	37611.111	.006	.000	.000
25000.643	15361.978	673.757	225.000	14260.735	37610.735	.006	.000	.000
25060.643	15361.978	673.382	225.000	14260.360	37610.360	.006	.000	.000
25120.644	15361.978	673.007	225.000	14259.985	37609.985	.006	.000	.000
25180.643	15361.978	672.632	225.000	14259.611	37609.610	.006	.000	.000
25240.643	15361.978	672.257	225.000	14259.235	37609.235	.006	.000	.000
25300.643	15361.978	671.882	225.000	14258.860	37608.860	.006	.000	.000
25360.643	15361.978	671.507	225.000	14258.485	37608.486	.006	.000	.000
25420.643	15361.978	671.132	225.000	14258.110	37608.110	.006	.000	.000
25480.643	15361.978	670.757	225.000	14257.735	37607.735	.006	.000	.000
25540.643	15361.978	670.382	225.000	14257.360	37607.361	.006	.000	.000
25600.643	15361.978	670.007	225.000	14256.985	37606.985	.006	.000	.000
25660.643	15361.978	669.632	225.000	14256.610	37606.610	.006	.000	.000
25720.643	15361.978	669.257	225.000	14256.235	37606.236	.006	.000	.000
25780.644	15361.978	668.882	225.000	14255.860	37605.860	.006	.000	.000
25840.643	15361.978	668.507	225.000	14255.486	37605.485	.006	.000	.000
25900.643	15361.978	668.132	225.000	14255.111	37605.111	.006	.000	.000
25960.643	15361.978	667.757	225.000	14254.736	37604.735	.006	.000	.000
26020.643	15361.978	667.382	225.000	14254.361	37604.360	.006	.000	.000
26080.643	15361.978	667.007	225.000	14253.986	37603.986	.006	.000	.000
26140.643	15361.978	666.632	225.000	14253.611	37603.610	.006	.000	.000
26200.643	15361.978	666.257	225.000	14253.235	37603.235	.006	.000	.000
26260.643	15361.978	665.882	225.000	14252.861	37602.860	.006	.000	.000
26320.643	15361.978	665.507	225.000	14252.486	37602.485	.006	.000	.000
26380.643	15361.978	665.132	225.000	14252.111	37602.110	.006	.000	.000
26440.644	15361.978	664.757	225.000	14251.736	37601.735	.006	.000	.000
26500.643	15361.978	664.382	225.000	14251.361	37601.361	.006	.000	.000
26560.643	15361.978	664.007	225.000	14250.986	37600.985	.006	.000	.000

TABLE VIII
APOLLO MISSION AS-502
SPACECRAFT OPERATIONAL TRAJECTORY
-WEIGHT AND PERFORMANCE-

TIME SECONDS	SPS PROPELLANT POUNDS	SM/RCS PROPELLANT POUNDS	CM/RCS PROPELLANT POUNDS	TOTAL PROPELLANT POUNDS	TOTAL SC WEIGHT POUNDS	PROPELLANT FLOW RATE POUNDS/SEC	THRUST POUNDS	DELTA V FT/SEC
26620.643	15361.978	663.632	225.000	16250.611	37600.610	.006	.000	.000
26680.643	15361.978	663.257	225.000	16250.236	37600.236	.006	.000	.000
26740.643	15361.978	662.882	225.000	16249.861	37599.860	.006	.000	.000
26800.643	15361.978	662.507	225.000	16249.486	37599.485	.006	.000	.000
26860.643	15361.978	662.132	225.000	16249.111	37599.111	.006	.000	.000
26920.643	15361.978	661.757	225.000	16248.736	37598.735	.006	.000	.000
26980.643	15361.978	661.382	225.000	16248.361	37598.360	.006	.000	.000
27040.643	15361.978	661.007	225.000	16247.986	37597.986	.006	.000	.000
27100.644	15361.978	660.632	225.000	16247.611	37597.610	.006	.000	.000
27160.643	15361.978	660.257	225.000	16247.236	37597.235	.006	.000	.000
27220.643	15361.978	659.882	225.000	16246.861	37596.861	.006	.000	.000
27280.643	15361.978	659.507	225.000	16246.486	37596.485	.006	.000	.000
27340.643	15361.978	659.132	225.000	16246.111	37596.110	.006	.000	.000
27400.643	15361.978	658.757	225.000	16245.736	37595.735	.006	.000	.000
27460.643	15361.978	658.382	225.000	16245.361	37595.360	.006	.000	.000
27520.643	15361.978	658.007	225.000	16244.986	37594.985	.006	.000	.000
27580.643	15361.978	657.632	225.000	16244.611	37594.610	.006	.000	.000
27640.643	15361.978	657.257	225.000	16244.236	37594.235	.006	.000	.000
27700.643	15361.978	656.882	225.000	16243.861	37593.860	.006	.000	.000
27760.644	15361.978	656.507	225.000	16243.486	37593.486	.006	.000	.000
27820.643	15361.978	656.132	225.000	16243.111	37593.111	.006	.000	.000
27880.643	15361.978	655.757	225.000	16242.736	37592.736	.006	.000	.000
27940.643	15361.978	655.382	225.000	16242.361	37592.361	.006	.000	.000
28000.643	15361.978	655.007	225.000	16241.986	37591.986	.006	.000	.000
28060.643	15361.978	654.632	225.000	16241.611	37591.611	.006	.000	.000
28120.643	15361.978	654.257	225.000	16241.236	37591.236	.006	.000	.000
28180.643	15361.978	653.882	225.000	16240.861	37590.861	.006	.000	.000
28240.643	15361.978	653.508	225.000	16240.486	37590.486	.006	.000	.000
28300.643	15361.978	653.133	225.000	16240.111	37590.111	.006	.000	.000
28360.643	15361.978	652.758	225.000	16239.736	37589.736	.006	.000	.000
28420.644	15361.978	652.383	225.000	16239.361	37589.361	.006	.000	.000
28480.643	15361.978	652.008	225.000	16238.986	37588.986	.006	.000	.000
28540.643	15361.978	651.633	225.000	16238.611	37588.611	.006	.000	.000
28600.643	15361.978	651.258	225.000	16238.236	37588.236	.006	.000	.000
28660.643	15361.978	650.883	225.000	16237.861	37587.861	.006	.000	.000
28720.643	15361.978	650.508	225.000	16237.486	37587.485	.006	.000	.000
28780.643	15361.978	650.133	225.000	16237.111	37587.111	.006	.000	.000
28840.643	15361.978	649.758	225.000	16236.736	37586.736	.006	.000	.000
28900.643	15361.978	649.383	225.000	16236.361	37586.361	.006	.000	.000
28960.643	15361.978	649.008	225.000	16235.986	37585.986	.006	.000	.000
29020.643	15361.978	648.633	225.000	16235.611	37585.611	.006	.000	.000
29080.644	15361.978	648.258	225.000	16235.236	37585.236	.006	.000	.000

TABLE VIII
APOLLO MISSION AS-502
SPACECRAFT OPERATIONAL TRAJECTORY
-WEIGHT AND PERFORMANCE-

TIME SECONDS	SPS PROPELLANT POUNDS	SM/RCS PROPELLANT POUNDS	CM/RCS PROPELLANT POUNDS	TOTAL PROPELLANT POUNDS	TOTAL SC WEIGHT POUNDS	PROPELLANT FLOW RATE POUNDS/SEC	THRUST POUNDS	DELTA V FT/SEC
29140.643	15361.978	647.883	225.000	16234.861	37584.861	.006	.000	.000
29200.643	15361.978	647.508	225.000	16234.486	37584.486	.006	.000	.000
29260.643	15361.978	647.133	225.000	16234.111	37584.111	.006	.000	.000
29320.643	15361.978	646.758	225.000	16233.736	37583.736	.006	.000	.000
29380.643	15361.978	646.383	225.000	16233.361	37583.361	.006	.000	.000
29440.643	15361.978	646.008	225.000	16232.986	37582.986	.006	.000	.000
29500.643	15361.978	645.633	225.000	16232.611	37582.611	.006	.000	.000
29560.643	15361.978	645.258	225.000	16232.236	37582.236	.006	.000	.000
29620.643	15361.978	644.883	225.000	16231.861	37581.861	.006	.000	.000
29680.643	15361.978	644.508	225.000	16231.486	37581.486	.006	.000	.000
29740.644	15361.978	644.133	225.000	16231.111	37581.111	.006	.000	.000
29800.643	15361.978	643.758	225.000	16230.736	37580.736	.006	.000	.000
29860.643	15361.978	643.383	225.000	16230.361	37580.360	.006	.000	.000
29920.644	15361.978	643.008	225.000	16229.986	37579.986	.006	.000	.000
29980.643	15361.978	642.633	225.000	16229.611	37579.611	.006	.000	.000
30040.643	15361.978	642.258	225.000	16229.236	37579.235	.006	.000	.000
30100.643	15361.978	641.883	225.000	16228.861	37578.861	.006	.000	.000
30160.643	15361.978	641.508	225.000	16228.486	37578.486	.006	.000	.000
30220.643	15361.978	641.133	225.000	16228.111	37578.111	.006	.000	.000
30280.643	15361.978	640.758	225.000	16227.736	37577.736	.006	.000	.000
30340.643	15361.978	640.383	225.000	16227.361	37577.361	.006	.000	.000
30400.643	15361.978	640.008	225.000	16226.986	37576.986	.006	.000	.000
30460.643	15361.978	639.633	225.000	16226.611	37576.611	.006	.000	.000
30520.643	15361.978	639.258	225.000	16226.236	37576.236	.006	.000	.000
30580.644	15361.978	638.883	225.000	16225.861	37575.861	.006	.000	.000
30640.643	15361.978	638.508	225.000	16225.486	37575.486	.006	.000	.000
30700.643	15361.978	638.133	225.000	16225.111	37575.111	.006	.000	.000
30760.643	15361.978	637.758	225.000	16224.736	37574.736	.006	.000	.000
30820.643	15361.978	637.383	225.000	16224.361	37574.361	.006	.000	.000
30880.643	15361.978	637.008	225.000	16223.986	37573.986	.006	.000	.000
30940.643	15361.978	636.633	225.000	16223.611	37573.611	.006	.000	.000
31000.643	15361.978	636.258	225.000	16223.236	37573.235	.006	.000	.000
31060.643	15361.978	635.883	225.000	16222.861	37572.861	.006	.000	.000
31120.643	15361.978	635.508	225.000	16222.486	37572.486	.006	.000	.000
31180.643	15361.978	635.133	225.000	16222.111	37572.110	.006	.000	.000
31240.644	15361.978	634.758	225.000	16221.736	37571.736	.006	.000	.000
31300.643	15361.978	634.383	225.000	16221.361	37571.361	.006	.000	.000
31360.643	15361.978	634.008	225.000	16220.986	37570.986	.006	.000	.000
31420.643	15361.978	633.633	225.000	16220.611	37570.611	.006	.000	.000
31480.643	15361.978	633.258	225.000	16220.236	37570.236	.006	.000	.000
31540.643	15361.978	632.883	225.000	16219.861	37569.861	.006	.000	.000
31600.643	15361.978	632.508	225.000	16219.486	37569.486	.006	.000	.000

TABLE VIII
APOLLO MISSION AS-502
SPACECRAFT OPERATIONAL TRAJECTORY
-WEIGHT AND PERFORMANCE-

TIME SECONDS	SPS PROPELLANT POUNDS	SM/RCS PROPELLANT POUNDS	CM/RCS PROPELLANT POUNDS	TOTAL PROPELLANT POUNDS	TOTAL SC WEIGHT POUNDS	PROPELLANT FLOW RATE POUNDS/SEC	THRUST POUNDS	DELTA V FT/SEC
31660.643	15361.978	632.133	225.000	16219.111	37569.112	.006	.000	.000
31720.643	15361.978	631.758	225.000	16218.736	37568.736	.006	.000	.000
31780.643	15361.978	631.383	225.000	16218.361	37568.361	.006	.000	.000
31840.643	15361.978	631.008	225.000	16217.986	37567.987	.006	.000	.000
31900.644	15361.978	630.633	225.000	16217.611	37567.611	.006	.000	.000
31960.643	15361.978	630.258	225.000	16217.236	37567.236	.006	.000	.000
32020.643	15361.978	629.883	225.000	16216.861	37566.862	.006	.000	.000
32080.643	15361.978	629.508	225.000	16216.486	37566.486	.006	.000	.000
32140.643	15361.978	629.133	225.000	16216.111	37566.111	.006	.000	.000
32200.643	15361.978	628.758	225.000	16215.736	37565.736	.006	.000	.000
32260.643	15361.978	628.383	225.000	16215.361	37565.361	.006	.000	.000
32320.643	15361.978	628.008	225.000	16214.986	37564.986	.006	.000	.000
32380.643	15361.978	627.633	225.000	16214.611	37564.611	.006	.000	.000
32440.643	15361.978	627.258	225.000	16214.236	37564.236	.006	.000	.000
32500.643	15361.978	626.883	225.000	16213.861	37563.861	.006	.000	.000
32560.644	15361.978	626.508	225.000	16213.486	37563.486	.006	.000	.000
32620.643	15361.978	626.133	225.000	16213.111	37563.112	.006	.000	.000
32680.643	15361.978	625.758	225.000	16212.736	37562.736	.006	.000	.000
32740.643	15361.978	625.383	225.000	16212.361	37562.361	.006	.000	.000
32800.643	15361.978	625.008	225.000	16211.986	37561.987	.006	.000	.000
32860.643	15361.978	624.633	225.000	16211.611	37561.611	.006	.000	.000
32866.102	15361.978	624.599	225.000	16211.577	37561.577	.006	.000	.000
CSM ATTITUDE ORIENTATION FOR SECOND SPS BURN								
32866.102	15361.978	624.599	225.000	16211.577	37561.577	.000	.000	.000
32874.643	15361.978	624.599	225.000	16211.577	37561.577	.000	.000	.000
32880.029	15361.978	620.795	225.000	16207.773	37557.773	.000	.000	.000
32888.643	15361.978	620.795	225.000	16207.773	37557.773	.000	.000	.000
32898.643	15361.978	620.795	225.000	16207.773	37557.773	.000	.000	.000
32906.184	15361.978	616.995	225.000	16203.973	37553.973	.000	.000	.000
32914.643	15361.978	616.995	225.000	16203.973	37553.973	.000	.000	.000
32924.643	15361.978	616.995	225.000	16203.973	37553.973	.000	.000	.000
32925.220	15361.978	616.995	225.000	16203.973	37553.973	.000	.000	.000
COAST TO +X TRANSLATION								
32925.220	15361.978	615.695	225.000	16202.673	37552.673	.000	.000	.000

TABLE VIII
APOLLO MISSION AS-502
SPACECRAFT OPERATIONAL TRAJECTORY
-WEIGHT AND PERFORMANCE-

TIME SECONDS	SPS PROPELLANT POUNDS	SM/RCS PROPELLANT POUNDS	CM/RCS PROPELLANT POUNDS	TOTAL PROPELLANT POUNDS	TOTAL SC WEIGHT POUNDS	PROPELLANT FLOW RATE POUNDS/SEC	THRUST POUNDS	DELTA V FT/SEC
32946.643	15361.978	615.695	225.000	14202.673	37552.673	.000	.000	.000
32971.643	15361.978	615.695	225.000	14202.673	37552.673	.000	.000	.000
32996.643	15361.978	615.695	225.000	14202.673	37552.673	.000	.000	.000
33021.643	15361.978	615.695	225.000	14202.673	37552.673	.000	.000	.000
33046.643	15361.978	615.695	225.000	14202.673	37552.673	.000	.000	.000
33071.643	15361.978	615.695	225.000	14202.673	37552.673	.000	.000	.000
33096.643	15361.978	615.695	225.000	14202.673	37552.673	.000	.000	.000
33121.643	15361.978	615.695	225.000	14202.673	37552.673	.000	.000	.000
33146.643	15361.978	615.695	225.000	14202.673	37552.673	.000	.000	.000
33171.643	15361.978	615.695	225.000	14202.673	37552.673	.000	.000	.000
33196.643	15361.978	615.695	225.000	14202.673	37552.673	.000	.000	.000
33221.643	15361.978	615.695	225.000	14202.673	37552.673	.000	.000	.000
33246.643	15361.978	615.695	225.000	14202.673	37552.673	.000	.000	.000
33271.643	15361.978	615.695	225.000	14202.673	37552.673	.000	.000	.000
33296.643	15361.978	615.695	225.000	14202.673	37552.673	.000	.000	.000
33321.643	15361.978	615.695	225.000	14202.673	37552.673	.000	.000	.000
33346.643	15361.978	615.695	225.000	14202.673	37552.673	.000	.000	.000
33371.643	15361.978	615.695	225.000	14202.673	37552.673	.000	.000	.000
33396.643	15361.978	615.695	225.000	14202.673	37552.673	.000	.000	.000
33421.643	15361.978	615.695	225.000	14202.673	37552.673	.000	.000	.000
33446.643	15361.978	615.695	225.000	14202.673	37552.673	.000	.000	.000
33471.643	15361.978	615.695	225.000	14202.673	37552.673	.000	.000	.000
33496.643	15361.978	615.695	225.000	14202.673	37552.673	.000	.000	.000
33521.643	15361.978	615.695	225.000	14202.673	37552.673	.000	.000	.000
33546.643	15361.978	615.695	225.000	14202.673	37552.673	.000	.000	.000
33571.643	15361.978	615.695	225.000	14202.673	37552.673	.000	.000	.000
33596.643	15361.978	615.695	225.000	14202.673	37552.673	.000	.000	.000
33621.643	15361.978	615.695	225.000	14202.673	37552.673	.000	.000	.000
33646.643	15361.978	615.695	225.000	14202.673	37552.673	.000	.000	.000
33671.643	15361.978	615.695	225.000	14202.673	37552.673	.000	.000	.000
33696.643	15361.978	615.695	225.000	14202.673	37552.673	.000	.000	.000
33703.841	15361.978	615.695	225.000	14202.673	37552.673	.000	.000	.000
			+X TRANSLATION					
33703.841	15361.978	615.695	225.000	14202.673	37552.673	1.440	398.800	.000
33726.643	15361.978	582.859	225.000	14169.837	37519.837	1.440	398.800	7.795

TABLE VIII
APOLLO MISSION AS-502
SPACECRAFT OPERATIONAL TRAJECTORY
-WEIGHT AND PERFORMANCE-

TIME SECONDS	SPS PROPELLANT POUNDS	SM/RCS PROPELLANT POUNDS	CM/RCS PROPELLANT POUNDS	TOTAL PROPELLANT POUNDS	TOTAL SC WEIGHT POUNDS	PROPELLANT FLOW RATE POUNDS/SEC	THRUST POUNDS	DELTA V FT/SEC
33733.840	15361.978	572.495	225.000	16159.474	37509.473	1.440	398.800	10.267
			SECOND SPS IGNITION					
33733.840	15361.978	572.495	225.000	16159.474	37509.473	38.400	600.000	.000
33734.215	15347.579	572.495	225.000	16145.074	37495.074	38.400	600.000	.193
			SECOND SPS BURN					
33734.215	15347.579	572.495	225.000	16145.074	37495.074	68.750	21292.000	.000
33735.234	15277.553	572.495	225.000	16075.048	37425.048	68.750	21292.000	18.644
33737.234	15140.053	572.495	225.000	15937.548	37287.547	68.750	21292.000	55.364
33739.234	15002.553	572.495	225.000	15800.048	37150.048	68.750	21292.000	92.200
33741.233	14865.053	572.495	225.000	15662.548	37012.548	68.750	21292.000	129.183
33743.234	14727.553	572.495	225.000	15525.048	36875.048	68.750	21292.000	166.304
33745.234	14590.053	572.495	225.000	15387.548	36737.548	68.750	21292.000	203.563
33747.233	14452.553	572.495	225.000	15250.048	36600.048	68.750	21292.000	240.962
33749.234	14315.053	572.495	225.000	15112.548	36462.548	68.750	21292.000	278.502
33751.234	14177.553	572.495	225.000	14975.048	36325.048	68.750	21292.000	316.185
33753.234	14040.053	572.495	225.000	14837.548	36187.547	68.750	21292.000	354.010
33755.234	13902.553	572.495	225.000	14700.048	36050.048	68.750	21292.000	391.979
33757.234	13765.053	572.495	225.000	14562.548	35912.548	68.750	21292.000	430.094
33759.234	13627.553	572.495	225.000	14425.048	35775.048	68.750	21292.000	468.354
33761.234	13490.053	572.495	225.000	14287.548	35637.548	68.750	21292.000	506.763
33763.234	13352.553	572.495	225.000	14150.048	35500.048	68.750	21292.000	545.320
33765.234	13215.053	572.495	225.000	14012.548	35362.548	68.750	21292.000	584.027
33767.234	13077.553	572.495	225.000	13875.048	35225.048	68.750	21292.000	622.884
33769.234	12940.053	572.495	225.000	13737.548	35087.547	68.750	21292.000	661.894
33771.234	12802.553	572.495	225.000	13600.048	34950.048	68.750	21292.000	701.057
33773.234	12665.053	572.495	225.000	13462.548	34812.548	68.750	21292.000	740.375
33775.233	12527.553	572.495	225.000	13325.048	34675.048	68.750	21292.000	779.849
33777.234	12390.053	572.495	225.000	13187.548	34537.548	68.750	21292.000	819.479
33779.234	12252.553	572.495	225.000	13050.048	34400.048	68.750	21292.000	859.268
33781.234	12115.053	572.495	225.000	12912.548	34262.548	68.750	21292.000	899.216
33783.234	11977.553	572.495	225.000	12775.048	34125.048	68.750	21292.000	939.325
33785.234	11840.053	572.495	225.000	12637.548	33987.547	68.750	21292.000	979.596
33787.234	11702.553	572.495	225.000	12500.048	33850.048	68.750	21292.000	1020.031
33789.234	11565.053	572.495	225.000	12362.548	33712.548	68.750	21292.000	1060.630

TABLE VIII
APOLLO MISSION AS-502
SPACECRAFT OPERATIONAL TRAJECTORY
-WEIGHT AND PERFORMANCE-

TIME SECONDS	SPS PROPELLANT POUNDS	SM/RCS PROPELLANT POUNDS	CM/RCS PROPELLANT POUNDS	TOTAL PROPELLANT POUNDS	TOTAL SC WEIGHT POUNDS	PROPELLANT FLOW RATE POUNDS/SEC	THRUST POUNDS	DELTA V FT/SEC
33791.234	11427.553	572.495	225.000	12225.048	33575.048	68.750	21292.000	1101.395
33793.234	11290.053	572.495	225.000	12087.548	33437.548	68.750	21292.000	1142.328
33795.234	11152.553	572.495	225.000	11950.048	33300.048	68.750	21292.000	1183.430
33797.234	11015.053	572.495	225.000	11812.548	33162.548	68.750	21292.000	1224.702
33799.234	10877.553	572.495	225.000	11675.048	33025.048	68.750	21292.000	1266.145
33801.234	10740.053	572.495	225.000	11537.548	32887.547	68.750	21292.000	1307.762
33803.234	10602.553	572.495	225.000	11400.048	32750.048	68.750	21292.000	1349.553
33805.234	10465.053	572.495	225.000	11262.548	32612.548	68.750	21292.000	1391.520
33807.234	10327.553	572.495	225.000	11125.048	32475.048	68.750	21292.000	1433.665
33809.233	10190.053	572.495	225.000	10987.548	32337.548	68.750	21292.000	1475.989
33811.234	10052.553	572.495	225.000	10850.048	32200.048	68.750	21292.000	1518.493
33813.234	9915.053	572.495	225.000	10712.548	32062.548	68.750	21292.000	1561.179
33815.234	9777.553	572.495	225.000	10575.048	31925.048	68.750	21292.000	1604.049
33817.234	9640.053	572.495	225.000	10437.548	31787.548	68.750	21292.000	1647.105
33819.234	9502.553	572.495	225.000	10300.048	31650.048	68.750	21292.000	1690.347
33821.234	9365.053	572.495	225.000	10162.548	31512.548	68.750	21292.000	1733.777
33823.234	9227.553	572.495	225.000	10025.048	31375.048	68.750	21292.000	1777.398
33825.234	9090.053	572.495	225.000	9887.548	31237.548	68.750	21292.000	1821.211
33827.234	8952.553	572.495	225.000	9750.048	31100.048	68.750	21292.000	1865.216
33829.234	8815.053	572.495	225.000	9612.548	30962.548	68.750	21292.000	1909.418
33831.234	8677.553	572.495	225.000	9475.048	30825.048	68.750	21292.000	1953.816
33833.234	8540.053	572.495	225.000	9337.548	30687.548	68.750	21292.000	1998.413
33835.234	8402.553	572.495	225.000	9200.048	30550.048	68.750	21292.000	2043.210
33837.233	8265.053	572.495	225.000	9062.548	30412.548	68.750	21292.000	2088.210
33839.234	8127.553	572.495	225.000	8925.048	30275.048	68.750	21292.000	2133.413
33841.234	7990.053	572.495	225.000	8787.548	30137.548	68.750	21292.000	2178.823
33843.234	7852.553	572.495	225.000	8650.048	30000.048	68.750	21292.000	2224.441
33845.234	7715.053	572.495	225.000	8512.548	29862.548	68.750	21292.000	2270.268
33847.234	7577.553	572.495	225.000	8375.048	29725.048	68.750	21292.000	2316.308
33849.234	7440.053	572.495	225.000	8237.548	29587.548	68.750	21292.000	2362.561
33851.234	7302.553	572.495	225.000	8100.048	29450.048	68.750	21292.000	2409.029
33853.234	7165.053	572.495	225.000	7962.548	29312.548	68.750	21292.000	2455.716
33855.234	7027.553	572.495	225.000	7825.048	29175.048	68.750	21292.000	2502.622
33857.234	6890.053	572.495	225.000	7687.548	29037.548	68.750	21292.000	2549.750
33859.234	6752.553	572.495	225.000	7550.048	28900.048	68.750	21292.000	2597.102
33861.234	6615.053	572.495	225.000	7412.548	28762.548	68.750	21292.000	2644.680
33863.234	6477.553	572.495	225.000	7275.048	28625.048	68.750	21292.000	2692.486
33865.234	6340.053	572.495	225.000	7137.548	28487.548	68.750	21292.000	2740.523
33867.234	6202.553	572.495	225.000	7000.048	28350.048	68.750	21292.000	2788.792
33869.234	6065.053	572.495	225.000	6862.548	28212.548	68.750	21292.000	2837.297
33871.233	5927.553	572.495	225.000	6725.048	28075.048	68.750	21292.000	2886.038
33873.234	5790.053	572.495	225.000	6587.548	27937.548	68.750	21292.000	2935.020

TABLE VIII
APOLLO MISSION AS-502
SPACECRAFT OPERATIONAL TRAJECTORY
-WEIGHT AND PERFORMANCE-

TIME SECONDS	SPS PROPELLANT POUNDS	SM/RCS PROPELLANT POUNDS	CM/RCS PROPELLANT POUNDS	TOTAL PROPELLANT POUNDS	TOTAL SC WEIGHT POUNDS	PROPELLANT FLOW RATE POUNDS/SEC	THRUST POUNDS	DELTA V FT/SEC
33875.234	5652.553	572.495	225.000	6450.048	27800.048	68.750	21292.000	2989.243
33877.234	5515.053	572.495	225.000	6312.548	27662.548	68.750	21292.000	3033.710
33879.234	5377.553	572.495	225.000	6175.048	27525.048	68.750	21292.000	3083.425
33881.234	5240.053	572.495	225.000	6037.548	27387.548	68.750	21292.000	3133.389
33883.234	5102.553	572.495	225.000	5900.048	27250.048	68.750	21292.000	3183.604
33885.234	4965.053	572.495	225.000	5762.548	27112.548	68.750	21292.000	3234.074
33887.234	4827.553	572.495	225.000	5625.048	26975.048	68.750	21292.000	3284.801
33889.234	4690.053	572.495	225.000	5487.548	26837.548	68.750	21292.000	3335.787
33891.234	4552.553	572.495	225.000	5350.048	26700.048	68.750	21292.000	3387.036
33893.234	4415.053	572.495	225.000	5212.548	26562.548	68.750	21292.000	3438.549
33895.234	4277.553	572.495	225.000	5075.048	26425.048	68.750	21292.000	3490.330
33897.234	4140.053	572.495	225.000	4937.548	26287.548	68.750	21292.000	3542.382
33899.233	4002.553	572.495	225.000	4800.048	26150.048	68.750	21292.000	3594.707
33901.234	3865.053	572.495	225.000	4662.548	26012.548	68.750	21292.000	3647.308
33903.234	3727.553	572.495	225.000	4525.048	25875.048	68.750	21292.000	3700.189
33905.233	3590.053	572.495	225.000	4387.548	25737.548	68.750	21292.000	3753.351
33907.234	3452.553	572.495	225.000	4250.048	25600.048	68.750	21292.000	3806.799
33909.234	3315.053	572.495	225.000	4112.548	25462.548	68.750	21292.000	3860.535
33911.234	3177.553	572.495	225.000	3975.048	25325.048	68.750	21292.000	3914.562
33913.234	3040.053	572.495	225.000	3837.548	25187.548	68.750	21292.000	3968.884
33915.234	2902.553	572.495	225.000	3700.048	25050.048	68.750	21292.000	4023.504
33917.234	2765.053	572.495	225.000	3562.548	24912.548	68.750	21292.000	4078.424
33919.234	2627.553	572.495	225.000	3425.048	24775.048	68.750	21292.000	4133.649
33921.234	2490.053	572.495	225.000	3287.548	24637.548	68.750	21292.000	4189.182
33922.325	2415.026	572.495	225.000	3212.521	24562.521	68.750	21292.000	4219.635
			SECOND SPS SHUTDOWN					
33922.325	2415.026	572.495	225.000	3212.521	24562.521	53.280	12055.313	.000
33923.012	2378.422	572.495	225.000	3175.917	24525.917	53.280	12055.313	10.857
			HOLD INERTIAL ATTITUDE					
33923.012	2378.422	572.495	225.000	3175.917	24525.917	.000	.000	.000
33932.023	2378.422	572.495	225.000	3175.917	24525.917	.000	.000	.000
33942.023	2378.422	572.495	225.000	3175.917	24525.917	.000	.000	.000
33952.023	2378.422	572.495	225.000	3175.917	24525.917	.000	.000	.000

TABLE VIII
APOLLO MISSION AS-502
SPACECRAFT OPERATIONAL TRAJECTORY
-WEIGHT AND PERFORMANCE-

TIME SECONDS	SPS PROPELLANT POUNDS	SM/RCS PROPELLANT POUNDS	CM/RCS PROPELLANT POUNDS	TOTAL PROPELLANT POUNDS	TOTAL SC WEIGHT POUNDS	PROPELLANT FLOW RATE POUNDS/SEC	THRUST POUNDS	DELTA V FT/SEC
33959.022	2378.422	572.495	225.000	3175.917	24525.917	.000	.000	.000
CSM ATTITUDE ORIENTATION FOR CM/SM SEPERATION								
33959.022	2378.422	572.495	225.000	3175.917	24525.917	.000	.000	.000
33959.109	2378.422	568.696	225.000	3172.118	24522.118	.000	.000	.000
33969.109	2378.422	568.696	225.000	3172.118	24522.118	.000	.000	.000
33976.606	2378.422	564.896	225.000	3168.318	24518.318	.000	.000	.000
33976.696	2378.422	564.896	225.000	3168.318	24518.318	.000	.000	.000
33976.797	2378.422	564.896	225.000	3168.318	24518.318	.000	.000	.000
33976.814	2378.422	564.896	225.000	3168.318	24518.318	.000	.000	.000
COAST TO CM/SM SEPARATION								
33976.814	2378.422	563.596	225.000	3167.018	24517.018	.000	.000	.000
33981.816	2378.422	563.596	225.000	3167.018	24517.018	.000	.000	.000
33991.817	2378.422	563.596	225.000	3167.018	24517.018	.000	.000	.000
34001.817	2378.422	563.596	225.000	3167.018	24517.018	.000	.000	.000
34011.817	2378.422	563.596	225.000	3167.018	24517.018	.000	.000	.000
34021.817	2378.422	563.596	225.000	3167.018	24517.018	.000	.000	.000
34031.817	2378.422	563.596	225.000	3167.018	24517.018	.000	.000	.000
34041.817	2378.422	563.596	225.000	3167.018	24517.018	.000	.000	.001
34051.817	2378.422	563.596	225.000	3167.018	24517.018	.000	.000	.001
34061.817	2378.422	563.596	225.000	3167.018	24517.018	.000	.000	.001
34071.817	2378.422	563.596	225.000	3167.018	24517.018	.000	.000	.002
34073.976	2378.422	563.596	225.000	3167.018	24517.018	.000	.000	.002
CM/SM SEPARATION AND FIVE SECOND COAST								
34073.976	.000	.000	225.000	225.000	12481.000	.000	.000	.000
34078.976	.000	.000	225.000	225.000	12481.000	.000	.000	.001
CM ATTITUDE ORIENTATION FOR ENTRY								

TABLE VIII
APOLLO MISSION AS-502
SPACECRAFT OPERATIONAL TRAJECTORY
-WEIGHT AND PERFORMANCE-

TIME SECONDS	SPS PROPELLANT POUNDS	SM/RCS PROPELLANT POUNDS	CM/RCS PROPELLANT POUNDS	TOTAL PROPELLANT POUNDS	TOTAL SC WEIGHT POUNDS	PROPELLANT FLOW RATE POUNDS/SEC	THRUST POUNDS	DELTA V FT/SEC
34078.976	.000	.000	225.000	225.000	12481.000	.000	.000	.000
34079.367	.000	.000	221.200	221.200	12477.200	.000	.000	.000
34088.408	.000	.000	221.200	221.200	12477.200	.000	.000	.002
34098.408	.000	.000	221.200	221.200	12477.200	.000	.000	.005
34102.683	.000	.000	217.400	217.400	12473.400	.000	.000	.000
34102.692	.000	.000	217.400	217.400	12473.400	.000	.000	.000
34102.694	.000	.000	217.400	217.400	12473.400	.000	.000	.000
COAST TO ENTRY								
34102.694	.000	.000	216.100	216.100	12472.100	.000	.000	.000
34111.694	.000	.000	216.100	216.100	12472.100	.000	.000	.004
34121.694	.000	.000	216.100	216.100	12472.100	.000	.000	.010
34131.695	.000	.000	216.100	216.100	12472.100	.000	.000	.019
34141.694	.000	.000	216.100	216.100	12472.100	.000	.000	.035
34151.694	.000	.000	216.100	216.100	12472.100	.000	.000	.067
34161.694	.000	.000	216.100	216.100	12472.100	.000	.000	.146
34163.594	.000	.000	216.100	216.100	12472.100	.000	.000	.173
ENTRY								

APPENDIX B
ENTRY PHASE

Position vector

Velocity vector

Position and velocity vector (ECI)

Body attitudes

Aerodynamic attitudes and load factors

Direction cosines

Heating parameters

Aerodynamic and guidance parameters

TABLES

Table		Page
I	POSITION VECTOR.	B-1
II	VELOCITY VECTOR	B-21
III	POSITION AND VELOCITY VECTOR - EARTH-CENTERED INERTIAL COORDINATE SYSTEM	B-41
IV	BODY ATTITUDES	B-60
V	AERODYNAMIC ATTITUDES AND LOAD FACTORS	B-79
VI	DIRECTION COSINES.	B-97
VII	HEATING PARAMETERS	B-115
VIII	AERODYNAMIC AND GUIDANCE PARAMETERS.	B-134

TABLE I
APOLLO MISSION AS-502
SPACECRAFT OPERATIONAL TRAJECTORY
-POSITION VECTOR-

TIME SECONDS	TIME DAY HR MIN SEC	GEODETIC LATITUDE DEGREES	GEODETIC LATITUDE DEG MIN SEC	LONGITUDE DEGREES	LONGITUDE DEG MIN SEC	ALTITUDE FEET	ALTITUDE METERS	RADIUS FEET
34163.594	0. 9. 29. 23.594	31.86698	31. 52. 1.1	154.96303	154. 57. 46.9	400000.0	121920.	21306302.
			ATMOSPHERIC ENTRY					
34163.594	0. 9. 29. 23.594	31.86698	31. 52. 1.1	154.96303	154. 57. 46.9	400000.0	121920.	21306302.
34165.593	0. 9. 29. 25.593	31.89231	31. 53. 32.3	155.18212	155. 10. 55.7	391823.3	119428.	21298099.
34167.593	0. 9. 29. 27.593	31.91724	31. 55. 2.1	155.40151	155. 24. 5.4	383770.8	116974.	21290019.
34169.593	0. 9. 29. 29.593	31.94179	31. 56. 30.5	155.62119	155. 37. 16.3	375841.3	114557.	21282063.
34171.593	0. 9. 29. 31.593	31.96595	31. 57. 57.4	155.84114	155. 50. 28.1	368034.6	112177.	21274230.
34173.593	0. 9. 29. 33.593	31.98972	31. 59. 23.0	156.06140	156. 3. 41.0	360351.4	109835.	21266521.
34175.593	0. 9. 29. 35.593	32.01309	32. 0. 47.1	156.28193	156. 16. 54.9	352791.4	107531.	21258935.
34177.593	0. 9. 29. 37.593	32.03606	32. 2. 9.8	156.50272	156. 30. 9.8	345355.2	105264.	21251474.
34179.593	0. 9. 29. 39.593	32.05864	32. 3. 31.1	156.72380	156. 43. 25.7	338042.5	103036.	21244136.
34181.593	0. 9. 29. 41.593	32.08082	32. 4. 50.9	156.94515	156. 56. 42.5	330854.3	100845.	21236924.
			ENTER S-BAND COMMUNICATION BLACKOUT					
34181.593	0. 9. 29. 41.593	32.08082	32. 4. 50.9	156.94515	156. 56. 42.5	330854.3	100845.	21236924.
34183.593	0. 9. 29. 43.593	32.10259	32. 6. 9.3	157.16674	157. 10. .3	323790.0	98691.	21229836.
34185.593	0. 9. 29. 45.593	32.12396	32. 7. 26.3	157.38861	157. 23. 19.0	316850.6	96576.	21222873.
34187.593	0. 9. 29. 47.593	32.14493	32. 8. 41.8	157.61071	157. 36. 38.6	310036.4	94499.	21216036.
34189.593	0. 9. 29. 49.593	32.16549	32. 9. 55.8	157.83306	157. 49. 59.0	303347.6	92461.	21209324.
34191.594	0. 9. 29. 51.593	32.18564	32. 11. 8.3	158.05565	158. 3. 20.3	296785.2	90460.	21202740.
			ENTER C-BAND COMMUNICATIONS BLACKOUT		LOAD FACTOR = 0.05 G			
34191.594	0. 9. 29. 51.593	32.18564	32. 11. 8.3	158.05565	158. 3. 20.3	296785.2	90460.	21202740.

Position vector

TABLE I
APOLLO MISSION AS-502
SPACECRAFT OPERATIONAL TRAJECTORY
-POSITION VECTOR-

TIME SECONDS	TIME DAY HR MIN SEC	GEODETIC LATITUDE DEGREES	GEODETIC LATITUDE DEG MIN SEC	LONGITUDE DEGREES	LONGITUDE DEG MIN SEC	ALTITUDE FEET	ALTITUDE METERS	RADIUS FEET
34193.593	0. 9. 29. 53.593	32.20538	32. 12. 19.4	158.27846	158. 16. 42.5	290349.9	88499.	21196283.
34195.593	0. 9. 29. 55.593	32.22471	32. 13. 29.0	158.50148	158. 30. 5.3	284043.5	86577.	21189955.
34197.593	0. 9. 29. 57.593	32.24363	32. 14. 37.1	158.72470	158. 43. 28.9	277866.5	84694.	21183757.
34199.593	0. 9. 29. 59.593	32.26213	32. 15. 43.7	158.94810	158. 56. 53.2	271821.3	82851.	21177691.
34201.593	0. 9. 30. 1.593	32.28022	32. 16. 48.8	159.17164	159. 10. 17.9	265910.0	81050.	21171761.
34203.593	0. 9. 30. 3.593	32.29789	32. 17. 52.4	159.39531	159. 23. 43.1	260138.3	79290.	21165969.
34205.593	0. 9. 30. 5.593	32.31514	32. 18. 54.5	159.61905	159. 37. 8.6	254509.3	77575.	21160322.
34207.593	0. 9. 30. 7.593	32.33196	32. 19. 55.1	159.84281	159. 50. 34.1	249029.1	75904.	21154822.
34209.593	0. 9. 30. 9.593	32.34836	32. 20. 54.1	160.06655	160. 3. 59.6	243704.4	74281.	21149480.
34211.593	0. 9. 30. 11.593	32.36434	32. 21. 51.6	160.29018	160. 17. 24.7	238542.9	72708.	21144301.
34213.593	0. 9. 30. 13.593	32.37987	32. 22. 47.5	160.51363	160. 30. 49.1	233553.4	71187.	21139294.
34215.593	0. 9. 30. 15.593	32.39498	32. 23. 41.9	160.73681	160. 44. 12.5	228746.2	69722.	21134470.
34217.593	0. 9. 30. 17.593	32.40965	32. 24. 34.7	160.95961	160. 57. 34.6	224132.5	68316.	21129841.
34219.594	0. 9. 30. 19.593	32.42388	32. 25. 26.0	161.18190	161. 10. 54.9	219725.5	66972.	21125418.
34221.593	0. 9. 30. 21.593	32.43766	32. 26. 15.6	161.40357	161. 24. 12.9	215538.3	65696.	21121215.
34223.593	0. 9. 30. 23.593	32.45101	32. 27. 3.6	161.62446	161. 37. 28.1	211585.3	64491.	21117248.
34225.594	0. 9. 30. 25.593	32.46391	32. 27. 50.1	161.84442	161. 50. 40.0	207880.8	63362.	21113529.
34227.593	0. 9. 30. 27.593	32.47638	32. 28. 35.0	162.06332	162. 3. 48.0	204440.3	62314.	21110074.
34229.593	0. 9. 30. 29.593	32.48840	32. 29. 18.2	162.28097	162. 16. 51.5	201276.6	61349.	21106897.
			MAXIMUM HEATING RATE					
34229.593	0. 9. 30. 29.593	32.48840	32. 29. 18.2	162.28097	162. 16. 51.5	201276.6	61349.	21106897.
34231.593	0. 9. 30. 31.593	32.49998	32. 29. 59.9	162.49722	162. 29. 50.0	198403.3	60473.	21104012.
34233.593	0. 9. 30. 33.593	32.51114	32. 30. 40.1	162.71193	162. 42. 42.9	195833.9	59690.	21101430.
34235.593	0. 9. 30. 35.593	32.52186	32. 31. 18.7	162.92491	162. 55. 29.7	193578.1	59003.	21099162.
34237.593	0. 9. 30. 37.593	32.53216	32. 31. 55.8	163.13604	163. 8. 9.8	191644.9	58413.	21097218.

TABLE I
APOLLO MISSION AS-502
SPACECRAFT OPERATIONAL TRAJECTORY
-POSITION VECTOR-

TIME SECONDS	TIME DAY HR MIN SEC	GEODETIC LATITUDE DEGREES	GEODETIC LATITUDE DEG MIN SEC	LONGITUDE DEGREES	LONGITUDE DEG MIN SEC	ALTITUDE FEET	ALTITUDE METERS	RADIUS FEET
34239.593	0. 9. 30. 39.593	32.54204	32. 32. 31.3	163.34520	163. 20. 42.7	190039.4	57924.	21095601.
34241.593	0. 9. 30. 41.593	32.55151	32. 33. 5.4	163.55230	163. 33. 8.3	188763.9	57535.	21094315.
GUIDANCE INITIATE AT RDOT = -700 FT/SEC								
34241.593	0. 9. 30. 41.593	32.55151	32. 33. 5.4	163.55230	163. 33. 8.3	188763.9	57535.	21094315.
34243.593	0. 9. 30. 43.593	32.56059	32. 33. 38.1	163.75725	163. 45. 26.1	187817.9	57247.	21093359.
34245.593	0. 9. 30. 45.593	32.56927	32. 34. 9.4	163.96002	163. 57. 36.1	187196.1	57057.	21092728.
MAXIMUM LOAD FACTOR								
34245.593	0. 9. 30. 45.593	32.56927	32. 34. 9.4	163.96002	163. 57. 36.1	187196.1	57057.	21092728.
34247.593	0. 9. 30. 47.593	32.57757	32. 34. 39.3	164.16058	164. 9. 38.1	186891.6	56965.	21092414.
34249.593	0. 9. 30. 49.593	32.58551	32. 35. 7.9	164.35896	164. 21. 32.3	186893.1	56965.	21092407.
34251.593	0. 9. 30. 51.593	32.59324	32. 35. 35.7	164.55517	164. 33. 18.6	187175.1	57051.	21092680.
34253.594	0. 9. 30. 53.593	32.60095	32. 36. 3.4	164.74926	164. 44. 57.3	187669.9	57202.	21093167.
34255.593	0. 9. 30. 55.593	32.60882	32. 36. 31.7	164.94130	164. 56. 28.7	188271.9	57385.	21093760.
34257.593	0. 9. 30. 57.593	32.61681	32. 37. .5	165.13138	165. 7. 53.0	188877.1	57570.	21094356.
34259.593	0. 9. 30. 59.593	32.62473	32. 37. 29.0	165.31960	165. 19. 10.6	189384.6	57725.	21094855.
34261.593	0. 9. 31. 1.593	32.63236	32. 37. 56.5	165.50604	165. 30. 21.7	189752.6	57837.	21095215.
34263.593	0. 9. 31. 3.593	32.63964	32. 38. 22.7	165.69076	165. 41. 26.8	189979.9	57906.	21095434.
34265.593	0. 9. 31. 5.593	32.64671	32. 38. 48.2	165.87383	165. 52. 25.8	190083.6	57938.	21095529.
34267.593	0. 9. 31. 7.593	32.65382	32. 39. 13.8	166.05526	166. 3. 18.9	190131.4	57952.	21095569.
34269.593	0. 9. 31. 9.593	32.66103	32. 39. 39.7	166.23508	166. 14. 6.3	190228.6	57982.	21095659.
34271.593	0. 9. 31. 11.593	32.66821	32. 40. 5.6	166.41333	166. 24. 48.0	190470.9	58056.	21095893.
34273.593	0. 9. 31. 13.593	32.67511	32. 40. 30.4	166.59006	166. 35. 24.2	190898.4	58186.	21096313.
34275.593	0. 9. 31. 15.593	32.68150	32. 40. 53.4	166.76532	166. 45. 55.2	191494.6	58368.	21096902.

TABLE I
APOLLO MISSION AS-502
SPACECRAFT OPERATIONAL TRAJECTORY
-POSITION VECTOR-

TIME SECONDS	TIME DAY HR MIN SEC	GEODETIC LATITUDE DEGREES	GEODETIC LATITUDE DEG MIN SEC	LONGITUDE DEGREES	LONGITUDE DEG MIN SEC	ALTITUDE FEET	ALTITUDE METERS	RADIUS FEET
34277.593	0. 9. 31. 17.593	32.68736	32. 41. 14.5	166.93917	166. 56. 21.0	192241.1	58595.	21097641.
34279.593	0. 9. 31. 19.593	32.69266	32. 41. 33.6	167.11165	167. 6. 41.9	193116.4	58862.	21098511.
34281.594	0. 9. 31. 21.593	32.69734	32. 41. 50.4	167.28283	167. 16. 58.2	194069.9	59153.	21099459.
34283.593	0. 9. 31. 23.593	32.70137	32. 42. 4.9	167.45279	167. 27. 10.0	195045.1	59450.	21100430.
34285.593	0. 9. 31. 25.593	32.70478	32. 42. 17.2	167.62157	167. 37. 17.7	196019.3	59747.	21101401.
34287.594	0. 9. 31. 27.593	32.70761	32. 42. 27.4	167.78922	167. 47. 21.2	196982.8	60040.	21102361.
34289.593	0. 9. 31. 29.593	32.70987	32. 42. 35.5	167.95581	167. 57. 20.9	197928.3	60329.	21103304.
34291.593	0. 9. 31. 31.593	32.71160	32. 42. 41.7	168.12137	168. 7. 16.9	198853.8	60611.	21104228.
34293.593	0. 9. 31. 33.593	32.71280	32. 42. 46.1	168.28594	168. 17. 9.4	199759.8	60887.	21105132.
34295.593	0. 9. 31. 35.593	32.71350	32. 42. 48.6	168.44957	168. 26. 58.5	200647.8	61158.	21106020.
34297.593	0. 9. 31. 37.593	32.71372	32. 42. 49.4	168.61231	168. 36. 44.3	201518.3	61423.	21106890.
34299.593	0. 9. 31. 39.593	32.71346	32. 42. 48.5	168.77418	168. 46. 27.1	202373.1	61683.	21107744.
34301.593	0. 9. 31. 41.593	32.71275	32. 42. 45.9	168.93521	168. 56. 6.8	203211.8	61939.	21108585.
34303.593	0. 9. 31. 43.593	32.71159	32. 42. 41.7	169.09544	169. 5. 43.6	204037.6	62191.	21109411.
34305.593	0. 9. 31. 45.593	32.71000	32. 42. 36.0	169.25489	169. 15. 17.6	204858.6	62441.	21110234.
34307.593	0. 9. 31. 47.593	32.70798	32. 42. 28.7	169.41360	169. 24. 48.9	205681.6	62692.	21111059.
34309.593	0. 9. 31. 49.593	32.70556	32. 42. 20.0	169.57157	169. 34. 17.7	206511.3	62945.	21111891.
34311.593	0. 9. 31. 51.593	32.70274	32. 42. 9.9	169.72885	169. 43. 43.9	207353.0	63201.	21112737.
34313.593	0. 9. 31. 53.593	32.69954	32. 41. 58.4	169.88545	169. 53. 7.6	208210.0	63463.	21113598.
34315.594	0. 9. 31. 55.593	32.69598	32. 41. 45.5	170.04140	170. 2. 29.1	209085.3	63729.	21114476.
34317.593	0. 9. 31. 57.593	32.69205	32. 41. 31.4	170.19672	170. 11. 48.2	209978.8	64002.	21115375.
34319.593	0. 9. 31. 59.593	32.68779	32. 41. 16.0	170.35142	170. 21. 5.1	210892.3	64280.	21116292.
34321.593	0. 9. 32. 1.593	32.68320	32. 40. 59.5	170.50555	170. 30. 20.0	211826.0	64565.	21117231.
34323.593	0. 9. 32. 3.593	32.67828	32. 40. 41.8	170.65910	170. 39. 32.8	212777.8	64855.	21118189.
34325.593	0. 9. 32. 5.593	32.67304	32. 40. 22.9	170.81212	170. 48. 43.6	213745.0	65150.	21119162.
34327.593	0. 9. 32. 7.593	32.66749	32. 40. 3.0	170.96460	170. 57. 52.6	214726.3	65449.	21120149.
34329.593	0. 9. 32. 9.593	32.66164	32. 39. 41.9	171.11658	171. 6. 59.7	215718.8	65751.	21121148.

TABLE I
APOLLO MISSION AS-502
SPACECRAFT OPERATIONAL TRAJECTORY
-POSITION VECTOR-

TIME SECONDS	TIME DAY HR MIN SEC	GEODETIC LATITUDE DEGREES	GEODETIC LATITUDE DEG MIN SEC	LONGITUDE DEGREES	LONGITUDE DEG MIN SEC	ALTITUDE FEET	ALTITUDE METERS	RADIUS FEET
34331.593	0. 9. 32. 11.593	32.65549	32. 39. 19.8	171.26807	171. 16. 5.1	216720.8	66057.	21122157.
34333.593	0. 9. 32. 13.593	32.64905	32. 38. 56.6	171.41910	171. 25. 8.8	217729.5	66364.	21123172.
34335.593	0. 9. 32. 15.593	32.64232	32. 38. 32.3	171.56967	171. 34. 10.8	218742.2	66673.	21124193.
EXIT C-BAND COMMUNICATIONS BLACKOUT								
34335.593	0. 9. 32. 15.593	32.64232	32. 38. 32.3	171.56967	171. 34. 10.8	218742.2	66673.	21124193.
34337.593	0. 9. 32. 17.593	32.63530	32. 38. 7.1	171.71981	171. 43. 11.3	219756.7	66982.	21125215.
34339.593	0. 9. 32. 19.593	32.62800	32. 37. 40.8	171.86953	171. 52. 10.3	220772.0	67291.	21126238.
34341.593	0. 9. 32. 21.593	32.62045	32. 37. 13.6	172.01885	172. 1. 7.9	221796.5	67604.	21127271.
34343.593	0. 9. 32. 23.593	32.61270	32. 36. 45.7	172.16777	172. 10. 4.0	222839.2	67922.	21128322.
34345.593	0. 9. 32. 25.593	32.60481	32. 36. 17.3	172.31633	172. 18. 58.8	223896.0	68244.	21129388.
34347.593	0. 9. 32. 27.593	32.59681	32. 35. 48.5	172.46454	172. 27. 52.4	224956.7	68567.	21130458.
34349.594	0. 9. 32. 29.593	32.58870	32. 35. 19.3	172.61241	172. 36. 44.7	226021.2	68891.	21131531.
34351.593	0. 9. 32. 31.593	32.58048	32. 34. 49.7	172.75997	172. 45. 35.9	227088.7	69217.	21132608.
34353.593	0. 9. 32. 33.593	32.57213	32. 34. 19.7	172.90721	172. 54. 26.0	228161.0	69544.	21133690.
34355.593	0. 9. 32. 35.593	32.56366	32. 33. 49.2	173.05415	173. 3. 15.0	229235.9	69871.	21134774.
34357.593	0. 9. 32. 37.593	32.55506	32. 33. 18.2	173.20081	173. 12. 2.9	230311.9	70199.	21135859.
34359.593	0. 9. 32. 39.593	32.54633	32. 32. 46.8	173.34719	173. 20. 49.9	231388.4	70527.	21136945.
34361.593	0. 9. 32. 41.593	32.53747	32. 32. 14.9	173.49331	173. 29. 35.9	232463.7	70855.	21138030.
34363.593	0. 9. 32. 43.593	32.52848	32. 31. 42.5	173.63917	173. 38. 21.0	233537.2	71182.	21139114.
34365.593	0. 9. 32. 45.593	32.51935	32. 31. 9.7	173.78478	173. 47. 5.2	234607.7	71509.	21140195.
34367.593	0. 9. 32. 47.593	32.51009	32. 30. 36.3	173.93017	173. 55. 48.6	235675.2	71834.	21141272.

TABLE I
APOLLO MISSION AS-502
SPACECRAFT OPERATIONAL TRAJECTORY
-POSITION VECTOR-

TIME SECONDS	TIME DAY HR MIN SEC	GEODETIC LATITUDE DEGREES	GEODETIC LATITUDE DEG MIN SEC	LONGITUDE DEGREES	LONGITUDE DEG MIN SEC	ALTITUDE FEET	ALTITUDE METERS	RADIUS FEET
34369.593	0. 9. 32. 49.593	32.50069	32. 30. 2.5	174.07532	174. 4. 31.2	236737.9	72158.	21142345.
			EXIT S-BAND COMMUNICATIONS BLACKOUT					
34369.593	0. 9. 32. 49.593	32.50069	32. 30. 2.5	174.07532	174. 4. 31.2	236737.9	72158.	21142345.
34371.593	0. 9. 32. 51.593	32.49115	32. 29. 28.1	174.22025	174. 13. 12.9	237795.2	72480.	21143413.
34373.593	0. 9. 32. 53.593	32.48146	32. 28. 53.3	174.36497	174. 21. 53.9	238847.2	72801.	21144476.
34375.593	0. 9. 32. 55.593	32.47164	32. 28. 17.9	174.50949	174. 30. 34.2	239892.4	73119.	21145532.
34377.594	0. 9. 32. 57.593	32.46167	32. 27. 42.0	174.65380	174. 39. 13.7	240930.4	73436.	21146581.
34379.593	0. 9. 32. 59.593	32.45155	32. 27. 5.6	174.79793	174. 47. 52.6	241961.4	73750.	21147623.
34381.593	0. 9. 33. 1.593	32.44128	32. 26. 28.6	174.94187	174. 56. 30.7	242983.6	74062.	21148656.
34383.593	0. 9. 33. 3.593	32.43087	32. 25. 51.1	175.08563	175. 5. 8.3	243996.9	74370.	21149682.
34385.593	0. 9. 33. 5.593	32.42030	32. 25. 13.1	175.22922	175. 13. 45.2	245000.9	74676.	21150697.
34387.593	0. 9. 33. 7.593	32.40959	32. 24. 34.5	175.37264	175. 22. 21.5	245994.1	74979.	21151702.
34389.593	0. 9. 33. 9.593	32.39872	32. 23. 55.4	175.51590	175. 30. 57.2	246976.6	75279.	21152697.
34391.593	0. 9. 33. 11.593	32.38770	32. 23. 15.7	175.65899	175. 39. 32.4	247948.4	75575.	21153680.
34393.593	0. 9. 33. 13.593	32.37653	32. 22. 35.5	175.80194	175. 48. 7.0	248907.4	75867.	21154652.
34395.593	0. 9. 33. 15.593	32.36521	32. 21. 54.8	175.94474	175. 56. 41.1	249853.9	76156.	21155611.
34397.593	0. 9. 33. 17.593	32.35374	32. 21. 13.5	176.08739	176. 5. 14.6	250787.4	76440.	21156557.
34399.593	0. 9. 33. 19.593	32.34211	32. 20. 31.6	176.22990	176. 13. 47.7	251707.6	76721.	21157490.
34401.593	0. 9. 33. 21.593	32.33032	32. 19. 49.2	176.37228	176. 22. 20.2	252613.6	76997.	21158409.
34403.593	0. 9. 33. 23.593	32.31838	32. 19. 6.2	176.51452	176. 30. 52.3	253505.3	77269.	21159314.
34405.593	0. 9. 33. 25.593	32.30629	32. 18. 22.6	176.65663	176. 39. 23.9	254382.6	77536.	21160204.
34407.593	0. 9. 33. 27.593	32.29404	32. 17. 38.5	176.79861	176. 47. 55.0	255244.6	77799.	21161080.
34409.593	0. 9. 33. 29.593	32.28163	32. 16. 53.9	176.94047	176. 56. 25.7	256091.1	78057.	21161940.
34411.594	0. 9. 33. 31.593	32.26907	32. 16. 8.6	177.08221	177. 4. 56.0	256922.1	78310.	21162785.
34413.593	0. 9. 33. 33.593	32.25634	32. 15. 22.8	177.22383	177. 13. 25.8	257737.3	78558.	21163614.

TABLE I
APOLLO MISSION AS-502
SPACECRAFT OPERATIONAL TRAJECTORY
-POSITION VECTOR-

TIME SECONDS	TIME DAY HR MIN SEC	GEODETIC LATITUDE DEGREES	GEODETIC LATITUDE DEG MIN SEC	LONGITUDE DEGREES	LONGITUDE DEG MIN SEC	ALTITUDE FEET	ALTITUDE METERS	RADIUS FEET
34415.593	0. 9. 33. 35.593	32.24346	32. 14. 36.5	177.36533	177. 21. 55.2	258536.6	78802.	21164428.
34417.593	0. 9. 33. 37.593	32.23043	32. 13. 49.5	177.50672	177. 30. 24.2	259319.1	79041.	21165224.
34419.593	0. 9. 33. 39.593	32.21723	32. 13. 2.0	177.64799	177. 38. 52.8	260084.6	79274.	21166004.
34421.593	0. 9. 33. 41.593	32.20388	32. 12. 14.0	177.78915	177. 47. 21.0	260833.3	79502.	21166768.
34423.593	0. 9. 33. 43.593	32.19036	32. 11. 25.3	177.93021	177. 55. 48.7	261565.1	79725.	21167514.
34425.593	0. 9. 33. 45.593	32.17669	32. 10. 36.1	178.07116	178. 4. 16.2	262279.3	79943.	21168244.
34427.593	0. 9. 33. 47.593	32.16285	32. 9. 46.3	178.21199	178. 12. 43.2	262975.8	80155.	21168955.
34429.593	0. 9. 33. 49.593	32.14886	32. 8. 55.9	178.35274	178. 21. 9.9	263654.8	80362.	21169650.
34431.593	0. 9. 33. 51.593	32.13471	32. 8. 4.9	178.49337	178. 29. 36.2	264316.1	80564.	21170326.
34433.593	0. 9. 33. 53.593	32.12039	32. 7. 13.4	178.63391	178. 38. 2.1	264959.1	80760.	21170985.
34435.593	0. 9. 33. 55.593	32.10592	32. 6. 21.3	178.77435	178. 46. 27.7	265583.8	80950.	21171626.
34437.593	0. 9. 33. 57.593	32.09128	32. 5. 28.6	178.91469	178. 54. 52.9	266190.1	81135.	21172249.
34439.594	0. 9. 33. 59.593	32.07648	32. 4. 35.3	179.05494	179. 3. 17.8	266777.3	81314.	21172852.
34441.593	0. 9. 34. 1.593	32.06153	32. 3. 41.5	179.19508	179. 11. 42.3	267346.3	81487.	21173437.
34443.593	0. 9. 34. 3.593	32.04641	32. 2. 47.1	179.33515	179. 20. 6.5	267897.0	81655.	21174005.
34445.594	0. 9. 34. 5.593	32.03112	32. 1. 52.0	179.47511	179. 28. 30.4	268428.3	81817.	21174552.
34447.593	0. 9. 34. 7.593	32.01568	32. 0. 56.4	179.61498	179. 36. 53.9	268940.5	81973.	21175082.
34449.593	0. 9. 34. 9.593	32.00008	32. 0. .3	179.75476	179. 45. 17.1	269433.0	82123.	21175591.
34451.593	0. 9. 34. 11.593	31.98431	31. 59. 3.5	179.89445	179. 53. 40.0	269906.5	82268.	21176082.
34453.593	0. 9. 34. 13.593	31.96838	31. 58. 6.2	-179.96594	-179. 57. 57.4	270360.5	82406.	21176554.
34455.593	0. 9. 34. 15.593	31.95229	31. 57. 8.2	-179.82643	-179. 49. 35.2	270795.3	82539.	21177006.
34457.593	0. 9. 34. 17.593	31.93604	31. 56. 9.7	-179.68701	-179. 41. 13.2	271210.5	82665.	21177439.
34459.593	0. 9. 34. 19.593	31.91962	31. 55. 10.6	-179.54767	-179. 32. 51.6	271605.3	82785.	21177851.
34461.593	0. 9. 34. 21.593	31.90305	31. 54. 11.0	-179.40842	-179. 24. 30.3	271980.0	82900.	21178245.
34463.593	0. 9. 34. 23.593	31.88632	31. 53. 10.7	-179.26926	-179. 16. 9.4	272334.3	83008.	21178617.
34465.593	0. 9. 34. 25.593	31.86942	31. 52. 9.9	-179.13018	-179. 7. 48.7	272668.8	83110.	21178970.
34467.593	0. 9. 34. 27.593	31.85236	31. 51. 8.5	-178.99120	-178. 59. 28.3	272983.0	83205.	21179304.

TABLE I
APOLLO MISSION AS-502
SPACECRAFT OPERATIONAL TRAJECTORY
-POSITION VECTOR-

TIME SECONDS	TIME DAY HR MIN SEC	GEODETIC LATITUDE DEGREES	GEODETIC LATITUDE DEG MIN SEC	LONGITUDE DEGREES	LONGITUDE DEG MIN SEC	ALTITUDE FEET	ALTITUDE METERS	RADIUS FEET
34469.593	0. 9. 34. 29.593	31.83514	31. 50. 6.5	-178.85229	-178. 51. 8.3	273277.0	83295.	21179616.
34471.593	0. 9. 34. 31.593	31.81777	31. 49. 4.0	-178.71347	-178. 42. 48.5	273550.3	83378.	21179909.
34473.594	0. 9. 34. 33.593	31.80023	31. 48. .8	-178.57474	-178. 34. 29.1	273802.8	83455.	21180180.
34475.593	0. 9. 34. 35.593	31.78253	31. 46. 57.1	-178.43609	-178. 26. 9.9	274034.0	83526.	21180431.
34477.593	0. 9. 34. 37.593	31.76467	31. 45. 52.8	-178.29752	-178. 17. 51.1	274245.0	83590.	21180661.
34479.593	0. 9. 34. 39.593	31.74666	31. 44. 48.0	-178.15904	-178. 9. 32.5	274435.3	83648.	21180870.
34481.593	0. 9. 34. 41.593	31.72848	31. 43. 42.5	-178.02064	-178. 1. 14.3	274604.5	83700.	21181060.
34483.593	0. 9. 34. 43.593	31.71014	31. 42. 36.5	-177.88233	-177. 52. 56.4	274753.0	83745.	21181229.
34485.593	0. 9. 34. 45.593	31.69165	31. 41. 29.9	-177.74409	-177. 44. 38.7	274880.3	83784.	21181376.
34487.593	0. 9. 34. 47.593	31.67299	31. 40. 22.8	-177.60595	-177. 36. 21.4	274986.5	83816.	21181502.
34489.593	0. 9. 34. 49.593	31.65418	31. 39. 15.0	-177.46788	-177. 28. 4.4	275071.5	83842.	21181608.
34491.593	0. 9. 34. 51.593	31.63521	31. 38. 6.7	-177.32991	-177. 19. 47.7	275136.0	83862.	21181693.
34493.593	0. 9. 34. 53.593	31.61607	31. 36. 57.9	-177.19201	-177. 11. 31.2	275179.5	83875.	21181758.
34495.593	0. 9. 34. 55.593	31.59678	31. 35. 48.4	-177.05420	-177. 3. 15.1	275202.3	83882.	21181801.
34497.593	0. 9. 34. 57.593	31.57733	31. 34. 38.4	-176.91647	-176. 54. 59.3	275203.8	83882.	21181824.
34499.593	0. 9. 34. 59.593	31.55772	31. 33. 27.8	-176.77882	-176. 46. 43.8	275184.5	83876.	21181826.
34501.594	0. 9. 35. 1.593	31.53795	31. 32. 16.6	-176.64126	-176. 38. 28.6	275144.0	83864.	21181807.
34503.593	0. 9. 35. 3.593	31.51803	31. 31. 4.9	-176.50379	-176. 30. 13.7	275082.3	83845.	21181767.
34505.593	0. 9. 35. 5.593	31.49794	31. 29. 52.6	-176.36640	-176. 21. 59.0	275000.0	83820.	21181706.
34507.594	0. 9. 35. 7.593	31.47770	31. 28. 39.7	-176.22909	-176. 13. 44.7	274896.8	83789.	21181625.
34509.593	0. 9. 35. 9.593	31.45730	31. 27. 26.3	-176.09186	-176. 5. 30.7	274772.3	83751.	21181523.
34511.593	0. 9. 35. 11.593	31.43675	31. 26. 12.3	-175.95473	-175. 57. 17.0	274626.5	83706.	21181399.
34513.593	0. 9. 35. 13.593	31.41604	31. 24. 57.7	-175.81768	-175. 49. 3.7	274459.0	83655.	21181255.
34515.593	0. 9. 35. 15.593	31.39517	31. 23. 42.6	-175.68071	-175. 40. 50.6	274270.3	83598.	21181088.
34517.593	0. 9. 35. 17.593	31.37415	31. 22. 26.9	-175.54383	-175. 32. 37.8	274059.5	83534.	21180900.
34519.593	0. 9. 35. 19.593	31.35297	31. 21. 10.7	-175.40704	-175. 24. 25.3	273828.3	83463.	21180692.
34521.593	0. 9. 35. 21.593	31.33164	31. 19. 53.9	-175.27033	-175. 16. 13.2	273575.3	83386.	21180462.

TABLE I
APOLLO MISSION AS-502
SPACECRAFT OPERATIONAL TRAJECTORY
-POSITION VECTOR-

TIME SECONDS	TIME DAY HR MIN SEC	GEODETIC LATITUDE DEGREES	GEODETIC LATITUDE DEG MIN SEC	LONGITUDE DEGREES	LONGITUDE DEG MIN SEC	ALTITUDE FEET	ALTITUDE METERS	RADIUS FEET
34523.593	0. 9. 35. 23.593	31.31015	31. 18. 36.6	-175.13371	-175. 8. 1.4	273301.1	83302.	21180211.
34525.593	0. 9. 35. 25.593	31.28851	31. 17. 18.6	-174.99717	-174. 59. 49.8	273005.3	83212.	21179939.
34527.593	0. 9. 35. 27.593	31.26672	31. 16. .2	-174.86072	-174. 51. 38.6	272697.3	83115.	21179645.
34529.593	0. 9. 35. 29.593	31.24477	31. 14. 41.2	-174.72437	-174. 43. 27.7	272348.1	83012.	21179329.
34531.593	0. 9. 35. 31.593	31.22267	31. 13. 21.6	-174.58810	-174. 35. 17.2	271987.8	82902.	21178993.
34533.593	0. 9. 35. 33.593	31.20042	31. 12. 1.5	-174.45192	-174. 27. 6.9	271606.6	82786.	21178635.
34535.594	0. 9. 35. 35.593	31.17802	31. 10. 40.9	-174.31583	-174. 18. 57.0	271204.6	82663.	21178257.
34537.593	0. 9. 35. 37.593	31.15546	31. 9. 19.7	-174.17983	-174. 10. 47.4	270781.6	82534.	21177859.
34539.593	0. 9. 35. 39.593	31.13275	31. 7. 57.9	-174.04392	-174. 2. 38.1	270337.1	82399.	21177439.
34541.593	0. 9. 35. 41.593	31.10989	31. 6. 35.6	-173.90811	-173. 54. 29.2	269871.3	82257.	21176998.
34543.593	0. 9. 35. 43.593	31.08688	31. 5. 12.8	-173.77239	-173. 46. 20.6	269384.8	82109.	21176536.
34545.593	0. 9. 35. 45.593	31.06372	31. 3. 49.4	-173.63676	-173. 38. 12.4	268877.3	81954.	21176054.
34547.593	0. 9. 35. 47.593	31.04041	31. 2. 25.5	-173.50123	-173. 30. 4.4	268349.6	81793.	21175551.
34549.593	0. 9. 35. 49.593	31.01695	31. 1. 1.0	-173.36579	-173. 21. 56.9	267800.6	81626.	21175028.
34551.593	0. 9. 35. 51.593	30.99334	30. 59. 36.0	-173.23045	-173. 13. 49.7	267229.8	81452.	21174482.
34553.593	0. 9. 35. 53.593	30.96959	30. 58. 10.5	-173.09521	-173. 5. 42.8	266638.1	81271.	21173916.
34555.593	0. 9. 35. 55.593	30.94569	30. 56. 44.5	-172.96007	-172. 57. 36.3	266025.1	81085.	21173329.
34557.593	0. 9. 35. 57.593	30.92165	30. 55. 17.9	-172.82503	-172. 49. 30.1	265391.6	80892.	21172721.
34559.593	0. 9. 35. 59.593	30.89746	30. 53. 50.9	-172.69009	-172. 41. 24.3	264736.9	80692.	21172093.
34561.593	0. 9. 36. 1.593	30.87313	30. 52. 23.3	-172.55525	-172. 33. 18.9	264061.1	80486.	21171442.
34563.594	0. 9. 36. 3.593	30.84866	30. 50. 55.2	-172.42052	-172. 25. 13.9	263364.1	80274.	21170772.
34565.593	0. 9. 36. 5.593	30.82405	30. 49. 26.6	-172.28589	-172. 17. 9.2	262647.1	80055.	21170081.
34567.593	0. 9. 36. 7.593	30.79929	30. 47. 57.5	-172.15137	-172. 9. 4.9	261909.9	79830.	21169370.
34569.594	0. 9. 36. 9.593	30.77440	30. 46. 27.8	-172.01696	-172. 1. 1.1	261152.6	79599.	21168640.
34571.593	0. 9. 36. 11.593	30.74936	30. 44. 57.7	-171.88266	-171. 52. 57.6	260375.4	79363.	21167890.
34573.593	0. 9. 36. 13.593	30.72418	30. 43. 27.1	-171.74847	-171. 44. 54.5	259578.4	79120.	21167120.
34575.593	0. 9. 36. 15.593	30.69887	30. 41. 55.9	-171.61441	-171. 36. 51.9	258761.9	78871.	21166331.

TABLE I
APOLLO MISSION AS-502
SPACECRAFT OPERATIONAL TRAJECTORY
-POSITION VECTOR-

TIME SECONDS	TIME DAY HR MIN SEC	GEODETIC LATITUDE DEGREES	GEODETIC LATITUDE DEG MIN SEC	LONGITUDE DEGREES	LONGITUDE DEG MIN SEC	ALTITUDE FEET	ALTITUDE METERS	RADIUS FEET
34577.593	0. 9. 36. 17.593	30.67342	30. 40. 24.3	-171.48045	-171. 28. 49.7	257925.9	78616.	21165521.
34579.593	0. 9. 36. 19.593	30.64784	30. 38. 52.2	-171.34662	-171. 20. 47.9	257070.2	78355.	21164693.
34581.593	0. 9. 36. 21.593	30.62212	30. 37. 19.6	-171.21291	-171. 12. 46.5	256194.4	78088.	21163845.
34583.593	0. 9. 36. 23.593	30.59627	30. 35. 46.6	-171.07932	-171. 4. 45.6	255299.2	77815.	21162978.
34585.593	0. 9. 36. 25.593	30.57030	30. 34. 13.1	-170.94586	-170. 56. 45.1	254384.7	77537.	21162090.
34587.593	0. 9. 36. 27.593	30.54419	30. 32. 39.1	-170.81252	-170. 48. 45.1	253450.4	77252.	21161184.
34589.593	0. 9. 36. 29.593	30.51796	30. 31. 4.7	-170.67933	-170. 40. 45.6	252496.2	76961.	21160258.
34591.593	0. 9. 36. 31.593	30.49161	30. 29. 29.8	-170.54626	-170. 32. 46.6	251523.7	76665.	21159314.
34593.593	0. 9. 36. 33.593	30.46513	30. 27. 54.5	-170.41333	-170. 24. 48.0	250532.2	76362.	21158350.
34595.593	0. 9. 36. 35.593	30.43852	30. 26. 18.7	-170.28054	-170. 16. 50.0	249523.9	76055.	21157371.
34597.594	0. 9. 36. 37.593	30.41179	30. 24. 42.4	-170.14790	-170. 8. 52.5	248499.9	75743.	21156375.
34599.593	0. 9. 36. 39.593	30.38492	30. 23. 5.7	-170.01542	-170. 0. 55.5	247461.0	75426.	21155365.
34601.593	0. 9. 36. 41.593	30.35791	30. 21. 28.5	-169.88309	-169. 52. 59.1	246407.0	75105.	21154340.
34603.593	0. 9. 36. 43.593	30.33078	30. 19. 50.8	-169.75091	-169. 45. 3.3	245338.7	74779.	21153300.
34605.593	0. 9. 36. 45.593	30.30352	30. 18. 12.7	-169.61891	-169. 37. 8.1	244256.2	74449.	21152247.
34607.593	0. 9. 36. 47.593	30.27614	30. 16. 34.1	-169.48707	-169. 29. 13.5	243160.2	74115.	21151180.
34609.593	0. 9. 36. 49.593	30.24863	30. 14. 55.1	-169.35541	-169. 21. 19.5	242051.5	73777.	21150100.
34611.593	0. 9. 36. 51.593	30.22100	30. 13. 15.6	-169.22393	-169. 13. 26.2	240929.7	73436.	21149007.
34613.593	0. 9. 36. 53.593	30.19325	30. 11. 35.7	-169.09264	-169. 5. 33.5	239795.7	73090.	21147903.
34615.593	0. 9. 36. 55.593	30.16539	30. 9. 55.4	-168.96154	-168. 57. 41.5	238650.2	72741.	21146787.
34617.593	0. 9. 36. 57.593	30.13741	30. 8. 14.7	-168.83063	-168. 49. 50.3	237493.8	72388.	21145660.
34619.593	0. 9. 36. 59.593	30.10933	30. 6. 33.6	-168.69993	-168. 41. 59.7	236326.3	72032.	21144523.
34621.593	0. 9. 37. 1.593	30.08113	30. 4. 52.1	-168.56943	-168. 34. 10.0	235148.8	71673.	21143375.
34623.593	0. 9. 37. 3.593	30.05284	30. 3. 10.2	-168.43915	-168. 26. 21.0	233962.3	71312.	21142218.
34625.593	0. 9. 37. 5.593	30.02444	30. 1. 28.0	-168.30911	-168. 18. 32.8	232767.0	70948.	21141053.
34627.593	0. 9. 37. 7.593	29.99595	29. 59. 45.4	-168.17928	-168. 10. 45.4	231563.5	70581.	21139880.
34629.593	0. 9. 37. 9.593	29.96736	29. 58. 2.5	-168.04970	-168. 2. 58.9	230352.8	70212.	21138699.

TABLE I
APOLLO MISSION AS-502
SPACECRAFT OPERATIONAL TRAJECTORY
-POSITION VECTOR-

TIME SECONDS	TIME DAY HR MIN SEC	GEODETIC LATITUDE DEGREES	GEODETIC LATITUDE DEG MIN SEC	LONGITUDE DEGREES	LONGITUDE DEG MIN SEC	ALTITUDE FEET	ALTITUDE METERS	RADIUS FEET
34631.594	0. 9. 37. 11.593	29.93868	29. 56. 19.3	-167.92037	-167. 55. 13.3	229135.8	69841.	21137512.
34633.593	0. 9. 37. 13.593	29.90992	29. 54. 35.7	-167.79129	-167. 47. 28.7	227913.1	69468.	21136320.
34635.593	0. 9. 37. 15.593	29.88107	29. 52. 51.8	-167.66248	-167. 39. 44.9	226685.3	69094.	21135122.
34637.593	0. 9. 37. 17.593	29.85214	29. 51. 7.7	-167.53395	-167. 32. 2.2	225453.8	68718.	21133921.
ENTER S-BAND COMMUNICATIONS BLACKOUT								
34637.593	0. 9. 37. 17.593	29.85214	29. 51. 7.7	-167.53395	-167. 32. 2.2	225453.8	68718.	21133921.
34639.593	0. 9. 37. 19.593	29.82314	29. 49. 23.3	-167.40569	-167. 24. 20.5	224219.6	68342.	21132718.
34641.593	0. 9. 37. 21.593	29.79406	29. 47. 38.6	-167.27774	-167. 16. 39.9	222983.3	67965.	21131512.
34643.593	0. 9. 37. 23.593	29.76491	29. 45. 53.7	-167.15009	-167. 9. .3	221746.1	67588.	21130306.
34645.593	0. 9. 37. 25.593	29.73570	29. 44. 8.5	-167.02276	-167. 1. 21.9	220509.1	67211.	21129099.
34647.593	0. 9. 37. 27.593	29.70644	29. 42. 23.2	-166.89576	-166. 53. 44.7	219272.8	66834.	21127894.
34649.593	0. 9. 37. 29.593	29.67713	29. 40. 37.7	-166.76909	-166. 46. 8.7	218037.1	66458.	21126688.
34651.593	0. 9. 37. 31.593	29.64780	29. 38. 52.1	-166.64277	-166. 38. 34.0	216801.6	66081.	21125484.
34653.593	0. 9. 37. 33.593	29.61844	29. 37. 6.4	-166.51681	-166. 31. .5	215566.6	65705.	21124279.
34655.593	0. 9. 37. 35.593	29.58907	29. 35. 20.7	-166.39122	-166. 23. 28.4	214332.4	65329.	21123076.
34657.593	0. 9. 37. 37.593	29.55971	29. 33. 35.0	-166.26600	-166. 15. 57.6	213098.1	64952.	21121872.
34659.594	0. 9. 37. 39.593	29.53036	29. 31. 49.3	-166.14118	-166. 8. 28.3	211862.9	64576.	21120668.
34661.593	0. 9. 37. 41.593	29.50104	29. 30. 3.7	-166.01676	-166. 1. .3	210627.1	64199.	21119463.
34663.593	0. 9. 37. 43.593	29.47175	29. 28. 18.3	-165.89276	-165. 53. 33.9	209390.1	63822.	21118256.
34665.594	0. 9. 37. 45.593	29.44250	29. 26. 33.0	-165.76919	-165. 46. 9.1	208153.7	63445.	21117051.
34667.593	0. 9. 37. 47.593	29.41331	29. 24. 47.9	-165.64606	-165. 38. 45.8	206919.2	63069.	21115847.
34669.593	0. 9. 37. 49.593	29.38416	29. 23. 3.0	-165.52339	-165. 31. 24.2	205687.9	62694.	21114646.
34671.593	0. 9. 37. 51.593	29.35508	29. 21. 18.3	-165.40120	-165. 24. 4.3	204462.9	62320.	21113452.
34673.593	0. 9. 37. 53.593	29.32607	29. 19. 33.8	-165.27950	-165. 16. 46.2	203244.4	61949.	21112263.
34675.593	0. 9. 37. 55.593	29.29713	29. 17. 49.7	-165.15830	-165. 9. 29.9	202034.7	61580.	21111083.

404331

TABLE I
APOLLO MISSION AS-502
SPACECRAFT OPERATIONAL TRAJECTORY
-POSITION VECTOR-

TIME SECONDS	TIME DAY HR MIN SEC	GEODETIC LATITUDE DEGREES	GEODETIC LATITUDE DEG MIN SEC	LONGITUDE DEGREES	LONGITUDE DEG MIN SEC	ALTITUDE FEET	ALTITUDE METERS	RADIUS FEET
34677.593	0. 9. 37. 57.593	29.26827	29. 16. 5.8	-165.03763	-165. 2. 15.5	200833.4	61214.	21109912.
34679.593	0. 9. 37. 59.593	29.23952	29. 14. 22.3	-164.91750	-164. 55. 3.0	199641.2	60851.	21108750.
34681.593	0. 9. 38. 1.593	29.21087	29. 12. 39.1	-164.79792	-164. 47. 52.5	198458.9	60490.	21107597.
34683.593	0. 9. 38. 3.593	29.18233	29. 10. 56.4	-164.67892	-164. 40. 44.1	197288.5	60134.	21106456.
34685.593	0. 9. 38. 5.593	29.15393	29. 9. 14.1	-164.56051	-164. 33. 37.8	196130.0	59781.	21105327.
34687.593	0. 9. 38. 7.593	29.12566	29. 7. 32.4	-164.44271	-164. 26. 33.8	194985.5	59432.	21104212.
34689.593	0. 9. 38. 9.593	29.09753	29. 5. 51.1	-164.32554	-164. 19. 31.9	193857.0	59088.	21103112.
34691.593	0. 9. 38. 11.593	29.06954	29. 4. 10.4	-164.20901	-164. 12. 32.4	192746.5	58749.	21102031.
34693.594	0. 9. 38. 13.593	29.04171	29. 2. 30.2	-164.09314	-164. 5. 35.3	191657.2	58417.	21100971.
34695.593	0. 9. 38. 15.593	29.01403	29. 0. 50.5	-163.97797	-163. 58. 40.7	190593.5	58093.	21099935.
34697.593	0. 9. 38. 17.593	28.98650	28. 59. 11.4	-163.86351	-163. 51. 48.6	189558.0	57777.	21098928.
34699.593	0. 9. 38. 19.593	28.95913	28. 57. 32.9	-163.74977	-163. 44. 59.2	188549.2	57470.	21097948.
34701.593	0. 9. 38. 21.593	28.93194	28. 55. 55.0	-163.63676	-163. 38. 12.4	187566.0	57170.	21096993.
34703.593	0. 9. 38. 23.593	28.90496	28. 54. 17.9	-163.52451	-163. 31. 28.2	186606.0	56878.	21096061.
34705.593	0. 9. 38. 25.593	28.87820	28. 52. 41.5	-163.41301	-163. 24. 46.9	185667.8	56592.	21095150.
34707.593	0. 9. 38. 27.593	28.85167	28. 51. 6.0	-163.30229	-163. 18. 8.3	184749.5	56312.	21094259.
34709.593	0. 9. 38. 29.593	28.82539	28. 49. 31.4	-163.19236	-163. 11. 32.5	183849.8	56038.	21093386.
34711.593	0. 9. 38. 31.593	28.79937	28. 47. 57.7	-163.08323	-163. 4. 59.6	182968.3	55769.	21092532.
34713.593	0. 9. 38. 33.593	28.77361	28. 46. 25.0	-162.97492	-162. 58. 29.7	182104.0	55505.	21091694.
34715.593	0. 9. 38. 35.593	28.74813	28. 44. 53.3	-162.86741	-162. 52. 2.7	181256.5	55247.	21090873.
34717.593	0. 9. 38. 37.593	28.72293	28. 43. 22.5	-162.76075	-162. 45. 38.7	180423.5	54993.	21090066.
34719.593	0. 9. 38. 39.593	28.69803	28. 41. 52.9	-162.65494	-162. 39. 17.8	179603.8	54743.	21089271.
34721.594	0. 9. 38. 41.593	28.67344	28. 40. 24.4	-162.54997	-162. 32. 59.9	178796.8	54497.	21088490.
34723.593	0. 9. 38. 43.593	28.64915	28. 38. 56.9	-162.44586	-162. 26. 45.1	178002.3	54255.	21087720.
34725.593	0. 9. 38. 45.593	28.62518	28. 37. 30.7	-162.34263	-162. 20. 33.5	177218.8	54016.	21086962.
34727.594	0. 9. 38. 47.593	28.60154	28. 36. 5.5	-162.24027	-162. 14. 25.0	176446.8	53781.	21086214.
34729.593	0. 9. 38. 49.593	28.57822	28. 34. 41.6	-162.13881	-162. 8. 19.7	175685.8	53549.	21085476.

TABLE I
APOLLO MISSION AS-502
SPACECRAFT OPERATIONAL TRAJECTORY
-POSITION VECTOR-

TIME SECONDS	TIME DAY HR MIN SEC	GEODETIC LATITUDE DEGREES	GEODETIC LATITUDE DEG MIN SEC	LONGITUDE DEGREES	LONGITUDE DEG MIN SEC	ALTITUDE FEET	ALTITUDE METERS	RADIUS FEET
34731.593	0. 9. 38. 51.593	28.55524	28. 33. 18.9	-162.03825	-162. 2. 17.7	174934.3	53320.	21084749.
34733.593	0. 9. 38. 53.593	28.53260	28. 31. 57.4	-161.93858	-161. 56. 18.9	174191.1	53094.	21084028.
34735.593	0. 9. 38. 55.593	28.51030	28. 30. 37.1	-161.83983	-161. 50. 23.4	173453.6	52869.	21083314.
34737.593	0. 9. 38. 57.593	28.48836	28. 29. 18.1	-161.74139	-161. 44. 31.2	172719.6	52645.	21082602.
34739.593	0. 9. 38. 59.593	28.46678	28. 28. .4	-161.64505	-161. 38. 42.2	171987.3	52422.	21081892.
34741.593	0. 9. 39. 1.593	28.44557	28. 26. 44.1	-161.54905	-161. 32. 56.6	171254.8	52199.	21081181.
34743.593	0. 9. 39. 3.593	28.42473	28. 25. 29.0	-161.45398	-161. 27. 14.3	170521.1	51975.	21080469.
34745.593	0. 9. 39. 5.593	28.40427	28. 24. 15.4	-161.35985	-161. 21. 35.4	169785.1	51751.	21079754.
34747.593	0. 9. 39. 7.593	28.38418	28. 23. 3.1	-161.26665	-161. 15. 60.0	169046.1	51525.	21079035.
34749.593	0. 9. 39. 9.593	28.36448	28. 21. 52.1	-161.17440	-161. 10. 27.9	168302.8	51299.	21078312.
34751.593	0. 9. 39. 11.593	28.34516	28. 20. 42.6	-161.08311	-161. 4. 59.2	167555.8	51071.	21077584.
34753.593	0. 9. 39. 13.593	28.32623	28. 19. 34.4	-160.99277	-160. 59. 34.0	166804.1	50842.	21076852.
34755.594	0. 9. 39. 15.593	28.30770	28. 18. 27.7	-160.90341	-160. 54. 12.3	166046.9	50611.	21076114.
34757.593	0. 9. 39. 17.593	28.28955	28. 17. 22.4	-160.81501	-160. 48. 54.0	165284.1	50379.	21075369.
EXIT S-BAND COMMUNICATIONS BLACKOUT								
34757.593	0. 9. 39. 17.593	28.28955	28. 17. 22.4	-160.81501	-160. 48. 54.0	165284.1	50379.	21075369.
34759.593	0. 9. 39. 19.593	28.27181	28. 16. 18.5	-160.72759	-160. 43. 39.3	164515.1	50144.	21074618.
34761.593	0. 9. 39. 21.593	28.25446	28. 15. 16.0	-160.64116	-160. 38. 28.2	163739.9	49908.	21073861.
34763.593	0. 9. 39. 23.593	28.23751	28. 14. 15.0	-160.55571	-160. 33. 20.5	162957.6	49670.	21073096.
34765.593	0. 9. 39. 25.593	28.22096	28. 13. 15.5	-160.47125	-160. 28. 16.5	162167.1	49429.	21072322.
34767.593	0. 9. 39. 27.593	28.20482	28. 12. 17.4	-160.38779	-160. 23. 16.1	161366.6	49185.	21071538.
34769.593	0. 9. 39. 29.593	28.18909	28. 11. 20.7	-160.30534	-160. 18. 19.2	160554.1	48937.	21070741.
34771.593	0. 9. 39. 31.593	28.17378	28. 10. 25.6	-160.22389	-160. 13. 26.0	159730.1	48686.	21069933.
34773.593	0. 9. 39. 33.593	28.15887	28. 9. 32.0	-160.14346	-160. 8. 36.5	158893.1	48431.	21069111.
34775.593	0. 9. 39. 35.593	28.14439	28. 8. 39.8	-160.06405	-160. 3. 50.6	158044.1	48172.	21068277.

TABLE I
APOLLO MISSION AS-502
SPACECRAFT OPERATIONAL TRAJECTORY
-POSITION VECTOR-

TIME SECONDS	TIME DAY HR MIN SEC	GEODETIC LATITUDE DEGREES	GEODETIC LATITUDE DEG MIN SEC	LONGITUDE DEGREES	LONGITUDE DEG MIN SEC	ALTITUDE FEET	ALTITUDE METERS	RADIUS FEET
34777.593	0. 9. 39. 37.593	28.13025	28. 7. 48.9	-159.98568	-159. 59. 8.4	157206.4	47917.	21067453.
34779.593	0. 9. 39. 39.593	28.11630	28. 6. 58.7	-159.90838	-159. 54. 30.2	156408.9	47674.	21066670.
34781.593	0. 9. 39. 41.593	28.10233	28. 6. 8.4	-159.83220	-159. 49. 56.0	155635.6	47438.	21065911.
34783.594	0. 9. 39. 43.593	28.08821	28. 5. 17.6	-159.75720	-159. 45. 25.9	154829.2	47192.	21065119.
34785.593	0. 9. 39. 45.593	28.07392	28. 4. 26.1	-159.68337	-159. 41. .1	153950.9	46924.	21064255.
34787.593	0. 9. 39. 47.593	28.05946	28. 3. 34.1	-159.61074	-159. 36. 38.7	153002.7	46635.	21063322.
34789.594	0. 9. 39. 49.593	28.04485	28. 2. 41.5	-159.53930	-159. 32. 21.5	151990.7	46327.	21062324.
34791.593	0. 9. 39. 51.593	28.03010	28. 1. 48.3	-159.46909	-159. 28. 8.7	150924.2	46002.	21061273.
34793.593	0. 9. 39. 53.593	28.01520	28. 0. 54.7	-159.40009	-159. 24. .3	149812.7	45663.	21060176.
34795.593	0. 9. 39. 55.593	28.00019	28. 0. .7	-159.33234	-159. 19. 56.4	148662.7	45312.	21059041.
34797.593	0. 9. 39. 57.593	27.98507	27. 59. 6.2	-159.26584	-159. 15. 57.0	147482.7	44953.	21057877.
34799.593	0. 9. 39. 59.593	27.96990	27. 58. 11.6	-159.20060	-159. 12. 2.2	146304.9	44594.	21056714.
34801.593	0. 9. 40. 1.593	27.95479	27. 57. 17.2	-159.13659	-159. 8. 11.7	145166.7	44247.	21055592.
34803.593	0. 9. 40. 3.593	27.93977	27. 56. 23.2	-159.07381	-159. 4. 25.8	144075.4	43914.	21054515.
34805.593	0. 9. 40. 5.593	27.92486	27. 55. 29.5	-159.01230	-159. 0. 44.3	143029.2	43595.	21053484.
34807.593	0. 9. 40. 7.593	27.91002	27. 54. 36.1	-158.95204	-158. 57. 7.3	142023.5	43289.	21052493.
34809.593	0. 9. 40. 9.593	27.89524	27. 53. 42.9	-158.89305	-158. 53. 35.0	141052.2	42993.	21051537.
34811.593	0. 9. 40. 11.593	27.88052	27. 52. 49.9	-158.83534	-158. 50. 7.3	140109.0	42705.	21050608.
34813.593	0. 9. 40. 13.593	27.86583	27. 51. 57.0	-158.77893	-158. 46. 44.2	139186.5	42424.	21049701.
34815.593	0. 9. 40. 15.593	27.85116	27. 51. 4.2	-158.72381	-158. 43. 25.7	138277.0	42147.	21048806.
34817.594	0. 9. 40. 17.593	27.83652	27. 50. 11.5	-158.66998	-158. 40. 11.9	137373.7	41872.	21047918.
34819.593	0. 9. 40. 19.593	27.82190	27. 49. 18.8	-158.61744	-158. 37. 2.8	136473.7	41597.	21047032.
34821.593	0. 9. 40. 21.593	27.80730	27. 48. 26.3	-158.56618	-158. 33. 58.3	135575.0	41323.	21046148.
34823.593	0. 9. 40. 23.593	27.79275	27. 47. 33.9	-158.51619	-158. 30. 58.3	134676.7	41050.	21045265.
34825.593	0. 9. 40. 25.593	27.77824	27. 46. 41.6	-158.46746	-158. 28. 2.9	133778.2	40776.	21044381.
34827.593	0. 9. 40. 27.593	27.76378	27. 45. 49.6	-158.41999	-158. 25. 12.0	132878.2	40501.	21043495.
34829.593	0. 9. 40. 29.593	27.74938	27. 44. 57.8	-158.37376	-158. 22. 25.5	131975.7	40226.	21042607.

TABLE I
APOLLO MISSION AS-502
SPACECRAFT OPERATIONAL TRAJECTORY
-POSITION VECTOR-

TIME SECONDS	TIME DAY HR MIN SEC	GEODETIC LATITUDE DEGREES	GEODETIC LATITUDE DEG MIN SEC	LONGITUDE DEGREES	LONGITUDE DEG MIN SEC	ALTITUDE FEET	ALTITUDE METERS	RADIUS FEET
34831.593	0. 9. 40. 31.593	27.73505	27. 44. 6.2	-158.32875	-158. 19. 43.5	131069.8	39950.	21041715.
34833.593	0. 9. 40. 33.593	27.72079	27. 43. 14.9	-158.28497	-158. 17. 5.9	130156.0	39672.	21040817.
34835.593	0. 9. 40. 35.593	27.70661	27. 42. 23.8	-158.24239	-158. 14. 32.6	129231.0	39390.	21039905.
34837.593	0. 9. 40. 37.593	27.69249	27. 41. 33.0	-158.20102	-158. 12. 3.7	128288.5	39102.	21038977.
34839.593	0. 9. 40. 39.593	27.67844	27. 40. 42.4	-158.16084	-158. 9. 39.0	127325.0	38809.	21038028.
34841.593	0. 9. 40. 41.593	27.66448	27. 39. 52.1	-158.12184	-158. 7. 18.6	126340.5	38509.	21037057.
34843.593	0. 9. 40. 43.593	27.65060	27. 39. 2.2	-158.08401	-158. 5. 2.4	125334.5	38202.	21036065.
34845.593	0. 9. 40. 45.593	27.63683	27. 38. 12.6	-158.04733	-158. 2. 50.4	124309.5	37890.	21035054.
34847.593	0. 9. 40. 47.593	27.62317	27. 37. 23.4	-158.01179	-158. 0. 42.4	123269.3	37573.	21034027.
34849.593	0. 9. 40. 49.593	27.60964	27. 36. 34.7	-157.97736	-157. 58. 38.5	122217.5	37252.	21032989.
34851.594	0. 9. 40. 51.593	27.59626	27. 35. 46.5	-157.94405	-157. 56. 38.6	121160.5	36930.	21031945.
34853.593	0. 9. 40. 53.593	27.58303	27. 34. 58.9	-157.91181	-157. 54. 42.5	120101.5	36607.	21030900.
34855.593	0. 9. 40. 55.593	27.56998	27. 34. 11.9	-157.88062	-157. 52. 50.2	119043.6	36285.	21029855.
34857.593	0. 9. 40. 57.593	27.55709	27. 33. 25.5	-157.85048	-157. 51. 1.7	117987.1	35963.	21028811.
34859.593	0. 9. 40. 59.593	27.54443	27. 32. 40.0	-157.82133	-157. 49. 16.8	116946.3	35645.	21027783.
34861.593	0. 9. 41. 1.593	27.53217	27. 31. 55.8	-157.79305	-157. 47. 35.0	115933.1	35336.	21026782.
34863.593	0. 9. 41. 3.593	27.52047	27. 31. 13.7	-157.76556	-157. 45. 56.0	114922.6	35028.	21025784.
34865.593	0. 9. 41. 5.593	27.50936	27. 30. 33.7	-157.73881	-157. 44. 19.7	113894.8	34715.	21024767.
34867.593	0. 9. 41. 7.593	27.49883	27. 29. 55.8	-157.71279	-157. 42. 46.0	112846.8	34396.	21023729.
34869.593	0. 9. 41. 9.593	27.48887	27. 29. 19.9	-157.68748	-157. 41. 14.9	111778.6	34070.	21022671.
34871.593	0. 9. 41. 11.593	27.47947	27. 28. 46.1	-157.66288	-157. 39. 46.4	110691.1	33739.	21021593.
34873.593	0. 9. 41. 13.593	27.47060	27. 28. 14.2	-157.63897	-157. 38. 20.3	109587.1	33402.	21020497.
34875.593	0. 9. 41. 15.593	27.46225	27. 27. 44.1	-157.61577	-157. 36. 56.8	108468.6	33061.	21019387.
34877.593	0. 9. 41. 17.593	27.45439	27. 27. 15.8	-157.59324	-157. 35. 35.7	107340.1	32717.	21018267.
34879.594	0. 9. 41. 19.593	27.44701	27. 26. 49.2	-157.57139	-157. 34. 17.0	106205.6	32372.	21017139.
34881.593	0. 9. 41. 21.593	27.44009	27. 26. 24.3	-157.55022	-157. 33. .8	105069.4	32025.	21016011.
34883.593	0. 9. 41. 23.593	27.43360	27. 26. .9	-157.52973	-157. 31. 47.0	103935.6	31680.	21014883.

404333

TABLE I
APOLLO MISSION AS-502
SPACECRAFT OPERATIONAL TRAJECTORY
-POSITION VECTOR-

TIME SECONDS	TIME DAY HR MIN SEC	GEODETIC LATITUDE DEGREES	GEODETIC LATITUDE DEG MIN SEC	LONGITUDE DEGREES	LONGITUDE DEG MIN SEC	ALTITUDE FEET	ALTITUDE METERS	RADIUS FEET
34885.594	0. 9. 41. 25.593	27.42754	27. 25. 39.1	-157.50990	-157. 30. 35.7	102800.6	31334.	21013754.
34887.593	0. 9. 41. 27.593	27.42191	27. 25. 18.9	-157.49074	-157. 29. 26.7	101659.1	30986.	21012618.
34889.593	0. 9. 41. 29.593	27.41671	27. 25. .2	-157.47222	-157. 28. 20.0	100505.1	30634.	21011470.
34891.593	0. 9. 41. 31.593	27.41194	27. 24. 43.0	-157.45436	-157. 27. 15.7	99335.1	30277.	21010304.
34893.593	0. 9. 41. 33.593	27.40759	27. 24. 27.3	-157.43712	-157. 26. 13.6	98145.4	29915.	21009119.
34895.593	0. 9. 41. 35.593	27.40364	27. 24. 13.1	-157.42051	-157. 25. 13.8	96934.9	29546.	21007912.
34897.593	0. 9. 41. 37.593	27.40003	27. 24. .1	-157.40452	-157. 24. 16.3	95721.6	29176.	21006703.
34899.593	0. 9. 41. 39.593	27.39662	27. 23. 47.8	-157.38916	-157. 23. 21.0	94531.4	28813.	21005516.
34901.593	0. 9. 41. 41.593	27.39322	27. 23. 35.6	-157.37448	-157. 22. 28.1	93352.4	28454.	21004340.
34903.593	0. 9. 41. 43.593	27.38973	27. 23. 23.0	-157.36052	-157. 21. 37.9	92138.9	28084.	21003130.
34905.593	0. 9. 41. 45.593	27.38616	27. 23. 10.2	-157.34729	-157. 20. 50.3	90863.4	27695.	21001858.
34907.593	0. 9. 41. 47.593	27.38252	27. 22. 57.1	-157.33478	-157. 20. 5.2	89531.4	27289.	21000530.
34909.593	0. 9. 41. 49.593	27.37881	27. 22. 43.7	-157.32297	-157. 19. 22.7	88150.4	26868.	20999152.
34911.593	0. 9. 41. 51.593	27.37505	27. 22. 30.2	-157.31183	-157. 18. 42.6	86726.9	26434.	20997733.
34913.594	0. 9. 41. 53.593	27.37125	27. 22. 16.5	-157.30137	-157. 18. 4.9	85269.9	25990.	20996279.
34915.593	0. 9. 41. 55.593	27.36742	27. 22. 2.7	-157.29153	-157. 17. 29.5	83786.7	25538.	20994800.
34917.593	0. 9. 41. 57.593	27.36358	27. 21. 48.9	-157.28233	-157. 16. 56.4	82283.4	25080.	20993301.
34919.593	0. 9. 41. 59.593	27.35972	27. 21. 35.0	-157.27372	-157. 16. 25.4	80766.4	24618.	20991788.
34921.593	0. 9. 42. 1.593	27.35587	27. 21. 21.1	-157.26571	-157. 15. 56.6	79242.0	24153.	20990267.
34923.593	0. 9. 42. 3.593	27.35204	27. 21. 7.3	-157.25826	-157. 15. 29.7	77713.7	23687.	20988742.
34925.593	0. 9. 42. 5.593	27.34823	27. 20. 53.6	-157.25135	-157. 15. 4.9	76186.5	23222.	20987219.
34927.593	0. 9. 42. 7.593	27.34446	27. 20. 40.1	-157.24493	-157. 14. 41.7	74678.2	22762.	20985714.
34929.593	0. 9. 42. 9.593	27.34083	27. 20. 27.0	-157.23886	-157. 14. 19.9	73214.5	22316.	20984254.
34931.593	0. 9. 42. 11.593	27.33746	27. 20. 14.9	-157.23304	-157. 13. 59.0	71790.2	21882.	20982833.
34933.593	0. 9. 42. 13.593	27.33446	27. 20. 4.0	-157.22745	-157. 13. 38.8	70374.0	21450.	20981421.
34935.593	0. 9. 42. 15.593	27.33185	27. 19. 54.7	-157.22208	-157. 13. 19.5	68935.0	21011.	20979984.
34937.593	0. 9. 42. 17.593	27.32962	27. 19. 46.6	-157.21690	-157. 13. .9	67473.0	20566.	20978524.

TABLE I
APOLLO MISSION AS-502
SPACECRAFT OPERATIONAL TRAJECTORY
-POSITION VECTOR-

TIME SECONDS	TIME DAY HR MIN SEC	GEODETIC LATITUDE DEGREES	GEODETIC LATITUDE DEG MIN SEC	LONGITUDE DEGREES	LONGITUDE DEG MIN SEC	ALTITUDE FEET	ALTITUDE METERS	RADIUS FEET
34939.593	0. 9. 42. 19.593	27.32775	27. 19. 39.9	-157.21191	-157. 12. 42.9	65992.3	20114.	20977045.
34941.594	0. 9. 42. 21.593	27.32623	27. 19. 34.4	-157.20711	-157. 12. 25.6	64497.8	19659.	20975552.
34943.593	0. 9. 42. 23.593	27.32504	27. 19. 30.1	-157.20251	-157. 12. 9.1	62997.3	19202.	20974053.
34945.593	0. 9. 42. 25.593	27.32416	27. 19. 27.0	-157.19813	-157. 11. 53.3	61497.3	18744.	20972554.
34947.594	0. 9. 42. 27.593	27.32356	27. 19. 24.8	-157.19397	-157. 11. 38.3	60001.8	18289.	20971059.
			TERMINATION OF AGC GUIDANCE					
34947.594	0. 9. 42. 27.593	27.32356	27. 19. 24.8	-157.19397	-157. 11. 38.3	60001.8	18289.	20971059.
34949.593	0. 9. 42. 29.593	27.32322	27. 19. 23.6	-157.19003	-157. 11. 24.1	58514.3	17835.	20969572.
34951.593	0. 9. 42. 31.593	27.32312	27. 19. 23.2	-157.18632	-157. 11. 10.8	57037.5	17385.	20968095.
34953.593	0. 9. 42. 33.593	27.32322	27. 19. 23.6	-157.18284	-157. 10. 58.2	55574.8	16939.	20966632.
34955.593	0. 9. 42. 35.593	27.32350	27. 19. 24.6	-157.17957	-157. 10. 46.5	54129.3	16499.	20965187.
34957.593	0. 9. 42. 37.593	27.32394	27. 19. 26.2	-157.17652	-157. 10. 35.5	52703.1	16064.	20963760.
34959.593	0. 9. 42. 39.593	27.32451	27. 19. 28.3	-157.17369	-157. 10. 25.3	51299.1	15636.	20962355.
34961.593	0. 9. 42. 41.593	27.32521	27. 19. 30.8	-157.17107	-157. 10. 15.9	49920.3	15216.	20960975.
34963.593	0. 9. 42. 43.593	27.32600	27. 19. 33.6	-157.16863	-157. 10. 7.1	48569.3	14804.	20959624.
34965.593	0. 9. 42. 45.593	27.32688	27. 19. 36.8	-157.16639	-157. 9. 59.0	47247.6	14401.	20958301.
34967.593	0. 9. 42. 47.593	27.32783	27. 19. 40.2	-157.16432	-157. 9. 51.6	45955.8	14007.	20957009.
34969.593	0. 9. 42. 49.593	27.32883	27. 19. 43.8	-157.16241	-157. 9. 44.7	44695.1	13623.	20955747.
34971.593	0. 9. 42. 51.593	27.32986	27. 19. 47.5	-157.16065	-157. 9. 38.3	43465.1	13248.	20954516.
34973.593	0. 9. 42. 53.593	27.33093	27. 19. 51.3	-157.15902	-157. 9. 32.5	42265.6	12883.	20953315.
34975.594	0. 9. 42. 55.593	27.33201	27. 19. 55.3	-157.15751	-157. 9. 27.1	41096.1	12526.	20952145.
34977.593	0. 9. 42. 57.593	27.33311	27. 19. 59.2	-157.15610	-157. 9. 22.0	39957.9	12179.	20951006.
34979.593	0. 9. 42. 59.593	27.33421	27. 20. 3.1	-157.15479	-157. 9. 17.3	38850.4	11842.	20949897.
34981.593	0. 9. 43. 1.593	27.33530	27. 20. 7.1	-157.15356	-157. 9. 12.8	37773.9	11513.	20948819.
34983.593	0. 9. 43. 3.593	27.33638	27. 20. 11.0	-157.15240	-157. 9. 8.7	36726.6	11194.	20947771.

TABLE I
APOLLO MISSION AS-502
SPACECRAFT OPERATIONAL TRAJECTORY
-POSITION VECTOR-

TIME SECONDS	TIME DAY HR MIN SEC	GEODETIC LATITUDE DEGREES	GEODETIC LATITUDE DEG MIN SEC	LONGITUDE DEGREES	LONGITUDE DEG MIN SEC	ALTITUDE FEET	ALTITUDE METERS	RADIUS FEET
34985.593	0. 9. 43. 5.593	27.33745	27. 20. 14.8	-157.15130	-157. 9. 4.7	35708.4	10884.	20946752.
34987.593	0. 9. 43. 7.593	27.33851	27. 20. 18.6	-157.15028	-157. 9. 1.0	34717.1	10582.	20945759.
34989.593	0. 9. 43. 9.593	27.33955	27. 20. 22.4	-157.14930	-157. 8. 57.5	33750.6	10287.	20944792.
34991.593	0. 9. 43. 11.593	27.34058	27. 20. 26.1	-157.14838	-157. 8. 54.2	32806.4	9999.	20943847.
34993.593	0. 9. 43. 13.593	27.34158	27. 20. 29.7	-157.14750	-157. 8. 51.0	31883.1	9718.	20942922.
34995.593	0. 9. 43. 15.593	27.34257	27. 20. 33.2	-157.14666	-157. 8. 48.0	30978.6	9442.	20942017.
34997.593	0. 9. 43. 17.593	27.34353	27. 20. 36.7	-157.14587	-157. 8. 45.1	30091.4	9172.	20941129.
34999.593	0. 9. 43. 19.593	27.34448	27. 20. 40.1	-157.14510	-157. 8. 42.4	29220.6	8906.	20940257.
35001.593	0. 9. 43. 21.593	27.34541	27. 20. 43.5	-157.14437	-157. 8. 39.7	28364.9	8646.	20939401.
35003.594	0. 9. 43. 23.593	27.34632	27. 20. 46.7	-157.14366	-157. 8. 37.2	27523.4	8389.	20938558.
35005.593	0. 9. 43. 25.593	27.34721	27. 20. 50.0	-157.14298	-157. 8. 34.7	26695.2	8137.	20937729.
35007.593	0. 9. 43. 27.593	27.34808	27. 20. 53.1	-157.14233	-157. 8. 32.4	25879.9	7888.	20936913.
35009.594	0. 9. 43. 29.593	27.34894	27. 20. 56.2	-157.14169	-157. 8. 30.1	25076.9	7643.	20936108.
35011.593	0. 9. 43. 31.593	27.34978	27. 20. 59.2	-157.14107	-157. 8. 27.9	24284.9	7402.	20935316.
35013.593	0. 9. 43. 33.593	27.35060	27. 21. 2.2	-157.14048	-157. 8. 25.7	23503.9	7164.	20934534.
35013.994	0. 9. 43. 33.994	27.35077	27. 21. 2.8	-157.14036	-157. 8. 25.3	23348.9	7117.	20934379.
			DROGUE PARACHUTES DEPLOYMENT					
35013.994	0. 9. 43. 33.994	27.35077	27. 21. 2.8	-157.14036	-157. 8. 25.3	23348.9	7117.	20934379.
35023.993	0. 9. 43. 43.994	27.35325	27. 21. 11.7	-157.13856	-157. 8. 18.8	19868.2	6056.	20930896.
35033.993	0. 9. 43. 53.994	27.35395	27. 21. 14.2	-157.13804	-157. 8. 17.0	17102.9	5213.	20928130.
35043.994	0. 9. 44. 3.994	27.35412	27. 21. 14.9	-157.13791	-157. 8. 16.5	14619.7	4456.	20925647.
35053.994	0. 9. 44. 13.994	27.35417	27. 21. 15.0	-157.13786	-157. 8. 16.3	12247.2	3733.	20923274.

TABLE I
APOLLO MISSION AS-502
SPACECRAFT OPERATIONAL TRAJECTORY
-POSITION VECTOR-

TIME SECONDS	TIME DAY HR MIN SEC	GEODETIC LATITUDE DEGREES	GEODETIC LATITUDE DEG MIN SEC	LONGITUDE DEGREES	LONGITUDE DEG MIN SEC	ALTITUDE FEET	ALTITUDE METERS	RADIUS FEET
35063.193	0. 9. 44. 23.193	27.35418	27. 21. 15.0	-157.13785	-157. 8. 16.3	10144.0	3092.	20921171.
			MAIN PARACHUTES DEPLOYMENT					
35063.193	0. 9. 44. 23.193	27.35418	27. 21. 15.0	-157.13785	-157. 8. 16.3	10144.0	3092.	20921171.
35093.194	0. 9. 44. 53.193	27.35418	27. 21. 15.0	-157.13785	-157. 8. 16.3	8817.5	2688.	20919845.
35123.193	0. 9. 45. 23.193	27.35418	27. 21. 15.0	-157.13785	-157. 8. 16.3	7850.0	2393.	20918877.
35153.193	0. 9. 45. 53.193	27.35418	27. 21. 15.0	-157.13785	-157. 8. 16.3	6896.7	2102.	20917924.
35183.194	0. 9. 46. 23.193	27.35418	27. 21. 15.0	-157.13785	-157. 8. 16.3	5957.2	1816.	20916984.
35213.193	0. 9. 46. 53.193	27.35418	27. 21. 15.0	-157.13785	-157. 8. 16.3	5031.2	1534.	20916058.
35243.193	0. 9. 47. 23.193	27.35418	27. 21. 15.0	-157.13785	-157. 8. 16.3	4117.7	1255.	20915145.
35273.194	0. 9. 47. 53.193	27.35417	27. 21. 15.0	-157.13785	-157. 8. 16.3	3216.7	980.	20914244.
35303.193	0. 9. 48. 23.193	27.35417	27. 21. 15.0	-157.13784	-157. 8. 16.2	2327.7	709.	20913355.
35333.193	0. 9. 48. 53.193	27.35417	27. 21. 15.0	-157.13784	-157. 8. 16.2	1450.2	442.	20912477.
35363.194	0. 9. 49. 23.193	27.35417	27. 21. 15.0	-157.13784	-157. 8. 16.2	584.0	178.	20911611.

TABLE II
APOLLO MISSION AS-502
SPACECRAFT OPERATIONAL TRAJECTORY
-VELOCITY VECTOR-

TIME SECONDS	-INERTIAL- VELOCITY FT/SEC	VELOCITY M/SEC	PATH ANGLE DEG	AZIMUTH DEG	-EARTH FIXED- VELOCITY FT/SEC	VELOCITY M/SEC	PATH ANGLE DEG	AZIMUTH DEG
34163.594	36499.858	11125.2	-6.501	82.523	35198.341	10728.5	-6.742	82.241
ATMOSPHERIC ENTRY								
34163.594	36499.858	11125.2	-6.501	82.523	35198.341	10728.5	-6.742	82.241
34165.593	36506.945	11127.3	-6.402	82.643	35205.650	10730.7	-6.640	82.366
34167.593	36513.835	11129.4	-6.304	82.763	35212.762	10732.9	-6.538	82.490
34169.593	36520.579	11131.5	-6.205	82.883	35219.724	10735.0	-6.435	82.615
34171.593	36527.187	11133.5	-6.106	83.003	35226.548	10737.1	-6.333	82.740
34173.593	36533.653	11135.5	-6.008	83.124	35233.225	10739.1	-6.230	82.866
34175.593	36540.009	11137.4	-5.909	83.244	35239.789	10741.1	-6.128	82.991
34177.593	36546.183	11139.3	-5.810	83.365	35246.168	10743.1	-6.025	83.117
34179.593	36552.171	11141.1	-5.711	83.487	35252.357	10744.9	-5.923	83.243
34181.593	36557.937	11142.9	-5.612	83.608	35258.322	10746.8	-5.820	83.369
ENTER S-BAND COMMUNICATION BLACKOUT								
34181.593	36557.937	11142.9	-5.612	83.608	35258.322	10746.8	-5.820	83.369
34183.593	36563.428	11144.6	-5.513	83.730	35264.008	10748.5	-5.717	83.496
34185.593	36568.590	11146.1	-5.414	83.852	35269.359	10750.1	-5.614	83.622
34187.593	36573.309	11147.6	-5.314	83.974	35274.266	10751.6	-5.510	83.749
34189.593	36577.512	11148.8	-5.214	84.096	35278.652	10753.0	-5.407	83.876

TABLE II
APOLLO MISSION AS-502
SPACECRAFT OPERATIONAL TRAJECTORY
-VELOCITY VECTOR-

TIME SECONDS	-INERTIAL- VELOCITY FT/SEC	VELOCITY M/SEC	PATH ANGLE DEG	AZIMUTH DEG	-EARTH FIXED- VELOCITY FT/SEC	VELOCITY M/SEC	PATH ANGLE DEG	AZIMUTH DEG
34191.594	36580.878	11149.9	-5.114	84.219	35282.197	10754.0	-5.302	84.003
ENTER C-BAND COMMUNICATIONS BLACKOUT					LOAD FACTOR = 0.05 G			
34191.594	36580.878	11149.9	-5.114	84.219	35282.197	10754.0	-5.302	84.003
34193.593	36583.102	11150.6	-5.012	84.341	35284.595	10754.8	-5.197	84.131
34195.593	36583.715	11150.7	-4.910	84.463	35285.379	10755.0	-5.092	84.257
34197.593	36581.942	11150.2	-4.808	84.585	35283.774	10754.5	-4.985	84.384
34199.593	36576.999	11148.7	-4.704	84.707	35278.991	10753.1	-4.877	84.510
34201.593	36568.246	11146.0	-4.597	84.829	35270.391	10750.4	-4.767	84.637
34203.593	36554.356	11141.8	-4.488	84.951	35256.645	10746.2	-4.653	84.763
34205.593	36533.505	11135.4	-4.375	85.072	35235.933	10739.9	-4.537	84.889
34207.593	36504.970	11126.7	-4.259	85.194	35207.523	10731.3	-4.416	85.015
34209.593	36467.186	11115.2	-4.138	85.314	35169.856	10719.8	-4.291	85.140
34211.593	36418.057	11100.2	-4.011	85.436	35120.827	10704.8	-4.159	85.266
34213.593	36355.966	11081.3	-3.878	85.555	35058.828	10686.0	-4.021	85.389
34215.593	36278.803	11057.8	-3.737	85.674	34981.741	10662.5	-3.876	85.513
34217.593	36184.698	11029.1	-3.588	85.792	34887.698	10633.8	-3.721	85.635
34219.594	36071.711	10994.7	-3.429	85.909	34774.758	10599.4	-3.557	85.756
34221.593	35938.114	10954.0	-3.260	86.024	34641.194	10558.7	-3.382	85.875
34223.593	35782.535	10906.5	-3.080	86.138	34485.631	10511.2	-3.196	85.992
34225.594	35603.937	10852.1	-2.889	86.251	34307.036	10456.8	-2.998	86.108
34227.593	35401.776	10790.5	-2.686	86.361	34104.866	10395.2	-2.788	86.222

TABLE II
APOLLO MISSION AS-502
SPACECRAFT OPERATIONAL TRAJECTORY
-VELOCITY VECTOR-

TIME SECONDS	-INERTIAL- VELOCITY FT/SEC	VELOCITY M/SEC	PATH ANGLE DEG	AZIMUTH DEG	-EARTH FIXED- VELOCITY FT/SEC	VELOCITY M/SEC	PATH ANGLE DEG	AZIMUTH DEG
34229.593	35176.128	10721.7	-2.471	86.471	33879.197	10326.4	-2.566	86.335
MAXIMUM HEATING RATE								
34229.593	35176.128	10721.7	-2.471	86.471	33879.197	10326.4	-2.566	86.335
34231.593	34926.555	10645.6	-2.245	86.578	33629.595	10250.3	-2.331	86.445
34233.593	34653.583	10562.4	-2.006	86.683	33356.588	10167.1	-2.084	86.553
34235.593	34359.131	10472.7	-1.757	86.784	33062.101	10077.3	-1.826	86.658
34237.593	34045.950	10377.2	-1.499	86.884	32748.884	9981.9	-1.558	86.761
34239.593	33717.424	10277.1	-1.233	86.984	32420.325	9881.7	-1.282	86.863
34241.593	33377.397	10173.5	-.962	87.079	32080.274	9778.1	-1.001	86.961
GUIDANCE INITIATE AT RDOT = -700 FT/SEC								
34241.593	33377.397	10173.5	-.962	87.079	32080.274	9778.1	-1.001	86.961
34243.593	33030.148	10067.6	-.688	87.174	31733.009	9672.2	-.716	87.059
34245.593	32680.006	9960.9	-.413	87.268	31382.861	9565.5	-.430	87.155
MAXIMUM LOAD FACTOR								
34245.593	32680.006	9960.9	-.413	87.268	31382.861	9565.5	-.430	87.155
34247.593	32331.192	9854.6	-.140	87.359	31034.054	9459.2	-.146	87.249
34249.593	31987.137	9749.7	.124	87.433	30690.034	9354.3	.130	87.324
34251.593	31651.273	9647.3	.360	87.447	30354.275	9252.0	.375	87.337
34253.594	31326.349	9548.3	.507	87.385	30029.523	9153.0	.528	87.272
34255.593	31015.043	9453.4	.568	87.304	29718.397	9058.2	.593	87.186

TABLE II
APOLLO MISSION AS-502
SPACECRAFT OPERATIONAL TRAJECTORY
-VELOCITY VECTOR-

TIME SECONDS	-INERTIAL- VELOCITY FT/SEC	VELOCITY M/SEC	PATH ANGLE DEG	AZIMUTH DEG	-EARTH FIXED- VELOCITY FT/SEC	VELOCITY M/SEC	PATH ANGLE DEG	AZIMUTH DEG
34257.593	30716.258	9362.3	.522	87.258	29419.732	8967.2	.545	87.137
34259.593	30429.755	9275.0	.406	87.300	29133.243	8879.8	.424	87.180
34261.593	30154.783	9191.2	.274	87.400	28858.231	8796.0	.287	87.284
34263.593	29888.830	9110.1	.145	87.488	28592.265	8714.9	.151	87.374
34265.593	29630.136	9031.3	.050	87.491	28333.662	8636.1	.053	87.376
34267.593	29376.681	8954.0	.045	87.434	28080.366	8558.9	.047	87.316
34269.593	29128.183	8878.3	.146	87.387	27832.021	8483.2	.153	87.265
34271.593	28885.355	8804.3	.324	87.417	27589.267	8409.2	.339	87.295
34273.593	28649.458	8732.4	.509	87.553	27353.334	8337.3	.533	87.437
34275.593	28420.868	8662.7	.672	87.729	27124.669	8267.6	.704	87.620
34277.593	28201.301	8595.8	.822	87.913	26905.023	8200.7	.862	87.812
34279.593	27991.761	8531.9	.942	88.118	26695.380	8136.8	.987	88.027
34281.594	27792.489	8471.2	.997	88.350	26495.969	8076.0	1.046	88.269
34283.593	27602.657	8413.3	1.010	88.580	26305.994	8018.1	1.059	88.510
34285.593	27421.955	8358.2	1.011	88.802	26125.163	7963.0	1.061	88.742
34287.594	27250.008	8305.8	1.002	89.016	25953.098	7910.5	1.052	88.967
34289.593	27086.159	8255.9	.988	89.224	25789.141	7860.5	1.037	89.185
34291.593	26929.861	8208.2	.973	89.426	25632.749	7812.9	1.022	89.397
34293.593	26780.630	8162.8	.958	89.624	25483.435	7767.4	1.007	89.605
34295.593	26637.991	8119.3	.944	89.817	25340.724	7723.9	.993	89.808
34297.593	26501.511	8077.7	.932	90.006	25204.182	7682.3	.980	90.006
34299.593	26370.785	8037.8	.920	90.191	25073.402	7642.4	.968	90.201
34301.593	26245.251	7999.6	.909	90.373	24947.825	7604.1	.957	90.393
34303.593	26124.475	7962.8	.904	90.552	24827.013	7567.3	.951	90.581
34305.593	26008.331	7927.4	.906	90.728	24710.844	7531.9	.954	90.766
34307.593	25896.580	7893.3	.915	90.900	24599.075	7497.8	.963	90.948

TABLE II
APOLLO MISSION AS-502
SPACECRAFT OPERATIONAL TRAJECTORY
-VELOCITY VECTOR-

TIME SECONDS	-INERTIAL- VELOCITY FT/SEC	VELOCITY M/SEC	PATH ANGLE DEG	AZIMUTH DEG	-EARTH FIXED- VELOCITY FT/SEC	VELOCITY M/SEC	PATH ANGLE DEG	AZIMUTH DEG
34309.593	25789.011	7860.5	.931	91.068	24491.494	7465.0	.980	91.125
34311.593	25685.485	7829.0	.951	91.231	24387.963	7433.5	1.002	91.297
34313.593	25585.914	7798.6	.973	91.390	24288.389	7403.1	1.025	91.465
34315.594	25490.188	7769.4	.998	91.545	24192.662	7373.9	1.051	91.628
34317.593	25398.140	7741.4	1.025	91.694	24100.614	7345.9	1.080	91.786
34319.593	25309.717	7714.4	1.051	91.841	24012.193	7318.9	1.108	91.940
34321.593	25224.877	7688.6	1.076	91.984	23927.355	7293.1	1.135	92.092
34323.593	25143.418	7663.7	1.100	92.124	23845.898	7268.2	1.160	92.240
34325.593	25065.317	7639.9	1.121	92.263	23767.798	7244.4	1.182	92.387
34327.593	24990.456	7617.1	1.139	92.400	23692.939	7221.6	1.201	92.531
34329.593	24918.677	7595.2	1.155	92.534	23621.160	7199.7	1.219	92.673
34331.593	24849.956	7574.3	1.167	92.667	23552.440	7178.8	1.231	92.814
34333.593	24784.108	7554.2	1.177	92.798	23486.591	7158.7	1.243	92.953
34335.593	24721.067	7535.0	1.184	92.928	23423.550	7139.5	1.250	93.090
			EXIT C-BAND COMMUNICATIONS BLACKOUT					
34335.593	24721.067	7535.0	1.184	92.928	23423.550	7139.5	1.250	93.090
34337.593	24660.711	7516.6	1.188	93.056	23363.193	7121.1	1.254	93.226
34339.593	24602.734	7498.9	1.194	93.181	23305.215	7103.4	1.261	93.359
34341.593	24546.640	7481.8	1.215	93.287	23249.103	7086.3	1.283	93.470
34343.593	24493.279	7465.6	1.240	93.366	23195.690	7070.1	1.310	93.555
34345.593	24442.108	7450.0	1.253	93.424	23144.429	7054.4	1.323	93.616
34347.593	24393.836	7435.3	1.258	93.476	23096.054	7039.7	1.328	93.672
34349.594	24347.589	7421.2	1.265	93.533	23049.713	7025.6	1.337	93.732
34351.593	24303.400	7407.7	1.272	93.591	23005.430	7012.1	1.344	93.794

TABLE II
APOLLO MISSION AS-502
SPACECRAFT OPERATIONAL TRAJECTORY
-VELOCITY VECTOR-

TIME SECONDS	-INERTIAL- VELOCITY FT/SEC	VELOCITY M/SEC	PATH ANGLE DEG	AZIMUTH DEG	-EARTH FIXED- VELOCITY FT/SEC	VELOCITY M/SEC	PATH ANGLE DEG	AZIMUTH DEG
34353.593	24261.101	7394.8	1.279	93.653	22963.044	6999.1	1.352	93.860
34355.593	24220.723	7382.5	1.283	93.713	22922.572	6986.8	1.356	93.924
34357.593	24182.148	7370.7	1.287	93.776	22883.909	6975.0	1.360	93.991
34359.593	24145.254	7359.5	1.288	93.838	22846.924	6963.8	1.361	94.057
34361.593	24110.069	7348.8	1.289	93.902	22811.649	6953.0	1.362	94.124
34363.593	24076.401	7338.5	1.288	93.966	22777.892	6942.7	1.362	94.193
34365.593	24044.269	7328.7	1.286	94.031	22745.670	6932.9	1.359	94.261
34367.593	24013.585	7319.4	1.283	94.097	22714.899	6923.5	1.357	94.332
34369.593	23984.223	7310.4	1.279	94.163	22685.449	6914.5	1.352	94.402
EXIT S-BAND COMMUNICATIONS BLACKOUT								
34369.593	23984.223	7310.4	1.279	94.163	22685.449	6914.5	1.352	94.402
34371.593	23956.220	7301.9	1.274	94.231	22657.361	6906.0	1.347	94.474
34373.593	23929.425	7293.7	1.269	94.299	22630.481	6897.8	1.341	94.546
34375.593	23903.808	7285.9	1.261	94.367	22604.779	6890.0	1.334	94.619
34377.594	23879.370	7278.4	1.255	94.437	22580.261	6882.5	1.327	94.693
34379.593	23855.942	7271.3	1.247	94.507	22556.750	6875.3	1.318	94.767
34381.593	23833.553	7264.5	1.237	94.577	22534.280	6868.5	1.308	94.841
34383.593	23812.178	7258.0	1.228	94.648	22512.828	6861.9	1.299	94.917
34385.593	23791.662	7251.7	1.217	94.719	22492.233	6855.6	1.287	94.992
34387.593	23772.057	7245.7	1.205	94.790	22472.548	6849.6	1.275	95.067
34389.593	23753.320	7240.0	1.193	94.861	22453.736	6843.9	1.262	95.144
34391.593	23735.331	7234.5	1.180	94.933	22435.671	6838.4	1.249	95.220
34393.593	23718.098	7229.3	1.166	95.005	22418.360	6833.1	1.233	95.296
34395.593	23701.620	7224.3	1.151	95.077	22401.810	6828.1	1.218	95.372

404320

TABLE II
APOLLO MISSION AS-502
SPACECRAFT OPERATIONAL TRAJECTORY
-VELOCITY VECTOR-

TIME SECONDS	-INERTIAL- VELOCITY FT/SEC	VELOCITY M/SEC	PATH ANGLE DEG	AZIMUTH DEG	-EARTH FIXED- VELOCITY FT/SEC	VELOCITY M/SEC	PATH ANGLE DEG	AZIMUTH DEG
34397.593	23685.617	7219.5	1.137	95.150	22385.935	6823.2	1.203	95.450
34399.593	23670.617	7214.8	1.121	95.222	22370.663	6818.6	1.186	95.527
34401.593	23656.061	7210.4	1.104	95.294	22356.036	6814.1	1.168	95.603
34403.593	23642.116	7206.1	1.088	95.368	22342.022	6809.9	1.151	95.681
34405.593	23628.699	7202.0	1.071	95.441	22328.538	6805.8	1.133	95.759
34407.593	23615.780	7198.1	1.053	95.514	22315.551	6801.8	1.114	95.837
34409.593	23603.389	7194.3	1.035	95.587	22303.094	6798.0	1.095	95.914
34411.594	23591.495	7190.7	1.016	95.661	22291.137	6794.4	1.076	95.993
34413.593	23580.032	7187.2	.998	95.736	22279.614	6790.8	1.056	96.072
34415.593	23568.964	7183.8	.979	95.810	22268.485	6787.4	1.036	96.150
34417.593	23558.322	7180.6	.959	95.883	22257.783	6784.2	1.015	96.229
34419.593	23548.087	7177.5	.939	95.958	22247.491	6781.0	.994	96.307
34421.593	23538.224	7174.5	.919	96.033	22237.574	6778.0	.973	96.387
34423.593	23528.671	7171.6	.899	96.107	22227.967	6775.1	.951	96.466
34425.593	23519.445	7168.7	.878	96.181	22218.687	6772.3	.929	96.545
34427.593	23510.557	7166.0	.857	96.256	22209.748	6769.5	.907	96.624
34429.593	23502.020	7163.4	.836	96.331	22201.161	6766.9	.885	96.704
34431.593	23493.791	7160.9	.814	96.406	22192.886	6764.4	.862	96.784
34433.593	23485.824	7158.5	.793	96.482	22184.873	6762.0	.839	96.863
34435.593	23478.132	7156.1	.771	96.556	22177.137	6759.6	.816	96.943
34437.593	23470.715	7153.9	.748	96.631	22169.677	6757.3	.792	97.022
34439.594	23463.565	7151.7	.726	96.707	22162.487	6755.1	.769	97.103
34441.593	23456.656	7149.6	.704	96.783	22155.540	6753.0	.745	97.183
34443.593	23449.938	7147.6	.681	96.858	22148.785	6751.0	.721	97.263
34445.594	23443.411	7145.6	.658	96.933	22142.222	6749.0	.697	97.343
34447.593	23437.090	7143.6	.635	97.008	22135.866	6747.0	.672	97.423

TABLE II
APOLLO MISSION AS-502
SPACECRAFT OPERATIONAL TRAJECTORY
-VELOCITY VECTOR-

TIME SECONDS	-INERTIAL- VELOCITY FT/SEC	VELOCITY M/SEC	PATH ANGLE DEG	AZIMUTH DEG	-EARTH FIXED- VELOCITY FT/SEC	VELOCITY M/SEC	PATH ANGLE DEG	AZIMUTH DEG
34449.593	23430.970	7141.8	.612	97.084	22129.714	6745.2	.648	97.503
34451.593	23425.046	7140.0	.589	97.159	22123.761	6743.3	.623	97.583
34453.593	23419.274	7138.2	.565	97.235	22117.960	6741.6	.598	97.663
34455.593	23413.632	7136.5	.542	97.311	22112.291	6739.8	.573	97.744
34457.593	23408.136	7134.8	.517	97.386	22106.769	6738.2	.548	97.823
34459.593	23402.798	7133.2	.493	97.461	22101.405	6736.5	.522	97.903
34461.593	23397.602	7131.6	.469	97.536	22096.185	6734.9	.496	97.982
34463.593	23392.537	7130.1	.444	97.611	22091.100	6733.4	.471	98.062
34465.593	23387.586	7128.6	.420	97.686	22086.130	6731.9	.445	98.142
34467.593	23382.723	7127.1	.396	97.761	22081.249	6730.4	.419	98.222
34469.593	23377.953	7125.6	.371	97.836	22076.462	6728.9	.393	98.301
34471.593	23373.299	7124.2	.345	97.911	22071.792	6727.5	.366	98.380
34473.594	23368.749	7122.8	.320	97.985	22067.229	6726.1	.339	98.459
34475.593	23364.291	7121.5	.295	98.060	22062.759	6724.7	.312	98.539
34477.593	23359.919	7120.1	.270	98.135	22058.377	6723.4	.286	98.618
34479.593	23355.612	7118.8	.245	98.209	22054.062	6722.1	.259	98.698
34481.593	23351.357	7117.5	.220	98.284	22049.800	6720.8	.233	98.777
34483.593	23347.162	7116.2	.194	98.358	22045.600	6719.5	.205	98.856
34485.593	23343.037	7115.0	.168	98.432	22041.471	6718.3	.178	98.934
34487.593	23338.977	7113.7	.142	98.507	22037.409	6717.0	.151	99.013
34489.593	23334.981	7112.5	.117	98.581	22033.413	6715.8	.124	99.092
34491.593	23331.045	7111.3	.092	98.656	22029.480	6714.6	.097	99.171
34493.593	23327.141	7110.1	.066	98.730	22025.582	6713.4	.070	99.251
34495.593	23323.246	7108.9	.041	98.805	22021.693	6712.2	.043	99.330
34497.593	23319.368	7107.8	.015	98.879	22017.822	6711.0	.016	99.408
34499.593	23315.528	7106.6	-.011	98.953	22013.991	6709.9	-.011	99.487

TABLE II
APOLLO MISSION AS-502
SPACECRAFT OPERATIONAL TRAJECTORY
-VELOCITY VECTOR-

TIME SECONDS	-INERTIAL- VELOCITY FT/SEC	VELOCITY M/SEC	PATH ANGLE DEG	AZIMUTH DEG	-EARTH FIXED- VELOCITY FT/SEC	VELOCITY M/SEC	PATH ANGLE DEG	AZIMUTH DEG
34501.594	23311.720	7105.4	-.036	99.027	22010.194	6708.7	-.038	99.565
34503.593	23307.941	7104.3	-.062	99.101	22006.427	6707.6	-.065	99.644
34505.593	23304.192	7103.1	-.087	99.175	22002.694	6706.4	-.092	99.723
34507.594	23300.444	7102.0	-.113	99.249	21998.962	6705.3	-.119	99.802
34509.593	23296.681	7100.8	-.139	99.323	21995.215	6704.2	-.147	99.880
34511.593	23292.921	7099.7	-.165	99.396	21991.473	6703.0	-.175	99.957
34513.593	23289.173	7098.6	-.191	99.469	21987.743	6701.9	-.203	100.035
34515.593	23285.409	7097.4	-.218	99.541	21983.999	6700.7	-.231	100.112
34517.593	23281.635	7096.3	-.244	99.614	21980.248	6699.6	-.258	100.190
34519.593	23277.848	7095.1	-.270	99.688	21976.485	6698.4	-.286	100.267
34521.593	23274.027	7093.9	-.296	99.760	21972.691	6697.3	-.313	100.345
34523.593	23270.155	7092.8	-.322	99.833	21968.845	6696.1	-.341	100.421
34525.593	23266.257	7091.6	-.349	99.905	21964.973	6694.9	-.370	100.498
34527.593	23262.323	7090.4	-.375	99.977	21961.068	6693.7	-.398	100.575
34529.593	23258.343	7089.2	-.402	100.049	21957.120	6692.5	-.425	100.651
34531.593	23254.328	7087.9	-.427	100.122	21953.139	6691.3	-.453	100.728
34533.593	23250.254	7086.7	-.453	100.194	21949.103	6690.1	-.480	100.806
34535.594	23246.061	7085.4	-.479	100.266	21944.948	6688.8	-.507	100.882
34537.593	23241.771	7084.1	-.505	100.338	21940.694	6687.5	-.535	100.958
34539.593	23237.407	7082.8	-.531	100.409	21936.368	6686.2	-.562	101.034
34541.593	23232.973	7081.4	-.557	100.481	21931.975	6684.9	-.590	101.110
34543.593	23228.438	7080.0	-.582	100.553	21927.483	6683.5	-.617	101.187
34545.593	23223.790	7078.6	-.607	100.624	21922.880	6682.1	-.644	101.263
34547.593	23218.980	7077.2	-.633	100.695	21918.115	6680.7	-.671	101.338
34549.593	23214.038	7075.7	-.660	100.765	21913.216	6679.2	-.699	101.413
34551.593	23208.974	7074.1	-.686	100.835	21908.193	6677.6	-.727	101.487

TABLE II
APOLLO MISSION AS-502
SPACECRAFT OPERATIONAL TRAJECTORY
-VELOCITY VECTOR-

TIME SECONDS	-INERTIAL- VELOCITY FT/SEC	VELOCITY M/SEC	PATH ANGLE DEG	AZIMUTH DEG	-EARTH FIXED- VELOCITY FT/SEC	VELOCITY M/SEC	PATH ANGLE DEG	AZIMUTH DEG
34553.593	23203.748	7072.5	-.712	100.905	21903.013	6676.1	-.754	101.561
34555.593	23198.356	7070.9	-.738	100.975	21897.669	6674.4	-.782	101.636
34557.593	23192.752	7069.2	-.763	101.044	21892.113	6672.7	-.809	101.710
34559.593	23186.921	7067.4	-.790	101.113	21886.329	6671.0	-.837	101.783
34561.593	23180.888	7065.5	-.816	101.182	21880.344	6669.1	-.865	101.856
34563.594	23174.644	7063.6	-.842	101.251	21874.149	6667.3	-.892	101.929
34565.593	23168.150	7061.7	-.867	101.320	21867.710	6665.3	-.918	102.003
34567.593	23161.358	7059.6	-.891	101.389	21860.974	6663.2	-.944	102.076
34569.594	23154.256	7057.4	-.916	101.457	21853.925	6661.1	-.971	102.149
34571.593	23146.897	7055.2	-.941	101.525	21846.620	6658.9	-.997	102.221
34573.593	23139.255	7052.9	-.966	101.593	21839.035	6656.6	-1.023	102.294
34575.593	23131.327	7050.4	-.990	101.661	21831.165	6654.2	-1.048	102.366
34577.593	23123.024	7047.9	-1.014	101.728	21822.918	6651.6	-1.074	102.438
34579.593	23114.367	7045.3	-1.039	101.794	21814.313	6649.0	-1.101	102.508
34581.593	23105.354	7042.5	-1.064	101.859	21805.353	6646.3	-1.127	102.578
34583.593	23095.939	7039.7	-1.088	101.925	21795.993	6643.4	-1.153	102.648
34585.593	23086.068	7036.6	-1.112	101.990	21786.176	6640.4	-1.179	102.718
34587.593	23075.738	7033.5	-1.138	102.054	21775.895	6637.3	-1.205	102.786
34589.593	23064.969	7030.2	-1.162	102.118	21765.177	6634.0	-1.232	102.854
34591.593	23053.686	7026.8	-1.185	102.182	21753.948	6630.6	-1.256	102.922
34593.593	23041.984	7023.2	-1.209	102.245	21742.297	6627.1	-1.281	102.990
34595.593	23029.432	7019.4	-1.229	102.312	21729.818	6623.3	-1.302	103.062
34597.594	23016.024	7015.3	-1.249	102.382	21716.499	6619.2	-1.323	103.136
34599.593	23002.443	7011.2	-1.268	102.452	21703.005	6615.1	-1.344	103.211
34601.593	22988.217	7006.8	-1.286	102.519	21688.858	6610.8	-1.364	103.283
34603.593	22972.859	7002.1	-1.305	102.588	21673.587	6606.1	-1.383	103.356

TABLE II
APOLLO MISSION AS-502
SPACECRAFT OPERATIONAL TRAJECTORY
-VELOCITY VECTOR-

TIME SECONDS	-INERTIAL- VELOCITY FT/SEC	VELOCITY M/SEC	PATH ANGLE DEG	AZIMUTH DEG	-EARTH FIXED- VELOCITY FT/SEC	VELOCITY M/SEC	PATH ANGLE DEG	AZIMUTH DEG
34605.593	22956.816	6997.3	-1.323	102.657	21657.637	6601.3	-1.402	103.430
34607.593	22940.198	6992.2	-1.341	102.724	21641.099	6596.2	-1.421	103.502
34609.593	22922.583	6986.8	-1.358	102.790	21623.562	6590.9	-1.439	103.573
34611.593	22903.953	6981.1	-1.374	102.858	21605.020	6585.2	-1.457	103.646
34613.593	22884.504	6975.2	-1.390	102.923	21585.649	6579.3	-1.474	103.716
34615.593	22864.065	6969.0	-1.406	102.987	21565.282	6573.1	-1.490	103.785
34617.593	22842.460	6962.4	-1.420	103.053	21543.759	6566.6	-1.506	103.856
34619.593	22819.805	6955.5	-1.435	103.116	21521.173	6559.7	-1.521	103.924
34621.593	22796.020	6948.2	-1.448	103.179	21497.456	6552.4	-1.536	103.992
34623.593	22770.938	6940.6	-1.461	103.243	21472.448	6544.8	-1.549	104.060
34625.593	22744.611	6932.6	-1.473	103.304	21446.180	6536.8	-1.563	104.126
34627.593	22716.966	6924.1	-1.484	103.366	21418.602	6528.4	-1.574	104.193
34629.593	22687.841	6915.3	-1.495	103.426	21389.537	6519.5	-1.586	104.259
34631.594	22657.318	6906.0	-1.505	103.486	21359.068	6510.3	-1.596	104.323
34633.593	22625.214	6896.2	-1.513	103.546	21327.025	6500.5	-1.605	104.389
34635.593	22591.509	6885.9	-1.521	103.604	21293.366	6490.2	-1.614	104.451
34637.593	22556.164	6875.1	-1.527	103.663	21258.080	6479.5	-1.621	104.516
ENTER S-BAND COMMUNICATIONS BLACKOUT								
34637.593	22556.164	6875.1	-1.527	103.663	21258.080	6479.5	-1.621	104.516
34639.593	22519.028	6863.8	-1.533	103.720	21220.986	6468.2	-1.627	104.578
34641.593	22480.144	6852.0	-1.537	103.779	21182.155	6456.3	-1.632	104.642
34643.593	22439.334	6839.5	-1.541	103.835	21141.387	6443.9	-1.635	104.704
34645.593	22396.558	6826.5	-1.543	103.891	21098.650	6430.9	-1.638	104.765
34647.593	22351.820	6812.8	-1.545	103.941	21053.914	6417.2	-1.641	104.820

TABLE II
APOLLO MISSION AS-502
SPACECRAFT OPERATIONAL TRAJECTORY
-VELOCITY VECTOR-

TIME SECONDS	-INERTIAL- VELOCITY FT/SEC	VELOCITY M/SEC	PATH ANGLE DEG	AZIMUTH DEG	-EARTH FIXED- VELOCITY FT/SEC	VELOCITY M/SEC	PATH ANGLE DEG	AZIMUTH DEG
34649.593	22305.055	6798.6	-1.547	103.988	21007.142	6403.0	-1.643	104.873
34651.593	22256.119	6783.7	-1.551	104.030	20958.166	6388.1	-1.647	104.920
34653.593	22205.049	6768.1	-1.553	104.071	20907.047	6372.5	-1.649	104.965
34655.593	22151.697	6751.9	-1.557	104.105	20853.611	6356.2	-1.654	105.003
34657.593	22096.033	6734.9	-1.561	104.137	20797.853	6339.2	-1.658	105.041
34659.594	22038.011	6717.2	-1.566	104.164	20739.705	6321.5	-1.665	105.071
34661.593	21977.505	6698.8	-1.572	104.188	20679.059	6303.0	-1.671	105.100
34663.593	21914.554	6679.6	-1.577	104.209	20615.952	6283.8	-1.676	105.126
34665.594	21848.932	6659.6	-1.581	104.229	20550.166	6263.7	-1.681	105.150
34667.593	21780.691	6638.8	-1.581	104.248	20481.759	6242.9	-1.682	105.174
34669.593	21709.676	6617.1	-1.582	104.265	20410.562	6221.2	-1.682	105.195
34671.593	21635.891	6594.6	-1.578	104.282	20336.597	6198.6	-1.679	105.217
34673.593	21559.248	6571.3	-1.573	104.298	20259.769	6175.2	-1.674	105.238
34675.593	21479.736	6547.0	-1.569	104.310	20180.041	6150.9	-1.670	105.254
34677.593	21397.203	6521.9	-1.563	104.319	20097.285	6125.7	-1.664	105.268
34679.593	21311.533	6495.8	-1.556	104.325	20011.371	6099.5	-1.657	105.279
34681.593	21222.606	6468.7	-1.549	104.327	19922.177	6072.3	-1.650	105.286
34683.593	21130.414	6440.6	-1.540	104.328	19829.705	6044.1	-1.641	105.290
34685.593	21034.949	6411.5	-1.528	104.326	19733.953	6014.9	-1.629	105.294
34687.593	20936.161	6381.4	-1.515	104.322	19634.862	5984.7	-1.616	105.295
34689.593	20834.029	6350.2	-1.501	104.317	19532.415	5953.5	-1.601	105.294
34691.593	20728.607	6318.1	-1.481	104.311	19426.680	5921.3	-1.581	105.294
34693.594	20619.910	6285.0	-1.456	104.310	19317.693	5888.0	-1.555	105.298
34695.593	20507.909	6250.8	-1.426	104.311	19205.419	5853.8	-1.523	105.306
34697.593	20392.649	6215.7	-1.396	104.309	19089.861	5818.6	-1.491	105.309
34699.593	20274.324	6179.6	-1.368	104.299	18971.196	5782.4	-1.462	105.305

TABLE II
APOLLO MISSION AS-502
SPACECRAFT OPERATIONAL TRAJECTORY
-VELOCITY VECTOR-

TIME SECONDS	-INERTIAL- VELOCITY FT/SEC	VELOCITY M/SEC	PATH ANGLE DEG	AZIMUTH DEG	-EARTH FIXED- VELOCITY FT/SEC	VELOCITY M/SEC	PATH ANGLE DEG	AZIMUTH DEG
34701.593	20153.089	6142.7	-1.341	104.281	18849.578	5745.4	-1.434	105.293
34703.593	20029.049	6104.9	-1.317	104.257	18725.114	5707.4	-1.409	105.274
34705.593	19902.296	6066.2	-1.296	104.225	18597.899	5668.7	-1.387	105.247
34707.593	19772.911	6026.8	-1.277	104.187	18468.015	5629.1	-1.367	105.214
34709.593	19640.995	5986.6	-1.260	104.144	18335.574	5588.7	-1.350	105.175
34711.593	19506.659	5945.6	-1.243	104.097	18200.691	5547.6	-1.333	105.133
34713.593	19369.991	5904.0	-1.227	104.047	18063.460	5505.8	-1.316	105.086
34715.593	19231.106	5861.7	-1.213	103.991	17923.988	5463.2	-1.301	105.035
34717.593	19090.123	5818.7	-1.200	103.931	17782.392	5420.1	-1.289	104.979
34719.593	18947.153	5775.1	-1.191	103.865	17638.785	5376.3	-1.279	104.917
34721.594	18802.281	5730.9	-1.182	103.796	17493.259	5332.0	-1.270	104.852
34723.593	18655.606	5686.2	-1.173	103.724	17345.918	5287.0	-1.262	104.784
34725.593	18507.207	5641.0	-1.166	103.648	17196.836	5241.6	-1.255	104.711
34727.594	18357.215	5595.3	-1.160	103.569	17046.150	5195.7	-1.249	104.636
34729.593	18205.725	5549.1	-1.153	103.487	16893.957	5149.3	-1.243	104.557
34731.593	18052.814	5502.5	-1.149	103.402	16740.328	5102.5	-1.239	104.475
34733.593	17898.627	5455.5	-1.148	103.311	16585.400	5055.2	-1.239	104.388
34735.593	17743.246	5408.2	-1.151	103.216	16429.260	5007.6	-1.243	104.295
34737.593	17586.745	5360.5	-1.157	103.116	16271.984	4959.7	-1.250	104.198
34739.593	17429.201	5312.4	-1.167	103.011	16113.646	4911.4	-1.262	104.095
34741.593	17270.566	5264.1	-1.179	102.902	15954.204	4862.9	-1.277	103.988
34743.593	17110.712	5215.4	-1.194	102.789	15793.532	4813.9	-1.294	103.876
34745.593	16949.691	5166.3	-1.211	102.672	15631.682	4764.5	-1.313	103.761
34747.593	16787.532	5116.9	-1.229	102.551	15468.686	4714.9	-1.334	103.642
34749.593	16624.258	5067.1	-1.250	102.427	15304.566	4664.8	-1.357	103.519
34751.593	16459.907	5017.0	-1.271	102.300	15139.364	4614.5	-1.382	103.392

TABLE II
APOLLO MISSION AS-502
SPACECRAFT OPERATIONAL TRAJECTORY
-VELOCITY VECTOR-

TIME SECONDS	-INERTIAL- VELOCITY FT/SEC	VELOCITY M/SEC	PATH ANGLE DEG	AZIMUTH DEG	-EARTH FIXED- VELOCITY FT/SEC	VELOCITY M/SEC	PATH ANGLE DEG	AZIMUTH DEG
34753.593	16294.498	4966.6	-1.293	102.169	14973.099	4563.8	-1.407	103.262
34755.594	16128.067	4915.8	-1.317	102.034	14805.806	4512.8	-1.435	103.128
34757.593	15960.626	4864.8	-1.343	101.897	14637.498	4461.5	-1.464	102.991
EXIT S-BAND COMMUNICATIONS BLACKOUT								
34757.593	15960.626	4864.8	-1.343	101.897	14637.498	4461.5	-1.464	102.991
34759.593	15792.221	4813.5	-1.369	101.755	14468.222	4409.9	-1.494	102.849
34761.593	15622.653	4761.9	-1.397	101.610	14297.979	4358.0	-1.526	102.704
34763.593	15452.561	4710.0	-1.427	101.461	14126.806	4305.9	-1.561	102.555
34765.593	15281.340	4657.8	-1.461	101.307	13954.697	4253.4	-1.600	102.400
34767.593	15109.245	4605.3	-1.499	101.148	13781.703	4200.7	-1.643	102.238
34769.593	14936.274	4552.6	-1.540	100.983	13607.830	4147.7	-1.690	102.072
34771.593	14762.403	4499.6	-1.583	100.815	13433.057	4094.4	-1.739	101.901
34773.593	14587.641	4446.3	-1.627	100.642	13257.390	4040.9	-1.791	101.726
34775.593	14412.161	4392.8	-1.662	100.472	13081.028	3987.1	-1.831	101.552
34777.593	14235.901	4339.1	-1.620	100.392	12904.273	3933.2	-1.787	101.480
34779.593	14058.181	4284.9	-1.558	100.467	12726.773	3879.1	-1.721	101.577
34781.593	13879.422	4230.5	-1.578	100.681	12548.968	3824.9	-1.745	101.830
34783.594	13699.895	4175.7	-1.730	100.959	12370.836	3770.6	-1.916	102.155
34785.593	13518.873	4120.6	-1.906	101.241	12191.304	3715.9	-2.114	102.485
34787.593	13336.549	4065.0	-2.077	101.526	12010.539	3660.8	-2.306	102.821
34789.594	13152.456	4008.9	-2.235	101.813	11828.066	3605.2	-2.486	103.161
34791.593	12966.264	3952.1	-2.377	102.103	11643.542	3549.0	-2.647	103.505
34793.593	12777.686	3894.6	-2.505	102.393	11456.678	3492.0	-2.794	103.852
34795.593	12586.488	3836.4	-2.621	102.685	11267.246	3434.3	-2.928	104.203

TABLE II
APOLLO MISSION AS-502
SPACECRAFT OPERATIONAL TRAJECTORY
-VELOCITY VECTOR-

TIME SECONDS	-INERTIAL- VELOCITY FT/SEC	VELOCITY M/SEC	PATH ANGLE DEG	AZIMUTH DEG	-EARTH FIXED- VELOCITY FT/SEC	VELOCITY M/SEC	PATH ANGLE DEG	AZIMUTH DEG
34797.593	12392.196	3777.1	-2.713	102.972	11074.714	3375.6	-3.036	104.551
34799.593	12195.028	3717.1	-2.690	103.167	10878.657	3315.8	-3.016	104.798
34801.593	11996.488	3656.5	-2.628	103.310	10680.889	3255.5	-2.951	104.990
34803.593	11795.992	3595.4	-2.558	103.446	10481.125	3194.7	-2.879	105.175
34805.593	11593.897	3533.8	-2.496	103.601	10279.913	3133.3	-2.816	105.384
34807.593	11390.616	3471.9	-2.446	103.780	10077.696	3071.7	-2.765	105.622
34809.593	11186.653	3409.7	-2.411	103.981	9874.983	3009.9	-2.731	105.889
34811.593	10982.453	3347.5	-2.392	104.204	9672.224	2948.1	-2.716	106.182
34813.593	10778.397	3285.3	-2.393	104.448	9469.804	2886.4	-2.724	106.502
34815.593	10574.800	3223.2	-2.415	104.712	9268.045	2824.9	-2.756	106.849
34817.594	10371.874	3161.4	-2.450	104.985	9067.084	2763.7	-2.803	107.209
34819.593	10169.909	3099.8	-2.493	105.262	8867.176	2702.7	-2.859	107.578
34821.593	9969.077	3038.6	-2.541	105.541	8668.473	2642.2	-2.922	107.952
34823.593	9769.536	2977.8	-2.593	105.820	8471.124	2582.0	-2.990	108.331
34825.593	9571.384	2917.4	-2.651	106.101	8275.245	2522.3	-3.066	108.717
34827.593	9374.748	2857.4	-2.711	106.381	8080.935	2463.1	-3.146	109.105
34829.593	9179.733	2798.0	-2.778	106.662	7888.325	2404.4	-3.233	109.500
34831.593	8986.396	2739.1	-2.855	106.947	7697.509	2346.2	-3.334	109.904
34833.593	8794.783	2680.7	-2.948	107.240	7508.567	2288.6	-3.453	110.323
34835.593	8604.891	2622.8	-3.060	107.543	7321.539	2231.6	-3.597	110.760
34837.593	8416.686	2565.4	-3.197	107.859	7136.424	2175.2	-3.771	111.218
34839.593	8230.147	2508.6	-3.346	108.178	6953.117	2119.3	-3.961	111.687
34841.593	8045.335	2452.2	-3.498	108.496	6771.623	2064.0	-4.157	112.160
34843.593	7862.177	2396.4	-3.655	108.812	6591.884	2009.2	-4.360	112.639
34845.593	7680.709	2341.1	-3.807	109.120	6413.861	1954.9	-4.560	113.118
34847.593	7500.933	2286.3	-3.951	109.418	6237.518	1901.2	-4.753	113.592

TABLE II
APOLLO MISSION AS-502
SPACECRAFT OPERATIONAL TRAJECTORY
-VELOCITY VECTOR-

TIME SECONDS	-INERTIAL- VELOCITY FT/SEC	VELOCITY M/SEC	PATH ANGLE DEG	AZIMUTH DEG	-EARTH FIXED- VELOCITY FT/SEC	VELOCITY M/SEC	PATH ANGLE DEG	AZIMUTH DEG
34849.593	7323.007	2232.1	-4.079	109.698	6062.931	1848.0	-4.929	114.054
34851.594	7147.624	2178.6	-4.195	109.966	5890.835	1795.5	-5.092	114.509
34853.593	6974.901	2126.0	-4.300	110.223	5721.373	1743.9	-5.245	114.961
34855.593	6804.847	2074.1	-4.403	110.476	5554.618	1693.1	-5.396	115.416
34857.593	6637.306	2023.1	-4.496	110.717	5390.327	1643.0	-5.540	115.867
34859.593	6474.148	1973.3	-4.487	110.725	5227.853	1593.5	-5.559	116.038
34861.593	6317.349	1925.5	-4.510	110.394	5068.322	1544.8	-5.625	115.792
34863.593	6166.449	1879.5	-4.684	109.845	4912.834	1497.4	-5.883	115.272
34865.593	6019.342	1834.7	-4.897	109.260	4761.024	1451.2	-6.196	114.706
34867.593	5875.492	1790.9	-5.119	108.665	4612.544	1405.9	-6.526	114.122
34869.593	5734.779	1748.0	-5.345	108.062	4467.305	1361.6	-6.868	113.525
34871.593	5597.046	1706.0	-5.570	107.454	4325.170	1318.3	-7.216	112.917
34873.593	5462.139	1664.9	-5.793	106.843	4186.005	1275.9	-7.568	112.300
34875.593	5329.951	1624.6	-6.009	106.232	4049.721	1234.4	-7.919	111.678
34877.593	5200.231	1585.0	-6.211	105.627	3916.095	1193.6	-8.260	111.059
34879.594	5071.975	1545.9	-6.392	105.034	3784.142	1153.4	-8.582	110.452
34881.593	4945.177	1507.3	-6.551	104.458	3653.876	1113.7	-8.882	109.863
34883.593	4820.103	1469.2	-6.711	103.878	3525.472	1074.6	-9.194	109.264
34885.594	4697.454	1431.8	-6.917	103.252	3399.485	1036.2	-9.580	108.596
34887.593	4577.256	1395.2	-7.167	102.588	3276.058	998.5	-10.039	107.868
34889.593	4459.566	1359.3	-7.451	101.897	3155.347	961.8	-10.561	107.091
34891.593	4344.462	1324.2	-7.768	101.183	3037.499	925.8	-11.147	106.269
34893.593	4231.892	1289.9	-8.121	100.445	2922.533	890.8	-11.804	105.397
34895.593	4121.881	1256.4	-8.471	99.707	2810.477	856.6	-12.477	104.507
34897.593	4013.688	1223.4	-8.597	99.240	2700.937	823.2	-12.834	104.003
34899.593	3905.618	1190.4	-8.658	99.237	2593.889	790.6	-13.101	104.200

TABLE II
APOLLO MISSION AS-502
SPACECRAFT OPERATIONAL TRAJECTORY
-VELOCITY VECTOR-

TIME SECONDS	-INERTIAL- VELOCITY FT/SEC	VELOCITY M/SEC	PATH ANGLE DEG	AZIMUTH DEG	-EARTH FIXED- VELOCITY FT/SEC	VELOCITY M/SEC	PATH ANGLE DEG	AZIMUTH DEG
34901.593	3796.715	1157.2	-8.969	99.649	2489.902	758.9	-13.752	105.065
34903.593	3687.639	1124.0	-9.691	100.238	2389.661	728.4	-15.056	106.258
34905.593	3580.622	1091.4	-10.466	100.815	2292.585	698.8	-16.482	107.490
34907.593	3476.569	1059.7	-11.232	101.387	2199.260	670.3	-17.933	108.769
34909.593	3375.343	1028.8	-11.969	101.951	2109.410	642.9	-19.381	110.096
34911.593	3276.783	998.8	-12.670	102.503	2022.770	616.5	-20.812	111.473
34913.594	3180.668	969.5	-13.340	103.044	1939.144	591.1	-22.238	112.903
34915.593	3086.904	940.9	-13.971	103.569	1858.296	566.4	-23.644	114.385
34917.593	2995.347	913.0	-14.567	104.074	1780.079	542.6	-25.038	115.920
34919.593	2905.877	885.7	-15.141	104.561	1704.488	519.5	-26.442	117.520
34921.593	2818.662	859.1	-15.680	105.022	1631.504	497.3	-27.835	119.179
34923.593	2733.755	833.3	-16.190	105.460	1561.209	475.9	-29.225	120.906
34925.593	2651.643	808.2	-16.647	105.874	1493.783	455.3	-30.566	122.700
34927.593	2579.235	786.2	-16.725	105.988	1428.542	435.4	-31.305	123.877
34929.593	2519.309	767.9	-16.569	105.490	1365.592	416.2	-31.742	123.731
34931.593	2467.109	752.0	-16.609	104.332	1305.269	397.8	-32.703	122.195
34933.593	2418.702	737.2	-17.103	102.820	1251.655	381.5	-34.632	119.873
34935.593	2376.383	724.3	-17.749	101.259	1207.252	368.0	-36.875	117.230
34937.593	2339.079	713.0	-18.317	99.724	1168.843	356.3	-38.971	114.377
34939.593	2304.083	702.3	-18.827	98.196	1133.940	345.6	-40.976	111.293
34941.594	2267.845	691.2	-19.275	96.684	1099.248	335.1	-42.924	108.033
34943.593	2230.499	679.9	-19.649	95.203	1064.697	324.5	-44.786	104.602
34945.593	2192.707	668.3	-19.966	93.782	1031.134	314.3	-46.563	101.054

TABLE II
APOLLO MISSION AS-502
SPACECRAFT OPERATIONAL TRAJECTORY
-VELOCITY VECTOR-

TIME SECONDS	-INERTIAL- VELOCITY FT/SEC	VELOCITY M/SEC	PATH ANGLE DEG	AZIMUTH DEG	-EARTH FIXED- VELOCITY FT/SEC	VELOCITY M/SEC	PATH ANGLE DEG	AZIMUTH DEG
34947.594	2154.936	656.8	-20.251	92.447	999.292	304.6	-48.283	97.459
TERMINATICN OF AGC GUIDANCE								
34947.594	2154.936	656.8	-20.251	92.447	999.292	304.6	-48.283	97.459
34949.593	2117.639	645.5	-20.486	91.207	969.002	295.4	-49.894	93.837
34951.593	2080.327	634.1	-20.694	90.050	939.987	286.5	-51.452	90.167
34953.593	2043.744	622.9	-20.846	88.994	912.110	278.0	-52.880	86.508
34955.593	2007.339	611.8	-20.972	88.025	885.227	269.8	-54.253	82.824
34957.593	1971.928	601.0	-21.042	87.158	859.195	261.9	-55.491	79.196
34959.593	1936.860	590.4	-21.068	86.367	833.568	254.1	-56.642	75.532
34961.593	1902.771	580.0	-21.035	85.661	808.378	246.4	-57.660	71.898
34963.593	1869.956	570.0	-20.954	85.039	783.837	238.9	-58.555	68.327
34965.593	1838.308	560.3	-20.838	84.495	760.031	231.7	-59.363	64.812
34967.593	1808.723	551.3	-20.673	84.042	737.079	224.7	-60.034	61.502
34969.593	1780.591	542.7	-20.487	83.660	715.051	217.9	-60.640	58.305
34971.593	1754.572	534.8	-20.270	83.358	693.993	211.5	-61.149	55.355
34973.593	1730.830	527.6	-20.025	83.132	673.983	205.4	-61.569	52.694
34975.594	1708.489	520.7	-19.757	82.954	654.534	199.5	-61.928	50.182
34977.593	1688.519	514.7	-19.441	82.848	635.508	193.7	-62.169	48.077
34979.593	1670.235	509.1	-19.101	82.792	617.008	188.1	-62.352	46.239
34981.593	1653.336	503.9	-18.745	82.776	599.068	182.6	-62.507	44.616
34983.593	1637.950	499.2	-18.389	82.801	581.796	177.3	-62.638	43.246
34985.593	1622.980	494.7	-18.044	82.829	565.265	172.3	-62.791	41.810
34987.593	1609.801	490.7	-17.712	82.894	549.929	167.6	-62.947	40.672
34989.593	1597.633	487.0	-17.409	82.968	535.852	163.3	-63.129	39.593

TABLE II
APOLLO MISSION AS-502
SPACECRAFT OPERATIONAL TRAJECTORY
-VELOCITY VECTOR-

TIME SECONDS	-INERTIAL- VELOCITY FT/SEC	VELOCITY M/SEC	PATH ANGLE DEG	AZIMUTH DEG	-EARTH FIXED- VELOCITY FT/SEC	VELOCITY M/SEC	PATH ANGLE DEG	AZIMUTH DEG
34991.593	1586.261	483.5	-17.132	83.046	522.861	159.4	-63.337	38.535
34993.593	1576.563	480.5	-16.864	83.154	510.868	155.7	-63.541	37.805
34995.593	1566.921	477.6	-16.625	83.243	499.755	152.3	-63.770	36.888
34997.593	1558.794	475.1	-16.390	83.359	489.406	149.2	-63.991	36.309
34999.593	1550.981	472.7	-16.173	83.465	479.764	146.2	-64.219	35.661
35001.593	1543.760	470.5	-15.967	83.571	470.718	143.5	-64.447	35.069
35003.594	1537.621	468.7	-15.765	83.692	462.234	140.9	-64.663	34.724
35005.593	1531.175	466.7	-15.581	83.787	454.220	138.4	-64.881	34.126
35007.593	1526.115	465.2	-15.392	83.909	446.642	136.1	-65.083	33.938
35009.594	1520.678	463.5	-15.219	84.004	439.455	133.9	-65.281	33.479
35011.593	1516.119	462.1	-15.045	84.113	432.591	131.9	-65.468	33.273
35013.593	1511.782	460.8	-14.877	84.214	426.064	129.9	-65.642	33.051
35013.994	1511.099	460.6	-14.842	84.239	424.791	129.5	-65.675	33.073
CROGUE PARACHUTES DEPLOYMENT								
35013.994	1511.099	460.6	-14.842	84.239	424.791	129.5	-65.675	33.073
35023.993	1422.117	433.5	-12.487	88.128	312.280	95.2	-79.954	33.635
35033.993	1389.146	423.4	-10.621	89.533	256.390	78.1	-86.947	35.497
35043.994	1380.824	420.9	-10.102	89.901	242.223	73.8	-89.238	43.187
35053.994	1377.542	419.9	-9.722	89.996	232.613	70.9	-89.825	82.633
35063.193	1375.737	419.3	-9.402	90.018	224.745	68.5	-89.861	142.139
MAIN PARACHUTES DEPLOYMENT								
35063.193	1375.737	419.3	-9.402	90.018	224.745	68.5	-89.861	142.139

TABLE II
APOLLO MISSION AS-502
SPACECRAFT OPERATIONAL TRAJECTORY
-VELOCITY VECTOR-

TIME SECONDS	-INERTIAL- VELOCITY FT/SEC	M/SEC	PATH ANGLE DEG	AZIMUTH DEG	-EARTH FIXED- VELOCITY FT/SEC	M/SEC	PATH ANGLE DEG	AZIMUTH DEG
35093.194	1357.227	413.7	-1.372	90.004	32.490	9.9	-89.828	177.406
35123.193	1357.153	413.7	-1.351	90.004	32.007	9.8	-89.828	177.452
35153.193	1357.080	413.6	-1.332	90.004	31.541	9.6	-89.828	177.502
35183.194	1357.009	413.6	-1.313	90.004	31.091	9.5	-89.827	177.528
35213.193	1356.939	413.6	-1.295	90.004	30.657	9.3	-89.827	177.570
35243.193	1356.871	413.6	-1.277	90.004	30.238	9.2	-89.827	177.609
35273.194	1356.803	413.6	-1.260	90.004	29.832	9.1	-89.827	177.643
35303.193	1356.737	413.5	-1.243	90.004	29.440	9.0	-89.827	177.673
35333.193	1356.672	413.5	-1.227	90.004	29.060	8.9	-89.826	177.706
35363.194	1356.608	413.5	-1.212	90.004	28.691	8.7	-89.826	177.737

TABLE III
APOLLO MISSION AS-502
SPACECRAFT OPERATIONAL TRAJECTORY
-POSITION AND VELOCITY VECTOR-
-EARTH CENTERED INERTIAL COORDINATE SYSTEM-

TIME SECONDS	X FEET	Y FEET	Z FEET	DX FT/SEC	DY FT/SEC	DZ FT/SEC
34163.594	11850563.	-13718240.	11195203.	23291.	28043.	1844.
		ATMOSPHERIC ENTRY				
34163.594	11850563.	-13718240.	11195203.	23291.	28043.	1844.
34165.593	11897110.	-13662115.	11198857.	23256.	28082.	1811.
34167.593	11943588.	-13605911.	11202447.	23222.	28122.	1779.
34169.593	11989997.	-13549627.	11205971.	23187.	28162.	1746.
34171.593	12036335.	-13493264.	11209430.	23152.	28201.	1713.
34173.593	12082603.	-13436823.	11212824.	23116.	28240.	1680.
34175.593	12128800.	-13380302.	11216151.	23081.	28280.	1647.
34177.593	12174926.	-13323704.	11219413.	23045.	28319.	1614.
34179.593	12220980.	-13267028.	11222609.	23009.	28357.	1581.
34181.593	12266963.	-13210275.	11225739.	22973.	28396.	1548.
		ENTER S-BAND COMMUNICATION BLACKOUT				
34181.593	12266963.	-13210275.	11225739.	22973.	28396.	1548.
34183.593	12312872.	-13153445.	11228803.	22937.	28434.	1515.
34185.593	12358709.	-13096539.	11231800.	22900.	28472.	1482.
34187.593	12404472.	-13039557.	11234732.	22863.	28509.	1449.
34189.593	12450161.	-12982501.	11237598.	22826.	28546.	1416.
34191.594	12495775.	-12925373.	11240398.	22788.	28582.	1383.
	ENTER C-BAND COMMUNICATIONS BLACKOUT		LOAD FACTOR = 0.05 G			
34191.594	12495775.	-12925373.	11240398.	22788.	28582.	1383.

Position and velocity vector (ECI)

TABLE III
APOLLO MISSION AS-502
SPACECRAFT OPERATIONAL TRAJECTORY
-POSITION AND VELOCITY VECTOR-
-EARTH CENTERED INERTIAL COORDINATE SYSTEM-

TIME SECONDS	X FEET	Y FEET	Z FEET	DX FT/SEC	DY FT/SEC	DZ FT/SEC
34193.593	12541313.	-12868173.	11243132.	22750.	28617.	1351.
34195.593	12586774.	-12810905.	11245801.	22711.	28651.	1319.
34197.593	12632155.	-12753572.	11248407.	22670.	28682.	1287.
34199.593	12677452.	-12696179.	11250950.	22628.	28710.	1256.
34201.593	12722665.	-12638734.	11253430.	22585.	28735.	1225.
34203.593	12767789.	-12581244.	11255849.	22539.	28754.	1195.
34205.593	12812818.	-12523722.	11258211.	22490.	28767.	1167.
34207.593	12857747.	-12466181.	11260516.	22438.	28772.	1139.
34209.593	12902568.	-12408638.	11262769.	22382.	28769.	1114.
34211.593	12947273.	-12351113.	11264972.	22322.	28754.	1089.
34213.593	12991853.	-12293629.	11267129.	22257.	28727.	1068.
34215.593	13036296.	-12236214.	11269246.	22185.	28686.	1049.
34217.593	13080588.	-12178897.	11271329.	22107.	28628.	1033.
34219.594	13124717.	-12121713.	11273383.	22020.	28552.	1021.
34221.593	13168665.	-12064701.	11275416.	21926.	28457.	1013.
34223.593	13212415.	-12007902.	11277435.	21823.	28340.	1008.
34225.594	13255950.	-11951358.	11279448.	21710.	28201.	1007.
34227.593	13299251.	-11895114.	11281465.	21588.	28039.	1010.
34229.593	13342298.	-11839216.	11283491.	21457.	27855.	1018.
		MAXIMUM HEATING RATE				
34229.593	13342298.	-11839216.	11283491.	21457.	27855.	1018.
34231.593	13385073.	-11783709.	11285537.	21316.	27648.	1029.
34233.593	13427556.	-11728638.	11287610.	21165.	27419.	1044.
34235.593	13469729.	-11674046.	11289718.	21005.	27170.	1064.
34237.593	13511573.	-11619971.	11291867.	20838.	26902.	1086.

TABLE III
APOLLO MISSION AS-502
SPACECRAFT OPERATIONAL TRAJECTORY
-POSITION AND VELOCITY VECTOR-
-EARTH CENTERED INERTIAL COORDINATE SYSTEM-

TIME SECONDS	X FEET	Y FEET	Z FEET	DX FT/SEC	DY FT/SEC	DZ FT/SEC
34239.593	13553076.	-11566447.	11294062.	20664.	26620.	1110.
34241.593	13594225.	-11513497.	11296308.	20485.	26328.	1136.
GUIDANCE INITIATE AT RDOT = -700 FT/SEC						
34241.593	13594225.	-11513497.	11296308.	20485.	26328.	1136.
34243.593	13635012.	-11461141.	11298606.	20302.	26028.	1163.
34245.593	13675432.	-11409386.	11300958.	20118.	25726.	1189.
MAXIMUM LOAD FACTOR						
34245.593	13675432.	-11409386.	11300958.	20118.	25726.	1189.
34247.593	13715483.	-11358234.	11303362.	19933.	25426.	1215.
34249.593	13755164.	-11307676.	11305820.	19745.	25135.	1247.
34251.593	13794449.	-11257678.	11308361.	19536.	24869.	1297.
34253.594	13833279.	-11208168.	11311015.	19286.	24649.	1355.
34255.593	13871579.	-11159059.	11313771.	19011.	24466.	1396.
34257.593	13909307.	-11110282.	11316567.	18716.	24316.	1390.
34259.593	13946448.	-11061787.	11319292.	18428.	24179.	1325.
34261.593	13983032.	-11013566.	11321849.	18158.	24043.	1231.
34263.593	14019084.	-10965611.	11324222.	17893.	23914.	1146.
34265.593	14054603.	-10917906.	11326466.	17627.	23791.	1108.
34267.593	14089608.	-10870457.	11328689.	17383.	23655.	1122.
34269.593	14124165.	-10823305.	11330969.	17182.	23492.	1160.
34271.593	14158370.	-10776508.	11333320.	17030.	23301.	1186.
34273.593	14192305.	-10730108.	11335682.	16908.	23098.	1168.
34275.593	14226007.	-10684111.	11337980.	16794.	22901.	1129.

TABLE III
APOLLO MISSION AS-502
SPACECRAFT OPERATIONAL TRAJECTORY
-POSITION AND VELOCITY VECTOR-
-EARTH CENTERED INERTIAL COORDINATE SYSTEM-

TIME SECONDS	X FEET	Y FEET	Z FEET	DX FT/SEC	DY FT/SEC	DZ FT/SEC
34277.593	14259482.	-10638499.	11340195.	16682.	22712.	1083.
34279.593	14292735.	-10593253.	11342305.	16571.	22536.	1022.
34281.594	14325760.	-10548339.	11344265.	16451.	22381.	935.
34283.593	14358535.	-10503717.	11346037.	16324.	22243.	838.
34285.593	14391055.	-10459360.	11347619.	16196.	22115.	744.
34287.594	14423320.	-10415249.	11349012.	16070.	21998.	651.
34289.593	14455335.	-10371364.	11350223.	15946.	21888.	560.
34291.593	14487105.	-10327692.	11351256.	15825.	21784.	473.
34293.593	14518637.	-10284222.	11352118.	15708.	21686.	389.
34295.593	14549940.	-10240943.	11352814.	15595.	21593.	308.
34297.593	14581021.	-10197846.	11353351.	15486.	21505.	229.
34299.593	14611886.	-10154921.	11353734.	15380.	21421.	153.
34301.593	14642542.	-10112159.	11353967.	15277.	21341.	80.
34303.593	14672994.	-10069555.	11354055.	15178.	21263.	9.
34305.593	14703255.	-10027104.	11354007.	15084.	21187.	-57.
34307.593	14733333.	-9984804.	11353828.	14994.	21114.	-121.
34309.593	14763236.	-9942649.	11353527.	14909.	21042.	-180.
34311.593	14792971.	-9900634.	11353111.	14826.	20973.	-236.
34313.593	14822543.	-9858755.	11352585.	14746.	20907.	-290.
34315.594	14851958.	-9817005.	11351954.	14669.	20844.	-341.
34317.593	14881220.	-9775378.	11351225.	14594.	20783.	-389.
34319.593	14910334.	-9733870.	11350399.	14520.	20726.	-436.
34321.593	14939301.	-9692472.	11349482.	14448.	20672.	-482.
34323.593	14968125.	-9651180.	11348474.	14376.	20621.	-526.
34325.593	14996807.	-9609986.	11347376.	14306.	20574.	-571.
34327.593	15025350.	-9568883.	11346190.	14237.	20529.	-616.
34329.593	15053756.	-9527867.	11344915.	14169.	20488.	-659.

TABLE III
APOLLO MISSION AS-502
SPACECRAFT OPERATIONAL TRAJECTORY
-POSITION AND VELOCITY VECTOR-
-EARTH CENTERED INERTIAL COORDINATE SYSTEM-

TIME SECONDS	X FEET	Y FEET	Z FEET	DX FT/SEC	DY FT/SEC	DZ FT/SEC
34331.593	15082026.	-9486930.	11343552.	14101.	20450.	-703.
34333.593	15110161.	-9446067.	11342102.	14034.	20414.	-747.
34335.593	15138164.	-9405272.	11340554.	13968.	20381.	-791.
		EXIT C-BAND COMMUNICATIONS BLACKOUT				
34335.593	15138164.	-9405272.	11340564.	13968.	20381.	-791.
34337.593	15166034.	-9364540.	11338939.	13903.	20351.	-835.
34339.593	15193775.	-9323866.	11337226.	13839.	20323.	-877.
34341.593	15221390.	-9283248.	11335439.	13777.	20296.	-908.
34343.593	15248881.	-9242680.	11333601.	13713.	20273.	-929.
34345.593	15276239.	-9202150.	11331726.	13643.	20258.	-945.
34347.593	15303453.	-9161645.	11329820.	13572.	20247.	-961.
34349.594	15330529.	-9121162.	11327882.	13504.	20236.	-978.
34351.593	15357469.	-9080700.	11325908.	13437.	20227.	-996.
34353.593	15384277.	-9040255.	11323898.	13372.	20218.	-1015.
34355.593	15410955.	-8999826.	11321850.	13307.	20212.	-1034.
34357.593	15437504.	-8959408.	11319762.	13243.	20206.	-1054.
34359.593	15463927.	-8919000.	11317635.	13180.	20202.	-1074.
34361.593	15490225.	-8878598.	11315466.	13118.	20199.	-1095.
34363.593	15516399.	-8838201.	11313254.	13056.	20198.	-1117.
34365.593	15542450.	-8797806.	11310998.	12995.	20198.	-1139.
34367.593	15568382.	-8757410.	11308698.	12936.	20198.	-1162.

TABLE III
APOLLO MISSION AS-502
SPACECRAFT OPERATIONAL TRAJECTORY
-POSITION AND VELOCITY VECTOR-
-EARTH CENTERED INERTIAL COORDINATE SYSTEM-

TIME SECONDS	X FEET	Y FEET	Z FEET	DX FT/SEC	DY FT/SEC	DZ FT/SEC
34369.593	15594194.	-8717012.	11306352.	12876.	20200.	-1185.
EXIT S-BAND COMMUNICATIONS BLACKOUT						
34369.593	15594194.	-8717012.	11306352.	12876.	20200.	-1185.
34371.593	15619888.	-8676609.	11303959.	12818.	20203.	-1208.
34373.593	15645465.	-8636201.	11301518.	12760.	20206.	-1232.
34375.593	15670927.	-8595785.	11299029.	12702.	20211.	-1257.
34377.594	15696275.	-8555359.	11296490.	12646.	20216.	-1282.
34379.593	15721510.	-8514922.	11293901.	12589.	20221.	-1307.
34381.593	15746633.	-8474472.	11291261.	12533.	20228.	-1333.
34383.593	15771644.	-8434009.	11288569.	12478.	20235.	-1359.
34385.593	15796544.	-8393530.	11285824.	12423.	20243.	-1385.
34387.593	15821335.	-8353034.	11283027.	12368.	20252.	-1412.
34389.593	15846016.	-8312520.	11280177.	12313.	20262.	-1439.
34391.593	15870588.	-8271987.	11277272.	12259.	20271.	-1466.
34393.593	15895052.	-8231434.	11274313.	12205.	20282.	-1493.
34395.593	15919407.	-8190859.	11271299.	12151.	20293.	-1521.
34397.593	15943656.	-8150261.	11268229.	12098.	20304.	-1549.
34399.593	15967797.	-8109641.	11265104.	12044.	20316.	-1577.
34401.593	15991832.	-8068996.	11261922.	11991.	20329.	-1605.
34403.593	16015761.	-8028326.	11258684.	11938.	20341.	-1633.
34405.593	16039584.	-7987631.	11255389.	11885.	20354.	-1662.
34407.593	16063302.	-7946909.	11252036.	11832.	20368.	-1691.
34409.593	16086914.	-7906160.	11248625.	11780.	20381.	-1720.
34411.594	16110421.	-7865384.	11245157.	11728.	20395.	-1749.
34413.593	16133825.	-7824579.	11241629.	11676.	20409.	-1778.

TABLE III
APOLLO MISSION AS-502
SPACECRAFT OPERATIONAL TRAJECTORY
-POSITION AND VELOCITY VECTOR-
-EARTH CENTERED INERTIAL COORDINATE SYSTEM-

TIME SECONDS	X FEET	Y FEET	Z FEET	DX FT/SEC	DY FT/SEC	DZ FT/SEC
34415.593	16157124.	-7783747.	11238044.	11624.	20424.	-1808.
34417.593	16180319.	-7742885.	11234399.	11572.	20438.	-1837.
34419.593	16203411.	-7701994.	11230695.	11520.	20453.	-1867.
34421.593	16226399.	-7661073.	11226932.	11468.	20468.	-1897.
34423.593	16249284.	-7620123.	11223109.	11417.	20483.	-1926.
34425.593	16272066.	-7579142.	11219226.	11365.	20498.	-1956.
34427.593	16294744.	-7538130.	11215284.	11314.	20514.	-1986.
34429.593	16317320.	-7497088.	11211281.	11262.	20529.	-2017.
34431.593	16339794.	-7456015.	11207217.	11211.	20544.	-2047.
34433.593	16362165.	-7414910.	11203093.	11160.	20560.	-2077.
34435.593	16384434.	-7373774.	11198907.	11109.	20576.	-2108.
34437.593	16406601.	-7332606.	11194661.	11058.	20592.	-2138.
34439.594	16428665.	-7291406.	11190354.	11007.	20608.	-2169.
34441.593	16450628.	-7250174.	11185986.	10956.	20624.	-2200.
34443.593	16472489.	-7208911.	11181555.	10905.	20640.	-2230.
34445.594	16494249.	-7167615.	11177064.	10854.	20656.	-2261.
34447.593	16515906.	-7126287.	11172510.	10803.	20672.	-2292.
34449.593	16537461.	-7084926.	11167895.	10752.	20688.	-2323.
34451.593	16558915.	-7043534.	11163218.	10701.	20704.	-2354.
34453.593	16580267.	-7002109.	11158480.	10651.	20720.	-2385.
34455.593	16601517.	-6960652.	11153679.	10600.	20737.	-2416.
34457.593	16622666.	-6919163.	11148816.	10549.	20753.	-2447.
34459.593	16643713.	-6877641.	11143891.	10498.	20769.	-2478.
34461.593	16664657.	-6836087.	11138904.	10447.	20785.	-2509.
34463.593	16685499.	-6794501.	11133855.	10396.	20801.	-2540.
34465.593	16706239.	-6752882.	11128744.	10345.	20817.	-2571.
34467.593	16726878.	-6711232.	11123570.	10294.	20833.	-2602.

TABLE III
APOLLO MISSION AS-502
SPACECRAFT OPERATIONAL TRAJECTORY
-POSITION AND VELOCITY VECTOR-
-EARTH CENTERED INERTIAL COORDINATE SYSTEM-

TIME SECONDS	X FEET	Y FEET	Z FEET	DX FT/SEC	DY FT/SEC	DZ FT/SEC
34469.593	16747414.	-6669550.	11118335.	10243.	20849.	-2633.
34471.593	16767848.	-6627836.	11113037.	10191.	20865.	-2664.
34473.594	16788179.	-6586090.	11107677.	10140.	20881.	-2696.
34475.593	16808408.	-6544312.	11102255.	10089.	20897.	-2727.
34477.593	16828534.	-6502503.	11096770.	10038.	20912.	-2758.
34479.593	16848557.	-6460662.	11091224.	9986.	20928.	-2789.
34481.593	16868479.	-6418791.	11085615.	9935.	20943.	-2820.
34483.593	16888297.	-6376888.	11079944.	9884.	20959.	-2851.
34485.593	16908013.	-6334955.	11074210.	9832.	20974.	-2882.
34487.593	16927625.	-6292991.	11068415.	9780.	20990.	-2913.
34489.593	16947135.	-6250997.	11062558.	9729.	21005.	-2944.
34491.593	16966542.	-6208972.	11056638.	9678.	21020.	-2975.
34493.593	16985846.	-6166918.	11050656.	9627.	21034.	-3007.
34495.593	17005048.	-6124835.	11044612.	9575.	21049.	-3038.
34497.593	17024147.	-6082722.	11038506.	9523.	21064.	-3069.
34499.593	17043142.	-6040580.	11032337.	9472.	21078.	-3100.
34501.594	17062034.	-5998409.	11026107.	9420.	21093.	-3131.
34503.593	17080823.	-5956210.	11019815.	9369.	21107.	-3162.
34505.593	17099508.	-5913982.	11013461.	9317.	21121.	-3193.
34507.594	17118090.	-5871727.	11007045.	9265.	21135.	-3223.
34509.593	17136570.	-5829444.	11000567.	9214.	21148.	-3254.
34511.593	17154945.	-5787133.	10994028.	9161.	21162.	-3285.
34513.593	17173215.	-5744796.	10987427.	9109.	21176.	-3316.
34515.593	17191382.	-5702430.	10980765.	9057.	21189.	-3346.
34517.593	17209443.	-5660039.	10974041.	9005.	21202.	-3377.
34519.593	17227401.	-5617621.	10967256.	8953.	21215.	-3408.
34521.593	17245254.	-5575177.	10960410.	8901.	21228.	-3438.

TABLE III
APOLLO MISSION AS-502
SPACECRAFT OPERATIONAL TRAJECTORY
-POSITION AND VELOCITY VECTOR-
-EARTH CENTERED INERTIAL COORDINATE SYSTEM-

TIME SECONDS	X FEET	Y FEET	Z FEET	DX FT/SEC	DY FT/SEC	DZ FT/SEC
34523.593	17263003.	-5532708.	10953503.	8848.	21241.	-3469.
34525.593	17280646.	-5490213.	10946535.	8795.	21254.	-3499.
34527.593	17298184.	-5447694.	10939506.	8743.	21266.	-3530.
34529.593	17315618.	-5405150.	10932416.	8690.	21278.	-3560.
34531.593	17332946.	-5362582.	10925266.	8638.	21290.	-3590.
34533.593	17350169.	-5319990.	10918055.	8586.	21301.	-3621.
34535.594	17367288.	-5277376.	10910784.	8533.	21313.	-3651.
34537.593	17384302.	-5234739.	10903452.	8480.	21324.	-3681.
34539.593	17401209.	-5192080.	10896061.	8427.	21335.	-3711.
34541.593	17418011.	-5149399.	10888609.	8375.	21346.	-3741.
34543.593	17434708.	-5106697.	10881098.	8322.	21356.	-3771.
34545.593	17451299.	-5063974.	10873527.	8269.	21366.	-3800.
34547.593	17467785.	-5021232.	10865897.	8216.	21376.	-3830.
34549.593	17484163.	-4978469.	10858207.	8163.	21386.	-3859.
34551.593	17500436.	-4935687.	10850459.	8109.	21396.	-3889.
34553.593	17516600.	-4892886.	10842653.	8056.	21405.	-3918.
34555.593	17532658.	-4850067.	10834788.	8002.	21414.	-3947.
34557.593	17548608.	-4807231.	10826865.	7949.	21422.	-3976.
34559.593	17564451.	-4764378.	10818884.	7895.	21431.	-4005.
34561.593	17580187.	-4721509.	10810846.	7840.	21439.	-4033.
34563.594	17595813.	-4678624.	10802751.	7786.	21446.	-4062.
34565.593	17611332.	-4635725.	10794599.	7733.	21453.	-4090.
34567.593	17626745.	-4592812.	10786391.	7679.	21460.	-4118.
34569.594	17642048.	-4549886.	10778126.	7625.	21466.	-4146.
34571.593	17657244.	-4506948.	10769805.	7571.	21472.	-4174.
34573.593	17672332.	-4463999.	10761430.	7517.	21477.	-4202.
34575.593	17687311.	-4421040.	10752998.	7463.	21482.	-4229.

TABLE III
APOLLO MISSION AS-502
SPACECRAFT OPERATIONAL TRAJECTORY
-POSITION AND VELOCITY VECTOR-
-EARTH CENTERED INERTIAL COORDINATE SYSTEM-

TIME SECONDS	X FEET	Y FEET	Z FEET	DX FT/SEC	DY FT/SEC	DZ FT/SEC
34577.593	17702182.	-4378071.	10744512.	7408.	21487.	-4257.
34579.593	17716944.	-4335094.	10735972.	7353.	21491.	-4283.
34581.593	17731596.	-4292108.	10727379.	7298.	21495.	-4310.
34583.593	17746138.	-4249116.	10718732.	7244.	21498.	-4336.
34585.593	17760570.	-4206118.	10710033.	7188.	21500.	-4363.
34587.593	17774891.	-4163115.	10701282.	7133.	21502.	-4388.
34589.593	17789101.	-4120109.	10692481.	7077.	21504.	-4414.
34591.593	17803200.	-4077099.	10683628.	7022.	21505.	-4439.
34593.593	17817188.	-4034089.	10674725.	6966.	21505.	-4464.
34595.593	17831066.	-3991079.	10665772.	6912.	21504.	-4489.
34597.594	17844837.	-3948074.	10656768.	6859.	21501.	-4515.
34599.593	17858502.	-3905074.	10647712.	6805.	21498.	-4541.
34601.593	17872059.	-3862081.	10638606.	6752.	21495.	-4566.
34603.593	17885508.	-3819096.	10629450.	6698.	21490.	-4590.
34605.593	17898851.	-3776122.	10620244.	6644.	21484.	-4615.
34607.593	17912086.	-3733160.	10610990.	6591.	21478.	-4639.
34609.593	17925213.	-3690211.	10601689.	6537.	21471.	-4662.
34611.593	17938232.	-3647278.	10592342.	6483.	21462.	-4685.
34613.593	17951144.	-3604364.	10582949.	6429.	21453.	-4708.
34615.593	17963947.	-3561469.	10573512.	6374.	21442.	-4729.
34617.593	17976642.	-3518596.	10564032.	6320.	21430.	-4751.
34619.593	17989228.	-3475748.	10554511.	6266.	21418.	-4771.
34621.593	18001705.	-3432926.	10544949.	6211.	21404.	-4791.
34623.593	18014073.	-3390133.	10535347.	6157.	21388.	-4810.
34625.593	18026333.	-3347373.	10525708.	6102.	21372.	-4829.
34627.593	18038483.	-3304646.	10516033.	6048.	21354.	-4847.
34629.593	18050525.	-3261958.	10506322.	5993.	21335.	-4864.

TABLE III
APOLLO MISSION AS-502
SPACECRAFT OPERATIONAL TRAJECTORY
-POSITION AND VELOCITY VECTOR-
-EARTH CENTERED INERTIAL COORDINATE SYSTEM-

TIME SECONDS	X FEET	Y FEET	Z FEET	DX FT/SEC	DY FT/SEC	DZ FT/SEC
34631.594	18062456.	-3219309.	10496578.	5938.	21314.	-4880.
34633.593	18074279.	-3176704.	10486802.	5884.	21291.	-4896.
34635.593	18085992.	-3134146.	10476995.	5829.	21267.	-4910.
34637.593	18097596.	-3091638.	10467160.	5775.	21241.	-4925.
		ENTER S-BAND COMMUNICATIONS BLACKOUT				
34637.593	18097596.	-3091638.	10467160.	5775.	21241.	-4925.
34639.593	18109091.	-3049183.	10457297.	5720.	21213.	-4938.
34641.593	18120477.	-3006786.	10447409.	5666.	21184.	-4951.
34643.593	18131755.	-2964450.	10437496.	5612.	21152.	-4962.
34645.593	18142924.	-2922179.	10427561.	5557.	21119.	-4972.
34647.593	18153982.	-2879976.	10417608.	5501.	21084.	-4980.
34649.593	18164928.	-2837844.	10407640.	5445.	21047.	-4987.
34651.593	18175761.	-2795787.	10397661.	5387.	21009.	-4992.
34653.593	18186478.	-2753808.	10387675.	5329.	20969.	-4995.
34655.593	18197076.	-2711910.	10377684.	5269.	20928.	-4996.
34657.593	18207555.	-2670098.	10367692.	5209.	20884.	-4996.
34659.594	18217911.	-2628375.	10357703.	5147.	20839.	-4993.
34661.593	18228142.	-2586745.	10347720.	5084.	20791.	-4989.
34663.593	18238247.	-2545212.	10337746.	5021.	20741.	-4984.
34665.594	18248226.	-2503782.	10327785.	4958.	20689.	-4977.
34667.593	18258081.	-2462459.	10317838.	4896.	20633.	-4969.
34669.593	18267809.	-2421250.	10307909.	4833.	20576.	-4959.
34671.593	18277413.	-2380159.	10298001.	4771.	20515.	-4948.
34673.593	18286894.	-2339192.	10288116.	4710.	20451.	-4936.
34675.593	18296251.	-2298355.	10278258.	4647.	20385.	-4922.

TABLE III
APOLLO MISSION AS-502
SPACECRAFT OPERATIONAL TRAJECTORY
-POSITION AND VELOCITY VECTOR-
-EARTH CENTERED INERTIAL COORDINATE SYSTEM-

TIME SECONDS	X FEET	Y FEET	Z FEET	DX FT/SEC	DY FT/SEC	DZ FT/SEC
34677.593	18305483.	-2257653.	10268430.	4585.	20316.	-4906.
34679.593	18314590.	-2217092.	10258636.	4522.	20245.	-4888.
34681.593	18323570.	-2176677.	10248880.	4458.	20170.	-4868.
34683.593	18332423.	-2136414.	10239165.	4395.	20092.	-4846.
34685.593	18341149.	-2096311.	10229495.	4332.	20011.	-4823.
34687.593	18349748.	-2056372.	10219874.	4269.	19927.	-4798.
34689.593	18358222.	-2016605.	10210305.	4206.	19839.	-4771.
34691.593	18366573.	-1977016.	10200791.	4144.	19749.	-4743.
34693.594	18374802.	-1937614.	10191333.	4085.	19654.	-4714.
34695.593	18382915.	-1898404.	10181934.	4028.	19555.	-4685.
34697.593	18390915.	-1859396.	10172595.	3971.	19453.	-4654.
34699.593	18398798.	-1820592.	10163321.	3912.	19350.	-4620.
34701.593	18406562.	-1781999.	10154117.	3851.	19243.	-4584.
34703.593	18414202.	-1743620.	10144988.	3788.	19135.	-4545.
34705.593	18421713.	-1705460.	10135938.	3724.	19025.	-4504.
34707.593	18429096.	-1667522.	10126972.	3659.	18912.	-4462.
34709.593	18436347.	-1629812.	10118093.	3592.	18798.	-4417.
34711.593	18443464.	-1592333.	10109303.	3525.	18681.	-4372.
34713.593	18450448.	-1555091.	10100606.	3458.	18562.	-4325.
34715.593	18457296.	-1518088.	10092004.	3390.	18441.	-4277.
34717.593	18464007.	-1481330.	10083500.	3321.	18318.	-4227.
34719.593	18470579.	-1444819.	10075097.	3252.	18193.	-4176.
34721.594	18477012.	-1408559.	10066797.	3182.	18066.	-4124.
34723.593	18483306.	-1372554.	10058601.	3112.	17938.	-4071.
34725.593	18489459.	-1336808.	10050512.	3042.	17808.	-4018.
34727.594	18495474.	-1301324.	10042531.	2972.	17676.	-3963.
34729.593	18501349.	-1266105.	10034659.	2903.	17543.	-3908.

TABLE III
APOLLO MISSION AS-502
SPACECRAFT OPERATIONAL TRAJECTORY
-POSITION AND VELOCITY VECTOR-
-EARTH CENTERED INERTIAL COORDINATE SYSTEM-

TIME SECONDS	X FEET	Y FEET	Z FEET	DX FT/SEC	DY FT/SEC	DZ FT/SEC
34731.593	18507085.	-1231154.	10026899.	2833.	17408.	-3852.
34733.593	18512680.	-1196473.	10019250.	2762.	17272.	-3796.
34735.593	18518133.	-1162066.	10011716.	2691.	17135.	-3739.
34737.593	18523443.	-1127934.	10004297.	2619.	16997.	-3681.
34739.593	18528607.	-1094080.	9996994.	2546.	16857.	-3622.
34741.593	18533625.	-1060505.	9989808.	2473.	16717.	-3563.
34743.593	18538497.	-1027213.	9982740.	2400.	16575.	-3504.
34745.593	18543224.	-994205.	9975792.	2327.	16432.	-3444.
34747.593	18547804.	-961485.	9968963.	2254.	16288.	-3384.
34749.593	18552238.	-929055.	9962256.	2181.	16142.	-3323.
34751.593	18556528.	-896918.	9955670.	2109.	15995.	-3262.
34753.593	18560673.	-865076.	9949207.	2037.	15847.	-3201.
34755.594	18564676.	-833532.	9942867.	1965.	15697.	-3139.
34757.593	18568535.	-802288.	9936651.	1894.	15546.	-3077.
		EXIT S-BAND COMMUNICATIONS BLACKOUT				
34757.593	18568535.	-802288.	9936651.	1894.	15546.	-3077.
34759.593	18572253.	-771348.	9930559.	1823.	15394.	-3015.
34761.593	18575829.	-740713.	9924592.	1753.	15241.	-2952.
34763.593	18579266.	-710385.	9918750.	1683.	15086.	-2889.
34765.593	18582562.	-680368.	9913034.	1613.	14931.	-2826.
34767.593	18585718.	-650663.	9907445.	1542.	14774.	-2763.
34769.593	18588731.	-621272.	9901982.	1472.	14616.	-2700.
34771.593	18591604.	-592198.	9896646.	1402.	14457.	-2636.
34773.593	18594339.	-563443.	9891438.	1332.	14297.	-2572.
34775.593	18596935.	-535010.	9886358.	1266.	14136.	-2508.

TABLE III
APOLLO MISSION AS-502
SPACECRAFT OPERATIONAL TRAJECTORY
-POSITION AND VELOCITY VECTOR-
-EARTH CENTERED INERTIAL COORDINATE SYSTEM-

TIME SECONDS	X FEET	Y FEET	Z FEET	DX FT/SEC	DY FT/SEC	DZ FT/SEC
34777.593	18599426.	-506905.	9881397.	1230.	13968.	-2456.
34779.593	18601868.	-479142.	9876513.	1215.	13792.	-2434.
34781.593	18604284.	-451740.	9871635.	1198.	13609.	-2451.
34783.594	18606645.	-424710.	9866692.	1161.	13421.	-2494.
34785.593	18608924.	-398058.	9861660.	1119.	13231.	-2538.
34787.593	18611122.	-371786.	9856542.	1080.	13040.	-2580.
34789.594	18613245.	-345899.	9851344.	1044.	12847.	-2618.
34791.593	18615301.	-320400.	9846072.	1012.	12652.	-2653.
34793.593	18617296.	-295294.	9840736.	984.	12454.	-2683.
34795.593	18619239.	-270586.	9835342.	959.	12254.	-2710.
34797.593	18621134.	-246281.	9829899.	938.	12051.	-2731.
34799.593	18623000.	-222379.	9824440.	930.	11851.	-2721.
34801.593	18624855.	-198875.	9819021.	925.	11653.	-2697.
34803.593	18626699.	-175769.	9813654.	920.	11453.	-2670.
34805.593	18628533.	-153065.	9808339.	915.	11251.	-2645.
34807.593	18630357.	-130767.	9803069.	910.	11047.	-2625.
34809.593	18632171.	-108880.	9797835.	904.	10841.	-2609.
34811.593	18633971.	-87406.	9792630.	897.	10633.	-2597.
34813.593	18635757.	-66347.	9787446.	888.	10425.	-2588.
34815.593	18637522.	-45705.	9782275.	878.	10217.	-2583.
34817.594	18639266.	-25479.	9777114.	866.	10009.	-2579.
34819.593	18640985.	-5669.	9771961.	853.	9802.	-2574.
34821.593	18642677.	13729.	9766819.	840.	9596.	-2569.
34823.593	18644344.	32715.	9761688.	826.	9391.	-2562.
34825.593	18645982.	51295.	9756572.	812.	9188.	-2555.
34827.593	18647592.	69470.	9751472.	797.	8987.	-2546.
34829.593	18649171.	87245.	9746390.	782.	8788.	-2536.

TABLE III
APOLLO MISSION AS-502
SPACECRAFT OPERATIONAL TRAJECTORY
-POSITION AND VELOCITY VECTOR-
-EARTH CENTERED INERTIAL COORDINATE SYSTEM-

TIME SECONDS	X FEET	Y FEET	Z FEET	DX FT/SEC	DY FT/SEC	DZ FT/SEC
34831.593	18650720.	104623.	9741328.	766.	8590.	-2526.
34833.593	18652236.	121606.	9736286.	749.	8394.	-2517.
34835.593	18653715.	138198.	9731260.	730.	8199.	-2509.
34837.593	18655155.	154401.	9726250.	709.	8005.	-2502.
34839.593	18656551.	170218.	9721252.	687.	7813.	-2495.
34841.593	18657904.	185653.	9716271.	665.	7623.	-2486.
34843.593	18659213.	200710.	9711309.	644.	7434.	-2476.
34845.593	18660479.	215393.	9706371.	622.	7249.	-2462.
34847.593	18661703.	229706.	9701462.	602.	7065.	-2446.
34849.593	18662888.	243657.	9696591.	583.	6885.	-2425.
34851.594	18664036.	257250.	9691765.	565.	6708.	-2401.
34853.593	18665150.	270493.	9686989.	549.	6535.	-2375.
34855.593	18666231.	283393.	9682267.	532.	6365.	-2347.
34857.593	18667281.	295955.	9677601.	517.	6198.	-2318.
34859.593	18668300.	308195.	9673017.	501.	6046.	-2261.
34861.593	18669272.	320150.	9668575.	467.	5912.	-2177.
34863.593	18670150.	331850.	9664314.	409.	5789.	-2084.
34865.593	18670908.	343308.	9660236.	348.	5669.	-1993.
34867.593	18671545.	354528.	9656339.	289.	5551.	-1904.
34869.593	18672066.	365512.	9652617.	232.	5434.	-1818.
34871.593	18672475.	376265.	9649066.	177.	5319.	-1734.
34873.593	18672776.	386788.	9645680.	125.	5205.	-1652.
34875.593	18672976.	397085.	9642456.	76.	5092.	-1573.
34877.593	18673081.	407157.	9639389.	30.	4980.	-1496.
34879.594	18673100.	417007.	9636472.	-11.	4869.	-1421.
34881.593	18673041.	426633.	9633703.	-48.	4757.	-1349.
34883.593	18672910.	436037.	9631076.	-83.	4647.	-1279.

TABLE III
APOLLO MIS[redacted] AS-502
SPACECRAFT OPERA[redacted]
-POSITION AND VE[redacted]
-EARTH CENTERED INERT[redacted] SYSTEM-

TIME SECONDS	X FEET	Y FEET	Z FEET	DX FT/SEC	DY FT/SEC	DZ FT/SEC
34885.594	18672705.	445221.	9628589.	-121.	4537.	-1209.
34887.593	18672423.	454188.	9626238.	-162.	4430.	-1141.
34889.593	18672058.	462941.	9624022.	-204.	4323.	-1075.
34891.593	18671608.	471482.	9621936.	-246.	4218.	-1011.
34893.593	18671072.	479813.	9619976.	-289.	4114.	-949.
34895.593	18670450.	487938.	9618138.	-330.	4011.	-889.
34897.593	18669770.	495859.	9616412.	-346.	3909.	-841.
34899.593	18669081.	503573.	9614756.	-342.	3803.	-820.
34901.593	18668402.	511067.	9613110.	-340.	3689.	-830.
34903.593	18667709.	518325.	9611423.	-355.	3569.	-858.
34905.593	18666980.	525342.	9609679.	-373.	3449.	-885.
34907.593	18666217.	532125.	9607885.	-389.	3333.	-908.
34909.593	18665425.	538677.	9606047.	-403.	3220.	-928.
34911.593	18664607.	545007.	9604174.	-414.	3110.	-944.
34913.594	18663772.	551121.	9602273.	-422.	3004.	-957.
34915.593	18662921.	557025.	9600350.	-428.	2900.	-966.
34917.593	18662061.	562725.	9598412.	-432.	2800.	-971.
34919.593	18661193.	568228.	9596465.	-435.	2703.	-974.
34921.593	18660322.	573539.	9594517.	-436.	2609.	-974.
34923.593	18659449.	578665.	9592572.	-436.	2518.	-971.
34925.593	18658577.	583613.	9590635.	-434.	2431.	-965.
34927.593	18657717.	588403.	9588722.	-424.	2362.	-944.
34929.593	18656877.	593077.	9586872.	-418.	2315.	-902.
34931.593	18656030.	597669.	9585126.	-433.	2278.	-843.
34933.593	18655130.	602188.	9583502.	-471.	2240.	-781.
34935.593	18654143.	606631.	9581998.	-515.	2204.	-724.
34937.593	18653074.	611007.	9580605.	-554.	2172.	-669.

TABLE III
APOLLO MISSION AS-502
SPACECRAFT OPERATIONAL TRAJECTORY
-POSITION AND VELOCITY VECTOR-
-EARTH CENTERED INERTIAL COORDINATE SYSTEM-

TIME SECONDS	X FEET	Y FEET	Z FEET	DX FT/SEC	DY FT/SEC	DZ FT/SEC
34939.593	18651929.	615319.	9579320.	-590.	2140.	-616.
34941.594	18650715.	619566.	9578140.	-623.	2107.	-564.
34943.593	18649442.	623744.	9577065.	-650.	2071.	-512.
34945.593	18648119.	627851.	9576090.	-673.	2035.	-463.
34947.594	18646753.	631884.	9575211.	-692.	1998.	-417.
		TERMINATION OF AGC GUIDANCE				
34947.594	18646753.	631884.	9575211.	-692.	1998.	-417.
34949.593	18645352.	635841.	9574419.	-708.	1960.	-376.
34951.593	18643925.	639724.	9573706.	-720.	1923.	-337.
34953.593	18642476.	643532.	9573068.	-728.	1886.	-302.
34955.593	18641014.	647267.	9572495.	-733.	1849.	-271.
34957.593	18639545.	650929.	9571983.	-735.	1814.	-242.
34959.593	18638075.	654521.	9571525.	-735.	1779.	-216.
34961.593	18636609.	658047.	9571117.	-731.	1746.	-192.
34963.593	18635152.	661507.	9570754.	-725.	1715.	-171.
34965.593	18633709.	664908.	9570432.	-718.	1686.	-152.
34967.593	18632283.	668252.	9570145.	-708.	1659.	-135.
34969.593	18630877.	671544.	9569889.	-698.	1634.	-121.
34971.593	18629493.	674789.	9569660.	-686.	1611.	-108.
34973.593	18628132.	677990.	9569455.	-674.	1591.	-98.
34975.594	18626795.	681153.	9569269.	-662.	1573.	-88.
34977.593	18625485.	684283.	9569101.	-648.	1557.	-80.
34979.593	18624203.	687383.	9568947.	-634.	1543.	-73.
34981.593	18622950.	690458.	9568806.	-620.	1531.	-68.
34983.593	18621724.	693509.	9568676.	-606.	1521.	-63.

TABLE III
APOLLO MISSION AS-502
SPACECRAFT OPERATIONAL TRAJECTORY
-POSITION AND VELOCITY VECTOR-
-EARTH CENTERED INERTIAL COORDINATE SYSTEM-

TIME SECONDS	X FEET	Y FEET	Z FEET	DX FT/SEC	DY FT/SEC	DZ FT/SEC
34985.593	18620526.	696540.	9568555.	-592.	1510.	-58.
34987.593	18619356.	699551.	9568442.	-579.	1501.	-55.
34989.593	18618209.	702544.	9568335.	-567.	1493.	-52.
34991.593	18617086.	705522.	9568232.	-556.	1485.	-50.
34993.593	18615984.	708484.	9568133.	-546.	1478.	-49.
34995.593	18614903.	711434.	9568037.	-536.	1472.	-48.
34997.593	18613840.	714372.	9567942.	-527.	1466.	-47.
34999.593	18612795.	717299.	9567848.	-518.	1461.	-47.
35001.593	18611766.	720217.	9567755.	-510.	1456.	-46.
35003.594	18610753.	723125.	9567663.	-503.	1452.	-46.
35005.593	18609755.	726025.	9567571.	-496.	1448.	-46.
35007.593	18608771.	728919.	9567478.	-489.	1445.	-46.
35009.594	18607800.	731805.	9567386.	-482.	1441.	-46.
35011.593	18606842.	734685.	9567294.	-476.	1439.	-46.
35013.593	18605897.	737560.	9567201.	-470.	1436.	-46.
35013.994	18605709.	738134.	9567183.	-469.	1436.	-46.
		DROGUE PARACHUTES DEPLOYMENT				
35013.994	18605709.	738134.	9567183.	-469.	1436.	-46.
35023.993	18601638.	752146.	9566387.	-350.	1375.	-100.
35033.993	18596507.	765772.	9565341.	-289.	1355.	-107.
35043.994	18595709.	779285.	9564258.	-273.	1349.	-109.
35053.994	18593022.	792767.	9563182.	-265.	1348.	-106.

TABLE III
APOLLO MISSION AS-502
SPACECRAFT OPERATIONAL TRAJECTORY
-POSITION AND VELOCITY VECTOR-
-EARTH CENTERED INERTIAL COORDINATE SYSTEM-

TIME SECONDS	X FEET	Y FEET	Z FEET	DX FT/SEC	DY FT/SEC	DZ FT/SEC
35063.193	18590618.	805164.	9562219.	-258.	1347.	-103.
		MAIN PARACHUTES DEPLOYMENT				
35063.193	18590618.	805164.	9562219.	-258.	1347.	-103.
35093.194	18587635.	845779.	9561609.	-90.	1354.	-15.
35123.193	18584882.	886399.	9561165.	-93.	1354.	-15.
35153.193	18582053.	927012.	9560727.	-96.	1354.	-15.
35183.194	18579148.	967617.	9560295.	-98.	1353.	-14.
35213.193	18576165.	1008215.	9559869.	-101.	1353.	-14.
35243.193	18573105.	1048804.	9559449.	-103.	1353.	-14.
35273.194	18569967.	1089386.	9559035.	-106.	1353.	-14.
35303.193	18566751.	1129960.	9558626.	-108.	1352.	-14.
35333.193	18563458.	1170526.	9558223.	-111.	1352.	-13.
35363.194	18560085.	1211083.	9557824.	-114.	1352.	-13.

TABLE IV
APOLLO MISSION AS-502
SPACECRAFT OPERATIONAL TRAJECTORY
-BODY ATTITUDES-

TIME SECONDS	INNER DEGREES	MIDDLE DEGREES	OUTER DEGREES
34163.594	77.685	-.941	-.613
	ATMOSPHERIC ENTRY		
34163.594	77.685	-.941	-.613
34165.593	78.286	4.341	11.123
34167.593	80.857	4.919	16.155
34169.593	83.185	5.062	20.075
34171.593	84.021	3.024	20.428
34173.593	84.704	.858	20.453
34175.593	85.078	-.790	20.046
34177.593	84.842	-1.033	18.445
34179.593	84.233	-.966	16.565
34181.593	83.164	-.542	14.381
	ENTER S-BAND COMMUNICATION BLACKOUT		
34181.593	83.164	-.542	14.381
34183.593	81.547	.342	11.846
34185.593	79.348	2.146	9.946
34187.593	76.631	5.019	9.886
34189.593	74.043	6.661	11.185
34191.594	72.525	5.937	14.174
	ENTER C-BAND COMMUNICATIONS BLACKOUT	LOAD FACTOR = 0.05 G	
34191.594	72.525	5.937	14.174

Body attitudes

TABLE IV
APOLLO MISSION AS-502
SPACECRAFT OPERATIONAL TRAJECTORY
-BODY ATTITUDES-

TIME SECONDS	INNER DEGREES	MIDDLE DEGREES	OUTER DEGREES
34193.593	72.696	4.286	17.808
34195.593	74.847	2.702	20.359
34197.593	76.923	2.975	19.430
34199.593	75.944	5.572	16.596
34201.593	73.722	5.806	15.159
34203.593	74.683	2.950	15.840
34205.593	75.531	4.375	13.725
34207.593	74.501	4.157	12.393
34209.593	75.197	3.194	11.454
34211.593	74.863	3.859	10.864
34213.593	74.851	3.860	11.128
34215.593	74.855	2.919	11.738
34217.593	74.775	3.806	10.800
34219.594	74.744	4.154	10.137
34221.593	74.692	3.869	10.609
34223.593	74.725	3.593	10.446
34225.594	74.731	3.560	10.536
34227.593	74.740	3.706	10.441
34229.593	74.775	3.937	10.126
	MAXIMUM HEATING RATE		
34229.593	74.775	3.937	10.126
34231.593	74.809	3.901	10.385
34233.593	74.926	3.407	10.674
34235.593	74.998	3.202	10.710
34237.593	75.020	3.870	10.286

TABLE IV
APOLLO MISSION AS-502
SPACECRAFT OPERATIONAL TRAJECTORY
-BODY ATTITUDES-

TIME SECONDS	INNER DEGREES	MIDDLE DEGREES	OUTER DEGREES
34239.593	75.149	3.662	10.467
34241.593	75.276	3.244	10.636
GUIDANCE INITIATE AT RDOT = -700 FT/SEC			
34241.593	75.276	3.244	10.636
34243.593	75.323	3.976	10.182
34245.593	75.480	3.436	10.577
MAXIMUM LOAD FACTOR			
34245.593	75.480	3.436	10.577
34247.593	75.570	3.535	10.435
34249.593	74.498	6.128	24.020
34251.593	71.390	9.062	48.601
34253.594	65.044	10.589	81.459
34255.593	59.799	9.396	108.912
34257.593	55.133	4.209	145.739
34259.593	54.356	-1.820	178.112
34261.593	54.541	-3.327	-176.027
34263.593	53.993	.013	166.408
34265.593	56.075	6.644	129.439
34267.593	61.779	10.568	90.719
34269.593	68.717	10.020	50.646
34271.593	73.774	5.070	10.349
34273.593	74.967	-.597	-20.912
34275.593	74.730	-2.074	-26.425

TABLE IV
APOLLO MISSION AS-502
SPACECRAFT OPERATIONAL TRAJECTORY
-BODY ATTITUDES-

TIME SECONDS	INNER DEGREES	MIDDLE DEGREES	OUTER DEGREES
34277.593	74.305	-3.458	-33.882
34279.593	72.045	-7.109	-58.063
34281.594	68.362	-9.987	-82.544
34283.593	66.578	-10.688	-90.403
34285.593	65.624	-10.966	-94.558
34287.594	64.615	-11.182	-98.590
34289.593	64.076	-11.265	-99.193
34291.593	63.758	-11.321	-98.578
34293.593	63.534	-11.405	-97.827
34295.593	63.672	-11.549	-96.948
34297.593	64.122	-11.740	-96.443
34299.593	64.555	-11.930	-96.173
34301.593	64.690	-11.931	-94.015
34303.593	64.948	-11.670	-86.959
34305.593	65.608	-11.527	-81.511
34307.593	67.161	-11.210	-76.331
34309.593	68.307	-10.638	-71.102
34311.593	68.092	-10.413	-66.712
34313.593	68.159	-10.270	-62.842
34315.594	69.372	-9.612	-59.981
34317.593	69.638	-9.213	-57.063
34319.593	68.867	-9.529	-54.534
34321.593	69.574	-9.124	-54.945
34323.593	69.570	-9.091	-55.295
34325.593	68.396	-9.808	-55.262
34327.593	69.265	-9.382	-56.709
34329.593	68.478	-9.831	-57.523

TABLE IV
APOLLO MISSION AS-502
SPACECRAFT OPERATIONAL TRAJECTORY
-BODY ATTITUDES-

TIME SECONDS	INNER DEGREES	MIDDLE DEGREES	OUTER DEGREES
34331.593	67.873	-10.239	-58.711
34333.593	68.497	-10.014	-60.845
34335.593	66.786	-10.889	-62.001
EXIT C-BAND COMMUNICATIONS BLACKOUT			
34335.593	66.786	-10.889	-62.001
34337.593	68.174	-10.432	-63.117
34339.593	70.503	-8.285	-42.937
34341.593	71.209	-1.712	-6.382
34343.593	68.588	5.663	29.450
34345.593	64.676	7.268	58.272
34347.593	63.203	8.040	55.915
34349.594	64.423	7.246	52.225
34351.593	64.461	7.441	48.198
34353.593	64.553	7.290	48.717
34355.593	64.407	7.096	49.128
34357.593	63.790	7.850	48.815
34359.593	64.619	6.680	49.698
34361.593	63.119	8.224	48.445
34363.593	64.570	6.631	49.463
34365.593	63.218	7.814	48.153
34367.593	63.668	7.433	48.044

TABLE IV
APOLLO MISSION AS-502
SPACECRAFT OPERATIONAL TRAJECTORY
-BODY ATTITUDES-

TIME SECONDS	INNER DEGREES	MIDDLE DEGREES	OUTER DEGREES
34369.593	64.157	6.685	47.998
	EXIT S-BAND COMMUNICATIONS BLACKOUT		
34369.593	64.157	6.685	47.998
34371.593	62.764	8.156	46.206
34373.593	64.199	6.583	46.642
34375.593	63.595	7.025	45.371
34377.594	62.862	7.937	43.976
34379.593	64.235	6.229	44.987
34381.593	63.255	7.050	43.948
34383.593	62.453	8.068	43.717
34385.593	63.735	6.319	45.678
34387.593	62.819	6.920	45.739
34389.593	61.559	8.362	45.249
34391.593	62.777	6.920	46.824
34393.593	62.769	6.495	47.460
34395.593	61.007	8.237	46.467
34397.593	61.334	7.971	47.026
34399.593	62.547	6.423	48.410
34401.593	61.448	7.190	47.898
34403.593	60.101	8.593	46.993
34405.593	61.040	7.655	47.844
34407.593	61.991	6.382	48.814
34409.593	60.736	7.322	47.977
34411.594	59.463	8.637	46.954
34413.593	60.289	7.848	47.522

TABLE IV
APOLLO MISSION AS-502
SPACECRAFT OPERATIONAL TRAJECTORY
-BODY ATTITUDES-

TIME SECONDS	INNER DEGREES	MIDDLE DEGREES	OUTER DEGREES
34415.593	61.459	6.419	48.467
34417.593	60.691	6.842	47.866
34419.593	59.122	8.352	46.489
34421.593	59.156	8.422	46.261
34423.593	60.520	6.927	47.150
34425.593	60.940	6.177	47.359
34427.593	59.645	7.232	46.122
34429.593	58.428	8.507	44.807
34431.593	58.841	8.153	44.733
34433.593	60.160	6.629	45.475
34435.593	60.539	5.916	45.513
34437.593	59.409	6.843	44.245
34439.594	58.125	8.203	42.722
34441.593	58.079	8.353	42.349
34443.593	59.162	7.093	43.164
34445.594	60.047	5.818	43.920
34447.593	59.623	5.899	43.570
34449.593	58.242	7.204	42.308
34451.593	57.051	8.608	42.108
34453.593	57.135	8.535	43.150
34455.593	58.167	7.150	45.086
34457.593	58.884	5.919	46.841
34459.593	58.302	6.043	47.498
34461.593	56.686	7.425	47.217
34463.593	55.278	8.868	47.002
34465.593	55.089	9.157	47.691
34467.593	56.045	8.134	49.309

TABLE IV
APOLLO MISSION AS-502
SPACECRAFT OPERATIONAL TRAJECTORY
-BODY ATTITUDES-

TIME SECONDS	INNER DEGREES	MIDDLE DEGREES	OUTER DEGREES
34469.593	57.103	6.786	51.102
34471.593	57.140	6.279	52.067
34473.594	55.952	6.989	51.718
34475.593	54.268	8.395	50.909
34477.593	53.308	9.377	50.547
34479.593	53.672	9.167	51.115
34481.593	54.957	7.956	52.274
34483.593	56.366	6.519	52.194
34485.593	56.430	6.090	51.080
34487.593	55.138	6.948	48.896
34489.593	53.580	8.377	46.385
34491.593	52.997	9.173	44.482
34493.593	53.821	8.583	43.625
34495.593	55.439	6.947	43.511
34497.593	56.676	5.428	43.244
34499.593	56.581	5.175	42.214
34501.594	54.883	6.806	41.913
34503.593	52.933	8.760	42.167
34505.593	52.072	9.465	43.354
34507.594	52.677	8.517	45.725
34509.593	54.025	6.806	48.681
34511.593	54.751	5.770	51.121
34513.593	54.009	6.185	51.960
34515.593	52.072	7.788	51.450
34517.593	50.155	9.467	50.959
34519.593	49.590	9.930	51.437
34521.593	50.875	8.707	52.399

TABLE IV
APOLLO MISSION AS-502
SPACECRAFT OPERATIONAL TRAJECTORY
-BODY ATTITUDES-

TIME SECONDS	INNER DEGREES	MIDDLE DEGREES	OUTER DEGREES
34523.593	53.045	6.652	52.465
34525.593	53.895	5.609	51.597
34527.593	52.774	6.382	49.188
34529.593	50.787	8.285	45.993
34531.593	49.785	9.551	43.428
34533.593	50.641	8.881	42.493
34535.594	52.560	6.808	43.160
34537.593	53.921	5.018	43.549
34539.593	53.400	5.127	42.380
34541.593	51.160	7.449	41.864
34543.593	49.390	9.380	42.322
34545.593	49.478	9.104	44.358
34547.593	50.998	7.099	47.618
34549.593	51.927	5.677	50.420
34551.593	50.649	6.466	51.411
34553.593	48.029	8.732	51.316
34555.593	46.673	10.049	51.979
34557.593	48.387	8.642	52.483
34559.593	50.535	6.477	52.203
34561.593	50.414	6.134	50.289
34563.594	48.505	7.857	46.835
34565.593	47.694	9.083	44.013
34567.593	49.095	7.862	42.973
34569.594	50.899	5.641	42.592
34571.593	50.327	5.939	42.016
34573.593	48.048	8.354	41.888
34575.593	47.443	8.856	43.347

TABLE IV
APOLLO MISSION AS-502
SPACECRAFT OPERATIONAL TRAJECTORY
-BODY ATTITUDES-

TIME SECONDS	INNER DEGREES	MIDDLE DEGREES	OUTER DEGREES
34577.593	48.933	6.862	46.583
34579.593	49.316	6.032	48.892
34581.593	47.118	7.958	49.042
34583.593	45.666	9.383	49.727
34585.593	46.892	8.028	52.188
34587.593	48.365	6.367	52.026
34589.593	46.677	7.750	49.239
34591.593	45.655	9.021	46.805
34593.593	49.467	5.871	35.639
34595.593	52.911	3.677	14.996
34597.594	51.203	4.872	11.085
34599.593	49.595	2.264	12.441
34601.593	50.968	1.241	12.961
34603.593	51.367	4.122	10.893
34605.593	50.066	3.734	12.206
34607.593	49.964	1.393	14.770
34609.593	50.215	3.852	14.263
34611.593	49.698	4.503	14.740
34613.593	49.551	1.921	17.202
34615.593	49.306	4.174	16.559
34617.593	49.117	4.517	17.071
34619.593	49.074	2.475	18.986
34621.593	48.520	5.004	17.902
34623.593	48.696	3.834	19.107
34625.593	48.452	3.350	19.715
34627.593	48.007	5.312	18.682
34629.593	48.424	2.876	20.358

TABLE IV
APOLLO MISSION AS-502
SPACECRAFT OPERATIONAL TRAJECTORY
-BODY ATTITUDES-

TIME SECONDS	INNER DEGREES	MIDDLE DEGREES	OUTER DEGREES
34631.594	47.710	4.936	18.997
34633.593	48.002	3.733	19.695
34635.593	47.667	4.036	19.232
34637.593	47.593	4.429	18.609
ENTER S-BAND COMMUNICATIONS BLACKOUT			
34637.593	47.593	4.429	18.609
34639.593	47.669	3.327	18.774
34641.593	47.336	4.651	17.224
34643.593	47.589	3.017	17.822
34645.593	46.665	5.581	22.701
34647.593	46.214	4.658	27.743
34649.593	45.319	6.609	30.783
34651.593	44.987	5.952	35.207
34653.593	44.118	7.250	38.232
34655.593	43.519	7.231	41.790
34657.593	43.152	7.537	45.077
34659.594	41.903	8.404	47.584
34661.593	42.616	7.522	49.948
34663.593	41.394	8.712	48.217
34665.594	42.302	7.655	47.945
34667.593	42.071	8.024	46.415
34669.593	41.754	8.330	44.585
34671.593	42.824	7.182	43.540
34673.593	42.012	8.184	43.280
34675.593	41.675	8.301	44.266

TABLE IV
APOLLO MISSION AS-502
SPACECRAFT OPERATIONAL TRAJECTORY
-BODY ATTITUDES-

TIME SECONDS	INNER DEGREES	MIDDLE DEGREES	OUTER DEGREES
34677.593	42.145	7.594	45.589
34679.593	41.405	8.417	45.466
34681.593	41.018	8.723	45.326
34683.593	41.670	7.925	45.637
34685.593	41.599	8.040	44.903
34687.593	41.036	8.748	43.333
34689.593	41.315	8.445	42.067
34691.593	42.194	7.465	39.649
34693.594	42.609	7.127	35.347
34695.593	42.477	7.762	32.464
34697.593	42.007	8.104	35.019
34699.593	41.709	8.026	38.789
34701.593	41.477	8.065	42.044
34703.593	40.929	8.574	44.462
34705.593	40.156	9.300	46.192
34707.593	39.536	9.804	47.534
34709.593	39.312	9.901	48.630
34711.593	39.432	9.722	49.391
34713.593	39.541	9.577	50.512
34715.593	39.367	9.710	51.904
34717.593	38.884	10.109	52.953
34719.593	38.410	10.520	53.424
34721.594	38.045	10.862	53.355
34723.593	37.801	11.139	53.245
34725.593	37.691	11.214	53.761
34727.594	37.754	11.192	53.785
34729.593	37.889	11.126	53.941

TABLE IV
APOLLO MISSION AS-502
SPACECRAFT OPERATIONAL TRAJECTORY
-BODY ATTITUDES-

TIME SECONDS	INNER DEGREES	MIDDLE DEGREES	OUTER DEGREES
34731.593	37.822	11.154	55.496
34733.593	37.625	11.309	56.727
34735.593	37.394	11.509	57.791
34737.593	37.036	11.796	58.855
34739.593	36.630	12.108	59.623
34741.593	36.265	12.423	59.913
34743.593	35.914	12.734	60.188
34745.593	35.600	13.011	60.385
34747.593	35.363	13.258	60.386
34749.593	35.235	13.430	60.487
34751.593	35.124	13.601	60.427
34753.593	35.051	13.745	60.442
34755.594	35.058	13.842	60.536
34757.593	35.018	13.960	60.721
EXIT S-BAND COMMUNICATIONS BLACKOUT			
34757.593	35.018	13.960	60.721
34759.593	35.049	14.064	60.589
34761.593	34.999	14.197	60.925
34763.593	34.930	14.344	61.296
34765.593	34.736	14.535	62.392
34767.593	34.555	14.739	63.069
34769.593	34.426	14.948	63.081
34771.593	34.321	15.142	63.358
34773.593	34.220	15.347	63.395
34775.593	36.646	14.366	48.576

TABLE IV
APOLLO MISSION AS-502
SPACECRAFT OPERATIONAL TRAJECTORY
-BODY ATTITUDES-

TIME SECONDS	INNER DEGREES	MIDDLE DEGREES	OUTER DEGREES
34777.593	40.894	9.476	11.170
34779.593	41.276	2.650	-26.005
34781.593	37.330	-3.239	-63.657
34783.594	34.117	-5.367	-82.899
34785.593	34.134	-5.517	-80.880
34787.593	34.283	-5.654	-78.274
34789.594	34.643	-5.667	-74.234
34791.593	35.048	-5.620	-70.292
34793.593	35.332	-5.606	-67.063
34795.593	35.504	-5.647	-64.558
34797.593	37.852	-4.069	-48.650
34799.593	39.608	.298	-22.895
34801.593	39.720	1.055	-18.822
34803.593	39.717	.859	-20.407
34805.593	39.650	.034	-24.399
34807.593	39.526	-.826	-28.424
34809.593	39.332	-1.724	-32.444
34811.593	39.059	-2.661	-36.435
34813.593	38.692	-3.638	-40.393
34815.593	38.393	-4.494	-43.607
34817.594	38.174	-5.016	-44.597
34819.593	37.958	-5.474	-44.838
34821.593	37.778	-5.872	-44.731
34823.593	37.545	-6.295	-44.695
34825.593	37.360	-6.712	-44.529
34827.593	37.161	-7.090	-44.225
34829.593	36.856	-7.585	-44.664

TABLE IV
APOLLO MISSION AS-502
SPACECRAFT OPERATIONAL TRAJECTORY
-BODY ATTITUDES-

TIME SECONDS	INNER DEGREES	MIDDLE DEGREES	OUTER DEGREES
34831.593	36.552	-8.194	-45.842
34833.593	36.149	-8.887	-47.780
34835.593	35.604	-9.713	-50.471
34837.593	35.145	-10.463	-52.635
34839.593	34.916	-10.893	-52.359
34841.593	34.681	-11.313	-52.152
34843.593	34.574	-11.621	-50.919
34845.593	34.596	-11.781	-49.024
34847.593	34.725	-11.780	-46.025
34849.593	34.771	-11.615	-42.909
34851.594	34.621	-11.383	-40.522
34853.593	34.434	-11.235	-38.813
34855.593	34.136	-11.324	-39.099
34857.593	34.990	-9.506	-26.424
34859.593	33.712	-3.460	9.637
34861.593	29.145	.907	45.547
34863.593	26.277	1.785	57.862
34865.593	25.792	1.983	59.957
34867.593	25.552	2.155	60.229
34869.593	25.194	2.464	59.811
34871.593	24.561	3.008	58.613
34873.593	23.836	3.672	56.813
34875.593	23.417	4.143	54.721
34877.593	23.534	4.312	52.458
34879.594	23.859	4.440	49.782
34881.593	23.785	4.945	46.432
34883.593	22.917	5.860	49.532

TABLE IV
APOLLO MISSION AS-502
SPACECRAFT OPERATIONAL TRAJECTORY
-BODY ATTITUDES-

TIME SECONDS	INNER DEGREES	MIDDLE DEGREES	OUTER DEGREES
34885.594	21.514	7.026	53.274
34887.593	20.733	7.519	57.070
34889.593	20.331	7.851	60.666
34891.593	19.354	8.710	63.424
34893.593	17.725	9.892	65.450
34895.593	19.912	9.545	50.940
34897.593	22.514	7.102	12.644
34899.593	22.674	3.500	-25.780
34901.593	20.896	-.030	-64.040
34903.593	19.278	-2.646	-83.856
34905.593	16.761	-3.592	-81.846
34907.593	15.592	-4.682	-80.661
34909.593	14.791	-5.643	-78.672
34911.593	12.893	-6.690	-75.906
34913.594	11.512	-7.790	-73.799
34915.593	10.656	-8.970	-72.279
34917.593	8.878	-10.342	-70.669
34919.593	7.312	-11.738	-69.525
34921.593	6.416	-12.955	-69.048
34923.593	4.503	-14.521	-68.478
34925.593	5.797	-14.623	-53.274
34927.593	5.379	-10.280	-15.412
34929.593	2.145	-6.811	22.482
34931.593	-2.884	-3.508	59.008
34933.593	-6.850	-5.311	82.677
34935.593	-10.153	-4.992	81.891
34937.593	-13.676	-4.544	81.360

TABLE IV
APOLLO MISSION AS-502
SPACECRAFT OPERATIONAL TRAJECTORY
-BODY ATTITUDES-

TIME SECONDS	INNER DEGREES	MIDDLE DEGREES	OUTER DEGREES
34939.593	-14.833	-2.399	82.591
34941.594	-17.430	.647	82.862
34943.593	-18.352	3.358	84.415
34945.593	-21.101	6.486	84.894
34947.594	-22.136	9.015	86.452
	TERMINATION OF AGC GUIDANCE		
34947.594	-22.136	9.015	86.452
34949.593	-24.843	11.785	87.169
34951.593	-26.356	14.110	88.448
34953.593	-28.648	16.470	89.340
34955.593	-30.825	18.580	90.195
34957.593	-32.457	20.645	91.017
34959.593	-35.233	22.989	91.410
34961.593	-36.234	24.944	91.947
34963.593	-39.015	26.877	91.980
34965.593	-40.376	28.466	91.973
34967.593	-41.938	29.965	91.632
34969.593	-44.229	31.325	90.941
34971.593	-44.453	32.404	90.013
34973.593	-46.497	33.547	88.656
34975.594	-47.292	33.930	86.966
34977.593	-47.318	34.266	84.927
34979.593	-49.122	34.878	82.718
34981.593	-48.582	34.839	82.535
34983.593	-49.963	35.214	82.512

TABLE IV
APOLLO MISSION AS-502
SPACECRAFT OPERATIONAL TRAJECTORY
-BODY ATTITUDES-

TIME SECONDS	INNER DEGREES	MIDDLE DEGREES	OUTER DEGREES
34985.593	-51.068	35.402	82.575
34987.593	-50.326	35.230	82.520
34989.593	-52.663	35.640	82.610
34991.593	-51.786	35.298	82.530
34993.593	-52.887	35.415	82.552
34995.593	-53.756	35.372	82.556
34997.593	-52.818	35.005	82.505
34999.593	-55.057	35.266	82.589
35001.593	-53.510	34.714	82.514
35003.594	-55.212	34.898	82.578
35005.593	-54.932	34.582	82.506
35007.593	-54.740	34.368	82.592
35009.594	-56.265	34.473	82.514
35011.593	-54.462	33.906	82.570
35013.593	-56.813	34.247	82.497
35013.994	-56.403	34.138	82.513
	DROGUE PARACHUTES DEPLOYMENT		
35013.994	-56.403	34.138	82.513
35023.993	-48.387	-20.160	-72.681
35033.993	-77.496	32.739	123.779
35043.994	-88.663	-16.020	-150.078
35053.994	-83.302	-23.620	-134.888

TABLE IV
APOLLO MISSION AS-502
SPACECRAFT OPERATIONAL TRAJECTORY
-BODY ATTITUDES-

TIME SECONDS	INNER DEGREES	MIDDLE DEGREES	OUTER DEGREES
35063.193	-50.884	-30.812	-71.624
	MAIN PARACHUTES DEPLOYMENT		
35063.193	-50.884	-30.812	-71.624
35093.194	-41.943	28.245	53.317
35123.193	-86.331	-21.211	-141.665
35153.193	-30.492	13.599	20.609
35183.194	-94.203	-1.177	-177.111
35213.193	-30.120	-10.600	-17.822
35243.193	-86.197	23.135	140.202
35273.194	-49.424	-30.437	-67.288
35303.193	-55.390	32.905	78.415
35333.193	-86.110	-22.567	-139.166
35363.194	-29.064	4.137	5.720

TABLE V
APOLLO MISSION AS-502
SPACECRAFT OPERATIONAL TRAJECTORY
-AERODYNAMIC ATTITUDES AND LOAD FACTORS-

TIME DAY HR MIN SEC	AERODYNAMIC ANGLE OF ATTACK DEGREES	AERODYNAMIC ANGLE OF SIDESLIP DEGREES	TOTAL G-UNITS	LOAD FACTORS AT THE CENTER OF GRAVITY X COMPONENT G-IUNITS	Y COMPONENT G-UNITS	Z COMPONENT G-UNITS
0. 9. 29. 23.594	157.53	.00	.000	-.000	-.000	.000
ATMOSPHERIC ENTRY						
0. 9. 29. 23.594	157.53	.00	.000	-.000	-.000	.000
0. 9. 29. 25.593	159.02	2.82	.000	-.009	.007	.011
0. 9. 29. 27.593	161.98	1.53	.001	-.000	-.000	.001
0. 9. 29. 29.593	164.32	-.20	.001	.000	-.000	.001
0. 9. 29. 31.593	164.49	-2.45	.001	.000	-.000	.001
0. 9. 29. 33.593	164.51	-4.66	.002	.000	-.000	.002
0. 9. 29. 35.593	164.46	-6.16	.002	.000	-.000	.002
0. 9. 29. 37.593	164.41	-5.85	.003	.000	-.000	.003
0. 9. 29. 39.593	164.11	-5.08	.005	.000	-.000	.005
0. 9. 29. 41.593	163.43	-3.81	.007	.000	-.000	.007
ENTER S-BAND COMMUNICATION BLACKOUT						
0. 9. 29. 41.593	163.43	-3.81	.007	.000	-.000	.007
0. 9. 29. 43.593	162.25	-1.96	.011	.000	-.001	.011
0. 9. 29. 45.593	160.54	.63	.015	-.000	-.001	.015
0. 9. 29. 47.593	158.47	3.88	.021	-.000	-.001	.022
0. 9. 29. 49.593	156.45	5.73	.031	-.001	-.002	.031
0. 9. 29. 51.593	155.17	4.91	.045	-.001	-.003	.045
ENTER C-BAND COMMUNICATIONS BLACKOUT LOAD FACTOR = 0.05 G						
0. 9. 29. 51.593	155.17	4.91	.045	-.001	-.003	.045

Aerodynamic attitudes and load factors

TABLE V
APOLLO MISSION AS-502
SPACECRAFT OPERATIONAL TRAJECTORY
-AERODYNAMIC ATTITUDES AND LOAD FACTORS-

TIME DAY	HR	MIN	SEC	AERODYNAMIC ANGLE OF ATTACK DEGREES	AERODYNAMIC ANGLE OF SIDESLIP DEGREES	TOTAL G-UNITS	LOAD FACTORS AT THE CENTER OF GRAVITY X COMPONENT G-UNITS	Y COMPONENT G-UNITS	Z COMPONENT G-UNITS
0.	9.	29.	53.593	155.19	2.75	.065	-.001	-.005	.065
0.	9.	29.	55.593	156.85	.13	.095	-.000	-.007	.095
0.	9.	29.	57.593	158.98	-.18	.138	.000	-.008	.138
0.	9.	29.	59.593	158.88	3.10	.193	-.002	-.012	.193
0.	9.	30.	1.593	156.81	4.21	.262	-.003	-.018	.262
0.	9.	30.	3.593	157.06	1.09	.361	-.001	-.025	.362
0.	9.	30.	5.593	158.26	2.60	.480	-.003	-.031	.481
0.	9.	30.	7.593	157.22	2.86	.612	-.006	-.041	.613
0.	9.	30.	9.593	157.73	1.94	.783	-.004	-.052	.784
0.	9.	30.	11.593	157.57	2.75	.977	-.009	-.065	.979
0.	9.	30.	13.593	157.63	2.69	1.205	-.009	-.080	1.208
0.	9.	30.	15.593	157.51	1.66	1.465	-.008	-.098	1.468
0.	9.	30.	17.593	157.62	2.69	1.757	-.015	-.116	1.761
0.	9.	30.	19.593	157.65	3.15	2.078	-.020	-.138	2.083
0.	9.	30.	21.593	157.59	2.79	2.425	-.019	-.161	2.431
0.	9.	30.	23.593	157.57	2.54	2.793	-.020	-.186	2.800
0.	9.	30.	25.593	157.57	2.48	3.174	-.022	-.211	3.181
0.	9.	30.	27.593	157.58	2.64	3.558	-.027	-.236	3.565
0.	9.	30.	29.593	157.61	2.91	3.936	-.033	-.261	3.945
					MAXIMUM HEATING RATE				
0.	9.	30.	29.593	157.61	2.91	3.936	-.033	-.261	3.945
0.	9.	30.	31.593	157.61	2.82	4.327	-.038	-.287	4.337
0.	9.	30.	33.593	157.58	2.27	4.695	-.035	-.311	4.705
0.	9.	30.	35.593	157.54	2.05	5.020	-.030	-.334	5.032
0.	9.	30.	37.593	157.59	2.77	5.295	-.042	-.352	5.307

TABLE V
APOLLO MISSION AS-502
SPACECRAFT OPERATIONAL TRAJECTORY
-AERODYNAMIC ATTITUDES AND LOAD FACTORS-

TIME DAY HR MIN SEC	AERODYNAMIC ANGLE OF ATTACK DEGREES	AERODYNAMIC ANGLE OF SIDESLIP DEGREES	TOTAL G-UNITS	LOAD FACTORS AT THE CENTER OF GRAVITY X COMPONENT G-IUNITS	Y COMPONENT G-UNITS	Z COMPONENT G-UNITS
0. 9. 30. 39.593	157.59	2.52	5.512	-.045	-.366	5.524
0. 9. 30. 41.593	157.54	2.06	5.660	-.035	-.376	5.673
GUIDANCE INITIATE AT RDOT = -700 FT/SEC						
0. 9. 30. 41.593	157.54	2.06	5.660	-.035	-.376	5.673
0. 9. 30. 43.593	157.60	2.85	5.736	-.039	-.374	5.748
0. 9. 30. 45.593	157.56	2.23	5.744	-.042	-.381	5.756
MAXIMUM LOAD FACTOR						
0. 9. 30. 45.593	157.56	2.23	5.744	-.042	-.381	5.756
0. 9. 30. 47.593	157.56	2.34	5.681	-.038	-.378	5.694
0. 9. 30. 49.593	157.79	2.59	5.570	-.053	-.358	5.582
0. 9. 30. 51.593	157.94	2.14	5.408	-.035	-.351	5.419
0. 9. 30. 53.593	157.77	2.36	5.186	-.044	-.333	5.197
0. 9. 30. 55.593	157.99	2.47	4.978	-.038	-.322	4.989
0. 9. 30. 57.593	157.94	2.32	4.769	-.034	-.309	4.779
0. 9. 30. 59.593	157.77	2.14	4.582	-.038	-.293	4.591
0. 9. 31. 1.593	157.56	2.56	4.419	-.034	-.294	4.429
0. 9. 31. 3.593	157.30	2.49	4.289	-.042	-.282	4.298
0. 9. 31. 5.593	157.25	2.27	4.192	-.030	-.284	4.202
0. 9. 31. 7.593	157.30	2.26	4.113	-.028	-.278	4.122
0. 9. 31. 9.593	157.33	2.47	4.028	-.029	-.272	4.037
0. 9. 31. 11.593	157.31	2.68	3.922	-.031	-.265	3.931
0. 9. 31. 13.593	157.47	2.84	3.800	-.025	-.247	3.808
0. 9. 31. 15.593	157.53	2.49	3.660	-.028	-.244	3.668

TABLE V
APOLLO MISSION AS-502
SPACECRAFT OPERATIONAL TRAJECTORY
-AERODYNAMIC ATTITUDES AND LOAD FACTORS-

TIME DAY	HR	MIN	SEC	AERODYNAMIC ANGLE OF ATTACK DEGREES	AERODYNAMIC ANGLE OF SIDESLIP DEGREES	TOTAL G-UNITS	LOAD FACTORS AT THE CENTER OF GRAVITY X COMPONENT G-UNITS	Y COMPONENT G-UNITS	Z COMPONENT G-UNITS
0.	9.	31.	17.593	157.48	2.54	3.501	-.027	-.234	3.509
0.	9.	31.	19.593	157.34	2.85	3.330	-.019	-.217	3.337
0.	9.	31.	21.593	157.49	2.96	3.170	-.018	-.205	3.177
0.	9.	31.	23.593	157.56	2.72	3.017	-.024	-.201	3.023
0.	9.	31.	25.593	157.55	2.68	2.868	-.022	-.191	2.875
0.	9.	31.	27.593	157.55	2.58	2.730	-.020	-.182	2.736
0.	9.	31.	29.593	157.54	2.32	2.602	-.017	-.173	2.608
0.	9.	31.	31.593	157.53	2.04	2.482	-.015	-.165	2.488
0.	9.	31.	33.593	157.53	1.84	2.371	-.013	-.158	2.377
0.	9.	31.	35.593	157.56	1.98	2.268	-.015	-.151	2.273
0.	9.	31.	37.593	157.60	2.50	2.170	-.018	-.144	2.174
0.	9.	31.	39.593	157.63	3.05	2.078	-.020	-.138	2.083
0.	9.	31.	41.593	157.62	2.93	1.997	-.017	-.132	2.001
0.	9.	31.	43.593	157.56	2.04	1.921	-.020	-.120	1.925
0.	9.	31.	45.593	157.59	1.86	1.848	-.011	-.122	1.852
0.	9.	31.	47.593	157.71	2.63	1.778	-.015	-.117	1.782
0.	9.	31.	49.593	157.68	3.07	1.709	-.016	-.113	1.713
0.	9.	31.	51.593	157.56	2.28	1.643	-.011	-.109	1.646
0.	9.	31.	53.593	157.58	1.82	1.580	-.009	-.105	1.584
0.	9.	31.	55.593	157.67	2.81	1.518	-.013	-.100	1.521
0.	9.	31.	57.593	157.61	2.84	1.456	-.012	-.097	1.460
0.	9.	31.	59.593	157.55	1.68	1.398	-.007	-.093	1.402
0.	9.	32.	1.593	157.62	2.70	1.340	-.012	-.089	1.343
0.	9.	32.	3.593	157.59	2.90	1.284	-.011	-.085	1.287
0.	9.	32.	5.593	157.53	1.65	1.231	-.006	-.082	1.234
0.	9.	32.	7.593	157.62	3.01	1.178	-.011	-.078	1.181
0.	9.	32.	9.593	157.55	2.38	1.128	-.008	-.075	1.130

TABLE V
APOLLO MISSION AS-502
SPACECRAFT OPERATIONAL TRAJECTORY
-AERODYNAMIC ATTITUDES AND LOAD FACTORS-

TIME DAY HR MIN SEC	AERODYNAMIC ANGLE OF ATTACK DEGREES	AERODYNAMIC ANGLE OF SIDESLIP DEGREES	LOAD FACTORS AT THE CENTER OF GRAVITY TOTAL G-UNITS	X COMPONENT G-UNITS	Y COMPONENT G-UNITS	Z COMPONENT G-UNITS
0. 9. 32. 11.593	157.56	2.00	1.080	-.007	-.072	1.082
0. 9. 32. 13.593	157.60	3.18	1.032	-.010	-.069	1.034
0. 9. 32. 15.593	157.53	1.61	.988	-.005	-.066	.990
EXIT C-BAND COMMUNICATIONS BLACKOUT						
0. 9. 32. 15.593	157.53	1.61	.988	-.005	-.066	.990
0. 9. 32. 17.593	157.72	3.40	.945	-.010	-.062	.947
0. 9. 32. 19.593	158.51	2.79	.913	-.007	-.057	.914
0. 9. 32. 21.593	157.99	1.97	.869	-.005	-.056	.871
0. 9. 32. 23.593	158.50	2.75	.834	-.007	-.052	.835
0. 9. 32. 25.593	157.77	.94	.792	-.011	-.045	.793
0. 9. 32. 27.593	157.59	2.91	.752	-.006	-.050	.754
0. 9. 32. 29.593	157.54	2.02	.718	-.005	-.048	.720
0. 9. 32. 31.593	157.62	2.74	.685	-.005	-.045	.687
0. 9. 32. 33.593	157.65	2.37	.654	-.005	-.043	.656
0. 9. 32. 35.593	157.49	2.17	.623	-.004	-.042	.625
0. 9. 32. 37.593	157.72	3.08	.595	-.006	-.039	.596
0. 9. 32. 39.593	157.47	1.42	.567	-.002	-.038	.568
0. 9. 32. 41.593	157.68	3.68	.540	-.006	-.036	.542
0. 9. 32. 43.593	157.53	1.25	.516	-.002	-.034	.517
0. 9. 32. 45.593	157.57	3.17	.491	-.005	-.033	.492
0. 9. 32. 47.593	157.66	2.49	.469	-.004	-.031	.470

TABLE V
APOLLO MISSION AS-502
SPACECRAFT OPERATIONAL TRAJECTORY
-AERODYNAMIC ATTITUDES AND LOAD FACTORS-

TIME DAY HR MIN SEC	AERODYNAMIC ANGLE OF ATTACK DEGREES	AERODYNAMIC ANGLE OF SIDESLIP DEGREES	LOAD FACTORS AT THE CENTER OF GRAVITY TOTAL G-UNITS	X COMPONENT G-UNITS	Y COMPONENT G-UNITS	Z COMPONENT G-UNITS
0. 9. 32. 49.593	157.50	1.53	.447	-.002	-.030	.448
EXIT S-BAND COMMUNICATIONS BLACKOUT						
0. 9. 32. 49.593	157.50	1.53	.447	-.002	-.030	.448
0. 9. 32. 51.593	157.64	3.77	.426	-.005	-.028	.427
0. 9. 32. 53.593	157.58	1.47	.407	-.002	-.027	.408
0. 9. 32. 55.593	157.53	2.33	.387	-.003	-.026	.388
0. 9. 32. 57.593	157.68	3.64	.369	-.004	-.024	.370
0. 9. 32. 59.593	157.57	1.18	.353	-.001	-.023	.354
0. 9. 33. 1.593	157.52	2.54	.336	-.002	-.022	.337
0. 9. 33. 3.593	157.74	3.76	.321	-.004	-.021	.322
0. 9. 33. 5.593	157.58	1.16	.307	-.001	-.020	.308
0. 9. 33. 7.593	157.47	2.11	.293	-.002	-.020	.293
0. 9. 33. 9.593	157.70	4.00	.279	-.003	-.018	.280
0. 9. 33. 11.593	157.66	1.73	.268	-.002	-.018	.268
0. 9. 33. 13.593	157.45	1.22	.255	-.001	-.017	.256
0. 9. 33. 15.593	157.59	3.76	.244	-.003	-.016	.244
0. 9. 33. 17.593	157.74	3.13	.234	-.002	-.015	.234
0. 9. 33. 19.593	157.54	.84	.224	-.001	-.015	.224
0. 9. 33. 21.593	157.46	2.14	.214	-.001	-.014	.214
0. 9. 33. 23.593	157.65	4.13	.205	-.003	-.014	.205
0. 9. 33. 25.593	157.72	2.54	.197	-.002	-.013	.197
0. 9. 33. 27.593	157.52	.70	.189	-.000	-.013	.189
0. 9. 33. 29.593	157.47	2.30	.181	-.001	-.012	.181
0. 9. 33. 31.593	157.63	4.19	.173	-.002	-.011	.174
0. 9. 33. 33.593	157.73	2.64	.167	-.002	-.011	.167

TABLE V
APOLLO MISSION AS-502
SPACECRAFT OPERATIONAL TRAJECTORY
-AERODYNAMIC ATTITUDES AND LOAD FACTORS-

TIME DAY	HR	MIN	SEC	AERODYNAMIC ANGLE OF ATTACK DEGREES	AERODYNAMIC ANGLE OF SIDESLIP DEGREES	LOAD FACTORS AT THE CENTER OF GRAVITY TOTAL G-UNITS	X COMPONENT G-UNITS	Y COMPONENT G-UNITS	Z COMPONENT G-UNITS
0.	9.	33.	35.593	157.57	.73	.160	-.000	-.011	.161
0.	9.	33.	37.593	157.46	1.58	.154	-.001	-.010	.154
0.	9.	33.	39.593	157.55	3.89	.148	-.002	-.010	.148
0.	9.	33.	41.593	157.71	3.84	.143	-.002	-.009	.143
0.	9.	33.	43.593	157.68	1.56	.138	-.001	-.009	.138
0.	9.	33.	45.593	157.51	.60	.133	-.000	-.009	.133
0.	9.	33.	47.593	157.47	2.37	.128	-.001	-.009	.128
0.	9.	33.	49.593	157.57	4.26	.123	-.002	-.008	.123
0.	9.	33.	51.593	157.71	3.62	.118	-.001	-.008	.119
0.	9.	33.	53.593	157.68	1.38	.114	-.001	-.008	.115
0.	9.	33.	55.593	157.53	.50	.110	-.000	-.007	.110
0.	9.	33.	57.593	157.47	2.07	.106	-.001	-.007	.106
0.	9.	33.	59.593	157.52	4.10	.102	-.001	-.007	.103
0.	9.	34.	1.593	157.67	4.21	.099	-.001	-.007	.099
0.	9.	34.	3.593	157.75	2.30	.097	-.001	-.006	.097
0.	9.	34.	5.593	157.63	.53	.094	-.000	-.006	.094
0.	9.	34.	7.593	157.49	.84	.091	-.000	-.006	.091
0.	9.	34.	9.593	157.45	2.85	.088	-.001	-.006	.088
0.	9.	34.	11.593	157.63	4.62	.086	-.001	-.006	.086
0.	9.	34.	13.593	157.83	4.21	.084	-.001	-.005	.084
0.	9.	34.	15.593	157.80	2.04	.082	-.001	-.005	.082
0.	9.	34.	17.593	157.54	.24	.080	-.000	-.005	.080
0.	9.	34.	19.593	157.35	.52	.078	-.000	-.005	.078
0.	9.	34.	21.593	157.38	2.57	.076	-.001	-.005	.076
0.	9.	34.	23.593	157.58	4.51	.074	-.001	-.005	.075
0.	9.	34.	25.593	157.83	4.60	.073	-.001	-.005	.073
0.	9.	34.	27.593	157.88	2.79	.072	-.001	-.005	.072

TABLE V
APOLLO MISSION AS-502
SPACECRAFT OPERATIONAL TRAJECTORY
-AERODYNAMIC ATTITUDES AND LOAD FACTORS-

TIME DAY HR MIN SEC	AERODYNAMIC ANGLE OF ATTACK DEGREES	AERODYNAMIC ANGLE OF SIDESLIP DEGREES	TOTAL G-UNITS	LOAD FACTORS AT THE CENTER OF GRAVITY X COMPONENT G-UNITS	Y COMPONENT G-UNITS	Z COMPONENT G-UNITS
0. 9. 34. 29.593	157.66	.67	.071	-.000	-.005	.071
0. 9. 34. 31.593	157.39	.03	.070	-.000	-.005	.070
0. 9. 34. 33.593	157.31	1.34	.068	-.000	-.005	.069
0. 9. 34. 35.593	157.43	3.55	.067	-.001	-.005	.068
0. 9. 34. 37.593	157.66	4.86	.067	-.001	-.004	.067
0. 9. 34. 39.593	157.87	4.22	.066	-.001	-.004	.066
0. 9. 34. 41.593	157.85	2.13	.066	-.000	-.004	.066
0. 9. 34. 43.593	157.66	.04	.065	-.000	-.004	.065
0. 9. 34. 45.593	157.46	-.19	.064	.000	-.004	.064
0. 9. 34. 47.593	157.36	1.62	.064	-.000	-.004	.064
0. 9. 34. 49.593	157.37	4.06	.063	-.001	-.004	.063
0. 9. 34. 51.593	157.49	5.27	.063	-.001	-.004	.063
0. 9. 34. 53.593	157.70	4.32	.063	-.001	-.004	.063
0. 9. 34. 55.593	157.82	1.94	.063	-.000	-.004	.063
0. 9. 34. 57.593	157.78	-.05	.063	-.000	-.004	.063
0. 9. 34. 59.593	157.65	-.08	.063	.000	-.004	.063
0. 9. 35. 1.593	157.60	2.20	.063	-.000	-.004	.063
0. 9. 35. 3.593	157.62	4.80	.063	-.001	-.004	.063
0. 9. 35. 5.593	157.69	5.57	.063	-.001	-.004	.063
0. 9. 35. 7.593	157.75	3.93	.064	-.001	-.004	.064
0. 9. 35. 9.593	157.62	1.13	.064	-.000	-.004	.065
0. 9. 35. 11.593	157.40	-.65	.065	.000	-.004	.065
0. 9. 35. 13.593	157.35	-.09	.065	.000	-.004	.066
0. 9. 35. 15.593	157.51	2.39	.066	-.000	-.004	.066
0. 9. 35. 17.593	157.71	4.90	.067	-.001	-.004	.067
0. 9. 35. 19.593	157.86	5.41	.068	-.001	-.004	.068
0. 9. 35. 21.593	157.83	3.35	.069	-.001	-.004	.069

TABLE V
APOLLO MISSION AS-502
SPACECRAFT OPERATIONAL TRAJECTORY
-AERODYNAMIC ATTITUDES AND LOAD FACTORS-

TIME DAY	HR	MIN	SEC	AERODYNAMIC ANGLE OF ATTACK DEGREES	AERODYNAMIC ANGLE OF SIDESLIP DEGREES	LOAD FACTORS AT THE CENTER OF GRAVITY TOTAL G-UNITS	X COMPONENT G-IUNITS	Y COMPONENT G-UNITS	Z COMPONENT G-UNITS
0.	9.	35.	23.593	157.60	.25	.070	-.000	-.005	.070
0.	9.	35.	25.593	157.40	-1.01	.071	.000	-.005	.071
0.	9.	35.	27.593	157.39	.65	.072	-.000	-.005	.072
0.	9.	35.	29.593	157.45	3.85	.073	-.001	-.005	.073
0.	9.	35.	31.593	157.54	5.81	.074	-.001	-.005	.075
0.	9.	35.	33.593	157.72	4.80	.076	-.001	-.005	.076
0.	9.	35.	35.593	157.84	1.76	.078	-.000	-.005	.079
0.	9.	35.	37.593	157.71	-.64	.080	.000	-.005	.080
0.	9.	35.	39.593	157.52	-.09	.082	.009	.002	.083
0.	9.	35.	41.593	157.53	3.10	.084	-.001	-.006	.084
0.	9.	35.	43.593	157.69	5.52	.086	-.001	-.006	.086
0.	9.	35.	45.593	157.85	4.78	.089	-.001	-.006	.089
0.	9.	35.	47.593	157.72	1.58	.092	-.000	-.006	.092
0.	9.	35.	49.593	157.37	-.67	.094	.000	-.006	.094
0.	9.	35.	51.593	157.28	.52	.097	-.000	-.007	.097
0.	9.	35.	53.593	157.52	3.86	.100	-.001	-.007	.101
0.	9.	35.	55.593	157.88	5.49	.104	-.002	-.007	.104
0.	9.	35.	57.593	157.92	3.06	.108	-.001	-.007	.108
0.	9.	35.	59.593	157.58	-.02	.112	-.000	-.007	.112
0.	9.	36.	1.593	157.33	.09	.116	.000	-.008	.116
0.	9.	36.	3.593	157.38	3.15	.120	-.001	-.008	.120
0.	9.	36.	5.593	157.61	4.99	.125	-.002	-.008	.125
0.	9.	36.	7.593	157.79	3.22	.130	-.001	-.009	.131
0.	9.	36.	9.593	157.69	.35	.135	-.000	-.009	.136
0.	9.	36.	11.593	157.57	.96	.140	-.000	-.009	.141
0.	9.	36.	13.593	157.62	4.18	.145	-.002	-.010	.146
0.	9.	36.	15.593	157.74	4.58	.151	-.002	-.010	.152

TABLE V
APOLLO MISSION AS-502
SPACECRAFT OPERATIONAL TRAJECTORY
-AERODYNAMIC ATTITUDES AND LOAD FACTORS-

TIME DAY	HR	MIN	SEC	AERODYNAMIC ANGLE OF ATTACK DEGREES	AERODYNAMIC ANGLE OF SIDESLIP DEGREES	TOTAL G-UNITS	LOAD FACTORS AT THE CENTER OF GRAVITY X COMPONENT G-IUNITS	Y COMPONENT G-UNITS	Z COMPONENT G-UNITS
0.	9.	36.	17.593	157.63	1.42	.158	-.001	-.010	.158
0.	9.	36.	19.593	157.40	.05	.164	-.000	-.011	.164
0.	9.	36.	21.593	157.53	2.81	.171	-.001	-.011	.171
0.	9.	36.	23.593	157.82	4.59	.178	-.002	-.012	.178
0.	9.	36.	25.593	157.75	2.21	.186	-.001	-.012	.187
0.	9.	36.	27.593	157.43	-.07	.194	.000	-.013	.195
0.	9.	36.	29.593	157.46	2.50	.203	-.001	-.014	.203
0.	9.	36.	31.593	157.69	4.43	.211	-.003	-.014	.212
0.	9.	36.	33.593	157.96	1.54	.223	-.010	-.007	.223
0.	9.	36.	35.593	159.62	2.25	.237	-.001	-.014	.238
0.	9.	36.	37.593	158.15	4.56	.244	-.003	-.016	.244
0.	9.	36.	39.593	156.24	2.12	.250	-.002	-.018	.251
0.	9.	36.	41.593	157.50	.71	.266	-.001	-.018	.267
0.	9.	36.	43.593	158.57	3.75	.282	-.003	-.018	.282
0.	9.	36.	45.593	157.43	3.37	.291	-.003	-.019	.292
0.	9.	36.	47.593	157.00	.66	.304	-.001	-.021	.305
0.	9.	36.	49.593	157.99	2.99	.322	-.003	-.021	.323
0.	9.	36.	51.593	157.83	3.62	.337	-.004	-.022	.338
0.	9.	36.	53.593	157.18	.73	.352	-.001	-.024	.353
0.	9.	36.	55.593	157.73	2.99	.370	-.003	-.024	.371
0.	9.	36.	57.593	157.81	3.23	.389	-.004	-.025	.390
0.	9.	36.	59.593	157.33	.94	.406	-.001	-.027	.407
0.	9.	37.	1.593	157.71	3.62	.427	-.005	-.028	.428
0.	9.	37.	3.593	157.68	2.20	.449	-.003	-.030	.450
0.	9.	37.	5.593	157.43	1.67	.469	-.002	-.031	.470
0.	9.	37.	7.593	157.75	3.78	.492	-.006	-.032	.493
0.	9.	37.	9.593	157.50	1.02	.517	-.002	-.034	.518

TABLE V
APOLLO MISSION AS-502
SPACECRAFT OPERATIONAL TRAJECTORY
-AERODYNAMIC ATTITUDES AND LOAD FACTORS-

TIME DAY HR MIN SEC	AERODYNAMIC ANGLE OF ATTACK DEGREES	AERODYNAMIC ANGLE OF SIDESLIP DEGREES	LOAD FACTORS AT THE CENTER OF GRAVITY TOTAL G-UNITS	X COMPONENT G-UNITS	Y COMPONENT G-UNITS	Z COMPONENT G-UNITS
0. 9. 37. 11.593	157.61	3.37	.541	-.005	-.036	.542
0. 9. 37. 13.593	157.63	1.98	.568	-.004	-.038	.569
0. 9. 37. 15.593	157.52	2.41	.594	-.004	-.040	.595
0. 9. 37. 17.593	157.68	2.86	.623	-.006	-.041	.624
ENTER S-BAND COMMUNICATIONS BLACKOUT						
0. 9. 37. 17.593	157.68	2.86	.623	-.006	-.041	.624
0. 9. 37. 19.593	157.51	1.73	.651	-.003	-.043	.653
0. 9. 37. 21.593	157.67	3.31	.681	-.007	-.045	.683
0. 9. 37. 23.593	157.54	1.55	.713	-.003	-.047	.715
0. 9. 37. 25.593	157.90	3.28	.747	-.008	-.049	.749
0. 9. 37. 27.593	157.41	1.65	.778	-.004	-.052	.780
0. 9. 37. 29.593	157.83	3.13	.815	-.008	-.053	.817
0. 9. 37. 31.593	157.47	1.87	.849	-.004	-.057	.851
0. 9. 37. 33.593	157.76	2.77	.887	-.008	-.058	.889
0. 9. 37. 35.593	157.53	2.38	.923	-.006	-.062	.925
0. 9. 37. 37.593	157.67	2.14	.964	-.007	-.064	.966
0. 9. 37. 39.593	157.62	3.06	1.002	-.009	-.067	1.005
0. 9. 37. 41.593	157.56	1.40	1.045	-.005	-.069	1.047
0. 9. 37. 43.593	157.65	3.29	1.086	-.011	-.072	1.088
0. 9. 37. 45.593	157.52	1.87	1.130	-.006	-.075	1.132
0. 9. 37. 47.593	157.60	2.42	1.175	-.009	-.078	1.177
0. 9. 37. 49.593	157.59	3.06	1.219	-.011	-.081	1.222
0. 9. 37. 51.593	157.53	1.60	1.266	-.006	-.084	1.269
0. 9. 37. 53.593	157.67	2.82	1.314	-.012	-.087	1.317
0. 9. 37. 55.593	157.61	2.84	1.360	-.011	-.090	1.363

TABLE V
APOLLO MISSION AS-502
SPACECRAFT OPERATIONAL TRAJECTORY
-AERODYNAMIC ATTITUDES AND LOAD FACTORS-

TIME DAY HR MIN SEC	AERODYNAMIC ANGLE OF ATTACK DEGREES	AERODYNAMIC ANGLE OF SIDESLIP DEGREES	TOTAL G-UNITS	LOAD FACTORS AT THE CENTER OF GRAVITY X COMPONENT G-UNITS	Y COMPONENT G-UNITS	Z COMPONENT G-UNITS
0. 9. 37. 57.593	157.53	1.66	1.412	-.007	-.094	1.415
0. 9. 37. 59.593	157.64	2.67	1.465	-.013	-.097	1.468
0. 9. 38. 1.593	157.61	3.06	1.517	-.014	-.101	1.520
0. 9. 38. 3.593	157.53	1.87	1.572	-.008	-.105	1.575
0. 9. 38. 5.593	157.57	2.02	1.626	-.011	-.108	1.630
0. 9. 38. 7.593	157.62	3.09	1.679	-.016	-.111	1.683
0. 9. 38. 9.593	157.58	2.80	1.734	-.014	-.115	1.738
0. 9. 38. 11.593	157.52	1.82	1.789	-.009	-.119	1.793
0. 9. 38. 13.593	157.53	1.99	1.842	-.012	-.123	1.846
0. 9. 38. 15.593	157.69	3.03	1.895	-.018	-.125	1.899
0. 9. 38. 17.593	157.66	3.01	1.945	-.017	-.129	1.949
0. 9. 38. 19.593	157.57	2.33	1.994	-.013	-.132	1.998
0. 9. 38. 21.593	157.55	1.81	2.042	-.011	-.136	2.047
0. 9. 38. 23.593	157.59	2.00	2.088	-.014	-.138	2.093
0. 9. 38. 25.593	157.64	2.62	2.132	-.018	-.141	2.136
0. 9. 38. 27.593	157.65	3.04	2.173	-.020	-.144	2.178
0. 9. 38. 29.593	157.61	2.94	2.213	-.019	-.147	2.218
0. 9. 38. 31.593	157.57	2.46	2.253	-.016	-.150	2.258
0. 9. 38. 33.593	157.54	1.95	2.291	-.013	-.152	2.296
0. 9. 38. 35.593	157.55	1.78	2.327	-.013	-.155	2.332
0. 9. 38. 37.593	157.58	2.07	2.361	-.016	-.157	2.366
0. 9. 38. 39.593	157.60	2.46	2.392	-.019	-.159	2.398
0. 9. 38. 41.593	157.62	2.83	2.422	-.022	-.160	2.427
0. 9. 38. 43.593	157.64	3.06	2.451	-.023	-.162	2.456
0. 9. 38. 45.593	157.62	2.95	2.478	-.022	-.164	2.483
0. 9. 38. 47.593	157.58	2.73	2.503	-.020	-.166	2.509
0. 9. 38. 49.593	157.56	2.41	2.527	-.017	-.168	2.533

TABLE V
APOLLO MISSION AS-502
SPACECRAFT OPERATIONAL TRAJECTORY
-AERODYNAMIC ATTITUDES AND LOAD FACTORS-

TIME DAY HR MIN SEC	AERODYNAMIC ANGLE OF ATTACK DEGREES	AERODYNAMIC ANGLE OF SIDESLIP DEGREES	LOAD FACTORS AT THE CENTER OF GRAVITY TOTAL G-UNITS	X COMPONENT G-UNITS	Y COMPONENT G-UNITS	Z COMPONENT G-UNITS
0. 9. 38. 51.593	157.54	2.04	2.550	-.015	-.170	2.556
0. 9. 38. 53.593	157.54	1.91	2.571	-.015	-.171	2.576
0. 9. 38. 55.593	157.55	1.85	2.591	-.015	-.172	2.596
0. 9. 38. 57.593	157.57	1.95	2.609	-.016	-.173	2.615
0. 9. 38. 59.593	157.58	2.15	2.626	-.018	-.174	2.632
0. 9. 39. 1.593	157.59	2.40	2.646	-.021	-.175	2.651
0. 9. 39. 3.593	157.61	2.64	2.665	-.023	-.177	2.671
0. 9. 39. 5.593	157.62	2.83	2.684	-.024	-.178	2.690
0. 9. 39. 7.593	157.63	2.98	2.703	-.025	-.179	2.709
0. 9. 39. 9.593	157.62	2.98	2.721	-.025	-.180	2.727
0. 9. 39. 11.593	157.61	2.99	2.739	-.024	-.182	2.745
0. 9. 39. 13.593	157.60	2.94	2.757	-.024	-.183	2.763
0. 9. 39. 15.593	157.59	2.78	2.774	-.022	-.184	2.780
0. 9. 39. 17.593	157.57	2.65	2.791	-.021	-.186	2.797
EXIT S-BAND COMMUNICATIONS BLACKOUT						
0. 9. 39. 17.593	157.57	2.65	2.791	-.021	-.186	2.797
0. 9. 39. 19.593	157.56	2.50	2.807	-.020	-.187	2.814
0. 9. 39. 21.593	157.55	2.36	2.824	-.019	-.188	2.830
0. 9. 39. 23.593	157.54	2.23	2.840	-.018	-.189	2.846
0. 9. 39. 25.593	157.54	2.09	2.855	-.017	-.190	2.862
0. 9. 39. 27.593	157.53	2.02	2.871	-.017	-.191	2.877
0. 9. 39. 29.593	157.53	2.02	2.886	-.017	-.192	2.893
0. 9. 39. 31.593	157.53	1.94	2.902	-.017	-.193	2.909
0. 9. 39. 33.593	157.53	1.90	2.918	-.017	-.194	2.924
0. 9. 39. 35.593	157.44	1.81	2.931	-.025	-.189	2.937

TABLE V
APOLLO MISSION AS-502
SPACECRAFT OPERATIONAL TRAJECTORY
-AERODYNAMIC ATTITUDES AND LOAD FACTORS-

TIME DAY HR MIN SEC	AERODYNAMIC ANGLE OF ATTACK DEGREES	AERODYNAMIC ANGLE OF SIDESLIP DEGREES	LOAD FACTORS AT THE CENTER OF GRAVITY TOTAL G-UNITS	X COMPONENT G-UNITS	Y COMPONENT G-UNITS	Z COMPONENT G-UNITS
0. 9. 39. 37.593	157.36	1.98	2.940	-.018	-.198	2.947
0. 9. 39. 39.593	157.34	1.98	2.947	-.018	-.199	2.954
0. 9. 39. 41.593	157.32	1.98	2.949	-.009	-.192	2.956
0. 9. 39. 43.593	157.56	2.12	2.967	-.011	-.190	2.973
0. 9. 39. 45.593	157.54	2.06	2.987	-.019	-.199	2.994
0. 9. 39. 47.593	157.55	2.02	3.016	-.019	-.200	3.022
0. 9. 39. 49.593	157.56	1.95	3.050	-.019	-.202	3.057
0. 9. 39. 51.593	157.56	1.95	3.089	-.019	-.205	3.096
0. 9. 39. 53.593	157.55	1.94	3.132	-.019	-.208	3.139
0. 9. 39. 55.593	157.54	1.94	3.178	-.019	-.211	3.185
0. 9. 39. 57.593	157.93	2.12	3.240	-.012	-.203	3.247
0. 9. 39. 59.593	157.64	2.04	3.276	-.028	-.209	3.283
0. 9. 40. 1.593	157.58	2.18	3.311	-.021	-.220	3.318
0. 9. 40. 3.593	157.53	2.43	3.337	-.023	-.222	3.344
0. 9. 40. 5.593	157.54	2.55	3.357	-.025	-.223	3.364
0. 9. 40. 7.593	157.55	2.66	3.368	-.026	-.224	3.375
0. 9. 40. 9.593	157.55	2.76	3.371	-.027	-.224	3.379
0. 9. 40. 11.593	157.55	2.82	3.368	-.028	-.224	3.376
0. 9. 40. 13.593	157.55	2.84	3.360	-.029	-.224	3.367
0. 9. 40. 15.593	157.60	2.90	3.349	-.030	-.222	3.356
0. 9. 40. 17.593	157.60	2.87	3.333	-.030	-.221	3.341
0. 9. 40. 19.593	157.60	2.77	3.316	-.029	-.220	3.324
0. 9. 40. 21.593	157.60	2.68	3.297	-.028	-.219	3.304
0. 9. 40. 23.593	157.57	2.55	3.274	-.027	-.217	3.282
0. 9. 40. 25.593	157.59	2.44	3.252	-.026	-.216	3.259
0. 9. 40. 27.593	157.56	2.33	3.226	-.024	-.214	3.233
0. 9. 40. 29.593	157.55	2.24	3.199	-.023	-.213	3.206

TABLE V
APOLLO MISSION AS-502
SPACECRAFT OPERATIONAL TRAJECTORY
-AERODYNAMIC ATTITUDES AND LOAD FACTORS-

TIME DAY HR MIN SEC	AERODYNAMIC ANGLE OF ATTACK DEGREES	AERODYNAMIC ANGLE OF SIDESLIP DEGREES	LOAD FACTORS AT THE CENTER OF GRAVITY TOTAL G-UNITS	X COMPONENT G-IUNITS	Y COMPONENT G-UNITS	Z COMPONENT G-UNITS
0. 9. 40. 31.593	157.53	2.16	3.171	-.022	-.211	3.178
0. 9. 40. 33.593	157.52	2.15	3.142	-.022	-.209	3.149
0. 9. 40. 35.593	157.51	2.11	3.113	-.021	-.207	3.120
0. 9. 40. 37.593	157.54	2.13	3.086	-.021	-.205	3.093
0. 9. 40. 39.593	157.54	2.10	3.060	-.021	-.203	3.067
0. 9. 40. 41.593	157.54	2.09	3.034	-.020	-.202	3.041
0. 9. 40. 43.593	157.55	2.07	3.010	-.020	-.200	3.016
0. 9. 40. 45.593	157.57	2.12	2.985	-.020	-.198	2.992
0. 9. 40. 47.593	157.59	2.14	2.961	-.021	-.196	2.968
0. 9. 40. 49.593	157.47	2.19	2.933	-.021	-.195	2.939
0. 9. 40. 51.593	157.17	2.29	2.896	-.021	-.195	2.903
0. 9. 40. 53.593	156.88	2.44	2.859	-.022	-.194	2.866
0. 9. 40. 55.593	156.57	2.69	2.820	-.024	-.194	2.827
0. 9. 40. 57.593	156.85	2.99	2.798	-.017	-.181	2.804
0. 9. 40. 59.593	156.56	2.85	2.755	-.024	-.188	2.762
0. 9. 41. 1.593	156.22	2.70	2.707	-.031	-.181	2.713
0. 9. 41. 3.593	155.51	3.03	2.646	-.023	-.191	2.653
0. 9. 41. 5.593	155.20	2.65	2.601	-.020	-.190	2.608
0. 9. 41. 7.593	154.88	2.31	2.557	-.017	-.190	2.564
0. 9. 41. 9.593	154.60	2.21	2.515	-.017	-.190	2.522
0. 9. 41. 11.593	154.33	2.55	2.474	-.021	-.190	2.481
0. 9. 41. 13.593	154.08	3.10	2.434	-.024	-.190	2.442
0. 9. 41. 15.593	153.79	3.30	2.395	-.024	-.190	2.403
0. 9. 41. 17.593	153.57	2.91	2.369	-.021	-.190	2.376
0. 9. 41. 19.593	153.47	2.39	2.350	-.017	-.190	2.358
0. 9. 41. 21.593	153.41	2.52	2.327	-.019	-.188	2.335
0. 9. 41. 23.593	153.42	2.78	2.299	-.021	-.185	2.306

TABLE V
APOLLO MISSION AS-502
SPACECRAFT OPERATIONAL TRAJECTORY
-AERODYNAMIC ATTITUDES AND LOAD FACTORS-

TIME DAY HR MIN SEC	AERODYNAMIC ANGLE OF ATTACK DEGREES	AERODYNAMIC ANGLE OF SIDESLIP DEGREES	TOTAL G-UNITS	LOAD FACTORS AT THE CENTER OF GRAVITY X COMPONENT G-UNITS	Y COMPONENT G-UNITS	Z COMPONENT G-UNITS
0. 9. 41. 25.593	153.38	3.46	2.264	-.025	-.183	2.271
0. 9. 41. 27.593	153.21	3.16	2.227	-.021	-.182	2.235
0. 9. 41. 29.593	153.07	2.43	2.192	-.016	-.181	2.199
0. 9. 41. 31.593	153.04	2.48	2.157	-.018	-.178	2.164
0. 9. 41. 33.593	153.01	3.27	2.121	-.023	-.176	2.129
0. 9. 41. 35.593	152.83	1.65	2.091	-.020	-.170	2.098
0. 9. 41. 37.593	152.78	1.36	2.049	.001	-.176	2.056
0. 9. 41. 39.593	152.58	1.78	2.008	-.001	-.176	2.016
0. 9. 41. 41.593	152.22	2.69	1.971	-.018	-.179	1.979
0. 9. 41. 43.593	152.41	3.87	1.936	-.017	-.169	1.943
0. 9. 41. 45.593	152.18	2.67	1.900	-.017	-.170	1.908
0. 9. 41. 47.593	152.19	2.90	1.869	-.018	-.162	1.877
0. 9. 41. 49.593	152.17	3.45	1.842	-.020	-.155	1.848
0. 9. 41. 51.593	152.04	2.84	1.817	-.016	-.150	1.824
0. 9. 41. 53.593	152.02	2.81	1.796	-.015	-.144	1.802
0. 9. 41. 55.593	152.18	3.31	1.777	-.017	-.134	1.783
0. 9. 41. 57.593	152.25	2.88	1.759	-.013	-.126	1.764
0. 9. 41. 59.593	152.36	2.71	1.741	-.012	-.118	1.745
0. 9. 42. 1.593	152.50	3.31	1.722	-.014	-.110	1.726
0. 9. 42. 3.593	152.61	2.86	1.703	-.010	-.094	1.705
0. 9. 42. 5.593	153.79	4.27	1.690	-.003	-.061	1.691
0. 9. 42. 7.593	154.03	4.32	1.655	-.019	-.050	1.656
0. 9. 42. 9.593	153.91	3.10	1.636	-.005	-.036	1.637
0. 9. 42. 11.593	153.83	2.90	1.598	-.003	-.024	1.599
0. 9. 42. 13.593	150.24	1.58	1.500	-.011	-.028	1.500
0. 9. 42. 15.593	147.98	2.62	1.434	-.004	-.046	1.434
0. 9. 42. 17.593	145.74	3.95	1.397	-.006	-.053	1.398

TABLE V
APOLLO MISSION AS-502
SPACECRAFT OPERATIONAL TRAJECTORY
-AERODYNAMIC ATTITUDES AND LOAD FACTORS-

TIME DAY HR MIN SEC	AERODYNAMIC ANGLE OF ATTACK DEGREES	AERODYNAMIC ANGLE OF SIDESLIP DEGREES	LOAD FACTORS AT THE CENTER OF GRAVITY TOTAL G-UNITS	X COMPONENT G-IUNITS	Y COMPONENT G-UNITS	Z COMPONENT G-UNITS
0. 9. 42. 19.593	145.57	3.23	1.407	-.006	-.057	1.408
0. 9. 42. 21.593	146.05	4.01	1.424	-.007	-.059	1.425
0. 9. 42. 23.593	146.52	3.07	1.441	-.006	-.062	1.442
0. 9. 42. 25.593	147.21	3.94	1.419	-.009	-.069	1.421
0. 9. 42. 27.593	147.68	2.98	1.399	-.007	-.076	1.401
TERMINATION OF AGC GUIDANCE						
0. 9. 42. 27.593	147.68	2.98	1.399	-.007	-.076	1.401
0. 9. 42. 29.593	148.35	3.68	1.383	-.010	-.084	1.385
0. 9. 42. 31.593	148.84	3.10	1.368	-.009	-.092	1.371
0. 9. 42. 33.593	149.46	3.29	1.355	-.012	-.100	1.359
0. 9. 42. 35.593	149.99	3.32	1.342	-.012	-.109	1.347
0. 9. 42. 37.593	150.64	2.85	1.336	-.012	-.111	1.340
0. 9. 42. 39.593	151.68	3.48	1.336	-.013	-.103	1.340
0. 9. 42. 41.593	152.45	2.46	1.332	-.009	-.096	1.336
0. 9. 42. 43.593	153.31	3.22	1.325	-.011	-.088	1.328
0. 9. 42. 45.593	153.94	2.70	1.315	-.009	-.082	1.318
0. 9. 42. 47.593	154.59	2.54	1.304	-.008	-.076	1.306
0. 9. 42. 49.593	155.21	3.17	1.290	-.009	-.070	1.292
0. 9. 42. 51.593	155.67	2.09	1.276	-.006	-.063	1.277
0. 9. 42. 53.593	156.26	2.90	1.263	-.007	-.057	1.265
0. 9. 42. 55.593	156.17	2.71	1.260	-.006	-.057	1.261
0. 9. 42. 57.593	156.15	2.09	1.255	-.005	-.056	1.256
0. 9. 42. 59.593	156.27	3.27	1.247	-.008	-.056	1.248
0. 9. 43. 1.593	156.15	2.05	1.238	-.005	-.056	1.239
0. 9. 43. 3.593	156.26	2.69	1.228	-.007	-.055	1.229

TABLE V
APOLLO MISSION AS-502
SPACECRAFT OPERATIONAL TRAJECTORY
-AERODYNAMIC ATTITUDES AND LOAD FACTORS-

TIME DAY HR MIN SEC	AERODYNAMIC ANGLE OF ATTACK DEGREES	AERODYNAMIC ANGLE OF SIDESLIP DEGREES	TOTAL G-UNITS	LOAD FACTORS AT THE CENTER OF GRAVITY X COMPONENT G-IUNITS	Y COMPONENT G-UNITS	Z COMPONENT G-UNITS
0. 9. 43. 5.593	156.25	3.01	1.214	-.007	-.054	1.215
0. 9. 43. 7.593	156.16	1.78	1.194	-.004	-.054	1.195
0. 9. 43. 9.593	156.33	3.37	1.176	-.008	-.052	1.177
0. 9. 43. 11.593	156.18	2.04	1.160	-.004	-.052	1.161
0. 9. 43. 13.593	156.28	2.66	1.147	-.006	-.051	1.148
0. 9. 43. 15.593	156.27	2.97	1.135	-.006	-.051	1.136
0. 9. 43. 17.593	156.18	1.79	1.125	-.004	-.050	1.126
0. 9. 43. 19.593	156.34	3.48	1.116	-.007	-.050	1.117
0. 9. 43. 21.593	156.16	1.73	1.108	-.004	-.050	1.109
0. 9. 43. 23.593	156.33	3.08	1.101	-.007	-.049	1.103
0. 9. 43. 25.593	156.22	2.51	1.096	-.005	-.049	1.097
0. 9. 43. 27.593	156.23	2.18	1.091	-.005	-.049	1.092
0. 9. 43. 29.593	156.31	3.34	1.086	-.007	-.048	1.087
0. 9. 43. 31.593	156.15	1.52	1.082	-.003	-.049	1.083
0. 9. 43. 33.593	156.35	3.57	1.079	-.008	-.048	1.080
0. 9. 43. 33.994	180.00	.00	1.078	-.007	-.048	1.079
DROGUE PARACHUTES DEPLOYMENT						
0. 9. 43. 33.994	180.00	.00	1.078	-.007	-.048	1.079
0. 9. 43. 43.994	180.00	.00	1.146	-.008	-.013	1.146
0. 9. 43. 53.994	180.00	.00	1.062	.004	.004	1.062
0. 9. 44. 3.994	180.00	.00	1.029	.001	-.001	1.029
0. 9. 44. 13.994	180.00	.00	1.025	.000	-.000	1.025

TABLE V
APOLLO MISSION AS-502
SPACECRAFT OPERATIONAL TRAJECTORY
-AERODYNAMIC ATTITUDES AND LOAD FACTORS-

TIME DAY HR MIN SEC	AERODYNAMIC ANGLE OF ATTACK DEGREES	AERODYNAMIC ANGLE OF SIDESLIP DEGREES	LOAD FACTORS AT THE CENTER OF GRAVITY TOTAL G-UNITS	X COMPONENT G-IUNITS	Y COMPONENT G-UNITS	Z COMPONENT G-UNITS
0. 9. 44. 23.193	180.00	.00	1.022	-.000	-.000	1.022
MAIN PARACHUTES DEPLOYMENT						
0. 9. 44. 23.193	180.00	.00	1.022	-.000	-.000	1.022
0. 9. 44. 53.193	180.00	.00	.999	.000	-.000	.999
0. 9. 45. 23.193	180.00	.00	.999	-.000	.000	.999
0. 9. 45. 53.193	180.00	.00	.999	.000	.000	.999
0. 9. 46. 23.193	180.00	.00	.999	-.000	-.000	.999
0. 9. 46. 53.193	180.00	.00	.999	.000	.000	.999
0. 9. 47. 23.193	180.00	.00	1.000	-.000	-.000	1.000
0. 9. 47. 53.193	180.00	.00	1.000	-.000	.000	1.000
0. 9. 48. 23.193	180.00	.00	1.000	.000	-.000	1.000
0. 9. 48. 53.193	180.00	.00	1.000	-.000	.000	1.000
0. 9. 49. 23.193	180.00	.00	1.000	.000	.000	1.000

TABLE VI
APOLLO MISSION AS-502
SPACECRAFT OPERATIONAL TRAJECTORY
-DIRECTION COSINES-

TIME FROM LIFTOFF DAY	HR	MIN	SEC	ROLL AXIS L 11	L 21	L 31	PITCH AXIS L 12	L 22	L 32	YAW AXIS L 13	L 23	L 33
0.	9.	29.	23.594	-.3425205	-.9264375	.1561835	.4425082	-.3057272	-.8430406	.8287739	-.2196462	.5146739
ATMOSPHERIC ENTRY												
0.	9.	29.	23.594	-.3425205	-.9264375	.1561835	.4425082	-.3057272	-.8430406	.8287739	-.2196462	.5146739
0.	9.	29.	25.593	-.3756104	-.9106444	.1721731	.6004476	-.3806293	-.7032666	.7059600	-.1607733	.6897626
0.	9.	29.	27.593	-.4381426	-.8821678	.1726589	.6312014	-.4386871	-.6396353	.6400124	-.1712707	.7490330
0.	9.	29.	29.593	-.4921296	-.8533261	.1721712	.6427455	-.4895707	-.5892358	.5871003	-.1793181	.7894037
0.	9.	29.	31.593	-.5156548	-.8348911	.1925017	.6157291	-.5173321	-.5943443	.5958001	-.1879476	.7808315
0.	9.	29.	33.593	-.5346517	-.8174627	.2142481	.5854798	-.5411347	-.6036444	.6093939	-.1973016	.7679265
0.	9.	29.	35.593	-.5441316	-.8069270	.2297598	.5608390	-.5535013	-.6157077	.6240036	-.2061678	.7537336
0.	9.	29.	37.593	-.5335664	-.8151196	.2255814	.5521349	-.5377514	-.6371581	.6406667	-.2154148	.7369821
0.	9.	29.	39.593	-.5154533	-.8285048	.2188325	.5470850	-.5147250	-.6601183	.6595498	-.2205402	.7185792
0.	9.	29.	41.593	-.4878954	-.8473959	.2094713	.5456607	-.4833831	-.6845401	.6813314	-.2196837	.6982310
ENTER S-BAND COMMUNICATION BLACKOUT												
0.	9.	29.	41.593	-.4878954	-.8473959	.2094713	.5456607	-.4833831	-.6845401	.6813314	-.2196837	.6982310
0.	9.	29.	43.593	-.4482532	-.8720144	.1966212	.5477169	-.4417602	-.7105309	.7064526	-.2108050	.6756374
0.	9.	29.	45.593	-.3974684	-.8994677	.1815548	.5635672	-.3954602	-.7252608	.7241622	-.1859274	.6640934
0.	9.	29.	47.593	-.3405771	-.9245820	.1707491	.6024159	-.3540186	-.7153781	.7218741	-.1407794	.6775535
0.	9.	29.	49.593	-.2958598	-.9362848	.1829064	.6341331	-.3388646	-.6950151	.7127126	-.0924200	.6953410
0.	9.	29.	51.593	-.3005508	-.9268639	.2249278	.6510380	-.3717128	-.6617998	.6970069	-.0524679	.7151422
ENTER C-BAND COMMUNICATIONS BLACKOUT LOAD FACTOR = 0.05 G												
0.	9.	29.	51.593	-.3005508	-.9268639	.2249278	.6510380	-.3717128	-.6617998	.6970069	-.0524679	.7151422
0.	9.	29.	53.593	-.3354630	-.9036633	.2661901	.6583607	-.4269938	-.6198689	.6738143	-.0326940	.7381770

Direction cosines

TABLE VI
APOLLO MISSION AS-502
SPACECRAFT OPERATIONAL TRAJECTORY
-DIRECTION COSINES-

TIME FROM LIFTOFF DAY	HR	MIN	SEC	ROLL AXIS L 11	L 21	L 31	PITCH AXIS L 12	L 22	L 32	YAW AXIS L 13	L 23	L 33
0.	9.	29.	55.593	-.3906920	-.8764622	.2813783	.6495814	-.4790851	-.5903571	.6522298	-.0478697	.7565082
0.	9.	29.	57.593	-.4130509	-.8746732	.2536450	.6394631	-.4768595	-.6030688	.6484411	-.0869015	.7562884
0.	9.	29.	59.593	-.3674288	-.9052893	.2131837	.6554937	-.4146760	-.6311670	.6597909	-.0921684	.7457754
0.	9.	30.	1.593	-.3249931	-.9193280	.2218458	.6541643	-.3879362	-.6492877	.6829704	-.0658904	.7274681
0.	9.	30.	3.593	-.3596529	-.8981081	.2530843	.6245508	-.4332205	-.6498125	.6932431	-.0756429	.7167231
0.	9.	30.	5.593	-.3511470	-.9114913	.2141949	.6242578	-.3984062	-.6719931	.6978524	-.1022555	.7089047
0.	9.	30.	7.593	-.3297165	-.9186352	.2177073	.6144651	-.3838885	-.6892476	.7167424	-.0934827	.6910436
0.	9.	30.	9.593	-.3402553	-.9149244	.2171167	.5950762	-.3882849	-.7036470	.7280869	-.1102186	.6765657
0.	9.	30.	11.593	-.3279976	-.9215062	.2079517	.5989679	-.3730892	-.7085492	.7305170	-.1078460	.6743249
0.	9.	30.	13.593	-.3293173	-.9206121	.2098176	.6009971	-.3757576	-.7054139	.7282531	-.1062053	.6770286
0.	9.	30.	15.593	-.3385417	-.9135132	.2255728	.5946602	-.3934983	-.7010979	.7292247	-.1032117	.6764455
0.	9.	30.	17.593	-.3266863	-.9217388	.2089824	.5980254	-.3728143	-.7094893	.7318755	-.1068036	.6730165
0.	9.	30.	19.593	-.3202785	-.9258698	.2004664	.5969944	-.3615708	-.7161454	.7355402	-.1096886	.6685424
0.	9.	30.	21.593	-.3239934	-.9229855	.2076680	.5974259	-.3698118	-.7115627	.7335602	-.1064754	.6712320
0.	9.	30.	23.593	-.3252738	-.9220793	.2096822	.5929342	-.3716142	-.7143752	.7366315	-.1080398	.6676087
0.	9.	30.	25.593	-.3260630	-.9215806	.2106467	.5932434	-.3729608	-.7134160	.7360334	-.1076538	.6683304
0.	9.	30.	27.593	-.3247573	-.9226151	.2081204	.5941852	-.3702256	-.7140567	.7358510	-.1082330	.6684377
0.	9.	30.	29.593	-.3220342	-.9247552	.2027849	.5943680	-.3642070	-.7169937	.7368994	-.1103677	.6669320
						MAXIMUM HEATING RATE						
0.	9.	30.	29.593	-.3220342	-.9247552	.2027849	.5943680	-.3642070	-.7169937	.7368994	-.1103677	.6669320
0.	9.	30.	31.593	-.3242288	-.9235690	.2046848	.5958899	-.3674485	-.7140705	.7347046	-.1095526	.6694829
0.	9.	30.	33.593	-.3306294	-.9197095	.2117041	.5921909	-.3768389	-.7122516	.7348429	-.1101221	.6692376
0.	9.	30.	35.593	-.3331296	-.9183119	.2138410	.5899490	-.3799208	-.7124748	.7355167	-.1111911	.6683200
0.	9.	30.	37.593	-.3269219	-.9231073	.2024724	.5944507	-.3674162	-.7152858	.7346771	-.1134827	.6688581
0.	9.	30.	39.593	-.3311234	-.9210282	.2050956	.5931925	-.3722213	-.7138445	.7338119	-.1147094	.6695982

TABLE VI
APOLLO MISSION AS-502
SPACECRAFT OPERATIONAL TRAJECTORY
-DIRECTION COSINES-

TIME FROM LIFTOFF DAY HR MIN SEC	ROLL AXIS L 11	L 21	L 31	PITCH AXIS L 12	L 22	L 32	YAW AXIS L 13	L 23	L 33
0. 9. 30. 41.593	-.3364769	-.9179162	.2102694	.5893926	-.3794256	-.7131989	.7344384	-.1160437	.6686808
GUIDANCE INITIATE AT RDOT = -700 FT/SEC									
0. 9. 30. 41.593	-.3364769	-.9179162	.2102694	.5893926	-.3794256	-.7131989	.7344384	-.1160437	.6686808
0. 9. 30. 43.593	-.3300654	-.9230277	.1976783	.5944137	-.3659153	-.7160854	.7333002	-.1188523	.6694362
0. 9. 30. 45.593	-.3379310	-.9184367	.2056129	.5908318	-.3770703	-.7132571	.7326121	-.1195490	.6700653
MAXIMUM LOAD FACTOR									
0. 9. 30. 45.593	-.3379310	-.9184367	.2056129	.5908318	-.3770703	-.7132571	.7326121	-.1195490	.6700653
0. 9. 30. 47.593	-.3378220	-.9191441	.2026088	.5907644	-.3746476	-.7145884	.7327167	-.1217096	.6695618
0. 9. 30. 49.593	-.3918245	-.8824327	.2603576	.7075026	-.4698943	-.5278630	.5881442	-.0226260	.8084395
0. 9. 30. 51.593	-.5149947	-.7919704	.3279684	.8060799	-.5775813	-.1289770	.2915744	.1979463	.9358427
0. 9. 30. 53.593	-.6769360	-.6642606	.3170417	.7279448	-.5404831	.4218702	-.1088761	.5163680	.8494175
0. 9. 30. 55.593	-.7883843	-.5750169	.2186451	.4902390	-.3725327	.7879626	-.3716394	.7284057	.5755947
0. 9. 30. 57.593	-.8620552	-.5068133	.0010540	.0113930	-.0172997	.9997854	-.5066864	.8618822	.0206874
0. 9. 30. 59.593	-.8252433	-.5235851	-.2117358	-.4197441	.3177564	.8502033	-.3778734	.7904995	-.4819982
0. 9. 31. 1.593	-.8110701	-.5331326	-.2406965	-.4826645	.3775039	.7902694	-.3304545	.7571396	-.5635064
0. 9. 31. 3.593	-.8503238	-.5097224	-.1308914	-.2697575	.2086148	.9400589	-.4518633	.8346633	-.3148916
0. 9. 31. 5.593	-.8385616	-.5325399	.1149598	.2430871	-.1768917	.9537389	-.4875686	.8277141	.2777882
0. 9. 31. 7.593	-.7025580	-.6438913	.3030121	.6778275	-.4758266	.5604810	-.2167076	.5991604	.7707429
0. 9. 31. 9.593	-.4912310	-.8013385	.3413922	.8311569	-.5484673	-.0914430	.2605193	.2388308	.9354622
0. 9. 31. 11.593	-.3014600	-.9323958	.1993987	.6104186	-.3493810	-.7108601	.7324691	-.0925793	.6744761
0. 9. 31. 13.593	-.2348665	-.9720276	.0001086	.2308201	-.0558805	-.9713905	.9442244	-.2281220	.2374879
0. 9. 31. 15.593	-.2352122	-.9714272	-.0316910	.1481755	-.0036151	-.9889544	.9605827	-.2373100	.1447920
0. 9. 31. 17.593	-.2360030	-.9682945	-.0819049	.0417444	.0741058	-.9963763	.9708553	-.2385668	.0229317
0. 9. 31. 19.593	-.2747993	-.9312458	-.2393042	-.2893421	.3174417	-.9030569	.9169332	-.1789187	-.3566814

TABLE VI
APOLLO MISSION AS-502
SPACECRAFT OPERATIONAL TRAJECTORY
-DIRECTION COSINES-

TIME FROM LIFTOFF DAY	HR	MIN	SEC	ROLL AXIS L 11	L 21	L 31	PITCH AXIS L 12	L 22	L 32	YAW AXIS L 13	L 23	L 33
0.	9.	31.	21.593	-.3672377	-.8602326	-.3537461	-.5659522	.5084749	-.6489618	.7381291	-.0381198	-.6735817
0.	9.	31.	23.593	-.4017976	-.8361401	-.3734011	-.6375273	.5481318	-.5413967	.6573566	.0205215	-.7533002
0.	9.	31.	25.593	-.4211988	-.8228236	-.3815140	-.6700371	.5657990	-.4805432	.6112626	.0532243	-.7896362
0.	9.	31.	27.593	-.4399221	-.8103705	-.3869990	-.6987636	.5795781	-.4193073	.5640904	.0859583	-.8212266
0.	9.	31.	29.593	-.4396135	-.8121956	-.3835078	-.7067508	.5762990	-.4103446	.5542952	.0906514	-.8273688
0.	9.	31.	31.593	-.4329628	-.8185468	-.3775239	-.7075347	.5680964	-.4203106	.5585139	.0851324	-.8251150
0.	9.	31.	33.593	-.4266166	-.8246682	-.3713768	-.7066340	.5602092	-.4322429	.5645057	.0780255	-.8217332
0.	9.	31.	35.593	-.4237431	-.8280982	-.3670084	-.7012122	.5563885	-.4457950	.5733613	.0684482	-.8164384
0.	9.	31.	37.593	-.4270846	-.8266939	-.3663004	-.6940058	.5593758	-.4532711	.5796160	.0606295	-.8126311
0.	9.	31.	39.593	-.4318064	-.8241685	-.3664553	-.6879777	.5636933	-.4570957	.5832923	.0547362	-.8104159
0.	9.	31.	41.593	-.4191924	-.8343715	-.3579133	-.6764992	.5499715	-.4897756	.6054970	.0368178	-.7949955
0.	9.	31.	43.593	-.3749719	-.8673047	-.3273816	-.6342069	.4975730	-.5917793	.6761492	-.0142729	-.7366265
0.	9.	31.	45.593	-.3489674	-.8869187	-.3026500	-.5899504	.4588396	-.6643980	.7281348	-.0533047	-.6833581
0.	9.	31.	47.593	-.3354877	-.8974420	-.2864365	-.5331916	.4315622	-.7276405	.7766303	-.0913889	-.6232924
0.	9.	31.	49.593	-.3173591	-.9100799	-.2665290	-.4747477	.3957760	-.7861144	.8209128	-.1229466	-.5576615
0.	9.	31.	51.593	-.2932558	-.9270191	-.2337446	-.4348197	.3470724	-.8309468	.8514299	-.1420432	-.5048672
0.	9.	31.	53.593	-.2772384	-.9386848	-.2049626	-.3949929	.3058152	-.8662896	.8758536	-.1592099	-.4555576
0.	9.	31.	55.593	-.2752011	-.9402667	-.2004069	-.3505812	.2922525	-.8897647	.8951856	-.1746053	-.4100680
0.	9.	31.	57.593	-.2650014	-.9467462	-.1828820	-.3145260	.2641605	-.9117525	.9115084	-.1840945	-.3677792
0.	9.	31.	59.593	-.2510401	-.9563150	-.1498012	-.2954908	.2230809	-.9289349	.9217722	-.1889350	-.3385846
0.	9.	32.	1.593	-.2571181	-.9522048	-.1649129	-.2912937	.2390787	-.9262771	.9214327	-.1901245	-.3388428
0.	9.	32.	3.593	-.2576924	-.9514441	-.1683709	-.2949484	.2433978	-.9239929	.9201087	-.1884452	-.3433487
0.	9.	32.	5.593	-.2498937	-.9568295	-.1484267	-.3093892	.2241582	-.9241382	.9175137	-.1850146	-.3520485
0.	9.	32.	7.593	-.2609662	-.9494808	-.1743065	-.3150409	.2544437	-.9143345	.9124943	-.1836967	-.3655266
0.	9.	32.	9.593	-.2581173	-.9512945	-.1685651	-.3336037	.2515075	-.9085442	.9066885	-.1782770	-.3822738
0.	9.	32.	11.593	-.2585362	-.9512621	-.1681083	-.3541639	.2552446	-.8996766	.8987363	-.1730621	-.4028927
0.	9.	32.	13.593	-.2714558	-.9425561	-.1946785	-.3699029	.2889110	-.8830075	.8885288	-.1676854	-.4270809

TABLE VI
APOLLO MISSION AS-502
SPACECRAFT OPERATIONAL TRAJECTORY
-DIRECTION COSINES-

TIME FROM LIFTOFF DAY HR MIN SEC	ROLL AXIS L 11	L 21	L 31	PITCH AXIS L 12	L 22	L 32	YAW AXIS L 13	L 23	L 33
0. 9. 32. 15.593	-.2632820	-.9482220	-.1776448	-.4020117	.2752287	-.8732902	.8769659	-.1585063	-.4536591
EXIT C-BAND COMMUNICATIONS BLACKOUT									
0. 9. 32. 15.593	-.2632820	-.9482220	-.1776448	-.4020117	.2752287	-.8732902	.8769659	-.1585063	-.4536591
0. 9. 32. 17.593	-.2802357	-.9377254	-.2052781	-.3985609	.3082045	-.8638051	.8732795	-.1602532	-.4601106
0. 9. 32. 19.593	-.2361921	-.9688544	-.0743940	-.1393652	.1095446	-.9841633	.9616604	-.2220836	-.1608981
0. 9. 32. 21.593	-.2307590	-.9568183	.1767741	.3722409	-.2546682	-.8925137	.8989922	-.1401530	.4149339
0. 9. 32. 23.593	-.3468327	-.8722812	.3447210	.7551962	-.4776773	-.4488910	.5562246	.1046419	.8244175
0. 9. 32. 25.593	-.5083019	-.7539366	.4161835	.8372869	-.5457029	.0340454	.2014445	.3657704	.9086430
0. 9. 32. 27.593	-.4668231	-.7786969	.4191746	.8562670	-.5164998	-.0058964	.2210951	.3561728	.9078864
0. 9. 32. 29.593	-.4565811	-.7855632	.4176413	.8457196	-.5289651	-.0703856	.2762100	.3210707	.9058817
0. 9. 32. 31.593	-.4239476	-.8071929	.4107410	.8457852	-.5150460	-.1391944	.3239072	.2883875	.9010642
0. 9. 32. 33.593	-.4299976	-.8030431	.4125819	.8445602	-.5193020	-.1305510	.3190926	.2923137	.9015168
0. 9. 32. 35.593	-.4320447	-.7997200	.4168756	.8446043	-.5208642	-.1238708	.3161975	.2985773	.9004836
0. 9. 32. 37.593	-.4179032	-.8096887	.4120208	.8531877	-.5055995	-.1282178	.3121340	.2979484	.9021081
0. 9. 32. 39.593	-.4411348	-.7925000	.4211222	.8408421	-.5289897	-.1146927	.3136633	.3035023	.8997231
0. 9. 32. 41.593	-.4039150	-.8165189	.4124919	.8595847	-.4930416	-.1342539	.3129965	.3003446	.9010140
0. 9. 32. 43.593	-.4387696	-.7933818	.4219319	.8407824	-.5281734	-.1188186	.3171217	.3026190	.8988078
0. 9. 32. 45.593	-.4046608	-.8140556	.4166091	.8562665	-.4972323	-.1398848	.3210255	.3001226	.8982589
0. 9. 32. 47.593	-.4116631	-.8100592	.4175375	.8509197	-.5056971	-.1421484	.3262961	.2967737	.8974721
0. 9. 32. 49.593	-.4211211	-.8023429	.4229691	.8429764	-.5183334	-.1439490	.3347355	.2959330	.8946372
EXIT S-BAND COMMUNICATIONS BLACKOUT									
0. 9. 32. 49.593	-.4211211	-.8023429	.4229691	.8429764	-.5183334	-.1439490	.3347355	.2959330	.8946372
0. 9. 32. 51.593	-.3808972	-.8271582	.4131908	.8590250	-.4818891	-.1727973	.3420428	.2891233	.8940998
0. 9. 32. 53.593	-.4112458	-.8079926	.4219299	.8405994	-.5151853	-.1672623	.3525188	.2858881	.8910659

TABLE VI
APOLLO MISSION AS-502
SPACECRAFT OPERATIONAL TRAJECTORY
-DIRECTION COSINES-

TIME FROM LIFTOFF				ROLL AXIS			PITCH AXIS			YAW AXIS		
DAY	HR	MIN	SEC	L 11	L 21	L 31	L 12	L 22	L 32	L 13	L 23	L 33
0.	9.	32.	55.593	-.3907684	-.8194567	.4192740	.8455188	-.4995581	-.1884137	.3638654	.2808780	.8880932
0.	9.	32.	57.593	-.3651108	-.8352649	.4111285	.8533193	-.4768210	-.2109214	.3722099	.2738142	.8868402
0.	9.	32.	59.593	-.3999909	-.8128832	.4233535	.8355849	-.5132210	-.1959645	.3765702	.2753638	.8845166
0.	9.	33.	1.593	-.3743870	-.8271198	.4191745	.8451895	-.4903382	-.2126573	.3814304	.2746658	.8826492
0.	9.	33.	3.593	-.3565392	-.8383193	.4124324	.8559882	-.4700050	-.2153589	.3743849	.2762534	.8851667
0.	9.	33.	5.593	-.3980970	-.8115141	.4277425	.8405485	-.5094474	-.1842321	.3674192	.2861961	.8849265
0.	9.	33.	7.593	-.3831672	-.8185483	.4279738	.8503055	-.4935585	-.1827036	.3607818	.2939024	.8851315
0.	9.	33.	9.593	-.3548737	-.8356394	.4192510	.8659004	-.4628725	-.1896457	.3525352	.2957294	.8878418
0.	9.	33.	11.593	-.3913598	-.8135337	.4301167	.8521959	-.4967830	-.1642217	.3472745	.3022739	.8877110
0.	9.	33.	13.593	-.3981238	-.8067512	.4366348	.8504607	-.5030102	-.1539396	.3438227	.3100537	.8863705
0.	9.	33.	15.593	-.3575550	-.8302075	.4276797	.8703971	-.4622238	-.1695820	.3384720	.3116163	.8878806
0.	9.	33.	17.593	-.3680423	-.8248226	.4291998	.8677319	-.4705241	-.1601512	.3340452	.3134880	.8888976
0.	9.	33.	19.593	-.4029869	-.8020624	.4407919	.8525655	-.5041151	-.1378406	.3327666	.3202560	.8869625
0.	9.	33.	21.593	-.3801873	-.8137627	.4395996	.8636140	-.4824776	-.1462403	.3311018	.3240457	.8862087
0.	9.	33.	23.593	-.3472913	-.8325151	.4316333	.8784621	-.4498956	-.1609297	.3281663	.3232840	.8875778
0.	9.	33.	25.593	-.3719718	-.8189401	.4370059	.8687614	-.4729598	-.1468423	.3269413	.3250327	.8873911
0.	9.	33.	27.593	-.3986279	-.8010337	.4465879	.8564069	-.4993458	-.1312285	.3281202	.3301496	.8850640
0.	9.	33.	29.593	-.3701666	-.8159537	.4440678	.8688892	-.4732218	-.1452332	.3286461	.3320852	.8841442
0.	9.	33.	31.593	-.3375496	-.8340207	.4364283	.8822455	-.4419569	-.1622249	.3281814	.3302779	.8849934
0.	9.	33.	33.593	-.3577422	-.8234238	.4404473	.8739486	-.4613937	-.1527406	.3289898	.3302865	.8846900
0.	9.	33.	35.593	-.3881722	-.8041402	.4502010	.8597113	-.4919424	-.1374378	.3319922	.3336933	.8822868
0.	9.	33.	37.593	-.3706398	-.8122230	.4504664	.8662573	-.4772471	-.1477616	.3349991	.3354535	.8804808
0.	9.	33.	39.593	-.3300388	-.8339606	.4422489	.8817725	-.4396097	-.1709400	.3369741	.3335461	.8804518
0.	9.	33.	41.593	-.3283017	-.8354790	.4406732	.8815641	-.4385518	-.1746915	.3392091	.3311302	.8805055
0.	9.	33.	43.593	-.3619501	-.8165085	.4497845	.8667272	-.4723954	-.1600830	.3431852	.3318984	.8786736
0.	9.	33.	45.593	-.3727394	-.8080752	.4561577	.8600734	-.4853897	-.1570687	.3483376	.3337834	.8759278
0.	9.	33.	47.593	-.3395828	-.8250640	.4516114	.8718291	-.4562970	-.1780646	.3529836	.3332603	.8742654
0.	9.	33.	49.593	-.3050992	-.8429469	.4431195	.8828636	-.4248046	-.2002322	.3570244	.3301234	.8738147

TABLE VI
APOLLO MISSION AS-502
SPACECRAFT OPERATIONAL TRAJECTORY
-DIRECTION COSINES-

TIME FROM LIFTOFF DAY	HR	MIN	SEC	ROLL AXIS L 11	L 21	L 31	PITCH AXIS L 12	L 22	L 32	YAW AXIS L 13	L 23	L 33
0.	9.	33.	51.593	-.3121886	-.8398549	.4440518	.8785546	-.4330835	-.2014463	.3614971	.3272346	.8730620
0.	9.	33.	53.593	-.3442741	-.8218836	.4538532	.8640202	-.4664899	-.1893578	.3673480	.3269473	.8707243
0.	9.	33.	55.593	-.3530261	-.8148134	.4598289	.8575541	-.4783282	-.1892168	.3741303	.3275382	.8676089
0.	9.	33.	57.593	-.3223848	-.8300398	.4550846	.8666911	-.4521529	-.2107232	.3806764	.3264838	.8651553
0.	9.	33.	59.593	-.2846743	-.8489669	.4452142	.8771467	-.4180526	-.2363171	.3867483	.3232447	.8636773
0.	9.	34.	1.593	-.2801573	-.8517130	.4428282	.8771149	-.4145804	-.2424718	.3901043	.3204810	.8631978
0.	9.	34.	3.593	-.3087752	-.8370301	.4517061	.8666430	-.4432752	-.2289913	.3919027	.3207611	.8622787
0.	9.	34.	5.593	-.3334053	-.8217493	.4621352	.8560470	-.4692393	-.2167904	.3949993	.3233304	.8599029
0.	9.	34.	7.593	-.3240799	-.8244775	.4639063	.8580016	-.4627223	-.2229827	.3985040	.3257681	.8573620
0.	9.	34.	9.593	-.2877237	-.8421790	.4560150	.8694646	-.4293423	-.2443286	.4015549	.3261897	.8557767
0.	9.	34.	11.593	-.2616749	-.8551256	.4475337	.8825722	-.3996766	-.2476387	.3906310	.3301799	.8592954
0.	9.	34.	13.593	-.2720355	-.8505128	.4501386	.8850004	-.4048042	-.2300172	.3778506	.3358000	.8628252
0.	9.	34.	15.593	-.3099527	-.8303068	.4631630	.8772619	-.4375668	-.1973495	.3665254	.3451462	.8640215
0.	9.	34.	17.593	-.3402406	-.8110332	.4758797	.8700974	-.4634520	-.1677578	.3566046	.3569837	.8633631
0.	9.	34.	19.593	-.3368235	-.8099409	.4801517	.8754702	-.4570916	-.1569052	.3465572	.3675091	.8630383
0.	9.	34.	21.593	-.3050874	-.8250878	.4755541	.8913619	-.4231995	-.1624073	.3352545	.3743424	.8645647
0.	9.	34.	23.593	-.2758194	-.8393416	.4684327	.9053001	-.3906232	-.1668691	.3230408	.3780465	.8675975
0.	9.	34.	25.593	-.2775516	-.8393689	.4673595	.9089755	-.3869236	-.1550927	.3110124	.3817721	.8703570
0.	9.	34.	27.593	-.3103413	-.8236196	.4746589	.9019474	-.4128547	-.1266566	.3002985	.3888467	.8709873
0.	9.	34.	29.593	-.3468241	-.8028100	.4849836	.8915536	-.4427646	-.0953507	.2912821	.3993190	.8693095
0.	9.	34.	31.593	-.3576363	-.7938111	.4918544	.8896749	-.4497240	-.0789110	.2838572	.4094047	.8670714
0.	9.	34.	33.593	-.3347599	-.8034005	.4924260	.8998588	-.4276302	-.0859453	.2796247	.4143429	.8661004
0.	9.	34.	35.593	-.2971309	-.8208949	.4876933	.9146057	-.3913854	-.1015569	.2742436	.4158714	.8670879
0.	9.	34.	37.593	-.2751893	-.8314424	.4826742	.9231436	-.3687264	-.1088428	.2684713	.4156252	.8690102
0.	9.	34.	39.593	-.2865442	-.8274440	.4829377	.9211762	-.3764794	-.0984764	.2632998	.4166529	.8700997
0.	9.	34.	41.593	-.3209853	-.8112129	.4887761	.9103331	-.4066385	-.0770635	.2612700	.4202129	.8689989
0.	9.	34.	43.593	-.3467374	-.7965024	.4953353	.8956137	-.4380405	-.0774377	.2786562	.4167785	.8652435
0.	9.	34.	45.593	-.3399798	-.7969448	.4992922	.8920994	-.4413148	-.0969527	.2976110	.4124564	.8609921

TABLE VI
APOLLO MISSION AS-502
SPACECRAFT OPERATIONAL TRAJECTORY
-DIRECTION COSINES-

TIME FROM LIFTOFF DAY	HR	MIN	SEC	ROLL AXIS L 11	L 21	L 31	PITCH AXIS L 12	L 22	L 32	YAW AXIS L 13	L 23	L 33
0.	9.	34.	47.593	-.2990749	-.8148147	.4966158	.9003710	-.4133390	-.1359518	.3160478	.4064823	.8572548
0.	9.	34.	49.593	-.2479068	-.8372397	.4874126	.9094294	-.3745167	-.1807633	.3338867	.3984558	.8542556
0.	9.	34.	51.593	-.2187342	-.8504304	.4784594	.9103207	-.3544167	-.2137872	.3513852	.3887889	.8516875
0.	9.	34.	53.593	-.2266744	-.8488746	.4775256	.9014099	-.3685373	-.2272453	.3688887	.3789356	.8487219
0.	9.	34.	55.593	-.2577433	-.8357406	.4848774	.8853987	-.4052041	-.2277688	.3868300	.3706039	.8444023
0.	9.	34.	57.593	-.2806402	-.8233243	.4933338	.8699398	-.4353505	-.2316778	.4055191	.3641526	.8384194
0.	9.	34.	59.593	-.2718723	-.8253230	.4949013	.8654216	-.4345972	-.2493405	.4208692	.3605095	.8324073
0.	9.	35.	1.593	-.2367732	-.8404430	.4874361	.8816264	-.3966759	-.2557011	.4082564	.3691934	.8348790
0.	9.	35.	3.593	-.2000101	-.8547085	.4790295	.9007199	-.3528137	-.2534287	.3856158	.3807832	.8404193
0.	9.	35.	5.593	-.1935847	-.8558038	.4797132	.9115594	-.3376873	-.2345778	.3627456	.3918764	.8454871
0.	9.	35.	7.593	-.2281109	-.8403581	.4916946	.9122637	-.3609350	-.1936514	.3402063	.4043812	.8489614
0.	9.	35.	9.593	-.2817143	-.8145460	.5071014	.9050744	-.4010555	-.1414032	.3185552	.4191292	.8502077
0.	9.	35.	11.593	-.3176909	-.7948553	.5169889	.9003359	-.4239058	-.0984842	.2974353	.4341761	.8503078
0.	9.	35.	13.593	-.3124991	-.7959168	.5185178	.9074303	-.4115499	-.0848346	.2809172	.4440081	.8508480
0.	9.	35.	15.593	-.2727943	-.8135342	.5135614	.9237621	-.3706281	-.0964279	.2687877	.4481037	.8526173
0.	9.	35.	17.593	-.2319838	-.8300136	.5072089	.9382967	-.3284336	-.1083080	.2564816	.4507868	.8549903
0.	9.	35.	19.593	-.2254784	-.8323595	.5062975	.9430225	-.3169817	-.1011490	.2446794	.4546431	.8564062
0.	9.	35.	21.593	-.2592352	-.8187060	.5123647	.9342230	-.3471344	-.0820070	.2449990	.4574038	.8548434
0.	9.	35.	23.593	-.3009820	-.7988491	.5208166	.9152705	-.3953280	-.0774312	.2677492	.4533827	.8501496
0.	9.	35.	25.593	-.3102116	-.7917094	.5262745	.9050288	-.4154031	-.0914506	.2910183	.4479246	.8453826
0.	9.	35.	27.593	-.2698420	-.8084797	.5230161	.9104403	-.3910653	-.1347824	.3135023	.4398051	.8415983
0.	9.	35.	29.593	-.2035605	-.8357631	.5099639	.9197606	-.3417648	-.1929694	.3355644	.4297637	.8382718
0.	9.	35.	31.593	-.1594009	-.8532131	.4966072	.9201532	-.3106453	-.2383643	.3576442	.4189592	.8346040
0.	9.	35.	33.593	-.1677809	-.8518300	.4962209	.9108275	-.3265180	-.2525455	.3771509	.4095994	.8306536
0.	9.	35.	35.593	-.2128641	-.8342058	.5087137	.8962721	-.3740327	-.2383189	.3890825	.4052163	.8272935
0.	9.	35.	37.593	-.2446883	-.8176901	.5210668	.8823265	-.4106031	-.2300111	.4020294	.4034700	.8219393
0.	9.	35.	39.593	-.2267273	-.8228124	.5211281	.8809571	-.4014282	-.2505393	.4153424	.4022874	.8158771
0.	9.	35.	41.593	-.1777040	-.8425020	.5085388	.8998462	-.3483066	-.2626009	.3983692	.4109415	.8200177

TABLE VI
APOLLO MISSION AS-502
SPACECRAFT OPERATIONAL TRAJECTORY
-DIRECTION COSINES-

TIME FROM LIFTOFF DAY HR MIN SEC	ROLL AXIS L 11	L 21	L 31	PITCH AXIS L 12	L 22	L 32	YAW AXIS L 13	L 23	L 33
0. 9. 35. 43.593	-.1447264	-.8543324	.4991696	.9163810	-.3060200	-.2580651	.3732292	.4200808	.8271832
0. 9. 35. 45.593	-.1653563	-.8461702	.5066096	.9226988	-.3141239	-.2235018	.3482587	.4304907	.8327026
0. 9. 35. 47.593	-.2268157	-.8197898	.5258320	.9183049	-.3598730	-.1649468	.3244544	.4454616	.8344419
0. 9. 35. 49.593	-.2714222	-.7968023	.5398482	.9139421	-.3892193	-.1149705	.3017281	.4621844	.8338739
0. 9. 35. 51.593	-.2579767	-.8003810	.5411453	.9252615	-.3658904	-.1000764	.2780991	.4748835	.8349530
0. 9. 35. 53.593	-.2075912	-.8200491	.5333154	.9449496	-.3090771	-.1074320	.2529351	.4816543	.8390667
0. 9. 35. 55.593	-.1864772	-.8285495	.5279507	.9553416	-.2783082	-.0993325	.2292349	.4858501	.8434459
0. 9. 35. 57.593	-.2238210	-.8161384	.5327497	.9450019	-.3154800	-.0862769	.2384858	.4841390	.8418634
0. 9. 35. 59.593	-.2632386	-.7976794	.5425983	.9270571	-.3647969	-.0865350	.2669653	.4802403	.8355230
0. 9. 36. 1.593	-.2462468	-.8008702	.5458657	.9230102	-.3655873	-.1199922	.2956597	.4742919	.8292360
0. 9. 36. 3.593	-.1792414	-.8260612	.5343177	.9292843	-.3204525	-.1836867	.3229599	.4636088	.8250841
0. 9. 36. 5.593	-.1356455	-.8435450	.5196462	.9270891	-.2930561	-.2337176	.3494368	.4500556	.8217930
0. 9. 36. 7.593	-.1541844	-.8389787	.5218639	.9135574	-.3222399	-.2481415	.3763508	.4384931	.8161395
0. 9. 36. 9.593	-.1891080	-.8236797	.5345933	.8951608	-.3683918	-.2509473	.4036399	.4310909	.8069915
0. 9. 36. 11.593	-.1742399	-.8274034	.5338952	.8964242	-.3576604	-.2617303	.4075096	.4329927	.8040231
0. 9. 36. 13.593	-.1263814	-.8441795	.5209497	.9143648	-.3027778	-.2688170	.3846619	.4423646	.8101535
0. 9. 36. 15.593	-.1272655	-.8428927	.5228149	.9243479	-.2919411	-.2456652	.3597005	.4519981	.8162801
0. 9. 36. 17.593	-.1884567	-.8183955	.5428747	.9229076	-.3365636	-.1869934	.3357464	.4657830	.8187310
0. 9. 36. 19.593	-.2184440	-.8035074	.5537671	.9244254	-.3521698	-.1463356	.3126017	.4799503	.8197120
0. 9. 36. 21.593	-.1777727	-.8180266	.5470185	.9408860	-.3041568	-.1490708	.2883233	.4881814	.8237406
0. 9. 36. 23.593	-.1547253	-.8265026	.5412518	.9522297	-.2707570	-.1412417	.2632843	.4935424	.8289132
0. 9. 36. 25.593	-.2023315	-.8092580	.5515102	.9485427	-.3020105	-.0951648	.2435748	.5038761	.8287220
0. 9. 36. 27.593	-.2309853	-.7953992	.5603445	.9363540	-.3382105	-.0940998	.2643613	.5029452	.8228968
0. 9. 36. 29.593	-.1740829	-.8146937	.5531449	.9422651	-.3009914	-.1467674	.2860623	.4956594	.8200549
0. 9. 36. 31.593	-.1302251	-.8307610	.5411817	.9428776	-.2725721	-.1915364	.3066320	.4853253	.8188016
0. 9. 36. 33.593	-.1082357	-.8460484	.5220031	.8657276	-.3383289	-.3688485	.4886724	.4119899	.7690667
0. 9. 36. 35.593	-.0211973	-.9069626	.4206773	.6691027	-.3255174	-.6680868	.7428676	.2673147	.6137512
0. 9. 36. 37.593	.0370125	-.9189231	.3926964	.6349845	-.2818085	-.7192904	.7716377	.2759788	.5730714

TABLE VI
APOLLO MISSION AS-502
SPACECRAFT OPERATIONAL TRAJECTORY
-DIRECTION COSINES-

TIME FROM LIFTOFF DAY HR MIN SEC	ROLL AXIS L 11	ROLL AXIS L 21	ROLL AXIS L 31	PITCH AXIS L 12	PITCH AXIS L 22	PITCH AXIS L 32	YAW AXIS L 13	YAW AXIS L 23	YAW AXIS L 33
0. 9. 36. 39.593	.0370872	-.8947204	.4450841	.6344899	-.3230133	-.7022000	.7720408	.3084440	.5557114
0. 9. 36. 41.593	.0066264	-.8923858	.4512246	.6318293	-.3460138	-.6935893	.7750792	.2896930	.5615426
0. 9. 36. 43.593	.0307564	-.9162608	.3993997	.6276245	-.2932869	-.7211590	.7779085	.2728533	.5660472
0. 9. 36. 45.593	.0404520	-.9055429	.4223216	.6410581	-.3006875	-.7061384	.7664255	.2992975	.5683422
0. 9. 36. 47.593	.0118858	-.8835237	.4682356	.6547643	-.3470373	-.6714528	.7557397	.3145647	.5743749
0. 9. 36. 49.593	.0261249	-.9008332	.4333766	.6651278	-.3079754	-.6802618	.7462724	.3060239	.5911234
0. 9. 36. 51.593	.0351295	-.9011082	.4321688	.6750486	-.2974790	-.6751411	.7369364	.3154523	.5978416
0. 9. 36. 53.593	.0058295	-.8772848	.4799348	.6855527	-.3458982	-.6406028	.7279996	.3327550	.5994085
0. 9. 36. 55.593	.0272883	-.8924090	.4504014	.6932914	-.3076982	-.6516662	.7201405	.3300423	.6103029
0. 9. 36. 57.593	.0289061	-.8922068	.4507009	.7010919	-.3032897	-.6453568	.7124847	.3346375	.6167521
0. 9. 36. 59.593	.0045187	-.8732390	.4872712	.7087137	-.3409714	-.6176272	.7054817	.3481267	.6173357
0. 9. 37. 1.593	.0354985	-.8902978	.4539930	.7134265	-.2955432	-.6353556	.6998303	.3464449	.6246707
0. 9. 37. 3.593	.0174945	-.8802554	.4741776	.7188959	-.3185316	-.6178400	.6948975	.3516931	.6272394
0. 9. 37. 5.593	.0141840	-.8742434	.4852806	.7226126	-.3264862	-.6092928	.6911077	.3593120	.6271084
0. 9. 37. 7.593	.0399689	-.8878088	.4584736	.7238829	-.2905575	-.6257554	.6887641	.3568920	.6310563
0. 9. 37. 9.593	.0074230	-.8689173	.4949016	.7263649	-.3354641	-.5998815	.6872692	.3639321	.6286609
0. 9. 37. 11.593	.0400335	-.8833638	.4669751	.7253543	-.2957327	-.6216135	.6872106	.3636077	.6289125
0. 9. 37. 13.593	.0234767	-.8749439	.4836548	.7253313	-.3180307	-.6105334	.6879995	.3651433	.6271578
0. 9. 37. 15.593	.0336008	-.8768517	.4795852	.7227373	-.3101165	-.6176395	.6903056	.3673673	.6233132
0. 9. 37. 17.593	.0413914	-.8808163	.4716454	.7185338	-.3017647	-.6266156	.6942592	.3648297	.6204058
ENTER S-BAND COMMUNICATIONS BLACKOUT									
0. 9. 37. 17.593	.0413914	-.8808163	.4716454	.7185338	-.3017647	-.6266156	.6942592	.3648297	.6204058
0. 9. 37. 19.593	.0324524	-.8736625	.4854489	.7138366	-.3196983	-.6230813	.6995599	.3667517	.6132773
0. 9. 37. 21.593	.0560640	-.8849365	.4623248	.7051921	-.2927027	-.6457780	.7067962	.3622327	.6076401
0. 9. 37. 23.593	.0382329	-.8742045	.4840502	.7013685	-.3212548	-.6356380	.7111810	.3640903	.6013815
0. 9. 37. 25.593	.0336784	-.8725803	.4873083	.7672997	-.2898541	-.5720452	.6404037	.3931771	.6597688

TABLE VI
APOLLO MISSION AS-502
SPACECRAFT OPERATIONAL TRAJECTORY
-DIRECTION COSINES-

TIME FROM LIFTOFF DAY HR MIN SEC	ROLL AXIS L 11	L 21	L 31	PITCH AXIS L 12	L 22	L 32	YAW AXIS L 13	L 23	L 33
0. 9. 37. 27.593	-.0026882	-.8497249	.5272194	.8093945	-.3114656	-.4978652	.5872592	.4253901	.6885999
0. 9. 37. 29.593	-.0017493	-.8520188	.5235082	.8450549	-.2811680	-.4547822	.5346767	.4415976	.7204945
0. 9. 37. 31.593	-.0366732	-.8334295	.5514076	.8750354	-.2932861	-.3850925	.4826676	.4683787	.7400361
0. 9. 37. 33.593	-.0417985	-.8327142	.5521231	.9011759	-.2700428	-.3390560	.4314336	.4833880	.7617093
0. 9. 37. 35.593	-.0637639	-.8212515	.5669922	.9218786	-.2660594	-.2816954	.3821963	.5047360	.7740591
0. 9. 37. 37.593	-.0856421	-.8144958	.5738135	.9386860	-.2590127	-.2275543	.3339670	.5191425	.7867382
0. 9. 37. 39.593	-.0847241	-.8123244	.5770189	.9537126	-.2338078	-.1891193	.2885377	.5342873	.7945332
0. 9. 37. 41.593	-.1216920	-.8008227	.5864078	.9566632	-.2520976	-.1457471	.2645495	.5432585	.7967958
0. 9. 37. 43.593	-.0911325	-.8120413	.5779329	.9578358	-.2238703	-.1800906	.2756229	.5389536	.7959654
0. 9. 37. 45.593	-.0979146	-.8062486	.5834174	.9519752	-.2467654	-.1812459	.2900965	.5376523	.7916906
0. 9. 37. 47.593	-.0788169	-.8120593	.5782280	.9480674	-.2403537	-.2083222	.3081493	.5317799	.7888309
0. 9. 37. 49.593	-.0564809	-.8179317	.5725361	.9421854	-.2333785	-.2404602	.3302976	.5258538	.7838247
0. 9. 37. 51.593	-.0690764	-.8139275	.5768453	.9317528	-.2592465	-.2542202	.3564620	.5199166	.7762870
0. 9. 37. 53.593	-.0489442	-.8203922	.5697026	.9354594	-.2375432	-.2617037	.3500287	.5201249	.7790700
0. 9. 37. 55.593	-.0520101	-.8179273	.5729658	.9409677	-.2323014	-.2462028	.3344767	.5263373	.7817252
0. 9. 37. 57.593	-.0749221	-.8102981	.5812088	.9434454	-.2463608	-.2218493	.3229511	.5317173	.7829299
0. 9. 37. 59.593	-.0580910	-.8153086	.5761053	.9469392	-.2277356	-.2268095	.3161194	.5323612	.7852770
0. 9. 38. 1.593	-.0492671	-.8168442	.5747506	.9479722	-.2194517	-.2306287	.3145177	.5334852	.7851574
0. 9. 38. 3.593	-.0663998	-.8114816	.5805934	.9456975	-.2367413	-.2227326	.3181939	.5342763	.7831357
0. 9. 38. 5.593	-.0580955	-.8138910	.5781058	.9431469	-.2345776	-.2354724	.3272595	.5315588	.7812467
0. 9. 38. 7.593	-.0315237	-.8212941	.5696335	.9391943	-.2193122	-.2642276	.3419361	.5266671	.7782682
0. 9. 38. 9.593	-.0262158	-.8225280	.5681200	.9316761	-.2260996	-.2843564	.3623428	.5218493	.7722571
0. 9. 38. 11.593	-.0239031	-.8233085	.5670906	.9140664	-.2477221	-.3211173	.4048594	.5106828	.7584799
0. 9. 38. 13.593	.0047006	-.8325996	.5538554	.8851634	-.2542262	-.3896854	.4652565	.4920843	.7357917
0. 9. 38. 15.593	.0344843	-.8436990	.5357077	.8667552	-.2416058	-.4363051	.4975403	.4793731	.7229488
0. 9. 38. 17.593	.0223382	-.8382822	.5447788	.8871478	-.2346174	-.3973959	.4609445	.4921765	.7384392
0. 9. 38. 19.593	-.0058773	-.8278854	.5608665	.9115918	-.2348665	-.3371288	.4108327	.5093560	.7561567
0. 9. 38. 21.593	-.0306733	-.8199801	.5715696	.9301658	-.2327263	-.2839543	.3658562	.5229446	.7698559

TABLE VI
APOLLO MISSION AS-502
SPACECRAFT OPERATIONAL TRAJECTORY
-DIRECTION COSINES-

TIME FROM LIFTOFF DAY HR MIN SEC	ROLL AXIS L 11	L 21	L 31	PITCH AXIS L 12	L 22	L 32	YAW AXIS L 13	L 23	L 33
0. 9. 38. 23.593	-.0410397	-.8169778	.5752069	.9440705	-.2202203	-.2454260	.3271798	.5329637	.7803224
0. 9. 38. 25.593	-.0408243	-.8168117	.5754580	.9545237	-.2021143	-.2191672	.2953266	.5403410	.7879173
0. 9. 38. 27.593	-.0407622	-.8162953	.5761948	.9617806	-.1883316	-.1987695	.2707702	.5460707	.7927737
0. 9. 38. 29.593	-.0468835	-.8143264	.5785106	.9661155	-.1841250	-.1808835	.2538164	.5504276	.7953657
0. 9. 38. 31.593	-.0567385	-.8118335	.5811257	.9679363	-.1873922	-.1672823	.2447038	.5530013	.7964355
0. 9. 38. 33.593	-.0695661	-.8088973	.5838199	.9706536	-.1899350	-.1474998	.2302000	.5564260	.7983721
0. 9. 38. 35.593	-.0790519	-.8070278	.5851982	.9747611	-.1855275	-.1241788	.2087861	.5606119	.8013255
0. 9. 38. 37.593	-.0792378	-.8072713	.5848370	.9787384	-.1743457	-.1080492	.1891889	.5638409	.8039222
0. 9. 38. 39.593	-.0741107	-.8086632	.5835849	.9812691	-.1634765	-.1019131	.1778158	.5651011	.8056316
0. 9. 38. 41.593	-.0659481	-.8106155	.5818534	.9823370	-.1550794	-.1047111	.1751139	.5646706	.8065247
0. 9. 38. 43.593	-.0595725	-.8124203	.5800210	.9829534	-.1489881	-.1077271	.1739359	.5637161	.8074469
0. 9. 38. 45.593	-.0623092	-.8119644	.5803718	.9842247	-.1464659	-.0992448	.1655879	.5650323	.8082815
0. 9. 38. 47.593	-.0635996	-.8119650	.5802309	.9841339	-.1475256	-.0985731	.1656368	.5647557	.8084649
0. 9. 38. 49.593	-.0674782	-.8116367	.5802521	.9840928	-.1499386	-.0952877	.1643412	.5645921	.8088434
0. 9. 38. 51.593	-.0808762	-.8094595	.5815792	.9866326	-.1478368	-.0685597	.1414751	.5682601	.8105956
0. 9. 38. 53.593	-.0885425	-.8085462	.5817330	.9885875	-.1427951	-.0480022	.1218806	.5708438	.8119621
0. 9. 38. 55.593	-.0939088	-.8082539	.5812975	.9901076	-.1369592	-.0304800	.1042496	.5726847	.8131200
0. 9. 38. 57.593	-.0968206	-.8084800	.5805048	.9916193	-.1284819	-.0135500	.0855393	.5743278	.8141440
0. 9. 38. 59.593	-.0960848	-.8092344	.5795752	.9928536	-.1193216	-.0020031	.0707768	.5752409	.8149162
0. 9. 39. 1.593	-.0914195	-.8107233	.5782475	.9938103	-.1110822	.0013779	.0631159	.5747943	.8158602
0. 9. 39. 3.593	-.0868109	-.8122119	.5768671	.9946602	-.1031052	.0045141	.0558116	.5741786	.8168255
0. 9. 39. 5.593	-.0822261	-.8135681	.5756264	.9953583	-.0960201	.0064720	.0500063	.5734868	.8176872
0. 9. 39. 7.593	-.0771080	-.8150636	.5742174	.9958863	-.0904545	.0053370	.0475905	.5722668	.8186854
0. 9. 39. 9.593	-.0750338	-.8161318	.5729727	.9961828	-.0870526	.0064591	.0446074	.5712711	.8195483
0. 9. 39. 11.593	-.0717112	-.8173753	.5716250	.9964523	-.0840183	.0048674	.0440485	.5699461	.8205005
0. 9. 39. 13.593	-.0698133	-.8184401	.5703349	.9966453	-.0817037	.0047508	.0427103	.5687533	.8213985
0. 9. 39. 15.593	-.0701742	-.8192880	.5690718	.9967001	-.0809190	.0064080	.0407987	.5676436	.8222628

TABLE VI
APOLLO MISSION AS-502
SPACECRAFT OPERATIONAL TRAJECTORY
-DIRECTION COSINES-

TIME FROM LIFTOFF DAY HR MIN SEC	ROLL AXIS L 11	ROLL AXIS L 21	ROLL AXIS L 31	PITCH AXIS L 12	PITCH AXIS L 22	PITCH AXIS L 32	YAW AXIS L 13	YAW AXIS L 23	YAW AXIS L 33
0. 9. 39. 17.593	-.0705611	-.8200855	.5678740	.9968107	-.0792449	.0094184	.0372772	.5667274	.8230616
EXIT S-BAND COMMUNICATIONS BLACKOUT									
0. 9. 39. 17.593	-.0705611	-.8200855	.5678740	.9968107	-.0792449	.0094184	.0372772	.5667274	.8230616
0. 9. 39. 19.593	-.0690733	-.8212533	.5663672	.9968596	-.0788585	.0072278	.0387270	.5650878	.8241213
0. 9. 39. 21.593	-.0706397	-.8220397	.5650316	.9969599	-.0768521	.0128302	.0328769	.5642202	.8249694
0. 9. 39. 23.593	-.0721622	-.8228837	.5636089	.9970446	-.0744474	.0189624	.0263553	.5633116	.8258241
0. 9. 39. 25.593	-.0783647	-.8232188	.5622858	.9968881	-.0695447	.0371167	.0085491	.5634486	.8261068
0. 9. 39. 27.593	-.0807380	-.8240515	.5607321	.9967303	-.0649621	.0480477	-.0031675	.5627779	.8266020
0. 9. 39. 29.593	-.0775197	-.8255344	.5590024	.9969783	-.0613779	.0476131	-.0049958	.5610042	.8277978
0. 9. 39. 31.593	-.0772209	-.8267961	.5571760	.9969596	-.0581942	.0518174	-.0104181	.5594833	.8287761
0. 9. 39. 33.593	-.0747318	-.8282963	.5552841	.9971250	-.0550761	.0520412	-.0125227	.5575768	.8300309
0. 9. 39. 35.593	.0219227	-.8407080	.5410448	.9759556	-.0993935	-.1939885	.2168640	.5322885	.8183147
0. 9. 39. 37.593	.2254252	-.8863871	.4043530	.6539501	-.1699820	-.7371943	.7221722	.4306089	.5413347
0. 9. 39. 39.593	.2991384	-.9385055	.1724055	.0569656	-.1627922	-.9850145	.9525078	.3044769	.0047651
0. 9. 39. 41.593	.2097531	-.9760323	-.0580041	-.5703139	-.0739447	-.8180918	.7941950	.2046778	-.5721550
0. 9. 39. 43.593	.1082319	-.9850096	-.1343200	-.8077792	-.0083815	-.5894256	.5794641	.1722955	-.7965775
0. 9. 39. 45.593	.1220347	-.9851638	-.1206641	-.7881233	-.0222869	-.6151138	.6032986	.1701635	-.7791503
0. 9. 39. 47.593	.1379993	-.9849498	-.1040677	-.7609616	-.0381851	-.6476723	.6339508	.1685698	-.7547785
0. 9. 39. 49.593	.1612586	-.9836140	-.0806174	-.7153426	-.0602181	-.6961744	.6799122	.1699332	-.7133317
0. 9. 39. 51.593	.1819248	-.9816467	-.0572106	-.6672582	-.0805061	-.7404628	.7222671	.1728829	-.6696579
0. 9. 39. 53.593	.1979151	-.9795537	-.0361135	-.6257313	-.0978961	-.7738712	.7545130	.1757582	-.6323125
0. 9. 39. 55.593	.2096339	-.9776147	-.0179763	-.5924012	-.1123617	-.7977692	.7778910	.1778886	-.6026949
0. 9. 39. 57.593	.2612237	-.9623520	.0751051	-.3500583	-.1669557	-.9217293	.8995673	.2144864	-.3804921
0. 9. 39. 59.593	.3028108	-.9219285	.2415644	.0953118	-.2228993	-.9701709	.9482728	.3168022	.0203743
0. 9. 40. 1.593	.3018801	-.9147385	.2685551	.1667181	-.2267026	-.9595890	.9386551	.3344539	.0840664
0. 9. 40. 3.593	.3027424	-.9178852	.2565809	.1394854	-.2236441	-.9646383	.9428100	.3278263	.0603250

TABLE VI
APOLLO MISSION AS-502
SPACECRAFT OPERATIONAL TRAJECTORY
-DIRECTION COSINES-

TIME FROM LIFTOFF DAY HR MIN SEC	ROLL AXIS L 11	L 21	L 31	PITCH AXIS L 12	L 22	L 32	YAW AXIS L 13	L 23	L 33
0. 9. 40. 5.593	.3013150	-.9251568	.2308554	.0690606	-.2202976	-.9729849	.9510204	.3091180	-.0024871
0. 9. 40. 7.593	.2976740	-.9322881	.2054970	-.0024255	-.2159930	-.9763919	.9546645	.2901481	-.0665567
0. 9. 40. 9.593	.2919142	-.9391193	.1812209	-.0739255	-.2110606	-.9746735	.9535833	.2711243	-.1310365
0. 9. 40. 11.593	.2841931	-.9455743	.1585037	-.1447186	-.2057327	-.9678484	.9477820	.2521174	-.1953101
0. 9. 40. 13.593	.2748122	-.9515804	.1377426	-.2143753	-.2002922	-.9559949	.9372947	.2331905	-.2590381
0. 9. 40. 15.593	.2647046	-.9565432	.1222966	-.2702086	-.1953124	-.9427833	.9256990	.2165135	-.3101664
0. 9. 40. 17.593	.2609548	-.9576101	.1220063	-.2883715	-.1979425	-.9368354	.9212733	.2092886	-.3278015
0. 9. 40. 19.593	.2596572	-.9572405	.1275492	-.2942703	-.2042280	-.9336466	.9197734	.2048941	-.3347167
0. 9. 40. 21.593	.2593040	-.9562947	.1351364	-.2942890	-.2115039	-.9320194	.9198670	.2019072	-.3362708
0. 9. 40. 23.593	.2593418	-.9551750	.1427673	-.2956250	-.2192413	-.9298059	.9194279	.1989320	-.3392321
0. 9. 40. 25.593	.2591048	-.9539445	.1511772	-.2947499	-.2271529	-.9281832	.9197756	.1959373	-.3400315
0. 9. 40. 27.593	.2597933	-.9522620	.1603258	-.2915460	-.2356253	-.9270823	.9206022	.1941075	-.3388421
0. 9. 40. 29.593	.2584365	-.9518306	.1650124	-.3006535	-.2415821	-.9226297	.9180512	.1888297	-.3486048
0. 9. 40. 31.593	.2550641	-.9526798	.1653588	-.3218675	-.2449167	-.9145584	.9117805	.1800475	-.3691061
0. 9. 40. 33.593	.2491260	-.9550177	.1608645	-.3550666	-.2446029	-.9022733	.9010349	.1676622	-.4000318
0. 9. 40. 35.593	.2407786	-.9584208	.1531506	-.3997895	-.2417210	-.8841602	.8844173	.1516589	-.4413678
0. 9. 40. 37.593	.2328322	-.9610712	.1487660	-.4352234	-.2397683	-.8678086	.8696952	.1373074	-.4741065
0. 9. 40. 39.593	.2338391	-.9592413	.1586677	-.4325923	-.2487962	-.8665820	.8707371	.1340024	-.4731387
0. 9. 40. 41.593	.2347448	-.9574478	.1678947	-.4309497	-.2573264	-.8649078	.8713078	.1306784	-.4730179
0. 9. 40. 43.593	.2387936	-.9536455	.1831333	-.4133853	-.2704781	-.8694563	.8786866	.1319159	-.4588115
0. 9. 40. 45.593	.2443622	-.9486232	.2010003	-.3849972	-.2851593	-.8777592	.8899799	.1371067	-.4348995
0. 9. 40. 47.593	.2527634	-.9409090	.2253905	-.3384198	-.3042184	-.8904623	.9064120	.1487997	-.3953176
0. 9. 40. 49.593	.2626782	-.9321074	.2493510	-.2885256	-.3224812	-.9015314	.9207351	.1648685	-.3536457
0. 9. 40. 51.593	.2728208	-.9241042	.2675820	-.2492719	-.3365338	-.9080795	.9292106	.1810424	-.3221667
0. 9. 40. 53.593	.2805511	-.9176471	.2814512	-.2208925	-.3470834	-.9114492	.9340758	.1935377	-.3000761
0. 9. 40. 55.593	.2836974	-.9165279	.2819440	-.2258023	-.3496077	-.9092787	.9319491	.1942964	-.3061369
0. 9. 40. 57.593	.2988449	-.8823048	.3636344	-.0080917	-.3833768	-.9235566	.9542674	.2730578	-.1217096
0. 9. 40. 59.593	.2553688	-.7673918	.5881298	.5878599	-.3597033	-.7245925	.7675985	.5307762	.3592618

TABLE VI
APOLLO MISSION AS-502
SPACECRAFT OPERATIONAL TRAJECTORY
-DIRECTION COSINES-

TIME FROM LIFTOFF				ROLL AXIS			PITCH AXIS			YAW AXIS		
DAY	HR	MIN	SEC	L 11	L 21	L 31	L 12	L 22	L 32	L 13	L 23	L 33
0.	9.	41.	1.593	.0734732	-.6747053	.7344212	.9525217	-.1707038	-.2521164	.2954727	.7180759	.6301292
0.	9.	41.	3.593	.0034316	-.6515625	.7585872	.9956220	-.0686324	-.0634533	.0934074	.7554838	.6484745
0.	9.	41.	5.593	-.0086196	-.6497746	.7600780	.9982702	-.0497991	-.0312514	.0581575	.7584939	.6490799
0.	9.	41.	7.593	-.0068571	-.6502464	.7596924	.9986479	-.0436012	-.0283058	.0515292	.7584712	.6496661
0.	9.	41.	9.593	.0039524	-.6518769	.7583145	.9985633	-.0379504	-.0378283	.0534377	.7573746	.6507903
0.	9.	41.	11.593	.0274675	-.6545745	.7554983	.9975958	-.0301553	-.0623964	.0636254	.7553958	.6521725
0.	9.	41.	13.593	.0587869	-.6577064	.7509769	.9949403	-.0227942	-.0978477	.0814730	.7529294	.6530386
0.	9.	41.	15.593	.0874175	-.6603914	.7458159	.9904388	-.0225884	-.1360910	.1067201	.7505817	.6521026
0.	9.	41.	17.593	.1082329	-.6636817	.7401434	.9842742	-.0330129	-.1735351	.1396064	.7472862	.6496717
0.	9.	41.	19.593	.1296251	-.6685398	.7322922	.9751144	-.0480132	-.2164410	.1798591	.7421248	.6456790
0.	9.	41.	21.593	.1649023	-.6747151	.7194211	.9603882	-.0562842	-.2729222	.2246367	.7359291	.6387070
0.	9.	41.	23.593	.1545655	-.6756181	.7208673	.9731285	-.0219381	-.2292153	.1706765	.7369253	.6540724
0.	9.	41.	25.593	.1471561	-.6761562	.7219126	.9837871	.0244140	-.1776705	.1025082	.7363536	.6687864
0.	9.	41.	27.593	.1257508	-.6765427	.7255871	.9912411	.0559411	-.1196311	.0403454	.7342755	.6776516
0.	9.	41.	29.593	.0997416	-.6793250	.7270276	.9948870	.0797295	-.0619913	-.0158534	.7294935	.6838039
0.	9.	41.	31.593	.0935102	-.6838106	.7236428	.9934744	.1117590	-.0227709	-.0653026	.7210499	.6897989
0.	9.	41.	33.593	.1059128	-.6868978	.7189951	.9884159	.1517684	-.0006071	-.1087037	.7107305	.6950149
0.	9.	41.	35.593	.2090988	-.6863021	.6966111	.9709468	.0609417	-.2314051	.1163612	.7247589	.6791057
0.	9.	41.	37.593	.4616733	-.7116833	.5294946	.6402433	-.1458034	-.7542081	.6139594	.6872032	.3883369
0.	9.	41.	39.593	.5623453	-.7880155	.2505979	.0276412	-.2849731	-.9581369	.8264404	.5457306	-.1384716
0.	9.	41.	41.593	.4542759	-.8907625	-.0132456	-.5967419	-.2932227	-.7469401	.6614623	.3472211	-.6647594
0.	9.	41.	43.593	.3224164	-.9429947	-.0825145	-.8322230	-.2408442	-.4993986	.4510571	.2296848	-.8624340
0.	9.	41.	45.593	.3655775	-.9297618	-.0435427	-.8090467	-.2942865	-.5087621	.4602135	.2212201	-.8598053
0.	9.	41.	47.593	.3834060	-.9234737	-.0140075	-.7944811	-.3220415	-.5148679	.4709560	.2085322	-.8571551
0.	9.	41.	49.593	.4029577	-.9150868	.0155305	-.7711131	-.3486014	-.5327866	.4929600	.2027148	-.8461071
0.	9.	41.	51.593	.4417188	-.8953957	.0561334	-.7343835	-.3968092	-.5506571	.5153303	.2020122	-.8328420
0.	9.	41.	53.593	.4678181	-.8790766	.0914910	-.7043211	-.4333377	-.5622723	.5339269	.1986021	-.8218754
0.	9.	41.	55.593	.4820289	-.8675521	.1224801	-.6817621	-.4592023	-.5695031	.5503167	.1910147	-.8128130

TABLE VI
APOLLO MISSION AS-502
SPACECRAFT OPERATIONAL TRAJECTORY
-DIRECTION COSINES-

TIME FROM LIFTOFF DAY HR MIN SEC	ROLL AXIS L 11	L 21	L 31	PITCH AXIS L 12	L 22	L 32	YAW AXIS L 13	L 23	L 33
0. 9. 41. 57.593	.5074164	-.8465649	.1607991	-.6531494	-.4995742	-.5690530	.5620714	.1837210	-.8064256
0. 9. 41. 59.593	.5264494	-.8274022	.1955930	-.6298909	-.5340838	-.5639077	.5710416	.1736666	-.8023412
0. 9. 42. 1.593	.5335271	-.8164012	.2209929	-.6180226	-.5546888	-.5571072	.5774053	.1606532	-.8004959
0. 9. 42. 3.593	.5519724	-.7936535	.2558134	-.5984543	-.5906740	-.5412547	.5806710	.1456650	-.8010011
0. 9. 42. 5.593	.6060337	-.7183382	.3416231	-.3784036	-.6381348	-.6705183	.6996669	.2770815	-.6585530
0. 9. 42. 7.593	.6621089	-.5029611	.5555555	.2548535	-.5460236	-.7980651	.7047421	.6699913	-.2333457
0. 9. 42. 9.593	.5253609	-.3408028	.7796469	.7743293	-.1883384	-.6041050	.3527180	.9210766	.1649479
0. 9. 42. 11.593	.2923786	-.3263807	.8988828	.9373939	.2838079	-.2018555	-.1892283	.9016256	.3889267
0. 9. 42. 13.593	.1097351	-.3579473	.9272712	.8329897	.5421039	.1106865	-.5422973	.7602612	.3576543
0. 9. 42. 15.593	.1521502	-.3266016	.9328353	.8126540	.5785264	.0700039	-.5625333	.7474212	.3534371
0. 9. 42. 17.593	.1946813	-.2933720	.9359658	.7859464	.6175618	.0300933	-.5868453	.7297603	.3508025
0. 9. 42. 19.593	.2218938	-.3123291	.9236956	.7645992	.6436113	.0339491	-.6051042	.6987239	.3816200
0. 9. 42. 21.593	.2809244	-.3175898	.9056590	.7344377	.6786001	.0101528	-.6178048	.6622979	.4238852
0. 9. 42. 23.593	.3115625	-.3443938	.8856193	.7123546	.7014693	.0221751	-.6288718	.6239661	.4638821
0. 9. 42. 25.593	.3722055	-.3444260	.8618780	.6776537	.7353801	.0012271	-.6342307	.5835981	.5071141
0. 9. 42. 27.593	.4022315	-.3653023	.8395022	.6554287	.7551169	.0145465	-.6392363	.5443828	.5431615
TERMINATION OF AGC GUIDANCE									
0. 9. 42. 27.593	.4022315	-.3653023	.8395022	.6554287	.7551169	.0145465	-.6392363	.5443828	.5431615
0. 9. 42. 29.593	.4563012	-.3592289	.8140907	.6194546	.7850321	-.0008005	-.6387998	.5046575	.5807371
0. 9. 42. 31.593	.4900163	-.3673758	.7905181	.5945958	.8040088	.0050748	-.6374479	.4675520	.6124175
0. 9. 42. 33.593	.5332177	-.3608643	.7651509	.5628161	.8265787	-.0023796	-.6315987	.4319081	.6438466
0. 9. 42. 35.593	.5719232	-.3521717	.7408636	.5327213	.8462430	-.0089799	-.6237882	.3998096	.6715954
0. 9. 42. 37.593	.6045789	-.3494689	.7157904	.5098203	.8602152	-.0106290	-.6120193	.3713506	.6982343
0. 9. 42. 39.593	.6509840	-.3269756	.6850596	.4739349	.8800376	-.0303232	-.5929633	.3444136	.7278556
0. 9. 42. 41.593	.6764524	-.3285373	.6591475	.4605552	.8871073	-.0304877	-.5747182	.3241973	.7513954
0. 9. 42. 43.593	.7170497	-.2976944	.6302521	.4246119	.9036252	-.0562691	-.5527607	.3079603	.7743488

TABLE VI
APOLLO MISSION AS-502
SPACECRAFT OPERATIONAL TRAJECTORY
-DIRECTION COSINES-

TIME FROM LIFTOFF DAY HR MIN SEC	ROLL AXIS L 11	L 21	L 31	PITCH AXIS L 12	L 22	L 32	YAW AXIS L 13	L 23	L 33
0. 9. 42. 45.593	.7420160	-.2855408	.6065300	.4070501	.9107806	-.0692014	-.5326560	.2982367	.7920432
0. 9. 42. 47.593	.7678563	-.2662980	.5826509	.3864833	.9179137	-.0898052	-.5109083	.2941423	.8077456
0. 9. 42. 49.593	.7971827	-.2310399	.5577816	.3548098	.9267844	-.1232097	-.4884769	.2961271	.8207917
0. 9. 42. 51.593	.8106537	-.2250258	.5405590	.3511855	.9255738	-.1413572	-.4685182	.3044282	.8293456
0. 9. 42. 53.593	.8359830	-.1858977	.5163084	.3200485	.9294489	-.1835584	-.4457592	.3186954	.8364998
0. 9. 42. 55.593	.8481542	-.1599787	.5050161	.3055440	.9264961	-.2196539	-.4327555	.3406050	.8346921
0. 9. 42. 57.593	.8567584	-.1434026	.4953793	.3009464	.9190729	-.2544330	-.4188034	.3670702	.8305800
0. 9. 42. 59.593	.8751524	-.0975504	.4739115	.2681889	.9130352	-.3073131	-.4027195	.3960436	.8252069
0. 9. 43. 1.593	.8731852	-.1046906	.4760120	.2758717	.9113110	-.3056256	-.4017988	.3981860	.8246245
0. 9. 43. 3.593	.8813468	-.0835504	.4650237	.2543740	.9133248	-.3180118	-.3981477	.3985687	.8262090
0. 9. 43. 5.593	.8864848	-.0667474	.4579185	.2375306	.9148709	-.3264818	-.3971445	.3981909	.8268737
0. 9. 43. 7.593	.8827605	-.0776572	.4633542	.2489234	.9137774	-.3210110	-.3984609	.3987155	.8259872
0. 9. 43. 9.593	.8932149	-.0417976	.4476830	.2130270	.9161680	-.3394931	-.3959629	.3986088	.8272390
0. 9. 43. 11.593	.8881815	-.0538963	.4563209	.2268160	.9150982	-.3333912	-.3996099	.3996128	.8249979
0. 9. 43. 13.593	.8923495	-.0363996	.4498768	.2099678	.9157990	-.3423822	-.3995341	.3999839	.8248547
0. 9. 43. 15.593	.8944543	-.0217795	.4466286	.1963916	.9159596	-.3496450	-.4014787	.4006789	.8235723
0. 9. 43. 17.593	.8892237	-.0350157	.4561305	.2117911	.9152895	-.3426217	-.4054943	.4012718	.8213131
0. 9. 43. 19.593	.8968712	.0001096	.4422917	.1774109	.9159374	-.3599777	-.4051510	.4013210	.8214585
0. 9. 43. 21.593	.8889901	-.0220786	.4573937	.2019705	.9153410	-.3483658	-.4109798	.4020738	.8181884
0. 9. 43. 23.593	.8945278	.0047076	.4469874	.1758224	.9156419	-.3615057	-.4109823	.4019673	.8182395
0. 9. 43. 25.593	.8916325	.0023313	.4527538	.1806112	.9151457	-.3603996	-.4151759	.4031164	.8155526
0. 9. 43. 27.593	.8894032	-.0005016	.4571232	.1942226	.9155909	-.3574287	-.4183586	.4021107	.8144219
0. 9. 43. 29.593	.8936984	.0249771	.4479725	.1605376	.9145450	-.3712614	-.4189640	.4037121	.8133176
0. 9. 43. 31.593	.8852317	-.0025112	.4651436	.1894096	.9152713	-.3555310	-.4248398	.4028300	.8107028
0. 9. 43. 33.593	.8930601	.0354234	.4485407	.1526212	.9139427	-.3760525	-.4232616	.4042943	.8107994

TABLE VI
APOLLO MISSION AS-502
SPACECRAFT OPERATIONAL TRAJECTORY
-DIRECTION COSINES-

TIME FROM LIFTOFF DAY HR MIN SEC	ROLL AXIS L 11	ROLL AXIS L 21	ROLL AXIS L 31	PITCH AXIS L 12	PITCH AXIS L 22	PITCH AXIS L 32	YAW AXIS L 13	YAW AXIS L 23	YAW AXIS L 33
0. 9. 43. 33.994	.9764260	-.1864004	.1088446	.0577187	.7113628	.7004509	-.2079923	-.6776561	.7053519
DROGUE PARACHUTES DEPLOYMENT									
0. 9. 43. 33.994	.9764260	-.1864004	.1088446	.0577187	.7113628	.7004509	-.2079923	-.6776561	.7053519
0. 9. 43. 43.994	.9471142	-.0624001	.3147712	.2612331	-.4197485	-.8692344	.1863651	.9054929	-.3812488
0. 9. 43. 53.994	.9095184	.0049154	.4156346	-.4015249	.2689689	.8754618	-.1074895	-.9631363	.2466058
0. 9. 44. 3.994	.8937089	.0278720	.4477806	-.1102235	-.9538382	.2793626	.4348566	-.2990248	-.8493816
0. 9. 44. 13.994	.8890209	.0347314	.4565474	-.2594279	-.7834082	.5647732	.3772784	-.6205363	-.6874560
0. 9. 44. 23.193	.8878148	.0368983	.4587192	-.2914252	-.7263725	.6224582	.3561686	-.6863100	-.6341313
MAIN PARACHUTES DEPLOYMENT									
0. 9. 44. 23.193	.8878148	.0368983	.4587192	-.2914252	-.7263725	.6224582	.3561686	-.6863100	-.6341313
0. 9. 44. 53.193	.8871526	.0402056	.4597214	.3608593	-.6813892	-.6367804	.2876471	.7308161	-.6190048
0. 9. 45. 23.193	.8870604	.0421484	.4597252	-.2804897	.8401500	.4641912	-.3666732	-.5407138	.7570860
0. 9. 45. 53.193	.8869641	.0440912	.4597289	.1686126	-.9576348	-.2334638	.4299587	.2845901	-.8568220
0. 9. 46. 23.193	.8868636	.0460328	.4597324	-.0262727	.9984388	-.0492910	-.4612836	.0316360	.8866885
0. 9. 46. 53.193	.8867587	.0479746	.4597362	-.1419809	-.9182472	.3696802	.4398867	-.3930909	-.8074523
0. 9. 47. 23.193	.8866497	.0499162	.4597398	.3154247	.6617208	-.6801712	-.3381710	.7480869	.5709697
0. 9. 47. 53.193	.8865364	.0518568	.4597435	-.4402803	-.2107483	.8727762	.1421496	-.9761639	-.1640045
0. 9. 48. 23.193	.8864189	.0537976	.4597469	.4460843	-.3644362	-.8174319	.1235726	.9296731	-.3470414
0. 9. 48. 53.193	.8862971	.0557382	.4597507	-.2998097	.8256879	.4778635	-.3529753	-.5613668	.7485157
0. 9. 49. 23.193	.8861711	.0576782	.4597543	.0651319	-.9978766	-.0003530	.4587577	.0302574	-.8880461

TABLE VII
APOLLO MISSION AS-502
SPACECRAFT OPERATIONAL TRAJECTORY
-HEATING PARAMETERS-

TIME SECONDS	HEATING RATE CONVECTIVE BTU/FT SQ-SEC	HEATING RATE RADIATIVE BTU/FT SQ-SEC	HEATING RATE TOTAL BTU/FT SQ-SEC	HEAT LOAD CONVECTIVE BTU/FT SQ-SEC	HEAT LOAD RADIATIVE BTU/FT SQ-SEC	HEAT LOAD TOTAL BTU/FT SQ-SEC
34163.594	2.3	.0	2.3	.0	.0	.0
ATMOSPHERIC ENTRY						
34163.594	2.3	.0	2.3	.0	.0	.0
34165.593	2.7	.0	2.7	5.0	.0	5.0
34167.593	2.9	.0	2.9	10.5	.0	10.5
34169.593	3.2	.0	3.2	16.5	.0	16.5
34171.593	3.8	.0	3.8	23.4	.0	23.4
34173.593	4.6	.0	4.6	31.7	.0	31.7
34175.593	5.5	.0	5.5	41.9	.0	41.9
34177.593	6.6	.0	6.6	54.0	.0	54.0
34179.593	8.0	.0	8.0	68.5	.0	68.5
34181.593	9.7	.0	9.7	86.1	.0	86.1
ENTER S-BAND COMMUNICATION BLACKOUT						
34181.593	9.7	.0	9.7	86.1	.0	86.1
34183.593	12.0	.0	12.0	107.8	.0	107.8
34185.593	15.1	.0	15.1	134.7	.0	134.7
34187.593	19.4	.3	19.6	169.0	.2	169.1
34189.593	24.8	.2	25.0	213.0	.6	213.6
34191.594	30.9	.3	31.1	268.5	1.1	269.6
ENTER C-BAND COMMUNICATIONS BLACKOUT LOAD FACTOR = 0.05 G						
34191.594	30.9	.3	31.1	268.5	1.1	269.6

Heating parameters

TABLE VII
APOLLO MISSION AS-502
SPACECRAFT OPERATIONAL TRAJECTORY
-HEATING PARAMETERS-

TIME SECONDS	HEATING RATE CONVECTIVE BTU/FT SQ-SEC	HEATING RATE RADIATIVE BTU/FT SQ-SEC	HEATING RATE TOTAL BTU/FT SQ-SEC	HEAT LOAD CONVECTIVE BTU/FT SQ-SEC	HEAT LOAD RADIATIVE BTU/FT SQ-SEC	HEAT LOAD TOTAL BTU/FT SQ-SEC
34193.593	36.8	.5	37.4	336.3	1.8	338.1
34195.593	42.2	1.1	43.4	415.5	3.4	418.9
34197.593	47.8	2.2	50.0	505.3	6.7	511.9
34199.593	57.0	4.3	61.4	609.1	12.8	621.9
34201.593	70.8	6.7	77.5	736.8	23.8	760.6
34203.593	81.4	10.7	92.2	890.1	40.9	931.0
34205.593	90.8	14.8	105.6	1061.4	66.9	1128.3
34207.593	105.4	20.0	125.3	1257.6	101.3	1358.9
34209.593	116.7	28.1	144.9	1479.9	148.7	1628.7
34211.593	130.8	35.9	166.7	1727.3	212.6	1939.9
34213.593	144.3	46.7	191.1	2002.5	294.8	2297.3
34215.593	158.4	56.6	214.9	2305.2	397.7	2702.9
34217.593	172.3	69.7	241.9	2636.0	523.2	3159.3
34219.594	186.1	83.6	269.7	2994.4	678.2	3672.6
34221.593	199.3	92.9	292.2	3379.6	854.5	4234.1
34223.593	211.7	103.6	315.3	3790.6	1050.7	4841.3
34225.594	223.0	115.6	338.6	4225.3	1269.7	5494.9
34227.593	233.0	128.6	361.6	4681.4	1513.6	6195.0
34229.593	241.8	130.1	371.9	5156.1	1778.0	6934.1
MAXIMUM HEATING RATE						
34229.593	241.8	130.1	371.9	5156.1	1778.0	6934.1
34231.593	249.4	119.3	368.7	5647.4	2027.6	7674.9
34233.593	254.9	107.3	362.2	6152.0	2254.3	8406.3
34235.593	258.7	94.6	353.3	6666.1	2456.2	9122.3
34237.593	260.4	83.2	343.6	7185.4	2633.7	9819.2

TABLE VII
APOLLO MISSION AS-502
SPACECRAFT OPERATIONAL TRAJECTORY
-HEATING PARAMETERS-

TIME SECONDS	HEATING RATE CONVECTIVE BTU/FT SQ-SEC	HEATING RATE RADIATIVE BTU/FT SQ-SEC	HEATING RATE TOTAL BTU/FT SQ-SEC	HEAT LOAD CONVECTIVE BTU/FT SQ-SEC	HEAT LOAD RADIATIVE BTU/FT SQ-SEC	HEAT LOAD TOTAL BTU/FT SQ-SEC
34239.593	259.7	71.8	331.5	7705.8	2788.7	10494.6
34241.593	257.3	60.5	317.8	8223.2	2921.0	11144.2
GUIDANCE INITIATE AT RDOT = -700 FT/SEC						
34241.593	257.3	60.5	317.8	8223.2	2921.0	11144.2
34243.593	253.1	48.7	301.8	8733.7	3030.3	11764.0
34245.593	247.1	38.1	285.1	9234.1	3116.8	12350.9
MAXIMUM LOAD FACTOR						
34245.593	247.1	38.1	285.1	9234.1	3116.8	12350.9
34247.593	239.9	29.3	269.2	9721.3	3183.9	12905.2
34249.593	230.6	23.9	254.4	10191.5	3236.7	13428.2
34251.593	220.5	19.4	240.0	10643.1	3279.9	13923.0
34253.594	212.2	15.8	228.0	11075.3	3315.0	14390.3
34255.593	202.1	13.6	215.7	11489.8	3344.3	14834.1
34257.593	193.8	11.8	205.5	11885.7	3369.6	15255.3
34259.593	186.8	10.3	197.1	12265.6	3391.6	15657.3
34261.593	181.1	9.2	190.3	12633.7	3411.1	16044.7
34263.593	176.2	8.5	184.6	12990.4	3428.7	16419.2
34265.593	171.0	7.8	178.8	13337.7	3445.0	16782.7
34267.593	165.9	7.2	173.1	13674.7	3460.0	17134.7
34269.593	161.0	6.7	167.7	14001.9	3474.0	17475.8
34271.593	156.1	6.2	162.2	14319.1	3486.8	17806.0
34273.593	150.2	5.7	155.9	14625.6	3498.7	18124.3
34275.593	144.3	5.2	149.5	14919.7	3509.5	18429.2

TABLE VII
APOLLO MISSION AS-502
SPACECRAFT OPERATIONAL TRAJECTORY
-HEATING PARAMETERS-

TIME SECONDS	HEATING RATE CONVECTIVE BTU/FT SQ-SEC	HEATING RATE RADIATIVE BTU/FT SQ-SEC	HEATING RATE TOTAL BTU/FT SQ-SEC	HEAT LOAD CONVECTIVE BTU/FT SQ-SEC	HEAT LOAD RADIATIVE BTU/FT SQ-SEC	HEAT LOAD TOTAL BTU/FT SQ-SEC
34277.593	138.9	4.7	143.6	15202.9	3519.3	18722.2
34279.593	133.9	4.2	138.1	15475.2	3528.2	19003.4
34281.594	128.0	3.8	131.9	15736.9	3536.3	19273.2
34283.593	122.6	3.5	126.1	15987.4	3543.6	19531.0
34285.593	117.9	3.1	121.0	16227.9	3550.2	19778.0
34287.594	113.3	2.9	116.2	16459.0	3556.2	20015.1
34289.593	109.1	2.7	111.7	16681.2	3561.7	20242.9
34291.593	105.1	2.5	107.6	16895.3	3566.8	20462.1
34293.593	101.4	2.3	103.7	17101.8	3571.5	20673.4
34295.593	97.9	2.1	100.1	17301.2	3576.0	20877.2
34297.593	94.7	2.0	96.7	17494.0	3580.1	21074.1
34299.593	91.8	1.9	93.7	17680.5	3584.0	21264.5
34301.593	89.0	1.8	90.8	17861.1	3587.7	21448.8
34303.593	86.3	1.7	88.0	18036.0	3591.2	21627.2
34305.593	83.7	1.6	85.3	18205.9	3594.6	21800.5
34307.593	81.2	1.6	82.8	18370.9	3597.8	21968.8
34309.593	79.0	1.5	80.5	18531.2	3600.9	22132.1
34311.593	76.8	1.5	78.3	18686.9	3603.9	22290.8
34313.593	74.6	1.4	76.0	18838.3	3606.8	22445.1
34315.594	72.5	1.4	73.8	18985.4	3609.6	22595.0
34317.593	70.5	1.3	71.9	19128.4	3612.2	22740.6
34319.593	68.5	1.3	69.7	19267.3	3614.8	22882.1
34321.593	66.6	1.2	67.8	19402.5	3617.3	23019.8
34323.593	64.8	1.2	66.0	19533.8	3619.8	23153.6
34325.593	62.9	1.2	64.0	19661.4	3622.1	23283.6
34327.593	61.2	1.1	62.3	19785.5	3624.4	23409.9
34329.593	59.5	1.1	60.5	19906.1	3626.6	23532.7

TABLE VII
APOLLO MISSION AS-502
SPACECRAFT OPERATIONAL TRAJECTORY
-HEATING PARAMETERS-

TIME SECONDS	HEATING RATE CONVECTIVE BTU/FT SQ-SEC	HEATING RATE RADIATIVE BTU/FT SQ-SEC	HEATING RATE TOTAL BTU/FT SQ-SEC	HEAT LOAD CONVECTIVE BTU/FT SQ-SEC	HEAT LOAD RADIATIVE BTU/FT SQ-SEC	HEAT LOAD TOTAL BTU/FT SQ-SEC
34331.593	57.7	1.1	58.8	20023.3	3628.8	23652.1
34333.593	56.3	1.0	57.3	20137.3	3630.9	23768.2
34335.593	54.6	1.0	55.6	20248.1	3632.9	23881.0
EXIT C-BAND COMMUNICATIONS BLACKOUT						
34335.593	54.6	1.0	55.6	20248.1	3632.9	23881.0
34337.593	53.1	1.0	54.1	20355.8	3634.9	23990.7
34339.593	50.6	1.0	51.6	20459.6	3636.8	24096.5
34341.593	49.7	.9	50.7	20559.5	3638.7	24198.3
34343.593	47.9	.9	48.8	20657.5	3640.6	24298.1
34345.593	47.2	.9	48.1	20752.2	3642.4	24394.6
34347.593	46.3	.9	47.2	20845.9	3644.2	24490.2
34349.594	45.0	.9	45.9	20937.2	3646.0	24583.2
34351.593	43.7	.9	44.6	21025.9	3647.8	24673.7
34353.593	42.5	.9	43.4	21112.1	3649.5	24761.6
34355.593	41.5	.9	42.3	21196.1	3651.2	24847.3
34357.593	40.2	.8	41.1	21277.9	3652.9	24930.8
34359.593	39.2	.8	40.1	21357.3	3654.6	25011.9
34361.593	38.2	.8	39.0	21434.8	3656.3	25091.0
34363.593	37.1	.8	37.9	21510.0	3657.9	25167.9
34365.593	36.2	.8	37.0	21583.3	3659.6	25242.9
34367.593	35.1	.8	36.0	21654.7	3661.2	25315.9

TABLE VII
APOLLO MISSION AS-502
SPACECRAFT OPERATIONAL TRAJECTORY
-HEATING PARAMETERS-

TIME SECONDS	HEATING RATE CONVECTIVE BTU/FT SQ-SEC	HEATING RATE RADIATIVE BTU/FT SQ-SEC	HEATING RATE TOTAL BTU/FT SQ-SEC	HEAT LOAD CONVECTIVE BTU/FT SQ-SEC	HEAT LOAD RADIATIVE BTU/FT SQ-SEC	HEAT LOAD TOTAL BTU/FT SQ-SEC
34369.593	34.3	.8	35.1	21724.1	3662.8	25386.9
EXIT S-BAND COMMUNICATIONS BLACKOUT						
34369.593	34.3	.8	35.1	21724.1	3662.8	25386.9
34371.593	33.5	.8	34.3	21791.9	3664.4	25456.3
34373.593	32.5	.8	33.2	21857.8	3666.0	25523.8
34375.593	31.7	.8	32.5	21921.9	3667.6	25589.5
34377.594	30.9	.8	31.7	21984.6	3669.2	25653.7
34379.593	30.0	.8	30.8	22045.4	3670.7	25716.2
34381.593	29.4	.8	30.1	22104.8	3672.3	25777.1
34383.593	28.6	.8	29.4	22162.8	3673.8	25836.6
34385.593	27.8	.7	28.6	22219.1	3675.3	25894.5
34387.593	27.2	.7	28.0	22274.2	3676.8	25951.0
34389.593	26.6	.7	27.3	22328.0	3678.3	26006.3
34391.593	25.8	.7	26.5	22380.4	3679.7	26060.1
34393.593	25.3	.7	26.0	22431.4	3681.1	26112.6
34395.593	24.7	.7	25.4	22481.4	3682.5	26164.0
34397.593	24.0	.7	24.7	22530.3	3683.9	26214.2
34399.593	23.5	.7	24.2	22577.7	3685.3	26263.0
34401.593	23.0	.7	23.7	22624.2	3686.6	26310.9
34403.593	22.5	.7	23.2	22669.8	3688.0	26357.8
34405.593	21.9	.7	22.6	22714.3	3689.3	26403.6
34407.593	21.5	.6	22.1	22757.6	3690.6	26448.2
34409.593	21.1	.6	21.7	22800.1	3691.9	26492.0
34411.594	20.7	.6	21.3	22841.9	3693.1	26535.0
34413.593	20.1	.6	20.7	22882.6	3694.4	26577.0

TABLE VII
APOLLO MISSION AS-502
SPACECRAFT OPERATIONAL TRAJECTORY
-HEATING PARAMETERS-

TIME SECONDS	HEATING RATE CONVECTIVE BTU/FT SQ-SEC	HEATING RATE RADIATIVE BTU/FT SQ-SEC	HEATING RATE TOTAL BTU/FT SQ-SEC	HEAT LOAD CONVECTIVE BTU/FT SQ-SEC	HEAT LOAD RADIATIVE BTU/FT SQ-SEC	HEAT LOAD TOTAL BTU/FT SQ-SEC
34415.593	19.7	.6	20.3	22922.4	3695.7	26618.0
34417.593	19.3	.6	19.9	22961.4	3696.9	26658.2
34419.593	19.0	.5	19.6	22999.8	3698.0	26697.7
34421.593	18.6	.5	19.1	23037.4	3699.1	26736.5
34423.593	18.1	.5	18.6	23074.1	3700.1	26774.2
34425.593	17.8	.5	18.3	23110.1	3701.0	26811.1
34427.593	17.5	.5	18.0	23145.5	3702.0	26847.4
34429.593	17.3	.4	17.7	23180.3	3702.8	26883.1
34431.593	16.8	.4	17.2	23214.4	3703.7	26918.1
34433.593	16.4	.4	16.8	23247.6	3704.5	26952.1
34435.593	16.2	.4	16.5	23280.2	3705.3	26985.5
34437.593	15.9	.4	16.3	23312.3	3706.0	27018.3
34439.594	15.7	.4	16.1	23344.0	3706.7	27050.7
34441.593	15.4	.3	15.8	23375.2	3707.4	27082.6
34443.593	15.1	.3	15.4	23405.6	3708.1	27113.7
34445.594	14.8	.3	15.1	23435.5	3708.7	27144.2
34447.593	14.6	.3	15.0	23464.9	3709.4	27174.3
34449.593	14.5	.3	14.8	23494.1	3710.0	27204.1
34451.593	14.3	.3	14.6	23522.9	3710.6	27233.5
34453.593	14.0	.3	14.3	23551.3	3711.2	27262.5
34455.593	13.8	.3	14.1	23579.1	3711.8	27290.9
34457.593	13.7	.3	13.9	23606.5	3712.4	27318.9
34459.593	13.6	.3	13.8	23633.8	3712.9	27346.6
34461.593	13.4	.3	13.7	23660.8	3713.4	27374.2
34463.593	13.3	.2	13.6	23687.5	3713.9	27401.4
34465.593	13.1	.2	13.4	23714.0	3714.4	27428.4
34467.593	12.9	.2	13.1	23740.0	3714.8	27454.8

TABLE VII
APOLLO MISSION AS-502
SPACECRAFT OPERATIONAL TRAJECTORY
-HEATING PARAMETERS-

TIME SECONDS	HEATING RATE CONVECTIVE BTU/FT SQ-SEC	HEATING RATE RADIATIVE BTU/FT SQ-SEC	HEATING RATE TOTAL BTU/FT SQ-SEC	HEAT LOAD CONVECTIVE BTU/FT SQ-SEC	HEAT LOAD RADIATIVE BTU/FT SQ-SEC	HEAT LOAD TOTAL BTU/FT SQ-SEC
34469.593	12.8	.2	13.0	23765.7	3715.3	27480.9
34471.593	12.8	.2	13.0	23791.3	3715.7	27506.9
34473.594	12.7	.2	12.9	23816.8	3716.1	27532.8
34475.593	12.7	.2	12.8	23842.1	3716.5	27558.6
34477.593	12.6	.2	12.8	23867.4	3716.8	27584.2
34479.593	12.4	.2	12.6	23892.3	3717.2	27609.5
34481.593	12.3	.2	12.4	23917.0	3717.6	27634.6
34483.593	12.2	.2	12.4	23941.4	3717.9	27659.4
34485.593	12.2	.2	12.4	23965.9	3718.3	27684.2
34487.593	12.2	.2	12.4	23990.4	3718.6	27709.0
34489.593	12.3	.2	12.4	24014.9	3719.0	27733.8
34491.593	12.3	.2	12.4	24039.4	3719.3	27758.8
34493.593	12.1	.2	12.3	24063.9	3719.6	27783.5
34495.593	12.0	.2	12.2	24088.0	3720.0	27808.0
34497.593	12.0	.2	12.2	24112.0	3720.3	27832.3
34499.593	12.0	.2	12.2	24136.0	3720.6	27856.7
34501.594	12.1	.2	12.2	24160.1	3721.0	27881.1
34503.593	12.2	.2	12.4	24184.4	3721.3	27905.7
34505.593	12.2	.2	12.4	24208.9	3721.7	27930.5
34507.594	12.2	.2	12.3	24233.3	3722.0	27955.3
34509.593	12.2	.2	12.3	24257.6	3722.3	27979.9
34511.593	12.3	.2	12.4	24282.0	3722.7	28004.7
34513.593	12.3	.2	12.5	24306.5	3723.1	28029.6
34515.593	12.4	.2	12.5	24331.2	3723.4	28054.6
34517.593	12.5	.2	12.7	24356.0	3723.8	28079.8
34519.593	12.5	.2	12.7	24381.1	3724.2	28105.3
34521.593	12.5	.2	12.7	24406.2	3724.6	28130.7

TABLE VII
APOLLO MISSION AS-502
SPACECRAFT OPERATIONAL TRAJECTORY
-HEATING PARAMETERS-

TIME SECONDS	HEATING RATE CONVECTIVE BTU/FT SQ-SEC	HEATING RATE RADIATIVE BTU/FT SQ-SEC	HEATING RATE TOTAL BTU/FT SQ-SEC	HEAT LOAD CONVECTIVE BTU/FT SQ-SEC	HEAT LOAD RADIATIVE BTU/FT SQ-SEC	HEAT LOAD TOTAL BTU/FT SQ-SEC
34523.593	12.6	.2	12.8	24431.3	3725.0	28156.3
34525.593	12.8	.2	13.0	24456.7	3725.4	28182.1
34527.593	12.9	.2	13.1	24482.3	3725.8	28208.2
34529.593	13.1	.2	13.3	24508.3	3726.3	28234.6
34531.593	13.3	.2	13.5	24534.7	3726.8	28261.4
34533.593	13.3	.3	13.6	24561.3	3727.3	28288.5
34535.594	13.3	.3	13.6	24587.8	3727.8	28315.6
34537.593	13.5	.3	13.7	24614.6	3728.3	28342.9
34539.593	13.7	.3	14.0	24641.7	3728.9	28370.6
34541.593	13.9	.3	14.2	24669.2	3729.5	28398.7
34543.593	14.2	.3	14.5	24697.3	3730.0	28427.4
34545.593	14.3	.3	14.6	24725.8	3730.6	28456.4
34547.593	14.4	.3	14.7	24754.4	3731.2	28485.6
34549.593	14.7	.3	15.0	24783.4	3731.9	28515.3
34551.593	14.9	.3	15.3	24813.1	3732.5	28545.6
34553.593	15.2	.3	15.5	24843.2	3733.2	28576.4
34555.593	15.4	.3	15.8	24873.9	3733.8	28607.7
34557.593	15.5	.4	15.9	24904.9	3734.6	28639.4
34559.593	15.9	.4	16.2	24936.2	3735.3	28671.5
34561.593	16.2	.4	16.6	24968.4	3736.1	28704.4
34563.594	16.6	.4	17.0	25001.2	3736.8	28738.0
34565.593	17.0	.4	17.4	25034.8	3737.7	28772.5
34567.593	17.1	.4	17.5	25068.9	3738.6	28807.5
34569.594	17.3	.5	17.8	25103.3	3739.5	28842.7
34571.593	17.7	.5	18.2	25138.3	3740.4	28878.8
34573.593	18.2	.5	18.7	25174.2	3741.4	28915.6
34575.593	18.5	.6	19.0	25210.9	3742.5	28953.4

TABLE VII
APOLLO MISSION AS-502
SPACECRAFT OPERATIONAL TRAJECTORY
-HEATING PARAMETERS-

TIME SECONDS	HEATING RATE CONVECTIVE BTU/FT SQ-SEC	HEATING RATE RADIATIVE BTU/FT SQ-SEC	HEATING RATE TOTAL BTU/FT SQ-SEC	HEAT LOAD CONVECTIVE BTU/FT SQ-SEC	HEAT LOAD RADIATIVE BTU/FT SQ-SEC	HEAT LOAD TOTAL BTU/FT SQ-SEC
34577.593	18.7	.6	19.3	25248.1	3743.6	28991.7
34579.593	19.2	.6	19.7	25286.0	3744.8	29030.8
34581.593	19.6	.6	20.1	25324.7	3745.9	29070.6
34583.593	20.0	.6	20.5	25364.3	3747.1	29111.4
34585.593	20.2	.6	20.8	25404.4	3748.2	29152.7
34587.593	20.8	.6	21.3	25445.4	3749.4	29194.8
34589.593	21.2	.6	21.8	25487.4	3750.6	29238.0
34591.593	21.7	.6	22.3	25530.4	3751.8	29282.2
34593.593	21.9	.6	22.5	25574.0	3753.0	29327.0
34595.593	21.5	.6	22.1	25617.3	3754.1	29371.5
34597.594	22.9	.6	23.5	25661.5	3755.3	29416.8
34599.593	24.3	.6	24.9	25708.9	3756.6	29465.5
34601.593	24.1	.6	24.7	25757.5	3757.8	29515.3
34603.593	24.2	.6	24.8	25805.4	3759.0	29564.4
34605.593	25.3	.6	25.9	25854.9	3760.3	29615.1
34607.593	26.0	.6	26.6	25906.3	3761.5	29667.8
34609.593	26.1	.6	26.7	25958.3	3762.8	29721.1
34611.593	26.8	.6	27.4	26011.1	3764.1	29775.2
34613.593	27.6	.6	28.3	26065.6	3765.3	29830.9
34615.593	28.0	.6	28.6	26121.2	3766.6	29887.8
34617.593	28.6	.6	29.2	26177.7	3767.8	29945.6
34619.593	29.4	.6	30.0	26235.7	3769.1	30004.8
34621.593	29.9	.6	30.6	26295.0	3770.3	30065.3
34623.593	30.5	.6	31.1	26355.4	3771.5	30127.0
34625.593	31.3	.6	31.9	26417.2	3772.8	30190.0
34627.593	31.9	.6	32.5	26480.4	3774.0	30254.4
34629.593	32.5	.6	33.1	26544.7	3775.2	30319.9

TABLE VII
APOLLO MISSION AS-502
SPACECRAFT OPERATIONAL TRAJECTORY
-HEATING PARAMETERS-

TIME SECONDS	HEATING RATE CONVECTIVE BTU/FT SQ-SEC	HEATING RATE RADIATIVE BTU/FT SQ-SEC	HEATING RATE TOTAL BTU/FT SQ-SEC	HEAT LOAD CONVECTIVE BTU/FT SQ-SEC	HEAT LOAD RADIATIVE BTU/FT SQ-SEC	HEAT LOAD TOTAL BTU/FT SQ-SEC
34631.594	33.3	.6	33.9	26610.6	3776.4	30387.0
34633.593	33.8	.6	34.4	26677.6	3777.6	30455.2
34635.593	34.6	.6	35.2	26746.1	3778.8	30524.9
34637.593	35.2	.6	35.8	26816.0	3780.0	30595.9
ENTER S-BAND COMMUNICATIONS BLACKOUT						
34637.593	35.2	.6	35.8	26816.0	3780.0	30595.9
34639.593	35.9	.6	36.5	26887.1	3781.1	30668.2
34641.593	36.6	.6	37.2	26959.7	3782.3	30742.0
34643.593	37.3	.6	37.8	27033.6	3783.4	30817.0
34645.593	37.8	.6	38.3	27108.6	3784.6	30893.1
34647.593	38.7	.6	39.3	27185.1	3785.7	30970.8
34649.593	39.1	.6	39.7	27263.0	3786.9	31049.8
34651.593	40.0	.6	40.6	27342.1	3788.0	31130.1
34653.593	40.4	.6	41.0	27422.5	3789.2	31211.7
34655.593	41.2	.6	41.8	27504.2	3790.3	31294.6
34657.593	41.7	.6	42.3	27587.2	3791.5	31378.7
34659.594	42.5	.6	43.1	27671.4	3792.7	31464.1
34661.593	43.0	.6	43.5	27756.7	3793.9	31550.6
34663.593	43.6	.6	44.2	27843.4	3795.1	31638.5
34665.594	44.2	.6	44.8	27931.1	3796.3	31727.4
34667.593	44.7	.6	45.3	28020.0	3797.5	31817.5
34669.593	45.3	.6	45.9	28109.9	3798.7	31908.6
34671.593	45.7	.6	46.3	28200.8	3800.0	32000.7
34673.593	46.1	.6	46.7	28292.6	3801.2	32093.8
34675.593	46.6	.6	47.2	28385.3	3802.5	32187.7

TABLE VII
APOLLO MISSION AS-502
SPACECRAFT OPERATIONAL TRAJECTORY
-HEATING PARAMETERS-

TIME SECONDS	HEATING RATE CONVECTIVE BTU/FT SQ-SEC	HEATING RATE RADIATIVE BTU/FT SQ-SEC	HEATING RATE TOTAL BTU/FT SQ-SEC	HEAT LOAD CONVECTIVE BTU/FT SQ-SEC	HEAT LOAD RADIATIVE BTU/FT SQ-SEC	HEAT LOAD TOTAL BTU/FT SQ-SEC
34677.593	47.0	.6	47.7	28478.8	3803.7	32282.5
34679.593	47.4	.6	48.1	28573.4	3805.0	32378.3
34681.593	47.9	.6	48.5	28668.7	3806.2	32474.9
34683.593	48.2	.6	48.9	28764.8	3807.5	32572.3
34685.593	48.5	.6	49.1	28861.5	3808.8	32670.4
34687.593	48.8	.6	49.5	28958.9	3810.1	32769.0
34689.593	49.1	.6	49.7	29056.8	3811.4	32868.2
34691.593	49.2	.7	49.9	29155.1	3812.7	32967.7
34693.594	49.3	.7	50.0	29253.7	3814.0	33067.7
34695.593	49.4	.7	50.0	29352.5	3815.3	33167.8
34697.593	49.4	.7	50.0	29451.2	3816.6	33267.8
34699.593	49.4	.7	50.0	29549.9	3817.9	33367.8
34701.593	49.2	.7	49.9	29648.5	3819.2	33467.7
34703.593	49.0	.7	49.7	29746.8	3820.5	33567.3
34705.593	48.8	.6	49.5	29844.8	3821.8	33666.6
34707.593	48.6	.6	49.3	29942.3	3823.1	33765.4
34709.593	48.4	.6	49.0	30039.2	3824.4	33863.6
34711.593	48.0	.6	48.6	30135.6	3825.7	33961.2
34713.593	47.6	.6	48.2	30231.1	3827.0	34058.1
34715.593	47.1	.6	47.8	30325.9	3828.2	34154.1
34717.593	46.7	.6	47.3	30419.8	3829.5	34249.3
34719.593	46.2	.6	46.8	30512.7	3830.7	34343.5
34721.594	45.7	.6	46.3	30604.7	3832.0	34436.6
34723.593	45.1	.6	45.7	30695.5	3833.2	34528.6
34725.593	44.6	.6	45.2	30785.2	3834.3	34619.5
34727.594	44.0	.6	44.5	30873.7	3835.5	34709.2
34729.593	43.3	.6	43.9	30960.9	3836.7	34797.6

TABLE VII
APOLLO MISSION AS-502
SPACECRAFT OPERATIONAL TRAJECTORY
-HEATING PARAMETERS-

TIME SECONDS	HEATING RATE CONVECTIVE BTU/FT SQ-SEC	HEATING RATE RADIATIVE BTU/FT SQ-SEC	HEATING RATE TOTAL BTU/FT SQ-SEC	HEAT LOAD CONVECTIVE BTU/FT SQ-SEC	HEAT LOAD RADIATIVE BTU/FT SQ-SEC	HEAT LOAD TOTAL BTU/FT SQ-SEC
34731.593	42.6	.6	43.2	31046.8	3837.8	34884.6
34733.593	42.0	.6	42.5	31131.4	3839.0	34970.4
34735.593	41.3	.6	41.8	31214.7	3840.1	35054.7
34737.593	40.5	.5	41.1	31296.5	3841.2	35137.7
34739.593	39.8	.5	40.4	31376.9	3842.3	35219.2
34741.593	39.2	.5	39.7	31456.0	3843.3	35299.3
34743.593	38.5	.5	39.0	31533.6	3844.3	35378.0
34745.593	37.8	.5	38.3	31609.9	3845.3	35455.2
34747.593	37.1	.5	37.6	31684.7	3846.3	35531.0
34749.593	36.4	.5	36.8	31758.1	3847.3	35605.4
34751.593	35.6	.5	36.1	31830.1	3848.2	35678.3
34753.593	34.9	.5	35.4	31900.6	3849.1	35749.7
34755.594	34.2	.4	34.6	31969.7	3850.0	35819.7
34757.593	33.5	.4	33.9	32037.3	3850.9	35888.2
EXIT S-BAND COMMUNICATIONS BLACKOUT						
34757.593	33.5	.4	33.9	32037.3	3850.9	35888.2
34759.593	32.7	.4	33.1	32103.4	3851.8	35955.2
34761.593	32.0	.4	32.4	32168.1	3852.6	36020.7
34763.593	31.3	.4	31.7	32231.3	3853.4	36084.7
34765.593	30.5	.0	30.5	32293.1	3854.0	36147.0
34767.593	29.8	.0	29.8	32353.4	3854.0	36207.3
34769.593	29.1	.0	29.1	32412.2	3854.0	36266.2
34771.593	28.3	.0	28.3	32469.7	3854.0	36323.6
34773.593	27.6	.0	27.6	32525.6	3854.0	36379.6
34775.593	27.0	.0	27.0	32580.2	3854.0	36434.2

TABLE VII
APOLLO MISSION AS-502
SPACECRAFT OPERATIONAL TRAJECTORY
-HEATING PARAMETERS-

TIME SECONDS	HEATING RATE CONVECTIVE BTU/FT SQ-SEC	HEATING RATE RADIATIVE BTU/FT SQ-SEC	HEATING RATE TOTAL BTU/FT SQ-SEC	HEAT LOAD CONVECTIVE BTU/FT SQ-SEC	HEAT LOAD RADIATIVE BTU/FT SQ-SEC	HEAT LOAD TOTAL BTU/FT SQ-SEC
34777.593	26.3	.0	26.3	32633.7	3854.0	36487.6
34779.593	25.6	.0	25.6	32685.6	3854.0	36539.6
34781.593	24.8	.0	24.8	32736.1	3854.0	36590.1
34783.594	24.0	.0	24.0	32785.0	3854.0	36639.0
34785.593	23.4	.0	23.4	32832.3	3854.0	36686.3
34787.593	22.7	.0	22.7	32878.4	3854.0	36732.4
34789.594	22.1	.0	22.1	32923.2	3854.0	36777.2
34791.593	21.5	.0	21.5	32966.8	3854.0	36820.8
34793.593	20.9	.0	20.9	33009.2	3854.0	36863.2
34795.593	20.3	.0	20.3	33050.5	3854.0	36904.4
34797.593	19.6	.0	19.6	33090.4	3854.0	36944.3
34799.593	19.1	.0	19.1	33128.9	3854.0	36982.9
34801.593	18.5	.0	18.5	33166.5	3854.0	37020.5
34803.593	17.9	.0	17.9	33202.8	3854.0	37056.8
34805.593	17.2	.0	17.2	33237.9	3854.0	37091.8
34807.593	16.5	.0	16.5	33271.5	3854.0	37125.5
34809.593	15.8	.0	15.8	33303.8	3854.0	37157.8
34811.593	15.1	.0	15.1	33334.7	3854.0	37188.6
34813.593	14.4	.0	14.4	33364.2	3854.0	37218.1
34815.593	13.7	.0	13.7	33392.3	3854.0	37246.3
34817.594	13.1	.0	13.1	33419.1	3854.0	37273.0
34819.593	12.4	.0	12.4	33444.5	3854.0	37298.5
34821.593	11.8	.0	11.8	33468.7	3854.0	37322.7
34823.593	11.2	.0	11.2	33491.7	3854.0	37345.7
34825.593	10.6	.0	10.6	33513.5	3854.0	37367.4
34827.593	10.0	.0	10.0	33534.1	3854.0	37388.0
34829.593	9.5	.0	9.5	33553.6	3854.0	37407.5

TABLE VII
APOLLO MISSION AS-502
SPACECRAFT OPERATIONAL TRAJECTORY
-HEATING PARAMETERS-

TIME SECONDS	HEATING RATE CONVECTIVE BTU/FT SQ-SEC	HEATING RATE RADIATIVE BTU/FT SQ-SEC	HEATING RATE TOTAL BTU/FT SQ-SEC	HEAT LOAD CONVECTIVE BTU/FT SQ-SEC	HEAT LOAD RADIATIVE BTU/FT SQ-SEC	HEAT LOAD TOTAL BTU/FT SQ-SEC
34831.593	9.0	.0	9.0	33572.0	3854.0	37426.0
34833.593	8.5	.0	8.5	33589.4	3854.0	37443.4
34835.593	8.0	.0	8.0	33605.8	3854.0	37459.8
34837.593	7.5	.0	7.5	33621.3	3854.0	37475.3
34839.593	7.1	.0	7.1	33635.9	3854.0	37489.8
34841.593	6.6	.0	6.6	33649.6	3854.0	37503.6
34843.593	6.2	.0	6.2	33662.5	3854.0	37516.5
34845.593	5.9	.0	5.9	33674.6	3854.0	37528.6
34847.593	5.5	.0	5.5	33686.0	3854.0	37539.9
34849.593	5.2	.0	5.2	33696.6	3854.0	37550.6
34851.594	4.9	.0	4.9	33706.6	3854.0	37560.6
34853.593	4.6	.0	4.6	33716.1	3854.0	37570.1
34855.593	4.3	.0	4.3	33725.0	3854.0	37578.9
34857.593	4.0	.0	4.0	33733.3	3854.0	37587.3
34859.593	3.7	.0	3.7	33741.0	3854.0	37595.0
34861.593	3.5	.0	3.5	33748.3	3854.0	37602.2
34863.593	3.3	.0	3.3	33755.1	3854.0	37609.0
34865.593	3.1	.0	3.1	33761.4	3854.0	37615.4
34867.593	2.9	.0	2.9	33767.4	3854.0	37621.4
34869.593	2.7	.0	2.7	33772.9	3854.0	37626.9
34871.593	2.5	.0	2.5	33778.1	3854.0	37632.1
34873.593	2.3	.0	2.3	33783.0	3854.0	37636.9
34875.593	2.2	.0	2.2	33787.5	3854.0	37641.4
34877.593	2.0	.0	2.0	33791.7	3854.0	37645.6
34879.594	1.9	.0	1.9	33795.5	3854.0	37649.5
34881.593	1.7	.0	1.7	33799.1	3854.0	37653.1
34883.593	1.6	.0	1.6	33802.4	3854.0	37656.4

TABLE VII
APOLLO MISSION AS-502
SPACECRAFT OPERATIONAL TRAJECTORY
-HEATING PARAMETERS-

TIME SECONDS	HEATING RATE CONVECTIVE BTU/FT SQ-SEC	HEATING RATE RADIATIVE BTU/FT SQ-SEC	HEATING RATE TOTAL BTU/FT SQ-SEC	HEAT LOAD CONVECTIVE BTU/FT SQ-SEC	HEAT LOAD RADIATIVE BTU/FT SQ-SEC	HEAT LOAD TOTAL BTU/FT SQ-SEC
34885.594	1.4	.0	1.4	33805.4	3854.0	37659.4
34887.593	1.3	.0	1.3	33808.2	3854.0	37662.2
34889.593	1.2	.0	1.2	33810.7	3854.0	37664.7
34891.593	1.1	.0	1.1	33813.1	3854.0	37667.0
34893.593	1.0	.0	1.0	33815.2	3854.0	37669.1
34895.593	.9	.0	.9	33817.1	3854.0	37671.1
34897.593	.8	.0	.8	33818.9	3854.0	37672.8
34899.593	.8	.0	.8	33820.4	3854.0	37674.4
34901.593	.7	.0	.7	33821.9	3854.0	37675.9
34903.593	.6	.0	.6	33823.2	3854.0	37677.2
34905.593	.6	.0	.6	33824.4	3854.0	37678.4
34907.593	.5	.0	.5	33825.5	3854.0	37679.4
34909.593	.5	.0	.5	33826.5	3854.0	37680.4
34911.593	.4	.0	.4	33827.3	3854.0	37681.3
34913.594	.4	.0	.4	33828.1	3854.0	37682.1
34915.593	.3	.0	.3	33828.9	3854.0	37682.8
34917.593	.3	.0	.3	33829.5	3854.0	37683.5
34919.593	.3	.0	.3	33830.1	3854.0	37684.1
34921.593	.3	.0	.3	33830.7	3854.0	37684.6
34923.593	.2	.0	.2	33831.1	3854.0	37685.1
34925.593	.2	.0	.2	33831.6	3854.0	37685.5
34927.593	.2	.0	.2	33832.0	3854.0	37685.9
34929.593	.2	.0	.2	33832.3	3854.0	37686.3
34931.593	.1	.0	.1	33832.6	3854.0	37686.6
34933.593	.1	.0	.1	33832.9	3854.0	37686.9
34935.593	.1	.0	.1	33833.2	3854.0	37687.1
34937.593	.1	.0	.1	33833.4	3854.0	37687.4

TABLE VII
APOLLO MISSION AS-502
SPACECRAFT OPERATIONAL TRAJECTORY
-HEATING PARAMETERS-

TIME SECONDS	HEATING RATE CONVECTIVE BTU/FT SQ-SEC	HEATING RATE RADIATIVE BTU/FT SQ-SEC	HEATING RATE TOTAL BTU/FT SQ-SEC	HEAT LOAD CONVECTIVE BTU/FT SQ-SEC	HEAT LOAD RADIATIVE BTU/FT SQ-SEC	HEAT LOAD TOTAL BTU/FT SQ-SEC
34939.593	.1	.0	.1	33833.7	3854.0	37687.7
34941.594	.1	.0	.1	33833.9	3854.0	37687.9
34943.593	.1	.0	.1	33834.2	3854.0	37688.1
34945.593	.1	.0	.1	33834.4	3854.0	37688.3
34947.594	.1	.0	.1	33834.6	3854.0	37688.5
		TERMINATION OF AGC GUIDANCE				
34947.594	.1	.0	.1	33834.6	3854.0	37688.5
34949.593	.1	.0	.1	33834.7	3854.0	37688.7
34951.593	.1	.0	.1	33834.9	3854.0	37688.9
34953.593	.1	.0	.1	33835.1	3854.0	37689.0
34955.593	.1	.0	.1	33835.2	3854.0	37689.2
34957.593	.1	.0	.1	33835.4	3854.0	37689.3
34959.593	.1	.0	.1	33835.5	3854.0	37689.4
34961.593	.1	.0	.1	33835.6	3854.0	37689.6
34963.593	.1	.0	.1	33835.7	3854.0	37689.7
34965.593	.0	.0	.0	33835.8	3854.0	37689.8
34967.593	.0	.0	.0	33835.9	3854.0	37689.9
34969.593	.0	.0	.0	33836.0	3854.0	37689.9
34971.593	.0	.0	.0	33836.1	3854.0	37690.0
34973.593	.0	.0	.0	33836.1	3854.0	37690.1
34975.594	.0	.0	.0	33836.2	3854.0	37690.2
34977.593	.0	.0	.0	33836.3	3854.0	37690.2
34979.593	.0	.0	.0	33836.3	3854.0	37690.3
34981.593	.0	.0	.0	33836.4	3854.0	37690.3
34983.593	.0	.0	.0	33836.4	3854.0	37690.4

TABLE VII
APOLLO MISSION AS-502
SPACECRAFT OPERATIONAL TRAJECTORY
-HEATING PARAMETERS-

TIME SECONDS	HEATING RATE CONVECTIVE BTU/FT SQ-SEC	HEATING RATE RADIATIVE BTU/FT SQ-SEC	HEATING RATE TOTAL BTU/FT SQ-SEC	HEAT LOAD CONVECTIVE BTU/FT SQ-SEC	HEAT LOAD RADIATIVE BTU/FT SQ-SEC	HEAT LOAD TOTAL BTU/FT SQ-SEC
34985.593	.0	.0	.0	33836.5	3854.0	37690.4
34987.593	.0	.0	.0	33836.5	3854.0	37690.5
34989.593	.0	.0	.0	33836.6	3854.0	37690.5
34991.593	.0	.0	.0	33836.6	3854.0	37690.6
34993.593	.0	.0	.0	33836.6	3854.0	37690.6
34995.593	.0	.0	.0	33836.7	3854.0	37690.6
34997.593	.0	.0	.0	33836.7	3854.0	37690.7
34999.593	.0	.0	.0	33836.7	3854.0	37690.7
35001.593	.0	.0	.0	33836.8	3854.0	37690.7
35003.594	.0	.0	.0	33836.8	3854.0	37690.8
35005.593	.0	.0	.0	33836.8	3854.0	37690.8
35007.593	.0	.0	.0	33836.9	3854.0	37690.8
35009.594	.0	.0	.0	33836.9	3854.0	37690.8
35011.593	.0	.0	.0	33836.9	3854.0	37690.9
35013.593	.0	.0	.0	33836.9	3854.0	37690.9
35013.994	.0	.0	.0	33836.9	3854.0	37690.9
DROGUE PARACHUTES DEPLOYMENT						
35013.994	.0	.0	.0	33836.9	3854.0	37690.9
35023.993	.0	.0	.0	33837.0	3854.0	37691.0
35033.993	.0	.0	.0	33837.0	3854.0	37691.0
35043.994	.0	.0	.0	33837.0	3854.0	37691.0
35053.994	.0	.0	.0	33837.0	3854.0	37691.0

TABLE VII
APOLLO MISSION AS-502
SPACECRAFT OPERATIONAL TRAJECTORY
-HEATING PARAMETERS-

TIME SECONDS	HEATING RATE CONVECTIVE BTU/FT SQ-SEC	HEATING RATE RADIATIVE BTU/FT SQ-SEC	HEATING RATE TOTAL BTU/FT SQ-SEC	HEAT LOAD CONVECTIVE BTU/FT SQ-SEC	HEAT LOAD RADIATIVE BTU/FT SQ-SEC	HEAT LOAD TOTAL BTU/FT SQ-SEC
35063.193	.0	.0	.0	33837.0	3854.0	37691.0
MAIN PARACHUTES DEPLOYMENT						
35063.193	.0	.0	.0	33837.0	3854.0	37691.0
35093.194	.0	.0	.0	33837.0	3854.0	37691.0
35123.193	.0	.0	.0	33837.0	3854.0	37691.0
35153.193	.0	.0	.0	33837.0	3854.0	37691.0
35183.194	.0	.0	.0	33837.0	3854.0	37691.0
35213.193	.0	.0	.0	33837.0	3854.0	37691.0
35243.193	.0	.0	.0	33837.0	3854.0	37691.0
35273.194	.0	.0	.0	33837.0	3854.0	37691.0
35303.193	.0	.0	.0	33837.0	3854.0	37691.0
35333.193	.0	.0	.0	33837.0	3854.0	37691.0
35363.194	.0	.0	.0	33837.0	3854.0	37691.0

TABLE VIII
APOLLO MISSION AS-502
SPACECRAFT OPERATIONAL TRAJECTORY
-AERODYNAMIC AND GUIDANCE PARAMETERS-

TIME SECONDS	ALTITUDE FEET	ALTITUDE N.MI.	MACH NUMBER	DYNAMIC PRESSURE LB/SQ FT	RCS FUEL POUNDS	ROLL COMMAND DEGREES
34163.594	400000.0	65.83	39.8	.0	.0	.00
ATMOSPHERIC ENTRY						
34163.594	400000.0	65.83	39.8	.0	.0	.00
34165.593	391823.3	64.49	39.8	.0	1.2	15.20
34167.593	383770.8	63.16	39.8	.0	1.5	15.20
34169.593	375841.3	61.86	39.8	.1	1.8	15.20
34171.593	368034.6	60.57	39.8	.1	1.9	15.20
34173.593	360351.4	59.31	39.9	.1	1.9	15.20
34175.593	352791.4	58.06	39.9	.2	1.9	15.20
34177.593	345355.2	56.84	39.9	.2	1.9	15.20
34179.593	338042.5	55.63	39.9	.3	1.9	15.20
34181.593	330854.3	54.45	39.9	.5	1.9	15.20
ENTER S-BAND COMMUNICATION BLACKOUT						
34181.593	330854.3	54.45	39.9	.5	1.9	15.20
34183.593	323790.0	53.29	39.9	.7	1.9	15.20
34185.593	316850.6	52.15	39.9	1.1	2.0	15.20
34187.593	310036.4	51.03	39.9	1.6	2.1	15.20
34189.593	303347.6	49.92	39.9	2.3	2.1	15.20
34191.594	296785.2	48.84	39.9	3.4	2.1	15.20
ENTER C-BAND COMMUNICATIONS BLACKOUT LOAD FACTOR = 0.05 G						
34191.594	296785.2	48.84	39.9	3.4	2.1	15.20

TABLE VIII
APOLLO MISSION AS-502
SPACECRAFT OPERATIONAL TRAJECTORY
-AERODYNAMIC AND GUIDANCE PARAMETERS-

TIME SECONDS	ALTITUDE FEET	ALTITUDE N.MI.	MACH NUMBER	DYNAMIC PRESSURE LB/SQ FT	RCS FUEL POUNDS	ROLL COMMAND DEGREES
34193.593	290349.9	47.79	39.9	5.0	2.1	15.20
34195.593	284043.5	46.75	39.9	7.1	2.3	15.20
34197.593	277866.5	45.73	39.9	10.0	2.3	15.20
34199.593	271821.3	44.74	39.9	14.0	2.3	15.20
34201.593	265910.0	43.76	39.9	19.5	2.3	15.20
34203.593	260138.3	42.81	39.7	26.8	2.3	15.20
34205.593	254509.3	41.89	39.0	35.2	2.3	15.20
34207.593	249029.1	40.98	38.3	45.3	2.3	15.20
34209.593	243704.4	40.11	37.7	57.6	2.3	15.20
34211.593	238542.9	39.26	37.0	72.0	2.4	15.20
34213.593	233553.4	38.44	36.5	88.8	2.4	15.20
34215.593	228746.2	37.65	35.9	107.9	2.4	15.20
34217.593	224132.5	36.89	35.4	129.3	2.4	15.20
34219.594	219725.5	36.16	34.8	152.9	2.5	15.20
34221.593	215538.3	35.47	34.3	178.4	2.5	15.20
34223.593	211585.3	34.82	33.8	205.3	2.5	15.20
34225.594	207880.8	34.21	33.3	233.2	2.6	15.20
34227.593	204440.3	33.65	32.9	261.2	2.6	15.20
34229.593	201276.6	33.13	32.4	288.9	2.7	15.20
			MAXIMUM HEATING RATE			
34229.593	201276.6	33.13	32.4	288.9	2.7	15.20
34231.593	198403.3	32.65	32.1	317.4	2.7	15.20
34233.593	195833.9	32.23	31.7	343.9	2.8	15.20
34235.593	193578.1	31.86	31.3	367.6	2.8	15.20
34237.593	191644.9	31.54	31.0	387.5	2.9	15.20

TABLE VIII
APOLLO MISSION AS-502
SPACECRAFT OPERATIONAL TRAJECTORY
-AERODYNAMIC AND GUIDANCE PARAMETERS-

TIME SECONDS	ALTITUDE FEET	ALTITUDE N.MI.	MACH NUMBER	DYNAMIC PRESSURE LB/SQ FT	RCS FUEL POUNDS	ROLL COMMAND DEGREES
34235.593	190039.4	31.28	30.6	403.0	2.9	15.20
34241.593	188763.9	31.07	30.2	413.5	3.0	15.20
GUIDANCE INITIATE AT RDOT = -700 FT/SEC						
34241.593	188763.9	31.07	30.2	413.5	3.0	15.20
34243.593	187817.9	30.91	29.9	418.9	3.1	15.20
34245.593	187196.1	30.81	29.5	419.0	3.1	15.20
MAXIMUM LOAD FACTOR						
34245.593	187196.1	30.81	29.5	419.0	3.1	15.20
34247.593	186891.6	30.76	29.2	414.2	3.1	15.20
34249.593	186893.1	30.76	28.9	404.9	4.2	33.25
34251.593	187175.1	30.81	28.5	391.9	5.3	74.56
34253.594	187669.9	30.89	28.3	376.5	5.9	90.00
34255.593	188271.9	30.99	28.0	360.6	6.9	138.63
34257.593	188877.1	31.09	27.7	345.6	7.0	180.00
34259.593	189384.6	31.17	27.5	332.6	7.6	180.00
34261.593	189752.6	31.23	27.2	322.0	8.3	180.00
34263.593	189979.9	31.27	27.0	313.5	9.6	47.90
34265.593	190083.6	31.28	26.7	306.7	9.6	30.85
34267.593	190131.4	31.29	26.5	300.8	9.6	.00
34269.593	190228.6	31.31	26.3	294.4	9.6	-15.20
34271.593	190470.9	31.35	26.0	286.7	9.6	-15.20
34273.593	190898.4	31.42	25.8	277.3	10.6	-15.20
34275.593	191494.6	31.52	25.6	266.6	11.0	-32.48

TABLE VIII
APOLLO MISSION AS-502
SPACECRAFT OPERATIONAL TRAJECTORY
-AERODYNAMIC AND GUIDANCE PARAMETERS-

TIME SECONDS	ALTITUDE FEET	ALTITUDE N.MI.	MACH NUMBER	DYNAMIC PRESSURE LB/SQ FT	RCS FUEL POUNDS	ROLL COMMAND DEGREES
[illegible]	192241.1	31.64	25.4	[illegible]	11.2	-42.17
[illegible]	193116.4	31.78	25.3	[illegible]	12.3	-71.29
[illegible]	194069.9	31.94	25.1	[illegible]	13.0	-93.10
[illegible]	195045.1	32.10	25.0	[illegible]	13.6	-95.07
[illegible]	196019.3	32.26	24.8	[illegible]	13.6	-94.98
[illegible]	196982.8	32.42	24.7	[illegible]	13.7	-94.65
[illegible]	197920.3	32.57	24.6	[illegible]	13.8	-94.07
34291.593	198853.8	32.73	24.4	180.7	13.9	-93.28
34293.593	199759.8	32.88	24.3	172.6	13.9	-92.51
34295.593	200647.8	33.02	24.2	165.0	13.9	-91.76
34297.593	201518.3	33.17	24.1	157.9	13.9	-91.05
34299.593	202373.1	33.31	24.0	151.3	14.0	-90.39
34301.593	203211.8	33.44	23.9	145.4	14.0	-87.57
34303.593	204037.6	33.58	23.9	139.8	14.2	-80.82
34305.593	204858.6	33.72	23.8	134.4	14.3	-74.56
34307.593	205681.6	33.85	23.7	129.3	14.3	-69.85
34309.593	206511.3	33.99	23.7	124.4	14.4	-66.04
34311.593	207353.0	34.13	23.6	119.6	14.4	-63.27
34313.593	208210.0	34.27	23.6	115.0	14.4	-61.31
34315.594	209085.3	34.41	23.5	110.4	14.4	-59.95
34317.593	209978.8	34.56	23.5	106.0	14.4	-59.14
34319.593	210892.3	34.71	23.5	101.7	14.4	-58.66
34321.593	211826.0	34.86	23.4	97.6	14.4	-58.55
34323.593	212777.8	35.02	23.4	93.5	14.4	-58.72
34325.593	213745.0	35.18	23.4	89.6	14.4	-58.74
34327.593	214726.3	35.34	23.4	85.8	14.4	-58.95
34329.593	215718.8	35.50	23.4	82.1	14.4	-59.13

TABLE VIII
APOLLO MISSION AS-502
SPACECRAFT OPERATIONAL TRAJECTORY
-AERODYNAMIC AND GUIDANCE PARAMETERS-

TIME SECONDS	ALTITUDE FEET	ALTITUDE N.MI.	MACH NUMBER	DYNAMIC PRESSURE LB/SQ FT	RCS FUEL POUNDS	ROLL COMMAND DEGREES
34331.593	216720.8	35.67	23.3	78.6	14.4	-59.24
34333.593	217729.5	35.83	23.3	75.2	14.4	-59.47
34335.593	218742.2	36.00	23.3	71.9	14.4	-58.37
EXIT C-BAND COMMUNICATIONS BLACKOUT						
34335.593	218742.2	36.00	23.3	71.9	14.4	-58.37
34337.593	219756.7	36.17	23.3	68.8	14.6	-57.30
34339.593	220772.0	36.33	23.3	65.8	15.9	56.13
34341.593	221796.5	36.50	23.3	62.9	15.9	54.57
34343.593	222839.2	36.67	23.4	60.1	15.9	53.33
34345.593	223896.0	36.85	23.4	57.4	16.8	53.66
34347.593	224956.7	37.02	23.4	54.8	17.6	52.68
34349.594	226021.2	37.20	23.4	52.3	17.6	53.13
34351.593	227088.7	37.37	23.4	49.9	17.7	52.53
34353.593	228161.0	37.55	23.4	47.6	17.8	52.05
34355.593	229235.9	37.73	23.5	45.4	17.8	51.49
34357.593	230311.9	37.90	23.5	43.3	17.8	51.06
34359.593	231388.4	38.08	23.5	41.3	17.8	50.62
34361.593	232463.7	38.26	23.6	39.4	17.8	49.99
34363.593	233537.2	38.44	23.6	37.5	17.8	49.62
34365.593	234607.7	38.61	23.6	35.8	17.8	48.95
34367.593	235675.2	38.79	23.7	34.1	17.8	48.42

TABLE VIII
APOLLO MISSION AS-502
SPACECRAFT OPERATIONAL TRAJECTORY
-AERODYNAMIC AND GUIDANCE PARAMETERS-

TIME SECONDS	ALTITUDE FEET	ALTITUDE N.MI.	MACH NUMBER	DYNAMIC PRESSURE LB/SQ FT	RCS FUEL POUNDS	ROLL COMMAND DEGREES
34365.593	236737.9	38.96	23.7	32.5	17.8	48.16
EXIT S-BAND COMMUNICATIONS BLACKOUT						
34369.593	236737.9	38.96	23.7	32.5	17.8	48.16
34371.593	237795.2	39.14	23.8	31.0	17.8	48.08
34373.593	238847.2	39.31	23.8	29.6	17.8	48.03
34375.593	239892.4	39.48	23.8	28.2	17.8	47.96
34377.594	240930.4	39.65	23.9	26.9	17.8	47.89
34379.593	241961.4	39.82	23.9	25.7	17.8	47.83
34381.593	242983.6	39.99	24.0	24.5	17.8	47.75
34383.593	243996.9	40.16	24.0	23.4	17.8	47.67
34385.593	245000.9	40.32	24.1	22.3	17.8	47.60
34387.593	245994.1	40.49	24.1	21.3	17.8	47.51
34389.593	246976.6	40.65	24.2	20.4	17.8	47.43
34391.593	247948.4	40.81	24.2	19.5	17.8	47.35
34393.593	248907.4	40.96	24.3	18.6	17.8	47.25
34395.593	249853.9	41.12	24.3	17.8	17.8	47.15
34397.593	250787.4	41.27	24.4	17.0	17.8	47.06
34399.593	251707.6	41.43	24.4	16.3	17.8	46.96
34401.593	252613.6	41.57	24.5	15.6	17.8	46.85
34403.593	253505.3	41.72	24.5	14.9	17.8	46.75
34405.593	254382.6	41.87	24.6	14.3	17.8	46.65
34407.593	255244.6	42.01	24.7	13.7	17.8	46.53
34409.593	256091.1	42.15	24.7	13.2	17.8	46.41
34411.594	256922.1	42.28	24.8	12.6	17.8	46.41
34413.593	257737.3	42.42	24.8	12.1	17.8	46.41

TABLE VIII
APOLLO MISSION AS-502
SPACECRAFT OPERATIONAL TRAJECTORY
-AERODYNAMIC AND GUIDANCE PARAMETERS-

TIME SECONDS	ALTITUDE FEET	ALTITUDE N.MI.	MACH NUMBER	DYNAMIC PRESSURE LB/SQ FT	RCS FUEL POUNDS	ROLL COMMAND DEGREES
34415.593	258536.6	42.55	24.9	11.7	17.8	46.41
34417.593	259319.1	42.68	24.9	11.2	17.8	46.41
34419.593	260084.6	42.80	25.0	10.8	17.8	46.41
34421.593	260833.3	42.93	25.0	10.4	17.8	46.41
34423.593	261565.1	43.05	25.1	10.0	17.8	46.41
34425.593	262279.3	43.17	25.1	9.7	17.8	46.41
34427.593	262975.8	43.28	25.1	9.3	17.8	46.41
34429.593	263654.8	43.39	25.1	9.0	17.8	46.41
34431.593	264316.1	43.50	25.1	8.6	17.8	46.41
34433.593	264959.1	43.61	25.1	8.3	17.8	46.41
34435.593	265583.8	43.71	25.1	8.0	17.8	46.41
34437.593	266190.1	43.81	25.1	7.7	17.8	46.41
34439.594	266777.3	43.91	25.1	7.5	17.8	46.41
34441.593	267346.3	44.00	25.1	7.2	17.9	46.41
34443.593	267897.0	44.09	25.1	7.0	17.9	46.41
34445.594	268428.3	44.18	25.0	6.8	17.9	46.41
34447.593	268940.5	44.26	25.0	6.6	17.9	46.41
34449.593	269433.0	44.34	25.0	6.4	17.9	46.41
34451.593	269906.5	44.42	25.0	6.3	17.9	46.41
34453.593	270360.5	44.50	25.0	6.1	17.9	46.41
34455.593	270795.3	44.57	25.0	5.9	17.9	46.41
34457.593	271210.5	44.64	25.0	5.8	17.9	46.41
34459.593	271605.3	44.70	25.0	5.7	17.9	46.41
34461.593	271980.0	44.76	25.0	5.6	17.9	46.41
34463.593	272334.3	44.82	25.0	5.4	17.9	46.41
34465.593	272668.8	44.88	25.0	5.3	17.9	46.41
34467.593	272983.0	44.93	25.0	5.2	17.9	46.41

TABLE VIII
APOLLO MISSION AS-502
SPACECRAFT OPERATIONAL TRAJECTORY
-AERODYNAMIC AND GUIDANCE PARAMETERS-

TIME SECONDS	ALTITUDE FEET	ALTITUDE N.MI.	MACH NUMBER	DYNAMIC PRESSURE LB/SQ FT	RCS FUEL POUNDS	ROLL COMMAND DEGREES
34469.593	273277.0	44.98	25.0	5.2	17.9	46.41
34471.593	273550.3	45.02	25.0	5.1	17.9	46.41
34473.594	273802.8	45.06	25.0	5.0	17.9	46.41
34475.593	274034.0	45.10	25.0	4.9	17.9	46.41
34477.593	274245.0	45.13	25.0	4.9	17.9	46.41
34479.593	274435.3	45.17	24.9	4.8	17.9	46.41
34481.593	274604.5	45.19	24.9	4.8	17.9	46.41
34483.593	274753.0	45.22	24.9	4.7	18.0	46.41
34485.593	274880.3	45.24	24.9	4.7	18.0	46.41
34487.593	274986.5	45.26	24.9	4.7	18.0	46.41
34489.593	275071.5	45.27	24.9	4.6	18.0	46.41
34491.593	275136.0	45.28	24.9	4.6	18.0	46.41
34493.593	275179.5	45.29	24.9	4.6	18.0	46.41
34495.593	275202.3	45.29	24.9	4.6	18.0	46.41
34497.593	275203.8	45.29	24.9	4.6	18.0	46.41
34499.593	275184.5	45.29	24.9	4.6	18.0	46.41
34501.594	275144.0	45.28	24.9	4.6	18.1	46.41
34503.593	275082.3	45.27	24.9	4.6	18.1	46.41
34505.593	275000.0	45.26	24.9	4.6	18.1	46.41
34507.594	274896.8	45.24	24.9	4.7	18.1	46.41
34509.593	274772.3	45.22	24.9	4.7	18.1	46.41
34511.593	274626.5	45.20	24.9	4.7	18.1	46.41
34513.593	274459.0	45.17	24.9	4.8	18.1	46.41
34515.593	274270.3	45.14	24.9	4.8	18.1	46.41
34517.593	274059.5	45.10	24.9	4.9	18.1	46.41
34519.593	273828.3	45.07	24.9	4.9	18.1	46.41
34521.593	273575.3	45.02	24.9	5.0	18.2	46.41

TABLE VIII
APOLLO MISSION AS-502
SPACECRAFT OPERATIONAL TRAJECTORY
-AERODYNAMIC AND GUIDANCE PARAMETERS-

TIME SECONDS	ALTITUDE FEET	ALTITUDE N.MI.	MACH NUMBER	DYNAMIC PRESSURE LB/SQ FT	RCS FUEL POUNDS	ROLL COMMAND DEGREES
34523.593	273301.1	44.98	24.9	5.1	18.2	46.41
34525.593	273005.3	44.93	24.8	5.2	18.2	46.41
34527.593	272687.3	44.88	24.8	5.3	18.2	46.41
34529.593	272348.1	44.82	24.8	5.4	18.2	46.41
34531.593	271987.8	44.76	24.8	5.5	18.2	46.41
34533.593	271606.6	44.70	24.8	5.6	18.2	46.41
34535.594	271204.6	44.63	24.8	5.7	18.2	46.41
34537.593	270781.6	44.56	24.8	5.8	18.2	46.41
34539.593	270337.1	44.49	24.8	6.0	18.2	46.41
34541.593	269871.3	44.42	24.8	6.1	18.3	46.41
34543.593	269384.8	44.34	24.8	6.3	18.3	46.41
34545.593	268877.3	44.25	24.8	6.5	18.3	46.41
34547.593	268349.6	44.16	24.8	6.7	18.3	46.41
34549.593	267800.6	44.07	24.8	6.9	18.3	46.41
34551.593	267229.8	43.98	24.8	7.1	18.3	46.41
34553.593	266638.1	43.88	24.8	7.3	18.3	46.41
34555.593	266025.1	43.78	24.8	7.6	18.3	46.41
34557.593	265391.6	43.68	24.8	7.9	18.4	46.41
34559.593	264736.9	43.57	24.8	8.2	18.5	46.41
34561.593	264061.1	43.46	24.8	8.5	18.5	46.41
34563.594	263364.1	43.34	24.7	8.8	18.5	46.41
34565.593	262647.1	43.23	24.7	9.2	18.5	46.41
34567.593	261909.9	43.10	24.7	9.5	18.5	46.41
34569.594	261152.6	42.98	24.6	9.9	18.5	46.41
34571.593	260375.4	42.85	24.6	10.2	18.6	46.41
34573.593	259578.4	42.72	24.5	10.6	18.6	46.41
34575.593	258761.9	42.59	24.4	11.1	18.6	46.41

TABLE VIII
APOLLO MISSION AS-502
SPACECRAFT OPERATIONAL TRAJECTORY
-AERODYNAMIC AND GUIDANCE PARAMETERS-

TIME SECONDS	ALTITUDE FEET	ALTITUDE N.MI.	MACH NUMBER	DYNAMIC PRESSURE LB/SQ FT	RCS FUEL POUNDS	ROLL COMMAND DEGREES
34577.593	257925.9	42.45	24.3	11.5	18.6	46.41
34579.593	257070.2	42.31	24.3	12.0	18.6	46.41
34581.593	256194.4	42.16	24.2	12.5	18.6	46.41
34583.593	255299.2	42.02	24.1	13.0	18.6	46.41
34585.593	254384.7	41.87	24.0	13.6	18.7	46.41
34587.593	253450.4	41.71	23.9	14.2	18.7	46.41
34589.593	252496.2	41.56	23.9	14.8	18.8	46.41
34591.593	251523.7	41.40	23.8	15.5	18.8	46.41
34593.593	250532.2	41.23	23.7	16.2	19.9	15.20
34595.593	249523.9	41.07	23.6	17.0	21.2	15.20
34597.594	248499.9	40.90	23.5	17.7	21.4	15.20
34599.593	247461.0	40.73	23.4	18.6	21.4	15.20
34601.593	246407.0	40.55	23.3	19.5	21.4	15.20
34603.593	245338.7	40.38	23.3	20.4	21.4	15.20
34605.593	244256.2	40.20	23.2	21.4	21.5	15.20
34607.593	243160.2	40.02	23.1	22.4	21.5	15.20
34609.593	242051.5	39.84	23.0	23.5	21.5	15.20
34611.593	240929.7	39.65	22.9	24.6	21.5	15.20
34613.593	239795.7	39.47	22.8	25.8	21.5	15.20
34615.593	238650.2	39.28	22.7	27.1	21.5	15.20
34617.593	237493.8	39.09	22.6	28.4	21.5	15.20
34619.593	236326.3	38.89	22.5	29.8	21.5	15.20
34621.593	235148.8	38.70	22.4	31.2	21.5	15.20
34623.593	233962.3	38.51	22.3	32.8	21.5	15.20
34625.593	232767.0	38.31	22.2	34.3	21.5	15.20
34627.593	231563.5	38.11	22.1	36.0	21.5	15.20
34629.593	230352.8	37.91	22.0	37.8	21.5	15.20

TABLE VIII

APOLLO MISSION AS-502

SPACECRAFT OPERATIONAL TRAJECTORY

-AERODYNAMIC AND GUIDANCE PARAMETERS-

TIME SECONDS	ALTITUDE FEET	ALTITUDE N.MI.	MACH NUMBER	DYNAMIC PRESSURE LB/SQ FT	RCS FUEL POUNDS	ROLL COMMAND DEGREES
34631.594	229135.8	37.71	21.9	39.6	21.5	15.20
34633.593	227913.1	37.51	21.8	41.5	21.5	15.20
34635.593	226685.3	37.31	21.7	43.4	21.5	15.20
34637.593	225453.8	37.10	21.6	45.5	21.5	15.20
ENTER S-BAND COMMUNICATIONS BLACKOUT						
34637.593	225453.8	37.10	21.6	45.5	21.5	15.20
34639.593	224219.6	36.90	21.5	47.6	21.5	15.20
34641.593	222983.3	36.70	21.4	49.9	21.5	19.39
34643.593	221746.1	36.49	21.3	52.1	21.6	24.37
34645.593	220509.1	36.29	21.1	54.5	21.8	28.30
34647.593	219272.8	36.09	21.0	57.0	21.9	31.74
34649.593	218037.1	35.88	20.9	59.5	21.9	34.67
34651.593	216801.6	35.68	20.8	62.1	21.9	37.32
34653.593	215566.6	35.48	20.7	64.8	21.9	39.49
34655.593	214332.4	35.27	20.6	67.5	21.9	41.53
34657.593	213098.1	35.07	20.5	70.4	21.9	43.12
34659.594	211862.9	34.87	20.3	73.3	21.9	44.59
34661.593	210627.1	34.66	20.2	76.3	22.1	45.68
34663.593	209390.1	34.46	20.1	79.4	22.1	46.55
34665.594	208153.7	34.26	20.0	82.6	22.1	47.29
34667.593	206919.2	34.05	19.8	85.9	22.1	47.79
34669.593	205687.9	33.85	19.7	89.2	22.1	48.30
34671.593	204462.9	33.65	19.6	92.6	22.1	48.53
34673.593	203244.4	33.45	19.4	96.0	22.2	48.72
34675.593	202034.7	33.25	19.3	99.5	22.2	48.72

TABLE VIII
APOLLO MISSION AS-502
SPACECRAFT OPERATIONAL TRAJECTORY
-AERODYNAMIC AND GUIDANCE PARAMETERS-

TIME SECONDS	ALTITUDE FEET	ALTITUDE N.MI.	MACH NUMBER	DYNAMIC PRESSURE LB/SQ FT	RCS FUEL POUNDS	ROLL COMMAND DEGREES
34677.593	200833.4	33.05	19.2	103.2	22.2	48.36
34679.593	199641.2	32.86	19.1	107.0	22.2	47.68
34681.593	198458.9	32.66	19.0	110.9	22.2	46.61
34683.593	197288.5	32.47	18.9	114.9	22.2	45.03
34685.593	196130.0	32.28	18.8	118.8	22.2	43.03
34687.593	194985.5	32.09	18.6	122.8	22.2	40.53
34689.593	193857.0	31.90	18.5	126.8	22.2	37.28
34691.593	192746.5	31.72	18.4	130.7	22.3	33.07
34693.594	191657.2	31.54	18.3	134.6	22.4	35.67
34695.593	190593.5	31.37	18.1	138.4	22.6	38.68
34697.593	189558.0	31.20	18.0	142.1	22.7	41.64
34699.593	188549.2	31.03	17.9	145.7	22.7	44.32
34701.593	187566.0	30.87	17.7	149.1	22.7	46.70
34703.593	186606.0	30.71	17.6	152.4	22.7	48.82
34705.593	185667.8	30.56	17.5	155.7	22.7	50.68
34707.593	184749.5	30.41	17.3	158.7	22.7	52.28
34709.593	183849.8	30.26	17.2	161.7	22.7	53.65
34711.593	182968.3	30.11	17.0	164.6	22.7	54.84
34713.593	182104.0	29.97	16.9	167.3	22.8	55.92
34715.593	181256.5	29.83	16.7	169.9	22.8	56.89
34717.593	180423.5	29.69	16.6	172.3	22.8	57.72
34719.593	179603.8	29.56	16.5	174.7	22.8	58.35
34721.594	178796.8	29.43	16.3	176.9	22.8	58.83
34723.593	178002.3	29.30	16.1	179.0	22.9	59.17
34725.593	177218.8	29.17	16.0	180.9	22.9	59.42
34727.594	176446.8	29.04	15.8	182.8	22.9	59.54
34729.593	175685.8	28.91	15.7	184.5	22.9	59.54

TABLE VIII
APOLLO MISSION AS-502
SPACECRAFT OPERATIONAL TRAJECTORY
-AERODYNAMIC AND GUIDANCE PARAMETERS-

TIME SECONDS	ALTITUDE FEET	ALTITUDE N.MI.	MACH NUMBER	DYNAMIC PRESSURE LB/SQ FT	RCS FUEL POUNDS	ROLL COMMAND DEGREES
34731.593	174934.3	28.79	15.5	186.1	23.0	60.87
34733.593	174191.1	28.67	15.4	187.6	23.0	62.10
34735.593	173453.6	28.55	15.2	189.0	23.0	63.16
34737.593	172719.6	28.43	15.1	190.4	23.1	64.08
34739.593	171987.3	28.31	14.9	191.6	23.1	64.84
34741.593	171254.8	28.18	14.8	193.1	23.1	65.44
34743.593	170521.1	28.06	14.6	194.5	23.1	65.88
34745.593	169785.1	27.94	14.5	196.0	23.1	66.15
34747.593	169046.1	27.82	14.3	197.3	23.1	66.31
34749.593	168302.8	27.70	14.2	198.7	23.2	66.37
34751.593	167555.8	27.58	14.0	200.0	23.2	66.33
34753.593	166804.1	27.45	13.8	201.3	23.2	66.20
34755.594	166046.9	27.33	13.7	202.5	23.2	65.98
34757.593	165284.1	27.20	13.5	203.8	23.3	65.65
EXIT S-BAND COMMUNICATIONS BLACKOUT						
34757.593	165284.1	27.20	13.5	203.8	23.3	65.65
34759.593	164515.1	27.08	13.4	205.0	23.3	65.20
34761.593	163739.9	26.95	13.2	206.1	23.3	66.01
34763.593	162957.6	26.82	13.1	207.3	23.4	66.82
34765.593	162167.1	26.69	12.9	208.4	23.4	67.54
34767.593	161366.6	26.56	12.7	209.5	23.4	68.09
34769.593	160554.1	26.42	12.6	210.7	23.4	68.46
34771.593	159730.1	26.29	12.4	211.8	23.5	68.70
34773.593	158893.1	26.15	12.3	213.0	23.5	68.83
34775.593	158044.1	26.01	12.1	214.1	24.6	-68.84

TABLE VIII
APOLLO MISSION AS-502
SPACECRAFT OPERATIONAL TRAJECTORY
-AERODYNAMIC AND GUIDANCE PARAMETERS-

TIME SECONDS	ALTITUDE FEET	ALTITUDE N.MI.	MACH NUMBER	DYNAMIC PRESSURE LB/SQ FT	RCS FUEL POUNDS	ROLL COMMAND DEGREES
34777.593	157206.4	25.87	11.9	215.1	24.8	-69.23
34779.593	156408.9	25.74	11.8	215.6	24.8	-72.69
34781.593	155635.6	25.61	11.6	215.9	24.8	-76.53
34783.594	154829.2	25.48	11.4	216.6	26.2	-78.46
34785.593	153950.9	25.34	11.3	218.1	26.4	-75.95
34787.593	153002.7	25.18	11.1	220.1	26.5	-72.36
34789.594	151990.7	25.01	11.0	222.6	26.6	-69.09
34791.593	150924.2	24.84	10.8	225.5	26.6	-66.03
34793.593	149812.7	24.66	10.7	228.6	26.6	-63.39
34795.593	148662.7	24.47	10.5	232.0	26.6	-61.06
34797.593	147482.7	24.27	10.4	235.5	27.8	-25.46
34799.593	146304.9	24.08	10.2	238.8	28.9	-21.12
34801.593	145166.7	23.89	10.0	241.6	29.1	-22.71
34803.593	144075.4	23.71	9.9	243.7	29.4	-26.39
34805.593	143029.2	23.54	9.7	245.1	29.4	-29.15
34807.593	142023.5	23.37	9.5	245.9	29.4	-31.01
34809.593	141052.2	23.21	9.3	246.1	29.4	-32.42
34811.593	140109.0	23.06	9.2	245.9	29.5	-35.65
34813.593	139186.5	22.91	9.0	245.3	29.5	-38.07
34815.593	138277.0	22.76	8.8	244.4	29.6	-39.72
34817.594	137373.7	22.61	8.6	243.2	29.7	-40.59
34819.593	136473.7	22.46	8.5	241.9	29.7	-40.85
34821.593	135575.0	22.31	8.3	240.5	29.8	-40.66
34823.593	134676.7	22.16	8.1	238.9	29.8	-40.03
34825.593	133778.2	22.02	7.9	237.1	29.9	-40.28
34827.593	132878.2	21.87	7.8	235.3	29.9	-42.60
34829.593	131975.7	21.72	7.6	233.3	29.9	-44.68

TABLE VIII
APOLLO MISSION AS-502
SPACECRAFT OPERATIONAL TRAJECTORY
-AERODYNAMIC AND GUIDANCE PARAMETERS-

TIME SECONDS	ALTITUDE FEET	ALTITUDE N.MI.	MACH NUMBER	DYNAMIC PRESSURE LB/SQ FT	RCS FUEL POUNDS	ROLL COMMAND DEGREES
34831.593	131069.8	21.57	7.4	231.3	29.9	-46.44
34833.593	130156.0	21.42	7.2	229.2	29.9	-47.81
34835.593	129231.0	21.27	7.1	227.1	29.9	-48.67
34837.593	128288.5	21.11	6.9	225.1	30.0	-48.90
34839.593	127325.0	20.96	6.7	223.1	30.1	-48.41
34841.593	126340.5	20.79	6.6	221.2	30.1	-47.27
34843.593	125334.5	20.63	6.4	219.4	30.2	-45.62
34845.593	124309.5	20.46	6.2	217.6	30.3	-43.31
34847.593	123269.3	20.29	6.1	215.8	30.4	-40.29
34849.593	122217.5	20.11	5.9	214.0	30.4	-38.74
34851.594	121160.5	19.94	5.8	212.0	30.4	-40.51
34853.593	120101.5	19.77	5.6	210.0	30.4	-42.95
34855.593	119043.6	19.59	5.5	207.9	30.4	-45.32
34857.593	117987.1	19.42	5.3	205.6	31.6	47.63
34859.593	116946.3	19.25	5.2	203.0	32.0	49.65
34861.593	115933.1	19.08	5.0	200.1	32.2	52.88
34863.593	114922.6	18.91	4.9	197.1	33.2	55.62
34865.593	113894.8	18.74	4.7	194.3	33.3	56.34
34867.593	112846.8	18.57	4.6	191.7	33.3	56.21
34869.593	111778.6	18.40	4.4	189.1	33.3	55.75
34871.593	110691.1	18.22	4.3	186.7	33.3	54.80
34873.593	109587.1	18.04	4.2	184.4	33.3	53.72
34875.593	108468.6	17.85	4.1	182.1	33.3	52.03
34877.593	107340.1	17.67	3.9	179.8	33.3	50.14
34879.594	106205.6	17.48	3.8	177.4	33.3	48.20
34881.593	105069.4	17.29	3.7	174.7	33.4	51.93
34883.593	103935.6	17.11	3.6	171.5	33.6	55.63

TABLE VIII
APOLLO MISSION AS-502
SPACECRAFT OPERATIONAL TRAJECTORY
-AERODYNAMIC AND GUIDANCE PARAMETERS-

TIME SECONDS	ALTITUDE FEET	ALTITUDE N.MI.	MACH NUMBER	DYNAMIC PRESSURE LB/SQ FT	RCS FUEL POUNDS	ROLL COMMAND DEGREES
34885.594	102800.6	16.92	3.4	168.1	33.6	59.08
34887.593	101659.1	16.73	3.3	164.6	33.7	62.59
34889.593	100505.1	16.54	3.2	161.2	33.7	64.79
34891.593	99335.1	16.35	3.1	157.7	33.7	67.27
34893.593	98145.4	16.15	3.0	154.4	33.7	69.22
34895.593	96934.9	15.95	2.8	151.1	35.2	-70.26
34897.593	95721.6	15.75	2.7	147.8	36.6	-71.37
34899.593	94531.4	15.56	2.6	144.1	37.8	-74.64
34901.593	93352.4	15.36	2.5	140.4	38.4	-78.07
34903.593	92138.9	15.16	2.4	136.9	39.8	-79.21
34905.593	90863.4	14.95	2.3	133.9	40.1	-77.74
34907.593	89531.4	14.73	2.2	131.2	40.1	-74.63
34909.593	88150.4	14.51	2.1	128.9	40.2	-72.85
34911.593	86726.9	14.27	2.1	126.8	40.2	-70.11
34913.594	85269.9	14.03	2.0	124.9	40.2	-70.75
34915.593	83786.7	13.79	1.9	123.2	40.2	-71.09
34917.593	82283.4	13.54	1.8	121.4	40.2	-72.21
34919.593	80766.4	13.29	1.7	119.8	40.2	-71.54
34921.593	79242.0	13.04	1.7	118.1	40.2	-72.05
34923.593	77713.7	12.79	1.6	116.4	40.2	-73.06
34925.593	76186.5	12.54	1.5	114.7	41.6	73.46
34927.593	74678.2	12.29	1.5	112.8	42.9	74.60
34929.593	73214.5	12.05	1.4	110.7	43.6	74.82
34931.593	71790.2	11.82	1.3	108.5	43.6	76.84
34933.593	70374.0	11.58	1.3	106.8	44.9	78.70
34935.593	68935.0	11.35	1.2	106.6	45.6	80.55
34937.593	67473.0	11.10	1.2	107.3	45.7	85.88

TABLE VIII
APOLLO MISSION AS-502
SPACECRAFT OPERATIONAL TRAJECTORY
-AERODYNAMIC AND GUIDANCE PARAMETERS-

TIME SECONDS	ALTITUDE FEET	ALTITUDE N.MI.	MACH NUMBER	DYNAMIC PRESSURE LB/SQ FT	RCS FUEL POUNDS	ROLL COMMAND DEGREES
34939.593	65992.3	10.86	1.2	108.6	45.7	85.24
34941.594	64497.8	10.61	1.1	109.7	45.7	87.24
34943.593	62997.3	10.37	1.1	110.5	45.7	87.20
34945.593	61497.3	10.12	1.1	111.4	45.7	84.05
34947.594	60001.8	9.88	1.0	112.4	45.7	88.25
TERMINATION OF AGC GUIDANCE						
34947.594	60001.8	9.88	1.0	112.4	45.7	88.25
34949.593	58514.3	9.63	1.0	113.4	45.7	88.25
34951.593	57037.5	9.39	1.0	114.5	45.7	88.25
34953.593	55574.8	9.15	.9	115.6	45.7	88.25
34955.593	54129.3	8.91	.9	116.7	45.7	88.25
34957.593	52703.1	8.67	.9	117.7	45.7	88.25
34959.593	51299.1	8.44	.9	118.5	45.7	88.25
34961.593	49920.3	8.22	.8	119.0	45.7	88.25
34963.593	48569.3	7.99	.8	119.4	45.7	88.25
34965.593	47247.6	7.78	.8	119.6	45.7	88.25
34967.593	45955.8	7.56	.8	119.6	45.7	88.25
34969.593	44695.1	7.36	.7	119.6	45.7	88.25
34971.593	43465.1	7.15	.7	119.5	45.7	88.25
34973.593	42265.6	6.96	.7	119.3	45.7	88.25
34975.594	41096.1	6.76	.7	119.0	45.7	88.25
34977.593	39957.9	6.58	.7	118.5	45.7	88.25
34979.593	38850.4	6.39	.6	117.8	45.8	88.25
34981.593	37773.9	6.22	.6	116.9	45.9	88.25
34983.593	36726.6	6.04	.6	115.9	45.9	88.25

TABLE VIII
APOLLO MISSION AS-502
SPACECRAFT OPERATIONAL TRAJECTORY
-AERODYNAMIC AND GUIDANCE PARAMETERS-

TIME SECONDS	ALTITUDE FEET	ALTITUDE N.MI.	MACH NUMBER	DYNAMIC PRESSURE LB/SQ FT	RCS FUEL POUNDS	ROLL COMMAND DEGREES
34985.593	35708.4	5.88	.6	114.7	45.9	88.25
34987.593	34717.1	5.71	.6	112.8	45.9	88.25
34989.593	33750.6	5.55	.5	111.1	45.9	88.25
34991.593	32806.4	5.40	.5	109.6	45.9	88.25
34993.593	31883.1	5.25	.5	108.3	46.0	88.25
34995.593	30978.6	5.10	.5	107.2	46.0	88.25
34997.593	30091.4	4.95	.5	106.3	46.0	88.25
34999.593	29220.6	4.81	.5	105.4	46.0	88.25
35001.593	28364.9	4.67	.5	104.7	46.0	88.25
35003.594	27523.4	4.53	.5	104.1	46.1	88.25
35005.593	26695.2	4.39	.5	103.5	46.1	88.25
35007.593	25879.9	4.26	.4	103.1	46.1	88.25
35009.594	25076.9	4.13	.4	102.7	46.2	88.25
35011.593	24284.9	4.00	.4	102.3	46.2	88.25
35013.593	23503.9	3.87	.4	102.0	46.2	88.25
35013.994	23348.9	3.84	.4	101.9	46.2	88.25
DROGUE PARACHUTES DEPLOYMENT						
35013.994	23348.9	3.84	.4	101.9	46.2	88.25
35023.993	19868.2	3.27	.3	62.1	46.2	88.25
35033.993	17102.9	2.81	.2	45.9	46.2	88.25
35043.994	14619.7	2.41	.2	44.4	46.2	88.25
35053.994	12247.2	2.02	.2	44.2	46.2	88.25

T40+

TABLE VIII
APOLLO MISSION AS-502
SPACECRAFT OPERATIONAL TRAJECTORY
-AERODYNAMIC AND GUIDANCE PARAMETERS-

TIME SECONDS	ALTITUDE FEET	ALTITUDE N.MI.	MACH NUMBER	DYNAMIC PRESSURE LB/SQ FT	RCS FUEL POUNDS	ROLL COMMAND DEGREES
35063.193	10144.0	1.67	.2	44.1	46.2	88.25
MAIN PARACHUTES DEPLOYMENT						
35063.193	10144.0	1.67	.2	44.1	46.2	88.25
35093.194	8817.5	1.45	.0	1.0	46.2	88.25
35123.193	7850.0	1.29	.0	1.0	46.2	88.25
35153.193	6896.7	1.14	.0	1.0	46.2	88.25
35183.194	5957.2	.98	.0	1.0	46.2	88.25
35213.193	5031.2	.83	.0	1.0	46.2	88.25
35243.193	4117.7	.68	.0	1.0	46.2	88.25
35273.194	3216.7	.53	.0	1.0	46.2	88.25
35303.193	2327.7	.38	.0	1.0	46.2	88.25
35333.193	1450.2	.24	.0	1.0	46.2	88.25
35363.194	584.0	.10	.0	1.0	46.2	88.25