NATIONAL AERONAUTICS AND SPACE ADMINISTRATION

NASA CR-
134446

(NASA-CR-134446) AIRLOADS INVESTIGATION OF AN 0.030-SCALE MODEL OF THE SPACE SHUTTLE VEHICLE 140A/B LAUNCH CONFIGURATION (MODEL 47-OTS) IN THE ARC 11-FOOT UNITARY PLAN WIND TUNNEL FOR MACH RANGE 0.6 TO 1.4 (IA14A).

N75-23658

Unclas
G3/18 20533

SPACE SHUTTLE

AEROTHERMODYNAMIC DATA REPORT

JOHNSON SPACE CENTER

HOUSTON, TEXAS

DATA MANagement services

SPACE DIVISION CHRYSLER CORPORATION

March, 1975

DMS-DR-2084
NASA CR-134,446

VOLUME 4 OF 11

AIRLOADS INVESTIGATION OF AN 0.030-SCALE MODEL OF THE SPACE SHUTTLE VEHICLE 140A/B LAUNCH CONFIGURATION (MODEL 47-OTS) IN THE ARC 11-FOOT UNITARY PLAN WIND TUNNEL FOR MACH RANGE 0.6 TO 1.4 (IA14A)

by

R. L. Gillins
Rockwell International Space Division

Prepared under NASA Contract Number NAS9-13247

by

Data Management Services
Chrysler Corporation Space Division

for

Engineering Analysis Division

Johnson Space Center
National Aeronautics and Space Administration
Houston, Texas

WIND TUNNEL SPECIFICS:

Test Number:	ARC 11-716
NACA Series No.:	IA14A
Model Number:	47-OTS
Test Dates:	4 through 13 September 1973

FACILITY COORDINATOR:

Stuart L. Treon
Mail Stop 227-5
Ames Research Center
Moffett Field, Calif. 94035

Phone: (415) 965-5850

PROJECT ENGINEERS:

R. L. Gillins,
V. Esparza, and W. Embury
Mail Code AC07
Rockwell Int'l. Space Div.
12214 Lakewood Blvd.
Downey, Calif. 90421

Phone: (213) 922-4898

AERODYNAMIC ANALYSIS ENGINEERS:

I. M. Jaremenko
H. G. Webb
Mail Code AC07
Rockwell Int'l. Space Div.
12214 Lakewood Blvd.
Downey. Calif. 90421

Phone: (213) 922-2703

DATA MANAGEMENT SERVICES:

Prepared by: Liaison--D. A. Sarver
Operations--M. M. Mann, J. T. Daviet

Reviewed by: D. E. Poucher, J. L. Glynn

Approved: N. D. Kemp, Manager
Data Management Services

Concurrence: J. G. Swider, Manager
Flight Technology Branch

Chrysler Corporation Space Division assumes no responsibility for the data presented other than display characteristics.

AIRLOADS INVESTIGATION OF AN 0.030-SCALE MODEL

OF THE SPACE SHUTTLE VEHICLE

140A/B LAUNCH CONFIGURATION (MODEL 39-OTS)

IN THE ARC 11-FOOT UNITARY

PLAN WIND TUNNEL FOR MACH RANGE 0.6 TO 1.4 (IA14A)

VOLUME 4

By R. L. Gillins, Rockwell International Space Division

ABSTRACT

This report presents results of tests conducted on an 0.030-scale launch configuration model of the Space Shuttle Vehicle 140A/B in the NASA/ARC 11-Foot Unitary Plan Wind Tunnel. Aerodynamic loads data were obtained at Mach numbers from 0.6 to 1.4.

Surface pressure distributions were obtained simultaneously with six-component stability and control force data on the complete launch configuration. The configuration consisted of the orbiter, an external tank, two solid rocket boosters, and associated intercomponent attach hardware. Angles of attack and sideslip from -10 degrees to +10 degrees were investigated. The tests, designated IA14A, were conducted from 4 September 1973 through 13 September 1973.

TABLE OF CONTENTS

		Page
ABSTRACT		iii
INDEX OF MODEL FIGURES		3
INTRODUCTION		4
NOMENCLATURE		6
CONFIGURATIONS INVESTIGATED		11
INSTRUMENTATION DESCRIPTION		13
TEST FACILITY DESCRIPTION		14
DATA REDUCTION		15
REFERENCES		18
TABLES		
I.	TEST CONDITIONS	21
II.	DATA SET/RUN NUMBER COLLATION SUMMARY	23
III.	MODEL DIMENSIONAL DATA	26
IV.	ORBITER FUSELAGE PRESSURE ORIFICE LOCATIONS	40
V.	ORBITER WING PRESSURE ORIFICE LOCATIONS	41
VI.	ORBITER VERTICAL TAIL PRESSURE ORIFICE LOCATIONS	42
VII.	ORBITER BASE, BODYFLAP, AND OMS NOZZLE PRESSURE ORIFICE LOCATIONS	43
VIII.	EXTERNAL TANK PRESSURE ORIFICE LOCATIONS	44
IX.	SRM PRESSURE ORIFICE LOCATIONS	45
X.	ORBITER ATTACH POINT PRESSURE ORIFICE LOCATIONS	46
XI.	EXTERNAL TANK ATTACH POINT PRESSURE ORIFICE LOCATIONS	47

TABLE OF CONTENTS (Concluded)

	Page
FIGURES	
MODEL	50
TABULATED PRESSURE DATA	69

INDEX OF MODEL FIGURES

Figure		Title	Page
1.		Axis systems.	
	a.	Stability and body axis systems	50
	b.	Orifice location nomenclature diagram	51
2.		Model sketches.	
	a.	Integrated Vehicle - 2 Balances, no attach structure	52
	b.	Integrated Vehicle - 1 Balance, with attach structure	53
	c.	Integrated Vehicle - 2 Balances, with attach structure	54
	d.	Installation side views	55
	e.	Attach hardware	56
	f.	External tank protuberances	57
	g.	SSV orbiter configuration 140A/B	58
	h.	Orbiter nomenclature	59
	i.	Canopy, C_9, and body, B_{26}, lines drawing VL70-00193 and VL70-000140A/B	60
	j.	M_7 - OMS pod	61
	k.	Body flap, F_8, lines drawing no. VL70-000140A/B	62
	l.	Wing, W_{116}, lines drawing no. VL70-000200	63
	m.	Elevon, E_{26}, lines drawing no. VL70-000200, VL70-000140A/B	64
	n.	Vertical tail, V_8, and rudder, R_5, lines drawing no. VL70-000146A	65
	o.	Rudder, R_5, lines drawing no. VL70-000095	66
3.		Model photographs.	
	a.	Front view of model installed in tunnel	67
	b.	Rear view of model installed in tunnel	68

INTRODUCTION

The 0.030-scale aero loads Space Shuttle Model was tested in the ARC Unitary Plan Wind Tunnels as follows:

IA14A	4 thru 13 Sept. 1973
IA14B	17 thru 19 Sept. 1973
OA22A	13 thru 14 Sept. 1973
OA22B	19 thru 20 Sept. 1973

For tests IA14B, OA22A, and OA22B, see reference 34, 35, and 36, respectively.

The testing was conducted in the 11-foot and the 9- by 7-foot tunnels of the ARC Unitary Plan Wind Tunnels. The IAI4A/B tests were for the launch configurations at Mach numbers from 0.6 to 2.2. The OA22A/B tests were for the orbiter alone configuration at Mach numbers from 0.6 to 2.2. The effects of control surface deflections were also investigated in tests OA22A/B.

This report for test IA14A consists of one volume of force data and ten volumes of pressure data for a total of eleven volumes arrayed in the following manner:

Volume No.	Contents	Page
1.	IA14A force data	
2.	IA14A plotted pressure data	
3.	IA14A tabulated pressure data	
	(a) Orbiter fuselage (B)	1-725
	(b) Orbiter base (C)	726-918

Volume No.	Contents	Page
4.	IA14A tabulated pressure data	
	(a) OMS nozzle (E)	919-1145
	(b) Body flap (F)	1146-1338
	(c) OMS pod outside (M)	1339-1531
5.	IA14A tabulated pressure data	
	(a) Lower wing surface (L)	1532-2414
6.	IA14A tabulated pressure data	
	(a) Upper wing surface (U)	2415-3297
7.	IA14A tabulated pressure data	
	(a) Left vertical tail surface (V)	3298-3603
	(b) Right vertical tail surface (R)	3604-3909
8.	IA14A tabulated pressure data	
	(a) SRM booster (S)	3910-4444
9.	IA14A tabulated pressure data	
	(a) External tank (T)	4445-5031
	(b) SRM nozzle (X)	5032-5161
10.	IA14A tabulated pressure data	
	(a) External tank base & SRM booster base (Y)	5162-5354
	(b) Orbiter attach points (1)	5355-5941
11.	IA14A tabulated pressure data	
	(a) External tank attach points (2)	5942-6313
	(b) External tank base rake (3)	6314-6412

NOMENCLATURE
General

SYMBOL	SADSAC SYMBOL	DEFINITION
a		speed of sound; m/sec, ft/sec
C_p	CP	pressure coefficient; $(p_l - p_\infty)/q$
M	MACH	Mach number; V/a
p		pressure; N/m^2, psf
q	Q(NSM) Q(PSF)	dynamic pressure; $1/2\rho V^2$, N/m^2, psf
RN/L	RN/L	unit Reynolds number; per m, per ft
V		velocity; m/sec, ft/sec
α	ALPHA	angle of attack, degrees
β	BETA	angle of sideslip, degrees
ψ	PSI	angle of yaw, degrees
ϕ	PHI	angle of roll, degrees
ρ		mass density; kg/m^3, $slugs/ft^3$
		Reference & C.G. Definitions
A_b		base area; m^2, ft^2
b	BREF	reference span; m, ft
c.g.		center of gravity
$\bar{c}$		reference length or wing mean aerodynamic chord; m, ft
S	SREF	wing area or reference area; m^2, ft^2
	MRP	moment reference point
	XMRP	moment reference point on X axis
	YMRP	moment reference point on Y axis
	ZMRP	moment reference point on Z axis

SUBSCRIPTS

b	base
l	local
s	static conditions
t	total conditions
∞	free stream

NOMENCLATURE (Continued)

Body-Axis System

SYMBOL	SADSAC SYMBOL	DEFINITION
C_N	CN	normal-force coefficient; $\frac{\text{normal force}}{qS}$
C_A	CA	axial-force coefficient; $\frac{\text{axial force}}{qS}$
C_Y	CY	side-force coefficient; $\frac{\text{side force}}{qS}$
C_{A_b}	CAB	base-force coefficient; $\frac{\text{base force}}{qS}$ $-A_b(p_b - p_\infty)/qS$
C_{A_f}	CAF	forebody axial force coefficient, $C_A - C_{A_b}$
C_m	CIM	pitching-moment coefficient; $\frac{\text{pitching moment}}{qS\ell_{REF}}$
C_n	CYN	yawing-moment coefficient; $\frac{\text{yawing moment}}{qSb}$
C_ℓ	CBL	rolling-moment coefficient; $\frac{\text{rolling moment}}{qSb}$
		Stability-Axis System
C_L	CL	lift coefficient; $\frac{\text{lift}}{qS}$
C_D	CD	drag coefficient; $\frac{\text{drag}}{qS}$
C_{D_b}	CDB	base-drag coefficient; $\frac{\text{base drag}}{qS}$
C_{D_f}	CDF	forebody drag coefficient; $C_D - C_{D_b}$
C_Y	CY	side-force coefficient; $\frac{\text{side force}}{qS}$
C_m	CIM	pitching-moment coefficient; $\frac{\text{pitching moment}}{qS\ell_{REF}}$
C_n	CLN	yawing-moment coefficient; $\frac{\text{yawing moment}}{qSb}$
C_ℓ	CTL	rolling-moment coefficient; $\frac{\text{rolling moment}}{qSb}$
L/D	L/D	lift-to-drag ratio; C_L/C_D

NOMENCLATURE (Continued)
Additions To Standard List

Symbol	SADSAC Symbol	Definition
$A_{(\ )}$		model base area, subscript is base orifice number and identifies location
C_{A_b}	CAB	model base axial-force coefficient
$C_{p_{(\ )}}$		model static pressure coefficient, subscript is orifice number, $[p_{(\ )} - p_\infty]/q$
C_{AU}	CA	axial-force coefficient, unadjusted
C_{AF}	CAF	forebody axial-force coefficient, C_{AU} adjusted for base terms
ET		external tank
IV		integrated vehicle, consists of orbiter, external tank, and two solid rocket motors
ℓ_{REF}	LREF	reference length, inches
MRC		moment reference center
OMS		orbital maneuvering system
δ_e	ELEVON	elevon, surface deflection angle, positive deflection trailing edge down, degrees
δ_f	BDFLAP	orbiter body flap deflection angle, positive deflection angle is trailing edge down, degrees
δ_R	RUDDER	rudder, surface deflection angle, positive deflection trailing edge to the left, degrees
δ_{SB}	SPDBRK	speed brake deflection angle, left split rudder trailing edge left and right split rudder trailing edge right, $\delta_{SB} = (\delta_{RL} + \delta_{RR})/2$, positive deflection, degrees
i_o	ORBINC	incidence angle between the orbiter and external tank, $i_0 = \alpha_0 - \alpha_T$, degrees

NOMENCLATURE (Continued)

β_T	BETAT	angle of sideslip of external tank, degrees
α_T	ALPHAT	angle of attack of external tank, degrees
ℓ_B	LB	length of orbiter body, in
ℓ_T	LT	length of external tank, in
ℓ_S	LS	length of SRM booster, in
ℓ_{NM}	LNM	length of OMS nozzle, positive direction forward of exit plane, in
ℓ_{NP}	LNP	length of MPS nozzle, positive direction forward of exit plane, in
b/2	BW	wing semi-span, in
b_v	BV	vertical tail span, in
x	X	distance from component nose, in
y	Y	lateral distance from centerline, in
z	Z	vertical distance measured from W.L. 500 (vertical tail reference root chord), in
c_w	CW	local wing chord, in
c_v	CV	local vertical tail chord, in
x/ℓ_B	X/LB	longitudinal position/orbiter body length
x/ℓ_T	X/LT	longitudinal position/external tank length
x/ℓ_S	X/LS	longitudinal position/booster length
x/ℓ_{NM}	X/LNM	longitudinal position/OMS nozzle length

NOMENCLATURE (Concluded)

x/ℓ_{NP}	X/LNP	longitudinal position/MPS nozzle length
x/c_w	X/CW	local chordwise position/local wing chord length
x/c_v	X/CV	local chordwise position/local vertical tail chord length.
η	Y/BW	local spanwise position/wing semi-span
η_v	Z/BV	local spanwise position/vertical tail span
x_{CP}/ℓ	XCP/L	center of pressure distance from MRC, expressed as a fraction of body length
β_0	BETAO	angle of sideslip of orbiter
α_0	ALPHAO	angle of attack of orbiter

CONFIGURATIONS INVESTIGATED

The 0.030-scale Aero Loads Model, 47-OTS, was configured after the Shuttle Vehicle MCR 0200 Baseline R1, as defined in drawing number VL70-000088B. The orbiter configuration was a combination of the VL70-000140A orbiter and a VL70-000140B wing and midbody, from which the 140A/B designation was derived. The basic launch configuration consisted of the orbiter, an external tank with simulated fuel and vent lines, and two solid rocket boosters, designated O_1 T_{12} S_{12} N_{25}.

Three launch configurations were tested. One was the basic configuration described above mounted on a dual balance and sting arrangement, illustrated in figure 2d. A second contained attach hardware, designated AT_{10}, mating the orbiter with the external tank and mounted on a single sting and balance in the orbiter, illustrated in figure 2b. The third utilized a similar attach hardware configuration, designated AT_{11}, which was attached to the orbiter but not to the external tank and was mounted on the same dual sting and balance arrangement as the basic configuration (figure 2c). In all three configurations, the SRB-to-ET attach hardware was simulated at the forward attach location but not at the aft attach location. Model and component general arrangements are shown in figures 2e through 2o.

Component	Description
O_1	140A/B orbiter minus the main propulsion system nozzles
T_{12}	324-inch diameter external tank with ogive nose and external fuel and vent lines
S_{12}	142.3-inch diameter solid rocket boosters

N_{25}	Nozzles for S_{12} boosters
AT_{10}	Orbiter-to-ET attach hardware, fixed to both vehicles
AT_{11}	Orbiter-to-ET attach hardware, fixed to orbiter only
LV	O_1 T_{12} S_{12} N_{25}
LVA	O_1 T_{12} S_{12} N_{25} AT_{10}
LVA^{p}	O_1 T_{12} S_{12} N_{25} AT_{11}

The orbiter O_1, consisted of the following components:

B_{26} C_9 F_8 M_7 N_{28} V_8 R_5 W_{116} E_{26}.

B_{26}	Double delta wing fuselage, 140A/B
C_9	Canopy, 140A
F_8	Body flap, 140A
M_7	OMS pods, 140A
N_{28}	OMS nozzles, 140A
V_8	Vertical tail, 140A
R_5	Rudder, 140A
W_{116}	Double delta wing, 140B
E_{26}	Elevons, 140B

Parametric investigations were limited to angles of attack and sideslip with all orbiter control surfaces at 0° deflection.

INSTRUMENTATION DESCRIPTION

The left side of the orbiter and the external tank and the left hand SRB were extensively instrumented with pressure orifices for measurement of surface static pressure distributions. Additionally, there were clusters of orifices around inter-component attach structure locations on the right hand side of the orbiter and external tank. The orbiter contained 471 operational orifices, of which 83 were clustered around attach structure. The external tank contained 270 operational orifices, of which 127 were clustered around attach structure. The SRB contained 124 operational orifices. A three-tube total pressure rake was installed in the opening between the orbiter and external tank. Tables and sketches defining orifice locations are included in this report. All model pressures were measured by model mounted Scanivalve, Inc., S-type scanivalve modules - twelve in the orbiter, seven in the external tank, and five in the SRB.

Force instrumentation consisted of a six-component internal force balance in both the orbiter and external tank for the LV and LVAP configurations, and a single six-component internal force balance in the orbiter for the attached LVA configuration.

TEST FACILITY DESCRIPTION

The tests were conducted in the Ames 11- by 11-Foot Transonic Wind Tunnel which is a variable density, closed return, continuous flow type. This tunnel has an adjustable nozzle (two flexible walls) and a slotted test section to permit transonic testing over a Mach number range continuously variable from 0.4 to 1.4.

DATA REDUCTION

Data were reduced to coefficient form about body axes using the following reference constants:

S_{REF}	= 2.421 ft^2	reference area for force and moment coefficients
ℓ_{REF}	= 38.709 in	reference length for moment coefficients
A_1	= 0.07670 ft^2	Orbiter sting cavity
A_2	= 0.21340 ft^2	Orbiter heat shield base
A_3	= 0.08560 ft^2	Orbiter OMS base (2)
A_4	= (see table below)	Orbiter speed brake base
A_{501}	= 0.07266 ft^2	Tank sting cavity
A_{502}	= 0.44264 ft^2	Tank base
A_{801}	= 0.19600 ft^2	SRM nozzle base (2)
A_{802}	= 0.16590 ft^2	SRM skirt base (2)

δ_{SB} =	deg	A_4 =	ft^2
0		0	
14.92		0.02327	
24.92		0.03866	
34.92		0.05370	
54.92		0.08252	
84.92		0.12083	

X_{MRP} = 0 in

Y_{MRP} = 0 in

Z_{MRP} = 9.99 in

The incidence angle between the orbiter and the external tank is equal to zero for angle of attack and angle of sideslip. Therefore, the angle of attack, ALPHA, used in the force plots is equal to ALPHAO. Also the angle of sideslip, BETA, used in the force plots is equal to BETAO.

The force and moment data recorded by the orbiter balance for configuration LV and LVAP are identified as RB10XX datasets. Force and moment data recorded by the tank balance for configuration LV and LVAP and by the orbiter balance for LVA (composite) are identified by RB1IXX.

The pressure data were recorded for each component. The fourth character in each dataset identifier (i.e. RB1BXX, B for fuselage) represents the individual component. The following list indicates the symbol for each component.

SYMBOL	COMPONENT
B	Orbiter fuselage
C	Orbiter base
E	OMS nozzle
F	Body flap
M	OMS pod outside
L	Lower wing surface
U	Upper wing surface
R	Right vertical tail surface
V	Left vertical tail surface
S	SRM booster
T	External tank
X	SRM nozzle

SYMBOL	COMPONENT
Y	External tank base & SRM booster base
1	Orbiter attach points
2	External tank attach points
3	External tank base rake

REFERENCES

1. Orbiter - Lines and Configuration Control Drawings
2. VL70-000140A, Orbiter Configuration Control Drawing MCR 0200 Baseline
3. VL70-000143A, Lines Control, Vehicle 4 Forward Body - Cabin - Canopy MCR 0200 Baseline
4. VL70-000200, Lines Control, Midbody - Wing - Boot Fairing MCR 200 R3 dated 7-2-73
5. VL70-000145, Lines Control - Aft Body - OMS/RCS Pods, MCR 0200 - R1 baseline
6. VL70-000146A, Lines Control (Vehicle 4) Vertical Tail MCR 0200 Baseline
7. External Oxygen Hydrogen Tank (EOHT) - Lines and Configuration Control Drawings
8. VL78-000041B, External Tank - Configuration Control MCR 0200 Baseline R2
9. VL78-000024A, Structural Assy - External Tank MCR 0200 R2
10. VL78-000031A, Thermal Protection - External Tank, MCR 0200 Baseline
11. Solid Rocket Boosters (SRB) - Lines and Configuration Control Drawings
12. VL77-000036A, SRB Configuration Control MCR 0200 R1
13. VL77-000041, SRB Booster Assy, MCR 0200 R1
14. Integrated Vehicle - Lines and Configuration Control Drawings
15. VL72-000088A, Shuttle Configuration MCR 0200 Baseline R1
16. VL72-000089, SRB-ET-Orbiter Interface Disconnects MCR 0200 Baseline
17. VL72-000075, External Tank to SRB Attach Interface MCR 0074 Baseline
18. Aero Loads Model 47-OTS - Model Fabrication, Assembly and Installation Drawings

19. SS-A00119, Orbiter Assy - .030 Scale Pressure/Loads Model (140A/B Lines)

20. SS-A00120, Assy & Details - EOHT - .030 Scale Pressure/Loads Model (140A Lines)

21. SS-A00121, Orbiter/EOHT Attachments .030 Scale Pressure/Loads Model (140A Lines)

22. SS-A00122, Assy & Details - SRM - .030 Scale Pressure/Loads Model (140A Lines)

23. SS-A00123, Assy & Details - Forebody - .030 Scale Pressure/ Loads Model (140A Lines)

24. SS-A00124, Assy & Details - Aft Fuselage - .030 Scale Pressure/ Loads Model (140A Lines)

25. SS-A00125, Assy & Details - Wing Splice Plate & Cuff - .030 Scale Pressure/Loads Model (140A Lines)

26. SS-A00126, Assy & Details - Vertical Stabilizer - .030 Scale Pressure/Loads Model (140A Lines)

27. SS-A00127, Ames 11-ft x 11-ft Wind Tunnel Installation - .030 Scale Pressure/Loads Model (140A/B Lines)

28. SS-A00128, Ames 9-ft x 7-ft Wind Tunnel Installation - .030 Scale Pressure/Loads Model (140A/B Lines)

29. SS-A00130, Lines Control - Profile VL70-000140A - .030 Scale Pressure/Loads Model (140A/B Lines)

30. W-1104S Sting - Ames MK II 4" Balance (Male End), Ames MK XX 2.5" Balance

31. W-1105S, Sting - Ames MK II 4" Balance (Male End), RI MK I 2.75 Balance

32. W-1106A, Adapter - Ames MK II, 4" Balance (Male & Female)

33. W-1107A, 13.5° Bent Sting Adapter Ames MK II 4" Balance (Male & Female)

34. (DMS-DR-2129), "Airloads Investigation of an 0.030-Scale Model of the Space Shuttle Vehicle 140A/B Launch Configuration (Model 47-OTS) in the ARC 9- by 7-foot Unitary Plan Wind Tunnel for Mach Range 1.55 and 2.2 (IA14B)"

35. (DMS-DR-2130), "Airloads Investigation of an 0.030-Scale Model of the Space Shuttle Vehicle 140A/B Orbiter Configuration (Model 47-O) in the ARC 11-foot Unitary Plan Wind Tunnel for Mach Range 0.6 and 0.9 (OA22A)"

36. (DMS-DR-2131), "Airloads Investigation of an 0.030-Scale Model of the Space Shuttle Vehicle 140A/B Orbiter Configuration (Model 47-O) in the ARC 9- by 7-foot Unitary Plan Wind Tunnel for Mach Range 1.55 and 2.2 (OA22B)"

TABLE I.

TEST : 1A-14A

DATE : 9-13-73

TEST CONDITIONS

MACH NUMBER	REYNOLDS NUMBER (per unit length)	DYNAMIC PRESSURE (pounds/sq. ft.)	STAGNATION TEMPERATURE (degrees Fahrenheit)
0.60	4.0×10^6	480	120
0.75	3.75×10^6	540	120
0.85	3.5×10^6	550	120
0.90	3.5×10^6	580	120
0.95	3.25×10^6	610	120
0.975	3.0×10^6	530	120
1.00	3.0×10^6	535	120
1.025	3.0×10^6	540	120
1.05	3.0×10^6	545	120
1.10	3.0×10^6	550	120
1.15	3.0×10^6	575	120
1.25	2.75×10^6	540	120
1.40	2.75×10^6	570	120

BALANCE UTILIZED: LVA: 2.5-in MK XX (ORBITER)
LVAP: 2.5-in MK XX (ORB.), 2.75-in MK I (FT)

	CAPACITY: MK XX	CAPACITY: MK I	ACCURACY: MK XX	ACCURACY: MK I	COEFFICIENT TOLERANCE:
NF	6000	7500			
SF	3000	3750	0.2%	0.2%	
AF	600	700	0.2%	0.2%	
PM					
RM	4000	4000	0.2%	0.2%	
YM					

COMMENTS: Test conditions for LVA and LVAP model configurations

ORIGINAL PAGE IS
OF POOR QUALITY

TABLE I. - Concluded.

TEST : IA-14A

DATE : 9-13-73

TEST CONDITIONS

MACH NUMBER	REYNOLDS NUMBER (per unit length)	DYNAMIC PRESSURE (pounds/sq. ft)	STAGNATION TEMPERATURE (degrees Fahrenheit)
0.60	4.0×10^6	480	120
0.75	4.25×10^6	610	120
0.85	4.5×10^6	710	120
0.90	4.5×10^6	750	120
0.95	4.5×10^6	780	120
0.975	4.25×10^6	750	120
1.05	4.25×10^6	790	120
1.10	4.0×10^6	760	120
1.15	3.75×10^6	720	120
1.25	2.75×10^6	735	120
1.40	3.0×10^6	620	120

BALANCE UTILIZED: 2.5-in MK XX (ORB.), 2.75-in MK I (ET)

	CAPACITY: MK XX	CAPACITY: MK I	ACCURACY MK XX	ACCURACY MK I	COEFFICIENT TOLERANCE:
NF	6000	7500	0.2	0.2	
SF	3000	3750	0.2	0.2	
AF	600	700	0.2	0.2	
PM					
RM	4000	4000	0.2	0.2	
YM					

COMMENTS: Test conditions for IV model configs.

TABLE II

TEST: [illegible]

DATA SET RUN NUMBER COLLATION SUMMARY

DATE: 13 Sept 1973

DATA SET IDENTIFIER	CONFIGURATION	SCHD. α	SCHD. β	CONTROL DEFLECTION [illegible]	NO. OF RUNS	MACH NUMBERS OR ALTERNATE INDEPENDENT VARIABLE 0.9	0.975	1.1	1.25					
RB 17	Ø1+T12+S12+N25+AT11	3	0	[illegible]		[illegible]	[illegible]	92	89					
18	↓ +AT11	0	0			[illegible]	[illegible]	91	90					
24	Ø1+T12+S12+N25+AT10	-10	7			[illegible]								
25		-8				[illegible]								
26		-6				[illegible]								
27		-4	-10			[illegible]								
28		0	[illegible]						38					
29		-10	0						39*					
30	Ø1+T12+S12+N25+AT11	0	0							D/62				

TEST RUN NUMBERS

1	13	19	25	31	37	43	49	55	61	67	75 76
CN	CLN	CA	CAF	CY	CYN	CBL					

IDVAR (1) IDVAR (2) NDV

α SCHEDULES

α(B) = β(B) = -8, -4, 0, 4, 8

β(Z) = -10, +10

β(Y) = -10, -8, -6, --, -2, 0

MACH (D) = 0.975, 1.0, 1.[illegible]

NASA-MSFC-MAF

* FORCE DATA NOT AVAILABLE.

ORIGINAL PAGE IS OF POOR QUALITY

TABLE II - Continued

TEST: IA14A

DATA SET RUN NUMBER COLLATION SUMMARY

DATE [illegible]

DATA SET IDENTIFIER	CONFIGURATION	SCHD. β	PARAMETERS/VALUES M	δ_e	δ_R	δ_{SB}	NO. OF RUNS	-10	-8	-6	-4	2	0	2	4	6	8	10
RB1 x 31	$\Phi_1+T_{12}+S_{12}N_{25}+AT_{10}$	A	.9	0	0	0		1*	2*	3*	4*	5	6	7	12	13	14	15
32			1.1					16*	17*	18*	19*	20	21	22	23	24	25	26
33			1.25					27*	28*	29*	30*	31	32	33	34	35	36	37
34	$+AT_{11}$	B	.60						47		48		49		50		51	
35			.75						56		55		54		53		52	
36			.85						42		43		44		45		46	
37			.95						57		58		59		60		61	
38			1.05						63		64		65		66		67	
39			1.15						68		69		70		71		72	
40			1.4						84		85		86		87		88	
41			.65						149		148		147		146		145	
42			.75						140		141		142		143		144	
43			.85						135		136		137		138		139	
44			.90						130		131		132		133		134	
45			[illegible]						125		126		127		128		129	
46			.975						120		121		122		123		124	
47			1.05						115		116		117		118		119	
48			1.10						110		111		112		113		114	

TEST RUN NUMBERS

1 7 13 19 25 31 37 43 49 55 61 67 75 76

α OR β SCHEDULES

COEFFICENTS

$\beta(A) = -10$ to $+10$, 2 [illegible]

$\beta(B) = -8, -4, 4, 8$

IDVAR (1) IDVAR (2) NDV

* FORCE DATA NOT AVAILABLE.

ORIGINAL PAGE IS OF POOR QUALITY

TABLE II - Concluded

TEST: TA14A

DATA SET/RUN NUMBER COLLATION SUMMARY

DATE: 13 Sept. 1973

DATA SET IDENTIFIER	CONFIGURATION	SCHD.	PARAMETERS/VALUES				NO. OF RUNS	ALPHA (OR ALTERNATE INDEPENDENT VARIABLE)									
		β	M	[illegible]	[illegible]	[illegible]		-8	-4	0	4	8					
RB1x49	$\phi_1+T_2+S_{12}N_{25}$	B	1.15	0	0	0		105	106	107	108	109					
50			1.25					95	96	97	98	99					
51			1.40					100	101	102	103	104					

TEST RUN NUMBERS

1 7 13 19 25 31 37 43 49 55 61 67 75 76

COEFFICENTS

IDVAR (1) IDVAR (2) NDV

α OR β SCHEDULES: β(B) = -8, -4, 0, 4,

ORIGINAL PAGE IS OF POOR QUALITY

TABLE III. - MODEL DIMENSIONAL DATA

MODEL COMPONENT: ATTACH STRUCTURE - AT_{10}

GENERAL DESCRIPTION: Attach structure for Integrated Vehicle Configuration 4 per VL72-000088B and VL72-000089, modified as follows: Removed ET-to-SRM aft attach struts (4) and left orbiter to right ET aft attach crossover rod.

MODEL SCALE: 0.030

DRAWING NO.: SEE DESCRIPTION

DIMENSIONS:	FULL SCALE	MODEL SCALE
FORWARD ATTACH		
Orbiter to Tank		
Number of struts	2	2
Diameter - In.	6.000	0.180
Location - In.		
X_O	382.000	11.460
X_T	1078.000	32.340
DRAG LINK ATTACH		
Orbiter to Tank		
Number of struts	2	2
Diameter, In.	15.000	0.450
Location, In.		
X_O	1307.000	39.210
X_T	1859.000	55.770
AFT ATTACH		
Orbiter to Tank		
Number of struts	2	2
Diameter - In.	12.000	0.360
Location - In.		
X_O	1307.000	39.210
X_T	2058.000	61.740
CROSSOVER ROD (RIGHT ORBITER TO LEFT ET)		
Diameter, In.	8.000	0.240
Location - In.		
X_O	1307.000	39.210
X_T	2058.000	61.740

TABLE III. - Continued.

MODEL COMPONENT: ATTACH STRUCTURE - AT_{11}

GENERAL DESCRIPTION: Attach structure, same as AT_{10} except the forward attach struts are rotated to the vertical, and the structure extends from the orbiter but is not attached to the tank.

MODEL SCALE: 0.030

DIMENSIONS:	FULL SCALE	MODEL SCALE
FORWARD ATTACH		
Orbiter to Tank		
Location - In.		
X_o	382.000	11.460
X_T	1133.000	33.990
Clearance, tank to strut - In.	16.667	0.500
DRAG LINK ATTACH		
Orbiter to Tank		
Clearance, tank to strut - In.	8.333	0.250
AFT ATTACH		
Orbiter to Tank		
Clearance, Tank to strut - In.	8.333	0.250
Crossover Rod		
Clearance, tank to strut - In.	8.333	0.250

TABLE III. - Continued.

MODEL COMPONENT: BODY - B_{26}

GENERAL DESCRIPTION: Orbiter Fuselage Configuration 140 A/B

NOTE: B_{26} identical to B_{24} except underside of fuselage refaired to accept W_{116}.

Model Scale = .030

DRAWING NUMBER: VL70-000193, VL70-000140A

DIMENSIONS:	FULL-SCALE	MODEL SCALE
Length (Body Fwd Sta X_o = 238) - in.	1293.3	38.799
Max. Width (at X_o = 1520) - in.	262.0	7.860
Max. Depth (at X_o = 1464) - in.	250.0	7.500
Fineness Ratio	0.26357	0.26357
Area - ft^2		
Max. Cross-Sectional	340.88462	0.30679
Planform		
Wetted		
Base		

TABLE III. - Continued.

MODEL COMPONENT: CANOPY - C_9

GENERAL DESCRIPTION: Configuration 3A

Model Scale = .030

DRAWING NUMBER VL70-000140A
VL70-000143A

DIMENSION:	FULL SCALE	MODEL SCALE
Length (X_o=434.643 to 670)	235.357	7.06071
Max Width (@ X_o=513.127)	152.412	4.57236
Max Depth (@ X_o=485.0)	25.000	0.75000
Fineness Ratio		
Area		
Max Cross-Sectional		
Planform		
Wetted		
Base		

ORIGINAL PAGE IS
OF POOR QUALITY

TABLE III. - Continued.

MODEL COMPONENT: ELEVON - E_{26}

GENERAL DESCRIPTION: Configuration 4

NOTE: VL70-000400 data for (1) of (2) sides. Identical to E_{25} except airfoil thickness

Model Scale = .030

DRAWING NUMBER: VL70-000 200
VL70-000140 B

DIMENSIONS:	FULL-SCALE	MODEL SCALE
Area	223.5814	0.20122
Span (equivalent)	368.34	11.05020
Inb'd equivalent chord	119.623	3.58869
Outb'd equivalent chord	55.1922	1.65577
Ratio movable surface chord/ total surface chord		
At Inb'd equiv. chord	0.2096	0.2096
At Outb'd equiv. chord	0.4004	0.4004
Sweep Back Angles, degrees		
Leading Edge	0.00	0.00
Tailing Edge	-10.056	-10.056
Hingeline	0.00	0.00
Area Moment (Normal to hinge line)	851.1502	0.76604

TABLE III. - Continued.

MODEL COMPONENT: Body Flap - F_8

GENERAL DESCRIPTION: Configuration 4

Model Scale - .030

DRAWING NUMBER VL70-000140B, VL70-000200

DIMENSION:	FULL SCALE	MODEL SCALE
Length in.	84.7	2.541
Max Width in.	262.308	7.86924
Max Depth in.	23.000	~~0.69000~~
Fineness Ratio		
Area - ft^2		
Max Cross-Sectional		
Planform	158.85350	0.14297
Wetted		
Base	41.89642	0.03771

ORIGINAL PAGE IS
OF POOR QUALITY

TABLE III. - Continued.

MODEL COMPONENT: OMS POD - M_7

GENERAL DESCRIPTION: Configuration 3A

Model Scale = .030

DRAWING NUMBER VL70-000140A
VL70-000145

DIMENSION:	FULL SCALE	MODEL SCALE
Length (OMS Fwd Sta X_o=1233.0) - IN.	327.000	9.810
Max Width (@ X_o=1450.0) - IN.	94.5	2.8350
Max Depth (@ X_o=1493.0) - IN.	109.000	3.270
Fineness Ratio		
Area		
Max Cross-Sectional		
Planform		
Wetted		
Base		

TABLE III. - Continued.

MODEL COMPONENT: BSRM NOZZLES - N_{25}

GENERAL DESCRIPTION: Configuration 3A BSRM Nozzles

Model Scale = .030

DRAWING NO. VL72-000088A
VL77-000036A

DIMENSIONS	FULL-SCALE	MODEL SCALE
MACH NO. _____		
DIAMETER DEX ~ IN (One Nozzle)	141.3	4.2390
DIAMETER DT ~ IN		
DIAMETER DIN ~ IN		
ON ~ DEGREES		
AREA - FT^2 (One Nozzle)		
MAX CROSS-SECTIONAL	108.89595	0.09801

GIMBAL ORIGIN	X_o	Y_o	Z_o
LEFT NOZZLE ~ IN. F.S.	1825.3	-243	400
RIGHT NOZZLE ~ IN. FS	1825.3	+243	400

NULL POSITION - DEG.	PITCH	YAW
LEFT NOZZLE	±8	±8
RIGHT NOZZLE	±8	±8

ORIGINAL PAGE IS
OF POOR QUALITY

TABLE III. - Continued.

MODEL COMPONENT: NOZZLES - N_{28}

GENERAL DESCRIPTION: Configuration 3A OMS Nozzle

Model Scale = .030

DRAWING NO. VL70-000140A

DIMENSIONS	FULL-SCALE	MODEL SCALE
MACH NO. _____		
DIAMETER DEX ~ IN (One nozzle)		
DIAMETER DT ~ IN		
DIAMETER DIN ~ IN		
ON ~ DEGREES		
AREA - Ft^2 (one nozzle)		
MAX CROSS-SECTIONAL		

GIMBAL ORIGIN	X_o	Y_o	Z_o
LEFT NOZZLE ~ IN.	1518.0	-88.0	492.0
RIGHT NOZZLE ~ IN.	1518.0	+88.0	492.0

NULL POSITION	PITCH	YAW
LEFT NOZZLE (Null Pitch 15°49'; Yaw 12°17' OUTB'D)	±8°	13°17' OUTB'D 2°30' INB'D
RIGHT NOZZLE (Null Pitch 15°49': Yaw 12°17' OUTB'D)	±8°	13°17' OUTB'D 2°17' INB'D

TABLE III. - Continued.

MODEL COMPONENT: RUDDER - R5

GENERAL DESCRIPTION: 2A, 3 and 3A Configuration per Rockwell Lines VL70-000095

Model Scale = .030

DRAWING NUMBER: VL70-000095

DIMENSIONS:	FULL-SCALE	MODEL SCALE
Area - FT^2	106.38	0.09574
Span (equivalent) - IN.	201.0	6.0300
Inb'd equivalent chord	91.585	2.74755
Outb'd equivalent chord	50.833	1.52499
Ratio movable surface chord/ total surface chord		
At Inb'd equiv. chord	0.400	0.400
At Outb'd equiv. chord	0.400	0.400
Sweep Back Angles, degrees		
Leading Edge	34.83	34.83
Tailing Edge	26.25	26.25
Hingeline	34.83	34.83
Area Moment (Normal to hinge line)- FT^3 Product of Area and Mean Chord	526.13	0.01420

TABLE III. - Continued.

MODEL COMPONENT: BOOSTER SOLID ROCKET MOTOR - S_{12}

GENERAL DESCRIPTION: Configuration 3A, Data for (1) of (2) sides, per Rockwell Lines VL77-000036A

Model Scale = .030

DRAWING NUMBER VL72-000088A VL77-000036A

DIMENSION:	FULL SCALE	MODEL SCALE
Length (Includes Nozzle) - IN.	1741.0	52.2300
Max Width (Tank Dia) - IN.	142.3	4.2690
Max Depth (Aft Shroud) - IN.	192.0	5.7600
Fineness Ratio	9.06771	9.06771
Area - FT^2		
Max Cross-Sectional	201.06193	0.18096
Planform		
Wetted		
Base		
WP of BSRM Centerline (Z_T) - IN.	400	12.000
FS of BSRM Nose (X_T) - IN.	200	6.000

TABLE III. - Continued.

MODEL COMPONENT: EXTERNAL TANK - T12

GENERAL DESCRIPTION: External Oxygen Hydrogen Tank

NOTE: Identical to T11 with external fuel lines added

Model Scale = .030

DRAWING NUMBER VL78-000031A
VL73-000041A

DIMENSION:	FULL SCALE	MODEL SCALE
Length - IN. (Nose @ X_T = 309)	1865	57.629
Max Width (Dia) - IN.	324	9.72
Max Depth		
Fineness Ratio	5.75617	5.75617
Area - FT^2		
Max Cross-Sectional	572.555	17.177
Planform		
Wetted		
Base		
WP of Tank Centerline (X_T) - IN.	400.0	

ORIGINAL PAGE IS
OF POOR QUALITY

TABLE III. - Continued.

MODEL COMPONENT: VERTICAL - V_8

GENERAL DESCRIPTION: Configuration 3A

NOTE: Similar to V5 with radius on TE upper corner and LE lower corner where vertical meets fuselage.

Model Scale = .030

DRAWING NUMBER: VL70-000140A
VL70-000146A

DIMENSIONS:	FULL-SCALE	MODEL SCALE
TOTAL DATA		
Area (Theo) Ft^2	413.253	0.37193
Planform		
Span (Theo) In	315.720	9.47160
Aspect Ratio	1.675	1.675
Rate of Taper	0.507	0.507
Taper Ratio	0.40399	0.40399
Sweep Back Angles, degrees		
Leading Edge	45.00	45.00
Trailing Edge	25.947	25.947
0.25 Element Line	41.130	41.1300
Chords:		
Root (Theo) WP	268.500	8.05500
Tip (Theo) WP	108.470	3.25410
MAC	199.80756	5.99423
Fus. Sta. of .25 MAC	1463.50	43.9050
W. P. of .25 MAC	635.522	19.06566
B. L. of .25 MAC	0.00	0.00
Airfoil Section		
Leading Wedge Angle Deg	10.00	10.00
Trailing Wedge Angle Deg	14.920	14.920
Leading Edge Radius (Min) - IN.	2.00	0.060
Void Area	13.17	0.01185
Blanketed Area	0.00	0.00

ORIGINAL PAGE IS OF POOR QUALITY

TABLE III. - Concluded.

MODEL COMPONENT: WING-W116

GENERAL DESCRIPTION: Configuration 4

NOTE: Identical to W_{114} except airfoil thickness. Dihedral angle is along trailing edge of wing.

Model Scale = .030

TEST NO.

DWG. NO. VL70-000140B VL70-000200

DIMENSIONS:	FULL-SCALE	MODEL SCALE
TOTAL DATA		
Area (Theo.) Ft^2		
Planform	2690.00	2.4210
Span (Theo In.	936.6816	28.10045
Aspect Ratio	2.265	2.265
Rate of Taper	1.177	1.177
Taper Ratio	0.200	0.200
Dihedral Angle, degrees(at X_o=1506.623,Y_o=	3.500	3.500
Incidence Angle, degrees 105, Z_o= 282.75)	0.500	0.500
Aerodynamic Twist, degrees	+3.000	+3.000
Sweep Back Angles, degrees		
Leading Edge	45.00	45.00
Trailing Edge	-10.056	-10.056
0.25 Element Line	35.209	35.209
Chords:		
Root (Theo) B.P.O.O.	689.2429	20.67729
Tip, (Theo) B.P.	137.8486	4.13546
MAC	474.8117	14.24435
Fus. Sta. of .25 MAC	1126.721	33.80163
W.P. of .25 MAC	291.00	8.73000
B.L. of .25 MAC	187.33491	5.62005
EXPOSED DATA		
Area (Theo) Ft^2	1812.2205	1.63010
Span, (Theo) In. BP108	736.6816	22.10045
Aspect Ratio	2.058	2.058
Taper Ratio	0.2451	0.2451
Chords		
Root BP108	570.6230	17.11869
Tip 1.00 $\frac{b}{2}$	137.8512	4.13554
MAC	354.2376	10.62713
Fus. Sta. of .25 MAC	1164.237	34.92711
W.P. of .25 MAC	292.00	8.76000
B.L. of .25 MAC	239.67786	7.19034
Airfoil Section (Rockwell Mod NASA) XXXX-64		
Root $\frac{b}{2}$ = 0.425	0.113	0.113
Tip $\frac{b}{2}$ = 1.00	0.12	0.12
Data for (1) of (2) Sides		
Leading Edge Cuff		
Planform Area Ft^2	118.333	0.10650
Leading Edge Intersects Fus M. L. @ Sta	505.0	15.15000
Leading Edge Intersects Wing @ Sta	1003.5	30.10500

ORIGINAL PAGE IS OF POOR QUALITY

TABLE IV. - ORBITER FUSELAGE PRESSURE ORIFICE LOCATIONS

	ORBITER X_o IN.			RADIAL LOCATION Ø DEGREES																	
	FULL	MODEL	Xo/lo	o	20	40	55	70	90	105	110	120	135	140	150	151	156	162	165	169	174	180
	235	7.05	0	6																		
	245	7.35	.008	7					8													9
	265	7.95	.023	10	11	12	13	14	15			16			17							18
	295	8.85	.047	19	20	21	22	23	24			25			26							27
	325	9.75	.070	28	29	30	31	32	33			34			35							36
	380	11.40	.112	37	38	39	40	41	42			43			44							45
	440	13.20	.159																		46	
	450	13.50	.167	47	48	49	50	51	52			53					54			55		56
	465	13.95	.178													57		58				
	500	15.00	.205	59	60	61	62	63	64			65		66	67				68			69
	560	16.80	.252	70		71		72	73			74			75				76			77
	625	18.75	.301	78		79		80	81			82			83				84			85
	725	21.75	.379	86		87		88	89			90			91				92			93
	880	26.40	.499	94		95		96	97			98			99				100			101
	980	29.40	.576	102		103																
	1080	32.40	.653	104		105		106	107			108			109				110			111
	1180	35.40	.730	112		113		114	115			116			117							118
	1245	37.35	.781	119		120		121	122	123		124	125		126				127			128
	1300	39.00	.823	129		130		131	132	133		134	135		136							137
	1375	41.25	.882	138		139		140	141	142		143	144		145				146			
	1430	42.90	.923	147		148		149	150	151		152	153		154				155			
	1480	44.40	.963	156		157		158	159	160		161	162		163				164			
a	1530	45.90	1.002								165	166										
b	1530	45.90	1.002								167	168										
	1555	46.65	1.021	169		170																
c	1590	47.70	1.048	171		172																
d	1590	47.70	1.048	173		174																

ℓo = 1293.3 full scale

ℓ_o = 38.799 model

a: OMS pod, inside

b: OMS pod, outside

c: Body flap lower surface

d: Body flap upper surface

data in datasets RB1BXX

TABLE V. - ORBITER WING PRESSURE ORIFICE LOCATIONS

ORBITER WING

ORBITER B.P.~Y_o			X/C ~ LOCAL WING CHORD																																									
FULL	MODEL	D		D	.02	.04	.05	.08	.081	.086	.094	.150	.163	.177	.229	.246	.250	.274	.362	.390	.470	.402	.497	.55	.565	.60	.65	.70	.725	.75	.760	.775	.808	.834	.85	.857	.865	.90	.905	.95	.955	.965
140	4.20	.299	U	179			180				181				182				183									185						186			187	188				189
			L.E.																																									
			L				190				191				192				193				195					195						196			197	198				199
170	5.10	.364	U			201				202						204[1]				205[2]																							
			L.E.	200									208																															
			L			206				207						209				210																								
200	6.00	.427	U		212[3]	213[4]				214				215				216				217									219		220			221			222		223	
			L.E.	211																																								
			L		224[3]	225[4]				226				227				228				229			230						231		232			233			234		235	
250	7.50	.534	U		237		238	239				240					241				242			243					244			245			246			247		248		
			L.E.	236																																								
			L		249		250	251				252					253				254			255					256			257			258			259		260		
315	9.45	.673	U		262		263					264					265				266			267				268				269			270				271			
			L.E.	261																																								
			L		272		273					274					275				276			277				278				279			280				281			
365	10.95	.780	U		283		284					285					286										287			288					289					290		
			L.E.	282																																								
			L		291		292					293					294										295			296					297					298		
415	12.45	.887	U		300		301					302					303				304					305				306								307				
			L.E.	299																																								
			L		308		309					310					311				312					313				314								315				

1 X/c = .19
2 X/c = .34
3 X/c = .03
4 X/c = .045

data in data sets RB1LXX (lower surface and RB1UXX (upper surface)

TABLE VI. - ORBITER VERTICAL TAIL PRESSURE ORIFICE LOCATIONS

ORBITER VERTICAL TAIL

VERTICAL $W_L \sim Z_o$				X/C_V								
FULL	MODEL	η_V		0	.025	.05	.15	.30	.52	.685	.775	.90
550	16.50	.158	RH	316		324	325	326	327	328	329	
			LE		317	318	319	320	321	322	323	
			LH									
600	18.00	.316	RH	330		339	340	341	342	343	344	345
			LE		331	332	333	334	335	336	337	338
			LH									
690	20.70	.600	RH	346		355	356	357	358	359	360	361
			LE		347	348	349	350	351	352	353	354
			LH									
765	22.95	.840	RH	362		371	372	373	374	375	376	377
			LE		363	364	365	366	367	368	369	370
			LH									
792	23.76	.925	RH	378		387	388	389	390	391	392	393
			LE		379	380	381	382	383	384	385	386
			LH									

data in datasets RB1VXX (left side) and RB1RXX (right side)

TABLE VII. - ORBITER BASE, BODYFLAP, AND OMS NOZZLE PRESSURE ORIFICE LOCATIONS

ORBITER BASE

LOCATION	ORIFICE NUMBER
Orbiter Sting Cavity	1
Orbiter Base (Lower Left Corner)	2
OMS Nozzle Base	3

data in datasets RB1CXX

RUDDER FLARE BASE

RUDDER $W_L \sim Z_o$		X/C_V
FULL	MODEL	.75
725	18.75	4
625	21.75	5

data in datasets RB1CXX

BODY FLAP

ORBITER $\sim X_o$		$\emptyset \sim$ Deg	
FULL	MODEL	0	40
1555	46.65	169	170
1590	47.70	Upper 173	174
1590	47.70	Lower 171	172

data in datasets RB1FXX

LEFT OMS NOZZLE SURFACE

X ~ IN. FWD. NOZZLE EXIT		$\emptyset \sim$ DEG.		
FULL	MODEL	135	180	225
10	.30	175	176	177
20	.60		178	

data in datasets RB1EXX

TABLE VIII. - EXTERNAL TANK PRESSURE ORIFICE LOCATIONS

EXTERNAL TANK

TANK STATION ~ X_T			Ø ~ DEG.									
FULL SCALE	MODEL SCALE	$\frac{X_T}{\ell_T}$	0	30	60	90	120	135	150	165	180	270
309	9.27	0	503									
324	9.72	.008	504			505					506	507
400	12.00	.049	508	509	510	511	512		513		514	
520	15.60	.113	515	516	517	518	519		520	521	522	
640	19.20	.178	523	524	525	526	527		528	529	530	
670	20.10	.194	531	532	533	534	535		536	537	538	
710	21.30	.215	539	540	541	542	543		544	545	546	
760	22.80	.242	547	548	549	550	551	552	553	554	555	
850	25.50	.290	556	557	558	559	560		561	562	563	564
950	28.50	.344	565	566	567		568	569	570	571	572	
1050	31.30	.394	573	574	575	576	577		578	579	580	
1150	34.50	.451	581	582	583	584	585	586	587	588	589	
1250	37.50	.505	590	591	592	593	594		595	596	597	
1350	40.50	.558	598	599	600	601	602	603	604	605	606	
1500	45.00	.638	607	608	609	610	611		612	613	614	
1700	51.00	.746	615	616	617	618	619	620	621	622	623	
1900	57.00	.853	624	625	626	627	628	629	630	631	632	
2040	61.20	.928	633	634	635		636	637	638	639	640	
TANK BASE STING CAVITY			501								502	

ℓ_T = 1865 IN. FULL SCALE
55.950 IN. MODEL SCALE

data in datasets RBiTXX

TABLE IX. - SRM PRESSURE ORIFICE LOCATIONS

LEFT SRM

SRM STATION ~ X_s			Ø ~ DEG.							
FULL SCALE	MODEL SCALE	$\frac{X_s}{\ell_s}$	0	45	90	135	180	225	270	315
200	6.00	0	805							
260	7.80	.034	806	807	808	809	810	811	812	813
370	11.10	.098	814	815	816	817	818	819	820	821
400	12.00	.115	822	823	824	825	826	827		828
450	13.50	.144	829	830	831	832	833	834	835	836
550	16.50	.201	837	838	839	840	841	842	843	844
700	21.00	.287	845		846		847	848	849	850
850	25.50	.373	851		852		853		854	
1050	31.50	.488	855		856		857			
1250	37.50	.603	858		859		860			
1450	43.50	.718	861		862		863		864	
1650	49.50	.833	865		866		867		868	
1750	52.50	.890	869	870	871	872	873	874	875	876
1796	53.88	.917	877	878	879	880	881	882	883	884
1835	55.05	.939	885	886	887	888	889	890	891	892
1868	56.04	.958	893	894	895	896	897	898	899	900
SKIRT BASE			802			803		804		
NOZZLE BASE			801							
NOZZLE EXTERNAL PRESSURES										
1850	55.50	.948	901	902	903	904	905	906	907	908
1905	57.15	.979	909	910	911	912	913	914	915	916
1928	57.84	.993	917	918	919	920	921	922	923	924

ℓ_s = 1741 IN. FULL SCALE
52.53 IN. MODEL SCALE

data in datasets RB1SXX

TABLE X. - ORBITER ATTACH POINT PRESSURE ORIFICE LOCATIONS

			ORBITER ATTACH POINT ORIFICE LOCATIONS															
	X_o FULL SCALE		347	357	367	377	387	397	407	1252	1262	1272	1282	1292	1302	1312	1322	1332
	X_o MODEL		10.41	10.71	11.01	11.31	11.61	11.91	12.21	37.56	37.86	38.16	38.46	38.76	39.06	39.36	39.96	40.26
	X_o/ℓ_o		.087	.095	.102	.110	.118	.126	.133	.788	.796	.804	.811	.819	.827	.835	.850	.858
η	F.S. Y_o	MODEL Y_o	394	397					412				436	447		468	474	480
.021	10	.30		396	399	403	407	411	415				435	446	457	467	473	479
.043	20	.60		395	398	402	406	410	414				434	445	456	466	472	478
.064	30	.90				401	405	409	413				433	444	455	465	471	477
.085	40	1.20											432	443	454	464	470	476
.107	50	1.50															469	475
.149	69.75	2.09											431	442	453	463		
.170	79.75	2.39										424	430	441	452	462		
.192	89.75	2.69									419	423	429	440	451	461		
.213	99.75	2.99								416	418	422	428					
.23[illegible]	09.75	3.29									417	421	427	439	450	460		
.256	119.75	3.59										420	426	438	449	459		
.277	129.75	3.89											425	437	448	458		

data in datasets RB11XX

TABLE XI. - EXTERNAL TANK ATTACH POINT PRESSURE ORIFICE LOCATIONS

X_T Full Scale	1103	1093	1083	1073	1063	1053	1043	
X_T Model Scale	33.09	32.79	32.49	32.19	31.89	31.59	31.29	
X_T/l_T	.424	.419	.413	.408	.402	.397	.391	
								ø DEG.
FWD ATTACH POINT (ORBITER TO E-T)	684	676	668	660				182.84
	685	677	669	661				186.38
	686	678	670	662	655			189.92
	687	679	671	663	656	652		193.46
	688	680			657	653	651	197.0
	689	681	673	665	658	654		200.54
	690	682	674	666	659			204.08
	691	683	675	667				207.62

data in datasets RB12XX

TABLE XI. - EXTERNAL TANK ATTACH POINT PRESSURE ORIFICE LOCATIONS

(CONTINUED)

	X_T FULL SCALE	1874	1864	1854	1844	1834	1824	1814	
	X_T MODEL SCALE	56.22	55.92	55.62	55.32	55.02	54.72	54.42	
	X_T/ℓ_T	.839	.834	.828	.823	.818	.812	.807	
									Ø ∿ DEG.
		719	713	707					222.84
FWD DRAG LINK ATTACH POINT		720	714	708	701				226.38
		721	715	709	702	696			229.92
		722		710	703	697	693		233.46
					704	698	694	692	237.00
						699	695		240.54
		723	718	712	706	700			244.08

data in datasets RB12XX

TABLE XI. - EXTERNAL TANK ATTACH POINT PRESSURE ORIFICE LOCATIONS

(CONCLUDED)

	X_T FULL SCALE	2078	2068	2058	2048	2038	2028	2018	
	X_T MODEL SCALE	62.34	62.04	61.74	61.44	61.14	60.84	60.54	
	X_T/ℓ_T	.948	.943	.938	.932	.927	.921	.916	
									Ø ~ DEG.
AFT UPPER ATTACH		777	766	754					234.04
		778	767	755	742				237.58
		779	768	756	743	732			241.12
		780	769		744	733	726		244.66
		781	770		745	734	727	724	248.2
					746	735	728		251.74
			771	759	747	736			255.28
AFT LOWER ATTACH		782	772	760					323.51
		783	773	761	748				327.05
		784	774	762	749	737			330.59
		785	775		750	738	729		334.13
		786	776		751	739	730	725	337.67
					752	740	731		341.21
				765	753	741			344.75

data in datasets RB12XX

Notes:

1. Positive directions of force coefficients, moment coefficients, and angles are indicated by arrows
2. For clarity, origins of wind and stability axes have been displaced from the center of gravity

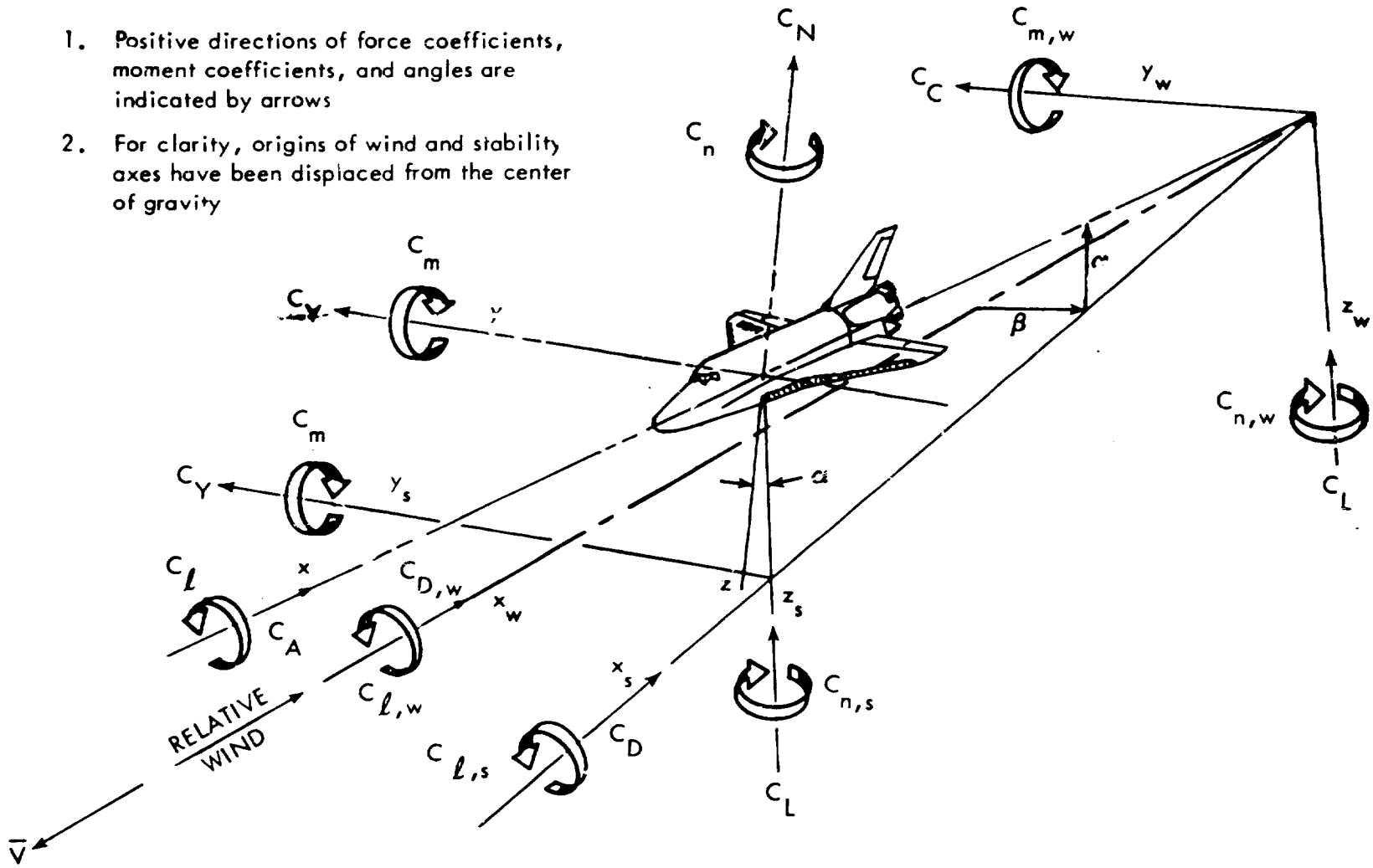

a. Stability and body axis systems

Figure 1. - Axis Systems

ORIGINAL PAGE IS OF POOR QUALITY

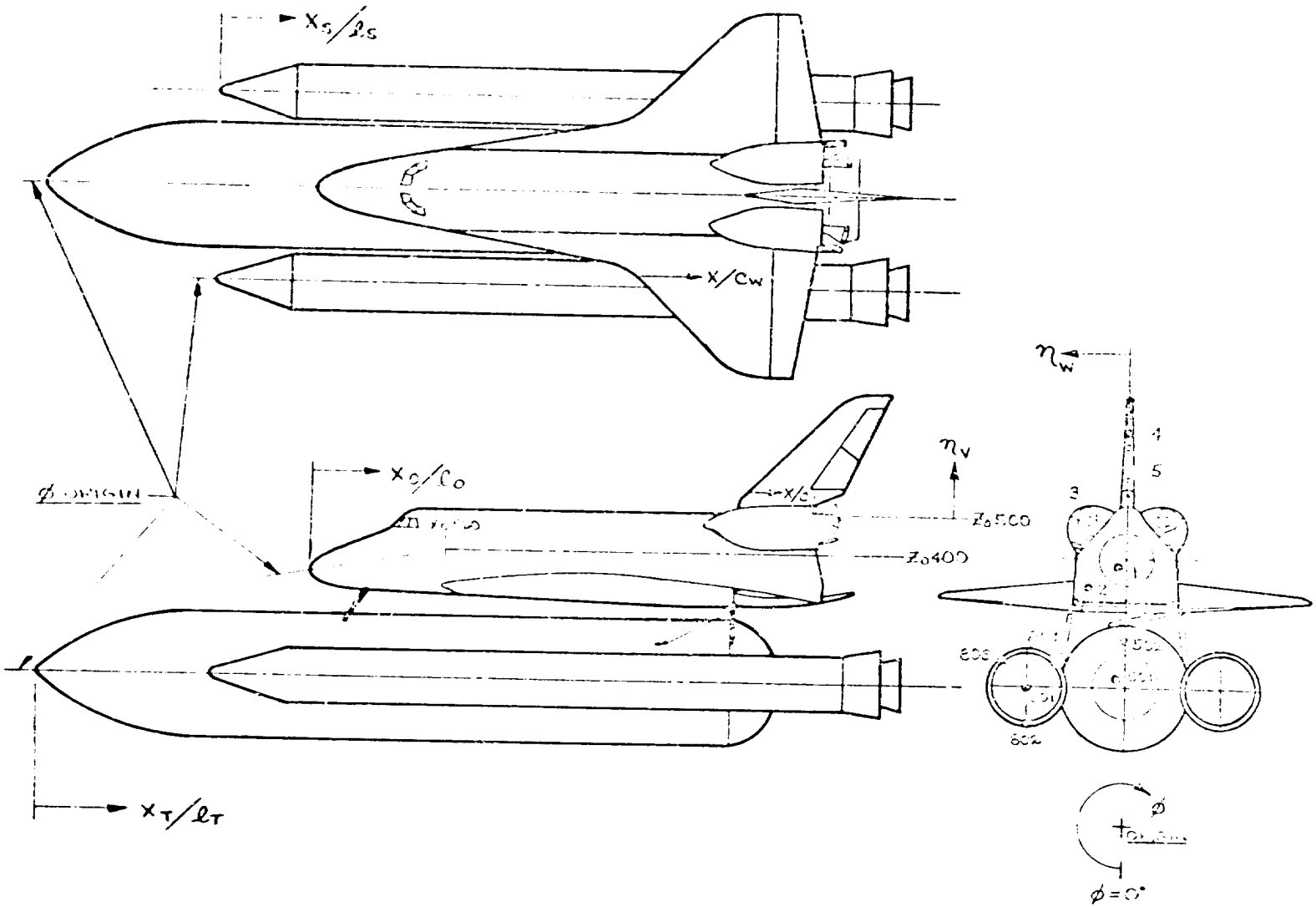

b. Orifice location nomenclature diagram

Figure 1. - Concluded

ORIGINAL PAGE IS
OF POOR QUALITY

LV

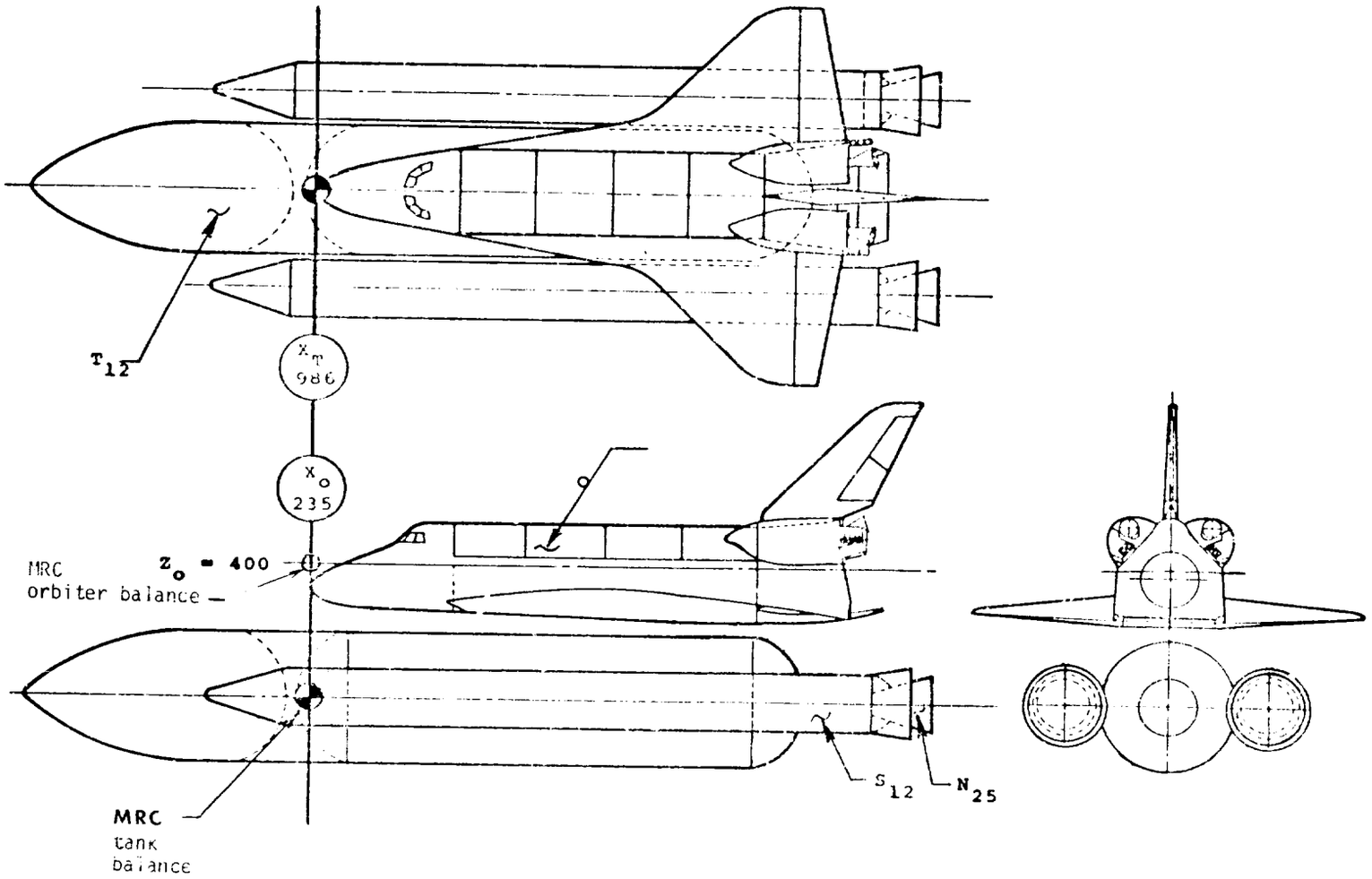

a. Integrated vehicle - 2 balances, no attach structure

Figure 2. - Model Sketches

ORIGINAL PAGE IS
OF POOR QUALITY

LVAP

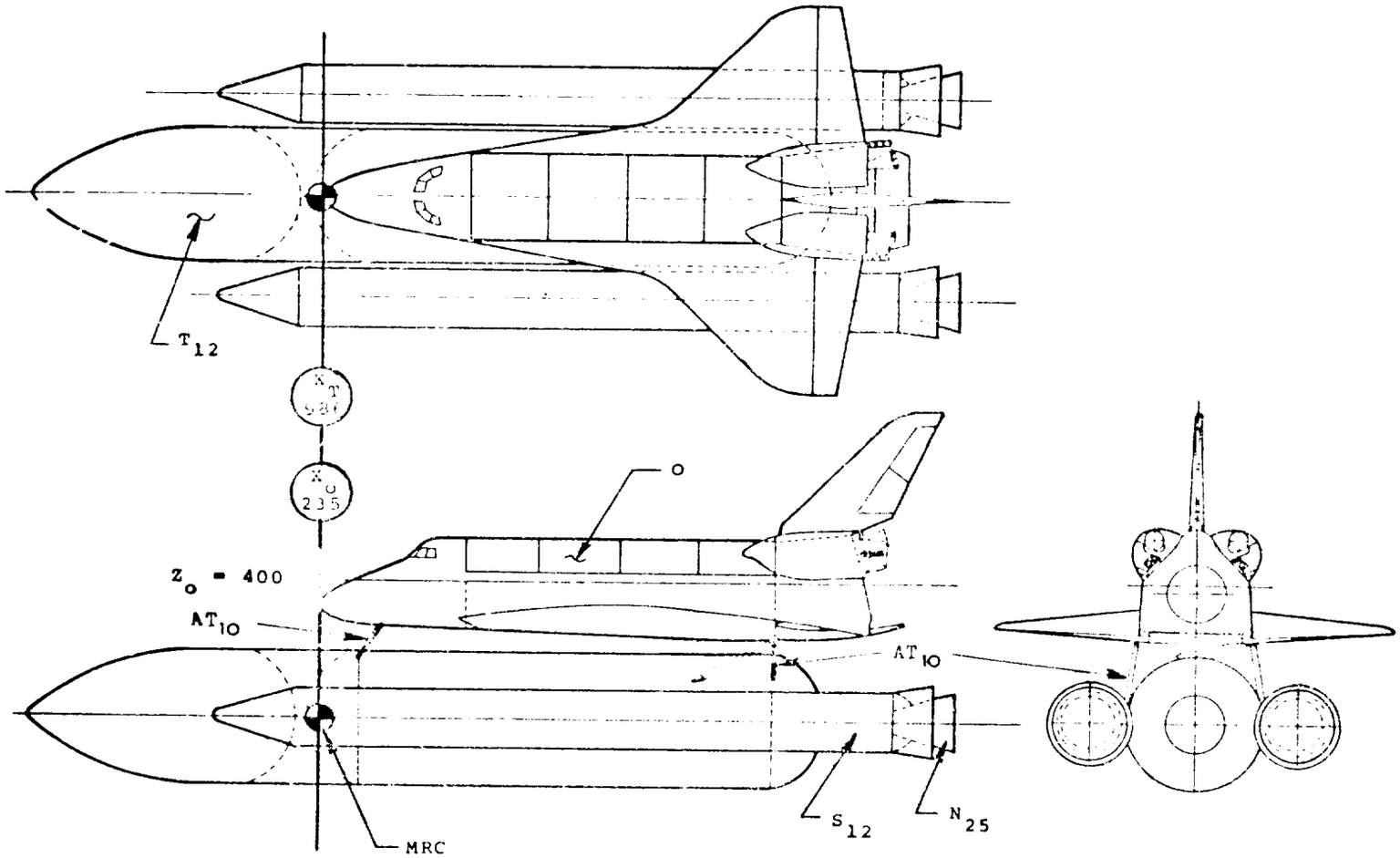

b. Integrated vehicle - 1 balance with attach structure

Figure 2. - Continued

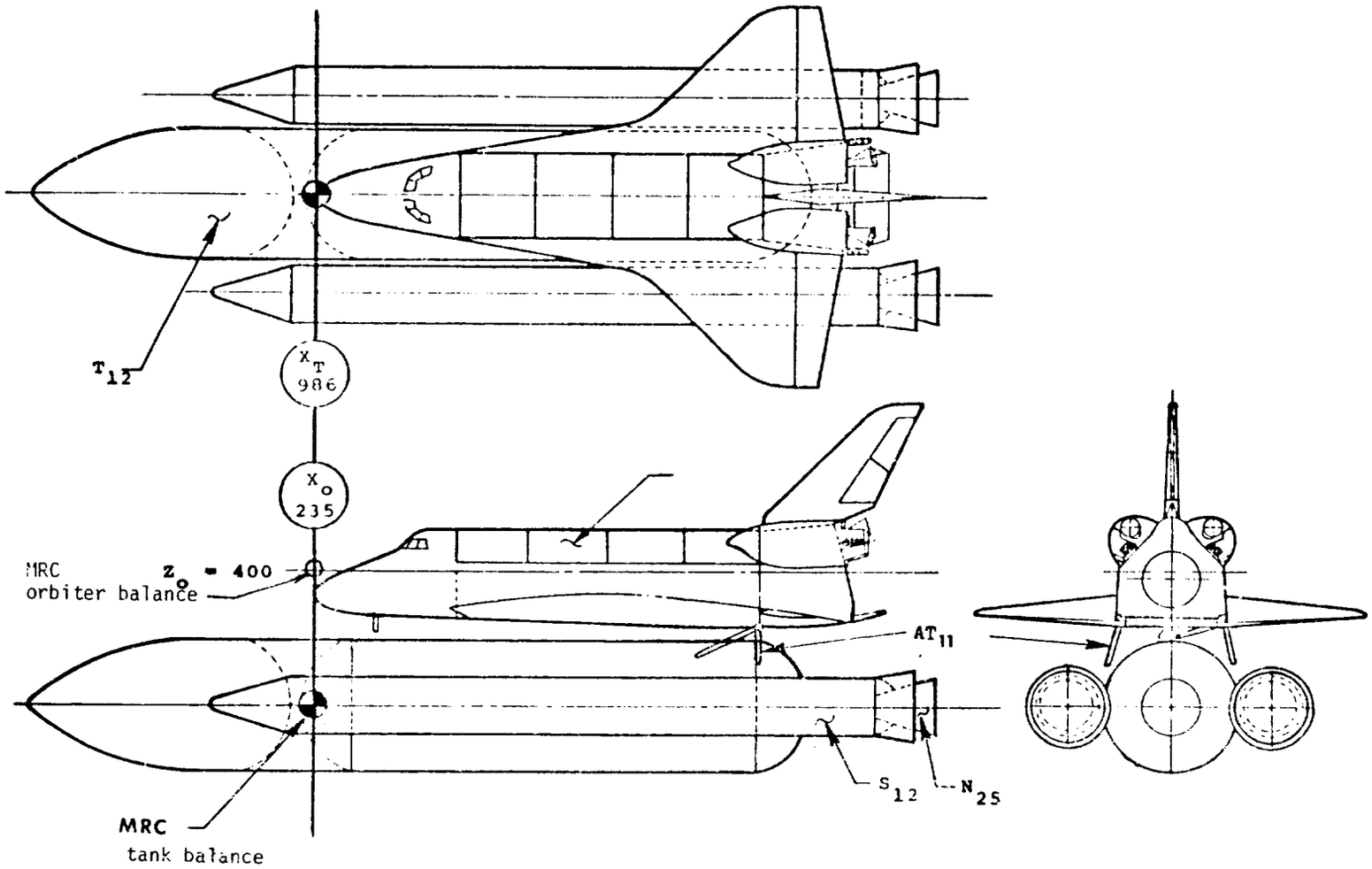

c. Integrated vehicle - 2 balances with attach structure

Figure 2. - Continued

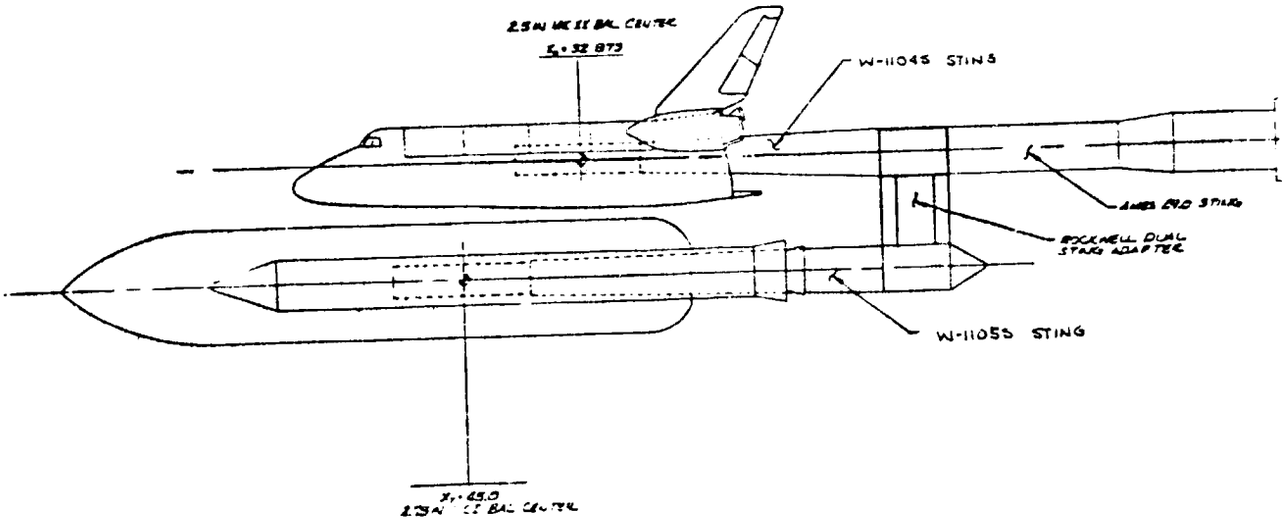

DUAL BALANCE CONFIGURATION ~ LV & LVAP

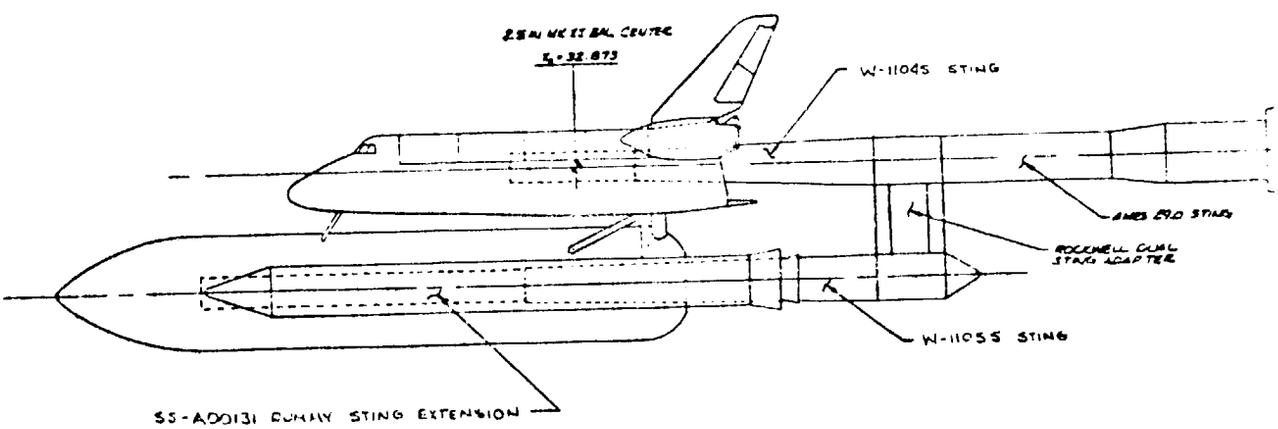

SINGLE BALANCE CONFIGURATION ~ LVA

ORIGINAL PAGE IS
OF POOR QUALITY

d. Installation side views

Figure 2. - Continued

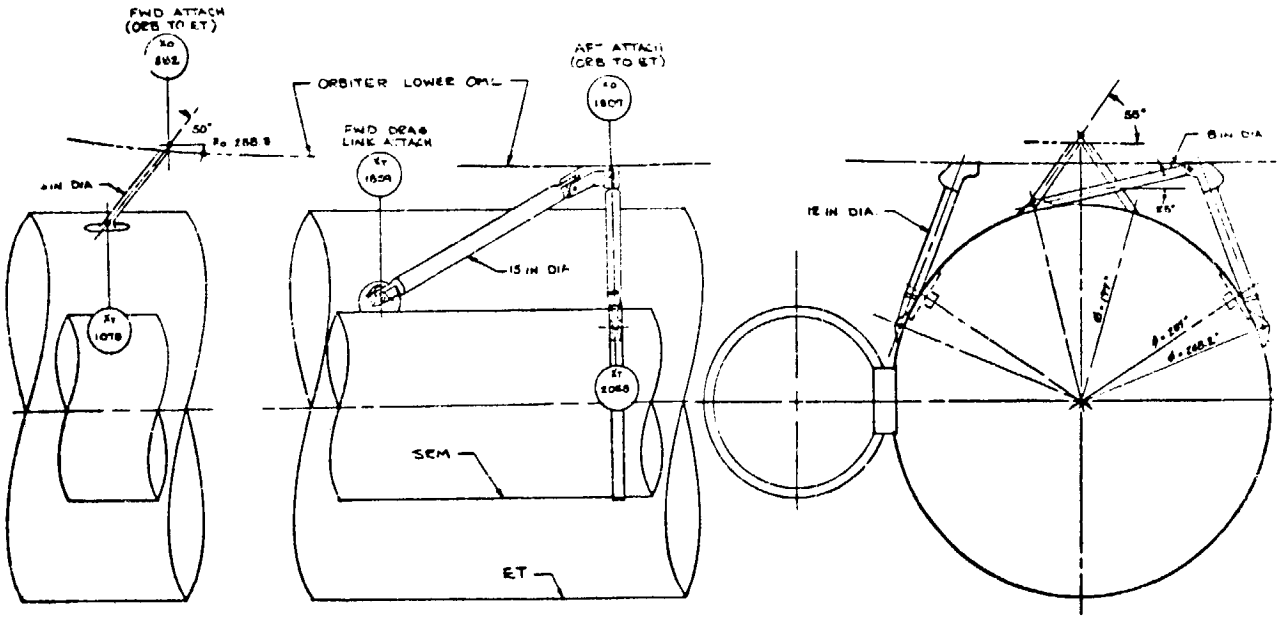

ATTACH HARDWARE CONFIGURATION — AT10

ATTACH HARDWARE CONFIGURATION — AT11

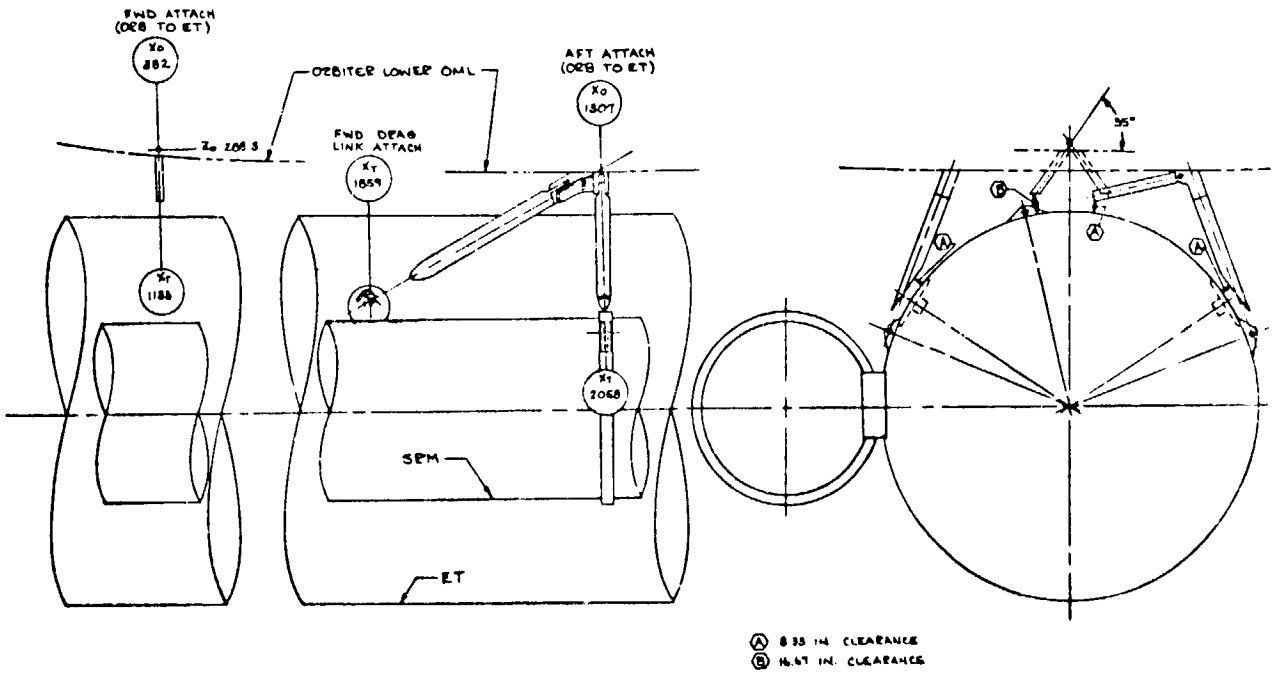

e. Attach hardware

Figure 2. Continued

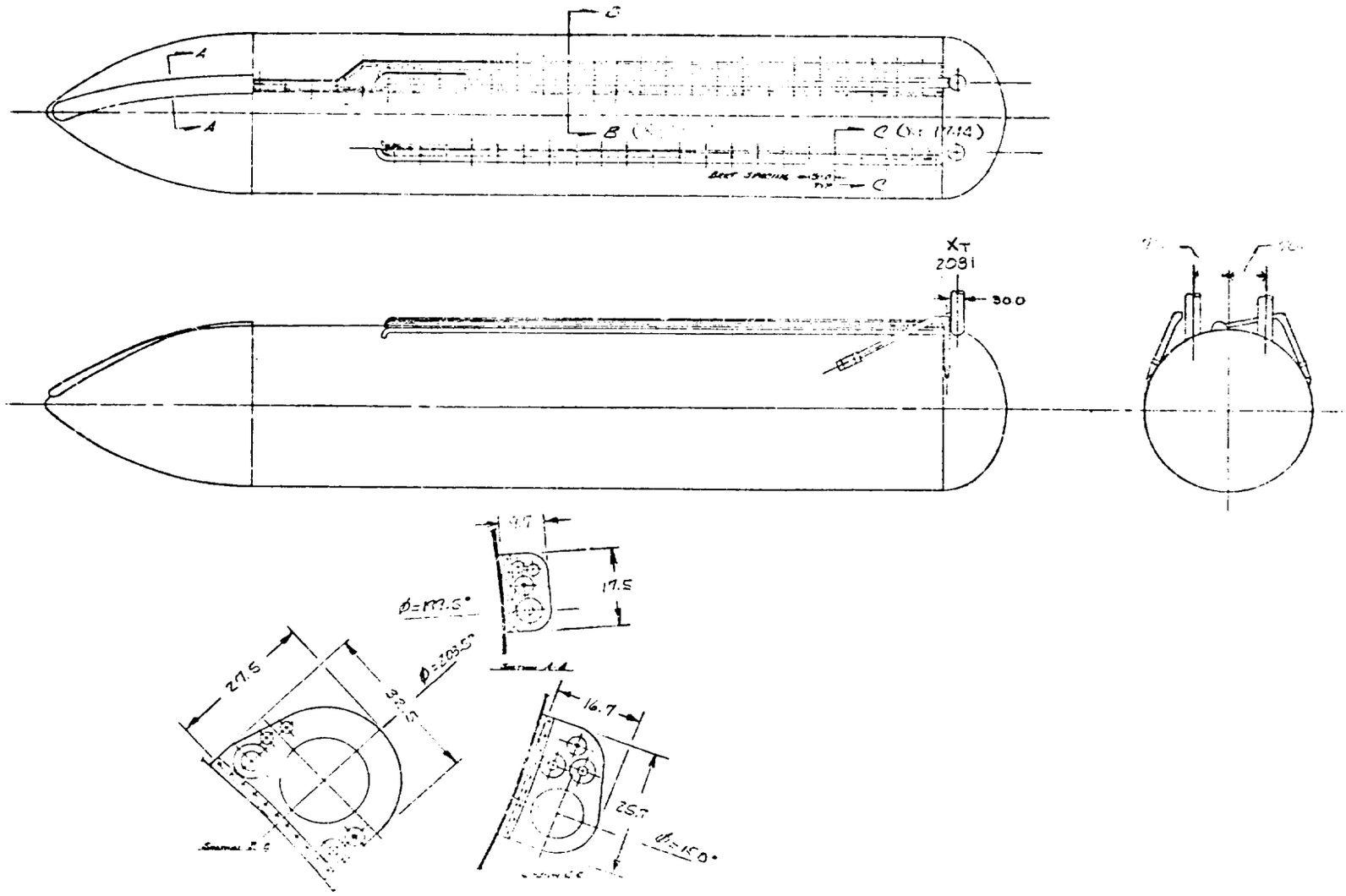

f. External tank protuberances

Figure 2. - Continued

ORIGINAL PAGE IS
OF POOR QUALITY

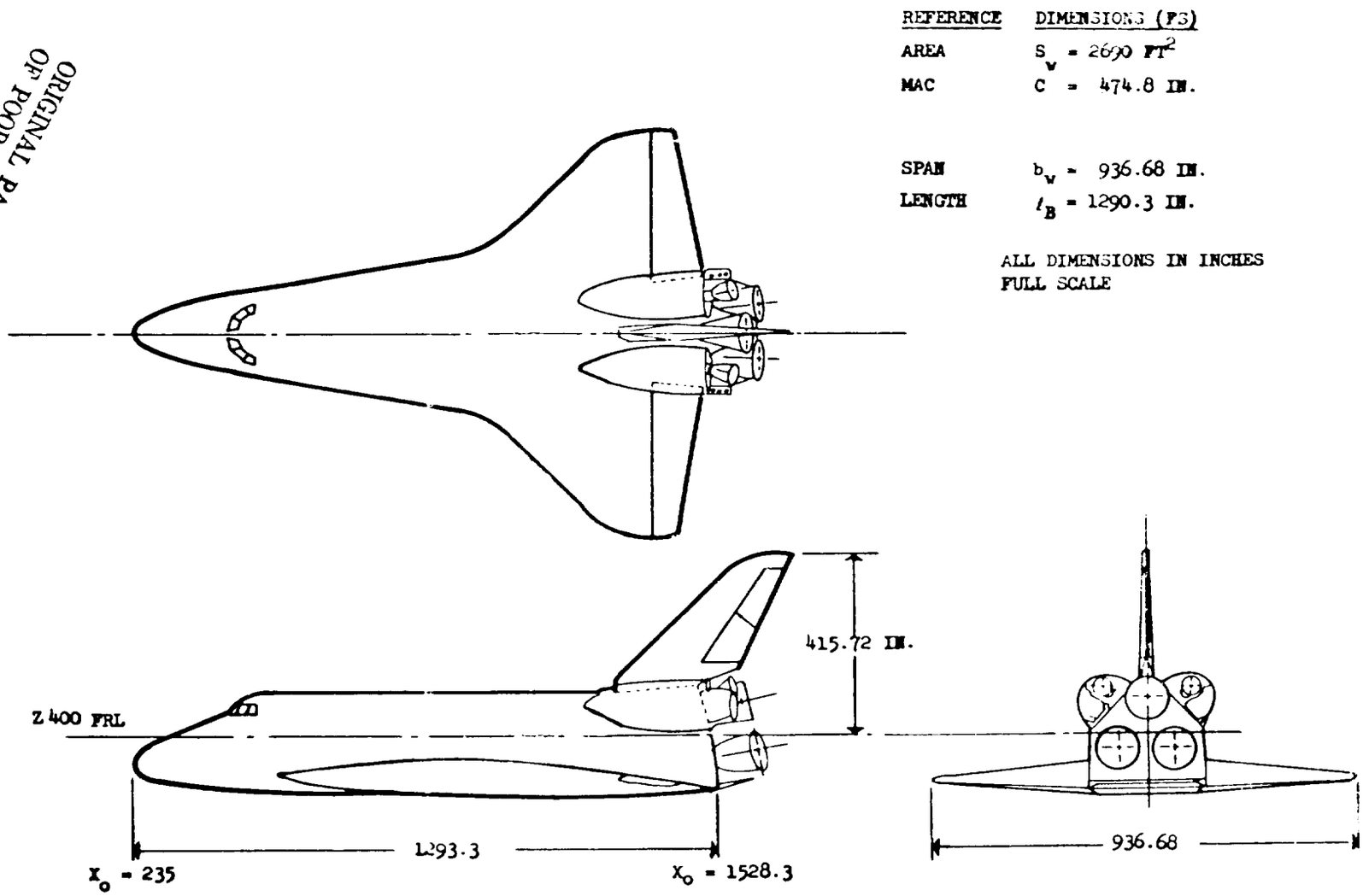

g. SSV orbiter configuration 140A/B

Figure 2. - Continued

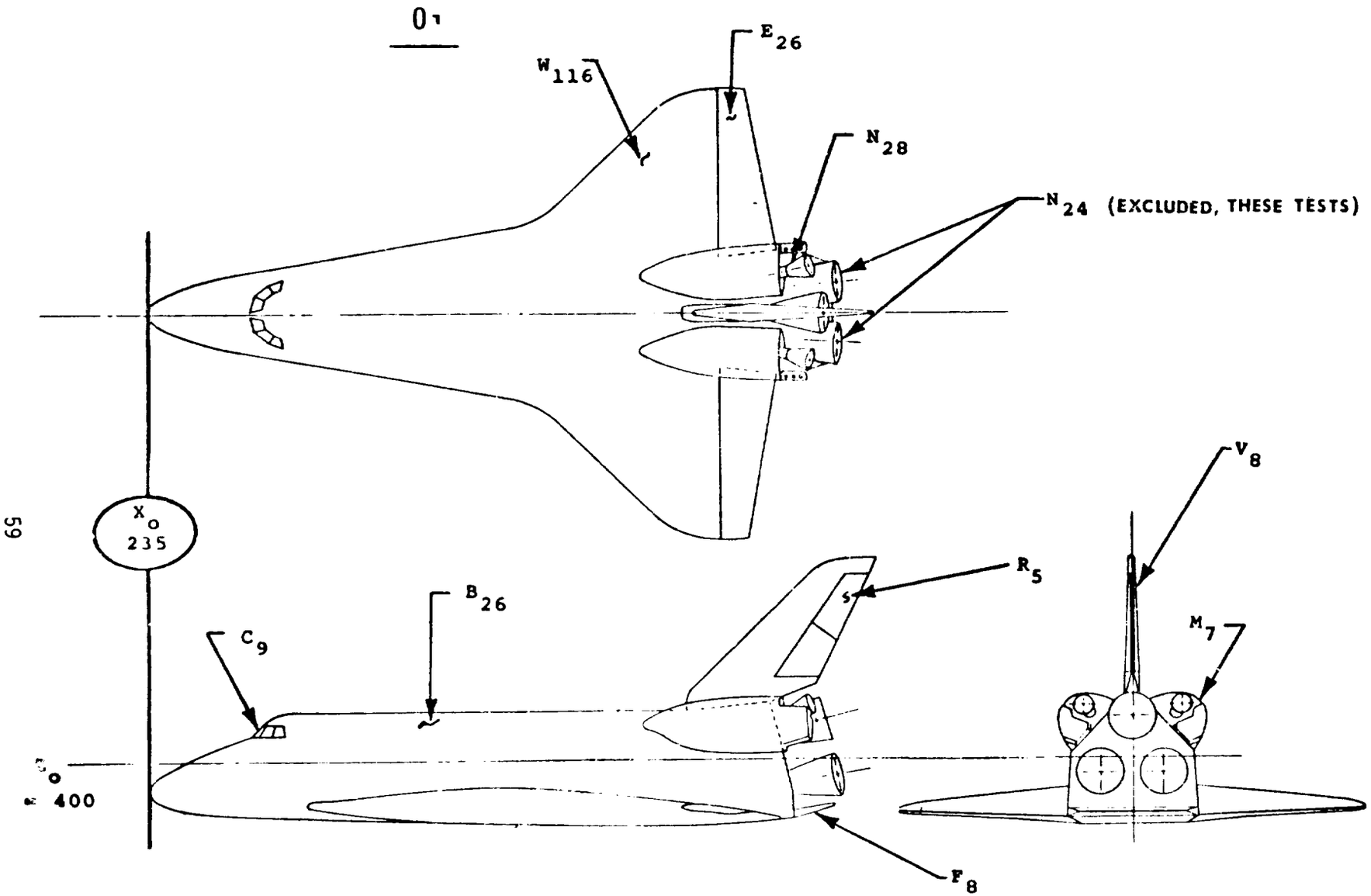

h. Orbiter nomenclature

Figure 2. - Continued

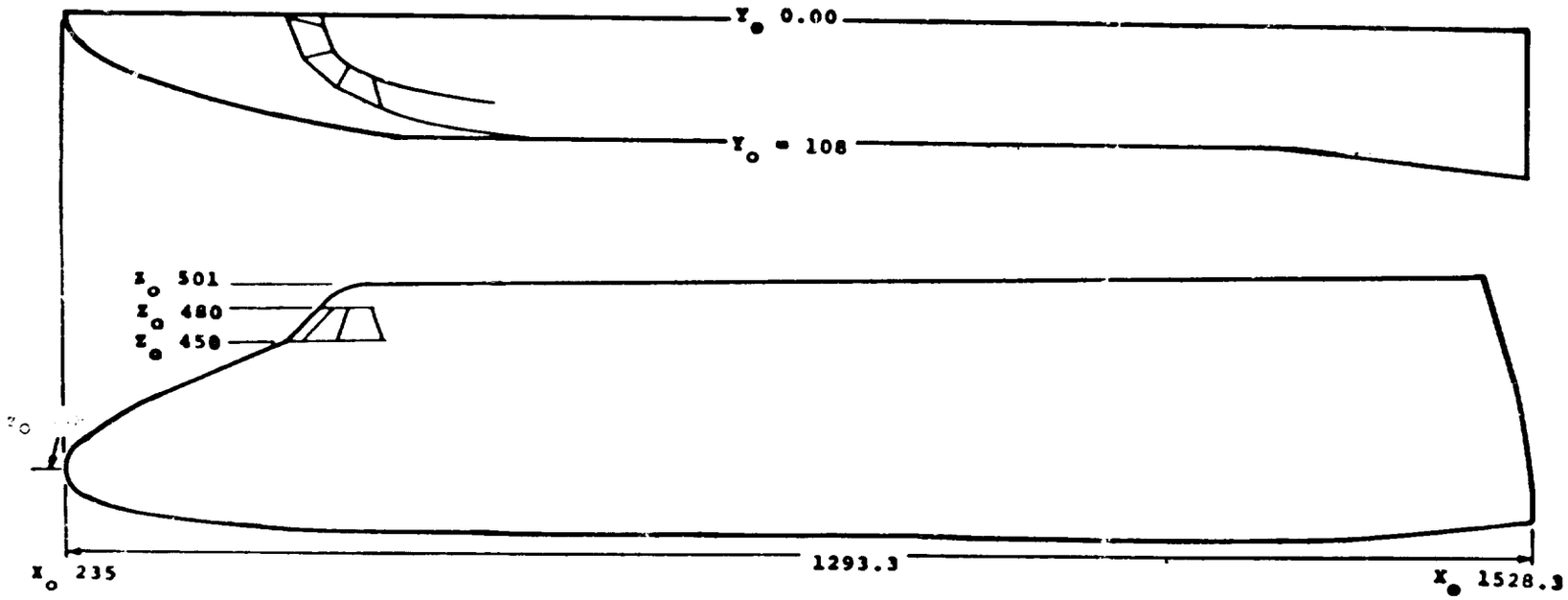

i. Canopy, C_9, and body, B_{26}, lines drawing VL70-00193 and VL70-000140A/B

Figure 2. - Continued

ORIGINAL PAGE IS
OF POOR QUALITY

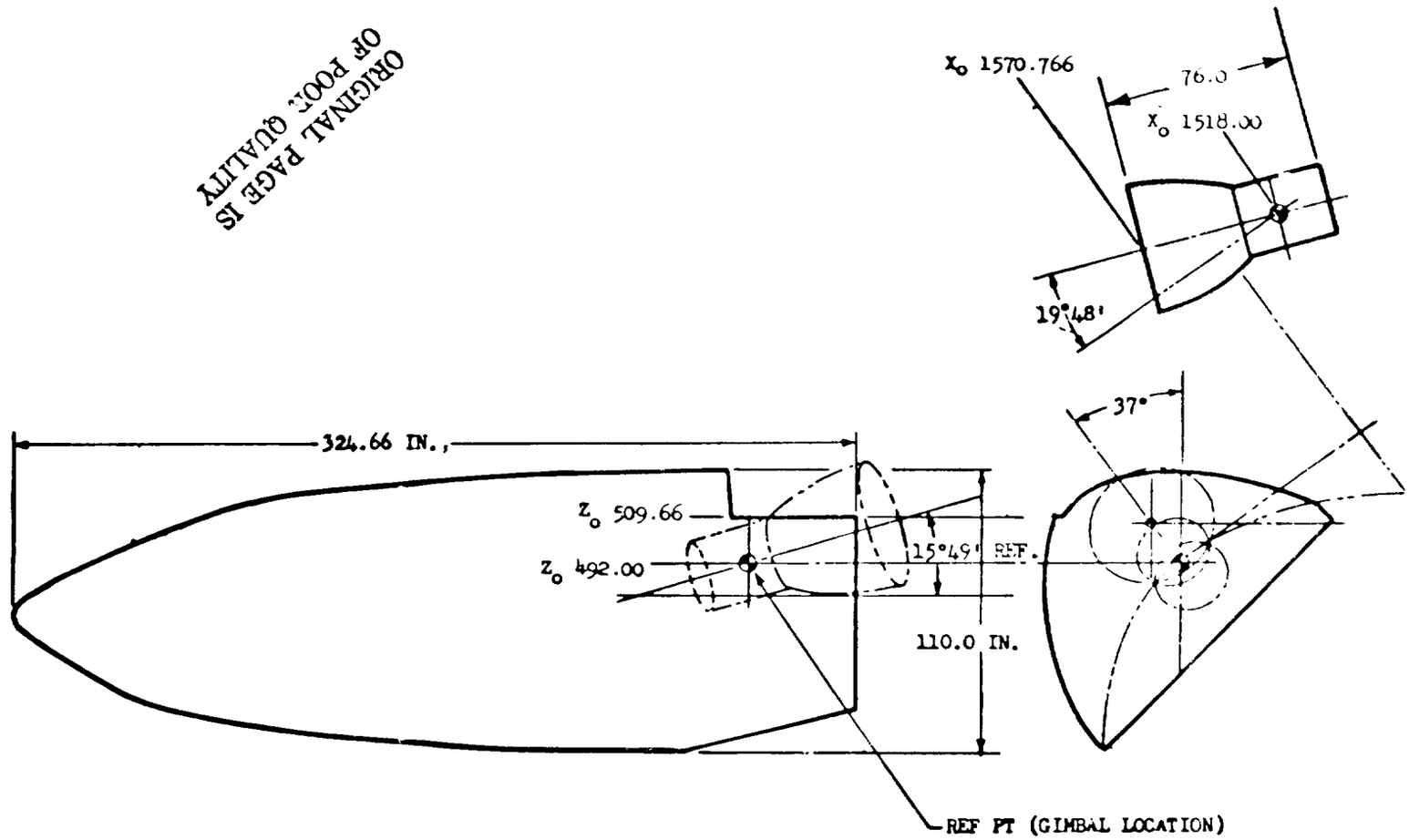

j. M_7 - OMS Pod

Figure 2. - Continued

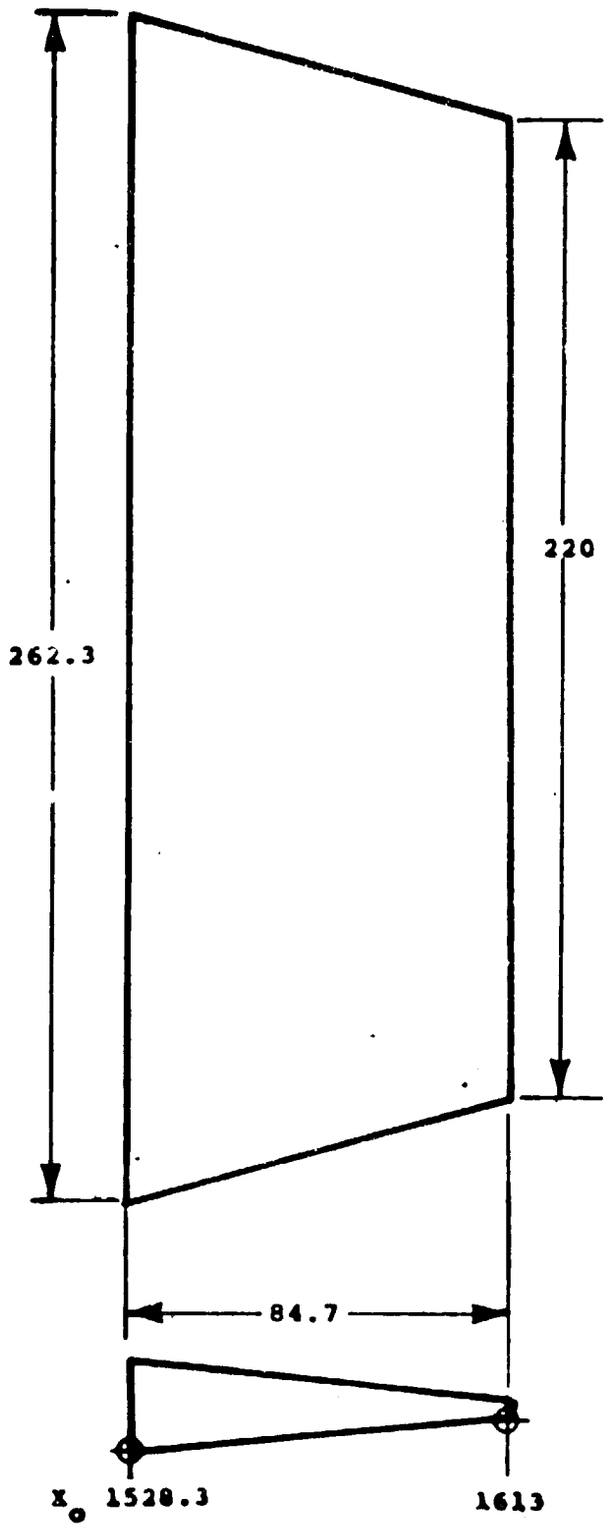

k. Body flap, F_8, lines drawing no. VL70-000140A/B

Figure 2. - Continued

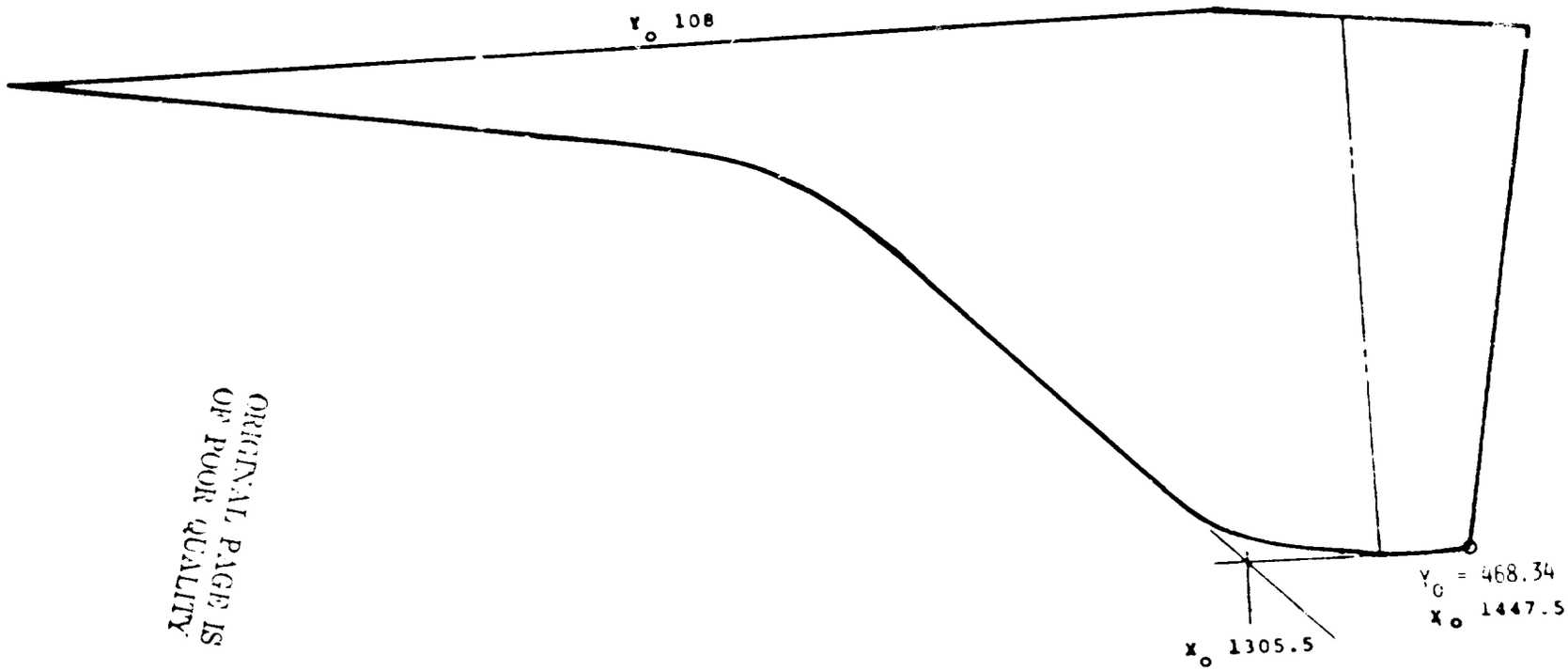

1. Wing, W_{116}, lines drawing no. VL70-000200

Figure 2. - Continued

ORIGINAL PAGE IS
OF POOR QUALITY

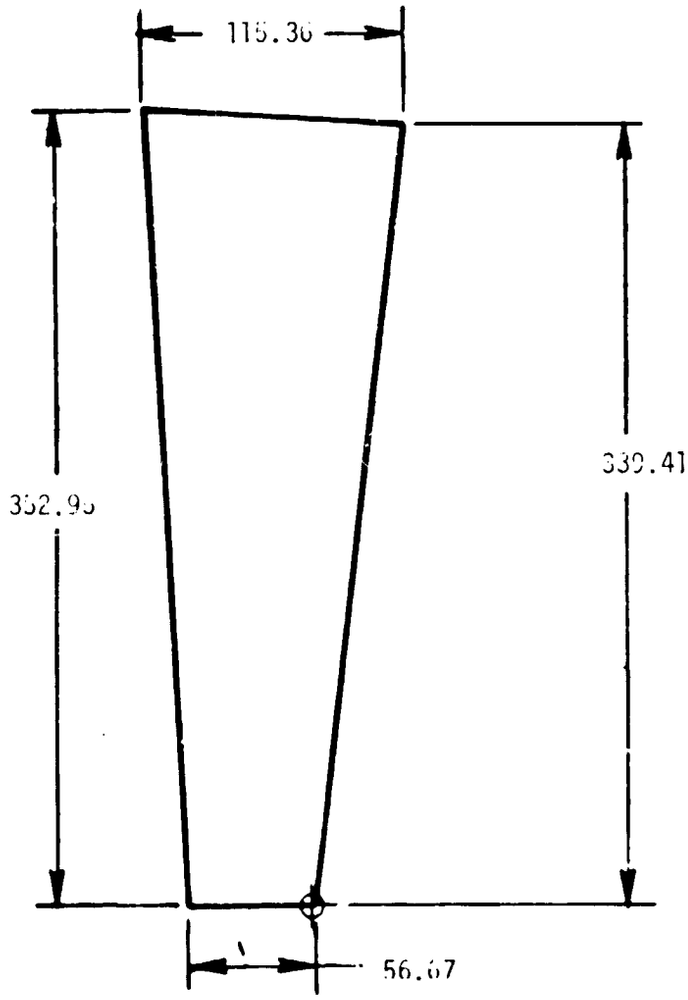

m. Elevon, E_{26}, lines drawing no. VL70-000200, VL70-000140A/B

Figure 2. - Continued

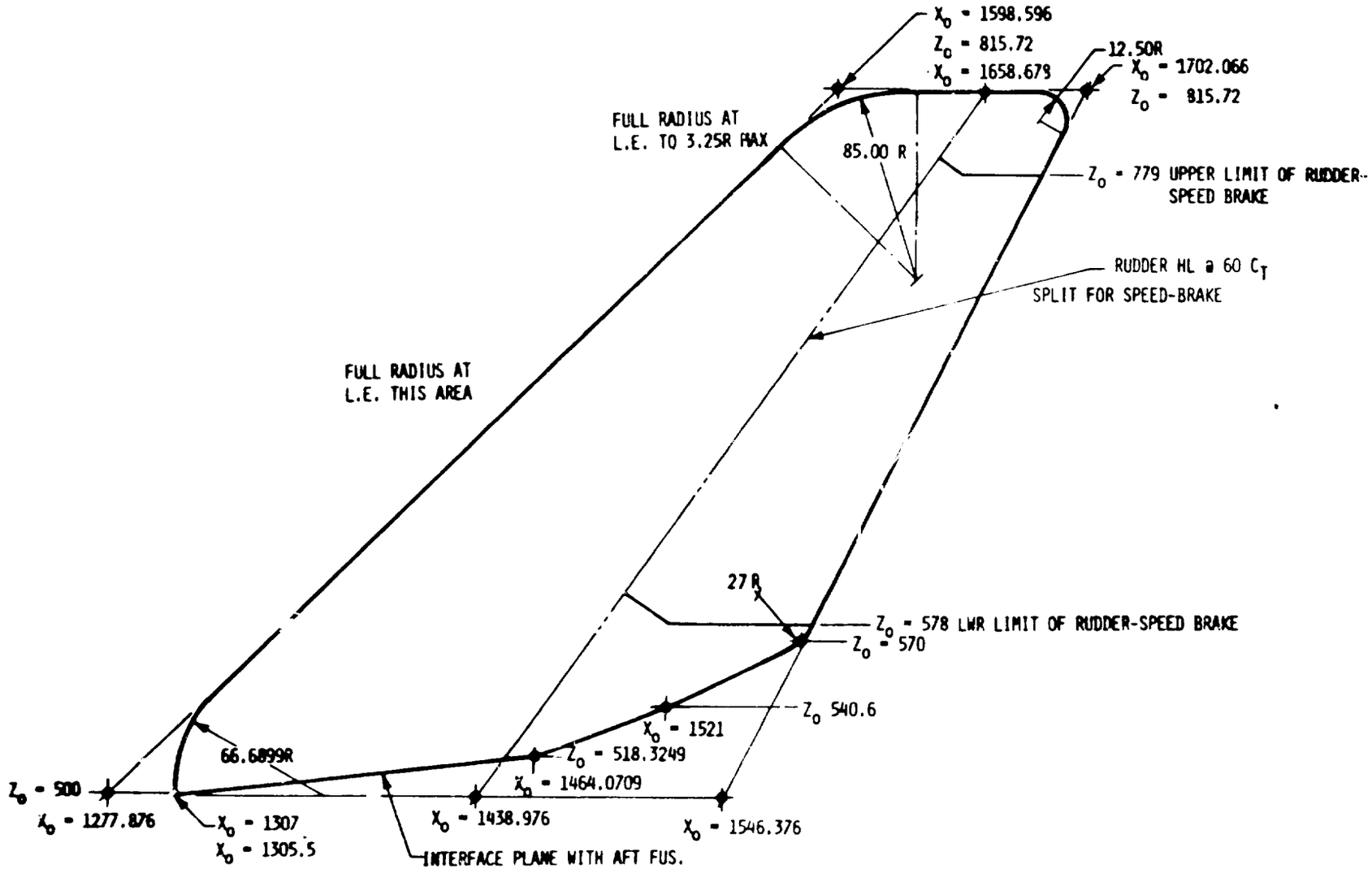

n. Vertical tail, V_8, and rudder, R_5, lines drawing no. VL70-000146A

Figure 2. - Continued

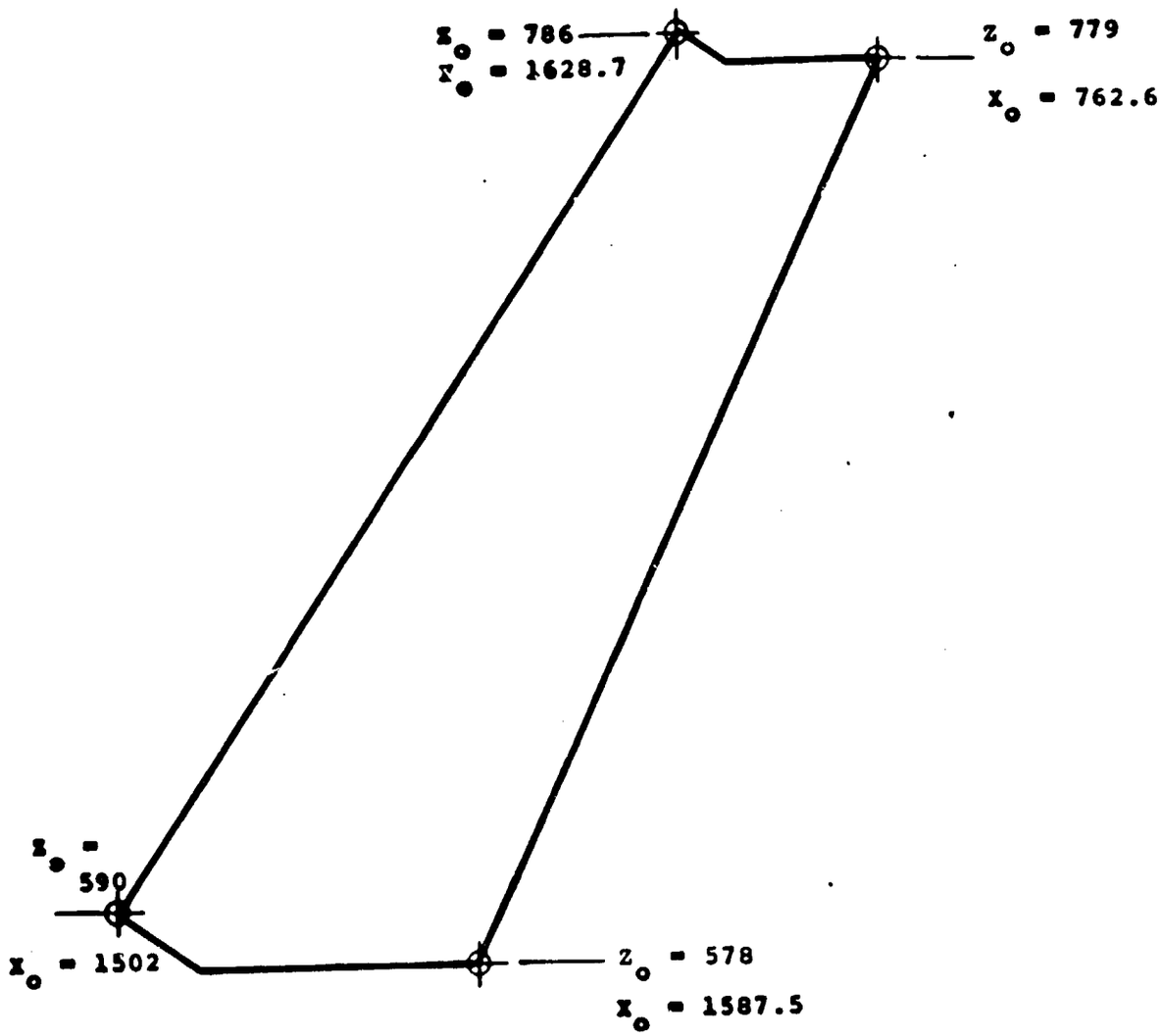

o. Rudder, R_5, lines drawing no. VL70-000095

Figure 2. - Concluded

ORIGINAL PAGE IS
OF POOR QUALITY

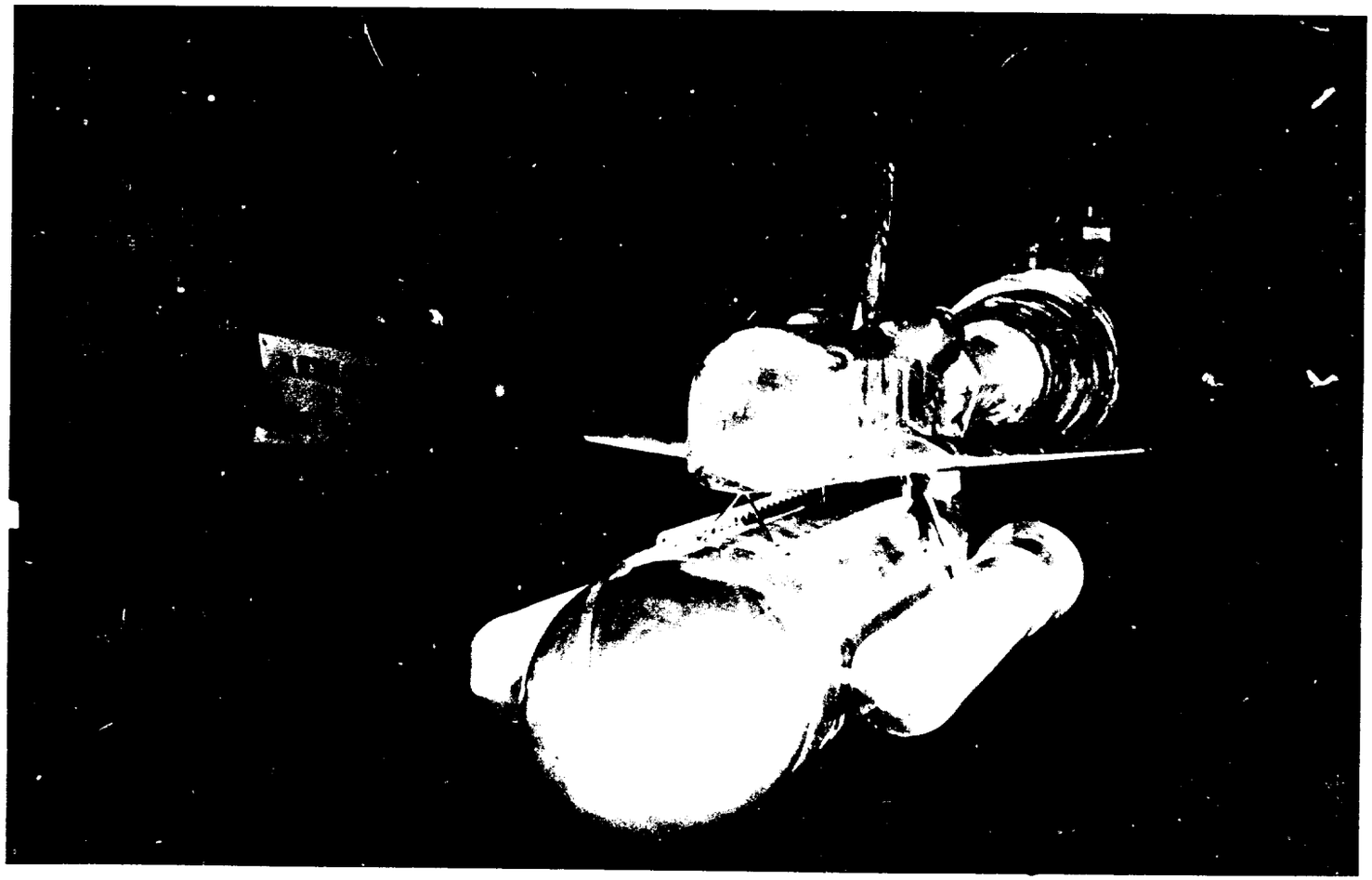

a. Front view of model installed in tunnel

Figure 3. - Model photographs.

ORIGINAL PAGE IS
OF POOR QUALITY

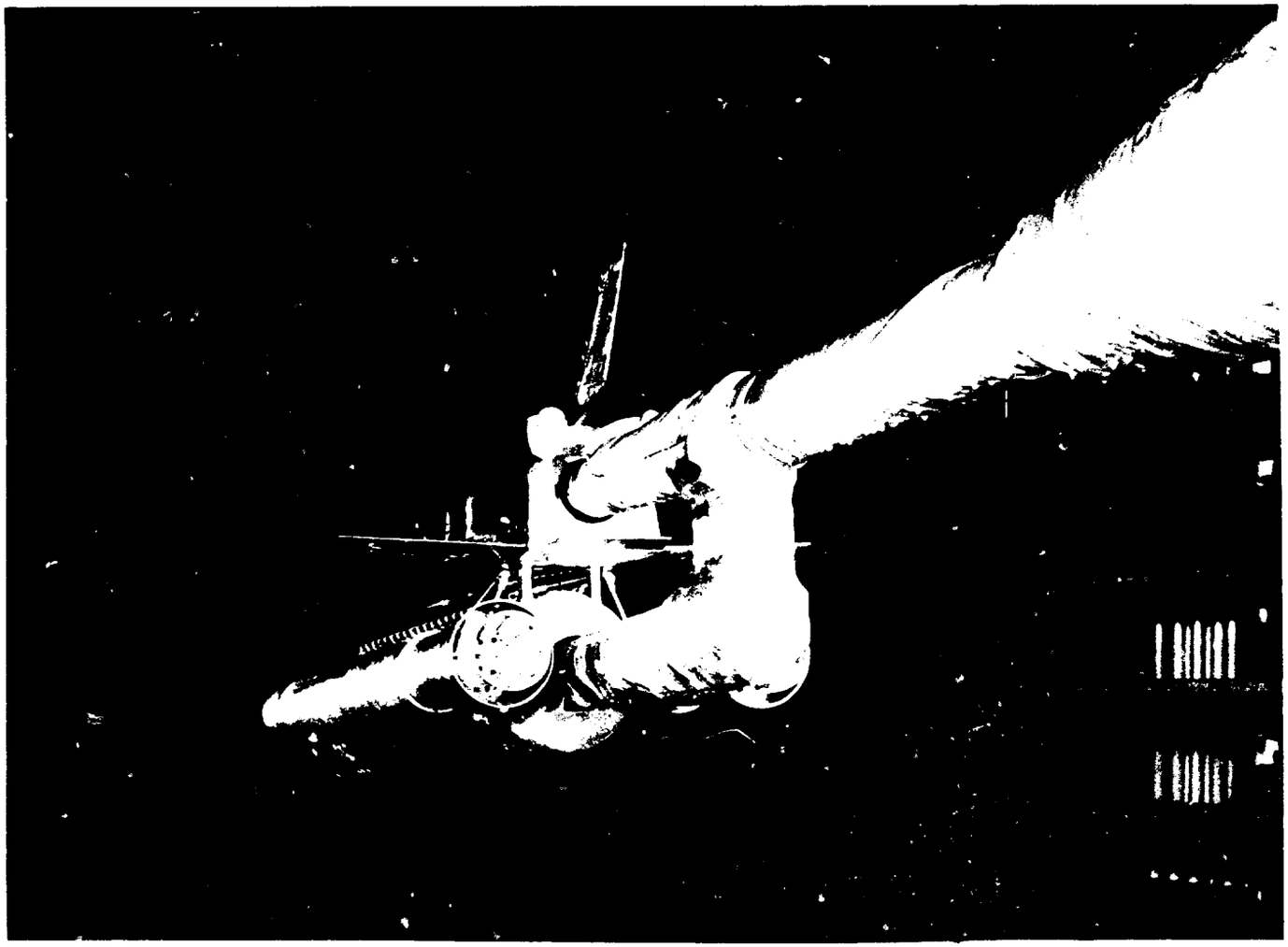

b. Rear view of model installed in tunnel

Figure 3. - Concluded.

ORIGINAL PAGE IS
OF POOR QUALITY

TABULATED PRESSURE DATA

ARC11-716 IA14 O1+T12+S12N25+AT11 OMS NOZZLE (RB1E17) (03 OCT 73)

REFERENCE DATA

SREF = 2.4210 SQ.FT. XMRP = 29.5800 INCHES
LREF = 38.7090 INCHES YMRP = .0000 INCHES
BREF = 38.7090 INCHES ZMRP = .0000 INCHES
SCALE = .0300 SCALE

PARAMETRIC DATA

BETAO = .000 ELEVON = .000
RUDDER = .000 SPDBRK = .000

MACH (1) = .898 ALPHAO(1) = -8.170

SECTION (1)OMS NOZZLE DEPENDENT VARIABLE CP

X/LNM	.2000	.4000
PHI		
135.000	-.1736	
180.000	.3929	-.0634
225.000	-.2041	

MACH (1) = .898 ALPHAO(2) = -4.140

SECTION (1)OMS NOZZLE DEPENDENT VARIABLE CP

X/LNM	.2000	.4000
PHI		
135.000	-.1754	
180.000	.3262	-.0467
225.000	-.1814	

MACH (1) = .898 ALPHAO(3) = -.220

SECTION (1)OMS NOZZLE DEPENDENT VARIABLE CP

X/LNM	.2000	.4000
PHI		
135.000	-.1667	
180.000	.2681	-.0142
225.000	-.1355	

MACH (1) = .898 ALPHAO(4) = 3.830

SECTION (1)OMS NOZZLE DEPENDENT VARIABLE CP

X/LNM	.2000	.4000
PHI		
135.000	-.1589	
180.000	.1498	.0030
225.000	-.1139	

ARC11-716 IA14 O1+T12+J12N25+A711 OMS NOZZLE (RB1E17)

MACH (1) = .898 ALPHAO(5) = 8.030

SECTION (1)OMS NOZZLE DEPENDENT VARIABLE CP

X/LNM	.2000	.4000
PHI		
135.000	-.1779	
180.000	.0718	.0127
225.000	-.1002	

MACH (2) = .977 ALPHAO(1) = -7.920

SECTION (1)OMS NOZZLE DEPENDENT VARIABLE CP

X/LNM	.2000	.4000
PHI		
135.000	-.2873	
180.000	.3588	-.1733
225.000	-.2249	

MACH (2) = .976 ALPHAO(2) = -3.880

SECTION (1)OMS NOZZLE DEPENDENT VARIABLE CP

X/LNM	.2000	.4000
PHI		
135.000	-.2635	
180.000	.1909	-.2069
225.000	-.3102	

MACH (2) = .977 ALPHAO(3) = .090

SECTION (1)OMS NOZZLE DEPENDENT VARIABLE CP

X/LNM	.2000	.4000
PHI		
135.000	-.2281	
180.000	.1196	-.1892
225.000	-.3169	

ORIGINAL PAGE IS OF POOR QUALITY

ARC11-716 TA14 C1+T12+S12N25+AT11 OMS NOZZLE (RB1E17)

MACH (2) = .973 ALPHAO(4) = 4.020

SECTION (1)OMS NOZZLE DEPENDENT VARIABLE CP

X/LNM	.2000	.4000
PHI		
135.000	-.2516	
180.000	.0165	-.1739
225.000	-.3111	

MACH (2) = .977 ALPHAO(5) = 8.030

SECTION (1)OMS NOZZLE DEPENDENT VARIABLE CP

X/LNM	.2000	.4000
PHI		
135.000	-.2517	
180.000	-.0351	-.1825
225.000	-.2799	

MACH (3) = 1.102 ALPHAO(1) = -7.940

SECTION (1)OMS NOZZLE DEPENDENT VARIABLE CP

X/LNM	.2000	.4000
PHI		
135.000	-.2866	
180.000	.4491	.0197
225.000	.0262	

MACH (3) = 1.101 ALPHAO(2) = -3.890

SECTION (1)OMS NOZZLE DEPENDENT VARIABLE CP

X/LNM	.2000	.4000
PHI		
135.000	-.2743	
180.000	.3695	-.0662
225.000	-.1131	

ORIGINAL PAGE IS
OF POOR QUALITY

ARC11-716 IA14 O1+T12+S12N25+AT11 OMS NOZZLE (RB1E17)

MACH (3) = 1.103 ALPHAO(3) = .090

SECTION (1)OMS NOZZLE DEPENDENT VARIABLE CP

X/LNM	.2000	.4000
PHI		
135.000	-.2469	
180.000	.2237	-.1015
225.000	-.1747	

MACH (3) = 1.100 ALPHAO(4) = 4.080

SECTION (1)OMS NOZZLE DEPENDENT VARIABLE CP

X/LNM	.2000	.4000
PHI		
135.000	-.2192	
180.000	.1435	-.1506
225.000	-.2504	

MACH (3) = 1.099 ALPHAO(5) = 8.020

SECTION (1)OMS NOZZLE DEPENDENT VARIABLE CP

X/LNM	.2000	.4000
PHI		
135.000	-.2250	
180.000	.0138	-.1870
225.000	-.2679	

MACH (4) = 1.248 ALPHAO(1) = -7.940

SECTION (1)OMS NOZZLE DEPENDENT VARIABLE CP

X/LNM	.2000	.4000
PHI		
135.000	-.2039	
180.000	.4917	.1829
225.000	.2713	

ARC11-716 IA14 O1+T12+S12N25+AT11 OMS NOZZLE (RB1E17)

MACH (4) = 1.246 ALPHAO(2) = -3.840

SECTION (1)OMS NOZZLE DEPENDENT VARIABLE CP

X/LNM	.2000	.4000
PHI		
135.000	-.2339	
180.000	.4042	.0108
225.000	.0276	

MACH (4) = 1.244 ALPHAO(3) = .050

SECTION (1)OMS NOZZLE DEPENDENT VARIABLE CP

X/LNM	.2000	.4000
PHI		
135.000	-.2037	
180.000	.2221	-.0514
225.000	-.0946	

MACH (4) = 1.249 ALPHAO(4) = 4.010

SECTION (1)OMS NOZZLE DEPENDENT VARIABLE CP

X/LNM	.2000	.4000
PHI		
135.000	-.2074	
180.000	.1678	-.1470
225.000	-.1947	

MACH (4) = 1.249 ALPHAO(5) = 7.930

SECTION (1)OMS NOZZLE DEPENDENT VARIABLE CP

X/LNM	.2000	.4000
PHI		
135.000	-.1769	
180.000	.0203	-.1677
225.000	-.2205	

ARC11-716 IA14 O1+T12+S12N25+AT11 OMS NOZZLE (RB1E18) (02 OCT 73)

REFERENCE DATA

SREF = 2.4210 SQ.FT. XMRP = 29.5800 INCHES
LREF = 38.7090 INCHES YMRP = .0000 INCHES
BREF = 38.7090 INCHES ZMRP = .0000 INCHES
SCALE = .0300 SCALE

PARAMETRIC DATA

ALPHAO = .000 ELEVON = .000
RUDDER = .000 SPOERK = .000

MACH (1) = .898 BETAO (1) = -8.080

SECTION (1)OMS NOZZLE DEPENDENT VARIABLE CP

X/LNM	.2000	.4000
PHI		
135.000	-.2012	
180.000	.3653	.0384
225.000	.0506	

MACH (1) = .898 BETAO (2) = -4.010

SECTION (1)OMS NOZZLE DEPENDENT VARIABLE CP

X/LNM	.2000	.4000
PHI		
135.000	-.1771	
180.000	.3391	.0039
225.000	-.0643	

MACH (1) = .897 BETAO (3) = .030

SECTION (1)OMS NOZZLE DEPENDENT VARIABLE CP

X/LNM	.2000	.4000
PHI		
135.000	-.1670	
180.000	.2576	-.0211
225.000	-.1465	

MACH (1) = .898 BETAO (4) = 4.100

SECTION (1)OMS NOZZLE DEPENDENT VARIABLE CP

X/LNM	.2000	.4000
PHI		
135.000	-.1749	
180.000	.2158	-.0299
225.000	-.1757	

ARC11-716 TA14 O1+T12+S12N25+AT11 OMS NOZZLE (RB1E18)

MACH (1) = .898 BETAO (5) = 8.130

SECTION (1)OMS NOZZLE DEPENDENT VARIABLE CP

X/LNM	.2000	.4000
PHI		
135.000	-.2320	
180.000	-.0622	-.2137
225.000	-.2775	

MACH (2) = .976 BETAO (1) = -8.050

SECTION (1)OMS NOZZLE DEPENDENT VARIABLE CP

X/LNM	.2000	.4000
PHI		
135.000	-.2845	
180.000	.3536	-.0085
225.000	.1214	

MACH (2) = .976 BETAO (2) = -4.010

SECTION (1)OMS NOZZLE DEPENDENT VARIABLE CP

X/LNM	.2000	.4000
PHI		
135.000	-.2245	
180.000	.3299	-.0698
225.000	-.0731	

MACH (2) = .975 BETAO (3) = .040

SECTION (1)OMS NOZZLE DEPENDENT VARIABLE CP

X/LNM	.2000	.4000
PHI		
135.000	-.2193	
180.000	.1149	-.1907
225.000	-.3105	

ORIGINAL PAGE IS OF POOR QUALITY

DATE 10 DEC 74 TABULATED PRESSURE DATA - IA14A - VOL. 4

ARC11-716 IA14 01+T12+S12N25+AT11 OMS NOZZLE (RB1E18)

MACH (2) = .976 BETAO (4) = 4.070

SECTION (1)OMS NOZZLE DEPENDENT VARIABLE CP

X/LNM	.2000	.4000
PHI		
135.000	-.2626	
180.000	.0514	-.2173
225.000	-.3460	

MACH (2) = .974 BETAO (5) = 8.120

SECTION (1)OMS NOZZLE DEPENDENT VARIABLE CP

X/LNM	.2000	.4000
PHI		
135.000	-.2522	
180.000	-.0542	-.2516
225.000	-.3494	

MACH (3) = 1.102 BETAO (1) = -8.090

SECTION (1)OMS NOZZLE DEPENDENT VARIABLE CP

X/LNM	.2000	.4000
PHI		
135.000	-.2720	
180.000	.4535	.2048
225.000	.7621	

MACH (3) = 1.100 BETAO (2) = -4.010

SECTION (1)OMS NOZZLE DEPENDENT VARIABLE CP

X/LNM	.2000	.4000
PHI		
135.000	-.2826	
180.000	.3487	-.0447
225.000	.0032	

ARC11-716 IA14 O1+T12+S12N25+AT11 OMS NOZZLE (RB1E18)

MACH (3) = 1.102 BETAO (3) = .030

SECTION (1)OMS NOZZLE DEPENDENT VARIABLE CP

X/LNM	.2000	.4000
PHI		
135.000	-.2545	
180.000	.2387	-.0959
225.000	-.1606	

MACH (3) = 1.100 BETAO (4) = 4.090

SECTION (1 OMS NOZZLE DEPENDENT VARIABLE CP

X/LNM	.2000	.4000
PHI		
135.000	-.2334	
180.000	.1745	-.1916
225.000	-.2932	

MACH (3) = 1.100 BETAO (5) = 8.130

SECTION (1)OMS NOZZLE DEPENDENT VARIABLE CP

X/LNM	.2000	.4000
PHI		
135.000	-.2873	
180.000	-.0083	-.2548
225.000	-.3332	

MACH (4) = 1.292 BETAO (1) = -8.080

SECTION (1)OMS NOZZLE DEPENDENT VARIABLE CP

X/LNM	.2000	.4000
PHI		
135.000	-.1538	
180.000	.4811	.4156
225.000	.5772	

ORIGINAL PAGE IS
OF POOR QUALITY

ARC11-716 IA14 01+T12+S12N25+AT11 OMS NOZZLE (RB1E18)

MACH (4) = 1.244 BETAO (2) = -4.030

SECTION (1)OMS NOZZLE DEPENDENT VARIABLE CP

X/LNM	.2000	.4000
PHI		
135.000	-.2082	
180.000	.4249	.1093
225.000	.1975	

MACH (4) = 1.249 BETAO (3) = .030

SECTION (1)OMS NOZZLE DEPENDENT VARIABLE CP

X/LNM	.2000	.4000
PHI		
135.000	-.2070	
180.000	.2384	-.0356
225.000	-.0695	

MACH (4) = 1.246 BETAO (4) = 4.090

SECTION (1)OMS NOZZLE DEPENDENT VARIABLE CP

X/LNM	.2000	.4000
PHI		
135.000	-.1949	
180.000	.1879	-.1522
225.000	-.2117	

MACH (4) = 1.248 BETAO (5) = 8.150

SECTION (1)OMS NOZZLE DEPENDENT VARIABLE CP

X/LNM	.2000	.4000
PHI		
135.000	-.2424	
180.000	-.0884	-.2458
225.000	-.2689	

DATE 10 DEC 74 TABULATED PRESSURE DATA - IA14A - VOL. 4

ARC11-716 IA14 (M+T12+S12N25+AT10 OMS NOZZLE (RB1E24) (28 SEP 73)

REFERENCE DATA

SREF = 2.4210 SQ.FT. XMRP = 29.5800 INCHES
LREF = 38.7090 INCHES YMRP = .0000 INCHES
BREF = 38.7090 INCHES ZMRP = .0000 INCHES
SCALE = .0300 SCALE

PARAMETRIC DATA

ALPHAO = -10.000 ELEVON = .000
RUDDER = .000 SPDBRK = .000

MACH (1) = .902 BETAO (1) = -9.890

SECTION (1)OMS NOZZLE DEPENDENT VARIABLE CP

X/LNM	.2000	.4000
PHI		
135.000	-.2572	
180.000	.5016	.2729
225.000	.6787	

MACH (1) = .899 BETAO (2) = 10.090

SECTION (1)OMS NOZZLE DEPENDENT VARIABLE CP

X/LNM	.2000	.4000
PHI		
135.000	-.3021	
180.000	-.1966	-.2998
225.000	-.3258	

ORIGINAL PAGE IS OF POOR QUALITY

ARC11-716 IA14 O1+T12+S12N25+AT10 OMS NOZZLE (RB1E25) (28 SEP 73)

REFERENCE DATA

SREF = 2.4010 SQ.FT. XMRP = 29.5800 INCHES
LREF = 38.7090 INCHES YMRP = .0000 INCHES
BREF = 38.7090 INCHES ZMRP = .0000 INCHES
SCALE = .0300 SCALE

PARAMETRIC DATA

ALPHAO = -8.000 ELEVON = .000
RUDDER = .000 SPDBRK = .000

MACH (1) = .899 BETAO (1) = -9.930

SECTION (1)OMS NOZZLE DEPENDENT VARIABLE CP

X/LNM	.2000	.4000
PHI		
135.000	-.2424	
180.000	.4917	.2232
223.000	.5458	

MACH (1) = .898 BETAO (2) = 10.090

SECTION (1)OMS NOZZLE DEPENDENT VARIABLE CP

X/LNM	.2000	.4000
PHI		
135.000	-.2995	
180.000	-.1949	-.2705
225.000	-.3104	

ARC11-716 IA14 O1+T12+S12N25+AT10 OMS NOZZLE (RB1E26) (28 SEP 73)

REFERENCE DATA

SREF = 2.4210 SQ.FT. XMRP = 29.5800 INCHES
LREF = 38.7090 INCHES YMRP = .0000 INCHES
BREF = 38.7090 INCHES ZMRP = .0000 INCHES
SCALE = .0300 SCALE

PARAMETRIC DATA

ALPHAO = -6.000 ELEVON = .000
RUDDER = .000 SPOBRK = .000

MACH (1) = .897 BETAO (1) = -9.940

SECTION (1)OMS NOZZLE DEPENDENT VARIABLE CP

X/LNM	.2000	.4000
PHI		
135.000	-.2337	
180.000	.4749	.2129
225.000	.4202	

MACH (1) = .898 BETAO (2) = 10.070

SECTION (1)OMS NOZZLE DEPENDENT VARIABLE CP

X/LNM	.2000	.4000
PHI		
135.000	-.2922	
180.000	-.1849	-.2691
225.000	-.3078	

ORIGINAL PAGE IS OF POOR QUALITY

ARC11-716 IA14 O1+T12+S12N25+AT10 OMS NOZZLE (RB1E27) (28 SEP 73)

REFERENCE DATA

SREF = 2.4210 SQ.FT. XMRP = 29.5800 INCHES
LREF = 38.7090 INCHES YMRP = .0000 INCHES
BREF = 38.7090 INCHES ZMRP = .0000 INCHES
SCALE = .0300 SCALE

PARAMETRIC DATA

ALPHAO = -4.000 ELEVON = .000
RUDDER = .000 SPOBRK = .000

MACH (1) = .899 BETAO (1) = -9.990

SECTION (1)OMS NOZZLE DEPENDENT VARIABLE CP

X/LNM	.2000	.4000
PHI		
135.000	-.2291	
180.000	.4492	.1653
225.000	.3313	

ARC11-716 IA14 01+T12+S12N25+AT10 OMS NOZZLE (RB1E28) (28 SEP 73)

REFERENCE DATA

SREF = 2.4210 SQ.FT. XMRP = 29.5800 INCHES
LREF = 38.7090 INCHES YMRP = .0000 INCHES
BREF = 38.7090 INCHES ZMRP = .0000 INCHES
SCALE = .0300 SCALE

PARAMETRIC DATA

ALPHAO = .000 ELEVON = .000
RUDDER = .000 SPDBRK = .000

MACH (1) = 1.246 BETAO (1) = -10.080

SECTION (1)OMS NOZZLE DEPENDENT VARIABLE CP

X/LNM	.2000	.4000
PHI		
135.000	-.1378	
180.000	.4756	.5356
225.000	.5957	

MACH (1) = 1.245 BETAO (2) = -7.960

SECTION (1)OMS NOZZLE DEPENDENT VARIABLE CP

X/LNM	.2000	.4000
PHI		
135.000	-.1430	
180.000	.4719	.3619
225.000	.5454	

MACH (1) = 1.248 BETAO (3) = -6.020

SECTION (1)OMS NOZZLE DEPENDENT VARIABLE CP

X/LNM	.2000	.4000
PHI		
135.000	-.1672	
180.000	.4716	.2479
225.000	.4260	

MACH (1) = 1.247 BETAO (4) = -3.950

SECTION (1)OMS NOZZLE DEPENDENT VARIABLE CP

X/LNM	.2000	.4000
PHI		
135.000	-.1927	
180.000	.4268	.1021
225.000	.1739	

ARC11-716 IA14 O1+T12+S12N25+AT10 OMS NOZZLE (RB1E28)

MACH (1) = 1.246 BETAO (5) = -2.040

SECTION (1)OMS NOZZLE DEPENDENT VARIABLE CP

X/LNM	.2000	.4000
PHI		
135.000	-.2074	
180.000	.3722	-.0031
225.000	-.0098	

MACH (1) = 1.246 BETAO (6) = .010

SECTION (1)OMS NOZZLE DEPENDENT VARIABLE CP

X/LNM	.2000	.4000
PHI		
135.000	-.1764	
180.000	.2296	-.0528
225.000	-.1005	

ORIGINAL PAGE IS OF POOR QUALITY

ARC11-716 IA14 O1+T12+S12N25+AT10 OMS NOZZLE (RB1E29) (28 SEP 73)

REFERENCE DATA

SREF = 2.4210 SQ.FT. XMRP = 29.5800 INCHES
LREF = 38.7090 INCHES YMRP = .0000 INCHES
BREF = 38.7090 INCHES ZMRP = .0000 INCHES
SCALE = .0300 SCALE

PARAMETRIC DATA

ALPHAO = -10.000 ELEVON = .000
RUDDER = .000 SPDBRK = .000

MACH (1) = 1.245 BETAO (1) = .030

SECTION (1)OMS NOZZLE DEPENDENT VARIABLE CP

X/LNM	.2000	.4000
PHI		
135.000	-.1236	
180.000	.5244	.3239
225.000	.3945	

ARC11-716 IA14 01+T12+S12N25+A111 OMS NOZZLE (R01E00) , 02 OCT 73)

REFERENCE DATA

SREF = 2.4210 SQ.FT. XMRP = 29.5800 INCHES
LREF = 38.7090 INCHES YMRP = .0000 INCHES
BREF = 38.7090 INCHES ZMRP = .0000 INCHES
SCALE = .0300 SCALE

PARAMETRIC DATA

ALPHAO = .000 ELEVON = .000
RUDDER = .000 SPDBRK = .000

MACH (1) = .972 BETAO (1) = .040

SECTION (1)OMS NOZZLE DEPENDENT VARIABLE CP

X/LNM	.2000	4000
PHI		
135.000	-.2242	
180.000	.1225	-.1855
225.000	-.3201	

MACH (2) = 1.002 BETAO (1) = .040

SECTION (1)OMS NOZZLE DEPENDENT VARIABLE CP

X/LNM	.2000	.4000
PHI		
135.000	-.2606	
180.000	.1622	-.1818
225.000	-.2900	

MACH (3) = 1.025 BETAO (1) = .040

SECTION (1)OMS NOZZLE DEPENDENT VARIABLE CP

X/LNM	.2000	.4000
PHI		
135.000	-.2530	
180.000	.1884	-.1512
225.000	-.2581	

ARC11-716 IA14 O1+T12+S12N25+AT10 OMS NOZZLE (RB1E31) (06 FEB 74)

REFERENCE DATA

SREF = 2.4210 SQ.FT. XMRP = 29.5800 INCHES
LREF = 38.7090 INCHES YMRP = .0000 INCHES
BREF = 38.7090 INCHES ZMRP = .0000 INCHES
SCALE = .0300 SCALE

PARAMETRIC DATA

MACH = .900 ELEVON = .000
RUDDER = .000 SPDBRK = .000

ALPHAO(1) = -10.140 BETAO (1) = -8.370

SECTION (1)OMS NOZZLE DEPENDENT VARIABLE CP

X/LNM	.2000	4000
PHI		
135.000	-.2313	
180.000	.5026	.1807
225.000	.4466	

ALPHAO(1) = -10.130 BETAO (2) = -6.560

SECTION (1)OMS NOZZLE DEPENDENT VARIABLE CP

X/LNM	.2000	.4000
PHI		
135.000	-.2023	
180.000	.4927	.1496
225.000	.2348	

ALPHAO(1) = -10.130 BETAO (3) = -4.640

SECTION (1)OMS NOZZLE DEPENDENT VARIABLE CP

X/LNM	.2000	.4000
PHI		
135.000	-.1810	
180.000	[illegible]	.1142
225.000	.083[illegible]	

ALPHAO(1) = -10.080 BETAO (4) = -3.250

SECTION (1)OMS NOZZLE DEPENDENT VARIABLE CP

X/LNM	.2000	.4000
PHI		
135.000	-.1743	
180.000	.4673	.0539
225.000	-.0124	

ORIGINAL PAGE IS OF POOR QUALITY

ARC11-716 IA14 O1+T12+S12N25+AT10 OMS NOZZLE (RB1E31)

ALPHAO(1) = -10.040 BETAO (5) = -1.600

SECTION (1)OMS NOZZLE DEPENDENT VARIABLE CP

X/LNM	.2000	.4000
PHI		
135.000	-.1751	
180.000	.4556	-.0103
225.000	-.1134	

ALPHAO(1) = -10.040 BETAO (6) = .100

SECTION (1)OMS NOZZLE DEPENDENT VARIABLE CP

X/LNM	.2000	.4000
PHI		
135.000	-.1823	
180.000	.4592	-.0599
225.000	-.1765	

ALPHAO(1) = -10.040 BETAO (7) = 1.810

SECTION (1)OMS NOZZLE DEPENDENT VARIABLE CP

X/LNM	.2000	.4000
PHI		
135.000	-.1963	
180.000	.3864	-.1067
225.000	-.2411	

ALPHAO(1) = -10.130 BETAO (8) = 3.580

SECTION (1)OMS NOZZLE DEPENDENT VARIABLE CP

X/LNM	.2000	.4000
PHI		
135.000	-.2080	
180.000	.2930	-.1647
225.000	-.3126	

ARC11-716 'A14 O1+T12+S12N25+AT10 OMS NOZZLE (RB1E31)

ALPHAO(1) = -10.130 BETAO (9) = 5.250

SECTION (1)OMS NOZZLE DEPENDENT VARIABLE CP

X/LNM	.2000	.4000
PHI		
135.000	-.2314	
180.000	.2145	-.1790
225.000	-.3156	

ALPHAO(1) = -10.120 BETAO (10) = 7.010

SECTION (1)OMS NOZZLE DEPENDENT VARIABLE CP

X/LNM	.2000	.4000
PHI		
135.000	-.2318	
180.000	.1479	-.1433
225.000	-.3070	

ALPHAO(1) = -10.130 BETAO (11) = 8.780

SECTION (1)OMS NOZZLE DEPENDENT VARIABLE CP

X/LNM	.2000	.4000
PHI		
135.000	-.2881	
180.000	-.0821	-.2676
225.000	-.3236	

ALPHAO(2) = -8.110 BETAO (1) = -8.350

SECTION (1)OMS NOZZLE DEPENDENT VARIABLE CP

X/LNM	.2000	.4000
PHI		
135.000	-.2249	
180.000	.4891	.1602
225.000	.3328	

ORIGINAL PAGE IS OF POOR QUALITY

ARC11-716 IA14 O1+T12+S12N25+AT10 OMS NOZZLE (RB1E31)

ALPHAO(2) = -8.120 BETAO (2) = -6.640

SECTION (1)OMS NOZZLE DEPENDENT VARIABLE CP

X/LNM	.2000	.4000
PHI		
135.000	-.1973	
180.000	.4752	.1265
225.000	.1937	

ALPHAO(2) = -8.120 BETAO (3) = -4.940

SECTION (1)OMS NOZZLE DEPENDENT VARIABLE CP

X/LNM	.2000	.4000
PHI		
135.000	-.1724	
180.000	.4509	.1015
225.000	.0769	

ALPHAO(2) = -8.130 BETAO (4) = -3.270

SECTION (1)OMS NOZZLE DEPENDENT VARIABLE CP

X/LNM	.2000	.4000
PHI		
135.000	-.1710	
180.000	.4376	.0512
225.000	-.0184	

ALPHAO(2) = -8.130 BETAO (5) = -1.600

SECTION (1)OMS NOZZLE DEPENDENT VARIABLE CP

X/LNM	.2000	.4000
PHI		
135.000	-.1663	
180.000	.4271	-.0056
225.000	-.1092	

ARC11-716 IA14 O1+T12+S12N25+AT10 OMS NOZZLE (RB1E31)

ALPHAO(2) = -8.130 BETAO (6) = .010

SECTION (1)OMS NOZZLE DEPENDENT VARIABLE CP

X/LNM	.2000	.4000
PHI		
135.000	-.1837	
180.000	.4105	-.0361
225.000	-.1562	

ALPHAO(2) = -8.120 BETAO (7) = 1.700

SECTION (1)OMS NOZZLE DEPENDENT VARIABLE CP

X/LNM	.2000	.4000
PHI		
135.000	-.2005	
180.000	.3654	-.0875
225.000	-.2493	

ALPHAO(2) = -8.110 BETAO (8) = 3.340

SECTION (1)OMS NOZZLE DEPENDENT VARIABLE CP

X/LNM	.2000	.4000
PHI		
135.000	-.1860	
180.000	.2867	-.1283
225.000	.2516	

ALPHAO(2) = -8.090 BETAO (9) = 4.950

SECTION (1)OMS NOZZLE DEPENDENT VARIABLE CP

X/LNM	.2000	.4000
PHI		
135.000	-.2057	
180.000	.2214	-.1308
225.000	-.2804	

ARC11-716 IA14 01+T12+S12N25+AT10 OMS NOZZLE (RB1E31)

ALPHAO(2) = -8.080 BETAO (10) = 6.750

SECTION (1)OMS NOZZLE DEPENDENT VARIABLE CP

X/LNM	.2000	.4000
PHI		
135.000	-.2175	
180.000	.0893	-.1717
225.000	-.3126	

ALPHAO(2) = -8.090 BETAO (11) = 8.570

SECTION (1)OMS NOZZLE DEPENDENT VARIABLE CP

X/LNM	.2000	.4000
PHI		
135.000	-.2486	
180.000	-.0617	-.2366
225.000	-.3162	

ALPHAO(3) = -8.100 BETAO (1) = -8.140

SECTION (1)OMS NOZZLE DEPENDENT VARIABLE CP

X/LNM	.2000	.4000
PHI		
135.000	-.20[illegible]	
180.000	.4743	.1336
225.000	.2536	

ALPHAO(3) = -8.110 BETAO (2) = -8.480

SECTION (1)OMS NOZZLE DEPENDENT VARIABLE CP

X/LNM	.2000	.4000
PHI		
135.000	-.1875	
180.000	.4808	.1038
225.000	.1342	

ARC11-716 IA14 O1+T12+S12N25+AT10 OMS NOZZLE (RB1E31)

ALPHAO(3) = -6.130 BETAO (3) = -4.820

SECTION (1)OMS NOZZLE DEPENDENT VARIABLE CP

X/LNM	.2000	.4000
PHI		
135.000	-.1664	
180.000	.4278	.0968
225.000	.0779	

ALPHAO(3) = -6.140 BETAO (4) = -3.220

SECTION (1)OMS NOZZLE DEPENDENT VARIABLE CP

X/LNM	.2000	.4000
PHI		
135.000	-.1555	
180.000	.3796	.0464
225.000	-.0268	

ALPHAO(3) = -6.030 BETAO (5) = -1.620

SECTION (1)OMS NOZZLE DEPENDENT VARIABLE CP

X/LNM	.2000	.4000
PHI		
135.000	-.1508	
180.000	.3935	.0151
225.000	-.0836	

ALPHAO(3) = -6.030 BETAO (6) = .000

SECTION (1)OMS NOZZLE DEPENDENT VARIABLE CP

X/LNM	.2000	.4000
PHI		
135.000	-.1636	
180.000	.3762	-.0390
225.000	-.1541	

ARC11-716 IA14 O1+T12+S12N25+AT10 OMS NOZZLE (RB1E31)

ALPHAO(3) = -6.030 BETAO (7) = 1.640

SECTION (1)OMS NOZZLE DEPENDENT VARIABLE CP

X/LNM	.2000	.4000
PHI		
135.000	-.2049	
180.000	.3203	-.0981
225.000	-.2439	

ALPHAO(3) = -6.180 BETAO (8) = 3.330

SECTION (1)OMS NOZZLE DEPENDENT VARIABLE CP

X/LNM	.2000	.4000
PHI		
135.000	-.1679	
180.000	.2444	-.1302
225.000	-.2512	

ALPHAO(3) = -6.180 BETAO (9) = 5.010

SECTION (1)OMS NOZZLE DEPENDENT VARIABLE CP

X/LNM	.2000	.4000
PHI		
135.000	-.1775	
180.000	.2267	-.0922
225.000	-.2592	

ALPHAO(3) = -6.140 BETAO (10) = 6.740

SECTION (1)OMS NOZZLE DEPENDENT VARIABLE CP

X/LNM	.2000	.4000
PHI		
135.000	-.2349	
180.000	.0282	-.1795
225.000	-.3053	

ARC11-716 IA14 O1+T12+S12N25+AT10 OMS NOZZLE (RB1E31)

ALPHAO(3) = -8.140 BETAO (11) = 8.900

SECTION (1)OMS NOZZLE DEPENDENT VARIABLE CP

X/LNM	.2000	.4000
PHI		
135.000	-.2784	
180.000	-.0908	-.2336
225.000	-.3020	

ALPHAO(4) = -4.170 BETAO (1) = -9.980

SECTION (1)OMS NOZZLE DEPENDENT VARIABLE CP

X/LNM	.2000	.4000
PHI		
135.000	-.2280	
180.000	.4505	.1545
225.000	.3334	

ALPHAO(4) = -4.190 BETAO (2) = -7.970

SECTION (1)OMS NOZZLE DEPENDENT VARIABLE CP

X/LNM	.2000	.4000
PHI		
135.000	-.1953	
180.000	.4437	.1136
225.000	.1942	

ALPHAO(4) = -4.210 BETAO (3) = -5.970

SECTION (1)OMS NOZZLE DEPENDENT VARIABLE CP

X/LNM	.2000	.4000
PHI		
135.000	-.1770	
180.000	.4280	.0926
225.000	.0906	

ARC11-716 IA14 O1+T12+S12N25+AT10 OMS NOZZLE (RB1E31)

ALPHAO(4) = -4.190 BETAO (4) = -3.980

SECTION (1)OMS NOZZLE DEPENDENT VARIABLE CP

X/LNM	.2000	.4000
PHI		
135.000	-.1992	
180.000	.3803	.0632
225.000	.0056	

ALPHAO(4) = -4.180 BETAO (5) = -1.980

SECTION (1)OMS NOZZLE DEPENDENT VARIABLE CP

X/LNM	.2000	.4000
PHI		
135.000	-.1450	
180.000	.3335	.0332
225.000	-.0694	

ALPHAO(4) = -4.180 BETAO (6) = .030

SECTION (1)OMS NOZZLE DEPENDENT VARIABLE CP

X/LNM	.2000	.4000
PHI		
135.000	-.1797	
180.000	.3395	-.0610
225.000	-.1857	

ALPHAO(4) = -4.170 BETAO (7) = 2.020

SECTION (1)OMS NOZZLE DEPENDENT VARIABLE CP

X/LNM	.2000	.4000
PHI		
135.000	-.2032	
180.000	.2892	-.0976
225.000	-.2347	

ORIGINAL PAGE IS OF POOR QUALITY

ARC11-716 IA14 O1+T12+S12N25+AT10 OMS NOZZLE (RB1E31)

ALPHAO(4) = -4.240 BETAO (8) = 4.040

SECTION (1)OMS NOZZLE DEPENDENT VARIABLE CP

X/LNM	.2000	.4000
PHI		
135.000	-.1958	
180.000	.2484	-.0758
225.000	-.2385	

ALPHAO(4) = -4.230 BETAO (9) = 6.050

SECTION (1)OMS NOZZLE DEPENDENT VARIABLE CP

X/LNM	.2000	.4000
PHI		
135.000	-.2281	
180.000	.0424	-.1703
225.000	-.2664	

ALPHAO(4) = -4.200 BETAO (10) = 8.070

SECTION (1)OMS NOZZLE DEPENDENT VARIABLE CP

X/LNM	.2000	.4000
PHI		
135.000	-.2613	
180.000	-.0510	-.2056
225.000	-.2710	

ALPHAO(4) = -4.200 BETAO (11) = 10.080

SECTION (1)OMS NOZZLE DEPENDENT VARIABLE CP

X/LNM	.2000	.4000
PHI		
135.000	-.2902	
180.000	-.2011	-.2684
225.000	-.2992	

ORIGINAL PAGE IS OF POOR QUALITY

ARC11-716 IA14 O1+T12+S12N25+AT10 OMS NOZZLE (RB1E31)

ALPHAO(5) = -2.870 BETAO (1) = -9.990

SECTION (1)OMS NOZZLE DEPENDENT VARIABLE CP

X/LNM	.2000	.4000
PHI		
135.000	-.2259	
180.000	.4329	.1510
225.000	.2973	

ALPHAO(5) = -2.890 BETAO (2) = -7.990

SECTION (1)OMS NOZZLE DEPENDENT VARIABLE CP

X/LNM	.2000	.4000
PHI		
135.000	-.1992	
180.000	.4262	.0965
225.000	.1732	

ALPHAO(5) = -2.870 BETAO (3) = -5.970

SECTION (1)OMS NOZZLE DEPENDENT VARIABLE CP

X/LNM	.2000	.4000
PHI		
135.000	-.1755	
180.000	.4143	.0804
225.000	.0888	

ALPHAO(5) = -2.860 BETAO (4) = -3.980

SECTION (1)OMS NOZZLE DEPENDENT VARIABLE CP

X/LNM	.2000	.4000
PHI		
135.000	-.1580	
180.000	.3752	.0603
225.000	.0068	

ARC11-716 IA14 O1+T12+S12N25+AT10 OMS NOZZLE (RB1E31)

ALPHAO(5) = -2.840 BETAO (5) = -1.990

SECTION (1)OMS NOZZLE DEPENDENT VARIABLE CP

X/LNM	.2000	.4000
PHI		
135.000	-.1389	
180.000	.2836	.0500
225.000	-.0583	

ALPHAO(5) = -2.840 BETAO (6) = .010

SECTION (1)OMS NOZZLE DEPENDENT VARIABLE CP

X/LNM	.2000	.4000
PHI		
135.000	-.1842	
180.000	.3202	-.0474
225.000	-.1745	

ALPHAO(5) = -2.840 BETAO (7) = 2.040

SECTION (1)OMS NOZZLE DEPENDENT VARIABLE CP

X/LNM	.2000	.4000
PHI		
135.000	-.1946	
180.000	.2732	-.0797
225.000	-.2250	

ALPHAO(5) = -2.860 BETAO (8) = 4.050

SECTION (1)OMS NOZZLE DEPENDENT VARIABLE CP

X/LNM	.2000	.4000
PHI		
135.000	-.1575	
180.000	.2127	-.0627
225.000	-.2195	

ARC11-716 IA14 O1+T12+S12N25+AT10 OMS NOZZLE (RB1E31)

ALPHAO(5) = -2.870 BETAO (9) = 6.060

SECTION (1)OMS NOZZLE DEPENDENT VARIABLE CP

X/LNM	.2000	.4000
PHI		
135.000	-.2084	
180.000	.0606	-.1554
225.000	-.2535	

ALPHAO(5) = -2.870 BETAO (10) = 8.070

SECTION (1)OMS NOZZLE DEPENDENT VARIABLE CP

X/LNM	.2000	.4000
PHI		
135.000	-.2511	
180.000	-.0803	-.2181
225.000	-.2816	

ALPHAO(5) = -2.830 BETAO (11) = 10.090

SECTION (1)OMS NOZZLE DEPENDENT VARIABLE CP

X/LNM	.2000	.4000
PHI		
135.000	-.2825	
180.000	-.1993	-.2514
225.000	-.2806	

ALPHAO(6) = -.690 BETAO (1) = -10.000

SECTION (1)OMS NOZZLE DEPENDENT VARIABLE CP

X/LNM	.2000	.4000
PHI		
135.000	-.2231	
180.000	.4010	.1282
225.000	.2722	

ARC11-716 IA14 O1+T12+S12N25+AT10 OMS NOZZLE (RB1E31)

ALPHAO(6) = -.080 BETAO (2) = -7.980

SECTION (1)OMS NOZZLE DEPENDENT VARIABLE CP

X/LNH	.2000	.4000
PHI		
135.000	-.1880	
180.000	.3918	.0970
225.000	.1657	

ALPHAO(6) = -.070 BETAO (3) = -5.980

SECTION (1)OMS NOZZLE DEPENDENT VARIABLE CP

X/LNH	.2000	.4000
PHI		
135.000	-.1627	
180.000	.3664	.0862
225.000	.0996	

ALPHAO(6) = -.080 BETAO (4) = -3.970

SECTION (1)OMS NOZZLE DEPENDENT VARIABLE CP

X/LNH	.2000	.4000
PHI		
135.000	-.1552	
180.000	.3603	.0571
225.000	.0133	

ALPHAO(6) = -.080 BETAO (5) = -1.980

SECTION (1)OMS NOZZLE DEPENDENT VARIABLE CP

X/LNH	.2000	.4000
PHI		
135.000	-.1317	
180.000	.2710	.0633
225.000	-.0374	

ARC11-716 IA14 O1+T12+S12N25+AT10 OMS NOZZLE (RB1E31)

ALPHAO(6) = -.680 BETAO (6) = .010

SECTION (1)OMS NOZZLE DEPENDENT VARIABLE CP

X/LNM	.2000	.4000
PHI		
135.000	-.1743	
180.000	.2710	-.0173
225.000	-.1368	

ALPHAO(6) = -.670 BETAO (7) = 2.050

SECTION (1)OMS NOZZLE DEPENDENT VARIABLE CP

X/LNM	.2000	.4000
PHI		
135.000	-.1819	
180.000	.2512	-.0706
225.000	-.1995	

ALPHAO(6) = -.680 BETAO (8) = 4.050

SECTION (1)OMS NOZZLE DEPENDENT VARIABLE CP

X/LNM	.2000	.4000
PHI		
135.000	-.1681	
180.000	.1912	-.0336
225.000	-.1830	

ALPHAO(6) = -.680 BETAO (9) = 6.080

SECTION (1)OMS NOZZLE DEPENDENT VARIABLE CP

X/LNM	.2000	.4000
PHI		
135.000	-.2042	
180.000	.0330	-.1236
225.000	-.2301	

ARC11-716 IA14 O1+T12+S12N25+AT10 OMS NOZZLE (RB1E31)

ALPHAO(6) = -.080 BETAO (10) = 8.080

SECTION (1)OMS NOZZLE DEPENDENT VARIABLE CP

X/LNM	.2000	.4000
PHI		
135.000	-.2400	
180.000	-.0742	-.2180
225.000	-.2622	

ALPHAO(6) = -.080 BETAO (11) = 10.120

SECTION (1)OMS NOZZLE DEPENDENT VARIABLE CP

X/LNM	.2000	.4000
PHI		
135.000	-.2765	
180.000	-.1912	-.2565
225.000	-.2817	

ALPHAO(7) = 2.080 BETAO (1) = -10.000

SECTION (1)OMS NOZZLE DEPENDENT VARIABLE CP

X/LNM	.2000	.4000
PHI		
135.000	-.2082	
180.000	.3464	.1122
225.000	.2090	

ALPHAO(7) = 1.960 BETAO (2) = -5.960

SECTION (1)OMS NOZZLE DEPENDENT VARIABLE CP

X/LNM	.2000	.4000
PHI		
135.000	-.1703	
180.000	.3451	.0810
225.000	.0615	

ORIGINAL PAGE IS OF POOR QUALITY

ARC11-716 IA14 O1+T12+S12N25+AT10 OMS NOZZLE (RB1E31)

ALPHAO(7) = 1.970 BETAO (3) = -3.980

SECTION (1)OMS NOZZLE DEPENDENT VARIABLE CP

X/LNN	.2000	.4000
PHI		
135.000	-.1477	
180.000	.3285	.0612
225.000	.0065	

ALPHAO(7) = 1.980 BETAO (4) = -1.990

SECTION (1)OMS NOZZLE DEPENDENT VARIABLE CP

X/LNN	.2000	.4000
PHI		
135.000	-.1343	
180.000	.2404	.0510
225.000	-.0222	

ALPHAO(7) = 1.980 BETAO (5) = .080

SECTION (1)OMS NOZZLE DEPENDENT VARIABLE CP

X/LNN	.2000	.4000
PHI		
135.000	-.1088	
180.000	.1988	-.0026
225.000	-.1103	

ALPHAO(7) = 1.970 BETAO (6) = 2.040

SECTION (1)OMS NOZZLE DEPENDENT VARIABLE CP

X/LNN	.2000	.4000
PHI		
135.000	-.1004	
180.000	.2238	-.0318
225.000	-.1538	

ARC11-T18 IA14 O1+T12+S12N25+AT10 OMS NOZZLE (RB1E31)

ALPHAO(7) = 2.050 BETAO (7) = 4.050

SECTION (1)OMS NOZZLE DEPENDENT VARIABLE CP

X/LNM	.2000	.4000
PHI		
135.000	-.1584	
180.000	.1837	-.0145
225.000	-.1631	

ALPHAO(7) = 2.050 BETAO (8) = 6.070

SECTION (1)OMS NOZZLE DEPENDENT VARIABLE CP

X/LNM	.2000	.4000
PHI		
135.000	-.2006	
180.000	.0586	-.1121
225.000	-.2066	

ALPHAO(7) = 2.040 BETAO (9) = 8.090

SECTION (1)OMS NOZZLE DEPENDENT VARIABLE CP

X/LNM	.2000	.4000
PHI		
135.000	-.2267	
180.000	-.0644	-.1886
225.000	-.2285	

ALPHAO(7) = 2.080 BETAO (10) = 10.110

SECTION (1)OMS NOZZLE DEPENDENT VARIABLE CP

X/LNM	.2000	.4000
PHI		
135.000	-.2782	
180.000	-.2053	-.2472
225.000	-.2845	

ORIGINAL PAGE IS
OF POOR QUALITY

ARC11-716 IA14 O1+T12+S12N25+AT10 OMS NOZZLE (R61E31)

ALPHAO(8) = 4.110 BETAO (1) = -10.000

SECTION (1)OMS NOZZLE DEPENDENT VARIABLE CP

X/LNM	.2000	.4000
PHI		
135.000	-.1897	
180.000	.3023	.1000
225.000	.1587	

ALPHAO(8) = 4.130 BETAO (2) = -7.980

SECTION (1)OMS NOZZLE DEPENDENT VARIABLE CP

X/LNM	.2000	.4000
PHI		
135.000	-.1635	
180.000	.3124	.0855
225.000	.1048	

ALPHAO(8) = 4.150 BETAO (3) = -5.980

SECTION (1)OMS NOZZLE DEPENDENT VARIABLE CP

X/LNM	.2000	.4000
PHI		
135.000	-.1468	
180.000	.3193	.0847
225.000	.0382	

ALPHAO(8) = 4.160 BETAO (4) = -3.980

SECTION (1)OMS NOZZLE DEPENDENT VARIABLE CP

X/LNM	.2000	.4000
PHI		
135.000	-.1280	
180.000	.3066	.0885
225.000	-.0111	

ARC11-716 IA14 O1+T12+S12N25+AT10 OMS NOZZLE (RB1E31)

ALPHAO(8) = 4.040 BETAO (5) = -1.980

SECTION (1)OMS NOZZLE DEPENDENT VARIABLE CP

X/LNM	.2000	.4000
PHI		
135.000	-.1539	
180.000	.2130	.1074
225.000	-.0141	

ALPHAO(8) = 4.050 BETAO (6) = .030

SECTION (1)OMS NOZZLE DEPENDENT VARIABLE CP

X/LNM	.2000	.4000
PHI		
135.000	-.1656	
180.000	.1582	.0029
225.000	-.1045	

ALPHAO(8) = 4.050 BETAO (7) = 2.050

SECTION (1)OMS NOZZLE DEPENDENT VARIABLE CP

X/LNM	.2000	.4000
PHI		
135.000	-.1746	
180.000	.2116	-.0175
225.000	-.1305	

ALPHAO(8) = 4.050 BETAO (8) = 4.050

SECTION (1)OMS NOZZLE DEPENDENT VARIABLE CP

X/LNM	.2000	.4000
PHI		
135.000	-.1503	
180.000	.1612	-.0112
225.000	-.1501	

ARC11-716 IA14 O1+T12+S12N25+AT10 OMS NOZZLE (RB1E31)

ALPHAO(8) = 4.020 BETAO (9) = 8.070

SECTION (1)OMS NOZZLE DEPENDENT VARIABLE CP

X/LNM	.2000	.4000
PHI		
135.000	-.1978	
180.000	.0403	-.0725
225.000	-.1617	

ALPHAO(8) = 4.010 BETAO (10) = 8.100

SECTION (1)OMS NOZZLE DEPENDENT VARIABLE CP

X/LNM	.2000	.4000
PHI		
135.000	-.2426	
180.000	-.1214	-.1954
225.000	-.2147	

ALPHAO(8) = 4.000 BETAO (11) = 10.130

SECTION (1)OMS NOZZLE DEPENDENT VARIABLE CP

X/LNM	.2000	.4000
PHI		
135.000	-.2647	
180.000	-.1939	-.2298
225.000	-.2451	

ALPHAO(9) = 6.000 BETAO (1) = -9.980

SECTION (1)OMS NOZZLE DEPENDENT VARIABLE CP

X/LNM	.2000	.4000
PHI		
135.000	-.1828	
180.000	.2477	.1024
225.000	.1160	

ARC11-716 IA14 O1+T12+S12N25+AT10 OMS NOZZLE (RB1E31)

ALPHAO(9) = 5.930 BETAO (2) = -7.960

SECTION (1)OMS NOZZLE DEPENDENT VARIABLE CP

X/LNM	.2000	.4000
PHI		
135.000	-.1475	
180.000	.2628	.1121
225.000	.0927	

ALPHAO(9) = 5.960 BETAO (3) = -5.960

SECTION (1)OMS NOZZLE DEPENDENT VARIABLE CP

X/LNM	.2000	.4000
PHI		
135.000	-.1325	
180.000	.2626	.1312
225.000	.0356	

ALPHAO(9) = 5.950 BETAO (4) = -3.970

SECTION (1)OMS NOZZLE DEPENDENT VARIABLE CP

X/LNM	.2000	.4000
PHI		
135.000	-.1498	
180.000	.2485	.1461
225.000	.0111	

ALPHAO(9) = 5.940 BETAO (5) = -1.960

SECTION (1)OMS NOZZLE DEPENDENT VARIABLE CP

X/LNM	.2000	.4000
PHI		
135.000	-.1682	
180.000	.1620	.1156
225.000	.0043	

ARC11-716 IA14 O1+T12+S12N25+AT10 OMS NOZZLE (RB1E31)

ALPHAO(9) = 5.940 BETAO (6) = .040

SECTION (1)OMS NOZZLE DEPENDENT VARIABLE CP

X/LNH	.2000	.4000
PHI		
135.000	-.1666	
180.000	.1260	.0002
225.000	-.0983	

ALPHAO(9) = 5.880 BETAO (7) = 2.060

SECTION (1)OMS NOZZLE DEPENDENT VARIABLE CP

X/LNH	.2000	.4000
PHI		
135.000	-.1761	
180.000	.1429	-.0194
225.000	-.1336	

ALPHAO(9) = 5.990 BETAO (8) = 4.070

SECTION (1)OMS NOZZLE DEPENDENT VARIABLE CP

X/LNH	.2000	.4000
PHI		
135.000	-.1680	
180.000	.1023	-.0404
225.000	-.1443	

ALPHAO(9) = 5.990 BETAO (9) = 6.100

SECTION (1)OMS NOZZLE DEPENDENT VARIABLE CP

X/LNH	.2000	.4000
PHI		
135.000	-.1939	
180.000	.0573	-.0383
225.000	-.1268	

ORIGINAL PAGE IS OF POOR QUALITY

ARC11-716 IA14 O1+T12+S12N25+AT10 OMS NOZZLE (RB1E31)

ALPHAO(9) = 8.020 BETAO (10) = 8.130

SECTION (1)OMS NOZZLE DEPENDENT VARIABLE CP

X/LNM	.2000	.4000
PHI		
135.000	-.2376	
180.000	-.0336	-.1243
225.000	-.1700	

ALPHAO(9) = 5.990 BETAO (11) = 10.150

SECTION (1)OMS NOZZLE DEPENDENT VARIABLE CP

X/LNM	.2000	.4000
PHI		
135.000	-.2663	
180.000	-.1896	-.2333
225.000	-.2416	

ALPHAO(10) = 8.050 BETAO (1) = -9.970

SECTION (1)OMS NOZZLE DEPENDENT VARIABLE CP

X/LNM	.2000	.4000
PHI		
135.000	-.1837	
180.000	.1761	.1360
225.000	.0694	

ALPHAO(10) = 8.000 BETAO (2) = -7.950

SECTION (1)OMS NOZZLE DEPENDENT VARIABLE CP

X/LNM	.2000	.4000
PHI		
135.000	-.1681	
180.000	.2053	.2097
225.000	.0671	

ORIGINAL PAGE IS OF POOR QUALITY

ARC11-716 IA14 O1+T12+S12N25+AT10 OMS NOZZLE (RB1E31)

ALPHAO(10) = 7.980 BETAO (3) = -5.950

SECTION (1)OMS NOZZLE DEPENDENT VARIABLE CP

X/LNM	.2000	.4000
PHI		
135.000	-.1828	
180.000	.2118	.2141
225.000	.0647	

ALPHAO(10) = 7.940 BETAO (4) = -3.970

SECTION (1)OMS NOZZLE DEPENDENT VARIABLE CP

X/LNM	.2000	.4000
PHI		
135.000	-.1934	
180.000	.1643	.1950
225.000	.0466	

ALPHAO(10) = 7.940 BETAO (5) = -1.980

SECTION (1)OMS NOZZLE DEPENDENT VARIABLE CP

X/LNM	.2000	.4000
PHI		
135.000	-.1758	
180.000	.0977	.1085
225.000	.0208	

ALPHAO(10) = 7.890 BETAO (6) = .030

SECTION (1)OMS NOZZLE DEPENDENT VARIABLE CP

X/LNM	.2000	.4000
PHI		
135.000	-.1662	
180.000	.0838	.0097
225.000	-.0588	

ARC11-716 IA14 O1+T12+S12N25+AT10 OMS NOZZLE (RB1E31)

ALPHAO(10) = 7.940 BETAO (7) = 2.060

SECTION (1)OMS NOZZLE DEPENDENT VARIABLE CP

X/LNM	.2000	.4000
PHI		
135.000	-.1912	
180.000	.1042	-.0238
225.000	-.1313	

ALPHAO(10) = 8.010 BETAO (8) = 4.090

SECTION (1)OMS NOZZLE DEPENDENT VARIABLE CP

X/LNM	.2000	.4000
PHI		
135.000	-.1601	
180.000	.0589	-.0331
225.000	-.1361	

ALPHAO(10) = 8.000 BETAO (9) = 6.120

SECTION (1)OMS NOZZLE DEPENDENT VARIABLE CP

X/LNM	.2000	.4000
PHI		
135.000	-.1885	
180.000	.0717	-.0242
225.000	-.1291	

ALPHAO(10) = 7.980 BETAO (10) = 8.120

SECTION (1)OMS NOZZLE DEPENDENT VARIABLE CP

X/LNM	.2000	.4000
PHI		
135.000	-.2397	
180.000	-.0248	-.0543
225.000	-.1439	

ARC11-716 IA14 O1+T12+S12N25+AT10 OMS NOZZLE (RB1E31)

ALPHAO(10) = 7.950 BETAO (11) = 10.200

SECTION (1)OMS NOZZLE DEPENDENT VARIABLE CP

X/LNM	.2000	.4000
PHI		
135.000	-.2683	
180.000	-.1510	-.1675
225.000	-.1851	

ALPHAO(11) = 9.990 BETAO (1) = -9.930

SECTION (1)OMS NOZZLE DEPENDENT VARIABLE CP

X/LNM	.2000	.4000
PHI		
135.000	-.1886	
180.000	.1144	.1791
225.000	.0304	

ALPHAO(11) = 10.010 BETAO (2) = -7.910

SECTION (1)OMS NOZZLE DEPENDENT VARIABLE CP

X/LNM	.2000	.4000
PHI		
135.000	-.1900	
180.000	.1447	.2249
225.000	.0553	

ALPHAO(11) = 9.920 BETAO (3) = -5.920

SECTION (1)OMS NOZZLE DEPENDENT VARIABLE CP

X/LNM	.2000	.4000
PHI		
135.000	-.2105	
180.000	.1414	.2244
225.000	.0577	

ARC11-716 IA14 O1+T12+S12N25+AT10 OMS NOZZLE (RB1E31)

ALPHAO(11) = 9.940 BETAO (4) = -3.950

SECTION (1)OMS NOZZLE DEPENDENT VARIABLE CP

X/LNM	.2000	.4000
PHI		
135.000	-.1984	
180.000	.0988	.1887
225.000	.0458	

ALPHAO(11) = 9.940 BETAO (5) = -1.960

SECTION (1)OMS NOZZLE DEPENDENT VARIABLE CP

X/LNM	.2000	.4000
PHI		
135.000	-.1878	
180.000	.0526	.0762
225.000	.0056	

ALPHAO(11) = 9.880 BETAO (6) = .040

SECTION (1)OMS NOZZLE DEPENDENT VARIABLE CP

X/LNM	.2000	.4000
PHI		
135.000	-.1707	
180.000	.0623	.0170
225.000	-.0554	

ALPHAO(11) = 9.960 BETAO (7) = 2.070

SECTION (1)OMS NOZZLE DEPENDENT VARIABLE CP

X/LNM	.2000	.4000
PHI		
135.000	-.1829	
180.000	.0912	-.0105
225.000	-.1060	

ARC11-716 IA14 O1+T12+S12N25+AT10 OMS NOZZLE (RB1E31)

ALPHAO(11) = 9.980 BETAO (8) = 4.110

SECTION (1)OMS NOZZLE DEPENDENT VARIABLE CP

X/LNM	.2000	.4000
PHI		
135.000	-.1887	
180.000	.0968	-.0307
225.000	-.1321	

ALPHAO(11) = 9.980 BETAO (9) = 6.130

SECTION (1)OMS NOZZLE DEPENDENT VARIABLE CP

X/LNM	.2000	.4000
PHI		
135.000	-.1945	
180.000	.0842	-.0382
225.000	-.1253	

ALPHAO(11) = 10.030 BETAO (10) = 8.170

SECTION (1)OMS NOZZLE DEPENDENT VARIABLE CP

X/LNM	.2000	.4000
PHI		
135.000	-.2396	
180.000	-.0008	-.0666
225.000	-.1366	

ALPHAO(11) = 10.050 BETAO (11) = 10.230

SECTION (1)OMS NOZZLE DEPENDENT VARIABLE CP

X/LNM	.2000	.4000
PHI		
135.000	-.2657	
180.000	-.1193	-.1327
225.000	-.1827	

ARC11-716 IA14 01+T12+S12N25+AT10 OMS NOZZLE (RB1E32) (17 APR 74)

REFERENCE DATA

SREF = 2.4210 SQ.FT. XMRP = 29.5800 INCHES
LREF = 38.7090 INCHES YMRP = .0000 INCHES
BREF = 38.7090 INCHES ZMRP = .0000 INCHES
SCALE = .0300 SCALE

PARAMETRIC DATA

MACH = 1.100 ELEVON = .000
RUDDER = .000 SPOBRK = .000

ALPHAO(1) = -10.240 BETAO (1) = -9.900

SECTION (1)OMS NOZZLE DEPENDENT VARIABLE CP

X/LNM	.2000	.4000
PHI		
135.000	-.2644	
180.000	.4959	.7043
225.000	.9539	

ALPHAO(1) = -10.220 BETAO (2) = -7.890

SECTION (1)OMS NOZZLE DEPENDENT VARIABLE CP

X/LNM	.2000	.4000
PHI		
135.000	-.2358	
180.000	.5163	.6226
225.000	.9138	

ALPHAO(1) = -10.220 BETAO (3) = -5.900

SECTION (1)OMS NOZZLE DEPENDENT VARIABLE CP

X/LNM	.2000	.4000
PHI		
135.000	-.2156	
180.000	.5298	.4778
225.000	.8075	

ALPHAO(1) = -10.230 BETAO (4) = -3.930

SECTION (1)OMS NOZZLE DEPENDENT VARIABLE CP

X/LNM	.2000	.4000
PHI		
135.000	-.2167	
180.000	.5239	.3807
225.000	.6539	

ORIGINAL PAGE IS OF POOR QUALITY

ARC11-716 IA14 O1+T12+S12N25+AT10 OMS NOZZLE (RB1E32)

ALPHAO(1) = -10.230 BETAO (5) = -1.940

SECTION (1)OMS NOZZLE DEPENDENT VARIABLE CP

X/LNM	.2000	.4000
PHI		
135.000	-.2403	
180.000	.5026	.1663
225.000	.3364	

ALPHAO(1) = -10.240 BETAO (6) = .030

SECTION (1)OMS NOZZLE DEPENDENT VARIABLE CP

X/LNM	.2000	.4000
PHI		
135.000	-.2559	
180.000	.4788	.1048
225.000	.1195	

ALPHAO(1) = -10.250 BETAO (7) = 2.040

SECTION (1)OMS NOZZLE DEPENDENT VARIABLE CP

X/LNM	.2000	.4000
PHI		
135.000	-.2620	
180.000	.4573	.0388
225.000	-.0340	

ALPHAO(1) = -10.260 BETAO (8) = 4.030

SECTION (1)OMS NOZZLE DEPENDENT VARIABLE CP

X/LNM	.2000	.4000
PHI		
135.000	-.2874	
180.000	.4217	-.0606
225.000	-.1545	

ARC11-716 IA14 O1+T12+S12N25+AT10 OMS NOZZLE (RB1E32)

ALPHAO(1) = -10.250 BETAO (9) = 6.090

SECTION (1)OMS NOZZLE DEPENDENT VARIABLE CP

X/LNM	.2000	.4000
PHI		
135.000	-.3086	
180.000	.1440	-.2647
225.000	-.2888	

ALPHAO(1) = -10.240 BETAO (10) = 8.120

SECTION (1)OMS NOZZLE DEPENDENT VARIABLE CP

X/LNM	.2000	.4000
PHI		
135.000	-.2901	
180.000	-.0694	-.3104
225.000	-.3431	

ALPHAO(1) = -10.250 BETAO (11) = 10.110

SECTION (1)OMS NOZZLE DEPENDENT VARIABLE CP

X/LNM	.2000	.4000
PHI		
135.000	-.3120	
180.000	-.1730	-.3151
225.000	-.3408	

ALPHAO(2) = -8.190 BETAO (1) = -9.970

SECTION (1)OMS NOZZLE DEPENDENT VARIABLE CP

X/LNM	.2000	.4000
PHI		
135.000	-.2689	
180.000	.4998	.5876
225.000	.9748	

ORIGINAL PAGE IS OF POOR QUALITY

ARC11-716 IA14 C1+T12+S12N25+AT10 OMS NOZZLE (RB1E32)

ALPHAO(2) = -8.200 BETAO (2) = -7.960

SECTION (1)OMS NOZZLE DEPENDENT VARIABLE CP

X/LNM	.2000	.4000
PHI		
135.000	-.2420	
180.000	.5196	.4997
225.000	.9241	

ALPHAO(2) = -8.210 BETAO (3) = -5.960

SECTION (1)OMS NOZZLE DEPENDENT VARIABLE CP

X/LNM	.2000	.4000
PHI		
135.000	-.2280	
180.000	.5343	.3513
225.000	.7842	

ALPHAO(2) = -8.220 BETAO (4) = -1.980

SECTION (1)OMS NOZZLE DEPENDENT VARIABLE CP

X/LNM	.2000	.4000
PHI		
135.000	-.2460	
180.000	.4828	.0979
225.000	.1738	

ALPHAO(2) = -8.150 BETAO (5) = .010

SECTION (1)OMS NOZZLE DEPENDENT VARIABLE CP

X/LNM	.2000	.4000
PHI		
135.000	-.2538	
180.000	.4547	.0356
225.000	.0218	

ARC11-716 IA14 D1+T12+S12N25+AT10 OMS NOZZLE (RB1E32)

ALPHAO(2) = -8.190 BETAO (6) = 2.040

SECTION (1)OMS NOZZLE DEPENDENT VARIABLE CP

X/LNM	.2000	.4000
PHI		
135.000	-.2645	
180.000	.4232	-.0337
225.000	-.0966	

ALPHAO(2) = -8.240 BETAO (7) = 4.040

SECTION (1)OMS NOZZLE DEPENDENT VARIABLE CP

X/LNM	.2000	.4000
PHI		
135.000	-.2427	
180.000	.3834	-.1021
225.000	-.2139	

ALPHAO(2) = -8.220 BETAO (8) = 6.070

SECTION (1)OMS NOZZLE DEPENDENT VARIABLE CP

X/LNM	.2000	.4000
PHI		
135.000	-.2611	
180.000	.1674	-.2466
225.000	-.2762	

ALPHAO(2) = -8.230 BETAO (9) = 8.080

SECTION (1)OMS NOZZLE DEPENDENT VARIABLE CP

X/LNM	.2000	.4000
PHI		
135.000	-.2795	
180.000	-.0772	-.3041
225.000	-.3313	

ARC11-716 IA14 O1+112+S12N25+AT10 OMS NOZZLE (R81E32)

ALPHAO(2) = -8.240 BETAO (10) = 10.100

SECTION (1)OMS NOZZLE DEPENDENT VARIABLE CP

X/LNM	.2000	.4000
PHI		
135.000	-.3106	
180.000	-.1698	-.2989
225.000	-.3298	

ALPHAO(3) = -6.210 BETAO (1) = -10.020

SECTION (1)OMS NOZZLE DEPENDENT VARIABLE CP

X/LNM	.2000	.4000
PHI		
135.000	-.2615	
180.000	.5004	.5515
225.000	.9886	

ALPHAO(3) = -6.220 BETAO (2) = -7.960

SECTION (1)OMS NOZZLE DEPENDENT VARIABLE CP

X/LNM	.2000	.4000
PHI		
135.000	-.2415	
180.000	.5223	.4263
225.000	.9092	

ALPHAO(3) = -6.230 BETAO (3) = -5.960

SECTION (1)OMS NOZZLE DEPENDENT VARIABLE CP

X/LNM	.2000	.4000
PHI		
135.000	-.2322	
180.000	.5345	.2561
225.000	.7338	

ARC11-716 IA14 O1+T12+S12N25+AT10 OMS NOZZLE (RB1E32)

ALPHAO(3) = -6.120 BETAO (4) = -1.980

SECTION (1)OMS NOZZLE DEPENDENT VARIABLE CP

X/LNM	.2000	.4000
PHI		
135.000	-.2438	
180.000	.4365	.0115
225.000	.0355	

ALPHAO(3) = -6.130 BETAO (5) = .000

SECTION (1)OMS NOZZLE DEPENDENT VARIABLE CP

X/LNM	.2000	.4000
PHI		
135.000	-.2496	
180.000	.4098	-.0391
225.000	-.0885	

ALPHAO(3) = -6.120 BETAO (6) = 2.030

SECTION (1)OMS NOZZLE DEPENDENT VARIABLE CP

X/LNM	.2000	.4000
PHI		
135.000	-.2546	
180.000	.3664	-.0910
225.000	-.1595	

ALPHAO(3) = -6.110 BETAO (7) = 4.060

SECTION (1)OMS NOZZLE DEPENDENT VARIABLE CP

X/LNM	.2000	.4000
PHI		
135.000	-.2285	
180.000	.3265	-.1282
225.000	-.2504	

ARC11-716 IA14 O1+T12+S12N25+AT10 OMS NOZZLE (RB1E32)

ALPHAO(3) = -6.190 BETAO (8) = 6.080

SECTION (1)OMS NOZZLE DEPENDENT VARIABLE CP

X/LNM	.2000	.4000
PHI		
135.000	-.2396	
180.000	.1731	-.2270
225.000	-.2890	

ALPHAO(3) = -6.190 BETAO (9) = 8.090

SECTION (1)OMS NOZZLE DEPENDENT VARIABLE CP

X/LNM	.2000	.4000
PHI		
135.000	-.2774	
180.000	-.0651	-.2848
225.000	-.3129	

ALPHAO(3) = -6.170 BETAO (10) = 10.090

SECTION (1)OMS NOZZLE DEPENDENT VARIABLE CP

X/LNM	.2000	.4000
PHI		
135.000	-.3052	
180.000	-.1734	-.2833
225.000	-.3147	

ALPHAO(4) = -4.240 BETAO (1) = -10.010

SECTION (1)OMS NOZZLE DEPENDENT VARIABLE CP

X/LNM	.2000	.4000
PHI		
135.000	-.2617	
180.000	.4852	.4641
225.000	.9335	

ORIGINAL PAGE IS OF POOR QUALITY

ARC11-716 IA14 O1+T12+S12N25+AT10 OMS NOZZLE (RB1E32)

ALPHAO(4) = -4.270 BETAO (2) = -8.020

SECTION (1)OMS NOZZLE DEPENDENT VARIABLE CP

X/LNM	.2000	.4000
PHI		
135.000	-.2432	
180.000	.5104	.3202
225.000	.8208	

ALPHAO(4) = -4.290 BETAO (3) = -5.970

SECTION (1)OMS NOZZLE DEPENDENT VARIABLE CP

X/LNM	.2000	.4000
PHI		
135.000	-.2369	
180.000	.5223	.1665
225.000	.6564	

ALPHAO(4) = -4.250 BETAO (4) = -3.970

SECTION (1)OMS NOZZLE DEPENDENT VARIABLE CP

X/LNM	.2000	.4000
PHI		
135.000	-.2406	
180.000	.4394	.0203
225.000	.2336	

ALPHAO(4) = -4.240 BETAO (5) = -1.960

SECTION (1)OMS NOZZLE DEPENDENT VARIABLE CP

X/LNM	.2000	.4000
PHI		
135.000	-.2470	
180.000	.3850	-.0310
225.000	-.0375	

ORIGINAL PAGE IS OF POOR QUALITY

ALPHAO(4) = -4.220 BETAO (6) = .020

SECTION (1)OMS NOZZLE DEPENDENT VARIABLE CP

X/LNM	.2000	.4000
PHI		
135.000	-.2437	
180.000	.3542	-.0769
225.000	-.1299	

ALPHAO(4) = -4.290 BETAO (7) = 2.020

SECTION (1)OMS NOZZLE DEPENDENT VARIABLE CP

X/LNM	.2000	.4000
PHI		
135.000	-.2583	
180.000	.3045	-.1255
225.000	-.2050	

ALPHAO(4) = -4.310 BETAO (8) = 4.040

SECTION (1)OMS NOZZLE DEPENDENT VARIABLE CP

X/LNM	.2000	.4000
PHI		
135.000	-.2124	
180.000	.2702	-.1564
225.000	-.2674	

ALPHAO(4) = -4.220 BETAO (9) = 6.060

SECTION (1)OMS NOZZLE DEPENDENT VARIABLE CP

X/LNM	2000	.4000
PHI		
135.000	-.2786	
180.000	-.0427	-.2734
225.000	-.3022	

ARC11-716 IA14 O1+T12+S12N25+AT10 OMS NOZZLE (RB1E32)

ALPHAO(4) = -4.210 BETAO (10) = 10.100

SECTION (1)OMS NOZZLE DEPENDENT VARIABLE CP

X/LNM	.2000	.4000
PHI		
135.000	-.3057	
180.000	-.1638	-.2787
225.000	-.2997	

ALPHAO(5) = -2.920 BETAO (1) = -10.000

SECTION (1)OMS NOZZLE DEPENDENT VARIABLE CP

X/LNM	.2000	.4000
PHI		
135.000	-.2525	
180.000	.4732	.4434
225.000	.9137	

ALPHAO(5) = -2.930 BETAO (2) = -8.000

SECTION (1)OMS NOZZLE DEPENDENT VARIABLE CP

X/LNM	.2000	.4000
PHI		
135.000	-.2341	
180.000	.4991	.2928
225.000	.7924	

ALPHAO(5) = -2.930 BETAO (3) = -5.970

SECTION (1)OMS NOZZLE DEPENDENT VARIABLE CP

X/LNM	.2000	.4000
PHI		
135.000	-.2430	
180.000	.4994	.0801
225.000	.4904	

ALPHAO(5) = -2.910 BETAO (4) = -3.960

SECTION (1)OMS NOZZLE DEPENDENT VARIABLE CP

X/LNM	.2000	.4000
PHI		
135.000	-.2406	
180.000	.4047	-.0063
225.000	.0902	

ALPHAO(5) = -2.910 BETAO (5) = -2.000

SECTION (1)OMS NOZZLE DEPENDENT VARIABLE CP

X/LNM	.2000	.4000
PHI		
135.000	-.2456	
180.000	.3500	-.0409
225.000	-.0632	

ALPHAO(5) = -2.910 BETAO (6) = .020

SECTION (1)OMS NOZZLE DEPENDENT VARIABLE CP

X/LNM	.2000	.4000
PHI		
135.000	-.2470	
180.000	.3249	-.0878
225.000	-.1454	

ALPHAO(5) = -2.910 BETAO (7) = 2.050

SECTION (1)OMS NOZZLE DEPENDENT VARIABLE CP

X/LNM	.2000	.4000
PHI		
135.000	-.2521	
180.000	.2669	-.1385
225.000	-.2230	

ARC11-716 IA14 O1+T12+S12N25+AT10 OMS NOZZLE (RB1E32)

ALPHAO(5) = -2.920 BETAO (8) = 4.080

SECTION (1)OMS NOZZLE DEPENDENT VARIABLE CP

X/LNM	.2000	.4000
PHI		
135.000	-.2352	
180.000	.1929	-.1754
225.000	-.2757	

ALPHAO(5) = -2.930 BETAO (9) = 6.070

SECTION (1)OMS NOZZLE DEPENDENT VARIABLE CP

X/LNM	.2000	.4000
PHI		
135.000	-.2573	
180.000	.1079	-.2026
225.000	-.3046	

ALPHAO(5) = -2.920 BETAO (10) = 8.110

SECTION (1)OMS NOZZLE DEPENDENT VARIABLE CP

X/LNM	.2000	.4000
PHI		
135.000	-.2807	
180.000	-.0297	-.2578
225.000	-.3043	

ALPHAO(5) = -2.900 BETAO (11) = 10.100

SECTION (1)OMS NOZZLE DEPENDENT VARIABLE CP

X/LNM	.2000	.4000
PHI		
135.000	-.3064	
180.000	-.1808	-.2744
225.000	-.2952	

ARC11-716 IA14 O1+T12+S12N25+AT10 OMS NOZZLE (R81E32)

ALPHAO(6) = -.750 BETAO (1) = -10.040

SECTION (1)OMS NOZZLE DEPENDENT VARIABLE CP

X/LNM	.2000	.4000
PHI		
135.000	-.2581	
180.000	.4530	.4121
225.000	.8434	

ALPHAO(6) = -.740 BETAO (2) = -8.040

SECTION (1)OMS NOZZLE DEPENDENT VARIABLE CP

X/LNM	.2000	.4000
PHI		
135.000	-.2276	
180.000	.4644	.2149
225.000	.6907	

ALPHAO(6) = -.720 BETAO (3) = -5.990

SECTION (1)OMS NOZZLE DEPENDENT VARIABLE CP

X/LNM	.2000	.4000
PHI		
135.000	-.2300	
180.000	.4065	.0078
225.000	.2037	

ALPHAO(6) = -.710 BETAO (4) = -3.980

SECTION (1)OMS NOZZLE DEPENDENT VARIABLE CP

X/LNM	.2000	.4000
PHI		
135.000	-.2448	
180.000	.3450	-.0427
225.000	.0007	

ARC11-716 TA14 O1+T12+S12N25+AT10 OMS NOZZLE (RB1E32)

ALPHAO(6) = -.700 BETAO (5) = -2.010

SECTION (1)OMS NOZZLE DEPENDENT VARIABLE CP

X/LNH	.2000	.4000
PHI		
135.000	-.2415	
180.000	.3041	-.0751
225.000	-.1149	

ALPHAO(6) = -.690 BETAO (6) = .040

SECTION (1)OMS NOZZLE DEPENDENT VARIABLE CP

X/LNH	.2000	.4000
PHI		
135.000	-.2349	
180.000	.2997	-.0994
225.000	-.1757	

ALPHAO(6) = -.690 BETAO (7) = 2.030

SECTION (1)OMS NOZZLE DEPENDENT VARIABLE CP

X/LNH	.2000	.4000
PHI		
135.000	-.2369	
180.000	.2218	-.1529
225.000	-.2369	

ALPHAO(6) = -.710 BETAO (8) = 4.080

SECTION (1)OMS NOZZLE DEPENDENT VARIABLE CP

X/LNH	.2000	.4000
PHI		
135.000	-.2037	
180.000	.1840	-.1868
225.000	-.2881	

ARC11-T16 IA14 O1+T12+S12N25+AT10 OMS NOZZLE (R81E32)

ALPHAO(6) = -.720 BETAO (9) = 8.080

SECTION (1)OMS NOZZLE DEPENDENT VARIABLE CP

X/LNM	.2000	.4000
PHI		
135.000	-.2455	
180.000	.1140	-.2032
225.000	-.3054	

ALPHAO(6) = -.730 BETAO (10) = 8.100

SECTION (1)OMS NOZZLE DEPENDENT VARIABLE CP

X/LNM	.2000	.4000
PHI		
135.000	-.2789	
180.000	.0012	-.2395
225.000	-.3128	

ALPHAO(6) = -.740 BETAO (11) = 10.180

SECTION (1)OMS NOZZLE DEPENDENT VARIABLE CP

X/LNM	.2000	.4000
PHI		
135.000	-.2995	
180.000	-.1621	-.2819
225.000	-.2948	

ALPHAO(7) = 2.030 BETAO (1) = -10.000

SECTION (1)OMS NOZZLE DEPENDENT VARIABLE CP

X/LNM	.2000	.4000
PHI		
135.000	-.1970	
180.000	.3913	.3809
225.000	.6903	

ORIGINAL PAGE IS OF POOR QUALITY

ARC11-716 IA14 G1+T12+S12N25+AT10 OMS NOZZLE (RB1E32)

ALPHAO(7) = 2.080 BETAO (2) = -8.030

SECTION (1)OMS NOZZLE DEPENDENT VARIABLE CP

X/LNM	.2000	.4000
PHI		
135.000	-.2167	
180.000	.3775	.0606
225.000	.4004	

ALPHAO(7) = 2.080 BETAO (3) = -5.990

SECTION (1)OMS NOZZLE DEPENDENT VARIABLE CP

X/LNM	.2000	.4000
PHI		
135.000	-.2359	
180.000	.3043	-.0337
225.000	-.0106	

ALPHAO(7) = 1.940 BETAO (4) = -4.010

SECTION (1)OMS NOZZLE DEPENDENT VARIABLE CP

X/LNM	.2000	.4000
PHI		
135.000	-.2312	
180.000	.2646	-.0780
225.000	-.1247	

ALPHAO(7) = 1.950 BETAO (5) = -2.000

SECTION (1)OMS NOZZLE DEPENDENT VARIABLE CP

X/LNM	.2000	.4000
PHI		
135.000	-.2231	
180.000	.2160	-.1038
225.000	-.1778	

ARC11-716 IA14 O1+T12+S12N25+AT10 OMS NOZZLE (RB1E32)

ALPHAO(7) = 1.930 BETAO (6) = .040

SECTION (1)OMS NOZZLE DEPENDENT VARIABLE CP

X/LNM	.2000	.4000
PHI		
135.000	-.2197	
180.000	.1385	-.1179
225.000	-.2156	

ALPHAO(7) = 1.930 BETAO (7) = 2.030

SECTION (1)OMS NOZZLE DEPENDENT VARIABLE CP

X/LNM	.2000	.4000
PHI		
135.000	-.2234	
180.000	.1450	-.1690
225.000	-.2557	

ALPHAO(7) = 1.930 BETAO (8) = 4.070

SECTION (1)OMS NOZZLE DEPENDENT VARIABLE CP

X/LNM	.2000	.4000
PHI		
135.000	-.2195	
180.000	.1160	-.1834
225.000	-.2818	

ALPHAO(7) = 1.960 BETAO (9) = 6.100

SECTION (1)OMS NOZZLE DEPENDENT VARIABLE CP

X/LNM	.2000	.4000
PHI		
135.000	-.2682	
180.000	.0497	-.1872
225.000	-.2977	

ORIGINAL PAGE IS OF POOR QUALITY

ARC11-/16 IA14 O1+T12+312N25+AT10 OMS NOZZLE (RB1E32)

ALPHAO(7) = 1.950 BETAO (10) = 8.100

SECTION (1)OMS NOZZLE DEPENDENT VARIABLE CP

X/LNM	.2000	.4000
PHI		
135.000	-.3246	
180.000	-.0359	-.2114
225.000	-.3140	

ALPHAO(7) = 1.940 BETAO (11) = 10.140

SECTION (1)OMS NOZZLE DEPENDENT VARIABLE CP

X/LNM	.2000	.4000
PHI		
135.000	-.2980	
180.000	-.1297	-.2444
225.000	-.2916	

ALPHAO(8) = 3.970 BETAO (1) = -9.990

SECTION (1)OMS NOZZLE DEPENDENT VARIABLE CP

X/LNM	.2000	.4000
PHI		
135.000	-.1819	
180.000	.3770	.4271
225.000	.6358	

ALPHAO(8) = 3.990 BETAO (2) = -8.000

SECTION (1)OMS NOZZLE DEPENDENT VARIABLE CP

X/LNM	.2000	.4000
PHI		
135.000	-.2030	
180.000	.2963	.0217
225.000	.1457	

ORIGINAL PAGE IS
OF POOR QUALITY

ARC11-716 IA14 O1+T12+S12N25+AT10 OMS NOZZLE (RB1E32)

ALPHAO(8) = 3.970 BETAO (3) = -6.020

SECTION (1)OMS NOZZLE DEPENDENT VARIABLE CP

X/LNM	.2000	.4000
PHI		
135.000	-.2211	
180.000	.2460	-.0822
225.000	-.0982	

ALPHAO(8) = 3.930 BETAO (4) = -3.990

SECTION (1)OMS NOZZLE DEPENDENT VARIABLE CP

X/LNM	.2000	.4000
PHI		
135.000	-.2212	
180.000	.1994	-.0991
225.000	-.1743	

ALPHAO(8) = 3.930 BETAO (5) = -2.000

SECTION (1)OMS NOZZLE DEPENDENT VARIABLE CP

X/LNM	.2000	.4000
PHI		
135.000	-.2160	
180.000	.1561	-.1148
225.000	-.2046	

ALPHAO(8) = 3.940 BETAO (6) = .040

SECTION (1)OMS NOZZLE DEPENDENT VARIABLE CP

X/LNM	.2000	.4000
PHI		
135.000	-.2216	
180.000	.1090	-.1340
225.000	-.2265	

ARC11-716 IA14 O1+T12+S12N25+AT10 OMS NOZZLE (RB1E32)

ALPHAO(8) = 4.030 BETAO (7) = 2.050

SECTION (1)OMS NOZZLE DEPENDENT VARIABLE CP

X/LNM	.2000	.4000
PHI		
135.000	-.2180	
180.000	.1059	-.1812
225.000	-.2686	

ALPHAO(8) = 4.020 BETAO (8) = 4.070

SECTION (1)OMS NOZZLE DEPENDENT VARIABLE CP

X/LNM	.2000	.4000
PHI		
135.000	-.1990	
180.000	.1499	-.1982
225.000	-.2940	

ALPHAO(8) = 4.010 BETAO (9) = 6.080

SECTION (1)OMS NOZZLE DEPENDENT VARIABLE CP

X/LNM	.2000	.4000
PHI		
135.000	-.2335	
180.000	.0493	-.2036
225.000	-.3016	

ALPHAO(8) = 4.080 BETAO (10) = 8.110

SECTION (1)OMS NOZZLE DEPENDENT VARIABLE CP

X/LNM	.2000	.4000
PHI		
135.000	-.2750	
180.000	-.0131	-.2196
225.000	-.3058	

ARC11-716 IA14 O1+T12+S12N25+AT10 OMS NOZZLE (RB1E32)

ALPHAO(8) = 4.050 BETAO (11) = 10.160

SECTION (1)OMS NOZZLE DEPENDENT VARIABLE CP

X/LNM	.2000	.4000
PHI		
135.000	-.3011	
180.000	-.1595	-.2401
225.000	-.2980	

ALPHAO(9) = 5.980 BETAO (1) = -9.980

SECTION (1)OMS NOZZLE DEPENDENT VARIABLE CP

X/LNM	.2000	.4000
PHI		
135.000	-.2017	
180.000	.2910	.4605
225.000	.4615	

ALPHAO(9) = 5.960 BETAO (2) = -7.980

SECTION (1)OMS NOZZLE DEPENDENT VARIABLE CP

X/LNM	.2000	.4000
PHI		
135.000	-.1787	
180.000	.2766	.0597
225.000	.1576	

ALPHAO(9) = 5.940 BETAO (3) = -5.960

SECTION (1)OMS NOZZLE DEPENDENT VARIABLE CP

X/LNM	.2000	.4000
PHI		
135.000	-.2013	
180.000	.1960	-.0607
225.000	-.1182	

ARC11-716 IA14 O1+T12+S12N25+A710 OMS NOZZLE (RB1E32)

ALPHAO(9) = 5.980 BETAO (4) = -3.990

SECTION (1)OMS NOZZLE DEPENDENT VARIABLE CP

X/LNM	.2000	.4000
PHI		
135.000	-.2132	
180.000	.1418	-.0924
225.000	-.1899	

ALPHAO(9) = 5.970 BETAO (5) = -1.970

SECTION (1)OMS NOZZLE DEPENDENT VARIABLE CP

X/LNM	.2000	.4000
PHI		
135.000	-.2401	
180.000	.1016	-.0986
225.000	-.2217	

ALPHAO(9) = 5.980 BETAO (6) = .030

SECTION (1)OMS NOZZLE DEPENDENT VARIABLE CP

X/LNM	.2000	.4000
PHI		
135.000	-.2283	
180.000	.0310	-.1420
225.000	-.2350	

ALPHAO(9) = 5.970 BETAO (7) = 2.030

SECTION (1)OMS NOZZLE DEPENDENT VARIABLE CP

X/LNM	.2000	.4000
PHI		
135.000	-.2150	
180.000	.1098	-.1881
225.000	-.2860	

ALPHAO(9) = 5.950 BETAO (8) = 4.080

SECTION (1)OMS NOZZLE DEPENDENT VARIABLE CP

X/LNM	.2000	.4000
PHI		
135.000	-.2032	
180.000	.1018	-.2130
225.000	-.2949	

ALPHAO(9) = 5.940 BETAO (9) = 6.100

SECTION (1)OMS NOZZLE DEPENDENT VARIABLE CP

X/LNM	.2000	.4000
PHI		
135.000	-.2425	
180.000	.0577	-.2069
225.000	-.3050	

ALPHAO(9) = 5.920 BETAO (10) = 6.130

SECTION (1)OMS NOZZLE DEPENDENT VARIABLE CP

X/LNM	.2000	.4000
PHI		
135.000	-.2713	
180.000	.0120	-.2260
225.000	-.3167	

ALPHAO(9) = 5.980 BETAO (11) = 10.150

SECTION (1)OMS NOZZLE DEPENDENT VARIABLE CP

X/LNM	.2000	.4000
PHI		
135.000	-.3285	
180.000	-.0575	-.2148
225.000	-.3176	

AFC11-716 IA14 O1+T12+S12N25+AT10 OMS NOZZLE (RB1E32)

ALPHAO(10) = 8.080 BETAO (1) = -9.950

SECTION (1)OMS NOZZLE DEPENDENT VARIABLE CP

X/LNM	.2000	.4000
PHI		
135.000	-.2946	
180.000	.1631	.2657
225.000	.2632	

ALPHAO(10) = 8.110 BETAO (2) = -7.950

SECTION (1)OMS NOZZLE DEPENDENT VARIABLE CP

X/LNM	.2000	.4000
PHI		
135.000	-.2898	
180.000	.2625	.2372
225.000	.2336	

ALPHAO(10) = 8.130 BETAO (3) = -5.940

SECTION (1)OMS NOZZLE DEPENDENT VARIABLE CP

X/LNM	.2000	.4000
PHI		
135.000	-.2743	
180.000	.2369	.0642
225.000	.0603	

ALPHAO(10) = 7.980 BETAO (4) = -3.970

SECTION (1)OMS NOZZLE DEPENDENT VARIABLE CP

X/LNM	.2000	.4000
PHI		
135.000	-.2565	
180.000	.1550	.0172
225.000	-.1128	

ARC11-716 IA14 O1+T12+S12N25+AT10 OMS NOZZLE (RB1E32)

ALPHAO(10) = 8.010 BETAO (5) = -1.970

SECTION (1)OMS NOZZLE DEPENDENT VARIABLE CP

X/LNM	.2000	.4000
PHI		
135.000	-.2550	
180.000	.0214	-.0789
225.000	-.2088	

ALPHAO(10) = 7.930 BETAO (6) = .060

SECTION (1)OMS NOZZLE DEPENDENT VARIABLE CP

X/LNM	.2000	.4000
PHI		
135.000	-.2466	
180.000	-.0143	-.1677
225.000	-.2384	

ALPHAO(10) = 7.970 BETAO (7) = 2.050

SECTION (1)OMS NOZZLE DEPENDENT VARIABLE CP

X/LNM	.2000	.4000
PHI		
135.000	-.2333	
180.000	.0539	-.1928
225.000	-.2595	

ALPHAO(10) = 7.950 BETAO (8) = 4.080

SECTION (1)OMS NOZZLE DEPENDENT VARIABLE CP

X/LNM	.2000	.4000
PHI		
135.000	-.2308	
180.000	.0429	-.2295
225.000	-.3159	

ARC11-718 IA14 O1+712+S12N25+AT10 OMS NOZZLE (RB1E32)

ALPHAO(10) = 7.920 BETAO (9) = 6.110

SECTION (1)OMS NOZZLE DEPENDENT VARIABLE CP

X/LNM	.2000	.4000
PHI		
135.000	-.2584	
180.000	.0436	-.2269
225.000	-.3227	

ALPHAO(10) = 7.910 BETAO (10) = 8.160

SECTION (1)OMS NOZZLE DEPENDENT VARIABLE CP

X/LNM	.2000	.4000
PHI		
135.000	-.2955	
180.000	.0275	-.2307
225.000	-.3326	

ALPHAO(10) = 8.060 BETAO (11) = 10.160

SECTION (1)OMS NOZZLE DEPENDENT VARIABLE CP

X/LNM	.2000	.4000
PHI		
135.000	-.3581	
180.000	.0087	-.2295
225.000	-.3514	

ALPHAO(11) = 10.040 BETAO (1) = -9.930

SECTION (1)OMS NOZZLE DEPENDENT VARIABLE CP

X/LNM	.2000	.4000
PHI		
135.000	-.3581	
180.000	.0818	.1626
225.000	.0991	

ARC11-716 IA14 O1+T12+S12N25+AT10 OMS NOZZLE (RB1E32)

ALPHAO(11) = 9.930 BETAO (2) = -7.950

SECTION (1)OMS NOZZLE DEPENDENT VARIABLE CP

X/LNM	.2000	.4000
PHI		
135.000	-.3411	
180.000	.1183	.2256
225.000	.1033	

ALPHAO(11) = 9.960 BETAO (3) = -5.920

SECTION (1)OMS NOZZLE DEPENDENT VARIABLE CP

X/LNM	.2000	.4000
PHI		
135.000	-.3200	
180.000	.0746	.1232
225.000	.0186	

ALPHAO(11) = 9.960 BETAO (4) = -3.970

SECTION (1)OMS NOZZLE DEPENDENT VARIABLE CP

X/LNM	.2000	.4000
PHI		
135.000	-.2938	
180.000	-.0074	.0109
225.000	-.0662	

ALPHAO(11) = 9.950 BETAO (5) = -1.970

SECTION (1)OMS NOZZLE DEPENDENT VARIABLE CP

X/LNM	.2000	.4000
PHI		
135.000	-.2466	
180.000	-.0636	-.1619
225.000	-.1499	

ARC11-716 IA14 01+T12+S12N25+AT10 OMS NOZZLE (RB1E32)

ALPHAO(11) = 9.990 BETAO (6) = .030

SECTION (1)OMS NOZZLE DEPENDENT VARIABLE CP

X/LNM	.2000	.4000
PHI		
135.000	-.2828	
180.000	-.0099	-.1718
225.000	-.2257	

ALPHAO(11) = 9.990 BETAO (7) = 2.080

SECTION (1)OMS NOZZLE DEPENDENT VARIABLE CP

X/LNM	.2000	.4000
PHI		
135.000	-.2655	
180.000	.0312	-.1909
225.000	-.2693	

ALPHAO(11) = 9.960 BETAO (8) = 4.080

SECTION (1)OMS NOZZLE DEPENDENT VARIABLE CP

X/LNM	.2000	.4000
PHI		
135.000	-.2527	
180.000	.0173	-.2362
225.000	-.3259	

ALPHAO(11) = 10.040 BETAO (9) = 6.140

SECTION (1)OMS NOZZLE DEPENDENT VARIABLE CP

X/LNM	.2000	.4000
PHI		
135.000	-.2839	
180.000	.0196	-.2320
225.000	-.3366	

ARC11-716 IA14 O1+T12+S12N25+AT10 OMS NOZZLE (RB1E32)

ALPHAO(11) = 10.030 BETAO (10) = 8.180

SECTION (1)OMS NOZZLE DEPENDENT VARIABLE CP

X/LNM	.2000	.4000
PHI		
135.000	-.3233	
180.000	-.0082	-.2395
225.000	-.3444	

ALPHAO(11) = 10.070 BETAO (11) = 10.230

SECTION (1)OMS NOZZLE DEPENDENT VARIABLE CP

X/LNM	.2000	.4000
PHI		
135.000	-.3459	
180.000	-.0994	-.2704
225.000	-.3268	

ORIGINAL PAGE IS OF POOR QUALITY

ARC11-716 IA14 OMS T12+S12N25+AT10 OMS NOZZLE (RB1E33) (17 APR 74)

REFERENCE DATA

SREF = 2.4210 SQ.FT. XMRP = 29.3800 INCHES
LREF = 36.7090 INCHES YMRP = .0000 INCHES
BREF = 38.7090 INCHES ZMRP = .0000 INCHES
SCALE = .0300 SCALE

PARAMETRIC DATA

MACH = 1.250 ELEVON = .000
RUDDER = .000 SPDBRK = .000

ALPHAO(1) = -10.340 BETAO (1) = -9.910

SECTION (1)OMS NOZZLE DEPENDENT VARIABLE CP

X/LNM	.2000	.4000
PHI		
135.000	-.1658	
180.000	.5280	.8747
225.000	.9426	

ALPHAO(1) = -10.260 BETAO (2) = -7.920

SECTION (1)OMS NOZZLE DEPENDENT VARIABLE CP

X/LNM	.2000	.4000
PHI		
135.000	-.1536	
180.000	.5323	.8452
225.000	.8995	

ALPHAO(1) = -10.250 BETAO (3) = -5.920

SECTION (1)OMS NOZZLE DEPENDENT VARIABLE CP

X/LNM	.2000	.4000
PHI		
135.000	-.1116	
180.000	.5401	.7632
225.000	.8303	

ALPHAO(1) = -10.240 BETAO (4) = -3.960

SECTION (1)OMS NOZZLE DEPENDENT VARIABLE CP

X/LNM	.2000	.4000
PHI		
135.000	-.1097	
180.000	.5298	.6505
225.000	.7177	

ORIGINAL PAGE IS OF POOR QUALITY

ARC11-716 IA14 O1+T12+S12N25+AT10 OMS NOZZLE (RB1E33)

ALPHAO(1) = -10.250 BETAO (3) = -1.970

SECTION (1)OMS NOZZLE DEPENDENT VARIABLE CP

X/LNM	.2000	.4000
PHI		
135.000	-.1067	
180.000	.5361	.4641
225.000	.5800	

ALPHAO(1) = -10.160 BETAO (6) = .020

SECTION (1)OMS NOZZLE DEPENDENT VARIABLE CP

X/LNM	.2000	.4000
PHI		
135.000	-.1285	
180.000	.5305	.5003
225.000	.3797	

ALPHAO(1) = -10.160 BETAO (7) = 2.040

SECTION (1)OMS NOZZLE DEPENDENT VARIABLE CP

X/LNM	.2000	.4000
PHI		
135.000	-.1944	
180.000	.4954	.1482
225.000	.1853	

ALPHAO(1) = -10.220 BETAO (8) = 4.080

SECTION (1)OMS NOZZLE DEPENDENT VARIABLE CP

X/LNM	.2000	.4000
PHI		
135.000	-.2304	
180.000	.3181	-.1222
225.000	-.1371	

ORIGINAL PAGE IS OF POOR QUALITY

ARC11-716 IA14 O1+T12+S12N23+AT10 OMS NOZZLE (RB1E33)

ALPHAO(1) = -10.230 BETAO (9) = 6.080

SECTION (1)OMS NOZZLE DEPENDENT VARIABLE CP

X/LNM	.2000	.4000
PHI		
135.000	-.2282	
180.000	.2324	-.1662
225.000	-.2201	

ALPHAO(1) = -10.230 BETAO (10) = 8.120

SECTION (1)OMS NOZZLE DEPENDENT VARIABLE CP

X/LNM	.2000	.4000
PHI		
135.000	-.2536	
180.000	.0136	-.2481
225.000	-.2838	

ALPHAO(1) = -10.240 BETAO (11) = 10.110

SECTION (1)OMS NOZZLE DEPENDENT VARIABLE CP

X/LNM	.2000	.4000
PHI		
135.000	-.2494	
180.000	-.0427	-.2646
225.000	-.2760	

ALPHAO(2) = -8.220 BETAO (1) = -9.940

SECTION (1)OMS NOZZLE DEPENDENT VARIABLE CP

X/LNM	.2000	.4000
PHI		
135.000	-.1785	
180.000	.5164	.7865
225.000	.9420	

ORIGINAL PAGE IS
OF POOR QUALITY

ARC11-716 IA14 O1+T12+S12N25+AT10 OMS NOZZLE (RB1E33)

ALPHAO(2) = -8.240 BETAO (2) = -7.960

SECTION (1)OMS NOZZLE DEPENDENT VARIABLE CP

X/LNM	.2000	.4000
PHI		
135.000	-.1343	
180.000	.5336	.7092
225.000	.6794	

ALPHAO(2) = -8.240 BETAO (3) = -5.960

SECTION (1)OMS NOZZLE DEPENDENT VARIABLE CP

X/LNM	.2000	.4000
PHI		
135.000	-.1295	
180.000	.5399	.6009
225.000	.7703	

ALPHAO(2) = -8.250 BETAO (4) = -3.980

SECTION (1)OMS NOZZLE DEPENDENT VARIABLE CP

X/LNM	.2000	.4000
PHI		
135.000	-.1349	
180.000	.5341	.4801
225.000	.6611	

ALPHAO(2) = -8.250 BETAO (5) = -1.990

SECTION (1)OMS NOZZLE DEPENDENT VARIABLE CP

X/LNM	.2000	.4000
PHI		
135.000	-.1426	
180.000	.5345	.3152
225.000	.4840	

ARC11-716 IA14 O1+T12+S12N25+AT10 OMS NOZZLE (RB1E33)

ALPHAO(2) = -8.250 BETAO (6) = .010

SECTION (1)OMS NOZZLE DEPENDENT VARIABLE CP

X/LNM	.2000	.4000
PHI		
135.000	-.1658	
180.000	.5084	.1831
225.000	.2422	

ALPHAO(2) = -8.230 BETAO (7) = 2.020

SECTION (1)OMS NOZZLE DEPENDENT VARIABLE CP

X/LNM	.2000	.4000
PHI		
135.000	-.2101	
180.000	.4482	.0472
225.000	.0620	

ALPHAO(2) = -8.230 BETAO (8) = 4.040

SECTION (1)OMS NOZZLE DEPENDENT VARIABLE CP

X/LNM	.2000	.4000
PHI		
135.000	-.2289	
180.000	.2575	-.1620
225.000	-.1916	

ALPHAO(2) = -8.220 BETAO (9) = 6.050

SECTION (1)OMS NOZZLE DEPENDENT VARIABLE CP

X/LNM	.2000	.4000
PHI		
135.000	-.2281	
180.000	.2027	-.1918
225.000	-.2380	

ARC11-716 IA14 O1+T12+S12N25+AT10 OMS NOZZLE (RB1E33)

ALPHAO(2) = -8.220 BETAO (10) = 8.100

SECTION (1)OMS NOZZLE DEPENDENT VARIABLE CP

X/LNM	.2000	.4000
PHI		
135.000	-.2323	
180.000	-.0028	-.2529
225.000	-.2829	

ALPHAO(2) = -8.220 BETAO (11) = 10.130

SECTION (1)OMS NOZZLE DEPENDENT VARIABLE CP

X/LNM	.2000	.4000
PHI		
135.000	-.2402	
180.000	-.1231	-.2621
225.000	-.2678	

ALPHAO(3) = -6.280 BETAO (1) = -9.970

SECTION (1)OMS NOZZLE DEPENDENT VARIABLE CP

X/LNM	.2000	.4000
PHI		
135.000	-.1678	
180.000	.5010	.7208
225.000	.8943	

ALPHAO(3) = -6.280 BETAO (2) = -7.990

SECTION (1)OMS NOZZLE DEPENDENT VARIABLE CP

X/LNM	.2000	.4000
PHI		
135.000	-.1612	
180.000	.5215	.6142
225.000	.6427	

ORIGINAL PAGE IS OF POOR QUALITY

ARC11-716 IA14 O1+T12+S12N25+A[illegible]0 OMS NOZZLE (RB1E33)

ALPHAO(3) = -6.300 BETAO (3) = -6.000

SECTION (1)OMS NOZZLE DEPENDENT VARIABLE CP

X/LNM	.2000	.4000
PHI		
135.000	-.1446	
180.000	.5277	.3168
225.000	.7325	

ALPHAO(3) = -6.260 BETAO (4) = -3.980

SECTION (1)OMS NOZZLE DEPENDENT VARIABLE CP

X/LNM	.2000	.4000
PHI		
135.000	-.1565	
180.000	.5246	.3264
225.000	.5405	

ALPHAO(3) = -6.160 BETAO (5) = .030

SECTION (1)OMS NOZZLE DEPENDENT VARIABLE CP

X/LNM	.2000	.4000
PHI		
135.000	-.1852	
180.000	.4678	.0934
225.000	.1189	

ALPHAO(3) = -6.320 BETAO (6) = 2.000

SECTION (1)OMS NOZZLE DEPENDENT VARIABLE CP

X/LNM	.2000	.4000
PHI		
135.000	-.2169	
180.000	.3680	-.0305
225.000	-.0455	

ORIGINAL PAGE IS OF POOR QUALITY

ARC11-716 IA14 O1+T12+S12N25+AT1U OMS NOZZLE (RB1E33)

ALPHAO(3) = -6.330 BETAO (7) = 4.070

SECTION (1)OMS NOZZLE DEPENDENT VARIABLE CP

X/LNM	.2000	.4000
PHI		
135.000	-.2213	
180.000	.2025	-.1554
225.000	-.1722	

ALPHAO(3) = -6.360 BETAO (8) = 6.050

SECTION (1)OMS NOZZLE DEPENDENT VARIABLE CP

X/LNM	.2000	.4000
PHI		
135.000	-.2163	
180.000	.1439	-.2063
225.000	-.2394	

ALPHAO(3) = -6.270 BETAO (9) = 8.100

SECTION (1)OMS NOZZLE DEPENDENT VARIABLE CP

X/LNM	.2000	.4000
PHI		
135.000	-.2130	
180.000	-.0454	-.2516
225.000	-.2715	

ALPHAO(3) = -6.260 BETAO (10) = 10.090

SECTION (1)OMS NOZZLE DEPENDENT VARIABLE CP

X/LNM	.2000	.4000
PHI		
135.000	-.2298	
180.000	-.1303	-.2602
225.000	-.2757	

ARC11-716 IA14 O1+T12+S12N25+AT10 OMS NOZZLE (RB1E33)

ALPHAO(4) = -4.200 BETAO (1) = -9.980

SECTION (1)OMS NOZZLE DEPENDENT VARIABLE CP

X/LNM	.2000	.4000
PHI		
135.000	-.1625	
180.000	.4824	.6386
225.000	.7927	

ALPHAO(4) = -4.230 BETAO (2) = -7.990

SECTION (1)OMS NOZZLE DEPENDENT VARIABLE CP

X/LNM	.2000	.4000
PHI		
135.000	-.1570	
180.000	.5122	.5093
225.000	.7558	

ALPHAO(4) = -4.180 BETAO (3) = -5.970

SECTION (1)OMS NOZZLE DEPENDENT VARIABLE CP

X/LNM	.2000	.4000
PHI		
135.000	-.1585	
180.000	.5129	.3665
225.000	.5974	

ALPHAO(4) = -4.170 BETAO (4) = -3.950

SECTION (1)OMS NOZZLE DEPENDENT VARIABLE CP

X/LNM	.2000	.4000
PHI		
135.000	-.1643	
180.000	.4887	.2041
225.000	.3651	

ARC11-716 IA14 O1+T12+S12N25+AT10 OMS NOZZLE (RB1E33)

ALPHAO(4) = -4.150 BETAO (5) = -2.020

SECTION (1)OMS NOZZLE DEPENDENT VARIABLE CP

X/LNM	.2000	.4000
PHI		
135.000	-.1894	
180.000	.4592	.1167
225.000	.1825	

ALPHAO(4) = -4.080 BETAO (6) = -.010

SECTION (1)OMS NOZZLE DEPENDENT VARIABLE CP

X/LNM	.2000	.4000
PHI		
135.000	-.1893	
180.000	.4038	.0141
225.000	.0045	

ALPHAO(4) = -4.210 BETAO (7) = 2.110

SECTION (1)OMS NOZZLE DEPENDENT VARIABLE CP

X/LNM	.2000	.4000
PHI		
135.000	-.2106	
180.000	.2898	-.0960
225.000	-.1358	

ALPHAO(4) = -4.200 BETAO (8) = 4.090

SECTION (1)OMS NOZZLE DEPENDENT VARIABLE CP

X/LNM	.2000	.4000
PHI		
135.000	-.2203	
180.000	.1388	-.1744
225.000	-.2112	

ARC11-716 IA14 O1+T12+S12N25+AT10 OHS NOZZLE (RB1E33)

ALPHAO(4) = -4.210 BETAO (9) = 6.060

SECTION (1)OHS NOZZLE DEPENDENT VARIABLE CP

X/LNM	.2000	.4000
PHI		
135.000	-.2114	
180.000	.0843	-.1938
225.000	-.2342	

ALPHAO(4) = -4.200 BETAO (10) = 8.080

SECTION (1)OHS NOZZLE DEPENDENT VARIABLE CP

X/LNM	.2000	.4000
PHI		
135.000	-.1977	
180.000	-.0446	-.2495
225.000	-.2684	

ALPHAO(4) = -4.180 BETAO (11) = 10.090

SECTION (1)OHS NOZZLE DEPENDENT VARIABLE CP

X/LNM	.2000	.4000
PHI		
135.000	-.2236	
180.000	-.1522	-.2523
225.000	-.2656	

ALPHAO(5) = -2.870 BETAO (1) = -10.040

SECTION (1)OHS NOZZLE DEPENDENT VARIABLE CP

X/LNM	.2000	.4000
PHI		
135.000	-.1509	
180.000	.4789	.8049
225.000	.7090	

ARC11-716 IA14 O1+T12+S12N25+AT10 OMS NOZZLE (RB1E33)

ALPHAO(5) = -2.870 BETAO (2) = -8.030

SECTION (1)OMS NOZZLE DEPENDENT VARIABLE CP

X/LNM	.2000	.4000
PHI		
135.000	-.1498	
180.000	.5024	.4497
225.000	.6710	

ALPHAO(5) = -2.870 BETAO (3) = -5.960

SECTION (1)OMS NOZZLE DEPENDENT VARIABLE CP

X/LNM	.2000	.4000
PHI		
135.000	-.1642	
180.000	.4999	.3101
225.000	.5179	

ALPHAO(5) = -2.860 BETAO (4) = -3.920

SECTION (1)OMS NOZZLE DEPENDENT VARIABLE CP

X/LNM	.2000	.4000
PHI		
135.000	-.1654	
180.000	.4622	.1540
225.000	.2548	

ALPHAO(5) = -2.860 BETAO (5) = -2.000

SECTION (1)OMS NOZZLE DEPENDENT VARIABLE CP

X/LNM	.2000	.4000
PHI		
135.000	-.1700	
180.000	.4110	.0576
225.000	.0773	

APC11-716 IA14 01+T12+S12N25+AT10 OMS NOZZLE (RB1E33)

ALPHAO(5) = -2.850 BETAO (6) = .020

SECTION (1)OMS NOZZLE DEPENDENT VARIABLE CP

X/LNM	.2000	.4000
PHI		
135.000	-.1946	
180.000	.3508	-.0323
225.000	-.0581	

ALPHAO(5) = -2.850 BETAO (7) = 2.020

SECTION (1)OMS NOZZLE DEPENDENT VARIABLE CP

X/LNM	.2000	.4000
PHI		
135.000	-.2009	
180.000	.2341	-.1208
225.000	-.1674	

ALPHAO(5) = -2.770 BETAO (8) = 4.100

SECTION (1)OMS NOZZLE DEPENDENT VARIABLE CP

X/LNM	.2000	.4000
PHI		
135.000	-.1995	
180.000	.1291	-.1918
225.000	-.2248	

ALPHAO(5) = -2.790 BETAO (9) = 6.120

SECTION (1)OMS NOZZLE DEPENDENT VARIABLE CP

X/LNM	.2000	.4000
PHI		
135.000	-.1938	
180.000	.0862	-.2124
225.000	-.2451	

ARC11-716 IA14 O1+T12+S12N25+AT10 OMS NOZZLE (RB1E33)

ALPHAO(5) = -2.790 BETAO (10) = 8.140

SECTION (1)OMS NOZZLE DEPENDENT VARIABLE CP

X/LNM	.2000	.4000
PHI		
135.000	-.1956	
180.000	-.0571	-.2504
225.000	-.2695	

ALPHAO(5) = -2.770 BETAO (11) = 10.100

SECTION (1)OMS NOZZLE DEPENDENT VARIABLE CP

X/LNM	.2000	.4000
PHI		
135.000	-.2364	
180.000	-.1639	-.2508
225.000	-.2667	

ALPHAO(6) = -.780 BETAO (1) = -10.520

SECTION (1)OMS NOZZLE DEPENDENT VARIABLE CP

X/LNM	.2000	.4000
PHI		
135.000	-.1438	
180.000	.4829	.5742
225.000	.5776	

ALPHAO(6) = -.730 BETAO (2) = -8.420

SECTION (1)OMS NOZZLE DEPENDENT VARIABLE CP

X/LNM	.2000	.4000
PHI		
135.000	-.1405	
180.000	.4711	.4087
225.000	.5597	

AF311-716 TA14 O1+T12+S12N25+AT10 OMS NOZZLE (RD1E33)

ALPHAO(6) = -.730 BETAO (3) = -8.290

SECTION (1)OMS NOZZLE DEPENDENT VARIABLE CP

X/LNM	.2000	.4000
PHI		
135.000	-.1644	
180.000	.4734	.2679
225.000	.4485	

ALPHAO(6) = -.710 BETAO (4) = -4.140

SECTION (1)OMS NOZZLE DEPENDENT VARIABLE CP

X/LNM	.2000	.4000
PHI		
135.000	-.1954	
180.000	.4555	.1207
225.000	.2131	

ALPHAO(6) = -.700 BETAO (5) = -2.080

SECTION (1)OMS NOZZLE DEPENDENT VARIABLE CP

X/LNM	.2000	.4000
PHI		
135.000	-.2102	
180.000	.3621	.0162
225.000	.0130	

ALPHAO(6) = -.700 BETAO (6) = .0[illegible]

SECTION (1)OMS NOZZLE DEPENDENT VARIABLE CP

X/LNM	.2000	.4000
PHI		
135.000	-.1777	
180.000	.2333	-.0513
225.000	-.0995	

ARC11-716 IA14 O1+T12+S12N25+AT10 OMS NOZZLE (P31E33)

ALPHAO(6) = -.700 BETAO (7) = 2.160

SECTION (1)OMS NOZZLE DEPENDENT VARIABLE CP

X/LNM	.2000	.4000
PHI		
135.000	-.1935	
180.000	.1619	-.1423
225.000	-.1917	

ALPHAO(6) = -.710 BETAO (8) = 4.270

SECTION (1)OMS NOZZLE DEPENDENT VARIABLE CP

X/LNM	.2000	.4000
PHI		
135.000	-.1833	
180.000	.1424	-.1373
225.000	-.2044	

ALPHAO(6) = -.730 BETAO (9) = 6.350

SECTION (1)OMS NOZZLE DEPENDENT VARIABLE CP

X/LNM	.2000	.4000
PHI		
135.000	-.1942	
180.000	.0093	-.1910
225.000	-.2304	

ALPHAO(6) = -.730 BETAO (10) = 8.130

SECTION (1)OMS NOZZLE DEPENDENT VARIABLE CP

X/LNM	.2000	.4000
PHI		
135.000	-.2466	
180.000	-.0821	-.2102
225.000	-.2458	

ORIGINAL PAGE IS
OF POOR QUALITY

ARC11-716 IA14 O1+T12+S12N25+AT10 OMS NOZZLE (RB1E33)

ALPHAO(6) = -.750 BETAO (11) = 10.110

SECTION (1)OMS NOZZLE DEPENDENT VARIABLE CP

X/LNM	.2000	.4000
PHI		
135.000	-.2423	
180.000	-.1560	-.2450
225.000	-.2566	

ALPHAO(7) = 2.010 BETAO (1) = -10.080

SECTION (1)OMS NOZZLE DEPENDENT VARIABLE CP

X/LNM	.2000	.4000
PHI		
135.000	-.1118	
180.000	.4705	.4093
225.000	.3631	

ALPHAO(7) = 2.000 BETAO (2) = -6.040

SECTION (1)OMS NOZZLE DEPENDENT VARIABLE CP

X/LNM	.2000	.4000
PHI		
135.000	-.1136	
180.000	.4392	.2733
225.000	.3677	

ALPHAO(7) = 2.050 BETAO (3) = -6.040

SECTION (1)OMS NOZZLE DEPENDENT VARIABLE CP

X/LNM	.2000	.4000
PHI		
135.000	-.1587	
180.000	.4250	.1574
225.000	.2468	

ARC11-716 IA14 O1+T12+S12N25+AT10 OMS NOZZLE (RB1E33)

ALPHAO(7) = 1.920 BETAO (4) = -3.990

SECTION (1)OMS NOZZLE DEPENDENT VARIABLE CP

X/LNM	.2000	.4000
PHI		
135.000	-.1701	
180.000	.3525	.0208
225.000	.0427	

ALPHAO(7) = 1.920 BETAO (5) = -2.020

SECTION (1)OMS NOZZLE DEPENDENT VARIABLE CP

X/LNM	.2000	.4000
PHI		
135.000	-.1671	
180.000	.2489	-.0744
225.000	-.0980	

ALPHAO(7) = 1.920 BETAO (6) = .010

SECTION (1)OMS NOZZLE DEPENDENT VARIABLE CP

X/LNM	.2000	.4000
PHI		
135.000	-.1742	
180.000	.1874	-.0961
225.000	-.1634	

ALPHAO(7) = 1.920 BETAO (7) = 2.050

SECTION (1)OMS NOZZLE DEPENDENT VARIABLE CP

X/LNM	.2000	.4000
PHI		
135.000	-.1780	
180.000	.0801	-.1474
225.000	-.1966	

ARC11-716 IA14 O1+T12+S12N25+AT10 OMS NOZZLE (RB1E33)

ALPHAO(7) = 1.900 BETAO (8) = 4.080

SECTION (1)OMS NOZZLE DEPENDENT VARIABLE CP

X/LNM	.2000	.4000
PHI		
135.000	-.1774	
180.000	.0925	-.1485
225.000	-.2143	

ALPHAO(7) = 2.040 BETAO (9) = 6.080

SECTION (1)OMS NOZZLE DEPENDENT VARIABLE CP

X/LNM	.2000	.4000
PHI		
135.000	-.2042	
180.000	.0074	-.1723
225.000	-.2268	

ALPHAO(7) = 2.030 BETAO (10) = 8.110

SECTION (1)OMS NOZZLE DEPENDENT VARIABLE CP

X/LNM	.2000	.4000
PHI		
135.000	-.2417	
180.000	-.0087	-.2096
225.000	-.2567	

ALPHAO(7) = 2.350 BETAO (11) = 10.150

SECTION (1)OMS NOZZLE DEPENDENT VARIABLE CP

X/LNM	.2000	.4000
PHI		
135.000	-.2490	
180.000	-.1270	-.2255
225.000	-.2574	

ALPHAO(8) = 4.300 BETAO (1) = -9.980

SECTION (1)OMS NOZZLE DEPENDENT VARIABLE CP

X/LNM	.2000	.4000
PHI		
135.000	-.1479	
180.000	.3207	.2929
225.000	.0807	

ALPHAO(8) = 4.200 BETAO (2) = -8.090

SECTION (1)OMS NOZZLE DEPENDENT VARIABLE CP

X/LNM	.2000	.4000
PHI		
135.000	-.1422	
180.000	.4097	.1907
225.000	.1438	

ALPHAO(8) = 4 200 BETAO (3) = -5.990

SECTION (1)OMS NOZZLE DEPENDENT VARIABLE CP

X/LNM	.2000	.4000
PHI		
135.000	-.1279	
180.000	.3524	.0689
225.000	.0617	

ALPHAO(8) = 4.200 BETAO (4) = -3.970

SECTION (1)OMS NOZZLE DEPENDENT VARIABLE CP

X/LNM	.2000	.4000
PHI		
135.000	-.1382	
180.000	.2629	-.0280
225.000	-.0720	

ARC11-716 IA14 O1+T12+S12N25+AT10 OMS NOZZLE (RB1F33)

ALPHAO(8) = 4.220 BETAO (5) = -2.000

SECTION (1)OMS NOZZLE DEPENDENT VARIABLE CP

X/LNM	.2000	.4000
PHI		
135.000	-.1607	
180.000	.1680	-.0907
225.000	-.1371	

ALPHAO(8) = 4.240 BETAO (6) = -.070

SECTION (1)OMS NOZZLE DEPENDENT VARIABLE CP

X/LNM	.2000	.4000
PHI		
135.000	-.1609	
180.000	.1035	-.1245
225.000	-.1733	

ALPHAO(8) = 4.220 BETAO (7) = 1.990

SECTION (1)OMS NOZZLE DEPENDENT VARIABLE CP

X/LNM	.2000	.4000
PHI		
135.000	-.1678	
180.000	.0156	-.1558
225.000	-.1955	

ALPHAO(8) = 4.430 BETAO (8) = 4.100

SECTION (1)OMS NOZZLE DEPENDENT VARIABLE CP

X/LNM	.2000	.4000
PHI		
135.000	-.1764	
180.000	.0834	-.1751
225.000	-.2296	

ARC11-716 IA14 O1+T12+S12N25+AT10 OMS NOZZLE (RB1E33)

ALPHAO(8) = 4.410 BETAO (9) = 8.060

SECTION (1)OMS NOZZLE DEPENDENT VARIABLE CP

X/LNM	.2000	.4000
PHI		
135.000	-.1928	
180.000	-.0076	-.1978
225.000	-.2435	

ALPHAO(8) = 4.410 BETAO (10) = 8.150

SECTION (1)OMS NOZZLE DEPENDENT VARIABLE CP

X/LNM	.2000	.4000
PHI		
135.000	-.2119	
180.000	-.0079	-.2140
225.000	-.2552	

ALPHAO(8) = 4.390 BETAO (11) = 10.140

SECTION (1)OMS NOZZLE DEPENDENT VARIABLE CP

X/LNM	.2000	.4000
PHI		
135.000	-.2643	
180.000	-.0336	-.2030
225.000	-.2509	

ALPHAO(9) = 6.340 BETAO (1) = -9.960

SECTION (1)OMS NOZZLE DEPENDENT VARIABLE CP

X/LNM	.2000	.4000
PHI		
135.000	-.1465	
180.000	-.0011	-.0400
225.000	-.0065	

ARC11-716 IA14 O1+T12+S12N25+AT10 OMS NOZZLE (RB1E33)

ALPHAO(9) = 6.380 BETAO (2) = -7.970

SECTION (1)OMS NOZZLE DEPENDENT VARIABLE CP

X/LNM	.2000	.4000
PHI		
135.000	-.1859	
180.000	.1934	.1280
225.000	-.0320	

ALPHAO(9) = 5.980 BETAO (3) = -6.000

SECTION (1)OMS NOZZLE DEPENDENT VARIABLE CP

X/LNM	.2000	.4000
PHI		
135.000	-.1933	
180.000	.2545	.0857
225.000	-.0469	

ALPHAO(9) = 5.990 BETAO (4) = -4.010

SECTION (1)OMS NOZZLE DEPENDENT VARIABLE CP

X/LNM	.2000	.4000
PHI		
135.000	-.1835	
180.000	.2015	-.0134
225.000	-.1131	

ALPHAO(9) = 6.010 BETAO (5) = -2.060

SECTION (1)OMS NOZZLE DEPENDENT VARIABLE CP

X/LNM	.2000	.4000
PHI		
135.000	-.1854	
180.000	.1270	-.0702
225.000	-.1621	

ORIGINAL PAGE IS
OF POOR QUALITY

ARC11-716 IA14 O1+T12+S12N25+AT10 OMS NOZZLE (RB1E33)

ALPHAO(9) = 6.020 BETAO (6) = .050

SECTION (1)OMS NOZZLE DEPENDENT VARIABLE CP

X/LNM	.2000	.4000
PHI		
135.000	-.1583	
180.000	.0412	-.1339
225.000	-.1876	

ALPHAO(9) = 6.010 BETAO (7) = 2.060

SECTION (1)OMS NOZZLE DEPENDENT VARIABLE CP

X/LNM	.2000	.4000
PHI		
135.000	-.1750	
180.000	.0590	-.1630
225.000	-.2033	

ALPHAO(9) = 5.990 BETAO (8) = 4.080

SECTION (1)OMS NOZZLE DEPENDENT VARIABLE CP

X/LNM	.2000	.4000
PHI		
135.000	-.1704	
180.000	.0608	-.1832
225.000	-.2326	

ALPHAO(9) = 5.980 BETAO (9) = 6.090

SECTION (1)OMS NOZZLE DEPENDENT VARIABLE CP

X/LNM	.2000	.4000
PHI		
135.000	-.1946	
180.000	-.0256	-.2150
225.000	-.2483	

ARC11-716 IA14 C1+T12+S12N25+AT10 OHS NOZZLE (RB1E33)

ALPHAO(9) = 5.970 BETAO (10) = 8.160

SECTION (1)OHS NOZZLE DEPENDENT VARIABLE CP

X/LNM	.2000	.4000
PHI		
135.000	-.2183	
180.000	-.0549	-.2314
225.000	-.2537	

ALPHAO(9) = 5.950 BETAO (11) = 10.160

SECTION (1)OHS NOZZLE DEPENDENT VARIABLE CP

X/LNM	.2000	.4000
PHI		
135.000	-.2694	
180.000	-.0861	-.2178
225.000	-.2613	

ALPHAO(10) = 7.910 BETAO (1) = -10.030

SECTION (1)OHS NOZZLE DEPENDENT VARIABLE CP

X/LNM	.2000	.4000
PHI		
135.000	-.2042	
180.000	-.0073	-.0672
225.000	-.0816	

ALPHAO(10) = 7.930 BETAO (2) = -8.030

SECTION (1)OHS NOZZLE DEPENDENT VARIABLE CP

X/LNM	.2000	.4000
PHI		
135.000	-.2091	
180.000	.0851	.1015
225.000	-.0876	

ORIGINAL PAGE IS OF POOR QUALITY

ARC11-716 TA14 O1+T12+S12N25+AT10 OMS NOZZLE (R31E33)

ALPHAO(10) = 7.810 BETAO (3) = -5.970

SECTION (1)OMS NOZZLE DEPENDENT VARIABLE CP

X/LNM	.2000	.4000
PHI		
135.000	-.2153	
180.000	.0489	.0572
225.000	-.0952	

ALPHAO(10) = 7.830 BETAO (4) = -4.000

SECTION (1)OMS NOZZLE DEPENDENT VARIABLE CP

X/LNM	.2000	.4000
PHI		
135.000	-.2079	
180.000	.0613	.0442
225.000	-.1455	

ALPHAO(10) = 7.830 BETAO (5) = -2.030

SECTION (1)OMS NOZZLE DEPENDENT VARIABLE CP

X/LNM	.2000	.4000
PHI		
135.000	-.1807	
180.000	.0180	-.0722
225.000	-.1781	

ALPHAO(10) = 7.840 BETAO (6) = .040

SECTION (1)OMS NOZZLE DEPENDENT VARIABLE CP

X/LNM	.2000	.4000
PHI		
135.000	-.1578	
180.000	-.0030	-.1528
225.000	-.1950	

ARC11-716 IA14 C1+T12+S12N25+AT10 OMS NOZZLE (RB1E33)

ALPHAO(10) = 7.830 BETAO (7) = 2.040

SECTION (1)OMS NOZZLE DEPENDENT VARIABLE CP

X/LNM	.2000	.4000
PHI		
135.000	-.1823	
180.000	.0104	-.1723
225.000	-.2113	

ALPHAO(10) = 7.870 BETAO (8) = 4.060

SECTION (1)OMS NOZZLE DEPENDENT VARIABLE CP

X/LNM	.2000	.4000
PHI		
135.000	-.1811	
180.000	.0079	-.2002
225.000	-.2366	

ALPHAO(10) = 7.970 BETAO (9) = 6.160

SECTION (1)OMS NOZZLE DEPENDENT VARIABLE CP

X/LNM	.2000	.4000
PHI		
135.000	-.2087	
180.000	-.0457	-.2327
225.000	-.2570	

ALPHAO(10) = 7.960 BETAO (10) = 8.110

SECTION (1)OMS NOZZLE DEPENDENT VARIABLE CP

X/LNM	.2000	.4000
PHI		
135.000	-.2403	
180.000	-.0992	-.2523
225.000	-.2738	

ARC11-716 IA14 01+Y12+S12N25+AT10 OMS NOZZLE (RB1E33)

ALPHAO(10) = 7.960 BETAO (11) = 10.230

SECTION (1)OMS NOZZLE DEPENDENT VARIABLE CP

X/LNM	.2000	.4000
PHI		
135.000	-.2843	
180.000	-.0659	-.2188
225.000	-.2746	

ALPHAO(11) = 9.890 BETAO (1) = -9.960

SECTION (1)OMS NOZZLE DEPENDENT VARIABLE CP

X/LNM	.2000	.4000
PHI		
135.000	-.2271	
180.000	-.0009	.0056
225.000	-.1403	

ALPHAO(11) = 9.930 BETAO (2) = -7.920

SECTION (1)OMS NOZZLE DEPENDENT VARIABLE CP

X/LNM	.2000	.4000
PHI		
135.000	-.1984	
180.000	-.0487	-.0149
225.000	-.1253	

ALPHAO(11) = 9.940 BETAO (3) = -6.010

SECTION (1)OMS NOZZLE DEPENDENT VARIABLE CP

X/LNM	.2000	.4000
PHI		
135.000	-.1964	
180.000	-.1064	-.1562
225.000	-.0399	

ARC11-716 TA14 01+T12+S12N25+AT10 OMS NOZZLE (RB1E33)

ALPHAO(11) = 9.990 BETAO (4) = -3.990

SECTION (1)OMS NOZZLE DEPENDENT VARIABLE CP

X/LNM	.2000	.4000
PHI		
135.000	-.1077	
180.000	-.0759	-.1082
225.000	-.1415	

ALPHAO(11) = 9.900 BETAO (5) = -1.980

SECTION (1)OMS NOZZLE DEPENDENT VARIABLE CP

X/LNM	.2000	.4000
PHI		
135.000	-.1678	
180.000	-.0694	-.1574
225.000	-.1557	

ALPHAO(11) = 9.910 BETAO (6) = .020

SECTION (1)OMS NOZZLE DEPENDENT VARIABLE CP

X/LNM	.2000	.4000
PHI		
135.000	-.1647	
180.000	.0195	-.1647
225.000	-.2004	

ALPHAO(11) = 9.900 BETAO (7) = 2.040

SECTION (1)OMS NOZZLE DEPENDENT VARIABLE CP

X/LNM	.2000	.4000
PHI		
135.000	-.1865	
180.000	.0162	-.1839
225.000	-.2152	

ARC11-718 IA14 O1+T12+S12N25+AT10 OMS NOZZLE (RB1E33)

ALPHAO(11) = 9.900 BETAO (8) = 4.130

SECTION (1)OMS NOZZLE DEPENDENT VARIABLE CP

X/LNM	.2000	.4000
PHI		
135.000	-.1816	
180.000	-.0030	-.2089
225.000	-.2483	

ALPHAO(11) = 9.880 BETAO (9) = 6.100

SECTION (1)OMS NOZZLE DEPENDENT VARIABLE CP

X/LNM	.2000	.4000
PHI		
135.000	-.2160	
180.000	-.0406	-.2269
225.000	-.2629	

ALPHAO(11) = 9.870 BETAO (10) = 8.110

SECTION (1)OMS NOZZLE DEPENDENT VARIABLE CP

X/LNM	.2000	.4000
PHI		
135.000	-.2486	
180.000	-.1082	-.2499
225.000	-.2807	

ALPHAO(11) = 10.000 BETAO (11) = 10.190

SECTION (1)OMS NOZZLE DEPENDENT VARIABLE CP

X/LNM	.2000	.4000
PHI		
135.000	-.2772	
180.000	-.0851	-.2439
225.000	-.2804	

ORIGINAL PAGE IS OF POOR QUALITY

ARC11-716 IA14 G1+T12+S12N25+AT11 OMS NOZZLE (RB1E34) (15 FEB 74)

REFERENCE DATA

SREF = 2.4210 SQ.FT. XMRP = 29.5800 INCHES
LREF = 38.7090 INCHES YMRP = .0000 INCHES
BREF = 38.7090 INCHES ZMRP = .0000 INCHES
SCALE = .0300 SCALE

PARAMETRIC DATA

MACH = .600 ELEVON = .000
RUDDER = .000 SPOBRK = .000

ALPHAO(1) = -8.010 BETAO (1) = -7.980

SECTION (1)OMS NOZZLE DEPENDENT VARIABLE CP

X/LNM	.2000	.4000
PHI		
135.000	-.2355	
180.000	.2629	.5227
225.000	.5161	

ALPHAO(1) = -7.990 BETAO (2) = -3.980

SECTION (1)OMS NOZZLE DEPENDENT VARIABLE CP

X/LNM	.2000	.4000
PHI		
135.000	-.1563	
180.000	.3135	.4157
225.000	.3117	

ALPHAO(1) = -7.990 BETAO (3) = .030

SECTION (1) NOZZLE DEPENDENT VARIABLE CP

X/LNM	.2000	.4000
PHI		
135.000	-.1065	
180.000	.3377	.2868
225.000	.0700	

ALPHAO(1) = -8.000 BETAO (4) = 4.090

SECTION (1)OMS NOZZLE DEPENDENT VARIABLE CP

X/LNM	.2000	.4000
PHI		
135.000	-.1142	
180.000	.3104	.1507
225.000	-.1339	

ORIGINAL PAGE IS OF POOR QUALITY

ARC11-716 IA14 O1+T12+S12N25+AT11 OMS NOZZLE (RB1E34)

ALPHAO(1) = -8.020 BETAO (3) = 8.130

SECTION (1)OMS NOZZLE DEPENDENT VARIABLE CP

X/LNM	.2000	.4000
PHI		
135.000	-.1602	
180.000	.2613	-.0027
225.000	-.2389	

ALPHAO(2) = -4.050 BETAO (1) = -8.030

SECTION (1)OMS NOZZLE DEPENDENT VARIABLE CP

X/LNM	.2000	.4000
PHI		
135.000	-.2144	
180.000	.2678	.4292
225.000	.4295	

ALPHAO(2) = -4.050 BETAO (2) = -4.000

SECTION (1)OMS NOZZLE DEPENDENT VARIABLE CP

X/LNM	.2000	.4000
PHI		
135.000	-.1751	
180.000	.2993	.3225
225.000	.2162	

ALPHAO(2) = -4.050 BETAO (3) = .040

SECTION (1)OMS NOZZLE DEPENDENT VARIABLE CP

X/LNM	.2000	.4000
PHI		
135.000	-.1068	
180.000	.3183	.2241
225.000	.0497	

ARC11-716 (A14 O1+T12+S12N25+AT11 OMS NOZZLE (RB1E34)

ALPHAO(2) = -4.060 BETAO (4) = 4.070

SECTION (1)OMS NOZZLE DEPENDENT VARIABLE CP

X/LNM	.2000	.4000
PHI		
135.000	-.1300	
180.000	.2640	.0956
225.000	-.1258	

ALPHAO(2) = -4.060 BETAO (5) = 8.090

SECTION (1)OMS NOZZLE DEPENDENT VARIABLE CP

X/LNM	.2000	.4000
PHI		
135.000	-.1667	
180.000	.2267	-.0146
225.000	-.2213	

ALPHAO(3) = -.310 BETAO (1) = -8.030

SECTION (1)OMS NOZZLE DEPENDENT VARIABLE CP

X/LNM	.2000	.4000
PHI		
135.000	-.1910	
180.000	.2584	.3301
225.000	.3089	

ALPHAO(3) = -.320 BETAO (2) = -4.010

SECTION (1)OMS NOZZLE DEPENDENT VARIABLE CP

X/LNM	.2000	.4000
PHI		
135.000	-.1521	
180.000	.2824	.2524
225.000	.1538	

ARC11-716 IA14 O1+T12+S12N25+AT11 OMS NOZZLE (R81E34)

ALPHAO(3) = -.320 BETAO (3) = .030

SECTION (1)OMS NOZZLE DEPENDENT VARIABLE CP

X/LNM	.2000	.4000
PHI		
135.000	-.0958	
180.000	.2615	.1888
225.000	.0336	

ALPHAO(3) = -.320 BETAO (4) = 4.080

SECTION (1)OMS NOZZLE DEPENDENT VARIABLE CP

X/LNM	.2000	.4000
PHI		
135.000	-.1493	
180.000	.2256	.0665
225.000	-.1352	

ALPHAO(3) = -.320 BETAO (5) = 8.110

SECTION (1)OMS NOZZLE DEPENDENT VARIABLE CP

X/LNM	.2000	.4000
PHI		
135.000	-.1714	
180.000	.1855	-.0397
225.000	-.2228	

ALPHAO(4) = 4.000 BETAO (1) = -8.050

SECTION (1)OMS NOZZLE DEPENDENT VARIABLE CP

X/LNM	.2000	.4000
PHI		
135.000	-.1601	
180.000	.2240	.2380
225.000	.1707	

ARC11-718 TA14 O1+T12+S12N25+AT11 OMS NOZZLE (RB1E34)

ALPHAO(4) = 4.000 BETAO (2) = -3.980

SECTION (1)OMS NOZZLE DEPENDENT VARIABLE CP

X/LNM	.2000	4000
PHI		
135.000	-.1282	
180.000	.2533	.2251
225.000	.0488	

ALPHAO(4) = 4.000 BETAO (3) = .030

SECTION (1)OMS NOZZLE DEPENDENT VARIABLE CP

X/LNM	.2000	.4000
PHI		
135.000	-.1402	
180.000	.1881	.1607
225.000	-.0283	

ALPHAO(4) = 3.990 BETAO (4) = 4.080

SECTION (1)OMS NOZZLE DEPENDENT VARIABLE CP

X/LNM	.2000	.4000
PHI		
135.000	-.1256	
180.000	.2430	.0715
225.000	-.1100	

ALPHAO(4) = 3.980 BETAO (5) = 8.140

SECTION (1)OMS NOZZLE DEPENDENT VARIABLE CP

X/LNM	.2000	.4000
PHI		
135.000	-.1646	
180.000	.1571	-.0384
225.000	-.1897	

ARC11-716 IA14 O1+T12+S12N25+AT11 OMS NOZZLE (RB1E34)

ALPHAO(5) = 7.890 BETAO (1) = -8.010

SECTION (1)OMS NOZZLE DEPENDENT VARIABLE CP

X/LNM	.2000	.4000
PHI		
135.000	-.1310	
180.000	.1709	.1854
225.000	.0018	

ALPHAO(5) = 7.900 BETAO (2) = -4.010

SECTION (1)OMS NOZZLE DEPENDENT VARIABLE CP

X/LNM	.2000	.4000
PHI		
135.000	-.1239	
180.000	.2263	.2492
225.000	.0245	

ALPHAO(5) = 7.910 BETAO (3) = .040

SECTION (1)OMS NOZZLE DEPENDENT VARIABLE CP

X/LNM	.2000	.4000
PHI		
135.000	-.1410	
180.000	.0807	.1765
225.000	.0452	

ALPHAO(5) = 7.900 BETAO (4) = 4.100

SECTION (1)OMS NOZZLE DEPENDENT VARIABLE CP

X/LNM	.2000	.4000
PHI		
135.000	-.1149	
180.000	.2423	.1003
225.000	-.0676	

ARC11-716 IA14 OI+T12+S12N25+AT11 OMS NOZZLE (RB1E34)

ALPHAO(5) = 7.880 BETAO (5) = 8.170

SECTION (1)OMS NOZZLE DEPENDENT VARIABLE CP

X/LNM .2000 .0000

PHI		
135.000	-.1676	
180.000	.1658	-.0121
225.000	-.1541	

ARC11-716 IA14 O1+T12+S12N25+AT11 OMS NOZZLE (RB1E35) (15 FEB 74)

REFERENCE DATA

SREF = 2.4210 SQ.FT XMRP = 29.5800 INCHES
LREF = 38.7090 INCHES YMRP = .0000 INCHES
BREF = 38.7090 INCHES ZMRP = .0000 INCHES
SCALE = .0300 SCALE

PARAMETRIC DATA

MACH = .750 ELEVON = .000
RUDDER = .000 SPOBRK = .000

ALPHAO(1) = -8.050 BETAO (1) = -8.000

SECTION (1)OMS NOZZLE DEPENDENT VARIABLE CP

X/LNM	.2000	.4000
PHI		
135.000	-.2006	
180.000	.3602	.3728
225.000	.4341	

ALPHAO(1) = -8.040 BETAO (2) = -3.990

SECTION (1)OMS NOZZLE DEPENDENT VARIABLE CP

X/LNM	.2000	.4000
PHI		
135.000	-.1738	
180.000	.3862	.2556
225.000	.2036	

ALPHAO(1) = -8.040 BETAO (3) = .040

SECTION (1)OMS NOZZLE DEPENDENT VARIABLE CP

X/LNM	.2000	.4000
PHI		
135.000	-.1456	
180.000	.3649	.1311
225.000	-.0380	

ALPHAO(1) = -8.050 BETAO (4) = 4.080

SECTION (1)OMS NOZZLE DEPENDENT VARIABLE CP

X/LNM	.2000	.4000
PHI		
135.000	-.1449	
180.000	.3346	.0383
225.000	-.1793	

ARC11-716 TA14 O1+T12+S12N2C-AT11 OMS NOZZLE (RB1E35)

ALPHAO(1) = -8.080 BETAO (5) = 8.150

SECTION (1)OMS NOZZLE DEPENDENT VARIABLE CP

X/LNH	.2000	.4000
PHI		
135.000	-.1698	
180.000	.2337	-.0605
225.000	-.2646	

ALPHAO(2) = -4.070 BETAO (1) = -8.040

SECTION (1 OMS NOZZLE DEPENDENT VARIABLE CP

X/LNH	.2000	.4000
PHI		
135.000	-.2091	
180.000	.3377	.2991
225.000	.3219	

ALPHAO(2) = -4.080 BETAO (2) = -4.000

SECTION (1)OMS NOZZLE DEPENDENT VARIABLE CP

X/LNH	.2000	.4000
PHI		
135.000	-.1545	
180.000	.3592	.1947
225.000	.1474	

ALPHAO(2) = -4.080 BETAO (3) = .040

SECTION (1)OMS NOZZLE DEPENDENT VARIABLE CP

X/LNH	.2000	.4000
PHI		
135.000	-.1287	
180.000	.3170	.1242
225.000	-.0458	

ORIGINAL PAGE IS OF POOR QUALITY

ARC11-716 IA14 O1+T12+S12N25+AT11 OMS NOZZLE (RB1E35)

ALPHAO(2) = -4.080 BETAO (4) = 4.090

SECTION (1)OMS NOZZLE DEPENDENT VARIABLE CP

X/LNM	.2000	.4000
PHI		
135.000	-.1557	
180.000	.2699	.0091
225.000	-.1717	

ALPHAO(2) = -4.090 BETAO (5) = 8.150

SECTION (1)OMS NOZZLE DEPENDENT VARIABLE CP

X/LNM	.2000	.4000
PHI		
135.000	-.1771	
180.000	.2106	-.0712
225.000	-.2477	

ALPHAO(3) = -.310 BETAO (1) = -8.080

SECTION (1)OMS NOZZLE DEPENDENT VARIABLE CP

X/LNM	.2000	.4000
PHI		
135.000	-.1883	
180.000	.3105	.2429
225.000	.2378	

ALPHAO(3) = -.320 BETAO (2) = -4.010

SECTION (1)OMS NOZZLE DEPENDENT VARIABLE CP

X/LNM	.2000	.4000
PHI		
135.000	-.1535	
180.000	.3244	.1591
225.000	.0945	

JC11-716 IA14 O1+T12+S12N25+AT11 OMS NOZZLE (RB1E35)

ALPHAO(3) = -.330 BETAO (3) = .050

SECTION (1)OMS NOZZLE DEPENDENT VARIABLE CP

X/LNM	.2000	.4000
PHI		
135.000	-.1421	
180.000	.2392	.0918
225.000	-.0639	

ALPHAO(3) = -.320 BETAO (4) = 4.080

SECTION (1)OMS NOZZLE DEPENDENT VARIABLE CP

X/LNM	.2000	.4000
PHI		
135.000	-.1655	
180.000	.2192	-.0001
225.000	-.1554	

ALPHAO(3) = -.320 BETAO (5) = 8.130

SECTION (1)OMS NOZZLE DEPENDENT VARIABLE CP

X/LNM	.2000	.4000
PHI		
135.000	-.1792	
180.000	.1710	-.0761
225.000	-.2291	

ALPHAO(4) = 4.020 BETAO (1) = -8.060

SECTION (1)OMS NOZZLE DEPENDENT VARIABLE CP

X/LNM	.2000	.4000
PHI		
135.000	-.1558	
180.000	.2611	.1819
225.000	.0979	

ORIGINAL PAGE IS OF POOR QUALITY

ARC11-716 IA14 O1>T12+S12N25+AT11 OMS NOZZLE (RB1E35)

ALPHAO(4) = 4.020 BETAO (2) = -4.030

SECTION (1)OMS NOZZLE DEPENDENT VARIABLE CP

X/LNM	.2000	.4000
PHI		
135.000	-.1314	
180.000	.2716	.1428
225.000	.0005	

ALPHAO(4) = 4.020 BETAO (3) = .040

SECTION (1)OMS NOZZLE DEPENDENT VARIABLE CP

X/LNM	.2000	.4000
PHI		
135.000	-.1371	
180.000	.1585	.1093
225.000	-.0562	

ALPHAO(4) = 4.010 BETAO (4) = 5.100

SECTION (1)OMS NOZZLE DEPENDENT VARIABLE CP

X/LNM	.2000	.4000
PHI		
135.000	-.1690	
180.000	.1641	-.0100
225.000	-.1406	

ALPHAO(4) = 4.000 BETAO (5) = 8.160

SECTION (1)OMS NOZZLE DEPENDENT VARIABLE CP

X/LNM	.2000	.4000
PHI		
135.000	-.1831	
180.000	.1402	-.0652
225.000	-.1982	

ARC11-718 TA14 O1+T12+S12N25+AT11 OMS NOZZLE (RB1E35)

ALPHAO(5) = 7.930 BETAO (1) = -8.040

SECTION (1)OMS NOZZLE DEPENDENT VARIABLE CP

X/LNM	.2000	.4000
PHI		
135.000	-.1366	
180.000	.1871	.1446
225.000	.0318	

ALPHAO(5) = 7.940 BETAO (2) = -4.000

SECTION (1)OMS NOZZLE DEPENDENT VARIABLE CP

X/LNM	.2000	.4000
PHI		
135.000	-.1443	
180.000	.2324	.2272
225.000	-.0154	

ALPHAO(5) = 7.940 BETAO (3) = .030

SECTION (1)OMS NOZZLE DEPENDENT VARIABLE CP

X/LNM	.2000	.4000
PHI		
135.000	-.1440	
180.000	.0913	.0965
225.000	-.0473	

ALPHAO(5) = 7.930 BETAO (4) = 4.110

SECTION (1)OMS NOZZLE DEPENDENT VARIABLE CP

X/LNM	.2000	.4000
PHI		
135.000	-.1315	
180.000	.2035	.0358
225.000	-.0929	

ARC11-716 IA14 O1+T12+S12N25+AT11 OMS NOZZLE (RB1E35)

ALPHAO(5) = 7.920 BETAO (5) = 8.160

SECTION (1)OMS NOZZLE DEPENDENT VARIABLE CP

X/LNM	.2000	.4000
PHI		
135.000	-.1758	
180.000	.1250	-.0464
225.000	-.1434	

ARC11-716 IA14 O1+T12+S12N25+AT11 OMS NOZZLE (RB1E36) (15 FEB 74)

REFERENCE DATA

SREF = 2.4210 SQ.FT. XMRP = 29.5800 INCHES
LREF = 38.7090 INCHES YMRP = .0000 INCHES
BREF = 38.7090 INCHES ZMRP = .0000 INCHES
SCALE = .0300 SCALE

PARAMETRIC DATA

MACH = .850 ELEVON = .000
RUDDER = .000 SPDBRK = .000

ALPHAO(1) = -8.120 BETAO (1) = -8.000

SECTION (1)OMS NOZZLE DEPENDENT VARIABLE CP

X/LNM	.2000	.4000
PHI		
135.000	-.1957	
180.000	.4364	.2103
225.000	.3005	

ALPHAO(1) = -8.110 BETAO (2) = -3.970

SECTION (1)OMS NOZZLE DEPENDENT VARIABLE CP

X/LNM	.2000	.4000
PHI		
135.000	-.1790	
180.000	.4438	.0859
225.000	.0409	

ALPHAO(1) = -8.070 BETAO (3) = .010

SECTION (1)OMS NOZZLE DEPENDENT VARIABLE CP

X/LNM	.2000	.4000
PHI		
135.000	-.1651	
180.000	.3792	-.0051
225.000	-.1505	

ALPHAO(1) = -8.080 BETAO (4) = 4.090

SECTION (1)OMS NOZZLE DEPENDENT VARIABLE CP

X/LNM	.2000	.4000
PHI		
135.000	-.1850	
180.000	.3017	-.0728
225.000	-.2557	

ARC11-716 IA14 O1+T12+S12N25+AT11 OMS NOZZLE (RB1E36)

ALPHAO(1) = -8.100 BETAO (5) = 8.160

SECTION (1)OMS NOZZLE DEPENDENT VARIABLE CP

X/LNM	.2000	.4000
PHI		
135.000	-.1822	
180.000	.2140	-.0994
225.000	-.2727	

ALPHAO(2) = -3.980 BETAO (1) = -8.050

SECTION (1)OMS NOZZLE DEPENDENT VARIABLE CP

X/LNM	.2000	.4000
PHI		
135.000	-.2074	
180.000	.4046	.1660
225.000	.2039	

ALPHAO(2) = -3.980 BETAO (2) = -3.990

SECTION (1)OMS NOZZLE DEPENDENT VARIABLE CP

X/LNM	.2000	.4000
PHI		
135.000	-.1760	
180.000	.3878	.0575
225.000	.0101	

ALPHAO(2) = -3.990 BETAO (3) = .060

SECTION (1)OMS NOZZLE DEPENDENT VARIABLE CP

X/LNM	.2000	.4000
PHI		
135.000	-.1596	
180.000	.3004	.0036
225.000	-.1406	

ORIGINAL PAGE IS OF POOR QUALITY

ARC11-716 IA14 O1+T12+S12N25+AT11 OMS NOZZLE (RP1E36)

ALPHAO(2) = -5.990 BETAO (4) = 4.070

SECTION (1)OMS NOZZLE DEPENDENT VARIABLE CP

X/LNM	.2000	.4000
PHI		
135.000	-.1834	
180.000	.2415	-.0743
225.000	-.2331	

ALPHAO(2) = -4.000 BETAO (5) = 8.110

SECTION (1)OMS NOZZLE DEPENDENT VARIABLE CP

X/LNM	.2000	.4000
PHI		
135.000	-.1859	
180.000	.1670	-.0873
225.000	-.2636	

ALPHAO(3) = -.310 BETAO (1) = -8.050

SECTION (1)OMS NOZZLE DEPENDENT VARIABLE CP

X/LNM	.2000	.4000
PHI		
135.000	-.1761	
180.000	.3570	.1401
225.000	.1269	

ALPHAO(3) = -.320 BETAO (2) = -3.990

SECTION (1)OMS NOZZLE DEPENDENT VARIABLE CP

X/LNM	.2000	.4000
PHI		
135.000	-.1584	
180.000	.3295	.0558
225.000	-.0163	

ORIGINAL PAGE IS OF POOR QUALITY

ARC11-716 IA14 O1+T12+S12N25+AT11 OMS NOZZLE (RB1E36)

ALPHAO(3) = -.330 BETAO (3) = .040

SECTION (1)OMS NOZZLE DEPENDENT VARIABLE CP

X/LNM	.2000	.4000
PHI		
135.000	-.1481	
180.000	.2315	.0163
225.000	-.1282	

ALPHAO(3) = -.330 BETAO (4) = 8.130

SECTION (1)OMS NOZZLE DEPENDENT VARIABLE CP

X/LNM	.2000	.4000
PHI		
135.000	-.1929	
180.000	.1380	-.0913
225.000	-.2367	

ALPHAO(4) = 3.810 BETAO (1) = -4.010

SECTION (1)OMS NOZZLE DEPENDENT VARIABLE CP

X/LNM	.2000	.4000
PHI		
135.000	-.1403	
180.000	.2908	.0745
225.000	-.0542	

ALPHAO(4) = 3.810 BETAO (2) = .040

SECTION (1)OMS NOZZLE DEPENDENT VARIABLE CP

X/LNM	.2000	.4000
PHI		
135.000	-.1615	
180.000	.1303	.0392
225.000	-.0845	

ARC11-716 IA14 O1+T12+S12N25+AT11 OMS NOZZLE (RB1E36)

ALPHAO(4) = 3.800 BETAO (3) = 4.090

SECTION (1)OMS NOZZLE DEPENDENT VARIABLE CP

X/LNM	.2000	.4000
PHI		
135.000	-.1620	
180.000	.1687	-.0311
225.000	-.1390	

ALPHAO(4) = 5.780 BETAO (4) = 8.160

SECTION (1)OMS NOZZLE DEPENDENT VARIABLE CP

X/LNM	.2000	.4000
PHI		
135.000	-.2080	
180.000	.0808	-.0863
225.000	-.2033	

ALPHAO(5) = 7.940 BETAO (1) = .030

SECTION (1)OMS NOZZLE DEPENDENT VARIABLE CP

X/LNM	.2000	.4000
PHI		
135.000	-.1602	
180.000	.0747	.0423
225.000	-.0693	

ALPHAO(5) = 7.930 BETAO (2) = 4.130

SECTION (1)OMS NOZZLE DEPENDENT VARIABLE CP

X/LNM	.2000	.4000
PHI		
135.000	-.1634	
180.000	.1523	-.0016
225.000	-.1052	

ARC11-716 IA14 O1+T12+S12N25+AT11 OMS NOZZLE (PB1E36)

ALPHAO(5) = 7.910 BETAO (5) = 8.190

SECTION (1)OMS NOZZLE DEPENDENT VARIABLE CP

X/LNM	.2000	.4000
PHI		
135.000	-.2047	
180.000	.0337	-.0706
225.000	-.1463	

ARC11-716 IA14 01+T12+S12N25+AT11 OMS NOZZLE (RB1E37) (15 FEB 74)

REFERENCE DATA

SREF = 2.4210 SQ.FT. XMRP = 29.5300 INCHES
LREF = 38.7090 INCHES YMRP = .0000 INCHES
BREF = 38.7090 INCHES ZMRP = .0000 INCHES
SCALE = .0300 SCALE

PARAMETRIC DATA

MACH = .950 ELEVON = .000
RUDDER = .000 SPDBRK = .000

ALPHAO(1) = -8.060 BETAO (1) = -3.980

SECTION (1)OMS NOZZLE DEPENDENT VARIABLE CP

X/LNM	.2000	.4000
PHI		
135.000	-.2416	
180.000	.4523	-.0628
225.000	-.0796	

ALPHAO(1) = -8.050 BETAO (2) = .040

SECTION (1)OMS NOZZLE DEPENDENT VARIABLE CP

X/LNM	.2000	.4000
PHI		
135.000	-.2253	
180.000	.3715	-.1324
225.000	-.2370	

ALPHAO(1) = -8.070 BETAO (3) = 4.090

SECTION (1)OMS NOZZLE DEPENDENT VARIABLE CP

X/LNM	.2000	.4000
PHI		
135.000	-.2380	
180.000	.2241	-.1906
225.000	-.3221	

ALPHAO(1) = -8.100 BETAO (4) = 8.150

SECTION (1)OMS NOZZLE DEPENDENT VARIABLE CP

X/LNM	.2000	.4000
PHI		
135.000	-.2631	
180.000	-.1035	-.2655
225.000	-.3192	

ARC11-718 IA14 O1+T12+S12N25+AT11 OMS NOZZLE (RB1E37)

ALPHAO(2) = -4.090 BETAO (1) = -8.040

SECTION (1)OMS NOZZLE DEPENDENT VARIABLE CP

X/LNM	.2000	.4000
PHI		
135.000	-.2420	
180.000	.4096	-.0248
225.000	.0280	

ALPHAO(2) = -4.080 BETAO = -4.020

SECTION (1)OMS NOZZLE DEPENDENT VARIABLE CP

X/LNM	.2000	.4000
PHI		
135.000	-.2348	
180.000	.3521	-.0847
225.000	-.1271	

ALPHAO(2) = -4.080 BETAO (3) = .010

SECTION (1)OMS NOZZLE DEPENDENT VARIABLE CP

X/LNM	.2000	.4000
PHI		
135.000	-.2064	
180.000	.2138	-.1723
225.000	-.2702	

ALPHAO(2) = -4.090 BETAO (4) = 4.070

SECTION (1)OMS NOZZLE DEPENDENT VARIABLE CP

X/LNM	.2000	.4000
PHI		
135.000	-.2427	
180.000	.1121	-.2015
225.000	-.3404	

ARC11-716 IA14 O1+T12+S12N25+AT11 OMS NOZZLE (RB1E37)

ALPHAO(2) = -4.110 BETAO (5) = 8.110

SECTION (1)OMS NOZZLE DEPENDENT VARIABLE CP

X/LNM	.2000	.4000
PHI		
135.000	-.2439	
180.000	-.0841	-.2601
225.000	-.2942	

ALPHAO(3) = -.310 BETAO (1) = -8.040

SECTION (1)OMS NOZZLE DEPENDENT VARIABLE CP

X/LNM	.2000	.4000
PHI		
135.000	-.2434	
180.000	.3407	-.0465
225.000	-.0046	

ALPHAO(3) = -.320 BETAO (2) = -4.000

SECTION (1)OMS NOZZLE DEPENDENT VARIABLE CP

X/LNM	.2000	.4000
PHI		
135.000	-.2080	
180.000	.3016	-.0740
225.000	-.1298	

ALPHAO(3) = -.320 BETAO (3) = .040

SECTION (1)OMS NOZZLE DEPENDENT VARIABLE CP

X/LNM	.2000	.4000
PHI		
135.000	-.2141	
180.000	.0878	-.1841
225.000	-.3102	

ARC11-716 IA14 O1+T12+S12N25+AT11 OMS NOZZLE (R81E37)

ALPHAO(3) = -.320 BETAO (4) = 4.090

SECTION (1)OMS NOZZLE DEPENDENT VARIABLE CP

X/LNM	.2000	.4000
PHI		
135.000	-.2299	
180.000	.0311	-.1973
225.000	-.3232	

ALPHAO(3) = -.330 BETAO (5) = 8.130

SECTION (1)OMS NOZZLE DEPENDENT VARIABLE CP

X/LNM	.2000	.4000
PHI		
135.000	-.2477	
180.000	-.0902	-.2622
225.000	-.3229	

ALPHAO(4) = 4.030 BETAO (1) = -8.060

SECTION (1)OMS NOZZLE DEPENDENT VARIABLE CP

X/LNM	.2000	.4000
PHI		
135.000	-.2115	
180.000	.2545	-.0362
225.000	-.0598	

ALPHAO(4) = 4.030 BETAO (2) = -4.010

SECTION (1)OMS NOZZLE DEPENDENT VARIABLE CP

X/LNM	.2000	.4000
PHI		
135.000	-.1892	
180.000	.2576	.0081
225.000	-.1024	

ORIGINAL PAGE IS OF POOR QUALITY

ARC11-716 IA14 O1+T12+S12N25+AT11 OMS NOZZLE (RB1E37)

ALPHAO(4) = 4.080 BETAO (3) = .030

SECTION (1)OMS NOZZLE DEPENDENT VARIABLE CP

X/LNM	.2000	.4000
PHI		
135.000	-.2358	
180.000	.0191	-.1652
225.000	-.2950	

ALPHAO(4) = 4.020 BETAO (4) = 4.100

SECTION (1)OMS NOZZLE DEPENDENT VARIABLE CP

X/LNM	.2000	.4000
PHI		
135.000	-.2233	
180.000	-.0600	-.1992
225.000	-.2926	

ALPHAO(4) = 4.010 BETAO (5) = 8.140

SECTION (1)OMS NOZZLE DEPENDENT VARIABLE CP

X/LNM	.2000	.4000
PHI		
135.000	-.2807	
180.000	-.1143	-.2581
225.000	-.3112	

ALPHAO(5) = 7.940 BETAO (1) = -8.030

SECTION (1)OMS NOZZLE DEPENDENT VARIABLE CP

X/LNM	.2000	.4000
PHI		
135.000	-.1565	
180.000	.1475	.0723
225.000	-.0829	

ORIGINAL PAGE IS
OF POOR QUALITY

ARC11-716 IA14 O1+T12+S12N25+AT11 OMS NOZZLE (RB1E37)

ALPHAO(3) = 7.940 BETAO (2) = -4.010

SECTION (1)OMS NOZZLE DEPENDENT VARIABLE CP

X/LNM	.2000	.4000
PHI		
135.000	-.2614	
180.000	.0706	.0763
225.000	-.0933	

ALPHAO(3) = 7.940 BETAO (3) = .040

SECTION (1)OMS NOZZLE DEPENDENT VARIABLE CP

X/LNM	.2000	.4000
PHI		
135.000	-.2266	
180.000	-.0221	-.1326
225.000	-.2062	

ALPHAO(3) = 7.930 BETAO (4) = 4.110

SECTION (1)OMS NOZZLE DEPENDENT VARIABLE CP

X/LNM	.2000	.4000
PHI		
135.000	-.2313	
180.000	-.1131	-.2091
225.000	-.2596	

ALPHAO(3) = 7.920 BETAO (5) = 8.180

SECTION (1)OMS NOZZLE DEPENDENT VARIABLE CP

X/LNM	.2000	.4000
PHI		
135.000	-.2733	
180.000	-.1066	-.2305
225.000	-.2882	

ARC11-716 IA14 01+T12+S12N25+AT11 OMS NOZZLE (RB1E38) (15 FEB 74)

REFERENCE DATA

SREF = 2.4210 SQ.FT. XMRP = 29.5800 INCHES
LREF = 38.7050 INCHES YMRP = .0000 INCHES
BREF = 38.7090 INCHES ZMRP = .0000 INCHES
SCALE = .0300 SCALE

PARAMETRIC DATA

MACH = 1.050 ELEVON = .000
RUDDER = .000 SPDBRK = .000

ALPHAO(1) = -8.080 BETAO (1) = -8.020

SECTION (1)OMS NOZZLE DEPENDENT VARIABLE CP

X/LNM	.2000	.4000
PHI		
135.000	-.3024	
180.000	.4976	.3497
225.000	.8933	

ALPHAO(1) = -8.070 BETAO (2) = -4.980

SECTION (1)OMS NOZZLE DEPENDENT VARIABLE CP

X/LNM	.2000	.4000
PHI		
135.000	-.2751	
180.000	.5092	.1626
225.000	.5775	

ALPHAO(1) = -8.080 BETAO (3) = .030

SECTION (1)OMS NOZZLE DEPENDENT VARIABLE CP

X/LNM	.2000	.4000
PHI		
135.000	-.2872	
180.000	.4033	-.0961
225.000	-.1542	

ALPHAO(1) = -8.070 BETAO (4) = 4.120

SECTION (1)OMS NOZZLE DEPENDENT VARIABLE CP

X/LNM	.2000	.4000
PHI		
135.000	-.2268	
180.000	.3274	-.1660
225.000	-.2904	

ARC11-716 IA14 O1+T12+S12N25+AT11 OMS NOZZLE (RB1E38)

ALPHAO(1) = -8.100 BETAO (5) = 8.160

SECTION (1)OMS NOZZLE DEPENDENT VARIABLE CP

X/LNM	.2000	.4000
PHI		
135.000	-.2692	
180.000	-.0261	-.2855
225.000	-.3280	

ALPHAO(2) = -4.080 BETAO (1) = -8.040

SECTION (1)OMS NOZZLE DEPENDENT VARIABLE CP

X/LNM	.2000	.4000
PHI		
135.000	-.3150	
180.000	.4731	.2407
225.000	.7694	

ALPHAO(2) = -4.090 BETAO (2) = -4.020

SECTION (1)OMS NOZZLE DEPENDENT VARIABLE CP

X/LNM	.2000	.4000
PHI		
135.000	-.2872	
180.000	.4624	.0088
225.000	.3109	

ALPHAO(2) = -4.090 BETAO (3) = .040

SECTION (1)OMS NOZZLE DEPENDENT VARIABLE CP

X/LNM	.2000	.4000
PHI		
135.000	-.2811	
180.000	.3155	-.1264
225.000	-.2040	

ORIGINAL PAGE IS OF POOR QUALITY

ARC11-718 IA14 O1+T12+S12N25+AT11 OMS NOZZLE (RB1E38)

ALPHAO(2) = -4.090 BETAO (4) = 4.080

SECTION (1)OMS NOZZLE DEPENDENT VARIABLE CP

X/LNM	.2000	.4000
PHI		
135.000	-.2159	
180.000	.2257	-.1611
225.000	-.3036	

ALPHAO(2) = -4.100 BETAO (5) = 8.120

SECTION (1)OMS NOZZLE DEPENDENT VARIABLE CP

Y/LNM	.2000	.4000
PHI		
135.000	-.2918	
180.000	.0248	-.2727
225.000	-.3368	

ALPHAO(3) = -.310 BETAO (1) = -8.040

SECTION (1)OMS NOZZLE DEPENDENT VARIABLE CP

X/LNM	.2000	.4000
PHI		
135.000	-.2983	
180.000	.4285	.1659
225.000	.5678	

ALPHAO(3) = -.320 BETAO (2) = -4.010

SECTION (1)OMS NOZZLE DEPENDENT VARIABLE CP

X/LNM	.2000	.4000
PHI		
135.000	-.2786	
180.000	.3227	-.1063
225.000	.0312	

ORIGINAL PAGE IS OF POOR QUALITY

ARC11-718 IA14 C1+T12+S12N25+A711 OMS NOZZLE (RB1E38)

ALPHAO(2) = -.330 BETAO (3) = .040

SECTION (1)OMS NOZZLE DEPENDENT VARIABLE CP

X/LNM	.2000	.4000
PHI		
135.000	-.2377	
180.000	.1939	-.1403
225.000	-.2437	

ALPHAO(3) = -.320 BETAO (4) = 4.090

SECTION (1)OMS NOZZLE DEPENDENT VARIABLE CP

X/LNM	.2000	.4000
PHI		
135.000	-.2290	
180.000	.1430	-.2003
225.000	-.3182	

ALPHAO(3) = -.330 BETAO (5) = 8.130

SECTION (1)OMS NOZZLE DEPENDENT VARIABLE CP

X/LNM	.2000	.4000
PHI		
135.000	-.3004	
180.000	.0353	-.2340
225.000	-.3629	

ALPHAO(4) = 4.020 BETAO (1) = -8.050

SECTION (1)OMS NOZZLE DEPENDENT VARIABLE CP

X/LNM	.2000	.4000
PHI		
135.000	-.2500	
180.000	.3508	.1962
225.000	.5005	

ARC11-716 IA14 O1+T12+S12N25+AT11 OMS NOZZLE (RB1E38)

ALPHAO(4) = 4.020 BETAO (2) = -4.020

SECTION (1)OMS NOZZLE DEPENDENT VARIABLE CP

X/LNM	.2000	.4000
PHI		
135.000	-.2410	
180.000	.1920	-.1525
225.000	-.1995	

ALPHAO(4) = 4.020 BETAO (3) = .030

SECTION (1)OMS NOZZLE DEPENDENT VARIABLE CP

X/LNM	.2000	.4000
PHI		
135.000	-.2228	
180.000	.1031	-.1677
225.000	-.2945	

ALPHAO(4) = 4.010 BETAO (4) = 4.110

SECTION (1)OMS NOZZLE DEPENDENT VARIABLE CP

X/LNM	.2000	.4000
PHI		
135.000	-.2351	
180.000	.0979	-.2103
225.000	-.3281	

ALPHAO(4) = 4.000 BETAO (5) = 8.160

SECTION (1)OMS NOZZLE DEPENDENT VARIABLE CP

X/LNM	.2000	.4000
PHI		
135.000	-.2939	
180.000	-.0220	-.2398
225.000	-.3469	

ARC11-716 IA14 O1+T12+S12N25+AT11 OMS NOZZLE (RB1E38)

ALPHAO(5) = 7.930 BETAO (1) = -8.010

SECTION (1)OMS NOZZLE DEPENDENT VARIABLE CP

X/LNM	.2000	.4000
PHI		
135.000	-.2182	
180.000	.1855	.1656
225.000	.1908	

ALPHAO(5) = 7.930 BETAO (2) = -3.990

SECTION (1)OMS NOZZLE DEPENDENT VARIABLE CP

X/LNM	.2000	.4000
PHI		
135.000	-.2655	
180.000	.1834	-.0204
225.000	-.1039	

ALPHAO(5) = 7.930 BETAO (3) = .040

SECTION (1)OMS NOZZLE DEPENDENT VARIABLE CP

X/LNM	.2000	.4000
PHI		
135.000	-.2575	
180.000	-.0060	-.1833
225.000	-.2974	

ALPHAO(5) = 7.930 BETAO (4) = 4.110

SECTION (1)OMS NOZZLE DEPENDENT VARIABLE CP

X/LNM	.2000	.4000
PHI		
135.000	-.2711	
180.000	.0050	-.2046
225.000	-.3326	

DATE 10 DEC 74 TABULATED PRESSURE DATA - TA14A - VOL. 4

ARC11-718 TA14 O1+T12+S12N25+AT11 OMS NOZZLE (RB1E38)

ALPHAO(5) = 7.910 BETAO (5) = 8.200

SECTION (1)OMS NOZZLE DEPENDENT VARIABLE CP

X/LNM	.2000	.4000
PHI		
135.000	-.3138	
180.000	-.0093	-.2521
225.000	-.3751	

ARC11-T16 IA14 O1+T12+S12N25+AT11 OMS NOZZLE (RB1E39) (15 FEB 74)

REFERENCE DATA

SREF = 2.4210 SQ.FT. XMRP = 29.5800 INCHES
LREF = 38.7090 INCHES YMRP = .0000 INCHES
BREF = 38.7090 INCHES ZMRP = .0000 INCHES
SCALE = .0300 SCALE

PARAMETRIC DATA

MACH = 1.150 ELEVON = .000
RUDDER = .000 SPOERK = .000

ALPHAO(1) = -8.110 BETAO (1) = -8.020

SECTION (1)OMS NOZZLE DEPENDENT VARIABLE CP

X/LNM	.2000	.4000
PHI		
135.000	-.2434	
180.000	.5002	.6815
225.000	.9295	

ALPHAO(1) = -8.100 BETAO (2) = -4.000

SECTION (1)OMS NOZZLE DEPENDENT VARIABLE CP

X/LNM	.2000	.4000
PHI		
135.000	-.2099	
180.000	.5277	.3619
225.000	.6942	

ALPHAO(1) = -8.090 BETAO (3) = .030

SECTION (1)OMS NOZZLE DEPENDENT VARIABLE CP

X/LNM	.2000	.4000
PHI		
135.000	-.2376	
180.000	.4876	.1489
225.000	.2319	

ALPHAO(1) = -8.100 BETAO (4) = 4.080

SECTION (1)OMS NOZZLE DEPENDENT VARIABLE CP

X/LNM	.2000	.4000
PHI		
135.000	-.2405	
180.000	.4184	-.0400
225.000	-.1175	

ARC11-716 IA14 O1+T12+S12N25+AT11 OMS NOZZLE (R81E39)

ALPHAO(1) = -8.150 BETAO (5) = 8.160

SECTION (1)OMS NOZZLE DEPENDENT VARIABLE CP

X/LNM	.2000	.4000
PHI		
135.000	-.2864	
180.000	-.0693	-.2882
225.000	-.3111	

ALPHAO(2) = -4.100 BETAO (1) = -8.030

SECTION (1)OMS NOZZLE DEPENDENT VARIABLE CP

X/LNM	.2000	.4000
PHI		
135.000	-.2437	
180.000	.5133	.4542
225.000	.9220	

ALPHAO(2) = -4.110 BETAO (2) = -4.010

SECTION (1)OMS NOZZLE DEPENDENT VARIABLE CP

X/LNM	.2000	.4000
PHI		
135.000	-.2472	
180.000	.5032	.1625
225.000	.4932	

ALPHAO(2) = -4.110 BETAO (3) = .040

SECTION (1)OMS NOZZLE DEPENDENT VARIABLE CP

X/LNM	.2000	.4000
PHI		
135.000	-.2383	
180.000	.4265	.0209
225.000	.0239	

ARC11-718 TA14 O1+T12+S12N25+AT11 OMS NOZZLE (RB1E39)

ALPHAO(2) = -4.110 BETAO (4) = 4.170

SECTION (1)OMS NOZZLE DEPENDENT VARIABLE CP

X/LNM	.2000	.4000
PHI		
135.000	-.2336	
180.000	.3104	-.1218
225.000	-.2092	

ALPHAO(2) = -4.130 BETAO (5) = 8.110

SECTION (1)OMS NOZZLE DEPENDENT VARIABLE CP

X/LNM	.2000	.4000
PHI		
135.000	-.2680	
180.000	-.0772	-.2793
225.000	-.2936	

ALPHAO(3) = -.330 BETAO (1) = -4.020

SECTION (1)OMS NOZZLE DEPENDENT VARIABLE CP

X/LNM	.2000	.4000
PHI		
135.000	-.2535	
180.000	.4187	.0682
225.000	.2068	

ALPHAO(3) = -.330 BETAO (2) = .040

SECTION (1)OMS NOZZLE DEPENDENT VARIABLE CP

X/LNM	.2000	.4000
PHI		
135.000	-.2104	
180.000	.2854	-.0171
225.000	-.0663	

ORIGINAL PAGE IS OF POOR QUALITY

ARC11-716 TA14 O1+T12+S12N25+AT11 OMS NOZZLE (RB1E39)

ALPHAO(3) = -.340 BETAO (3) = 4.070

SECTION (1)OMS NOZZLE DEPENDENT VARIABLE CP

X/LNM	.2000	.4000
PHI		
135.000	-.2165	
180.000	.2415	-.1427
225.000	-.2358	

ALPHAO(3) = -.340 BETAO (4) = 8.140

SECTION (1)OMS NOZZLE DEPENDENT VARIABLE CP

X/LNM	.2000	.4000
PHI		
135.000	-.2697	
180.000	-.0605	-.2591
225.000	-.2981	

ALPHAO(4) = 4.010 BETAO (1) = -8.060

SECTION (1)OMS NOZZLE DEPENDENT VARIABLE CP

X/LNM	.2000	.4000
PHI		
135.000	-.1903	
180.000	.3214	.0699
225.000	.1136	

ALPHAO(4) = 4.010 BETAO (2) = -4.010

SECTION (1)OMS NOZZLE DEPENDENT VARIABLE CP

X/LNM	.2000	.4000
PHI		
135.000	-.2461	
180.000	.3064	-.0395
225.000	-.0423	

ARC11-718 IA14 O1+T12+S12N25+AT11 OMS NOZZLE (RB1E39)

ALPHAO(4) = 4.000 BETAO (3) = .050

SECTION (1)OMS NOZZLE DEPENDENT VARIABLE CP

X/LNH	.2000	.4000
PHI		
135.000	-.2128	
180.000	.1958	-.1184
225.000	-.2050	

ALPHAO(4) = 4.000 BETAO (4) = 4.100

SECTION (1)OMS NOZZLE DEPENDENT VARIABLE CP

X/LNH	.2000	.4000
PHI		
135.000	-.2029	
180.000	.1164	-.1847
225.000	-.2658	

ALPHAO(4) = 3.990 BETAO (5) = 8.140

SECTION (1)OMS NOZZLE DEPENDENT VARIABLE CP

X/LNH	.2000	.4000
PHI		
135.000	-.2704	
180.000	-.0216	-.2153
225.000	-.2930	

ALPHAO(5) = 7.920 BETAO (1) = -8.050

SECTION (1)OMS NOZZLE DEPENDENT VARIABLE CP

X/LNH	.2000	.4000
PHI		
135.000	-.2820	
180.000	.2939	.1311
225.000	-.0447	

ARC11-716 IA14 O1+T12+S12N2%+AT11 OMS NOZZLE (RB1E39)

ALPHAO(5) = 7.930 BETAO (2) = -3.990

SECTION (1)OMS NOZZLE DEPENDENT VARIABLE CP

X/LNM	.2000	.4000
PHI		
135.000	-.2117	
180.000	.1933	-.0637
225.000	-.1404	

ALPHAO(5) = 7.930 BETAO (3) = .040

SECTION (1)OMS NOZZLE DEPENDENT VARIABLE CP

X/LNM	.2000	.4000
PHI		
135.000	-.1805	
180.000	.0764	-.1549
225.000	-.2355	

ALPHAO(5) = 7.930 BETAO (4) = 4.120

SECTION (1)OMS NOZZLE DEPENDENT VARIABLE CP

X/LNM	.2000	.4000
PHI		
135.000	-.2101	
180.000	.0496	-.1972
225.000	-.2840	

ALPHAO(5) = 7.910 BETAO (5) = 8.200

SECTION (1)OMS NOZZLE DEPENDENT VARIABLE CP

X/LNM	.2000	.4000
PHI		
135.000	-.2579	
180.000	-.0179	-.2577
225.000	-.3506	

ARC11-716 IA14 O1+T12+S1BN25+AT11 OMS NOZZLE (R81E40) (15 FEB 74)

REFERENCE DATA

SREF = 2.4210 SQ.FT. XMRP = 29.5800 INCHES
LREF = 36.7090 INCHES YMRP = .0000 INCHES
BREF = 36.7090 INCHES ZMRP = .0000 INCHES
SCALE = .0300 SCALE

PARAMETRIC DATA

MACH = 1.400 ELEVON = .000
RUDDER = .000 SPOERK = .000

ALPHAO(1) = -7.920 BETAO (1) = -8.040

SECTION (1)OMS NOZZLE DEPENDENT VARIABLE CP

X/LNM	.2000	.4000
PHI		
135.000	-.1040	
180.000	.5007	.8828
225.000	.8034	

ALPHAO(1) = -7.910 BETAO (2) = -4.000

SECTION (1)OMS NOZZLE DEPENDENT VARIABLE CP

X/LNM	.2000	.4000
PHI		
135.000	-.0695	
180.000	.4752	.7789
225.000	.7021	

ALPHAO(1) = -7.900 BETAO (3) = .030

SECTION (1)OMS NOZZLE DEPENDENT VARIABLE CP

X/LNM	.2000	.4000
PHI		
135.000	-.1492	
180.000	.4671	.2904
225.000	.2273	

ALPHAO(1) = -7.910 BETAO (4) = 4.100

SECTION (1)OMS NOZZLE DEPENDENT VARIABLE CP

X/LNM	.2000	.4000
PHI		
135.000	-.2149	
180.000	.3183	-.0409
225.000	-.1559	

ARC11-716 IA14 O1+T12+S12N25+AT11 OMS NOZZLE (RB1E40)

ALPHAO(1) = -8.000 BETAO (5) = 8.190

SECTION (1)OMS NOZZLE DEPENDENT VARIABLE CP

X/LNM	.2000	.4000
PHI		
135.000	-.2020	
180.000	.0104	-.2394
225.000	-.2833	

ALPHAO(2) = -4.010 BETAO (1) = -8.050

SECTION (1)OMS NOZZLE DEPENDENT VARIABLE CP

X/LNM	.2000	.4000
PHI		
135.000	-.1034	
180.000	.4885	.8226
225.000	.7378	

ALPHAO(2) = -4.010 BETAO (2) = -4.020

SECTION (1)OMS NOZZLE DEPENDENT VARIABLE CP

X/LNM	.2000	.4000
PHI		
135.000	-.1128	
180.000	.4682	.4752
225.000	.5492	

ALPHAO(2) = -3.930 BETAO (3) = .030

SECTION (1)OMS NOZZLE DEPENDENT VARIABLE CP

X/LNM	.2000	.4000
PHI		
135.000	-.1976	
180.000	.4063	.1044
225.000	.1012	

ORIGINAL PAGE IS OF POOR QUALITY

ARC11-716 IA14 O1+T12+S12N25+AT11 OMS NOZZLE (RB1E40)

ALPHAO(2) = -3.940 BETAO (4) = 4.100

SECTION (1)OMS NOZZLE DEPENDENT VARIABLE CP

X/LNM	.2000	.4000
PHI		
135.000	-.2228	
180.000	.2094	-.1424
225.000	-.2000	

ALPHAO(2) = -3.950 BETAO (5) = 8.150

SECTION (1)OMS NOZZLE DEPENDENT VARIABLE CP

X/LNM	.2000	.4000
PHI		
135.000	-.2484	
180.000	-.0850	-.2436
225.000	-.2679	

ALPHAO(3) = -.370 BETAO (1) = -8.090

SECTION (1)OMS NOZZLE DEPENDENT VARIABLE CP

X/LNM	.2000	.4000
PHI		
135.000	-.1129	
180.000	.4796	.8714
225.000	.4150	

ALPHAO(3) = -.380 BETAO (2) = -4.020

SECTION (1)OMS NOZZLE DEPENDENT VARIABLE CP

X/LNM	.2000	.4000
PHI		
135.000	-.1449	
180.000	.4254	.2892
225.000	.3636	

ARC11-716 IA14 O1+T12+S12N25+AT11 OMS NOZZLE (RB1E40)

ALPHAO(3) = -.380 BETAO (3) = .020

SECTION (1)OMS NOZZLE DEPENDENT VARIABLE CP

X/LNM	.2000	.4000
PHI		
135.000	-.1876	
180.000	.2664	.0249
225.000	-.0150	

ALPHAO(3) = -.390 BETAO (4) = 4.090

SECTION (1)OMS NOZZLE DEPENDENT VARIABLE CP

X/LNM	.2000	.4000
PHI		
135.000	-.2165	
180.000	.1344	-.1650
225.000	-.2089	

ALPHAO(3) = -.390 BETAO (5) = 9.140

SECTION (1)OMS NOZZLE DEPENDENT VARIABLE CP

X/LNM	.2000	.4000
PHI		
135.000	-.2377	
180.000	-.1271	-.2405
225.000	-.2549	

ALPHAO(4) = 4.080 BETAO (1) = -8.080

SECTION (1)OMS NOZZLE DEPENDENT VARIABLE CP

X/LNM	.2000	.4000
PHI		
135.000	-.1147	
180.000	.3304	.3695
225.000	-.0552	

ORIGINAL PAGE IS OF POOR QUALITY

ARC11-716 IA14 O1+T12+S12N25+AT11 OMS NOZZLE (RB1E40)

ALPHAO(4) = 4.080 BETAO (2) = -4.020

SECTION (1)OMS NOZZLE DEPENDENT VARIABLE CP

X/LNM	.2000	.4000
PHI		
135.000	-.1521	
180.000	.3908	.1780
225.000	.2045	

ALPHAO(4) = 4.010 BETAO (3) = .030

SECTION (1)OMS NOZZLE DEPENDENT VARIABLE CP

X/LNM	.2000	.4000
PHI		
135.000	-.1921	
180.000	.2117	-.0832
225.000	-.1206	

ALPHAO(4) = 4.040 BETAO (4) = 4.090

SECTION (1)OMS NOZZLE DEPENDENT VARIABLE CP

X/LNM	.2000	.4000
PHI		
135.000	-.2129	
180.000	.0669	-.1894
225.000	-.2151	

ALPHAO(4) = 4.060 BETAO (5) = 8.160

SECTION (1)OMS NOZZLE DEPENDENT VARIABLE CP

X/LNM	.2000	.4000
PHI		
135.000	-.2422	
180.000	-.1182	-.2424
225.000	-.2550	

ARC11-716 IA14 Q1*T12+S12N25+AT11 OMS NOZZLE (RB1E40)

ALPHAO(5) = 8.000 BETAO (1) = -8.080

SECTION (1)OMS NOZZLE DEPENDENT VARIABLE CP

X/LNM	.2000	.4000
PHI		
135.000	-.1700	
180.000	-.0160	-.1169
225.000	-.0268	

ALPHAO(5) = 7.980 BETAO (2) = -4.010

SECTION (1)OMS NOZZLE DEPENDENT VARIABLE CP

X/LNM	.2000	.4000
PHI		
135.000	-.2138	
180.000	.1752	.1340
225.000	-.0140	

ALPHAO(5) = 7.910 BETAO (3) = .030

SECTION (1)OMS NOZZLE DEPENDENT VARIABLE CP

X/LNM	.2000	.4000
PHI		
135.000	-.1744	
180.000	.0617	-.0979
225.000	-.1547	

ALPHAO(5) = 8.000 BETAO (4) = 8.210

SECTION (1)OMS NOZZLE DEPENDENT VARIABLE CP

X/LNM	.2000	.4000
PHI		
135.000	-.2701	
180.000	-.1451	-.2626
225.000	-.2721	

ARC11-71G IA14 O1+T12+S12N25 OMS NOZZLE (RB1E41) (15 FEB 74)

REFERENCE DATA

SREF = 2.4210 SQ.FT. XMRP = 29.5800 INCHES
LREF = 38.7090 INCHES YMRP = .0000 INCHES
BREF = 38.7090 INCHES ZMRP = .0000 INCHES
SCALE = .0300 SCALE

PARAMETRIC DATA

MACH = .600 ELEVON = .000
RUDDER = .000 SPOBRK = .000

ALPHAO(1) = -7.940 BETAO (1) = .020

SECTION (1)OMS NOZZLE DEPENDENT VARIABLE CP

X/LNM	.2000	.4000
PHI		
135.000	-.1052	
180.000	.3174	.2820
225.000	.0153	

ALPHAO(1) = -7.950 BETAO (2) = 4.080

SECTION (1)OMS NOZZLE DEPENDENT VARIABLE CP

X/LNM	.2000	.4000
PHI		
135.000	-.1048	
180.000	.3031	.1334
225.000	-.1378	

ALPHAO(1) = -7.970 BETAO (3) = 8.150

SECTION (1)OMS NOZZLE DEPENDENT VARIABLE CP

X/LNM	.2000	.4000
PHI		
135.000	-.1408	
180.000	.2695	.0229
225.000	-.2537	

ALPHAO(2) = -4.050 BETAO (1) = -8.030

SECTION (1)OMS NOZZLE DEPENDENT VARIABLE CP

X/LNM	.2000	.4000
PHI		
135.000	-.2095	
180.000	.2533	.3915
225.000	.3939	

ARC11-716 IA14 01+T12+S12N25 OMS NOZZLE (RB1E41)

ALPHAO(2) = -4.050 BETAO (2) = -4.020

SECTION (1)OMS NOZZLE DEPENDENT VARIABLE CP

X/LNM	.2000	.4000
PHI		
135.000	-.1557	
180.000	.2967	.3377
225.000	.2323	

ALPHAO(2) = -4.050 BETAO (3) = .030

SECTION (1)OMS NOZZLE DEPENDENT VARIABLE CP

X/LNM	.2000	.4000
PHI		
135.000	-.1160	
180.000	.2893	.2214
225.000	.0007	

ALPHAO(2) = -3.950 BETAO (4) = 4.070

SECTION (1)OMS NOZZLE DEPENDENT VARIABLE CP

X/LNM	.2000	.4000
PHI		
135.000	-.1232	
180.000	.2528	.0807
225.000	-.1509	

ALPHAO(2) = 950 BETAO (5) = 8.110

SECTION (1 NOZZLE DEPENDENT VARIABLE CP

X/LNM	.2000	.4000
PHI		
135.000	-.1563	
180.000	.2198	-.0100
225.000	-.2257	

ARC11-715 IA14 01+T12+S12N25 OMS NOZZLE (RB1E41)

ALPHAO(3) = -.310 BETAO (1) = -8.040

SECTION (1)OMS NOZZLE DEPENDENT VARIABLE CP

X/LNM	.2000	.4000
PHI		
135.000	-.1969	
180.000	.2442	.3288
225.000	.2852	

ALPHAO(3) = -.320 BETAO (2) = -4.020

SECTION (1)OMS NOZZLE DEPENDENT VARIABLE CP

X/LNM	.2000	.4000
PHI		
135.000	-.1445	
180.000	.2730	.2683
225.000	.1433	

ALPHAO(3) = -.320 BETAO (3) = .040

SECTION (1)OMS NOZZLE DEPENDENT VARIABLE CP

X/LNM	.2000	.4000
PHI		
135.000	-.1138	
180.000	.2445	.1795
225.000	-.0255	

ALPHAO(3) = -.330 BETAO (4) = 4.080

SECTION (1)OMS NOZZLE DEPENDENT VARIABLE CP

X/LNM	.2000	.4000
PHI		
135.000	-.1333	
180.000	.2156	.0731
225.000	-.1430	

ARC11-716 IA14 O1+T12+S12N25 OMS NOZZLE (RB1E41)

ALPHAO(3) = -.330 BETAO (5) = 8.140

SE TION (1)OMS NOZZLE DEPENDENT VARIABLE CP

X/LNM	.2000	.4000
PHI		
135.000	-.1676	
180.000	.1834	-.0290
225.000	-.2154	

ALPHAO(4) = 4.130 BETAO (1) -8.050

SECTION (1)OMS NOZZLE DEPENDENT VARIABLE CP

X/LNM	.2000	.4000
PHI		
135.000	-.1641	
180.000	.2144	.2375
225.000	.1186	

ALPHAO(4) = 4.130 BETAO (2) = -4.010

SECTION (1)OMS NOZZLE DEPENDENT VARIABLE CP

X/LNM	.2000	.4000
PHI		
135.000	-.1284	
180.000	.2494	.2308
225.000	.0862	

ALPHAO(4) = 4.130 BETAO (3) = .060

SECTION (1)OMS NOZZLE DEPENDENT VARIABLE CP

X/LNM	.2000	.4000
PHI		
135.000	-.1297	
180.000	.1874	.1886
225.000	-.0141	

ALPHAO(4) = 4.120 BETAO (4) = 4.080

SECTION (1)OMS NOZZLE DEPENDENT VARIABLE CP

X/LNM	.2000	.4000
PHI		
135.000	-.1326	
180.000	.2363	.0834
225.000	-.1258	

ALPHAO(4) = 4.110 BETAO (5) = 8.150

SECTION (1)OMS NOZZLE DEPENDENT VARIABLE CP

X/LNM	.2000	.4000
PHI		
135.000	-.1630	
180.000	.1517	-.0337
225.000	-.1856	

ALPHAO(5) = 7.990 BETAO (1) = -8.000

SECTION (1)OMS NOZZLE DEPENDENT VARIABLE CP

X/LNM	.2000	.4000
PHI		
135.000	-.1315	
180.000	.1566	.1560
225.000	-.0345	

ALPHAO(5) = 8.000 BETAO (2) = -4.010

SECTION (1)OMS NOZZLE DEPENDENT VARIABLE CP

X/LNM	.2000	.4000
PHI		
135.000	-.1286	
180.000	.2121	.2090
225.000	-.0105	

ORIGINAL PAGE IS OF POOR QUALITY

ARC11-M16 TA14 O1+T12+S12N25 OMS NOZZLE (RB1E41)

ALPHAO(5) = 6.000 BETAO (3) = .010

SECTION (1)OMS NOZZLE DEPENDENT VARIABLE CP

X/LNM	.2000	.4000
PHI		
135.000	-.1369	
180.000	.0855	.1560
225.000	.0086	

ALPHAO(5) = 7.870 BETAO (4) = 8.160

SECTION (1)OMS NOZZLE DEPENDENT VARIABLE CP

X/LNM	.2000	.4000
PHI		
135.000	-.1585	
180.000	.1523	.0004
225.000	-.1677	

ORIGINAL PAGE IS
OF POOR QUALITY

ARC11-716 IA14 O1+T12+S1EN25 OMS NOZZLE (RB1E42) (16 FEB 74)

REFERENCE DATA

SREF = 2.4210 SQ.FT. XMRP = 29.5800 INCHES
LREF = 38.7090 INCHES YMRP = .0000 INCHES
BREF = 38.7090 INCHES ZMRP = .0000 INCHES
SCALE = .0300 SCALE

PARAMETRIC DATA

MACH = .750 ELEVON = .000
RUDDER = .000 SPDBRK = .000

ALPHAO(1) = -7.890 BETAO (1) = -8.000

SECTION (1)OMS NOZZLE DEPENDENT VARIABLE CP

X/LNM	.2000	.4000
PHI		
135.000	-.2168	
180.000	.3455	.3918
225.000	.4470	

ALPHAO(1) = -7.780 BETAO (2) = -3.990

SECTION (1)OMS NOZZLE DEPENDENT VARIABLE CP

X/LNM	.2000	.4000
PHI		
135.000	-.1556	
180.000	.3785	.2787
225.000	.1928	

ALPHAO(1) = -7.780 BETAO (3) = .040

SECTION (1)OMS NOZZLE DEPENDENT VARIABLE CP

X/LNM	.2000	.4000
PHI		
135.000	-.1226	
180.000	.3517	.1549
225.000	-.0429	

ALPHAO(1) = -7.790 BETAO (4) = 4.090

SECTION (1)OMS NOZZLE DEPENDENT VARIABLE CP

X/LNM	.2000	.4000
PHI		
135.000	-.1218	
180.000	.3158	.0338
225.000	-.1822	

ARC11-716 IA14 01+T12+S12N25 OMS NOZZLE (RB1E42)

ALPHAO(1) = -7.970 BETAO (5) = 8.160

SECTION (1)OMS NOZZLE DEPENDENT VARIABLE CP

X/LNH	.2000	.4000
PHI		
135.000	-.1550	
180.000	.2315	-.0514
225.000	-.2438	

ALPHAO(2) = -4.020 BETAO (1) = -8.080

SECTION (1)OMS NOZZLE DEPENDENT VARIABLE CP

X/LNH	.2000	.4000
PHI		
135.000	-.2071	
180.000	.3321	.3036
225.000	.3123	

ALPHAO(2) = -4.030 BETAO (2) = -4.030

SECTION (1)OMS NOZZLE DEPENDENT VARIABLE CP

X/LNH	.2000	.4000
PHI		
135.000	-.1640	
180.000	.3534	.2100
225.000	.1325	

ALPHAO(2) = -4.040 BETAO (3) = .040

SECTION (1)OMS NOZZLE DEPENDENT VARIABLE CP

X/LNH	.2000	.4000
PHI		
135.000	-.1338	
180.000	.2917	.1195
225.000	-.0626	

ARC11-716 IA14 O1+T12+S12+25 OMS NOZZLE (H81E42)

ALPHAO(2) = -4.040 BETAO (4) = 4.070

SECTION (1)OMS NOZZLE DEPENDENT VARIABLE CP

X/LNM	.2000	.4000
PHI		
135.000	-.1479	
180.000	.2644	.0100
225.000	-.1781	

ALPHAO(2) = -4.040 BETAO (5) = 8.130

SECTION (1)OMS NOZZLE DEPENDENT VARIABLE CP

X/LNM	.2000	.4000
PHI		
135.000	-.1600	
180.000	.1902	-.0577
225.000	-.2262	

ALPHAO(3) = -.320 BETAO (1) = -8.080

SECTION (1)OMS NOZZLE DEPENDENT VARIABLE CP

X/LNM	.2000	.4000
PHI		
135.000	-.1929	
180.000	.3063	.2484
225.000	.2132	

ALPHAO(3) = -.340 BETAO (2) = -4.010

SECTION (1)OMS NOZZLE DEPENDENT VARIABLE CP

X/LNM	.2000	.4000
PHI		
135.000	-.1908	
180.000	.3181	.1853
225.000	.0853	

ARC11-716 IA14 O1+T12+S12N25 OMS NOZZLE (RB1E42)

ALPHAO(3) = -.340 BETAO (3) = .050

SECTION (1)OMS NOZZLE DEPENDENT VARIABLE CP

X/LNM	.2000	.4000
PHI		
135.000	-.1308	
180.000	.2510	.1110
225.000	-.0661	

ALPHAO(3) = -.350 BETAO (4) = 4.090

SECTION (1)OMS NOZZLE DEPENDENT VARIABLE CP

X/LNM	.2000	.4000
PHI		
135.000	-.1498	
180.000	.2073	.0022
225.000	-.1799	

ALPHAO(3) = -.340 BETAO (5) = 8.160

SECTION (1)OMS NOZZLE DEPENDENT VARIABLE CP

X/LNM	.2000	.4000
PHI		
135.000	-.1718	
180.000	.1653	-.0708
225.000	-.2226	

ALPHAO(4) = 4.220 BETAO (1) = -8.060

SECTION (1)OMS NOZZLE DEPENDENT VARIABLE CP

X/LNM	.2000	.4000
PHI		
135.000	-.1627	
180.000	.2533	.1852
225.000	.0897	

ORIGINAL PAGE IS OF POOR QUALITY

DATE 10 DEC 74 TABULATED PRESSURE DATA - IA14A - VOL. 4

ARC11-716 IA14 O1+T12+S12N25 OMS NOZZLE (RB1E42)

ALPHAO(4) = 4.210 BETAO (2) = -4.030

SECTION (1)OMS NOZZLE DEPENDENT VARIABLE CP

X/LNM	.2000	.4000
PHI		
135.000	-.1333	
180.000	.2797	.1678
225.000	.0252	

ALPHAO(4) = 4.210 BETAO (3) = .030

SECTION (1)OMS NOZZLE DEPENDENT VARIABLE CP

X/LNM	.2000	.4000
PHI		
135.000	-.1411	
180.000	.1722	.1214
225.000	-.0447	

ALPHAO(4) = 4.200 BETAO (4) = 4.090

SECTION (1)OMS NOZZLE DEPENDENT VARIABLE CP

X/LNM	.2000	.4000
PHI		
135.000	-.1429	
180.000	.1686	.0255
225.000	-.1307	

ALPHAO(4) = 4.190 BETAO (5) = 8.160

SECTION (1)OMS NOZZLE DEPENDENT VARIABLE CP

X/LNM	.2000	.4000
PHI		
135.000	-.1685	
180.000	.1423	-.0572
225.000	-.1824	

ARC11-716 IA14 O1+T12+S12N25 OMS NOZZLE (RB1E42)

ALPHAO(5) = 8.070 BETAO (1) = -8.050

SECTION (1)OMS NOZZLE DEPENDENT VARIABLE CP

X/LNM	.2000	.4000
PHI		
135.000	-.1402	
180.000	.1842	.1486
225.000	-.0258	

ALPHAO(5) = 8.080 BETAO (2) = -3.990

SECTION (1)OMS NOZZLE DEPENDENT VARIABLE CP

X/LNM	.2000	.4000
PHI		
135.000	-.1391	
180.000	.2305	.1953
225.000	-.0078	

ALPHAO(5) = 7.970 BETAO (3) = .050

SECTION (1)OMS NOZZLE DEPENDENT VARIABLE CP

X/LNM	.2000	.4000
PHI		
135.000	-.1452	
180.000	.0886	.1052
225.000	-.0287	

ALPHAO(5) = 7.960 BETAO (4) = 4.130

SECTION (1)OMS NOZZLE DEPENDENT VARIABLE CP

X/LNM	.2000	.4000
PHI		
135.000	-.1420	
180.000	.2017	.0369
225.000	-.1007	

ORIGINAL PAGE IS
OF POOR QUALITY

ARC11-716 IA14 O1+T12+S12N25 OMS NOZZLE (RB1E42)

ALPHAO(5) = 7.940 BETAO (5) = 8.220

SECTION (1)OMS NOZZLE DEPENDENT VARIABLE CP

X/LNM	.2000	.4000
PHI		
135.000	-.1672	
180.000	.1233	-.0404
225.000	-.1511	

ARC11-716 IA14 O1+T12+S12N25 OMS NOZZLE (RB1E43) (15 FEB 74)

REFERENCE DATA

SREF = 2.4210 SQ.FT. XMRP = 29.5800 INCHES
LREF = 38.7090 INCHES YMRP = .0000 INCHES
BREF = 38.7090 INCHES ZMRP = .0000 INCHES
SCALE = .0300 SCALE

PARAMETRIC DATA

MACH = .850 ELEVON = .000
RUDDER = .000 SPDBRK = .000

ALPHAO(1) = -7.890 BETAO (1) = -8.020

SECTION (1)OMS NOZZLE DEPENDENT VARIABLE CP

X/LNM	.2000	.4000
PHI		
135.000	-.2077	
180.000	.4249	.2289
225.000	.3186	

ALPHAO(1) = -7.780 BETAO (2) = -4.000

SECTION (1)OMS NOZZLE DEPENDENT VARIABLE CP

X/LNM	.2000	.4000
PHI		
135.000	-.1707	
180.000	.4391	.1029
225.000	.0437	

ALPHAO(1) = -7.780 BETAO (3) = .040

SECTION (1)OMS NOZZLE DEPENDENT VARIABLE CP

X/LNM	.2000	.4000
PHI		
135.000	-.1530	
180.000	.3586	.0311
225.000	-.1456	

ALPHAO(1) = -7.850 BETAO (4) = 4.110

SECTION (1)OMS NOZZLE DEPENDENT VARIABLE CP

X/LNM	.2000	.4000
PHI		
135.000	-.1661	
180.000	.2881	-.0686
225.000	-.2439	

ALPHAO(1) = -7.890 BETAO (5) = 8.170

SECTION (1)OMS NOZZLE DEPENDENT VARIABLE CP

X/LNM	.2000	.4000
PHI		
135.000	-.1789	
180.000	.2114	-.0849
225.000	-.2760	

ALPHAO(2) = -3.880 BETAO (1) = -8.060

SECTION (1)OMS NOZZLE DEPENDENT VARIABLE CP

X/LNM	.2000	.4000
PHI		
135.000	-.2194	
180.000	.3963	.1718
225.000	.2090	

ALPHAO(2) = -3.890 BETAO (2) = -4.020

SECTION (1)OMS NOZZLE DEPENDENT VARIABLE CP

X/LNM	.2000	.4000
PHI		
135.000	-.1752	
180.000	.3962	.0868
225.000	.0192	

ALPHAO(2) = -3.640 BETAO (3) = .030

SECTION (1)OMS NOZZLE DEPENDENT VARIABLE CP

X/LNM	.2000	.4000
PHI		
135.000	-.1484	
180.000	.2826	.0227
225.000	-.1316	

ARC11-716 IA14 01+T12+S12N25 OMS NOZZLE (RB1E43)

ALPHAO(2) = -3.880 BETAO (4) = 4.090

SECTION (1)OMS NOZZLE DEPENDENT VARIABLE CP

X/LNM	.2000	.4000
PHI		
135.000	-.1785	
180.000	.2285	-.0607
225.000	-.2249	

ALPHAO(2) = -3.900 BETAO (5) = 8.150

SECTION (1)OMS NOZZLE DEPENDENT VARIABLE CP

X/LNM	.2000	.4000
PHI		
135.000	-.1987	
180.000	.1766	-.0835
225.000	-.2538	

ALPHAO(3) = -.310 BETAO (1) = -8.080

SECTION (1)OMS NOZZLE DEPENDENT VARIABLE CP

X/LNM	.2000	.4000
PHI		
135.000	-.1939	
180.000	.3547	.1500
225.000	.1326	

ALPHAO(3) = -.330 BETAO (2) = -5.040

SECTION (1)OMS NOZZLE DEPENDENT VARIABLE CP

X/LNM	.2000	.4000
PHI		
135.000	-.1663	
180.000	.3528	.1011
225.000	.0325	

ARC11-716 IA14 O1+T12+S12N25 OMS NOZZLE (RB1E43)

ALPHAO(3) = -.340 BETAO (3) = .040

SECTION (1)OMS NOZZLE DEPENDENT VARIABLE CP

X/LNM	.2000	.4000
PHI		
135.000	-.1505	
180.000	.2081	.0465
225.000	-.1086	

ALPHAO(3) = -.350 BETAO (4) = 4.090

SECTION (1)OMS NOZZLE DEPENDENT VARIABLE CP

X/LNM	.2000	.4000
PHI		
135.000	-.1739	
180.000	.1695	-.0554
225.000	-.1996	

ALPHAO(3) = -.340 BETAO (5) = 8.150

SECTION (1)OMS NOZZLE DEPENDENT VARIABLE CP

X/LNM	.2000	.4000
PHI		
135.000	-.1968	
180.000	.1445	-.0788
225.000	-.2367	

ALPHAO(4) = 4.130 BETAO (1) = -8.090

SECTION (1)OMS NOZZLE DEPENDENT VARIABLE CP

X/LNM	.2000	.4000
PHI		
135.000	-.1637	
180.000	.2883	.1279
225.000	.0407	

ORIGINAL PAGE IS OF POOR QUALITY

ALPHAO(4) = 4.050 BETAO (2) = -4.020

SECTION (1)OMS NOZZLE DEPENDENT VARIABLE CP

X/LNM	.2000	.4000
PHI		
135.000	-.1358	
180.000	.2891	.1052
225.000	-.0373	

ALPHAO(4) = 4.050 BETAO (3) = .030

SECTION (1)OMS NOZZLE DEPENDENT VARIABLE CP

X/LNM	.2000	.4000
PHI		
135.000	-.1506	
180.000	.1332	.0585
225.000	-.0864	

ALPHAO(4) = 4.140 BETAO (4) = 4.140

SECTION (1)OMS NOZZLE DEPENDENT VARIABLE CP

X/LNM	.2000	.4000
PHI		
135.000	-.1649	
180.000	.1555	-.0214
225.000	-.1484	

ALPHAO(4) = 4.150 BETAO (5) = 8.190

SECTION (1)OMS NOZZLE DEPENDENT VARIABLE CP

X/LNM	.2000	.4000
PHI		
135.000	-.2082	
180.000	.0496	-.0739
225.000	-.1867	

ORIGINAL PAGE IS OF POOR QUALITY

ARC11-716 IA14 O1+T12+S12N25 OMS NOZZLE (RB1E43)

ALPHAO(5) = 8.040 BETAO (1) = -8.070

SECTION (1)OMS NOZZLE DEPENDENT VARIABLE CP

X/LNM	.2000	.4000
PHI		
135.000	-.1552	
180.000	.1873	.1158
225.000	-.0424	

ALPHAO(5) = 8.010 BETAO (2) = -4.020

SECTION (1)OMS NOZZLE DEPENDENT VARIABLE CP

X/LNM	.2000	.4000
PHI		
135.000	-.1767	
180.000	.1748	.1756
225.000	-.0239	

ALPHAO(5) = 8.010 BETAO (3) = .030

SECTION (1)OMS NOZZLE DEPENDENT VARIABLE CP

X/LNM	.2000	.4000
PHI		
135.000	-.1627	
180.000	.0744	.0631
225.000	-.0611	

ALPHAO(5) = 8.000 BETAO (4) = 4.130

SECTION (1)OMS NOZZLE DEPENDENT VARIABLE CP

X/LNM	.2000	.4000
PHI		
135.000	-.1594	
180.000	.1458	.0087
225.000	-.1071	

ARC11-718 IA14 O1+T12+S12N25 OMS NOZZLE (RB1E43)

ALPHAO(5) = 8.090 BETAO (5) = 8.250

SECTION (1)OMS NOZZLE DEPENDENT VARIABLE CP

X/LNM	.2000	.4000
PHI		
135.000	-.1978	
180.000	.0244	-.0783
225.000	-.1424	

ARC11-716 IA14 O1+T12+S12N25 OMS NOZZLE (RB1E44) (15 FEB 74)

REFERENCE DATA

SREF = 2.4210 SQ.FT. XMRP = 29.5800 INCHES
LREF = 38.7090 INCHES YMRP = .0000 INCHES
BREF = 38.7090 INCHES ZMRP = .0000 INCHES
SCALE = .0300 SCALE

PARAMETRIC DATA

MACH = .900 ELEVON = .000
RUDDER = .000 SPDBRK = .000

ALPHAO(1) = -7.970 BETAO (1) = -8.050

SECTION (1)OMS NOZZLE DEPENDENT VARIABLE CP

X/LNM	.2000	.4000
PHI		
135.000	-.2254	
180.000	.4768	.0928
225.000	.1881	

ALPHAO(1) = -7.960 BETAO (2) = -4.000

SECTION (1)OMS NOZZLE DEPENDENT VARIABLE CP

X/LNM	.2000	.4000
PHI		
135.000	-.1805	
180.000	.4334	.0501
225.000	-.0413	

ALPHAO(1) = -7.960 BETAO (3) = .050

SECTION (1)OMS NOZZLE DEPENDENT VARIABLE CP

X/LNM	.2000	.4000
PHI		
135.000	-.1778	
180.000	.3984	-.0492
225.000	-.2077	

ALPHAO(1) = -7.970 BETAO (4) = 4.100

SECTION (1)OMS NOZZLE DEPENDENT VARIABLE CP

X/LNM	.2000	.4000
PHI		
135.000	-.1833	
180.000	.2548	-.1346
225.000	-.2856	

ARC11-716 IA14 01+T12+S12N25 OMS NOZZLE (RB1E44)

ALPHAO(1) = -8.000 BETAO (5) = 8.170

SECTION (1)OMS NOZZLE DEPENDENT VARIABLE CP

X/LNM	.2000	.4000
PHI		
135.000	-.2432	
180.000	-.0546	-.2282
225.000	-.3065	

ALPHAO(2) = -4.070 BETAO (1) = -8.080

SECTION (1)OMS NOZZLE DEPENDENT VARIABLE CP

X/LNM	.2000	.4000
PHI		
135.000	-.2173	
180.000	.4203	.0584
225.000	.0983	

ALPHAO(2) = -3.970 BETAO (2) = -4.030

SECTION (1)OMS NOZZLE DEPENDENT VARIABLE CP

X/LNM	.2000	.4000
PHI		
135.000	-.1829	
180.000	.3771	.0131
225.000	-.0641	

ALPHAO(2) = -3.880 BETAO (3) = .030

SECTION (1)OMS NOZZLE DEPENDENT VARIABLE CP

X/LNM	.2000	.4000
PHI		
135.000	-.1738	
180.000	.3552	-.0353
225.000	-.1835	

ARC11-716 IA14 O1+T12+S12N25 OMS NOZZLE (RB1E44)

ALPHAO(2) = -3.920 BETAO (4) = 4.080

SECTION (1)OMS NOZZLE DEPENDENT VARIABLE CP

X/LNM	.2000	.4000
PHI		
135.000	-.1726	
180.000	.2557	-.0684
225.000	-.2133	

ALPHAO(2) = -3.930 BETAO (5) = 8.150

SECTION (1)OMS NOZZLE DEPENDENT VARIABLE CP

X/LNM	.2000	.4000
PHI		
135.000	-.2348	
180.000	-.0711	-.2209
225.000	-.2925	

ALPHAO(3) = .080 BETAO (1) = -8.080

SECTION (1)OMS NOZZLE DEPENDENT VARIABLE CP

X/LNM	.2000	.4000
PHI		
135.000	-.2088	
180.000	.3635	.0501
225.000	.0542	

ALPHAO(3) = -.320 BETAO (2) = -4.030

SECTION (1)OMS NOZZLE DEPENDENT VARIABLE CP

X/LNM	.2000	.4000
PHI		
135.000	-.1891	
180.000	.3443	.0291
225.000	-.0577	

ORIGINAL PAGE IS OF POOR QUALITY

ARC11-716 IA14 01+T12+S12N25 OMS NOZZLE (RB1E44)

ALPHAO(3) = -.320 BETAO (3) = .050

SECTION (1)OMS NOZZLE DEPENDENT VARIABLE CP

X/LNM	.2000	.4000
PHI		
135.000	-.1608	
180.000	.2703	.0117
225.000	-.1340	

ALPHAO(3) = -.330 BETAO (4) = 4.100

SECTION (1)OMS NOZZLE DEPENDENT VARIABLE CP

X/LNM	.2000	.4000
PHI		
135.000	-.1638	
180.000	.2191	-.0299
225.000	-.1988	

ALPHAO(3) = -.330 BETAO (5) = 8.150

SECTION (1)OMS NOZZLE DEPENDENT VARIABLE CP

X/LNM	.2000	.4000
PHI		
135.000	-.2509	
180.000	-.0976	-.2329
225.000	-.2905	

ALPHAO(4) = 4.200 BETAO (1) = -8.100

SECTION (1)OMS NOZZLE DEPENDENT VARIABEE CP

X/LNM	.2000	.4000
PHI		
135.000	-.1818	
180.000	.2990	.0589
225.000	-.0046	

ORIGINAL PAGE IS
OF POOR QUALITY

ARC11-716 IA14 O1+T12+S12N25 OMS NOZZLE (RB1E44)

ALPHAO(4) = 4.190 BETAO (2) = -4.020

SECTION (1)OMS NOZZLE DEPENDENT VARIABLE CP

X/LNM	.2000	.4000
PHI		
135.000	-.1528	
180.000	.2804	.0704
225.000	-.0707	

ALPHAO(4) = 4.060 BETAO (3) = .040

SECTION (1)OMS NOZZLE DEPENDENT VARIABLE CP

X/LNM	.2000	.4000
PHI		
135.000	-.1494	
180.000	.1760	.0267
225.000	-.1025	

ALPHAO(4) = 4.100 BETAO (4) = 4.110

SECTION (1)OMS NOZZLE DEPENDENT VARIABLE CP

X/LNM	.2000	.4000
PHI		
135.000	-.1806	
180.000	.1494	-.0036
225.000	-.1347	

ALPHAO(4) = 4.100 BETAO (5) = 8.190

SECTION (1)OMS NOZZLE DEPENDENT VARIABLE CP

X/LNM	.2000	.4000
PHI		
135.000	-.2390	
180.000	-.0629	-.1746
225.000	-.2153	

ARC11-716 TA14 O1+T12+S12N25 OMS NOZZLE (RB1E44)

ALPHAO(5) = 8.040 BETAO (1) = -8.080

SECTION (1)OMS NOZZLE DEPENDENT VARIABLE CP

X/LNM	.2000	.4000
PHI		
135.000	-.1786	
180.000	.1921	.1756
225.000	-.0235	

ALPHAO(5) = 7.980 BETAO (2) = -4.020

SECTION (1)OMS NOZZLE DEPENDENT VARIABLE CP

X/LNM	.2000	.4000
PHI		
135.000	-.2001	
180.000	.1349	.1438
225.000	-.0248	

ALPHAO(5) = 7.970 BETAO (3) = .020

SECTION (1)OMS NOZZLE DEPENDENT VARIABLE CP

X/LNM	.2000	.4000
PHI		
135.000	-.1744	
180.000	.0731	.0356
225.000	-.0803	

ALPHAO(5) = 8.020 BETAO (4) = 4.130

SECTION (1)OMS NOZZLE DEPENDENT VARIABLE CP

X/LNM	.2000	.4000
PHI		
135.000	-.1958	
180.000	.1149	-.0227
225.000	-.1382	

ORIGINAL PAGE IS
OF POOR QUALITY

ARC11-716 IA14 O1+T12+S12N25 OMS NOZZLE (RB1E44)

ALPHAO(5) = 8.080 BETAO (5) = 8.230

SECTION (1)OMS NOZZLE DEPENDENT VARIABLE CP

X/LNM	.2000	.4000
PHI		
135.000	-.2359	
180.000	.0178	-.0571
225.000	-.1231	

ARC11-716 IA14 O1+T12+S12N25 OMS NOZZLE (RB1E45) (20 FEB 74)

REFERENCE DATA

SREF = 2.4210 SQ.FT. XMRP = 29.5800 INCHES
LREF = 38.7090 INCHES YMRP = .0000 INCHES
BREF = 38.7090 INCHES ZMRP = .0000 INCHES
SCALE = .0300 SCALE

PARAMETRIC DATA

MACH = .950 ELEVON = .000
RUDDER = .000 SPOERK = .000

ALPHAO(1) = -7.870 BETAO (1) = -8.040

SECTION (1)OMS NOZZLE DEPENDENT VARIABLE CP

X/LNM	.2000	.4000
PHI		
135.000	-.2643	
180.000	.4813	.0261
225.000	.1775	

ALPHAO(1) = -7.770 BETAO (2) = -4.010

SECTION (1)OMS NOZZLE DEPENDENT VARIABLE CP

X/LNM	.2000	.4000
PHI		
135.000	-.2369	
180.000	.4544	-.0484
225.000	-.0725	

ALPHAO(1) = -7.760 BETAO (3) = .040

SECTION (1)OMS NOZZLE DEPENDENT VARIABLE CP

X/LNM	.2000	.4000
PHI		
135.000	-.2067	
180.000	.3824	-.1073
225.000	-.2290	

ALPHAO(1) = -7.900 BETAO (4) = 4.110

SECTION (1)OMS NOZZLE DEPENDENT VARIABLE CP

X/LNM	.2000	.4000
PHI		
135.000	-.2215	
180.000	.2331	-.1903
225.000	-.3667	

ALPHAO(1) = -7.930 BETAO (5) = 8.180

SECTION (1)OMS NOZZLE DEPENDENT VARIABLE CP

X/LNM	.2000	.4000
PHI		
135.000	-.2535	
180.000	-.0946	-.3065
225.000	-.3604	

ALPHAO(2) = -4.020 BETAO (1) = -8.080

SECTION (1)OMS NOZZLE DEPENDENT VARIABLE CP

X/LNM	.2000	.4000
PHI		
135.000	-.2711	
180.000	.4103	-.0172
225.000	.0537	

ALPHAO(2) = -3.960 BETAO (2) = -4.030

SECTION (1)OMS NOZZLE DEPENDENT VARIABLE CP

X/LNM	.2000	.4000
PHI		
135.000	-.2254	
180.000	.3615	-.0708
225.000	-.1349	

ALPHAO(2) = -3.870 BETAO (3) = .010

SECTION (1)OMS NOZZLE DEPENDENT VARIABLE CP

X/LNM	.2000	.4000
PHI		
135.000	-.2022	
180.000	.2038	-.1729
225.000	-.2916	

ARC11-716 IA14 O1+T12+S12N25 OMS NOZZLE (RB1E45)

ALPHAO(2) = -3.940 BETAO (4) = 4.090

SECTION (1)OMS NOZZLE DEPENDENT VARIABLE CP

X/LNM	.2000	.4000
PHI		
135.000	-.2282	
180.000	.1175	-.2044
225.000	-.3599	

ALPHAO(2) = -3.950 BETAO (5) = 8.170

SECTION (1)OMS NOZZLE DEPENDENT VARIABLE CP

X/LNM	.2000	.4000
PHI		
135.000	-.2657	
180.000	-.0807	-.2771
225.000	-.3398	

ALPHAO(3) = -.300 BETAO (1) = -8.100

SECTION (1)OMS NOZZLE DEPENDENT VARIABLE CP

X/LNM	.2000	.4000
PHI		
135.000	-.2562	
180.000	.3426	-.0306
225.000	.0101	

ALPHAO(3) = -.320 BETAO (2) = -4.030

SECTION (1)OMS NOZZLE DEPENDENT VARIABLE CP

X/LNM	.2000	.4000
PHI		
135.000	-.2031	
180.000	.3145	-.0500
225.000	-.1289	

ARC11-716 IA14 01+T12+S12N25 OMS NOZZLE (RB1E45)

ALPHAO(3) = -.330 BETAO (3) = .040

SECTION (1)OMS NOZZLE DEPENDENT VARIABLE CP

X/LNM	.2000	.4000
PHI		
135.000	-.2106	
180.000	.1021	-.1623
225.000	-.2980	

ALPHAO(3) = -.330 BETAO (4) = 4.090

SECTION (1)OMS NOZZLE DEPENDENT VARIABLE CP

X/LNM	.2000	.4000
PHI		
135.000	-.2218	
180.000	.0553	-.2064
225.000	-.3586	

ALPHAO(3) = -.330 BETAO (5) = 8.160

SECTION (1)OMS NOZZLE DEPENDENT VARIABLE CP

X/LNM	.2000	.4000
PHI		
135.000	-.2704	
180.000	-.0714	-.2587
225.000	-.3520	

ALPHAO(4) = 4.170 BETAO (1) = -8.100

SECTION (1)OMS NOZZLE DEPENDENT VARIABLE CP

X/LNM	.2000	.4000
PHI		
135.000	-.2151	
180.000	.2581	-.0285
225.000	-.0551	

ARC11-716 IA14 01+T12+S12N25 OMS NOZZLE (RB1E45)

ALPHAO(4) = 4.230 BETAO (2) = -4.030

SECTION (1)OMS NOZZLE DEPENDENT VARIABLE CP

X/LNM	.2000	.4000
PHI		
135.000	-.1910	
180.000	.2869	.0439
225.000	-.0722	

ALPHAO(4) = 4.150 BETAO (3) = .010

SECTION (1)OMS NOZZLE DEPENDENT VARIABLE CP

X/LNM	.2000	.4000
PHI		
135.000	-.2164	
180.000	.0261	-.1417
225.000	-.2791	

ALPHAO(4) = 4.140 BETAO (4) = 4.110

SECTION (1)OMS NOZZLE DEPENDENT VARIABLE CP

X/LNM	.2000	.4000
PHI		
135.000	-.1957	
180.000	-.0375	-.2052
225.000	-.3230	

ALPHAO(5) = 8.150 BETAO (1) = -8.090

SECTION (1)OMS NOZZLE DEPENDENT VARIABLE CP

X/LNM	.2000	.4000
PHI		
135.000	-.1789	
180.000	.1607	.1048
225.000	-.1015	

ARC11-716 IA14 O1+T12+S12N25 OMS NOZZLE (RB1E45)

ALPHAO(5) = 8.150 BETAO (2) = -4.030

SECTION (1)OMS NOZZLE DEPENDENT VARIABLE CP

X/LNM	.2000	.4000
PHI		
135.000	-.2422	
180.000	.0763	.0965
225.000	-.0637	

ALPHAO(5) = 8.140 BETAO (3) = .040

SECTION (1)OMS NOZZLE DEPENDENT VARIABLE CP

X/LNM	.2000	.4000
PHI		
135.000	-.2168	
180.000	-.0135	-.1309
225.000	-.1763	

ALPHAO(5) = 8.140 BETAO (4) = 4.150

SECTION (1)OMS NOZZLE DEPENDENT VARIABLE CP

X/LNM	.2000	.4000
PHI		
135.000	-.2237	
180.000	-.1080	-.2124
225.000	-.3064	

ALPHAO(5) = 8.120 BETAO (5) = 8.270

SECTION (1)OMS NOZZLE DEPENDENT VARIABLE CP

X/LNM	.2000	.4000
PHI		
135.000	-.2917	
180.000	-.1023	-.2159
225.000	-.3233	

ARC11-718 IA14 O1+T12+S12N25 OMS NOZZLE (RB1E46) (15 FEB 74)

REFERENCE DATA

SREF = 2.4210 SQ.FT. XMRP = 29.5800 INCHES
LREF = 38.7090 INCHES YMRP = .0000 INCHES
BREF = 35.7090 INCHES ZMRP = .0000 INCHES
SCALE = .0300 SCALE

PARAMETRIC DATA

MACH = .975 ELEVON = .000
RUDDER = .000 SPOBRK = .000

ALPHAO(1) = -7.970 BETAO (1) = -8.050

SECTION (1)OMS NOZZLE DEPENDENT VARIABLE CP

X/LNM	.2000	.4000
PHI		
135.000	-.3089	
180.000	.4761	.0854
225.000	.4587	

ALPHAO(1) = -7.960 BETAO (2) = -4.020

SECTION (1)OMS NOZZLE DEPENDENT VARIABLE CP

X/LNM	.2000	.4000
PHI		
135.000	-.2606	
180.000	.4607	-.0327
225.000	.0546	

ALPHAO(1) = -7.890 BETAO (3) = .030

SECTION (1)OMS NOZZLE DEPENDENT VARIABLE CP

X/LNM	.2000	.4000
PHI		
135.000	-.2405	
180.000	.3512	-.1606
225.000	-.2537	

ALPHAO(1) = -7.950 BETAO (4) = 4.100

SECTION (1)OMS NOZZLE DEPENDENT VARIABLE CP

X/LNM	.2000	.4000
PHI		
135.000	-.2331	
180.000	.2713	-.2080
225.000	-.3888	

ARC11-716 IA14 O1+T12+S12N25 OMS NOZZLE (RB:E46)

ALPHAO(1) = -7.980 BETAO (5) = 8.190

SECTION (1)OMS NOZZLE DEPENDENT VARIABLE CP

X/LNH	.2000	.4000
PHI		
135.000	-.3050	
180.000	-.0987	-.3296
225.000	-.4039	

ALPHAO(2) = -3.920 BETAO (1) = -8.060

SECTION (1)OMS NOZZLE DEPENDENT VARIABLE CP

X/LNH	.2000	.4000
PHI		
135.000	-.2976	
180.000	.4206	.0286
225.000	.2344	

ALPHAO(2) = -3.920 BETAO (2) = -4.010

SECTION (1)OMS NOZZLE DEPENDENT VARIABLE CP

X/LNH	.2000	.4000
PHI		
135.000	-.2780	
180.000	.3782	-.0673
225.000	-.0295	

ALPHAO(2) = -3.850 BETAO (3) = .020

SECTION (1)OMS NOZZLE DEPENDENT VARIABLE CP

X/LNH	.2000	.4000
PHI		
135.000	-.2322	
180.000	.2077	-.1858
225.000	-.3074	

ARC11-718 IA14 O1+T12+S12N25 OMS NOZZLE (RB1E46)

ALPHAO(2) = -3.970 BETAO (4) = 4.100

SECTION (1)OMS NOZZLE DEPENDENT VARIABLE CP

X/LNM	.2000	.4000
PHI		
135.000	-.2556	
180.000	.1661	-.2204
225.000	-.3868	

ALPHAO(2) = -3.990 BETAO (5) = 8.160

SECTION (1)OMS NOZZLE DEPENDENT VARIABLE CP

X/LNM	.2000	.4000
PHI		
135.000	-.3061	
180.000	-.3536	-.2989
225.000	-.3884	

ALPHAO(3) = -.300 BETAO (1) = -8.100

SECTION (1)OMS NOZZLE DEPENDENT VARIABLE CP

X/LNM	.2000	.4000
PHI		
135.000	-.2884	
180.000	.3538	-.0048
225.000	.1036	

ALPHAO(3) = -.320 BETAO (2) = -4.030

SECTION (1)OMS NOZZLE DEPENDENT VARIABLE CP

X/LNM	.2000	.4000
PHI		
135.000	-.2290	
180.000	.3359	-.0820
225.000	-.0793	

ARC11-716 IA14 01+T12+S12N25 OMS NOZZLE (RB1E46)

ALPHAO(3) = -.330 BETAO (3) = .040

SECTION (1)OMS NOZZLE DEPENDENT VARIABLE CP

X/LNM	.2000	.4000
PHI		
135.000	.2161	
180.000	.1309	-.1727
225.000	-.3174	

ALPHAO(3) = -.330 BETAO (4) = 4.080

SECTION (1)OMS NOZZLE DEPENDENT VARIABLE CP

X/LNM	.2000	.4000
PHI		
135.000	-.2678	
180.000	.0765	-.2305
225.000	-.3820	

ALPHAO(3) = -.330 BETAO (5) = 8.160

SECTION (1)OMS NOZZLE DEPENDENT VARIABLE CP

X/LNM	.2000	.4000
PHI		
135.000	-.3151	
180.000	-.0447	-.2686
225.000	-.3901	

ALPHAO(4) = 4.100 BETAO (1) = -8.100

SECTION (1)OMS NOZZLE DEPENDENT VARIABLE CP

X/LNM	.2000	.4000
PHI		
135.000	-.2651	
180.000	.2885	.0021
225.000	.0618	

ARC11-716 IA14 O1+[illegible]+S12N25 OMS NOZZLE (RB1E46)

ALPHAO(4) = 4.090 BETAO (2) = -4.040

SECTION (1)OMS NOZZLE DEPENDENT VARIABLE CP

X/LNM	.2000	.4000
PHI		
135.000	-.2133	
180.000	.2345	-.0877
225.000	-.0728	

ALPHAO(4) = 4.090 BETAO (3) = .030

SECTION (1)OMS NOZZLE DEPENDENT VARIABLE CP

X/LNM	.2000	.4000
PHI		
135.000	-.2621	
180.000	.0111	-.1724
225.000	-.3248	

ALPHAO(4) = 4.070 BETAO (4) = 4.120

SECTION (1)OMS NOZZLE DEPENDENT VARIABLE CP

X/LNM	.2000	.4000
PHI		
135.000	-.2764	
180.000	.0221	-.2312
225.000	-.3732	

ALPHAO(4) = 4.060 BETAO (5) = 8.200

SECTION (1)OMS NOZZLE DEPENDENT VARIABLE CP

X/LNM	.2000	.4000
PHI		
135.000	-.3288	
180.000	-.0702	-.2568
225.000	-.3738	

ORIGINAL PAGE IS
OF POOR QUALITY

ARC11-716 IA14 O1+T12+S12N25 OMS NOZZLE (RB1E46)

ALPHAO(5) = 8.040 BETAO (1) = -8.080

SECTION (1)OMS NOZZLE DEPENDENT VARIABLE CP

X/LNM	.2000	.4000
PHI		
135.000	-.1798	
180.000	.1427	.0924
225.000	-.0691	

ALPHAO(5) = 7.920 BETAO (2) = -4.020

SECTION (1)OMS NOZZLE DEPENDENT VARIABLE CP

X/LNM	.2000	.4000
PHI		
135.000	-.2720	
180.000	.1102	.1368
225.000	-.0434	

ALPHAO(5) = 7.910 BETAO (3) = .080

SECTION (1)OMS NOZZLE DEPENDENT VARIABLE CP

X/LNM	.2000	.4000
PHI		
135.000	-.2616	
180.000	-.0567	-.1882
225.000	-.2842	

ALPHAO(5) = 8.040 BETAO (4) = 4.150

SECTION (1)OMS NOZZLE DEPENDENT VARIABLE CP

X/LNM	.2000	.4000
PHI		
135.000	-.2242	
180.000	-.0703	-.2425
225.000	-.3602	

DATE 10 DEC 74 TABULATED PRESSURE DATA - IA14A - VOL. 4

ARC11-716 IA14 O1+T12+S12N25 OMS NOZZLE (R81E46)

ALPHAO(5) = 8.030 BETAO (5) = 8.220

SECTION (1)OMS NOZZLE DEPENDENT VARIABLE CP

X/LNM	.2000	.4000
PHI		
135.000	-.3145	
180.000	-.1066	-.2510
225.000	-.3608	

ARC11-716 IA14 01+T12+S12N25 OMS NOZZLE (RB1E47) (15 FEB 74)

REFERENCE DATA

SREF = 2.4210 SQ.F . XMRP = 29.5800 INCHES
LREF = 38.7090 INCHES YMRP = .0000 INCHES
BREF = 38.7090 INCHES ZMRP = .0000 INCHES
SCALE = .0300 SCALE

PARAMETRIC DATA

MACH = 1.050 ELEVON = .000
RUDDER = .000 SPOBRK = .000

ALPHAO(1) = -7.960 BETAO (1) = -8.070

SECTION (1)OMS NOZZLE DEPENDENT VARIABLE CP

X/LNM	.2000	.4000
PHI		
135.000	-.3033	
180.000	.4981	.3348
225.000	.8740	

ALPHAO(1) = -7.960 BETAO (2) = -4.010

SECTION (1)OMS NOZZLE DEPENDENT VARIABLE CP

X/LNM	.2000	.4000
PHI		
135.000	-.2777	
180.000	.4917	.0563
225.000	.3236	

ALPHAO(1) = -7.960 BETAO (3) = .030

SECTION (1)OMS NOZZLE DEPENDENT VARIABLE CP

X/LNM	.2000	.4000
PHI		
135.000	-.2687	
180.000	.4019	-.1015
225.000	-.1684	

ALPHAO(1) = -7.960 BETAO (4) = 4.120

SECTION (1)OMS NOZZLE DEPENDENT VARIABLE CP

X/LNM	.2000	.4000
PHI		
135.000	-.2446	
180.000	.3460	-.1634
225.000	-.2953	

ORIGINAL PAGE IS OF POOR QUALITY

ARC11-716 IA14 O1+T12+S12N25 OMS NOZZLE (RB1E47)

ALPHAO(1) = -7.990 BETAO (5) = 8.210

SECTION (1)OMS NOZZLE DEPENDENT VARIABLE CP

X/LNM	.2000	.4000
PHI		
135.000	-.3028	
180.000	-.0380	-.3360
225.000	-.3899	

ALPHAO(2) = -3.820 BETAO (1) = -8.120

SECTION (1)OMS NOZZLE DEPENDENT VARIABLE CP

X/LNM	.2000	.4000
PHI		
135.000	-.3124	
180.000	.4704	.2516
225.000	.7609	

ALPHAO(2) = -3.830 BETAO (2) = -4.020

SECTION (1)OMS NOZZLE DEPENDENT VARIABLE CP

X/LNM	.2000	.4000
PHI		
135.000	-.2788	
180.000	.4354	-.0374
225.000	.2051	

ALPHAO(2) = -3.910 BETAO (3) = .030

SECTION (1)OMS NOZZLE DEPENDENT VARIABLE CP

X/LNM	.2000	.4000
PHI		
135.000	-.2416	
180.000	.3104	-.1233
225.000	-.2193	

ARC11-716 IA14 O1+T12+S12N25 OMS NOZZLE (RB1E47)

ALPHAO(2) = -3.910 BETAO (4) = 4.100

SECTION (1)OMS NOZZLE DEPENDENT VARIABLE CP

X/LNM	.2000	.4000
PHI		
135.000	-.2274	
180.000	.2440	-.1792
225.000	-.3242	

ALPHAO(2) = -3.920 BETAO (5) = 8.180

SECTION (1)OMS NOZZLE DEPENDENT VARIABLE CP

X/LNM	.2000	.4000
PHI		
135.000	-.3135	
180.000	.0217	-.2994
225.000	-.3678	

ALPHAO(3) = .020 BETAO (1) = -8.130

SECTION (1)OMS NOZZLE DEPENDENT VARIABLE CP

X/LNM	.2000	.4000
PHI		
135.000	-.2914	
180.000	.4229	.1715
225.000	.5658	

ALPHAO(3) = .000 BETAO (2) = -4.080

SECTION (1)OMS NOZZLE DEPENDENT VARIABLE CP

X/LNM	.2000	.4000
PHI		
135.000	-.2716	
180.000	.3070	-.1123
225.000	-.0220	

ORIGINAL PAGE IS OF POOR QUALITY

ALPHAO(3) = -.330 BETAO (3) = .040

SECTION (1)OMS NOZZLE DEPENDENT VARIABLE CP

X/LNM	.2000	.4000
PHI		
135.000	-.2235	
180.000	.2087	-.1392
225.000	-.2503	

ALPHAO(3) = .080 BETAO (4) = 4.100

SECTION (1)OMS NOZZLE DEPENDENT VARIABLE CP

X/LNM	.2000	.4000
PHI		
135.000	-.2409	
180.000	.1656	-.1968
225.000	-.3394	

ALPHAO(3) = .070 BETAO (5) = 8.180

SECTION (1)OMS NOZZLE DEPENDENT VARIABLE CP

X/LNM	.2000	.4000
PHI		
135.000	-.3135	
180.000	.0469	-.2388
225.000	-.3908	

ALPHAO(4) = 4.120 BETAO (1) = -8.110

SECTION (1)OMS NOZZLE DEPENDENT VARIABLE CP

X/LNM	.2000	.4000
PHI		
135.000	-.2202	
180.000	.3609	.1819
225.000	.4991	

ALPHAO(4) = 4.100 BETAO (2) = -4.030

SECTION (1)OMS NOZZLE DEPENDENT VARIABLE CP

X/LNM	.2000	.4000
PHI		
135.000	-.2363	
180.000	.1875	-.1522
225.000	-.2419	

ALPHAO(4) = 4.100 BETAO (3) = .040

SECTION (1)OMS NOZZLE DEPENDENT VARIABLE CP

X/LNM	.2000	.4000
PHI		
135.000	-.2240	
180.000	.1112	-.1557
225.000	-.2937	

ALPHAO(4) = 4.090 BETAO (4) = 4.130

SECTION (1)OMS NOZZLE DEPENDENT VARIABLE CP

X/LNM	.2000	.4000
PHI		
135.000	-.2570	
180.000	.1188	-.2214
225.000	-.3561	

ALPHAO(4) = 4.080 BETAO (5) = 6.230

SECTION (1)OMS NOZZLE DEPENDENT VARIABLE CP

X/LNM	.2000	.4000
PHI		
135.000	-.3123	
180.000	.0051	-.2402
225.000	-.3810	

ALPHAO(5) = 8.050 BETAO (1) = -8.090

SECTION (1)OMS NOZZLE DEPENDENT VARIABLE CP

X/LNM	.2000	.4000
PHI		
135.000	-.2459	
180.000	.2518	.2038
225.000	.2736	

ALPHAO(5) = 8.050 BETAO (2) = -4.040

SECTION (1)OMS NOZZLE DEPENDENT VARIABLE CP

X/LNM	.2000	.4000
PHI		
135.000	-.2666	
180.000	.1456	-.0688
225.000	-.1778	

ALPHAO(5) = 8.050 BETAO (3) = .020

SECTION (1)OMS NOZZLE DEPENDENT VARIABLE CP

X/LNM	.2000	.4000
PHI		
135.000	-.2659	
180.000	.0048	-.1835
225.000	-.3132	

ALPHAO(5) = 8.020 BETAO (4) = 4.170

SECTION (1)OMS NOZZLE DEPENDENT VARIABLE CP

X/LNM	.2000	.4000
PHI		
135.000	-.2742	
180.000	.0315	-.2266
225.000	-.3730	

ARC11-716 IA14 O1+T12+S12N25 OMS NOZZLE (RB1E47)

ALPHAO(5) = 8.020 BETAO (5) = 8.260

SECTION (1)OMS NOZZLE DEPENDENT VARIABLE CP

X/LNH	.2000	.4000
PHI		
135.000	-.3146	
180.000	.0245	-.2394
225.000	-.3978	

ARC11-716 IA14 01+T12+S12N25 OMS NOZZLE (RB1E48) (15 FEB 74)

REFERENCE DATA

SREF = 2.4210 SQ.FT. XMRP = 29.5800 INCHES
LREF = 38.7090 INCHES YMRP = .0000 INCHES
BREF = 38.7090 INCHES ZMRP = .0000 INCHES
SCALE = .0300 SCALE

PARAMETRIC DATA

MACH = 1.100 ELEVON = .000
RUDDER = .000 SPOERK = .000

ALPHAO(1) = -7.930 BETAO (1) = -8.080

SECTION (1)OMS NOZZLE DEPENDENT VARIABLE CP

X/LNM	.2000	.4000
PHI		
135.000	-.2903	
180.000	.4861	.5264
225.000	.9203	

ALPHAO(1) = -7.950 BETAO (2) = -4.020

SECTION (1)OMS NOZZLE DEPENDENT VARIABLE CP

X/LNM	.2000	.4000
PHI		
135.000	-.2741	
180.000	.4921	.1893
225.000	.4889	

ALPHAO(1) = -7.920 BETAO (3) = .040

SECTION (1)OMS NOZZLE DEPENDENT VARIABLE CP

X/LNM	.2000	.4000
PHI		
135.000	-.2682	
180.000	.4549	.0070
225.000	.0040	

ALPHAO(1) = -7.930 BETAO (4) = 4.090

SECTION (1)OMS NOZZLE DEPENDENT VARIABLE CP

X/LNM	.2000	.4000
PHI		
135.000	-.2900	
180.000	.3699	-.1294
225.000	-.2112	

ORIGINAL PAGE IS OF POOR QUALITY

ARC11-716 IA14 O1+T12+S12N25 OMS NOZZLE (RB1E48)

ALPHAO(1) = -7.950 BETAO (5) = 8.230

SECTION (1)OMS NOZZLE DEPENDENT VARIABLE CP

X/LNM	.2000	.4000
PHI		
135.000	-.3081	
180.000	-.0943	-.3514
225.000	-.3834	

ALPHAO(2) = -3.940 BETAO (1) = -8.110

SECTION (1)OMS NOZZLE DEPENDENT VARIABLE CP

X/LNM	.2000	.4000
PHI		
135.000	-.2884	
180.000	.4854	.3617
225.000	.8852	

ALPHAO(2) = -3.930 BETAO (2) = -4.020

SECTION (1)OMS NOZZLE DEPENDENT VARIABLE CP

X/LNM	.2000	.4000
PHI		
135.000	-.2899	
180.000	.4318	.0388
225.000	.1819	

ALPHAO(2) = -3.890 BETAO (3) = .050

SECTION (1)OMS NOZZLE DEPENDENT VARIABLE CP

X/LNM	.2000	.4000
PHI		
135.000	-.2541	
180.000	.3733	-.0766
225.000	-.1286	

ARC11-716 IA14 01+T12+S12N25 OMS NOZZLE (RB1E48)

ALPHA(0(2) = -3.890 BETA0 (4) = 4.130

SECTION (1)OMS NOZZLE DEPENDENT VARIABLE CP

X/LNH	.2000	.4000
PHI		
135.000	-.2549	
180.000	.2735	-.1750
225.000	-.2812	

ALPHA(0(2) = -3.890 BETA0 (5) = 8.190

SECTION (1)OMS NOZZLE DEPENDENT VARIABLE CP

X/LNH	.2000	.4000
PHI		
135.000	-.3042	
180.000	-.0899	-.3437
225.000	-.3753	

ALPHA(0(3) = -.310 BETA0 (1) = -8.140

SECTION (1)OMS NOZZLE DEPENDENT VARIABLE CP

X/LNH	.2000	.4000
PHI		
135.000	-.2779	
180.000	.4581	.1727
225.000	.7349	

ALPHA(0(3) = -.330 BETA0 (2) = -4.040

SECTION (1)OMS NOZZLE DEPENDENT VARIABLE CP

X/LNH	.2000	.4000
PHI		
135.000	-.2854	
180.000	.3619	-.0346
225.000	.0139	

ORIGINAL PAGE IS OF POOR QUALITY

ALPHAO(3) = -.340 BETAO (3) = .030

SECTION (1)OMS NOZZLE DEPENDENT VARIABLE CP

X/LNM	.2000	.4000
PHI		
135.000	-.2586	
180.000	.267[illegible]	-.1080
225.000	-.1650	

ALPHAO(3) = -.340 BETAO (4) = 4.110

SECTION (1)OMS NOZZLE DEPENDENT VARIABLE CP

X/LNM	.2000	.4000
PHI		
135.000	-.2507	
180.000	.1942	-.1951
225.000	-.3078	

ALPHAO(3) = -.340 BETAO (5) = 8.180

SECTION (1)OMS NOZZLE DEPENDENT VARIABLE CP

X/LNM	.2000	.4000
PHI		
135.000	-.3209	
180.000	-.0581	-.3136
225.000	-.3688	

ALPHAO(4) = [illegible] BETAO (1) = -8.250

SECTION (1)OMS NOZZLE DEPENDENT VARIABLE CP

X/LNM	.2000	.4000
PHI		
135.000	-.2425	
180.000	.3293	.0518
225.000	.3088	

ARC11-716 IA14 01+T12+S12N25 OMS NOZZLE (RB1E48) (15 FEB 74)

REFERENCE DATA

SREF = 2.4210 SQ.FT. XMRP = 29.5800 INCHES
LREF = 38.7090 INCHES YMRP = .0000 INCHES
BREF = 38.7090 INCHES ZMRP = .0000 INCHES
SCALE = .0300 SCALE

PARAMETRIC DATA

MACH = 1.100 ELEVON = .000
RUDDER = .000 SPOBRK = .000

ALPHAO(1) = -7.930 BETAO (1) = -8.080

SECTION (1)OMS NOZZLE DEPENDENT VARIABLE CP

X/LNM	.2000	.4000
PHI		
135.000	-.2903	
180.000	.4861	.5264
225.000	.9203	

ALPHAO(1) = -7.950 BETAO (2) = -4.020

SECTION (1)OMS NOZZLE DEPENDENT VARIABLE CP

X/LNM	.2000	.4000
PHI		
135.000	-.2741	
180.000	.4921	.1693
225.000	.4889	

ALPHAO(1) = -7.920 BETAO (3) = .040

SECTION (1)OMS NOZZLE DEPENDENT VARIABLE CP

X/LNM	.2000	.4000
PHI		
135.000	-.2682	
180.000	.4549	.0070
225.000	.0040	

ALPHAO(1) = -7.930 BETAO (4) = 4.000

SECTION (1)OMS NOZZLE DEPENDENT VARIABLE CP

X/LNM	.2000	.4000
PHI		
135.000	-.2900	
180.000	.3699	-.1294
225.000	-.2112	

ORIGINAL PAGE IS OF POOR QUALITY

ARC11-716 IA14 O1+T12+S12N25 OMS NOZZLE (RB1E48)

ALPHAO(1) = -7.950 BETAO (5) = 8.230

SECTION (1)OMS NOZZLE DEPENDENT VARIABLE CP

X/LNM	.2000	.4000
PHI		
135.000	-.3081	
180.000	-.0943	-.3514
225.000	-.3834	

ALPHAO(2) = -3.940 BETAO (1) = -8.110

SECTION (1)OMS NOZZLE DEPENDENT VARIABLE CP

X/LNM	.2000	.4000
PHI		
135.000	-.2884	
180.000	.4854	.361[illegible]
225.000	.8852	

ALPHAO(2) = -3.530 BETAO (2) = -4.020

SECTION (1)OMS NOZZLE DEPENDENT VARIABLE CP

X/LNM	.2000	.4000
PHI		
135.000	-.2899	
180.000	.4318	.0388
225.000	[illegible]19	

ALPHAO(2) = .890 BETAO (3) = .050

SECTION (1)OMS NOZZLE DEPENDENT VARIABLE CP

X/LNM	.2000	.4000
PHI		
135.000	-.2541	
180.000	.3733	-.0766
225.000	-.1288	

ARC11-716 IA14 O1+T12+S12N25 OMS NOZZLE (RB1E49) (15 FEB 74)

REFERENCE DATA

SREF = 2.4210 SQ.FT. XMRP = 29.5800 INCHES
LREF = 38.7090 INCHES YMRP = .0000 INCHES
BREF = 38.7090 INCHES ZMRP = .0000 INCHES
SCALE = .0300 SCALE

PARAMETRIC DATA

MACH = 1.150 ELEVON = .000
RUDDER = .000 SPOBRK = .000

ALPHAO(1) = -7.860 BETAO (1) = -8.060

SECTION (1)OMS NOZZLE DEPENDENT VARIABLE CP

X/LNM	.2000	.4000
PHI		
135.000	-.2602	
180.000	.4883	.6952
225.000	.9206	

ALPHAO(1) = -7.860 BETAO (2) = -4.000

SECTION (1)OMS NOZZLE DEPENDENT VARIABLE CP

X/LNM	.2000	.4000
PHI		
135.000	-.2143	
180.000	.5181	.3627
225.000	.6600	

ALPHAO(1) = -7.860 BETAO (3) = .040

SECTION (1)OMS NOZZLE DEPENDENT VARIABLE CP

X/LNM	.2000	.4000
PHI		
135.000	-.2302	
180.000	.4855	.1199
225.000	.1795	

ALPHAO(1) = -7.870 BETAO (4) = 4.100

SECTION (1)OMS NOZZLE DEPENDENT VARIABLE CP

X/LNM	.2000	.4000
PHI		
135.000	-.2634	
180.000	.4130	-.0499
225.000	-.1326	

ORIGINAL PAGE IS OF POOR QUALITY

ARC11-716 IA14 O1+T12+S12N25 OMS NOZZLE (RB1E49)

ALPHAO(1) = -7.890 BETAO (5) = 8.200

SECTION (1)OMS NOZZLE DEPENDENT VARIABLE CP

X/LNM	.2000	.4000
PHI		
135.000	-.2977	
180.000	-.0622	-.3338
225.000	-.3611	

ALPHAO(2) = -3.930 BETAO (1) = -8.100

SECTION (1)OMS NOZZLE DEPENDENT VARIABLE CP

X/LNM	.2000	.4000
PHI		
135.000	-.2470	
180.000	.5081	.4202
225.000	.8985	

ALPHAO(2) = -3.880 BETAO (2) = -4.120

SECTION (1)OMS NOZZLE DEPENDENT VARIABLE CP

X/LNM	.2000	.4000
PHI		
135.000	-.2459	
180.000	.4880	.1733
225.000	.4787	

ALPHAO(2) = -3.890 BETAO (3) = .030

SECTION (1)OMS NOZZLE DEPENDENT VARIABLE CP

X/LNM	.2000	.4000
PHI		
135.000	-.2222	
180.000	.4295	.0032
225.000	-.0071	

ARC11-716 IA14 01+T12+S12N25 OMS NOZZLE (RB1E49)

ALPHAO(2) = -3.890 BETAO (4) = 4.080

SECTION (1)OMS NOZZLE DEPENDENT VARIABLE CP

X/LNM	.2000	.4000
PHI		
135.000	-.2386	
180.000	.3444	-.1007
225.000	-.1687	

ALPHAO(2) = -3.890 BETAO (5) = 8.180

SECTION (1)OMS NOZZLE DEPENDENT VARIABLE CP

X/LNM	.2000	.4000
PHI		
135.000	-.2790	
180.000	-.1099	-.3195
225.000	-.3472	

ALPHAO(3) = -.310 BETAO (1) = -8.100

SECTION (1)OMS NOZZLE DEPENDENT VARIABLE CP

X/LNM	.2000	.4000
PHI		
135.000	-.2332	
180.000	.4391	.2508
225.000	.5795	

ALPHAO(3) = -.330 BETAO (2) = -4.030

SECTION (1)OMS NOZZLE DEPENDENT VARIABLE CP

X/LNM	.2000	.4000
PHI		
135.000	-.2566	
180.000	.4311	.0923
225.000	.2419	

ALPHAO(3) = -.340 BETAO (3) = .030

SECTION (1)OMS NOZZLE DEPENDENT VARIABLE CP

X/LNM	.2000	.4000
PHI		
135.000	-.2071	
180.000	.2951	-.0368
225.000	-.0888	

ALPHAO(3) = -.340 BETAO (4) = 4.100

SECTION (1)OMS NOZZLE DEPENDENT VARIABLE CP

X/LNM	.2000	.4000
PHI		
135.000	-.2347	
180.000	.2601	-.1438
225.000	-.2303	

ALPHAO(3) = -.340 BETAO (5) = 8.170

SECTION (1)OMS NOZZLE DEPENDENT VARIABLE CP

X/LNM	.2000	.4000
PHI		
135.000	-.2827	
180.000	-.1088	-.3072
225.000	-.3420	

ALPHAO(4) = 4.130 BETAO (1) = -8.080

SECTION (1)OMS NOZZLE DEPENDENT VARIABLE CP

X/LNM	.2000	.4000
PHI		
135.000	-.1885	
180.000	.3351	.1057
225.000	.1625	

ARC11-716 IA14 01+T12+S12N25 OMS NOZZLE (RB1E49)

ALPHAO(4) = 4.010 BETAO (2) = -4.010

SECTION (1)OMS NOZZLE DEPENDENT VARIABLE CP

X/LNM	.2000	.4000
PHI		
135.000	-.2409	
180.000	.3080	-.0415
225.000	-.0442	

ALPHAO(4) = 4.000 BETAO (3) = .040

SECTION (1)OMS NOZZLE DEPENDENT VARIABLE CP

X/LNM	.2000	.4000
PHI		
135.000	-.1946	
180.000	.2046	-.1104
225.000	-.2019	

ALPHAO(4) = 4.030 BETAO (4) = 4.110

SECTION (1)OMS NOZZLE DEPENDENT VARIABLE CP

X/LNM	.2000	.4000
PHI		
135.000	-.2233	
180.000	.1624	-.1972
225.000	-.2959	

ALPHAO(4) = 4.030 BETAO (5) = 8.210

SECTION (1)OMS NOZZLE DEPENDENT VARIABLE CP

X/LNM	.2000	.4000
PHI		
135.000	-.2862	
180.000	-.0352	-.2628
225.000	-.3350	

ORIGINAL PAGE IS OF POOR QUALITY

ALPHAO(5) = 8.040 BETAO (1) = -8.090

SECTION (1)OMS NOZZLE DEPENDENT VARIABLE CP

X/LNM	.2000	.4000
PHI		
135.000	-.2958	
180.000	.2843	.1160
225.000	-.1130	

ALPHAO(5) = 7.970 BETAO (2) = -4.030

SECTION (1)OMS NOZZLE DEPENDENT VARIABLE CP

X/LNM	.2000	.4000
PHI		
135.000	-.2287	
180.000	.1972	-.0316
225.000	-.1401	

ALPHAO(5) = 8.080 BETAO (3) = .040

SECTION (1)OMS NOZZLE DEPENDENT VARIABLE CP

X/LNM	.2000	.4000
PHI		
135.000	-.1855	
180.000	.1113	-.1624
225.000	-.2358	

ALPHAO(5) = 8.080 BETAO (4) = 4.140

SECTION (1)OMS NOZZLE DEPENDENT VARIABLE CP

X/LNM	.2000	.4000
PHI		
135.000	-.2232	
180.000	.0726	-.2055
225.000	-.3280	

ARC11-716 1A14 01+T12+S12N25 OMS NOZZLE (FB1E49)

ALPHAO(5) = 8.050 BETAO (5) = 8.270

SECTION (1)OMS NOZZLE DEPENDENT VARIABLE CP

X/LNM	.2000	.4000
PHI		
135.000	-.2756	
180.000	.0313	-.2427
225.000	-.3580	

ORIGINAL PAGE IS OF POOR QUALITY

ARC11-716 IA14 O1+T12+S12N25 OMS NOZZLE (RB1E50) (15 FEB 74)

REFERENCE DATA

SREF = [illegible] SQ.FT. XMRP = 29.5800 INCHES
LREF = [illegible] INCHES YMRP = .0000 INCHES
BREF = [illegible] INCHES ZMRP = .0000 INCHES
SCALE = [illegible] SCALE

PARAMETRIC DATA

MACH = 1.250 ELEVON = .000
RUDDER = .000 SPDBRK = .000

ALPHAO(1) = [illegible] BETAO (1) = -8.020

SECTION [illegible] DEPENDENT VARIABLE CP

X/LNM [illegible] .4000

PHI		
135.000	-.1994	
180.000	[illegible]	[illegible]
225.000	[illegible]	

ALPHAO(1) = [illegible] BETAO (2) = -4.000

SECTION (1 OMS NOZZLE DEPENDENT VARIABLE CP

X/LNM [illegible] .4000

PHI		
135.000	-.1492	
180.000	[illegible]	.5447
225.000	[illegible]	

ALPHAO(1) = -8.000 BETAO (3) = .030

SECTION (1 OMS NOZZLE DEPENDENT VARIABLE CP

X/LNM .2000 .4000

PHI		
135.000	-.1989	
180.000	.4934	.1749
225.000	.2493	

ALPHAO(1) = -8.010 BETAO (4) = 4.100

SECTION (1 OMS NOZZLE DEPENDENT VARIABLE CP

X/LNM [illegible] .4000

PHI		
135.000	-.2801	
180.000	.2907	-.1794
225.000	-.1507	

ARC11-716 TA14 01+T12+S12N25 OMS NOZZLE (RB1E50)

ALPHAO(1) = -8.030 BETAO (5) = 8.160

SECTION (1)OMS NOZZLE DEPENDENT VARIABLE CP

X/LNM	.2000	.4000
PHI		
135.000	-.2676	
180.000	-.0168	-.2914
225.000	-.3321	

ALPHAO(2) = -3.930 BETAO (1) = -8.030

SECTION (1)OMS NOZZLE DEPENDENT VARIABLE CP

X/LNM	.2000	.4000
PHI		
135.000	-.1872	
180.000	.4874	.5600
225.000	.7828	

ALPHAO(2) = 3.930 BETAO (2) = -4.020

SECTION (1)OMS NOZZLE DEPENDENT VARIABLE CP

X/LNM	.2000	.4000
PHI		
135.000	-.2010	
180.000	.4810	.2499
225.000	.4455	

ALPHAO(2) = -3.940 BETAO (3) = .050

SECTION (1)OMS NOZZLE DEPENDENT VARIABLE CP

X/LNM	.2000	.4000
PHI		
135.000	-.2180	
180.000	.4097	.0104
225.000	.0247	

ALPHAO(2) = -3.940 BETAO (4) = 4.090

SECTION (1)OMS NOZZLE DEPENDENT VARIABLE CP

X/LNM	.2000	.4000
PHI		
135.000	-.2561	
180.000	.2096	-.1966
225.000	-.1803	

ALPHAO(2) = -3.950 BETAO (5) = 8.110

SECTION (1)OMS NOZZLE DEPENDENT VARIABLE CP

X/LNM	.2000	.4000
PHI		
135.000	-.2803	
180.000	-.0656	-.2994
225.000	-.3268	

ALPHAO(3) = -.340 BETAO (1) = -8.080

SECTION (1)OMS NOZZLE DEPENDENT VARIABLE CP

X/LNM	.2000	.4000
PHI		
135.000	-.1782	
180.000	.4538	.4328
225.000	.6021	

ALPHAO(3) = -.350 BETAO (2) = -4.020

SECTION (1)OMS NOZZLE DEPENDENT VARIABLE CP

X/LNM	.2000	.4000
PHI		
135.000	-.2194	
180.000	.4209	.1242
225.000	.2432	

ORIGINAL PAGE IS OF POOR QUALITY

ARC11-716 IA14 O1+T12+S12N25 OMS NOZZLE (R81E50)

ALPHAO(3) = -.360 BETAO (3) = .040

SECTION (1)OMS NOZZLE DEPENDENT VARIABLE CP

X/LNM	.2000	.4000
PHI		
135.000	-.1992	
180.000	.2497	-.0568
225.000	-.1037	

ALPHAO(3) = -.350 BETAO (4) = 4.080

SECTION (1)OMS NOZZLE DEPENDENT VARIABLE CP

X/LNM	.2000	.4000
PHI		
135.000	-.2305	
180.000	.1774	-.1577
225.000	-.2180	

ALPHAO(3) = -.360 BETAO (3) = 0.120

SECTION (1)OMS NOZZLE DEPENDENT VARIABLE CP

X/LNM	.2000	.4000
PHI		
135.000	-.2640	
180.000	-.1226	-.2931
225.000	-.3246	

ALPHAO(4) = 4.010 BETAO (1) = -9.080

SECTION (1)OMS NOZZLE DEPENDENT VARIABLE CP

X/LNM	.2000	.4000
PHI		
135.000	-.1589	
180.000	.3930	.2994
225.000	.3436	

ARC11-716 IA14 O1+T12+S12N25 OMS NOZZLE (RB1E50)

ALPHAO(4) = 4.010 BETAO (2) = -4.030

SECTION (1)OMS NOZZLE DEPENDENT VARIABLE CP

X/LNM	.2000	.4000
PHI		
135.000	-.1910	
180.000	.3154	.0082
225.000	.0103	

ALPHAO(4) = 4.050 BETAO (3) = .040

SECTION (1)OMS NOZZLE DEPENDENT VARIABLE CP

X/LNM	.2000	.4000
PHI		
135.000	-.2054	
180.000	.1634	-.1403
225.000	-.2037	

ALPHAO(4) = 4.050 BETAO (4) = 4.090

SECTION (1)OMS NOZZLE DEPENDENT VARIABLE CP

X/LNM	.2000	.4000
PHI		
135.000	-.2325	
180.000	.1235	-.1869
225.000	-.2682	

ALPHAO(4) = 4.080 BETAO (5) = 8.170

SECTION (1)OMS NOZZLE DEPENDENT VARIABLE CP

X/LNM	.2000	.4000
PHI		
135.000	.2671	
180.000	-.0959	-.2754
225.000	-.3144	

ARC11-718 IA14 O1+T12+S12N25 OMS NOZZLE (RB1E50)

ALPHAO(5) = 8.080 BETAO (1) = -8.030

SECTION (1)OMS NOZZLE DEPENDENT VARIABLE CP

X/LNM	.2000	.4000
PHI		
135.000	-.2387	
180.000	.1255	.1061
225.000	-.0424	

ALPHAO(5) = 8.000 BETAO (2) = -3.980

SECTION (1)OMS NOZZLE DEPENDENT VARIABLE CP

X/LNM	.2000	.4000
PHI		
135.000	-.2452	
180.000	.0696	.0412
225.000	-.1235	

ALPHAO(5) = 7.910 BETAO (3) = .040

SECTION (1)OMS NOZZLE DEPENDENT VARIABLE CP

X/LNM	.2000	.4000
PHI		
135.000	-.1609	
180.000	.0437	-.1619
225.000	-.2290	

ALPHAO(5) = 8.000 BETAO (4) = 4.130

SECTION (1)OMS NOZZLE DEPENDENT VARIABLE CP

X/LNM	.2000	.4000
PHI		
135.000	-.2218	
180.000	-.0167	-.2293
225.000	-.2690	

ARC11-716 IA14 O1+T12+S12N25 OMS NOZZLE (RB1E50)

ALPHAO(5) = 7.980 BETAO (5) = 8.220

SECTION (1)OMS NOZZLE DEPENDENT VARIABLE CP

X/LNM	.2000	.4000
PHI		
135.000	-.2772	
180.000	-.1582	-.2993
225.000	-.3129	

DATE 10 DEC 74 TABULATED PRESSURE DATA - IA14A - VOL. 4

ARC11-716 IA14 O1+T12+S12N25 OMS NOZZLE (RB1E51) (15 FEB 74)

PARAMETRIC DATA

MACH = 1.400 ELEVON = .000
RUDDER = .000 SPOBRK = .000

REFERENCE DATA

SREF = 2.4210 SQ.FT. XMRP = 29.5800 INCHES
LREF = 38.7090 INCHES YMRP = .0000 INCHES
BREF = 38.7090 INCHES ZMRP = .0000 INCHES
SCALE = .0300 SCALE

ALPHAO(1) = -7.890 BETAO (1) = -8.050

SECTION (1)OMS NOZZLE DEPENDENT VARIABLE CP

X/LNM	.2000	.4000
PHI		
135.000	-.1429	
180.000	.4619	.8044
225.000	.7480	

ALPHAO(1) = -7.880 BETAO (2) = -4.010

SECTION (1)OMS NOZZLE DEPENDENT VARIABLE CP

X/LNM	.2000	.4000
PHI		
135.000	-.0877	
180.000	.4539	.8323
225.000	.6791	

ALPHAO(1) = -7.870 BETAO (3) = .020

SECTION (1)OMS NOZZLE DEPENDENT VARIABLE CP

X/LNM	.2000	.4000
PHI		
135.000	-.1246	
180.000	.4593	.3410
225.000	.2866	

ALPHAO(1) = -7.970 BETAO (4) = 4.110

SECTION (1)OMS NOZZLE DEPENDENT VARIABLE CP

X/LNM	.2000	.4000
PHI		
135.000	-.2221	
180.000	.3307	.0044
225.000	-.1225	

ALPHAO(1) = -7.990 BETAO (5) = 8.180

SECTION (1)OMS NOZZLE DEPENDENT VARIABLE CP

X/LNH	.2000	.4000
PHI		
135.000	-.2750	
180.000	.0592	-.2558
225.000	-.3210	

ALPHAO(2) = -3.980 BETAO (1) = -8.080

SECTION (1)OMS NOZZLE DEPENDENT VARIABLE CP

X/LNH	.2000	.4000
PHI		
135.000	-.1307	
180.000	.4524	.8664
225.000	.7180	

ALPHAO(2) = -3.990 BETAO (2) = -4.030

SECTION (1)OMS NOZZLE DEPENDENT VARIABLE CP

X/LNH	.2000	.4000
PHI		
135.000	-.1080	
180.000	.4451	.5820
225.000	.6203	

ALPHAO(2) = -3.850 BETAO (3) = .040

SECTION (1)OMS NOZZLE DEPENDENT VARIABLE CP

X/LNH	.2000	.4000
PHI		
135.000	-.1880	
180.000	.4141	.1060
225.000	.1044	

ARC11-716 IA14 O1+T12+S12N25 OMS NOZZLE (RB1E51)

ALPHAO(2) = -3.970 BETAO (4) = 4.090

SECTION (1)OMS NOZZLE DEPENDENT VARIABLE CP

X/LNM	.2000	.4000
PHI		
135.000	-.2451	
180.000	.2506	-.1115
225.000	-.1726	

ALPHAO(2) = -4.000 BETAO (5) = 8.150

SECTION (1)OMS NOZZLE DEPENDENT VARIABLE CP

X/LNM	.2000	.4000
PHI		
135.000	-.2822	
180.000	-.0309	-.2804
225.000	-.3115	

ALPHAO(3) = -.370 BETAO (1) = -8.100

SECTION (1)OMS NOZZLE DEPENDENT VARIABLE CP

X/LNM	.2000	.4000
PHI		
135.000	-.1388	
180.000	.4394	.9178
225.000	.4851	

ALPHAO(3) = -.390 BETAO (2) = -4.010

SECTION (1)OMS NOZZLE DEPENDENT VARIABLE CP

X/LNM	.2000	.4000
PHI		
135.000	-.1455	
180.000	.4274	.3711
225.000	.4632	

ARC11-716 IA14 O1+T12+S12N25 OMS NOZZLE (RB1E51)

ALPHAO(3) = -.390 BETAO (3) = .030

SECTION (1)OMS NOZZLE DEPENDENT VARIABLE CP

X/LNM	.2000	.4000
PHI		
135.000	-.1909	
180.000	.2770	.0385
225.000	-.0026	

ALPHAO(3) = -.400 BETAO (4) = 4.090

SECTION (1)OMS NOZZLE DEPENDENT VARIABLE CP

X/LNM	.2000	.4000
PHI		
135.000	-.2465	
180.000	.1885	-.1416
225.000	-.1907	

ALPHAO(3) = -.400 BETAO (5) = 8.140

SECTION (1)OMS NOZZLE DEPENDENT VARIABLE CP

X/LNM	.2000	.4000
PHI		
135.000	-.2769	
180.000	-.0833	-.2820
225.000	-.3046	

ALPHAO(4) = 4.110 BETAO (1) = -8.070

SECTION (1)OMS NOZZLE DEPENDENT VARIABLE CP

X/LNM	.2000	.4000
PHI		
135.000	-.1170	
180.000	.3486	.4575
225.000	-.0468	

ORIGINAL PAGE IS OF POOR QUALITY

ARC11-716 IA14 O1+T12+S12N25 OMS NOZZLE (RB1E51)

ALPHAO(4) = 4.100 BETAO (2) = -3.980

SECTION (1)OMS NOZZLE DEPENDENT VARIABLE CP

X/LNM	.2000	.4000
PHI		
135.000	-.1559	
180.000	.4004	.2206
225.000	.2625	

ALPHAO(4) = 4.100 BETAO (3) = .060

SECTION (1)OMS NOZZLE DEPENDENT VARIABLE CP

X/LNM	.2000	.4000
PHI		
135.000	-.2024	
180.000	.2370	-.0543
225.000	-.0954	

ALPHAO(4) = 4.100 BETAO (4) = 4.130

SECTION (1)OMS NOZZ E DEPENDENT VARIABLE CP

X/LNM	.2000	.4000
PHI		
135.000	-.2555	
180.000	.1322	-.1898
225.000	-.2247	

ALPHAO(4) = 4.090 BETAO (5) = 8.180

SECTION (1)OMS NOZZLE DEPENDENT VARIABLE CP

X/LNM	.2000	.4000
PHI		
135.000	-.2798	
180.000	-.0970	-.2840
225.000	-.2975	

ORIGINAL PAGE IS OF POOR QUALITY

ARC11-716 IA14 O1+T12+S12N25 OMS NOZZLE (RB1E51)

ALPHAO(5) = 8.010 BETAO (1) = -8.050

SECTION (1)OMS NOZZLE DEPENDENT VARIABLE CP

X/LNM	.2000	.4000
PHI		
135.000	-.1450	
180.000	-.0063	-.1193
225.000	-.0580	

ALPHAO(5) = 8.010 BETAO (2) = -4.010

SECTION (1)OMS NOZZLE DEPENDENT VARIABLE CP

X/LNM	.2000	.4000
PHI		
135.000	-.2138	
180.000	.1697	.1590
225.000	.0252	

ALPHAO(5) = 8.020 BETAO (3) = .030

SECTION (1)OMS NOZZLE DEPENDENT VARIABLE CP

X/LNM	.2000	.4000
PHI		
135.000	-.1852	
180.000	.0614	-.0937
225.000	-.1496	

ALPHAO(5) = 8.010 BETAO (4) = 4.150

SECTION (1)OMS NOZZLE DEPENDENT VARIABLE CP

X/LNM	.2000	.4000
PHI		
135.000	-.2793	
180.000	.0535	-.2133
225.000	-.2329	

ARC11-716 IA14 O1+T12+S12N25 OMS NOZZLE (RB1E51)

ALPHAO(5) = 7.990 BETAO (5) = 8.280

SECTION (1)OMS NOZZLE DEPENDENT VARIABLE CP

X/LNH	.2000	.4000
PHI		
135.000	-.2910	
180.000	-.1109	-.2851
225.000	-.2880	

ARC11-716 IA14 O1+T12+S12N25+AT11 BODY FLAP (RB1F17) (03 OCT 73)

REFERENCE DATA

SREF = 2.4210 SQ.FT. XMRP = 29.5800 INCHES
LREF = 38.7090 INCHES YMRP = .0000 INCHES
BREF = 38.7090 INCHES ZMRP = .0000 INCHES
SCALE = .0300 SCALE

PARAMETRIC DATA

BETAO = .000 ELEVON = .000
RUDDER = .000 SPOERK = .000

MACH (1) = .898 ALPHAO(1) = -8.170

SECTION (1)BODY FLAP DEPENDENT VARIABLE CP

TAP NO 169.0000170.0000171.0000172.0000173.0000174.0000

.000 -.2339 -.2344 -.2186 -.2436 -.3368 -.3258

MACH (1) = .898 ALPHAO(2) = -4.140

SECTION (1)BODY FLAP DEPENDENT VARIABLE CP

TAP NO 169.0000170.0000171.0000172.0000173.0000174.0000

.000 -.2117 -.2132 -.2119 -.2251 -.3061 -.2981

MACH (1) = .898 ALPHAO(3) = -.220

SECTION (1)BODY FLAP DEPENDENT VARIABLE CP

TAP NO 169.0000170.0000171.0000172.0000173.0000174.0000

.000 -.2081 -.2111 -.1999 -.2191 -.2922 -.2757

MACH (1) = .898 ALPHAO(4) = 3.830

SECTION (1)BODY FLAP DEPENDENT VARIABLE CP

TAP NO 169.0000170.0000171.0000172.0000173.0000174.0000

.000 -.1998 -.2081 -.2021 -.2161 -.2876 -.2693

ORIGINAL PAGE IS OF POOR QUALITY

AFC11-716 IA14 01+T12+S12N25+AT11 BODY FLAP (RB1F17)

MACH (1) = .898 ALPHAO(5) = 8.030

SECTION (1)BODY FLAP DEPENDENT VARIABLE CP

TAP NO	169.0000	170.0000	171.0000	172.0000	173.0000	174.0000
.000	-.2029	-.2107	-.1968	-.2053	-.2621	-.2447

MACH (2) = .977 ALPHAO(1) = -7.920

SECTION (1)BODY FLAP DEPENDENT VARIABLE CP

TAP NO	169.0000	170.0000	171.0000	172.0000	173.0000	174.0000
.000	-.3119	-.2981	-.3030	-.3094	-.4002	-.4027

MACH (2) = .976 ALPHAO(2) = -3.880

SECTION (1)BODY FLAP DEPENDENT VARIABLE CP

TAP NO	169.0000	170.0000	171.0000	172.0000	173.0000	174.0000
.000	-.2856	-.2771	-.2812	-.2955	-.3767	-.3695

MACH (2) = .977 ALPHAO(3) = .090

SECTION (1)BODY FLAP DEPENDENT VARIABLE CP

TAP NO	169.0000	170.0000	171.0000	172.0000	173.0000	174.0000
.000	-.2684	-.2651	-.2579	-.2832	-.3662	-.3546

MACH (2) = .973 ALPHAO(4) = 4.020

SECTION (1)BODY FLAP DEPENDENT VARIABLE CP

TAP NO	169.0000	170.0000	171.0000	172.0000	173.0000	174.0000
.000	-.2491	-.2530	-.2486	-.2638	-.3335	-.3271

ORIGINAL PAGE IS OF POOR QUALITY

ARC11-T16 IA14 O1+T12+S12N25+AT11 BODY FLAP (RB1F17)

MACH (2) = .977 ALPHAO(5) = 8.030

SECTION (1)BODY FLAP DEPENDENT VARIABLE CP

TAP NO 169.0000170.0000171.0000172.0000173.0000174.0000

.000 - 2381 -.2473 -.2360 -.2578 -.3909 -.3141

MACH (3) = 1.102 ALPHAO(1) = -7.940

SECTION (1)BODY FLAP DEPENDENT VARIABLE CP

TAP NO 169.0000170.0000171.0000172.0000173.0000174.0000

.000 -.2903 -.2549 -.2951 -.2822 -.3949 -.3918

MACH (3) = 1.101 ALPHAO(2) = -3.890

SECTION (1)BODY FLAP DEPENDENT VARIABLE CP

TAP NO 169.0000170.0000171.0000172.0000173.0000174.0000

.000 -.2648 -.2341 -.2702 -.2604 -.3693 -.3700

MACH (3) = 1.103 ALPHAO(3) = .090

SECTION (1)BODY FLAP DEPENDENT VARIABLE CP

TAP NO 169.0000170.0000171.0000172.0000173.0000174.0000

.000 -.2358 -.2258 -.2446 -.2409 -.3486 -.3494

MACH (3) = 1.100 ALPHAO(4) = 4.080

SECTION (1)BODY FLAP DEPENDENT VARIABLE CP

TAP NO 169.0000170.0000171.0000172.0000173.0000174.0000

.000 -.2195 -.2161 -.2246 -.2312 -.3387 -.3398

ARC11-716 TA14 O1+T12+S12N25+AT11 BODY FLAP (RB1F17)

MACH (3) = 1.099 ALPHAO(5) = 8.020

SECTION (1)BODY FLAP DEPENDENT VARIABLE CP

TAP NO	169.0000	170.0000	171.0000	172.0000	173.0000	174.0000
.000	-.1980	-.1942	-.2011	-.2165	-.3441	-.3449

MACH (4) = 1.248 ALPHAO(1) = -7.940

SECTION (1)BODY FLAP DEPENDENT VARIABLE CP

TAP NO	169.0000	170.0000	171.0000	172.0000	173.0000	174.0000
.000	-.2427	-.2017	-.2515	-.2306	-.3363	-.3389

MACH (4) = 1.246 ALPHAO(2) = -3.840

SECTION (1)BODY FLAP DEPENDENT VARIABLE CP

TAP NO	169.0000	170.0000	171.0000	172.0000	173.0000	174.0000
.000	-.21[illegible]0	-.1780	-.2260	-.2107	-.3216	-.3184

MACH (4) = 1.244 ALPHAO(3) = .050

SECTION (1)BODY FLAP DEPENDENT VARIABLE CP

TAP NO	169.0000	170.0000	171.0000	172.0000	173.0000	174.0000
.000	-.1976	-.1885	-.2082	-.1949	-.3009	-.3027

MACH (4) = 1.249 ALPHAO(4 = 4.010

SECTION (1)BODY FLAP DEPENDENT VARIABLE CP

TAP NO	169.0000	170.0000	171.0000	172.0000	173.0000	174.0000
.000	-.1701	-.1535	-.1776	-.1694	-.2866	-.2890

ARC11-716 IA14 O1+T12+S12N25+AT11 BODY FLAP (RB1F17)

MACH (4) = 1.249 ALPHAO(5) = 7.930

SECTION (1)BODY FLAP DEPENDENT VARIABLE CP

TAP NO	169.0000	170.0000	171.0000	172.0000	173.0000	174.0000
.000	-.1529	-.1413	-.1542	-.1534	-.2787	-.2824

ORIGINAL PAGE IS
OF POOR QUALITY

ARC11-716 IA14 OI+T12+S12N25+AT11 BODY FLAP (RB1F18) (02 OCT 73)

REFERENCE DATA

SREF = 2.4210 SQ.FT. XMRP = 29.5800 INCHES
LREF = 38.7090 INCHES YMRP = .0000 INCHES
BREF = 38.7090 INCHES ZMRP = .0000 INCHES
SCALE = .0300 SCALE

PARAMETRIC DATA

ALPHAO = .000 ELEVON = .000
RUDDER = .000 SPDBRK = .000

MACH (1) = .898 BETAO (1) = -8.060

SECTION (1)BODY FLAP DEPENDENT VARIABLE CP

TAP NO 169.0000170.0000171.0000172.0000173.0000174.0000

.000 -.2049 -.2555 -.1869 -.2536 -.3262 -.3070

MACH (1) = .898 BETAO (2) = -4.010

SECTION (1)BODY FLAP DEPENDENT VARIABLE CP

TAP NO 169.0000170.0000171.0000172.0000173.0000174.0000

.000 -.2073 -.2284 -.1947 -.2341 -.2943 -.2848

MACH (1) = .897 BETAO (3) = .030

SECTION (1)BODY FLAP DEPENDENT VARIABLE CP

TAP NO 169.0000170.0000171.0000172.0000173.0000174.0000

.000 -.2134 -.2149 -.2069 -.2199 -.2963 -.2816

MACH (1) = .898 BETAO (4) = 4.100

SECTION (1)BODY FLAP DEPENDENT VARIABLE CP

TAP NO 169.0000170.0000171.0000172.0000173.0000174.0000

.000 -.2164 -.1997 -.1998 -.1869 -.3083 -.2804

ORIGINAL PAGE IS OF POOR QUALITY

ARC11-716 IA14 O1+T12+S12N25+AT11 BODY FLAP (RB1F18)

MACH (1) = .658 BETAO (5) = 8.130

SECTION (1)BODY FLAP DEPENDENT VARIABLE CP

TAP NO 169.0000170.0000171.0000172.0000173.0000174.0000

.000 -.2406 -.2175 -.2250 -.1992 -.3347 -.3122

MACH (2) = .978 BETAO (1) = -8.050

SECTION (1)BODY FLAP DEPENDENT VARIABLE CP

TAP NO 169.0000170.0000171.0000172.0000173.0000174.0000

.000 -.2412 -.3036 -.2206 -.3096 -.4026 -.3631

MACH (2) = .976 BETAO (2) = -4.010

SECTION (1)BODY FLAP DEPENDENT VARIABLE CP

TAP NO 169.0000170.0000171.0000172.0000173.0000174.0000

.000 -.2401 -.2874 -.2248 -.2928 -.3627 -.3613

MACH (2) = .975 BETAO (3) = .040

SECTION (1)BODY FLAP DEPENDENT VARIABLE CP

TAP NO 169.0000170.0000171.0000172.0000173.0000174.0000

.000 -.2582 -.2651 -.2634 -.2808 -.3637 -.3518

MACH (2) = .976 BETAO (4) = 4.070

SECTION (1)BODY FLAP DEPENDENT VARIABLE CP

TAP NO 169.0000170.0000171.0000172.0000173.0000174.0000

.000 -.2541 -.2414 -.2399 -.2443 -.3634 -.3435

ARC11-716 TA14 O1+T12+S12N25+AT11 BODY FLAP (RB1F18)

MACH (2) = .974 BETAO (5) = 8.120

SECTION (1)BODY FLAP DEPENDENT VARIABLE CP

TAP NO 169.0000170.0000171.0000172.0000173.0000174.0000

.000 -.2902 -.2722 -.2769 -.2672 -.3713 -.3563

MACH (3) = 1.102 BETAO (1) = -8.090

SECTION (1)BODY FLAP DEPENDENT VARIABLE CP

TAP NO 169.0000170.0000171.0000172.0000173.0000174.0000

.000 -.2644 -.2759 -.2684 -.2922 -.3908 -.3648

MACH (3) = 1.100 BETAO (2) = -4.010

SECTION (1)BODY FLAP DEPENDENT VARIABLE CP

TAP NO 169.0000170.0000171.0000172.0000173.0000174.0000

.000 -.2472 -.2592 -.2536 -.2784 -.3685 -.3589

MACH (3) = 1.102 BETAO (3) = .030

SECTION (1)BODY FLAP DEPENDENT VARIABLE CP

TAP NO 169.0000170.0000171.0000172.0000173.0000174.0000

.000 -.2416 -.2306 -.2484 -.2512 -.3519 -.3542

MACH (3) = 1.100 BETAO (4) = 4.090

SECTION (1)BODY FLAP DEPENDENT VARIABLE CP

TAP NO 169.0000170.0000171.0000172.0000173.0000174.0000

.000 -.2442 -.2124 -.2298 -.2280 -.3692 -.3537

ARC11-716 IA14 O1+T12+S12N25+AT11 BODY FLAP (RB1F18)

MACH (3) = 1.100 BETAO (3) = 8.130

SECTION (1)BODY FLAP DEPENDENT VARIABLE CP

TAP NO 169.0000170.0000171.0000172.0000173.0000174.0000

.000 -.2636 -.2525 -.2579 -.2581 -.3721 -.3487

MACH (4) = 1.252 BETAO (1) = -8.080

SECTION (1)BODY FLAP DEPENDENT VARIABLE CP

TAP NO 169.0000170.0000171.0000172.0000173.0000174.0000

.000 -.2075 -.1977 -.2082 -.1962 -.3259 -.3142

MACH (4) = 1.244 BETAO (2) = -4.030

SECTION (1)BODY FLAP DEPENDENT VARIABLE CP

TAP NO 169.0000170.0000171.0000172.0000173.0000174.0000

.000 -.1908 -.1911 -.2053 -.2005 -.3053 -.2946

MACH (4) = 1.249 BETAO (3) = .030

SECTION (1)BODY FLAP DEPENDENT VARIABLE CP

TAP NO 169.0000170.0000171.0000172.0000173.0000174.0000

.000 -.1983 -.1721 -.2096 -.1940 -.3012 -.3038

MACH (4) = 1.246 BETAO (4) = 4.090

SECTION (1)BODY FLAP DEPENDENT VARIABLE CP

TAP NO 169.0000170.0000171.0000172.0000173.0000174.0000

.000 -.1930 -.1752 -.1925 -.1796 -.2972 -.2913

ARC11-716 IA14 O1+T12+S12N25+AT11 BODY FLAP (RB1F18)

MACH (4) = 1.248 BETAO (5) = 8.150

SECTION (1)BODY FLAP DEPENDENT VARIABLE CP

TAP NO	169.0000	170.0000	171.0000	172.0000	173.0000	174.0000
.000	-.2310	-.2085	-.2074	-.2066	-.3275	-.2984

ARC11-716 IA14 O1+T12+S12N25+AT10 BODY FLAP (RB1F24) (28 SEP 73)

REFERENCE DATA

SREF = 2.4210 SQ.FT. XMRP = 29.5800 INCHES
LREF = 38.7090 INCHES YMRP = .0000 INCHES
BREF = 38.7090 INCHES ZMRP = .0000 INCHES
SCALE = .0300 SCALE

PARAMETRIC DATA

ALPHAO = -10.000 ELEVON = .000
RUDDER = .000 SPDBRK = .000

MACH (1) = .902 BETAO (1) = -9.890

SECTION (1)BODY FLAP DEPENDENT VARIABLE CP

TAP NO	169.0000	170.0000	171.0000	172.0000	173.0000	174.0000
.000	-.3583	-.3377	-.3449	-.3176	-.3278	-.3300

MACH (1) = .899 BETAO (2) = 10.090

SECTION (1)BODY FLAP DEPENDENT VARIABLE CP

TAP NO	169.0000	170.0000	171.0000	172.0000	173.0000	174.0000
.000	-.3313	-.3666	-.3045	-.3703	-.3223	-.3186

ORIGINAL PAGE IS OF POOR QUALITY

ARC11-716 IA14 O1+T12+S12N25+AT10 BODY FLAP (RB1F25) (28 SEP 73)

REFERENCE DATA

SREF = 2.4210 SQ.FT. XMRP = 29.5800 INCHES
LREF = 38.7090 INCHES YMRP = .0000 INCHES
BREF = 38.7090 INCHES ZMRP = .0000 INCHES
SCALE = .0300 SCALE

PARAMETRIC DATA

ALPHAO = -8.000 ELEVON = .000
RUDDER = .000 SPOBRK = .000

MACH (1) = .899 BETAO (1) = -9.930

SECTION (1)BODY FLAP DEPENDENT VARIABLE CP

TAP NO	169.0000	170.0000	171.0000	172.0000	173.0000	174.0000
.000	-.3450	-.3240	-.3342	-.3151	-.3129	-.3136

MACH (1) = .898 BETAO (2) = 10.090

SECTION (1)BODY FLAP DEPENDENT VARIABLE CP

TAP NO	169.0000	170.0000	171.0000	172.0000	173.0000	174.0000
.000	-.3119	-.3479	-.2941	-.3471	-.3226	-.3067

ORIGINAL PAGE IS OF POOR QUALITY

ARC11-716 1A14 O1+T12+S12N25+AT10 BODY FLAP (RB1F26) (28 SEP 73)

REFERENCE DATA

SREF = 2.4210 SQ.FT. XMRP = 29.5800 INCHES
LREF = 38.7090 INCHES YMRP = .0000 INCHES
BREF = 38.7090 INCHES ZMRP = .0000 INCHES
SCALE = .0300 SCALE

PARAMETRIC DATA

ALPHAO = -6.000 ELEVON = .000
RUDDER = .000 SPDBRK = .000

MACH (1) = .897 BETAO (1) = -9.940

SECTION (1)BODY FLAP DEPENDENT VARIABLE CP

TAP NO	169.0000	170.0000	171.0000	172.0000	173.0000	174.0000
.000	-.3296	-.3167	-.3165	-.2914	-.3060	-.3209

MACH (1) = .898 BETAO (2) = 10.070

SECTION (1)BODY FLAP DEPENDENT VARIABLE CP

TAP NO	169.0000	170.0000	171.0000	172.0000	173.0000	174.0000
.000	-.3123	-.3381	-.2855	-.3364	-.3150	-.2892

ARC11-716 IA14 O1+T12+S12N25+AT10 BODY FLAP (RB1F27) (28 SEP 73)

REFERENCE DATA

SREF =	2.4210 SQ.FT.	XMRP =	29.5800 INCHES
LREF =	38.7090 INCHES	YMRP =	.0000 INCHES
BREF =	38.7090 INCHES	ZMRP =	.0000 INCHES
SCALE =	.0300 SCALE		

PARAMETRIC DATA

ALPHAO =	-4.000	ELEVON =	.000
RUDDER =	.000	SPOBRK =	.000

MACH (1) = .899 BETAO (1) = -9.990

SECTION (1)BODY FLAP DEPENDENT VARIABLE CP

TAP NO	169.0000	170.0000	171.0000	172.0000	173.0000	174.0000
.000	-.3229	-.3105	-.3048	-.2917	-.3214	-.3204

ARC11-716 IA14 O1+T12+S12N25+AT10 BODY FLAP (RB1F28) (28 SEP 73)

REFERENCE DATA

SREF = 2.4210 SQ.FT. XMRP = 29.5800 INCHES
LREF = 38.7090 INCHES YMRP = .0000 INCHES
BREF = 38.7090 INCHES ZMRP = .0000 INCHES
SCALE = .0300 SCALE

PARAMETRIC DATA

ALPHAO = .000 ELEVON = .000
RUDDER = .000 SPOERK = .000

MACH (1) = 1.246 BETAO (1) = -10.080

SECTION (1)BODY FLAP DEPENDENT VARIABLE CP

TAP NO 169.0000170.0000171.0000172.0000173.0000174.0000

.000 -.2849 -.2597 -.2831 -.2457 -.2989 -.2863

MACH (1) = 1.245 BETAO (2) = -7.980

SECTION (1)BODY FLAP DEPENDENT VARIABLE CP

TAP NO 169.0000170.0000171.0000172.0000173.0000174.0000

.000 -.2905 -.2750 -.2580 -.2460 -.2774 -.2725

MACH (1) = 1.248 BETAO (3) = -6.020

SECTION (1)BODY FLAP DEPENDENT VARIABLE CP

TAP NO 169.0000170.0000171.0000172.0000173.0000174.0000

.000 -.2881 -.2587 -.2676 -.2380 -.2875 -.2772

MACH (1) = 1.247 BETAO (4) = -3.950

SECTION (1)BODY FLAP DEPENDENT VARIABLE CP

TAP NO 169.0000170.0000171.0000172.0000173.0000174.0000

.000 -.2586 -.2534 -.2368 -.2336 -.2699 -.2582

ARC11-716 IA14 O1+T12+S12N25+AT10 BODY FLAP (RB1F28)

MACH (1) = 1.246 BETAO (5) = -2.040

SECTION (1)BODY FLAP DEPENDENT VARIABLE CP

TAP NO	169.0000	170.0000	171.0000	172.0000	173.0000	174.0000
.000	-.2364	-.2333	-.2402	-.2178	-.2711	-.2615

MACH (1) = 1.246 BETAO (6) = .010

SECTION (1)BODY FLAP DEPENDENT VARIABLE CP

TAP NO	169.0000	170.0000	171.0000	172.0000	173.0000	174.0000
.000	-.2351	-.2299	-.2395	-.2208	-.2589	-.2652

ORIGINAL PAGE IS OF POOR QUALITY

ARC11-716 IA14 O1+T12+S12N25+AT10 BODY FLAP (RB1F29) (28 SEP 73)

REFERENCE DATA

SREF = 2.4210 SQ.FT. XMRP = 29.5800 INCHES
LREF = 38.7090 INCHES YMRP = .0000 INCHES
BREF = 38.7090 INCHES ZMRP = .0000 INCHES
SCALE = .0300 SCALE

PARAMETRIC DATA

ALPHAO = -10.000 ELEVON = .000
RUDDER = .000 SPDBRK = .000

MACH (1) = 1.245 BETAO (1) = .030

SECTION (1)BODY FLAP DEPENDENT VARIABLE CP

TAP NO	169.0000	170.0000	171.0000	172.0000	173.0000	174.0000
.000	-.2650	-.2695	-.2775	-.2482	-.3079	-.3115

ARC11-716 IA14 O1+T12+S12N25+AT11 BODY FLAP (RB1F30) (02 OCT 73)

REFERENCE DATA

SREF = 2.4210 SQ.FT. XMRP = 29.5800 INCHES
LREF = 38.7090 INCHES YMRP = .0000 INCHES
BREF = 38.7090 INCHES ZMRP = .0000 INCHES
SCALE = .0300 SCALE

PARAMETRIC DATA

ALPHAO = .000 ELEVON = .000
RUDDER = .000 SPOERK = .000

MACH (1) = .972 BETAO (1) = .040

SECTION (1)BODY FLAP DEPENDENT VARIABLE CP

TAP NO	169.0000	170.0000	171.0000	172.0000	173.0000	174.0000
.000	-.2655	-.2676	-.2657	-.2828	-.3652	-.3559

MACH (2) = 1.002 BETAO (1) = .040

SECTION (1)BODY FLAP DEPENDENT VARIABLE CP

TAP NO	169.0000	170.0000	171.0000	172.0000	173.0000	174.0000
.000	-.2706	-.2730	-.2711	-.2880	-.3802	-.3774

MACH (3) = 1.025 BETAO (1) = .040

SECTION (1)BODY FLAP DEPENDENT VARIABLE CP

TAP NO	169.0000	170.0000	171.0000	172.0000	173.0000	174.0000
.000	-.2596	-.2607	-.2693	-.2804	-.3898	-.3652

ORIGINAL PAGE IS OF POOR QUALITY

ARC11-71F IA14 O1+T12+S12N25+AT10 BODY FLAP (RB1F31) (06 FEB 74)

REFERENCE DATA

SREF = 2.4210 SQ.FT. XMRP = 29.5800 INCHES
LREF = 38.7090 INCHES YMRP = .0000 INCHES
BREF = 38.7090 INCHES ZMRP = .0000 INCHES
SCALE = .0300 SCALE

PARAMETRIC DATA

MACH = .900 ELEVON = .000
RUDDER = .000 SPOERK = .000

ALPHAO(1) = -10.140 BETAO (1) = -8.370

SECTION (1)BODY FLAP DEPENDENT VARIABLE CP

TAP NO	169.0000	170.0000	171.0000	172.0000	173.0000	174.0000
.000	-.3500	-.3377	-.3510	-.3093	-.3098	-.3118

ALPHAO(1) = -10.130 BETAO (2) = -6.560

SECTION (1)BODY FLAP DEPENDENT VARIABLE CP

TAP NO	169.0000	170.0000	171.0000	172.0000	173.0000	174.0000
.000	-.3443	-.3268	-.3367	-.3039	-.2838	-.2891

ALPHAO(1) = -10.130 BETAO (3) = -4.840

SECTION (1)BODY FLAP DEPENDENT VARIABLE CP

TAP NO	169.0000	170.0000	171.0000	172.0000	173.0000	174.0000
.000	-.3339	-.3257	-.3179	-.2928	-.2688	-.2655

ALPHAO(1) = -10.080 BETAO (4) = -3.250

SECTION (1)BODY FLAP DEPENDENT VARIABLE CP

TAP NO	169.0000	170.0000	171.0000	172.0000	173.0000	174.0000
.000	-.3132	-.3075	-.3053	-.2859	-.2807	-.2864

ARC11-716 1A14 O1+T12+S12N25+AT10 BODY FLAP (RB1F31)

ALPHAO(1) = -10.040 BETAO (5) = -1.600

SECTION (1)BODY FLAP DEPENDENT VARIABLE CP

TAP NO 169.0000170.0000171.0000172.0000173.0000174.0000

.000 -.3200 -.3125 -.3172 -.2921 -.3024 -.3042

ALPHAO(1) = -10.040 BETAO (6) = .100

SECTION (1)BODY FLAP DEPENDENT VARIABLE CP

TAP NO 169.0000170.0000171.0000172.0000173.0000174.0000

.000 -.3170 -.2935 -.3249 -.2814 -.3264 -.3202

ALPHAO(1) = -10.040 BETAO (7) = 1.810

SECTION (1)BODY FLAP DEPENDENT VARIABLE CP

TAP NO 169.0000170.0000171.0000172.0000173.0000174.0000

.000 -.2764 -.2792 -.2742 -.2704 -.3572 -.3180

ALPHAO(1) = -10.130 BETAO (8) = 3.580

SECTION (1)BODY FLAP DEPENDENT VARIABLE CP

TAP NO 169.0000170.0000171.0000172.0000173.0000174.0000

.000 -.2873 -.2642 -.2936 -.2578 -.3521 -.3389

ALPHAO(1) = -10.130 BETAO (9) = 5.250

SECTION (1)BODY FLAP DEPENDENT VARIABLE CP

TAP NO 169.0000170.0000171.0000172.0000173.0000174.0000

.000 -.2898 -.2830 -.2828 -.2690 -.3400 -.3257

ARC11-716 IA14 O1+T12+S12N25+AT10 BODY FLAP (RB1F31)

ALPHAO(1) = -10.120 BETAO (10) = 7.010

SECTION (1)BODY FLAP DEPENDENT VARIABLE CP

TAP NO 169.0000170.0000171.0000172.0000173.0000174.0000

.000 -.3002 -.3175 -.2724 -.2782 -.3183 -.3037

ALPHAO(1) = -10.130 BETAO (11) = 8.780

SECTION (1)BODY FLAP DEPENDENT VARIABLE CP

TAP NO 169.0000170.0000171.0000172.0000173.0000174.0000

.000 -.3259 -.3523 -.3062 -.3637 -.3107 -.3062

ALPHAO(2) = -8.110 BETAO (1) = -8.350

SECTION (1)BODY FLAP DEPENDENT VARIABLE CP

TAP NO 169.0000170.0000171.0000172.0000173.0000174.0000

.000 -.3465 -.3298 -.3293 -.3105 -.3048 -.3038

ALPHAO(2) = -8.120 BETAO (2) = -6.640

SECTION (1)BODY FLAP DEPENDENT VARIABLE CP

TAP NO 169.0000170.0000171.0000172.0000173.0000174.0000

.000 -.3279 -.3111 -.3204 -.2928 -.2783 -.2823

ALPHAO(2) = -8.120 BETAO (3) = -4.940

SECTION (1)BODY FLAP DEPENDENT VARIABLE CP

TAP NO 169.0000170.0000171.0000172.0000173.0000174.0000

.000 -.3233 -.3125 -.3035 -.2767 -.2620 -.2685

ORIGINAL PAGE IS OF POOR QUALITY

ARC11-716 IA14 O1+T12+S12N25+AT10 BODY FLAP (RB1F31)

ALPHAO(2) = -8.130 BETAO (4) = -3.270

SECTION (1)BODY FLAP DEPENDENT VARIABLE CP

TAP NO 169.0000170.0000171.0000172.0000173.0000174.0000

.000 -.3119 -.3049 -.3029 -.2870 -.2670 -.2750

ALPHAO(2) = -8.130 BETAO (5) = -1.600

SECTION (1)BODY FLAP DEPENDENT VARIABLE CP

TAP NO 169.0000170.0000171.0000172.0000173.0000174.0000

.000 -.3013 -.3021 -.2944 -.2800 -.2902 -.2914

ALPHAO(2) = -8.130 BETAO (6) = .010

SECTION (1)BODY FLAP DEPENDENT VARIABLE CP

TAP NO 169.0000170.0000171.0000172.0000173.0000174.0000

.000 -.2864 -.2765 -.3009 -.2592 -.3146 -.2949

ALPHAO(2) = -8.120 BETAO (7) = 1.700

SECTION (1)BODY FLAP DEPENDENT VARIABLE CP

TAP NO 169.0000170.0000171.0000172.0000173.0000174.0000

.000 -.2651 -.2566 -.2558 -.2543 -.3538 -.3371

ALPHAO(2) = -8.110 BETAO (8) = 3.340

SECTION (1)BODY FLAP DEPENDENT VARIABLE CP

TAP NO 169.0000170.0000171.0000172.0000173.0000174.0000

.000 -.2949 -.2872 -.2768 -.2956 -.2941 -.2831

ORIGINAL PAGE IS OF POOR QUALITY

ARC11-716 IA14 O1+T12+S12N25+AT10 BODY FLAP (RB1F31)

ALPHAO(2) = -8.090 BETAO (9) = 4.950

SECTION (1)BODY FLAP DEPENDENT VARIABLE CP

TAP NO	169.0000	170.0000	171.0000	172.0000	173.0000	174.0000
.000	-.3151	-.3113	-.2834	-.2999	-.2715	-.2722

ALPHAO(2) = -8.080 BETAO (10) = 6.750

SECTION (1)BODY FLAP DEPENDENT VARIABLE CP

TAP NO	169.0000	170.0000	171.0000	172.0000	173.0000	174.0000
.000	-.3151	-.3290	-.2899	-.3205	-.2780	-.2631

ALPHAO(2) = -8.090 BETAO (11) = 8.570

SECTION (1)BODY FLAP DEPENDENT VARIABLE CP

TAP NO	169.0000	170.0000	171.0000	172.0000	173.0000	174.0000
.000	-.3150	-.3437	-.2940	-.3276	-.2895	-.2792

ALPHAO(3) = -6.100 BETAO (1) = -8.140

SECTION (1)BODY FLAP DEPENDENT VARIABLE CP

TAP NO	169.0000	170.0000	171.0000	172.0000	173.0000	174.0000
.000	-.3184	-.3022	-.3077	-.2894	-.2922	-.3044

ALPHAO(3) = -6.110 BETAO (2) = -5.480

SECTION (1)BODY FLAP DEPENDENT VARIABLE CP

TAP NO	169.0000	170.0000	171.0000	172.0000	173.0000	174.0000
.000	-.3141	-.2887	-.2974	-.2790	-.2740	-.2875

ARC11-716 IA14 O1+T12+S12N25+AT10 BODY FLAP (RB1F31)

ALPHAO(3) = -6.130 BETAO (3) = -4.820

SECTION (1)BODY FLAP DEPENDENT VARIABLE CP

TAP NO 169.0000170.0000171.0000172.0000173.0000174.0000

.000 -.2971 -.2843 -.2905 -.2650 -.2610 -.2675

ALPHAO(3) = -6.140 BETAO (4) = -3.220

SECTION (1)BODY FLAP DEPENDENT VARIABLE CP

TAP NO 169.0000170.0000171.0000172.0000173.0000174.0000

.000 -.2992 -.2902 -.2875 -.2741 -.2679 -.2713

ALPHAO(3) = -6.030 BETAO (5) = -1.620

SECTION (1)BODY FLAP DEPENDENT VARIABLE CP

TAP NO 169.0000170.0000171.0000172.0000173.0000174.0000

.000 -.2816 -.2754 -.2767 -.2608 -.2715 -.2742

ALPHAO(3) = -6.030 BETAO (6) = .000

SECTION (1)BODY FLAP DEPENDENT VARIABLE CP

TAP NO 169.0000170.0000171.0000172.0000173.0000174.0000

.000 -.2767 -.2715 -.2844 -.2446 -.3049 -.3036

ALPHAO(3) = -6.030 BETAO (7) = 1.640

SECTION (1)BODY FLAP DEPENDENT VARIABLE CP

TAP NO 169.0000170.0000171.0000172.0000173.0000174.0000

.000 -.2440 -.2460 -.2481 -.2434 -.3408 -.3201

ARC11-716 IA14 O1+T12+S12N25+AT10 BODY FLAP (RB1F31)

ALPHAO(3) = -6.180 BETAO (8) = 3.330

SECTION (1)BODY FLAP DEPENDENT VARIABLE CP

TAP NO 169.0000170.0000171.0000172.0000173.0000174.0000

.000 -.2934 -.2889 -.2842 -.2939 -.2747 -.2749

ALPHAO(3) = -6.100 BETAO (9) = 5.010

SECTION (1)BODY FLAP DEPENDENT VARIABLE CP

TAP NO 169.0000170.0000171.0000172.0000173.0000174.0000

.000 -.2986 -.2984 -.2664 -.2871 -.2652 -.2569

ALPHAO(3) = -6.140 BETAO (10) = 6.740

SECTION (1)BODY FLAP DEPENDENT VARIABLE CP

TAP NO 169.0000170.0000171.0000172.0000173.0000174.0000

.000 -.2968 -.3170 -.2841 -.3053 -.2748 -.2691

ALPHAO(3) = -6.140 BETAO (11) = 8.500

SECTION (1)BODY FLAP DEPENDENT VARIABLE CP

TAP NO 169.0000170.0000171.0000172.0000173.0000174.0000

.000 -.3077 -.3301 -.2866 -.3249 -.2933 -.2806

ALPHAO(4) = -4.170 BETAO (1) = -9.980

SECTION (1)BODY FLAP DEPENDENT VARIABLE CP

TAP NO [illegible]0000170.0000171.0000172.0000173.0000174.0000

.000 -.3233 -.3094 -.3046 -.2897 -.3096 -.3188

ARC11-716 IA14 O1+T12+S12N25+AT10 BODY FLAP (RB1F31)

ALPHAO(4) = -4.190 BETAO (2) = -7.970

SECTION (1)BODY FLAP DEPENDENT VARIABLE CP

TAP NO 169.0000170.0000171.0000172.0000173.0000174.0000

.000 -.3115 -.2944 -.2970 -.2779 -.2806 -.2898

ALPHAO(4) = -4.210 BETAO (3) = -5.970

SECTION (1)BODY FLAP DEPENDENT VARIABLE CP

TAP NO 169.0000170.0000171.0000172.0000173.0000174.0000

.000 -.3007 -.2850 -.2800 -.2688 -.2655 -.2755

ALPHAO(4) = -4.190 BETAO (4) = -3.980

SECTION (1)BODY FLAP DEPENDENT VARIABLE CP

TAP NO 169.0000170.0000171.0000172.0000173.0000174.0000

.000 -.2950 -.2750 -.2717 -.2562 -.2679 -.2724

ALPHAO(4) = -4.180 BETAO (5) = -1.980

SECTION (1)BODY FLAP DEPENDENT VARIABLE CP

TAP NO 169.0000170.0000171.0000172.0000173.0000174.0000

.000 -.2808 -.2730 -.2696 -.2467 -.2647 -.2744

ALPHAO(4) = -4.180 BETAO (6) = .030

SECTION (1)BODY FLAP DEPENDENT VARIABLE CP

TAP NO 169.0000170.0000171.0000172.0000173.0000174.0000

.000 -.2578 -.2446 -.2515 -.2336 -.3266 -.3099

ARC11-716 1A14 O1+T12+S12N25+AT10 BODY FLAP (RB1F31)

ALPHAO(4) = -4.170 BETAO (7) = 2.020

SECTION (1)BODY FLAP DEPENDENT VARIABLE CP

TAP NO 169.0000170.0000171.0000172.0000173.0000174.0000

.000 -.2436 -.2346 -.2469 -.2319 -.3277 -.3132

ALPHAO(4) = -4.240 BETAO (8) = 4.040

SECTION (1)BODY FLAP DEPENDENT VARIABLE CP

TAP NO 169.0000170.0000171.0000172.0000173.0000174.0000

.000 -.2492 -.2410 -.2415 -.2271 -.3272 -.3018

ALPHAO(4) = -4.230 BETAO (9) = 6.050

SECTION (1)BODY FLAP DEPENDENT VARIABLE CP

TAP NO 169.0000170.0000171.0000172.0000173.0000174.0000

.000 -.2615 -.2802 -.2512 -.2515 -.3102 -.2886

ALPHAO(4) = -4.200 BETAO (10) = 8.070

SECTION (1)BODY FLAP DEPENDENT VARIABLE CP

TAP NO 169.0000170.0000171.0000172.0000173.0000174.0000

.000 -.2643 -.2665 -.2406 -.2373 -.3193 -.3008

ALPHAO(4) = -4.200 BETAO (11) = 10.080

SECTION (1)BODY FLAP DEPENDENT VARIABLE CP

TAP NO 169.0000170.0000171.0000172.0000173.0000174.0000

.000 -.3133 -.3352 -.2808 -.3287 -.3131 -.2999

ORIGINAL PAGE IS OF POOR QUALITY

ARC11-716 IA14 O1+T12+S12N25+AT10 BODY FLAP (RB1F31)

ALPHAO(5) = -2.870 BETAO (1) = -9.990

SECTION (1)BODY FLAP DEPENDENT VARIABLE CP

TAP NO 169.0000170.0000171.0000172.0000173.0000174.0000

.000 -.3229 -.3074 -.3029 -.2850 -.3127 -.3196

ALPHAO(5) = -2.890 BETAO (2) = -7.990

SECTION (1)BODY FLAP DEPENDENT VARIABLE CP

TAP NO 169.0000170.0000171.0000172.0000173.0000174.0000

.000 -.3151 -.3034 -.2886 -.2759 -.2796 -.2861

ALPHAO(5) = -2.870 BETAO (3) = -5.970

SECTION (1)BODY FLAP DEPENDENT VARIABLE CP

TAP NO 169.0000170.0000171.0000172.0000173.0000174.0000

.000 -.3047 -.2882 -.2817 -.2608 -.2553 -.2720

ALPHAO(5) = -2.860 BETAO (4) = -3.980

SECTION (1)BODY FLAP DEPENDENT VARIABLE CP

TAP NO 169.0000170.0000171.0000172.0000173.0000174.0000

.000 -.2743 -.2653 -.2720 -.2546 -.2486 -.2521

ALPHAO(5) = -2.840 BETAO (5) = -1.990

SECTION (1)BODY FLAP DEPENDENT VARIABLE CP

TAP NO 169.0000170.0000171.0000172.0000173.0000174.0000

.000 -.2610 -.2633 -.2627 -.2361 -.2562 -.2572

ARC11-716 IA14 O1+T12+S12N25+AT10 BODY FLAP (RB1F31)

ALPHAO(5) = -2.840 BETAO (6) = .010

SECTION (1)BODY FLAP DEPENDENT VARIABLE CP

TAP NO 169.0000170.0000171.0000172.0000173.0000174.0000

.000 -.2322 -.2347 -.2442 -.2313 -.3159 -.2990

ALPHAO(5) = -2.840 BETAO (7) = 2.040

SECTION (1)BODY FLAP DEPENDENT VARIABLE CP

TAP NO 169.0000170.0000171.0000172.0000173.0000174.0000

.000 -.2338 -.2235 -.2327 -.2255 -.3235 -.3054

ALPHAO(5) = -2.860 BETAO (8) = 4.050

SECTION (1)BODY FLAP DEPENDENT VARIABLE CP

TAP NO 169.0000170.0000171.0000172.0000173.0000174.0000

.000 -.2733 -.2823 -.2540 -.2910 -.2602 -.2690

ALPHAO(5) = -2.870 BETAO (9) = 6.060

SECTION (1)BODY FLAP DEPENDENT VARIABLE CP

TAP NO 169.0000170.0000171.0000172.0000173.0000174.0000

.000 -.2923 -.3025 -.2548 -.2970 -.2670 -.2603

ALPHAO(5) = -2.870 BETAO (10) = 8.070

SECTION (1)BODY FLAP DEPENDENT VARIABLE CP

TAP NO 169.0000170.0000171.0000172.0000173.0000174.0000

.000 -.3035 -.3231 -.2665 -.3128 -.2603 -.2784

ARC11-716 IA14 O1+T12+S12+M25+AT10 BODY FLAP (RB1F31)

ALPHAO(5) = -2.830 BETAO (11) = 10.090

SECTION (1)BODY FLAP DEPENDENT VARIABLE CP

TAP NO	169.0000	170.0000	171.0000	172.0000	173.0000	174.0000
.000	-.2976	-.3278	-.272	-.3217	-.3005	-.2908

ALPHAO(6) = -.690 BETAO (1) = -10.050

SECTION (1)BODY FLAP DEPENDENT VARIABLE CP

TAP NO	169.0000	170.0000	171.0000	172.0000	173.0000	174.0000
.000	-.3235	-.2986	-.2969	-.2827	-.3174	-.3159

ALPHAO(6) = -.680 BETAO (2) = -7.980

SECTION (1)BODY FLAP DEPENDENT VARIABLE CP

TAP NO	169.0000	170.0000	171.0000	172.0000	173.0000	174.0000
.000	-.3072	-.2893	-.2900	-.2825	-.2735	-.2760

ALPHAO(6) = -.670 BETAO (3) = -5.980

SECTION (1)BODY FLAP DEPENDENT VARIABLE CP

TAP NO	169.0000	170.0000	171.0000	172.0000	173.0000	174.0000
.000	-.2857	-.2732	-.2775	-.2532	-.2497	-.2565

ALPHAO(6) = -.660 BETAO (4) = -3.970

SECTION (1)BODY FLAP DEPENDENT VARIABLE CP

TAP NO	169.0000	170.0000	171.0000	172.0000	173.0000	174.0000
.000	-.2731	-.2699	-.2603	-.2464	-.2464	-.2516

ARC11-716 IA14 O1+T12+S12N25+AT10 BODY FLAP (RB1F31)

ALPHAO(6) = -.660 BETAO (5) = -1.980

SECTION (1)BODY FLAP DEPENDENT VARIABLE CP

TAP NO	169.0000170.	0000171.	0000172.	0000173.	0000174.	0000
.000	-.2604	-.2521	-.2605	-.2403	-.2356	-.2423

ALPHAO(6) = -.660 BETAO (6) = .010

SECTION (1)BODY FLAP DEPENDENT VARIABLE CP

TAP NO	169.0000170.	0000171.	0000172.	0000173.	0000174.	0000
.000	-.2257	-.2314	-.2245	-.2243	-.3090	-.2916

ALPHAO(6) = -.670 BETAO (7) = 2.050

SECTION (1)BODY FLAP DEPENDENT VARIABLE CP

TAP NO	169.0000170.	0000171.	0000172.	0000173.	0000174.	0000
.000	-.2219	-.2148	-.2119	-.2203	-.3193	-.2989

ALPHAO(6) = -.680 BETAO (8) = 4.050

SECTION (1)BODY FLAP DEPENDENT VARIABLE CP

TAP NO	169.0000170.	0000171.	0000172.	0000173.	0000174.	0000
.000	-.2761	-.2728	-.2478	-.2825	-.2535	-.2428

ALPHAO(6) = -.690 BETAO (9) = 6.060

SECTION (1)BODY FLAP DEPENDENT VARIABLE CP

TAP NO	169.0000170.	0000171.	0000172.	0000173.	0000174.	0000
.000	-.2771	-.2987	-.2906	-.2844	-.2600	-.2580

ARC11-716 TA14 01+T12+S12N25+AT10 BODY FLAP (RB1F31)

ALPHAO(6) = -.690 BETAO (10) = 8.080

SECTION (1)BODY FLAP DEPENDENT VARIABLE CP

TAP NO	169.0000	170.0000	171.0000	172.0000	173.0000	174.0000
.000	-.2920	-.3124	-.2647	-.3146	-.2744	-.2809

ALPHAO(6) = -.690 BETAO (11) = 10.120

SECTION (1)BODY FLAP DEPENDENT VARIABLE CP

TAP NO	169.0000	170.0000	171.0000	172.0000	173.0000	174.0000
.000	-.2986	-.3238	-.2595	-.3211	-.3006	-.2947

ALPHAO(7) = 2.060 BETAO (1) = -10.000

SECTION (1)BODY FLAP DEPENDENT VARIABLE CP

TAP NO	169.0000	170.0000	171.0000	172.0000	173.0000	174.0000
.000	-.3134	-.2905	-.2606	-.2789	-.2990	-.3072

ALPHAO(7) = 1.980 BETAO (2) = -5.980

SECTION (1)BODY FLAP DEPENDENT VARIABLE CP

TAP NO	169.0000	170.0000	171.0000	172.0000	173.0000	174.0000
.000	-.2756	-.2666	-.2622	-.2540	-.2501	-.2518

ALPHAO(7) = 1.970 BETAO (3) = -3.980

SECTION (1)BODY FLAP DEPENDENT VARIABLE CP

TAP NO	169.0000	170.0000	171.0000	172.0000	173.0000	174.0000
.000	-.2668	-.2686	-.2646	-.2457	-.2405	-.2412

ARC11-716 IA14 O1+T12+S12N25+AT10 BODY FLAP (RB1F31)

ALPHAO(7) = 1.980 BETAO (4) = -1.990

SECTION (1)BODY FLAP DEPENDENT VARIABLE CP

TAP NO 169.0000170.0000171.0000172.0000173.0000174.0000

.000 -.2532 -.2559 -.2472 -.2320 -.2132 .2235

ALPHAO(7) = 1.980 BETAO (5) = .060

SECTION (1)BODY FLAP DEPENDENT VARIABLE CP

TAP NO 169.0000170.0000171.0000172.0000173.0000174.0000

.000 -.2298 -.2361 -.2246 -.2309 -.3026 -.2812

ALPHAO(7) = 1.970 BETAO (6) = 2.040

SECTION (1)BODY FLAP DEPENDENT VARIABLE CP

TAP NO 169.0000170.0000171.0000172.0000173.0000174.0000

.000 -.2176 -.2096 -.2118 -.2175 -.2990 -.2773

ALPHAO(7) = 2.050 BETAO (7) = 4.050

SECTION (1)BODY FLAP DEPENDENT VARIABLE CP

TAP NO 169.0000170.0000171.0000172.0000173.0000174.0000

.000 -.2679 -.2580 -.2492 -.2758 -.2484 -.2464

ALPHAO(7) = 2.050 BETAO (8) = 6.070

SECTION (1)BODY FLAP DEPENDENT VARIABLE CP

TAP NO 169.0000170.0000171.0000172.0000173.0000174.0000

.000 -.2690 -.2792 -.2455 -.2817 -.2568 -.2543

ORIGINAL PAGE IS OF POOR QUALITY

ARC11-716 IA14 O1+T12+S12N25+AT10 BODY FLAP (RB1F31)

ALPHAO(7) = 2.040 BETAO (9) = 8.090

SECTION (1)BODY FLAP DEPENDENT VARIABLE CP

TAP NO	169.0000	170.0000	171.0000	172.0000	173.0000	174.0000
.000	-.2833	-.2968	-.2494	-.2938	-.2632	-.2630

ALPHAO(7) = 2.020 BETAO (10) = 10.110

SECTION (1)BODY FLAP DEPENDENT VARIABLE CP

TAP NO	169.0000	170.0000	171.0000	172.0000	173.0000	174.0000
.000	-.2914	-.3237	-.2623	-.3208	-.3027	-.2903

ALPHAO(8) = 4.110 BETAO (1) = -10.000

SECTION (1)BODY FLAP DEPENDENT VARIABLE CP

TAP NO	169.0000	170.0000	171.0000	172.0000	173.0000	174.0000
.000	-.2976	-.2833	-.2865	-.2724	-.2830	-.2882

ALPHAO(8) = 4.130 BETAO (2) = -7.960

SECTION (1)BODY FLAP DEPENDENT VARIABLE CP

TAP NO	169.0000	170.0000	171.0000	172.0000	173.0000	174.0000
.000	-.2794	-.2785	-.2712	-.2660	-.2694	-.2739

ALPHAO(8) = 4.150 BETAO (3) = -5.960

SECTION (1)BODY FLAP DEPENDENT VARIABLE CP

TAP NO	169.0000	170.0000	171.0000	172.0000	173.0000	174.0000
.000	-.2542	-.2510	-.2507	-.2410	-.2554	-.2554

ORIGINAL PAGE IS OF POOR QUALITY

ARC11-716 IA14 O1+T12+S12N25+AT10 BODY FLAP (RB1F31)

ALPHAO(8) = 4.160 BETAO (4) = -3.960

SECTION (1)BODY FLAP DEPENDENT VARIABLE CP

TAP NO	169.0000	170.0000	171.0000	172.0000	173.0000	174.0000
.000	-.2450	-.2484	-.2416	-.2339	-.2284	-.2237

ALPHAO(8) = 4.040 BETAO (5) = -1.980

SECTION (1)BODY FLAP DEPENDENT VARIABLE CP

TAP NO	169.0000	170.0000	171.0000	172.0000	173.0000	174.0000
.000	-.2482	-.2544	-.2522	-.2292	-.2319	-.2282

ALPHAO(8) = 4.050 BETAO (6) = .030

SECTION (1)BODY FLAP DEPENDENT VARIABLE CP

TAP NO	169.0000	170.0000	171.0000	172.0000	173.0000	174.0000
.000	-.2235	-.2344	-.2225	-.2279	-.2977	-.2759

ALPHAO(8) = 4.050 BETAO (7) = 2.050

SECTION (1)BODY FLAP DEPENDENT VARIABLE CP

TAP NO	169.0000	170.0000	171.0000	172.0000	173.0000	174.0000
.000	-.2071	-.1959	-.2053	-.2043	-.2901	-.2731

ALPHAO(8) = 4.030 BETAO (8) = 4.050

SECTION (1)BODY FLAP DEPENDENT VARIABLE CP

TAP NO	169.0000	170.0000	171.0000	172.0000	173.0000	174.0000
.000	-.2600	-.2573	-.2366	-.2645	-.2489	-.2391

ARC11-716 IA14 O1+T12+S12N25+AT10 BODY FLAP (RB1F31)

ALPHAO(8) = 4.020 BETAO (9) = 6.070

SECTION (1)BODY FLAP DEPENDENT VARIABLE CP

TAP NO 169.0000170.0000171.0000172.0000173.0000174.0000

.000 -.2654 -.2847 -.2398 -.2796 -.2646 -.2594

ALPHAO(8) = 4.010 BETAO (10) = 8.100

SECTION (1)BODY FLAP DEPENDENT VARIABLE CP

TAP NO 169.0000170.0000171.0000172.0000173.0000174.0000

.000 -.2742 -.2994 -.2377 -.2868 -.2764 -.2685

ALPHAO(8) = 4.000 BETAO (11) = 10.130

SECTION (1)BODY FLAP DEPENDENT VARIABLE CP

TAP NO 169.0000170.0000171.0000172.0000173.0000174.0000

.000 -.2852 -.3077 -.2511 -.3080 -.3028 -.2921

ALPHAO(9) = 6.000 BETAO (1) = -9.980

SECTION (1)BODY FLAP DEPENDENT VARIABLE CP

TAP NO 169.0000170.0000171.0000172.0000173.0000174.0000

.000 -.2957 -.2806 -.2823 -.2694 -.2959 -.2959

ALPHAO(9) = 5.930 BETAO (2) = -7.960

SECTION (1)BODY FLAP DEPENDENT VARIABLE CP

TAP NO 169.0000170.0000171.0000172.0000173.0000174.0000

.000 -.2726 -.2587 -.2667 -.2476 -.2518 -.2667

ARC11-716 TA14 O1+T12+S12N25+AT10 BODY FLAP (RB1F31)

ALPHAO(9) = 5.960 BETAO (3) = -5.960

SECTION (1)BODY FLAP DEPENDENT VARIABLE CP

TAP NO	169.0000	170.0000	171.0000	172.0000	173.0000	174.0000
.000	-.2603	-.2504	-.2609	-.2441	-.2493	-.2577

ALPHAO(9) = 5.950 BETAO (4) = -3.970

SECTION (1)BODY FLAP DEPENDENT VARIABLE CP

TAP NO	169.0000	170.0000	171.0000	172.0000	173.0000	174.0000
.000	-.2473	-.2533	-.2485	-.2300	-.2337	-.2361

ALPHAO(9) = 5.940 BETAO (5) = -1.960

SECTION (1)BODY FLAP DEPENDENT VARIABLE CP

TAP NO	169.0000	170.0000	171.0000	172.0000	173.0000	174.0000
.000	-.2466	-.2419	-.2492	-.2276	-.2221	-.2278

ALPHAO(9) = 5.940 BETAO (6) = .040

SECTION (1)BODY FLAP DEPENDENT VARIABLE CP

TAP NO	169.0000	170.0000	171.0000	172.0000	173.0000	174.0000
.000	-.2267	-.2279	-.2231	-.2216	-.2806	-.2628

ALPHAO(9) = 5.880 BETAO (7) = 2.060

SECTION (1)BODY FLAP DEPENDENT VARIABLE CP

TAP NO	169.0000	170.0000	171.0000	172.0000	173.0000	174.0000
.000	-.2081	-.2031	-.2020	-.2028	-.2767	-.2646

ARC11-716 IA14 O1+T12+S12N25+AT10 BODY FLAP (RB1F31)

ALPHAO(9) = 5.990 BETAO (8) = 4.070

SECTION (1)BODY FLAP DEPENDENT VARIABLE CP

TAP NO 169.0000170.0000171.0000172.0000173.0000174.0000

.000 -.2520 -.2465 -.2259 -.2542 -.2468 -.2366

ALPHAO(9) = 5.990 BETAO (9) = 6.100

SECTION (1)BODY FLAP DEPENDENT VARIABLE CP

TAP NO 169.0000170.0000171.0000172.0000173.0000174.0000

.000 -.2684 -.2773 -.2250 -.2738 -.2597 -.2578

ALPHAO(9) = 6.020 BETAO (10) = 8.130

SECTION (1)BODY FLAP DEPENDENT VARIABLE CP

TAP NO 169.0000170.0000171.0000172.0000173.0000174.0000

.000 -.2699 -.2909 -.2361 -.2895 -.2747 -.2655

ALPHAO(9) = 5.990 BETAO (11) = 10.150

SECTION (1)BODY FLAP DEPENDENT VARIABLE CP

TAP NO 169.0000170.0000171.0000172.0000173.0000174.0000

.000 -.2775 -.3029 -.2485 -.3139 -.2964 -.2872

ALPHAO(10) = 8.050 BETAO (1) = -9.970

SECTION (1)BODY FLAP DEPENDENT VARIABLE CP

TAP NO 169.0000170.0000171.0000172.0000173.0000174.0000

.000 -.2799 -.2663 -.2636 -.2433 -.2735 -.2730

ARC11-716 IA14 O1+T12+S12N25+AT10 BODY FLAP (RB1F31)

ALPHAO(10) = 8.000 BETAO (2) = -7.950

SECTION (1)BODY FLAP DEPENDENT VARIABLE CP

TAP NO 169.0000170.0000171.0000172.0000173.0000174.0000

.000 -.2683 -.2557 -.2650 -.2454 -.2501 -.2509

ALPHAO(10) = 7.980 BETAO (3) = -5.950

SECTION (1)BODY FLAP DEPENDENT VARIABLE CP

TAP NO 169.0000170.0000171.0000172.0000173.0000174.0000

.000 -.2312 -.2509 -.2505 -.2404 -.2322 -.2431

ALPHAO(10) = 7.940 BETAO (4) = -3.970

SECTION (1)BODY FLAP DEPENDENT VARIABLE CP

TAP NO 169.0000170.0000171.0000172.0000173.0000174.0000

.000 -.2354 -.2426 -.2429 -.2285 -.2238 -.2206

ALPHAO(10) = 7.940 BETAO (5) = -1.980

SECTION (1)BODY FLAP DEPENDENT VARIABLE CP

TAP NO 169.0000170.0000171.0000172.0000173.0000174.0000

.000 -.2353 -.2408 -.2414 -.2276 -.2305 -.2234

ALPHAO(10) = 7.890 BETAO (6) = .030

SECTION (1)BODY FLAP DEPENDENT VARIABLE CP

TAP NO 169.0000170.0000171.0000172.0000173.0000174.0000

.000 -.2367 -.2338 -.2327 -.2128 -.2270 -.2242

ARC11-716 IA14 01+T12+S12N25+AT10 BODY FLAP (RB1F31)

ALPHAO(10) = 7.940 BETAO (7) = 2.060

SECTION (1)BODY FLAP DEPENDENT VARIABLE CP

TAP NO	169.0000	170.0000	171.0000	172.0000	173.0000	174.0000
.000	-.2025	-.1892	-.2026	-.1962	-.2833	-.2682

ALPHAO(10) = 8.010 BETAO (8) = 4.090

SECTION (1)BODY FLAP DEPENDENT VARIABLE CP

TAP NO	169.0000	170.0000	171.0000	172.0000	173.0000	174.0000
.000	-.2496	-.2365	-.2277	-.2502	-.2374	-.2332

ALPHAO(10) = 8.000 BETAO (9) = 6.120

SECTION (1)BODY FLAP DEPENDENT VARIABLE CP

TAP NO	169.0000	170.0000	171.0000	172.0000	173.0000	174.0000
.000	-.2579	-.2716	-.2430	-.2728	-.2430	-.2425

ALPHAO(10) = 7.980 BETAO (10) = 8.120

SECTION (1)BODY FLAP DEPENDENT VARIABLE CP

TAP NO	169.0000	170.0000	171.0000	172.0000	173.0000	174.0000
.000	-.2625	-.2734	-.2362	-.2845	-.2486	-.2453

ALPHAO(10) = 7.950 BETAO (11) = 10.200

SECTION (1)BODY FLAP DEPENDENT VARIABLE CP

TAP NO	169.0000	170.0000	171.0000	172.0000	173.0000	174.0000
.000	-.2797	-.2965	-.2438	-.2904	-.2775	-.2710

ARC11-716 IA14 O1+T12+S12N25+AT10 BODY FLAP (R01F31)

ALPHAO(11) = 9.990 BETAO (1) = -9.930

SECTION (1)BODY FLAP DEPENDENT VARIABLE CP

TAP NO 169.0000170.0000171.0000172.0000173.0000174.0000

.000 -.2681 -.2755 -.2708 -.2473 -.2577 -.2631

ALPHAO(11) = 10.010 BETAO (2) = -7.910

SECTION (1)BODY FLAP DEPENDENT VARIABLE CP

TAP NO 169.0000170.0000171.0000172.0000173.0000174.0000

.000 -.2683 -.2535 -.2609 -.2421 -.2334 -.2307

ALPHAO(11) = 9.920 BETAO (3) = -5.920

SECTION (1)BODY FLAP DEPENDENT VARIABLE CP

TAP NO 169.0000170.0000171.0000172.0000173.0000174.0000

.000 -.2679 -.2563 -.2509 -.2376 -.2275 -.2312

ALPHAO(11) = 9.940 BETAO (4) = -3.950

SECTION (1)BODY FLAP DEPENDENT VARIABLE CP

TAP NO 169.0000170.0000171.0000172.0000173.0000174.0000

.000 -.2573 -.2509 -.2508 -.2306 -.2214 -.2239

ALPHAO(11) = 9.940 BETAO (5) = -1.960

SECTION (1)BODY FLAP DEPENDENT VARIABLE CP

TAP NO 169.0000170.0000171.0000172.0000173.0000174.0000

.000 -.2607 -.2565 -.2558 -.2269 -.2175 -.2192

ARC11-716 IA14 01+T12+S12N25+AT10 BODY FLAP (RB1F31)

ALPHAO(11) = 9.880 BETAO (6) = .040

SECTION (1)BODY FLAP DEPENDENT VARIABLE CP

TAP NO	169.0000	170.0000	171.0000	172.0000	173.0000	174.0000
.000	-.2543	-.2521	-.2362	-.2186	-.2196	-.2161

ALPHAO(11) = 9.980 BETAO (7) = 2.070

SECTION (1)BODY FLAP DEPENDENT VARIABLE CP

TAP NO	169.0000	170.0000	171.0000	172.0000	173.0000	174.0000
.000	-.2635	-.2452	-.2512	-.2079	-.2418	-.2237

ALPHAO(11) = 9.990 BETAO (8) = 4.110

SECTION (1)BODY FLAP DEPENDENT VARIABLE CP

TAP NO	169.0000	170.0000	171.0000	172.0000	173.0000	174.0000
.000	-.2647	-.2505	-.2358	-.2521	-.2293	-.2264

ALPHAO(11) = 9.980 BETAO (9) = 6.130

SECTION (1)BODY FLAP DEPENDENT VARIABLE CP

TAP NO	169.0000	170.0000	171.0000	172.0000	173.0000	174.0000
.000	-.2633	-.2682	-.2240	-.2583	-.2349	-.2366

ALPHAO(11) = 10.030 BETAO (10) = 8.170

SECTION (1)BODY FLAP DEPENDENT VARIABLE CP

TAP NO	169.0000	170.0000	171.0000	172.0000	173.0000	174.0000
.000	-.2801	-.2937	-.2359	-.2758	-.2337	-.2399

ARC11-716 IA14 O1+T12+S12N25+AT10 BODY FLAP (RB1F31)

ALPHAO(11) = 10.050 BETAO (11) = 10.230

SECTION (1)BODY FLAP DEPENDENT VARIABLE CP

TAP NO	169.0000	170.0000	171.0000	172.0000	173.0000	174.0000
.000	-.2722	-.2992	-.2401	-.2953	-.2672	-.2572

ARC11-716 IA14 O1+T12+S12N23+AT10 BODY FLAP (RB1F32) (17 APR 74)

REFERENCE DATA

SREF = 2.4210 SQ.FT. XMRP = 19.5800 INCHES
LREF = 38.7090 INCHES YMRP = .0000 INCHES
BREF = 38.7090 INCHES ZMRP = .0000 INCHES
SCALE = .0300 SCALE

PARAMETRIC DATA

MACH = 1.100 ELEVON = .000
RUDDER = .000 SPOBRK = .000

ALPHAO(1) = -10.240 BETAO (1) = -9.900

SECTION (1)BODY FLAP DEPENDENT VARIABLE CP

TAP NO 169.0000170.0000171.0000172.0000173.0000174.0000

.000 -.3736 -.3639 -.3614 -.3551 -.3437 -.3385

ALPHAO(1) = -10.220 BETAO (2) = -7.890

SECTION (1)BODY FLAP DEPENDENT VARIABLE CP

TAP NO 169.0000170.0000171.0000172.0000173.0000174.0000

.000 -.3777 -.3642 -.3641 -.3603 -.3382 -.3367

ALPHAO(1) = -10.220 BETAO (3) = -5.900

SECTION (1)BODY FLAP DEPENDENT VARIABLE CP

TAP NO 169.0000170.0000171.0000172.0000173.0000174.0000

.000 -.3652 -.3685 -.3574 -.3634 -.3421 -.3405

ALPHAO(1) = -10.230 BETAO (4) = -3.930

SECTION (1)BODY FLAP DEPENDENT VARIABLE CP

TAP NO 169.0000170.0000171.0000172.0000173.0000174.0000

.000 -.3392 -.3574 -.3387 -.3481 -.3579 -.3514

ARC11-716 IA14 O1+T12+S12N25+AT10 BODY FLAP (RB1F32)

ALPHAO(1) = -10.230 BETAO (5) = -1.940

SECTION (1)BODY FLAP DEPENDENT VARIABLE CP

TAP NO	169.0000170	.0000171	.0000172	.0000173	.0000174	.0000
.000	-.3295	-.3422	-.3316	-.3267	-.3609	-.3596

ALPHAO(1) = -10.240 BETAO (6) = .030

SECTION (1)BODY FLAP DEPENDENT VARIABLE CP

TAP NO	169.0000170	.0000171	.0000172	.0000173	.0000174	.0000
.000	-.3249	-.3329	-.3441	-.3078	-.3744	-.3812

ALPHAO(1) = -10.250 BETAO (7) = 2.040

SECTION (1)BODY FLAP DEPENDENT VARIABLE CP

TAP NO	169.0000170	.0000171	.0000172	.0000173	.0000174	.0000
.000	-.3333	-.3133	-.3450	-.2975	-.3945	-.3971

ALPHAO(1) = -10.260 BETAO (8) = 4.030

SECTION (1)BODY FLAP DEPENDENT VARIABLE CP

TAP NO	169.0000170	.0000171	.0000172	.0000173	.0000174	.0000
.000	-.3249	-.3176	-.3305	-.3012	-.4007	-.3999

ALPHAO(1) = -10.250 BETAO (9) = 6.090

SECTION (1)BODY FLAP DEPENDENT VARIABLE CP

TAP NO	169.0000170	.0000171	.0000172	.0000173	.0000174	.0000
.000	-.3364	-.3289	-.3355	-.3156	-.3822	-.3669

ORIGINAL PAGE IS OF POOR QUALITY

ARC11-716 TA14 O1+T12+S12N25+AT10 BODY FLAP (RB1F32)

ALPHAO(1) = -10.240 BETAO (10) = 8.120

SECTION (1)BODY FLAP DEPENDENT VARIABLE CP

TAP NO	169.0000	170.0000	171.0000	172.0000	173.0000	174.0000
.000	-.3781	-.3976	-.3407	-.3940	-.3506	-.3558

ALPHAO(1) = -10.250 BETAO (11) = 10.110

SECTION (1)BODY FLAP DEPENDENT VARIABLE CP

TAP NO	169.0000	170.0000	171.0000	172.0000	173.0000	174.0000
.000	-.3806	-.4050	-.3413	-.3976	-.3564	-.3569

ALPHAO(2) = -8.190 BETAO (1) = -9.970

SECTION (1)BODY FLAP DEPENDENT VARIABLE CP

TAP NO	169.0000	170.0000	171.0000	172.0000	173.0000	174.0000
.000	-.3640	-.3483	-.3524	-.3357	-.3347	-.3303

ALPHAO(2) = -8.200 BETAO (2) = -7.960

SECTION (1)BODY FLAP DEPENDENT VARIABLE CP

TAP NO	169.0000	170.0000	171.0000	172.0000	173.0000	174.0000
.000	-.3595	-.3436	-.3488	-.3388	-.3280	-.3277

ALPHAO(2) = -8.210 BETAO (3) = -5.960

SECTION (1)BODY FLAP DEPENDENT VARIABLE CP

TAP NO	169.0000	170.0000	171.0000	172.0000	173.0000	174.0000
.000	-.3507	-.3512	-.3399	-.3440	-.3273	-.3252

ARC11 716 IA14 O1+T12+S12N25+AT10 BODY FLAP (RE1F32)

ALPHAO(2) = -8.220 BETAO (4) = -1.980

SECTION (1)BODY FLAP DEPENDENT VARIABLE CP

TAP NO 169.0000170.0000171.0000172.0000173.0000174.0000

.000 -.3131 -.3308 -.3078 -.3080 -.3416 -.3406

ALPHAO(2) = -8.150 BETAO (5) = .010

SECTION (1)BODY FLAP DEPENDENT VARIABLE CP

TAP NO 169.0000170.0000171.0000172.0000173.0000174.0000

.000 -.3135 -.3159 -.3256 -.2894 -.3629 -.3642

ALPHAO(2) = -8.190 BETAO (6) = 2.040

SECTION (1)BODY FLAP DEPENDENT VARIABLE CP

TAP NO 169.0000170.0000171.0000172.0000173.0000174.0000

.000 -.3103 -.2983 -.3210 -.2782 -.3827 -.3829

ALPHAO(2) = -8.240 BETAO (7) = 4.040

SECTION (1)BODY FLAP DEPENDENT VARIABLE CP

TAP NO 169.0000170.0000171.0000172.0000173.0000174.0000

.000 -.3423 -.3486 -.3201 -.3592 -.3587 -.3579

ALPHAO(2) = -8.220 BETAO (8) = 6.070

SECTION (1)BODY FLAP DEPENDENT VARIABLE CP

TAP NO 169.0000170.0000171.0000172.0000173.0000174.0000

.000 -.3547 -.3700 -.3205 -.3727 -.3512 -.3499

ORIGINAL PAGE IS OF POOR QUALITY

ARC11-716 IA14 O1+T12+S12N25+AT1G BODY FLAP (RB1F32)

ALPHAO(2) = -6.230 BETAO (9) = 8.080

SECTION (1)BODY FLAP DEPENDENT VARIABLE CP

TAP NO	169.0000	170.0000	171.0000	172.0000	173.0000	174.0000
.000	-.3598	-.3816	-.3277	-.3791	-.3443	-.3474

ALPHAO(2) = -6.240 BETAO (10) = 10.100

SECTION (1)BODY FLAP DEPENDENT VARIABLE CP

TAP NO	169.0000	170.0000	171.0000	172.0000	173.0000	174.0000
.000	-.3628	-.3895	-.3277	-.3845	-.3458	-.3456

ALPHAO(3) = -6.210 BETAO (1) = -10.020

SECTION (1)BODY FLAP DEPENDENT VARIABLE CP

TAP NO	169.0000	170.0000	171.0000	172.0000	173.0000	174.0000
.000	-.3544	-.3311	-.3416	-.3201	-.3290	-.3252

ALPHAO(3) = -6.220 BETAO (2) = -7.960

SECTION (1)BODY FLAP DEPENDENT VARIABLE CP

TAP NO	169.0000	170.0000	171.0000	172.0000	173.0000	174.0000
.000	-.3453	-.3266	-.3333	-.3197	-.3225	-.3220

ALPHAO(3) = -6.230 BETAO (3) = -5.960

SECTION (1)BODY FLAP DEPENDENT VARIABLE CP

TAP NO	169.0000	170.0000	171.0000	172.0000	173.0000	174.0000
.000	-.3370	-.3267	-.3260	-.3203	-.3196	-.3160

ORIGINAL PAGE IS OF POOR QUALITY

ARC11-716 IA14 O1+T12+S12N25+AT10 BODY FLAP (RB1F52)

ALPHAO(3) = -6.120 BETAO (4) = -1.980

SECTION (1)BODY FLAP DEPENDENT VARIABLE CP

TAP NO 169.0000170.0000171.0000172.0000173.0000174.0000

.000 -.3063 -.3187 -.2986 -.3006 -.3248 -.3258

ALPHAO(3) = -6.130 BETAO (5) = .000

SECTION (1)BODY FLAP DEPENDENT VARIABLE CP

TAP NO 169.0000170.0000171.0000172.0000173.0000174.0000

.000 -.3049 -.3136 -.3086 -.2911 -.3398 -.3413

ALPHAO(3) = -6.120 BETAO (6) = 2.030

SECTION (1)BODY FLAP DEPENDENT VARIABLE CP

TAP NO 169.0000170.0000171.0000172.0000173.0000174.0000

.000 -.2956 -.2848 -.3100 -.2636 -.3703 -.3684

ALPHAO(3) = -6.110 BETAO (7) = 4.060

SECTION (1)BODY FLAP DEPENDENT VARIABLE CP

TAP NO 169.0000170.0000171.0000172.0000173.0000174.0000

.000 -.3204 -.3307 -.2950 -.3404 -.3481 -.3481

ALPHAO(3) = -6.190 BETAO (8) = 6.080

SECTION (1)BODY FLAP DEPENDENT VARIABLE CP

TAP NO 169.0000170.0000171.0000172.0000173.0000174.0000

.000 -.3359 -.3509 -.3055 -.3582 -.3328 -.3379

ARC11-716 IA14 Q1+T12+S12N25+AT10 BODY FLAP (RB1F32)

ALPHAO(3) = -6.190 BETAO (9) = 8.090

SECTION (1)BODY FLAP DEPENDENT VARIABLE CP

TAP NO	169.0000	170.0000	171.0000	172.0000	173.0000	174.0000
	.000	-.3504	-.3718	-.3116	-.3661	-.3291	-.3337

ALPHAO(3) = -6.170 BETAO (10) = 10.090

SECTION (1)BODY FLAP DEPENDENT VARIABLE CP

TAP NO	169.0000	170.0000	171.0000	172.0000	173.0000	174.0000
	.000	-.3506	-.3839	-.3090	-.3757	-.3407	-.3405

ALPHAO(4) = -4.240 BETAO (1) = -10.010

SECTION (1)BODY FLAP DEPENDENT VARIABLE CP

TAP NO	169.0000	170.0000	171.0000	172.0000	173.0000	174.0000
	.000	-.3547	-.3316	-.3371	-.3096	-.3379	-.3327

ALPHAO(4) = -4.270 BETAO (2) = -8.020

SECTION (1)BODY FLAP DEPENDENT VARIABLE CP

TAP NO	169.0000	170.0000	171.0000	172.0000	173.0000	174.0000
	.000	-.3395	-.3196	-.3251	-.3083	-.3280	-.3218

ALPHAO(4) = -4.290 BETAO (3) = -5.970

SECTION (1)BODY FLAP DEPENDENT VARIABLE CP

TAP NO	169.0000	170.0000	171.0000	172.0000	173.0000	174.0000
	.000	-.3245	-.3079	-.3154	-.3066	-.3222	-.3152

ARC11-716 IA14 O1+T12+S12N25+A710 BODY FLAP (RB1F32)

ALPHAO(4) = -4.250 BETAO (4) = -3.970

SECTION (1)BODY FLAP DEPENDENT VARIABLE CP

TAP NO 169.0000170.0000171.0000172.0000173.0000174.0000

.000 -.3076 -.3009 -.3003 -.2952 -.3201 -.3154

ALPHAO(4) = -4.240 BETAO (5) = -1.960

SECTION (1)BODY FLAP DEPENDENT VARIABLE CP

TAP NO 169.0000170.0000171.0000172.0000173.0000174.0000

.000 -.2914 -.3007 -.2865 -.2893 -.3184 -.3199

ALPHAO(4) = -4.220 BETAO (6) = .020

SECTION (1)BODY FLAP DEPENDENT VARIABLE CP

TAP NO 169.0000170.0000171.0000172.0000173.0000174.0000

.000 -.2896 -.2991 -.3001 -.2786 -.3342 -.3337

ALPHAO(4) = -4.290 BETAO (7) = 2.020

SECTION (1)BODY FLAP DEPENDENT VARIABLE CP

TAP NO 169.0000170.0000171.0000172.0000173.0000174.0000

.000 -.2833 -.2786 -.2904 -.2614 -.3614 -.3570

ALPHAO(4) = -4.310 BETAO (8) = 4.040

SECTION (1)BODY FLAP DEPENDENT VARIABLE CP

TAP NO 169.0000170.0000171.0000172.0000173.0000174.0000

.000 -.3155 -.3176 -.2837 -.3307 -.3372 -.3351

ARC11-716 IA14 O1+T12+S12N25+AT10 BODY FLAP (RB1F32)

ALPHAO(4) = -4.220 BETAO (9) = 8.060

SECTION (1)BODY FLAP DEPENDENT VARIABLE CP

TAP NO	169.0000	170.0000	171.0000	172.0000	173.0000	174.0000
.000	-.3359	-.3615	-.2972	-.3591	-.3252	-.3304

ALPHAO(4) = -4.210 BETAO (10) = 10.100

SECTION (1)BODY FLAP DEPENDENT VARIABLE CP

TAP NO	169.0000	170.0000	171.0000	172.0000	173.0000	174.0000
.000	-.3368	-.3679	-.2945	-.3644	-.3313	-.3334

ALPHAO(5) = -2.920 BETAO (1) = -10.000

SECTION (1)BODY FLAP DEPENDENT VARIABLE CP

TAP NO	169.0000	170.0000	171.0000	172.0000	173.0000	174.0000
.000	-.3479	-.3182	-.3345	-.3027	-.3371	-.3327

ALPHAO(5) = -2.930 BETAO (2) = -8.000

SECTION (1)BODY FLAP DEPENDENT VARIABLE CP

TAP NO	169.0000	170.0000	171.0000	172.0000	173.0000	174.0000
.000	-.3428	-.3177	-.3236	-.3047	-.3161	-.3172

ALPHAO(5) = -2.930 BETAO (3) = -5.970

SECTION (1)BODY FLAP DEPENDENT VARIABLE CP

TAP NO	169.0000	170.0000	171.0000	172.0000	173.0000	174.0000
.000	-.3177	-.3027	-.3140	-.2933	-.3215	-.3177

ARC11-716 IA14 O1+T12+S12N25+AT10 BODY FLAP (RB1F32)

ALPHAO(5) = -2.910 BETAO (4) = -3.960

SECTION (1)BODY FLAP DEPENDENT VARIABLE CP

TAP NO	169.0000	170.0000	171.0000	172.0000	173.0000	174.0000
.000	-.3075	-.2922	-.2988	-.2809	-.3133	-.3112

ALPHAO(5) = -2.910 BETAO (5) = -2.000

SECTION (1)BODY FLAP DEPENDENT VARIABLE CP

TAP NO	169.0000	170.0000	171.0000	172.0000	173.0000	174.0000
.000	-.2913	-.2895	-.2844	-.2816	-.3194	-.3152

ALPHAO(5) = -2.910 BETAO (6) = .020

SECTION (1)BODY FLAP DEPENDENT VARIABLE CP

TAP NO	169.0000	170.0000	171.0000	172.0000	173.0000	174.0000
.000	-.2926	-.2908	-.2958	-.2730	-.3347	-.3318

ALPHAO(5) = -2.910 BETAO (7) = 2.050

SECTION (1)BODY FLAP DEPENDENT VARIABLE CP

TAP NO	169.0000	170.0000	171.0000	172.0000	173.0000	174.0000
.000	-.2818	-.2774	-.2814	-.2809	-.3535	-.3452

ALPHAO(5) = -2.920 BETAO (8) = 4.080

SECTION (1)BODY FLAP DEPENDENT VARIABLE CP

TAP NO	169.0000	170.0000	171.0000	172.0000	173.0000	174.0000
.000	-.2765	-.2944	-.2767	-.2723	-.3523	-.3359

ORIGINAL PAGE IS OF POOR QUALITY

ARC11-716 IA14 O1+T12+S12N25+AT10 BODY FLAP (R81F32)

ALPHAO(5) = -2.930 BETAO (9) = 6.070

SECTION (1)BODY FLAP DEPENDENT VARIABLE CP

TAP NO	169.0000	170.0000	171.0000	172.0000	173.0000	174.0000
.000	-.2942	-.3121	-.2820	-.2890	-.3504	-.3316

ALPHAO(5) = -2.920 BETAO (10) = 8.110

SECTION (1)BODY FLAP DEPENDENT VARIABLE CP

TAP NO	169.0000	170.0000	171.0000	172.0000	173.0000	174.0000
.000	-.3337	-.3578	-.2984	-.3618	-.3244	-.3324

ALPHAO(5) = -2.900 BETAO (11) = 10.100

SECTION (1)BODY FLAP DEPENDENT VARIABLE CP

TAP NO	169.0000	170.0000	171.0000	172.0000	173.0000	174.0000
.000	-.3317	-.3630	-.2983	-.3652	-.3345	-.3350

ALPHAO(6) = -.750 BETAO (1) = -10.040

SECTION (1)BODY FLAP DEPENDENT VARIABLE CP

TAP NO	169.0000	170.0000	171.0000	172.0000	173.0000	174.0000
.000	-.3456	-.3108	-.3268	-.2915	-.3468	-.3326

ALPHAO(6) = -.740 BETAO (2) = -8.040

SECTION (1)BODY FLAP DEPENDENT VARIABLE CP

TAP NO	169.0000	170.0000	171.0000	172.0000	173.0000	174.0000
.000	-.3440	-.3124	-.3216	-.2957	-.3292	-.3198

ARC11-716 IA14 O1+T12+S12N25+AT10 BODY FLAP (RB1F32)

ALPHAO(6) = -.720 BETAO (3) = -5.990

SECTION (1)BODY FLAP DEPENDENT VARIABLE CP

TAP NO 169.0000170.0000171.0000172.0000173.0000174.0000

.000 -.3300 -.3009 -.3126 -.2874 -.3157 -.3155

ALPHAO(6) = -.710 BETAO (4) = -3.980

SECTION (1)BODY FLAP DEPENDENT VARIABLE CP

TAP NO 169.0000170.0000171.0000172.0000173.0000174.0000

.000 -.3093 -.2908 -.2957 -.2843 -.3185 -.3139

ALPHAO(6) = -.700 BETAO (5) = -2.010

SECTION (1)BODY FLAP DEPENDENT VARIABLE CP

TAP NO 169.0000170.0000171.0000172.0000173.0000174.0000

.000 -.2852 -.2790 -.2867 -.2719 -.3126 -.3080

ALPHAO(6) = -.690 BETAO (6) = .040

SECTION (1)BODY FLAP DEPENDENT VARIABLE CP

TAP NO 169.0000170.0000171.0000172.0000173.0000174.0000

.000 -.2802 -.2745 -.2887 -.2632 -.3261 -.3248

ALPHAO(6) = -.690 BETAO (7) = 2.030

SECTION (1)BODY FLAP DEPENDENT VARIABLE CP

TAP NO 169.0000170.0000171.0000172.0000173.0000174.0000

.000 -.2703 -.2742 -.2734 -.2574 -.3453 -.3279

ORIGINAL PAGE IS OF POOR QUALITY

ARC11-716 IA14 O1+T12+S12N25+AT10 BODY FLAP (RB1F32)

ALPHAO(6) = -.710 BETAO (8) = 4.060

SECTION (1)BODY FLAP DEPENDENT VARIABLE CP

TAP NO 169.0000170.0000171.0000172.0000173.0000174.0000

.000 -.3010 -.3036 -.2715 -.3190 -.3390 -.3294

ALPHAO(6) = -.720 BETAO (9) = 6.080

SECTION (1)BODY FLAP DEPENDENT VARIABLE CP

TAP NO 169.0000170.0000171.0000172.0000173.0000174.0000

.000 -.3076 -.3174 -.2730 -.3324 -.3285 -.3280

ALPHAO(6) = -.730 BETAO (10) = 8.100

SECTION (1)BODY FLAP DEPENDENT VARIABLE CP

TAP NO 169.0000170.0000171.0000172.0000173.0000174.0000

.000 -.3187 -.3363 -.2794 -.3478 -.3361 -.3312

ALPHAO(6) = -.740 BETAO (11) = 10.160

SECTION (1)BODY FLAP DEPENDENT VARIABLE CP

TAP NO 169.0000170.0000171.0000172.0000173.0000174.0000

.000 -.3237 -.3498 -.2804 -.3515 -.3342 -.3318

ALPHAO(7) = 2.030 BETAO (1) = -10.000

SECTION (1)BODY FLAP DEPENDENT VARIABLE CP

TAP NO 169.0000170.0000171.0000172.0000173.0000174.0000

.000 -.3394 -.3046 -.3241 -.2877 -.3482 -.3350

ARC11-716 IA14 O1+T12+S12N25+AT10 BODY FLAP (RB1F32)

ALPHAO(7) = 2.080 BETAO (2) = -8.030

SECTION (1)BODY FLAP DEPENDENT VARIABLE CP

TAP NO	169.0000	170.0000	171.0000	172.0000	173.0000	174.0000
.000	-.3365	-.3013	-.3150	-.2858	-.3285	-.3223

ALPHAO(7) = 2.080 BETAO (3) = -5.990

SECTION (1)BODY FLAP DEPENDENT VARIABLE CP

TAP NO	169.0000	170.0000	171.0000	172.0000	173.0000	174.0000
.000	-.3187	-.2892	-.3066	-.2770	-.3273	-.3247

ALPHAO(7) = 1.940 BETAO (4) = -4.010

SECTION (1)BODY FLAP DEPENDENT VARIABLE CP

TAP NO	169.0000	170.0000	171.0000	172.0000	173.0000	174.0000
.000	-.3042	-.2884	-.2989	-.2766	-.3105	-.3095

ALPHAO(7) = 1.950 BETAO (5) = -2.000

SECTION (1)BODY FLAP DEPENDENT VARIABLE CP

TAP NO	169.0000	170.0000	171.0000	172.0000	173.0000	174.0000
.000	-.2899	-.2772	-.2816	-.2689	-.2992	-.2974

ALPHAO(7) = 1.950 BETAO (6) = .040

SECTION (1)BODY FLAP DEPENDENT VARIABLE CP

TAP NO	169.0000	170.0000	171.0000	172.0000	173.0000	174.0000
.000	-.2767	-.2676	-.2832	-.2534	-.3162	-.3107

ARC11-716 IA14 01+T12+S12N25+AT10 BODY FLAP (RB1F32)

ALPHAO(7) = 1.930 BETAO (7) = 2.030

SECTION (1)BODY FLAP DEPENDENT VARIABLE CP

TAP NO 169.0000170.0000171.0000172.0000173.0000174.0000

.000 -.2693 -.2716 -.2687 -.2511 -.3311 -.3194

ALPHAO(7) = 1.930 BETAO (8) = 4.070

SECTION (1)BODY FLAP DEPENDENT VARIABLE CP

TAP NO 169.0000170.0000171.0000172.0000173.0000174.0000

.000 -.2587 -.2740 -.2470 -.2530 -.3399 -.3225

ALPHAO(7) = 1.980 BETAO (9) = 6.100

SECTION (1)BODY FLAP DEPENDENT VARIABLE CP

TAP NO 169.0000170.0000171.0000172.0000173.0000174.0000

.000 -.2674 -.2832 -.2521 -.2635 -.3442 -.3227

ALPHAO(7) = 1.930 BETAO (10) = 8.100

SECTION (1)BODY FLAP DEPENDENT VARIABLE CP

TAP NO 169.0000170.0000171.0000172.0000173.0000174.0000

.000 -.2798 -.2934 -.2997 -.2763 -.3514 -.3361

ALPHAO(7) = 1.940 BETAO (11) = 10.140

SECTION (1)BODY FLAP DEPENDENT VARIABLE CP

TAP NO 169.0000170.0000171.0000172.0000173.0000174.0000

.000 -.3130 -.3405 -.2643 -.3403 -.3286 -.3268

ARC11-716 IA14 O1+T12+S12N25+AT10 BODY FLAP (RB1F32)

ALPHAO(8) = 3.970 BETAO (1) = -9.990

SECTION (1)BODY FLAP DEPENDENT VARIABLE CP

TAP NO	169.0000	170.0000	171.0000	172.0000	173.0000	174.0000
	.000	-.3350	-.3057	-.3224	-.2874	-.3496	-.3356

ALPHAO(8) = 3.990 BETAO (2) = -8.000

SECTION (1)BODY FLAP DEPENDENT VARIABLE CP

TAP NO	169.0000	170.0000	171.0000	172.0000	173.0000	174.0000
	.000	-.3283	-.2961	-.3146	-.2791	-.3466	-.3323

ALPHAO(8) = 3.970 BETAO (3) = -6.020

SECTION (1)BODY FLAP DEPENDENT VARIABLE CP

TAP NO	169.0000	170.0000	171.0000	172.0000	173.0000	174.0000
	.000	-.3118	-.2839	-.2997	-.2723	-.3235	-.3199

ALPHAO(8) = 3.930 BETAO (4) = -3.990

SECTION (1)BODY FLAP DEPENDENT VARIABLE CP

TAP NO	169.0000	170.0000	171.0000	172.0000	173.0000	174.0000
	.000	-.2953	-.2792	-.2999	-.2710	-.3151	-.3128

ALPHAO(8) = 3.930 BETAO (5) = -2.000

SECTION (1)BODY FLAP DEPENDENT VARIABLE CP

TAP NO	169.0000	170.0000	171.0000	172.0000	173.0000	174.0000
	.000	-.2834	-.2743	-.2774	-.2665	-.2996	-.2989

ORIGINAL PAGE IS OF POOR QUALITY

ARC11-716 1A14 C1+T12+S12N25+AT10 BODY FLAP (RB1F32)

ALPHAO(8) = 3.940 BETAO (6) = .040

SECTION (1)BODY FLAP DEPENDENT VARIABLE CP

TAP NO 169.0000170.0000171.0000172.0000173.0000174.0000

.000 -.2782 -.2639 -.2797 -.2513 -.3125 -.3063

ALPHAO(8) = 4.030 BETAO (7) = 2.050

SECTION (1)BODY FLAP DEPENDENT VARIABLE CP

TAP NO 169.0000170.0000171.0000172.0000173.0000174.0000

.000 -.2629 -.2657 -.2585 -.2465 -.3298 -.3184

ALPHAO(8) = 4.020 BETAO (8) = 4.070

SECTION (1)BODY FLAP DEPENDENT VARIABLE CP

TAP NO 169.0000170.0000171.0000172.0000173.0000174.0000

.000 -.2853 -.2812 -.2513 -.2935 -.3083 -.3044

ALPHAO(8) = 4.010 BETAO (9) = 6.080

SECTION (1)BODY FLAP DEPENDENT VARIABLE CP

TAP NO 169.0000170.0000171.0000172.0000173.0000174.0000

.000 -.2869 -.2982 -.2529 -.3099 -.3169 -.3169

ALPHAO(8) = 4.080 BETAO (10) = 8.110

SECTION (1)BODY FLAP DEPENDENT VARIABLE CP

TAP NO 169.0000170.0000171.0000172.0000173.0000174.0000

.000 -.2977 -.3189 -.2602 -.3302 -.3258 -.3227

ARC11-716 IA14 O1+T12+S12N25+AT10 BODY FLAP (RB1F32)

ALPHAO(8) = 4.050 BETAO (11) = 10.160

SECTION (1)BODY FLAP DEPENDENT VARIABLE CP

TAP NO	169.0000	170.0000	171.0000	172.0000	173.0000	174.0000
.000	-.3076	-.3363	-.2612	-.3364	-.3330	-.3333

ALPHAO(9) = 5.980 BETAO (1) = -9.980

SECTION (1)BODY FLAP DEPENDENT VARIAPLE CP

TAP NO	169.0000	170.0000	171.0000	172.0000	173.0000	174.0000
.000	-.3295	-.2923	-.3140	-.2705	-.3523	-.3448

ALPHAO(9) = 5.960 BETAO (2) = -7.980

SECTION (1)BODY FLAP DEPENDENT VARIABLE CP

TAP NO	169.0000	170.0000	171.0000	172.0000	173.0000	174.0000
.000	-.3234	-.2877	-.3067	-.2729	-.3466	-.3362

ALPHAO(9) = 5.940 BETAO (3) = -5.960

SECTION (1)BODY FLAP DEPENDENT VARIABLE CP

TAP NO	169.0000	170.0000	171.0000	172.0000	173.0000	174.0000
.000	-.3098	-.2813	-.2968	-.2626	-.3266	-.3222

ALPHAO(9) = 5.960 BETAO (4) = -3.990

SECTION (1)BODY FLAP DEPENDENT VARIABLE CP

TAP NO	169.0000	170.0000	171.0000	172.0000	173.0000	174.0000
.000	-.2956	-.2718	-.2891	-.2613	-.3176	-.3147

ORIGINAL PAGE IS OF POOR QUALITY

ARC11-716 IA14 O1+T12+S12N25+AT10 BODY FLAP (RB1F32)

ALPHAO(9) = 5.970 BETAO (5) = -1.970

SECTION (1)BODY FLAP DEPENDENT VARIABLE CP

TAP NO	169.0000	170.0000	171.0000	172.0000	173.0000	174.0000
.000	-.2848	-.2679	-.2842	-.2640	-.3169	-.3132

ALPHAO(9) = 5.980 BETAO (6) = .030

SECTION (1)BODY FLAP DEPENDENT VARIABLE CP

TAP NO	169.0000	170.0000	171.0000	172.0000	173.0000	174.0000
.000	-.2809	-.2597	-.2723	-.2459	-.3184	-.3096

ALPHAO(9) = 5.970 BETAO (7) = 2.030

SECTION (1)BODY FLAP DEPENDENT VARIABLE CP

TAP NO	169.0000	170.0000	171.0000	172.0000	173.0000	174.0000
.000	-.2535	-.2530	-.2440	-.2373	-.3414	-.3230

ALPHAO(9) = 5.950 BETAO (8) = 4.080

SECTION (1)BODY FLAP DEPENDENT VARIABLE CP

TAP NO	169.0000	170.0000	171.0000	172.0000	173.0000	174.0000
.000	-.2815	-.2768	-.2462	-.2843	-.3143	-.3071

ALPHAO(9) = 5.940 BETAO (9) = 6.100

SECTION (1)BODY FLAP DEPENDENT VARIABLE CP

TAP NO	169.0000	170.0000	171.0000	172.0000	173.0000	174.0000
.000	-.2867	-.3007	-.2508	-.3060	-.3175	-.3128

ORIGINAL PAGE IS
OF POOR QUALITY

ARC11-716 IA14 O1+T12+S12N25+AT10 BODY FLAP (RB1F32)

ALPHAO(9) = 5.920 BETAO (10) = 8.130

SECTION (1)BODY FLAP DEPENDENT VARIABLE CP

TAP NO	169.0000	170.0000	171.0000	172.0000	173.0000	174.0000
.000	-.2974	-.3145	-.2516	-.3232	-.3323	-.3305

ALPHAO(9) = 5.980 BETAO (11) = 10.150

SECTION (1)BODY FLAP DEPENDENT VARIABLE CP

TAP NO	169.0000	170.0000	171.0000	172.0000	173.0000	174.0000
.000	-.2968	-.3281	-.2552	-.3404	-.3458	-.3430

ALPHAO(10) = 8.080 BETAO (1) = -9.950

SECTION (1)BODY FLAP DEPENDENT VARIABLE CP

TAP NO	169.0000	170.0000	171.0000	172.0000	173.0000	174.0000
.000	-.3339	-.2882	-.3208	-.2767	-.3650	-.3551

ALPHAO(10) = 8.110 BETAO (2) = -7.950

SECTION (1)BODY FLAP DEPENDENT VARIABLE CP

TAP NO	169.0000	170.0000	171.0000	172.0000	173.0000	174.0000
.000	-.3321	-.2976	-.3153	-.2754	-.3498	-.3436

ALPHAO(10) = 8.130 BETAO (3) = -5.940

SECTION (1)BODY FLAP DEPENDENT VARIABLE CP

TAP NO	169.0000	170.0000	171.0000	172.0000	173.0000	174.0000
.000	-.3106	-.2859	-.2970	-.2712	-.3355	-.3306

ARC11-716 IA14 O1+T12+S12N25+AT10 BODY FLAP (RB1F32)

ALPHAO(10) = 7.980 BETAO (4) = -3.970

SECTION (1)BODY FLAP DEPENDENT VARIABLE CP

TAP NO 169.0000170.0000171.0000172.0000173.0000174.0000

.000 -.3061 -.2811 -.2912 -.2683 -.3313 -.3230

ALPHAO(10) = 8.010 BETAO (5) = -1.970

SECTION (1)BODY FLAP DEPENDENT VARIABLE CP

TAP NO 169.0000170.0000171.0000172.0000173.0000174.0000

.000 -.2986 -.2638 -.2823 -.2635 -.3262 -.3244

ALPHAO(10) = 7.930 BETAO (6) = .060

SECTION (1)BODY FLAP DEPENDENT VARIABLE CP

TAP NO 169.0000170.0000171.0000172.0000173.0000174.0000

.000 -.2796 -.2507 -.2698 -.2404 -.3258 -.3178

ALPHAO(10) = 7.970 BETAO (7) = 2.050

SECTION (1)BODY FLAP DEPENDENT VARIABLE CP

TAP NO 169.0000170.0000171.0000172.0000173.0000174.0000

.000 -.2512 -.2553 -.2436 -.2316 -.3279 -.3207

ALPHAO(10) = 7.950 BETAO (8) = 4.080

SECTION (1)BODY FLAP DEPENDENT VARIABLE CP

TAP NO 169.0000170.0000171.0000172.0000173.0000174.0000

.000 -.2777 -.2749 -.2444 -.2827 -.3333 -.3177

ARC11-716 IA14 O1+T12+S12N25+AT10 BODY FLAP (RB1F32)

ALPHAO(10) = 7.920 BETAO (9) = 8.110

SECTION (1)BODY FLAP DEPENDENT VARIABLE CP

TAP NO	169.0000	170.0000	171.0000	172.0000	173.0000	174.0000
	.000	-.2843	-.2922	-.2505	-.3021	-.3316	-.3237

ALPHAO(10) = 7.910 BETAO (10) = 8.160

SECTION (1)BODY FLAP DEPENDENT VARIABLE CP

TAP NO	169.0000	170.0000	171.0000	172.0000	173.0000	174.0000
	.000	-.2979	-.3110	-.2595	-.3223	-.3403	-.3385

ALPHAO(10) = 8.060 BETAO (11) = 10.180

SECTION (1)BODY FLAP DEPENDENT VARIABLE CP

TAP NO	169.0000	170.0000	171.0000	172.0000	173.0000	174.0000
	.000	-.3017	-.3269	-.2609	-.3370	-.3612	-.3602

ALPHAO(11) = 10.040 BETAO (1) = -9.930

SECTION (1)BODY FLAP DEPENDENT VARIABLE CP

TAP NO	169.0000	170.0000	171.0000	172.0000	173.0000	174.0000
	.000	-.3335	-.2903	-.3097	-.2696	-.3676	-.3499

ALPHAO(11) = 9.930 BETAO (2) = -7.950

SECTION (1)BODY FLAP DEPENDENT VARIABLE CP

TAP NO	169.0000	170.0000	171.0000	172.0000	173.0000	174.0000
	.000	-.3283	-.2814	-.2952	-.2669	-.3566	-.3470

ARC11-716 IA14 O1+T12+S12N25+AT10 BODY FLAP (RB1F32)

ALPHAO(11) = 9.960 BETAO (3) = -5.920

SECTION (1)BODY FLAP DEPENDENT VARIABLE CP

TAP NO 169.0000170.0000171.0000172.0000173.0000174.0000

.000 -.3128 -.2827 -.2929 -.2661 -.3472 -.3416

ALPHAO(11) = 9.960 BETAO (4) = -3.970

SECTION (1)BODY FLAP DEPENDENT VARIABLE CP

TAP NO 169.0000170.0000171.0000172.0000173.0000174.0000

.000 -.3084 -.2762 -.2915 -.2653 -.3374 -.3338

ALPHAO(11) = 9.950 BETAO (5) = -1.970

SECTION (1)BODY FLAP DEPENDENT VARIABLE CP

TAP NO 169.0000170.0000171.0000172.0000173.0000174.0000

.000 -.2891 -.2692 -.2782 -.2586 -.3132 -.3080

ALPHAO(11) = 9.950 BETAO (6) = .030

SECTION (1)BODY FLAP DEPENDENT VARIABLE CP

TAP NO 169.0000170.0000171.0000172.0000173.0000174.0000

.000 -.2814 -.2624 -.2829 -.2491 -.3116 -.3035

ALPHAO(11) = 9.950 BETAO (7) = 2.060

SECTION (1)BODY FLAP DEPENDENT VARIABLE CP

TAP NO 169.0000170.0000171.0000172.0000173.0000174.0000

.000 -.2713 -.2662 -.2731 -.2408 -.3274 -.3182

ARC11-716 IA14 O1+T12+S12N25+AT10 BODY FLAP (RB1F32)

ALPHAO(11) = 9.960 BETAO (8) = 4.080

SECTION (1)BODY FLAP DEPENDENT VARIABLE CP

TAP NO	169.0000	170.0000	171.0000	172.0000	173.0000	174.0000
.000	-.2775	-.2791	-.2466	-.2797	-.3335	-.3220

ALPHAO(11) = 10.040 BETAO (9) = 6.140

SECTION (1)BODY FLAP DEPENDENT VARIABLE CP

TAP NO	169.0000	170.0000	171.0000	172.0000	173.0000	174.0000
.000	-.2889	-.2952	-.2509	-.2997	-.3417	-.3348

ALPHAO(11) = 10.030 BETAO (10) = 8.160

SECTION (1)BODY FLAP DEPENDENT VARIABLE CP

TAP NO	169.0000	170.0000	171.0000	172.0000	173.0000	174.0000
.000	-.3008	-.3156	-.2541	-.3156	-.3511	-.3467

ALPHAO(11) = 10.070 BETAO (11) = 10.230

SECTION (1)BODY FLAP DEPENDENT VARIABLE CP

TAP NO	169.0000	170.0000	171.0000	172.0000	173.0000	174.0000
.000	-.2946	-.3217	-.2516	-.3316	-.3479	-.3482

ORIGINAL PAGE IS OF POOR QUALITY

ARC11-716 IA14 01+T12+S12N25+AT10 BODY FLAP (RB1F33) (17 APR 74)

REFERENCE DATA

SREF = 2.4210 SQ.FT. XMRP = 29.5800 INCHES
LREF = 38.7090 INCHES YMRP = .0000 INCHES
BREF = 38.7090 INCHES ZMRP = .0000 INCHES
SCALE = .0300 SCALE

PARAMETRIC DATA

MACH = 1.250 ELEVON = .000
RUDDER = .000 SPOBRK = .000

ALPHAO(1) = -10.340 BETAO (1) = -9.910

SECTION (1)BODY FLAP DEPENDENT VARIABLE CP

TAP NO 169.0000170.0000171.0000172.0000173.0000174.0000

.000 -.3063 -.3433 -.2986 -.3022 -.2813 -.2792

ALPHAO(1) = -10.260 BETAO (2) = -7.920

SECTION (1)BODY FLAP DEPENDENT VARIABLE CP

TAP NO 169.0000170.0000171.0000172.0000173.0000174.0000

.000 -.3023 -.3183 -.2982 -.3010 -.2877 -.2817

ALPHAO(1) = -10.250 BETAO (3) = -5.920

SECTION (1)BODY FLAP DEPENDENT VARIABLE CP

TAP NO 169.0000170.0000171.0000172.0000173.0000174.0000

.000 -.2923 -.3037 -.2883 -.2964 -.2865 -.2797

ALPHAO(1) = -10.240 BETAO (4) = -3.960

SECTION (1)BODY FLAP DEPENDENT VARIABLE CP

TAP NO 169.0000170.0000171.0000172.0000173.0000174.0000

.000 -.2740 -.2868 -.2764 -.2751 -.2931 -.2941

QUALITY PAGE IS OF POOR QUALITY

ARC11-716 IA14 O1+T12+S12N25+AT10 BODY FLAP (RB1F33)

ALPHAO(1) = -10.250 BETAO (5) = -1.970

SECTION (1)BODY FLAP DEPENDENT VARIABLE CP

TAP NO	169.0000	170.0000	171.0000	172.0000	173.0000	174.0000
.000	-.2698	-.2805	-.2719	-.2617	-.2993	-.2949

ALPHAO(1) = -10.160 BETAO (6) = .020

SECTION (1)BODY FLAP DEPENDENT VARIABLE CP

TAP NO	169.0000	170.0000	171.0000	172.0000	173.0000	174.0000
.000	-.2678	-.2644	-.2801	-.2453	-.3021	-.3084

ALPHAO(1) = -10.160 BETAO (7) = 2.040

SECTION (1)BODY FLAP DEPENDENT VARIABLE CP

TAP NO	169.0000	170.0000	171.0000	172.0000	173.0000	174.0000
.000	-.2738	-.2474	-.2663	-.2323	-.3135	-.3205

ALPHAO(1) = -10.220 BETAO (8) = 4.080

SECTION (1)BODY FLAP DEPENDENT VARIABLE CP

TAP NO	169.0000	170.0000	171.0000	172.0000	173.0000	174.0000
.000	-.2767	-.2530	-.2800	-.2477	-.3061	-.3168

ALPHAO(1) = -10.230 BETAO (9) = 6.080

SECTION (1)BODY FLAP DEPENDENT VARIABLE CP

TAP NO	169.0000	170.0000	171.0000	172.0000	173.0000	174.0000
.000	-.2852	-.2698	-.2801	-.2598	-.3117	-.3042

ARC11-716 IA14 O1+T12+S12N25+AT10 BODY FLAP (RB1F33)

ALPHAO(1) = -10.230 BETAO (10) = 6.120

SECTION (1)BODY FLAP DEPENDENT VARIABLE CP

TAP NO	169.0000	170.0000	171.0000	172.0000	173.0000	174.0000
.000	-.2869	-.2804	-.2801	-.2656	-.3119	-.3104

ALPHAO(1) = -10.240 BETAO (11) = 10.110

SECTION (1)BODY FLAP DEPENDENT VARIABLE CP

TAP NO	169.0000	170.0000	171.0000	172.0000	173.0000	174.0000
.000	-.3200	-.3415	-.2022	-.3300	-.2984	-.2992

ALPHAO(2) = -8.220 BETAO (1) = -9.940

SECTION (1)BODY FLAP DEPENDENT VARIABLE CP

TAP NO	169.0000	170.0000	171.0000	172.0000	173.0000	174.0000
.000	-.3091	-.3060	-.2792	-.2753	-.2998	-.2930

ALPHAO(2) = -8.240 BETAO (2) = -7.960

SECTION (1)BODY FLAP DEPENDENT VARIABLE CP

TAP NO	169.0000	170.0000	171.0000	172.0000	173.0000	174.0000
.000	-.2935	-.3113	-.2848	-.2835	-.2749	-.2710

ALPHAO(2) = -8.240 BETAO (3) = -5.960

SECTION (1)BODY FLAP DEPENDENT VARIABLE CP

TAP NO	169.0000	170.0000	171.0000	172.0000	173.0000	174.0000
.000	-.2823	-.2883	-.2713	-.2851	-.2776	-.2713

ARC11-716 TA14 O1+T12+S12N25+AT10 BODY FLAP (RB1F33)

ALPHAO(2) = -8.250 BETAO (4) = -3.980

SECTION (1)BODY FLAP DEPENDENT VARIABLE CP

TAP NO	169.0000	170.0000	171.0000	172.0000	173.0000	174.0000
.000	-.2636	-.2743	-.2642	-.2645	-.2801	-.2770

ALPHAO(2) = -8.250 BETAO (5) = -1.990

SECTION (1)BODY FLAP DEPENDENT VARIABLE CP

TAP NO	169.0000	170.0000	171.0000	172.0000	173.0000	174.0000
.000	-.2593	-.2695	-.2589	-.2495	-.2881	-.2880

ALPHAO(2) = -8.250 BETAO (6) = .010

SECTION (1)BODY FLAP DEPENDENT VARIABLE CP

TAP NO	169.0000	170.0000	171.0000	172.0000	173.0000	174.0000
.000	-.2550	-.2543	-.2703	-.2340	-.2936	-.3004

ALPHAO(2) = -8.230 BETAO (7) = 2.020

SECTION (1)BODY FLAP DEPENDENT VARIABLE CP

TAP NO	169.0000	170.0000	171.0000	172.0000	173.0000	174.0000
.000	-.2661	-.2470	-.2805	-.2295	-.3080	-.3156

ALPHAO(2) = -8.230 BETAO (8) = 4.040

SECTION (1)BODY FLAP DEPENDENT VARIABLE CP

TAP NO	169.0000	170.0000	171.0000	172.0000	173.0000	174.0000
.000	-.2885	-.2846	-.2616	-.2864	-.2890	-.2885

ARC11-716 IA14 O1+T12+S12N25+AT10 BODY FLAP (RB1F33)

ALPHAO(2) = -8.220 BETAO (9) = 6.050

SECTION (1)BODY FLAP DEPENDENT VARIABLE CP

TAP NO	169.0000170.	0000171.	0000172.	0000173.	0000174.	0000
.000	-.3007	-.3020	-.2898	-.3046	-.2905	-.2879

ALPHAO(2) = -8.220 BETAO (10) = 8.100

SECTION (1)BODY FLAP DEPENDENT VARIABLE CP

TAP NO	169.0000170.	0000171.	0000172.	0000173.	0000174.	0000
.000	-.3108	-.3187	-.2790	-.3202	-.2960	-.2978

ALPHAO(2) = -8.220 BETAO (11) = 10.130

SECTION (1)BODY FLAP DEPENDENT VARIABLE CP

TAP NO	169.0000170.	0000171.	0000172.	0000173.	0000174.	0000
.000	-.3087	-.3320	-.2788	-.3236	-.2957	-.2975

ALPHAO(3) = -6.280 BETAO (1) = -9.970

SECTION (1)BODY FLAP DEPENDENT VARIABLE CP

TAP NO	169.0000170.	0000171.	0000172.	0000173.	0000174.	0000
.000	-.3068	-.2985	-.2746	-.2707	-.3055	-.2979

ALPHAO(3) = -6.280 BETAO (2) = -7.990

SECTION (1)BODY FLAP DEPENDENT VARIABLE CP

TAP NO	169.0000170.	0000171.	0000172.	0000173.	0000174.	0000
.000	-.3050	-.2929	-.2751	-.2670	-.2971	-.2895

ARC11-716 IA14 O1+T12+S12N25+AT10 BODY FLAP (RB1F33)

ALPHAO(3) = -6.300 BETAO (3) = -6.000

SECTION (1)BODY FLAP DEPENDENT VARIABLE CP

TAP NO 169.0000170.0000171.0000172.0000173.0000174.0000

.000 -.2798 -.2826 -.2651 -.2588 -.2918 -.2871

ALPHAO(3) = -6.260 BETAO (4) = -3.980

SECTION (1)BODY FLAP DEPENDENT VARIABLE CP

TAP NO 169.0000170.0000171.0000172.0000173.0000174.0000

.000 -.2614 -.2872 -.2626 -.2518 -.2697 -.2652

ALPHAO(3) = -6.160 BETAO (5) = .030

SECTION (1)BODY FLAP DEPENDENT VARIABLE CP

TAP NO 169.0000170.0000171.0000172.0000173.0000174.0000

.000 -.2534 -.2586 -.2552 -.2397 -.2859 -.2882

ALPHAO(3) = -6.320 BETAO (6) = 2.000

SECTION (1)BODY FLAP DEPENDENT VARIABLE CP

TAP NO 169.0000170.0000171.0000172.0000173.0000174.0000

.000 -.2527 -.2346 -.2634 -.2180 -.3015 -.3080

ALPHAO(3) = -6.330 BETAO (7) = 4.070

SECTION (1)BODY FLAP DEPENDENT VARIABLE CP

TAP NO 169.0000170.0000171.0000172.0000173.0000174.0000

.000 -.2580 -.2493 -.2520 -.2328 -.2869 -.2809

ALPHAO(3) = -6.380 BETAO (8) = 6.050

SECTION (1)BODY FLAP DEPENDENT VARIABLE CP

TAP NO 169.0000170.0000171.0000172.0000173.0000174.0000

.000 -.2896 -.2914 -.2586 -.2930 -.2799 -.2791

ALPHAO(3) = -6.270 BETAO (9) = 8.100

SECTION (1)BODY FLAP DEPENDENT VARIABLE CP

TAP NO 169.0000170.0000171.0000172.0000173.0000174.0000

.000 -.3026 -.3097 -.2689 -.3107 -.2899 -.2904

ALPHAO(3) = -6.260 BETAO (10) = 10.090

SECTION (1)BODY FLAP DEPENDENT VARIABLE CP

TAP NO 169.0000170.0000171.0000172.0000173.0000174.0000

.000 -.3055 -.3265 -.2681 -.3177 -.2943 -.2972

ALPHAO(4) = -4.200 BETAO (1) = -9.980

SECTION (1)BODY FLAP DEPENDENT VARIABLE CP

TAP NO 169.0000170.0000171.0000172.0000173.0000174.0000

.000 -.2986 -.2903 -.2701 -.2612 -.3080 -.2973

ALPHAO(4) = -4.230 BETAO (2) = -7.990

SECTION (1)BODY FLAP DEPENDENT VARIABLE CP

TAP NO 169.0000170.0000171.0000172.0000173.0000174.0000

.000 -.3031 -.2954 -.2762 -.2637 -.2917 -.2829

ARC11-716 IA14 C1+T12+S12N25+AT10 BODY FLAP (RB1F33)

ALPHAO(4) = -4.180 BETAO (3) = -5.970

SECTION (1)BODY FLAP DEPENDENT VARIABLE CP

TAP NO 169.0000170.0000171.0000172.0000173.0000174.0000

.000 -.2756 -.2448 -.2576 -.2534 -.2867 -.2757

ALPHAO(4) = -4.170 BETAO (4) = -3.950

SECTION (1)BODY FLAP DEPENDENT VARIABLE CP

TAP NO 169.0000170.0000171.0000172.0000173.0000174.0000

.000 -.2588 -.2497 -.2620 -.2425 -.2686 -.2649

ALPHAO(4) = -4.150 BETAO (5) = -2.020

SECTION (1)BODY FLAP DEPENDENT VARIABLE CP

TAP NO 169.0000170.0000171.0000172.0000173.0000174.0000

.000 -.2520 -.2491 -.2501 -.2394 -.2644 -.2644

ALPHAO(4) = -4.030 BETAO (6) = -.010

SECTION (1)BODY FLAP DEPENDENT VARIABLE CP

TAP NO 169.0000170.0000171.0000172.0000173.0000174.0000

.000 -.2475 -.2443 -.2523 -.2361 -.2776 -.2837

ALPHAO(4) = -4.210 BETAO (7) = 2.110

SECTION (1)BODY FLAP DEPENDENT VARIABLE CP

TAP NO 169.0000170.0000171.0000172.0000173.0000174.0000

.000 -.2493 -.2397 -.2525 -.2194 -.2901 -.2890

ORIGINAL PAGE IS OF POOR QUALITY

ARC11-716 IA14 O1+T12+S12N25+AT10 BODY FLAP (RB1F33)

ALPHAO(4) = -4.200 BETAO (8) = 4.090

SECTION (1)BODY FLAP DEPENDENT VARIABLE CP

TAP NO 169.0000170.0000171.0000172.0000173.0000174.0000

.000 -.2475 -.2549 -.2416 -.2339 -.2314 -.2834

ALPHAO(4) = -4.210 BETAO (9) = 6.060

SECTION (1)BODY FLAP DEPENDENT VARIABLE CP

TAP NO 169.0000170.0000171.0000172.0000173.0000174.0000

.000 -.2518 -.2712 -.2417 -.2507 -.2858 -.2699

ALPHAO(4) = -4.200 BETAO (10) = 8.080

SECTION (1)BODY FLAP DEPENDENT VARIABLE CP

TAP NO 169.0000170.0000171.0000172.0000173.0000174.0000

.000 -.2902 -.2976 -.2583 -.3000 -.2891 -.2910

ALPHAO(4) = -4.160 BETAO (11) = 10.090

SECTION (1)BODY FLAP DEPENDENT VARIABLE CP

TAP NO 169.0000170.0000171.0000172.0000173.0000174.0000

.000 -.2895 -.3116 -.2542 -.3087 -.2887 -.2885

ALPHAO(5) = -2.870 BETAO (1) = -10.040

SECTION (1)BODY FLAP DEPENDENT VARIABLE CP

TAP NO 169.0000170.0000171.0000172.0000173.0000174.0000

.000 -.2980 -.2871 -.2666 -.2607 -.2985 -.2884

ARC11-716 IA14 O1+T12+S12N25+AT10 BODY FLAP (RB1F33)

ALPHAO(5) = -2.870 BETAO (2) = -8.030

SECTION (1)BODY FLAP DEPENDENT VARIABLE CP

TAP NO	169.0000	170.0000	171.0000	172.0000	173.0000	174.0000
.000	-.2939	-.2854	-.2639	-.2541	-.2859	-.2780

ALPHAO(5) = -2.870 BETAO (3) = -5.960

SECTION (1)BODY FLAP DEPENDENT VARIABLE CP

TAP NO	169.0000	170.0000	171.0000	172.0000	173.0000	174.0000
.000	-.2754	-.2752	-.2526	-.2489	-.2802	-.2714

ALPHAO(5) = -2.860 BETAO (4) = -3.920

SECTION (1)BODY FLAP DEPENDENT VARIABLE CP

TAP NO	169.0000	170.0000	171.0000	172.0000	173.0000	174.0000
.000	-.2529	-.2375	-.2574	-.2361	-.2630	-.2600

ALPHAO(5) = -2.860 BETAO (5) = -2.000

SECTION (1)BODY FLAP DEPENDENT VARIABLE CP

TAP NO	169.0000	170.0000	171.0000	172.0000	173.0000	174.0000
.000	-.2417	-.2377	-.2385	-.2311	-.2579	-.2587

ALPHAO(5) = -2.850 BETAO (6) = .020

SECTION (1)BODY FLAP DEPENDENT VARIABLE CP

TAP NO	169.0000	170.0000	171.0000	172.0000	173.0000	174.0000
.000	-.2440	-.2376	-.2519	-.2296	-.2737	-.2782

ARC11-716 IA14 O1+T12+S12N25+AT10 BODY FLAP (RB1F33)

ALPHAO(5) = -2.850 BETAO (7) = 2.020

SECTION (1)BODY FLAP DEPENDENT VARIABLE CP

TAP NO	169.0000	170.0000	171.0000	172.0000	173.0000	174.0000
.000	-.2483	-.2393	-.2475	-.2188	-.2811	-.2768

ALPHAO(5) = -2.770 BETAO (8) = 4.100

SECTION (1)BODY FLAP DEPENDENT VARIABLE CP

TAP NO	169.0000	170.0000	171.0000	172.0000	173.0000	174.0000
.000	-.2629	-.2578	-.2323	-.2631	-.2818	-.2780

ALPHAO(5) = -2.790 BETAO (9) = 6.120

SECTION (1)BODY FLAP DEPENDENT VARIABLE CP

TAP NO	169.0000	170.0000	171.0000	172.0000	173.0000	174.0000
.000	-.2730	-.2719	-.2392	-.2786	-.2876	-.2818

ALPHAO(5) = -2.790 BETAO (10) = 8.140

SECTION (1)BODY FLAP DEPENDENT VARIABLE CP

TAP NO	169.0000	170.0000	171.0000	172.0000	173.0000	174.0000
.000	-.2847	-.2945	-.2499	-.2972	-.2932	-.2908

ALPHAO(5) = -2.770 BETAO (11) = 10.100

SECTION (1)BODY FLAP DEPENDENT VARIABLE CP

TAP NO	169.0000	170.0000	171.0000	172.0000	173.0000	174.0000
.000	-.2850	-.3076	-.2489	-.3031	-.2911	-.2898

ARC11-716 IA14 O1+T12+S12N25+AT10 BODY FLAP (RB1F33)

ALPHAO(6) = -.760 BETAO (1) = -10.520

SECTION (1)BODY FLAP DEPENDENT VARIABLE CP

TAP NO	169.0000	170.0000	171.0000	172.0000	173.0000	174.0000
.000	-.2864	-.2629	-.2832	-.2434	-.2992	-.2886

ALPHAO(6) = -.730 BETAO (2) = -8.420

SECTION (1)BODY FLAP DEPENDENT VARIABLE CP

TAP NO	169.0000	170.0000	171.0000	172.0000	173.0000	174.0000
.000	-.2941	-.2776	-.2624	-.2509	-.2872	-.2784

ALPHAO(6) = -.730 BETAO (3) = -6.290

SECTION (1)BODY FLAP DEPENDENT VARIABLE CP

TAP NO	169.0000	170.0000	171.0000	172.0000	173.0000	174.0000
.000	-.2922	-.2591	-.2651	-.2408	-.2870	-.2808

ALPHAO(6) = -.710 BETAO (4) = -4.140

SECTION (1)BODY FLAP DEPENDENT VARIABLE CP

TAP NO	169.0000	170.0000	171.0000	172.0000	173.0000	174.0000
.000	-.2669	-.2576	-.2427	-.2347	-.2701	-.2586

ALPHAO(6) = -.700 BETAO (5) = -2.080

SECTION (1)BODY FLAP DEPENDENT VARIABLE CP

TAP NO	169.0000	170.0000	171.0000	172.0000	173.0000	174.0000
.000	-.2328	-.2323	-.2363	-.2190	-.2704	-.2613

ORIGINAL PAGE IS OF POOR QUALITY

ARC11-716 IA14 O1+T12+S12N25+AT10 BODY FLAP (RB1F33)

ALPHAO(6) = -.700 BETAO (6) = .030

SECTION (1)BODY FLAP DEPENDENT VARIABLE CP

TAP NO 169.0000170.0000171.0000172.0000173.0000174.0000

.000 -.2408 -.2291 -.2414 -.2214 -.2621 -.2672

ALPHAO(6) = -.700 BETAO (7) = 2.160

SECTION (1)BODY FLAP DEPENDENT VARIABLE CP

TAP NO 169.0000170.0000171.0000172.0000173.0000174.0000

.000 -.2363 -.2349 -.2358 -.2110 -.2692 -.2681

ALPHAO(6) = -.710 BETAO (8) = 4.270

SECTION (1)BODY FLAP DEPENDENT VARIABLE CP

TAP NO 169.0000170.0000171.0000172.0000173.0000174.0000

.000 -.2265 -.2433 -.2223 -.2215 -.2736 -.2621

ALPHAO(6) = -.730 BETAO (9) = 6.350

SECTION (1)BODY FLAP DEPENDENT VARIABLE CP

TAP NO 169.0000170.0000171.0000172.0000173.0000174.0000

.000 -.2343 -.2562 -.2227 -.2320 -.2809 -.2687

ALPHAO(6) = -.730 BETAO (10) = 8.130

SECTION (1)BODY FLAP DEPENDENT VARIABLE CP

TAP NO 169.0000170.0000171.0000172.0000173.0000174.0000

.000 -.2472 -.2697 -.2318 -.2437 -.2814 -.2788

ARC11-716 IA14 O1+T12+S12N25+AT10 BODY FLAP (RB1F33)

ALPHAO(6) = -.750 BETAO (11) = 10.110

SECTION (1)BODY FLAP DEPENDENT VARIABLE CP

TAP NO 169.0000170.0000171.0000172.0000173.0000174.0000

.000 -.2776 -.2964 -.2397 -.2988 -.2854 -.2872

ALPHAO(7) = 2.010 BETAO (1) = -10.080

SECTION (1)BODY FLAP DEPENDENT VARIABLE CP

TAP NO 169.0000170.0000171.0000172.0000173.0000174.0000

.000 -.2755 -.2523 -.2726 -.2413 -.3002 -.2860

ALPHAO(7) = 2.000 BETAO (2) = -8.040

SECTION (1)BODY FLAP DEPENDENT VARIABLE CP

TAP NO 169.0000170.0000171.0000172.0000173.0000174.0000

.000 -.2712 -.2428 -.2678 -.2231 -.2954 -.2857

ALPHAO(7) = 2.050 BETAO (3) = -6.040

SECTION (1)BODY FLAP DEPENDENT VARIABLE CP

TAP NO 169.0000170.0000171.0000172.0000173.0000174.0000

.000 -.2898 -.2398 -.2629 -.2213 -.2884 -.2800

ALPHAO(7) = 1.920 BETAO (4) = -3.990

SECTION (1)BODY FLAP DEPENDENT VARIABLE CP

TAP NO 169.0000170.0000171.0000172.0000173.0000174.0000

.000 -.2601 -.2325 -.2580 -.2172 -.2654 -.2577

ARC11-716 IA14 O1+T12+S12N25+AT10 BODY FLAP (RB1F33)

ALPHAO(7) = 1.920 BETAO (5) = -2.020

SECTION (1)BODY FLAP DEPENDENT VARIABLE CP

TAP NO 169.0000170.0000171.0000172.0000173.0000174.0000

.000 -.2472 -.2217 -.2454 -.2152 -.2501 -.2477

ALPHAO(7) = 1.920 BETAO (6) = .010

SECTION (1)BODY FLAP DEPENDENT VARIABLE CP

TAP NO 169.0000170.0000171.0000172.0000173.0000174.0000

.000 -.2394 -.2234 -.2355 -.2147 -.2478 -.2471

ALPHAO(7) = 1.920 BETAO (7) = 2.050

SECTION (1)BODY FLAP DEPENDENT VARIABLE CP

TAP NO 169.0000170.0000171.0000172.0000173.0000174.0000

.000 -.2382 -.2293 -.2361 -.2088 -.2548 -.2509

ALPHAO(7) = 1.900 BETAO (8) = 4.080

SECTION (1)BODY FLAP DEPENDENT VARIABLE CP

TAP NO 169.0000170.0000171.0000172.0000173.0000174.0000

.000 -.2205 -.2316 -.2127 -.2125 -.2650 -.2559

ALPHAO(7) = 2.040 BETAO (9) = 6.080

SECTION (1)BODY FLAP DEPENDENT VARIABLE CP

TAP NO 169.0000170.0000171.0000172.0000173.0000174.0000

.000 -.2284 -.2477 -.2142 -.2237 -.2787 -.2682

ARC11-716 IA14 O1+T12+S12N25+AT10 BODY FLAP (RB1F33)

ALPHAO(7) = 2.030 BETAO (10) = 8.110

SECTION (1)BODY FLAP DEPENDENT VARIABLE CP

TAP NO	169.0000	170.0000	171.0000	172.0000	173.0000	174.0000
.000	-.2492	-.2640	-.2251	-.2383	-.2773	-.2678

ALPHAO(7) = 2.350 BETAO (11) = 10.150

SECTION (1)BODY FLAP DEPENDENT VARIABLE CP

TAP NO	169.0000	170.0000	171.0000	172.0000	173.0000	174.0000
.000	-.[illegible]706	-.2987	-.2302	-.2987	-.2808	-.2916

ALPHAO(8) = 4.300 BETAO (1) = -9.980

SECTION (1)BODY FLAP DEPENDENT VARIABLE CP

TAP NO	169.0000	170.0000	171.0000	172.0000	173.0000	174.0000
.000	-.2662	-.2461	-.2652	-.2351	-.3008	-.2864

ALPHAO(8) = 4.200 BETAO (2) = -8.090

SECTION (1)BODY FLAP DEPENDENT VARIABLE CP

TAP NO	169.0000	170.0000	171.0000	172.0000	173.0000	174.0000
.000	-.2693	-.2384	-.2632	-.2216	-.2983	-.2847

ALPHAO(8) = 4.200 BETAO (3) = -5.990

SECTION (1)BODY FLAP DEPENDENT VARIABLE CP

TAP NO	169.0000	170.0000	171.0000	172.0000	173.0000	174.0000
.000	-.2653	-.2317	-.2567	-.2127	-.2829	-.2748

ORIGINAL PAGE IS OF POOR QUALITY

ARC11-716 IA14 O1+T12+S12N25+AT10 BODY FLAP (RB1F33)

ALPHAO(8) = 4.200 BETAO (4) = -3.970

SECTION (1)BODY FLAP DEPENDENT VARIABLE CP

TAP NO	169.0000170	0000171	0000172	0000173	0000174	0000
.000	-.2571	-.2301	-.2562	-.2091	-.2565	-.2510

ALPHAO(8) = 4.220 BETAO (5) = -2.000

SECTION (1)BODY FLAP DEPENDENT VARIABLE CP

TAP NO	169.0000170	0000171	0000172	0000173	0000174	0000
.000	-.2495	-.2199	-.2435	-.2120	-.2534	-.2506

ALPHAO(8) = 4.240 BETAO (6) = -.070

SECTION (1)BODY FLAP DEPENDENT VARIABLE CP

TAP NO	169.0000170	0000171	0000172	0000173	0000174	0000
.000	-.2419	-.2184	-.2357	-.2081	-.2459	-.2398

ALPHAO(8) = 4.220 BETAO (7) = 1.990

SECTION (1)BODY FLAP DEPENDENT VARIABLE CP

TAP NO	169.0000170	0000171	0000172	0000173	0000174	0000
.000	-.2363	-.2282	-.2326	-.2052	-.2514	-.2441

ALPHAO(8) = 4.430 BETAO (8) = 4.100

SECTION (1)BODY FLAP DEPENDENT VARIABLE CP

TAP NO	169.0000170	0000171	0000172	0000173	0000174	0000
.000	-.2411	-.2314	-.2117	-.2340	-.2516	-.2534

ARC11-716 IA14 O1+T12+S12N25+AT10 BODY FLAP (RB1F33)

ALPHAO(8) = 4.410 BETAO (9) = 6.060

SECTION (1)BODY FLAP DEPENDENT VARIABLE CP

TAP NO 169.0000170.0000171.0000172.0000173.0000174.0000

.000 -.2498 -.2514 -.2159 -.2527 -.2733 -.2701

ALPHAO(8) = 4.410 BETAO (10) = 8.150

SECTION (1)BODY FLAP DEPENDENT VARIABLE CP

TAP NO 169.0000170.0000171.0000172.0000173.0000174.0000

.000 -.250 -.2706 -.2174 -.2732 -.2827 -.2800

ALPHAO(8) = 4.390 BETAO (11) = 10.140

SECTION (1)BODY FLAP DEPENDENT VARIABLE CP

TAP NO 169.0000170.0000171.0000172.0000173.0000174.0000

.000 -.2593 -.2864 -.2180 -.2906 -.2846 -.2883

ALPHAO(9) = 6.340 BETAO (1) = -9.960

SECTION (1)BODY FLAP DEPENDENT VARIABLE CP

TAP NO 169.0000170.0000171.0000172.0000173.0000174.0000

.000 -.2818 -.2455 -.2713 -.2286 -.3014 -.2888

ALPHAO(9) = 6.380 BETAO (2) = -7.970

SECTION (1)BODY FLAP DEPENDENT VARIABLE CP

TAP NO 169.0000170.0000171.0000172.0000173.0000174.0000

.000 -.2782 -.2432 -.2652 -.2244 -.2995 -.2877

ARC11-716 IA14 O1+T12+S12N25+AT10 BODY FLAP (RB1F33)

ALPHAO(9) = 5.980 BETAO (3) = -6.000

SECTION (1)BODY FLAP DEPENDENT VARIABLE CP

TAP NO	169.0000	170.0000	171.0000	172.0000	173.0000	174.0000
.000	-.2672	-.2347	-.2559	-.2150	-.2839	-.2748

ALPHAO(9) = 5.990 BETAO (4) = -4.010

SECTION (1)BODY FLAP DEPENDENT VARIABLE CP

TAP NO	169.0000	170.0000	171.0000	172.0000	173.0000	174.0000
.000	-.2597	-.2241	-.2518	-.2071	-.2649	-.2571

ALPHAO(9) = 6.010 BETAO (5) = -2.060

SECTION (1)BODY FLAP DEPENDENT VARIABLE CP

TAP NO	169.0000	170.0000	171.0000	172.0000	173.0000	174.0000
.000	-.2514	-.2174	-.2399	-.2082	-.2624	-.2572

ALPHAO(9) = 6.020 BETAO (6) = .050

SECTION (1)BODY FLAP DEPENDENT VARIABLE CP

TAP NO	169.0000	170.0000	171.0000	172.0000	173.0000	174.0000
.000	-.2452	-.2169	-.2376	-.2086	-.2513	-.2413

ALPHAO(9) = 6.010 BETAO (7) = 2.060

SECTION (1)BODY FLAP DEPENDENT VARIABLE CP

TAP NO	169.0000	170.0000	171.0000	172.0000	173.0000	174.0000
.000	-.2356	-.2244	-.2321	-.2012	-.2604	-.2521

ARC11-716 IA14 O1+T12+S12N25+AT10 BODY FLAP (RB1F33)

ALPHAO(9) = 5.990 BETAO (8) = 4.060

SECTION (1)BODY FLAP DEPENDENT VARIABLE CP

TAP NO 169.0000170.0000171.0000172.0000173.0000174.0000

.000 -.2350 -.2243 -.2047 -.2258 -.2543 -.2533

ALPHAO(9) = 5.980 BETAO (9) = 6.090

SECTION (1)BODY FLAP DEPENDENT VARIABLE CP

TAP NO 169.0000170.0000171.0000172.0000173.0000174.0000

.000 -.2420 -.2425 -.2075 -.2475 -.2773 -.2744

ALPHAO(9) = 5.970 BETAO (10) = 8.160

SECTION (1)BODY FLAP DEPENDENT VARIABLE CP

TAP NO 169.0000170.0000171.0000172.0000173.0000174.0000

.000 -.2522 -.2577 -.2160 -.2644 -.2885 -.2885

ALPHAO(9) = 5.950 BETAO (11) = 10.160

SECTION (1)BODY FLAP DEPENDENT VARIABLE CP

TAP NO 169.0000170.0000171.0000172.0000173.0000174.0000

.000 -.2589 -.2825 -.2116 -.2912 -.2954 -.2983

ALPHAO(10) = 7.910 BETAO (1) = -10.030

SECTION (1)BODY FLAP DEPENDENT VARIABLE CP

TAP NO 169.0000170.0000171.0000172.0000173.0000174.0000

.000 -.2836 -.2449 -.2763 -.2277 -.3130 -.2990

ARC11-716 IA14 O1+T12+S12N25+AT10 BODY FLAP (RB1F33)

ALPHAO(10) = 7.930 BETAO (2) = -8.030

SECTION (1)BODY FLAP DEPENDENT VARIABLE CP

TAP NO 169.0000170.0000171.0000172.0000173.0000174.0000

.000 -.2796 -.2420 -.2725 -.2227 -.2999 -.2926

ALPHAO(10) = 7.810 BETAO (3) = -5.970

SECTION (1)BODY FLAP DEPENDENT VARIABLE CP

TAP NO 169.0000170.0000171.0000172.0000173.0000174.0000

.000 -.2409 -.2323 -.2587 -.2172 -.2991 -.2903

ALPHAO(10) = 7.850 BETAO (4) = -4.000

SECTION (1)BODY FLAP DEPENDENT VARIABLE CP

TAP NO 169.0000170.0000171.0000172.0000173.0000174.0000

.000 -.2582 -.2246 -.2413 -.2096 -.2825 -.2747

ALPHAO(10) = 7.850 BETAO (5) = -2.030

SECTION (1)BODY FLAP DEPENDENT VARIABLE CP

TAP NO 169.0000170.0000171.0000172.0000173.0000174.0000

.000 -.2496 -.2173 -.2371 -.2076 -.2728 -.2648

ALPHAO(10) = 7.840 BETAO (6) = .040

SECTION (1)BODY FLAP DEPENDENT VARIABLE CP

TAP NO 169.0000170.0000171.0000172.0000173.0000174.0000

.000 -.2455 -.2215 -.2391 .2066 -.2584 -.2485

ARC11-716 IA14 O1+T12+S12N25+AT10 BODY FLAP (R81F33)

ALPHAO(10) = 7.830 BETAO (7) = 2.040

SECTION (1)BODY FLAP DEPENDENT VARIABLE CP

TAP NO 169.0000170.0000171.0000172.0000173.0000174.0000

.000 -.2445 -.2227 -.2414 -.2053 -.2639 -.2548

ALPHAO(10) = 7.870 BETAO (8) = 4.060

SECTION (1)BODY FLAP DEPENDENT VARIABLE CP

TAP NO 169.0000170.0000171.0000172.0000173.0000174.0000

.000 -.2238 -.2222 -.1976 -.2264 -.2717 -.2646

ALPHAO(10) = 7.970 BETAO (9) = 6.160

SECTION (1)BODY FLAP DEPENDENT VARIABLE CP

TAP NO 169.0000170.0000171.0000172.0000173.0000174.0000

.000 -.2348 -.2413 -.2031 -.2450 -.2939 -.2900

ALPHAO(10) = 7.960 BETAO (10) = 8.110

SECTION (1)BODY FLAP DEPENDENT VARIABLE CP

TAP NO 169.0000170.0000171.0000172.0000173.0000174.0000

.000 -.2455 -.2604 -.2104 -.2641 -.3044 -.3049

ALPHAO(10) = 7.960 BETAO (11) = 10.230

SECTION (1)BODY FLAP DEPENDENT VARIABLE CP

TAP NO 169.0000170.0000171.0000172.0000173.0000174.0000

.000 -.2568 -.2799 -.2080 -.2906 -.3064 -.3087

ARC11-716 IA14 01+T12+S12N25+AT10 BODY FLAP (RB1F33)

ALPHAO(11) = 9.890 BETAO (1) = -9.980

SECTION (1)BODY FLAP DEPENDENT VARIABLE CP

TAP NO 169.0000170.0000171.0000172.0000173.0000174.0000

.000 -.2827 -.2391 -.2740 -.2279 -.3233 -.3082

ALPHAO(11) = 9.930 BETAO (2) = -7.920

SECTION (1)BODY FLAP DEPENDENT VARIABLE CP

TAP NO 169.0000170.0000171.0000172.0000173.0000174.0000

.000 -.2849 -.2352 -.2742 -.2232 -.3068 -.3008

ALPHAO(11) = 9.940 BETAO (3) = -6.010

SECTION (1)BODY FLAP DEPENDENT VARIABLE CP

TAP NO 169.0000170.0000171.0000172.0000173.0000174.0000

.000 -.2668 -.2297 -.2571 -.2143 -.3038 -.2993

ALPHAO(11) = 9.890 BETAO (4) = -3.990

SECTION (1)BODY FLAP DEPENDENT VARIABLE CP

TAP NO 169.0000170.0000171.0000172.0000173.0000174.0000

.000 -.2568 -.2268 -.2554 -.2132 -.2859 -.2833

ALPHAO(11) = 9.900 BETAO (5) = -1.980

SECTION (1)BODY FLAP DEPENDENT VARIABLE CP

TAP NO 169.0000170.0000171.0000172.0000173.0000174.0000

.000 -.2453 -.2192 -.2435 -.2098 -.2675 -.2623

ARC11-716 IA14 O1+T12+S12N25+AT10 BODY FLAP (RB1F33)

ALPHAO(11) = 9.910 BETAO (6) = .020

SECTION (1)BODY FLAP DEPENDENT VARIABLE CP

TAP NO 169.0000170.0000171.0000172.0000173.0000174.0000

.000 -.2571 -.2172 -.2346 -.2158 -.2575 -.2510

ALPHAO(11) = 9.900 BETAO (7) = 2.040

SECTION (1)BODY FLAP DEPENDENT VARIABLE CP

TAP NO 169.0000170.0000171.0000172.0000173.0000174.0000

.000 -.2385 -.2158 -.2405 -.2006 -.2687 -.2590

ALPHAO(11) = 9.900 BETAO (8) = 4.130

SECTION (1)BODY FLAP DEPENDENT VARIABLE CP

TAP NO 169.0000170.0000171.0000172.0000173.0000174.0000

.000 -.2210 -.2173 -.1993 -.2246 -.2807 -.2692

ALPHAO(11) = 9.880 BETAO (9) = 6.100

SECTION (1)BODY FLAP DEPENDENT VARIABLE CP

TAP NO 169.0000170.0000171.0000172.0000173.0000174.0000

.000 -.2276 -.2401 -.1975 -.2426 -.3023 -.2931

ALPHAO(11) = 9.870 BETAO (10) = 8.110

SECTION (1)BODY FLAP DEPENDENT VARIABLE CP

TAP NO 169.0000170.0000171.0000172.0000173.0000174.0000

.000 -.2451 -.2634 -.2089 -.2621 -.3088 -.3117

ORIGINAL PAGE IS OF POOR QUALITY

DATE 10 DEC 74 TABULATED PRESSURE DATA - IA14A - VOL. 4 (RB1F33)

ARC!1-716 IA14 O1+T12+S12N25+AT10 BODY FLAP

ALPHAO(11) = 10.000 BETAO (11) = 10.190

SECTION (1)BODY FLAP DEPENDENT VARIABLE CP

TAP NO	169.0000	170.0000	171.0000	172.0000	173.0000	174.0000
.000	-.2584	-.2871	-.2140	-.2861	-.3100	-.3067

ORIGINAL PAGE IS OF POOR QUALITY

ARC11-716 IA14 O1+T12+S12N25+AT11 BODY FLAP (RB1F34) (15 FEB 74)

REFERENCE DATA

SREF = 2.4210 SQ.FT. XMRP = 29.5800 INCHES
LREF = 38.7090 INCHES YMRP = .0000 INCHES
BREF = 38.7090 INCHES ZMRP = .0000 INCHES
SCALE = .0300 SCALE

PARAMETRIC DATA

MACH = .600 ELEVON = .000
RUDDER = .000 SPDBRK = .000

ALPHAO(1) = -8.010 BETAO (1) = -7.980

SECTION (1)BODY FLAP DEPENDENT VARIABLE CP

TAP NO 169.0000170.0000171.0000172.0000173.0000174.0000

.000 -.2019 -.2283 -.2082 -.2391 -.2925 -.2751

ALPHAO(1) = -7.990 BETAO (2) = -3.980

SECTION (1)BODY FLAP DEPENDENT VARIABLE CP

TAP NO 169.0000170.0000171.0000172.0000173.0000174.0000

.000 -.1768 -.1771 -.1820 -.1931 -.2699 -.2553

ALPHAO(1) = -7.990 BETAO (3) = .030

SECTION (1)BODY FLAP DEPENDENT VARIABLE CP

TAP NO 169.0000170.0000171.0000172.0000173.0000174.0000

.000 -.1638 -.1540 -.1585 -.1471 -.2534 -.2271

ALPHAO(1) = -8.000 BETAO (4) = 4.090

SECTION (1)BODY FLAP DEPENDENT VARIABLE CP

TAP NO 169.0000170.0000171.0000172.0000173.0000174.0000

.000 -.1710 -.1617 -.1764 -.1579 -.2792 -.2538

ARC11-716 IA14 O1+T12+S12N25+AF11 BODY FLAP (RB1F34)

ALPHAO(1) = -8.020 BETAO (5) = 8.130

SECTION (1)BODY FLAP DEPENDENT VARIABLE CP

TAP NO	169.0000	170.0000	171.0000	172.0000	173.0000	174.0000
.000	-.1649	-.1837	-.1754	-.1823	-.3053	-.2615

ALPHAO(2) = -4.050 BETAO (1) = -8.030

SECTION (1)BODY FLAP DEPENDENT VARIABLE CP

TAP NO	169.0000	170.0000	171.0000	172.0000	173.0000	174.0000
.000	-.1827	-.2254	-.1826	-.2258	-.2816	-.2540

ALPHAO(2) = -4.050 BETAO (2) = -4.000

SECTION (1)BODY FLAP DEPENDENT VARIABLE CP

TAP NO	169.0000	170.0000	171.0000	172.0000	173.0000	174.0000
.000	-.1554	-.1635	-.1665	-.1811	-.2666	-.2532

ALPHAO(2) = -4.050 BETAO (3) = .040

SECTION (1)BODY FLAP DEPENDENT VARIABLE CP

TAP NO	169.0000	170.0000	171.0000	172.0000	173.0000	174.0000
.000	-.1440	-.1341	-.1391	-.1352	-.2411	-.2172

ALPHAO(2) = -4.060 BETAO (4) = 4.070

SECTION (1)BODY FLAP DEPENDENT VARIABLE CP

TAP NO	169.0000	170.0000	171.0000	172.0000	173.0000	174.0000
.000	-.1482	-.1476	-.1579	-.1603	-.2762	-.2529

ARC11-716 IA14 O1+T12+S12N25+AT11 BODY FLAP (RB1F34)

ALPHAO(2) = -4.080 BETAO (5) = 8.090

SECTION (1)BODY FLAP DEPENDENT VARIABLE CP

TAP NO 169.0000170.0000171.0000172.0000173.0000174.0000

.000 -.1737 -.1531 -.1661 -.1535 -.3017 -.2621

ALPHAO(3) = -.310 BETAO (1) = -8.030

SECTION (1)BODY FLAP DEPENDENT VARIABLE CP

TAP NO 169.0000170.0000171.0000172.0000173.0000174.0000

.000 -.1566 -.2085 -.1684 -.2201 -.2795 -.2513

ALPHAO(3) = -.320 BETAO (2) = -4.010

SECTION (1)BODY FLAP DEPENDENT VARIABLE CP

TAP NO 169.0000170.0000171.0000172.0000173.0000174.0000

.000 -.1500 -.1671 -.1602 -.1913 -.2748 -.2476

ALPHAO(3) = -.320 BETAO (3) = .030

SECTION (1)BODY FLAP DEPENDENT VARIABLE CP

TAP NO 169.0000170.0000171.0000172.0000173.0000174.0000

.000 -.1548 -.1247 -.1317 -.1296 -.2375 -.2091

ALPHAO(3) = -.320 BETAO (4) = 4.080

SECTION (1)BODY FLAP DEPENDENT VARIABLE CP

TAP NO 169.0000170.0000171.0000172.0000173.0000174.0000

.000 -.1480 -.1375 -.1552 -.1373 -.2733 -.2434

ARC11-716 IA14 O1+T12+S12N25+AT11 BODY FLAP (RB1F34)

ALPHAO(3) = -.320 BETAO (5) = 8.110

SECTION (1)BODY FLAP DEPENDENT VARIABLE CP

TAP NO	169.0000	170.0000	171.0000	172.0000	173.0000	174.0000
.000	-.1882	-.1380	-.1995	-.1356	-.2921	-.2554

ALPHAO(4) = 4.000 BETAO (1) = -8.050

SECTION (1)BODY FLAP DEPENDENT VARIABLE CP

TAP NO	169.0000	170.0000	171.0000	172.0000	173.0000	174.0000
.000	-.1429	-.1994	-.1535	-.2112	-.2676	-.2378

ALPHAO(4) = 4.000 BETAO (2) = -3.980

SECTION (1)BODY FLAP DEPENDENT VARIABLE CP

TAP NO	169.0000	170.0000	171.0000	172.0000	173.0000	174.0000
.000	-.1321	-.1638	-.1414	-.1826	-.2535	-.2284

ALPHAO(4) = 4.000 BETAO (3) = .030

SECTION (1)BODY FLAP DEPENDENT VARIABLE CP

TAP NO	169.0000	170.0000	171.0000	172.0000	173.0000	174.0000
.000	-.1349	-.1327	-.1438	-.1492	-.2401	-.2302

ALPHAO(4) = 3.990 BETAO (4) = 4.080

SECTION (1)BODY FLAP DEPENDENT VARIABLE CP

TAP NO	169.0000	170.0000	171.0000	172.0000	173.0000	174.0000
.000	-.1230	-.1035	-.1360	-.1082	-.2539	-.2302

ARC11-716 IA14 O1+T12+S12N25+AT11 BODY FLAP (RB1F34)

ALPHAO(4) = 3.980 BETAO (5) = 8.140

SECTION (1)BODY FLAP DEPENDENT VARIABLE CP

TAP NO	169.0000	170.0000	171.0000	172.0000	173.0000	174.0000
.000	-.1509	-.1225	-.1398	-.1188	-.2790	-.2439

ALPHAO(5) = 7.850 BETAO (1) = -8.010

SECTION (1)BODY FLAP DEPENDENT VARIABLE CP

TAP NO	169.0000	170.0000	171.0000	172.0000	173.0000	174.0000
.000	-.1559	-.1761	-.1343	-.1875	-.2556	-.2290

ALPHAO(5) = 7.900 BETAO (2) = -4.010

SECTION (1)BODY FLAP DEPENDENT VARIABLE CP

TAP NO	169.0000	170.0000	171.0000	172.0000	173.0000	174.0000
.000	-.1071	-.1459	-.1340	-.1709	-.2484	-.2205

ALPHAO(5) = 7.910 BETAO (3) = .040

SECTION (1)BODY FLAP DEPENDENT VARIABLE CP

TAP NO	169.0000	170.0000	171.0000	172.0000	173.0000	174.0000
.000	-.1195	-.1129	-.1125	-.1116	-.2285	-.2156

ALPHAO(5) = 7.900 BETAO (4) = 4.100

SECTION (1)BODY FLAP DEPENDENT VARIABLE CP

TAP NO	169.0000	170.0000	171.0000	172.0000	173.0000	174.0000
.000	-.1118	-.0950	-.1143	-.0954	-.2427	-.2181

ARC11-716 IA14 O1+T12+S12N25+AT11 BODY FLAP (RB1F34)

ALPHAO(5) = 7.880 BETAO (5) = 8.170

SECTION (1)BODY FLAP DEPENDENT VARIABLE CP

TAP NO 169.0000170.0000171.0000172.0000173.0000174.0000

.000 -.1348 -.1127 -.1333 -.1043 -.2881 -.2412

ARC11-716 IA14 O1+T12+S12N25+AT11 BODY FLAP (RB1F35) (15 FEB 74)

REFERENCE DATA

SREF = 2.4210 SQ.FT. XMRP = 29.5800 INCHES
LREF = 38.7090 INCHES YMRP = .0000 INCHES
BREF = 38.7090 INCHES ZMRP = .0000 INCHES
SCALE = .0300 SCALE

PARAMETRIC DATA

MACH = .750 ELEVON = .000
RUDDER = 000 SPOERK = .000

ALPHAO(1) = -8.050 BETAO (1) = -8.000

SECTION (1)BODY FLAP DEPENDENT VARIABLE CP

TAP NO 169.0000170.0000171.0000172.0000173.0000174.0000

.000 -.2124 -.2457 -.2053 -.2495 -.2892 -.2694

ALPHAO(1) = -8.040 BETAO (2) = -3.990

SECTION (1)BODY FLAP DEPENDENT VARIABLE CP

TAP NO 169.0000170.0000171.0000172.0000173.0000174.0000

.000 -.1877 -.2172 -.1887 -.2201 -.2886 -.2724

ALPHAO(1) = -8.040 BETAO (3) = .040

SECTION (1)BODY FLAP DEPENDENT VARIABLE CP

TAP NO 169.0000170.0000171.0000172.0000173.0000174.0000

.000 -.1943 -.1882 -.1849 -.2022 -.2862 -.2795

ALPHAO(1) = -8.050 BETAO (4) = 4.080

SECTION (1)BODY FLAP DEPENDENT VARIABLE CP

TAP NO 169.0000170.0000171.0000172.0000173.0000174.0000

.000 -.1967 -.1751 -.1868 -.1738 -.2949 -.2774

ORIGINAL PAGE IS OF POOR QUALITY

ARC11-716 IA14 O1+T12+S12N25+AT11 BODY FLAP (RB1F: 5)

ALPHAO(1) = -8.080 BETAO (5) = 8.150

SECTION (1)BODY FLAP DEPENDENT VARIABLE CP

TAP NO	169.0000	170.0000	171.0000	172.0000	173.0000	174.0000
.000	-.2256	-.2028	-.1943	-.1975	-.3076	-.2802

ALPHAO(2) = -4.070 BETAO (1) = -8.040

SECTION (1)BODY FLAP DEPENDENT VARIABLE CP

TAP NO	169.0000	170.0000	171.0000	172.0000	173.0000	174.0000
.000	-.1993	-.2400	-.1846	-.2376	-.2978	-.2754

ALPHAO(2) = -4.080 BETAO (2) = -4.000

SECTION (1)BODY FLAP DEPENDENT VARIABLE CP

TAP NO	169.0000	170.0000	171.0000	172.0000	173.0000	174.0000
.000	-.1858	-.2008	-.1836	-.2059	-.2764	-.2652

ALPHAO(2) = -4.080 BETAO (3) = .040

SECTION (1)BODY FLAP DEPENDENT VARIABLE CP

TAP NO	169.0000	170.0000	171.0000	172.0000	173.0000	174.0000
.000	-.1704	-.1995	-.1721	-.1826	-.2588	-.2415

ALPHAO(2) = -4.080 BETAO (4) = 4.090

SECTION (1)BODY FLAP DEPENDENT VARIABLE CP

TAP NO	169.0000	170.0000	171.0000	172.0000	173.0000	174.0000
.000	-.1822	-.1981	-.1872	-.1882	-.2925	-.2590

ORIGINAL PAGE IS OF POOR QUALITY

ARC11-716 IA14 01+T12+S12N25+AT11 BODY FLAP (RB1F35)

ALPHAO(2) = -4.090 BETAO (5) = 8.150

SECTION (1)BODY FLAP DEPENDENT VARIABLE CP

TAP NO	169.0000	170.0000	171.0000	172.0000	173.0000	174.0000
.000	-.2196	-.1790	-.1967	-.1726	-.3066	-.2666

ALPHAO(3) = -.310 BETAO (1) = -8.080

SECTION (1)BODY FLAP DEPENDENT VARIABLE CP

TAP NO	169.0000	170.0000	171.0000	172.0000	173.0000	174.0000
.000	-.1893	-.2230	-.1792	-.2292	-.2777	-.2707

ALPHAO(3) = -.320 BETAO (2) = -4.010

SECTION (1)BODY FLAP DEPENDENT VARIABLE CP

TAP NO	169.0000	170.0000	171.0000	172.0000	173.0000	174.0000
.000	-.1652	-.1880	-.1796	-.2029	-.2664	-.2580

ALPHAO(3) = -.330 BETAO (3) = .050

SECTION (1)BODY FLAP DEPENDENT VARIABLE CP

TAP NO	169.0000	170.0000	171.0000	172.0000	173.0000	174.0000
.000	-.1705	-.1652	-.1670	-.1763	-.2596	-.2519

ALPHAO(3) = -.320 BETAO (4) = 4.080

SECTION (1)BODY FLAP DEPENDENT VARIABLE CP

TAP NO	169.0000	170.0000	171.0000	172.0000	173.0000	174.0000
.000	-.1737	-.1488	.1642	-.1605	-.2774	-.2554

ARC11-716 IA14 O1+T12+S12N25+AT11 BODY FLAP (RB1F35)

ALPHAO(3) = -.320 BETAO (5) = 8.130

SECTION (1)BODY FLAP DEPENDENT VARIABLE CP

TAP NO	169.0000	170.0000	171.0000	172.0000	173.0000	174.0000
.000	-.2081	-.1696	-.1914	-.1561	-.2917	-.2681

ALPHAO(4) = 4.020 BETAO (1) = -8.060

SECTION (1)BODY FLAP DEPENDENT VARIABLE CP

TAP NO	169.0000	170.0000	171.0000	172.0000	173.0000	174.0000
.000	-.1688	-.2116	-.1637	-.2182	-.2788	-.2589

ALPHAO(4) = 4.020 BETAO (2) = -4.030

SECTION (1)BODY FLAP DEPENDENT VARIABLE CP

TAP NO	169.0000	170.0000	171.0000	172.0000	173.0000	174.0000
.000	-.1611	-.1844	-.1560	-.1948	-.2595	-.2383

ALPHAO(4) = 4.020 BETAO (3) = .040

SECTION (1)BODY FLAP DEPENDENT VARIABLE CP

TAP NO	169.0000	170.0000	171.0000	172.0000	173.0000	174.0000
.000	-.1540	-.1583	-.1571	-.1731	-.2540	-.2303

ALPHAO(4) = 4.010 BETAO (4) = 5.100

SECTION (1)BODY FLAP DEPENDENT VARIABLE CP

TAP NO	169.0000	170.0000	171.0000	172.0000	173.0000	174.0000
.000	-.1657	-.1373	-.1553	-.1458	-.2745	-.2460

ARC11-716 IA14 O1+T12+S12N25+AT11 BODY FLAP (RB1F35)

ALPHAO(4) = 4.000 BETAO (5) = 8.160

SECTION (1)BODY FLAP DEPENDENT VARIABLE CP

TAP NO	169.0000	170.0000	171.0000	172.0000	173.0000	174.0000
.000	-.1886	-.1491	-.1731	-.1432	-.2789	-.2609

ALPHAO(5) = 7.930 BETAO (1) = -8.040

SECTION (1)BODY FLAP DEPENDENT VARIABLE CP

TAP NO	169.0000	170.0000	171.0000	172.0000	173.0000	174.0000
.000	-.1515	-.2027	-.1549	-.2035	-.2606	-.2367

ALPHAO(5) = 7.940 BETAO (2) = -4.000

SECTION (1)BODY FLAP DEPENDENT VARIABLE CP

TAP NO	169.0000	170.0000	171.0000	172.0000	173.0000	174.0000
.000	-.1437	-.1707	-.1482	-.1866	-.2428	-.2237

ALPHAO(5) = 7.940 BETAO (3) = .030

SECTION (1)BODY FLAP DEPENDENT VARIABLE CP

TAP NO	169.0000	170.0000	171.0000	172.0000	173.0000	174.0000
.000	-.1463	-.1506	-.1485	-.1631	-.2375	-.2160

ALPHAO(5) = 7.930 BETAO (4) = 4.110

SECTION (1)BODY FLAP DEPENDENT VARIABLE CP

TAP NO	169.0000	170.0000	171.0000	172.0000	173.0000	174.0000
.000	-.1437	-.1200	-.1363	-.1273	-.2527	-.2230

ORIGINAL PAGE IS OF POOR QUALITY

ARC11-716 IA14 O1+T12+S12N25+AT11 BODY FLAP (RB1F35)

ALPHAO(5) = 7.920 BETAO (5) = 8.180

SECTION (1)BODY FLAP DEPENDENT VARIABLE CP

TAP NO	169.0000	170.0000	171.0000	172.0000	173.0000	174.0000
.000	-.1667	-.1390	-.1500	-.1203	-.2907	-.2439

ARC11-716 IA14 O1+T12+S12N25+AT11 BODY FLAP (RB1F36) (15 FEB 74)

REFERENCE DATA

SREF = 2.4210 SQ.FT. XMRP = 29.5800 INCHES
LREF = 38.7090 INCHES YMRP = .0000 INCHES
BREF = 38.7090 INCHES ZMRP = .0000 INCHES
SCALE = .0300 SCALE

PARAMETRIC DATA

MACH = .850 ELEVON = .000
RUDDER = .000 SPDBRK = .000

ALPHAO(1) = -8.120 BETAO (1) = -8.000

SECTION (1)BODY FLAP DEPENDENT VARIABLE CP

TAP NO 169.0000170.0000171.0000172.0000173.0000174.0000

.000 -.2399 -.2649 -.2243 -.2574 -.3032 -.2811

ALPHAO(1) = -8.110 BETAO (2) = -3.970

SECTION (1)BODY FLAP DEPENDENT VARIABLE CP

TAP NO 169.0000170.0000171.0000172.0000173.0000174.0000

.000 -.2236 -.2412 -.2181 -.2406 -.3079 -.2931

ALPHAO(1) = -8.070 BETAO (3) = .010

SECTION (1)BODY FLAP DEPENDENT VARIABLE CP

TAP NO 169.0000170.0000171.0000172.0000173.0000174.0000

.000 -.2143 -.2098 -.1991 -.2238 -.3074 -.3007

ALPHAO(1) = -8.080 BETAO (4) = 4.090

SECTION (1)BODY FLAP DEPENDENT VARIABLE CP

TAP NO 169.0000170.0000171.0000172.0000173.0000174.0000

.000 -.2228 -.2076 -.2105 -.2144 -.3256 -.3127

ORIGINAL PAGE IS OF POOR QUALITY

ARC11-716 IA14 O1+T12+S12N25+AT11 BODY FLAP (RB1F36)

ALPHAO(1) = -8.100 BETAO (5) = 8.180

SECTION (1)BODY FLAP DEPENDENT VARIABLE CP

TAP NO 169.0000170.0000171.0000172.0000173.0000174.0000

.000 -.2651 -.2435 -.2449 -.2345 -.3119 -.3023

ALPHAO(2) = -3.980 BETAO (1) = -8.050

SECTION (1)BODY FLAP DEPENDENT VARIABLE CP

TAP NO 169.0000170.0000171.0000172.0000173.0000174.0000

.000 -.2298 -.2573 -.1994 -.2476 -.3106 -.2995

ALPHAO(2) = -3.980 BETAO (2) = -3.990

SECTION (1)BODY FLAP DEPENDENT VARIABLE CP

TAP NO 169.0000170.0000171.0000172.0000173.0000174.0000

.000 -.2064 -.2241 -.1923 -.2232 -.2877 -.2740

AL HAO(2) = -3.990 BETAO (3) = .080

SEC'ION (1)BODY FLAP DEPENDENT VARIABLE CP

TAP NO 169.0000170.0000171.0000172.0000173.0000174.0000

.000 -.1976 -.1927 -.1920 -.2048 -.2899 -.2860

ALPHAO(2) = -3.990 BETAO (4) = 4.070

SECTION (1)BODY FLAP DEPENDENT VARIABLE CP

TAP NO 169.0000170.0000171.0000172.0000173.0000174.0000

.000 -.2007 -.1909 -.1976 -.1958 -.3065 -.2875

ARC11-716 IA14 O1+T12+S12N25+AT11 BODY FLAP (RB1F36)

ALPHAO(2) = -4.000 BETAO (5) = 8.110

SECTION (1)BODY FLAP DEPENDENT VARIABLE CP

TAP NO 169.0000170.0000171.0000172.0000173.0000174.0000

.000 -.2545 -.2286 -.2406 -.2173 -.3154 -.2903

ALPHAO(3) = -.310 BETAO (1) = -8.050

SECTION (1)BODY FLAP DEPENDENT VARIABLE CP

TAP NO 169.0000170.0000171.0000172.0000173.0000174.0000

.000 -.2100 -.2375 -.1903 -.2453 -.3002 -.2774

ALPHAO(3) = -.320 BETAO (2) = 3.990

SECTION (1)BODY FLAP DEPENDENT VARIABLE CP

TAP NO 169.0000170.0000171.0000172.0000173.0000174.0000

.000 -.2004 -.2116 -.1885 -.2139 -.2728 -.2528

ALPHAO(3) = -.330 BETAO (3) = .040

SECTION (1)BODY FLAP DEPENDENT VARIABLE CP

TAP NO 169.0000170.0000171.0000172.0000173.0000174.0000

.000 -.1861 -.1872 -.1843 -.1991 -.2762 -.2650

ALPHAO(3) = -.330 BETAO (4) = 8.130

SECTION (1)BODY FLAP DEPENDENT VARIABLE CP

TAP NO 169.0000170.0000171.0000172.0000173.0000174.0000

.000 -.2371 -.1996 -.2051 -.1841 -.3037 -.2832

ARC11-716 IA14 O1+T12+S12N25+AT11 BODY FLAP (RB1F36)

ALPHAO(4) = 3.810 BETAO (1) = -4.010

SECTION (1)BODY FLAP DEPENDENT VARIABLE CP

TAP NO	169.0000	170.0000	171.0000	172.0000	173.0000	174.0000
.000	-.1857	-.2084	-.1844	-.2154	-.2607	-.2508

ALPHAO(4) = 3.810 BETAO (2) = .040

SECTION (1)BODY FLAP DEPENDENT VARIABLE CP

TAP NO	169.0000	170.0000	171.0000	172.0000	173.0000	174.0000
.000	-.1774	-.1901	-.1773	-.1970	-.2701	-.2520

ALPHAO(4) = 3.800 BETAO (3) = 4.090

SECTION (1)BODY FLAP DEPENDENT VARIABLE CP

TAP NO	169.0000	170.0000	171.0000	172.0000	173.0000	174.0000
.000	-.1865	-.1697	-.1780	-.1659	-.2745	-.2463

ALPHAO(4) = 3.780 BETAO (4) = 8.160

SECTION (1)BODY FLAP DEPENDENT VARIABLE CP

TAP NO	169.0000	170.0000	171.0000	172.0000	173.0000	174.0000
.000	-.2181	-.1890	-.1905	-.1688	-.2957	-.2623

ALPHAO(5) = 7.940 BETAO (1) = .030

SECTION (1)BODY FLAP DEPENDENT VARIABLE CP

TAP NO	169.0000	170.0000	171.0000	172.0000	173.0000	174.0000
.000	-.1671	-.1720	-.1670	-.1893	-.2582	-.2330

ARC11-716 IA14 O1+T12+S12N25+AT11 BODY FLAP (2B1F36)

ALPHAO(5) = 7.930 BETAO (2) = 4.130

SECTION (1)BODY FLAP DEPENDENT VARIABLE CP

TAP NO	169.0000	170.0000	171.0000	172.0000	173.0000	174.0000
	.000	-.1738	-.1509	-.1598	-.1554	-.2623	-.2325

ALPHAO(5) = 7.910 BETAO (3) = 8.190

SECTION (1)BODY FLAP DEPENDENT VARIABLE CP

TAP NO	169.0000	170.0000	171.0000	172.0000	173.0000	174.0000
	.000	-.1821	-.1650	-.1755	-.1620	-.2898	-.2546

ORIGINAL PAGE IS OF POOR QUALITY

ARC11-716 IA14 O1+T12+S12N25+AT11 BODY FLAP (RB1F37) (15 FEB 74)

REFERENCE DATA

SREF = 2.4210 SQ.FT. XMRP = 29.5800 INCHES
LREF = 36.7090 INCHES YMRP = .0000 INCHES
BREF = 36.7090 INCHES ZMRP = .0000 INCHES
SCALE = .0300 SCALE

PARAMETRIC DATA

MACH = .950 ELEVON = .000
RUDDER = .000 SPOERK = .000

ALPHAO(1) = -8.060 BETAO (1) = -3.980

SECTION (1)BODY FLAP DEPENDENT VARIABLE CP

TAP NO	169.0000	170.0000	171.0000	172.0000	173.0000	174.0000
.000	-.2561	-.2852	-.2566	-.2912	-.3591	-.3480

ALPHAO(1) = -8.050 BETAO (2) = .040

SECTION (1)BODY FLAP DEPENDENT VARIABLE CP

TAP NO	169.0000	170.0000	171.0000	172.0000	173.0000	174.0000
.000	-.2854	-.2766	-.2709	-.2908	-.3576	-.3540

ALPHAO(1) = -8.070 BETAO (3) = 4.090

SECTION (1)BODY FLAP DEPENDENT VARIABLE CP

TAP NO	169.0000	170.0000	171.0000	172.0000	173.0000	174.0000
.000	-.3148	-.3228	-.2860	-.2754	-.3917	-.3260

ALPHAO(1) = -8.100 BETAO (4) = 8.150

SECTION (1)BODY FLAP DEPENDENT VARIABLE CP

TAP NO	169.0000	170.0000	171.0000	172.0000	173.0000	174.0000
.000	-.3197	-.3492	-.2714	-.3342	-.3210	-.3231

ARC11-716 IA14 O1+T12+S12N25+AT11 BODY FLAP (RB1F37)

ALPHAO(2) = -4.090 BETAO (1) = -8.040

SECTION (1)BODY FLAP DEPENDENT VARIABLE CP

TAP NO	169.0000	170.0000	171.0000	172.0000	173.0000	174.0000
.000	-.2434	-.2908	-.2389	-.2928	-.3455	-.3203

ALPHAO(2) = -4.060 BETAO (2) = -4.020

SECTION (1)BODY FLAP DEPENDENT VARIABLE CP

TAP NO	169.0000	170.0000	171.0000	172.0000	173.0000	174.0000
.000	-.2460	-.2643	-.2222	-.2694	-.3480	-.3284

ALPHAO(2) = -4.060 BETAO (3) = .010

SECTION (1)BODY FLAP DEPENDENT VARIABLE CP

TAP NO	169.0000	170.0000	171.0000	172.0000	173.0000	174.0000
.000	-.2640	-.2581	-.2560	-.2679	-.3466	-.3386

ALPHAO(2) = -4.090 BETAO (4) = 4.070

SECTION (1)BODY FLAP DEPENDENT VARIABLE CP

TAP NO	169.0000	170.0000	171.0000	172.0000	173.0000	174.0000
.000	-.2903	-.2321	-.2365	-.2403	-.3637	-.3357

ALPHAO(2) = -4.110 BETAO (5) = 8.110

SECTION (1)BODY FLAP DEPENDENT VARIABLE CP

TAP NO	169.0000	170.0000	171.0000	172.0000	173.0000	174.0000
.000	-.2875	-.2836	-.2681	-.2828	-.3151	-.3492

ARC11-716 IA14 O1+T12+S12N25+AT11 BODY FLAP (RB1F37)

ALPHAO(3) = -.310 BETAO (1) = -8.040

SECTION (1)BODY FLAP DEPENDENT VARIABLE CP

TAP NO	169.0000	170.0000	171.0000	172.0000	173.0000	174.0000
.000	-.2290	-.2856	-.2103	-.2918	-.3676	-.3417

ALPHAO(3) = -.320 BETAO (2) = -4.000

SECTION (1)BODY FLAP DEPENDENT VARIABLE CP

TAP NO	169.0000	170.0000	171.0000	172.0000	173.0000	174.0000
.000	-.2387	-.2705	-.2191	-.2733	-.3440	-.3329

ALPHAO(3) = -.320 BETAO (3) = .040

SECTION (1)BODY FLAP DEPENDENT VARIABLE CP

TAP NO	169.0000	170.0000	171.0000	172.0000	173.0000	174.0000
.000	-.2499	-.2608	-.2516	-.2689	-.3474	-.3291

ALPHAO(3) = -.320 BETAO (4) = 4.090

SECTION (1)BODY FLAP DEPENDENT VARIABLE CP

TAP NO	169.0000	170.0000	171.0000	172.0000	173.0000	174.0000
.000	-.2302	-.2242	-.2234	-.2281	-.3455	-.3245

ALPHAO(3) = -.330 BETAO (5) = 8.130

SECTION (1)BODY FLAP DEPENDENT VARIABLE CP

TAP NO	169.0000	170.0000	171.0000	172.0000	173.0000	174.0000
.000	-.2793	-.2889	-.2704	-.2889	-.3568	-.3421

ALPHAO(4) = 4.030 BETAO (1) = -8.080

SECTION (1)BODY FLAP DEPENDENT VARIABLE CP

TAP NO 169.0000170.0000171.0000172.0000173.0000174.0000

.000 -.2184 -.2798 -.2040 -.2729 -.3554 -.3234

ALPHAO(4) = 4.030 BETAO (2) = -4.010

SECTION (1)BODY FLAP DEPENDENT VARIABLE CP

TAP NO 169.0000170.0000171.0000172.0000173.0000174.0000

.000 -.2258 -.2506 -.2148 -.2510 -.3133 -.3027

ALPHAO(4) = 4.020 BETAO (3) = .030

SECTION (1)BODY FLAP DEPENDENT VARIABLE CP

TAP NO 169.0000170.0000171.0000172.0000173.0000174.0000

.000 -.2303 -.2456 -.2329 -.2546 -.3254 -.3099

ALPHAO(4) = 4.020 BETAO (4) = 4.100

SECTION (1)BODY FLAP DEPENDENT VARIABLE CP

TAP NO 169.0000170.0000171.0000172.0000173.0000174.0000

.000 -.2311 -.2076 -.2106 -.2121 -.3272 -.3032

ALPHAO(4) = 4.010 BETAO (5) = 8.140

SECTION (1)BODY FLAP DEPENDENT VARIABLE CP

TAP NO 169.0000170.0000171.0000172.0000173.0000174.0000

.000 -.2378 -.2371 -.2455 -.2414 -.3563 -.3269

ARC11-716 IA14 O1+T12+S12N25+AT11 BODY FLAP (RB1F37)

ALPHAO(5) = 7.940 BETAO (1) = -8.030

SECTION (1)BODY FLAP DEPENDENT VARIABLE CP

TAP NO	169.0000	170.0000	171.0000	172.0000	173.0000	174.0000
.000	-.2239	-.2999	-.2111	-.2623	-.3294	-.2938

ALPHAO(3) = 7.940 BETAO (2) = -4.010

SECTION (1)BODY FLAP DEPENDENT VARIABLE CP

TAP NO	169.0000	170.0000	171.0000	172.0000	173.0000	174.0000
.000	-.2325	-.2996	-.2243	-.2648	-.3133	-.3014

ALPHAO(5) = 7.940 BETAO (3) = .040

SECTION (1)BODY FLAP DEPENDENT VARIABLE CP

TAP NO	169.0000	170.0000	171.0000	172.0000	173.0000	174.0000
.000	-.2279	-.2360	-.2207	-.2349	-.2993	-.2827

ALPHAO(5) = 7.930 BETAO (4) = 4.110

SECTION (1)BODY FLAP DEPENDENT VARIABLE CP

TAP NO	169.0000	170.0000	171.0000	172.0000	173.0000	174.0000
.000	-.2256	-.2053	-.2139	-.2083	-.3260	-.2816

ALPHAO(5) = 7.920 BETAO (5) = 8.180

SECTION (1)BODY FLAP DEPENDENT VARIABLE CP

TAP NO	169.0000	170.0000	171.0000	172.0000	173.0000	174.0000
.000	-.2012	-.2284	-.2248	-.2191	-.3307	-.3028

ARC11-716 IA14 O1+T12+S12N25+AT11 BODY FLAP (R81F08) (15 FEB 74)

REFERENCE DATA

SREF = 2.4210 SQ.FT. XMRP = 29.5800 INCHES
LREF = 58.7090 INCHES YMRP = .0000 INCHES
BREF = 58.7090 INCHES ZMRP = .0000 INCHES
SCALE = .0300 SCALE

PARAMETRIC DATA

MACH = 1.030 ELEVON = .000
RUDDER = .000 SPOERK = .000

ALPHAO(1) = -8.080 BETAO (1) = -8.020

SECTION (1)BODY FLAP DEPENDENT VARIABLE CP

TAP NO	169.0000170	0000171	.0000172	.0000173	.0000174	.0000
.000	-.2954	-.3135	-.2960	-.3229	-.4005	-.3805

ALPHAO(1) = -8.070 BETAO (2) = -4.980

SECTION (1)BODY FLAP DEPENDENT VARIABLE CP

TAP NO	169.0000170	.0000171	.0000172	.0000173	.0000174	.0000
.000	-.2753	.2892	-.2661	-.3095	-.3893	-.3733

ALPHAO(1) = -8.060 BETAO (3) = .030

SECTION (1)BODY FLAP DEPENDENT VARIABLE CP

TAP NO	169.0000170	.0000171	.0000172	.0000173	.0000174	.0000
.000	-.2829	-.2803	-.2795	-.2814	-.3911	-.3856

ALPHAO(1) = -8.070 BETAO (4) = 4.120

SECTION (1)BODY FLAP DEPENDENT VARIABLE CP

TAP NO	169.0000170	.0000171	.0000172	.0000173	.0000174	.0000
.000	-.2903	-.2716	-.2783	-.2756	-.3855	-.3712

ARC11-716 IA14 O1+T12+S12N25+AT11 BODY FLAP (RB1F38)

ALPHAO(1) = -8.100 BETAO (3) = 8.160

SECTION (1)BODY FLAP DEPENDENT VARIABLE CP

TAP NO	169.00001	70.00001	71.00001	72.00001	73.00001	74.0000
.000	-.3537	-.3473	-.3071	-.3398	-.3531	-.3490

ALPHAO(2) = -4.080 BETAO (1) = -8.040

SECTION (1)BODY FLAP DEPENDENT VARIABLE CP

TAP NO	169.00001	70.00001	71.00001	72.00001	73.00001	74.0000
.000	-.2876	-.3058	-.2841	-.3218	-.3909	-.3667

ALPHAO(2) = -4.090 BETAO (2) = -4.020

SECTION (1)BODY FLAP DEPENDENT VARIABLE CP

TAP NO	169.00001	70.00001	71.00001	72.00001	73.00001	74.0000
.000	-.2575	-.2742	-.2479	-.2906	-.3683	-.3625

ALPHAO(2) = -4.090 BETAO (3) = .040

SECTION (1)BODY FLAP DEPENDENT VARIABLE CP

TAP NO	169.00001	70.00001	71.00001	72.00001	73.00001	74.0000
.000	-.2647	-.2453	-.2658	-.2716	-.3624	-.3676

ALPHAO(2) = -4.090 BETAO (4) = 4.080

SECTION (1)BODY FLAP DEPENDENT VARIABLE CP

TAP NO	169.00001	70.00001	71.00001	72.00001	73.00001	74.0000
.000	-.2593	-.2414	-.2485	-.2451	-.3760	-.3515

ORIGINAL PAGE IS OF POOR QUALITY

ARC11-716 IA14 O1+T12+S12N25+AT11 BODY FLAP (RB1F38)

ALPHAO(2) = -4.100 BETAO (5) = 8.120

SECTION (1)BODY FLAP DEPENDENT VARIABLE CP

TAP NO	169.0000	170.0000	171.0000	172.0000	173.0000	174.0000
.000	-.2775	-.2701	-.2805	-.2779	-.3954	-.3728

ALPHAO(3) = -.310 BETAO (1) = -8.040

SECTION (1)BODY FLAP DEPENDENT VARIABLE CP

TAP NO	169.0000	170.0000	171.0000	172.0000	173.0000	174.0000
.000	-.2587	-.2891	-.2669	-.3173	-.3927	-.3692

ALPHAO(3) = -.320 BETAO (2) = -4.010

SECTION (1)BODY FLAP DEPENDENT VARIABLE CP

TAP NO	169.0000	170.0000	171.0000	172.0000	173.0000	174.0000
.000	-.2384	-.2668	-.2343	-.2878	-.3645	-.3587

ALPHAO(3) = -.330 BETAO (3) = .040

SECTION (1)BODY FLAP DEPENDENT VARIABLE CP

TAP NO	169.0000	170.0000	171.0000	172.0000	173.0000	174.0000
.000	-.2506	-.2432	-.2545	-.2629	-.3584	-.3495

ALPHAO(3) = -.320 BETAO (4) = 4.090

SECTION (1)BODY FLAP DEPENDENT VARIABLE CP

TAP NO	169.0000	170.0000	171.0000	172.0000	173.0000	174.0000
.000	-.2420	-.2222	-.2288	-.2283	-.3671	-.3481

ARC11-716 IA14 01+T12+S12N25+AT11 BODY FLAP (RB1F38)

ALPHAO(3) = -.330 BETAO (5) = 8.130

SECTION (1)BODY FLAP DEPENDENT VARIABLE CP

TAP NO 169.0000170.0000171.0000172.0000173.0000174.0000

.000 -.2760 -.2588 -.2740 -.2656 -.3921 -.3610

ALPHAO(4) = 4.020 BETAO (1) = -8.050

SECTION (1)BODY FLAP DEPENDENT VARIABLE CP

TAP NO 169.0000170.0000171.0000172.0000173.0000174.0000

.000 -.2400 -.2759 -.2439 -.3035 -.3875 -.3665

ALPHAO(4) = 4.020 BETAO (2) = -4.020

SECTION (1)BODY FLAP DEPENDENT VARIABLE CP

TAP NO 169.0000170.0000171.0000172.0000173.0000174.0000

.000 -.2273 -.2547 -.2278 -.2779 -.3593 -.3543

ALPHAO(4) = 4.020 BETAO (3) = .030

SECTION (1)BODY FLAP DEPENDENT VARIABLE CP

TAP NO 169.0000170.0000171.0000172.0000173.0000174.0000

.000 -.2275 -.2338 -.2373 -.2465 -.3402 -.3386

ALPHAO(4) = 4.010 BETAO (4) = 4.110

SECTION (1)BODY FLAP DEPENDENT VARIABLE CP

TAP NO 169.0000170.0000171.0000172.0000173.0000174.0000

.000 -.2270 -.2057 -.2143 -.2140 -.3560 -.3352

ORIGINAL PAGE IS
OF POOR QUALITY

ARC11-716 IA14 O1+T12+S12N25+AT11 BODY FLAP (RB1F38)

ALPHAO(4) = 4.000 BETAO (5) = 8.160

SECTION (1)BODY FLAP DEPENDENT VARIABLE CP

TAP NO	169.0000	170.0000	171.0000	172.0000	173.0000	174.0000
.000	-.2579	-.2373	-.2483	-.2451	-.3693	-.3522

ALPHAO(5) = 7.930 BETAO (1) = -8.010

SECTION (1)BODY FLAP DEPENDENT VARIABLE CP

TAP NO	169.0000	170.0000	171.0000	172.0000	173.0000	174.0000
.000	-.2389	-.2405	-.2361	-.2688	-.3796	-.3550

ALPHAO(5) = 7.930 BETAO (2) = -3.990

SECTION (1)BODY FLAP DEPENDENT VARIABLE CP

TAP NO	169.0000	170.0000	171.0000	172.0000	173.0000	174.0000
.000	-.2120	-.2399	-.2168	-.2605	-.3552	-.3444

ALPHAO(5) = 7.930 BETAO (3) = .040

SECTION (1)BODY FLAP DEPENDENT VARIABLE CP

TAP NO	169.0000	170.0000	171.0000	172.0000	173.0000	174.0000
.000	-.2057	-.2105	-.2147	-.2282	-.3389	-.3405

ALPHAO(5) = 7.930 BETAO (4) = 4.110

SECTION (1)BODY FLAP DEPENDENT VARIABLE CP

TAP NO	169.0000	170.0000	171.0000	172.0000	173.0000	174.0000
.000	-.2188	-.2032	-.2022	-.2096	-.3547	-.3291

A1 C11-716 IA14 O1+T12+S12N25+AT11 BODY FLAP (RB1F38)

ALPHAO(5) = 7.910 BETAO (5) = 8.200

SECTION (1)BODY FLAP DEPENDENT VARIABLE CP

TAP NO	169.0000	170.0000	171.0000	172.0000	173.0000	174.0000
.000	-.2567	-.2190	-.2382	-.2131	-.4178	-.3646

ARC11-716 IA14 O1+T12+S12N25+AT11 BODY FLAP (RB1F39) (15 FEB 74)

REFERENCE DATA

SREF = 2.4210 SQ FT. XMRP = 29.5800 INCHES
LREF = 38.7090 INCHES YMRP = .0000 INCHES
BREF = 38.7090 INCHES ZMRP = .0000 INCHES
SCALE = .0300 SCALE

PARAMETRIC DATA

MACH = 1.150 ELEVON = .000
RUDDER = .000 SPOBRK = .000

ALPHAO(1) = -8.110 BETAO (1) = -8.020

SECTION (1)BODY FLAP DEPENDENT VARIABLE CP

TAP NO 169.0000170.0000171.0000172.0000173.0000174.0000

.000 -.2815 -.2670 -.2842 -.2787 -.3686 -.3546

ALPHAO(1) = -8.100 BETAO (2) = -4.000

SECTION (1)BODY FLAP DEPENDENT VARIABLE CP

TAP NO 169.0000170.0000171.0000172.0000173.0000174.0000

.000 -.2702 -.2462 -.2779 -.2739 -.3646 -.3426

ALPHAO(1) = -8.090 BETAO (3) = .030

SECTION (1)BODY FLAP DEPENDENT VARIABLE CP

TAP NO 169.0000170.0000171.0000172.0000173.0000174.0000

.000 -.2624 -.2247 -.2690 -.2536 -.3631 -.3606

ALPHAO(1) = -8.100 BETAO (4) = 4.000

SECTION (1)BODY FLAP DEPENDENT VARIABLE CP

TAP NO 169.0000170.0000171.0000172.0000173.0000174.0000

.000 -.2643 -.2422 -.2526 -.2443 -.3557 -.3449

ARC11-716 IA14 O1+T12+S12N25+AT11 BODY FLAP (RB1F39)

ALPHAO(1) = -8.130 BETAO (5) = 8.160

SECTION (1)BODY FLAP DEPENDENT VARIABLE CP

TAP NO 169.0000170.0000171.0000172.0000173.0000174.0000

.000 -.2845 -.2699 -.2668 -.2746 -.3571 -.3440

ALPHAO(2) = -4.100 BETAO (1) = -8.030

SECTION (1)BODY FLAP DEPENDENT VARIABLE CP

TAP NO 169.0000170.0000171.0000172.0000173.0000174.0000

.000 -.2833 -.2578 -.2598 -.2638 -.3603 -.3502

ALPHAO(2) = -4.110 BETAO (2) = -4.010

SECTION (1)BODY FLAP DEPENDENT VARIABLE CP

TAP NO 169.0000170.0000171.0000172.0000173.0000174.0000

.000 -.2421 -.2269 -.2527 -.2517 -.3485 -.3196

ALPHAO(2) = -4.110 BETAO (3) = .040

SECTION (1)BODY FLAP DEPENDENT VARIABLE CP

TAP NO 169.0000170.0000171.0000172.0000173.0000174.0000

.000 -.2376 -.2025 -.2435 -.2312 -.3337 -.3352

ALPHAO(2) = -4.110 BETAO (4) = 4.170

SECTION (1)BODY FLAP DEPENDENT VARIABLE CP

TAP NO 169.0000170.0000171.0000172.0000173.0000174.0000

.000 -.2407 -.2153 -.2318 -.2205 -.3509 -.3343

ARC11-716 IA14 O1+T12+S12N25+AT11 BODY FLAP (RB1F39)

ALPHAO(2) = -4.130 BETAO (5) = 8.110

SECTION (1)BODY FLAP DEPENDENT VARIABLE CP

TAP NO	169.0000	170.0000	171.0000	172.0000	173.0000	174.0000
.000	-.2605	-.2455	-.2434	-.2479	-.3541	-.3338

ALPHAO(3) = -.330 BETAO (1) = -4.020

SECTION (1)BODY FLAP DEPENDENT VARIABLE CP

TAP NO	169.0000	170.0000	171.0000	172.0000	173.0000	174.0000
.000	-.2217	-.2284	-.2342	-.2432	-.3400	-.3267

ALPHAO(3) = -.330 BETAO (2) = .040

SECTION (1)BODY FLAP DEPENDENT VARIABLE CP

TAP NO	169.0000	170.0000	171.0000	172.0000	173.0000	174.0000
.000	-.2106	-.1913	-.2227	-.2184	-.3218	-.3165

ALPHAO(3) = -.340 BETAO (3) = 4.070

SECTION (1)BODY FLAP DEPENDENT VARIABLE CP

TAP NO	169.0000	170.0000	171.0000	172.0000	173.0000	174.0000
.000	-.2234	-.1927	-.2134	-.2016	-.3425	-.3320

ALPHAO(3) = -.340 BETAO (4) = 8.140

SECTION (1)BODY FLAP DEPENDENT VARIABLE CP

TAP NO	169.0000	170.0000	171.0000	172.0000	173.0000	174.0000
.000	-.2427	-.2291	-.2292	-.2277	-.3464	-.3137

ORIGINAL PAGE IS OF POOR QUALITY

ARC11-716 IA14 O1+T12+S12N25+AT11 BODY FLAP (RB1F39)

ALPHAO(4) = 4.010 BETAO (1) = -8.060

SECTION (1)BODY FLAP DEPENDENT VARIABLE CP

TAP NO 169.0000170.0000171.0000172.0000173.0000174.0000

.000 -.2155 -.2273 -.2145 -.2241 -.3508 -.3315

ALPHAO(4) = 4.010 BETAO (2) = -4.010

SECTION (1)BODY FLAP DEPENDENT VARIABLE CP

TAP NO 169.0000170.0000171.0000172.0000173.0000174.0000

.000 -.1895 -.2063 -.2095 -.2220 -.3386 -.3308

ALPHAO(4) = 4.000 BETAO (3) = .050

SECTION (1)BODY FLAP DEPENDENT VARIABLE CP

TAP NO 169.0000170.0000171.0000172.0000173.0000174.0000

.000 -.1923 -.1850 -.2005 -.2067 -.3159 -.3181

ALPHAO(4) = 4.000 BETAO (4) = 4.100

SECTION (1)BODY FLAP DEPENDENT VARIABLE CP

TAP NO 169.0000170.0000171.0000172.0000173.0000174.0000

.000 -.1903 -.1678 -.1849 -.1824 -.3300 -.3074

ALPHAO(4) = 3.990 BETAO (5) = 8.140

SECTION (1)BODY FLAP DEPENDENT VARIABLE CP

TAP NO 169.0000170.0000171.0000172.0000173.0000174.0000

.000 -.2374 -.2013 -.2175 -.2025 -.3494 -.3161

ARC11-716 IA14 O1+T12+S12N25+AT11 BODY FLAP (RB1F39)

ALPHAO(5) = 7.920 BETAO (1) = -8.050

SECTION (1)BODY FLAP DEPENDENT VARIABLE CP

TAP NO 169.0000170.0000171.0000172.0000173.0000174.0000

.000 -.2032 -.1894 -.2091 -.2101 -.3518 -.3443

ALPHAO(5) = 7.930 BETAO (2) = -3.990

SECTION (1)BODY FLAP DEPENDENT VARIABLE CP

TAP NO 169.0000170.0000171.0000172.0000173.0000174.0000

.000 -.1670 -.1760 -.1856 -.2031 -.3451 -.3343

ALPHAO(5) = 7.930 BETAO (3) = .040

SECTION (1)BODY FLAP DEPENDENT VARIABLE CP

TAP NO 169.0000170.0000171.0000172.0000173.0000174.0000

.000 -.1636 -.1603 -.1767 -.1843 -.3227 -.3242

ALPHAO(5) = 7.930 BETAO (4) = 4.120

SECTION (1)BODY FLAP DEPENDENT VARIABLE CP

TAP NO 169.0000170.0000171.0000172.0000173.0000174.0000

.000 -.1876 -.1677 -.1789 -.1759 -.3356 -.3087

ALPHAO(5) = 7.910 BETAO (5) = 8.200

SECTION (1)BODY FLAP DEPENDENT VARIABLE CP

TAP NO 169.0000170.0000171.0000172.0000173.0000174.0000

.000 -.2351 -.1933 -.2097 -.1896 -.3705 -.3288

DATE 10 DEC 74 TABULATED PRESSURE DATA - IA14A - VOL. 4

ARC11-716 IA14 O1+T12+S12N25+AT11 BODY FLAP (RB1F40) (15 FEB 74)

REFERENCE DATA

SREF = 2.4210 SQ.FT. XMRP = 29.5800 INCHES
LREF = 58.7090 INCHES YMRP = .0000 INCHES
BREF = 58.7090 INCHES ZMRP = .0000 INCHES
SCALE = .0300 SCALE

PARAMETRIC DATA

MACH = 1.400 ELEVON = .000
RUDDER = .000 SPDBRK = .000

ALPHAO(1) = -7.920 BETAO (1) = -8.040

SECTION (1)BODY FLAP DEPENDENT VARIABLE CP

TAP NO 169.0000170.0000171.0000172.0000173.0000174.0000

.000 -.2161 -.2022 -.2096 -.1975 -.2896 -.2746

ALPHAO(1) = -7.910 BETAO (2) = -4.000

SECTION (1)BODY FLAP DEPENDENT VARIABLE CP

TAP NO 169.0000170.0000171.0000172.0000173.0000174.0000

.000 -.2229 -.1943 -.2222 -.2108 -.3097 -.3008

ALPHAO(1) = -7.900 BETAO (3) = .030

SECTION (1)BODY FLAP DEPENDENT VARIABLE CP

TAP NO 169.0000170.0000171.0000172.0000173.0000174.0000

.000 -.2333 -.1965 -.2320 -.2185 -.3055 -.2964

ALPHAO(1) = -7.910 BETAO (4) = 4.100

SECTION (1)BODY FLAP DEPENDENT VARIABLE CP

TAP NO 169.0000170.0000171.0000172.0000173.0000174.0000

.000 -.2160 -.2033 -.2139 -.2126 -.3136 -.3009

ARC11-716 IA14 O1+T12+S12N25+AT11 BODY FLAP (RB1F40)

ALPHAO(1) = -8.000 BETAO (5) = 8.190

SECTION (1)BODY FLAP DEPENDENT VARIABLE CP

TAP NO	169.0000	170.0000	171.0000	172.0000	173.0000	174.0000
.000	-.2756	-.2716	-.2458	-.2647	-.2810	-.2738

ALPHAO(2) = -4.010 BETAO (1) = -8.050

SECTION (1)BODY FLAP DEPENDENT VARIABLE CP

TAP NO	169.0000	170.0000	171.0000	172.0000	173.0000	174.0000
.000	-.1979	-.2093	-.1891	-.1827	-.2915	-.2788

ALPHAO(2) = -4.010 BETAO (2) = -4.020

SECTION (1)BODY FLAP DEPENDENT VARIABLE CP

TAP NO	169.0000	170.0000	171.0000	172.0000	173.0000	174.0000
.000	-.1945	-.1783	-.2003	-.1919	-.3032	-.2941

ALPHAO(2) = -3.930 BETAO (3) = .030

SECTION (1)BODY FLAP DEPENDENT VARIABLE CP

TAP NO	169.0000	170.0000	171.0000	172.0000	173.0000	174.0000
.000	-.2004	-.1883	-.2050	-.1936	-.2981	-.2938

ALPHAO(2) = -3.940 BETAO (4) = 4.100

SECTION (1)BODY FLAP DEPENDENT VARIABLE CP

TAP NO	169.0000	170.0000	171.0000	172.0000	173.0000	174.0000
.000	-.2038	-.1868	-.2020	-.1926	-.2907	-.2798

ARC11-716 IA14 O1+T12+S12N23+AT11 BODY FLAP (RB1F40)

ALPHAO(2) = -3.950 BETAO (5) = 8.150

SECTION (11)BODY FLAP DEPENDENT VARIABLE CP

TAP NO 169.0000170.0000171.0000172.0000173.0000174.0000

.000 -.1965 -.1889 -.19 -.1975 -.3024 -.2925

ALPHAO(3) = -.370 BETAO (1) = -8.090

SECTION (11)BODY FLAP DEPENDENT VARIABLE CP

TAP NO 169.0000170.0000171.0000172.0000173.0000174.0000

.000 -.1786 -.2152 -.1739 -.1737 -.2931 -.2813

ALPHAO(3) = -.380 BETAO (2) = -4.020

SECTION (11)BODY FLAP DEPENDENT VARIABLE CP

TAP NO 169.0000170.0000171.0000172.0000173.0000174.0000

.000 -.1812 -.1746 -.1803 -.1732 -.2896 -.2807

ALPHAO(3) = -.380 BETAO (3) = .020

SECTION (11)BODY FLAP DEPENDENT VARIABLE CP

TAP NO 169.0000170.0000171.0000172.0000173.0000174.0000

.000 -.1778 -.1444 -.1798 -.1699 -.2819 -.2769

ALPHAO(3) = -.390 BETAO (4) = 4.090

SECTION (11)BODY FLAP DEPENDENT VARIABLE CP

TAP NO 169.0000170.0000171.0000172.0000173.0000174.0000

.000 -.1682 -.1630 -.1797 -.1746 -.2826 -.2768

ARC11-716 IA14 O1+T12+S12N25+AT11 BODY FLAP (R81F40)

ALPHAO(3) = -.390 BETAO (5) = 8.140

SECTION (1)BODY FLAP DEPENDENT VARIABLE CP

TAP NO	169.0000	170.0000	171.0000	172.0000	173.0000	174.0000
.000	-.1850	-.1837	-.1817	-.1779	-.2945	-.2841

ALPHAO(4) = 4.080 BETAO (1) = -8.060

SECTION (1)BODY FLAP DEPENDENT VARIABLE CP

TAP NO	169.0000	170.0000	171.0000	172.0000	173.0000	174.0000
.000	-.1801	-.2181	-.1566	-.1581	-.3024	-.2810

ALPHAO(4) = 4.080 BETAO (2) = -4.020

SECTION (1)BODY FLAP DEPENDENT VARIABLE CP

TAP NO	169.0000	170.0000	171.0000	172.0000	173.0000	174.0000
.000	-.1588	-.1858	-.1554	-.1514	-.2900	-.2852

ALPHAO(4) = 4.010 BETAO (3) = .030

SECTION (1)BODY FLAP DEPENDENT VARIABLE CP

TAP NO	169.0000	170.0000	171.0000	172.0000	173.0000	174.0000
.000	-.1620	-.1471	-.1628	-.1547	-.2679	-.2805

ALPHAO(4) = 4.040 BETAO (4) = 4.090

SECTION (1)BODY FLAP DEPENDENT VARIABLE CP

TAP NO	169.0000	170.0000	171.0000	172.0000	173.0000	174.0000
.000	-.1758	-.1547	-.1718	-.1680	-.2723	-.2620

ORIGINAL PAGE IS OF POOR QUALITY

ARC11-716 IA14 O1+T1E+S12N25+AT11 BODY FLAP (RB1F40)

ALPHAO(4) = 4.060 BETAO (5) = 8.160

SECTION (1)BODY FLAP DEPENDENT VARIABLE CP

TAP NO 169.0000170.0000171.0000172.0000173.0000174.0000

.000 -.1786 -.1473 -.1661 -.1575 -.3011 -.2896

ALPHAO(5) = 8.000 BETAO (1) = -8.060

SECTION (1)BODY FLAP DEPENDENT VARIABLE CP

TAP NO 169.0000170.0000171.0000172.0000173.0000174.0000

.000 -.1533 -.1265 -.1589 -.1490 -.3133 -.2941

ALPHAO(5) = 7.960 BETAO (2) = -4.010

SECTION (1)BODY FLAP DEPENDENT VARIABLE CP

TAP NO 169.0000170.0000171.0000172.0000173.0000174.0000

.000 -.1513 -.1328 -.1551 -.1587 -.3031 -.2973

ALPHAO(5) = 7.910 BETAO (3) = .030

SECTION (1)BODY FLAP DEPENDENT VARIABLE CP

TAP NO 169.0000170.0000171.0000172.0000173.0000174.0000

.000 -.1480 -.1369 -.1509 -.1499 -.2579 -.2566

ALPHAO(5) = 8.000 BETAO (4) = 8.210

SECTION (1)BODY FLAP DEPENDENT VARIABLE CP

TAP NO 169.0000170.0000171.0000172.0000173.0000174.0000

.000 -.1703 -.1406 -.1579 -.1534 -.3253 -.2772

ORIGINAL PAGE IS OF POOR QUALITY

ARC11-716 IA14 O14C12+S12N25 BODY FLAP (RB1F41) (15 FEB 74)

REFERENCE DATA

SREF = 2.4210 SQ.FT. XMRP = 29.5800 INCHES
LREF = 38.7090 INCHES YMRP = .0000 INCHES
BREF = 38.7090 INCHES ZMRP = .0000 INCHES
SCALE = .0300 SCALE

PARAMETRIC DATA

MACH = .600 ELEVON = .000
RUDDER = .000 SPOBRK = .000

ALPHAO(1) = -7.940 BETAO (1) = .020

SECTION (1)BODY FLAP DEPENDENT VARIABLE CP

TAP NO 169.0000170.0000171.0000172.0000173.0000174.0000

.000 -.1218 .0000 -.1297 .0000 .0000 -.2420

ALPHAO(1) = -7.950 BETAO (2) = 4.080

SECTION (1.BODY FLAP DEPENDENT VARIABLE CP

TAP NO 169.0000170.0000171.0000172.0000173.0000174.0000

.000 -.1134 .0000 -.1157 .0000 .0000 -.2519

ALPHAO(1) = -7.970 BETAO (3) = 8.150

SECTION (1)BODY FLAP DEPENDENT VARIABLE CP

TAP NO 169.0000170.0000171.0000172.0000173.0000174.0000

.000 -.1386 .0000 -.1530 .0000 .0000 -.2553

ALPHAO(2) = -4.050 BETAO (1) = -8.030

SECTION (1)BODY FLAP DEPENDENT VARIABLE CP

TAP NO 169.0000170.0000171.0000172.0000173.0000174.0000

.000 -.0956 .0000 -.1379 .0000 .0000 -.2651

ALPHAO(2) = -4.050 BETAO (2) = -4.020

SECTION (1)BODY FLAP DEPENDENT VARIABLE CP

TAP NO 169.0000170.0000171.0000172.0000173.0000174.0000

.000 -.1041 .0000 -.1292 .0000 .0000 -.2504

ALPHAO(2) = -4.050 BETAO (3) = .030

SECTION (1)BODY FLAP DEPENDENT VARIABLE CP

TAP NO 169.0000170.0000171.0000172.0000173.0000174.0000

.000 -.0937 .0000 -.1097 .0000 .0000 -.2465

ALPHAO(2) = -3.950 BETAO (4) = 4.070

SECTION (1)BODY FLAP DEPENDENT VARIABLE CP

TAP NO 169.0000170.0000171.0000172.0000173.0000174.0000

.000 -.1051 .0000 -.1176 .0000 .0000 -.2544

ALPHAO(2) = -3.950 BETAO (5) = 8.110

SECTION (1)BODY FLAP DEPENDENT VARIABLE CP

TAP NO 169.0000170.0000171.0000172.0000173.0000174.0000

.000 -.1156 .0000 -.1308 .0000 .0000 -.2577

ALPHAO(3) = -.310 BETAO (1) = -8.040

SECTION (1)BODY FLAP DEPENDENT VARIABLE CP

TAP NO 169.0000170.0000171.0000172.0000173.0000174.0000

.000 -.0853 .0000 -.1276 .0000 .0000 -.2518

ARC11-716 IA14 O1+T12+S12N25 BODY FLAP (RB1F41)

ALPHAO(3) = -.320 BETAO (2) = -4.020

SECTION (1)BODY FLAP DEPENDENT VARIABLE CP

TAP NO 169.0000170.0000171.0000172.0000173.0000174.0000

.000 -.0926 .0000 -.1236 .0000 .0000 -.2406

ALPHAO(3) = -.320 BETAO (3) = .040

SECTION (1)BODY FLAP DEPENDENT VARIABLE CP

TAP NO 169.0000170.0000171.0000172.0000173.0000174.0000

.000 -.0966 .0000 -.1061 .0000 .0000 -.2379

ALPHAO(3) = -.330 BETAO (4) = 4.060

SECTION (1)BODY FLAP DEPENDENT VARIABLE CP

TAP NO 169.0000170.0000171.0000172.0000173.0000174.0000

.000 -.0997 .0000 -.1225 .0000 .0000 -.2409

ALPHAO(3) = -.330 BETAO (5) = 8.140

SECTION (1)BODY FLAP DEPENDENT VARIABLE CP

TAP NO 169.0000170.0000171.0000172.0000173.0000174.0000

.000 -.1133 .0000 -.1236 .0000 .0000 -.2572

ALPHAO(4) = 4.130 BETAO (1) = -8.050

SECTION (1)BODY FLAP DEPENDENT VARIABLE CP

TAP NO 169.0000170.0000171.0000172.0000173.0000174.0000

.000 -.0663 .0000 -.1032 .0000 .0000 -.2437

ORIGINAL PAGE IS OF POOR QUALITY

ARC11-716 1A14 01+T12+S12N25 BODY FLAP (RB1F41)

ALPHAO(4) = 4.130 BETAO (2) = -4.010

SECTION (1)BODY FLAP DEPENDENT VARIABLE CP

TAP NO 169.0000170.0000171.0000172.0000173.0000174.0000

.000 -.0706 .0000 -.1059 .0000 .0000 -.2263

ALPHAO(4) = 4.130 BETAO (3) = .080

SECTION (1)BODY FLAP DEPENDENT VARIABLE CP

TAP NO 169.0000170.0000171.0000172.0000173.0000174.0000

.000 -.0814 .0000 -.1024 .0000 .0000 -.2271

ALPHAO(4) = 4.120 BETAO (4) = 4.080

SECTION (1)BODY FLAP DEPENDENT VARIABLE CP

TAP NO 169.0000170.0000171.0000172.0000173.0000174.0000

.000 -.0829 .0000 -.1093 .0000 .0000 -.2288

ALPHAO(4) = 4.110 BETAO (5) = 8.150

SECTION (1)BODY FLAP DEPENDENT VARIABLE CP

TAP NO 169.0000170.0000171.0000172.0000173.0000174.0000

.000 -.0995 .0000 -.1067 .0000 .0000 -.2455

ALPHAO(5) = 7.990 BETAO (1) = -8.000

SECTION (1)BODY FLAP DEPENDENT VARIABLE CP

TAP NO 169.0000170.0000171.0000172.0000173.0000174.0000

.000 -.0587 .0000 -.1003 .0000 .0000 -.2244

ARC11-716 IA14 O1+T12+S12N25 BODY FLAP (RB1F41)

ALPHAO(5) = 8.000 BETAO (2) = -4.010

SECTION (1)BODY FLAP DEPENDENT VARIABLE CP

TAP NO	169.0000	170.0000	171.0000	172.0000	173.0000	174.0000
	.000	-.0566	.0000	-.0902	.0000	.0000	-.2200

ALPHAO(5) = 8.000 BETAO (3) = .010

SECTION (1)BODY FLAP DEPENDENT VARIABLE CP

TAP NO	169.0000	170.0000	171.0000	172.0000	173.0000	174.0000
	.000	-.0576	.0000	-.0815	.0000	.0000	-.2144

ALPHAO(5) = 7.870 BETAO (4) = 8.160

SECTION (1)BODY FLAP DEPENDENT VARIABLE CP

TAP NO	169.0000	170.0000	171.0000	172.0000	173.0000	174.0000
	.000	-.0897	.0000	-.1103	.0000	.0000	-.2465

ARC11-716 IA14 O1+T12+S12N25 BODY FLAP (RB1F42) (16 FEB 74)

REFERENCE DATA

SREF = 2.4210 SQ.FT. XMRP = 29.5800 INCHES
LREF = 38.7090 INCHES YMRP = .0000 INCHES
BREF = 38.7090 INCHES ZMRP = .0000 INCHES
SCALE = .0300 SCALE

PARAMETRIC DATA

MACH = .750 ELEVON = .000
RUDDER = .000 SPOORK = .000

ALPHAO(1) = -7.890 BETAO (1) = -8.000

SECTION (1)BODY FLAP DEPENDENT VARIABLE CP

TAP NO 169.0000170.0000171.0000172.0000173.0000174.0000

.000 -.1540 .0000 -.1750 .0000 .0000 -.2882

ALPHAO(1) = -7.780 BETAO (2) = -3.990

SECTION (1)BODY FLAP DEPENDENT VARIABLE CP

TAP NO 169.0000170.0000171.0000172.0000173.0000174.0000

.000 -.1519 .0000 -.1561 .0000 .0000 -.2734

ALPHAO(1) = -7.780 BETAO (3) = .040

SECTION (1)BODY FLAP DEPENDENT VARIABLE CP

TAP NO 169.0000170.0000171.0000172.0000173.0000174.0000

.000 -.1564 .0000 -.1589 .0000 .0000 -.2606

ALPHAO(1) = -7.790 BETAO (4) = 4.090

SECTION (1)BODY FLAP DEPENDENT VARIABLE CP

TAP NO 169.0000170.0000171.0000172.0000173.0000174.0000

.000 -.1642 .0000 -.1487 .0000 .0000 -.2568

ALPHAO(1) = -7.970 BETAO (5) = 8.160

SECTION (1)BODY FLAP DEPENDENT VARIABLE CP

TAP NO 169.0000170.0000171.0000172.0000173.0000174.0000

.000 -.1911 .0000 -.1798 .0000 .0000 -.2501

ALPHAO(2) = -4.020 BETAO (1) = -8.060

SECTION (1)BODY FLAP DEPENDENT VARIABLE CP

TAP NO 169.0000170.0000171.0000172.0000173.0000174.0000

.000 -.1403 .0000 -.1707 .0000 .0000 -.2745

ALPHAO(2) = -4.030 BETAO (2) = -4.030

SECTION (1)BODY FLAP DEPENDENT VARIABLE CP

TAP NO 169.0000170.0000171.0000172.0000173.0000174.0000

.000 -.1417 .0000 -.1629 .0000 .0000 -.2655

ALPHAO(2) = -4.040 BETAO (3) = .040

SECTION (1)BODY FLAP DEPENDENT VARIABLE CP

TAP NO 169.0000170.0000171.0000172.0000173.0000174.0000

.000 -.1326 .0000 -.1440 .0000 .0000 -.2616

ALPHAO(2) = -4.040 BETAO (4) = 4.070

SECTION (1)BODY FLAP DEPENDENT VARIABLE CP

TAP NO 169.0000170.0000171.0000172.0000173.0000174.0000

.000 -.1396 .0000 -.1421 .0000 .0000 -.2599

ALPHAO(2) = -4.040 BETAO (5) = 8.130

SECTION (1)BODY FLAP DEPENDENT VARIABLE CP

TAP NO 169.0000170.0000171.0000172.0000173.0000174.0000

.000 -.1664 .0000 -.1586 .0000 .0000 -.2640

ALPHAO(3) = -.320 BETAO (1) = -8.060

SECTION (1)BODY FLAP DEPENDENT VARIABLE CP

TAP NO 169.0000170.0000171.0000172.0000173.0000174.0000

.000 -.1345 .0000 -.1554 .0000 .0000 -.2685

ALPHAO(3) = -.340 BETAO (2) = -4.010

SECTION (1)BODY FLAP DEPENDENT VARIABLE CP

TAP NO 169.0000170.0000171.0000172.0000173.0000174.0000

.000 -.1325 .0000 -.1506 .0000 .0000 -.2506

ALPHAO(3) = -.340 BETAO (3) = .050

SECTION (1)BODY FLAP DEPENDENT VARIABLE CP

TAP NO 169.0000170.0000171.0000172.0000173.0000174.0000

.000 -.1292 .0000 -.1357 .0000 .0000 -.2573

ALPHAO(3) = -.350 BETAO (4) = 4.090

SECTION (1)BODY FLAP DEPENDENT VARIABLE CP

TAP NO 169.0000170.0000171.0000172.0000173.0000174.0000

.000 -.1470 .0000 -.1487 .0000 .0000 -.2577

ALPHAO(3) = -.340 BETAO (5) = 8.180

SECTION (1)BODY FLAP DEPENDENT VARIABLE CP

TAP NO 169.0000170.0000171.0000172.0000173.0000174.0000

.000 -.1619 .0000 -.1500 .0000 .0000 -.2653

ALPHAO(4) = 4.220 BETAO (1) = -8.060

SECTION (1)BODY FLAP DEPENDENT VARIABLE CP

TAP NO 169.0000170.0000171.0000172.0000173.0000174.0000

.000 -.1019 .0000 -.1337 .0000 .0000 -.2997

ALPHAO(4) = 4.210 BETAO (2) = -4.030

SECTION (1)BODY FLAP DEPENDENT VARIABLE CP

TAP NO 169.0000170.0000171.0000172.0000173.0000174.0000

.000 -.1062 .0000 -.1286 .0000 .0000 -.2344

ALPHAO(4) = 4.210 BETAO (3) = .030

SECTION (1)BODY FLAP DEPENDENT VARIABLE CP

TAP NO 169.0000170.0000171.0000172.0000173.0000174.0000

.000 -.1090 .0000 -.1234 .0000 .0000 -.2339

ALPHAO(4) = 4.200 BETAO (4) = 4.090

SECTION (1)BODY FLAP DEPENDENT VARIABLE CP

TAP NO 169.0000170.0000171.0000172.0000173.0000174.0000

.000 -.1178 .0000 -.1323 .0000 .0000 -.2372

ORIGINAL PAGE IS OF POOR QUALITY

ALPHAO(4) = 4.190 BETAO (5) = 8.160

SECTION (1)BODY FLAP DEPENDENT VARIABLE CP

TAP NO 169.0000170.0000171.0000172.0000173.0000174.0000

.000 -.1378 .0000 -.1350 .0000 .0000 -.2468

ALPHAO(5) = 8.070 BETAO (1) = -8.050

SECTION (1)BODY FLAP DEPENDENT VARIABLE CP

TAP NO 169.0000170.0000171.0000172.0000173.0000174.0000

.000 -.0972 .0000 -.1230 .0000 .0000 -.2460

ALPHAO(5) = 8.080 BETAO (2) = -3.990

SECTION (1)BODY FLAP DEPENDENT VARIABLE CP

TAP NO 169.0000170.0000171.0000172.0000173.0000174.0000

.000 -.0955 .0000 -.1223 .0000 .0000 -.2309

ALPHAO(5) = 7.970 BETAO (3) = .050

SECTION (1)BODY FLAP DEPENDENT VARIABLE CP

TAP NO 169.0000170.0000171.0000172.0000173.0000174.0000

.000 -.0955 .0000 -.1082 .0000 .0000 -.2245

ALPHAO(5) = 7.980 BETAO (4) = 4.130

SECTION (1)BODY FLAP DEPENDENT VARIABLE CP

TAP NO 169.0000170.0000171.0000172.0000173.0000174.0000

.000 -.0986 .0000 -.1148 .0000 .0000 -.2316

ORIGINAL PAGE IS
OF POOR QUALITY

ARC11-716 IA14 O1+T12+S12N25 BODY FLAP (RB1F42)

ALPHAO(5) = 7.940 BETAO (5) = 8.220

SECTION (1)BODY FLAP DEPENDENT VARIABLE CP

TAP NO	169.0000	170.0000	171.0000	172.0000	173.0000	174.0000
	.000	-.1193	.0000	-.1175	.0000	.0000	-.2492

ARC11-716 IA14 01+T12+S12N25 BODY FLAP (RB1F43) (15 FEB 74)

REFERENCE DATA

SREF =	2.4210 SQ.FT.	XMRP =	29.5800 INCHES
LREF =	36.7090 INCHES	YMRP =	.0000 INCHES
BREF =	36.7090 INCHES	ZMRP =	.0000 INCHES
SCALE =	.0300 SCALE		

PARAMETRIC DATA

MACH =	.850	ELEVON =	.000
RUDDER =	.000	SPOERK =	.000

ALPHAO(1) = -7.800 BETAO (1) = -8.020

SECTION (1)BODY FLAP DEPENDENT VARIABLE CP

TAP NO	169.0000	170.0000	171.0000	172.0000	173.0000	174.0000
	.000	-.2127	.0000	-.2219	.0000	.0000	-.3131

ALPHAO(1) = -7.780 BETAO (2) = -4.000

SECTION (1)BODY FLAP DEPENDENT VARIABLE CP

TAP NO	169.0000	170.0000	171.0000	172.0000	173.0000	174.0000
	.000	-.2068	.0000	-.2012	.0000	.0000	-.2962

ALPHAO(1) = -7.780 BETAO (3) = .040

SECTION (1)BODY FLAP DEPENDENT VARIABLE CP

TAP NO	169.0000	170.0000	171.0000	172.0000	173.0000	174.0000
	.000	-.1919	.0000	-.2018	.0000	.0000	-.2949

ALPHAO(1) = -7.850 BETAO (4) = 4.110

SECTION (1)BODY FLAP DEPENDENT VARIABLE CP

TAP NO	169.0000	170.0000	171.0000	172.0000	173.0000	174.0000
	.000	-.2178	.0030	-.1994	.0000	.0000	-.2878

ARC11-716 1A14 01+T12+S12N25 BODY FLAP (RB1F43)

ALPHAO(1) = -7.890 BETAO (5) = 8.170

SECTION (1)BODY FLAP DEPENDENT VARIABLE CP

TAP NO 169.0000170.0000171.0000172.0000173.0000174.0000

.000 -.2475 .0000 -.2258 .0000 .0000 -.2975

ALPHAO(2) = -3.890 BETAO (1) = -8.080

SECTION (1)BODY FLAP DEPENDENT VARIABLE CP

TAP NO 169.0000170.0000171.0000172.0000173.0000174.0000

.000 -.1928 .0000 -.2071 .0000 .0000 -.3052

ALPHAO(2) = -3.890 BETAO (2) = -4.020

SECTION (1)BODY FLAP DEPENDENT VARIABLE CP

TAP NO 169.0000170.0000171.0000172.0000173.0000174.0000

.000 -.1910 .0000 -.1925 .0000 .0000 -.2806

ALPHAO(2) = -3.640 BETAO (3) = .030

SECTION (1)BODY FLAP DEPENDENT VARIABLE CP

TAP NO 169.0000170.0000171.0000172.0000173.0000174.0000

.000 -.1668 .0000 -.1695 .0000 .0000 -.2757

ALPHAO(2) = -3.880 BETAO (4) = 4.090

SECTION (1)BODY FLAP DEPENDENT VARIABLE CP

TAP NO 169.0000170.0000171.0000172.0000173.0000174.0000

.000 -.2028 .0000 -.1871 .0000 .0000 -.2804

ALPHAO(2) = -3.900 BETAO (5) = 8.150

SECTION (1)BODY FLAP DEPENDENT VARIABLE CP

TAP NO 169.0000170.0000171.0000172.0000173.0000174.0000

.000 -.2246 .0000 -.2053 .0000 .0000 -.2954

ALPHAO(3) = -.310 BETAO (1) = -8.080

SECTION (1)BODY FLAP DEPENDENT VARIABLE CP

TAP NO 169.0000170.0000171.0000172.0000173.0000174.0000

.000 -.1627 .0000 -.1769 .0000 .0000 -.2847

ALPHAO(3) = -.330 BETAO (2) = -5.040

SECTION (1)BODY FLAP DEPENDENT VARIABLE CP

TAP NO 169.0000170.0000171.0000172.0000173.0000174.0000

.000 -.1701 .0000 -.1789 .0000 .0000 -.2708

ALPHAO(3) = -.340 BETAO (3) = .040

SECTION (1)BODY FLAP DEPENDENT VARIABLE CP

TAP NO 169.0000170.0000171.0000172.0000173.0000174.0000

.000 -.1714 .0000 -.1842 .0000 .0000 -.2690

ALPHAO(3) = -.350 BETAO (4) = 4.090

SECTION (1)BODY FLAP DEPENDENT VARIABLE CP

TAP NO 169.0000170.0000171.0000172.0000173.0000174.0000

.000 -.1874 .0000 -.1955 .0000 .0000 -.2676

ORIGINAL PAGE IS OF POOR QUALITY

ALPHAO(3) = -.340 BETAO (5) = 8.150

SECTION (1)BODY FLAP DEPENDENT VARIABLE CP

TAP NO 169.0000170.0000171.0000172.0000173.0000174.0000

.000 -.2096 .0000 -.1920 .0000 .0000 -.2877

ALPHAO(4) = 4.130 BETAO (1) = -8.090

SECTION (1)BODY FLAP DEPENDENT VARIABLE CP

TAP NO 169.0000170.0000171.0000172.0000173.0000174.0000

.000 -.1452 .0000 -.1615 .0000 .0000 -.2686

ALPHAO(4) = 4.050 BETAO (2) = -4.020

SECTION (1)BODY FLAP DEPENDENT VARIABLE CP

TAP NO 169.0000170.0000171.0000172.0000173.0000174.0000

.000 -.1508 .0000 -.1645 .0000 .0000 -.2482

ALPHAO(4) = 4.050 BETAO (3) = .030

SECTION (1)BODY FLAP DEPENDENT VARIABLE CP

TAP NO 169.0000170.0000171.0000172.0000173.0000174.0000

.000 -.1457 .0000 -.1444 .0000 .0000 -.2486

ALPHAO(4) = 4.140 BETAO (4) = 4.140

SECTION (1)BODY FLAP DEPENDENT VARIABLE CP

TAP NO 169.0000170.0000171.0000172.0000173.0000174.0000

.000 -.1605 .0000 -.1705 .0000 .0000 -.2530

ARC11-716 IA14 C1+T12+S12N25 BODY FLAP (RB1F43)

ALPHAO(4) = 4.150 BETAO (5) = 8.190

SECTION (1)BODY FLAP DEPENDENT VARIABLE CP

TAP NO 169.0000170.0000171.0000172.0000173.0000174.0000

.000 -.1845 .0000 -.1661 .0000 .0000 -.2628

ALPHAO(5) = 8.040 BETAO (1) = -8.070

SECTION (1)BODY FLAP DEPENDENT VARIABLE CP

TAP NO 169.0000170.0000171.0000172.0000173.0000174.0000

.000 -.1359 .0000 -.1573 .0000 .0000 -.2622

ALPHAO(5) = 8.010 BETAO (2) = -4.020

SECTION (1)BODY FLAP DEPENDENT VARIABLE CP

TAP NO 169.0000170.0000171.0000172.0000173.0000174.0000

.000 -.1378 .0000 -.1498 .0000 .0000 -.2471

ALPHAO(5) = 8.010 BETAO (3) = .030

SECTION (1)BODY FLAP DEPENDENT VARIABLE CP

TAP NO 169.0000170.0000171.0000172.0000173.0000174.0000

.000 -.1388 .0000 -.1509 .0000 .0000 -.2367

ALPHAO(5) = 8.000 BETAO (4) = 4.130

SECTION (1)BODY FLAP DEPENDENT VARIABLE CP

TAP NO 169.0000170.0000171.0000172.0000173.0000174.0000

.000 -.1532 .0000 -.1461 .0000 .0000 -.2360

ORIGINAL PAGE IS OF POOR QUALITY

ARC11-716 IA14 O1+T12+S12N25 BODY FLAP (R81F43)

ALPHAO(5) = 8.000 BETAO (5) = 8.250

SECTION (1)BODY FLAP DEPENDENT VARIABLE CP

TAP NO	169.0000	170.0000	171.0000	172.0000	173.0000	174.0000
	.000	-.1731	.0000	-.1645	.0000	.0000	-.2563

ARC11-716 IA14 O1+T12+S12N25 BODY FLAP (RB1F44) (15 FEB 74)

REFERENCE DATA

SREF =	2.4210 SQ.FT.	XMRP =	29.5800 INCHES
LREF =	38.7090 INCHES	YMRP =	.0000 INCHES
BREF =	38.7090 INCHES	ZMRP =	.0000 INCHES
SCALE =	.0300 SCALE		

PARAMETRIC DATA

MACH =	.900	ELEVON =	.000
RUDDER =	.000	SPOBRK =	.000

ALPHAO(1) = -7.970 BETAO (1) = -3.050

SECTION (1)BODY FLAP DEPENDENT VARIABLE CP

TAP NO 169.0000170.0000171.0000172.0000173.0000174.0000

.000 -.2331 .0000 -.2343 .0000 .0000 -.3249

ALPHAO(1) = -7.960 BETAO (2) = -4.000

SECTION (1)BODY FLAP DEPENDENT VARIABLE CP

TAP NO 169.0000170.0000171.0000172.0000173.0000174.0000

.000 -.2346 .0000 -.2273 .0000 .0000 -.3150

ALPHAO(1) = -7.960 BETAO (3) = .050

SECTION (1)BODY FLAP DEPENDENT VARIABLE CP

TAP NO 169.0000170.0000171.0000172.0000173.0000174.0000

.000 -.2242 .0000 -.2210 .0000 .0000 -.3264

ALPHAO(1) = -7.970 BETAO (4) = 4.100

SECTION (1)BODY FLAP DEPENDENT VARIABLE CP

TAP NO 169.0000170.0000171.0000172.0000173.0000174.0000

.000 -.2439 .0000 -.2319 .0000 .0000 -.3148

ALPHAO(1) = -8.000 BETAO (5) = 8.170

SECTION (1)BODY FLAP DEPENDENT VARIABLE CP

TAP NO 169.0000170.0000171.0000172.0000173.0000174.0000

.000 -.2617 .0000 -.2356 .0000 .0000 -.3219

ALPHAO(2) = -4.070 BETAO (1) = -8.080

SECTION (1)BODY FLAP DEPENDENT VARIABLE CP

TAP NO 169.0000170.0000171.0000172.0000173.0000174.0000

.000 -.2017 .0000 -.2165 .0000 .0000 -.3172

ALPHAO(2) = -3.970 BETAO (2) = -4.030

SECTION (1)BODY FLAP DEPENDENT VARIABLE CP

TAP NO 169.0000170.0000171.0000172.0000173.0000174.0000

.000 -.1990 .0000 -.2008 .0000 .0000 -.2941

ALPHAO(2) = -3.880 BETAO (3) = .030

SECTION (1)BODY FLAP DEPENDENT VARIABLE CP

TAP NO 169.0000170.0000171.0000172.0000173.0000174.0000

.000 -.2017 .0000 -.1901 .0000 .0000 -.3047

ALPHAO(2) = -3.920 BETAO (4) = 4.080

SECTION (1)BODY FLAP DEPENDENT VARIABLE CP

TAP NO 169.0000170.0[illegible].71.0000172.0000173.0000174.0000

.000 -.2054 .0000 -.2060 .0000 .0000 -.3000

ORIGINAL PAGE IS
OF POOR QUALITY

ALPHAO(2) = -3.930 BETAO (5) = 8.150

SECTION (1)BODY FLAP DEPENDENT VARIABLE CP

TAP NO 169.0000170.0000171.0000172.0000173.0000174.0000

.000 -.2413 .0000 -.2236 .0000 .0000 -.3274

ALPHAO(3) = .060 BETAO (1) = -8.080

SECTION (1)BODY FLAP DEPENDENT VARIABLE CP

TAP NO 169.0000170.0000171.0000172.0000173.0000174.0000

.000 -.1894 .0000 -.1964 .0000 .0000 -.3011

ALPHAO(3) = -.320 BETAO (2) = -4.030

SECTION (1)BODY FLAP DEPENDENT VARIABLE CP

TAP NO 169.0000170.0000171.0000172.0000173.0000174.0000

.000 -.1986 .0000 -.1993 .0000 .0000 -.2828

ALPHAO(3) = -.320 BETAO (3) = .050

SECTION (1)BODY FLAP DEPENDENT VARIABLE CP

TAP NO 169.0000170.0000171.0000172.0000173.0000174.0000

.000 -.1997 .0000 -.2026 .0000 .0000 -.2858

ALPHAO(3) = -.330 BETAO (4) = 4.100

SECTION (1)BODY FLAP DEPENDENT VARIABLE CP

TAP NO 169.0000170.0000171.0000172.0000173.0000174.0000

.000 -.2073 .0000 -.2161 .0000 .0000 -.2918

ALPHAO(3) = -.330 BETAO (5) = 8.150

SECTION (1)BODY FLAP DEPENDENT VARIABLE CP

TAP NO 169.0000170.0000171.0000172.0000173.0000174.0000

.000 -.2472 .0000 -.2164 .0000 .0000 -.3201

ALPHAO(4) = 4.200 BETAO (1) = -8.100

SECTION (1)BODY FLAP DEPENDENT VARIABLE CP

TAP NO 169.0000170.0000171.0000172.0000173.0000174.0000

.000 -.1701 .0000 -.1868 .0000 .0000 -.2877

ALPHAO(4) = 4.190 BETAO (2) = -4.020

SECTION (1)BODY FLAP DEPENDENT VARIABLE CP

TAP NO 169.0000170.0000171.0000172.0000173.0000174.0000

.000 -.1793 .0000 -.1856 .0000 .0000 -.2632

ALPHAO(4) = 4.060 BETAO (3) = .040

SECTION (1)BODY FLAP DEPENDENT VARIABLE CP

TAP NO 169.0000170.0000171.0000172.0000173.0000174.0000

.000 -.2023 .0000 -.1933 .0000 .0000 -.2617

ALPHAO(4) = 4.100 BETAO (4) = 4.110

SECTION (1)BODY FLAP DEPENDENT VARIABLE CP

TAP NO 169.0000170.0000171.0000172.0000173.0000174.0000

.000 -.1972 .0000 -.1967 .0000 .0000 -.2656

ALPHAO(4) = 4.100 BETAO (5) = 8.190

SECTION (1)BODY FLAP DEPENDENT VARIABLE CP

TAP NO 169.0000170.0000171.0000172.0000173.0000174.0000

.000 -.2217 .0000 -.1928 .0000 .0000 -.2929

ALPHAO(5) = 8.040 BETAO (1) = -8.080

SECTION (1)BODY FLAP DEPENDENT VARIABLE CP

TAP NO 169.0000170.0000171.0000172.0000173.0000174.0000

.000 -.1595 .0000 -.1818 .0000 .0000 -.2899

ALPHAO(5) = 7.980 BETAO (2) = -4.0[illegible]

SECTION (1)BODY FLAP DEPENDENT VARIABLE CP

TAP NO 169.0000170.0000171.0000172.0000173.0000174.0000

.000 -.1685 .0000 -.1753 .0000 .0000 -.2524

ALPHAO(5) = 7.970 BETAO (3) = .020

SECTION (1)BODY FLAP DEPENDENT VARIABLE CP

TAP NO 169.0000170.0000171.0000172.0000173.0000174.0000

.000 -.1628 .0000 -.1702 .0000 .0000 -.2513

ALPHAO(5) = 8.020 BETAO (4) = 4.130

SECTION (1)BODY FLAP DEPENDENT VARIABLE CP

TAP NO 169.0000170.0000171.0000172.0000173.0000174.0000

.000 -.1828 .0000 -.1859 .0000 .0000 -.2589

ARC11-716 IA14 O1+T12+S12N25 BODY FLAP (RB1F44)

ALPHAO(5) = 8.080 BETAO (5) = 8.230

SECTION (1)BODY FLAP DEPENDENT VARIABLE CP

TAP NO	169.0000	170.0000	171.0000	172.0000	173.0000	174.0000
	.000	-.1952	.0000	-.1905	.00[illegible]	.0000	-.2797

ORIGINAL PAGE IS OF POOR QUALITY

ARC11-716 IA14 O1+T12+S12N25 BODY FLAP (RB1F45) (20 FEB 74)

REFERENCE DATA

SREF = 2.4210 SQ.FT. XMRP = 29.5800 INCHES
LREF = 38.7090 INCHES YMRP = .0000 INCHES
BREF = 38.7090 INCHES ZMRP = .0000 INCHES
SCALE = .0300 SCALE

PARAMETRIC DATA

MACH = .950 ELEVON = .000
RUDDER = .000 SPDBRK = .000

ALPHAO(1) = -7.870 BETAO (1) = -8.040

SECTION (1)BODY FLAP DEPENDENT VARIABLE CP

TAP NO 169.0000170.0000171.0000172.0000173.0000174.0000

.000 -.2731 .0000 -.2944 .0000 .0000 -.3686

ALPHAO(1) = -7.770 BETAO (2) = -4.010

SECTION (1)BODY FLAP DEPENDENT VARIABLE CP

TAP NO 169.0000170.0000171.0000172.0000173.0000174.0000

.000 -.2955 .0000 -.2873 .0000 .0000 -.3646

ALPHAO(1) = -7.760 BETAO (3) = .040

SECTION (1)BODY FLAP DEPENDENT VARIABLE CP

TAP NO 169.0000170.0000171.0000172.0000173.0000174.0000

.000 -.3250 .0000 -.3137 .0000 .0000 -.3588

ALPHAO(1) = -7.900 BETAO (4) = 4.110

SECTION (1)BODY FLAP DEPENDENT VARIABLE CP

TAP NO 169.0000170.0000171.0000172.0000173.0000174.0000

.000 -.3171 .0000 -.2994 .0000 .0000 -.3617

ARC11-716 IA14 O1+T12+S12N25 BODY FLAP (RB1F45)

ALPHAO(1) = -7.930 BETAO (5) = 8.180

SECTION (1)BODY FLAP DEPENDENT VARIABLE CP

TAP NO 169.0000170.0000171.0000172.0000173.0000174.0000

.000 -.3295 .0000 -.2908 .0000 .0000 -.3520

ALPHAO(2) = -4.020 BETAO (1) = -8.080

SECTION (1)BODY FLAP DEPENDENT VARIABLE CP

TAP NO 169.0000170.0000171.0000172.0000173.0000174.0000

.000 -.2477 .0000 -.2658 .0000 .0000 -.3493

ALPHAO(2) = -3.960 BETAO (2) = -4.030

SECTION (1)BODY FLAP DEPENDENT VARIABLE CP

TAP NO 169.0000170.0000171.0000172.0000173.0000174.0000

.000 -.2563 .0000 -.2481 .0000 .0000 -.3496

ALPHAO(2) = -3.870 BETAO (3) = .010

SECTION (1)BODY FLAP DEPENDENT VARIABLE CP

TAP NO 169.0000170.0000171.0000172.0000173.0000174.0000

.000 -.2658 .0000 -.2668 .0000 .0000 -.3459

ALPHAO(2) = -3.940 BETAO (4) = 4.090

SECTION (1)BODY FLAP DEPENDENT VARIABLE CP

TAP NO 169.0000170.0000171.0000172.0000173.0000174.0000

.000 -.2757 .0000 -.2638 .0000 .0000 -.3387

DATE 10 DEC 74 TABULATED PRESSURE DATA - IA14A - VOL. 4

ARC11-716 IA14 O1+T12+S12N25 BODY FLAP (RB1F45)

ALPHAO(2) = -3.950 BETAO (5) = 8.170

SECTION : 1)BODY FLAP DEPENDENT VARIABLE CP

TAP NO 169.0000170.0000171.0000172.0000173.0000174.0000

.000 -.2972 .0000 -.2669 .0000 .0000 -.3532

ALPHAO(3) = -.300 BETAO (1) = -8.100

SECTION (1)BODY FLAP DEPENDENT VARIABLE CP

TAP NO 169.0000170.0000171.0000172.0000173.0000174.0000

.000 -.2282 .0000 -.2531 .0000 .0000 -.3363

ALPHAO(3) = -.320 BETAO (2) = -4.030

SECTION (1)BODY FLAP DEPENDENT VARIABLE CP

TAP NO 169.0000170.0000171.0000172.0000173.0000174.0000

.000 -.2425 .0000 -.2470 .0000 .0000 -.3234

ALPHAO(3) = -.330 BETAO (3) = .040

SECTION (1)BODY FLAP DEPENDENT VARIABLE CP

TAP NO 169.0000170.0000171.0000172.0000173.0000174.0000

.000 -.2544 .0000 -.2538 .0000 .0000 -.3280

ALPHAO(3) = -.330 BETAO (4) = 4.090

SECTION . 1)BODY FLAP DEPENDENT VARIABLE CP

TAP NO 169.0000170.0000171.0000172.0000173.0000174.0000

.100 -.2827 .0000 -.2636 .0000 .0000 -.3353

ARC11-716 IA14 O1+T12+S12N25 BODY FLAP (RB1F45)

ALPHAO(3) = -.330 BETAO (5) = 8.160

SECTION (1)BODY FLAP DEPENDENT VARIABLE CP

TAP NO 169.0000170.0000171.0000172.0000173.0000174.0000

.000 -.2674 .0000 -.2578 .0000 .0000 -.3531

ALPHAO(4) = 4.170 BETAO (1) = -8.100

SECTION (1)BODY FLAP DEPENDENT VARIABLE CP

TAP NO 169.0000170.0000171.0000172.0000173.0000174.0000

.000 -.2486 .0000 -.2410 .0000 .0000 -.3276

ALPHAO(4) = 4.170 BETAO (2) = -4.030

SECTION (1)BODY FLAP DEPENDENT VARIABLE CP

TAP NO 169.0000170.0000171.0000172.0000173.0000174.0000

.000 .2229 .0000 -.2553 .0000 .0000 -.2984

ALPHAO(4) = 4.150 BETAO (3) = .010

SECTION (1)BODY FLAP DEPENDENT VARIABLE CP

TAP NO 169.0000170.0000171.0000172.0000173.0000174.0000

.000 -.2440 .0000 -.2465 .0000 .0000 -.3035

ALPHAO(4) = 4.140 BETAO (4) = 4.110

SECTION (1)BODY FLAP DEPENDENT VARIABLE CP

TAP NO 169.0000170.0000171.0000172.0000173.0000174.0000

.000 -.2444 .0000 -.2427 .0000 .0000 -.3004

ARC11-716 IA14 O1+T12+S12N25 BODY FLAP (RB1F45)

ALPHAO(5) = 8.150 BETAO (1) = -8.090

SECTION (1)BODY FLAP DEPENDENT VARIABLE CP

TAP NO 169.0000170.0000171.0000172.0000173.0000174.0000

.000 -.1996 .0000 -.2179 .0000 .0000 -.3141

ALPHAO(5) = 8.150 BETAO (2) = -4.030

SECTION (1)BODY FLAP DEPENDENT VARIABLE CP

TAP NO 169.0000170.0000171.0000172.0000173.0000174.0000

.000 -.2090 .0000 -.2143 .0000 .0000 -.2823

ALPHAO(5) = 8.140 BETAO (3) = .040

SECTION (1)BODY FLAP DEPENDENT VARIABLE CP

TAP NO 169.0000170.0000171.0000172.0000173.0000174.0000

.000 -.2151 .0000 -.2161 .0000 .0000 -.2813

ALPHAO(5) = 8.140 BETAO (4) = 4.150

SECTION (1)BODY FLAP DEPENDENT VARIABLE CP

TAP NO 169.0000170.0000171.0000172.0000173.0000174.0000

.000 -.2375 .0000 -.2329 .0000 .0000 -.2914

ALPHAO(5) = 8.120 BETAO (5) = 8.270

SECTION (1)BODY FLAP DEPENDENT VARIABLE CP

TAP NO 169.0000170.0000171.0000172.0000173.0000174.0000

.000 -.2488 .0000 -.2270 .0000 .0000 -.3319

ORIGINAL PAGE IS OF POOR QUALITY

ARC11-716 IA14 O1+T12+S12N25 BODY FLAP (RB1F46) (15 FEB 74)

REFERENCE DATA

SREF = 2.4210 SQ.FT. XMRP = 29.5800 INCHES
LREF = 38.7090 INCHES YMRP = .0000 INCHES
BREF = 38.7090 INCHES ZMRP = .0000 INCHES
SCALE = .0300 SCALE

PARAMETRIC DATA

MACH = .975 ELEVON = .000
RUDDER = .000 SPDBRK = .000

ALPHAO(1) = 7.970 BETAO (1) = -8.050

SECTION (1)BODY FLAP DEPENDENT VARIABLE CP

TAP NO 169.0000170.0000171.0000172.0000173.0000174.0000

.000 -.3192 .0000 -.3251 .0000 .0000 -.4090

ALPHAO(1) = -7.960 BETAO (2) = -4.020

SECTION (1)BODY FLAP DEPENDENT VARIABLE CP

TAP NO 169.0000170.0000171.0000172.0000173.0000174.0000

.000 -.3165 .0000 -.3283 .0000 .0000 -.3977

ALPHAO(1) = -7.890 BETAO (3) = .030

SECTION (1)BODY FLAP DEPENDENT VARIABLE CP

TAP NO 169.0000170.0000171.0000172.0000173.0000174.0000

.000 -.3447 .0000 -.3534 .0000 .0000 -.3705

ALPHAO(1) = -7.950 BETAO (4) = 4.100

SECTION (1)BODY FLAP DEPENDENT VARIABLE CP

TAP NO 169.0000170.0000171.0000172.0000173.0000174.0000

.000 -.3315 .0000 -.3286 .0000 .0000 -.3929

ALPHAO(1) = -7.980 BETAO (5) = 8.190

SECTION (1)BODY FLAP DEPENDENT VARIABLE CP

TAP NO 169.0000170.0000171.0000172.0000173.0000174.0000

.000 -.3526 .0000 -.3224 .0000 .0000 -.3943

ALPHAO(2) = -3.920 BETAO (1) = -8.060

SECTION (1)BODY FLAP DEPENDENT VARIABLE CP

TAP NO 169.0000170.0000171.0000172.0000173.0000174.0000

.000 -.2877 .0000 -.3006 .0000 .0000 -.3860

ALPHAO(2) = -3.920 BETAO (2) = -4.010

SECTION (1)BODY FLAP DEPENDENT VARIABLE CP

TAP NO 169.0000170.0000171.0000172.0000173.0000174.0000

.000 -.2873 .0000 -.3037 .0000 .0000 -.3800

ALPHAO(2) = -3.850 BETAO (3) = .020

SECTION (1)BODY FLAP DEPENDENT VARIABLE CP

TAP NO 169.0000170.0000171.0000172.0000173.0000174.0000

.000 -.3142 .0000 -.3143 .0000 .0000 -.3673

ALPHAO(2) = -3.970 BETAO (4) = 4.100

SECTION (1)BODY FLAP DEPENDENT VARIABLE CP

TAP NO 169.0000170.0000171.0000172.0000173.0000174.0000

.000 -.3109 .0000 -.3096 .0000 .0000 -.3830

ALPHAO(2) = -3.990 BETAO (5) = 8.160

SECTION (1)BODY FLAP DEPENDENT VARIABLE CP

TAP NO 169.0000170.0000171.0000172.0000173.0000174.0000

.000 -.3267 .0000 -.2967 .0000 .0000 -.3789

ALPHAO(3) = -.300 BETAO (1) = -8.100

SECTION (1)BODY FLAP DEPENDENT VARIABLE CP

TAP NO 169.0000170.0000171.0000172.0000173.0000174.0000

.000 -.2528 .0000 -.2727 .0000 .0000 -.3738

ALPHAO(3) = -.320 BETAO (2) = -4.030

SECTION (1)BODY FLAP DEPENDENT VARIABLE CP

TAP NO 169.0000170.0000171.0000172.0000173.0000174.0000

.000 -.2704 .0000 -.2833 .0000 .0000 -.3633

ALPHAO(3) = -.330 BETAO (3) = .040

SECTION (1)BODY FLAP DEPENDENT VARIABLE CP

TAP NO 169.0000170.0000171.0000172.0000173.0000174.0000

.000 -.2863 .0000 -.2853 .0000 .0000 -.3464

ALPHAO(3) = -.330 BETAO (4) = 4.080

SECTION (1)BODY FLAP DEPENDENT VARIABLE CP

TAP NO 169.0000170.0000171.0000172.0000173.0000174.0000

.000 -.2868 .0000 -.2875 .0000 .0000 -.3552

ALPHAO(3) = -.330 BETAO (3) = 8.160

SECTION (1)BODY FLAP DEPENDENT VARIABLE CP

TAP NO 169.0000170.0000171.0000172.0000173.0000174.0000

.000 -.3120 .0000 -.2804 .0000 .0000 -.3687

ALPHAO(4) = 4.100 BETAO (1) = -8.100

SECTION (1)BODY FLAP DEPENDENT VARIABLE CP

TAP NO 169.0000170.0000171.0000172.0000173.0000174.0000

.000 -.2377 .0000 -.2511 .0000 .0000 -.3595

ALPHAO(4) = 4.090 BETAO (2) = -4.040

SECTION (1)BODY FLAP DEPENDENT VARIABLE CP

TAP NO 169.0000170.0000171.0000172.0000173.0000174.0000

.000 -.2410 .0000 -.2580 .0000 .0000 -.3367

ALPHAO(4) = 4.090 BETAO (3) = .030

SECTION (1)BODY FLAP DEPENDENT VARIABLE CP

TAP NO 169.0000170.0000171.0000172.0000173.0000174.0000

.000 -.2681 .0000 -.2709 .0000 .0000 -.3422

ALPHAO(4) = 4.070 BETAO (4) = 4.120

SECTION (1)BODY FLAP DEPENDENT VARIABLE CP

TAP NO 169.0000170.0000171.0000172.0000173.0000174.0000

.000 -.2609 .0000 -.2538 .0000 .0000 -.3371

ALPHAO(4) = 4.080 BETAO (5) = 8.200

SECTION (1)BODY FLAP DEPENDENT VARIABLE CP

TAP NO 169.0000170.0000171.0000172.0000173.0000174.0000

.000 -.2817 .0000 -.2616 .0000 .0000 -.3656

ALPHAO(5) = 8.040 BETAO (1) = -8.080

SECTION (1)BODY FLAP DEPENDENT VARIABLE CP

TAP NO 169.0000170.0000171.0000172.0000173.0000174.0000

.000 -.2092 .0000 -.2356 .0000 .0000 -.3363

ALPHAO(5) = 7.920 BETAO (2) = -4.020

SECTION (1)BODY FLAP DEPENDENT VARIABLE CP

TAP NO 169.0000170.0000171.0000172.0000173.0000174.0000

.000 -.2175 .0000 -.2400 .0000 .0000 -.3079

ALPHAO(5) = 7.910 BETAO (3) = .080

SECTION (1)BODY FLAP DEPENDENT VARIABLE CP

TAP NO 169.0000170.0000171.0000172.0000173.0000174.0000

.000 -.2237 .0000 -.2362 .0000 .0000 -.3113

ALPHAO(5) = 8.040 BETAO (4) = 4.150

SECTION (1)BODY FLAP DEPENDENT VARIABLE CP

TAP NO 169.0000170.0000171.0000172.0000173.0000174.0000

.000 -.2451 .0000 -.2496 .0000 .0000 -.3305

ORIGINAL PAGE IS OF POOR QUALITY

ARC11-718 IA14 O1+T12+S12N25 BODY FLAP (RB1F46)

ALPHAO(5) = 8.030 BETAO (5) = 8.220

SECTION (1)BODY FLAP DEPENDENT VARIABLE CP

TAP NO	169.0000	170.0000	171.0000	172.0000	173.0000	174.0000
	.000	-.2540	.0000	-.2556	.0000	.0000	-.3495

ARC11-718 IA14 O1+T12+S12N25 BODY FLAP (RB1F47) (15 FEB 74)

REFERENCE DATA

SREF = 2.4210 SQ.FT. XMRP = 29.5800 INCHES
LREF = 38.7090 INCHES YMRP = .0000 INCHES
BREF = 38.7090 INCHES ZMRP = .0000 INCHES
SCALE = .0300 SCALE

PARAMETRIC DATA

MACH = 1.050 ELEVON = .000
RUDDER = .000 SPOBRK = .000

ALPHAO(1) = -7.960 BETAO (1) = -8.070

SECTION (1)BODY FLAP DEPENDENT VARIABLE CP

TAP NO 169.0000170.0000171.0000172.0000173.0000174.0000

.000 -.2898 .0000 -.3033 .0000 .0000 -.3957

ALPHAO(1) = -7.960 BETAO (2) = -4.010

SECTION (1)BODY FLAP DEPENDENT VARIABLE CP

TAP NO 169.0000170.0000171.0000172.0000173.0000174.0000

.000 -.2794 .0000 -.2964 .0000 .0000 -.3751

ALPHAO(1) = -7.960 BETAO (3) = .030

SECTION (1)BODY FLAP DEPENDENT VARIABLE CP

TAP NO 169.0000170.0000171.0000172.0000173.0000174.0000

.000 -.3284 .0000 -.3296 .0000 .0000 -.3626

ALPHAO(1) = -7.960 BETAO (4) = 4.120

SECTION (1)BODY FLAP DEPENDENT VARIABLE CP

TAP NO 169.0000170.0000171.0000172.0000173.0000174.0000

.000 -.3105 .0000 -.3037 .0000 .0000 -.3822

ALPHAO(1) = -7.990 BETAO (5) = 5.210

SECTION (1)BODY FLAP DEPENDENT VARIABLE CP

TAP NO 169.0000170.0000171.0000172.0000173.0000174.0000

.000 -.3258 .0000 -.3109 .0000 .0000 -.3989

ALPHAO(2) = -3.820 BETAO (1) = -8.120

SECTION (1)BODY FLAP DEPENDENT VARIABLE CP

TAP NO 169.0000170.0000171.0000172.0000173.0000174.0000

.000 -.2635 .0000 -.2822 .0000 .0000 -.3809

ALPHAO(2) = -3.830 BETAO (2) = -4.020

SECTION (1)BODY FLAP DEPENDENT VARIABLE CP

TAP NO 169.0000170.0000171.0000172.0000173.0000174.0000

.000 -.2608 .0000 -.2779 .0000 .0000 -.3612

ALPHAO(2) = -3.910 BETAO (3) = .030

SECTION (1)BODY FLAP DEPENDENT VARIABLE CP

TAP NO 169.0000170.0000171.0000172.0000173.0000174.0000

.000 -.2928 .0000 -.2958 .0000 .0000 -.3511

ALPHAO(2) = -3.910 BETAO (4) = 4.100

SECTION (1)BODY FLAP DEPENDENT VARIABLE CP

TAP NO 169.0000170.0000171.0000172.0000173.0000174.0000

.000 -.2742 .0000 -.2803 .0000 .0000 -.3653

ALPHAO(2) = -3.920 BETAO (5) = 8.180

SECTION (1)BODY FLAP DEPENDENT VARIABLE CP

TAP NO 169.0000170.0000171.0000172.0000173.0000174.0000

.000 -.2999 .0000 -.2802 .0000 .0000 -.3913

ALPHAO(3) = .020 BETAO (1) = -8.130

SECTION (1)BODY FLAP DEPENDENT VARIABLE CP

TAP NO 169.0000170.0000171.0000172.0000173.0000174.0000

.000 -.2381 .0000 -.2652 .0000 .0000 -.3756

ALPHAO(3) = .000 BETAO (2) = -4.060

SECTION (1)BODY FLAP DEPENDENT VARIABLE CP

TAP NO 169.0000170.0000171.0000172.0000173.0000174.0000

.000 -.2469 .0000 -.2676 .0000 .0000 -.3500

ALPHAO(3) = -.350 BETAO (3) = .340

SECTION (1)BODY FLAP DEPENDENT VARIABLE CP

TAP NO 169.0000170.0000171.0000172.0000173.0000174.0000

.000 -.2719 .0000 -.2797 .0000 .0000 -.3403

ALPHAO(3) = .040 BETAO (4) = 4.100

SECTION (1)BODY FLAP DEPENDENT VARIABLE CP

TAP NO 169.0000170.0000171.0000172.0000173.0000174.0000

.000 -.2519 .0000 -.2556 .0000 .0000 -.3541

ARC11-716 IA14 01+T12+S12N25 BODY FLAP (RB1F47)

ALPHAO(3) = .070 BETAO (5) = 8.180

SECTION (1)BODY FLAP DEPENDENT VARIABLE CP

TAP NO 169.0000170.0000171.0000172.0000173.0000174.0000

.000 -.2870 .0000 -.2639 .0000 .0000 -.3781

ALPHAO(4) = 4.120 BETAO (1) = -8.110

SECTION (1)BODY FLAP DEPENDENT VARIABLE CP

TAP NO 169.0000170.0000171.0000172.0000173.0000174.0000

.000 -.2031 .0000 -.2242 .0000 .0000 -.3626

ALPHAO(4) = 4.100 BETAO (2) = -4.030

SECTION (1)BODY FLAP DEPENDENT VARIABLE CP

TAP NO 169.0000170.0000171.0000172.0000173.0000174.0000

.000 -.2178 .0000 -.2356 .0000 .0000 -.3375

ALPHAO(4) = 4.100 BETAO (3) = .040

SECTION (1)BODY FLAP DEPENDENT VARIABLE CP

TAP NO 169.0000170.0000171.0000172.0000173.0000174.0000

.000 -.2351 .0000 -.2557 .0000 .0000 -.3395

ALPHAO(4) = 4.090 BETAO (4) = 4.130

SECTION (1)BODY FLAP DEPENDENT VARIABLE CP

TAP NO 169.0000170.0000171.0000172.0000173.0000174.0000

.000 -.2250 .0000 -.2251 .0000 .0000 -.3565

ORIGINAL PAGE IS OF POOR QUALITY

ALPHAO(4) = 4.080 BETAO (5) = 8.230

SECTION (1)BODY FLAP DEPENDENT VARIABLE CP

TAP NO 169.0000170.0000171.0000172.0000173.0000174.0000

.000 -.2635 .0000 -.2250 .0000 .0000 -.3678

ALPHAO(5) = 8.050 BETAO (1) = -8.090

SECTION (1)BODY FLAP DEPENDENT VARIABLE CP

TAP NO 169.0000170.0000171.0000172.0000173.0000174.0000

.000 -.1904 .0000 -.2107 .0000 .0000 -.3584

ALPHAO(5) = 8.050 BETAO (2) = -4.040

SECTION (1)BODY FLAP DEPENDENT VARIABLE CP

TAP NO 169.0000170.0000171.0000172.0000173.0000174.0000

.000 -.1954 .0000 -.2149 .0000 .0000 -.3504

ALPHAO(5) = 8.050 BETAO (3) = .020

SECTION (1)BODY FLAP DEPENDENT VARIABLE CP

TAP NO 169.0000170.0000171.0000172.0000173.0000174.0000

.000 -.1887 .0000 -.2134 .0000 .0000 -.3493

ALPHAO(5) = 8.020 BETAO (4) = 4.170

SECTION (1)BODY FLAP DEPENDENT VARIABLE CP

TAP NO 169.0000170.0000171.0000172.0000173.0000174.0000

.000 -.2058 .0000 -.2190 .0000 .0000 -.3530

ARC11-716 IA14 01+T12+S12N25 BODY FLAP (RB1F47)

ALPHAO(5) = 8.020 BETAO (5) = 8.260

SECTION (1)BODY FLAP DEPENDENT VARIABLE CP

TAP NO 169.0000170.0000171.0000172.0000173. 000174.0000

.000 -.2394 .0000 -.2265 .0000 .0000 -.3795

ARC11-716 IA14 O1+T12+S12N25 BODY FLAP (RB1F48) (15 FEB 74)

REFERENCE DATA

BREF = 2.4210 SQ.FT. XMRP = 29.5800 INCHES
LREF = 34.7000 INCHES YMRP = .0000 INCHES
BREF = 38.7090 INCHES ZMRP = .0000 INCHES
SCALE = .0300 SCALE

PARAMETRIC DATA

MACH = 1.100 ELEVON = .000
RUDDER = .000 SPOERK = .000

ALPHAO(1) = -7.930 BETAO (1) = -8.080

SECTION (1)BODY FLAP DEPENDENT VARIABLE CP

TAP NO 169.0000170.0000171.0000172.0000173.0000174.0000

.000 -.1836 .0000 -.2860 .0000 .0000 -.3925

ALPHAO(1) = -7.930 BETAO (2) = -4.020

SECTION (1)BODY FLAP DEPENDENT VARIABLE CP

TAP NO 169.0000170.0000171.0000172.0000173.0000174.0000

.000 -.2865 .0000 -.2993 .0000 .0000 -.3737

ALPHAO(1) = -7.930 BETAO (3) = .040

SECTION (1)BODY FLAP DEPENDENT VARIABLE CP

TAP NO 169.0000170.0000171.0000172.0000173.0000174.0000

.000 -.3167 .0000 -.3239 .0000 .0000 -.3661

ALPHAO(1) = -7.930 BETAO (4) = 4.090

SECTION (1)BODY FLAP DEPENDENT VARIABLE CP

TAP NO 169.0000170.0000171.0000172.0000173.0000174.0000

.000 -.2980 .0000 -.2961 .0000 .0000 -.3912

ARC11-716 IA14 O1+T12+S12N25 BODY FLAP (RB1F48)

ALPHAO(1) = -7.950 BETAO (5) = 8.230

SECTION (1)BODY FLAP DEPENDENT VARIABLE CP

TAP NO 169.0000170.0000171.0000172.0000173.0000174.0000

.000 -.3122 .0000 -.2940 .0000 .0000 -.4025

ALPHAO(2) = -3.940 BETAO (1) = -8.170

SECTION (1)BODY FLAP DEPENDENT VARIABLE CP

TAP NO 169.0000170.0000171.0000172.0000173.0000174.0000

.000 -.2493 .0000 -.1613 .0000 .0000 -.3782

ALPHAO(2) = -3.960 BETAO (2) = -4.020

SECTION (1)BODY FLAP DEPENDENT VARIABLE CP

TAP NO 169.0000170.0000171.0000172.0000173.0000174.0000

.000 -.2523 .0000 -.2713 .0000 .0000 -.3623

ALPHAO(2) = -3.890 BETAO (3) = .050

SECTION (1)BODY FLAP DEPENDENT VARIABLE CP

TAP NO 169.0000170.0000171.0000172.0000173.0000174.0000

.000 -.2639 .0000 -.2888 .0000 .0000 -.3468

ALPHAO(2) = -3.890 BETAO (4) = 4.130

SECTION (1)BODY FLAP DEPENDENT VARIABLE CP

TAP NO 169.0000170.0000171.0000172.0000173.0000174.0000

.000 -.2610 .0000 -.2680 .0000 .0000 -.3761

ORIGINAL PAGE IS OF POOR QUALITY

ALPHAO(2) = -3.890 BETAO (5) = 8.190

SECTION (1)BODY FLAP DEPENDENT VARIABLE CP

TAP NO 169.0000170.0000171.0000172.0000173.0000174.0000

.000 -.2877 .0000 -.2711 .0000 .0000 -.3943

ALPHAO(3) = -.310 BETAO (1) = -8.140

SECTION (1)BODY FLAP DEPENDENT VARIABLE CP

TAP NO 169.0000170.0000171.0000172.0000173.0000174.0000

.000 -.2236 .0000 -.2388 .0000 .0000 -.3727

ALPHA[illegible] = -.330 BETAO (2) = -4.040

SECTION (1)BODY FLAP DEPENDENT VARIABLE CP

TAP NO 169.0000170.0000171.0000172.0000173.0000174.0000

.000 -.2256 .0000 -.2413 .0000 .0000 -.3550

ALPHAO(3) = -.340 BETAO (3) = .030

SECTION (1)BODY FLAP DEPENDENT VARIABLE CP

TAP NO [illegible].0000170.0000171.0000172.0000173.0000174.0000

.000 -.[illegible]8 .0000 -.2723 .0000 .0000 -.3402

ALPHAO(3) = -.340 BETAO (4) = 4.110

SECTION (1)BODY FLAP DEPENDENT VARIABLE C

TAP NO 169.0000170.0000171.0000172.0000173.0000174.0000

.000 -.2324 .0000 -.2376 .0000 .0000 -.3693

ALPHAO(3) = -.340 BETAO (5) = 8.180

SECTION (1)BODY FLAP DEPENDENT VARIABLE CP

TAP NO 169.0000170.0000171.0000172.0000173.0000174.0000

.000 -.2788 .0000 -.2591 .0000 .0000 -.3955

ALPHAO(4) = 4.170 BETAO (1) = -8.250

SECTION (1)BODY FLAP DEPENDENT VARIABLE CP

TAP NO 169.0000170.0000171.0000172.0000173.0000174.0000

.000 -.1724 .0000 -.2080 .0000 .0000 -.3651

ALPHAO(4) = 4.160 BETAO (2) = -4.050

SECTION (1)BODY FLAP DEPENDENT VARIABLE CP

TAP NO 169.0000170.0000171.0000172.0000173.0000174.0000

.000 -.1960 .0000 -.2238 .0000 .0000 -.3484

ALPHAO(4) = 4.170 BETAO (3) = .030

SECTION (1)BODY FLAP DEPENDENT VARIABLE CP

TAP NO 169.0000170.0000171.0000172.0000173.0000174.0000

.000 -.2234 .0000 -.2479 .0000 .0000 -.3388

ALPHAO(4) = 4.170 BETAO (4) = 4.130

SECTION (1)BODY FLAP DEPENDENT VARIABLE CP

TAP NO 169.0000170.0000171.0000172.0000173.0000174.0000

.000 -.2018 .0000 -.2058 .0000 .0000 -.3593

OF POOR QUALITY

ALPHAO(4) = 4.160 BETAO (5) = 8.240

SECTION (1)BODY FLAP DEPENDENT VARIABLE CP

TAP NO 169.0000170.0000171.0000172.0000173.0000174.0000

.000 -.2440 .0000 -.2130 .0000 .0000 -.3792

ALPHAO(5) = 8.130 BETAO (1) = -4.040

SECTION (1)BODY FLAP DEPENDENT VARIABLE CP

TAP NO 169.0000170.0000171.0000172.0000173.0000174.0000

.000 -.1844 .0000 -.2089 .0000 .0000 -.3457

ALPHAO(5) = 8.130 BETAO (2) = .040

SECTION (1)BODY FLAP DEPENDENT VARIABLE CP

TAP NO 169.0000170.0000171.0000172.0000173.0000174.0000

.000 -.1764 .0000 -.2025 .0000 .0000 -.3523

ALPHAO(5) = 8.120 BETAO (3) = 4.160

SECTION (1)BODY FLAP DEPENDENT VARIABLE CP

TAP NO 169.0000170.0000171.0000172.0000173.0000174.0000

.000 -.1947 .0000 -.2045 .0000 .0000 -.3672

ALPHAO(5) = 8.110 BETAO (4) = 8.270

SECTION (1)BODY FLAP DEPENDENT VARIABLE CP

TAP NO 169.0000170.0000171.0000172.0000173.0000174.0000

.000 -.2284 .0000 -.1966 .0000 .0000 -.3872

ARC11-716 IA14 O1+T12+S12N25 BODY FLAP (RB1F49) (15 FEB 74)

REFERENCE DATA

SREF = 2.4210 SQ.FT. XMRP = 29.5800 INCHES
LREF = 38.7090 INCHES YMRP = .0000 INCHES
BREF = 38.7090 INCHES ZMRP = .0000 INCHES
SCALE = .0300 SCALE

PARAMETRIC DATA

MACH = 1.150 ELEVON = .000
RUDDER = .000 SPOBRK = .000

ALPHAO(1) = -7.860 BETAO (1) = -8.060

SECTION (1)BODY FLAP DEPENDENT VARIABLE CP

TAP NO 169.0000170.0000171.0000172.0000173.0000174.0000

.000 -.2686 .0000 -.2677 .0000 .0000 -.3747

ALPHAO(1) = -7.860 BETAO (2) = -4.000

SECTION (1)BODY FLAP DEPENDENT VARIABLE CP

TAP NO 169.0000170.0000171.0000172.0000173.0000174.0000

.000 -.2541 .0000 -.2668 .0000 .0000 -.3380

ALPHAO(1) = -7.860 BETAO (3) = .040

SECTION (1)BODY FLAP DEPENDENT VARIABLE CP

TAP NO 169.0000170.0000171.0000172.0000173.0000174.0000

.000 -.2931 .0000 -.3001 .0000 .0000 -.3407

ALPHAO(1) = -7.870 BETAO (4) = 4.100

SECTION (1)BODY FLAP DEPENDENT VARIABLE CP

TAP NO 169.0000170.0000171.0000172.0000173.0000174.0000

.000 -.2591 .0000 -.2610 .0000 .0000 -.3569

ALPHAO(1) = -7.890 BETAO (5) = 8.200

SECTION (1)BODY FLAP DEPENDENT VARIABLE CP

TAP NO 169.0000170.0000171.0000172.0000173.0000174.0000

.000 -.2804 .0000 -.2741 .0000 .0000 -.3827

ALPHAO(2) = -3.930 BETAO (1) = -8.100

SECTION (1)BODY FLAP DEPENDENT VARIABLE CP

TAP NO 169.0000170.0000171.0000172.0000173.0000174.0000

.000 -.2341 .0000 -.2352 .0000 .0000 -.3510

ALPHAO(2) = -3.880 BETAO (2) = -4.120

SECTION (1)BODY FLAP DEPENDENT VARIABLE CP

TAP NO 169.0000170.0000171.0000172.0000173.0000174.0000

.000 -.2169 .0000 -.2360 .0000 .0000 -.3217

ALPHAO(2) = -3.890 BETAO (3) = .030

SECTION (1)BODY FLAP DEPENDENT VARIABLE CP

TAP NO 169.0000170.0000171.0000172.0000173.0000174.0000

.000 -.2426 .0000 -.2557 .0000 .0000 -.3141

ALPHAO(2) = -3.890 BETAO (4) = 4.080

SECTION (1)BODY FLAP DEPENDENT VARIABLE CP

TAP NO 169.0000170.0000171.0000172.0000173.0000174.0000

.000 -.2305 .0000 -.2289 .0000 .0000 -.3441

ALPHAO(2) = -3.890 BETAO (5) = 8.180

SECTION (1)BODY FLAP DEPENDENT VARIABLE CP

TAP NO 169.0000170.0000171.0000172.0000173.0000174.0000

.000 -.2500 .0000 -.2438 .0000 .0000 -.3737

ALPHAO(3) = -.310 BETAO (1) = -8.100

SECTION (1)BODY FLAP DEPENDENT VARIABLE CP

TAP NO 169.0000170.0000171.0000172.0000173.0000174.0000

.000 -.1949 .0000 -.2108 .0000 .0000 -.3437

ALPHAO(3) = -.330 BETAO (2) = -4.030

SECTION (1)BODY FLAP DEPENDENT VARIABLE CP

TAP NO 169.0000170.0000171.0000172.0000173.0000174.0000

.000 -.1964 .0000 -.2105 .0000 .0000 -.3164

ALPHAO(3) = -.340 BETAO (3) = .030

SECTION (1)BODY FLAP DEPENDENT VARIABLE CP

TAP NO 169.0000170.0000171.0000172.0000173.0000174.0000

.000 -.2235 .0000 -.2384 .0000 .0000 -.3069

ALPHAO(3) = -.340 BETAO (4) = 4.100

SECTION (1)BODY FLAP DEPENDENT VARIABLE CP

TAP NO 169.0000170.0000171.0000172.0000173.0000174.0000

.000 -.1968 .0000 -.2016 0000 .0000 -.3369

ALPHAO(3) = -.340 BETAO (5) = 8.170

SECTION (1)BODY FLAP DEPENDENT VARIABLE CP

TAP NO 169.0000170.0000171.0000172.0000173.0000174.0000

.000 -.2365 .0000 -.2150 .0000 .0000 - 3584

ALPHAO(4) = 4.130 BETAO (1) = -8.080

SECTION (1)BODY FLAP DEPENDENT VARIABLE CP

TAP NO 169.0000170.0000171.0000172.0000173.0000174.0000

.000 -.1435 .0000 -.1723 .0000 .0000 -.3316

ALPHAO(4) = 4.010 BETAO (2) = -4.010

SECTION (1)BODY FLAP DEPENDENT VARIABLE CP

TAP NO 169.0000170.0000171.0000172.0000173.0000174.0000

.000 -.1657 .0000 -.1863 .0000 .0000 -.3141

ALPHAO(4) = 4.000 BETAO (3) = .040

SECTION (1)BODY FLAP DEPENDENT VARIABLE CP

TAP NO 169.0000170.0000171.0000172.0000173.0000174.0000

.000 -.1901 .0000 -.2100 .0000 .0000 -.3111

ALPHAO(4) = 4.030 BETAO (4) = 4.110

SECTION (1)BODY FLAP DEPENDENT VARIABLE CP

TAP NO 169.0000170.0000171.0000172.0000173.0000174.0000

.000 -.1694 .0000 -.1750 .0000 .0000 -.3299

ORIGINAL PAGE IS OF POOR QUALITY

ALPHAO(4) = 4.030 BETAO (5) = 8.210

SECTION (1)BODY FLAP DEPENDENT VARIABLE CP

TAP NO 169.0000170.0000171.0000172.0000173.0000174.0000

.000 -.2135 .0000 -.1779 .0000 .0000 -.3503

ALPHAO(3) = 8.040 BETAO (1) = -8.090

SECTION (1)BODY FLAP DEPENDENT VARIABLE CP

TAP NO 169.0000170.0000171.0000172.0000173.0000174.0000

.000 -.1382 .0000 -.1748 .0000 .0000 -.3361

ALPHAO(5) = 7.970 BETAO (2) = -4.030

SECTION (1)BODY FLAP DEPENDENT VARIABLE CP

TAP NO 169.0000170.0000171.0000172.0000173.0000174.0000

.000 -.1571 .0000 -.1799 .0000 .0000 -.3168

ALPHAO(5) = 8.060 BETAO (3) = .040

SECTION (1)BODY FLAP DEPENDENT VARIABLE CP

TAP NO 169.0000170.0000171.0000172.0000173.0000174.0000

.000 -.1466 .0000 -.1787 .0000 .0000 -.3364

ALPHAO(5) = 8.060 BETAO (4) = 4.140

SECTION (1)BODY FLAP DEPENDENT VARIABLE CP

TAP NO 169.0000170.0000171.0000172.0000173.0000174.0000

.000 -.1600 .0000 -.1676 .0000 .0000 -.3357

ORIGINAL PAGE IS OF POOR QUALITY

ARC11-716 IA14 01+T12+S12N25 BODY FLAP (RB1F49)

ALPHAO(5) = 8.050 BETAO (5) = 8.270

SECTION (1)BODY FLAP DEPENDENT VARIABLE CP

TAP NO 169.0000170.000017..0000172.0000173.0000174.0000

.000 -.1948 .0000 -.1719 .0000 .0000 -.3598

ARC11-716 IA14 01+T12+S12H25 BODY FLAP (RB1F50) (15 FEB 74)

REFERENCE DATA

SREF = 8.4210 SQ.FT. XMRP = 29.5800 INCHES
LREF = 38.7090 INCHES YMRP = .0000 INCHES
BREF = 38.7090 INCHES ZMRP = .0000 INCHES
SCALE = .0300 SCALE

PARAMETRIC DATA

MACH = 1.250 ELEVON = .000
RUDDER = .000 SPOIBK = .000

ALPHAO(1) = -8.010 BETAO (1) = -8.020

SECTION (1)BODY FLAP DEPENDENT VARIABLE CP

TAP NO 169.0000170.0000171.0000172.0000173.0000174.0000

.000 -.2258 .0000 -.2389 .0000 .0000 -.3442

ALPHAO(1) = -8.010 BETAO (2) = -4.000

SECTION (1)BODY FLAP DEPENDENT VARIABLE CP

TAP NO 169.0000170.0000171.0000172.0000173.0000174.0000

.000 -.2239 .0000 -.2428 .0000 .0000 -.3221

ALPHAO(1) = -8.000 BETAO (3) = .030

SECTION (1)BODY FLAP DEPENDENT VARIABLE CP

TAP NO 169.0000170.0000171.0000172.0000173.0000174.0000

.000 -.2634 .0000 -.2644 .0000 .0000 -.3151

ALPHAO(1) = -8.010 BETAO (4) = 4.100

SECTION (1)BODY FLAP DEPENDENT VARIABLE CP

TAP NO 169.0000170.0000171.0000172.0000173.0000174.0000

.000 -.2333 .0000 -.2359 .0000 .0000 -.3254

ARC11-716 IA14 O1+T12+S12N25 BODY FLAP (RB1F50)

ALPHAO(1) = -8.030 BETAO (5) = 8.160

SECTION (1)BODY FLAP DEPENDENT VARIABLE CP

TAP NO 169.0000170.0000171.0000172.0000173.0000174.0000

.000 -.2302 .0000 -.2203 .0000 .0000 -.3465

ALPHAO(2) = -3.930 BETAO (1) = -8.030

SECTION (1)BODY FLAP DEPENDENT VARIABLE CP

TAP NO 169.0000170.0000171.0000172.0000173.0000174.0000

.000 -.2087 .0000 -.2114 .0000 .0000 -.3256

ALPHAO(2) = -3.930 BETAO (2) = -4.020

SECTION (1)BODY FLAP DEPENDENT VARIABLE CP

TAP NO 169.0000170.0000171.0000172.0000173.0000174.0000

.000 -.1828 .0000 -.1991 .0000 .0000 -.3033

ALPHAO(2) = -3.940 BETAO (3) = .050

SECTION (1)BODY FLAP DEPENDENT VARIABLE CP

TAP NO 169.0000170.0000171.0000172.0000173.0000174.0000

.000 -.2285 .0000 -.2325 .0000 .0000 -.2950

ALPHAO(2) = -3.940 BETAO (4) = 4.090

SECTION (1)BODY FLAP DEPENDENT VARIABLE CP

TAP NO 169.0000170.0000171.0000172.0000173.0000174.0000

.000 -.1904 .0000 -.2001 .0000 .0000 -.3206

ORIGINAL PAGE IS OF POOR QUALITY

ARC11-716 IA14 01+T12+S12N25 BODY FLAP (R81F50)

ALPHAO(2) = -3.950 BETAO (5) = 8.110

SECTION (11)BODY FLAP DEPENDENT VARIABLE CP

TAP NO 169.0000170.0000171.0000172.0000173.0000174.0000

.000 -.1742 .0000 -.2063 .0000 .0000 -.3508

ALPHAO(3) = -.340 BETAO (1) = -8.080

SECTION (11)BODY FLAP DEPENDENT VARIABLE CP

TAP NO 169.0000170.0000171.0000172.0000173.0000174.0000

.000 -.1781 .1682 -.1841 .0000 .0000 -.3250

ALPHAO(3) = -.350 BETAO (2) = -4.020

SECTION (11)BODY FLAP DEPENDENT VARIABLE CP

TAP NO 169.0000170.0000171.0000172.0000173.0000174.0000

.000 -.1612 .0000 -.1709 .0000 .0000 -.2974

ALPHAO(3) = -.360 BETAO (3) = .040

SECTION (11)BODY FLAP DEPENDENT VARIABLE CP

TAP NO 169.0000170.0000171.0000172.0000173.0000174.0000

.000 -.1965 .0000 -.2152 .0000 .0000 -.2857

ALPHAO(3) = -.360 BETAO (4) = 4.080

SECTION (11)BODY FLAP DEPENDENT VARIABLE CP

TAP NO 169.0000170.0000171.0000172.0000173.0000174.0000

.000 -.1999 .0000 -.1801 .0000 .0000 -.3066

ALPHAO(5) = -.360 BETAO (5) = 8.120

SECTION (1)BODY FLAP DEPENDENT VARIABLE CP

TAP NO 169.0000170.0000171.0000172.0000173.0000174.0000

.000 -.1352 .0000 -.1869 .0000 .0000 -.3473

ALPHAO(4) = 4.010 BETAO (1) = -8.080

SECTION (1)BODY FLAP DEPENDENT VARIABLE CP

TAP NO 169.0000170.0000171.0000172.0000173.0000174.0000

.000 -.1487 .0000 -.1326 .0000 .0000 .3238

ALPHAO(4) = 4.010 BETAO (2) = -4.030

SECTION (1)BODY FLAP DEPENDENT VARIABLE CP

TAP NO 169.0000170.0000171.0000172.0000173.0000174.0000

.000 -.1442 .0000 -.1515 .0000 .0000 -.2944

ALPHAO(4) = .050 BETAO (3) = .040

SECTION (1)BODY FLAP DEPENDENT VARIABLE CP

TAP NO 169.0000170.0000171.0000172.0000173.0000174.0000

.000 -.1629 .0000 -.1821 .0000 .0000 -.2889

ALPHAO(4) = 4.050 BETAO (4) = 4.090

SECTION (1)BODY FLAP DEPENDENT VARIABLE CP

TAP NO 169.0000170.0000171.0000172.0000173.0000174.0000

.000 -.1180 .0000 -.1303 .0000 .0000 -.3096

ARC11-716 IA14 01+T12+S12N25 BODY FLAP (RB1F50)

ALPHAO(4) = 4.080 BETAO (5) = 8.170

SECTION (1)BODY FLAP DEPENDENT VARIABLE CP

TAP NO 169.0000170.0000171.0000172.0000173.0000174.0000

.000 -.1166 .0000 -.1531 .0000 .0000 -.3433

ALPHAO(5) = 6.080 BETAO (1) = -8.030

SECTION (1)BODY FLAP DEPENDENT VARIABLE CP

TAP NO 169.0000170.0000171.0000172.0000173.0000174.0000

.000 -.1455 .0000 -.1217 .0000 .0000 -.3246

ALPHAO(5) = 6.000 BETAO (2) = -3.980

SECTION (1)BODY FLAP DEPENDENT VARIABLE CP

TAP NO 169.0000170.0000171.0000172.0000173.0000174.0000

.000 -.1331 .0000 -.1488 .0000 .0000 -.3020

ALPHAO(5) = 7.910 BETAO (3) = .040

SECTION (1)BODY FLAP DEPENDENT VARIABLE CP

TAP NO 169.0000170.0000171.0000172.0000173.0000174.0000

.000 -.1463 .0000 -.1598 .0000 .0000 -.2877

ALPHAO(5) = 8.000 BETAO (4) = 4.130

SECTION (1)BODY FLAP DEPENDENT VAR'ABLE CP

TAP NO 169.0000170.0000171.0000172.0000173.0000174.0000

.000 -.1307 .0000 -.1315 .0000 .0000 -.3199

ARC11-716 IA14 O1+T12+S12N25 BODY FLAP (RB1F50)

ALPHAO(5) = 7.980 BETAO (5) = 8.220

SECTION (1)BODY FLAP DEPENDENT VARIABLE CP

TAP NO	169.0000	170.0000	171.0000	172.0000	173.0000	174.0000
	.000	-.1322	.0000	-.1382	.0000	.0000	-.3506

ARC11-716 IA14 O1+T12+S12N25 BODY FLAP (RB1F51) (15 FEB 74)

REFERENCE DATA

SREF = 2.4210 SQ.FT. XMRP = 29.5800 INCHES
LREF = 38.7090 INCHES YMRP = .0000 INCHES
BREF = 38.7090 INCHES ZMRP = .0000 INCHES
SCALE = .0300 SCALE

PARAMETRIC DATA

MACH = 1.400 ELEVON = .000
RUDDER = .000 SPDBRK = .000

ALPHAO(1) = -7.890 BETAO (1) = -8.050

SECTION (1)BODY FLAP DEPENDENT VARIABLE CP

TAP NO 169.0000170.0000171.0000172.0000173.0000174.0000

.000 -.2079 .0000 -.1970 .0000 .0000 -.3178

ALPHAO(1) = -7.880 BETAO (2) = -4.010

SECTION (1)BODY FLAP DEPENDENT VARIABLE CP

TAP NO 169.0000170.0000171.0000172.0000173.0000174.0000

.000 -.2168 .0000 -.2122 .0000 .0000 -.3145

ALPHAO(1) = -7.870 BETAO (3) = .020

SECTION (1)BODY FLAP DEPENDENT VARIABLE CP

TAP NO 169.0000170.0000171.0000172.0000173.0000174.0000

.000 -.2368 .0000 -.2344 .0000 .0000 -.3054

ALPHAO(1) = -7.970 BETAO (4) = 4.110

SECTION (1)BODY FLAP DEPENDENT VARIABLE CP

TAP NO 169.0000170.0000171.0000172.0000173.0000174.0000

.000 -.2164 .0000 -.2196 .0000 .0000 -.3222

ARC11-716 IA14 O1+T12+S12N25 BODY FLAP (RB1F51)

ALPHAO(1) = -7.990 BETAO (5) = 8.180

SECTION (1)BODY FLAP DEPENDENT VARIABLE CP

TAP NO 169.0000170.0000171.0000172.0000173.0000174.0000

.000 -.1829 .0000 -.2320 .0000 .0000 -.3252

ALPHAO(2) = -3.960 BETAO (1) = -8.060

SECTION (1)BODY FLAP DEPENDENT VARIABLE CP

TAP NO 169.0000170.0000171.0000172.0000173.0000174.0000

.000 -.1554 .0000 -.1411 .0000 .0000 -.3052

ALPHAO(2) = -3.990 BETAO (2) = -4.030

SECTION (1)BODY FLAP DEPENDENT VARIABLE CP

TAP NO 169.0000170.0000171.0000172.0000173.0000174.0000

.000 -.1623 .0000 -.1697 .0000 .0000 -.3029

ALPHAO(2) = -3.850 BETAO (3) = .040

SECTION (1)BODY FLAP DEPENDENT VARIABLE CP

TAP NO 169.0000170.0000171.0000172.0000173.0000174.0000

.000 -.2035 .0000 -.2062 .0000 .0000 -.2754

ALPHAO(2) = -3.970 BETAO (4) = 4.090

SECTION (1)BODY FLAP DEPENDENT VARIABLE CP

TAP NO 169.0000170.0000171.0000172.0000173.0000174.0000

.000 -.1878 .0000 -.1966 .0000 .0000 -.3205

ARC11-716 IA14 O1+T12+S12N25 BODY FLAP (RB1F51)

ALPHAO(2) = -4.000 BETAO (5) = 8.150

SECTION (1)BODY FLAP DEPENDENT VARIABLE CP

TAP NO 169.0000170.0000171.0000172.0000173.0000174.0000

.000 -.1723 .0000 -.2071 .0000 .0000 -.3245

ALPHAO(3) = -.370 BETAO (1) = -8.100

SECTION (1)BODY FLAP DEPENDENT VARIABLE CP

TAP NO 169.0000170.0000171.0000172.0000173.0000174.0000

.000 -.1190 .0000 -.1229 .0000 .0000 -.3086

ALPHAO(3) = -.390 BETAO (2) = -4.010

SECTION (1)BODY FLAP DEPENDENT VARIABLE CP

TAP NO 169.0000170.0000171.0000172.0000173.0000174.0000

.000 -.1256 .0000 -.1518 .0000 .0000 -.2964

ALPHAO(3) = -.390 BETAO (3) = .030

SECTION (1)BODY FLAP DEPENDENT VARIABLE CP

TAP NO 169.0000170.0000171.0000172.0000173.0000174.0000

.000 -.1682 .0000 -.1762 .0000 .0000 -.2717

ALPHAO(3) = -.400 BETAO (4) = 4.090

SECTION (1)BODY FLAP DEPENDENT VARIABLE CP

TAP NO 169.0000170.0000171.0000172.0000173.0000174.0000

.000 -.1364 .0000 -.1839 .0000 .0000 -.3085

ALPHAO(3) = -.400 BETAO (5) = 8.140

SECTION (1)BODY FLAP DEPENDENT VARIABLE CP

TAP NO 169.0000170.0000171.0000172.0000173.0000174.0000

.000 -.1282 .0000 -.1650 .0000 .0000 -.3173

ALPHAO(4) = 4.110 BETAO (1) = -8.070

SECTION (1)BODY FLAP DEPENDENT VARIABLE CP

TAP NO 169.0000170.0000171.0000172.0000173.0000174.0000

.000 -.0848 .0000 -.0919 .0000 .0000 -.3016

ALPHAO(4) = 4.100 BETAO (2) = -3.980

SECTION (1)BODY FLAP DEPENDENT VARIABLE CP

TAP NO 169.0000170.0000171.0000172.0000173.0000174.0000

.000 -.0971 .0000 -.1176 .0000 .0000 -.2957

ALPHAO(4) = 4.100 BETAO (3) = .080

SECTION (1)BODY FLAP DEPENDENT VARIABLE CP

TAP NO 169.0000170.0000171.0000172.0000173.0000174.0000

.000 -.1440 .0000 -.1533 .0000 .0000 -.2830

ALPHAO(4) = 4.100 BETAO (4) = 4.130

SECTION (1)BODY FLAP DEPENDENT VARIABLE CP

TAP NO 169.0000170.0000171.0000172.0000173.0000174.0000

.000 -.0773 .0000 -.1673 .0000 .0000 -.3085

ALPHAO(4) = 4.090 BETAO (5) = 8.180

SECTION (1)BODY FLAP DEPENDENT VARIABLE CP

TAP NO 169.0000170.0000171.0000172.0000173.0000174.0000

.000 -.0578 .0000 -.1331 .0000 .0000 -.3203

ALPHAO(5) = 8.010 BETAO (1) = -8.050

SECTION (1)BODY FLAP DEPENDENT VARIABLE CP

TAP NO 169.0000170.0000171.0000172.0000173.0000174.0000

.000 -.0364 .0000 -.0899 .0000 .0000 -.3040

ALPHAO(5) = 8.010 BETAO (2) = -4.010

SECTION (1)BODY FLAP DEPENDENT VARIABLE CP

TAP NO 169.0000170.0000171.0000172.0000173.0000174.0000

.000 -.0917 .0000 -.1285 .0000 .0000 -.3024

ALPHAO(5) = 8.020 BETAO (3) = .030

SECTION (1)BODY FLAP DEPENDENT VARIABLE CP

TAP NO 169.0000170.0000171.0000172.0000173.0000174.0000

.000 -.1321 .0000 -.1427 .0000 .0000 -.2844

ALPHAO(5) = 8.010 BETAO (4) = 4.150

SECTION (1)BODY FLAP DEPENDENT VARIABLE CP

TAP NO 169.0000170.0000171.0000172.0000173.0000174.0000

.000 -.0650 .0000 -.1395 .0000 .0000 -.3136

ORIGINAL PAGE IS OF POOR QUALITY

ARC11-716 IA14 O1+T12+S12N25 BODY FLAP (RB1F51)

ALPHAO(5) = 7.990 BETAO (5) = 8.280

SECTION (1)BODY FLAP DEPENDENT VARIABLE CP

TAP NO	169.00001	70.00001	71.00001	72.00001	73.00001	74.0000
	.000	-.0617	.0000	-.1210	.0000	.0000	-.3322

ARC11-716 IA14 O1+T12+S12N25+AT11 OMS POD (RB1H17) (03 OCT 73)

REFERENCE DATA

SREF = 2.4210 SQ.FT. XMRP = 29.5800 INCHES
LREF = 38.7090 INCHES YMRP = .0000 INCHES
BREF = 38.7090 INCHES ZMRP = .0000 INCHES
SCALE = .0300 SCALE

PARAMETRIC DATA

BETAO = .000 ELEVON = .000
RUDDER = .000 SPDBRK = .000

MACH (1) = .898 ALPHAO(1) = -8.170

SECTION (1)OMS POD DEPENDENT VARIABLE CP

TAP NO 165.0000166.0000167.0000168.0000

.000 -.2916 -.3088 -.2968 -.2746

MACH (1) = .898 ALPHAO(2) = -4.140

SECTION (1)OMS POD DEPENDENT VARIABLE CP

TAP NO 165.0000166.0000167.0000168.0000

.000 -.2777 -.2929 -.2765 -.2511

MACH (1) = .898 ALPHAO(3) = -.220

SECTION (1)OMS POD DEPENDENT VARIABLE CP

TAP NO 165.0000166.0000167.0000168.0000

.000 -.2667 -.2785 -.2592 -.2286

MACH (1) = .898 ALPHAO(4) = 3.830

SECTION (1)OMS POD DEPENDENT VARIABLE CP

TAP NO 165.0000166.0000167.0000168.0000

.000 -.2538 -.2720 -.2503 -.2143

PAGE IS OF POOR QUALITY

ARC11-716 IA14 O1+T12+S12N25+AT11 OMS POD (RB1M17)

MACH (1) = .898 ALPHAO(5) = 8.030

SECTION (1)OMS POD DEPENDENT VARIABLE CP

TAP NO 165.0000166.0000167.0000168.0000

.000 -.2332 -.2544 -.2354 -.1989

MACH (2) = .977 ALPHAO(1) = -7.920

SECTION (1)OMS POD DEPENDENT VARIABLE CP

TAP NO 165.0000165.0000167.0000168.0000

.000 -.3609 -.3903 -.3602 -.2771

MACH (2) = .975 ALPHAO(2) = -3.880

SECTION (1)OMS POD DEPENDENT VARIABLE CP

TAP NO 165.0000166.0000167.0000168.0000

.000 -.3558 -.3679 -.3221 -.2520

MACH (2) = .977 ALPHAO(3) = .090

SECTION (1)OMS POD DEPENDENT VARIABLE CP

TAP NO 165.0000166.0000167.0000168.0000

.000 -.3365 -.3442 -.2499 -.2507

MACH (2) = .973 ALPHAO(4) = 4.020

SECTION (1)OMS POD DEPENDENT VARIABLE CP

TAP NO 165.0000166.0000167.0000168.0000

.000 -.3147 -.3244 -.2229 -.2121

ARC11-716 IA14 O1+T12+S12N25+AT11 OMS POD (RB1M17)

MACH (2) = .977 ALPHAO(5) = 6.030

SECTION (1)OMS POD DEPENDENT VARIABLE CP

TAP NO 165.0000166.0000167.0000168.0000

.000 -.3019 -.3130 -.2646 -.2191

MACH (3) = 1.102 ALPHAO(1) = -7.940

SECTION (1)OMS POD DEPENDENT VARIABLE CP

TAP NO 165.0000166.0000167.0000168.0000

.000 -.3627 -.3635 -.2693 -.2032

MACH (3) = 1.101 ALPHAO(2) = -3.890

SECTION (1)OMS POD DEPENDENT VARIABLE CP

TAP NO 165.0000166.0000167.0000168.0000

.000 -.3425 -.3471 -.2928 -.2272

MACH (3) = 1.103 ALPHAO(3) = .090

SECTION (1)OMS POD DEPENDENT VARIABLE CP

TAP NO 165.0000166.0000167.0000168.0000

.000 -.3236 -.3328 -.3011 -.2453

MACH (3) = 1.100 ALPHAO(4) = 4.080

SECTION (1)OMS POD DEPENDENT VARIABLE CP

TAP NO 165.0000166.0000167.0000168.0000

.000 -.3168 -.3236 -.3068 -.2873

ARC11-716 IA14 O1+T12+S12N25+AT11 OMS POD (RB1H17)

MACH (3) = 1.099 ALPHAO(5) = 8.020

SECTION (1)OMS POD DEPENDENT VARIABLE CP

TAP NO 165.0000166.0000167.0000168.0000

.000 -.3113 -.3224 -.3289 -.3343

MACH (4) = 1.248 ALPHAO(1) = -7.940

SECTION (1 OMS POD DEPENDENT VARIABLE CP

TAP NO 165.0000166.0000167.0000168.0000

.000 -.3058 -.3042 -.1412 -.1039

MACH (4) = 1.246 ALPHAO(2) = -3.840

SECTION (1)OMS POD DEPENDENT VARIABLE CP

TAP NO 165.0000166.0000167.0000168.0000

.000 -.2893 -.2899 -.1760 -.1410

MACH (4) = 1.244 ALPHAO(3) = .050

SECTION (1)OMS POD DEPENDENT VARIABLE CP

TAP NO 165.0000166.0000167.0000168.0000

.000 -.2802 -.2823 -.2135 -.1931

MACH (4) = 1.249 ALPHAO(4) = 4.010

SECTION (1)OMS POD DEPENDENT VARIABLE CP

TAP NO 165.0000166.0000167.0000168.0000

.000 -.2564 -.2598 -.2366 -.2118

ARC11-718 IA14 O1+T12+S12N25+AT11 OMS POD (RB1M17)

MACH (4) = 1.249 ALPHAO(5) = 7.930

SECTION (1)OMS POD DEPENDENT VARIABLE CP

TAP NO	165.0000	166.0000	167.0000	168.0000
.000	-.2491	-.2475	-.2568	-.2590

ARC11-716 IA14 O1+T12+S12N25+AT11 OMS POD (RB1M18) (02 OCT 73)

REFERENCE DATA

SREF = 2.4210 SQ.FT. XMRP = 29.5800 INCHES
LREF = 38.7090 INCHES YMRP = .0000 INCHES
BREF = 38.7090 INCHES ZMRP = .0000 INCHES
SCALE = .0300 SCALE

PARAMETRIC DATA

ALPHAO = .000 ELEVON = .000
RUDDER = .000 SPDBRK = .000

MACH (1) = .898 BETAO (1) = -8.060

SECTION (1)OMS POD DEPENDENT VARIABLE CP

TAP NO 165.0000166.0000167.0000168.0000

.000 -.2805 -.2957 -.2508 -.1946

MACH (1) = .898 BETAO (2) = -4.010

SECTION (1)OMS POD DEPENDENT VARIABLE CP

TAP NO 165.0000166.0000167.0000168.0000

.000 -.2652 -.2799 -.2496 -.2090

MACH (1) = .897 BETAO (3) = .030

SECTION (1)OMS POD DEPENDENT VARIABLE CP

TAP NO 165.0000166.0000167.0000168.0000

.000 -.2699 -.2826 -.2621 -.2264

MACH (1) = .898 BETAO (4) = 4.100

SECTION (1)OMS POD DEPENDENT VARIABLE CP

TAP NO 165.0000166.0000167.0000168.0000

.000 -.2554 -.2615 -.2474 -.2377

ORIGINAL PAGE IS OF POOR QUALITY

ARC11-716 IA14 O1+T12+S12N25+AT11 OMS POD (RB1M18)

MACH (1) = .898 BETAO (5) = 8.130

SECTION (1)OMS POD DEPENDENT VARIABLE CP

TAP NO 165.0000166.0000167.0000168.0000

.000 -.2552 -.2670 -.2306 -.2675

MACH (2) = .978 BETAO (1) = -8.050

SECTION (1)OMS POD DEPENDENT VARIABLE CP

TAP NO 165.0000166.0000167.0000168.0000

.000 -.3378 -.3504 -.3138 -.2208

MACH (2) = .976 BETAO (2) = -4.010

SECTION (1)OMS POD DEPENDENT VARIABLE CP

TAP NO 165.0000166.0000167.0000168.0000

.000 -.3165 -.3281 -.3137 -.2457

MACH (2) = .975 BETAO (3) = .040

SECTION (1)OMS POD DEPENDENT VARIABLE CP

TAP NO 165.0000166.0000167.0000168.0000

.000 -.3343 -.3440 -.2651 -.2200

MACH (2) = .976 BETAO (4) = 4.070

SECTION (1)OMS POD DEPENDENT VARIABLE CP

TAP NO 165.0000166.0000167.0000168.0000

.000 -.3089 -.3152 -.3111 -.3238

ARC11-716 IA14 O1+T12+S12N25+AT11 OMS POD (RB1M18)

MACH (2) = .974 BETAO (5) = 8.120

SECTION (1)OMS POD DEPENDENT VARIABLE CP

TAP NO 165.0000166.0000167.0000168.0000

.000 -.2988 -.3054 -.2586 -.2999

MACH (3) = 1.102 BETAO (1) = -8.090

SECTION (1)OMS POD DEPENDENT VARIABLE CP

TAP NO 165.0000166.0000167.0000168.0000

.000 -.3356 -.3374 -.1820 -.0612

MACH (3) = 1.100 BETAO (2) = -4.010

SECTION (1)OMS POD DEPENDENT VARIABLE CP

TAP NO 165.0000166.0000167.0000168.0000

.000 -.3198 -.3226 -.1551 -.0788

MACH (3) = 1.102 BETAO (3) = .030

SECTION (1)OMS POD DEPENDENT VARIABLE CP

TAP NO 165.0000166.0000167.0000168.0000

.000 -.3298 -.3388 -.2971 -.2439

MACH (3) = 1.100 BETAO (4) = 4.090

SECTION (1)OMS POD DEPENDENT VARIABLE CP

TAP NO 165.0000166.0000167.0000168.0000

.000 -.3213 -.3206 -.3309 -.3076

ARC11-716 IA14 01+T12+S12N25+AT11 OMS PCD (RB1M18)

MACH (3) = 1.100 BETAO (3) = 8.130

SECTION (1)OMS PCD DEPENDENT VARIABLE CP

TAP NO 165.0000166.0000167.0000168.0000

.000 -.3028 -.3183 -.3090 -.3263

MACH (4) = 1.252 BETAO (1) = -8.080

SECTION (1)OMS PCD DEPENDENT VARIABLE CP

TAP NO 165.0000166.0000167.0000168.0000

.000 -.2799 -.2783 -.1213 -.0720

MACH (4) = 1.244 BETAO (2) = -4.030

SECTION (1)OMS PCD DEPENDENT VARIABLE CP

TAP NO 165.0000166.0000167.0000168.0000

.000 -.2594 -.2613 -.1573 -.1321

MACH (4) = 1.249 BETAO (3) = .030

SECTION (1)OMS PCD DEPENDENT VARIABLE CP

TAP NO 165.0000166.0000167.0000168.0000

.000 -.2817 -.2822 -.2087 -.1899

MACH (4) = 1.246 BETAO (4) = 4.090

SECTION (1)OMS PCD DEPENDENT VARIABLE CP

TAP NO 165.0000166.0000167.0000168.0000

.000 -.2636 -.2620 -.2341 -.2049

ARC11-716 IA14 O1+T12+S12N25+AT11 OMS POD (RB1M!.8)

MACH (4) = 1.248 BETAO (5) = 8.150

SECTION (1)OMS POD DEPENDENT VARIABLE CP

TAP NO 165.0000166.0000167.0000168.0000

.000 -.2536 -.2692 -.2321 -.2576

ORIGINAL PAGE IS OF POOR QUALITY

ARC11-T16 IA14 O1+T12+S12N25+AT10 OMS POD (RB1M24) (26 SEP 73)

REFERENCE DATA

SREF = 2.4210 SQ.FT. XMRP = 29.5800 INCHES
LREF = 38.7090 INCHES YMRP = .0000 INCHES
BREF = 38.7090 INCHES ZMRP = .0000 INCHES
SCALE = .0300 SCALE

PARAMETRIC DATA

ALPHAO = -10.000 ELEVON = .000
RUDDER = .000 SPOERK = .000

MACH (1) = .902 BETAO (1) = -9.890

SECTION (1)OMS POD DEPENDENT VARIABLE CP

TAP NO 165.0000166.0000167.0000168.0000

.000 -.2716 -.2865 -.2416 -.1877

MACH (1) = .899 BETAO (2) = 10.090

SECTION (1)OMS POD DEPENDENT VARIABLE CP

TAP NO 165.0000166.0000167.0000168.0000

.000 -.2762 -.3209 -.2740 -.3347

ARC11-716 IA14 O1+T12+S12N25+AT10 OMS POD (RB1H25) (28 SEP 73)

REFERENCE DATA

SREF = 2.4210 SQ.FT. XMRP = 29.5800 INCHES
LREF = 58.7090 INCHES YMRP = .0000 INCHES
BREF = 58.7090 INCHES ZMRP = .0000 INCHES
SCALE = .0300 SCALE

PARAMETRIC DATA

ALPHAO = -8.000 ELEVON = .000
RUDDER = .000 SPDBRK = .000

MACH (1) = .899 BETAO (1) = -9.930

SECTION (1) OMS POD DEPENDENT VARIABLE CP

TAP NO 165.0000166.0000167.0000168.0000

.000 -.2651 -.2772 -.2379 -.1837

MACH (1) = .899 BETAO (2) = 10.090

SECTION (1) OMS POD DEPENDENT VARIABLE CP

TAP NO 165.0000166.0000167.0000168.0000

.000 -.2765 -.3127 -.2421 -.2877

ARC11-716 IA14 O1+T12+S12N25+AT10 OMS POD (RB1M26) (28 SEP 73)

REFERENCE DATA

SREF =	2.4210 SQ.FT.	XMRP =	29.5800 INCHES
LREF =	38.7090 INCHES	YMRP =	.0000 INCHES
BREF =	38.7090 INCHES	ZMRP =	.0000 INCHES
SCALE =	.0300 SCALE		

PARAMETRIC DATA

ALPHAO =	-6.000	ELEVON =	.000
RUDDER =	.000	SPDBRK =	.000

MACH (1) = .897 BETAO (1) = -9.940

SECTION (1)OMS POD DEPENDENT VARIABLE CP

TAP NO	165.0000	166.0000	167.0000	168.0000
.000	-.2628	-.2735	-.2368	-.1791

MACH (1) = .898 BETAO (2) = 10.070

SECTION (1)OMS POD DEPENDENT VARIABLE CP

TAP NO	165.0000	166.0000	167.0000	168.0000
.000	-.2497	-.2924	-.2283	-.2929

ARC11-716 IA14 O1+T12+S12N25+AT10 OMS POD (RB1M27) (28 SEP 73)

REFERENCE DATA

SREF =	2.4210 SQ.FT.	XMRP =	29.5800 INCHES
LREF =	38.7090 INCHES	YMRP =	.0000 INCHES
BREF =	38.7090 INCHES	ZMRP =	.0000 INCHES
SCALE =	.0300 SCALE		

PARAMETRIC DATA

ALPHAO =	-4.000	ELEVON =	.000
RUDDER =	.000	SPDBRK =	.000

MACH (1) = .899 BETAO (1) = -9.990

SECTION (1)OMS POD DEPENDENT VARIABLE CP

TAP NO	165.0000	166.0000	167.0000	168.0000
.000	-.2476	-.2640	-.2276	-.1747

ORIGINAL PAGE IS OF POOR QUALITY

ARC11-716 IA14 O1+T12+S12N25+AT10 OMS POD (RB1M28) (28 SEP 73)

REFERENCE DATA

SREF = 2.4210 SQ.FT. XMRP = 29.5800 INCHES
LREF = 38.7090 INCHES YMRP = .0000 INCHES
BREF = 38.7090 INCHES ZMRP = .0000 INCHES
SCALE = .0300 SCALE

PARAMETRIC DATA

ALPHAO = .000 ELEVON = .000
RUDDER = .000 SPDBRK = .000

MACH (1) = 1.246 BETAO (1) = -10.080

SECTION (1)OMS POD DEPENDENT VARIABLE CP

TAP NO 165.0000166.0000167.0000168.0000

.000 -.2208 -.2462 -.1048 -.0298

MACH (1) = 1.245 BETAO (2) = -7.980

SECTION (1)OMS POD DEPENDENT VARIABLE CP

TAP NO 165.0000166.0000167.0000168.0000

.000 -.2560 -.2576 -.1156 -.0580

MACH (1) = 1.248 BETAO (3) = -6.020

SECTION (1)OMS POD DEPENDENT VARIABLE CP

TAP NO 165.0000166.0000167.0000168.0000

.000 -.2399 -.2421 -.1245 -.0971

MACH (1) = 1.247 BETAO (4) = -3.950

SECTION (1)OMS POD DEPENDENT VARIABLE CP

TAP NO 165.0000166.0000167.0000168.0000

.000 -.2364 -.2444 -.1506 -.1237

ARC11-716 IA14 01+T1L,S12N25+AT10 OMS POD (RB1M28)

MACH (1) = 1.246 BETAO (5) = -2.040

SECTION (1)OMS POD DEPENDENT VARIABLE CP

TAP NO 165.0000166.0000167.0000168.0000

.000 -.2502 -.2613 -.1764 -.1520

MACH (1) = 1.246 BETAO (6) = .010

SECTION (1)OMS POD DEPENDENT VARIABLE CP

TAP NO 165.0000166.0000167.0000168.0000

.000 -.2091 -.2278 -.1787 -.1761

ARC11-T16 IA14 O1+T12+S12N25+AT10 OHS POD (RB1M29) (28 SEP 73)

REFERENCE DATA

SREF =	2.4210 SQ.FT.	XMRP =	29.5800 INCHES
LREF =	58.7090 INCHES	YMRP =	.0000 INCHES
BREF =	58.7090 INCHES	ZMRP =	.0000 INCHES
SCALE =	.0300 SCALE		

PARAMETRIC DATA

ALPHAO =	-10.000	ELEVON =	.000
RUDDER =	.000	SPOERK =	.000

MACH (1) = 1.245 BETAO (1) = .030

SECTION (1)OHS POD DEPENDENT VARIABLE CP

TAP NO	165.0000	166.0000	167.0000	168.0000
.000	-.2560	-.2905	-.1252	-.0844

ARC11-716 IA14 O1<T12+S12N25+AT11 OMS PCD (RB1M30) (02 OCT 73)

REFERENCE DATA

BREF = 2.4210 SQ.FT. XMRP = 29.5800 INCHES
LREF = 58.7090 INCHES YMRP = .0000 INCHES
BREF = 58.7090 INCHES ZMRP = .0000 INCHES
SCALE = .0300 SCALE

PARAMETRIC DATA

ALPHAO = .000 ELEVON = .000
RUDDER = .000 SPDBRK = .000

MACH (1) = .972 BETAO (1) = .040

SECTION (1)OMS PCD DEPENDENT VARIABLE CP

TAP NO 165.0000166.0000167.0000168.0000

.000 -.3583 -.3512 -.2683 -.2346

MACH (2) = 1.002 BETAO (1) = .040

SECTION (1)OMS PCD DEPENDENT VARIABLE CP

TAP NO 165.0000166.0000167.0000168.0000

.000 -.3583 -.3700 -.2555 -.2695

MACH (3) = 1.025 BETAO (1) = .040

SECTION (1)OMS PCD DEPENDENT VARIABLE CP

TAP NO 165.0000166.0000167.0000168.0000

.000 -.3483 -.3525 -.2210 -.2911

ARC11-716 IA14 O4+T12+S1EN25+AT10 OMS POD (RB1H31) (06 FEB 74)

REFERENCE DATA

SREF = 2.4210 SQ.FT. XMRP = 29.5800 INCHES
LREF = 36.7090 INCHES YMRP = .0000 INCHES
BREF = 36.7090 INCHES ZMRP = .0000 INCHES
SCALE = .0300 SCALE

PARAMETRIC DATA

MACH = .900 ELEVON = .000
RUDDER = .000 SPOERK = .000

ALPHAO(1) = -10.140 BETAO (1) = -8.370

SECTION (1)OMS POD DEPENDENT VARIABLE CP

TAP NO 165.0000166.0000167.0000168.0000

.000 -.2522 -.2680 -.2311 -.1964

ALPHAO(1) = -10.130 BETAO (2) = -6.560

SECTION (1)OMS POD DEPENDENT VARIABLE CP

TAP NO 165.0000166.0000167.0000168.0000

.000 -.2494 -.2649 -.2376 -.1988

ALPHAO(1) = -10.130 BETAO (3) = -4.640

SECTION (1)OMS POD DEPENDENT VARIABLE CP

TAP NO 165.0000166.0000167.0000168.0000

.000 -.2431 -.2551 -.2328 -.2180

ALPHAO(1) = -10.080 BETAO (4) = -3.250

SECTION (1)OMS POD DEPENDENT VARIABLE CP

TAP NO 165.0000166.0000167.0000168.0000

.000 -.2356 -.2653 -.2338 -.2219

ARC11-716 IA14 O1+T12+S12N25+AT10 OMS PCO (RB1M51)

ALPHAO(1) = -10.040 BETAO (5) = -1.600

SECTION (1)OMS PCO DEPENDENT VARIABLE CP

TAP NO 165.0000166.0000167.0000168.0000

.000 -.2420 -.2741 -.2543 -.2460

ALPHAO(1) = -10.040 BETAO (6) = .100

SECTION (1)OMS PCO DEPENDENT VARIABLE CP

TAP NO 165.0000166.0000167.0000168.0000

.000 -.2692 -.2820 -.2642 -.2652

ALPHAO(1) = -10.040 BETAO (7) = 1.810

SECTION (1)OMS PCO DEPENDENT VARIABLE CP

TAP NO 165.0000166.0000167.0000168.0000

.000 -.3222 -.3125 -.2847 -.2889

ALPHAO(1) = -10.130 BETAO (8) = 3.580

SECTION (1)OMS PCO DEPENDENT VARIABLE CP

TAP NO 165.0000166.0000167.0000168.0000

.000 -.3038 -.3010 -.2383 -.3025

ALPHAO(1) = -10.130 BETAO (9) = 5.250

SECTION (1)OMS PCO DEPENDENT VARIABLE CP

TAP NO 165.0000166.0000167.0000168.0000

.000 -.2830 -.2918 -.2810 -.3051

ORIGINAL PAGE IS OF POOR QUALITY

ARC11-716 IA14 O1+T12+S12N25+AT10 OMS POD (RB1M31)

ALPHAO(1) = -10.120 BETAO (10) = 7.010

SECTION (1)OMS POD DEPENDENT VARIABLE CP

TAP NO 165.0000166.0000167.0000168.0000

.000 -.2654 -.2794 -.2448 -.3604

ALPHAO(1) = -10.130 BETAO (11) = 8.780

SECTION (1)OMS POD DEPENDENT VARIABLE CP

TAP NO 165.0000166.0000167.0000168.0000

.000 -.2771 -.3079 -.2604 -.3387

ALPHAO(2) = -8.110 BETAO (1) = -8.350

SECTION (1)OMS POD DEPENDENT VARIABLE CP

TAP NO 165.0000166.0000167.0000168.0000

.000 -.2460 -.2633 -.2358 -.1890

ALPHAO(2) = -8.120 BETAO (2) = -6.640

SECTION (1)OMS POD DEPENDENT VARIABLE CP

TAP NO 165.0000166.0000167.0000168.0000

.000 -.2357 -.2562 -.2354 -.2001

ALPHAO(2) = -8.120 BETAO (3) = -4.940

SECTION (1)OMS POD DEPENDENT VARIABLE CP

TAP NO 165.0000166.0000167.0000168.0000

.000 -.2295 -.2575 -.2297 -.2012

ORIGINAL PAGE IS OF POOR QUALITY

ALPHAO(2) = -8.130 BETAO (4) = -3.270

SECTION (1)OMS POD DEPENDENT VARIABLE CP

TAP NO 165.0000166.0000167.0000168.0000

.000 -.2281 -.2543 -.2306 -.2159

ALPHAO(2) = -8.130 BETAO (5) = -1.600

SECTION (1)OMS POD DEPENDENT VARIABLE CP

TAP NO 165.0000166.0000167.0000168.0000

.000 -.2410 -.2574 -.2407 -.2327

ALPHAO(2) = -8.130 BETAO (6) = .010

SECTION (1)OMS POD DEPENDENT VARIABLE CP

TAP NO 165.0000166.0000167.0000168.0000

.000 -.2568 -.2765 -.2560 -.2473

ALPHAO(2) = -8.120 BETAO (7) = 1.700

SECTION (1)OMS POD DEPENDENT VARIABLE CP

TAP NO 165.0000166.0000167.0000168.0000

.000 -.3080 -.3229 -.3117 -.2898

ALPHAO(2) = -8.110 BETAO (8) = 3.340

SECTION (1)OMS POD DEPENDENT VARIABLE CP

TAP NO 165.0000166.0000167.0000168.0000

.000 -.2547 -.2550 -.2575 -.2550

ARC11-716 IA14 O1+T12+S12N25+AT10 OMS POD (RB1H31)

ALPHAO(2) = -8.090 BETAO (9) = 4.950

SECTION (1)OMS POD DEPENDENT VARIABLE CP

TAP NO 165.0000166.0000167.0000168.0000

.000 -.2492 -.2634 -.2325 -.2714

ALPHAO(2) = -8.080 BETAO (10) = 6.750

SECTION (1)OMS POD DEPENDENT VARIABLE CP

TAP NO 165.0000166.0000167.0000168.0000

.000 -.2551 -.2713 -.2304 -.3233

ALPHAO(2) = -8.090 BETAO (11) = 8.570

SECTION (1)OMS POD DEPENDENT VARIABLE CP

TAP NO 165.0000166.0000167.0000168.0000

.000 -.2455 -.2819 -.2291 -.3479

ALPHAO(3) = -6.100 BETAO (1) = -8.140

SECTION (1)OMS POD DEPENDENT VARIABLE CP

TAP NO 165.0000166.0000167.0000168.0000

.000 -.2517 -.2607 -.2323 -.1851

ALPHAO(3) = -6.110 BETAO (2) = -6.480

SECTION (1)OMS POD DEPENDENT VARIABLE CP

TAP NO 165.0000166.0000167.0000168.0000

.000 -.2375 -.2547 -.2226 -.1912

ARC11-716 IA14 O1+T12+S12N25+AT10 OMS POD (RB1M31)

ALPHAO(3) = -8.130 BETAO (3) = -4.820

SECTION (1)OMS POD DEPENDENT VARIABLE CP

TAP NO 165.0000166.0000167.0000168.0000

.000 -.2187 -.2384 -.2197 -.1870

ALPHAO(3) = -6.140 BETAO (4) = -3.220

SECTION (1)OMS POD DEPENDENT VARIABLE CP

TAP NO 165.0000166.0000167.0000168.0000

.000 -.2155 -.2456 -.2217 -.2082

ALPHAO(3) = -6.030 BETAO (5) = -1.620

SECTION (1)OMS POD DEPENDENT VARIABLE CP

TAP NO 165.0000166.0000167.0000168.0000

.000 -.2210 -.2411 -.2160 -.2133

ALPHAO(3) = -6.030 BETAO (6) = .000

SECTION (1)OMS POD DEPENDENT VARIABLE CP

TAP NO 165.0000166.0000167.0000168.0000

.000 -.2568 -.2815 -.2441 -.2394

ALPHAO(3) = -6.030 BETAO (7) = 1.640

SECTION (1)OMS POD DEPENDENT VARIABLE CP

TAP NO 165.0000166.0000167.0000168.0000

.000 -.2996 -.3078 -.3006 -.2846

ALPHAO(3) = -6.160 BETAO (6) = 3.330

SECTION (1)OMS POD DEPENDENT VARIABLE CP

TAP NO 165.0000166.0000167.0000168.0000

.000 -.2537 -.2596 -.2524 -.2554

ALPHAO(3) = -6.160 BETAO (9) = 5.010

SECTION (1)OMS POD DEPENDENT VARIABLE CP

TAP NO 165.0000166.0000167.0000168.0000

.000 -.2360 -.2544 -.2347 -.2512

ALPHAO(3) = -6.140 BETAO (10) = 6.740

SECTION (1)OMS POD DEPENDENT VARIABLE CP

TAP NO 165.0000166.0000167.0000168.0000

.000 -.2261 -.2626 -.2264 -.2870

ALPHAO(3) = -6.140 BETAO (11) = 8.500

SECTION (1)OMS POD DEPENDENT VARIABLE CP

TAP NO 165.0000166.0000167.0000168.0000

.000 -.2491 -.2850 -.2220 -.3375

ALPHAO(4) = -4.170 BETAO (1) = -9.980

SECTION (1)OMS POD DEPENDENT VARIABLE CP

TAP NO 165.0000166.0000167.0000168.0000

.000 -.2552 -.2649 -.2265 -.1774

ARC11-716 IA14 O1+T12+S12N25+AT10 OMS POD (RB1M31)

ALPHAO(4) = -4.190 BETAO (2) = -7.970

SECTION (1)OMS POD DEPENDENT VARIABLE CP

TAP NO 165.0000166.0000167.0000168.0000

.000 -.2357 -.2499 -.2178 -.1818

ALPHAO(4) = -4.210 BETAO (3) = -5.970

SECTION (1)OMS POD DEPENDENT VARIABLE CP

TAP NO 165.0000166.0000167.0000168.0000

.000 -.2202 -.2364 -.2170 -.1846

ALPHAO(4) = -4.190 BETAO (4) = -3.980

SECTION (1)OMS POD DEPENDENT VARIABLE CP

TAP NO 165.0000166.0000167.0000168.0000

.000 -.2191 -.2377 -.2111 -.1952

ALPHAO(4) = -4.180 BETAO (5) = -1.980

SECTION (1)OMS POD DEPENDENT VARIABLE CP

TAP NO 165.0000166.0000167.0000168.0000

.000 -.2164 -.2384 -.2249 -.2067

ALPHAO(4) = -4.180 BETAO (6) = .030

SECTION (OMS POD DEPENDENT VARIABLE CP

TAP NO 5.0000166.0000167.0000168.0000

.000 -.2866 -.2863 -.2466 -.2533

ORIGINAL PAGE IS OF POOR QUALITY

ALPHAO(4) = -4.170 BETAO (7) = 2.020

SECTION (1)OMS POD DEPENDENT VARIABLE CP

TAP NO 165.0000166.0000167.0000168.0000

.000 -.2929 -.2986 -.2881 -.2711

ALPHAO(4) = -4.240 BETAO (8) = 4.040

SECTION (1)OMS POD DEPENDENT VARIABLE CP

TAP NO 165.0000166.0000167.0000168.0000

.000 -.2691 -.2824 -.2684 -.2674

ALPHAO(4) = -4.230 BETAO (9) = 6.050

SECTION (1)OMS POD DEPENDENT VARIABLE CP

TAP NO 165.0000166.0000167.0000168.0000

.000 -.2399 -.2588 -.2314 -.2503

ALPHAO(4) = -4.200 BETAO (10) = 8.070

SECTION (1)OMS POD DEPENDENT VARIABLE CP

TAP NO 165.0000166.0000167.0000168.0000

.000 -.2428 -.2715 -.2221 -.2968

ALPHAO(4) = -4.200 BETAO (11) = 10.080

SECTION (1)OMS POD DEPENDENT VARIABLE CP

TAP NO 165.0000166.0000167.0000168.0000

.000 -.2454 -.2874 -.2260 -.2912

ARC11-716 IA14 O1+T12+S12N25+AT10 OMS PCO (RB1M31)

ALPHAO(5) = -2.870 BETAO (1) = -9.990

SECTION (1)OMS PCO DEPENDENT VARIABLE CP

TAP NO 165.0000166.0000167.0000168.0000

.000 -.2534 -.2678 -.2197 -.1701

ALPHAO(5) = -2.890 BETAO (2) = -7.990

SECTION (1)OMS PCO DEPENDENT VARIABLE CP

TAP NO 165.0000166.0000167.0000168.0000

.000 -.2346 -.2573 -.2189 -.1839

ALPHAO(5) = -2.870 BETAO (3) = -5.970

SECTION (1)OMS PCO DEPENDENT VARIABLE CP

TAP NO 165.0000166.0000167.0000168.0000

.000 -.2152 -.2389 -.2127 -.1880

ALPHAO(5) = -2.860 BETAO (4) = -3.980

SECTION (1)OMS PCO DEPENDENT VARIABLE CP

TAP NO 165.0000166.0000167.0000168.0000

.000 -.2035 -.2189 -.1960 -.1845

ALPHAO(5) = -2.840 BETAO (5) = -1.990

SECTION (1)OMS PCO DEPENDENT VARIABLE CP

TAP NO 165.0000166.0000167.0000168.0000

.000 -.2075 -.2259 -.2065 -.1918

ARC11-716 IA14 O1+T12+S12N25+AT10 OMS POD (RB1M31)

ALPHAO(5) = -2.840 BETAO (6) = .010

SECTION (1)OMS POD DEPENDENT VARIABLE CP

TAP NO 165.0000166.0000167.0000168.0000

.000 -.2783 -.2810 -.2753 -.2228

ALPHAO(5) = -2.840 BETAO (7) = 2.040

SECTION (1)OMS POD DEPENDENT VARIABLE CP

TAP NO 165.0000166.0000167.0000168.0000

.000 -.2886 -.2953 -.2853 -.2604

ALPHAO(5) = -2.860 BETAO (8) = 4.050

SECTION (1)OMS POD DEPENDENT VARIABLE CP

TAP NO 165.0000166.0000167.0000168.0000

.000 -.2393 -.2398 -.2470 -.2363

ALPHAO(5) = -2.870 BETAO (9) = 6.060

SECTION (1)OMS POD DEPENDENT VARIABLE CP

TAP NO 165.0000166.0000167.0000168.0000

.000 -.2382 -.2324 -.2237 -.2377

ALPHAO(5) = -2.870 BETAO (10) = 8.070

SECTION (1)OMS POD DEPENDENT VARIABLE CP

TAP NO 165.0000166.0000167.0000168.0000

.000 -.2451 -.2782 -.2248 -.2801

ARC11-716 IA14 O1+T12+S12N25+AT10 OMS POD (RB1M31)

ALPHAO(5) = -2.830 BETAO (11) = 10.090

SECTION (1)OMS POD DEPENDENT VARIABLE CP

TAP NO 165.0000166.0000167.0000168.0000

.000 -.2503 -.2911 -.2254 -.2959

ALPHAO(6) = -.990 BETAO (1) = -10.000

SECTION (1)OMS POD DEPENDENT VARIABLE CP

TAP NO 165.0000166.0000167.0000168.0000

.000 -.2592 - 2680 -.2144 -.1696

ALPHAO(6) = -.680 BETAO (2) = -7.980

SECTION (1)OMS POD DEPENDENT VARIABLE CP

TAP NO 165.0000166.0000167.0000168.0000

.000 -.2245 -.2455 -.2043 -.1683

ALPHAO(6) = -.670 BETAO (3) = -5.980

SECTION (1)OMS POD DEPENDENT VARIABLE CP

TAP NO 165.0000166.0000167.0000168.0000

.000 -.2063 -.2247 -.2000 -.1730

ALPHAO(6) = -.680 BETAO (4) = -3.970

SECTION (1)OMS POD DEPENDENT VARIABLE CP

TAP NO 165.0000166.0000167.0000168.0000

.000 -.2005 -.2244 -.2005 -.1844

ARC11-716 IA14 01+T12+S12N25+AT10 OHS POD (RB1M31)

ALPHAO(6) = -.660 BETAO (5) = -1.980

SECTION (1)OHS POD DEPENDENT VARIABLE CP

TAP NO 165.0000166.0000167.0000168.0000

.000 -.1902 -.2099 -.1914 -.1783

ALPHAO(6) = -.660 BETAO (6) = .010

SECTION (1)OHS POD DEPENDENT VARIABLE CP

TAP NO 165.0000166.0000167.0000168.0000

.000 -.2664 -.2699 -.2612 -.2279

ALPHAO(6) = -.670 BETAO (7) = 2.050

SECTION (1)OHS POD DEPENDENT VARIABLE CP

TAP NO 165.0000166.0000167.0000168.0000

.000 -.2740 -.2779 -.2685 -.2428

ALPHAO(6) = -.660 BETAO (8) = 4.050

SECTION (1)OHS POD DEPENDENT VARIABLE CP

TAP NO 165.0000166.0000167.0000168.0000

.000 -.2219 -.2269 -.2204 -.2118

ALPHAO(6) = -.660 BETAO (9) = 6.060

SECTION (1)OHS POD DEPENDENT VARIABLE CP

TAP NO 165.0000166.0000167.0000168.0000

.000 -.2316 -.2413 -.2244 -.2271

ORIGINAL PAGE IS OF POOR QUALITY

ARC11-716 IA14 O1+T12+S12N25+AT10 OMS POD (RB1M31)

ALPHAO(6) = -.690 BETAO (10) = 8.080

SECTION (1)OMS POD DEPENDENT VARIABLE CP

TAP NO 165.0000166.0000167.0000168.0000

.000 -.2518 -.2702 -.2175 -.2555

ALPHAO(6) = -.690 BETAO (11) = 10.120

SECTION (1)OMS POD DEPENDENT VARIABLE CP

TAP NO 165.0000166.0000167.0000168.0000

.000 -.2514 -.2734 -.2240 -.2834

ALPHAO(7) = 2.080 BETAO (1) = -10.000

SECTION (1)OMS POD DEPENDENT VARIABLE CP

TAP NO 165.0000166.0000167.0000168.0000

.000 -.2301 -.2515 -.1945 -.1567

ALPHAO(7) = 1.980 BETAO (2) = -5.980

SECTION (1)OMS POD DEPENDENT VARIABLE CP

TAP NO 165.0000166.0000167.0000168.0000

.000 -.2030 -.2274 -.1921 -.1704

ALPHAO(7) = 1.970 BETAO (3) = -3.980

SECTION (1)OMS POD DEPENDENT VARIABLE CP

TAP NO 165.0000166.0000167.0000168.0000

.000 -.1976 -.2168 -.1587 -.1755

ARC11-716 IA14 OI+T12+S12N25+AT10 OHS POD (RB1H31)

ALPHAO(7) = 1.980 BETAO (4) = -*.990

SECTION (1)OHS POD DEPENDENT VARIABLE CP

TAP NO 165.0000166.0000167.0000168.0000

.000 -.1890 -.2085 -.1873 -.1715

ALPHAO(7) = 1.980 BETAO (5) = .060

SECTION (1)OHS POD DEPENDENT VARIABLE CP

TAP NO 165.0000166.0000167.0000168.0000

.000 -.2645 -.2759 -.2595 -.2259

ALPHAO(7) = 1.970 BETAO (6) = 2.040

SECTION (1)OHS POD DEPENDENT VARIABLE CP

TAP NO 165.0000166.0000167.0000168.0000

.000 -.2607 -.2709 -.2569 -.2290

ALPHAO(7) = 2.050 BETAO (7) = 4.050

SECTION (1)OHS POD DEPENDENT VARIABLE CP

TAP NO 165.0000166.0000167.0000168.0000

.000 -.2262 -.2314 -.2287 -.2093

ALPHAO(7) = 2.050 BETAO (8) = 6.070

SECTION (1)OHS POD DEPENDENT VARIABLE CP

TAP NO 165.0000166.0000167.0000168.0000

.000 -.2231 -.2325 -.2131 -.2124

ALPHAO(7) = 2.040 BETAO (9) = 8.090

SECTION (1)OMS POD DEPENDENT VARIABLE CP

TAP NO 165.0000166.0000167.0000168.0000

.000 -.2379 -.2462 -.2114 -.2297

ALPHAO(7) = 2.020 BETAO (10) = 10.110

SECTION (1)OMS POD DEPENDENT VARIABLE CP

TAP NO 165.0000166.0000167.0000168.0000

.000 -.2432 -.2795 -.2182 -.2427

ALPHAO(8) = 4.110 BETAO (1) = -10.000

SECTION (1)OMS POD DEPENDENT VARIABLE CP

TAP NO 165.0000166.0000167.0000168.0000

.000 -.2179 -.2471 -.1895 -.1504

ALPHAO(8) = 4.130 BETAO (2) = -7.960

SECTION (1)OMS POD DEPENDENT VARIABLE CP

TAP NO 165.0000166.0000167.0000168.0000

.000 -.2097 -.2446 -.2005 -.1622

ALPHAO(8) = 4.150 BETAO (3) = -5.960

SECTION (1)OMS POD DEPENDENT VARIABLE CP

TAP NO 165.0000166.0000167.0000168.0000

.000 -.2006 -.2228 -.1895 -.1616

ORIGINAL PAGE IS
POOR QUALITY

ARC11-716 IA14 O1+T12+S12N25+AT10 OMS POD (RB1M31)

ALPHAO(8) = 4.160 BETAO (4) = -3.960

SECTION (1)OMS POD DEPENDENT VARIABLE CP

TAP NO 165.0000166.0000167.0000168.0000

.000 -.1892 -.2036 -.1798 -.1593

ALPHAO(8) = 4.040 BETAO (5) = -1.980

SECTION (1)OMS POD DEPENDENT VARIABLE CP

TAP NO 165.0000166.0000167.0000168.0000

.000 -.1901 -.2007 -.1911 -.1881

ALPHAO(8) = 4.050 BETAO (6) = .030

SECTION (1)OMS POD DEPENDENT VARIABLE CP

TAP NO 165.0000166.0000167.0000168.0000

.000 -.2532 -.2703 -.2507 -.2151

ALPHAO(8) = 4.050 BETAO (7) = 2.050

SECTION (1)OMS POD DEPENDENT VARIABLE CP

TAP NO 165.0000166.0000167.0000168.0000

.000 -.2508 -.2577 -.2486 -.2202

ALPHAO(8) = 4.050 BETAO (8) = 4.050

SECTION (1)OMS POD DEPENDENT VARIABLE CP

TAP NO 165.0000166.0000167.0000168.0000

.000 -.2210 -.2237 -.2188 -.2043

ORIGINAL PAGE IS
OF POOR QUALITY

ARC11-716 IA14 O1+T12+S12N25+AT10 OMS POD (RB1M31)

ALPHAO(8) = 4.020 BETAO (9) = 6.070

SECTION (1)OMS POD DEPENDENT VARIABLE CP

TAP NO 165.0000166.0000167.0000168.0000

.000 -.2291 -.2357 -.2216 -.2174

ALPHAO(8) = 4.010 BETAO (10) = 8.100

SECTION (1)OMS POD DEPENDENT VARIABLE CP

TAP NO 165.0000166.0000167.0000168.0000

.000 -.2306 -.2489 -.2237 -.2162

ALPHAO(8) = 4.000 BETAO (11) = 10.130

SECTION (1)OMS POD DEPENDENT VARIABLE CP

TAP NO 165.0000166.0000167.0000168.0000

.000 -.2452 -.2667 -.2118 -.2261

ALPHAO(9) = 6.000 BETAO (1) = -9.980

SECTION (1)OMS POD DEPENDENT VARIABLE CP

TAP NO 165.0000166.0000167.0000168.0000

.000 -.2179 -.2517 -.1880 -.1505

ALPHAO(9) = 5.930 BETAO (2) = -7.980

SECTION (1)OMS POD DEPENDENT VARIABLE CP

TAP NO 165.0000166.0000167.0000168.0000

.000 -.2037 -.2295 -.1745 -.1470

ARC11-716 IA14 O1+T12+S12N25+AT10 OMS PCD (RB1H31)

ALPHAO(9) = 5.960 BETAO (3) = -5.960

SECTION (1)OMS PCD DEPENDENT VARIABLE CP

TAP NO 165.0000166.0000167.0000168.0000

.000 -.2008 -.2183 -.1828 -.1571

ALPHAO(9) = 5.950 BETAO (4) = -3.970

SECTION (1)OMS PCD DEPENDENT VARIABLE CP

TAP NO 165.0000166.0000167.0000168.0000

.000 -.1846 -.2041 -.1804 -.1622

ALPHAO(9) = 5.940 BETAO (5) = -1.960

SECTION (1)OMS PCD DEPENDENT VARIABLE CP

TAP NO 165.0000166.0000167.0000168.0000

.000 -.1688 -.2003 -.1804 -.1680

ALPHAO(9) = 5.940 BETAO (6) = .040

SECTION (1)OMS PCD DEPENDENT VARIABLE CP

TAP NO 165.0000166.0000167.0000168.0000

.000 -.2326 -.2605 -.2481 -.2096

ALPHAO(9) = 5.880 BETAO (7) = 2.060

SECTION (1)OMS PCD DEPENDENT VARIABLE CP

TAP NO 165.0000166.0000167.0000168.0000

.000 -.2464 -.2580 -.2261 -.2120

ALPHAO(9) = 5.990 BETAO (8) = 4.070

SECTION (1)OMS POD DEPENDENT VARIABLE CP

TAP NO 165.0000166.0000167.0000168.0000

.000 -.2067 -.2181 -.2241 -.2025

ALPHAO(9) = 5.990 BETAO (9) = 6.100

SECTION (1)OMS POD DEPENDENT VARIABLE CP

TAP NO 165.0000166.0000167.0000168.0000

.000 -.2274 -.2353 -.2291 -.2177

ALPHAO(9) = 6.020 BETAO (10) = 8.130

SECTION (1)OMS POD DEPENDENT VARIABLE CP

TAP NO 165.0000166.0000167.0000168.0000

.000 -.2222 -.2437 -.2148 -.2133

ALPHAO(9) = 5.990 BETAO (11) = 10.150

SECTION (1)OMS POD DEPENDENT VARIABLE CP

TAP NO 165.0000166.0000167.0000168.0000

.000 -.2296 -.2580 -.2141 -.2096

ALPHAO(10) = 8.050 BETAO (1) = -9.970

SECTION (1)OMS POD DEPENDENT VARIABLE CP

TAP NO 165.0000166.0000167.0000168.0000

.000 -.2163 -.2378 -.1878 -.1529

ARC11-716 IA14 O1+T12+S12N25+AT10 OMS POD (RB1431)

ALPHAO(10) = 8.000 BETAO (2) = -7.950

SECTION (1)OMS POD DEPENDENT VARIABLE CP

TAP NO 165.0000166.0000167.0000168.0000

.000 -.1945 -.2175 -.1775 -.1484

ALPHAO(10) = 7.980 BETAO (3) = -5.950

SECTION (1)OMS POD DEPENDENT VARIABLE CP

TAP NO 165.0000166.0000167.0000168.0000

.000 -.1855 -.2073 -.1848 -.1531

ALPHAO(10) = 7.940 BETAO (4) = -3.970

SECTION (1)OMS POD DEPENDENT VARIABLE CP

TAP NO 165.0000166.0000167.0000168.0000

.000 -.1816 -.2052 -.1819 -.1576

ALPHAO(10) = 7.940 BETAO (5) = -1.980

SECTION (1)OMS POD DEPENDENT VARIABLE CP

TAP NO 165.0000166.0000167.0000168.0000

.000 -.1757 -.2029 -.1755 -.1666

ALPHAO(10) = 7.890 BETAO (6) = .030

SECTION (1)OMS POD DEPENDENT VARIABLE CP

TAP NO 165.0000166.0000167.0000168.0000

.000 -.1776 -.2489 -.1808 -.1587

ARC11-716 IA14 O1+T12+S12N25+AT10 OMS POD (RB1M31)

ALPHAO(10) = 7.940 BETAO (7) = 2.060

SECTION (1)OMS POD DEPENDENT VARIABLE CP

TAP NO 165.0000166.0000167.0000168.0000

.000 -.2506 -.2533 -.2508 -.2288

ALPHAO(10) = 8.010 BETAO (8) = 4.090

SECTION (1)OMS POD DEPENDENT VARIABLE CP

TAP NO 165.0000166.0000167.0000168.0000

.000 -.2079 -.2056 -.2170 -.2066

ALPHAO(10) = 8.000 BETAO (9) = 6.120

SECTION (1)OMS POD DEPENDENT VARIABLE CP

TAP NO 165.0000166.0000167.0000168.0000

.000 -.2021 -.2137 -.2073 -.2070

ALPHAO(10) = 7.980 BETAO (10) = 8.120

SECTION (1)OMS POD DEPENDENT VARIABLE CP

TAP NO 165.0000166.0000167.0000168.0000

.000 -.2052 -.2274 -.2022 -.2067

ALPHAO(10) = 7.950 BETAO (11) = 10.200

SECTION (1)OMS POD DEPENDENT VARIABLE CP

TAP NO 165.0000166.0000167.0000168.0000

.000 -.2267 -.2500 -.2277 -.2304

ORIGINAL PAGE IS OF POOR QUALITY

ARC11-716 IA14 O1+T12+S12N25+AT10 OMS POD (RB1M31)

ALPHAO(11) = 9.990 BETAO (1) = -9.930

SECTION (1)OMS POD DEPENDENT VARIABLE CP

TAP NO 165.0000166.0000167.0000168.0000

.000 -.2132 -.2362 -.1967 -.1621

ALPHAO(11) = 10.010 BETAO (2) = -7.910

SECTION (1)OMS POD DEPENDENT VARIABLE CP

TAP NO 165.0000166.0000167.0000168.0000

.000 -.1954 -.2112 -.1900 -.1586

ALPHAO(11) = 9.920 BETAO (3) = -5.920

SECTION (1)OMS POD DEPENDENT VARIABLE CP

TAP NO 165.0000166.0000167.0000168.0000

.000 -.1858 -.2040 -.1823 -.1633

ALPHAO(11) = 9.940 BETAO (4) = -3.950

SECTION (1)OMS POD DEPENDENT VARIABLE CP

TAP NO 165.0000166.0000167.0000168.0000

.000 -.1820 -.1983 -.1783 -.1713

ALPHAO(11) = 9.940 BETAO (5) = -1.960

SECTION (1)OMS POD DEPENDENT VARIABLE CP

TAP NO 165.0000166.0000167.0000168.0000

.000 -.1775 -.2008 -.1854 -.1676

ORIGINAL PAGE IS OF POOR QUALITY

ARC11-716 IA14 O1+T12+S12N25+AT10 OMS PCO (RB1M31)

ALPHAO(11) = 9.880 BETAO (6) = .040

SECTION (1)OMS PCO DEPENDENT VARIABLE CP

TAP NO 165.0000166.0000167.0000168.0000

.000 -.1717 -.1878 -.1685 -.1618

ALPHAO(11) = 9.960 BETAO (7) = 2.070

SECTION (1)OMS PCO DEPENDENT VARIABLE CP

TAP NO 165.0000166.0000167.0000168.0000

.000 -.1786 -.1979 -.1875 -.1776

ALPHAO(11) = 9.900 BETAO (8) = 4.110

SECTION (1)OMS PCO DEPENDENT VARIABLE CP

TAP NO 165.0000166.0000167.0000168.0000

.000 -.2193 -.2151 -.2307 -.2089

ALPHAO(11) = 9.980 BETAO (9) = 6.130

SECTION (1)OMS PCO DEPENDENT VARIABLE CP

TAP NO 165.0000166.0000167.0000168.0000

.000 -.2061 -.2214 -.2120 -.2101

ALPHAO(11) = 10.030 BETAO (10) = 8.170

SECTION (1)OMS PCO DEPENDENT VARIABLE CP

TAP NO 165.0000166.0000167.0000168.0000

.000 -.2055 -.2243 -.2230 -.2178

ARC11-716 IA14 OS+T12+S12N25+AT10 OHS POD (RB1M31)

ALPHAO(11) = 10.050 BETAO (11) = 10.230

SECTION (1)OHS POD DEPENDENT VARIABLE CP

TAP NO 165.0000166.0000167.0000168.0000

.000 -.2241 -.2351 -.2241 -.2176

ARC11-716 IA14 O1+T12+S12N25+AT10 OMS POD (RB1M32) (17 APR 74)

REFERENCE DATA

SREF = 2.4210 SQ.FT. XMRP = 29.5800 INCHES
LREF = 38.7090 INCHES YMRP = .0000 INCHES
BREF = 38.7090 INCHES ZMRP = .0000 INCHES
SCALE = .0300 SCALE

PARAMETRIC DATA

MACH = 1.100 ELEVON = .000
RUDDER = .000 SPOBRK = .000

ALPHAO(1) = -10.240 BETAO (1) = -9.900

SECTION (1)OMS POD DEPENDENT VARIABLE CP

TAP NO 165.0000166.0000167.0000168.0000

.000 -.3129 -.3200 -.1659 -.0413

ALPHAO(1) = -10.220 BETAO (2) = -7.890

SECTION (1)OMS POD DEPENDENT VARIABLE CP

TAP NO 165.0000166.0000167.0000168.0000

.000 -.3118 -.3186 -.1755 -.0583

ALPHAO(1) = -10.220 BETAO (3) = -5.900

SECTION (1)OMS POD DEPENDENT VARIABLE CP

TAP NO 165.0000166.0000167.0000168.0000

.000 -.3063 -.3143 -.1861 -.0787

ALPHAO(1) = -10.230 BETAO (4) = -3.930

SECTION (1)OMS POD DEPENDENT VARIABLE CP

TAP NO 165.0000166.0000167.0000168.0000

.000 -.3077 -.3283 -.2013 -.1027

ALPHAO(1) = -10.250 BETAO (5) = -1.940

SECTION (1)OMS POD DEPENDENT VARIABLE CP

TAP NO 165.0000166.0000167.0000168.0000

.000 -.3015 -.3290 -.2205 -.1375

ALPHAO(1) = -10.240 BETAO (6) = .030

SECTION (1)OMS POD DEPENDENT VARIABLE CP

TAP NO 165.0000166.0000167.0000168.0000

.000 -.3169 -.3441 -.2497 -.1789

ALPHAO(1) = -10.250 BETAO (7) = 2.040

SECTION (1)OMS POD DEPENDENT VARIABLE CP

TAP NO 165.0000166.0000167.0000168.0000

.000 -.3349 -.3551 -.2723 -.2202

ALPHAO(1) = -10.260 BETAO (8) = 4.030

SECTION (1)OMS POD DEPENDENT VARIABLE CP

TAP NO 165.0000166.0000167.0000168.0000

.000 -.3571 -.3804 -.3000 -.2634

ALPHAO(1) = -10.250 BETAO (9) = 6.090

SECTION (1)OMS POD DEPENDENT VARIABLE CP

TAP NO 165.0000166.0000167.0000168.0000

.000 -.3172 -.3458 -.2926 -.3076

ARC11-716 IA14 O1+T12+S12N25+AT10 OMS POD (R81M32)

ALPHAO(1) = -10.240 BETAO (10) = 8.120

SECTION (1)OMS POD DEPENDENT VARIABLE CP

TAP NO 165.0000166.0000167.0000168.0000

.000 -.3241 -.3288 -.2934 -.3823

ALPHAO(1) = -10.250 BETAO (11) = 10.110

SECTION (1)OMS POD DEPENDENT VARIABLE CP

TAP NO 165.0000166.0000167.0000168.0000

.000 -.3230 -.3401 -.2843 -.3529

ALPHAO(2) = -8.190 BETAO (1) = -9.970

SECTION (1)OMS POD DEPENDENT VARIABLE CP

TAP NO 165.0000166.0000167.0000168.0000

.000 -.3044 -.3052 -.1706 -.0455

ALPHAO(2) = -8.200 BETAO (2) = -7.980

SECTION (1)OMS POD DEPENDENT VARIABLE CP

TAP NO 165.0000166.0000167.0000168.0000

.000 -.3033 -.3061 -.1772 -.0990

ALPHAO(2) = -8.210 BETAO (3) = -5.980

SECTION (1)OMS POD DEPENDENT VARIABLE CP

TAP NO 165.0000166.0000167.0000168.0000

.000 -.2940 -.3035 -.1906 -.0802

ARC11-716 1A14 01+T12+S12N25+AT10 OMS POD (RB1H32)

ALPHAO(2) = -8.220 BETAO (4) = -1.980

SECTION (1)OMS POD DEPENDENT VARIABLE CP

TAP NO 165.0000166.0000167.0000168.0000

.000 -.2408 -.3080 -.2277 -.1512

ALPHAO(2) = -8.150 BETAO (5) = .010

SECTION (1)OMS POD DEPENDENT VARIABLE CP

TAP NO 165.0000166.0000167.0000168.0000

.000 -.2963 -.3217 -.2523 -.1967

ALPHAO(2) = -8.190 BETAO (6) = 2.040

SECTION (1)OMS POD DEPENDENT VARIABLE CP

TAP NO 165.0000166.0000167.0000168.0000

.000 -.3139 -.3347 -.2808 -.2356

ALPHAO(2) = -8.240 BETAO (7) = 4.040

SECTION (1)OMS POD DEPENDENT VARIABLE CP

TAP NO 165.0000166.0000167.0000168.0000

.000 -.3232 -.3304 -.3031 -.2655

ALPHAO(2) = -8.220 BETAO (8) = 6.070

SECTION (1)OMS POD DEPENDENT VARIABLE CP

TAP NO 165.0000166.0000167.0000168.0000

.000 -.3225 -.3295 -.3103 -.3007

ARC11-716 IA14 O1+T12+S12N25+AT10 OMS POD (RB1M32)

ALPHAO(2) = -8.230 BETAO (9) = 8.080

SECTION (1)OMS POD DEPENDENT VARIABLE CP

TAP NO 165.0000166.0000167.0000168.0000

.000 -.3203 -.3222 -.3019 -.3756

ALPHAO(2) = -8.240 BETAO (10) = 10.100

SECTION (1)OMS POD DEPENDENT VARIABLE CP

TAP NO 165.0000166.0000167.0000168.0000

.000 -.3170 -.3242 -.2887 -.3113

ALPHAO(3) = -6.210 BETAO (1) = -10.020

SECTION (1)OMS POD DEPENDENT VARIABLE CP

TAP NO 165.0000166.0000167.0000168.0000

.000 -.2866 -.2961 -.1589 -.0343

ALPHAO(3) = -6.220 BETAO (2) = -7.960

SECTION (1)OMS POD DEPENDENT VARIABLE CP

TAP NO 165.0000166.0000167.0000168.0000

.000 -.2933 -.2979 -.1731 -.0543

ALPHAO(3) = -6.230 BETAO (3) = -5.960

SECTION (1)OMS POD DEPENDENT VARIABLE CP

TAP NO 165.0000166.0000167.0000168.0000

.000 -.2833 -.2874 -.1860 -.0755

ORIGINAL PAGE IS OF POOR QUALITY

ALPHAO(3) = -6.120 BETAO (4) = -1.980

SECTION (1)OMS POD DEPENDENT VARIABLE CP

TAP NO 165.0000166.0000167.0000168.0000

.000 -.2706 -.2981 -.2233 -.1732

ALPHAO(3) = -6.130 BETAO (5) = .000

SECTION (1)OMS POD DEPENDENT VARIABLE CP

TAP NO 165.0000166.0000167.0000168.0000

.000 -.2779 -.3000 -.2539 -.2143

ALPHAO(3) = -6.120 BETAO (6) = 2.030

SECTION (1)OMS POD DEPENDENT VARIABLE CP

TAP NO 165.0000166.0000167.0000168.0000

.000 -.3000 -.3185 -.2846 -.2498

ALPHAO(3) = -6.110 BETAO (7) = 4.060

SECTION (1)OMS POD DEPENDENT VARIABLE CP

TAP NO 165.0000166.0000167.0000168.0000

.000 -.3117 -.3111 -.3093 -.2764

ALPHAO(3) = -6.190 BETAO (8) = 6.080

SECTION (1)OMS POD DEPENDENT VARIABLE CP

TAP NO 165.0000166.0000167.0000168.0000

.000 -.3053 -.3097 -.3082 -.2994

ARC11-716 IA14 O1+T12+S12N25+AT10 OMS POD (RB1M32)

ALPHAO(3) = -6.190 BETAO (9) = 8.090

SECTION (1)OMS POD DEPENDENT VARIABLE CP

TAP NO 165.0000166.0000167.0000168.0000

.000 -.3054 -.3080 -.3028 -.3468

ALPHAO(3) = -6.170 BETAO (10) = 10.090

SECTION (1)OMS POD DEPENDENT VARIABLE CP

TAP NO 165.0000166.0000167.0000168.0000

.000 -.3086 -.3164 -.2914 -.3218

ALPHAO(4) = -4.240 BETAO (1) = -10.010

SECTION (1)OMS POD DEPENDENT VARIABLE CP

TAP NO 165.0000166.0000167.0000168.0000

.000 -.2832 -.2907 -.1758 -.0552

ALPHAO(4) = -4.270 BETAO (2) = -8.020

SECTION (1)OMS POD DEPENDENT VARIABLE CP

TAP NO 165.0000166.0000167.0000168.0000

.000 -.2858 -.2894 -.1869 -.0698

ALPHAO(4) = -4.290 BETAO (3) = -5.970

SECTION (1)OMS POD DEPENDENT VARIABLE CP

TAP NO 165.0000166.0000167.0000168.0000

.000 -.2843 -.2872 -.1894 -.0785

ALPHAO(4) = -4.250 BETAO (4) = -3.970

SECTION (1)OMS POD DEPENDENT VARIABLE CP

TAP NO 165.0000166.0000167.0000168.0000

.000 -.2681 -.2827 -.1907 -.0869

ALPHAO(4) = -4.240 BETAO (5) = -1.960

SECTION (1)OMS POD DEPENDENT VARIABLE CP

TAP NO 165.0000166.0000167.0000168.0000

.000 -.2615 -.2880 -.1639 -.1712

ALPHAO(4) = -4.220 BETAO (6) = .020

SECTION (1)OMS POD DEPENDENT VARIABLE CP

TAP NO 165.0000166.0000167.0000168.0000

.000 -.2668 -.2914 -.2554 -.2221

ALPHAO(4) = -4.290 BETAO (7) = 2.020

SECTION (1)OMS POD DEPENDENT VARIABLE CP

TAP NO 165.0000166.0000167.0000168.0000

.000 -.2959 -.3130 -.2931 -.2600

ALPHAO(4) = -4.310 BETAO (8) = 4.040

SECTION (1)OMS POD DEPENDENT VARIABLE CP

TAP NO 165.0000166.0000167.0000168.0000

.000 -.3018 -.3016 -.3119 -.2837

ALPHAO(4) = -4.220 BETAO (9) = 8.060

SECTION (1)OMS POD DEPENDENT VARIABLE CP

TAP NO 165.0000166.0000167.0000168.0000

.000 -.3004 -.2994 -.3025 -.3230

ALPHAO(4) = -4.210 BETAO (10) = 10.100

SECTION (1)OMS POD DEPENDENT VARIABLE CP

TAP NO 165.0000166.0000167.0000168.0000

.000 -.2967 -.3034 -.2737 -.3252

ALPHAO(5) = -2.920 BETAO (1) = -10.000

SECTION (1)OMS POD DEPENDENT VARIABLE CP

TAP NO 165.0000166.0000167.0000168.0000

.000 -.2750 -.2895 -.1708 -.0501

ALPHAO(5) = -2.930 BETAO (2) = -8.000

SECTION (1)OMS POD DEPENDENT VARIABLE CP

TAP NO 165.0000166.0000167.0000168.0000

.000 -.2722 -.2828 -.1773 -.0635

ALPHAO(5) = -2.930 BETAO (3) = -5.970

SECTION (1)OMS POD DEPENDENT VARIABLE CP

TAP NO 165.0000166.0000167.0000168.0000

.000 .2791 -.2838 -.1674 -.0770

ALPHAO(5) = -2.910 BETAO (4) = -3.960

SECTION (1)OMS POD DEPENDENT VARIABLE CP

TAP NO 165.0000166.0000167.0000168.0000

.000 -.2599 -.2798 -.1730 -.0710

ALPHAO(5) = -2.910 BETAO (5) = -2.000

SECTION (1)OMS POD DEPENDENT VARIABLE CP

TAP NO 165.0000166.0000167.0000168.0000

.000 -.2553 -.2840 -.1540 -.1315

ALPHAO(5) = -2.910 BETAO (6) = .020

SECTION (1)OMS POD DEPENDENT VARIABLE CP

TAP NO 165.0000166.0000167.0000168.0000

.000 -.2643 -.2887 -.2578 -.2285

ALPHAO(5) = -2.910 BETAO (7) = 2.050

SECTION (1)OMS POD DEPENDENT VARIABLE CP

TAP NO 165.0000166.0000167.0000168.0000

.000 -.2899 -.3047 [illegible]945 -.2660

ALPHAO(5) = -2.920 BETAO (8) = 4.080

SECTION (1)OMS POD DEPENDENT VARIABLE CP

TAP NO 165.0000166.0000167.0000168.0000

.000 -.2807 -.2991 -.3030 -.2929

ORIGINAL PAGE IS OF POOR QUALITY

ALPHAO(5) = -2.930 BETAO (9) = 6.070

SECTION (1)OMS POD DEPENDENT VARIABLE CP

TAP NO 165.0000166.0000167.0000168.0000

.000 -.2783 -.2952 -.3064 -.3025

ALPHAO(5) = -2.920 BETAO (10) = 8.110

SECTION (1)OMS POD DEPENDENT VARIABLE CP

TAP NO 165.0000166.0000167.0000168.0000

.000 -.3006 -.3048 -.3076 -.3183

ALPHAO(5) = -2.900 BETAO (11) = 10.100

SECTION (1)OMS POD DEPENDENT VARIABLE CP

TAP NO 165.0000166.0000167.0000168.0000

.000 -.2951 -.3018 -.2701 -.3250

ALPHAO(6) = -.750 BETAO (1) = -10.040

SECTION (1)OMS POD DEPENDENT VARIABLE CP

TAP NO 165.0000166.0000167.0000168.0000

.000 -.2649 -.2848 -.1693 -.0523

ALPHAO(6) = -.740 BETAO (2) = -8.040

SECTION (1)OMS POD DEPENDENT VARIABLE CP

TAP NO 165.0000166.0000167.0000168.0000

.000 -.2626 -.2786 -.1767 -.0674

ARC11-716 IA14 01+T12+S12N25+AT10 OMS POD (RB1M32)

ALPHAO(6) = -.720 BETAO (3) = -5.990

SECTION (1)OMS POD DEPENDENT VARIABLE CP

TAP NO 165.0000166.0000167.0000168.0000

.000 -.2629 -.2777 -.1740 -.0610

ALPHAO(6) = -.710 BETAO (4) = -3.980

SECTION (1)OMS POD DEPENDENT VARIABLE CP

TAP NO 165.0000166.0000167.0000168.0000

.000 -.2615 -.2815 -.1730 -.0636

ALPHAO(6) = -.700 BETAO (5) = -2.010

SECTION (1)OMS POD DEPENDENT VARIABLE CP

TAP NO 165.0000166.0000167.0000168.0000

.000 -.2476 -.2751 -.1503 -.1879

ALPHAO(6) = -.690 BETAO (6) = .040

SECTION (1)OMS POD DEPENDENT VARIABLE CP

TAP NO 165.0000166.0000167.0000168.0000

.000 -.2522 -.2799 -.2566 -.2397

ALPHAO(6) = -.690 BETAO (7) = 2.030

SECTION (1)OMS POD DEPENDENT VARIABLE CP

TAP NO 165.0000166.0000167.0000168.0000

.000 -.2744 -.2887 -.2928 -.2718

QUALITY OF THE ORIGINAL PAGE IS POOR

ARC11-716 IA14 O1+T12+S12N25+AT10 OMS POD (RB1H32)

ALPHAO(6) = -.710 BETAO (8) = 4.060

SECTION (1)OMS POD DEPENDENT VARIABLE CP

TAP NO 165.0000166.0000167.0000168.0000

.000 -.2987 -.2969 -.3158 -.2976

ALPHAO(6) = -.720 BETAO (9) = 6.080

SECTION (1)OMS POD DEPENDENT VARIABLE CP

TAP NO 165.0000166.0000167.0000168.0000

.000 -.2990 -.3006 -.3099 -.3084

ALPHAO(6) = -.730 BETAO (10) = 8.100

SECTION (1)OMS POD DEPENDENT VARIABLE CP

TAP NO 165.0000166.0000167.0000168.0000

.000 -.2978 -.2980 -.3027 -.3118

ALPHAO(6) = -.740 BETAO (11) = 10.160

SECTION (1)OMS POD DEPENDENT VARIABLE CP

TAP NO 165.0000166.0000167.0000168.0000

.000 -.2926 -.3102 -.2698 -.3247

ALPHAO(7) = 2.030 BETAO (1) = -10.000

SECTION (1)OMS POD DEPENDENT VARIABLE CP

TAP NO 165.0000166.0000167.0000168.0000

.000 -.2571 -.2766 -.1612 -.0477

ARC11-716 IA14 O1>T)2+S12N25+AT10 OMS POD (RB1M32)

ALPHAO(7) = 2.080 BETAO (2) = -6.030

SECTION (1)OMS POD DEPENDENT VARIABLE CP

TAP NO 165.0000166.0000167.0000168.0000

.000 -.2529 -.2757 -.1546 -.0430

ALPHAO(7) = 2.080 BETAO (3) = -5.990

SECTION (1)OMS POD DEPENDENT VARIABLE CP

TAP NO 165.0000166.0000167.0000168.0000

.000 -.2542 -.2791 -.1144 -.0800

ALPHAO(7) = 1.940 BETAO (4) = -4.010

SECTION (1)OMS POD DEPENDENT VARIABLE CP

TAP NO 165.0000166.0000167.0000168.0000

.000 -.2438 -.2697 -.1889 -.1847

ALPHAO(7) = 1.950 BETAO (5) = -2.000

SECTION (1)OMS POD DEPENDENT VARIABLE CP

TAP NO 165.0000166.0000167.0000168.0000

.000 -.2394 -.2633 -.2324 -.2172

ALPHAO(7) = 1.950 BETAO (6) = .040

SECTION (1)OMS POD DEPENDENT VARIABLE CP

TAP NO 165.0000166.0000167.0000168.0000

.000 -.2464 -.2728 -.2638 -.2586

ARC11-716 IA14 O1+T12+S12N25+AT10 OMS POD (RB1M32)

ALPHAO(7) = 1.930 BETAO (7) = 2.030

SECTION (1)OMS POD DEPENDENT VARIABLE CP

TAP NO 165.0000166.0000167.0000168.0000

.000 -.2646 -.2817 -.2828 -.2874

ALPHAO(7) = 1.930 BETAO (8) = 4.070

SECTION (1)OMS POD DEPENDENT VARIABLE CP

TAP NO 165.0000166.0000167.0000168.0000

.000 -.2667 -.2935 -.2968 -.3093

ALPHAO(7) = 1.960 BETAO (9) = 6.100

SECTION (1)OMS POD DEPENDENT VARIABLE CP

TAP NO 165.0000166.0000167.0000168.0000

.000 -.2674 -.2835 -.2925 -.3048

ALPHAO(7) = 1.950 BETAO (10) = 8.100

SECTION (1)OMS POD DEPENDENT VARIABLE CP

TAP NO 165.0000166.0000167.0000168.0000

.000 -.2824 -.3001 -.2648 -.2845

ALPHAO(7) = 1.940 BETAO (11) = 10.140

SECTION (1)OMS POD DEPENDENT VARIABLE CP

TAP NO 165.0000166.0000167.0000168.0000

.000 -.2824 -.3011 -.2736 -.2876

ARC11-716 IA14 O1+T12+S12N25+AT10 OMS POD (RB1M32)

ALPHAO(8) = 3.970 BETAO (1) = -9.990

SECTION (1)OMS POD DEPENDENT VARIABLE CP

TAP NO 165.0000166.0000167.0000168.0000

.000 -.2528 -.2780 -.1505 -.0343

ALPHAO(8) = 3.990 BETAO (2) = -8.000

SECTION (1)OMS POD DEPENDENT VARIABLE CP

TAP NO 165.0000166.0000167.0000168.0000

.000 -.2597 -.2816 -.1133 -.0238

ALPHAO(8) = 3.970 BETAO (3) = -6.020

SECTION (1)OMS POD DEPENDENT VARIABLE CP

TAP NO 165.0000166.0000167.0000168.0000

.000 -.2520 -.2789 -.1775 -.1423

ALPHAO(8) = 3.930 BETAO (4) = -3.990

SECTION (1)OMS POD DEPENDENT VARIABLE CP

TAP NO 165.0000166.0000167.0000168.0000

.000 -.2491 -.2733 -.2001 -.1972

ALPHAO(8) = 3.930 BETAO (5) = -2.000

SECTION (1)OMS POD DEPENDENT VARIABLE CP

TAP NO 165.0000166.0000167.0000168.0000

.000 -.2432 -.2642 -.2365 -.2336

DATE 10 DEC 74 TABULATED PRESSURE DATA - 1A14A - VOL. 4

ARC11-716 1A14 O1+712+S12N25+AT10 OMS POD (RB1M32)

ALPHAO(8) = 3.940 BETAO (6) = .040

SECTION (1)OMS POD DEPENDENT VARIABLE CP

TAP NO 165.0000166.0000167.0000168.0000

.000 -.2453 -.2704 -.2814 -.2807

ALPHAO(8) = 4.030 BETAO (7) = 2.050

SECTION (1)OMS POD DEPENDENT VARIABLE CP

TAP NO 165.0000166.0000167.0000168.0000

.000 -.2657 -.2505 -.2899 -.3132

ALPHAO(8) = 4.020 BETAO (8) = 4.070

SECTION (1)OMS POD DEPENDENT VARIABLE CP

TAP NO 165.0000166.0000167.0000168.0000

.000 -.2747 -.2799 -.2991 -.3177

ALPHAO(8) = 4.010 BETAO (9) = 6.080

SECTION (1)OMS POD DEPENDENT VARIABLE CP

TAP NO 165.0000166.0000167.0000168.0000

.000 -.2791 -.2835 -.2964 -.3117

ALPHAO(8) = 4.080 BETAO (10) = 8.110

SECTION (1)OMS POD DEPENDENT VARIABLE CP

TAP NO 165.0000166.0000167.0000168.0000

.000 -.2863 -.2982 -.2809 -.2992

ARC11-716 1A14 O1+T12+S12N25+A710 OMS POD (RB1M32)

ALPHAO(8) = 4.050 BETAO (11) = 10.160

SECTION (1)OMS POD DEPENDENT VARIABLE CP

TAP NO 165.0000166.0000167.0000168.0000

.000 -.2888 -.3096 -.2714 -.3015

ALPHAO(9) = 5.980 BETAO (1) = -9.980

SECTION (1)OMS POD DEPENDENT VARIABLE CP

TAP NO 165.0000166.0000167.0000168.0000

.000 -.2555 -.2663 -.1676 -.0491

ALPHAO(9) = 5.980 BETAO (2) = -7.980

SECTION (1)OMS POD DEPENDENT VARIABLE CP

TAP NO 165.0000166.0000167.0000168.0000

.000 -.2602 -.2778 -.1296 -.0586

ALPHAO(9) = 5.940 BETAO (3) = -5.980

SECTION (1)OMS POD DEPENDENT VARIABLE CP

TAP NO 165.0000166.0000167.0000168.0000

.000 -.2513 -.2759 -.1590 -.1110

ALPHAO(9) = 5.980 BETAO (4) = -3.990

SECTION (1)OMS POD DEPENDENT VARIABLE CP

TAP NO 165.0000166.0000167.0000168.0000

.000 -.2412 -.2718 -.1882 -.1848

ARC11-716 IA14 O1+T12+S12N25+AT10 OMS POD (FB1M32)

ALPHAO(9) = 5.970 BETAO (5) = -1.970

SECTION (1)OMS POD DEPENDENT VARIABLE CP

TAP NO 165.0000166.0000167.0000168.0000

.000 -.2467 -.2744 -.2399 -.2529

ALPHAO(9) = 5.980 BETAO (6) = .030

SECTION (1)OMS POD DEPENDENT VARIABLE CP

TAP NO 165.0000166.0000167.0000168.0000

.000 -.2460 -.2690 -.2628 -.3097

ALPHAO(9) = 5.970 BETAO (7) = 2.030

SECTION (1)OMS POD DEPENDENT VARIABLE CP

TAP NO 165.0000166.0000167.0000168.0000

.000 -.2577 -.2789 -.2903 -.3336

ALPHAO(9) = 5.950 BETAO (8) = 4.080

SECTION (1)OMS POD DEPENDENT VARIABLE CP

TAP NO 165.0000166.0000167.0000168.0000

.000 -.2778 -.2796 -.3154 -.3452

ALPHAO(9) = 5.940 BETAO (9) = 6.100

SECTION (1)OMS POD DEPENDENT VARIABLE CP

TAP NO 165.0000166.0000167.0000168.0000

.000 -.2784 -.2833 -.3017 -.3251

ORIGINAL PAGE IS OF POOR QUALITY

ALPHAO(9) = 5.920 BETAO (10) = 8.130

SECTION (1)OMS PCO DEPENDENT VARIABLE CP

TAP NO 165.0000166.0000167.0000168.0000

.000 -.2769 -.3034 -.2795 -.3065

ALPHAO(9) = 5.980 BETAO (11) = 10.150

SECTION (1)OMS PCO DEPENDENT VARIABLE CP

TAP NO 165.0000166.0000167.0000168.0000

.000 -.2859 -.3131 -.2817 -.3050

ALPHAO(10) = 8.080 BETAO (1) = -9.950

SECTION (1)OMS PCO DEPENDENT VARIABLE CP

TAP NO 165.0000166.0000167.0000168.0000

.000 -.2697 -.2941 -.1939 -.1132

ALPHAO(10) = 8.110 BETAO (2) = -7.950

SECTION (1)OMS PCO DEPENDENT VARIABLE CP

TAP NO 165.0000166.0000167.0000168.0000

.000 -.2661 -.2839 -.1894 -.1088

ALPHAO(10) = 8.130 BETAO (3) = -5.940

SECTION (1)OMS PCO DEPENDENT VARIABLE CP

TAP NO 165.0000166.0000167.0000168.0000

.000 -.2627 -.2774 -.1948 -.1146

ORIGINAL PAGE IS
OF POOR QUALITY

ALPHAO(10) = 7.980 BETAO (4) = -3.970

SECTION (1)OMS POD DEPENDENT VARIABLE CP

TAP NO 165.0000166.0000167.0000168.0000

.000 -.2529 -.2770 -.1709 -.1131

ALPHAO(10) = 8.010 BETAO (5) = -1.970

SECTION (1)OMS POD DEPENDENT VARIABLE CP

TAP NO 165.0000166.0000167.0000168.0000

.000 -.2537 -.2818 -.2064 -.2183

ALPHAO(10) = 7.930 BETAO (6) = .060

SECTION (1)OMS POD DEPENDENT VARIABLE CP

TAP NO 165.0000166.0000167.0000168.0000

.000 -.2486 -.2796 -.2708 -.3138

ALPHAO(10) = 7.970 BETAO (7) = 2.050

SECTION (1)OMS POD DEPENDENT VARIABLE CP

TAP NO 165.0000166.0000167.0000168.0000

.000 -.2489 -.2776 -.2930 -.3394

ALPHAO(10) = 7.950 BETAO (8) = 4.080

SECTION (1)OMS POD DEPENDENT VARIABLE CP

TAP NO 165.0000166.0000167.0000168.0000

.000 -.2929 -.2934 -.3250 -.3572

ARC11-716 IA14 O1+T12+S12N25+AT10 OMS POD (RB1M32)

ALPHAO(10) = 7.920 BETAO (9) = 8.110

SECTION (1)OMS POD DEPENDENT VARIABLE CP

TAP NO 165.0000166.0000167.0000168.0000

.000 -.2933 -.2999 -.3159 -.3428

ALPHAO(10) = 7.910 BETAO (10) = 8.160

SECTION (1)OMS POD DEPENDENT VARIABLE CP

TAP NO 165.0000166.0000167.0000168.0000

.000 -.2850 -.3071 -.2873 -.3200

ALPHAO(10) = 9.060 BETAO (11) = 10.160

SECTION (1)OMS POD DEPENDENT VARIABLE CP

TAP NO 165.0000166.0000167.0000168.0000

.000 -.2856 -.3161 -.2894 -.3043

ALPHAO(11) = 10.040 BETAO (1) = -9.930

SECTION (1)OMS POD DEPENDENT VARIABLE CP

TAP NO 165.0000166.0000167.0000168.0000

.000 -.2690 -.2946 -.2002 -.1332

ALPHAO(11) = 9.930 BETAO (2) = -7.950

SECTION (1)OMS POD DEPENDENT VARIABLE CP

TAP NO 165.0000166.0000167.0000168.0000

.000 -.2743 -.2939 -.1928 -.1330

ALPHAO(11) = 9.980 BETAO (3) = -5.920

SECTION (1)OMS POD DEPENDENT VARIABLE CP

TAP NO 165.0000166.0000167.0000168.0000

.000 -.2674 -.2865 -.1832 -.1515

ALPHAO(11) = 9.960 BETAO (4) = -3.970

SECTION (1)OMS POD DEPENDENT VARIABLE CP

TAP NO 165.0000166.0000167.0000168.0000

.000 -.2612 -.2882 -.1827 -.1389

ALPHAO(11) = 9.950 BETAO (5) = -1.970

SECTION (1)OMS POD DEPENDENT VARIABLE CP

TAP NO 165.0000166.0000167.0000168.0000

.000 -.2516 -.2728 -.1924 -.1495

ALPHAO(11) = 9.950 BETAO (6) = .030

SECTION (1)OMS POD DEPENDENT VARIABLE CP

TAP NO 165.0000166.0000167.0000168.0000

.000 -.2489 -.2713 -.2542 -.2967

ALPHAO(11) = 9.950 BETAO (7) = 2.060

SECTION (1)OMS POD DEPENDENT VARIABLE CP

TAP NO 165.0000166.0000167.0000168.0000

.000 -.2680 -.2846 -.2978 -.3305

ARC11-716 IA14 O1+T12+S12N25+AT10 OMS POD (RB1M32)

ALPHAO(11) = 9.980 BETAO (8) = 4.080

SECTION (1)OMS POD DEPENDENT VARIABLE CP

TAP NO 165.0000166.0000167.0000168.0000

.000 -.2969 -.2987 -.3328 -.3614

ALPHAO(11) = 10.040 BETAO (9) = 6.140

SECTION (1)OMS POD DEPENDENT VARIABLE CP

TAP NO 165.0000166.0000167.0000168.0000

.000 -.3032 -.3139 -.3323 -.3707

ALPHAO(11) = 10.030 BETAO (10) = 8.160

SECTION (1)OMS POD DEPENDENT VARIABLE CP

TAP NO 165.0000166.0000167.0000168.0000

.000 -.2887 -.3166 -.3023 -.3324

ALPHAO(11) = 10.070 BETAO (11) = 10.230

SECTION (1)OMS POD DEPENDENT VARIABLE CP

TAP NO 165.0000166.0000167.0000168.0000

.000 -.2816 -.3116 -.2887 -.2865

ARC11-716 IA14 O1+T12+S12N25+AT10 OMS POD (RB1M33) (17 APR 74)

REFERENCE DATA

SREF = 2.4210 SQ.FT. XMRP = 29.5800 INCHES
LREF = 38.7090 INCHES YMRP = .0000 INCHES
BREF = 38.7090 INCHES ZMRP = .0000 INCHES
SCALE = .0300 SCALE

PARAMETRIC DATA

MACH = 1.250 ELEVON = .000
RUDDER = .000 SPOBRK = .000

ALPHAO(1) = -10.340 BETAO (1) = -9.910

SECTION (1)OMS POD DEPENDENT VARIABLE CP

TAP NO 165.0000166.0000167.0000168.0000

.000 -.2540 -.2652 -.0094 .0920

ALPHAO(1) = -10.260 BETAO (2) = -7.920

SECTION (1)OMS POD DEPENDENT VARIABLE CP

TAP NO 165.0000166.0000167.0000168.0000

.000 -.2516 -.2704 -.0208 .0682

ALPHAO(1) = -10.250 BETAO (3) = -5.920

SECTION (1)OMS POD DEPENDENT VARIABLE CP

TAP NO 165.0000166.0000167.0000168.0000

.000 -.2456 -.2656 -.0470 .0273

ALPHAO(1) = -10.240 BETAO (4) = -3.960

SECTION (1)OMS POD DEPENDENT VARIABLE CP

TAP NO 165.0000166.0000167.0000168.0000

.000 -.2557 -.2732 -.0739 -.0120

ARC11-716 IA14 O1+T12+S12N25+AT10 OMS POD (RB1M33)

ALPHAO(1) = -10.250 BETAO (5) = -1.970

SECTION (1)OMS POD DEPENDENT VARIABLE CP

TAP NO 165.0000166.0000167.0000168.0000

.000 -.2478 -.2776 -.0986 -.0473

ALPHAO(1) = -10.160 BETAO (6) = .020

SECTION (1)OMS POD DEPENDENT VARIABLE CP

TAP NO 165.0000166.0000167.0000168.0000

.000 -.2524 -.2869 -.1256 -.0855

ALPHAO(1) = -10.160 BETAO (7) = 2.040

SECTION (1)OMS POD DEPENDENT VARIABLE CP

TAP NO 165.0000166.0000167.0000168.0000

.000 -.2634 -.2916 -.1461 -.1172

ALPHAO(1) = -10.220 BETAO (8) = 4.080

SECTION (1)OMS POD DEPENDENT VARIABLE CP

TAP NO 165.0000166.0000167.0000168.0000

.000 -.2569 -.2945 -.1434 -.1241

ALPHAO(1) = -10.230 BETAO (9) = 6.080

SECTION (1)OMS POD DEPENDENT VARIABLE CP

TAP NO 165.0000166.0000167.0000168.0000

.000 -.2536 -.2891 -.1786 -.2129

ORIGINAL PAGE IS OF POOR QUALITY

ARC11-716 IA14 O1+T12+S12N25+AT10 OMS POD (RB1H33)

ALPHAO(1) = -10.230 BETAO (10) = 8.120

SECTION (1)OMS POD DEPENDENT VARIABLE CP

TAP NO 165.0000166.0000167.0000168.0000

.000 -.2624 -.2911 -.2054 -.2437

ALPHAO(1) = -10.240 BETAO (11) = 10.110

SECTION (1)OMS POD DEPENDENT VARIABLE CP

TAP NO 165.0000166.0000167.0000168.0000

.000 -.2700 -.2841 -.2208 -.2737

ALPHAO(2) = -8.220 BETAO (1) = -9.940

SECTION (1)OMS POD DEPENDENT VARIABLE CP

TAP NO 165.0000166.0000167.0000168.0000

.000 -.2757 -.2804 -.0233 .0791

ALPHAO(2) = -8.240 BETAO (2) = -7.960

SECTION (1)OMS POD DEPENDENT VARIABLE CP

TAP NO 165.0000166.0000167.0000168.0000

.000 -.2418 -.2551 -.0383 .0497

ALPHAO(2) = -8.240 BETAO (3) = -5.960

SECTION (1)OMS POD DEPENDENT VARIABLE CP

TAP NO 165.0000166.0000167.0000168.0000

.000 -.2397 -.2517 -.0704 -.0006

ARC11-716 1A14 O1+T12+S12N25+AT10 OMS POD (RB1M33)

ALPHAO(2) = -8.250 BETAO (4) = -3.980

SECTION (1)OMS POD DEPENDENT VARIABLE CP

TAP NO 165.0000166.0000167.0000168.0000

.000 -.2380 -.2539 -.0931 -.0301

ALPHAO(2) = -8.250 BETAO (5) = -1.990

SECTION (1)OMS POD DEPENDENT VARIABLE CP

TAP NO 165.0000166.0000167.0000168.0000

.000 -.2329 -.2619 -.1114 -.0589

ALPHAO(2) = -8.250 BETAO (6) = .010

SECTION (1)OMS POD DEPENDENT VARIABLE CP

TAP NO 165.0000166.0000167.0000168.0000

.000 -.2381 -.2665 -.1362 -.0957

ALPHAO(2) = -8.230 BETAO (7) = 2.020

SECTION (1)OMS POD DEPENDENT VARIABLE CP

TAP NO 165.0000165.0000167.0000168.0000

.000 -.2525 -.2613 -.1612 -.1287

ALPHAO(2) = -8.230 BETAO (8) = 4.040

SECTION (1)OMS POD DEPENDENT VARIABLE CP

TAP NO 165.0000166.0000167.0000168.0000

.000 -.2397 -.2702 -.1754 -.1997

ARC11-716 IA14 O1+T12+S12N25+AT10 OMS POD (RB1W33)

ALPHAO(2) = -8.220 BETAO (9) = 6.050

SECTION (1)OMS POD DEPENDENT VARIABLE CP

TAP NO 165.0000166.0000167.0000168.0000

.000 -.2569 -.2694 -.1858 -.1944

ALPHAO(2) = -8.220 BETAO (10) = 8.100

SECTION (1)OMS POD DEPENDENT VARIABLE CP

TAP NO 165.0000166.0000167.0000168.0000

.000 -.2686 -.2754 -.2161 -.2339

ALPHAO(2) = -8.220 BETAO (11) = 10.130

SECTION (1)OMS POD DEPENDENT VARIABLE CP

TAP NO 165.0000166.0000167.0000168.0000

.000 -.2683 -.2756 -.2032 -.2331

ALPHAO(3) = -6.280 BETAO (1) = -9.970

SECTION (1)OMS POD DEPENDENT VARIABLE CP

TAP NO 165.0000166.0000167.0000168.0000

.000 -.2661 -.2731 -.0506 .0412

ALPHAO(3) = -6.280 BETAO (2) = -7.990

SECTION (1)OMS POD DEPENDENT VARIABLE CP

TAP NO 165.0000166.0000167.0000168.0000

.000 -.2677 -.2725 -.0688 .0183

DATE 10 DEC 74 TABULATED PRESSURE DATA - IA14A - VOL. 4 (RB1M33)

ARC11-716 IA14 O1+T12+S12N25+AT10 OMS POD

ALPHAO(3) = -6.300 BETAO (3) = -6.000

SECTION (1)OMS POD DEPENDENT VARIABLE CP

TAP NO 165.0000166.0000167.0000168.0000

.000 -.2745 -.2789 -.0885 -.0142

ALPHAO(3) = -6.280 BETAO (4) = -3.980

SECTION (1)OMS POD DEPENDENT VARIABLE CP

TAP NO 165.0000166.0000167.0000168.0000

.000 -.2291 -.2586 -.1065 -.0449

ALPHAO(3) = -6.160 BETAO (5) = .030

SECTION (1)OMS POD DEPENDENT VARIABLE CP

TAP NO 165.0000166.0000167.0000168.0000

.000 -.2287 -.2570 -.1498 -.1152

ALPHAO(3) = -6.320 BETAO (6) = 2.000

SECTION (1)OMS POD DEPENDENT VARIABLE CP

TAP NO 165.0000166.0000167.0000168.0000

.000 -.2412 -.2711 -.1766 -.1477

ALPHAO(3) = -6.330 BETAO (7) = 4.070

SECTION (1)OMS POD DEPENDENT VARIABLE CP

TAP NO 165.0000166.0000167.0000168.0000

.000 -.2304 -.2806 -.1750 -.1482

ALPHAO(3) = -6.380 BETAO (8) = 6.050

SECTION (1)OMS POD DEPENDENT VARIABLE CP

TAP NO 165.0000166.0000167.0000168.0000

.000 -.2518 -.2602 -.2068 -.1947

ALPHAO(3) = -6.270 BETAO (9) = 8.100

SECTION (1)OMS POD DEPENDENT VARIABLE CP

TAP NO 165.0000166.0000167.0000168.0000

.000 .2624 -.2642 -.2333 -.2474

ALPHAO(3) = -6.260 BETAO (10) = 10.000

SECTION (1)OMS POD DEPENDENT VARIABLE CP

TAP NO 165.0000166.0000167.0000168.0000

.000 -.2587 -.2729 -.2450 -.2959

ALPHAO(4) = -4.200 BETAO (1) = -9.980

SECTION (1)OMS POD DEPENDENT VARIABLE CP

TAP NO 165.0000166.0000167.0000168.0000

.000 -.2671 -.2759 -.0813 .0150

ALPHAO(4) = -4.230 BETAO (2) = -7.990

SECTION (1)OMS POD DEPENDENT VARIABLE CP

TAP NO 165.0000166.0000167.0000168.0000

.000 -.2666 -.2698 -.0882 -.0042

ARC11-716 IA14 01+T12+S12N25+AT10 OMS POD (RB1M33)

ALPHAO(4) = -4.180 BETAO (3) = -5.970

SECTION (1)OMS POD DEPENDENT VARIABLE CP

TAP NO 165.0000166.0000167.0000168.0000

.000 -.2652 -.2698 -.1053 -.0571

ALPHAO(4) = -4.170 BETAO (4) = -3.950

SECTION (1)OMS POD DEPENDENT VARIABLE CP

TAP NO 165.0000166.0000167.0000168.0000

.000 -.2223 -.2359 -.1255 -.0728

ALPHAO(4) = -4.150 BETAO (5) = -2.020

SECTION (1)OMS POD DEPENDENT VARIABLE CP

TAP NO 165.0000166.0000167.0000168.0000

.000 -.2188 -.2382 -.1453 -.1051

ALPHAO(4) = -4.080 BETAO (6) = -.010

SECTION (1)OMS POD DEPENDENT VARIABLE CP

TAP NO 165.0000166.0000167.0000168.0000

.000 -.2215 -.2433 -.1611 -.1332

ALPHAO(4) = -4.210 BETAO (7) = 2.110

SECTION (1)OMS POD DEPENDENT VARIABLE CP

TAP NO 165.0000166.0000167.0000168.0000

.000 -.2287 -.2479 -.1852 -.1649

ARC11-716 IA14 O1+T12+S12N25+AT10 OMS POD (RB1M33)

ALPHAO(4) = -4.200 BETAO (8) = 4.090

SECTION (1)OMS POD DEPENDENT VARIABLE CP

TAP NO 165.0000166.0000167.0000168.0000

.000 -.2248 -.2520 -.1824 -.1515

ALPHAO(4) = -4.210 BETAO (9) = 6.060

SECTION (1)OMS POD DEPENDENT VARIABLE CP

TAP NO 165.0000166.0000167.0000168.0000

.000 -.2257 -.2470 -.2167 -.2042

ALPHAO(4) = -4.200 BETAO (10) = 8.080

SECTION (1)OMS POD DEPENDENT VARIABLE CP

TAP NO 165.0000166.0000167.0000168.0000

.000 -.2370 -.2578 -.2399 -.2636

ALPHAO(4) = -4.160 BETAO (11) = 10.090

SECTION (1)OMS POD DEPENDENT VARIABLE CP

TAP NO 165.0000166.0000167.0000168.0000

.000 -.2622 -.2622 -.2457 -.2699

ALPHAO(5) = -2.870 BETAO (1) = -10.040

SECTION (1)OMS POD DEPENDENT VARIABLE CP

TAP NO 165.0000166.0000167.0000168.0000

.000 -.2634 -.2685 -.0916 .0028

ORIGINAL PAGE IS
OF POOR QUALITY

ALPHAO(5) = -2.870 BETAO (2) = -8.030

SECTION (1)OMS POD DEPENDENT VARIABLE CP

TAP NO 165.0000166.0000167.0000168.0000

.000 -.2591 -.2636 -.0975 -.0219

ALPHAO(5) = -2.970 BETAO (3) = -5.960

SECTION (1)OMS POD DEPENDENT VARIABLE CP

TAP NO 165.0000166.0000167.0000168.0000

.000 -.2616 -.2653 -.1124 -.0591

ALPHAO(5) = -2.860 BETAO (4) = -3.920

SECTION (1)OMS POD DEPENDENT VARIABLE CP

TAP NO 165.0000166.0000167.0000168.0000

.000 -.2146 -.2282 -.1304 -.0934

ALPHAO(5) = -2.860 BETAO (5) = -2.000

SECTION (1)OMS POD DEPENDENT VARIABLE CP

TAP NO 165.0000166.0000167.0000168.0000

.000 -.2112 -.2284 -.1504 -.1231

ALPHAO(5) = -2.850 BETAO (6) = .020

SECTION (1)OMS POD DEPENDENT VARIABLE CP

TAP NO 165.0000166.0000167.0000168.0000

.000 -.2171 -.2384 -.1709 -.1494

ALPHAO(5) = -2.650 BETAO (7) = 2.020

SECTION (1)OMS POD DEPENDENT VARIABLE CP

TAP NO 165.0000166.0000167.0000168.0000

.000 -.2244 -.2422 -.1932 -.1764

ALPHAO(5) = -2.770 BETAO (8) = 4.100

SECTION (1)OMS POD DEPENDENT VARIABLE CP

TAP NO 165.0000166.0000167.0000168.0000

.000 -.2506 -.2541 -.1971 -.1615

ALPHAO(5) = -2.790 BETAO (9) = 6.120

SECTION (1)OMS POD DEPENDENT VARIABLE CP

TAP NO 165.0000166.0000167.0000168.0000

.000 -.2520 -.2576 -.2358 -.2204

ALPHAO(5) = -2.790 BETAO (10) = 8.140

SECTION (1)OMS POD DEPENDENT VARIABLE CP

TAP NO 165.0000166.0000167.0000168.0000

.000 -.2589 -.2610 -.2446 -.2032

ALPHAO(5) = -2.770 BETAO (11) = 10.100

SECTION (1)OMS POD DEPENDENT VARIABLE CP

TAP NO 165.0000166.0000167.0000168.0000

.000 -.2611 -.2611 -.2452 -.2723

ARC11-716 IA14 O1+T12+S12N25+AT10 OMS POD (R81M33)

ALPHAO(6) = -.780 BETAO (1) = -10.520

SECTION (1)OMS POD DEPENDENT VARIABLE CP

TAP NO 165.0000166.0000167.0000168.0000

.000 -.2225 -.2464 -.1061 -.0292

ALPHAO(6) = -.730 BETAO (2) = -8.420

SECTION (1)OMS POD DEPENDENT VARIABLE CP

TAP NO 165.0000166.0000167.0000168.0000

.000 -.2551 -.2591 -.1166 -.0543

ALPHAO(6) = -.730 BETAO (3) = -6.290

SECTION (1)OMS POD DEPENDENT VARIABLE CP

TAP NO 165.0000166.0000167.0000168.0000

.000 -.2330 -.2439 -.1259 -.0968

ALPHAO(6) = -.710 BETAO (4) = -4.140

SECTION (1)OMS POD DEPENDENT VARIABLE CP

TAP NO 165.0000166.0000167.0000168.0000

.000 -.2437 -.2461 -.1486 -.1233

ALPHAO(6) = -.700 BETAO (5) = -2.080

SECTION (1)OMS POD DEPENDENT VARIABLE CP

TAP NO 165.0000166.0000167.0000168.0000

.000 -.2493 -.2583 -.1703 -.1450

ALPHAO(6) = -.700 BETAO (6) = .030

SECTION (1)OMS POD DEPENDENT VARIABLE CP

TAP NO 165.0000166.0000167.0000168.0000

.000 -.2065 -.2257 -.1769 -.1759

ALPHAO(6) = -.700 BETAO (7) = 2.160

SECTION (1)OMS POD DEPENDENT VARIABLE CP

TAP NO 165.0000166.0000167.0000168.0000

.000 -.2169 -.2336 -.2109 -.2026

ALPHAO(6) = -.710 BETAO (8) = 4.270

SECTION (1)OMS POD DEPENDENT VARIABLE CP

TAP NO 165.0000166.0000167.0000168.0000

.000 -.2174 -.2337 -.2158 -.2016

ALPHAO(6) = -.730 BETAO (9) = 6.350

SECTION (1)OMS POD DEPENDENT VARIABLE CP

TAP NO 165.0000166.0000167.0000168.0000

.000 -.2245 -.2409 -.2279 -.2332

ALPHAO(6) = -.730 BETAO (10) = 8.130

SECTION (1)OMS POD DEPENDENT VARIABLE CP

TAP NO 165.0000166.0000167.0000168.0000

.000 -.2349 -.2499 -.2320 -.2428

ARC11-716 IA14 O1+T12+S12N25+AT10 OMS POD (RB1M33)

ALPHAO(6) = -.750 BETAO (11) = 10.110

SECTION (1)OMS POD DEPENDENT VARIABLE CP

TAP NO 165.0000166.0000167.0000168.0000

.000 -.2573 -.2576 -.2417 -.2908

ALPHAO(7) = 2.010 BETAO (1) = -10.080

SECTION (1)OMS POD DEPENDENT VARIABLE CP

TAP NO 165.0000166.0000167.0000168.0000

.000 -.2213 -.2392 -.1305 -.0918

ALPHAO(7) = 2.000 BETAO (2) = -8.040

SECTION (1)OMS POD DEPENDENT VARIABLE CP

TAP NO 165.0000166.0000167.0000168.0000

.000 -.2208 -.2334 -.1349 -.0999

ALPHAO(7) = 2.050 BETAO (3) = -6.040

SECTION (1)OMS POD DEPENDENT VARIABLE CP

TAP NO 165.0000166.0000167.0000168.0000

.000 -.2213 -.2337 -.1461 -.1271

ALPHAO(7) = 1.920 BETAO (4) = -3.990

SECTION (1)OMS POD DEPENDENT VARIABLE CP

TAP NO 165.0000166.0000167.0000168.0000

.000 -.2088 -.2172 -.1553 -.1511

ORIGINAL PAGE IS OF POOR QUALITY

ARC11-716 IA14 O1+T12+S12N25+AT10 OMS POD (RB1M33)

ALPHAO(7) = 1.920 BETAO (5) = -2.020

SECTION (1)OMS POD DEPENDENT VARIABLE CP

TAP NO 165.0000166.0000167.0000168.0000

.000 -.1994 -.2152 -.1650 -.1689

ALPHAO(7) = 1.920 BETAO (6) = .010

SECTION (1)OMS POD DEPENDENT VARIABLE CP

TAP NO 165.0000166.0000167.0000168.0000

.000 -.1989 -.2130 -.1923 -.1987

ALPHAO(7) = 1.920 BETAO (7) = 2.050

SECTION (1)OMS POD DEPENDENT VARIABLE CP

TAP NO 165.0000166.0000167.0000168.0000

.000 -.2072 -.2177 -.2138 -.2227

ALPHAO(7) = 1.900 BETAO (8) = 4.080

SECTION (1)OMS POD DEPENDENT VARIABLE CP

TAP NO 165.0000166.0000167.0000168.0000

.000 -.2163 -.2258 -.2137 -.2163

ALPHAO(7) = 2.040 BETAO (9) = 6.080

SECTION (1)OMS POD DEPENDENT VARIABLE CP

TAP NO 165.0000166.0000167.0000168.0000

.000 -.2240 -.2392 -.2245 -.2440

ARC11-716 IA14 O1+T12+S12N25+AT10 OMS POD (RB1H33)

ALPHAO(7) = 2.030 BETAO (10) = 8.110

SECTION (1)OMS POD DEPENDENT VARIABLE CP

TAP NO 165.0000166.0000167.0000168.0000

.000 -.2281 -.2410 -.2334 -.2466

ALPHAO(7) = 2.350 BETAO (11) = 10.150

SECTION (1)OMS POD DEPENDENT VARIABLE CP

TAP NO 165.0000166.0000167.0000168.0000

.000 -.2363 -.2592 -.2595 -.2690

ALPHAO(8) = 4.300 BETAO (1) = -9.980

SECTION (1)OMS POD DEPENDENT VARIABLE CP

TAP NO 165.0000166.0000167.0000168.0000

.000 -.2243 -.2364 -.1461 -.1366

ALPHAO(8) = 4.200 BETAO (2) = -8.090

SECTION (1)OMS POD DEPENDENT VARIABLE CP

TAP NO 165.0000166.0000167.0000168.0000

.000 -.2219 -.2339 -.1538 -.1441

ALPHAO(8) = 4.200 BETAO (3) = -5.990

SECTION (1)OMS POD DEPENDENT VARIABLE CP

TAP NO 165.0000166.0000167.0000168.0000

.000 -.2150 -.2286 -.1634 -.1566

ORIGINAL PAGE IS OF POOR QUALITY

ARC11-716 IA14 O1+T12+S12N25+AT10 OMS POD (RB1H33)

ALPHAO(8) = 4.200 BETAO (4) = -3.970

SECTION (1)OMS POD DEPENDENT VARIABLE CP

TAP NO 165.0000166.0000167.0000168.0000

.000 -.2026 -.2128 -.1741 -.1756

ALPHAO(8) = 4.220 BETAO (5) = -2.000

SECTION (1)OMS POD DEPENDENT VARIABLE CP

TAP NO 165.0000166.0000167.0000168.0000

.000 -.2055 -.2147 -.1895 -.1919

ALPHAO(8) = 4.240 BETAO (6) = -.070

SECTION (1)OMS POD DEPENDENT VARIABLE CP

TAP NO 165.0000166.0000167.0000168.0000

.000 -.1958 -.2092 -.2052 -.2115

ALPHAO(8) = 4.220 BETAO (7) = 1.990

SECTION (1)OMS POD DEPENDENT VARIABLE CP

TAP NO 165.0000166.0000167.0000168.0000

.000 -.2045 -.2146 -.2222 -.2295

ALPHAO(8) = 4.430 BETAO (8) = 4.100

SECTION (1)OMS POD DEPENDENT VARIABLE CP

TAP NO 165.0000166.0000167.0000168.0000

.000 -.2275 -.2277 -.2356 -.2351

ARC11-Y16 IA14 01+T12+S12N25+AT10 OHS POD (RB1M33)

ALPHAO(8) = 4.410 BETAO (9) = 6.060

SECTION (1)OHS POD DEPENDENT VARIABLE CP

TAP NO 165.0000166.0000167.0000168.0000

.000 -.2409 -.2454 -.2514 -.2685

ALPHAO(8) = 4.410 BETAO (10) = 8.150

SECTION (1)OHS POD DEPENDENT VARIABLE CP

TAP NO 165.0000166.0000167.0000168.0000

.000 -.2407 -.2538 -.2604 -.2759

ALPHAO(8) = 4.390 BETAO (11) = 10.140

SECTION (1)OHS POD DEPENDENT VARIABLE CP

TAP NO 165.0000166.0000167.0000168.0000

.000 -.2455 -.2601 -.2806 -.2687

ALPHAO(9) = 6.340 BETAO (1) = -9.960

SECTION (1)OHS POD DEPENDENT VARIABLE CP

TAP NO 165.0000166.0000167.0000168.0000

.000 -.2290 -.2403 -.1740 -.1476

ALPHAO(9) = 6.380 BETAO (2) = -7.970

SECTION (1)OHS POD DEPENDENT VARIABLE CP

TAP NO 165.0000166.0000167.0000168.0000

.000 -.2299 -.2390 -.1880 -.1992

ARC11-716 IA14 O1+T12+S12N25+AT10 OMS POD (RB1H33)

ALPHAO(9) = 5.980 BETAO (3) = -6.000

SECTION (1)OMS POD DEPENDENT VARIABLE CP

TAP NO 165.0000166.0000167.0000168.0000

.000 -.2224 -.2289 -.1884 -.1874

ALPHAO(9) = 5.990 BETAO (4) = -4.010

SECTION (1)OMS POD DEPENDENT VARIABLE CP

TAP NO 165.0000166.0000167.0000168.0000

.000 -.2046 -.2183 -.1895 -.1895

ALPHAO(9) = 6.010 BETAO (5) = -2.060

SECTION (1)OMS POD DEPENDENT VARIABLE CP

TAP NO 165.0000166.0000167.0000168.0000

.000 -.2072 -.2221 -.2098 -.2056

ALPHAO(9) = 6.020 BETAO (6) = .050

SECTION (1)OMS POD DEPENDENT VARIABLE CP

TAP NO 165.0000166.0000167.0000168.0000

.000 -.2072 -.2138 -.2185 -.2224

ALPHAO(9) = 6.010 BETAO (7) = 2.060

SECTION (1)OMS POD DEPENDENT VARIABLE CP

TAP NO 165.0000166.0000167.0000168.0000

.000 -.2065 -.2220 -.2327 -.2393

ARC11-718 IA14 O1+T12+S12N25+AT10 OHS PCD (RB1H33)

ALPHAO(8) = 5.990 BETAO (8) = 4.060

SECTION (1)OHS PCD DEPENDENT VARIABLE CP

TAP NO 165.0000166.0000167.0000168.0000

.000 -.2303 -.2308 -.2478 -.2491

ALPHAO(9) = 5.980 BETAO (9) = 6.090

SECTION (1)OHS PCD DEPENDENT VARIABLE CP

TAP NO 165.0000166.0000167.0000168.0000

.000 -.2396 -.2472 -.2664 -.2654

ALPHAO(9) = 5.970 BETAO (10) = 8.100

SECTION (1)OHS PCD DEPENDENT VARIABLE CP

TAP NO 165.0000166.0000167.0000168.0000

.000 -.2435 -.2587 -.2671 -.2959

ALPHAO(9) = 5.950 BETAO (11) = 10.160

SECTION (1)OHS PCD DEPENDENT VARIABLE CP

TAP NO 165.0000166.0000167.0000168.0000

.000 -.2422 -.2639 -.2773 -.2883

ALPHAO(10) = 7.910 BETAO (1) = -10.050

SECTION (1)OHS PCD DEPENDENT VARIABLE CP

TAP NO 165.0000166.0000167.0000168.0000

.000 -.2387 -.2457 -.1781 -.1588

ARC11-716 IA14 O1+T12+S12N25+AT10 OMS POD (RB1M33)

ALPHAO(10) = 7.830 BETAO (2) = -8.030

SECTION (1)OMS POD DEPENDENT VARIABLE CP

TAP NO 165.0000166.0000167.0000168.0000

.000 -.2363 -.2436 -.1932 -.1846

ALPHAO(10) = 7.810 BETAO (3) = -5.970

SECTION (1)OMS POD DEPENDENT VARIABLE CP

TAP NO 165.0000166.0000167.0000168.0000

.000 -.2339 -.2417 -.2153 -.1848

ALPHAO(10) = 7.830 BETAO (4) = -4.000

SECTION (1)OMS POD DEPENDENT VARIABLE CP

TAP NO 165.0000166.0000167.0000168.0000

.000 -.2166 -.2316 -.2155 -.1943

ALPHAO(10) = 7.830 BETAO (5) = -2.030

SECTION (1)OMS POD DEPENDENT VARIABLE CP

TAP NO 165.0000166.0000167.0000168.0000

.000 -.2157 -.2274 -.2194 -.2217

ALPHAO(10) = 7.840 BETAO (6) = .040

SECTION (1)OMS POD DEPENDENT VARIABLE CP

TAP NO 165.0000166.0000167.0000168.0000

.000 -.2142 -.2217 -.2332 -.2345

DATE :0 DEC 74 TABULATED PRESSURE DATA - IA14A - VOL. 4

ARC11-716 IA14 O1+T12+S12N25+AT10 OMS POD (RB1M33)

ALPHAO(10) = 7.830 BETAO (7) = 2.040

SECTION (1)OMS POD DEPENDENT VARIABLE CP

TAP NO 165.0000166.0000167.0000168.0000

.000 -.2112 -.2264 -.2395 -.2442

ALPHAO(10) = 7.870 BETAO (8) = 4.080

SECTION (1)OMS POD DEPENDENT VARIABLE CP

TAP NO 165.0000166.0000167.0000168.0000

.000 -.2382 -.2395 -.2623 -.2694

ALPHAO(10) = 7.970 BETAO (9) = 6.160

SECTION (1)OMS POD DEPENDENT VARIABLE CP

TAP NO 165.0000166.0000167.0000168.0000

.000 -.2510 -.2599 -.2627 -.3005

ALPHAO(10) = 7.960 BETAO (10) = 8.110

SECTION (1)OMS POD DEPENDENT VARIABLE CP

TAP NO 165.0000166.0000167.0000168.0000

.000 -.2497 -.2719 -.2850 -.3175

ALPHAO(10) = 7.960 BETAO (11) = 10.250

SECTION (1)OMS POD DEPENDENT VARIABLE CP

TAP NO 165.0000166.0000167.0000168.0000

.000 -.2464 -.2752 -.2702 -.2779

ALPHAO(11) = 9.890 BETAO (1) = -9.960

SECTION (1)OMS POD DEPENDENT VARIABLE CP

TAP NO 165.0000166.0000167.0000168.0000

.000 -.2135 -.2595 -.2058 -.1849

ALPHAO(11) = 9.930 BETAO (2) = -7.920

SECTION (1)OMS POD DEPENDENT VARIABLE CP

TAP NO 165.0000166.0000167.0000168.0000

.000 -.2471 -.2505 -.2068 -.2161

ALPHAO(11) = 9.940 BETAO (3) = -6.010

SECTION (1)OMS POD DEPENDENT VARIABLE CP

TAP NO 165.0000166.0000167.0000168.0000

.000 -.2428 -.2464 -.2240 -.2167

ALPHAO(11) = 9.890 BETAO (4) = -3.990

SECTION (1)OMS POD DEPENDENT VARIABLE CP

TAP NO 165.0000166.0000167.0000168.0000

.000 -.2255 -.2383 -.2414 -.2076

ALPHAO(11) = 9.900 BETAO (5) = -1.980

SECTION (1)OMS POD DEPENDENT VARIABLE CP

TAP NO 165.0000166.0000167.0000168.0000

.000 -.2179 -.2291 -.2385 -.2263

ARC11-716 IA14 O1+T12+S12N25+AT10 OMS POD (RB1M33)

ALPHAO(11) = 9.910 BETAO (6) = .020

SECTION (1)OMS POD DEPENDENT VARIABLE CP

TAP NO 165.0000166.0000167.0000168.0000

.000 -.2206 -.2253 -.2365 -.2475

ALPHAO(11) = 9.900 BETAO (7) = 2.040

SECTION (1)OMS POD DEPENDENT VARIABLE CP

TAP NO 165.0000166.0000167.0000168.0000

.000 -.2158 -.2296 -.2453 -.2562

ALPHAO(11) = 9.900 BETAO (8) = 4.130

SECTION (1)OMS POD DEPENDENT VARIABLE CP

TAP NO 165.0000166.0000167.0000168.0000

.000 -.2426 -.2455 -.2716 -.2841

ALPHAO(11) = 9.880 BETAO (9) = 6.100

SECTION (1)OMS POD DEPENDENT VARIABLE CP

TAP NO 165.0000166.0000167.0000168.0000

.000 -.2552 -.2620 -.2789 -.3172

ALPHAO(11) = 9.870 BETAO (10) = 8.110

SECTION (1)OMS POD DEPENDENT VARIABLE CP

TAP NO 165.0000166.0000167.0000168.0000

.000 -.2511 -.2704 -.2850 -.3278

ARC11-716 IA14 O1+T12+S12N25+AT10 OMS POD (RB1M33)

ALPHAO(11) = 10.000 BETAO (11) = 10.190

SECTION (1)OMS POD DEPENDENT VARIABLE CP

TAP NO 165.0000166.0000167.0000168.0000

.000 -.2480 -.2772 -.2712 -.2873

ARC11-718 IA14 O1+T12+S12N25+AT11 OMS POD (RB1M34) (15 FEB 74)

REFERENCE DATA

SREF = 2.4210 SQ.FT. XMRP = 29.5800 INCHES
LREF = 38.7090 INCHES YMRP = .0000 INCHES
BREF = 38.7090 INCHES ZMRP = .0000 INCHES
SCALE = .0300 SCALE

PARAMETRIC DATA

MACH = .600 ELEVON = .000
RUDDER = .000 SPDBRK = .000

ALPHAO(1) = -8.010 BETAO (1) = -7.980

SECTION (1)OMS POD DEPENDENT VARIABLE CP

TAP NO 165.0000166.0000167.0000168.0000

.000 -.2405 -.2466 -.2235 -.1557

ALPHAO(1) = -7.990 BETAO (2) = -3.980

SECTION (1)OMS POD DEPENDENT VARIABLE CP

TAP NO 165.0000166.0000167.0000168.0000

.000 -.2442 -.2711 -.2326 -.1843

ALPHAO(1) = -7.990 BETAO (3) = .030

SECTION (1)OMS POD DEPENDENT VARIABLE CP

TAP NO 165.0000166.0000167.0000168.0000

.000 -.2044 -.2002 -.1931 -.1802

ALPHAO(1) = -8.000 BETAO (4) = 4.090

SECTION (1)OMS POD DEPENDENT VARIABLE CP

TAP NO 165.0000166.0000167.0000168.0000

.000 -.2264 -.2332 -.2308 -.2248

ARC11-716 1A14 O1+T12+S12N25+AT11 OMS POD (RB1H34)

ALPHAO(1) = -8.020 BETAO (5) = 8.130

SECTION (1)OMS POD DEPENDENT VARIABLE CP

TAP NO 165.0000166.0000167.0000168.0000

.000 -.2341 -.2275 -.2442 -.2237

ALPHAO(2) = -4.050 BETAO (1) = -8.030

SECTION (1)OMS POD DEPENDENT VARIABLE CP

TAP NO 165.0000166.0000167.0000168.0000

.000 -.2432 -.2654 -.2200 -.1578

ALPHAO(2) = -4.050 BETAO (2) = -4.000

SECTION (1)OMS POD DEPENDENT VARIABLE CP

TAP NO 165.0000166.0000167.0000168.0000

.000 -.2442 -.2603 -.2334 -.1844

ALPHAO(2) = -4.050 BETAO (3) = .040

SECTION (1)OMS POD DEPENDENT VARIABLE CP

TAP NO 165.0000166.0000167.0000168.0000

.000 -.1903 -.2020 -.1807 -.1649

ALPHAO(2) = -4.060 BETAO (4) = 4.070

SECTION (1)OMS POD DEPENDENT VARIABLE CP

TAP NO 165.0000166.0000167.0000168.0000

.000 -.2251 -.2227 -.2262 -.2161

ORIGINAL PAGE IS OF POOR QUALITY

DATE 10 DEC 74 TABULATED PRESSURE DATA - IA14A - VOL. 4

ARC11-716 IA14 O1+T12+S12:25+AT11 OMS PCD (RB1H34)

ALPHAO(2) = -4.080 BETAO (5) = 8.090

SECTION (1)OMS PCD DEPENDENT VARIABLE CP

TAP NO 165.0000166.0000167.0000168.0000

.000 -.2324 -.2282 -.2168 -.2231

ALPHAO(3) = -.310 BETAO (1) = -8.030

SECTION (1)OMS PCD DEPENDENT VARIABLE CP

TAP NO 165.0000166.0000167.0000168.0000

.000 -.2261 -.2424 -.2115 -.1524

ALPHAO(3) = -.320 BETAO (2) = -4.010

SECTION (1)OMS PCD DEPENDENT VARIABLE CP

TAP NO 165.0000166.0000167.0000168.0000

.000 -.2278 -.2634 -.2209 -.1742

ALPHAO(3) = -.320 BETAO (3) = .030

SECTION (1)OMS PCD DEPENDENT VARIABLE CP

TAP NO 165.0000166.0000167.0000168.0000

.000 -.1918 -.1856 -.1921 -.1575

ALPHAO(3) = -.320 BETAO (4) = 4.080

SECTION (1)OMS PCD DEPENDENT VARIABLE CP

TAP NO 165.0000166.0000167.0000168.0000

.000 -.2228 -.2174 -.2237 -.2075

ALPHAO(3) = -.320 BETAO (5) = 8.110

SECTION (1)OMS PCO DEPENDENT VARIABLE CP

TAP NO 165.0000166.0000167.0000168.0000

.000 -.2275 -.2239 -.2236 -.2248

ALPHAO(4) = 4.000 BETAO (1) = -8.050

SECTION (1)OMS PCO DEPENDENT VARIABLE CP

TAP NO 165.0000166.0000167.0000168.0000

.000 -.2198 -.2312 -.2009 -.1477

ALPHAO(4) = 4.000 BETAO (2) = -3.980

SECTION (1)OMS PCO DEPENDENT VARIABLE CP

TAP NO 165.0000166.0000167.0000168.0000

.000 -.2107 -.2278 -.2078 -.1662

ALPHAO(4) = 4.000 BETAO (3) = .030

SECTION (1)OMS PCO DEPENDENT VARIABLE CP

TAP NO 165.0000166.0000167.0000168.0000

.000 -.2083 -.2191 -.2095 -.1717

ALPHAO(4) = 3.990 BETAO (4) = 4.080

SECTION (1)OMS PCO DEPENDENT VARIABLE CP

TAP NO 165.0000166.0000167.0000168.0000

.000 -.2042 -.2063 -.2146 -.1874

ARC11-716 IA14 O1+T12+S12N25+AT11 OMS POD (RB1H34)

ALPHAO(4) = 3.980 BETAO (5) = 8.140

SECTION (1)OMS POD DEPENDENT VARIABLE CP

TAP NO 165.0000166.0000167.0000168.0000

.000 -.2091 -.2145 -.1980 -.2010

ALPHAO(5) = 7.890 BETAO (1) = -8.010

SECTION (1)OMS POD DEPENDENT VARIABLE CP

TAP NO 165.0000166.0000167.0000168.0000

.000 -.2116 -.2263 -.1898 -.1441

ALPHAO(5) = 7.900 BETAO (2) = -4.010

SECTION (1)OMS POD DEPENDENT VARIABLE CP

TAP NO 165.0000166.0000167.0000168.0000

.000 -.2016 -.2105 -.1936 -.1530

ALPHAO(5) = 7.910 BETAO (3) = .040

SECTION (1)OMS POD DEPENDENT VARIABLE CP

TAP NO 165.0000166.0000167.0000168.0000

.000 -.1948 -.2193 -.1676 -.1440

ALPHAO(5) = 7.900 BETAO (4) = 4.100

SECTION (1)OMS POD DEPENDENT VARIABLE CP

TAP NO 165.0000168.0000167.0000168.0000

.000 -.1997 -.1955 -.2095 -.1775

ARC11-716 IA14 O1+T12+S12N25+AT11 OMS POD (RB1M34)

ALPHAO(5) = 7.880 BETAO (5) = 8.170

SECTION (1)OMS POD DEPENDENT VARIABLE CP

TAP NO 165.0000166.0000167.0000168.0000

.000 -.2075 -.2190 -.2154 -.2030

ORIGINAL PAGE IS
OF POOR QUALITY

ARC11-716 1A14 01+T12+S12N25+AT11 OMS POD (RB1M35) (15 FEB 74)

REFERENCE DATA

SREF = 2.4210 SQ.FT. XMRP = 29.5800 INCHES
LREF = 38.7090 INCHES YMRP = .0000 INCHES
BREF = 38.7090 INCHES ZMRP = .0000 INCHES
SCALE = .0300 SCALE

PARAMETRIC DATA

MACH = .750 ELEVON = .000
RUDDER = .000 SPDBRK = .000

ALPHAO(1) = -8.050 BETAO (1) = -8.000

SECTION (1)OMS POD DEPENDENT VARIABLE CP

TAP NO 165.0000166.0000167.0000168.0000

.000 -.2537 -.2684 -.2301 -.1675

ALPHAO(1) = -8.040 BETAO (2) = -3.990

SECTION (1)OMS POD DEPENDENT VARIABLE CP

TAP NO 165.0000166.0000167.0000168.0000

.000 -.2549 -.2727 -.2416 -.1973

ALPHAO(1) = -8.040 BETAO (3) = .040

SECTION (1)OMS POD DEPENDENT VARIABLE CP

TAP NO 165.0000166.0000167.0000168.0000

.000 -.2607 -.2726 -.2525 -.2304

ALPHAO(1) = -8.050 BETAO (4) = 4.080

SECTION (1)OMS POD DEPENDENT VARIABLE CP

TAP NO 165.0000166.0000167.0000168.0000

.000 -.2535 -.2591 -.2421 -.2503

ARC11-716 IA14 O1+T12+S12N25+AT11 OMS POD (R51M35)

ALPHAO(1) = -8.080 BETAO (5) = 8.150

SECTION (1)OMS POD DEPENDENT VARIABLE CP

TAP NO 165.0000166.0000167.0000168.0000

.000 -.2452 -.2550 -.2412 -.2587

ALPHAO(2) = -4.070 BETAO (1) = -8.040

SECTION (1)OMS POD DEPENDENT VARIABLE CP

TAP NO 165.0000166.0000167.0000168.0000

.000 -.2614 -.2646 -.2281 -.1663

ALPHAO(2) = -4.050 BETAO (2) = -4.000

SECTION (1)OMS POD DEPENDENT VARIABLE CP

TAP NO 165.0000166.0000167.0000168.0000

.000 -.2488 -.2615 -.2363 -.1886

ALPHAO(2) = -4.080 BETAO (3) = .040

SECTION (1)OMS POD DEPENDENT VARIABLE CP

TAP NO 165.0000166.0000167.0000168.0000

.000 -.2119 -.2223 -.2191 -.1955

ALPHAO(2) = -4.080 BETAO (4) = 4.090

SECTION (1)OMS POD DEPENDENT VARIABLE CP

TAP NO 165.0000166.0000167.0000168.0000

.000 -.2403 -.2469 -.2344 -.2286

ALPHAO(2) = -4.090 BETAO (5) = 8.150

SECTION (1)OMS POD DEPENDENT VARIABLE CP

TAP NO 165.0000166.0000167.0000168.0000

.000 -.2353 -.2302 -.2140 -.2456

ALPHAO(3) = -.310 BETAO (1) = -8.080

SECTION (1)OMS POD DEPENDENT VARIABLE CP

TAP NO 165.0000166.0000167.0000168.0000

.000 -.2410 -.2519 -.2142 -.1584

ALPHAO(3) = -.320 BETAO (2) = -4.010

SECTION (1)OMS POD DEPENDENT VARIABLE CP

TAP NO 165.0000166.0000167.0000168.0000

.000 -.2357 -.2566 -.2190 -.1756

ALPHAO(3) = -.330 BETAO (3) = .050

SECTION (1)OMS POD DEPENDENT VARIABLE CP

TAP NO 165.0000166.0000167.0000168.0000

.000 -.2331 -.2503 -.2331 -.1943

ALPHAO(3) = -.320 BETAO (4) = 4.080

SECTION (1)OMS POD DEPENDENT VARIABLE CP

TAP NO 165.0000166.0000167.0000168.0000

.000 -.2310 -.2315 -.2249 -.2148

ARC11-716 IA14 O1+T12+S12N25+AT11 OMS POD (RB1M35)

ALPHAO(3) = -.320 BETAO (5) = 8.130

SECTION (1)OMS POD DEPENDENT VARIABLE CP

TAP NO 165.0000166.0000167.0000168.0000

.000 -.2225 -.2300 -.2156 -.2305

ALPHAO(4) = 4.020 BETAO (1) = -8.080

SECTION (1)OMS POD DEPENDENT VARIABLE CP

TAP NO 165.0000166.0000167.0000168.0000

.000 -.2302 -.2448 -.2105 -.1568

ALPHAO(4) = 4.020 BETAO (2) = -4.030

SECTION (1)OMS POD DEPENDENT VARIABLE CP

TAP NO 165.0000166.0000167.0000168.0000

.000 -.2154 -.2370 -.2083 -.1645

ALPHAO(4) = 4.020 BETAO (3) = .040

SECTION (1)OMS POD DEPENDENT VARIABLE CP

TAP NO 165.0000166.0000167.0000168.0000

.000 -.2113 -.2297 -.2201 -.1803

ALPHAO(4) = 4.010 BETAO (4) = 5.100

SECTION (1)OMS POD DEPENDENT VARIABLE CP

TAP NO 165.0000166.0000167.0000168.0000

.000 -.2275 -.2206 -.2138 -.1988

ARC11-716 IA14 O1+T12+S12N25+AT11 OMS POD (RB1M35)

ALPHAO(4) = 4.000 BETAO (5) = 8.160

SECTION (1)OMS POD DEPENDENT VARIABLE CP

TAP NO 165.0000166.0000167.0000168.0000

.000 -.2290 -.2282 -.2079 -.2090

ALPHAO(5) = 7.930 BETAO (1) = -8.040

SECTION (1)OMS POD DEPENDENT VARIABLE CP

TAP NO 165.0000166.0000167.0000168.0000

.000 -.2215 -.2252 -.1973 -.1469

ALPHAO(5) = 7.940 BETAO (2) = -4.000

SECTION (1)OMS POD DEPENDENT VARIABLE CP

TAP NO 165.0000166.0000167.0000168.0000

.000 -.2000 -.2191 -.1942 -.1484

ALPHAO(5) = 7.940 BETAO (3) = .030

SECTION (1)OMS POD DEPENDENT VARIABLE CP

TAP NO 165.0000166.0000167.0000168.0000

.000 -.2032 -.2311 -.2117 -.1612

ALPHAO(5) = 7.930 BETAO (4) = 4.110

SECTION (1)OMS POD DEPENDENT VARIABLE CP

TAP NO 165.0000166.0000167.0000168.0000

.000 -.2058 -.2016 -.2045 -.1824

ORIGINAL PAGE IS OF POOR QUALITY

ARC11-716 IA14 O1+T12+S12N25+AT11 OMS POD (RB1M3C)

ALPHAO(5) = 7.920 BETAO (5) = 8.180

SECTION (1)OMS POD DEPENDENT VARIABLE CP

TAP NO	165.0000	166.0000	167.0000	168.0000
.000	-.2163	-.2189	-.2105	-.1978

ARC11-716 IA14 O1+T12+S12N25+AT11 OMS POD (RB1M36) (15 FEB 74)

REFERENCE DATA

SREF = 2.4210 SQ.FT. XMRP = 29.5800 INCHES
LREF = 38.7090 INCHES YMRP = .0000 INCHES
BREF = 38.7090 INCHES ZMRP = .0000 INCHES
SCALE = .0300 SCALE

PARAMETRIC DATA

MACH = .850 ELEVON = .000
RUDDER = .000 SPOERK = .000

ALPHAO(1) = -8.120 BETAO (1) = -8.000

SECTION (1)OMS POD DEPENDENT VARIABLE CP

TAP NO 165.0000166.0000167.0000168.0000

.000 -.2618 -.2808 -.2352 -.1770

ALPHAO(1) = -8.110 BETAO (2) = -3.970

SECTION (1)OMS POD DEPENDENT VARIABLE CP

TAP NO 165.0000166.0000167.0000168.0000

.000 -.2727 -.2872 -.2570 -.2195

ALPHAO(1) = -8.070 BETAO (3) = .010

SECTION (1)OMS POD DEPENDENT VARIABLE CP

TAP NO 165.0000166.0000167.0000168.0000

.000 -.2765 -.2955 -.2739 -.2451

ALPHAO(1) = -8.080 BETAO (4) = 4.090

SECTION (1)OMS POD DEPENDENT VARIABLE CP

TAP NO 165.0000166.0000167.0000168.0000

.000 -.2817 -.2876 -.2791 -.2765

ORIGINAL PAGE IS OF POOR QUALITY

ARC11-716 1A14 O1+T12+S12N25+AT11 OMS POD (RB1M36)

ALPHAO(. = -8.100 BETAO (5) = 8.160

SECTION (1)OMS POD DEPENDENT VARIABLE CP

TAP NO 165.0000166.0000167.0000168.0000

.000 -.2529 -.2643 -.2419 -.3262

ALPHAO(2) = -3.980 BETAO (1) = -8.050

SECTION (1)OMS POD DEPENDENT VARIABLE CP

TAP NO 165.0000166.0000167.0000168.0000

.000 -.2762 -.2876 -.2384 -.1887

ALPHAO(2) = -3.980 BETAO (2) = -3.990

SECTION (1)OMS POD DEPENDENT VARIABLE CP

TAP NO 165.0000166.0000167.0000168.0000

.000 -.2559 -.2645 -.2434 -.2022

ALPHAO(2) = -3.990 BETAO (3) = .060

SECTION (1)OMS POD DEPENDENT VARIABLE CP

TAP NO 165.0000166.0000167.0000168.0000

.000 -.2627 -.2759 -.2632 -.2347

ALPHAO(2) = -3.990 BETAO (4) = 4.070

SECTION (1)OMS POD DEPENDENT VARIABLE CP

TAP NO 165.0000166.0000167.0000168.0000

.000 -.2679 -.2658 -.2529 -.2511

ALPHAO(2) = -4.000 BETAO (5) = 8.110

SECTION (1)OMS POD DEPENDENT VARIABLE CP

TAP NO 165.0000166.0000167.0000168.0000

.000 -.2543 -.2581 -.2340 -.2952

ALPHAO(3) = -.310 BETAO (1) = -8.050

SECTION (1)OMS POD DEPENDENT VARIABLE CP

TAP NO 165.0000166.0000167.0000168.0000

.000 -.2548 -.2613 -.2286 -.1732

ALPHAO(3) = -.320 BETAO (2) = -3.990

SECTION (1)OMS POD DEPENDENT VARIABLE CP

TAP NO 165.0000166.0000167.0000168.0000

.000 -.2404 -.2544 -.2323 -.1885

ALPHAO(3) = -.330 BETAO (3) = .040

SECTION (1)OMS POD DEPENDENT VARIABLE CP

TAP NO 165.0000166.0000167.0000168.0000

.000 -.2579 -.2615 -.2467 -.2143

ALPHAO(3) = -.330 BETAO (4) = 8.130

SECTION (1)OMS POD DEPENDENT VARIABLE CP

TAP NO 165.0000166.0000167.0000168.0000

.000 -.2363 -.2467 -.2324 -.2514

ALPHAO(4) = 3.810 BETAO (1) = -4.010

SECTION (1)OMS POD DEPENDENT VARIABLE CP

TAP NO 165.0000166.0000167.0000168.0000

.000 -.2312 -.2483 -.2172 -.1728

ALPHAO(4) = 3.810 BETAO (2) = .040

SECTION (1)OMS POD DEPENDENT VARIABLE CP

TAP NO 165.0000166.0000167.0000168.0000

.000 -.2332 -.2482 -.2291 -.1924

ALPHAO(4) = 3.800 BETAO (3) = 4.090

SECTION (1)OMS POD DEPENDENT VARIABLE CP

TAP NO 165.0000166.0000167.0000168.0000

.000 -.2233 -.2261 -.2220 -.2082

ALPHAO(4) = 3.780 BETAO (4) = 8.160

SECTION (1)OMS POD DEPENDENT VARIABLE CP

TAP NO 165.0000166.0000167.0000168.0000

.000 -.2323 -.2373 -.2193 -.2243

ALPHAO(5) = 7.940 BETAO (1) = .030

SECTION (1)OMS POD DEPENDENT VARIABLE CP

TAP NO 165.0000166.0000167.0000168.0000

.000 -.2186 -.2333 -.2171 -.1745

ARC11-716 IA14 O1+T12+S12N25+AT11 OMS POD (RB1M36)

ALPHAO(5) = 7.930 BETAO (2) = 4.130

SECTION (1)OMS POD DEPENDENT VARIABLE CP

TAP NO 165.0000166.0000167.0000168.0000

.000 -.2083 -.2132 -.2116 -.1948

ALPHAO(5) = 7.910 BETAO (3) = 8.190

SECTION (1)OMS POD DEPENDENT VARIABLE CP

TAP NO 165.0000166.0000167.0000168.0000

.000 -.2133 -.2253 -.2087 -.1990

ARC11-716 !A14 O1+T12+S12N25+AT11 OMS POD (RB1M37) (15 FEB 74)

REFERENCE DATA

SREF = 2.4210 SQ.FT. XMRP = 29.5800 INCHES
LREF = 38.7090 INCHES YMRP = .0000 INCHES
BREF = 38.7090 INCHES ZMRP = .0000 INCHES
SCALE = .0300 SCALE

PARAMETRIC DATA

MACH = .950 ELEVON = .000
RUDDER = .000 SPOBRK = .000

ALPHAO(1) = -8.060 BETAO (1) = -3.980

SECTION (1)OMS POD DEPENDENT VARIABLE CP

TAP NO 165.0000166.0000167.0000168.0000

.000 -.3108 -.3193 -.3356 -.2679

ALPHAO(1) = -8.050 BETAO (2) = .040

SECTION (1)OMS POD DEPENDENT VARIABLE CP

TAP NO 165.0000166.0000167.0000168.0000

.000 -.3369 -.3538 -.3424 -.2955

ALPHAO(1) = -8.070 BETAO (3) = 4.090

SECTION (1)OMS POD DEPENDENT VARIABLE CP

TAP NO 165.0000166.0000167.0000168.0000

.000 -.2970 -.3009 -.2764 -.3060

ALPHAO(1) = -8.100 BETAO (4) = 8.150

SECTION (1)OMS POD DEPENDENT VARIABLE CP

TAP NO 165.0000166.0000167.0000168.0000

.000 -.2830 -.2910 -.2476 -.3598

ARC11-716 IA14 O1+T12+S12N25+AT11 OMS POD (RB1M37)

ALPHAO(2) = -4.090 BETAO (1) = -8.040

SECTION (1)OMS POD DEPENDENT VARIABLE CP

TAP NO 165.0000166.0000167.0000168.0000

.000 -.3066 -.3162 -.3022 -.2318

ALPHAO(2) = -4.080 BETAO (2) = -4.020

SECTION (1)OMS POD DEPENDENT VARIABLE CP

TAP NO 165.0000166.0000167.0000168.0000

.000 -.3031 -.3116 -.3211 -.2692

ALPHAO(2) = -4.080 BETAO (3) = .010

SECTION (1)OMS POD DEPENDENT VARIABLE CP

TAP NO 165.0000166.0000167.0000168.0000

.000 -.3224 -.3319 -.3182 -.2741

ALPHAO(2) = -4.090 BETAO (4) = 4.070

SECTION (1)OMS POD DEPENDENT VARIABLE CP

TAP NO 165.0000166.0000167.0000168.0000

.000 -.2992 -.3010 -.2702 -.2757

ALPHAO(2) = -4.110 BETAO (5) = 8.110

SECTION (1)OMS POD DEPENDENT VARIABLE CP

TAP NO 165.0000166.0000167.0000168.0000

.000 -.2875 -.3138 -.2511 -.3167

ARC11-716 IA14 O1+T12+S12N25+AT11 OMS POD (RB1M37)

ALPHAO(3) = -.310 BETAO (1) = -8.040

SECTION (1)OMS POD DEPENDENT VARIABLE CP

TAP NO 165.0000166.0000167.0000168.0000

.000 -.3143 -.3262 -.3037 -.2388

ALPHAO(3) = -.320 BETAO (2) = -4.000

SECTION (1)OMS POD DEPENDENT VARIABLE CP

TAP NO 165.0000166.0000167.0000168.0000

.000 -.3067 -.3235 -.3036 -.2599

ALPHAO(3) = -.320 BETAO (3) = .040

SECTION (1)OMS POD DEPENDENT VARIABLE CP

TAP NO 165.0000166.0000167.0000168.0000

.000 -.3203 -.3154 -.2786 -.2186

ALPHAO(3) = -.320 BETAO (4) = 4.090

SECTION (1)OMS POD DEPENDENT VARIABLE CP

TAP NO 165.0000166.0000167.0000168.0000

.000 -.2836 -.2651 -.2341 -.2328

ALPHAO(3) = -.330 BETAO (5) = 8.130

SECTION (1)OMS POD DEPENDENT VARIABLE CP

TAP NO 165.0000166.0000167.0000168.0000

.000 -.2791 -.2988 -.2324 -.2822

ARC11-716 IA14 O1+T12+S12N25+AT11 OMS POD (RB1M37)

ALPHAO(4) = 4.030 BETAO (1) = -8.060

SECTION (1)OMS POD DEPENDENT VARIABLE CP

TAP NO 165.0000166.0000167.0000168.0000

.000 -.3028 -.3113 -.2647 -.2295

ALPHAO(4) = 4.030 BETAO (2) = -4.010

SECTION (1)OMS POD DEPENDENT VARIABLE CP

TAP NO 165.0000166.0000167.0000168.0000

.000 -.2730 -.2953 -.2829 -.2338

ALPHAO(4) = 4.020 BETAO (3) = .030

SECTION (1)OMS POD DEPENDENT VARIABLE CP

TAP NO 165.0000166.0000167.0000168.0000

.000 -.2893 -.2918 -.2422 -.1851

ALPHAO(4) = 4.020 BETAO (4) = 4.100

SECTION (1)OMS POD DEPENDENT VARIABLE CP

TAP NO 165.0000166.0000167.0000168.0000

.000 -.2577 -.2675 -.2102 -.2166

ALPHAO(4) = 4.010 BETAO (5) = 8.140

SECTION (1)OMS POD DEPENDENT VARIABLE CP

TAP NO 165.0000166.0000167.0000168.0000

.000 -.2792 -.2944 -.2364 -.2487

ARC11-716 IA14 O1+T12+S12N25+AT11 OMS POD (RB1M37)

ALPHAO(5) = 7.940 BETAO (1) = -8.030

SECTION (1)OMS POD DEPENDENT VARIABLE CP

TAP NO 165.0000166.0000167.0000168.0000

.000 -.2717 -.2803 -.2552 -.2120

ALPHAO(5) = 7.940 BETAO (2) = -4.010

SECTION (1)OMS POD DEPENDENT VARIABLE CP

TAP NO 165.0000166.0000167.0000168.0000

.000 -.2864 -.2962 -.2813 -.2395

ALPHAO(5) = 7.940 BETAO (3) = .040

SECTION (1)OMS POD DEPENDENT VARIABLE CP

TAP NO 165.0000166.0000167.0000168.0000

.000 -.2683 -.2776 -.2683 -.2238

ALPHAO(5) = 7.930 BETAO (4) = 4.110

SECTION (1)OMS POD DEPENDENT VARIABLE CP

TAP NO 165.0000166.0000167.0000168.0000

.000 -.2563 -.2620 -.2241 -.1859

ALPHAO(5) = 7.920 BETAO (5) = 8.180

SECTION (1)OMS POD DEPENDENT VARIABLE CP

TAP NO 165.0000166.0000167.0000168.0000

.000 -.2475 -.2803 -.2227 -.2132

ARC11-716 TA14 O1+T12+S12N25+AT11 OMS POD (RB1M38) (15 FEB 74)

REFERENCE DATA

SREF = 2.4210 SQ.FT. XMRP = 29.5800 INCHES
LREF = 38.7090 INCHES YMRP = .0000 INCHES
BREF = 38.7090 INCHES ZMRP = .0000 INCHES
SCALE = .0500 SCALE

PARAMETRIC DATA

MACH = 1.050 ELEVON = .000
RUDDER = .000 SPOBRK = .000

ALPHAO(1) = -8.080 BETAO (1) = -8.020

SECTION (1)OMS POD DEPENDENT VARIABLE CP

TAP NO 165.0000166.0000167.0000168.0000

.000 -.3580 -.3619 -.2442 -.1199

ALPHAO(1) = -8.070 BETAO (2) = -4.980

SECTION (1)OMS POD DEPENDENT VARIABLE CP

TAP NO 165.0000166.0000167.0000168.0000

.000 -.3408 -.3529 -.2524 -.1394

ALPHAO(1) = -8.080 BETAO (3) = .030

SECTION (1)OMS POD DEPENDENT VARIABLE CP

TAP NO 165.0000166.0000167.0000168.0000

.000 -.3535 -.3993 -.3006 -.2264

ALPHAO(1) = -8.070 BETAO (4) = 4.120

SECTION (1)OMS POD DEPENDENT VARIABLE CP

TAP NO 165.0000166.0000167.0000168.0000

.000 -.3792 -.3364 -.3136 -.3004

ORIGINAL PAGE IS OF POOR QUALITY

ARC11-716 1A14 O1+T12+S12N25+AT11 OMS POD (RB1M38)

ALPHAO(1) = -8.100 BETAO (5) = 8.160

SECTION (1)OMS POD DEPENDENT VARIABLE CP

TAP NO 165.0000166.0000167.0000168.0000

.000 -.3186 -.3231 -.3149 -.3840

ALPHAO(2) = -4.080 BETAO (1) = -8.040

SECTION (1)OMS POD DEPENDENT VARIABLE CP

TAP NO 165.0000166.0000167.0000168.0000

.000 -.3473 -.3571 -.2485 -.1252

ALPHAO(2) = -4.090 BETAO (2) = -4.020

SECTION (1)OMS POD DEPENDENT VARIABLE CP

TAP NO 165.0000166.0000167.0000168.0000

.000 -.3264 .3398 -.2589 -.1505

ALPHAO(2) = -4.090 BETAO (3) = .040

SECTION (1)OMS POD DEPENDENT VARIABLE CP

TAP NO 165.0000166.0000167.0000168.0000

.000 -.3433 -.3525 -.3167 -.2639

ALPHAO(2) = -4.090 BETAO (4) = 4.080

SECTION (1)OMS POD DEPENDENT VARIABLE CP

TAP NO 165.0000166.0000167.0000168.0000

.000 -.3130 -.3185 -.3227 .3174

ALPHAO(2) = -4.100 BETAO (3) = 8.120

SECTION (1)OMS POD DEPENDENT VARIABLE CP

TAP NO 165.0000166.0000167.0000168.0000

.000 -.3202 -.3297 -.3207 -.3438

ALPHAO(3) = -.310 BETAO (1) = -8.040

SECTION (1)OMS POD DEPENDENT VARIABLE CP

TAP NO 165.0000166.0000167.0000168.0000

.000 -.3418 -.3494 -.2458 -.1240

ALPHAO(3) = -.320 BETAO (2) = -4.010

SECTION (1)OMS POD DEPENDENT VARIABLE CP

TAP NO 165.0000166.0000167.0000168.0000

.000 -.3234 -.3321 -.2481 -.1388

ALPHAO(3) = -.330 BETAO (3) = .040

SECTION (1)OMS POD DEPENDENT VARIABLE CP

TAP NO 165.0000166.0000167.0000168.0000

.000 -.3345 -.3450 -.3235 -.2856

ALPHAO(3) = -.320 BETAO (4) = 4.090

SECTION (1)OMS POD DEPENDENT VARIABLE CP

TAP NO 165.0000166.0000167.0000168.0000

.000 -.3135 -.3111 -.3404 -.3409

ARC11-716 IA14 O1+T12+S12N25+AT11 OMS POD (RB1M38)

ALPHAO(3) = -.330 BETAO (5) = 8.130

SECTION (1)OMS POD DEPENDENT VARIABLE CP

TAP NO 165.0000166.0000167.0000168.0000

.000 -.3219 -.3269 -.3279 -.3390

ALPHAO(4) = 4.020 BETAO (1) = -8.050

SECTION (1)OMS POD DEPENDENT VARIABLE CP

TAP NO 165.0000166.0000167.0000168.0000

.000 -.3332 -.3427 -.2344 -.1129

ALPHAO(4) = 4.020 BETAO (2) = -4.020

SECTION (1)OMS POD DEPENDENT VARIABLE CP

TAP NO 165.0000166.0000167.0000168.0000

.000 -.3179 -.3226 -.1713 -.0847

ALPHAO(4) = 4.020 BETAO (3) = .030

SECTION (1)OMS POD DEPENDENT VARIABLE CP

TAP NO 165.0000166.0000167.0000168.0000

.000 -.3234 -.3263 -.3421 -.3234

ALPHAO(4) = 4.010 BETAO (4) = 4.110

SECTION (1)OMS POD DEPENDENT VARIABLE CP

TAP NO 165.0000166.0000167.0000168.0000

.000 -.2981 -.3013 -.3284 -.3548

ALPHAO(4) = 4.000 BETAO (5) = 8.160

SECTION (1)OMS POD DEPENDENT VARIABLE CP

TAP NO 165.0000166.0000167.0000168.0000

.000 -.3056 -.3201 -.2948 -.3161

ALPHAO(5) = 7.930 BETAO (1) = -8.010

SECTION (1)OMS POD DEPENDENT VARIABLE CP

TAP NO 165.0000166.0000167.0000168.0000

.000 -.3165 -.3252 -.2611 -.1566

ALPHAO(5) = 7.930 BETAO (2) = -3.990

SECTION (1)OMS POD DEPENDENT VARIABLE CP

TAP NO 165.0000166.0000167.0000168.0000

.000 -.3129 -.3200 -.2388 -.1645

ALPHAO(5) = 7.930 BETAO (3) = .040

SECTION (1)OMS POD DEPENDENT VARIABLE CP

TAP NO 165.0000166.0000167.0000168.0000

.000 -.3146 -.3188 -.2945 -.3146

ALPHAO(5) = 7.930 BETAO (4) = 4.110

SECTION (1)OMS POD DEPENDENT VARIABLE CP

TAP NO 165.0000166.0000167.0000168.0000

.000 -.2921 -.2953 -.3283 -.3581

ARC11-716 IA14 O1+T12+S12N25+AT11 OMS POD (RB1M38)

ALPHAO(5) = 7.910 BETAO (5) = 8.200

SECTION (1)OMS POD DEPENDENT VARIABLE CP

TAP NO	165.0000	166.0000	167.0000	168.0000
.000	-.3292	-.3418	-.3197	-.3300

ARC11-716 IA14 O1+T12+S12N25+A711 OM3 POD (RB1M39) (15 FEB 74)

REFERENCE DATA

SREF = 2.4210 SQ.FT. XMRP = 29.5800 INCHES
LREF = 38.7090 INCHES YMRP = .0000 INCHES
BREF = 38.7090 INCHES ZMRP = .0000 INCHES
SCALE = .0300 SCALE

PARAMETRIC DATA

MACH = 1.150 ELEVON = .000
RUDDER = .000 SPDBRK = .000

ALPHAO(1) = -8.110 BETAO (1) = -8.020

SECTION (1)OMS POD DEPENDENT VARIABLE CP

TAP NO 165.0000166.0000167.0000168.0000

.000 -.3171 -.3171 -.1173 -.0048

ALPHAO(1) = -8.100 BETAO (2) = -4.000

SECTION (1)OMS POD DEPENDENT VARIABLE CP

TAP NO 165.0000166.0000167.0000168.0000

.000 -.3156 -.3176 -.1373 -.0418

ALPHAO(1) = -8.090 BETAO (3) = .030

SECTION (1)OMS POD DEPENDENT VARIABLE CP

TAP NO 165.0000166.0000167.0000168.0000

.000 -.3259 -.3249 -.1971 -.1347

ALPHAO(1) = -8.100 BETAO (4) = 4.080

SECTION (1)OMS POD DEPENDENT VARIABLE CP

TAP NO 165.0000166.0000167.0000168.0000

.000 -.3065 -.3153 -.2445 -.2138

ORIGINAL PAGE IS OF POOR QUALITY

ARC11-716 IA14 O1+T12+S12N25+AT11 OMS POD (RB1M39)

ALPHAO(1) = -8.130 BETAO (5) = 8.160

SECTION (1)OMS POD DEPENDENT VARIABLE CP

TAP NO 165.0000166.0000167.0000168.0000

.000 -.2842 -.3091 -.2561 -.3355

ALPHAO(2) = -4.100 BETAO (1) = -8.030

SECTION (1)OMS POD DEPENDENT VARIABLE CP

TAP NO 165.0000166.0000167.0000168.0000

.000 -.3187 -.3187 -.1262 -.0122

ALPHAO(2) = -4.110 BETAO (2) = -4.010

SECTION (1)OMS POD DEPENDENT VARIABLE CP

TAP NO 165.0000166.0000167.0000168.0000

.000 -.2953 -.2988 -.1341 -.0282

ALPHAO(2) = -4.110 BETAO (3) = .040

SECTION (1)OMS POD DEPENDENT VARIABLE CP

TAP NO 165.0000166.0000167.0000168.0000

.000 -.3068 -.3068 -.2371 -.1716

ALPHAO(2) = -4.110 BETAO (4) = 4.170

SECTION (1)OMS POD DEPENDENT VARIABLE CP

TAP NO 165.0000166.0000167.0000168.0000

.000 -.3001 -.2986 -.2732 -.2392

ARC11-716 IA14 O1+T12+S12N25+AT11 OMS POD (RB1M39)

ALPHAO(2) = -4.130 BETAO (5) = 8.110

SECTION (1)OMS POD DEPENDENT VARIABLE CP

TAP NO 165.0000166.0000167.0000168.0000

.000 -.2794 -.2964 -.2676 -.3002

ALPHAO(3) = -.330 BETAO (1) = -4.020

SECTION (1)OMS POD DEPENDENT VARIABLE CP

TAP NO 165.0000166.0000167.0000168.0000

.000 -.2919 -.2934 -.1627 -.1126

ALPHAO(3) = -.330 BETAO (2) = .040

SECTION (1)OMS POD DEPENDENT VARIABLE CP

TAP NO 165.0000166.0000167.0000168.0000

.000 -.2966 -.2946 -.2524 -.1978

ALPHAO(3) = -.340 BETAO (3) = 4.070

SECTION (1)OMS POD DEPENDENT VARIABLE CP

TAP NO 16[illegible]000166.0000167.0000168.0000

.000 -.2984 -.2966 -.2868 -.2511

ALPHAO(3) = -.340 BETAO (4) = 8.140

SECTION (1)OMS POD DEPENDENT VARIABLE CP

TAP NO 165.0000166.0000167.0000168.0000

.000 -.2654 -.2920 -.2543 -.2903

ARC11-716 IA14 O1+T12+S12N25+AT11 OMS POD (RB1M39)

ALPHAO(4) = 4.010 BETAO (1) = -8.060

SECTION (1)OMS POD DEPENDENT VARIABLE CP

TAP NO 165.0000166.0000167.0000168.0000

.000 -.2972 -.2959 -.1813 -.1136

ALPHAO(4) = 4.010 BETAO (2) = -4.010

SECTION (1)OMS POD DEPENDENT VARIABLE CP

TAP NO 165.0000166.0000167.0000168.0000

.000 -.2902 -.2917 -.2359 -.1745

ALPHAO(4) = 4.000 BETAO (3) = .050

SECTION (1)OMS POD DEPENDENT VARIABLE CP

TAP NO 165.0000166.0000167.0000168.0000

.000 -.2926 -.2971 -.2776 -.2640

ALPHAO(4) = 4.000 BETAO (4) = 4.100

SECTION (1)OMS POD DEPENDENT VARIABLE CP

TAP NO 165.0000166.0000167.0000168.0000

.000 -.2667 -.2702 -.2782 -.2824

ALPHAO(4) = 3.990 BETAO (5) = 8.140

SECTION (1)OMS POD DEPENDENT VARIABLE CP

TAP NO 165.0000166.0000167.0000168.0000

.000 -.2657 -.2885 -.2635 -.2916

ARC11-716 IA14 O1+T12+S12N25+AT11 OMS POD (RB1M39)

ALPHAO(5) = 7.920 BETAO (1) = -8.050

SECTION (1)OMS POD DEPENDENT VARIABLE CP

TAP NO 165.0000166.0000167.0000168.0000

.000 -.3021 -.3104 -.1854 -.1323

ALPHAO(5) = 7.930 BETAO (2) = -3.990

SECTION (1)OMS POD DEPENDENT VARIABLE CP

TAP NO 165.0000166.0000167.0000168.0000

.000 -.2930 -.2948 -.2610 -.2474

ALPHAO(5) = 7.930 BETAO (3) = .040

SECTION (1)OMS POD DEPENDENT VARIABLE CP

TAP NO 165.0000166.0000167.0000168.0000

.000 -.2869 -.2917 -.2997 -.3020

ALPHAO(5) = 7.930 BETAO (4) = 4.120

SECTION (1)OMS POD DEPENDENT VARIABLE CP

TAP NO 165.0000166.0000167.0000168.0000

.000 -.2652 -.2699 -.2959 -.3324

ALPHAO(5) = 7.910 BETAO (5) = 8.200

SECTION (1)OMS POD DEPENDENT VARIABLE CP

TAP NO 165.0000166.0000167.0000168.0000

.000 -.3007 -.3090 -.3136 -.3533

ARC11-716 IA14 O1+T12+S12N25+AT11 OMS POD (RB:M40) (15 FEB 74)

REFERENCE DATA

SREF = 2.4210 SQ.FT. XMRP = 29.5800 INCHES
LREF = 38.7090 INCHES YMRP = .0000 INCHES
BREF = 36.7090 INCHES ZMRP = .0000 INCHES
SCALE = .0300 SCALE

PARAMETRIC DATA

MACH = 1.400 ELEVON = .000
RUDDER = .000 SPDBRK = .000

ALPHAO(1) = -7.920 BETAO (1) = -8.040

SECTION (1)OMS POD DEPENDENT VARIABLE CP

TAP NO 165.0000166.0000167.0000168.0000

.000 -.2545 -.2608 .0165 .0533

ALPHAO(1) = -7.910 BETAO (2) = -4.000

SECTION (1)OMS POD DEPENDENT VARIABLE CP

TAP NO 165.0000166.0000167.0000168.0000

.000 -.2694 -.2810 -.0312 -.0034

ALPHAO(1) = -7.900 BETAO (3) = .030

SECTION (1)OMS POD DEPENDENT VARIABLE CP

TAP NO 165.0000166.0000167.0000168.0000

.000 -.2666 -.2757 -.0793 -.0654

ALPHAO(1) = -7.910 BETAO (4) = 4.100

SECTION (1)OMS POD DEPENDENT VARIABLE CP

TAP NO 165.0000166.0000167.0000168.0000

.000 -.2639 -.2806 -.1186 -.1415

ARC11-716 IA14 Q1+T12+S12N25+AT11 OMS POD (RB1M40)

ALPHAO(1) = -8.000 BETAO (5) = 8.190

SECTION (1)OMS POD DEPENDENT VARIABLE CP

TAP NO 165.0000166.0000167.0000168.0000

.000 -.2517 -.2555 -.1765 -.3809

ALPHAO(2) = -4.010 BETAO (1) = -6.050

SECTION (1)OMS POD DEPENDENT VARIABLE CP

TAP NO 165.0000166.0000167.0000168.0000

.000 -.2546 -.2594 -.0691 -.0072

ALPHAO(2) = -4.010 BETAO (2) = -4.020

SECTION (1)OMS POD DEPENDENT VARIABLE CP

TAP NO 165.0000166.0000167.0000168.0000

.000 -.2655 -.2673 -.1005 -.0574

ALPHAO(2) = -3.930 BETAO (3) = .030

SECTION (1)OMS POD DEPENDENT VARIABLE CP

TAP NO 165.0000166.0000167.0000168.0000

.000 -.2660 -.2670 -.1237 -.1075

ALPHAO(2) = -3.940 BETAO (4) = 4.100

SECTION (1)OMS POD DEPENDENT VARIABLE CP

TAP NO 165.0000166.0000167.0000168.0000

.000 -.2508 -.2583 -.1570 -.1615

ARC11-71R IA14 O1+T12+S12N25+AT11 OMS PCO (RB1M40)

ALPHAO(2) = -3.950 BETAO (5) = 8.150

SECTION (1)OMS PCO DEPENDENT VARIABLE CP

TAP NO 165.0000166.0000167.0000168.0000

.000 -.2421 -.2627 -.2054 -.2561

ALPHAO(3) = -.370 BETAO (1) = -8.090

SECTION (1)OMS PCO DEPENDENT VARIABLE CP

TAP NO 165.0000166.0000167.0000168.0000

.000 -.2570 -.2990 -.1300 -.0523

ALPHAO(3) = -.380 BETAO (2) = -4.020

SECTION (1)OMS PCO DEPENDENT VARIABLE CP

TAP NO 165.0000166.0000167.0000168.0000

.000 -.2998 -.2801 -.1455 -.0921

ALPHAO(3) = -.380 BETAO (3) = .020

SECTION (1)OMS PCO DEPENDENT VARIABLE CP

TAP NO 165.0000166.0000167.0000168.0000

.000 -.2562 -.2539 -.1672 -.1409

ALPHAO(3) = -.390 BETAO (4) = 4.090

SECTION (1)OMS PCO DEPENDENT VARIABLE CP

TAP NO 165.0000166.0000167.0000168.0000

.000 -.2493 -.2501 -.1988 -.1857

ARC1:-716 :A14 O1+T12+S12N25+AT11 OMS POD (RB1N40)

ALPHAO(3) = -.390 BETAO (5) = 8.140

SECTION (1)OMS POD DEPENDENT VARIABLE CP

TAP NO 165.0000166.0000167.0000168.0000

.000 -.2400 -.2532 -.2235 -.2227

ALPHAO(4) = 4.080 BETAO (1) = -8.080

SECTION (1)OMS POD DEPENDENT VARIABLE CP

TAP NO 165.0000166.0000167.0000168.0000

.000 -.2560 -.2593 -.1816 -.1331

ALPHAO(4) = 4.080 BETAO (2) = -4.020

SECTION (1)OMS POD DEPENDENT VARIABLE CP

TAP NO 165.0000166.0000167.0000168.0000

.000 -.2588 -.2578 -.1858 -.1528

ALPHAO(4) = 4.010 BETAO (3) = .030

SECTION (1)OMS POD DEPENDENT VARIABLE CP

TAP NO 165.0000166.0000167.0000168.0000

.000 -.2333 -.2307 -.1949 -.1741

ALPHAO(4) = 4.040 BETAO (4) = 4.090

SECTION (1)OMS POD DEPENDENT VARIABLE CP

TAP NO 165.0000166.0000167.0000168.0000

.000 -.2335 -.2343 -.2161 -.2161

ARC11-718 IA14 O1+T12+S12N25+AT11 OMS POD (RB1M40)

ALPHAO(4) = 4.080 BETAO (5) = 8.180

SECTION (1)OMS POD DEPENDENT VARIABLE CP

TAP NO 165.0000166.0000167.0000168.0000

.000 -.2517 -.2585 -.2580 -.2303

ALPHAO(5) = 8.000 BETAO (1) = -8.080

SECTION (1)OMS POD DEPENDENT VARIABLE CP

TAP NO 165.0000166.0000167.0000168.0000

.000 -.2690 -.2707 -.2543 -.1904

ALPHAO(5) = 7.980 BETAO (2) = -4.010

SECTION (1)OMS POD DEPENDENT VARIABLE CP

TAP NO 165.0000166.0000167.0000168.0000

.000 -.2632 -.2634 -.2470 -.2039

ALPHAO(5) = 7.910 BETAO (3) = .030

SECTION (1)OMS POD DEPENDENT VARIABLE CP

TAP NO 165.0000166.0000167.0000168.0000

.000 -.2300 -.2295 -.2212 -.2373

ALPHAO(5) = 8.000 BETAO (4) = 8.210

SECTION (1)OMS POD DEPENDENT VARIABLE CP

TAP NO 165.0000166.0000167.0000168.0000

.000 -.2593 -.2681 -.2561 -.2368

ORIGINAL PAGE IS OF POOR QUALITY

ARC11-716 IA14 OI+T12+S12N25 OMS POD (RB1M41) (15 FEB 74)

REFERENCE DATA

SREF = 2.4210 SQ.FT. XMRP = 29.5800 INCHES
LREF = 38.7090 INCHES YMRP = .0000 INCHES
BREF = 38.7090 INCHES ZMRP = .0000 INCHES
SCALE = .0300 SCALE

PARAMETRIC DATA

MACH = .600 ELEVON = .000
RUDDER = .000 SPDBRK = .000

ALPHAO(1) = -7.940 BETAO (1) = .020

SECTION (1)OMS POD DEPENDENT VARIABLE CP

TAP NO 165.0000166.0000167.0000168.0000

.000 -.2228 -.2340 -.2211 -.1963

ALPHAO(1) = -7.950 BETAO (2) = 4.080

SECTION (1)OMS POD DEPENDENT VARIABLE CP

TAP NO 165.0000166.0000167.0000168.0000

.000 -.2286 -.2325 -.2145 -.2121

ALPHAO(1) = -7.970 BETAO (3) = 8.150

SECTION (1)OMS POD DEPENDENT VARIABLE CP

TAP NO 165.0000166.0000167.0000168.0000

.000 -.2364 -.2473 -.2535 -.2249

ALPHAO(2) = -4.050 BETAO (1) = -8.030

SECTION (1)OMS POD DEPENDENT VARIABLE CP

TAP NO 165.0000166.0000167.0000168.0000

.000 -.2388 -.2358 -.2136 -.1574

ORIGINAL PAGE IS OF POOR QUALITY

ALPHAO(2) = -4.050 BETAO (2) = -4.020

SECTION (1)OMS POD DEPENDENT VARIABLE CP

TAP NO 165.0000166.0000167.0000168.0000

.000 -.2366 -.2451 -.2278 -.1733

ALPHAO(2) = -4.050 BETAO (3) = .030

SECTION (1)OMS POD DEPENDENT VARIABLE CP

TAP NO 165.0000166.0000167.0000168.0000

.000 -.2232 -.2279 -.2217 -.1910

ALPHAO(2) = -3.950 BETAO (4) = 4.070

SECTION (1)OMS POD DEPENDENT VARIABLE CP

TAP NO 165.0000166.0000167.0000168.0000

.000 -.2205 -.2237 -.2213 -.2098

ALPHAO(2) = -3.950 BETAO (5) = 8.110

SECTION (1)OMS POD DEPENDENT VARIABLE CP

TAP NO 165.0000166.0000167.0000168.0000

.000 -.2325 -.2325 -.2135 -.2239

ALPHAO(3) = -.310 BETAO (1) = -8.040

SECTION (1)OMS POD DEPENDENT VARIABLE CP

TAP NO 165.0000166.0000167.0000168.0000

.000 -.2362 -.2397 -.2120 -.1585

ARC11-716 IA14 O1+T12+S12N25 OHS POD (RB1441)

ALPHAO(3) = -.320 BETAO (2) = -4.020

SECTION (1)OMS POD DEPENDENT VARIABLE CP

TAP NO 165.0000166.0000167.0000168.0000

.000 -.2200 -.2306 -.2121 -.1694

ALPHAO(3) = -.320 BETAO (3) = .040

SECTION (1)OMS POD DEPENDENT VARIABLE CP

TAP NO 165.0000166.0000167.0000138.0000

.000 -.2184 -.2208 -.2181 -.1849

ALPHAO(3) = -.330 BETAO (4) = 4.060

SECTION (1)OMS POD DEPENDENT VARIABLE CP

TAP NO 165.0000166.0000167.0000168.0000

.000 -.2180 -.2227 - 2306 -.2012

ALPHAO(3) = -.330 BETAO (5) = 8.140

SECTION (1)OMS POD DEPENDENT VARIABLE CP

TAP NO 165.0000166.0000167.0000168.0000

.000 -.2207 -.2234 -.2137 -.2181

ALPHAO(4) = 4.130 BETAO (1) = -8.050

SECTION (1)OMS POD DEPENDENT VARIABLE CP

TAP NO 165.0000166.0000167.0000168.0000

.000 -.2233 -.2283 -.2039 -.1448

ORIGINAL PAGE IS
OF POOR QUALITY

ALPHAO(4) = 4.130 BETAO (2) = -4.010

SECTION (1)OMS POD DEPENDENT VARIABLE CP

TAP NO 165.0000166.0000167.0000168.0000

.000 -.2139 -.2180 -.1989 -.1579

ALPHAO(4) = 4.130 BETAO (3) = .080

SECTION (1)OMS POD DEPENDENT VARIABLE CP

TAP NO 165.0000166.0000167.0000168.0000

.000 -.2033 -.2148 -.2039 -.1672

ALPHAO(4) = 4.120 BETAO (4) = 4.080

SECTION (1)OMS POD DEPENDENT VARIABLE CP

TAP NO 165.0000165.0000167.0000168.0000

.000 -.2173 -.2137 -.2294 -.1907

ALPHAO(4) = 4.110 BETAO (5) = 8.150

SECTION (1)OMS POD DEPENDENT VARIABLE CP

TAP NO 165.0000166.0000167.0000168.0000

.000 -.2117 -.2058 -.2091 -.2100

ALPHAO(5) = 7.990 BETAO (1) = -8.000

SECTION (1)OMS POD DEPENDENT VARIABLE CP

TAP NO 165.0000166.0000167.0000168.0000

.000 -.2211 -.2258 -.2049 -.1515

ARC11-716 IA14 O1+T12+S12N25 OMS POD (RB1M41)

ALPHAO(5) = 8.000 BETAO (2) = -4.010

SECTION (1)OMS POD DEPENDENT VARIABLE CP

TAP NO 165.0000166.0000167.0000168.0000

.000 -.1942 -.2036 -.1892 -.1478

ALPHAO(5) = 8.000 BETAO (3) = .010

SECTION (1)OMS POD DEPENDENT VARIABLE CP

TAP NO 165.0000166.0000167.0000168.0000

.000 -.1906 -.1989 -.1974 -.1533

ALPHAO(5) = 7.870 BETAO (4) = 8.160

SECTION (1)OMS POD DEPENDENT VARIABLE CP

TAP NO 165.0000166.0000167.0000168.0000

.000 -.2244 -.2268 -.2221 -.2050

ARC11-716 IA14 O1+T12+S12N25 OMS PCO (RB1M42) (16 FEB 74)

REFERENCE DATA

SREF = 2.4210 SQ.FT. XMRP = 29.5800 INCHES
LREF = 38.7090 INCHES YMRP = .0000 INCHES
BREF = 38.7090 INCHES ZMRP = .0000 INCHES
SCALE = .0300 SCALE

PARAMETRIC DATA

MACH = .750 ELEVON = .000
RUDDER = .000 SPDBRK = .000

ALPHAO(1) = -7.890 BETAO (1) = -6.000

SECTION (1)OMS PCO DEPENDENT VARIABLE CP

TAP NO 165.0000166.0000167.0000168.0000

.000 -.2567 -.2655 -.2405 -.1891

ALPHAO(1) = -7.780 BETAO (2) = -3.990

SECTION (1)OMS PCO DEPENDENT VARIABLE CP

TAP NO 165.0000166.0000167.0000168.0000

.000 -.2589 -.2690 -.2423 -.1934

ALPHAO(1) = -7.780 BETAO (3) = .040

SECTION (1)OMS PCO DEPENDENT VARIABLE CP

TAP NO 165.0000166.0000167.0000168.0000

.000 -.2439 -.2580 -.2456 -.2184

ALPHAO(1) = -7.790 BETAO (4) = 4.090

SECTION (1)OMS PCO DEPENDENT VARIABLE CP

TAP NO 165.0000166.0000167.0000168.0000

.000 -.2256 -.2256 -.2173 -.2236

ARC11-716 IA14 01+T12+S12N25 OMS PCO (RB1M42)

ALPHAO(1) = -7.970 BETAO (5) = 8.160

SECTION (1)OMS PCO DEPENDENT VARIABLE CP

TAP NO 165.0000166.0000167.0000168.0000

.000 -.2146 -.2213 -.2065 -.2240

ALPHAO(2) = -4.020 BETAO (1) = -8.060

SECTION (1)OMS PCO DEPENDENT VARIABLE CP

TAP NO 165.0000166.0000167.0000168.0000

.000 -.2623 -.2670 -.2342 -.1784

ALPHAO(2) = -4.030 BETAO (2) = -4.030

SECTION (1)OMS PCO DEPENDENT VARIABLE CP

TAP NO 165.0000166.0000167.0000168.0000

.000 -.2492 -.2629 -.2369 -.1920

ALPHAO(2) = -4.040 BETAO (3) = .040

SECTION (1)OMS PCO DEPENDENT VARIABLE CP

TAP NO 165.0000166.0000167.0000168.0000

.000 -.2397 -.2516 -.2393 -.2070

ALPHAO(2) = -4.040 BETAO (4) = 4.070

SECTION (1)OMS PCO DEPENDENT VARIABLE CP

TAP NO 165.0000166.0000167.0000168.0000

.000 -.2319 -.2245 -.2282 -.2170

ALPHAO(2) = -4.040 BETAO (5) = 8.130

SECTION (1)OMS PCO DEPENDENT VARIABLE CP

TAP NO 165.0000166.0000167.0000168.0000

.000 -.2363 -.2177 -.2028 -.2196

ALPHAO(3) = -.320 BETAO (1) = -8.060

SECTION (1)OMS PCO DEPENDENT VARIABLE CP

TAP NO 165.0000166.0000167.0000168.0000

.000 -.2510 -.2659 -.2312 -.1700

ALPHAO(3) = -.340 BETAO (2) = -4.010

SECTION (1)OMS PCO DEPENDENT VARIABLE CP

TAP NO 165.0000166.0000167.0000168.0000

.000 -.2420 -.2574 -.2350 -.1801

ALPHAO(3) = -.340 BETAO (3) = .050

SECTION (1)OMS PCO DEPENDENT VARIABLE CP

TAP NO 165.0000166.0000167.0000168.0000

.000 -.2317 -.2359 -.2343 -.2031

ALPHAO(3) = -.350 BETAO (4) = 4.090

SECTION (1)OMS PCO DEPENDENT VARIABLE CP

TAP NO 165.0000166.0000167.0000168.0000

.000 -.2362 -.2308 -.2362 -.2233

ORIGINAL PAGE IS
OF POOR QUALITY

ARC11-718 IA14 O1+T12+S12N25 OMS POD (RB1M42)

ALPHAO(3) = -.340 BETAO (5) = 8.160

SECTION (1)OMS POD DEPENDENT VARIABLE CP

TAP NO 165.0000166.0000167.0000168.0000

.000 -.2237 -.2309 -.2150 -.2213

ALPHAO(4) = 4.220 BETAO (1) = -8.060

SECTION (1)OMS POD DEPENDENT VARIABLE CP

TAP NO 165.0000166.0000167.0000168.0000

.000 -.2443 -.2583 -.2158 -.1596

ALPHAO(4) = 4.210 BETAO (2) = -4.030

SECTION (1)OMS POD DEPENDENT VARIABLE CP

TAP NO 165.0000166.0000167.0000168.0000

.000 -.2250 -.2332 -.2176 -.1709

ALPHAO(4) = 4.210 BETAO (3) = .030

SECTION (1)OMS POD DEPENDENT VARIABLE CP

TAP NO 165.0000166.0000167.0000168.0000

.000 -.2094 -.2185 -.2129 -.1776

ALPHAO(4) = 4.200 BETAO (4) = 4.090

SECTION (1)OMS POD DEPENDENT VARIABLE CP

TAP NO 165.0000166.0000167.0000168.0000

.000 -.2248 -.2223 -.2276 -.2043

ORIGINAL PAGE IS
OF POOR QUALITY

DATE 10 DEC 74 TABULATED PRESSURE DATA - TA14A - VOL. 4

ARC11-716 TA14 O1+T12+S12N25 OHS PCO (RB1M42)

ALPHAO(4) = 4.190 BETAO (5) = 8.160

SECTION (1)OHS PCO DEPENDENT VARIABLE CP

TAP NO 165.0000166.0000167.0000168.0000

.000 -.2126 -.2108 -.1994 -.2005

ALPHAO(5) = 8.070 BETAO (1) = -8.050

SECTION (1)OHS PCO DEPENDENT VARIABLE CP

TAP NO 165.0000166.0000167.0000168.0000

.000 -.2373 -.2526 -.2158 -.1569

ALPHAO(5) = 8.080 BETAO (2) = -3.990

SECTION (1)OHS PCO DEPENDENT VARIABLE CP

TAP NO 165.0000166.0000167.0000168.0000

.000 -.2062 -.2310 -.2016 -.1552

ALPHAO(5) = 7.970 BETAO (3) = .050

SECTION (1)OHS PCO DEPENDENT VARIABLE CP

TAP NO 165.0000166.0000167.0000168.0000

.000 -.2062 -.2181 -.2132 -.1659

ALPHAO(5) = 7.960 BETAO (4) = 4.130

SECTION (1)OHS PCO DEPENDENT VARIABLE CP

TAP NO 165.0000166.0000167.0000168.0000

.000 -.2210 -.2271 -.2276 -.1866

ARC11-718 1A14 01+T12+S12N23 ONS PCO (RB1H42)

ALPHAO (5) = 7.940 BETAO (5) = 8.220

SECTION (1)ONS PCO DEPENDENT VARIABLE CP

TAP NO 165.0000166.0000167.0000168.0000

.000 -.2109 -.2188 -.2191 -.2002

ARC11-716 IA14 O1+T12+S12N25 OMS POD (RB1M43) (15 FEB 74)

REFERENCE DATA

SREF = 2.4210 SQ.FT. XMRP = 29.5600 INCHES
LREF = 38.7090 INCHES YMRP = .0000 INCHES
BREF = 38.7090 INCHES ZMRP = .0000 INCHES
SCALE = .0300 SCALE

PARAMETRIC DATA

MACH = .850 ELEVON = .000
RUDDER = .000 SPDBRK = .000

ALPHAO(1) = -7.890 BETAO (1) = -8.020

SECTION (1)OMS POD DEPENDENT VARIABLE CP

TAP NO 165.0000166.0000167.0000168.0000

.000 -.2750 -.2788 -.2535 -.1837

ALPHAO(1) = -7.780 BETAO (2) = -4.000

SECTION (1)OMS POD DEPENDENT VARIABLE CP

TAP NO 165.0000166.0000167.0000168.0000

.000 -.2839 -.2968 -.2781 -.2209

ALPHAO(1) = -7.780 BETAO (3) = .040

SECTION (1)OMS POD DEPENDENT VARIABLE CP

TAP NO 165.0000166.0000167.0000168.0000

.000 -.2862 -.2946 -.2804 -.2480

ALPHAO(1) = -7.850 BETAO (4) = 4.110

SECTION (1)OMS POD DEPENDENT VARIABLE CP

TAP NO 165.0000166.0000167.0000168.0000

.000 -.2700 -.2664 -.2620 -.2565

APC11-716 IA14 05+712+512N25 OMS POD (RB1M43)

ALPHAC (1) = -7.890 BETAC (5) = 8.170

SECTION (1)OMS POD DEPENDENT VARIABLE CP

TAP NO 165.0000166.0000167.0000168.0000

.000 -.2687 -.2683 -.2487 -.3149

ALPHAC (2) = -3.880 BETAC (1) = -6.060

SECTION (1)OMS POD DEPENDENT VARIABLE CP

TAP NO 165.0000166.0000167.0000168.0000

.000 [illegible]

ALPHAC (2) = -3.890 BETAC (2) = -4.070

SECTION (1)OMS POD DEPENDENT VARIABLE CP

TAP NO 165.0000166.0000167.0000168.0000

.000 -.2842 -.2967 -.2692 -.2179

ALPHAC (2) = -3.640 BETAC (3) = .030

SECTION (1)OMS POD DEPENDENT VARIABLE CP

TAP NO 165.0000166.0000167.0000168.0000

.000 -.2603 -.2607 -.2707 -.2328

ALPHAC (2) = -3.880 BETAC (4) = 4.090

SECTION (1)OMS POD DEPENDENT VARIABLE CP

TAP NO 165.0000166.0000167.0000168.0000

.000 -.2566 -.2474 -.2548 -.2408

ALPHAO(2) = -3.900 BETAO (5) = 8.150

SECTION (1)OMS POD DEPENDENT VARIABLE CP

TAP NO 165.0000166.0000167.0000168.0000

.000 -.2673 -.2619 -.2382 -.2062

ALPHAO(3) = -.310 BETAO (1) = -8.080

SECTION (1)OMS POD DEPENDENT VARIABLE CP

TAP NO 165.0000166.0000167.0000168.0000

.000 -.2791 -.2946 -.2549 -.1814

ALPHAO(3) = -.350 BETAO (2) = -5.040

SECTION (1)OMS POD DEPENDENT VARIABLE CP

TAP NO 165.0000166.0000167.0000168.0000

.000 -.2648 -.2734 -.2480 -.1935

ALPHAO(3) = -.340 BETAO (3) = .040

SECTION (1)OMS POD DEPENDENT VARIABLE CP

TAP NO 165.0000166.0000167.0000168.0000

.000 -.2504 -.2552 -.2498 -.2211

ALPHAO(3) = -.390 BETAO (4) = 4.090

SECTION (1)OMS POD DEPENDENT VARIABLE CP

TAP NO 165.0000166.0000167.0000168.0000

.000 -.2471 -.2435 -.2463 -.2368

ARC11-718 IA14 01+T12+S12N25 OMS POD (RB1M43)

ALPHAO(3) = -.340 BETAO (5) = 8.150

SECTION (1)OMS POD DEPENDENT VARIABLE CP

TAP NO 165.0000166.0000167.0000168.0000

.000 -.2490 -.2516 -.2346 -.2603

ALPHAO(4) = 4.130 BETAO (1) = -8.090

SECTION (1)OMS POD DEPENDENT VARIABLE CP

TAP NO 165.0000166.0000167.0000168.0000

.000 -.2562 -.2734 -.2332 -.1700

ALPHAO(4) = 4.050 BETAO (2) = -4.020

SECTION (1)OMS POD DEPENDENT VARIABLE CP

TAP NO 165.0000166.0000167.0000168.0000

.000 -.2358 -.2448 -.2245 -.1751

ALPHAO(4) = 4.050 BETAO (3) = .030

SECTION (1)OMS POD DEPENDENT VARIABLE CP

TAP NO 165.0000166.0000167.0000168.0000

.000 -.2266 -.2389 -.2296 -.1896

ALPHAO(4) = 4.140 BETAO (4) = 4.140

SECTION (1)OMS POD DEPENDENT VARIABLE CP

TAP NO 165.0000166.0000167.0000168.0000

.000 -.2356 -.2461 -.2408 -.2181

ORIGINAL PAGE IS OF POOR QUALITY

DATE 10 DEC 74 TABULATED PRESSURE DATA - IA14A - VOL. 4

ARC11-716 IA14 01+T12+S12N23 OMS POD (RB1H43)

ALPHAO(4) = 4.130 BETAO (5) = 8.190

SECTION (1)OMS POD DEPENDENT VARIABLE CP

TAP NO 165.0000166.0000167.0000168.0000

.000 -.2301 -.2293 -.2191 -.2145

ALPHAO(5) = 8.040 BETAO (1) = -8.070

SECTION (1)OMS POD DEPENDENT VARIABLE CP

TAP NO 165.0000166.0000167.0000168.0000

.000 -.2369 -.2502 -.2222 -.1571

ALPHAO(5) = 8.010 BETAO (2) = -4.020

SECTION (1)OMS POD DEPENDENT VARIABLE CP

TAP NO 165.0000166.0000167.0000168.0000

.000 -.2204 -.2326 -.2151 -.1621

ALPHAO(5) = 8.010 BETAO (3) = .030

SECTION (1)OMS POD DEPENDENT VARIABLE CP

TAP NO 165.0000166.0000167.0000168.0000

.000 -.2238 -.2351 -.2156 -.1811

ALPHAO(5) = 8.000 BETAO (4) = 4.130

SECTION (1)OMS POD DEPENDENT VARIABLE CP

TAP NO 165.0000166.0000167.0000168.0000

.000 -.2281 -.2291 -.2323 -.2034

ARC11-716 IA14 O1+T12+S12N25 OMS POD (RB1M43)

ALPHAO(5) = 8.090 BETAO (5) = 8.250

SECTION (1)OMS POD DEPENDENT VARIABLE CP

TAP NO 165.0000166.0000167.0000168.0000

.000 -.2340 -.2273 -.2386 -.2145

ARC11-716 IA14 O1+T12+S12N25 OMS POD (RB1H44) (15 FEB 74)

REFERENCE DATA

SREF = 2.4210 SQ.FT. XMRP = 29.5800 INCHES
LREF = 38.7090 INCHES YMRP = .0000 INCHES
BREF = 38.7090 INCHES ZMRP = .0000 INCHES
SCALE = .0300 SCALE

PARAMETRIC DATA

MACH = .900 ELEVON = .000
RUDDER = .000 SPDBRK = .000

ALPHAO(1) = -7.970 BETAO (1) = -8.050

SECTION (1)OMS POD DEPENDENT VARIABLE CP

TAP NO 165.0000166.0000167.0000168.0000

.000 -.3021 -.3079 -.2768 -.2093

ALPHAO(1) = -7.960 BETAO (2) = -4.000

SECTION (1)OMS POD DEPENDENT VARIABLE CP

TAP NO 165.0000166.0000167.0000168.0000

.000 -.2979 -.3066 -.2855 -.2386

ALPHAO(1) = -7.960 BETAO (3) = .050

SECTION (1)OMS POD DEPENDENT VARIABLE CP

TAP NO 165.0000166.0000167.0000168.0000

.000 -.3144 -.3198 -.3135 -.2826

ALPHAO(1) = -7.970 BETAO (4) = 4.100

SECTION (1)OMS POD DEPENDENT VARIABLE CP

TAP NO 165.0000166.0000167.0000168.0000

.000 -.2899 -.3009 -.2857 -.2832

ARC11-716 IA14 O1+T12+S12N25 OMS POD (RB1M44)

ALPHAO(1) = -8.000 BETAO (5) = 8.170

SECTION (1)OMS POD DEPENDENT VARIABLE CP

TAP NO 165.0000166.0000167.0000168.0000

.000 -.2986 -.2960 -.2474 -.3588

ALPHAO(2) = -4.070 BETAO (1) = -8.080

SECTION (1)OMS POD DEPENDENT VARIABLE CP

TAP NO 165.0000166.0000167.0000168.0000

.000 -.3094 -.3102 -.2820 -.2126

ALPHAO(2) = -3.970 BETAO (2) = -4.030

SECTION (1)OMS POD DEPENDENT VARIABLE CP

TAP NO 165.0000166.0000167.0000168.0000

.000 -.2887 -.3026 -.2798 -.2241

ALPHAO(2) = -3.880 BETAO (3) = .030

SECTION (1)OMS POD DEPENDENT VARIABLE CP

TAP NO 165.0000166.0000167.0000168.0000

.000 -.2913 -.2917 -.2941 -.2607

ALPHAO(2) = -3.920 BETAO (4) = 4.080

SECTION (1)OMS POD DEPENDENT VARIABLE CP

TAP NO 165.0000166.0000167.0000168.0000

.000 -.2758 -.2745 -.2636 -.2560

ALPHAO(2) = -3.930 BETAO (5) = 8.150

SECTION (1)OMS POD DEPENDENT VARIABLE CP

TAP NO 165.0000166.0000167.0000168.0000

.000 -.2816 -.2879 -.2426 -.3031

ALPHAO(3) = .080 BETAO (1) = -8.080

SECTION (1)OMS POD DEPENDENT VARIABLE CP

TAP NO 165.0000166.0000167.0000168.0000

.000 -.2990 -.3128 -.2720 -.2010

ALPHAO(3) = -.320 BETAO (2) = -4.030

SECTION (1)OMS POD DEPENDENT VARIABLE CP

TAP NO 165.0000166.0000167.0000168.0000

.000 -.2798 -.2895 -.2698 -.2139

ALPHAO(3) = -.320 BETAO (3) = .050

SECTION (1)OMS POD DEPENDENT VARIABLE CP

TAP NO 165.0000166.0000167.0000168.0000

.000 -.2691 -.2773 -.2699 -.2296

ALPHAO(3) = -.330 BETAO (4) = 4.100

SECTION (1)OMS POD DEPENDENT VARIABLE CP

TAP NO 165.0000166.0000167.0000168.0000

.000 -.2636 -.2661 -.2644 -.2420

ALPHAO(3) = -.330 BETAO (5) = 8.150

SECTION (1)OMS POD DEPENDENT VARIABLE CP

TAP NO 165.0000166.0000167.0000168.0000

.000 -.2803 -.2922 -.2550 -.2706

ALPHAO(4) = 4.200 BETAO (1) = -8.100

SECTION (1)OMS POD DEPENDENT VARIABLE CP

TAP NO 165.0000166.0000167.0000168.0000

.000 -.2846 -.3009 -.2540 -.1918

ALPHAO(4) = 4.190 BETAO (2) = -4.020

SECTION (1)OMS POD DEPENDENT VARIABLE CP

TAP NO 165.0000166.0000167.0000168.0000

.000 -.2490 -.2628 -.2192 -.1925

ALPHAO(4) = 4.060 BETAO (3) = .04

SECTION (1)OMS POD DEPENDENT VARIABLE CP

TAP NO 165.0000166.0000167.0000168.0000

.000 -.2525 -.2605 -.2501 -.2112

ALPHAO(4) = 4.100 BETAO (4) = 4.110

SECTION (1)OMS POD DEPENDENT VARIABLE CP

TAP NO 165.0000166.0000167.0000168.0000

.000 -.2487 -.2588 -.2525 -.2271

ALPHAO(4) = 4.100 BETAO (5) = 8.190

SECTION (1)OMS PCO DEPENDENT VARIABLE CP

TAP NO 165.0000166.0000167.0000168.0000

.000 -.2595 -.2750 -.2418 -.2272

ALPHAO(5) = 8.040 BETAO (1) = -8.080

SECTION (1)OMS PCO DEPENDENT VARIABLE CP

TAP NO 165.0000166.0000167.0000168.0000

.000 -.2491 -.2514 -.2258 -.1693

ALPHAO(5) = 7.980 BETAO (2) = -4.020

SECTION (1)OMS PCO DEPENDENT VARIABLE CP

TAP NO 165.0000166.0000167.0000168.0000

.000 -.2266 -.2368 -.2167 -.1740

ALPHAO(5) = 7.970 BETAO (3) = .020

SECTION (1)OMS PCO DEPENDENT VARIABLE CP

TAP NO 165.0000166.0000167.0000168.0000

.000 -.2332 -.2467 -.2365 -.1904

ALPHAO(5) = 8.020 BETAO (4) = 4.130

SECTION (1)OMS PCO DEPENDENT VARIABLE CP

TAP NO 165.0000166.0000167.0000168.0000

.000 -.2593 -.2595 -.2596 -.2208

AR011-716 IA14 01+T12+S12N25 OMS POD (RB1M44)

ALPHA(5) = 0.080 BETA(5) = 0.230

SECTION (11)OMS POD DEPENDENT VARIABLE CP

TAP NO 165.0000166.0000167.0000168.0000

.000 -.2549 -.2450 -.2463 -.2195

ARC11-716 IA14 O1+T12+S12N25 OMS POD (RB1H45) (20 FEB 74)

REFERENCE DATA

SREF = 2.4210 SQ.FT. XMRP = 29.5800 INCHES
LREF = 38.7090 INCHES YMRP = .0000 INCHES
BREF = 38.7090 INCHES ZMRP = .0000 INCHES
SCALE = .0300 SCALE

PARAMETRIC DATA

MACH = .950 ELEVON = .000
RUDDER = .000 SPDBRK = .000

ALPHAO(1) = -7.870 BETAO (1) = -8.040

SECTION (1)OMS POD DEPENDENT VARIABLE CP

TAP NO 165.0000166.0000167.0000168.0000

.000 -.3422 -.3464 -.3389 -.2449

ALPHAO(1) = -7.770 BETAO (2) = -4.010

SECTION (1)OMS POD DEPENDENT VARIABLE CP

TAP NO 165.0000166.0000167.0000168.0000

.000 -.3424 -.3598 -.3587 -.2770

ALPHAO(1) = -7.760 BETAO (3) = .040

SECTION (1)OMS POD DEPENDENT VARIABLE CP

TAP NO 165.0000166.0000167.0000168.0000

.000 -.3334 -.3571 -.3467 -.2886

ALPHAO(1) = -7.900 BETAO (4) = 4.110

SECTION (1)OMS POD DEPENDENT VARIABLE CP

TAP NO 165.0000166.0000167.0000168.0000

.000 -.3592 -.3671 -.3365 -.3325

ORIGINAL PAGE IS OF POOR QUALITY

ALPHAO(1) = -7.930 BETAO (5) = 8.150

SECTION (1)OMS POD DEPENDENT VARIABLE CP

TAP NO 165.0000166.0000167.0000168.0000

.000 -.3521 -.3549 -.3150 -.4439

ALPHAO(2) = -4.020 BETAO (1) = -8.080

SECTION (1)OMS POD DEPENDENT VARIABLE CP

TAP NO 165.0000166.0000167.0000168.0000

.000 -.3193 -.3486 -.3356 -.2474

ALPHAO(2) = -3.980 BETAO (2) = -4.030

SECTION (1)OMS POD DEPENDENT VARIABLE CP

TAP NO 165.0000166.0000167.0000168.0000

.000 -.3309 -.3581 -.3441 -.2759

ALPHAO(2) = -3.870 BETAO (3) = .010

SECTION (1)OMS POD DEPENDENT VARIABLE CP

TAP NO 165.0000166.0000167.0000168.0000

.000 -.3229 -.3374 -.3225 -.2734

ALPHAO(2) = -3.940 BETAO (4) = 4.090

SECTION (1)OMS POD DEPENDENT VARIABLE CP

TAP NO 165.0000166.0000167.0000168.0000

.000 -.3254 -.3373 -.3072 -.3094

ARC11-716 IA14 01+T12+S12N25 OMS POD (RB1M45)

ALPHAO(2) = -3.950 BETAO (5) = 8.170

SECTION (1)OMS POD DEPENDENT VARIABLE CP

TAP NO 165.0000166.0000167.0000168.0000

.000 -.3405 -.3363 -.3003 -.3511

ALPHAO(3) = -.300 BETAO (1) = -8.100

SECTION (1)OMS POD DEPENDENT VARIABLE CP

TAP NO 165.0000166.0000167.0000168.0000

.000 -.3290 -.3290 -.3137 -.2412

ALPHAO(3) = -.320 BETAO (2) = -4.030

SECTION (1)OMS POD DEPENDENT VARIABLE CP

TAP NO 165.0000166.0000167.0000168.0000

.000 -.3096 -.3202 -.3218 -.2628

ALPHAO(3) = -.330 BETAO (3) = .040

SECTION (1)OMS POD DEPENDENT VARIABLE CP

TAP NO 165.0000166.0000167.0000168.0000

.000 -.3073 -.3107 -.2645 -.2014

ALPHAO(3) = -.330 BETAO (4) = 4.090

SECTION (1)OMS POD DEPENDENT VARIABLE CP

TAP NO 165.0000166.0000167.0000168.0000

.000 -.3217 -.3261 -.2970 -.3136

ORIGINAL PAGE IS OF POOR QUALITY

ARC11-716 1A14 Q1+T12+S12N25 OMS POD (RB1H45)

ALPHA0(3) = -.330 BETA0 (3) = 8.160

SECTION (1)OMS POD DEPENDENT VARIABLE CP

TAP NO 165.0000166.0000167.0000168.0000

.000 -.3335 -.3344 -.2097 -.3165

ALPHA0(4) = 4.170 BETA0 (3) = -8.100

SECTION (1)OMS POD DEPENDENT VARIABLE CP

TAP NO 165.0000166.0000167.0000168.0000

.000 -.3212 -.3296 -.3064 -.2328

ALPHA0(4) = 4.230 BETA0 (2) = -4.030

SECTION (1)OMS POD DEPENDENT VARIABLE CP

TAP NO 165.0000166.0000167.0000168.0000

.000 -.2921 -.3022 -.3923 -.2316

ALPHA0(4) = 4.190 BETA0 (3) = .010

SECTION (1)OMS POD DEPENDENT VARIABLE CP

TAP NO 165.0000166.0000167.0000168.0000

.000 -.2789 -.2787 -.2321 -.1737

ALPHA0(4) = 4.140 BETA0 (4) = 4.110

SECTION (1)OMS POD DEPENDENT VARIABLE CP

TAP NO 165.0000166.0000167.0000168.0000

.000 -.2996 -.3104 -.2615 -.2726

ARC11-716 IA14 01+T12+S12N25 OMS POD (RB1M45)

ALPHAO(5) = 8.150 BETAO (1) = -8.090

SECTION (1)OMS POD DEPENDENT VARIABLE CP

TAP NO 165.0000166.0000167.0000168.0000

.000 -.2921 -.2990 -.2844 -.2275

ALPHAO(5) = 8.150 BETAO (2) = -4.030

SECTION (1)OMS POD DEPENDENT VARIABLE CP

TAP NO 165.0000166.0000167.0000168.0000

.000 -.2619 -.2829 -.2847 -.2169

ALPHAO(5) = 8.140 BETAO (3) = .040

SECTION (1)OMS POD DEPENDENT VARIABLE CP

TAP NO 165.0000166.0000167.0000168.0000

.000 -.2695 -.2866 -.2858 -.2419

ALPHAO(5) = 8.140 BETAO (4) = 4.150

SECTION (1)OMS POD DEPENDENT VARIABLE CP

TAP NO 165.0000166.0000167.0000168.0000

.000 -.2840 -.2868 -.2534 -.2145

ALPHAO(5) = 8.120 BETAO (5) = 8.270

SECTION (1)OMS POD DEPENDENT VARIABLE CP

TAP NO 165.0000166.0000167.0000168.0000

.000 -.3053 -.3057 -.2746 -.2437

ARC11-716 IA14 CY 12+S12N25 OMS PCO (RB1M46) (15 FEB 74)

REFERENCE DATA

SREF = 2.4210 SQ.FT. XMRP = 99.5000 INCHES
LREF = 38.7090 INCHES YMRP = .0000 INCHES
BREF = 38.7090 INCHES ZMRP = .0000 INCHES
SCALE = .0300 SCALE

PARAMETRIC DATA

MACH = .675 ELEVON = .000
RUDDER = .000 SPOIRK = .000

ALPHAO(1) = -7.970 BETAO (1) = -8.050

SECTION (1)OMS PCO DEPENDENT VARIABLE CP

TAP NO 165.0000166.0000167.0000168.0000

.000 -.3736 -.3792 -.3439 -.2280

ALPHAO(1) = -7.940 BETAO (2) = -4.020

SECTION (1)OMS PCO DEPENDENT VARIABLE CP

TAP NO 165.0000166.0000167.0000168.0000

.000 -.3761 -.3784 -.3610 -.2583

ALPHAO(1) = -7.890 BETAO (3) = .030

SECTION (1)OMS PCO DEPENDENT VARIABLE CP

TAP NO 165.0000166.0000167.0000168.0000

.000 -.3574 -.3584 -.3445 -.2721

ALPHAO(1) = -7.950 BETAO (4) = 4.100

SECTION (1)OMS PCO DEPENDENT VARIABLE CP

TAP NO 165.0000166.0000167.0000168.0000

.000 -.3800 -.3873 -.3797 -.3535

ORIGINAL PAGE IS OF POOR QUALITY

ALPHAO(1) = -7.980 BETAO (5) = 8.190

SECTION (1)OMS POD DEPENDENT VARIABLE CP

TAP NO 165.0000166.0000167.0000168.0000

.000 -.3877 -.3913 -.3720 -.5001

ALPHAO(2) = -3.920 BETAO (1) = -8.060

SECTION (1)OMS POD DEPENDENT VARIABLE CP

TAP NO 165.0000166.0000167.0000168.0000

.000 -.3625 -.3740 -.3397 -.2282

ALPHAO(2) = -3.920 BETAO (2) = -4.010

SECTION (1)OMS POD DEPENDENT VARIABLE CP

TAP NO 165.0000166.0000167.0000168.0000

.000 -.3629 -.3749 -.3504 -.2531

ALPHAO(2) = -3.850 BETAO (3) = .520

SECTION (1)OMS POD DEPENDENT VARIABLE CP

TAP NO 165.0000166.0000167.0000168.0000

.000 -.3391 -.3486 -.3186 -.2468

ALPHAO(2) = -3.970 BETAO (4) = 4.100

SECTION (1)OMS POD DEPENDENT VARIABLE CP

TAP NO 165.0000166.0000167.0000168.0000

.000 -.3614 -.3780 -.3675 -.3809

AP011-718 TA14 O1+T12+S12N25 OMS POD (RB1H46)

ALPHAO(2) = -3.990 BETAO (5) = 8.160

SECTION (1)OMS POD DEPENDENT VARIABLE CP

TAP NO 165.0000166.0000167.0000168.0000

.000 -.3782 -.3772 -.3640 -.3980

ALPHAO(3) = -.300 BETAO (1) = -8.100

SECTION (1)OMS POD DEPENDENT VARIABLE CP

TAP NO 165.0000166.0000167.0000168.0000

.000 -.3523 -.3561 -.3249 -.0287

ALPHAO(3) = -.320 BETAO (2) = -4.030

SECTION (1)OMS POD DEPENDENT VARIABLE CP

TAP NO 165.0000166.0000167.0000168.0000

.000 -.3361 -.3556 -.3391 -.2508

ALPHAO(3) = -.330 BETAO (3) = .040

SECTION (1)OMS POD DEPENDENT VARIABLE CP

TAP NO 165.0000166.0000167.0000168.0000

.000 -.3269 -.3381 -.2430 -.2768

ALPHAO(3) = -.330 BETAO (4) = 4.080

SECTION (1)OMS POD DEPENDENT VARIABLE CP

TAP NO 165.0000166.0000167.0000168.0000

.000 -.3465 -.3558 -.3794 -.3845

ORIGINAL PAGE IS OF POOR QUALITY

ALPHAO(3) = -.330 BETAO (5) = 8.160

SECTION (1)OMS POD DEPENDENT VARIABLE CP

TAP NO 165.0000166.0000167.0000168.0000

.000 -.3550 -.3578 -.3514 -.3558

ALPHAO(4) = 4.100 BETAO (1) = -8.100

SECTION (1)OMS POD DEPENDENT VARIABLE CP

TAP NO 165.0000166.0000167.0000168.0000

.000 -.3394 -.3524 -.3236 -.2244

ALPHAO(4) = 4.090 BETAO (2) = -4.040

SECTION (1)OMS POD DEPENDENT VARIABLE CP

TAP NO 165.0000166.0000167.0000168.0000

.000 -.3213 -.3238 -.3025 -.2309

ALPHAO(4) = 4.090 BETAO (3) = .030

SECTION (1)OMS POD DEPENDENT VARIABLE CP

TAP NO 165.0000166.0000167.0000168.0000

.000 -.3108 -.3262 -.2154 -.2839

ALPHAO(4) = 4.070 BETAO (4) = 4.120

SECTION (1)OMS POD DEPENDENT VARIABLE CP

TAP NO 165.0000166.0000167.0000168.0000

.000 -.3305 -.3362 -.3434 -.3613

ARC11-716 IA14 01+T12+S12N25 OMS PCO (RE1M46)

ALPHAO(4) = 4.060 BETAO (5) = 8.200

SECTION (1)OMS PCO DEPENDENT VARIABLE CP

TAP NO 165.0000168.0000167.0000168.0000

.000 -.3475 -.362 -.3482 -.3001

ALPHAO(5) = 8.040 BETAO (1) = -8.080

SECTION (1)OMS PCO DEPENDENT VARIABLE CP

TAP NO 165.0000166.0000167.0000168.0000

.000 -.3135 -.3163 -.3000 -.2243

ALPHAO(5) = 7.920 BETAO (2) = -4.020

SECTION (1)OMS PCO DEPENDENT VARIABLE CP

TAP NO 165.0000166.0000167.0000168.0000

.000 -.3020 -.3115 -.2924 -.2324

ALPHAO(5) = 7.910 BETAO (3) = .080

SECTION (1)OMS PCO DEPENDENT VARIABLE CP

TAP NO 165.0000166.0000167.0000168.0000

.000 -.2930 -.3010 -.2599 -.1943

ALPHAO(5) = 8.040 BETAO (4) = 4.150

SECTION (1)OMS PCO DEPENDENT VARIABLE CP

TAP NO 165.0000166.0000167.0000168.0000

.000 -.3242 -.3324 -.2686 -.3161

ORIGINAL PAGE IS
OF POOR QUALITY

ARC11-716 IA14 O1+T12+S12N25 OMS POD (RB1M46)

ALPHAO(5) = 8.030 BETAO (5) = 8.220

SECTION (1)OMS POD DEPENDENT VARIABLE CP

TAP NO 165.0000166.0000167.0000168.0000

.000 -.3329 -.3298 -.2907 -.2990

ARC11-716 IA14 O1+T12+S12N25 OMS POD (RB1K47) (15 FEB 74)

REFERENCE DATA

SREF = 2.4210 SQ.FT. XMRP = 29.5800 INCHES
LREF = 38.7090 INCHES YMRP = .0000 INCHES
BREF = 38.7090 INCHES ZMRP = .0000 INCHES
SCALE = .0300 SCALE

PARAMETRIC DATA

MACH = 1.050 ELEVON = .000
RUDDER = .000 SPOBRK = .000

ALPHAO(1) = -7.960 BETAO (1) = -8.070

SECTION (1)OMS POD DEPENDENT VARIABLE CP

TAP NO 165.0000166.0000167.0000168.0000

.000 -.3584 -.3662 -.2584 -.1300

ALPHAO(1) = -7.960 BETAO (2) = -4.010

SECTION (1)OMS POD DEPENDENT VARIABLE CP

TAP NO 165.0000166.0000167.0000168.0000

.000 -.3511 -.3619 -.2761 -.1615

ALPHAO(1) = -7.960 BETAO (3) = .030

SECTION (1)OMS POD DEPENDENT VARIABLE CP

TAP NO 165.0000166.0000167.0000168.0000

.000 -.3440 -.3455 -.3175 -.2351

ALPHAO(1) = -7.960 BETAO (4) = 4.120

SECTION (1)OMS POD DEPENDENT VARIABLE CP

TAP NO 165.0000166.0000167.0000168.0000

.000 -.3617 -.3712 -.3683 -.3177

ALPHAO(1) = -7.990 BETAO (5) = 8.210

SECTION (1)OMS POD DEPENDENT VARIABLE CP

TAP NO 165.0000166.0000167.0000168.0000

.000 -.3861 -.3908 -.3762 -.4653

ALPHAO(2) = -3.820 BETAO (1) = -8.120

SECTION (1)OMS POD DEPENDENT VARIABLE CP

TAP NO 165.0000166.0000167.0000168.0000

.000 -.3525 -.3572 -.2545 -.1259

ALPHAO(2) = -3.830 BETAO (2) = -4.020

SECTION (1)OMS POD DEPENDENT VARIABLE CP

TAP NO 165.0000166.0000167.0000168.0000

.000 -.3412 -.3462 -.2648 -.1477

ALPHAO(2) = -3.910 BETAO (3) = .030

SECTION (1)OMS POD DEPENDENT VARIABLE CP

TAP NO 165.0000166.0000167.0000168.0000

.000 -.3272 -.3350 -.3285 -.2761

ALPHAO(2) = -3.910 BETAO (4) = 4.100

SECTION (1)OMS POD DEPENDENT VARIABLE CP

TAP NO 165.0000166.0000167.0000168.0000

.000 -.3563 -.3579 -.3761 -.3384

ALPHAO(2) = -3.920 BETAO (5) = 8.180

SECTION (1)OMS POD DEPENDENT VARIABLE CP

TAP NO 165.0000166.0000167.0000168.0000

.000 -.3749 -.3809 -.3917 -.3897

ALPHAO(3) = .020 BETAO (1) = -8.130

SECTION (1)OMS POD DEPENDENT VARIABLE CP

TAP NO 165.0000166.0000167.0000168.0000

.000 -.3490 -.3553 -.2614 -.1328

ALPHAO(3) = .000 BETAO (2) = -4.060

SECTION (1)OMS POD DEPENDENT VARIABLE CP

TAP NO 165.0000166.0000167.0000168.0000

.000 -.3339 -.3335 -.2565 -.1361

ALPHAO(3) = -.330 BETAO (3) = .040

SECTION (1)OMS POD DEPENDENT VARIABLE CP

TAP NO 165.0000166.0000167.0000168.0000

.000 -.3146 -.3210 -.3224 -.2904

ALPHAO(3) = .060 BETAO (4) = 4.100

SECTION (1)OMS POD DEPENDENT VARIABLE CP

TAP NO 165.0000166.0000167.0000168.0000

.000 -.3439 -.3499 -.3791 -.3579

ORIGINAL PAGE IS OF POOR QUALITY

ALPHAO(5) = .070 BETAO (5) = 8.180

SECTION (1)OMS POD DEPENDENT VARIABLE CP

TAP NO	165.0000	166.0000	167.0000	168.0000
.000	-.3647	-.3730	-.4036	-.3896

ALPHAO(4) = 4.120 BETAO (1) = -8.110

SECTION (1)OMS POD DEPENDENT VARIABLE CP

TAP NO	165.0000	166.0000	167.0000	168.0000
.000	-.3397	-.3451	-.2364	-.1093

ALPHAO(4) = 4.100 BETAO (2) = -4.030

SECTION (1)OMS POD DEPENDENT VARIABLE CP

TAP NO	165.0000	166.0000	167.0000	168.0000
.000	- 3151	-.3153	-.1618	-.1942

ALPHAO(4) = 4.100 BETAO (3) = .040

SECTION (1)OMS POD DEPENDENT VARIABLE CP

TAP NO	165.0000	166.0000	167.0000	168.0000
.000	-.3175	-.3198	-.3464	-.3318

ALPHAO(4) = 4.090 BETAO (4) = 4.130

SECTION (1)OMS POD DEPENDENT VARIABLE CP

TAP NO	165.0000	166.0000	167.0000	168.0000
.000	-.3414	-.3494	-.3828	-.3842

ALPHAO(4) = 4.080 BETAO (5) = 8.230

SECTION (1)OMS POD DEPENDENT VARIABLE CP

TAP NO 165.0000166.0000167.0000168.0000

.000 -.3608 -.3608 -.3820 -.3860

ALPHAO(5) = 8.050 BETAO (1) = -8.090

SECTION (1)OMS POD DEPENDENT VARIABLE CP

TAP NO 165.0000166.0000167.0000168.0000

.000 -.3580 -.3400 -.2009 -.0896

ALPHAO(5) = 8.050 BETAO (2) = -4.040

SECTION (1)OMS POD DEPENDENT VARIABLE CP

TAP NO 165.0000166.0000167.0000168.0000

.000 -.3144 -.3142 -.2100 -.1277

ALPHAO(5) = 8.030 BETAO (3) = .020

SECTION (1)OMS POD DEPENDENT VARIABLE CP

TAP NO 165.0000166.0000167.0000168.0000

.000 -.3150 -.3186 -.3590 -.3893

ALPHAO(5) = 8.020 BETAO (4) = 4.170

SECTION (1)OMS POD DEPENDENT VARIABLE CP

TAP NO 165.0000166.0000167.0000168.0000

.000 -.3408 -.3497 -.3937 -.4062

DATE 10 DEC 74 TABULATED PRESSURE DATA - IA14A - VOL. 4

ARC11-716 IA14 01+T12+S12N25 OMS POD (RB1M47)

ALPHAO(5) = 8.020 BETAO (5) = 8.260

SECTION (1)OMS POD DEPENDENT VARIABLE CP

TAP NO 165.0000166.0000167.0000168.0000

.000 -.3615 -.3680 -.4066 -.4208

ORIGINAL PAGE IS
OF POOR QUALITY

ARC11-716 IA14 01+T12+S12N25 OMS PCO (RB1M48) (15 FEB 74)

REFERENCE DATA

SREF = 2.4210 SQ.FT. XMRP = 39.5600 INCHES
LREF = 38.7090 INCHES YMRP = .0000 INCHES
MREF = 38.7090 INCHES ZMRP = .0000 INCHES
SCALE = .0300 SCALE

PARAMETRIC DATA

MACH = 1.100 ELEVON = .000
RUDDER = .000 SPOBRK = .000

ALPHAO(1) = -7.930 BETAO (1) = -8.080

SECTION (1)OMS PCO DEPENDENT VARIABLE CP

TAP NO 165.0000166.0000167.0000168.0000

.000 -.3606 -.3645 -.1919 -.0700

ALPHAO(1) = -7.930 BETAO (2) = -4.020

SECTION (1)OMS PCO DEPENDENT VARIABLE CP

TAP NO 165.0000166.0000167.0000168.0000

.000 -.3617 -.3658 -.2207 -.1191

ALPHAO(1) = -7.920 BETAO (3) = .040

SECTION (1)OMS PCO DEPENDENT VARIABLE CP

TAP NO 165.0000166.0000167.0000168.0000

.000 -.3437 -.3448 -.2682 -.2017

ALPHAO(1) = -7.930 BETAO (4) = 4.090

SECTION (1)OMS PCO DEPENDENT VARIABLE CP

TAP NO 165.0000166.0000167.0000168.0000

.000 -.3792 -.3756 -.3270 -.2829

ALPHAO(1) = -7.950 BETAO (5) = 8.230

SECTION (1)OMS POD DEPENDENT VARIABLE CP

TAP NO 165.0000166.0000167.0000168.0000

.000 -.3851 -.3837 -.3559 -.4242

ALPHAO(2) = -3.940 BETAO (1) = -8.110

SECTION (1)OMS POD DEPENDENT VARIABLE CP

TAP NO 165.0000166.0000167.0000168.0000

.000 -.3489 -.3532 -.1880 -.0641

ALPHAO(2) = -3.980 BETAO (2) = -4.020

SECTION (1)OMS POD DEPENDENT VARIABLE CP

TAP NO 165.0000166.0000167.0000168.0000

.000 -.3496 -.3551 -.1974 -.1390

ALPHAO(2) = -3.890 BETAO (3) = .050

SECTION (1)OMS POD DEPENDENT VARIABLE CP

TAP NO 165.0000166.0000167.0000168.0000

.000 -.3261 -.3299 -.2964 -.2319

ALPHAO(2) = -3.890 BETAO (4) = 4.130

SECTION (1)OMS POD DEPENDENT VARIABLE CP

TAP NO 165.0000166.0000167.0000168.0000

.000 -.3629 -.3649 -.3512 -.3070

ALPHAO(2) = -3.890 BETAO (5) = 8.190

SECTION (1)OMS POD DEPENDENT VARIABLE CP

TAP NO 165.0000166.0000167.0000168.0000

.000 -.3795 -.3884 -.3774 -.3884

ALPHAO(3) = -.310 BETAO (1) = -8.140

SECTION (1)OMS POD DEPENDENT VARIABLE CP

TAP NO 165.0000166.0000167.0000168.0000

.000 -.3477 -.3485 -.1880 -.0615

ALPHAO(3) = -.330 BETAO (2) = -4.040

SECTION (1)OMS POD DEPENDENT VARIABLE CP

TAP NO 165.0000166.0000167.0000168.0000

.000 -.3394 -.3435 -.2348 -.1842

ALPHAO(3) = -.340 BETAO (3) = .030

SECTION (1)OMS POD DEPENDENT VARIABLE CP

TAP NO 165.0000166.0000167.0000168.0000

.000 -.3151 -.3185 -.3070 -.2515

ALPHAO(3) = -.340 BETAO (4) = 4.110

SECTION (1)OMS POD DEPENDENT VARIABLE CP

TAP NO 165.0000166.0000167.0000168.0000

.000 -.3479 -.3477 -.3541 -.3156

ORIGINAL PAGE IS OF POOR QUALITY

ALPHAO(3) = -.340 BETAO (3) = 8.180

SECTION (1)OMS PCO DEPENDENT VARIABLE CP

TAP NO 165.0000166.0000167.0000168.0000

.000 -.3762 -.3753 -.3945 -.3838

ALPHAO(4) = 4.170 BETAO (1) = -8.250

SECTION (1)OMS PCO DEPENDENT VARIABLE CP

TAP NO 165.0000166.0000167.0000168.0000

.000 -.3477 -.3473 -.1423 -.0259

ALPHAO(4) = 4.160 BETAO (2) = -4.050

SECTION (1)OMS PCO DEPENDENT VARIABLE CP

TAP NO 165.0000166.0000167.0000168.0000

.000 -.3322 -.3345 -.2899 -.2377

ALPHAO(4) = 4.170 BETAO (3) = .030

SECTION (1)OMS PCO DEPENDENT VARIABLE CP

TAP NO 165.0000166.0000167.0000168.0000

.000 -.3145 -.3169 -.3175 -.2947

ALPHAO(4) = 4.170 BETAO (4) = 4.130

SECTION (1)OMS PCO DEPENDENT VARIABLE CP

TAP NO 165.0000166.0000137.0000168.0000

.000 -.3493 -.3608 -.3698 -.3550

ALPHAO(4) = 4.160 BETAO (5) = 8.240

SECTION (1)OMS POD DEPENDENT VARIABLE CP

TAP NO 165.0000166.0000167.0000164.0000

.000 -.3656 -.3695 -.3816 -.3767

ALPHAO(5) = 8.130 BETAO (1) = -4.040

SECTION (1)OMS POD DEPENDENT VARIABLE CP

TAP NO 165.0000166.0000167.0000168.0000

.000 -.3294 -.3339 -.3093 -.3151

ALPHAO(5) = 8.130 BETAO (2) = .040

SECTION (1)OMS POD DEPENDENT VARIABLE CP

TAP NO 165.0000166.0000167.0000168.0000

.000 -.3202 -.3221 -.3480 -.3480

ALPHAO(5) = 8.120 BETAO (3) = 4.160

SECTION (1)OMS POD DEPENDENT VARIABLE CP

TAP NO 165.0000166.0000167.0000168.0000

.000 -.3526 -.3620 -.3845 -.3826

ALPHAO(5) = 8.110 BETAO (4) = 8.270

SECTION (1)OMS POD DEPENDENT VARIABLE CP

TAP NO 165.0000166.0000167.0000168.0000

.000 -.3695 -.3718 -.3945 -.3997

ARC11-716 IA14 O1+T12+S12N25 OMS POD (RB1M49) (15 FEB 74)

REFERENCE DATA

SREF = 2.4210 SQ.FT. XMRP = 29.5800 INCHES
LREF = 38.7090 INCHES YMRP = .0000 INCHES
BREF = 38.7090 INCHES ZMRP = .0000 INCHES
SCALE = .0300 SCALE

PARAMETRIC DATA

MACH = 1.150 ELEVON = .000
RUDDER = .000 SPOBRK = .000

ALPHAO(1) = -7.860 BETAO (1) = -8.060

SECTION (1)OMS POD DEPENDENT VARIABLE CP

TAP NO 165.0000166.0000167.0000168.0000

.000 -.3368 -.3420 -.1267 -.0116

ALPHAO(1) = -7.860 BETAO (2) = -4.000

SECTION (1)OMS POD DEPENDENT VARIABLE CP

TAP NO 165.0000166.0000167.0000168.0000

.000 -.3213 -.3241 -.1480 -.0515

ALPHAO(1) = -7.860 BETAO (3) = .040

SECTION (1)OMS POD DEPENDENT VARIABLE CP

TAP NO 165.0000166.0000167.0000168.0000

.000 -.3187 -.3215 -.2102 -.1462

ALPHAO(1) = -7.870 BETAO (4) = 4.100

SECTION (1)OMS POD DEPENDENT VARIABLE CP

TAP NO 165.0000166.0000167.0000168.0000

.000 -.3320 -.3327 -.2611 -.2224

ARC11-716 IA14 O1+T12+S12N25 OMS POD (RB1M49)

ALPHAO(1) = -7.890 BETAO (5) = 8.200

SECTION (1)OMS POD DEPENDENT VARIABLE CP

TAP NO 165.0000166.0000167.0000168.0000

.000 -.3540 -.3615 -.3131 -.3639

ALPHAO(2) = -3.930 BETAO (1) = -8.100

SECTION (1)OMS POD DEPENDENT VARIABLE CP

TAP NO 165.0000166.0000167.0000168.0000

.000 -.3242 -.3266 -.1278 -.0110

ALPHAO(2) = -3.880 BETAO (2) = -4.120

SECTION (1)OMS POD DEPENDENT VARIABLE CP

TAP NO 165.0000166.0000167.0000168.0000

.000 -.3074 -.3102 -.1437 -.0386

ALPHAO(2) = -3.890 BETAO (3) = .030

SECTION (1)OMS POD DEPENDENT VARIABLE CP

TAP NO 165.0000166.0000167.0000168.0000

.000 -.2877 -.2891 -.2343 -.1681

ALPHAO(2) = -3.890 BETAO (4) = 4.080

SECTION (1)OMS POD DEPENDENT VARIABLE CP

TAP NO 165.0000166.0000167.0000168.0000

.000 -.3270 -.3274 -.2838 -.2372

ALPHAO(2) = -3.890 BETAO (5) = 8.180

SECTION (1)OMS POD DEPENDENT VARIABLE CP

TAP NO 165.0000166.0000167.0000168.0000

.000 -.3533 -.3564 -.3376 -.3475

ALPHAO(3) = -.310 BETAO (1) = -8.100

SECTION (1)OMS POD DEPENDENT VARIABLE CP

TAP NO 165.0000166.0000167.0000168.0000

.000 -.3151 -.3210 -.1566 -.0554

ALPHAO(3) = -.330 BETAO (2) = -4.030

SECTION (1)OMS POD DEPENDENT VARIABLE CP

TAP NO 165.0000166.0000167.0000168.0000

.000 -.3017 -.3060 -.1829 -.1170

ALPHAO(3) = -.340 BETAO (3) = .030

SECTION (1)OMS POD DEPENDENT VARIABLE CP

TAP NO 165.0000166.0000167.0000168.0000

.000 -.2916 -.2956 -.2608 -.2020

ALPHAO(3) = -.340 BETAO (4) = 4.100

SECTION (1)OMS POD DEPENDENT VARIABLE CP

TAP NO 165.0000166.0000167.0000168.0000

.000 -.3181 -.3165 -.3018 -.2589

ARC11-716 IA14 01+T12+S12N25 OMS POD (RB1H49)

ALPHAO(3) = -.340 BETAO (5) = 8.170

SECTION (1)OMS POD DEPENDENT VARIABLE CP

TAP NO 165.0000166.0000167.0000168.0000

.000 -.3502 -.3494 -.3554 -.3403

ALPHAO(4) = 4.130 BETAO (1) = -8.080

SECTION (1)OMS POD DEPENDENT VARIABLE CP

TAP NO 165.0000166.0000167.0000166.0000

.000 -.3103 -.3101 -.1900 -.1227

ALPHAO(4) = 4.010 BETAO (2) = -4.010

SECTION (1)OMS POD DEPENDENT VARIABLE CP

TAP NO 165.0000166.0000167.0000168.0000

.000 -.3014 -.3073 -.2411 -.1786

ALPHAO(4) = 4.000 BETAO (3) = .040

SECTION (1)OMS POD DEPENDENT VARIABLE CP

TAP NO 165.0000166.0000167.0000168.0000

.000 -.2908 -.2961 -.2856 -.2698

ALPHAO(4) = 4.030 BETAO (4) = 4.110

SECTION (1)OMS POD DEPENDENT VARIABLE CP

TAP NO 165.0000166.0000167.0000168.0000

.000 -.3210 -.3247 -.3218 -.3057

ORIGINAL PAGE IS OF POOR QUALITY

DATE 10 DEC 74 TABULATED PRESSURE DATA - IA14A - VOL. 4

ARC11-716 IA14 O1+T12+S12N25 OMS POD (RB1M49)

ALPHAO(4) = 4.030 BETAO (5) = 8.210

SECTION (1)OMS POD DEPENDENT VARIABLE CP

TAP NO 165.0000166.0000167.0000168.0000

.000 -.3302 -.3344 -.3445 -.3479

ALPHAO(5) = 8.040 BETAO (1) = -8.090

SECTION (1)OMS POD DEPENDENT VARIABLE CP

TAP NO 165.0000166.0000167.0000168.0000

.000 -.3120 -.3118 -.2363 -.1706

ALPHAO(5) = 7.970 BETAO (2) = -4.030

SECTION (1)OMS POD DEPENDENT VARIABLE CP

TAP NO 165.0000166.0000167.0000168.0000

.000 -.3025 -.3037 -.2700 -.2609

ALPHAO(5) = 8.060 BETAO (3) = .040

SECTION (1)OMS POD DEPENDENT VARIABLE CP

TAP NO 165.0000166.0000167.0000168.0000

.000 -.2984 -.3010 -.3141 -.3067

ALPHAO(5) = 8.060 BETAO (4) = 4.140

SECTION (1)OMS POD DEPENDENT VARIABLE CP

TAP NO 165.0000166.0000167.0000168.0000

.000 -.3268 -.3395 -.3480 -.3445

ARC11-716 TA14 01+T12+S12N25 OMS POD (RB1M49)

ALPHAO(5) = 8.050 BETAO (5) = 8.270

SECTION (11)OMS POD DEPENDENT VARIABLE CP

TAP NO 165.0000166.0000167.0000168.0000

.000 -.3388 -.3382 -.3840 -.3818

ARC11-716 IA14 O1+T12+S12N25 OMS PCO (RB1M50) (15 FEB 74)

REFERENCE DATA

SREF = 2.4210 SQ.FT. XMRP = 29.5800 INCHES
LREF = 38.7090 INCHES YMRP = .0000 INCHES
BREF = 38.7090 INCHES ZMRP = .0000 INCHES
SCALE = .0300 SCALE

PARAMETRIC DATA

MACH = 1.250 ELEVON = .000
RUDDER = .000 SPDBRK = .000

ALPHAO(1) = -8.010 BETAO (1) = -8.020

SECTION (1)OMS PCO DEPENDENT VARIABLE CP

TAP NO 165.0000166.0000167.0000168.0000

.000 -.3152 -.3170 -.0464 .0301

ALPHAO(1) = -8.010 BETAO (2) = -4.000

SECTION (1)OMS PCO DEPENDENT VARIABLE CP

TAP NO 165.0000166.0000167.0000168.0000

.000 -.2999 -.3044 -.0913 -.0310

ALPHAO(1) = -8.000 BETAO (3) = .030

SECTION (1)OMS PCO DEPENDENT VARIABLE CP

TAP NO 165.0000166.0000167.0000168.0000

.000 -.2971 -.2968 -.1357 -.0993

ALPHAO(1) = -8.010 BETAO (4) = 4.100

SECTION (1)OMS PCO DEPENDENT VARIABLE CP

TAP NO 165.0000166.0000167.0000168.0000

.000 -.2938 -.3012 -.1891 -.1449

ARC11-716 IA14 O1+T12+S12N25 OMS POD (RB1M50)

ALPHAO(1) = -8.030 BETAO (5) = 8.160

SECTION (1)OMS POD DEPENDENT VARIABLE CP

TAP NO 165.0000166.0000167.0000168.0000

.000 -.3219 -.3206 -.2556 -.2545

ALPHAO(2) = -3.930 BETAO (1) = -8.050

SECTION (1)OMS POD DEPENDENT VARIABLE CP

TAP NO 165.0000166.0000167.0000168.0000

.000 -.3059 -.3090 -.0960 -.0914

ALPHAO(2) = -3.930 BETAO (2) = -4.020

SECTION (1)OMS POD DEPENDENT VARIABLE CP

TAP NO 165.0000166.0000167.0000168.0000

.000 -.2916 -.2967 -.1308 -.0786

ALPHAO(2) = -3.940 BETAO (3) = .050

SECTION (1)OMS POD DEPENDENT VARIABLE CP

TAP NO 165.0000166.0000167.0000168.0000

.000 -.2785 -.2791 -.1720 -.1366

ALPHAO(2) = -3.940 BETAO (4) = 4.090

SECTION (1)OMS POD DEPENDENT VARIABLE CP

TAP NO 165.0000166.0000167.0000168.0000

.000 -.2863 -.2895 -.1896 -.1530

ALPHAO(2) = -3.950 BETAO (5) = 8.110

SECTION (1)OMS POD DEPENDENT VARIABLE CP

TAP NO 165.0000166.0000167.0000168.0000

.000 -.3298 -.3304 -.2721 -.2780

ALPHAO(3) = -.340 BETAO (1) = -8.080

SECTION (1)OMS POD DEPENDENT VARIABLE CP

TAP NO 165.0000166.0000167.0000168.0000

.000 -.3072 -.3088 -.1317 -.0794

ALPHAO(3) = -.350 BETAO (2) = -4.020

SECTION (1)OMS POD DEPENDENT VARIABLE CP

TAP NO 165.0000166.0000167.0000168.0000

.000 -.2904 -.2928 -.1623 -.1354

ALPHAO(3) = -.360 BETAO (3) = .040

SECTION (1)OMS POD DEPENDENT VARIABLE CP

TAP NO 165.0000166.0000167.0000168.0000

.000 -.2722 -.2794 -.2109 -.1842

ALPHAO(3) = -.360 BETAO (4) = 4.080

SECTION (1)OMS POD DEPENDENT VARIABLE CP

TAP NO 165.0000166.0000167.0000168.0000

.000 -.2880 -.2914 -.2423 -.2082

ARC11-716 IA14 01+T12+S12N25 OMS POD (RB1M50)

ALPHAO(3) = -.360 BETAO (5) = 8.120

SECTION (1)OMS POD DEPENDENT VARIABLE CP

TAP NO 165.0000166.0000167.0000168.0000

.000 -.3275 -.3345 -.3086 -.2933

ALPHAO(4) = 4.010 BETAO (1) = -8.080

SECTION (1)OMS POD DEPENDENT VARIABLE CP

TAP NO 165.0000166.0000167.0000168.0000

.000 -.2999 -.3047 -.1794 -.1483

ALPHAO(4) = 4.010 BETAO (2) = -4.030

SECTION (1)OMS POD DEPENDENT VARIABLE CP

TAP NO 165.0000166.0000167.0000168.0000

.000 -.2733 -.2824 -.2067 -.1790

ALPHAO(4) = 4.050 BETAO (3) = .040

SECTION (1)OMS POD DEPENDENT VARIABLE CP

TAP NO 165.0000166.0000167.0000168.0000

.000 -.2709 -.2778 -.2440 -.2166

ALPHAO(4) = 4.050 BETAO (4) = 4.090

SECTION (1)OMS POD DEPENDENT VARIABLE CP

TAP NO 165.0000166.0000167.0000168.0000

.000 -.3029 -.3135 -.2711 -.2583

AFC11-718 IA14 01+T12+S12N25 OMS POD (RB1M50)

ALPHAO(4) = 4.080 BETAO (5) = 8.170

SECTION (1)OMS POD DEPENDENT VARIABLE CP

TAP NO 165.0000166.0000167.0000168.0000

.000 -.3156 -.3153 -.3158 -.3019

ALPHAO(5) = 8.080 BETAO (1) = -8.030

SECTION (1)OMS POD DEPENDENT VARIABLE CP

TAP NO 165.0000166.0000167.0000168.0000

.000 -.3063 -.3076 -.2139 -.1263

ALPHAO(5) = 8.000 BETAO (2) = -3.980

SECTION (1)OMS POD DEPENDENT VARIABLE CP

TAP NO 165.0000166.0000167.0000168.0000

.000 -.2881 -.2907 -.2483 -.2160

ALPHAO(5) = 7.910 BETAO (3) = .040

SECTION (1)OMS POD DEPENDENT VARIABLE CP

TAP NO 165.0000166.0000167.0000168.0000

.000 -.2584 -.2605 -.2648 -.2402

ALPHAO(5) = 8.000 BETAO (4) = 4.130

SECTION (1)OMS POD DEPENDENT VARIABLE CP

TAP NO 165.0000166.0000167.0000168.0000

.000 -.2978 -.3053 -.2957 -.2730

DATE 10 DEC 74 TABULATED PRESSURE DATA - IA14A - VOL. 4

ARC11-716 IA14 O1+T12+S12N25 OMS POD (RB1M50)

ALPHAO(5) = 7.980 BETAO (5) = 8.220

SECTION (1)OMS POD DEPENDENT VARIABLE CP

TAP NO 165.0000166.0000167.0000168.0000

.000 -.3215 -.3202 -.3461 -.3381

ARC11-716 IA14 O1+T12+S12N25 OMS POD (RB1M51) (15 FEB 74)

REFERENCE DATA

SREF = 2.4210 SQ.FT. XMRP = 29.5800 INCHES
LREF = 38.7090 INCHES YMRP = .0000 INCHES
BREF = 38.7090 INCHES ZMRP = .0000 INCHES
SCALE = .0300 SCALE

PARAMETRIC DATA

MACH = 1.400 ELEVON = .000
RUDDER = .000 SPDBRK = .000

ALPHAO(1) = -7.890 BETAO (1) = -8.050

SECTION (1)OMS POD DEPENDENT VARIABLE CP

TAP NO 165.0000166.0000167.0000168.0000

.000 -.2948 -.2948 .0189 .0568

ALPHAO(1) = -7.880 BETAO (2) = -4.010

SECTION (1)OMS POD DEPENDENT VARIABLE CP

TAP NO 165.0000166.0000167.0000168.0000

.000 -.2911 -.2994 -.0309 -.0022

ALPHAO(1) = -7.870 BETAO (3) = .020

SECTION (1)OMS POD DEPENDENT VARIABLE CP

TAP NO 165.0000166.0000167.0000168.0000

.000 -.2798 -.2835 -.0761 -.0613

ALPHAO(1) = -7.970 BETAO (4) = [illegible]

SECTION (1)OMS POD DEPENDENT VARIABLE CP

TAP NO 165.0000166.0000167.0000168.0000

.000 -.2892 -.3040 -.1193 -.1445

ORIGINAL PAGE IS OF POOR QUALITY

ARC11-716 IA14 O1+T12+S12N25 OMS POD (RB1M51)

ALPHAO(1) = -7.990 BETAO (5) = 8.180

SECTION (1)OMS POD DEPENDENT VARIABLE CP

TAP NO 165.0000166.0000167.0000168.0000

.000 -.3041 -.3048 -.1801 -.3963

ALPHAO(2) = -3.960 BETAO (1) = -8.060

SECTION (1)OMS POD DEPENDENT VARIABLE CP

TAP NO 165.0000166.0000167.0000168.0000

.000 -.2789 -.2826 -.0656 -.0040

ALPHAO(2) = -3.990 BETAO (2) = -4.030

SECTION (1)OMS POD DEPENDENT VARIABLE CP

TAP NO 165.0000166.0000167.0000168.0000

.000 -.2828 -.2840 -.0942 -.0533

ALPHAO(2) = -3.850 BETAO (3) = .040

SECTION (1)OMS POD DEPENDENT VARIABLE CP

TAP NO 165.0000166.0000167.0000168.0000

.000 -.2558 -.2593 -.1177 -.0990

ALPHAO(2) = -3.970 BETAO (4) = 4.090

SECTION (1)OMS POD DEPENDENT VARIABLE CP

TAP NO 165.0000166.0000167.0000168.0000

.000 -.2902 -.2928 -.1550 -.1596

ALPHAO(2) = -4.000 BETAO (5) = 8.150

SECTION (1)OMS POD DEPENDENT VARIABLE CP

TAP NO 165.0000166.0000167.0000168.0000

.000 -.3044 -.3048 -.2120 -.2734

ALPHAO(3) = -.370 BETAO (1) = -8.100

SECTION (1)OMS POD DEPENDENT VARIABLE CP

TAP NO 165.0000166.0000167.0000168.0000

.000 -.2831 -.2865 -.1351 -.0564

ALPHAO(3) = -.390 BETAO (2) = -4.010

SECTION (1)OMS POD DEPENDENT VARIABLE CP

TAP NO 165.0000166.0000167.0000168.0000

.000 -.2897 -.2939 -.1465 -.0902

ALPHAO(3) = -.390 BETAO (3) = .030

SECTION (1)OMS POD DEPENDENT VARIABLE CP

TAP NO 165.0000166.0000167.0000168.0000

.000 -.2575 -.2589 -.1664 -.1388

ALPHAO(3) = -.400 BETAO (4) = 4.090

SECTION (1)OMS POD DEPENDENT VARIABLE CP

TAP NO 165.0000166.0000167.0000168.0000

.000 -.2842 -.2846 -.1903 -.1868

ALPHAO(3) = -.400 BETAO (5) = 8.140

SECTION (1)OMS PCO DEPENDENT VARIABLE CP

TAP NO 165.0000166.0000167.0000168.0000

.000 -.3017 -.3066 -.2484 -.2475

ALPHAO(4) = 4.110 BETAO (1) = -8.070

SECTION (1)OMS PCO DEPENDENT VARIABLE CP

TAP NO 165.0000166.0000167.0000168.0000

.000 -.2812 -.2823 -.1915 -.1418

ALPHAO(4) = 4.100 BETAO (2) = -3.980

SECTION (1)OMS PCO DEPENDENT VARIABLE CP

TAP NO 165.0000166.0000167.0000168.0000

.000 -.2833 -.2860 -.1933 -.1541

ALPHAO(4) = 4.100 BETAO (3) = .060

SECTION (1)OMS PCO DEPENDENT VARIABLE CP

TAP NO 165.0000166.0000167.0000168.0000

.000 -.2825 -.2880 -.2021 -.1734

ALPHAO(4) = 4.100 BETAO (4) = 4.130

SECTION (1)OMS PCO DEPENDENT VARIABLE CP

TAP NO 165.0000166.0000167.0000168.0000

.000 -.2955 -.3015 -.2378 -.2190

ALPHAO(4) = 4.090 BETAO (5) = 8.180

SECTION (1)OMS POD DEPENDENT VARIABLE CP

TAP NO 165.0000166.0000167.0000168.0000

.000 -.3030 -.3073 -.2448 -.2386

ALPHAO(5) = 8.010 BETAO (1) = -8.050

SECTION (1)OMS POD DEPENDENT VARIABLE CP

TAP NO 165.0000166.0000167.0000168.0000

.000 -.2965 -.2965 -.2613 -.1931

ALPHAO(5) = 8.010 BETAO (2) = -4.010

SECTION (1)OMS POD DEPENDENT VARIABLE CP

TAP NO 165.0000166.0000167.0000168.0000

.000 -.2875 -.2893 -.2571 -.2065

ALPHAO(5) = 8.020 BETAO (3) = .030

SECTION (1)OMS POD DEPENDENT VARIABLE CP

TAP NO 165.0000166.0000167.0000168.0000

.000 -.2609 -.2667 -.2333 -.2411

ALPHAO(5) = 8.010 BETAO (4) = 4.150

SECTION (1)OMS POD DEPENDENT VARIABLE CP

TAP NO 165.0000166.0000167.0000168.0000

.000 -.2961 -.3002 -.2554 -.2708

ORIGINAL PAGE IS
OF POOR QUALITY

ARC11-716 IA14 O1+T12+S12N25 OMS POD (RB1M51)

ALPHAO(5) = 7.990 BETAO (5) = 8.280

SECTION (1)OMS POD DEPENDENT VARIABLE CP

TAP NO 165.0000166.0000167.0000168.0000

.000 -.3089 -.3105 -.2533 -.2294