[redacted]

Get DRF from Vol. I & we duplicate that in

SATURN TECHNICAL INFORMATIO NDBOOK

VOLUM

(NASA-TM-X-62884) SATURN TECHNICAL INFORMATION HANDBOOK, VOLUME 2 (NASA) 300 p N75-75665

Unclas
00/98 28348

X71-73251
(ACCESSION NUMBER)
300
(PAGES)
NASA-TMX-62884
(NASA CR OR TMX OR AD NUMBER)
(THRU)
None
(CODE)
(CATEGORY)
FF No. 602(D)
AVAILABLE TO U.S. GOVERNMENT AGENCIES AND CONTRACTORS ONLY

GEORGE C. MARSHALL SPACE FLIGHT CENTER
NATIONAL AERONAUTICS AND SPACE ADMINISTRATION
HUNTSVILLE, ALABAMA

[redacted]

1 June 1961

CLASSIFICATION CHANGE
To UNCLASSIFIED
By authority of NASA TD 71-406
Changed by O. J. Weatheisen Date 7/23/71
Classified Document Master Control Station, NASA
Scientific and Technical Information Facility

SATURN SA-I TECHNICAL INFORMATION HANDBOOK

VOL. II (((

STRUCTURES AND MECHANICS DIVISION
GEORGE C. MARSHALL SPACE FLIGHT CENTER
NATIONAL AERONAUTICS AND SPACE ADMINISTRATION

1 June 1961

SECURITY NOTE

This document contains information affecting the national defense of the United States within the meaning of the Espionage Laws, Title 18, U.S.C., Sections 793 and 794. The transmission or the revelation of its contents in any manner to an unauthorized person is prohibited by law.

1 June 1961

ABSTRACT

The Saturn Technical Information Handbook is provided as a ready reference guide to perform maintenance of the SATURN vehicle mechanical components during launch site operations.

TABLE OF CONTENTS
VOLUME II

Paragraph		Page
	SECTION IV PROPELLANT CONTAINER SECTION	
4.1	General	4.1.1
4.2	Anti-Sloshing Devices	4.1.1
4.3	Suction Lines	4.1.1
4.4	Fuel Tank Pressure	4.1.1
4.5	LOX Tank Pressure	4.1.1
4.6	Location of Components	4.1.1
4.7	Fuel System	4.1.3
4.8	Fuel Container Pressurization System	4.2.1
4.9	Oxygen System	4.3.1
4.10	Control Pressure System	4.4.1
4.11	Helium System	4.5.1
	SECTION V S-IV DUMMY STAGE	
5.1	General	5.1.1
5.2	Ballast Tank	5.1.2
	SECTION VI S-V DUMMY STAGE	
6.1	General	6.1.1
6.2	Ballast Tank, Ballast Tank and Alpha Meter Pressurization	6.1.2
	Appendix	A. 1
	Alphabetical Index	B. 1

LIST OF ILLUSTRATIONS

Figure No.	Title	Page
1.1.1	Saturn SA-I Configuration	1.1.2
1.1.2	Saturn S-IV Dummy-Cutaway View	1.1.6
1.1.3	Saturn S-V Dummy-Cutaway View	1.1.7
1.1.4	Saturn Launch Vehicle SA-I Payload	1.1.9
1.1.5	Mechanical Control System-Schematic Part I	1.1.13
1.1.6	Mechanical Control System-Schematic Part II	1.1.15
1.1.7	Hazardous Material In Tail Section - Location View	1.1.19
1.1.8	Conax Valve Assembly - Sectional View	1.1.20
1.1.9	Hypergol Container - Sectional View	1.1.21
1.1.10	Turbine Starter Assembly - Sectional View	1.1.23
1.1.11	Primacord In Propellant Tanks - Location View	1.1.24
1.1.12	Primacord On Top Of Propellant Tanks	1.1.25
1.1.13	*Primacord Detonator	1.1.27
1.1.14	Saturn SA-I Access Doors and Service Points	1.1.29
1.1.15	S-I Stage Configuration - Part I	1.1.31
1.1.16	S-I Stage Configuration - Part II	1.1.32
1.1.17	S-I Stage Configuration - Part III	1.1.33
1.1.18	Short Cable Masts - Details	1.1.34
1.1.19	S-IV Stage Access Doors and Service Points	1.1.35
1.1.20	S-V Stage Access Door and Service Points	1.1.36
1.1.21	Inboard Engine Service Points	1.1.39
1.1.22	Outboard Engine Service Points	1.1.43
2.1.1	Saturn Nomenclature Chart	
2.2.1	Engine Component Connect Points, Gaskets and Seals	2.2.3
2.2.2	Inboard Engine Schematic	2.2.7
2.2.3	Outboard Engine Schematic	2.2.11
2.2.4	Gas Generator and Controls Installation - Exploded View	2.2.14
2.2.5	Gas Generator and Controls Installation - Exploded View	2.2.15
2.2.6	Rocket Engine Propellant Feed System - Installation	2.2.19
2.2.7	Igniter Purge, Gearbox Pressurization, Injector Purge, Lube Drain Line Check Valve NA5-26260	2.2.20

* Art to be supplied later

2.2.8	Heat Exchanger Assembly and 1.5 Inch GOX Line Inboard	2.2.21
2.2.9	Fuel Control Valve Assembly 304801 - Sectional View	2.2.23
2.2.10	Oxidizer Control Valve Assembly 306580 - Sectional View	2.2.25
2.2.11	Gas Generator Propellant Control Valves - Installation	2.2.26
2.2.12	Lube System Filter, NAS-26278	2.2.27
2.2.13	Fuel Additive Mixer Unit, 454075 - Sectional View	2.2.29
2.2.14	Fuel Additive Mixer Unit - Exploded View	2.2.31
2.2.15	Fuel Additive Mixer Unit Spool, 453385	2.2.33
2.2.16	Fuel Sequence Valve, 401340 - Sectional View	2.2.35
2.2.17	Fuel Sequence Valve - Exploded View	2.2.37
2.2.18	Thrust O. K. Pressure Switch, to be added when available	2.2.38
2.2.19	Heat Exchanger Assembly and 1.5 Inch GOX Line Outboard	2.2.39
2.2.20	Main LOX Valve, 402267 - Sectional View I	2.2.41
2.2.21	Main LOX Valve, 502267 - Sectional View II	2.2.42
2.2.22	Main LOX Valve - Exploded View I	2.2.43
2.2.23	Main LOX Valve - Exploded View II	2.2.45
2.2.24	LOX Dome Purge Check Valve - to be supplied when available	2.2.46
2.2.25	Fuel Injector Purge Check Valve - to be supplied when available	2.2.47
2.2.26	Main Fuel Valve, 403092-Sectional View I	2.2.49
2.2.27	Main Fuel Valve, 403092- Sectional View II	2.2.50
2.2.28	Main Fuel Valve, 403092- Exploded View I	2.2.51
2.2.29	Main Fuel Valve, 403092 - Exploded View II	2.2.53
2.2.30	Quick- Disconnect Coupling, 10414305 - Sectional View	2.2.54
2.2.31	Fuel Additive Mixer Unit Inlet Coupling Half	2.2.56
2.2.33	GOX Line and Check Valve - Installation	2.2.57
2.2.34	Heat Exchanger LOX Line Check Valve NA5-26032-2	2.2.58
2.2.35	Heat Exchanger LOX Line Check Valve NAS-26032-2	2.2.59
2.2.36	Gas Turbine Assembly, 4541003 - Sectional View	2.2.61

2.3.1	Hydraulic System Schematic	2.3.3
2.3.2	Hydraulic Installation - Outboard Engines	2.3.4
2.3.3	Hydraulic Installation - Outboard Engine Details	2.3.5
2.3.4	High Pressure Accumulator Relief Valve	2.3.6
2.3.5	Hydraulic System Differential Pressure Indicator, 10415272 - Sectional View	2.3.9
2.3.6	Hydraulic System Actuator 10420014 - Sectional View	2.3.11
2.3.7	Moog Servo Control Valve	2.3.12
2.3.8	GN_2 Pressure Charging Valve - Sectional View	2.3.13
2.3.9	Hydraulic System Accumulator - Sectional View	2.3.17
2.3.10	Hydraulic System Filter Element	2.3.18
2.3.11	Hydraulic System Relief Valve, Low Pressure, 10415553 - Sectional View	2.3.19
2.3.12	Hydraulic System Variable Delivery Purge, 10415145 - Cutaway View	2.3.21
2.3.13	Hydraulic System Check Valves	2.3.22
2.3.14	Auxiliary Pump Assembly	2.3.24
2.3.15	Hydraulic Thermal Switch	2.3.25
2.3.16	Quick-Disconnect Nipple, Low Pressure, 10415555- Sectional View	2.3.26
2.3.17	Quick-Disconnect Coupling, High Pressure 10415554 - Sectional View	2.3.27
2.3.18	Pressure Transducer, 10480614 - Sectional View	2.3.28
3.1.1	Second Stage Adapter Fairing	3.1.3
3.1.2	Long Cable Mast Disconnect Assembly	3.1.5
3.1.3	Air Bearing Supply System Schematic	3.1.9
3.1.4	ST-90 High Pressure Sphere Assembly, 10413945- Exploded View	3.1.11
3.1.5	Air Bearing Air Regulator Monitor Assembly - Interface View	3.1.12
3.1.6	Air Bearing Air Regulator Assembly, 10413893 - Exploded View	3.1.13
3.1.7	Air Bearing Air Heater, 10414078 - Sectional View	3.1.15
3.1.8	Air Bearing Air Supply High Pressure Switch, 10414029 - Sectional View	3.1.19
3.1.9	Air Bearing Air Supply High Pressure Switch, 10414029 - Exploded View	3.1.21
3.1.10	Air Bearing Air Supply Low Pressure Switch, 10414092- Exploded View	3.1.23
3.1.11	Quick-Disconnect Coupling, 10414063 - Sectional View	3.1.24
3.1.12	Filter, 10414026 - Exploded View	3.1.27

3.1.13	Air Bearing Supply Line Check Valve, 10414013 - Exploded View	3.1.29
3.1.14	Air Bearing Air Supply Line Needle Valve, 10414076 - Cross Section	3.1.30
3.1.15	Air Bearing Air Supply Line Needle Valve, 10414076 - Exploded View	3.1.31
3.1.16	Air Bearing Air Supply Regulator, 10414076	3.1.32
3.2.1	Canister Cooling Air System Schematic	3.2.3
3.2.2	Check Valve, Instrument Cooling, 10417222- Sectional View	3.2.4
3.2.3	Check Valve, Instrument Cooling, 10417222 - Installation	3.2.5
3.2.4	Precooling Valve Assembly, 10417068 - Sectional View	3.2.7
3.2.5	Precooling Valve Assembly, 10417068 - Exploded View	3.2.8
3.2.6	Control Valve, ST-90 Cooling Installation, 10417001 - Exploded View	3.2.11
3.2.7	Blower, ST-90 Platform, 10417306 - Sectional View	3.2.12
3.2.8	Blower, ST-90 Platform, 10417306 - Installation	3.2.13
3.2.9	ST-90 Container Absolute Pressure Valve, 10414080 - Sectional View	3.2.15
3.2.10	ST-90 Container Absolute Pressure Valve, 10414080 - Exploded View	3.2.16
3.2.11	Filler GN_2 Cross Section, 10414026	3.2.17
3.2.12	Valve, 4.00 IRIS Mixing, 10417100 - Installation (Typical 4 Places)	3.2.19
3.2.13	Absolute Pressure Switch, 10414085 - Sectional View	3.2.20
3.2.14	Absolute Pressure Switch, 10414085, Installation	3.2.21
3.2.15	Pressurizing Control Valve, 10414082 - Cross Section	3.2.23
3.2.16	Pressurizing Control Valve, 10414082 - Exploded View	3.2.24
3.2.17	Thermostat, 10417187 - Installation	3.2.27
3.2.18	.031 Diameter Orifice, 10414299	3.2.28
3.3.1	Instrument Group Assembly, Canister No. 13	3.2.5
3.4.1	Instrument Group Assembly, Canister No. 14	3.4.5
3.5.1	Instrument Group Assembly, Canister No. 15	3.5.6
3.5.2	Instrument Group Assembly, Canister No. 15	3.5.7
3.6.1	Instrument Group Assembly, Canister No. 16	3.6.5

LIST OF ILLUSTRATIONS

4.1.1	Fuel System Schematic	4.1.5
4.1.2	Fuel Manifold and Fill Line	4.1.6
4.1.3	Fuel Suction Line on Inboard Engine	4.1.7
4.1.4	Fuel Suction Line on Outboard Engine	4.1.8
4.1.5	Fuel Fill and Drain Valve, 10414020 - Sectional View	4.1.11
4.1.6	Fuel Fill and Drain Valve -Exploded View	4.1.13
4.1.7	Fuel Prevalve, 10414024 - Sectional View	4.1.15
4.1.8	Fuel Prevalve, 10414024 - Exploded View	4.1.17
4.1.9	Fuel Level Control Coupling, 10414053 - Sectional View	4.1.18
4.1.10	Fuel Level Control Coupling - Interface View	4.1.19
4.1.11	Quick-Disconnect Coupling, 10414048 - Sectional View	4.1.20
4.1.12	Quick-Disconnect Coupling - Installation	4.1.21
4.1.13	Fuel Level Control Valve, 10414055 - Sectional View	4.1.23
4.1.14	Fuel Level Control Valve - Exploded View	4.1.25
4.1.15	Three-Way Needle Valve, Checkout, 10414076 - Sectional View	4.1.26
4.1.16	Three-Way Needle Valve, Checkout - Exploded View	4.1.27
4.1.17	Sectional View to be supplied when available	4.1.29
4.1.18	Fuel Step Pressure Switch - Exploded View	4.1.31
4.1.19	Quick-Disconnect Coupling, 10414063 - Sectional View	4.1.32
4.1.20	Quick-Disconnect Coupling - Installation	4.1.33
4.1.21	Sectional View to be supplied when available	4.1.35
4.1.22	Fuel Level Switch and Connector Assembly - Exploded View	4.1.37
4.1.23	Sectional View to be supplied when available.	4.1.39
4.1.24	Inboard Engine Cutoff Switch - Exploded View	4.1.41
4.1.25	Fuel Fill and Drain Connector - Sectional View	4.1.42
4.1.26	Fuel Fill and Drain Line and Coupling Assembly - Installation	4.1.43
4.1.27	Fuel Bubbling Filter, 10414314 - Sectional View	4.1.44
4.1.28	Fuel Bubbling Filter Installation	4.1.45
4.1.29	Fuel Bubbling Check Valve and Orifice - Installation	4.1.47
4.1.30	Level Discretes and Standpipe Assembly	4.1.49

4.1.31	Discretes Sectional View to be supplied when available	4.1.50
4.1.32	Fuel Flow Meter Installation (Outboard)	4.1.51
4.1.33	Flow Meter Installation (Inboard)	4.1.52
4.2.1	Fuel Container Pressurization System Schematic	4.2.3
4.2.2	Pressure Manifold and Vent Assembly	4.2.4
4.2.3	Fuel Pressurization Spheres - Detail View I	4.2.5
4.2.4	Fuel Pressurization Spheres - Detail View II	4.2.6
4.2.5	Fuel Pressurization Spheres - Detail View III	4.2.7
4.2.6	Fuel Pressurization Spheres - Detail View IV	4.2.8
4.2.7	Fuel Pressurization Spheres - Detail View V	4.2.9
4.2.8	Fuel Pressurization Spheres - Detail View VI	4.2.10
4.2.9	Triplex Spheres Supply Line	4.2.11
4.2.10	Fuel Vent Valve Assembly, 10414021 - Sectional View	4.2.13
4.2.11	Fuel Vent Valve Assembly - Exploded View	4.2.15
4.2.12	Fuel Container Safety Valve, 10414039 - Sectional View	4.2.17
4.2.13	Fuel Container Safety Valve - Exploded View	4.2.19
4.2.14	Quick-Disconnect Coupling, 10414034 - Sectional View	4.2.20
4.2.15	Air Filter, 10414028 - Sectional View	4.2.21
4.2.16	Check Valve, 10414033 - Sectional View	4.2.22
4.2.17	High Pressure O.K. Switch - Exploded View	4.2.25
4.2.18	Fuel Pressurization Valve, 10414308 - Sectional View	4.2.27
4.2.19	Fuel Pressurization Valve, 10414308 - Exploded View	4.2.29
4.2.20	Fuel Tank Pressure Switch Assembly, 10414019 - Sectional View	4.2.31
4.2.21	Fuel Tank Pressure Switch Assembly - Exploded View	4.2.33
4.3.1	Oxygen System Schematic	4.3.3
4.3.2	LOX Fill Line	4.3.4
4.3.3	LOX Suction Line, Inboard Engine	4.3.5
4.3.4	LOX Suction Line, Outboard Engines	4.3.6
4.3.5	LOX Replenishing Line	4.3.7
4.3.6	GOX Manifold	4.3.8
4.3.7	Center LOX Container - Bottom View	4.3.9
4.3.8	Center LOX Container - Top View	4.3.10
4.3.9	GOX Distribution Line	4.3.11
4.3.10	LOX Vent Line	4.3.12
4.3.11	LOX Relief Line	4.3.13
4.3.12	LOX Fill and Drain Valve Assembly, 10414002 - Sectional View	4.3.15

4.3.13	LOX Fill and Drain Valve Assembly, 10414002 - Exploded View	4.3.17
4.3.14	LOX Prevalve, 1044005 - Sectional View	4.3.19
4.3.15	LOX Prevalve - Exploded View	4.3.21
4.3.17	LOX Differential Step Pressure Switch Assembly, 10414068 - Installation	4.3.25
4.3.18	Quick-Disconnect Coupling, 10414062 - Sectional View	4.2.26
4.3.19	Pressure Checkout Valve, 10414087 - Sectional View	4.3.28
4.3.20	Pressure Checkout Valve - Installation	4.3.29
4.3.21	LOX Replenishing Coupling, 10414235 - Sectional View	4.3.31
4.3.22	LOX Replenishing Valve, 10414003 - Sectional View	4.3.33
4.3.23	LOX Replenishing Valve - Exploded View	4.3.35
4.3.24	LOX Relief Valve Assembly, 10414000 - Sectional View	4.3.37
4.3.25	LOX Vent Assembly, 10414001 - Sectional View	4.3.39
4.3.26	LOX Vent Valve Assembly - Exploded View	4.3.41
4.3.27	LOX Level Switch and Connector Assembly, 10414045	4.3.43
4.3.28	LOX Level Switch and Connector Assembly, 10414045 - Installation	4.3.45
4.3.29	LOX Fill and Drain Flange - Sectional View	4.3.46
4.3.30	LOX Fill and Drain Flange - Installation	4.3.47
4.3.31	Quick-Disconnect Coupling, 10414065- Sectional View	4.3.48
4.3.32	LOX Vent Emergency Switch, 65 PSI, 10414010 - Sectional View	4.3.51
4.3.33	LOX Vent Emergency Switch, 65 PSI, 10414010 - Installation	4.3.53
4.3.34	LOX Pressurizing and Relief Switch, 60 PSI, 10414009 - Sectional View	4.3.55
4.3.35	LOX Pressurizing and Relief Switch, 60 PSI, 10414009 - Exploded View	4.3.57
4.3.36	Orifice Butterfly LOX Pressurizing Valve, 10414318 - Sectional View	4.3.59
4.3.37	Orifice Butterfly LOX Pressurizing Valve - Exploded View	4.3.61
4.3.38	LOX Level Discrete Sensor, 8968380	4.3.62
4.3.39	LOX Flow Meter Cross Section	4.3.64
4.3.40	LOX Flow Meter - Outboard Installation	4.3.65
4.3.41	LOX Flow Meter - Inboard Installation	4.3.66

4.4.1	Control Pressure Schematic	4.4.3
4.4.2	High Pressure Sphere Assembly, 1041393 - Exploded View	4.4.5
4.4.3	High Pressure Gage Assembly - Exploded View	4.4.7
4.4.4	Location of Components in Fuel Tank Skirts	4.4.10
4.4.5	Control Valve, 10414027 - Sectional View	4.4.11
4.4.6	LOX Pressurizing Control Valve - Installation	4.4.12
4.4.7	Fuel Vent Control Valve - Installation	4.4.13
4.4.8	LOX Vent Control Valve - Installation	4.4.14
4.4.9	Fuel Fill and Drain Control Valve - Installation	4.4.15
4.4.10	LOX Fill and Drain Control Valve - Installation	4.4.16
4.4.11	LOX Replenishing Control Valve	4.4.17
4.4.12	LOX and Fuel Prevalves Control - Installation	4.4.18
4.4.13	Quick-Disconnect Coupling, 10414064 - Sectional View	4.4.19
4.4.14	Filter GN_2 Line, 10414026 - Sectional View	4.4.20
4.4.15	Sphere Filling Filter, 10414026 - Installation	4.4.21
4.4.16	Control Pressure Filter, 10414026 - Installation	4.4.23
4.4.17	Sphere Filling Check Valve, 10414013 - Sectional View	4.4.24
4.4.18	Sphere Filling Check Valve, 10414013 - Exploded View	4.4.25
4.4.19	Control Pressure Regulator, 750 PSI - Sectional View	4.4.27
4.4.20	Control Pressure Regulator, 750 PSI - Installation	4.4.29
4.4.21	Control Pressure O.K. Switch, 750 PSI - Sectional View	4.4.31
4.4.22	Control Pressure O.K. Switch, 750 PSI	4.4.33
4.4.23	Control Pressure Valve, 10414076 - Exploded View	4.4.35
4.4.24	Pressure Relief Valve, 104145004, 750 PSI - Sectional View	4.4.37
4.4.25	Pressure Relief Valve, 104145004, 750 PSI - Exploded View	4.4.39
4.4.26	Control Pressure Fill and Vent Valve, 10414030 - Sectional View	4.4.41
4.4.27	Control Pressure Fill and Vent Valve, 10414030 - Exploded View	4.4.43
4.4.28	LOX Relief Valve Control Valve, 10414310 - Exploded View	4.4.45

4.4.29	Control Pressure High Pressure O.K. Switch, 10414029 - Sectional View	4.4.47
4.4.30	Control Pressure High Pressure O.K. Switch, 10414029 - Exploded View	4.4.49
4.4.31	Turbopump Gearbox Pressurizing and LOX Pump Seal Purge Control Valve, 10414087 - Exploded View	4.4.51
4.4.32	Sphere Assembly, 1 Cu.Ft., 10413931 - Installation	4.4.53
4.4.33	Calorimeter Purge Solenoid Valve, 10414093 - Sectional View	4.4.55
4.4.34	Calorimeter Purge Solenoid Valve, 10414093 - Exploded View	4.4.57
4.4.35	Control Pressure Manifold, 750 PSI - Exploded View	4.4.59
4.5.1	Helium System Schematic	4.5.3
4.5.2	Helium Supply Pressure Bottle Assembly, 10413654	4.5.5
4.5.3	Pressure Regulating Valve Assembly, 10413622 - Exploded View	4.5.7
4.5.4	LOX Differential Pressure Transducer, 10410158 -Installation	4.5.11
4.5.5	Tube Weldment, 10413724 - Installation	4.5.13
4.5.6	Differential Pressure Transducer, 8968256, 8968257 - Sectional View	4.5.15
4.5.7	Differential Pressure Transducer, 8968256 - Installation	4.5.16
4.5.8	Constant Flow Regulator Valve, 10414088, 10414089 - Sectional View	4.5.17
4.5.9	Orifice, P.U. By-Pass, 10414259 - Sectional View	4.5.18
4.5.10	LOX Slosh Purge Regulator, 10414090 - Sectional View	4.5.20
4.5.11	Helium Supply Filter, 10414026 - Installation	4.5.23
4.5.12	Helium Supply Check Valve, 10414014 - Sectional View	4.5.24
4.5.13	Helium Supply Check Valve, 10414014 - Installation	4.5.25
4.5.14	Helium Supply High Pressure O.K. Switch, 10414029 - Installation	4.5.27
4.5.15	Checkout Needle Valve, 10414076 - Installation	4.5.29
4.5.16	Computer, Propellant Utilization Schematic, 10414067	4.5.31
4.5.17	Propellant Utilization Computer, 10414067 - Installation	4.5.32
4.5.18	High Pressure Air Charging Valve, MS28889-1 - Sectional View	4.5.34

LIST OF ILLUSTRATIONS (Continued)

4.5.19	High Pressure Air Charging Valve, MS28889-1 - Exploded View	4.5.35
4.5.20	Three-Way Needle Valve, 10414084 - Sectional View	4.5.36
4.5.21	Checkout Valve, 10414087 - Installation	4.5.39
5.1.1	S-IV Dummy Stage Schematic	5.1.3
5.1.2	Tank Pressurization Air Pressure Regulator and Check Valve Installation	5.1.5
5.1.3	Tank Pressurization Air Pressure Regulator - Sectional View	5.1.7
5.1.4	Manual Tank Vent and Overflow Valve and Adapter - Sectional View	5.1.9
5.1.5	Manual Tank Fill and Drain Valve and Adapter - Installation	5.1.10
5.1.6	Manual Tank Vent and Overflow Valve and Adapter Installation	5.1.11
6.1.1	S-V Dummy Stage Schematic	6.1.3
6.1.2	GN_2 High Pressure Bottle Assembly, 10410825 - Installation	6.1.4
6.1.3	GN_2 Pressurizing Pressure Transducer - Installation	6.1.7
6.1.4	GN_2 System Solenoid Control Valve, 10414358 - Sectional View	6.1.9
6.1.5	Tank Vent Solenoid Valve Assembly - Installation	6.1.11

INTRODUCTION

The Saturn Technical Information Handbook, Volume II, provides a ready reference maintenance guide on the SATURN vehicle mechanical components in the propellant container section.

Section IV is categorized into the following systems: fuel system, fuel pressurization system, oxygen system, control pressure system and helium system.

Section V gives information of S-IV stage components and Section VI deals with S-V stage components.

A table of contents and list of illustrations include only those items which comprise this volume. An index is provided after Section IV to locate components in both volumes. An appendix in this volume presents the applicable portions of ABMA-STD-18. Table I contains torque values for tightening steel fasteners and table II contains torque values for tightening aluminum fasteners.

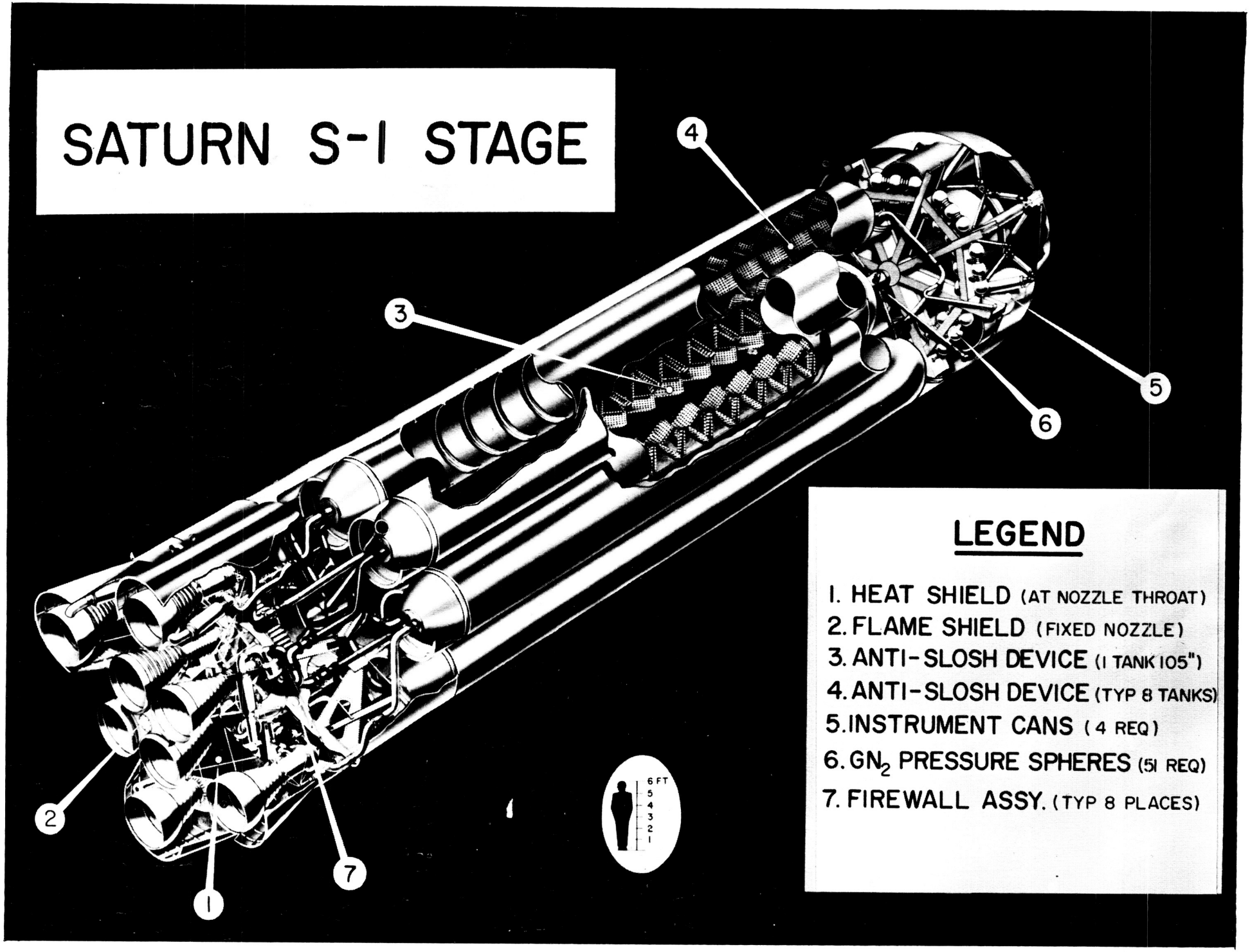

FRONTISPIECE: SATURN BOOSTER

SECTION IV
PROPELLANT CONTAINER SECTION

4.1 GENERAL

The propellant container section consists of a 105-inch diameter tank surrounded by eight 70-inch diameter tanks. The center tank and four of the outer tanks are for LOX, and the other four tanks, alternately arranged with the four LOX tanks, are for fuel. The aft sump for the 105-inch tank has a 22-inch diameter and supplies LOX through four interconnecting lines to the outer LOX tanks. The four fuel tanks are interconnected at the bottom by lines feeding into a square-shaped system of transfer lines. The fuel tanks are also interconnected at the top by a pressurizing gas manifold.

4.2 ANTI-SLOSHING DEVICES

Anti-sloshing baffles are installed in the 105-inch center tank and in the 70-inch tanks.

4.3 SUCTION LINES

A layout of the fuel and LOX suction lines are shown on pages 4.1.3 4.1.4 4.3.3, and 4.3.4.

4.4 FUEL TANK PRESSURE

The fuel tanks are pressurized from GN_2 pressure spheres mounted on the spider frame above the propellant tanks.

4.5 LOX TANK PRESSURE

The LOX tanks are initially pressurized with GN_2 from ground source. Pressurization is maintained in flight from GOX supplied by utilization of LOX flow heat exchangers located on each engine.

4.6 LOCATION OF COMPONENTS

Location of valves, fittings, and other components can be determined by referring to the component breakdown illustrations in this section. Further component data such as torque values, operating pressures, and tolerances can be obtained from the data sheets facing their corresponding breakdown illustrations.

THIS PAGE INTENTIONALLY LEFT
BLANK

4.7 FUEL SYSTEM

The following pages, 4.1.4 through 4.1.52, Figures 4.1.1 through 4.1.33 include information of the components in the fuel system. A fuel system schematic, Figure 4.1.1, is on page 4.1.5. A callout list, located on the facing page, shows the component find numbers, quantity used, nomenclatures, parts numbers, and the technical data pages of the components.

FUEL SYSTEM

The fuel system furnishes RP-1 fuel to the H-1 engines from four outer containers. In addition, fuel performs the following functions:

1. Fuel is utilized as the pressure source for the engine starting and shutdown sequences.

2. RP-1 is supplied to the gas generator to sustain engine operation.

3. Fuel is mixed with Oronite 262 for turbopump gearbox lubrication.

FUEL SYSTEM CALLOUT LIST

	PAGE
Fuel Manifold and Fill Line	4.1.6
Fuel Suction Line Inboard Engines 5, 6, 7, and 8	4.1.7
Fuel Suction Line Outboard Engines 1, 2, 3, and 4	4.1.8

FIND NO.	QTY.	COMPONENT	PART NO.	PAGE
B100	1	Fill and Drain Valve	10414352	4.1.10
B101	8	Prevalve, Fuel	10414024	4.1.14
B102	8	Flowmeter, Fuel	10413034	4.1.50
B103	1	Level Control Coupling	10414333	4.1.18
B104	1	Q.D. Coupling, Level Control	10414048	4.1.20
B105	1	Level Control Valve, Fuel	10414055	4.1.22
B106	1	3-Way Needle Valve, Step Pressure	10414076	4.1.26
B107	1	Step Pressure Switch	10414081	4.1.28
B108	1	Fuel Vent Valve Assembly	10414021	4.2.12
B109	1	Fuel Vent Valve Assembly	10414021	4.2.12
B110	1	Fuel Tank Safety Valve	10414039	4.2.16
B111	1	Fuel Tank Safety Valve	10414039	4.2.16
B112	1	Q.D. Coupling, Tank Test Line	10414063	4.1.32
B113	1	Q.D. Coupling, Density Sensing Line	10414063	4.1.32

FUEL SYSTEM CALLOUT LIST (Cont'd)

FIND NO.	QTY.	COMPONENT	PART NO.	PAGE
B114	1	Q.D. Coupling, Fuel Filling Computor	10414063	4.1.32
B115	1	Q.D. Coupling, Density Sensing Line	10414063	4.1.32
B116	1	Level Switch, Emergency Overfill	10414047	4.1.34
B117	2	Inboard Engine Cutoff Switch	10414398	4.1.34
B118	1	Connector, Fuel Fill & Drain	10426860	4.1.42
B119	1	Inboard Engine Cutoff Switch	10414348	4.1.48
B229	1	Coupling Half, Fuel Bubbling	10414063	4.1.32
B230	1	Filter, Fuel Bubbling	10414314	4.1.44
B231	8	Orifice, Fuel Bubbling	10414514	4.1.47
B232	8	Check Valve, Fuel Bubbling	10414014	4.1.46
B425	4	Fuel Level Probe	8968379	4.1.48
B431	1	Fuel Level Probe	8968379	4.1.48

THIS PAGE INTENTIONALLY LEFT
BLANK

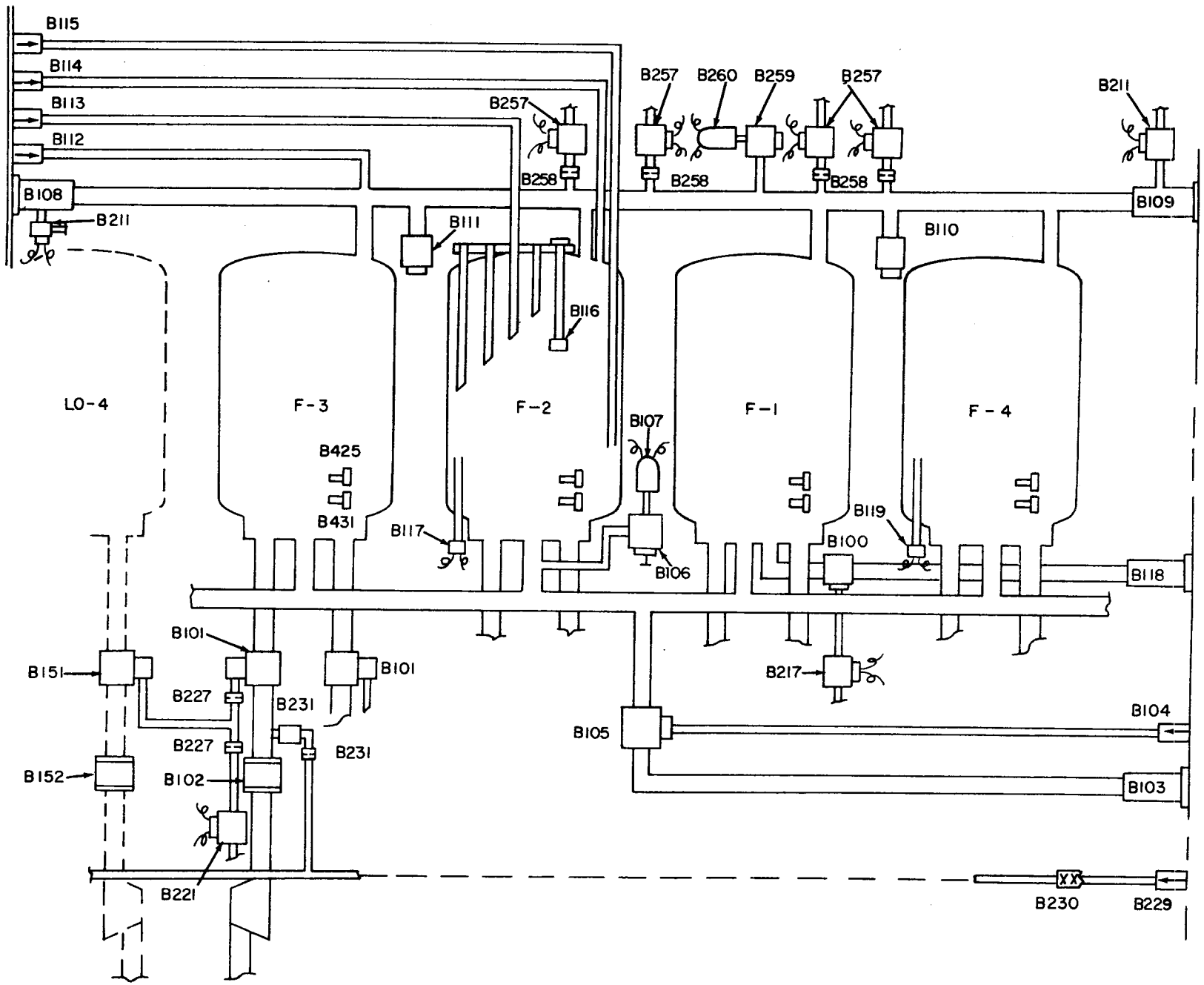

4.1.1 FUEL SYSTEM SCHEMATIC

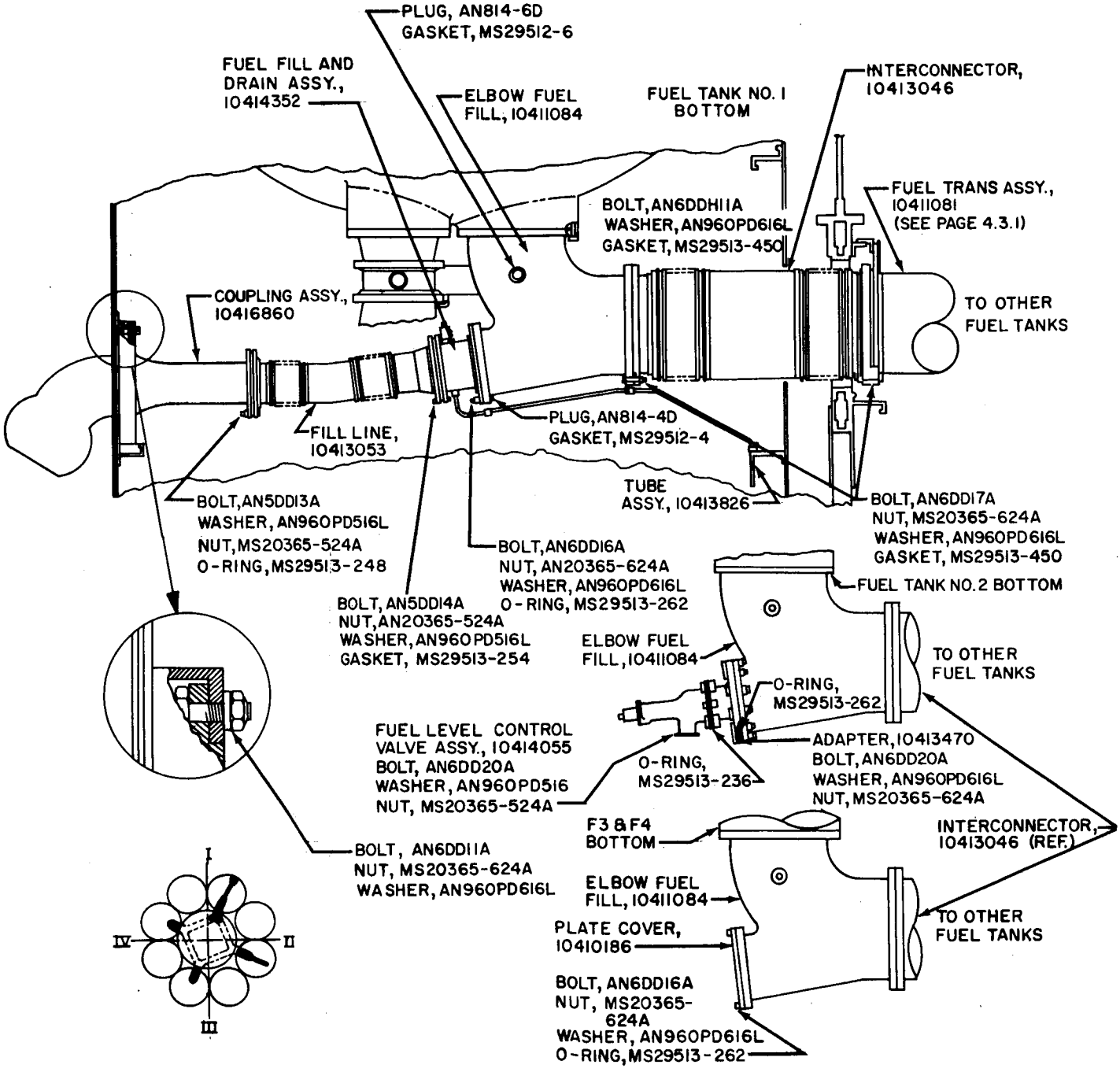

4.1.2 FUEL MANIFOLD AND FILL LINE - INSTALLATION

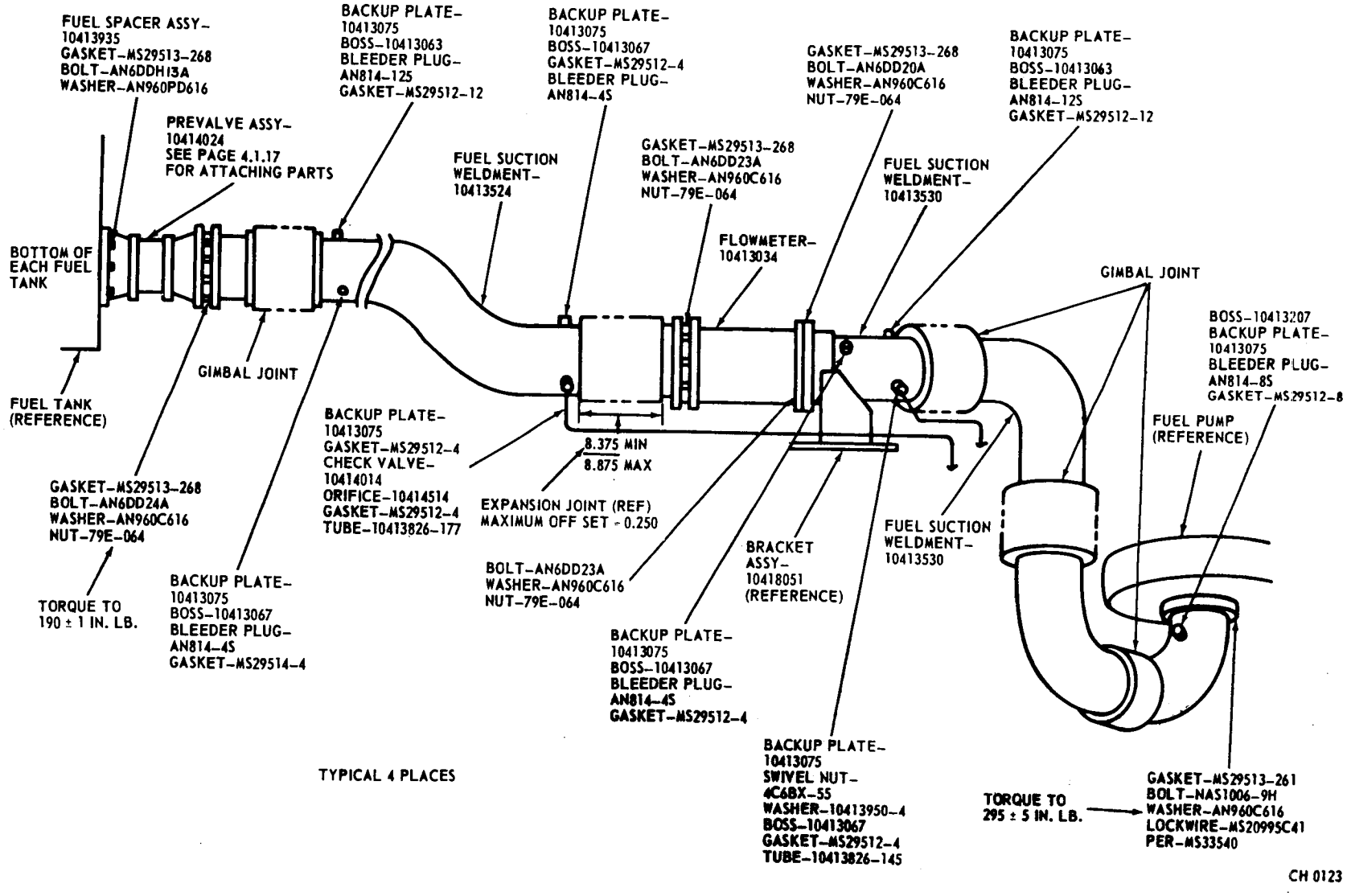

4.1.3 FUEL SUCTION LINE ON INBOARD ENGINES

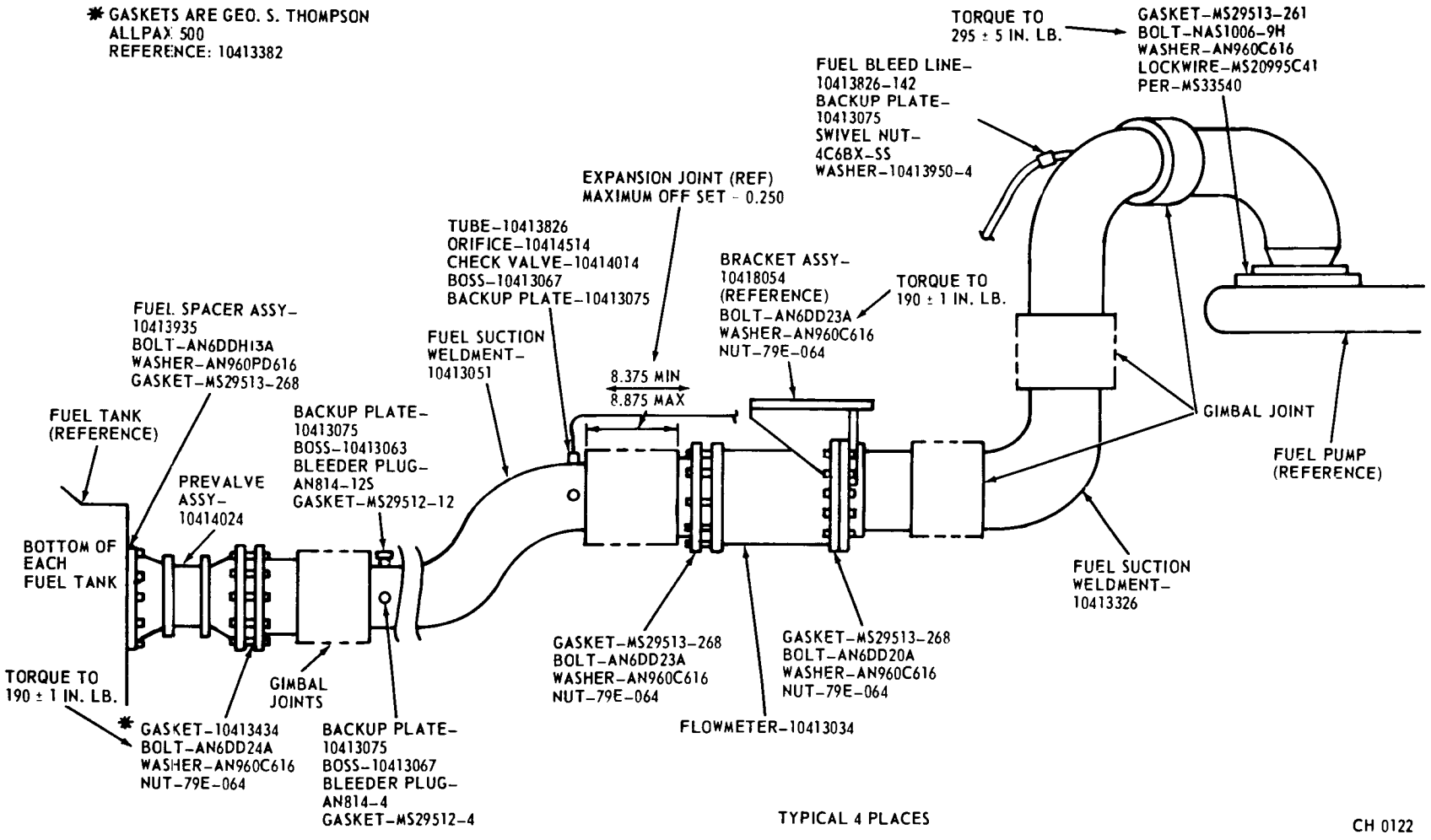

4.1.4 FUEL SUCTION LINE ON OUTBOARD ENGINES

THIS PAGE INTENTIONALLY LEFT
BLANK

FUEL FILL AND DRAIN VALVE ASSEMBLY PART NO. 10414352

The normally-closed fuel fill and drain valve assembly (B100) is used for fuel filling and draining of the fuel tanks and is pneumatically controlled by control valve (B217).

1. LOCATION - Station 228 in fuel tank No. 1
2. PRESSURE - FLOW CHAMBER
   a. Operating
      Nominal: 50 psig
   b. Proof: 160 psig
3. PRESSURE - PNEUMATIC
   a. Operating
      1. Nominal: 750 psig
      2. Minimum: 500 psig
4. LEAKAGE ALLOWANCES -
   a. Past control piston O-ring seal with 750 psig on control port 5 scim maximum.
   b. No leakage past 10414332 gland and MS-29512-20 gasket with 750 psig on control port.
   c. No leakage through 8944206 connector with 50 psig on line.
   d. Past poppet seal 10 scim are allowed with 75 psig on line.
   e. External: no leakage allowed.

   NOTE: No liquid soap or other liquid may be used on leakage test at switch wires.
5. ELECTRICAL -
   a. Continuity: Valve closed, pin "A" to valve body, pin "B" to valve body, pin "A" to "B"; 15 ohm maximum resistance allowed.
   b. Insulation resistance: 500 volt Megger test. Valve open, pin "A" to valve body, pin "B" to valve body, and pin "A" to "B"; 50 megohms minimum.
   c. Switch actuation: 0.005 minimum to 0.040 maximum from full-closed position.
6. LUBRICATION - Lubricate O-ring seals and sliding surfaces with fluorisilicone grease QC-2-0026.
7. TORQUE - Torque all fittings in accordance with MSFC Standard 10509303.

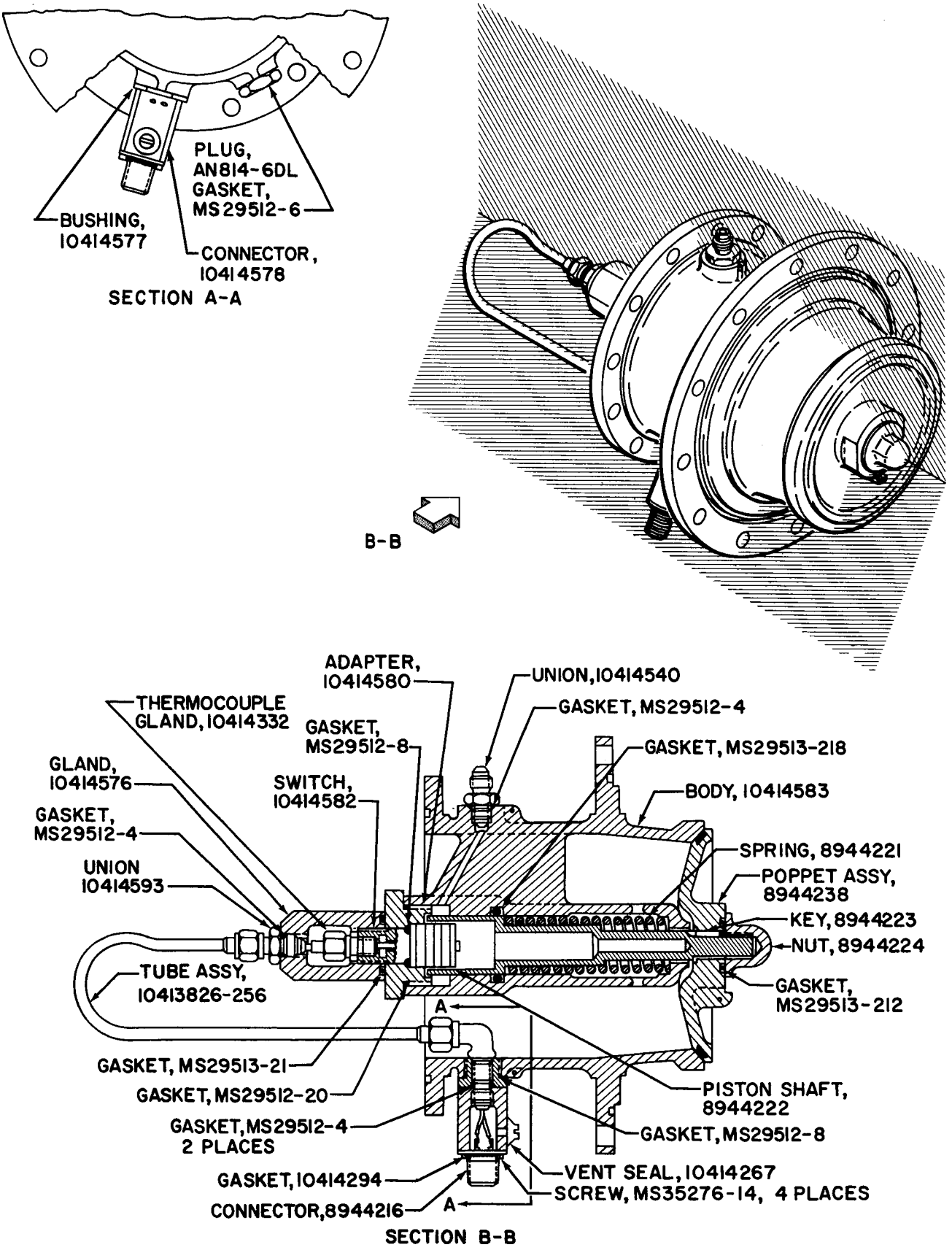

4.1.5 FUEL FILL AND DRAIN VALVE, 10414352
SECTIONAL VIEW

THIS PAGE INTENTIONALLY LEFT
BLANK

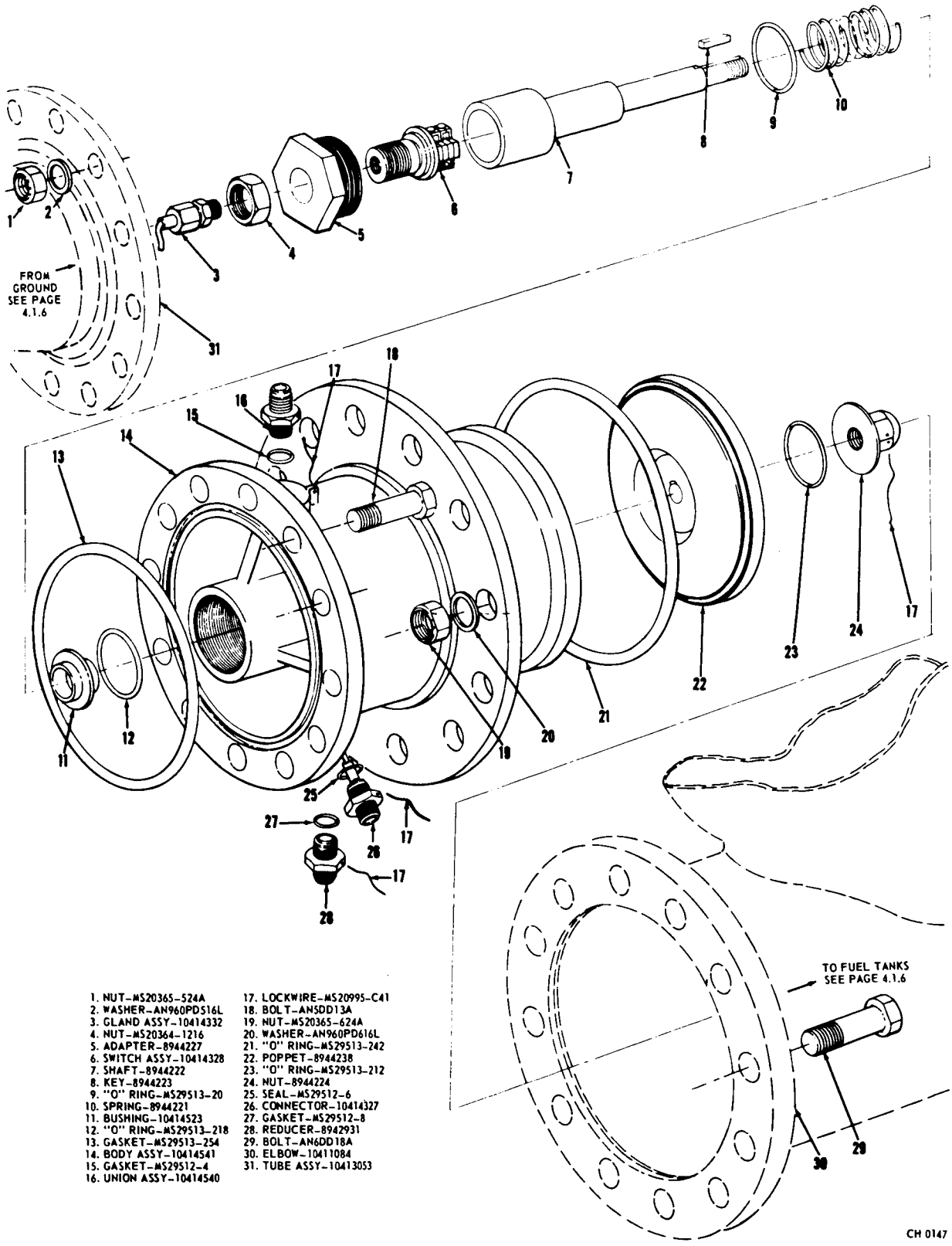

1. NUT-MS20365-524A
2. WASHER-AN960PD516L
3. GLAND ASSY-10414332
4. NUT-MS20364-1216
5. ADAPTER-8944227
6. SWITCH ASSY-10414328
7. SHAFT-8944222
8. KEY-8944223
9. "O" RING-MS29513-20
10. SPRING-8944221
11. BUSHING-10414523
12. "O" RING-MS29513-218
13. GASKET-MS29513-254
14. BODY ASSY-10414541
15. GASKET-MS29512-4
16. UNION ASSY-10414540
17. LOCKWIRE-MS20995-C41
18. BOLT-AN5DD13A
19. NUT-MS20365-624A
20. WASHER-AN960PD616L
21. "O" RING-MS29513-242
22. POPPET-8944238
23. "O" RING-MS29513-212
24. NUT-8944224
25. SEAL-MS29512-6
26. CONNECTOR-10414327
27. GASKET-MS29512-8
28. REDUCER-8942931
29. BOLT-AN6DD18A
30. ELBOW-10411084
31. TUBE ASSY-10413053

4.1.6 FUEL FILL AND DRAIN VALVE - EXPLODED VIEW

FUEL PREVALVES PART NO. 10414024

The normally closed fuel prevalves (B101) used in the fuel system are controlled by the normally open fuel prevalve control valves (B221) whenever control pressure is available.

1. VENDOR - NORTH AMERICAN AVIATION, INC., PART NO. 9512-48410-51.
2. LOCATION - Station 240, used in eight places, located near the top of the suction lines.
3. SERVICE - Air, helium, gaseous nitrogen.
4. PRESSURE -
   a. Nominal operating: 750 psig
   b. Proof: 1125 psig
   c. Burst: 1875 psig
5. TEMPERATURE - OPERATING - Minus 65° F to plus 300° F.
6. ELECTRICAL - Switch must actuate at $2 \pm 1^{\circ}$ - 0° before end of gate travel with 750 psig on control cylinder.
7. LEAKAGE ALLOWANCES -
   a. Control cylinders, vent, and mating surfaces: 5 scim maximum at 750 psig.
   b. Internal: With 45 psig on line and valve in both open and closed positions alternately:
      1. Shaft seals - 20 scim maximum.
      2. Gate pin seals - 2 scim maximum.
      3. Lip seal at outlet side - 25 scim maximum.
   c. External: No leakage allowed.
8. RUBBER SEALS - Must meet the requirements of Specification ABMA-STD-29.

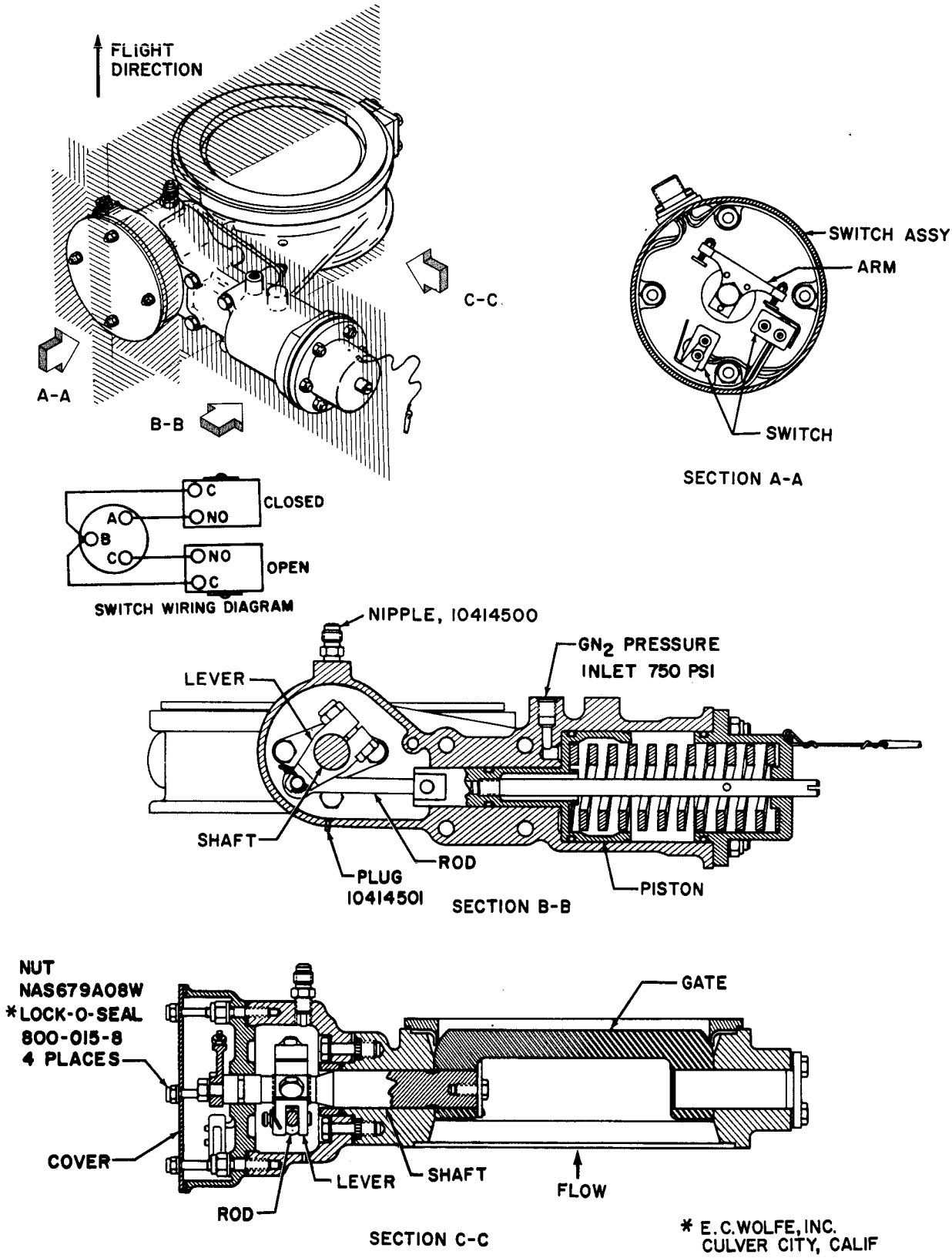

4.1.7 FUEL PREVALVE - SECTIONAL VIEW

THIS PAGE INTENTIONALLY LEFT
BLANK

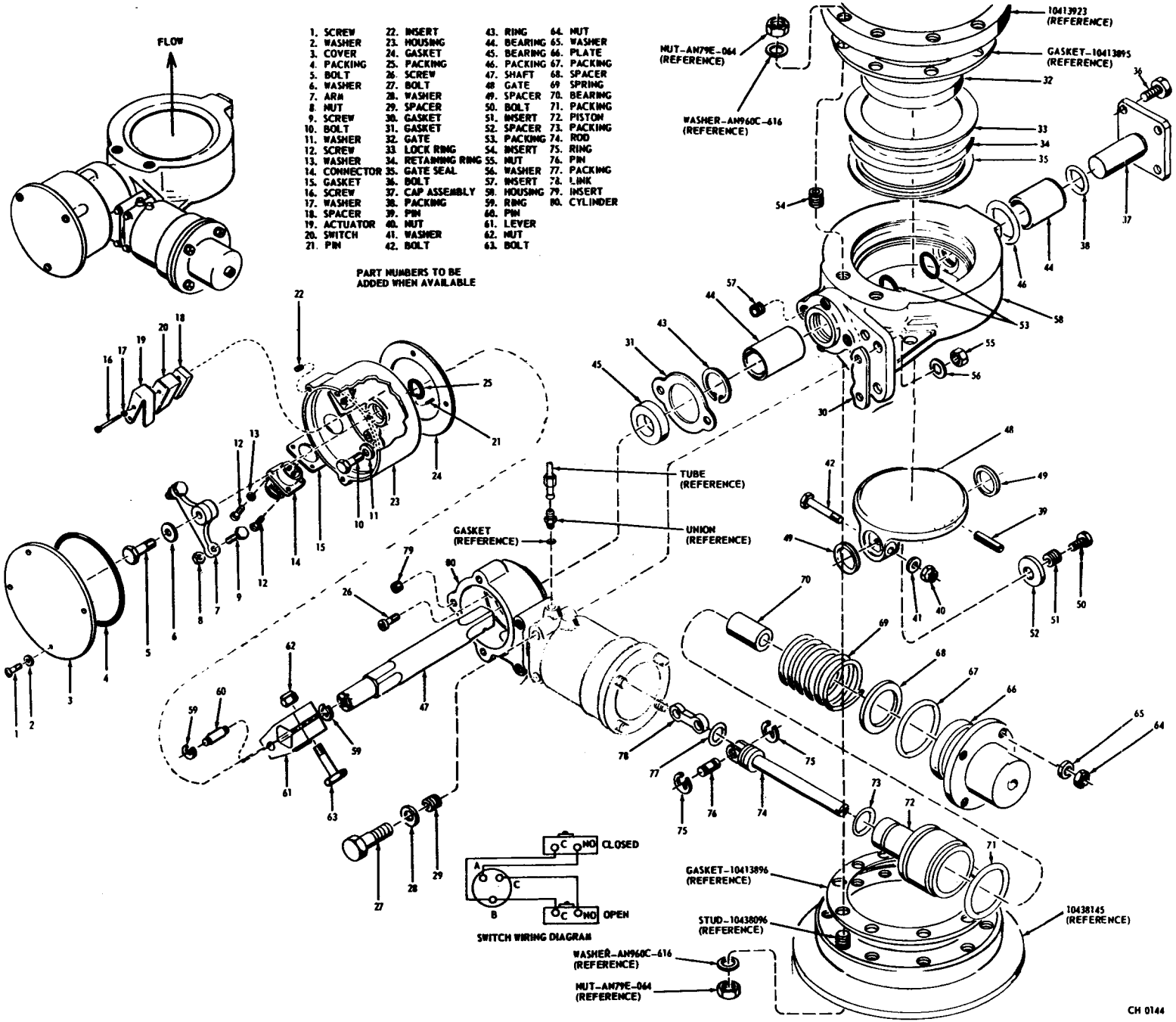

4.1.8 FUEL PREVALVE - EXPLODED VIEW

FUEL LEVEL CONTROL LINE COUPLING PART NO. 10414333

The fuel level control line coupling (B103) is used to connect the ground line to the fuel replenishing valve (B105).

1. VENDOR - E. B. WIGGINS OIL TOOL CO. PART NO. 7005R94A24
2. LOCATION - Station 148 at fin No. 2.
3. SERVICE - Fuel.
4. TEMPERATURE - OPERATING - Minus 65° F to plus 165° F.
5. PRESSURE -
   a. Operating: 50 psig
   b. Proof: 75 psig
   c. Burst: 125 psig
6. LEAKAGE ALLOWANCES - 2 SCIM Maximum

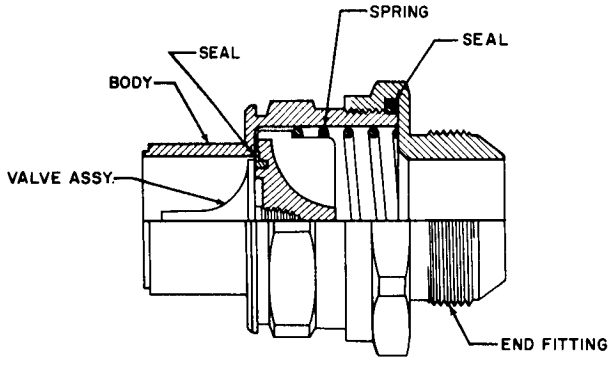

4.1.9 FUEL LEVEL CONTROL COUPLING, 10414053 - SECTIONAL VIEW

Fuel Level Control Coupling Interface View

will be supplied when available

QUICK-DISCONNECT COUPLING PART NO. 10414048

The one-fourth inch quick-disconnect coupling (B104) is used for the fuel level control line.

1. VENDOR - E. B. WIGGINS OIL TOOL CO., PART NO. 6105A4B4.
2. LOCATION - Station 170, fin No. 2 short cable mast 2 connection point.
3. SERVICE - Air, helium, gaseous nitrogen.
4. TEMPERATURE - OPERATING - Minus 65° F to plus 160° F.
5. PRESSURE -
   a. Operating: 750 psig
   b. Proof: 4500 psig
   c. Burst: 7500 psig
6. LEAKAGE ALLOWANCES - No external leakages.
7. LUBRICATION - Lubricate O-ring seals with 9970568 (KEL-F 10 Oil).
8. LINER - Remove liner parts furnished by vendor.

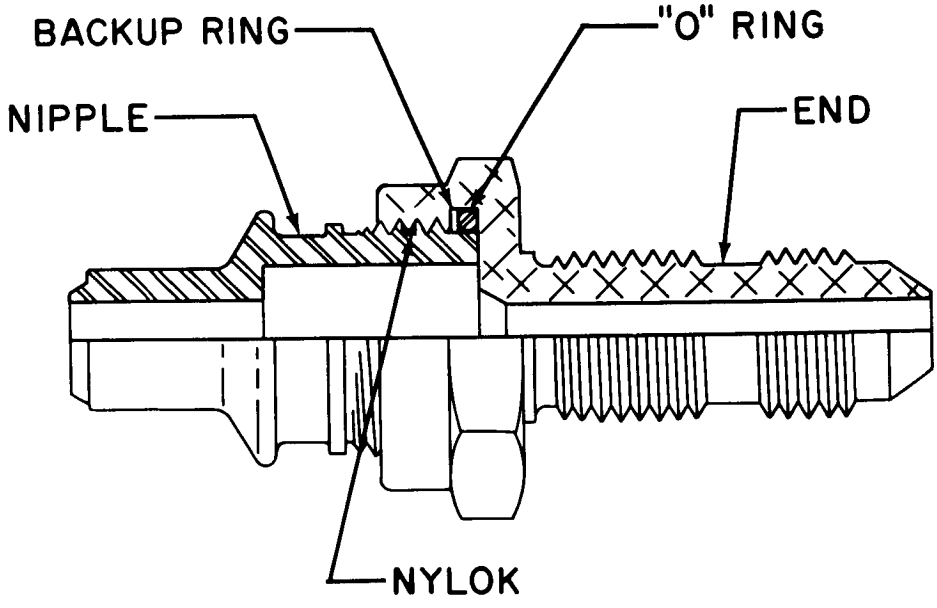

4.1.11 QUICK-DISCONNECT COUPLING, 10414048
SECTIONAL VIEW

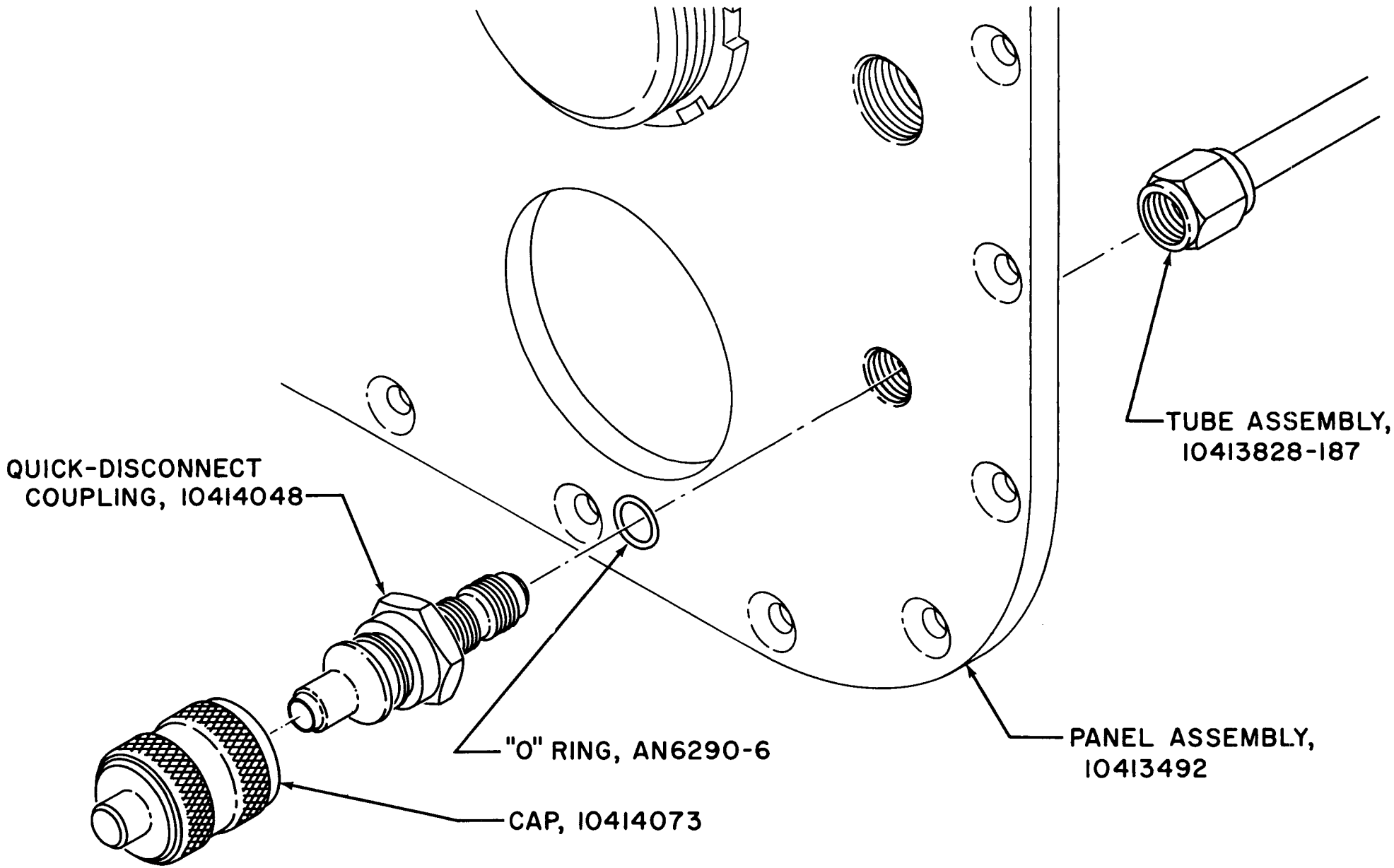

4.1.12 QUICK-DISCONNECT COUPLING - INSTALLATION

FUEL LEVEL CONTROL VALVE PART NO. 10414055

The pneumatically operated fuel level control valve (B105) is used to maintain a predetermined fuel container level depending on the calculations on the pressure differential obtained from the fuel filling computer and fuel density sensor.

1. LOCATION - Station 228 in fuel tank No. 2
2. SERVICE - Air, gaseous nitrogen, fuel
3. PRESSURE
   a. Operating:
      1. Minimum - 500 psig
      2. Nominal - 750 psig
   b. Proof: 1125 psig
   c. Burst: 1875 psig
4. FUEL PRESSURE
   a. Nominal operating pressure: 50 psig.
   b. Flow: 200 gpm minimum at 50 psig water at room ambient temperature.
5. ELECTRICAL -
   a. Continuity: With valve closed, pin "A" to "B", 0.5 ohm maximum resistance allowed.
   b. Insulation resistance: 500 volt Megger test. With valve open, pin "A" to valve body, pin "B" to valve body, and pin "A" to pin "B"; 50 megohm minimum.
   c. Switch actuation: Indicates the valve closed when poppet is within a range of 0.100 to 0.010 inch of fully closed.
6. LEAKAGE ALLOWANCES -
   a. With 750 psig in control cylinder: 5 scim allowed past the control piston and the electrical connector.
   b. Internal: With pneumatic port vented and 50 psig water applied to poppet from direction of large diameter flange, no leakage allowed past poppet seat.
   c. External: No leakage allowed.

   NOTE: No liquid leak detector may be used on the switch wires or electrical connector.
7. LUBRICATION - Lubricate O-rings and sliding surfaces with QC-2-0026.
8. TORQUE - Torque bolts 10414297-6 and bolts 10414297-1 per ABMA-STD-18.
9. TEMPERATURE - Minus 65° F to plus 125° F.

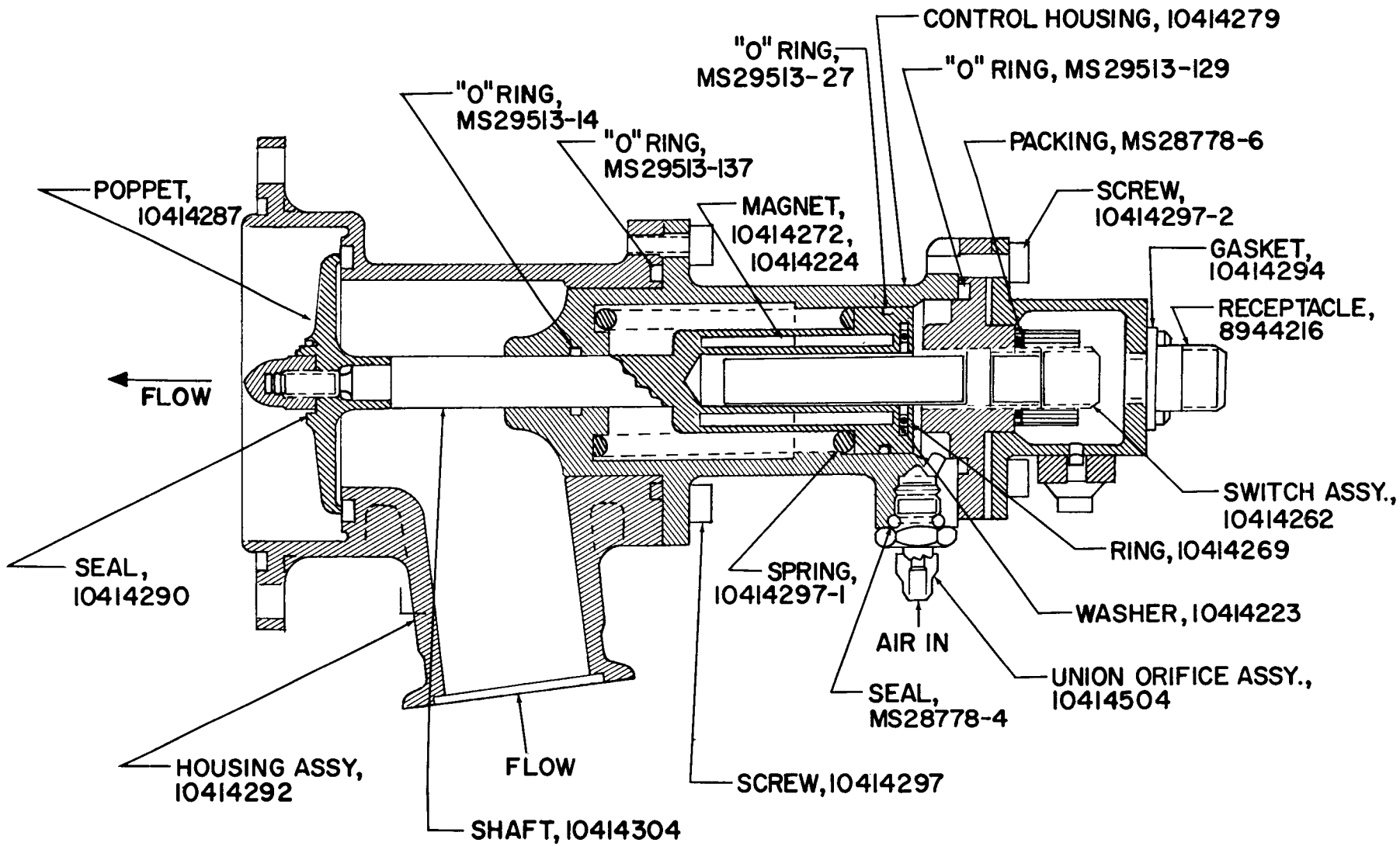

4.1.13 FUEL LEVEL CONTROL VALVE, 10414055
SECTIONAL VIEW

THIS PAGE INTENTIONALLY LEFT
BLANK

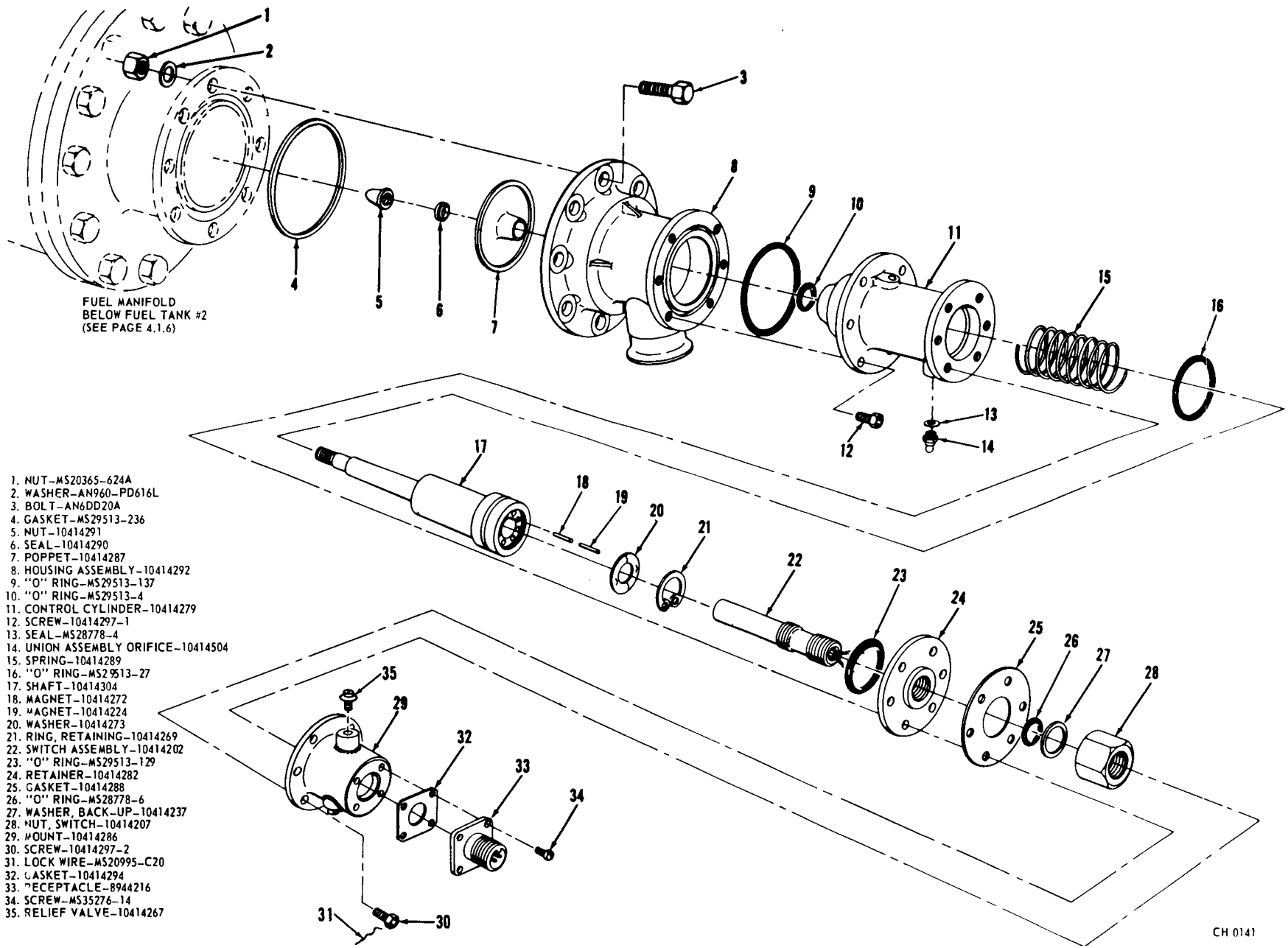

1. NUT–MS20365–624A
2. WASHER–AN960–PD616L
3. BOLT–AN6DD20A
4. GASKET–MS29513–236
5. NUT–10414291
6. SEAL–10414290
7. POPPET–10414287
8. HOUSING ASSEMBLY–10414292
9. "O" RING–MS29513–137
10. "O" RING–MS29513–4
11. CONTROL CYLINDER–10414279
12. SCREW–10414297–1
13. SEAL–MS28778–4
14. UNION ASSEMBLY ORIFICE–10414504
15. SPRING–10414289
16. "O" RING–MS29513–27
17. SHAFT–10414304
18. MAGNET–10414272
19. MAGNET–10414224
20. WASHER–10414273
21. RING, RETAINING–10414269
22. SWITCH ASSEMBLY–10414202
23. "O" RING–MS29513–129
24. RETAINER–10414282
25. GASKET–10414288
26. "O" RING–MS28778–6
27. WASHER, BACK-UP–10414237
28. NUT, SWITCH–10414207
29. MOUNT–10414286
30. SCREW–10414297–2
31. LOCK WIRE–MS20995–C20
32. GASKET–10414294
33. RECEPTACLE–8944216
34. SCREW–MS35276–14
35. RELIEF VALVE–10414267

4.1.14 FUEL LEVEL CONTROL VALVE - EXPLODED VIEW

THREE-WAY NEEDLE VALVE, 10414076

The manually-operated three-way valve (B106) is used to calibrate the fuel step pressure switch (B107).

1. LOCATION - In fuel tank No. 2 skirt section.
2. VENDOR - BENTON CORPORATION, PART NO. B17500.
3. PACKING MATERIAL - Teflon
4. PRESSURE -
   a. Operating: 3000 psig
   b. Proof: 4500 psig
   c. Burst: 7500 psig
5. TEMPERATURE OPERATING - Minus 100° F to plus 550° F.
6. SERVICE - Air, nitrogen, helium, H_2O_2, fuel, combustible gas, hydraulic oil, lube oil
7. LUBRICATION - No lubrication allowed.

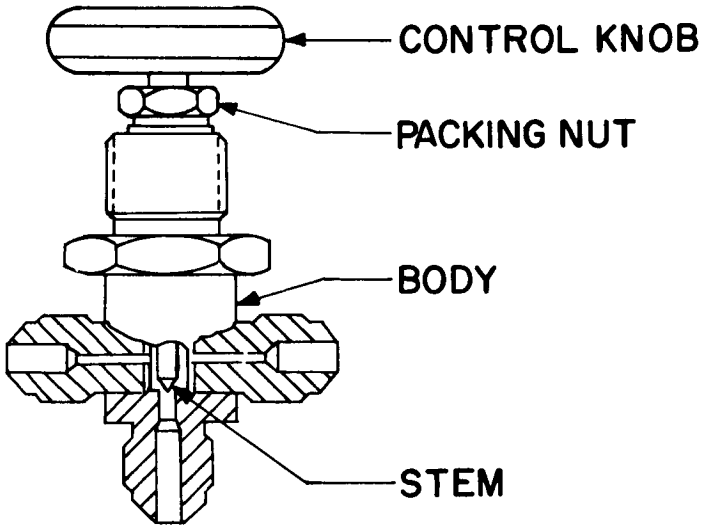

4.1.15 THREE-WAY NEEDLE VALVE, CHECKOUT 10414076
SECTIONAL VIEW

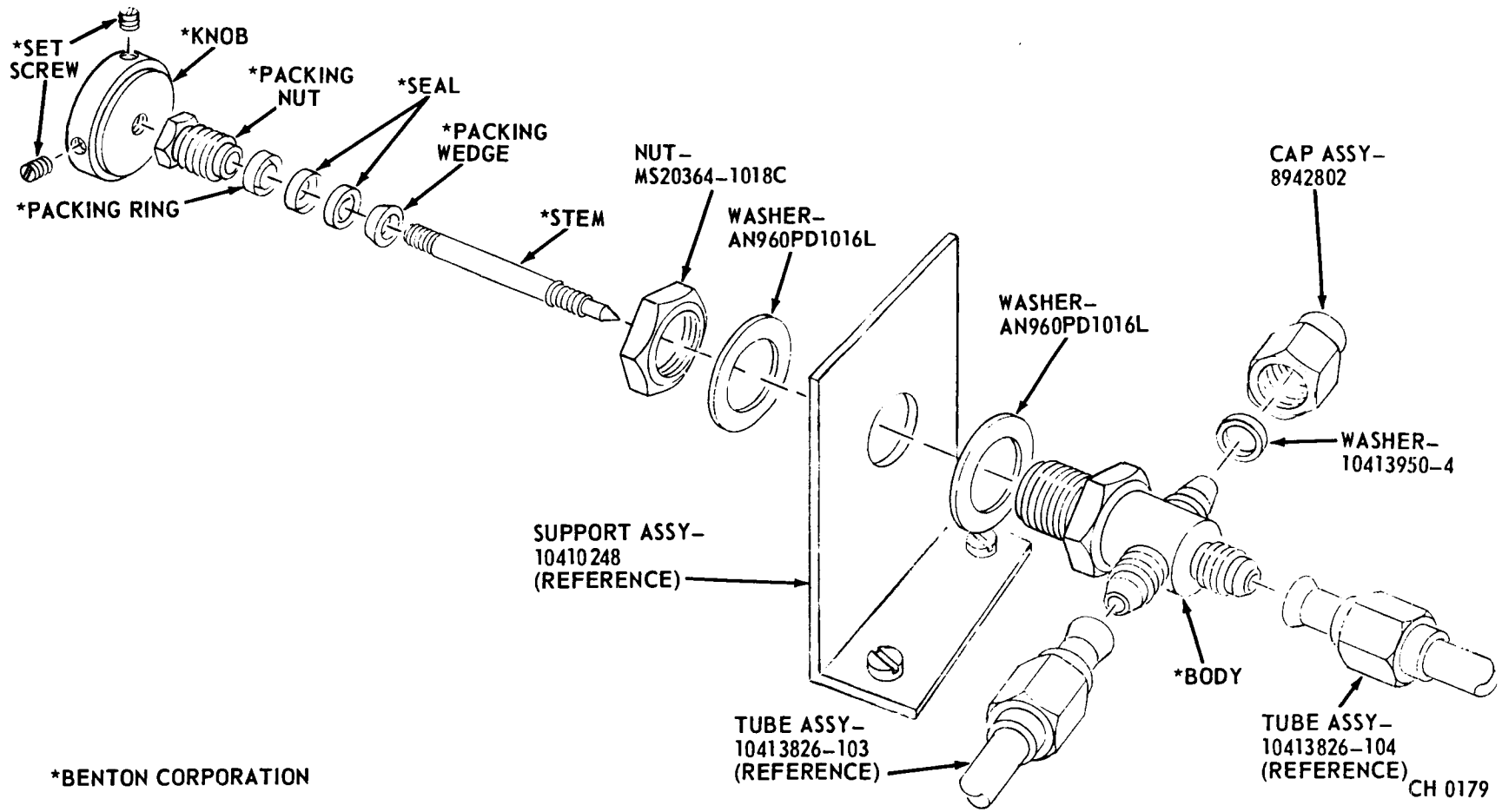

*BENTON CORPORATION

4.1.16 THREE-WAY NEEDLE VALVE CHECKOUT EXPLODED VIEW

FUEL STEP PRESSURE SWITCH PART NO. 10414081

The normally-open, fuel step pressure switch (B107) is used to indicate specific fuel level in the container.

1. VENDOR - SERVOMECHANISMS, INC. PART NO. X815021.
2. LOCATION - In fuel tank No. 2.
3. SERVICE - Fuel.
4. TEMPERATURE - OPERATING - Minus 65° F to plus 165° F.
5. PRESSURE -
   a. Operating: Switch shall have one switching point adjustable by exchanging calibrated resistors. Five resistors shall be supplied for the following pressures: 12.0, 13.5, 15.0, 16.5, 18.0 psid.
   b. Proof pressure: 120 psig.
6 ELECTRICAL -
   a. Insulation resistance: 250 volt Megger test, terminal to chassis for both PTO2E-8-4P and PTO2E-8-2P connectors; 50 megohm minimum.
   b. Switch: Normally open, single pole, one amp solid state circuitry. Switch shall be above ground if the d.c. supply voltage is above ground.
   c. Excitation: 26 to 32 volt d.c., 28 volt nominal, operate at reduced specification from 22 to 32 volt.
   d. Accuracy: ± 0.5 percent of setting, 22 to 32 volt, 1.0 percent of setting.
   e. Functional test:
      1. Apply 26 volt d.c. (neg.) to pin "A" and 26 volt d.c. (pos.) to pin "B" of PT02E-8-4P. Allow 30 minutes warm-up time. Output voltage between pin "C" (pos.) and pin "A" (neg.) shall be 24 + 2-0 volt with 200 ohm resistance.
      2. Apply 14 psig of dry gas to high-pressure port. Pins "C" and "A" shall indicate 24 + 2-0 volt.
      3. Slowly increase pressure from 14 psig until pressure switch operates. Pins "C" and "A" shall indicate 0 + 0.5 - 0 volt d.c. Pressure indication shall be 15 + 0.3 psig.
      4. Decrease pressure to zero. Repeat step 4 ten cycles noting actuation pressure.
   f. Heater test: Install pressure switch in a temperature chamber set for 30° F. Apply 115 d.c. to PT02E-8-2P connector. Cycle heater three times. Ammeter shall indicate 750 + 100 milliseconds.

Fuel Step Pressure Switch Part No. 10414081

Sectional View to be supplied when

available

THIS PAGE INTENTIONALLY LEFT
BLANK

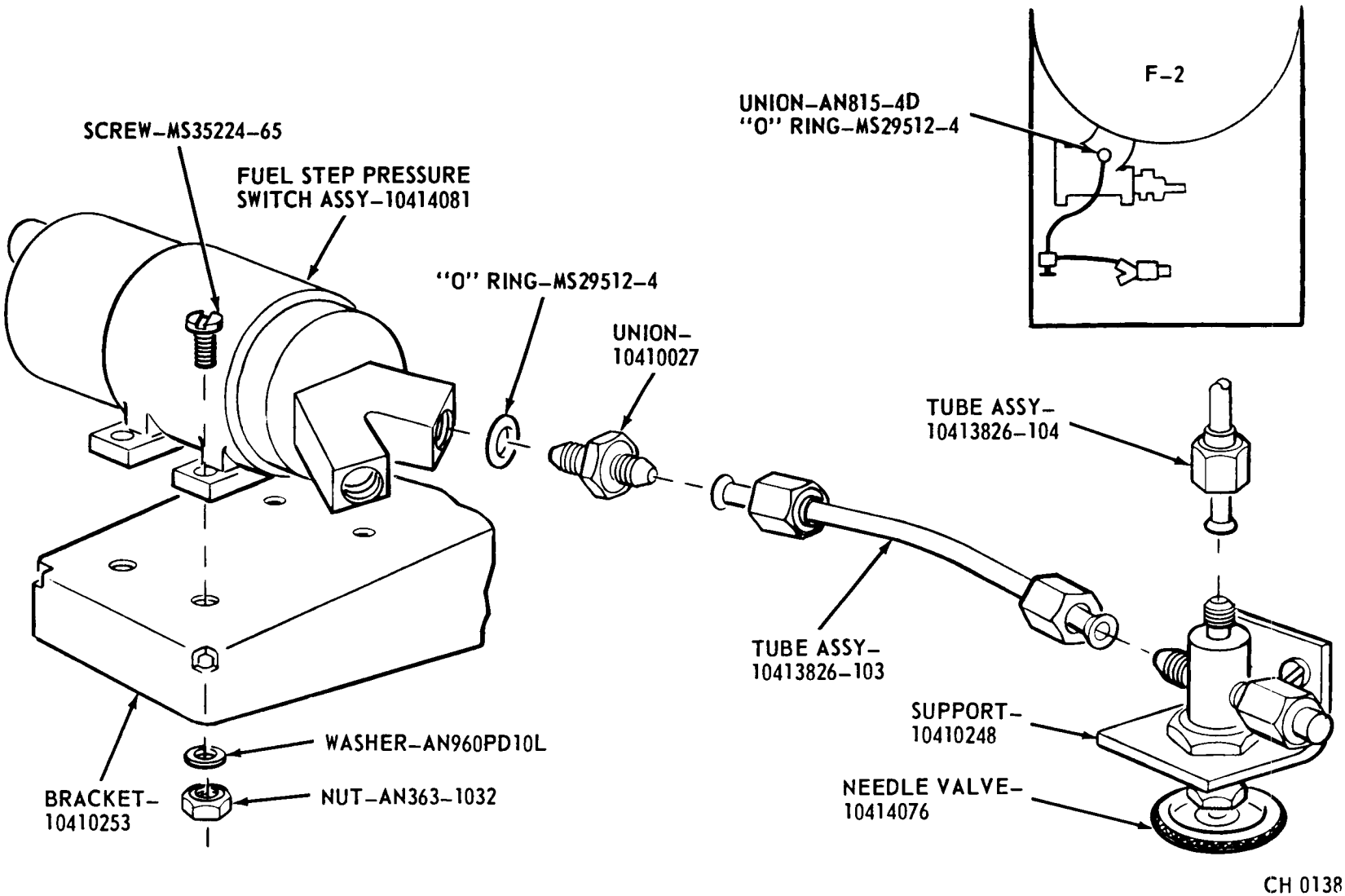

4.1.18 FUEL STEP PRESSURE SWITCH - EXPLODED VIEW

QUICK-DISCONNECT COUPLING PART NO. 10414063

The one-fourth inch quick-disconnect couplings (B112, B113, B114, B115, B229) are used for the fuel tank test, low-pressure density sensing line, low-pressure fuel filling computer, fuel bubbling and high-pressure density sensing lines on the vehicle.

1. VENDOR - E.B. WIGGINS OIL TOOL COMPANY, PART NO. 6005R79A4.
2. LOCATION - On long cable mast connection point and short cable mast fin 2.
3. SERVICE - Air, helium, gaseous nitrogen, fuel vapor.
4. TEMPERATURE - OPERATING - Minus 65° F to plus 165° F.
5. PRESSURE -
   a. Operating: 3000 psig
   b. Proof: 4500 psig
   c. Burst: 7500 psig
6. LEAKAGE ALLOWANCES -
   a. Internal: 2 scim maximum at operating pressure and temperature.
   b. External: No leakage.
7. LUBRICATION - Lubricate o-ring seals with 9970568 (KEL-R 10 Oil).

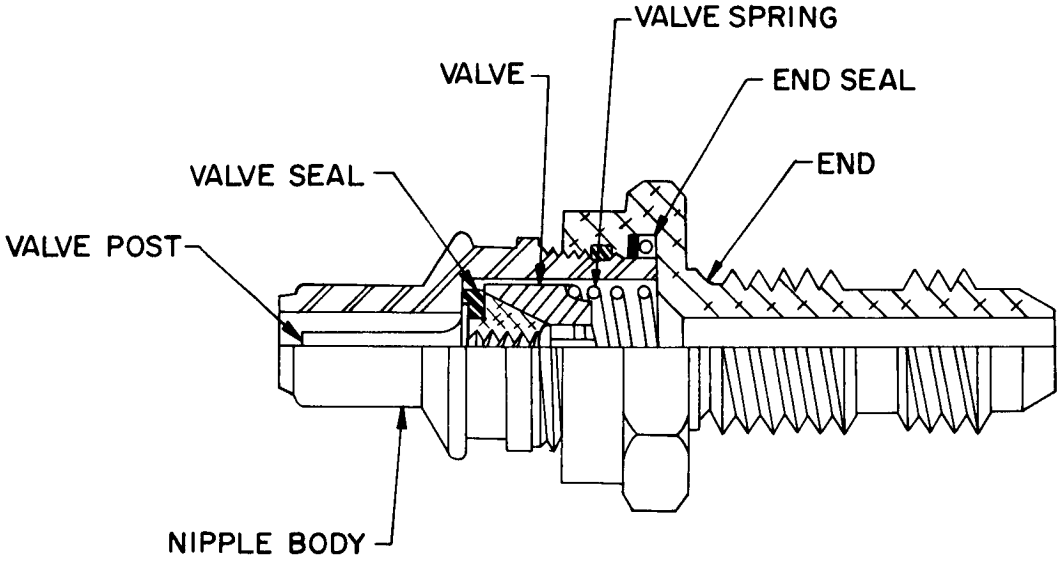

PART NUMBERS TO BE ADDED WHEN AVAILABLE

CH 0126

4.1.19 QUICK - DISCONNECT COUPLING 10414063 SECTIONAL VIEW

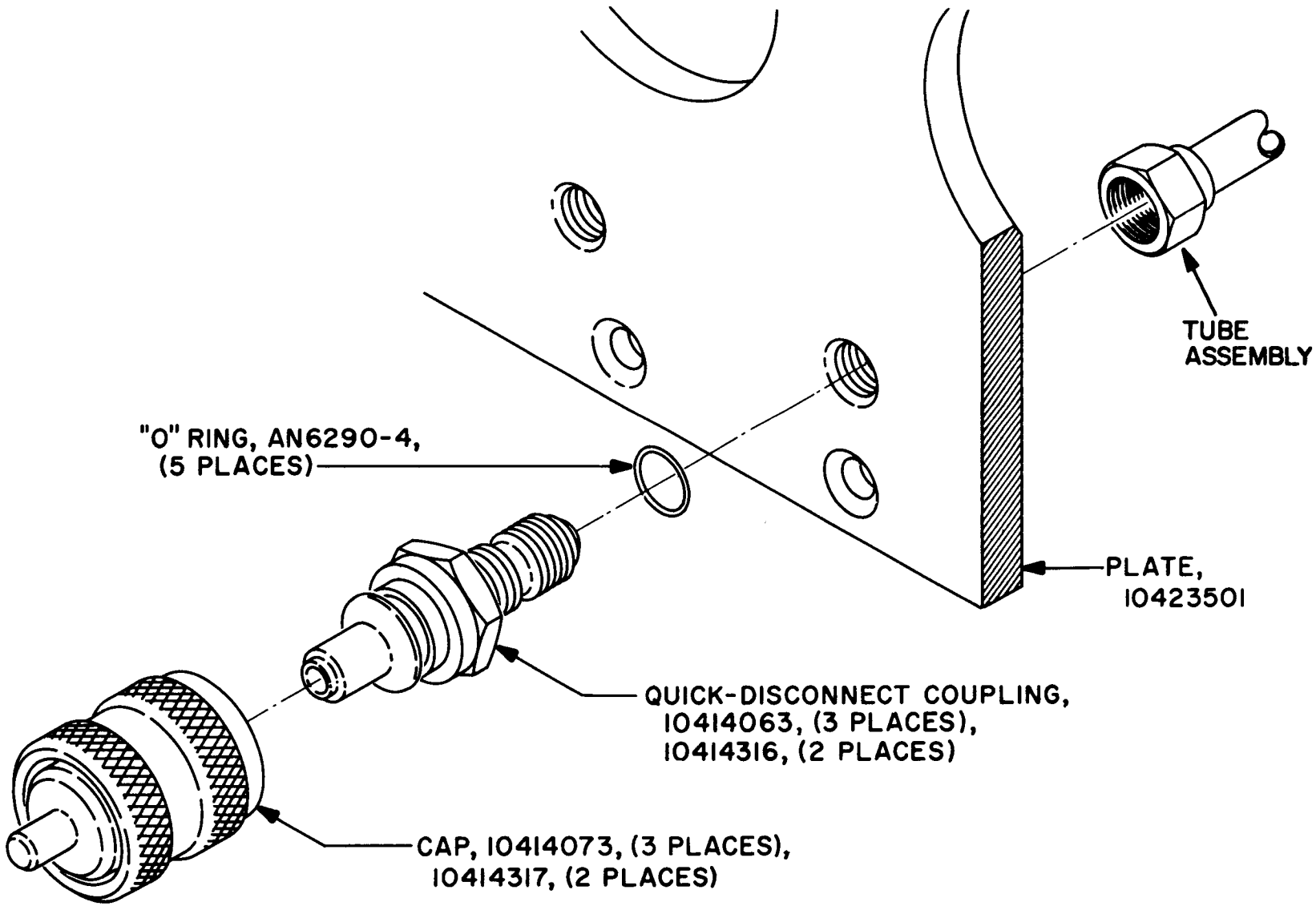

4.1.20 QUICK-DISCONNECT COUPLING - INSTALLATION

FUEL LEVEL SWITCH PART NO. 10414047

The fuel level switch furnishes one of three ways for cutting off fuel flow into the missile tanks. The switch is float operated and contains a precheck solenoid.

1. VENDOR - UNITED CONTROL CORPORATION, PART NO. 1093-1.
2. LOCATION - Station 828 in fuel tank No. 2.
3. SERVICE - Hydrocarbon fuels, actuation and deactuation levels are given for RP-1 (measured from connector end of switch to top of float - 1.83 inches actuation level rising fluid; 2.06 inches deactuation level falling fluid).
4. TEMPERATURE - OPERATING - Minus 320° F to plus 165° F.
5. THERMAL SHOCK - Immediate shock from plus 70° F to minus 320° F.
6. ELECTRICAL LOAD - 0.5 amp inductive, at rated voltage, 28 $\pm$ 2 v.d.c., steady operation.
7. PRESSURE -
   a. External operating pressure: 100 psig
   b. External proof pressure: 150 psig
   c. External burst pressure: 250 psig
8. PRECHECK SOLENOID - Must withstand energization at 28 v.d.c. at room temperature for 60 seconds without adverse effects within any 10 minute period. Solenoid resistance shall be .14 2 ohm and operating voltage 22 to 32 v.d.c., nominal 28 v.d.c. Pull-in 22 volts maximum Drop-out: 12 volts maximum, 1 volt minimum.
9. SWITCH CONTINUITY - Operate with precheck solenoid
   a. Low level contacts, green and black leads: Deactuation 0.5 ohms maximum actuation 500,000 ohm minimum.
   b. High level contacts, white and black leads: Deactuation 500,000 ohm minimum actuation 0.5 ohm maximum.

Fuel Level Switch, Part No. 10414047, Sectional View

to be supplied when available.

THIS PAGE INTENTIONALLY LEFT
BLANK

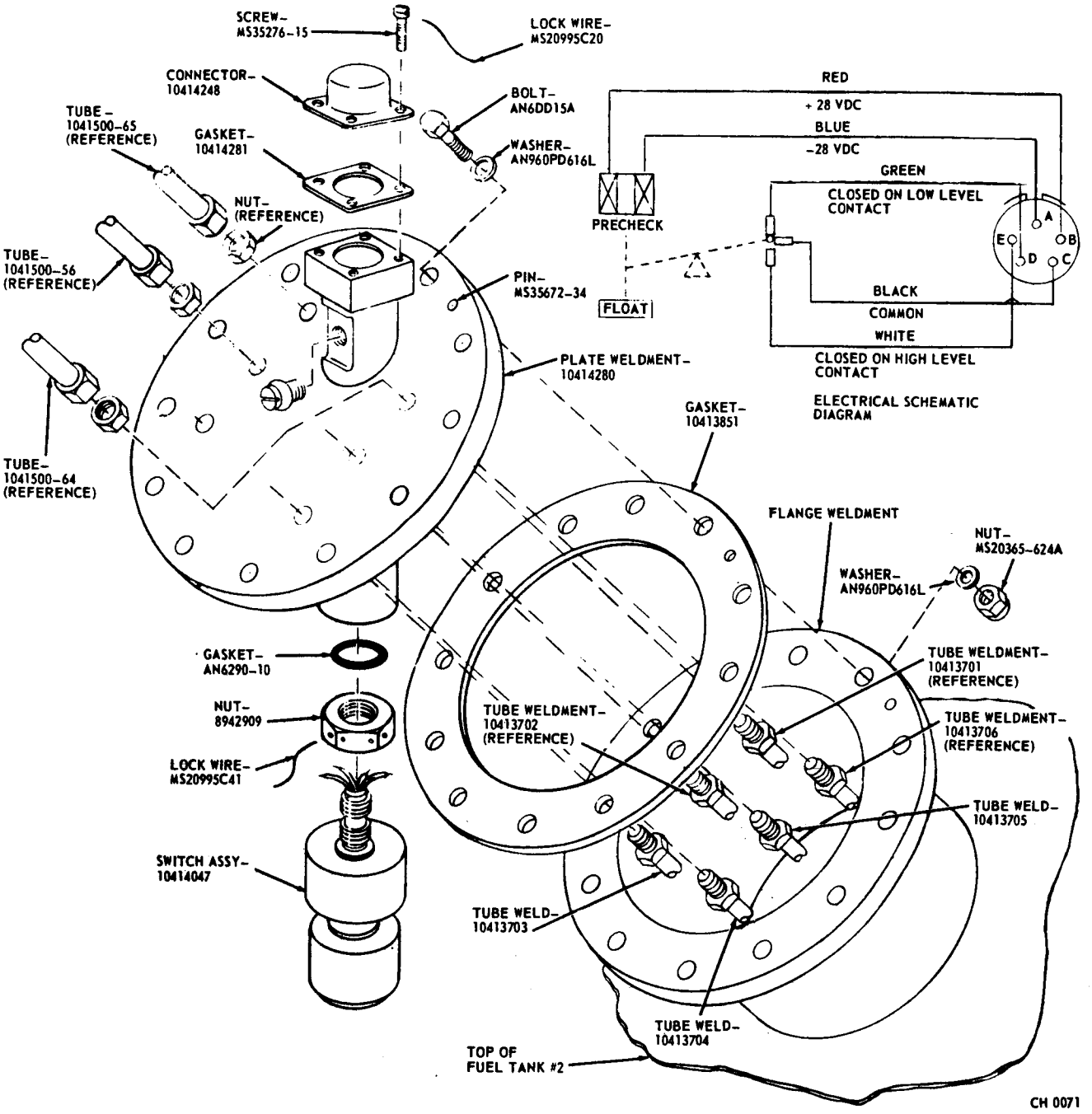

4.1.22 FUEL LEVEL SWITCH AND CONNECTOR ASSEMBLY EXPLODED VIEW

INBOARD ENGINE CUTOFF SWITCH ASSEMBLY PART NO. 10414348

The inboard engine cutoff switches (B117, B119) initiate engine cutoff. This occurs when the sensors of the switch clear the surface of the fuel and give the signal for engine cutoff.

1. VENDOR - ACOUSTICA ASSOCIATES, INC. PART NO. ASF109-1
2. LOCATION - Station 228 in fuel tank No. 2
3. SERVICE - RP-1 and water.
4. TEMPERATURE - Minus 55°F to plus 165°F
5. PRESSURE - OPERATING - 150 psig maximum
6. ELECTRICAL -
   a. Switch: Single pole, double throw, contacts rated at one amp solid state 2 amps d. c.. Closed contacts shall have less than .5 ohm resistance.
   b. Accuracy: On decreasing liquid level, the level shall be indicated within plus or minus .12 for excitations from 26 to 30 v. d. c. The level shall be indicated within plus or minus .25 for 22 to 26 and 30 to 32 v. d. c. excitations.

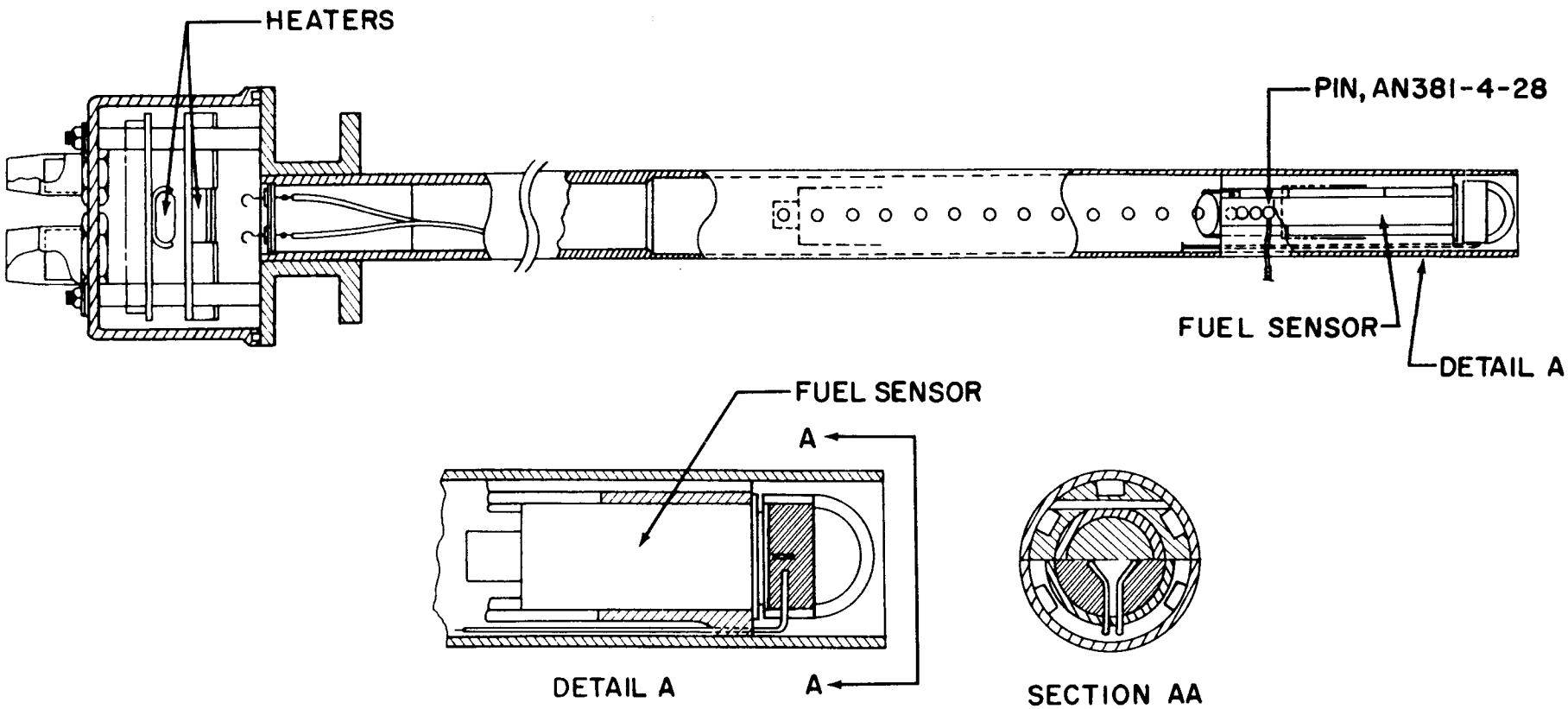

4.1.23 INBOARD ENGINE CUTOFF SWITCH ASSEMBLY, 10414348-SECTIONAL VIEW

THIS PAGE INTENTIONALLY LEFT
BLANK

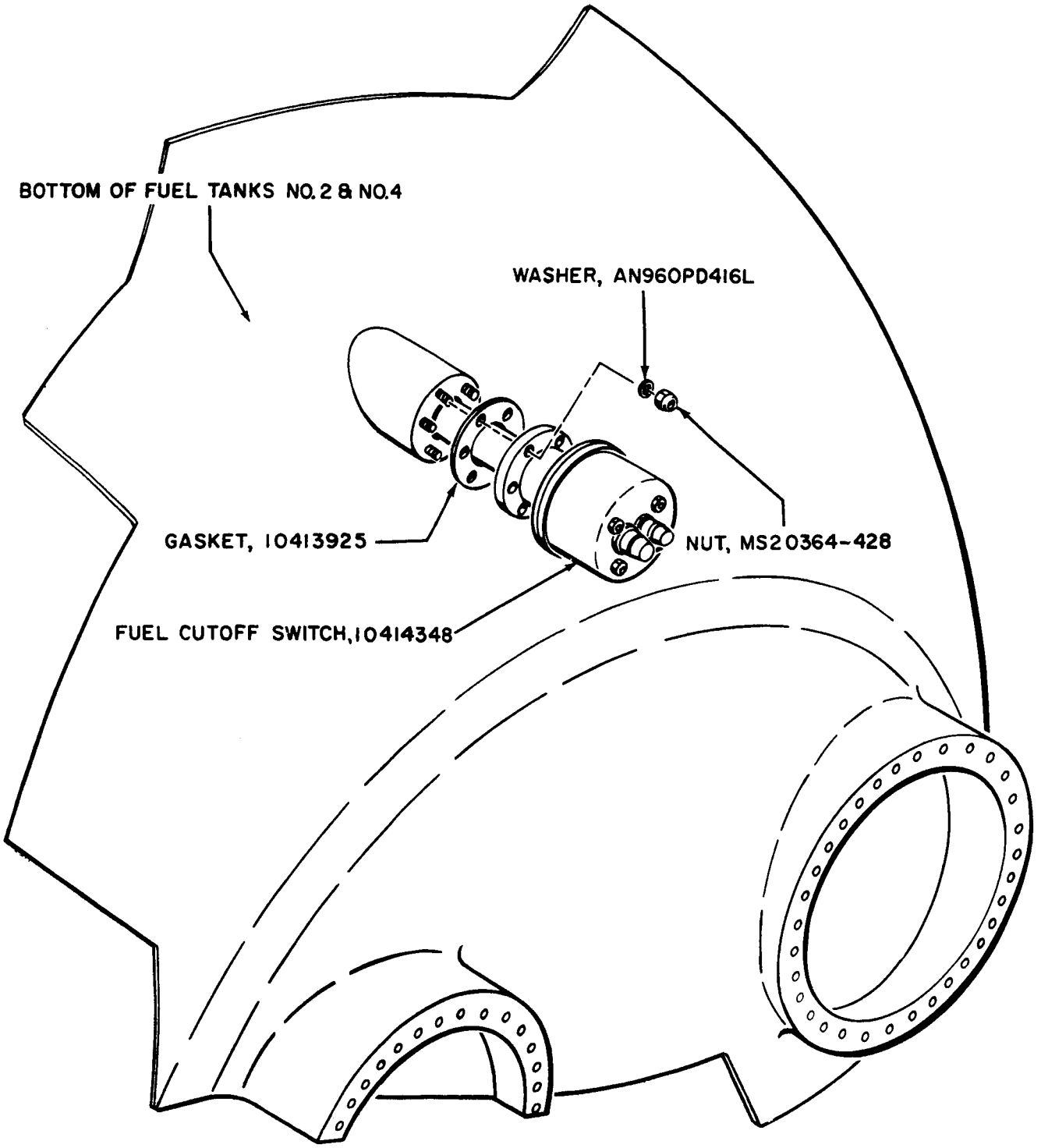

4.1.24 INBOARD ENGINE CUTOFF SWITCH ASSEMBLY-INSTALLATION

FUEL FILL AND DRAIN CONNECTOR, PART NO. 10414022

The connector (B118) is used in the fuel fill and drain system in conjunction with the ground quick disconnect assembly.

1. LOCATION - Station 225, fuel tank No. 1.
2. SERVICE - Fuel.
3. PRESSURE -
   a. Nominal operating: 50 psig.
   b. Proof: 75 psig.
   c. Burst: 125 psig.
4. LEAKAGE ALLOWANCE - 10 scim maximum past "O" ring at 10 and 50 psig.
5. LUBRICATION - Lubricate "O" ring with Dow-Corning QC-2-0026 grease.

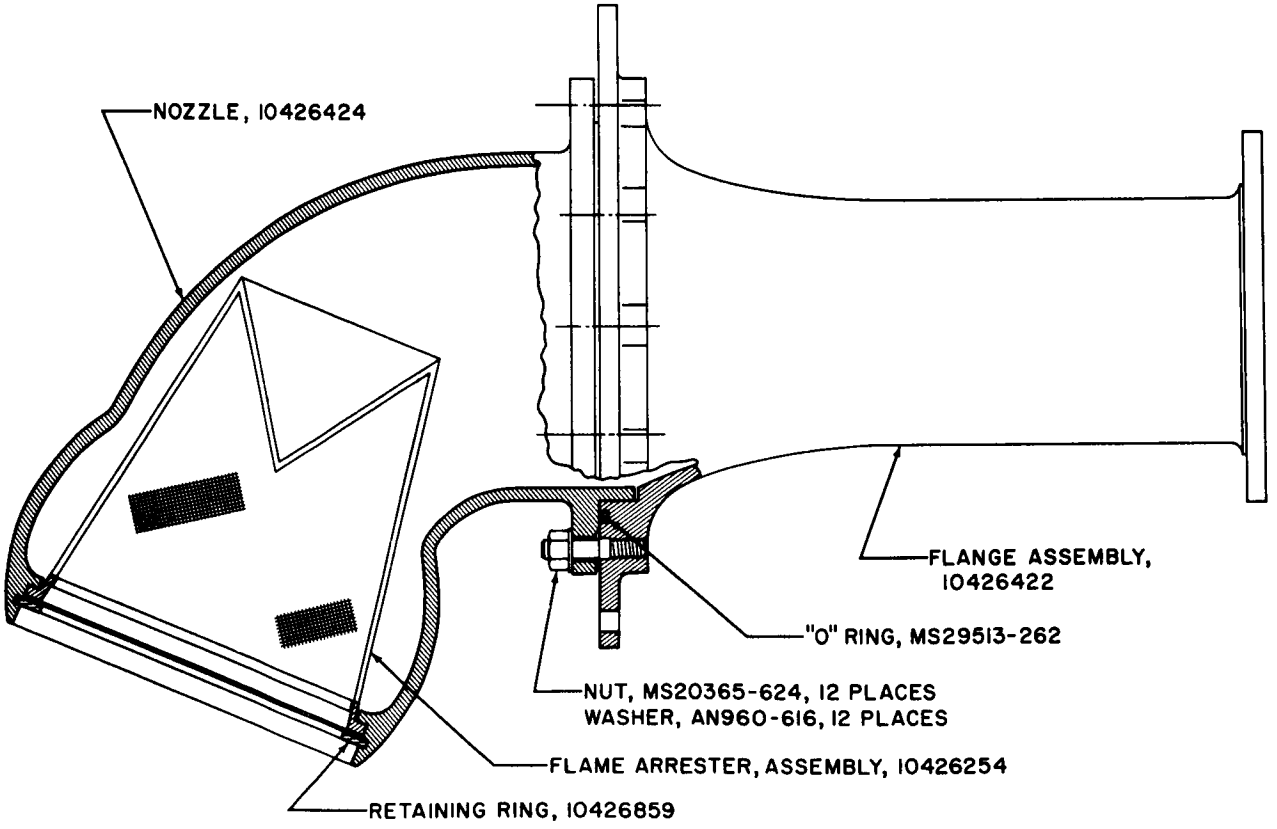

4.1.25 FUEL FILL AND DRAIN CONNECTOR SECTIONAL VIEW

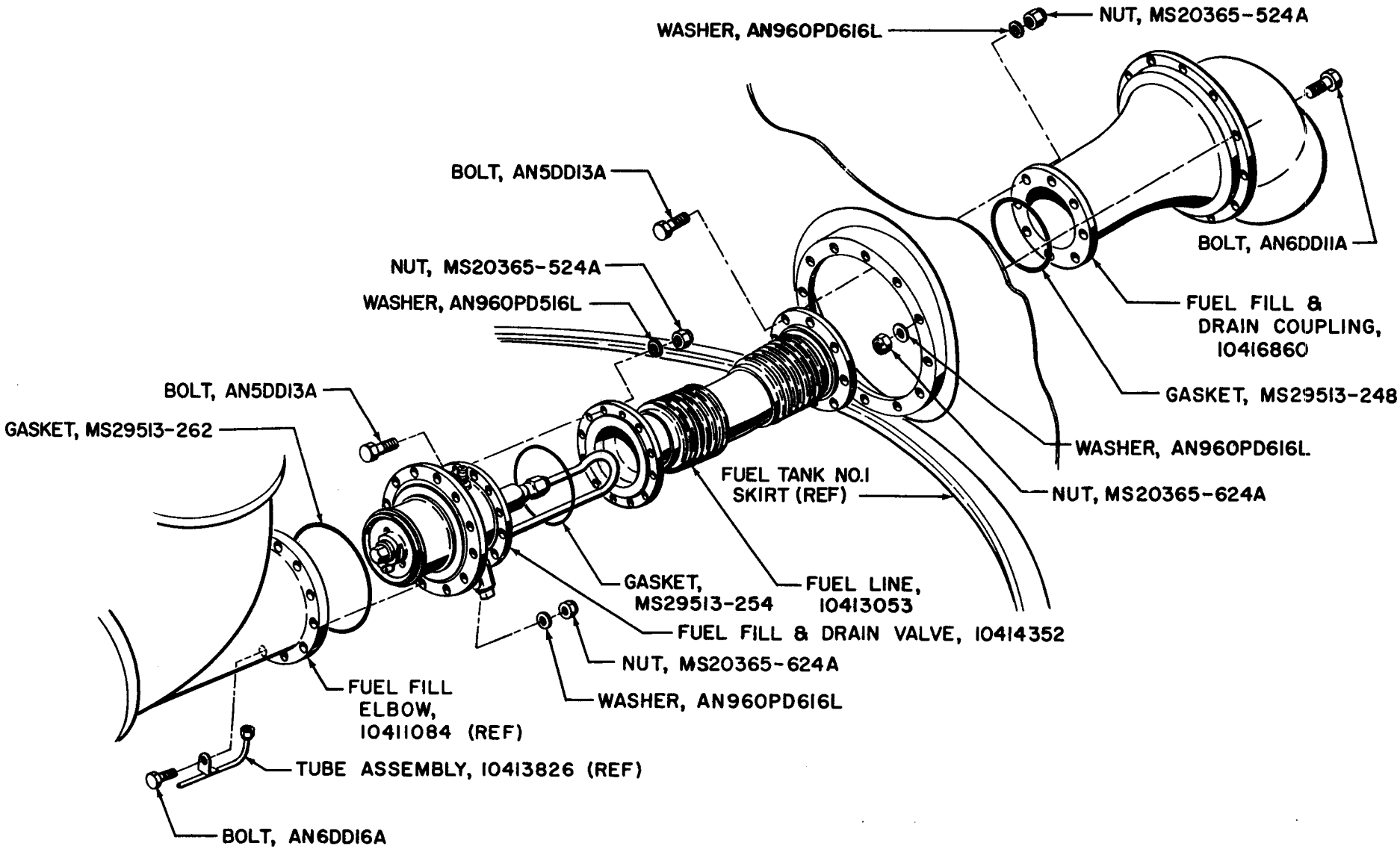

4.1.26 FUEL FILL AND DRAIN LINE AND COUPLING ASSEMBLY INSTALLATION

FUEL BUBBLING FILTER, PART NO. 10414314

The 20-micron fuel bubbling filter (B120) is used in the fuel bubbling suction line.

1. VENDOR - WALTER KIDDE AND CO., INC.
   PART NO. 8.2048.
2. LOCATION - Station 120 near fin No. 2.
3. SERVICE - Air, helium, gaseous nitrogen.
4. PRESSURE -
   a. Operating: 60 psig
   b. Proof: 4500 psig
   c. Burst: 7500 psig
5. TEMPERATURE - OPERATING - Minus 65° F to + 180° F.
6. LUBRICATION - Lubricate "O" Rings with 9970568 (KEL-F10 Oil).
7. FILTRATION - 20 micron.

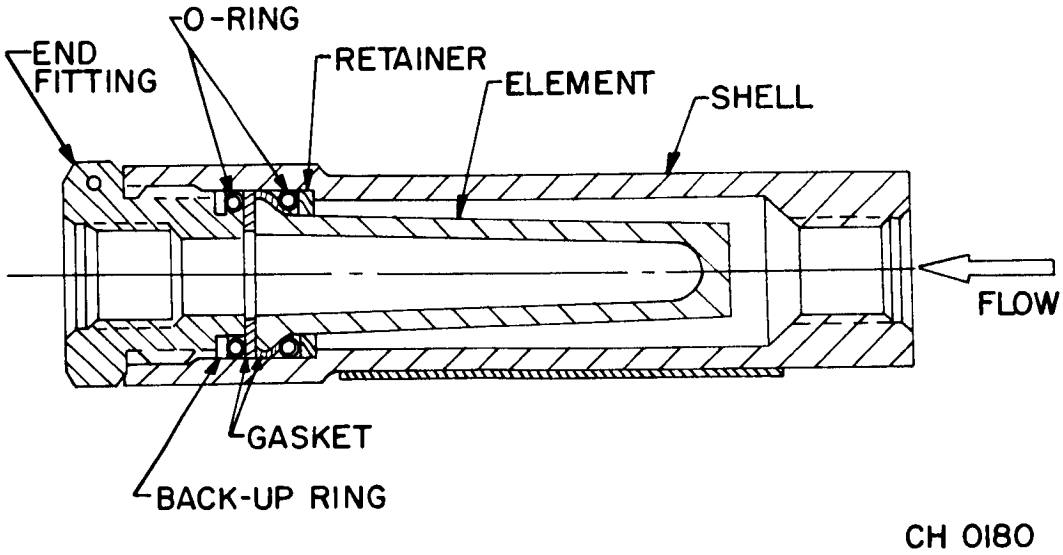

4.1.27 FUEL BUBBLING FILTER - 10414314
SECTIONAL VIEW

1 June 1961

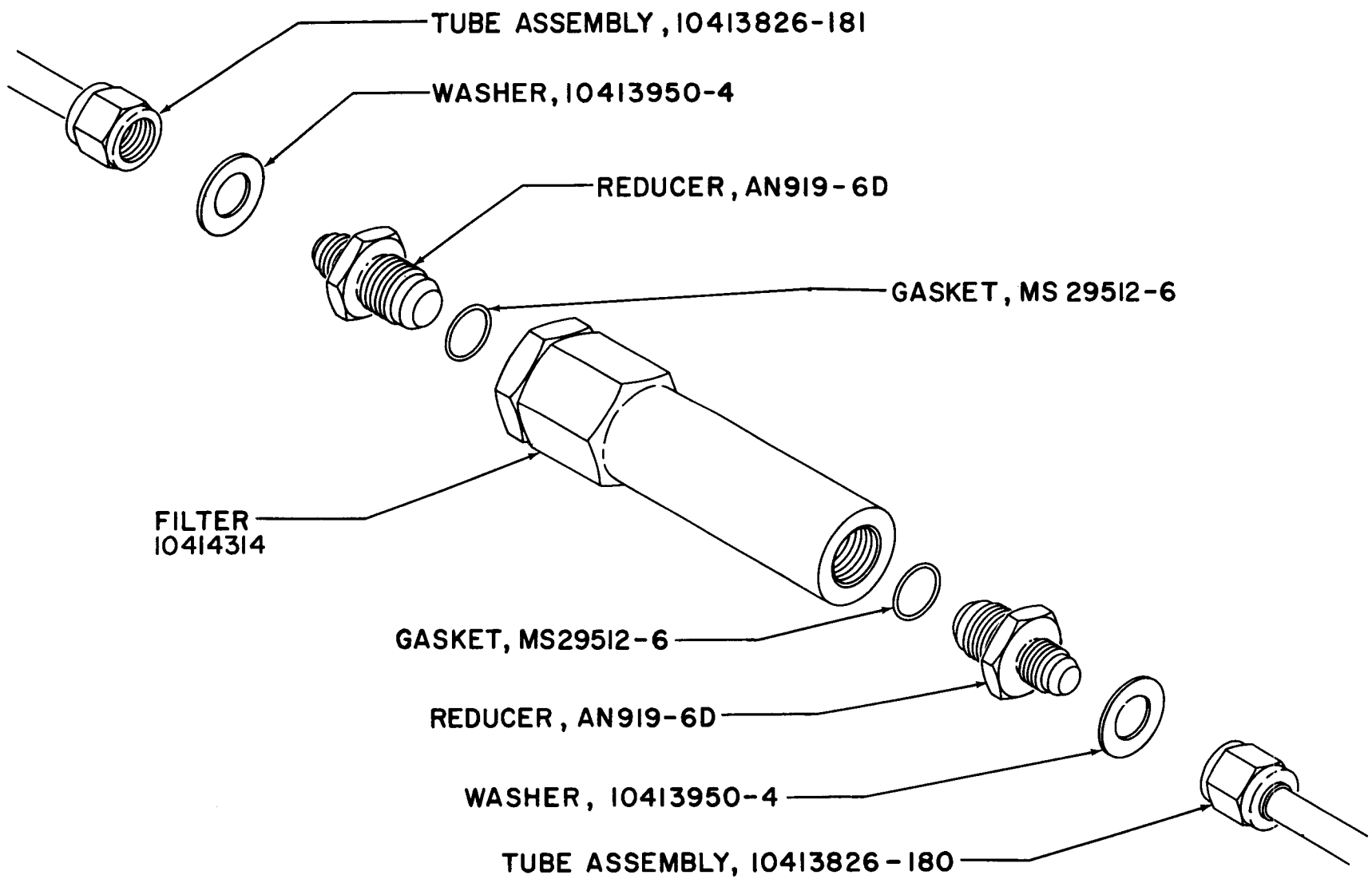

4.1.28 FUEL BUBBLING FILTER - INSTALLATION

FUEL BUBBLING CHECK VALVE PART NO. 10414014

The check valve (B232) is used in the fuel bubbling line to prevent back-flow of fuel through the bubbling line during engine operation. The check valve is located between the flowmeter (B102) and the prevalve (B101).

1. VENDOR - ADEL PRECISION PRODUCTS CORPORATION
2. LOCATION - In each fuel suction line at approximately Station 156.
3. SERVICE - Air, helium, nitrogen, fuel.
4. PRESSURE -
   a. Operating: 3000 psig
   b. Proof: 4500 psig
   c. Burst: 7500 psig
5. TEMPERATURE- Minus 65° F to plus 165° F.
6. LUBRICATION - All rubber components shall be lubricated with KEL-F No. 10 oil (M.K. Kellogg) or approved equal.
7. LEAKAGE -
   a. External: None
   b. Internal: 5 scim at operating pressure.

Refer to Page 4.5.20 for sectional view.

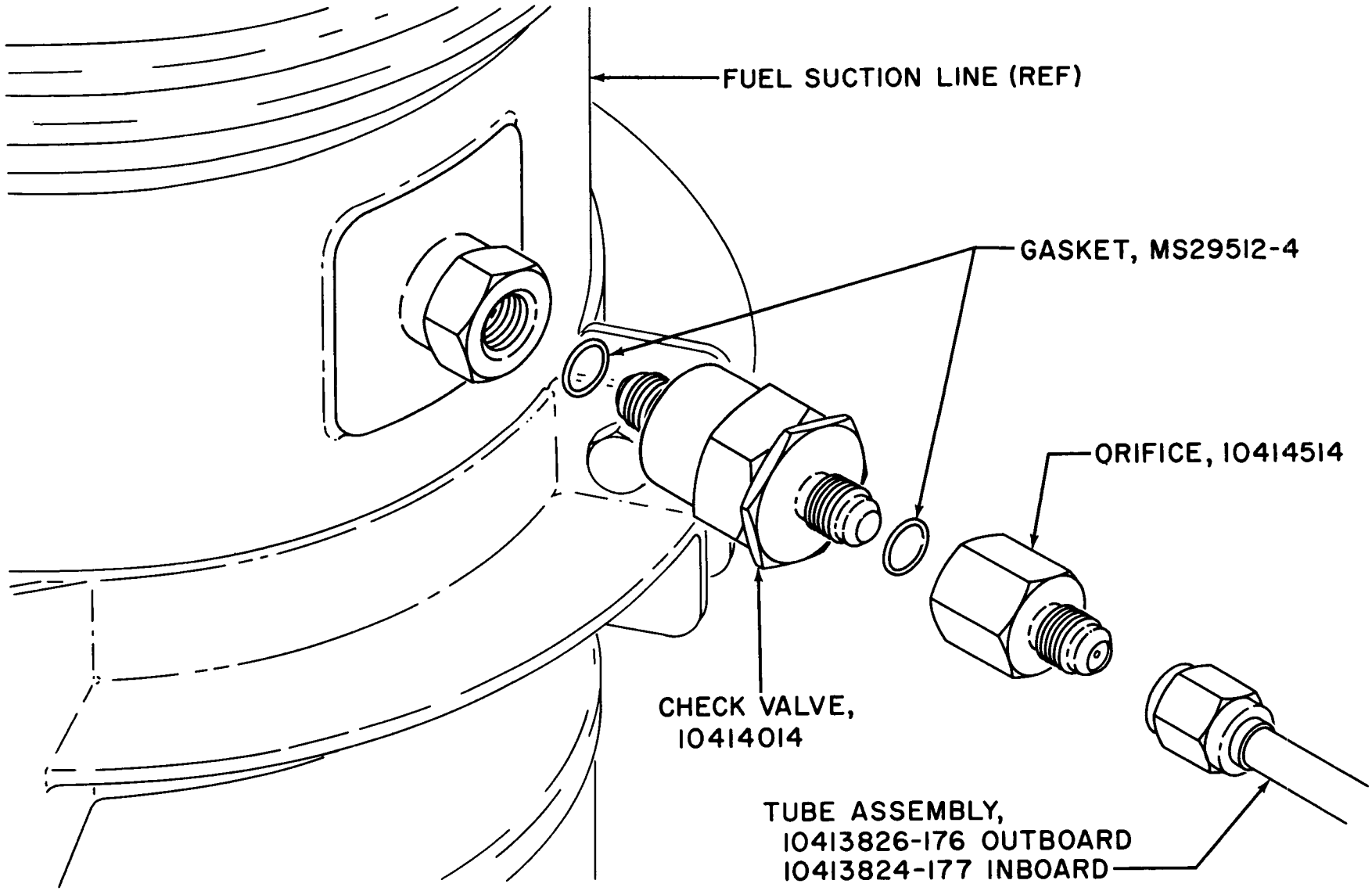

4.1.29 FUEL BUBBLING CHECK VALVE AND ORIFICE - INSTALLATION

FUEL LEVEL PROBE PART NO. 8968379

The fuel level probes (B425, B431) are located in each of the fuel tanks. The probes are used to indicate a differential head at any given time during flight. By virtue of design, the probe vibrates at a known frequency in free air. When submerged in fuel, the probe vibrates at a different frequency which when related to the known frequency of free air indicates the head of fuel above the probe.

1. VENDOR - ACOUSTICA ASSOCIATES, INC. MODEL NO. 120123
2. LOCATION - Two (2) in the bottom of each fuel tank.
3. OPERATING PRESSURE - 1000 psig
4. OPERATING TEMPERATURE - Minus 55° F to plus 190° F.
5. RESPONSE TIME - 25 milliseconds maximum

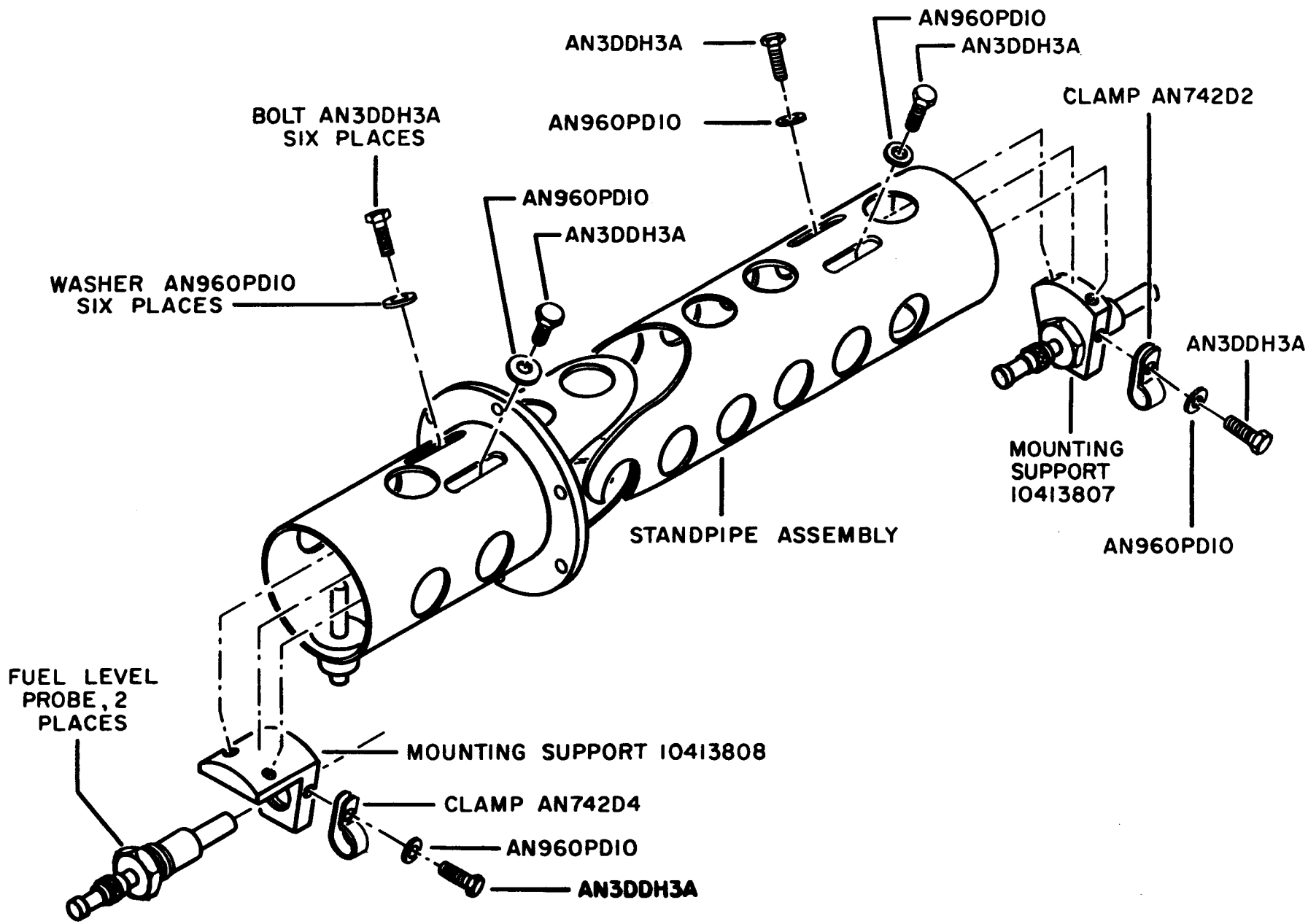

4.1.30 FUEL LEVEL PROBE - INSTALLATION

FUEL FLOWMETER PART NO. 10413034

The flowmeter measures the fuel consumption of each engine during flight. The meter gives a constant measurement of the amount of fluid passing through by the relation of the number of revolutions to the diameter of the meter.

1. VENDOR - POTTER AERONAUTICAL CORPORATION, PART NO. SE8-5014
2. LOCATION - In each fuel section line at approximately Station 111.
3. SERVICE - FUEL
4. OPERATING PRESSURE - 80 to 140 psig
5. TEMPERATURE - 125° F
6. LEAKAGE, EXTERNAL - None

Sectional View to be supplied when available.

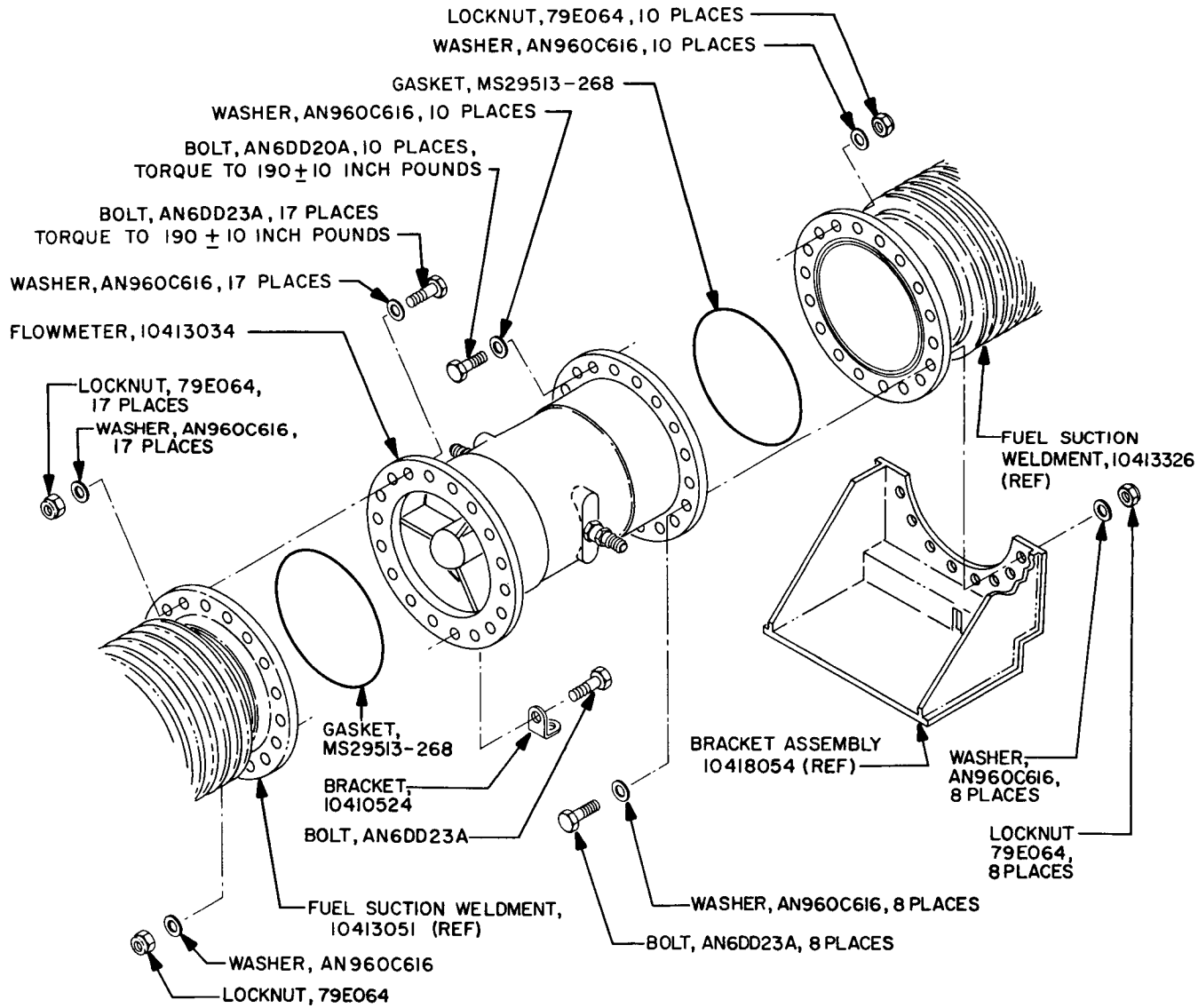

4.1.32 FUEL FLOW METER - INSTALLATION (OUTBOARD)

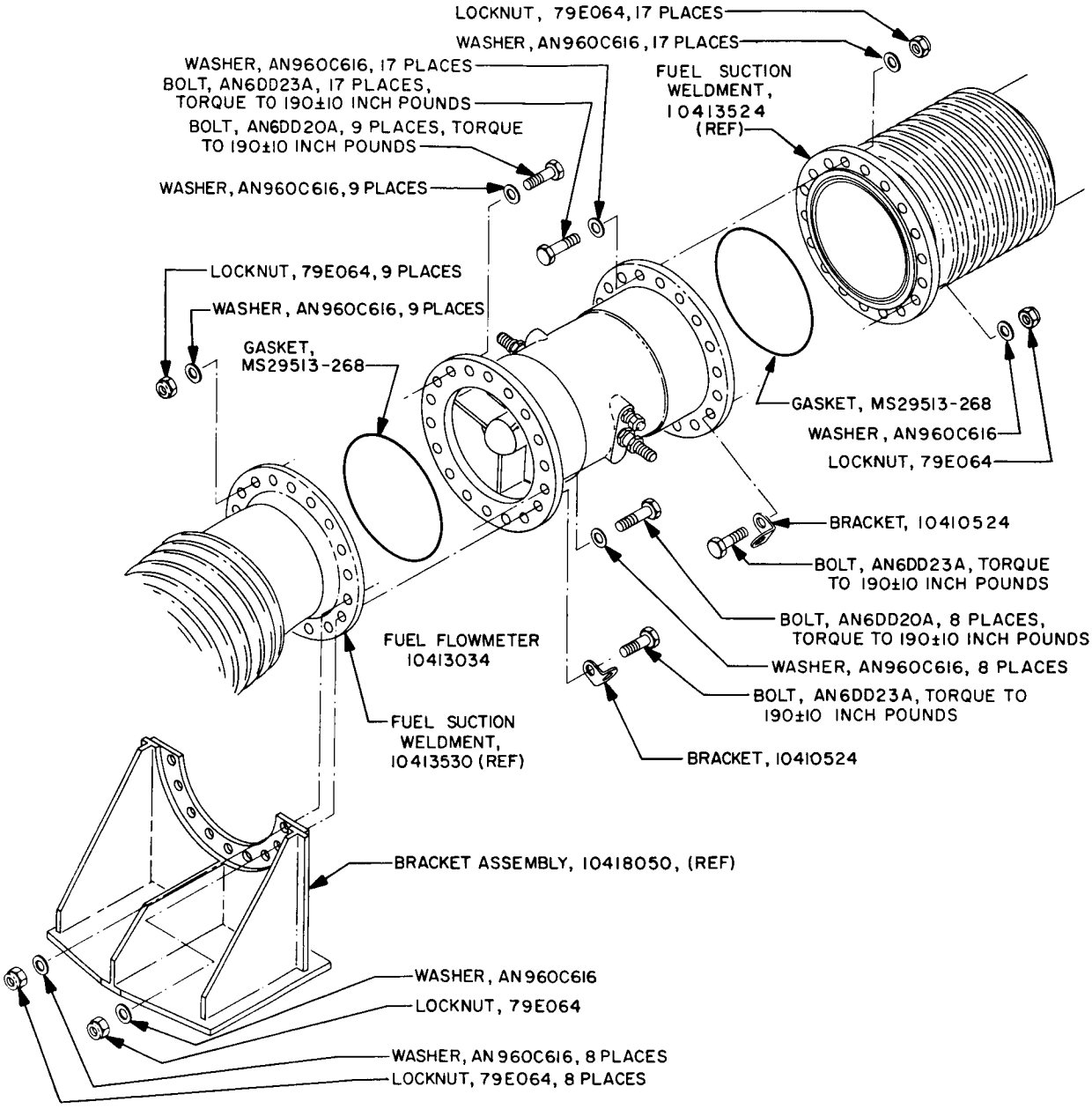

4.1.33 FLOW METER - INSTALLATION (INBOARD)

4.8 FUEL CONTAINER PRESSURIZATION SYSTEM.

The fuel pressurization system components are contained in pages 4.2.1 through 4.2.34 and Figures 4.2.1 through 4.2.22. A schematic, Figure 4.2.1, and a callout list, page 4.2.2, comprise component find numbers, quantity, nomenclatures, part numbers, and page locations of the technical data.

FUEL CONTAINER PRESSURIZATION SYSTEM

Nitrogen pressure of approximately 3000 psi is provided by 48 one cubic foot high-pressure triplex spheres to pressurize the fuel tanks and to provide an auxiliary pressure supply for canister number 15.

FUEL CONTAINER PRESSURIZATION SYSTEM CALLOUT LIST

Pressurizing Manifold & Vent Line	4.2.4
Fuel Pressurization Triplex Spheres, Views 1 through 6	4.2.5-4.2.10
Triplex Spheres Supply Line	4.2.11

FIND NO.	QTY	COMPONENT	PART NO.	PAGE
B108	1	Fuel Vent Valve Assembly	10414021	4.2.12
B109	1	Fuel Vent Valve Assembly	10414021	4.2.12
B110	1	Fuel Tank Safety Valve	10414039	4.2.16
B111	1	Fuel Tank Safety Valve	10414039	4.2.16
B250	1	Q.D. Coupling, Spheres Fill Line	10414034	4.2.20
B251	1	Filter, Sphere Fill	10414028	4.2.21
B252	1	Check Valve, Sphere Fill	10414033	4.2.22
B253	16	Triplex Spheres, Fuel Tank Press	8940680	4.2.5
B254	1	3-Way Needle Valve, High Press	10414076	4.2.23
B255	1	High-Press Switch, Fuel Press O.K.	10414029	4.2.24
B256	4	Filter, Fuel Pressurization	10414028	4.2.21
B257	1	Control Valve, Fuel Pressurization	10414308	4.2.26
B258	4	Orifice, Fuel Pressurization	10414511	4.2.6
B259	1	3-Way Needle Valve, Pressure Checkout	10414076	4.2.23
B260	1	Pressure Switch, Fuel Tank	10414338	4.2.30
B263	1	Control Valve, Fuel Pressurization	10414308	4.2.26
B264	1	Control Valve, Fuel Pressurization	10414308	4.2.26
B265	1	Control Valve, Fuel Pressurization	10414308	4.2.26
B330	1	Filter, N_2 Line	10414026	3.2.15
B335	1	Orifice, Canister # 15 Line	10414299	3.2.25
B336	1	Control Valve, Pressurizing	10414082	3.2.20

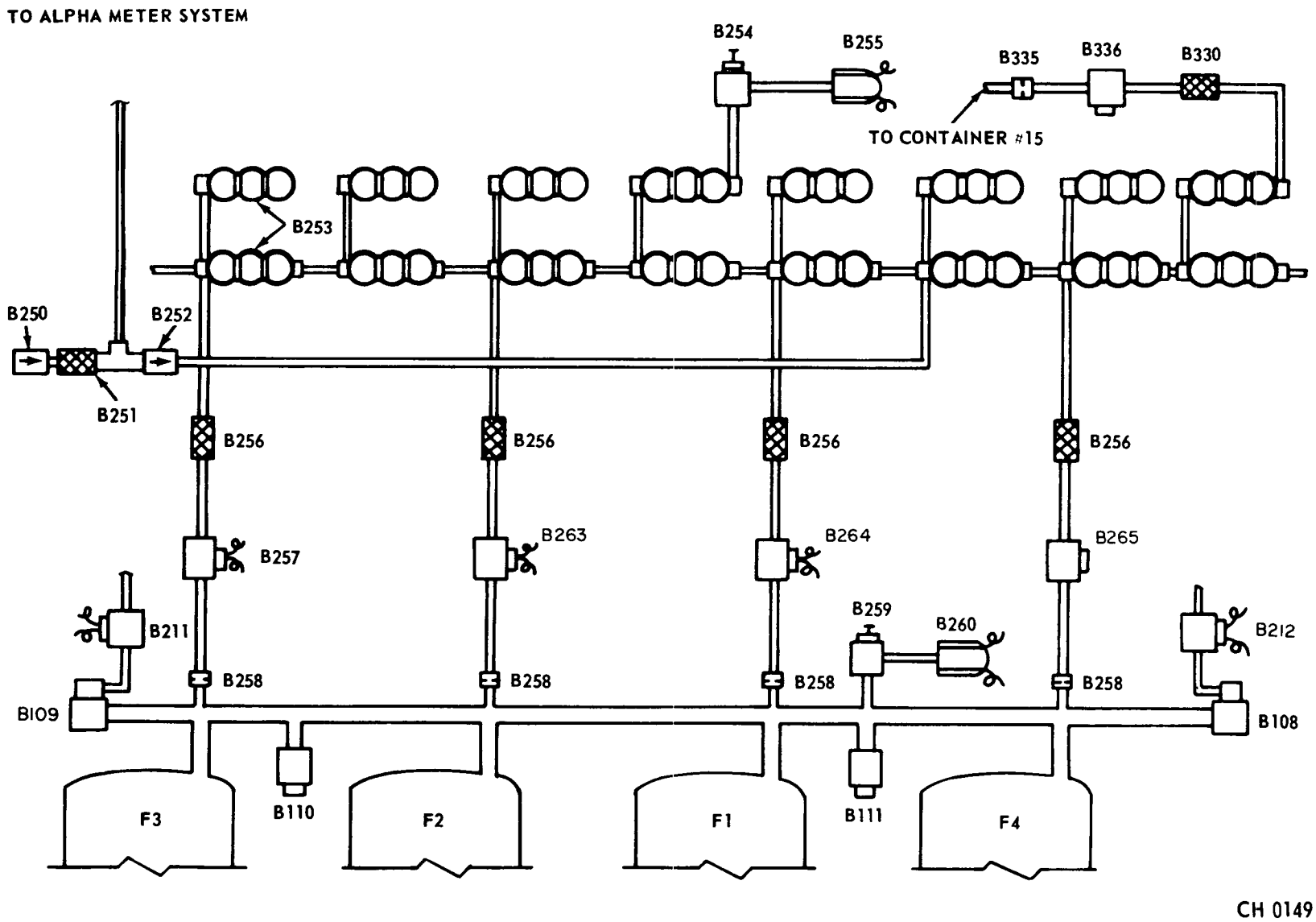

4.2.1 FUEL CONTAINER PRESSURIZATION SYSTEM SCHEMATIC

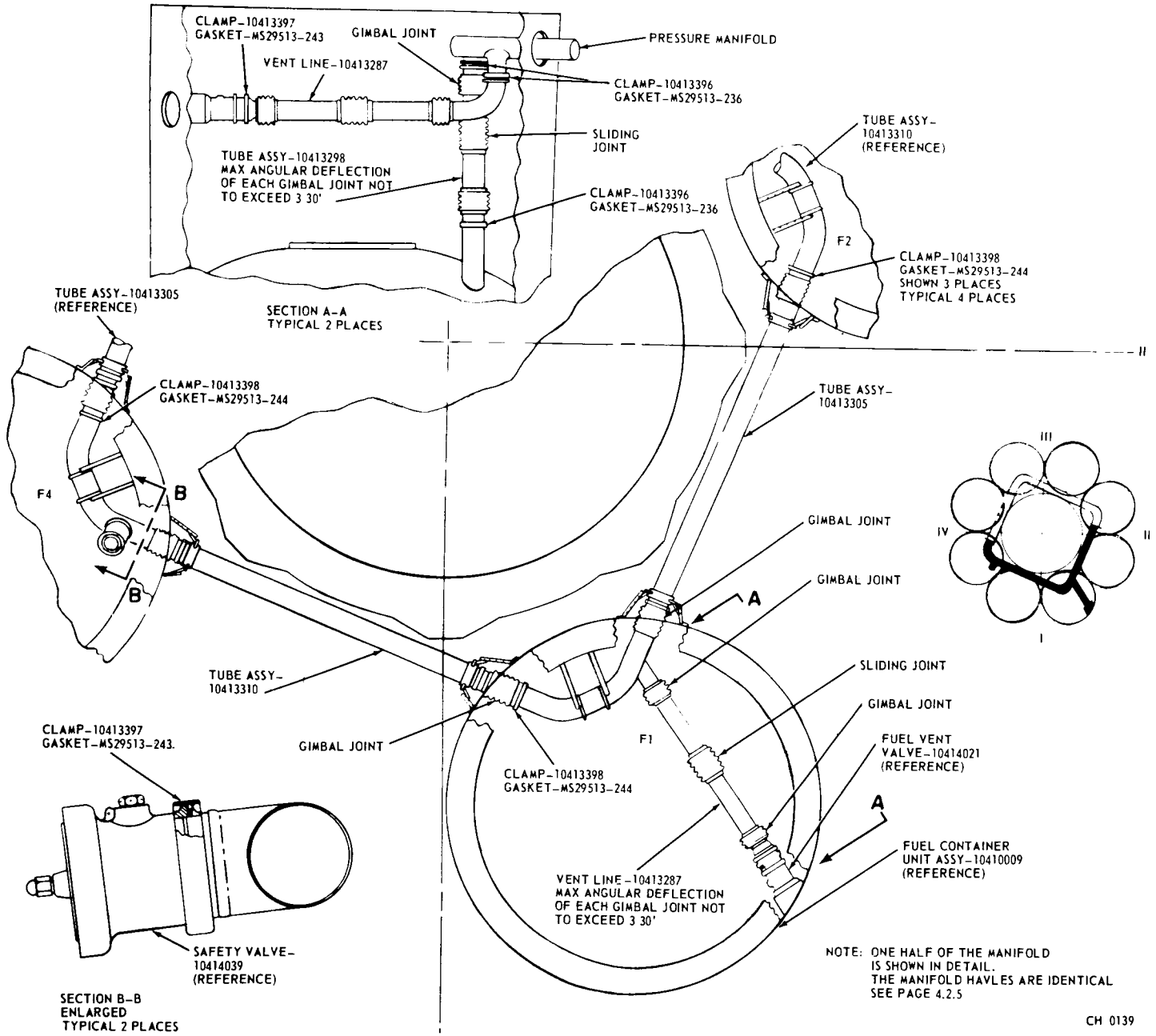

4.2.2 PRESSURE MANIFOLD AND VENT ASSEMBLY

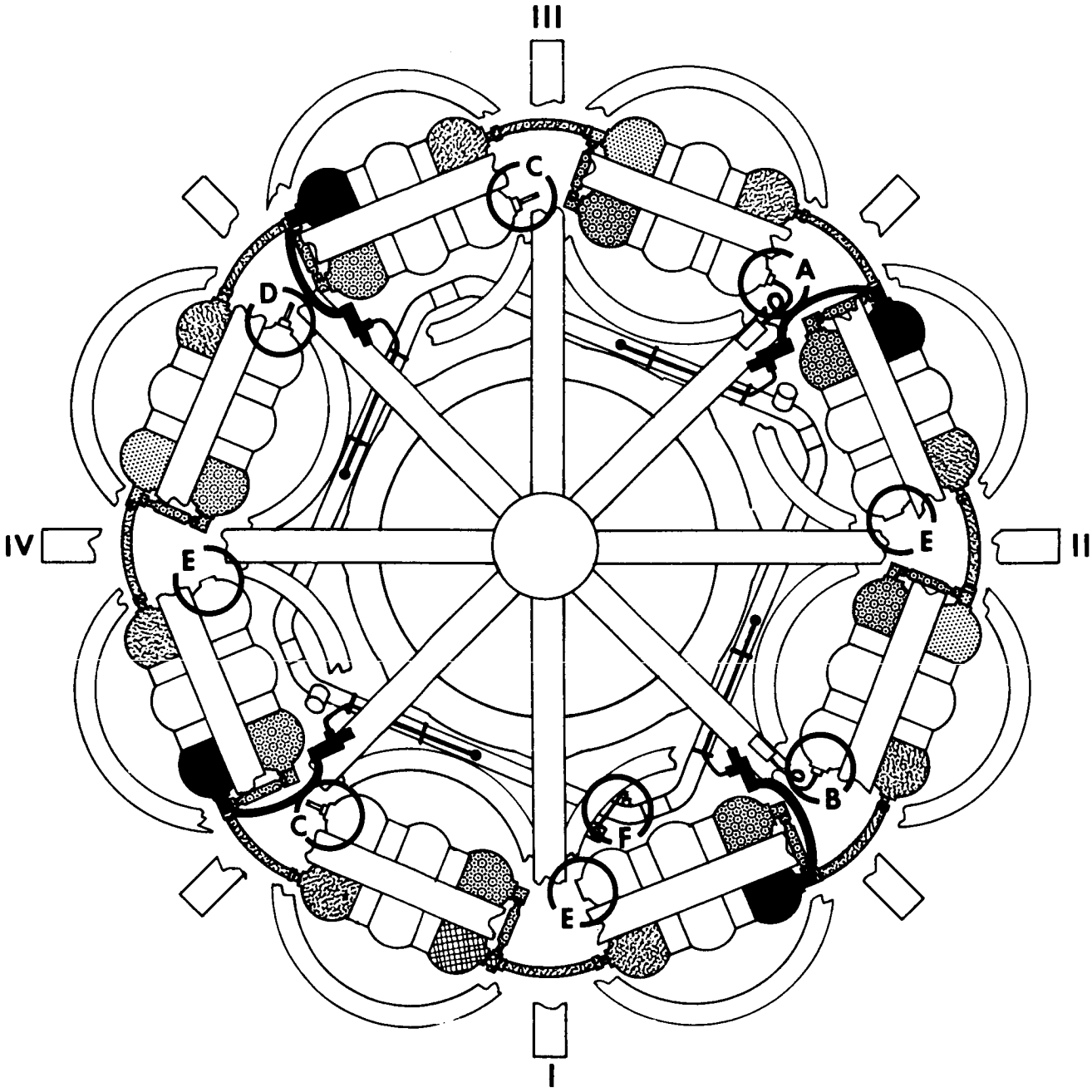

A	BETWEEN FINS II & III	(SEE PAGE 4.2.9)
B	BETWEEN FINS I & II	(SEE PAGE 4.2.8)
C	TYPICAL 2 PLACES	(SEE PAGE 4.2.9)
D	BETWEEN FINS III & IV	(SEE PAGE 4.2.9)
E	TYPICAL 3 PLACES	(SEE PAGE 4.2.8)
F	FIN I	(SEE PAGE 4.2.10)

TYPICAL 8 PLACES	(SEE PAGE 4.2.7)
TYPICAL 8 PLACES	(SEE PAGE 4.2.7)
TYPICAL 3 PLACES	(SEE PAGE 4.2.7)
FIN I	(SEE PAGE 4.2.7)
TYPICAL 4 PLACES	(SEE PAGE 4.2.6)

CH 0150

4.2.3 FUEL PRESSURIZATION SPHERES - DETAIL VIEW 1

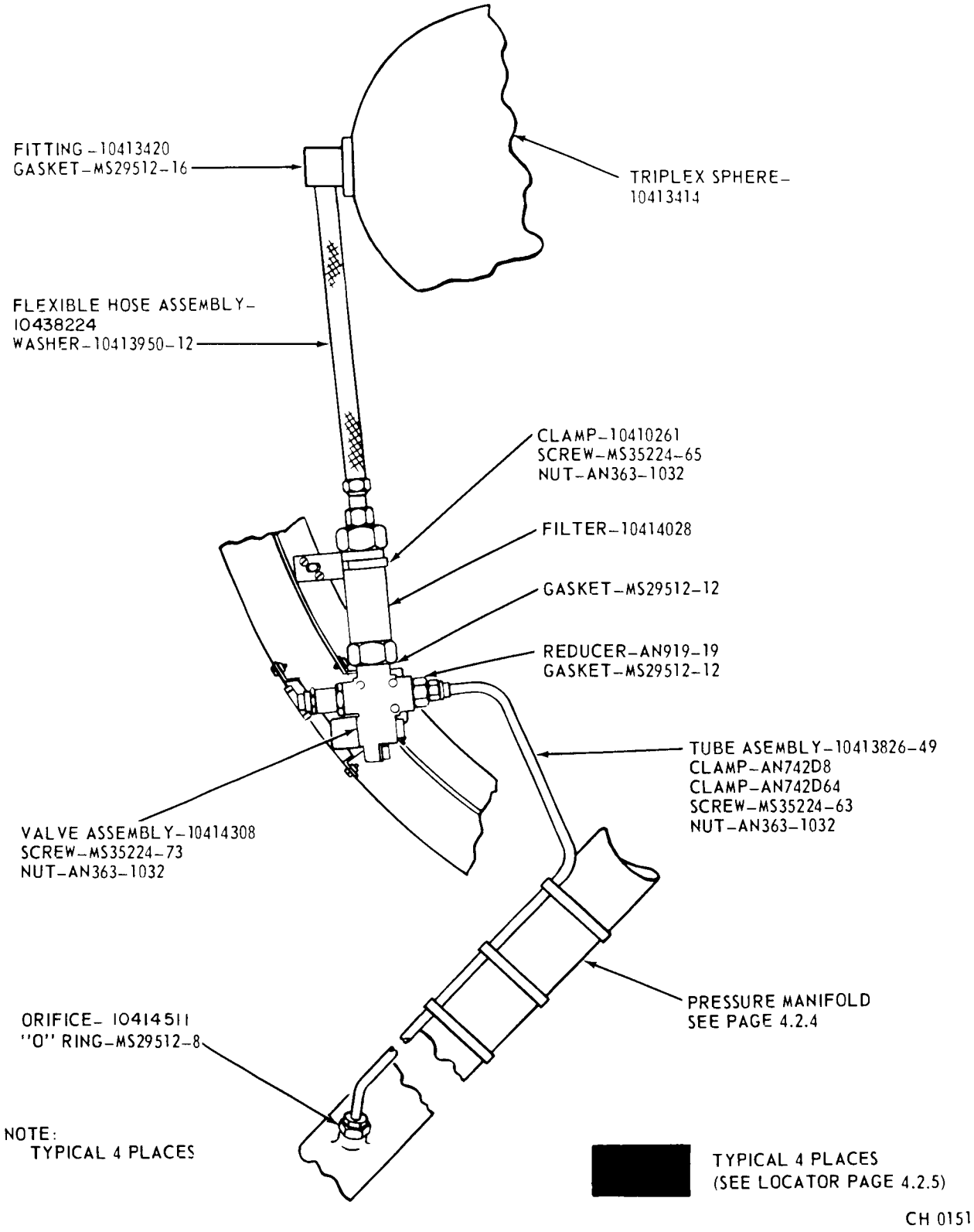

4.2.4 FUEL PRESSURIZATION SPHERES - DETAIL VIEW II

15 September 1961

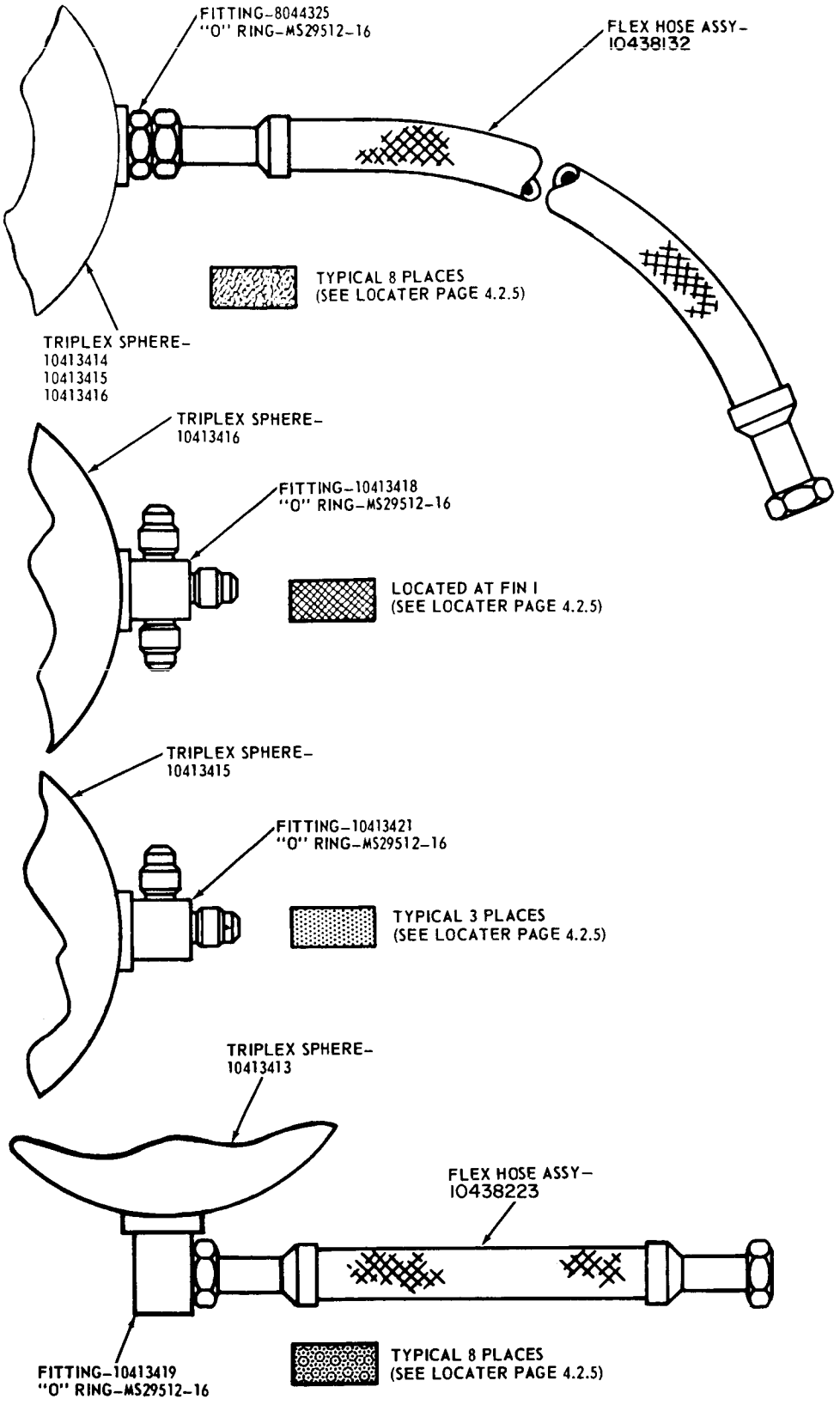

4.2.5 FUEL PRESSURIZATION SPHERES - DETAIL VIEW III

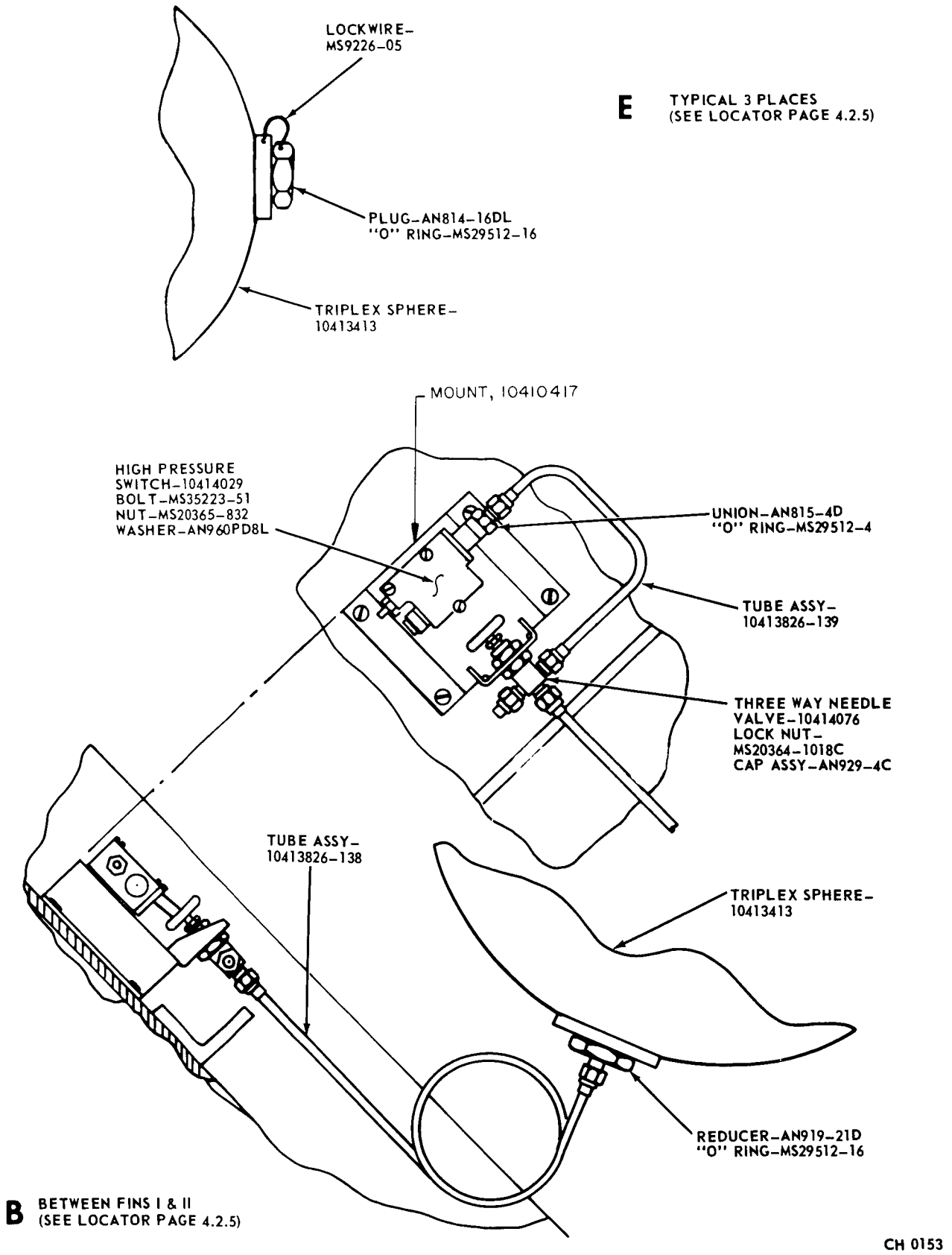

4.2.6 FUEL PRESSURIZATION SPHERES - DETAIL VIEW IV

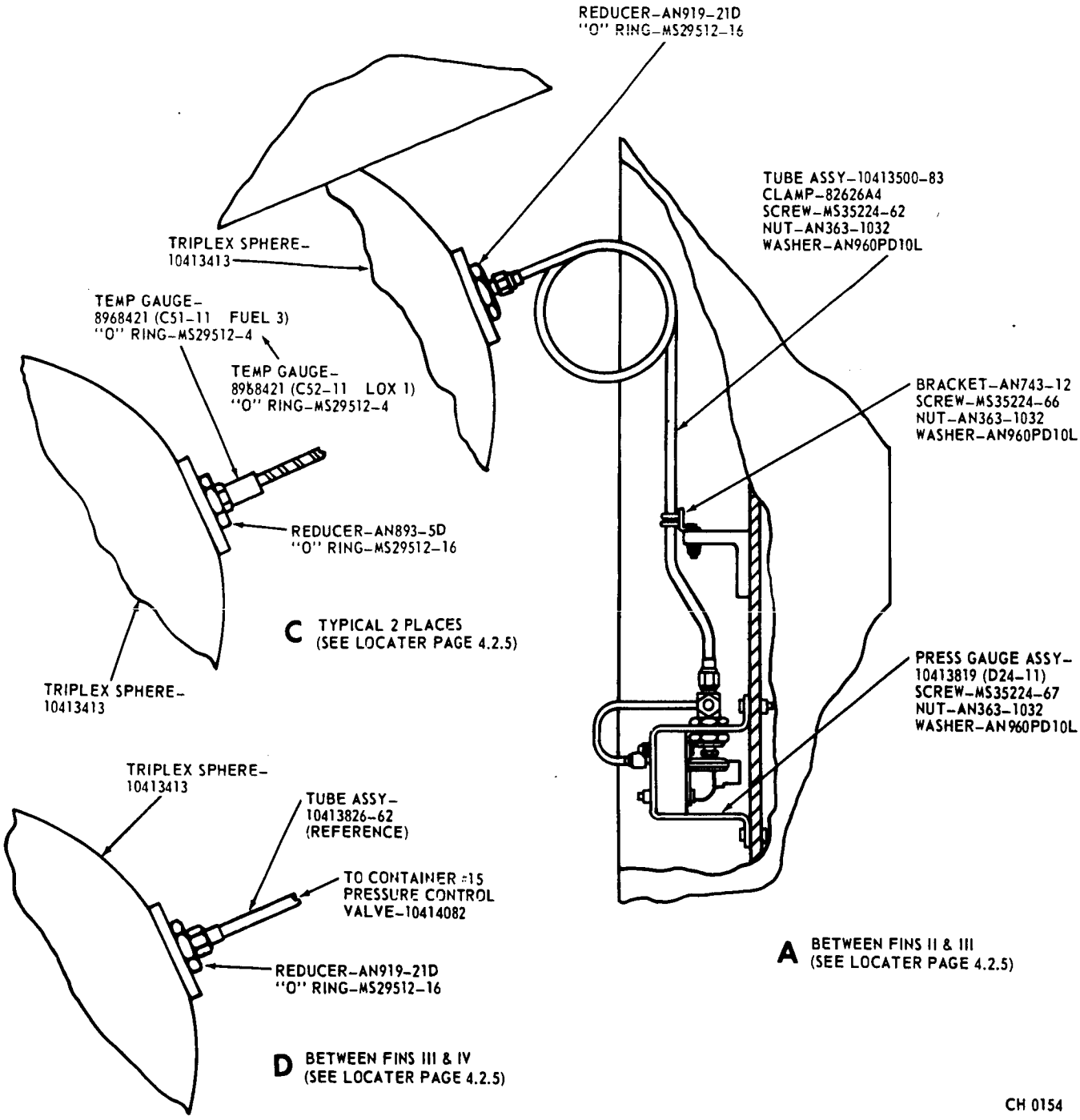

4.2.7 FUEL PRESSURIZATION SPHERES - DETAIL VIEW V

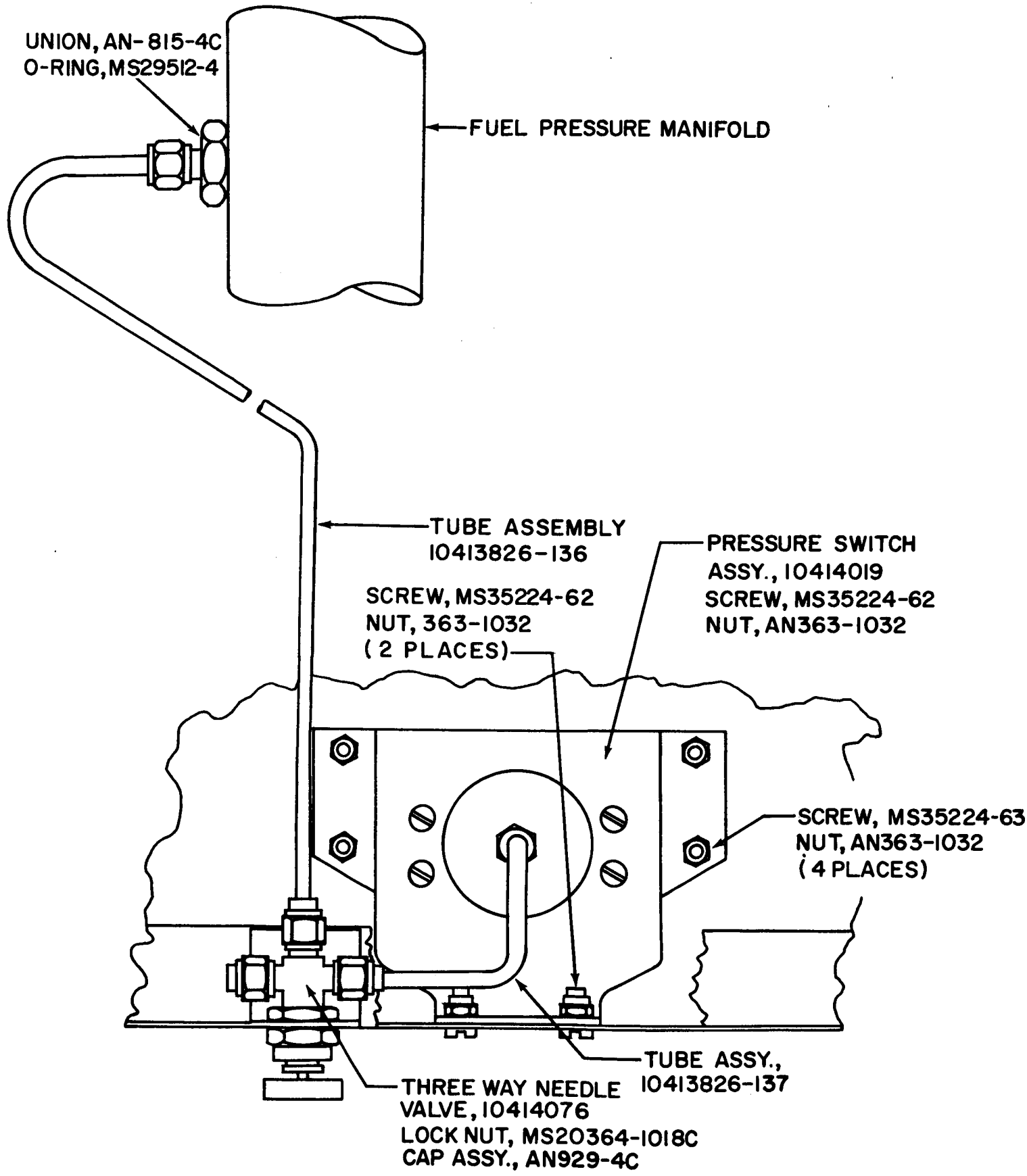

4.2.8 FUEL PRESSURIZATION SPHERES - DETAIL VIEW VI

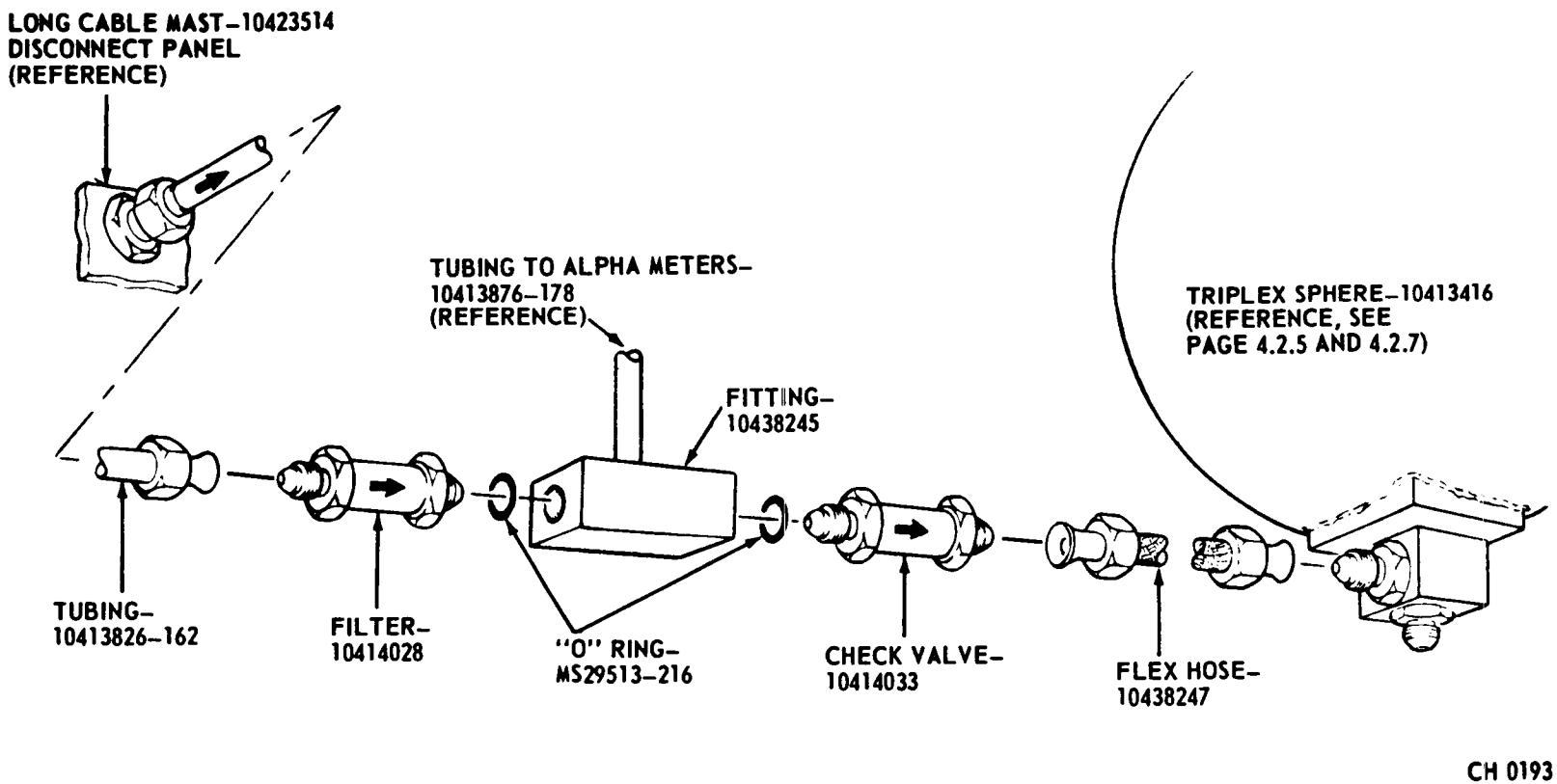

4.2.9 TRIPLEX SPHERES SUPPLY LINE

FUEL VENT VALVE ASSEMBLY PART NO. 10414021

The normally-closed fuel vent valve assemblies (B108) are used to provide venting of the fuel system during fill and drain operations. The fuel vent valves are controlled by the control valves (B212, B211).

1. LOCATION - Fuel tanks No. 1 and 3, station 845.
2. SERVICE - Air, nitrogen, fuel.
3. PRESSURE -
   a. Adjust valve to vent at 19 ± 0.5 psig and to reseat at 17 psig minimum.
   b. Override system: 750 psig.
4. LEAKAGE ALLOWANCES -
   a. With valve to vent at 19 ± 0.5 psig; reseat at 17 psig: 20 scim allowable.
   b. With 19 psig to valve housing: 5 scfm allowable past poppet.
5. LUBRICATION - Lubricate O-ring and sliding surfaces with flourisilicone grease QC-2-0026 (DOW-CORNING).
6. TORQUE -
   a. Plug AN814-8DL: per MSFC-STD-10509303.
   b. Union 8944191: per MSFC-STD-10509303.
   c. Plug 8944206: per MSFC-STD-10509303.
   d. Nut 8941725: per ABMA-STD-18.
   e. Nut MS35691-630: per ABMA-STD-18.

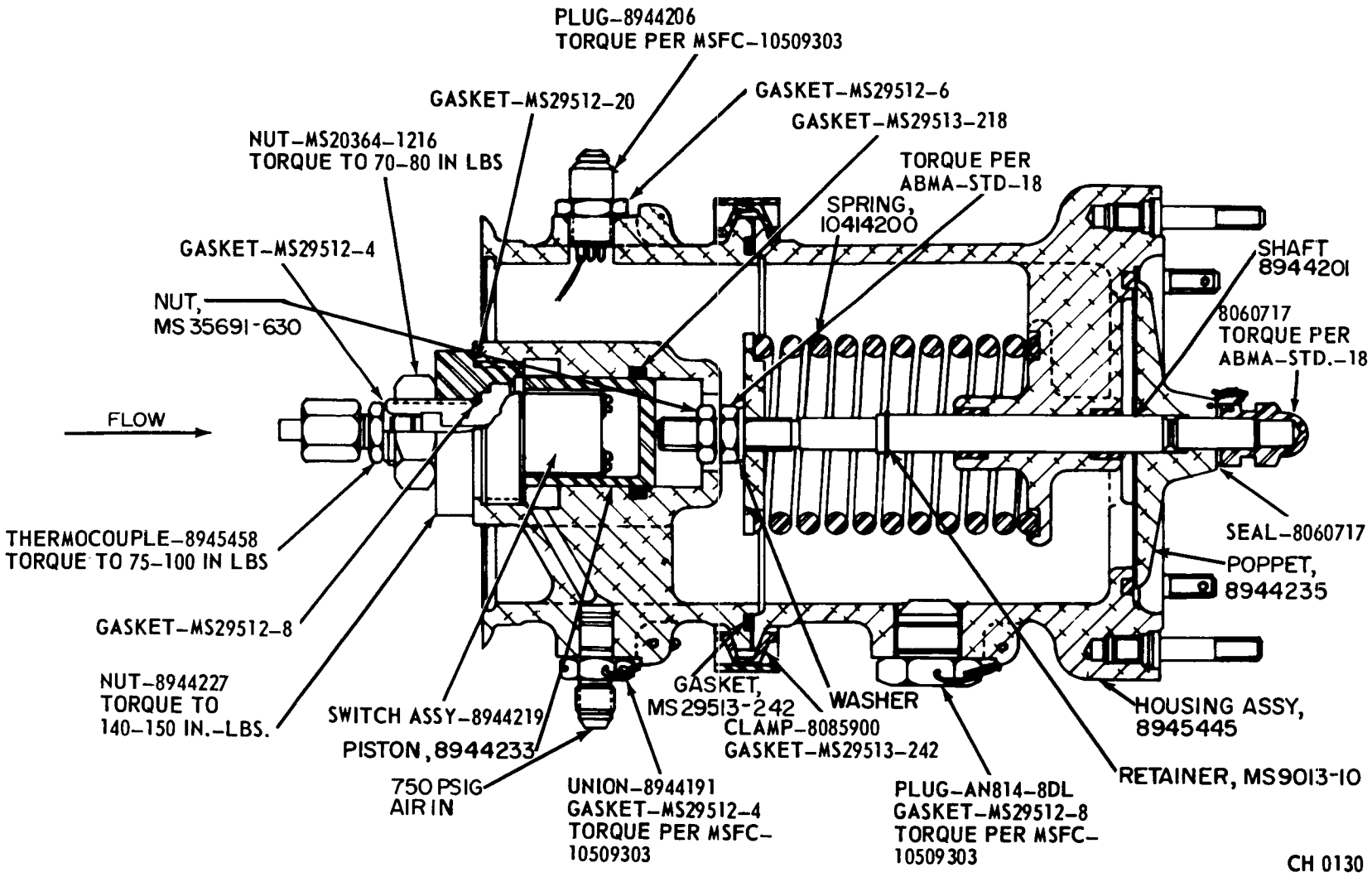

4.2.10 FUEL VENT VALVE ASSEMBLY 14014021 - SECTIONAL VIEW

THIS PAGE INTENTIONALLY LEFT
BLANK

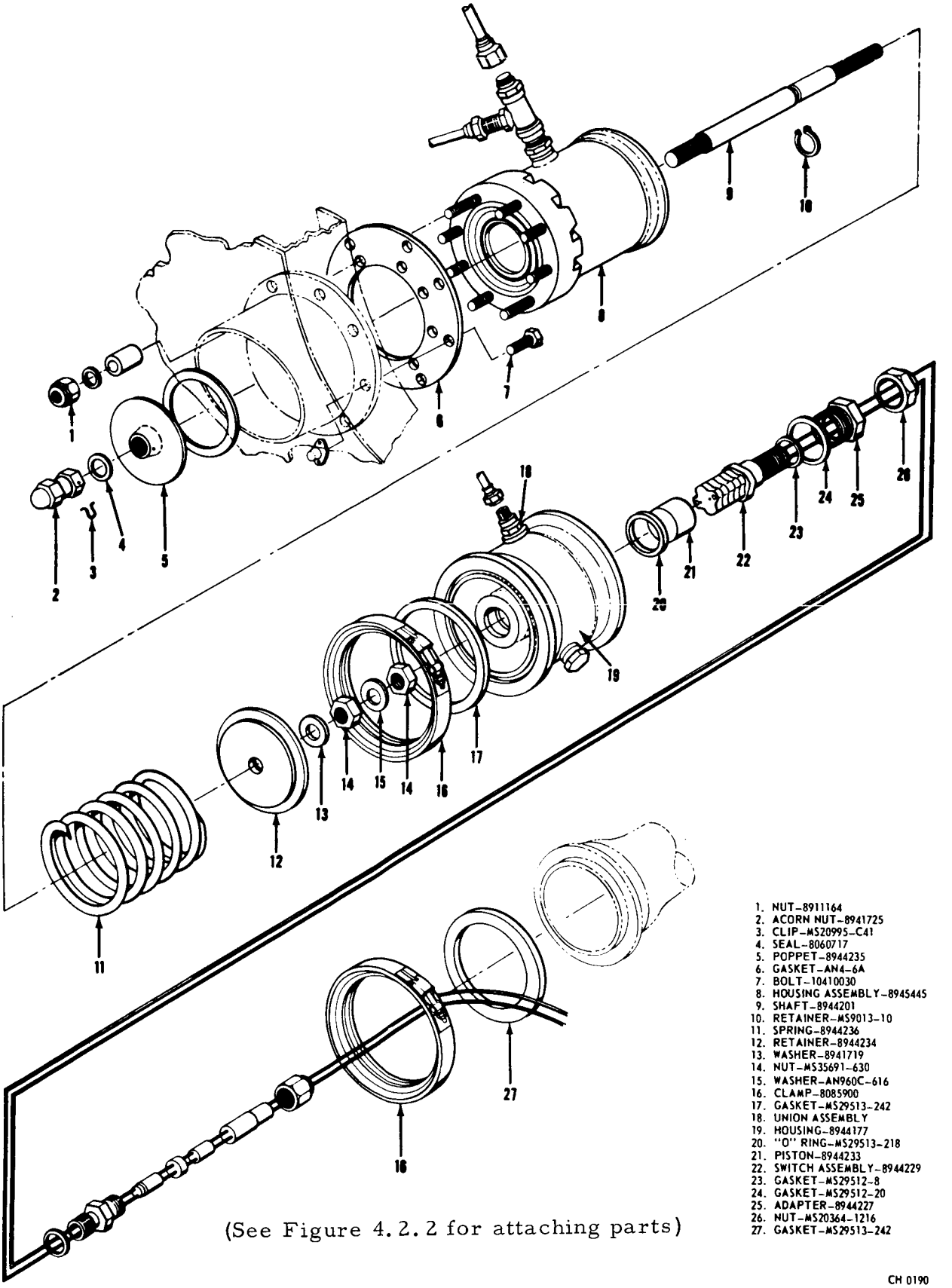

4.2.11 FUEL VENT VALVE ASSEMBLY - EXPLODED VIEW

FUEL CONTAINER SAFETY VALVE PART NO. 10414039

Fuel container safety valves (B110 and B111) are controlled by excessive fuel container (B253) pressure.

Prior to liftoff, the fuel containers are pressurized by the fuel tank pressurization valves (B257). Should the pressure in the fuel container exceed 19 psig, the fuel vent valves (B108, B109) are provided to relieve pressure. If the fuel container pressure exceeds 23 psig and the fuel vent valves are not capable of relieving excess fuel container pressure, the fuel container safety valves will operate, relieving pressure to a pre-determined level.

1. LOCATION - Two are used at station 862, one over fuel tank No. 2 and one over fuel tank No. 4.
2. PRESSURE
   a. Cracking: 23 $\pm$ 1 psig
   b. Reseat: 20 psig minimum
   c. Proof: 36 psig
   d. Burst: 60 psig
3. TEMPERATURE - OPERATING - Minus 65° F to plus 165° F
4. LEAKAGE ALLOWANCES - With 19 $\pm$ 0.5 psig on inlet:
   a. Past 9844173 seal; 25 scim.
   b. Past 8944483 plug; no leakage allowed.
   c. External; no leakage allowed.
5. LUBRICATION - O-ring and sliding surfaces with U CON-50-280 X.

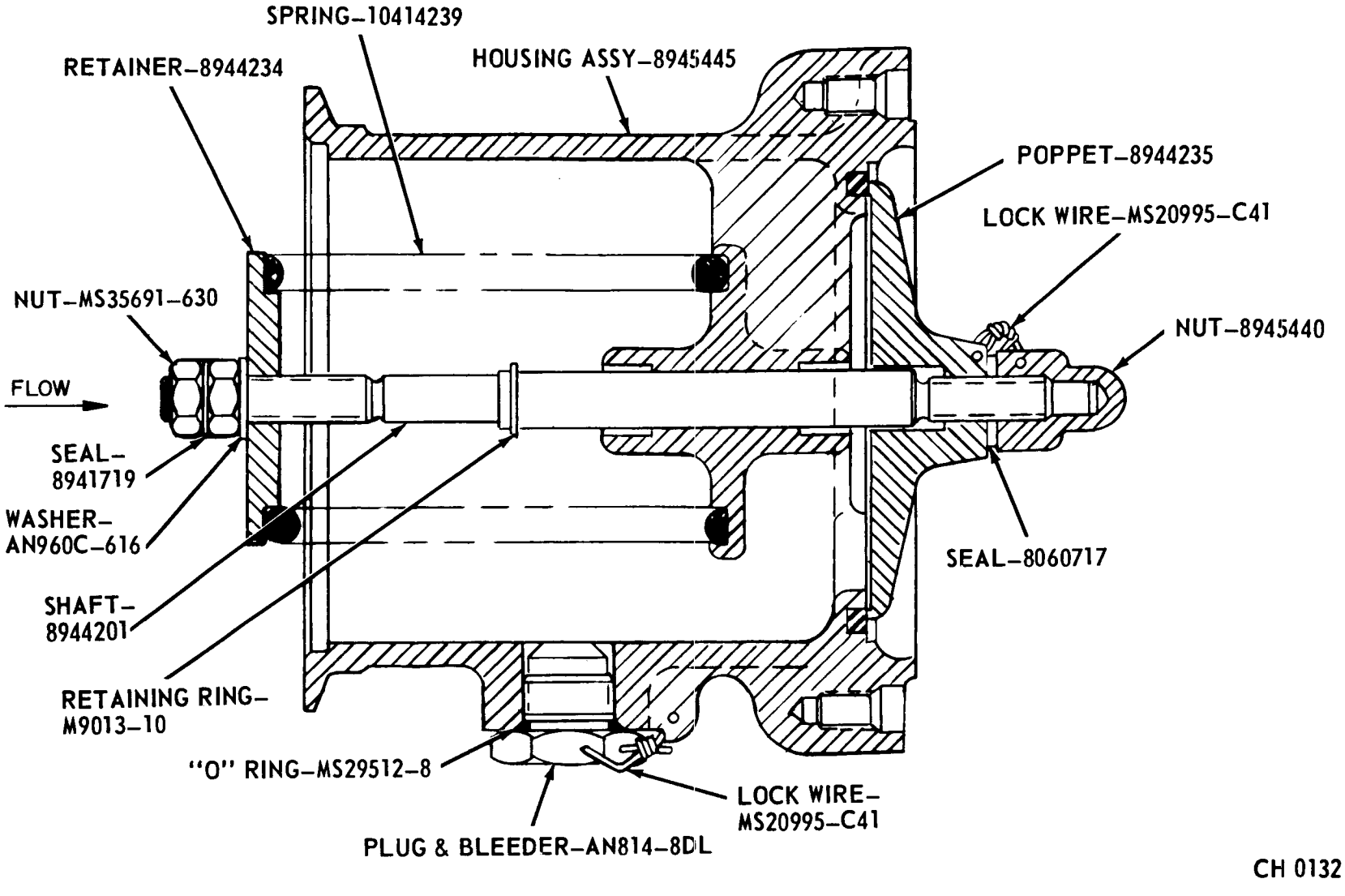

4.2.12 FUEL CONTAINER SAFETY VALVE 10414039 - SECTIONAL VIEW

THIS PAGE INTENTIONALLY LEFT
BLANK

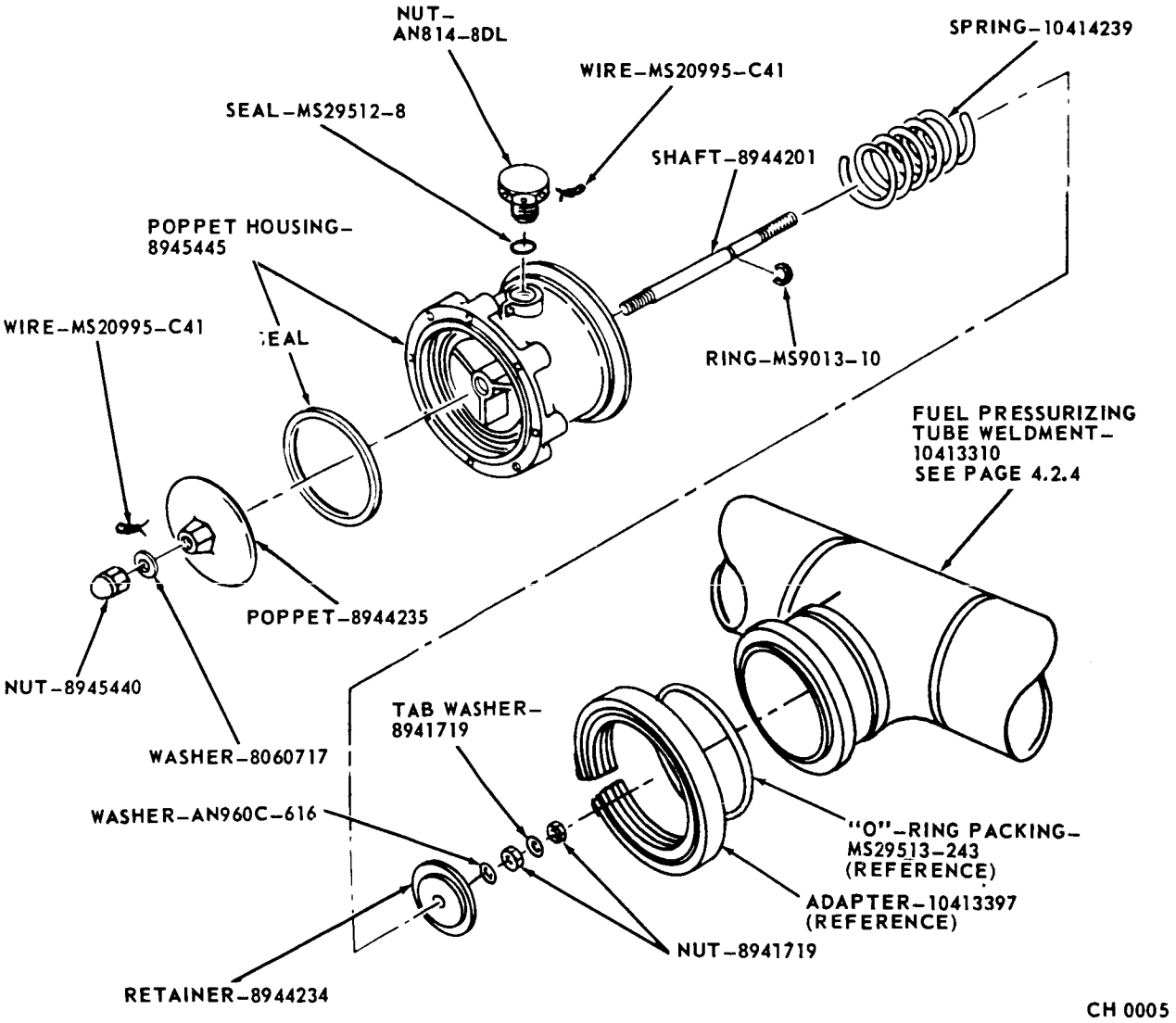

4.2.13 FUEL CONTAINER SAFETY VALVE - EXPLODED VIEW

GN_2 SPHERES FILL LINE COUPLING
PART NO. 10414034

The quick-disconnect spheres fill line coupling (B250) is used to connect ground source to pressurize the high-pressure triplex spheres (B253).

1. VENDOR - E. B. WIGGINS OIL TOOL CO., INC. PART NO. 6005R76A12.
2. LOCATION - Long cable mast connection point.
3. SERVICE - Gaseous nitrogen, fuel vapor.
4. PRESSURE -
   a. Operating: 3000 psig
   b. Proof: 4500 psig
   c. Burst 7500 psig
5. TEMPERATURE - OPERATING - Minus 65° F to plus 160° F.
6. LEAKAGE ALLOWANCES - 2 scim maximum at operating pressure and temperature range.
7. SEAL REQUIREMENT - Rubber seals must meet requirements of Specification MSFC-STD-10509311.
8. LUBRICATION - Lubricate seals with 9970568 (KEL-F10 Oil).

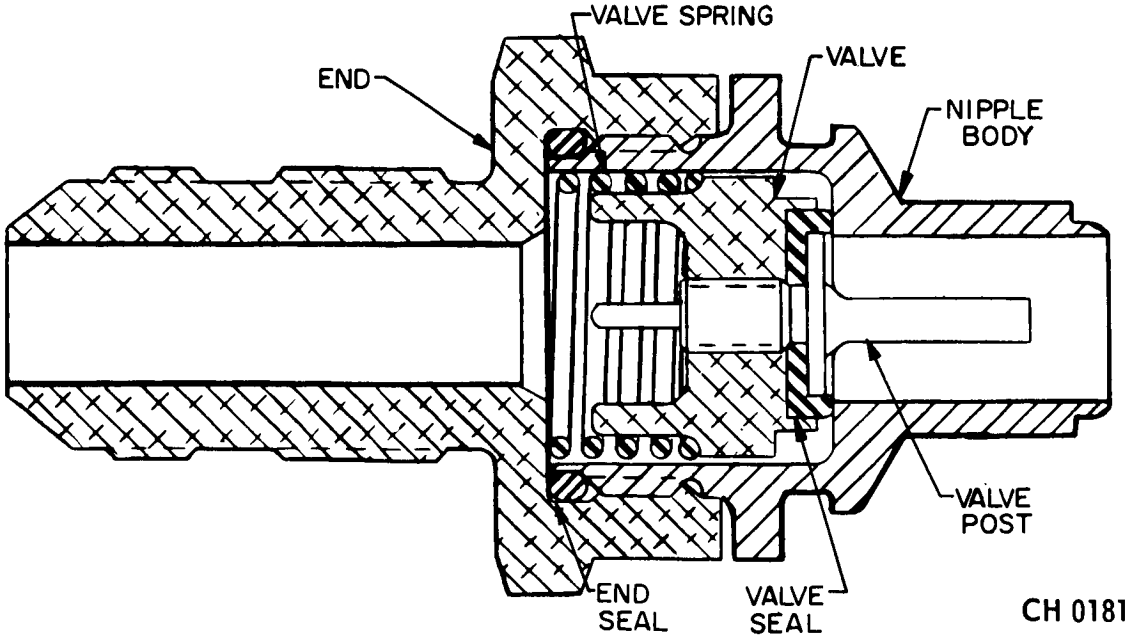

4.2.14 QUICK-DICSONNECT COUPLING 10414034 SECTIONAL VIEW

AIR FILTER PART NO. 10414028

The air filters (B251 andB256) are used in the fuel spheres filling line and in the four fuel pressurization lines between the air containers and the fuel tanks.

1. VENDOR - PERMANENT FILTER CORP. PART NO. 20030
2. LOCATION - Station 860, on each fuel tank.
3. SERVICE - Gaseous nitrogen, air.
4. PRESSURE -
   a. Operating: 3000 psig
   b. Proof: 4500 psig
   c. Burst: 7500 psig
5. LUBRICATION - Lubricate seals with MIL-L-4343.
6. TEMPERATURE -
7. FLOW RATE - 1 scfm

Refer to page 4.2.11 for installation.

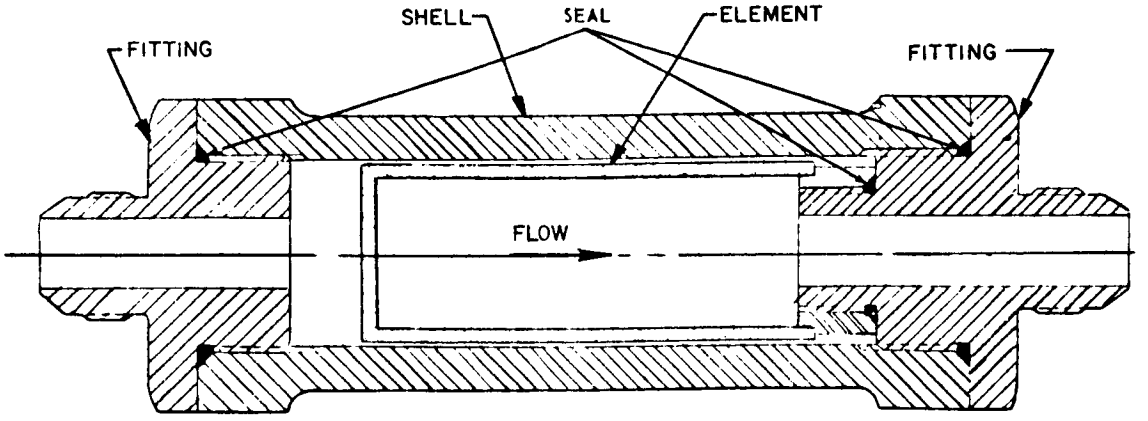

4.2.15 AIR FILTER 10414028 - SECTIONAL VIEW

SPHERES FILLING CHECK VALVE
PART NO. 10414033

The spheres filling check valve (B252) is used in the GN_2 high-pressure triplex spheres fill line to allow one-directional flow.

1. VENDOR - MAROTTA VALVE CORP.,
   PART NO. 204022 (CMV12).
2. LOCATION - Between filter (B251) and triplex spheres.
3. SERVICE - Gaseous nitrogen.
4. TEMPERATURE - OPERATING - Minus 65° F to plus 160° F.
5. PRESSURE -
   a. Operating: 3000 psig
   b. Proof: 4500 psig
   c. Burst: 7500 psig
6. LEAKAGE ALLOWANCES -
   a. Internal: 5 scim maximum at 3000 psig reverse flow
   b. External: No leakage allowed
7. LUBRICATION - Lubricate seals with A-9970568 (KEL-F10 Oil).

Refer to page 4.2.11 for installation.

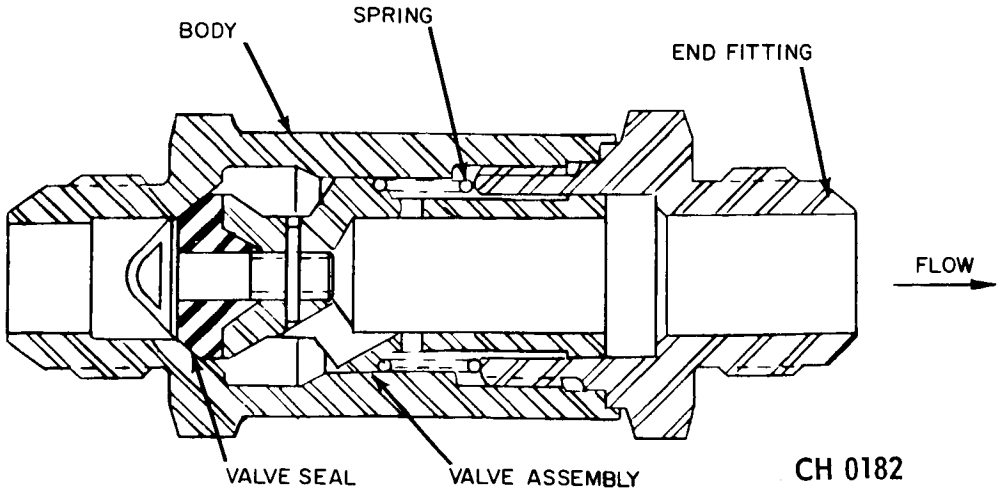

4.2.16 CHECK VALVE 10414033 - SECTIONAL VIEW

THREE-WAY NEEDLE VALVE PART NO. 10414076

HIGH-PRESSURE THREE-WAY NEEDLE VALVE

The manually-operated three-way needle valve (B254) is used to calibrate the high-pressure O.K. switch (B255) in the fuel tank pressurization system.

Refer to Page 4.2.8 for installation.

PRESSURE CHECKOUT THREE-WAY NEEDLE VALVE

The manually-operated three-way needle valve (B259) is used to calibrate the fuel container pressure switch.

Refer to Page 4.2.9 for installation.

Refer to Page 4.1.26 and Figure 4.1.15 for technical data and illustration of valve.

FUEL PRESSURE HIGH-PRESSURE O. K. SWITCH PART NO. 10414029

The filling of the triplex spheres with GN_2 at 3000 psig is monitored by the pressure switch (B255). The switch is located on the triplex spheres.

1. VENDOR-SOUTHWESTERN INDUSTRIES, INC., PART NO. PS-3800-3050.
2. LOCATION - Approximately station 865.
3. SERVICE - Air, nitrogen or oxygen.
4. PRESSURE -
   a. Operating: 3100 psig
   b. Proof: 5000 psig
   c. Switch actuation: Switch to actuate on increasing pressure at 3050 $\pm$ 66 psig and dropout at 2850 psig minimum.
5. ELECTRICAL -
   a. Continuity: N.C. Pins, "A" and "B", on decreasing pressure, Pins "B" and "C", 0.5 ohm maximum resistance allowed.
   b. Insulation resistance: 500 v Megger test each isolated terminal to valve body; 50 megohms minimum.
   c. Indicating lights: At no time may both indicating lights for the N.O. and N.C. positions be off when power is applied.
6. TEMPERATURE - OPERATING - Minus 40° F to plus 160° F.
7. RUBBER SEALS - Rubber seals must meet requirements of Specification ABMA-STD-29.
8. LUBRICATION - Lubricate rubber seals with DOW CORNING DC 33.

Reference page 4.4.45 for sectional view.

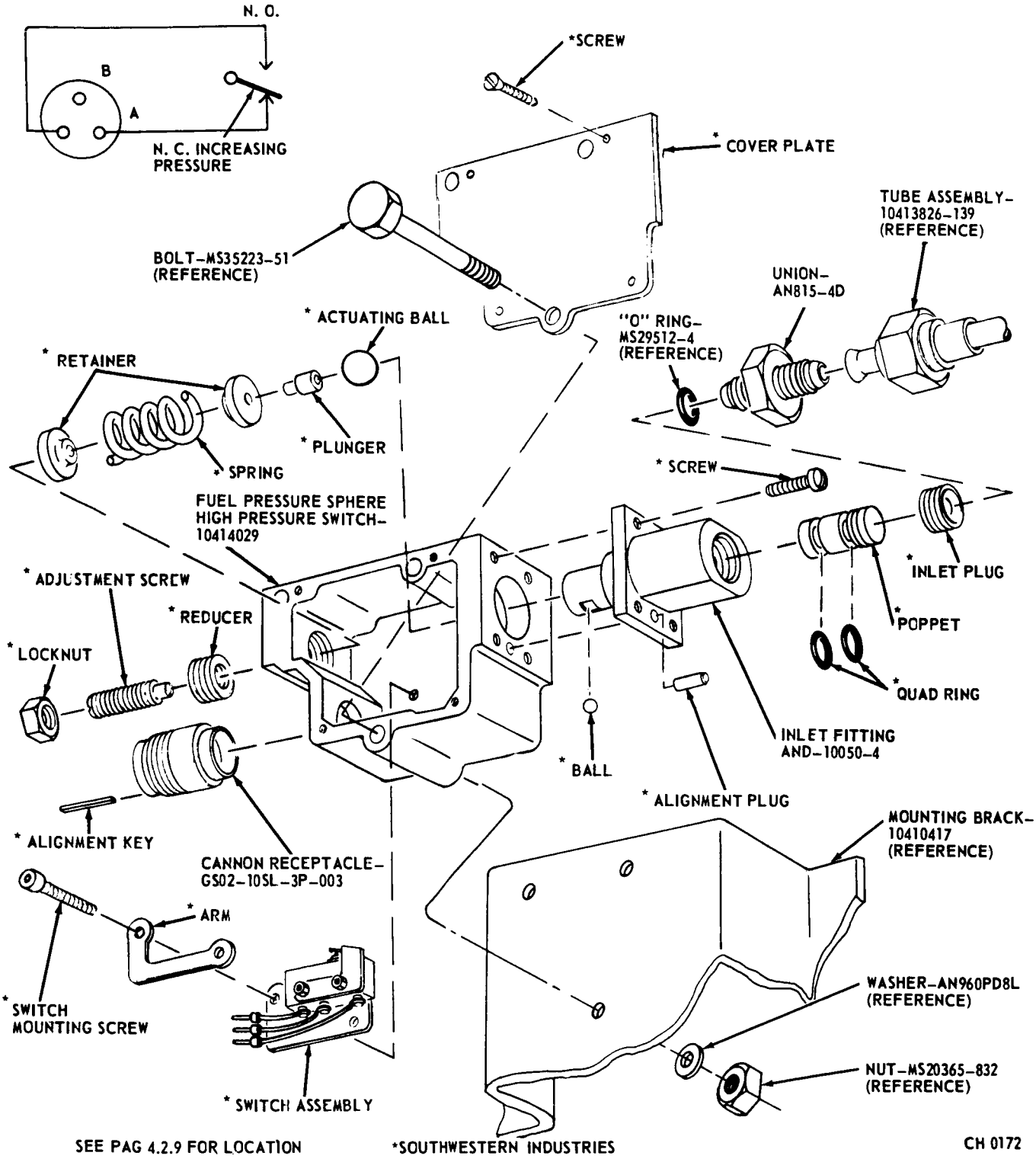

4.2.17 HIGH PRESSURE O.K. SWITCH - EXPLODED VIEW

FUEL PRESSURIZATION VALVE PART NO. 10414308

The fuel tank pressurizing valves (B257, B263, B264, B265) are actuated by a signal from the fuel tank pressure switch (B260) to provide pressurization of the fuel tanks to prevent pressure decay.

1. VENDOR - MAROTTA VALVE CORPORATION PART NO. 216774
2. LOCATION - Station 860, one each at fuel tanks No. 1, 2, 3, and 4.
3. SERVICE - Air, helium or nitrogen.
4. PRESSURE -
   a. Operating: 3000 psig
   b. Proof: 4500 psig
   c. Burst: 7500 psig
5. TEMPERATURE - OPERATING - Minus 65° F to plus 125° F
6. ELECTRICAL -
   a. Continuity: Coil, at 70° F, with 24 v.d.c; 24.5 ± 0.5 ohms maximum resistance.
   b. Operating voltage: 18 to 30 v.d.c.
   c. Amperage: 1 amp at 24 v.d.c.
   d. Test: Random selected units must withstand energization at 28 v.d.c. for four hours without adverse effects to the solenoid or proper operation of the valve.
7. RUBBER SEALS - Must meet requirements of Specification ABMA-STD-29.
8. LUBRICATION - Lubricate O-ring seals with A-9970568 (KEL-F-10 OIL).
9. LEAKAGE -
   a. Internal: 5 scim maximum at 3000 to 300 psig
   b. External: None

Refer to Figure 4.2.4, Page 4.2.6 for installation.

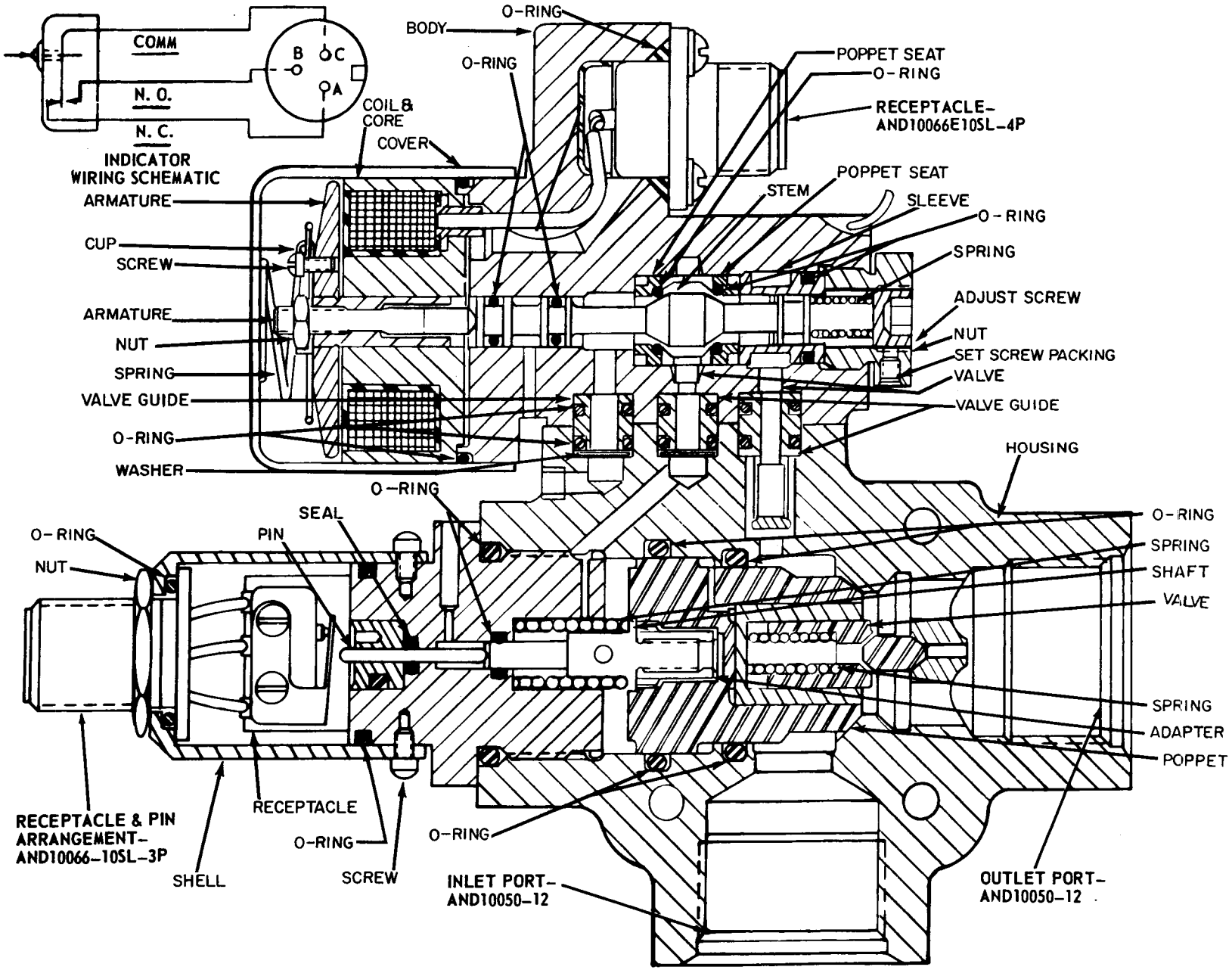

4.2.18 FUEL PRESSURIZATION VALVE 10414308 - SECTIONAL VIEW

FUEL PRESSURIZATION VALVE PART NO. 10414308

KEY FOR FIGURE 4.2.19

1. Armature
2. Coil & Core
3. Coil & Core
4. O-Ring
5. Body
6. Spacer
7. O-Ring
8. Receptacle
9. Packing
10. Poppet Seat
11. Packing
12. O-Ring
13. O-Ring
14. Stem
15. Spring
16. Adjust Screw
17. Set Screw
18. Packing
19. Nut
20. Washer
21. Sleeve
22. Poppet Seat
23. Packing
24. Housing
25. Sleeve
26. O-Ring
27. Valve Guide
28. O-Ring
29. Valve
30. Valve
31. O-Ring
32. Valve Guide
33. O-Ring
34. Washer
35. O-Ring
36. Receptacle
37. O-Ring
38. Shell
39. Screw
40. Nut
41. Pin
42. O-Ring
43. Adapter
44. O-Ring
45. Seal
46. Pin Guide
47. Adapter
48. Shaft
49. Spring
50. O-Ring
51. O-Ring
52. Poppet
53. O-Ring
54. Bushing
55. Spring
56. Valve
57. Sleeve
58. Washer
59. O-Ring
60. Valve Guide
61. O-Ring
62. Clip
63. Washer
64. Screw
65. Armature
66. Nut
67. Spring
68. Cover

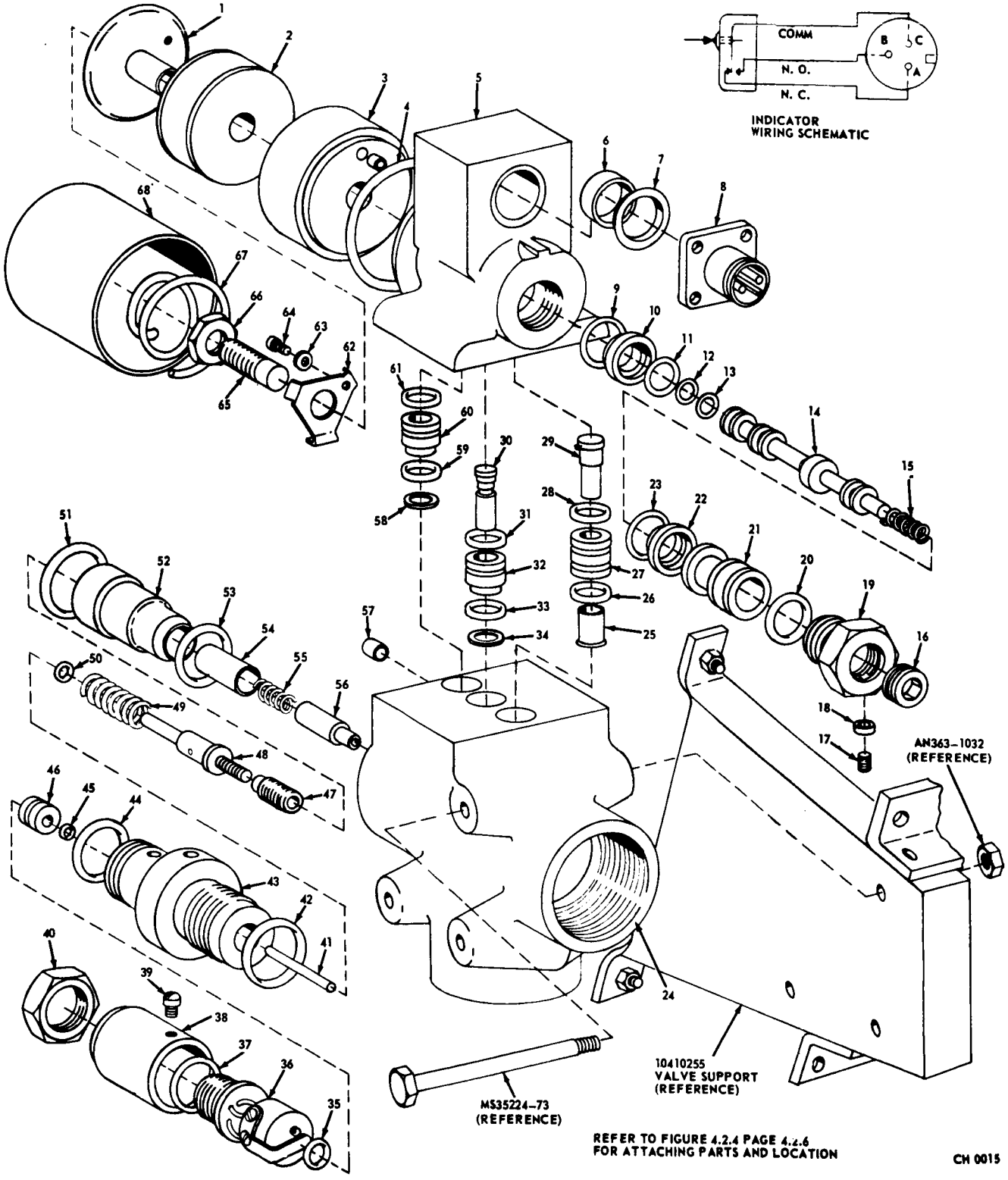

4.2.19 FUEL PRESSURIZATION VALVE - EXPLODED VIEW

FUEL TANK PRESSURE SWITCH ASSEMBLY PART NO. 10414338

The fuel tank pressure switch (B260) senses fuel tank pressure and actuates the fuel container pressurization valves (B257) at 17 ± 0.3 psig. The pressure switch (B260) is calibrated by the pressure checkout valve (B259).

1. VENDOR - THE FREBANK COMPANY, PART NO. 4188-1
2. LOCATION - Station 887 in fuel tank No. 1.
3. SERVICE - Air, nitrogen, RP-1 vapor.
4. PRESSURE -
   a. Actuation:
      1. Increasing 17 ± 0.3 psig
      2. Differential, 2.0 psig maximum, 0.3 psi minimum
   b. Proof: 60 psig
   c. Burst: 90 psig
5. TEMPERATURE - OPERATING - Minus 65° F to plus 165° F
6. LEAKAGE ALLOWANCE - Internal, no leakage allowed from 0 to 60 psig.
7. ELECTRICAL -
   a. Continuity: N.C. Pins "A" and "B" on decreasing pressure, Pins "B" and "C"; 0.5 ohm maximum resistance allowed.
   b. Insulation resistance: 500 volt Megger test each isolated terminal to valve body, 50 megohm minimum.
   c. Indicating lights: At no time may both indicating lights for the N.O. and N.C. positions be off when power is applied.
   d. Voltage: 18 to 30 v.d.c.
   e. Current: 3 amp . Resistive load at 28 VDC.
8. RUBBER SEALS - Must meet the requirements of Specification MSFC STD 10509311.

Refer to Page 4.2.10 for installation.

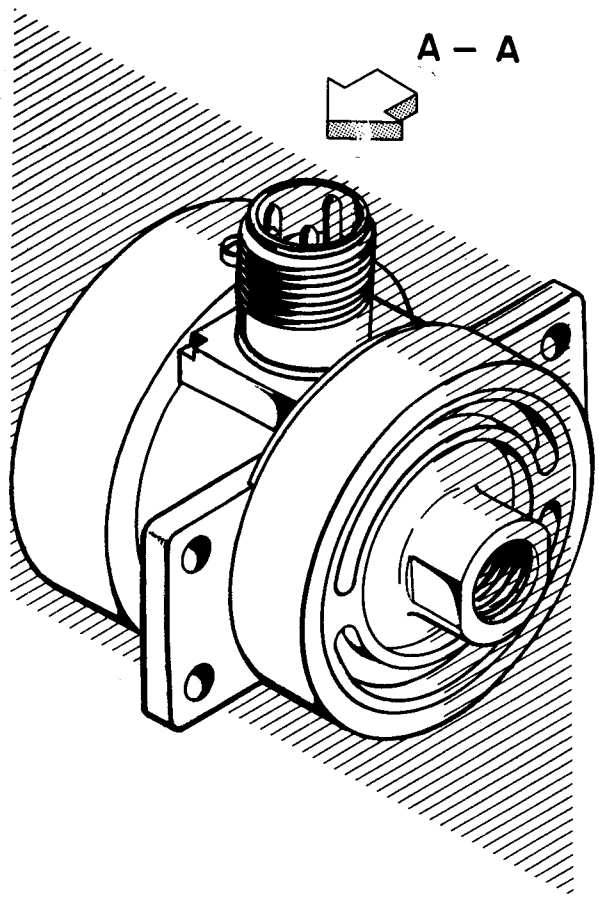

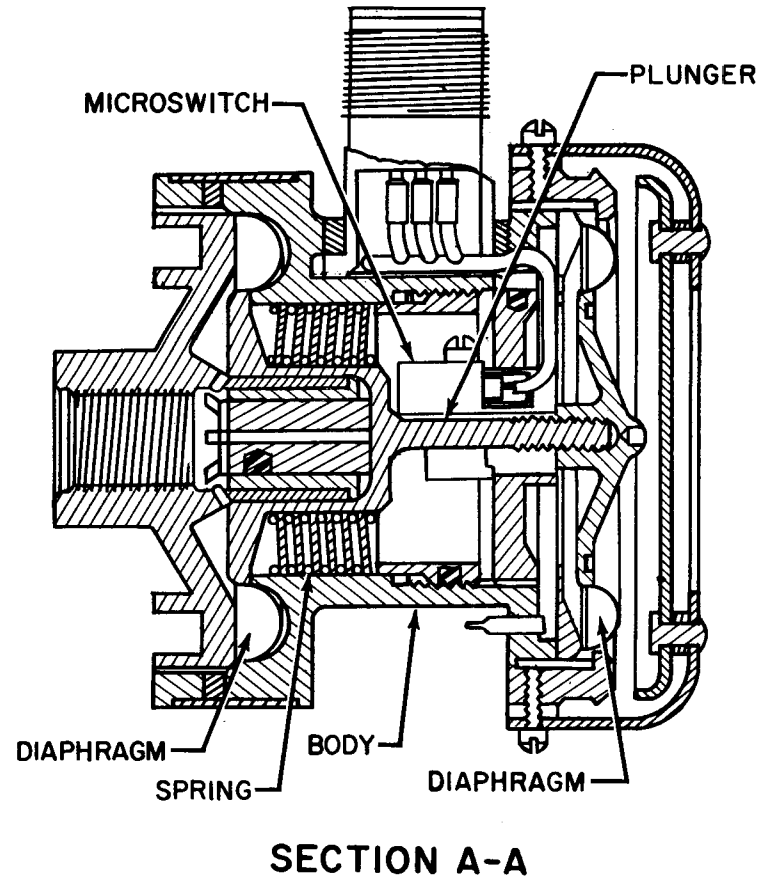

4.2.20 FUEL TANK PRESSURE SWITCH ASSEMBLY, 10414019 - SECTIONAL VIEW

THIS PAGE INTENTIONALLY LEFT
BLANK

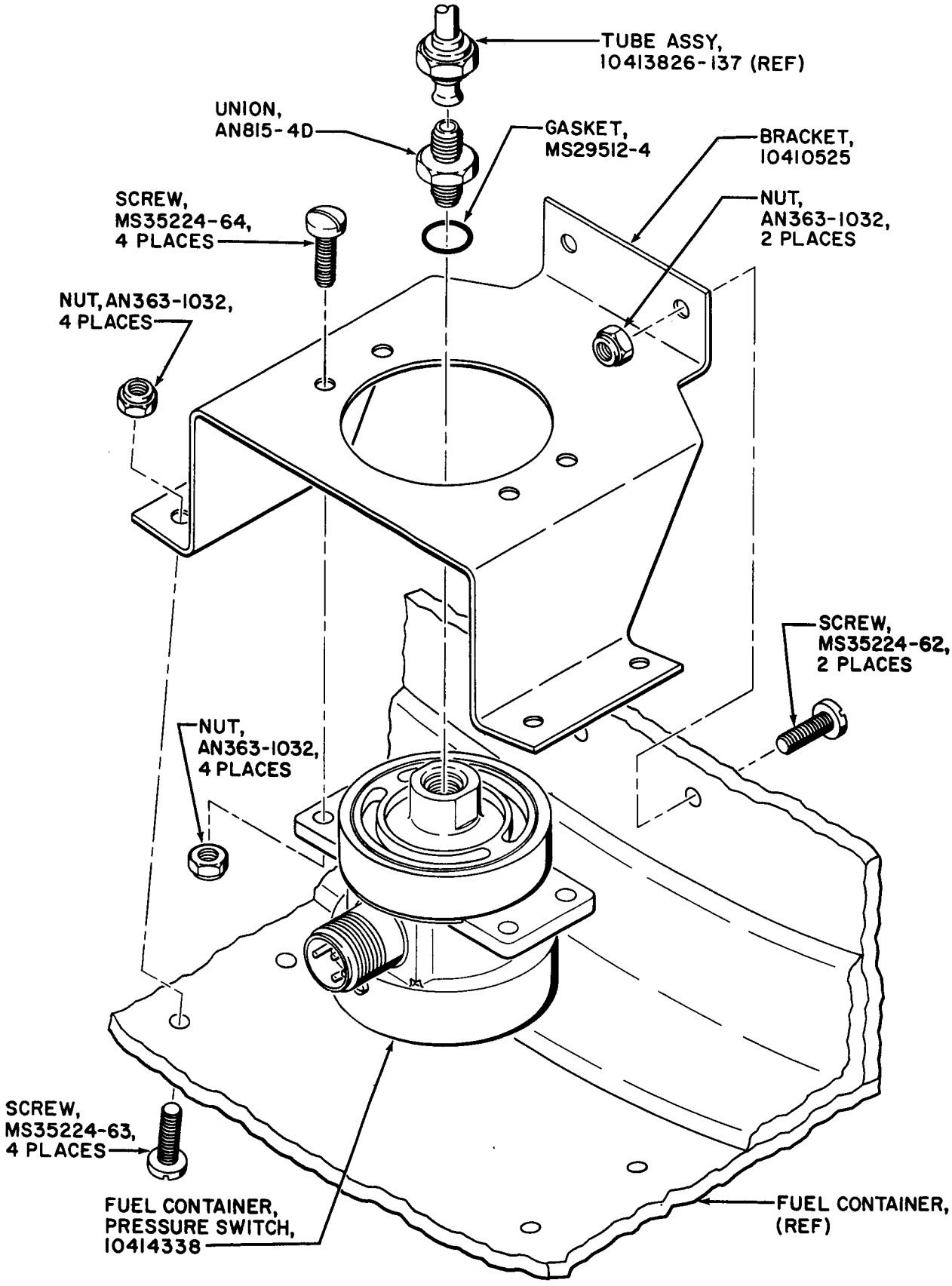

4.2.21 FUEL TANK PRESSURE SWITCH ASSEMBLY, 10414338 INSTALLATION

THIS PAGE INTENTIONALLY LEFT
BLANK

4.9 OXYGEN SYSTEM

The following pages, 4.3.2 through 4.3.72 and Figures 4.3.1 through 4.3.43, deal with the components on the oxygen system. A system schematic, Figure 4.3.1, and the callout list on page 4.3.2 show the find numbers, quantity used, nomenclatures, parts numbers, and page locations of the components listed.

OXYGEN SYSTEM

The liquid oxygen system furnishes oxidizer to the main engines, the gas generator and the heat exchangers for inflight LOX container pressurization. The oxidizer is carried in four outer containers and one center container pressurized to 58 ± 2 psia. The LOX system valves, lines and hardware necessary to fill and drain the containers, supply oxidizer to the engines, and vent the containers if excessive pressure occurs.

OXYGEN SYSTEM CALLOUT LIST

	PAGE
LOX Fill	4.3.4
LOX Suction Line on Inboard Engines	4.3.5
LOX Suction Line on Outboard Engines	4.3.6
LOX Replenishing Line	4.3.7
GOX Manifold and Check Valves	4.3.8
Center LOX Tank - Bottom View	4.3.9
Center LOX Tank - Top View	4.3.10
GOX Distribution Line	4.3.11
LOX Vent Line	4.3.12
LOX Relief Line	4.3.13

FIND NUMBER	QTY	COMPONENT	PART NUMBER	PAGE
B64	4	Quick Disconnect LOX Bubbling	10414320	4.3.68
B65	8	Orifice LOX Bubbling	10414555	
B150	1	Fill and Drain Valve	10414002	4.3.14
B151	8	Prevalve, LOX	10414005	4.3.18
B152	8	Flowmeter	10413034	4.3.64
B153	1	Step Switch, Differential Pressure	10414068	4.3.22
B154	1	Q.D. Coupling, LOX Tank Test Line	10414062	4.3.26
B155	1	3-Way Needle Valve, Pressure Checkout	10414087	4.3.28
B156	1	Coupling, LOX Replenishing	10414315	4.3.30
B157	1	Replenishing Valve, LOX	10414003	4.3.32
B158	1	Q.D. Coupling, LOX Sensing Computer Line	10414062	4.3.26
B159	1	Q.D. Coupling, LOX Sensing Computer Line	10414062	4.3.26
B160	1	Relief Valve No. 1, LOX	10414000	4.3.36
B161	1	Relief Valve No. 2, LOX	10414000	4.3.36
B162	1	Vent Valve, LOX	10414001	4.3.38
B163	1	Emergency Overfill Switch	10414045	4.3.42
B164	1	Fill Flange, LOX	10426427	4.3.46
B165	1	Inboard Engine Cutoff Switch	10414347	4.3.56
B166	1	Outboard Engine Cutoff Switch	10414347	4.3.56
B180	1	Orifice, LOX Container Pressure		
B181	1	Q.D. Coupling, LOX Container Press	10414300	4.3.67

OXYGEN SYSTEM CALLOUT LIST

FIND NUMBER	QTY	COMPONENT	PART NUMBER	PAGE
B182	1	Orifice, LOX Pressurization	10414066	4.3.8
B183	1	65 psi Emergency Switch, LOX Vent	10414341	4.3.50
B184	1	60 psi Press Relief Switch	10414340	4.3.54
B185	1	3-Way Needle Valve Press Checkout	10414087	4.3.28
B186	1	Orificed Butterfly Valve, LOX Pressure	10414318	4.3.58
B187	1	LOX Pressurizing Control Valve	10414027	4.3.8
B188	1	Orificed Butterfly Valve, LOX Pressure	10414318	4.3.58
B189	1	Orificed Butterfly Valve, LOX Pressure	10414318	4.3.58
B190	1	Orificed Butterfly Valve, LOX Pressure	10414318	4.3.58
B191	1	Q.D. Coupling, LOX Container Pressure	10414300	4.3.67
B403	5	Level Discrete Sensor	8968380	4.3.62
B427	5	Level Discrete Sensor	8968380	4.3.62
B443	1	LOX Bubbling Quick Disconnect	10414065	4.3.48
B444	4	LOX Bubbling Quick Disconnect	10414319	4.3.71

THIS PAGE INTENTIONALLY LEFT
BLANK

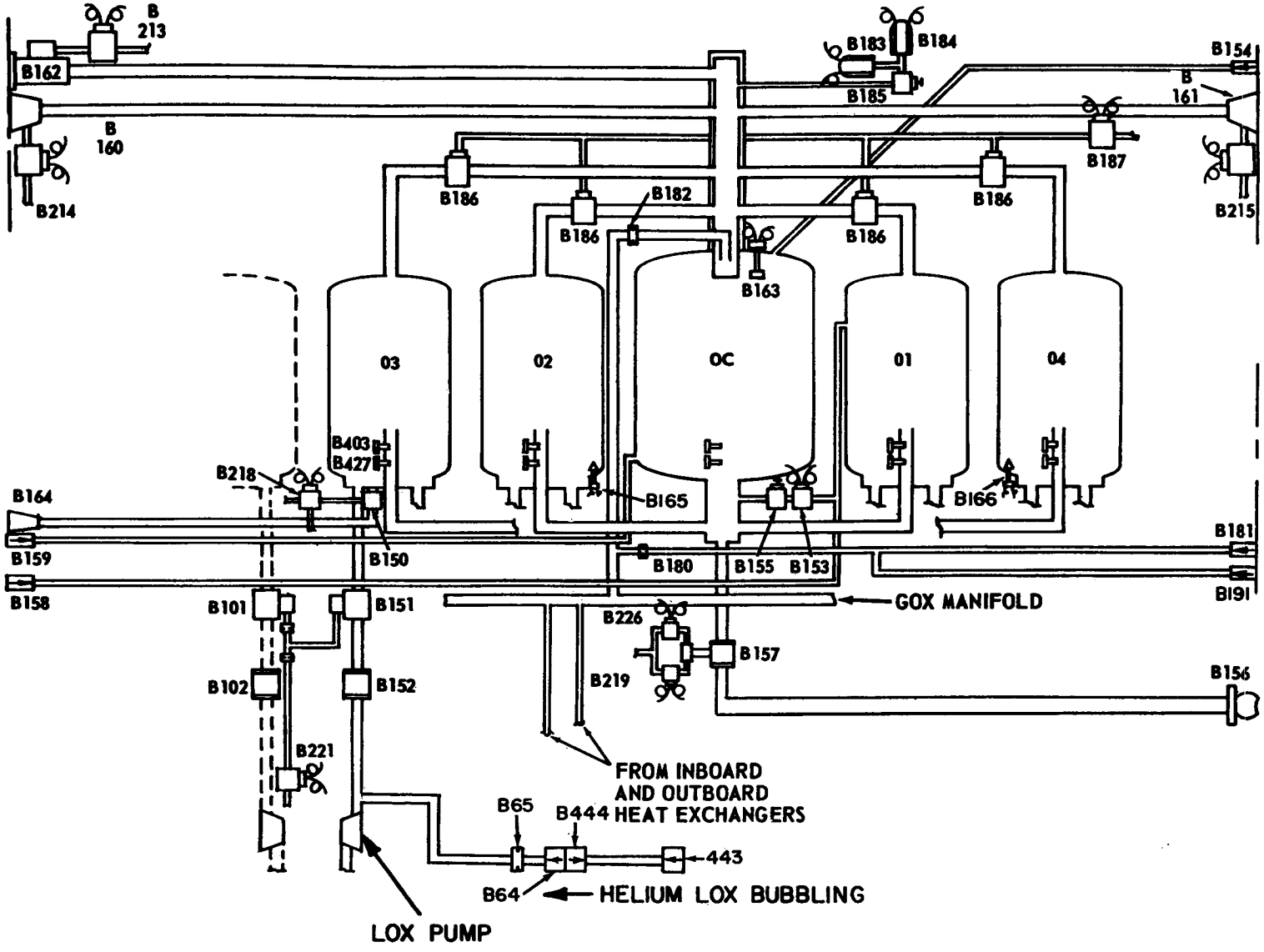

4.3.1 OXYGEN SYSTEM SCHEMATIC

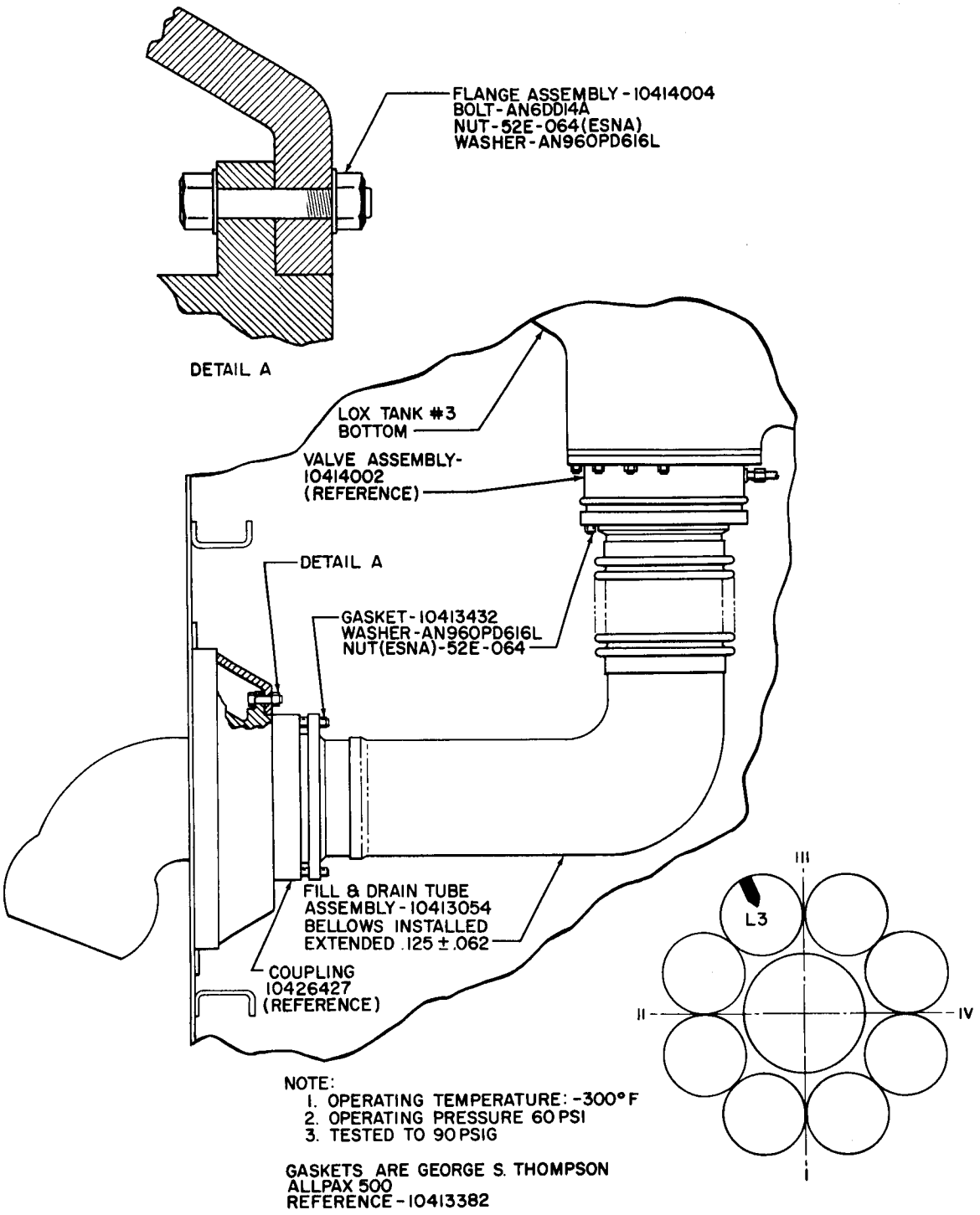

4.3.2 LOX FILL LINE

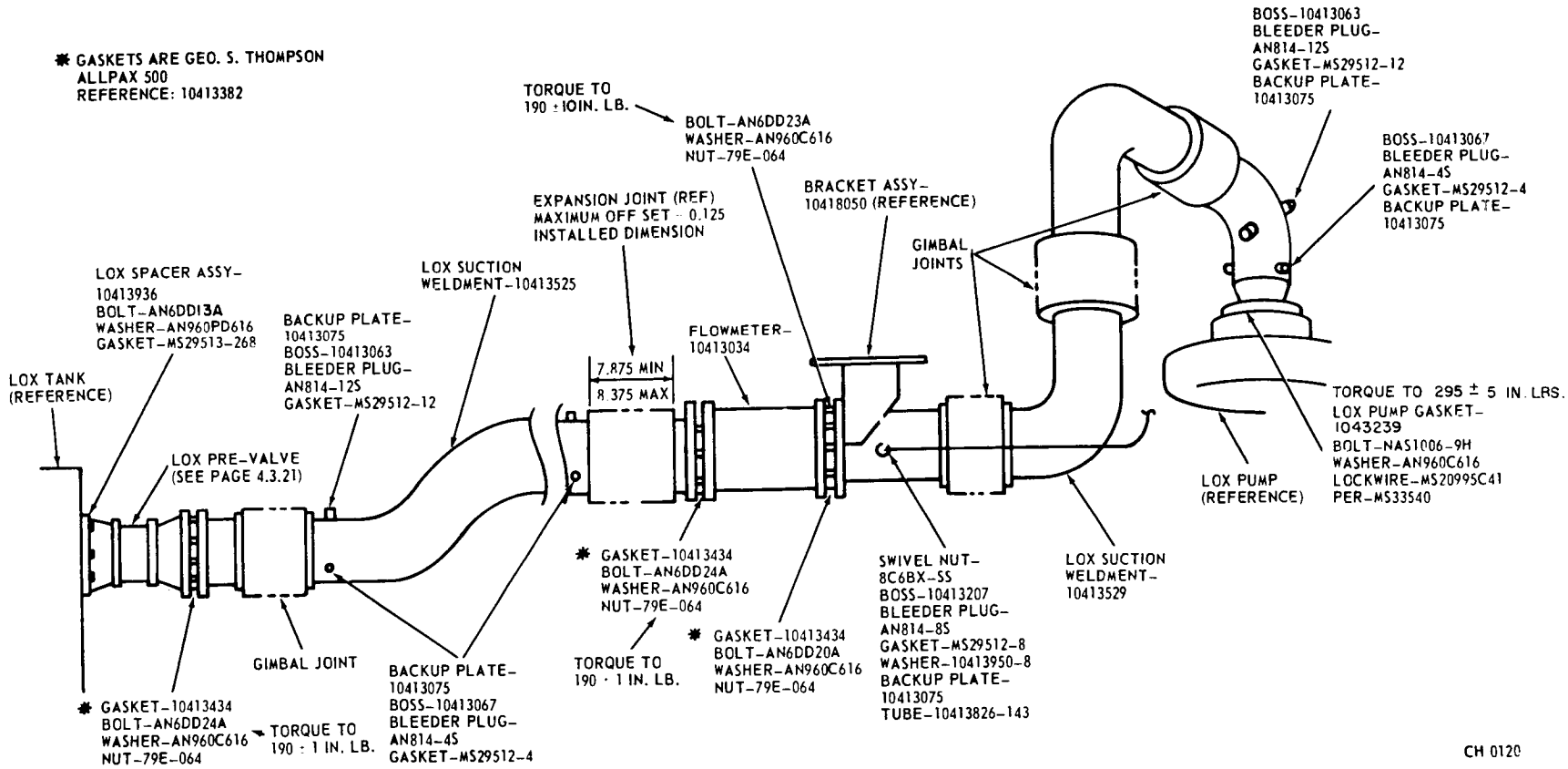

4.3.3 LOX SUCTION LINE, INBOARD ENGINES

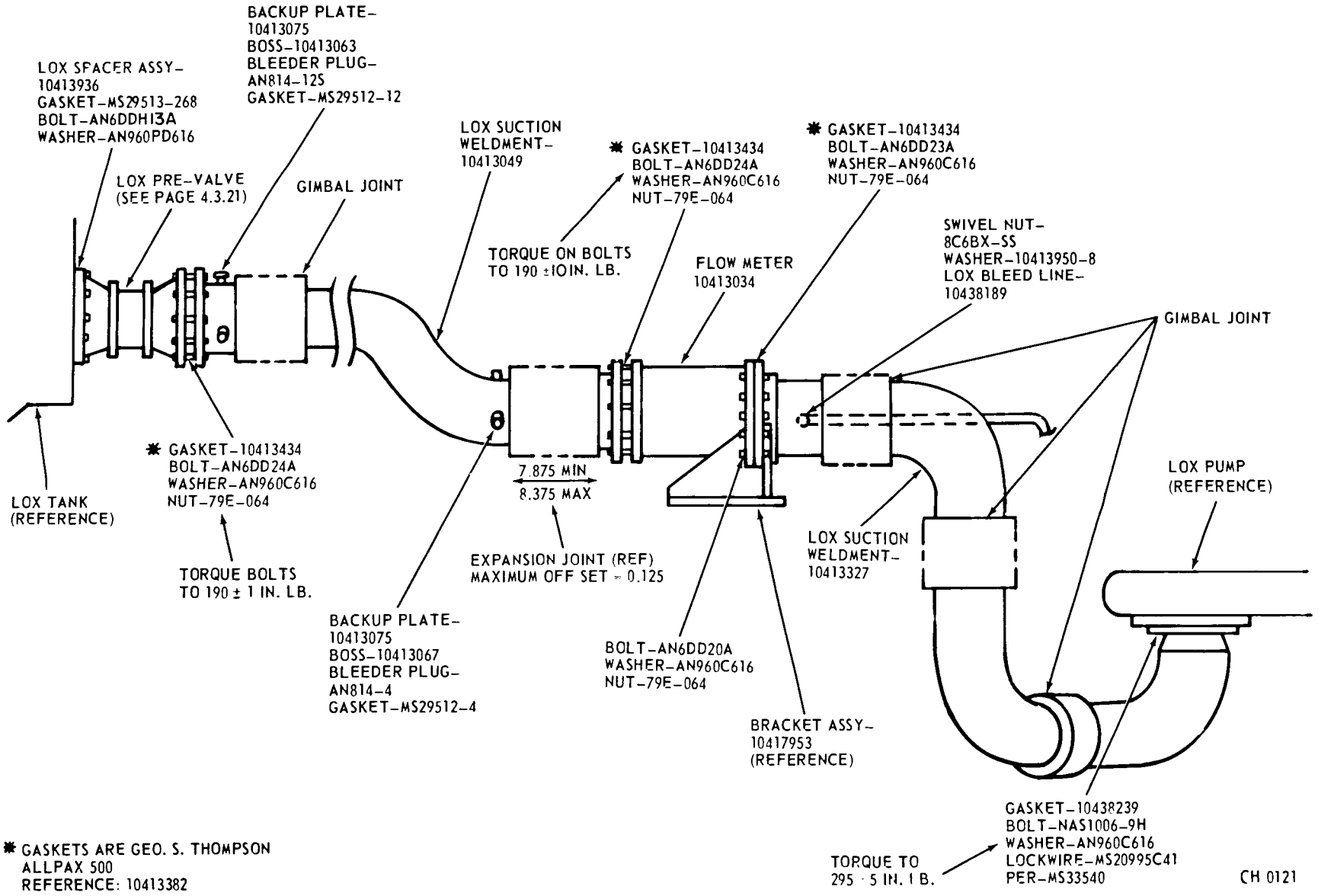

4.3.4 LOX SUCTION LINE, OUTBOARD ENGINES

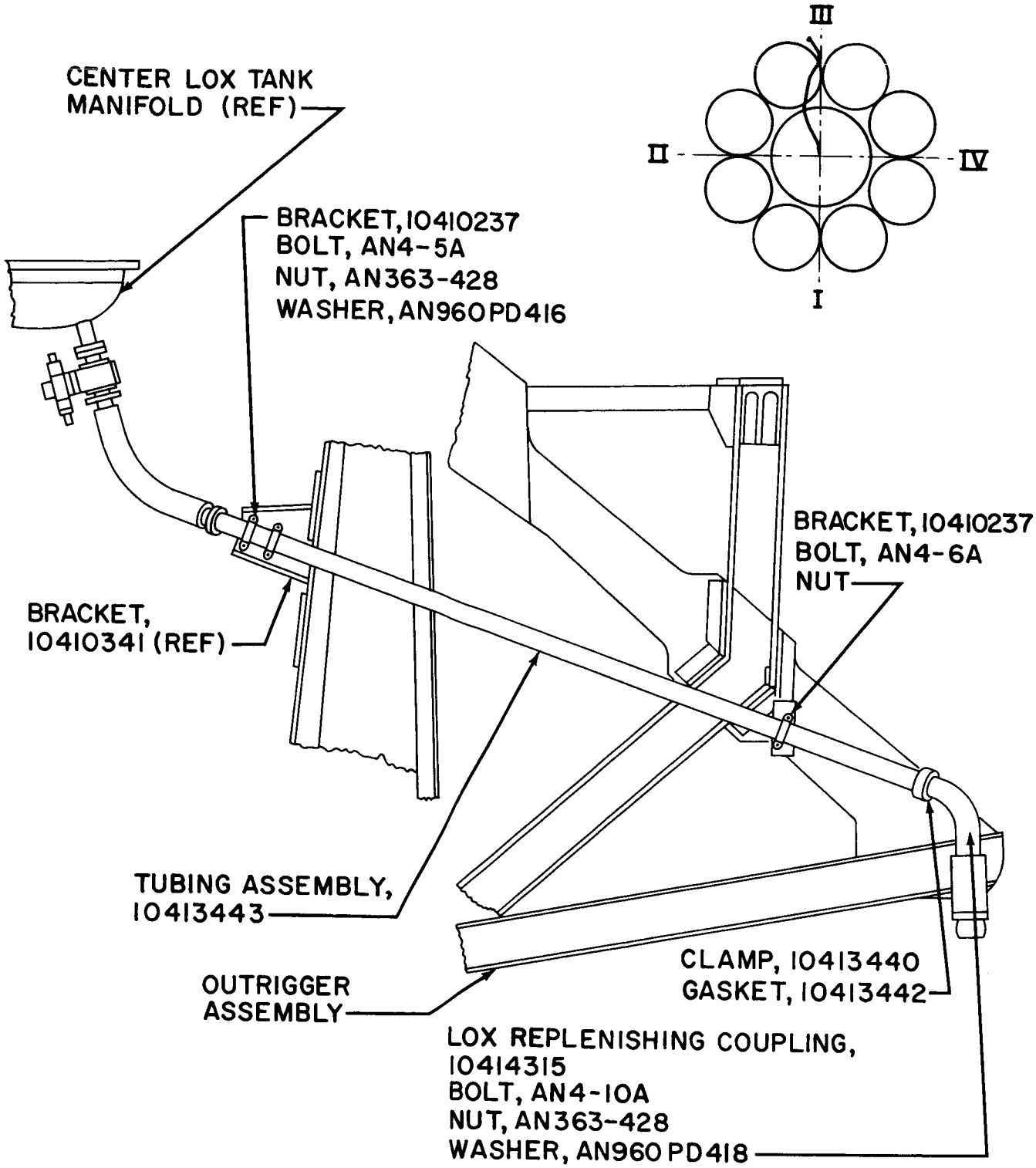

4.3.5 LOX REPLENISHING LINE

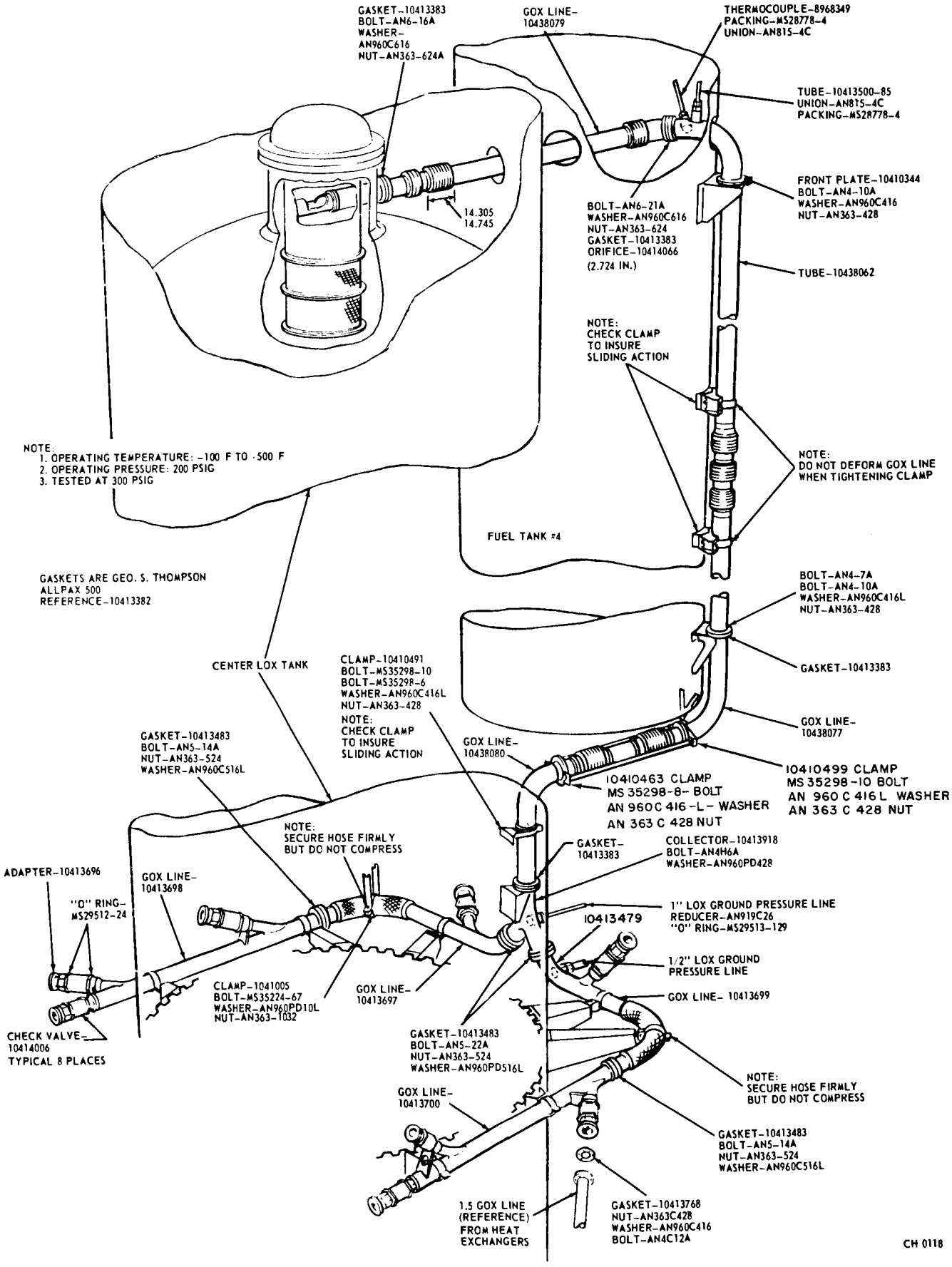

4.3.6 GOX MANIFOLD

1 June 1961

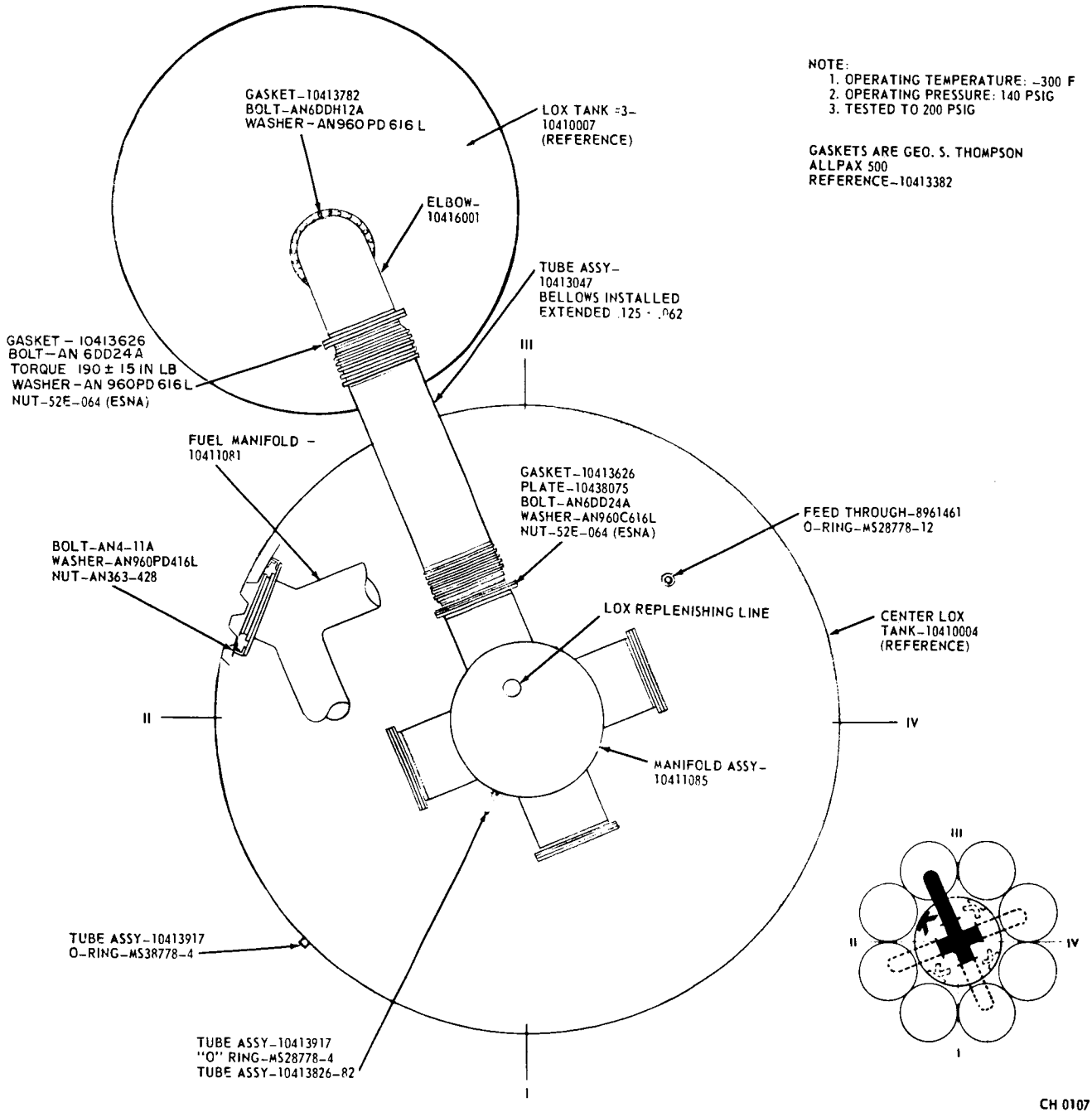

4.3.7 CENTER LOX CONTAINER - BOTTOM VIEW

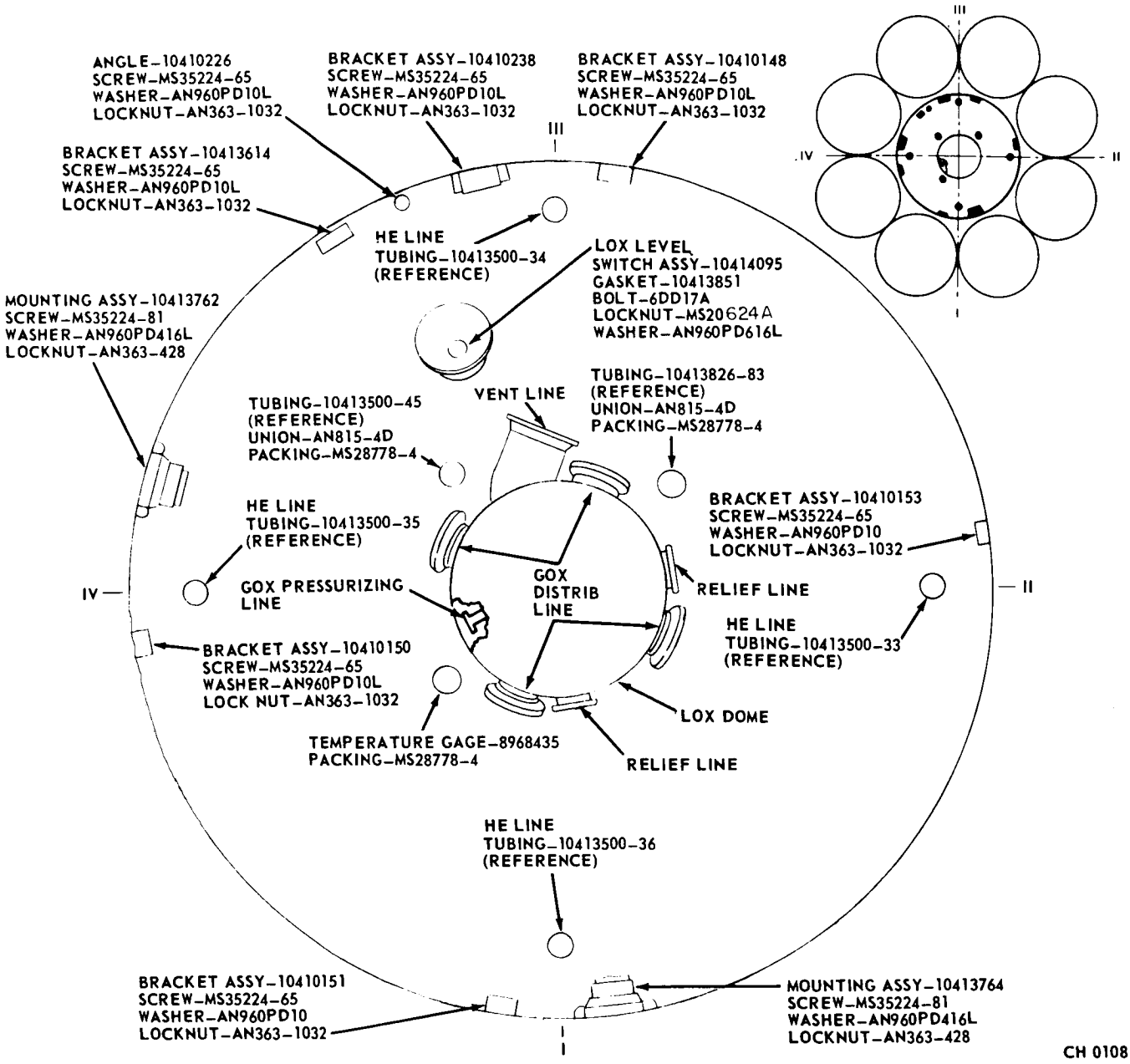

4.3.8 CENTER LOX CONTAINER - TOP VIEW

1 June 1961

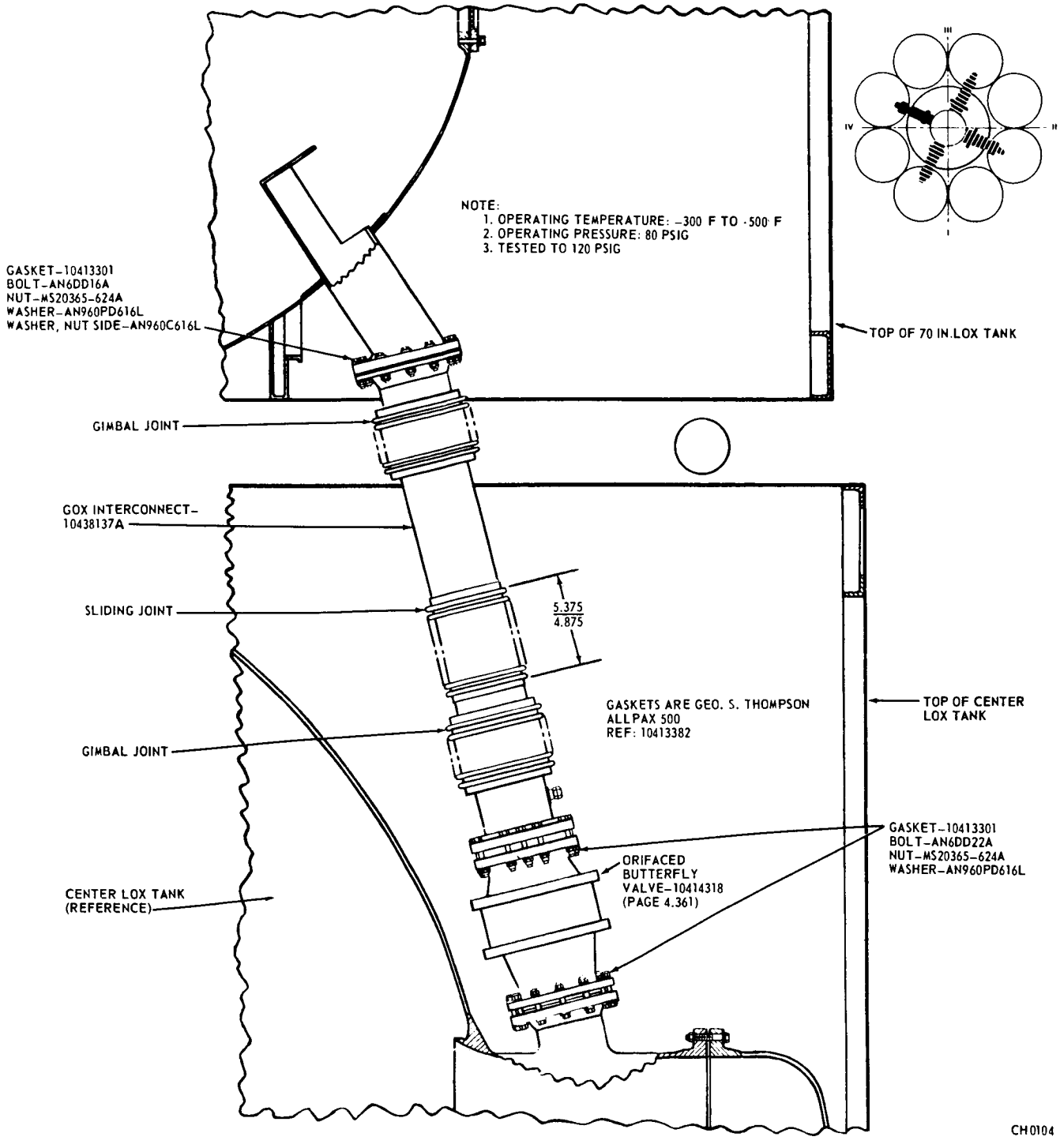

4.3.9 GOX DISTRIBUTION LINE

1 June 1961

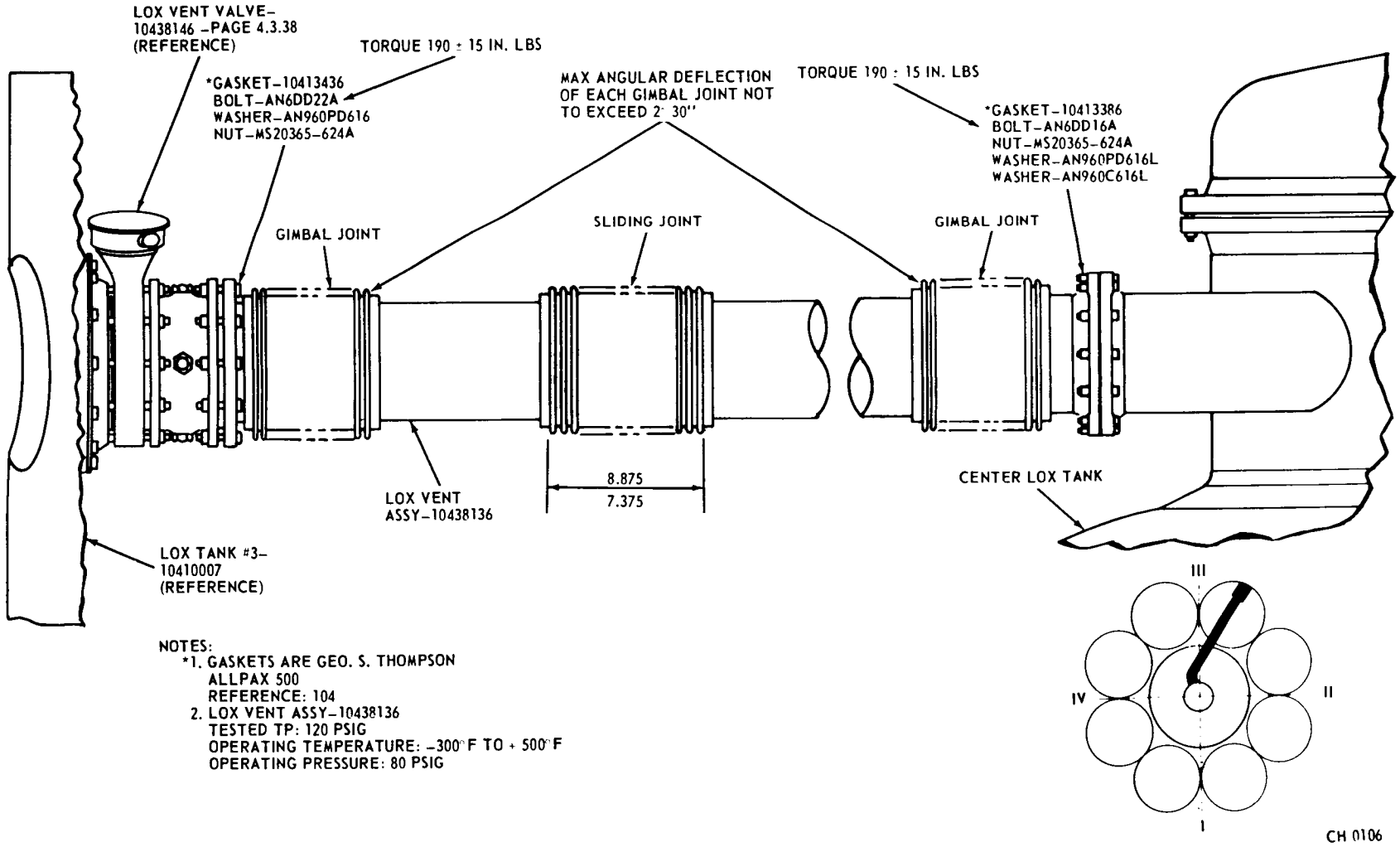

NOTES:
*1. GASKETS ARE GEO. S. THOMPSON
ALLPAX 500
REFERENCE: 104
2. LOX VENT ASSY-10438136
TESTED TP: 120 PSIG
OPERATING TEMPERATURE: -300°F TO + 500°F
OPERATING PRESSURE: 80 PSIG

4.3.10 LOX VENT LINE

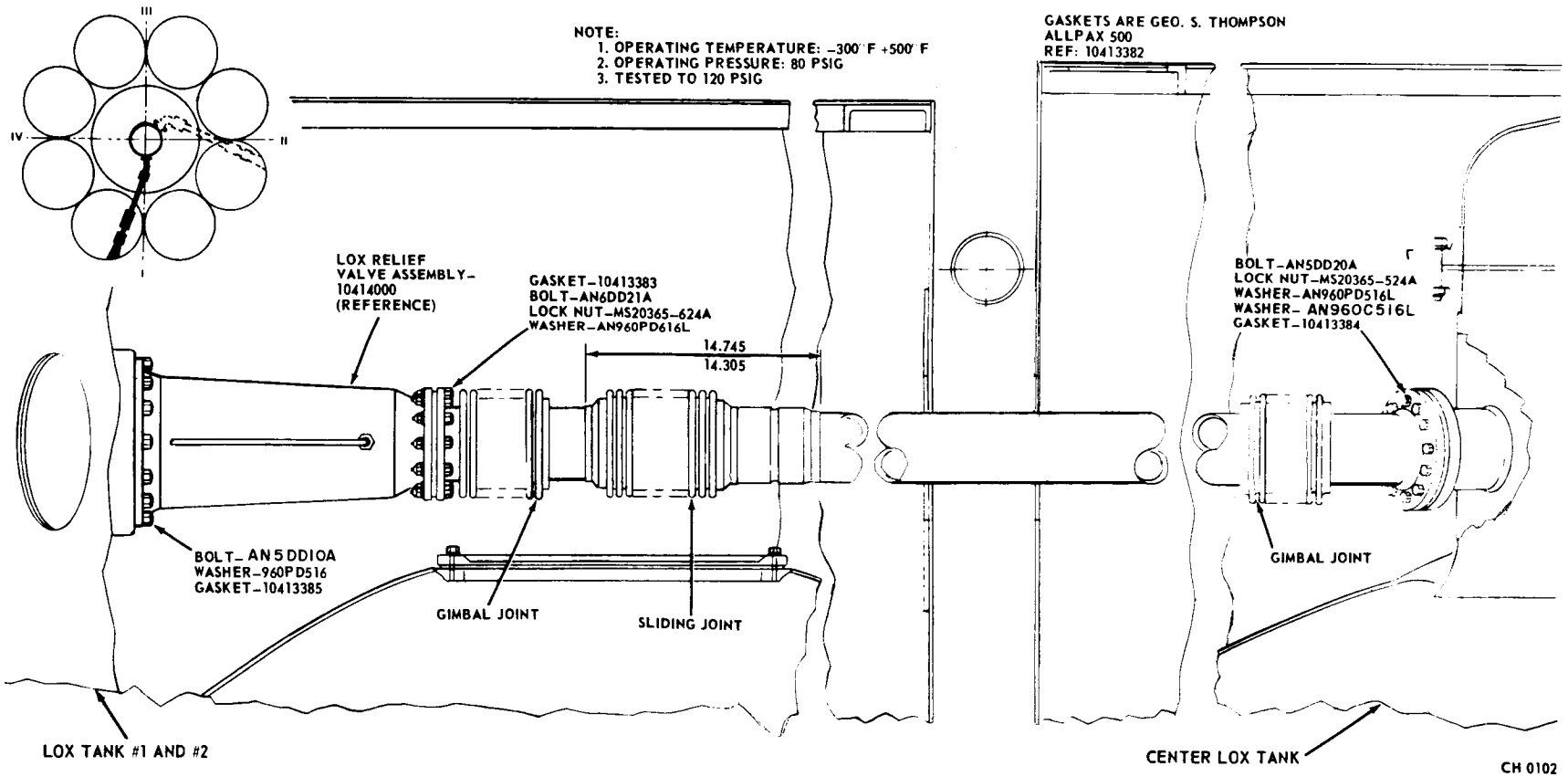

4.3.11 LOX RELIEF LINE

LOX FILL AND DRAIN VALVE ASSEMBLY PART NO. 10414002

The LOX fill and drain valve assembly (B150) is a six-inch, poppet-type pneumatically operated valve.

1. LOCATION - Station 228 in LOX Tank No. 3.
2. SERVICE - Air, helium, LOX.
3. PRESSURE -
   a. Operating:
      (1) Valve: 10 to 50 psig.
      (2) Override system: 750 psig nominal.
      500 psig minimum.
   b. Proof: 1125 psig.
   c. Burst: 1875 psig.
4. ELECTRICAL -
   a. Continuity: Valve closed; pin A to valve body, pin A to B 15 ohm maximum resistance allowed.
   b. Insulation resistance: 500 volt Megger test; valve open; pin A to valve body, pin B to valve body, pin A to B - 50 megohm minimum.
5. LEAKAGE ALLOWANCES -
   a. Past poppet: 100 scim maximum with 80 $\pm$ 1 psig helium on line at ambient temperature.
   b. Past lipseal: 50 scim maximum with 750 psig on control valve and solenoid energized.
   c. No liquid leakage or frosting allowed around switch wires with 80 $\pm$ 1 psig LN_2 on line and valve open at operating temperature.
   d. No liquid leakage allowed past poppet seat, 8944184 retainer, and 8944183 "O"-ring with 80 $\pm$ 1 psig LN_2 on line and valve closed.
6. TORQUE - Torque fittings per ABMA-STD-18.
   a. Cylinder 8944187: 200 to 300 in-lbs.
   b. Nut 8944189: 500 to 550 in-lbs.
   c. Nut 8944188: 150 to 200 in-lbs.
7. POPPET TRAVEL - From full open to full closed position - 1.552 inches minimum.

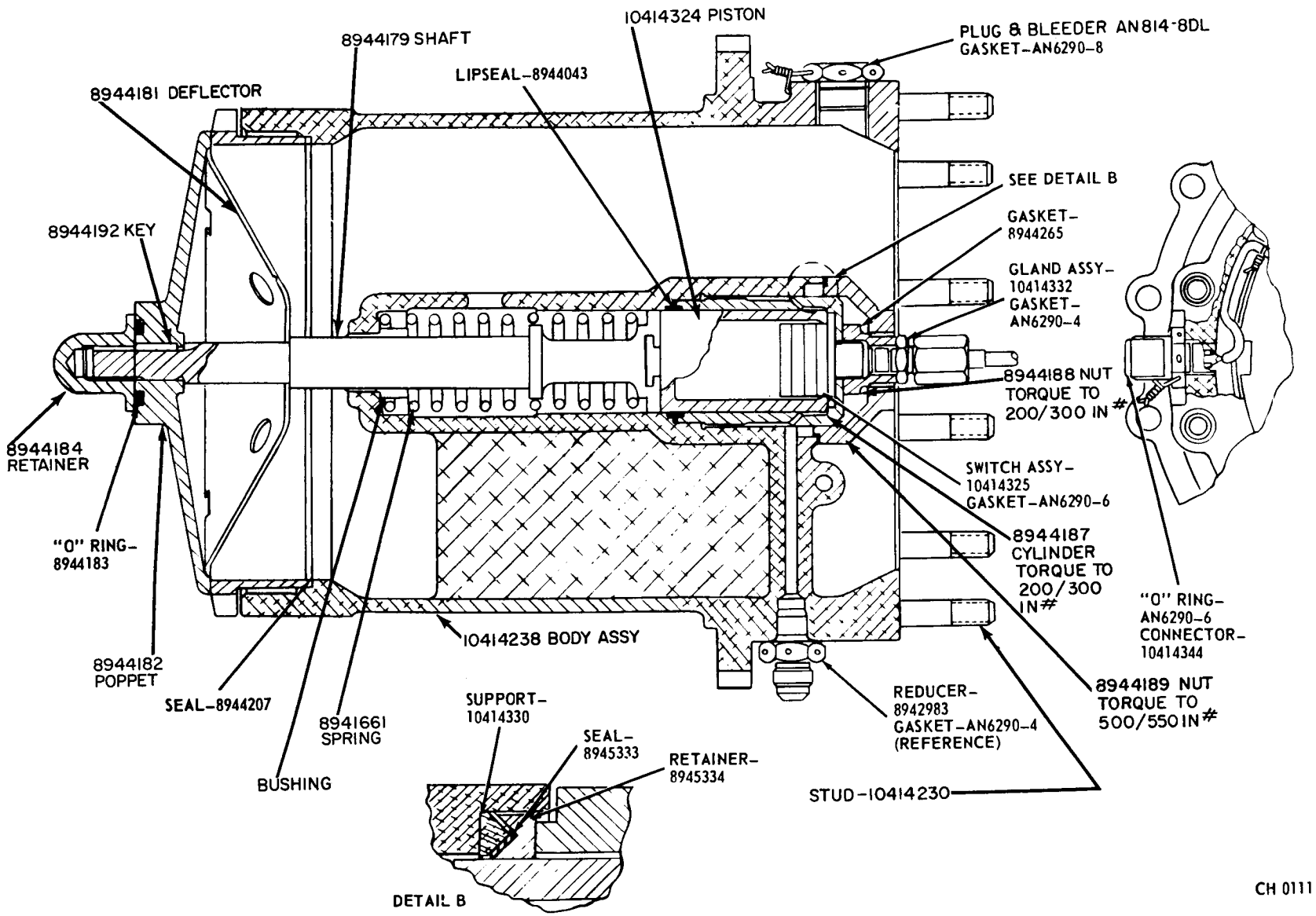

4.3.12 LOX FILL AND DRAIN VALVE ASSEMBLY 10414002 - SECTIONAL VIEW

THIS PAGE INTENTIONALLY LEFT
BLANK

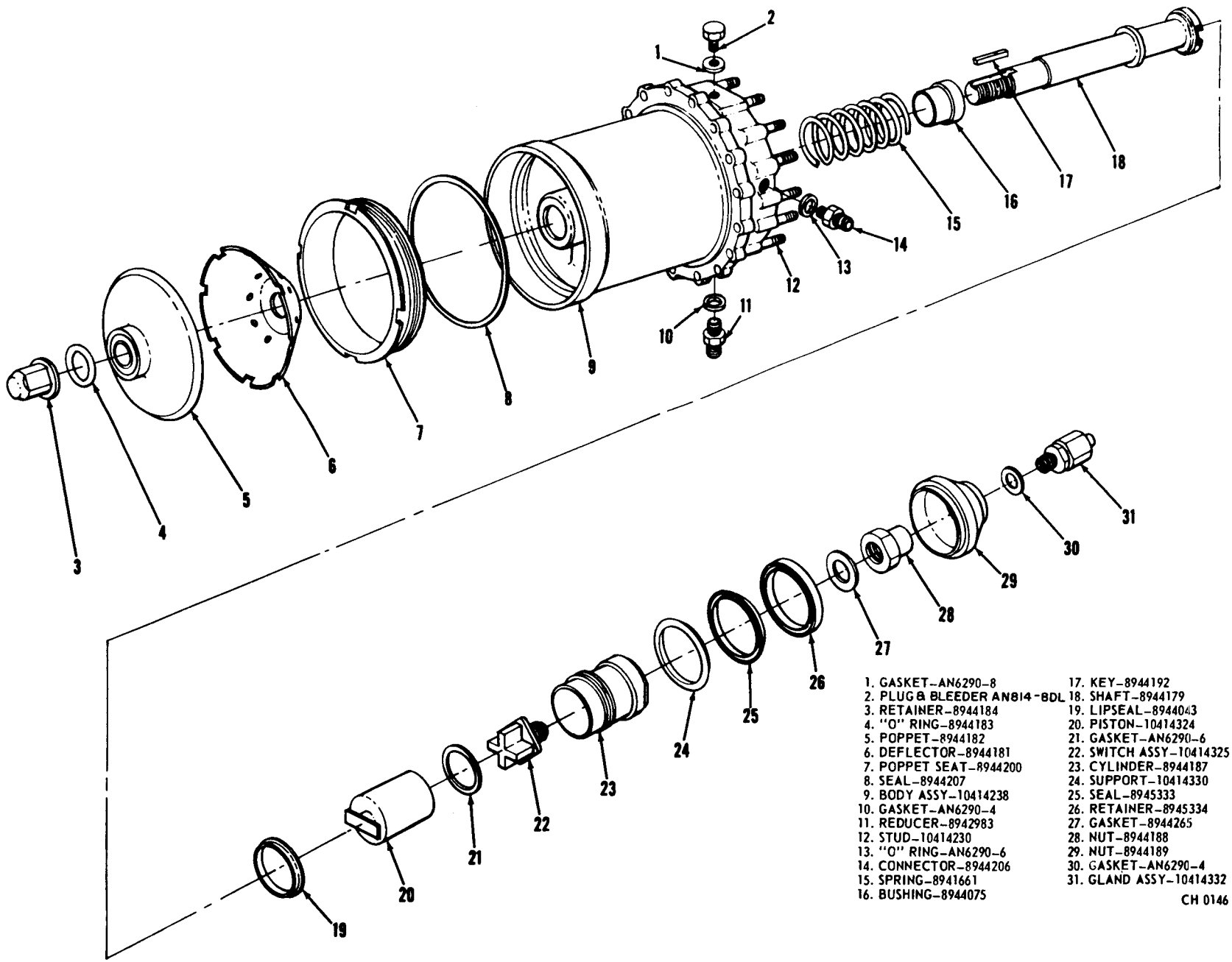

4.3.13 LOX FILL AND DRAIN VALVE ASSEMBLY - EXPLODED VIEW

LOX PREVALVE PART NO. 10414005

The normally closed LOX prevalve (B151) is used as a shutoff valve between the LOX container and the main LOX valve. The LOX prevalve is actuated by the fuel and LOX prevalve control valve (B221) when control pressure is applied.

1. VENDOR - NORTH AMERICAN AVIATION, INC., PART NO. 9512-48410-61.
2. LOCATION - Station 229, used in eight places.
3. SERVICE - Liquid Oxygen.
4. CONTROL PORT MEDIUM - Air, gaseous nitrogen, helium.
5. PRESSURE - CONTROL MEDIUM
   a. Operating:
      1. Minimum: 500 psig.
      2. Nominal: 700 psig.
   b. Proof: 1125 psig.
   c. Burst: 1875 psig.
6. TEMPERATURE - Control cylinder plus 70° F to 140° F.
7. GATE VALVE PLAY - 1° maximum.
8. ELECTRICAL - Switch must actuate at $2^{\circ} \pm 1^{\circ}$ before end of gate travel with valve open or closed.
9. LEAKAGE ALLOWANCES -
   a. Control cylinders: 5 scim maximum at 750 psi.
   b. Internal: With 75 psig on line and valve in open and closed positions alternately.
      1. Shaft seals - 20 scim maximum
      2. Gate Pin seals - 2 scim maximum.
      3. Main seal - 25 scim maximum. Omit open position.
   c. External: No leakage allowed.
10. LUBRICATION - Lubricate all "O"-Rings and sliding surfaces in pneumatic actuator portion of valve with DC55 grease. Lubricate seals and sliding surfaces exposed to LOX with Molykote Z.
11. RUBBER SEALS - Must meet the requirements of specification MSFC-STD-10509311.

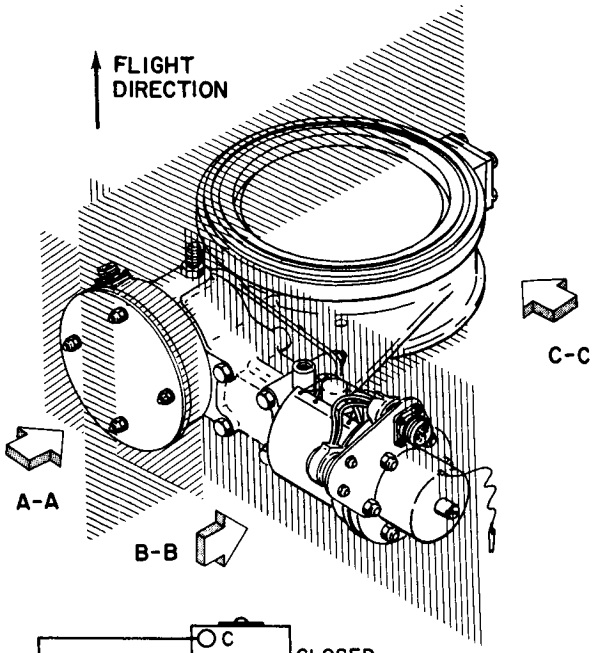

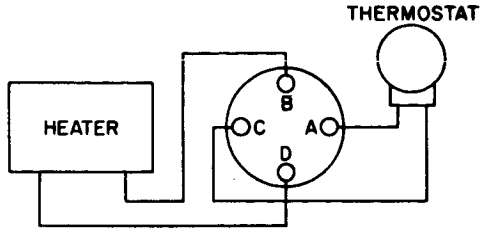

HEATER WIRING DIAGRAM

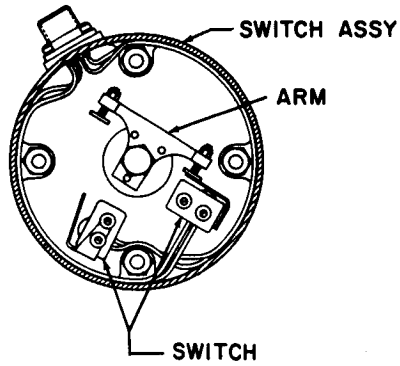

SECTION A-A

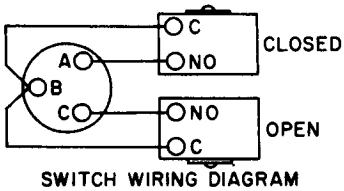

SWITCH WIRING DIAGRAM

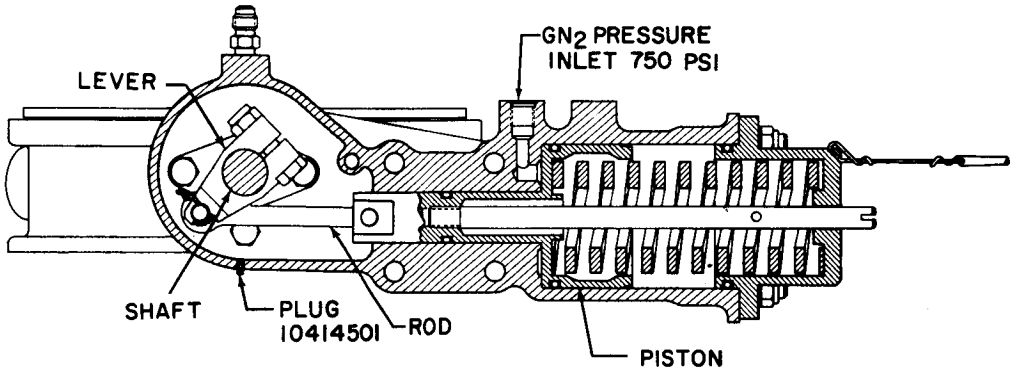

SECTION B-B

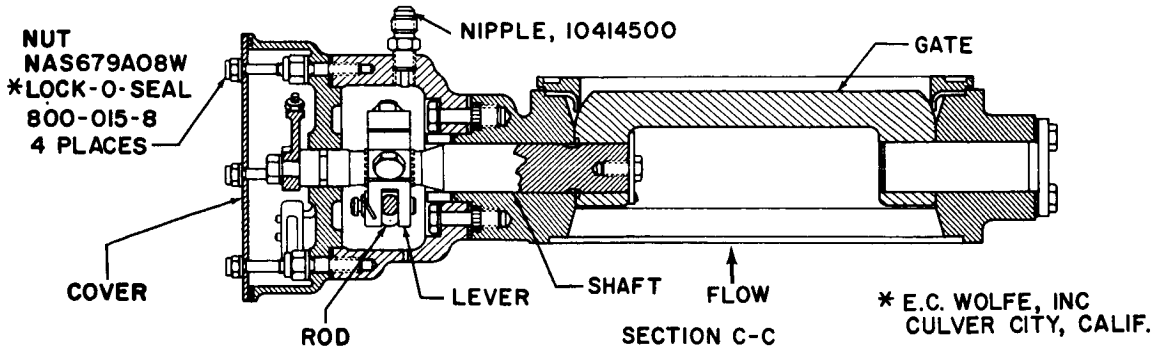

SECTION C-C

LOX PREVALVE, 10414005
SECTIONAL VIEW

4.3.14

THIS PAGE INTENTIONALLY LEFT
BLANK

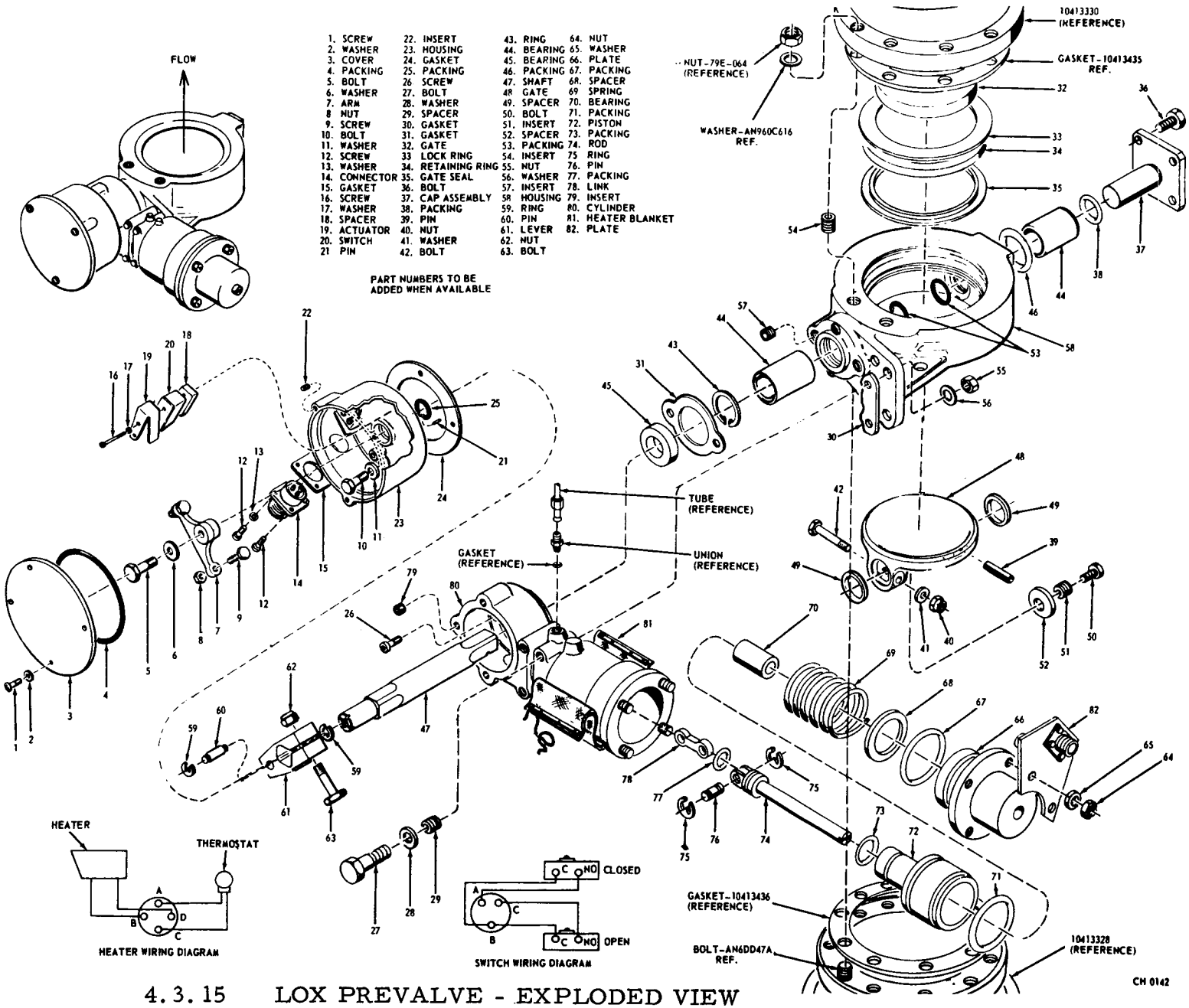

4.3.15 LOX PREVALVE - EXPLODED VIEW

LOX DIFFERENTIAL STEP PRESSURE SWITCH ASSEMBLY
PART NO. 10414068

After initial filling of the LOX tanks with tank preflight pressurization, the amount of LOX on board is based on the density of the fuel. The step differential pressure switch (B153) obtains the differential of the LOX head and signals the control valves (B219, B226) which in turn open or close the replenishing valve (B157) to drain or add more LOX.

1. VENDOR - SERVOMECHANISMS, INC., PART NO. 816105
2. LOCATION - Station 228, Fuel Tank No. 2
3. SERVICE -
   a. High-pressure port: LOX
   b. Low-pressure port: Gaseous oxygen.
4. TEMPERATURE - OPERATING - Minus 65° F to plus 165° F.
5. PRESSURE -
   a. Operating: The switch shall have one switching point. The switching point shall be adjustable by exchanging calibrated resistors. Five exchangeable resistors shall be supplied for the following pressures: 17.5, 19.0, 20.5, 22.0, 23.5 psid.
   b. Proof: 120 psi.
6. ELECTRICAL -
   a. Switch: Normally open, single pole, one amp, solid state circuitry. Switch shall be above ground if d.c. supply voltage is above ground.
   b. Excitation: 26 to 32 volt d.c., 28 volt nominal, operate at reduced specification from 22 to 32 volt.
   c. Accuracy: 0.5 percent of setting, 22 to 32 volt 1.0 percent of setting.
   d. Heater: Operate from 110 volt a.c. supply.

SECTIONAL VIEW WILL BE SUPPLIED WHEN AVAILABLE

THIS PAGE INTENTIONALLY LEFT
BLANK

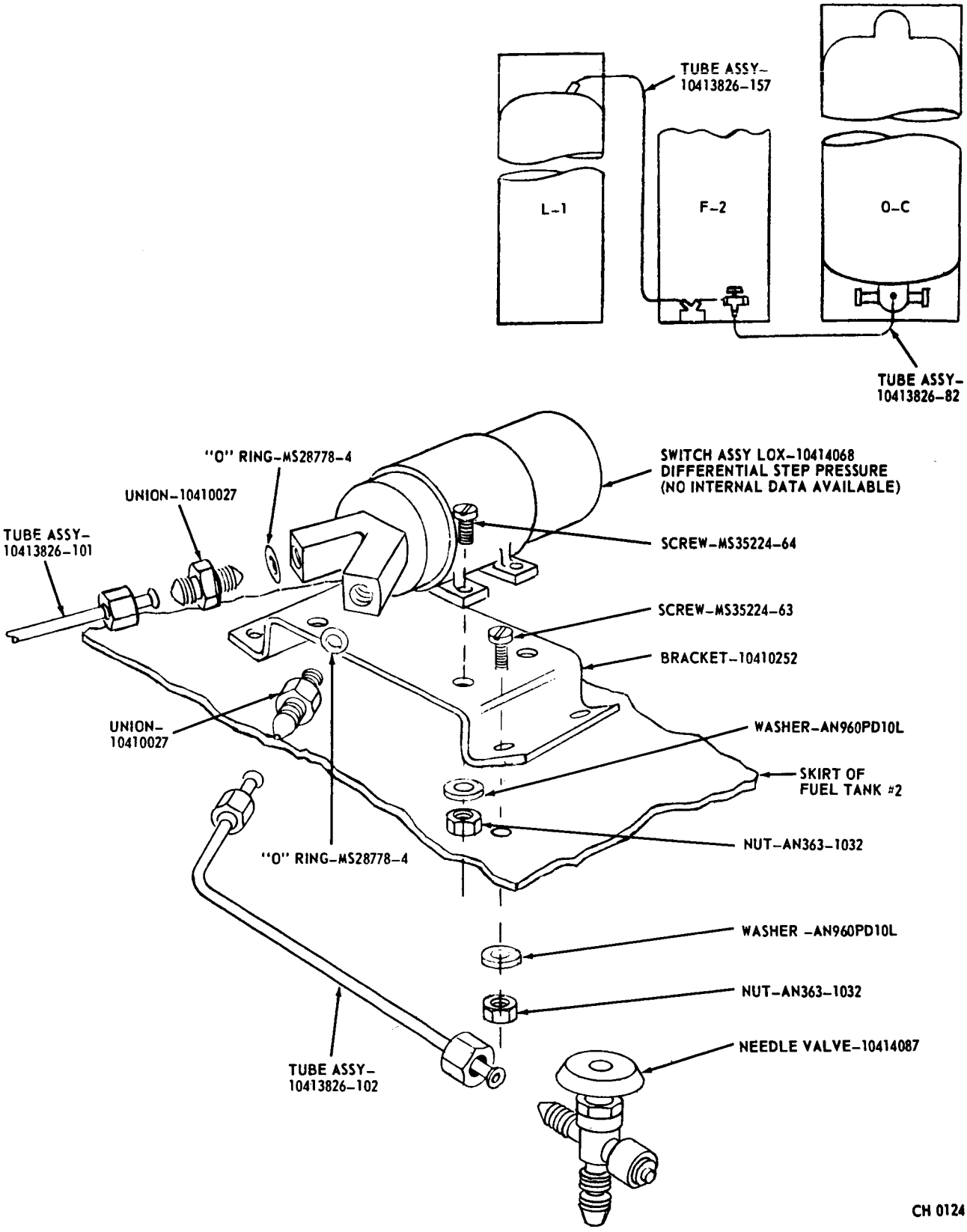

4.3.17 LOX DIFFERENTIAL STEP PRESSURE SWITCH ASSEMBLY 10414068 - INSTALLATION

QUICK-DISCONNECT COUPLING PART NO. 10414062

The one-fourth inch quick-disconnect couplings (B158, B159) are used in the LOX sensing computer line and (B154) in the LOX tank test line.

1. VENDOR - E.B. WIGGINS OIL TOOL CO., INC.
   PART NO. 6005 R78A4.
2. LOCATION - Station 158, Fin No. 2 on Short Cable Mast 2 connection point.
3. SERVICE - LOX vapor.
4. TEMPERATURE - OPERATING - Minus 65° F to plus 160° F.
5. PRESSURE -
   a. Operating: 100 psig.
   b. Proof: 4500 psig.
   c. Burst: 7500 psig.
6. LEAKAGE ALLOWANCES -
   a. Internal: 2 scim maximum at operating pressure and temperature.
   b. External: No leakage.
7. LUBRICATION - Lubricate seals with Molykote Z.

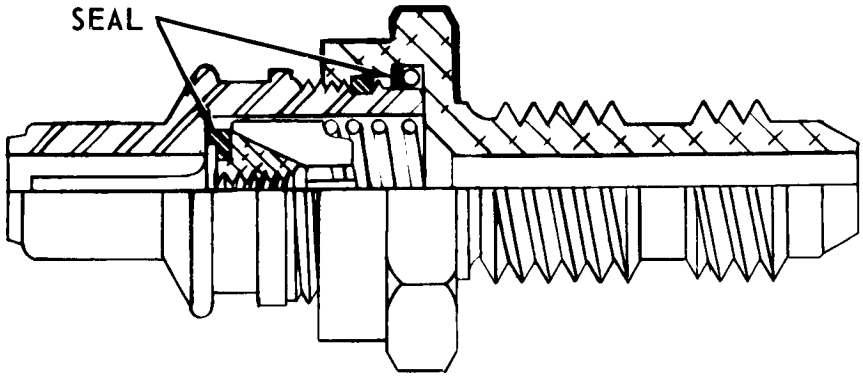

PART NUMBERS TO BE
ADDED WHEN AVAILABLE

CH 0119

4.3.18 QUICK-DISCONNECT COUPLING 10414062 - SECTIONAL VIEW

THIS PAGE INTENTIONALLY LEFT
BLANK

PRESSURE CHECKOUT VALVE PART NO. 10414087

The three-way needle pressure checkout valve (B155) is used to calibrate the pressure switch (B153) in the LOX replenishing System, and valve (B185) to calibrate the LOX pressure switches (B183 and B184).

1. VENDOR - BENTON CORP., PART NO. B-15600.
2. LOCATION - Station 202 in fuel tank No. 2.
3. PACKING MATERIAL - Teflon.
4. PRESSURE -
   a. Operating: 3000 psig
   b. Proof: 4500 psig
   c. Burst: 7500 psig
5. TEMPERATURE - OPERATING - Minus 100° F to plus 550° F.
6. LEAKAGE ALLOWANCE -Internal and external, no leakage allowed.
7. SERVICE - Air, nitrogen, helium, H_2 O_2, fuel, combustible gas, hydraulic oil, lube oil, gaseous oxygen.
8. LUBRICATION - No lubrication allowed.

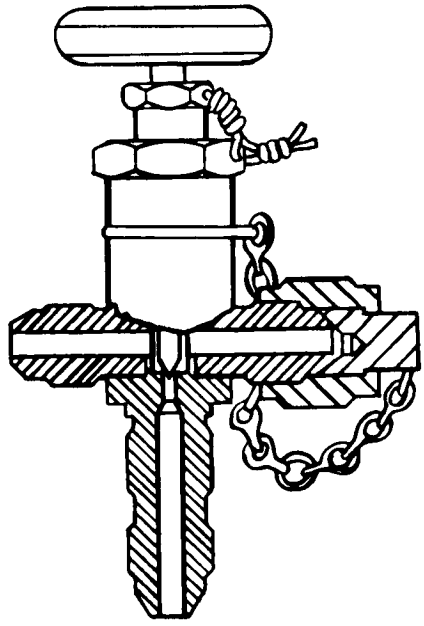

4.3.19 PRESSURE CHECKOUT VALVE 10414087
SECTIONAL VIEW
1 June 1961

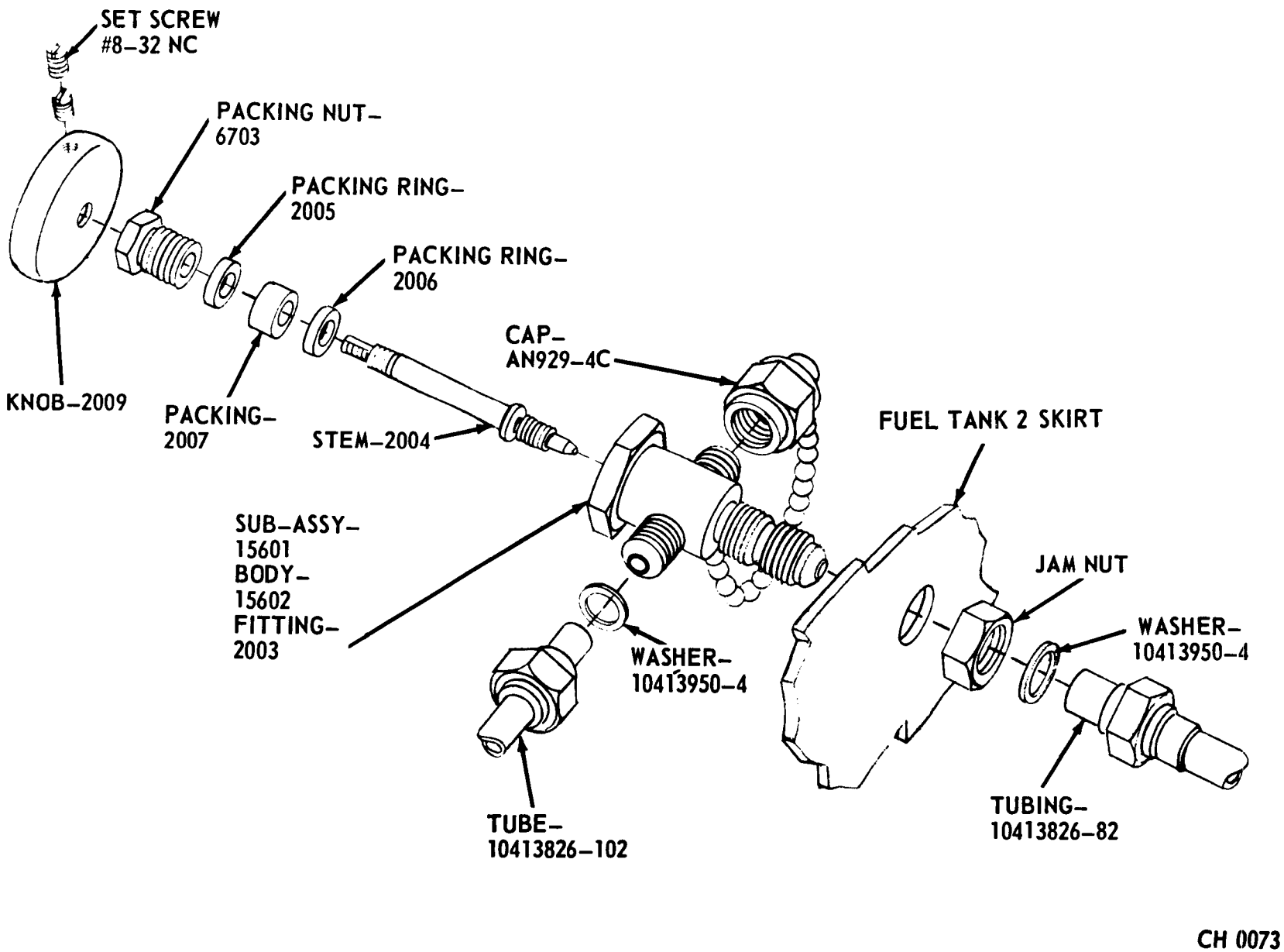

4.3.20 PRESSURE CHECKOUT VALVE - INSTALLATION

LOX REPLENISHING COUPLING PART NO. 10414315

The LOX replenishing coupling (B156) is the connection point of the ground LOX replenishing source. The coupling is located approximately at station 121.

1. LOCATION - STATION 114.47 fin II
2. SERVICE - LOX
3. PRESSURE - 50 to 150 psig drain flow
   50 psig maximum fill flow
4. LEAKAGE - NONE ALLOWED

Refer to page 4.3.7 for location.

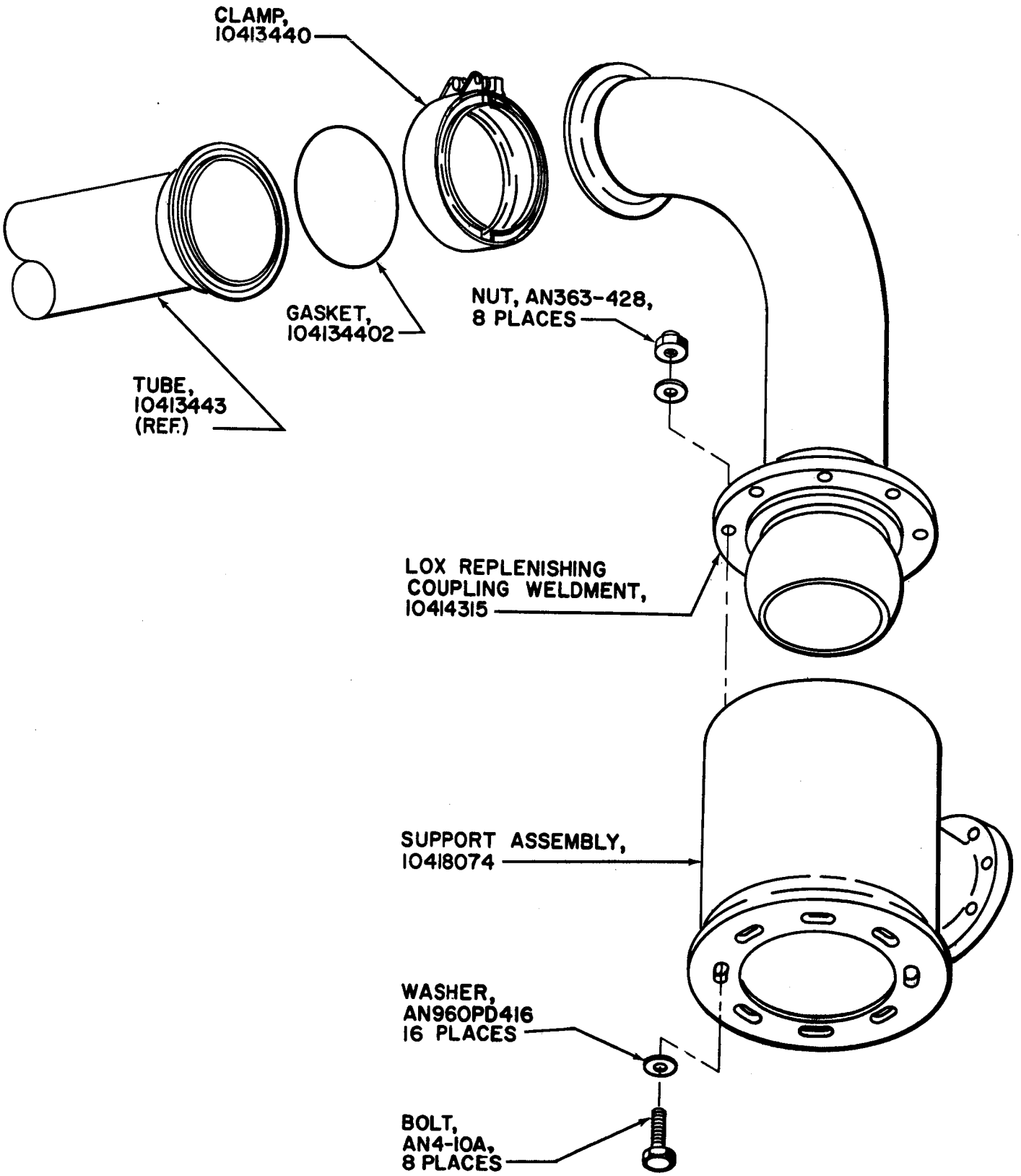

4.3.21 LOX REPLENISHING COUPLING, 10414315
INSTALLATION - SECTIONAL VIEW

LOX REPLENISHING VALVE, PART NO. 10414003

The LOX replenishing valve (B157) controls the flow of LOX from the ground supply through the LOX replenishing line to the missile tanks. The valve is operated by two-way pneumatic control.

1. VENDOR - HYDROMATICS, INC., PART NO. 131K6 Rev. B.
2. LOCATION - Station 187 in fuel tank No. 2.
3. SERVICE -
   a. Flow chamber: Liquid oxygen.
   b. Control chamber: Air, helium, or gaseous nitrogen.
4. LOX PRESSURE -
   a. Operating: 50 to 150 psig drain flow; 50 psig maximum fill flow.
   b. Proof: 225 psig.
   c. Burst: 375 psig.
5. TEMPERATURE - OPERATING - Minus 320° F to plus 160° F.
6. PNEUMATIC CONTROL PRESSURE -
   a. Minimum operating pressure: 500 psig.
   b. Nominal operating pressure: 750 psig.
   c. Proof pressure: 1125 psig.
   d. Burst pressure: 1875 psig.
7. LUBRICATION - Molykote Z.
8. RUBBER SEALS - Must meet requirements of Specification ABMA-STD-29.
9. LEAKAGE ALLOWANCES -
   a. Control cylinders: 5 scim maximum at 750 psig.
   b. Internal, past main seat: 40 scim maximum LOX vapor at 150 psig.
   c. External: No leakage allowed throughout pressure range.
10. ELECTRICAL -
    a. Switch rating: 30 vdc, inductive 3 amp, resistance 4 amp, maximum in rush 15 amp.
    b. At no time may both full on and full off indicators be on.
    c. Continuity: Valve closed; Pin A to C, and Pin B to E, valve open; Pin B to D, 1 ohm maximum resistance allowed.
    d. Insulation resistance: 500 volt Megger test; 50 megohms minimum.

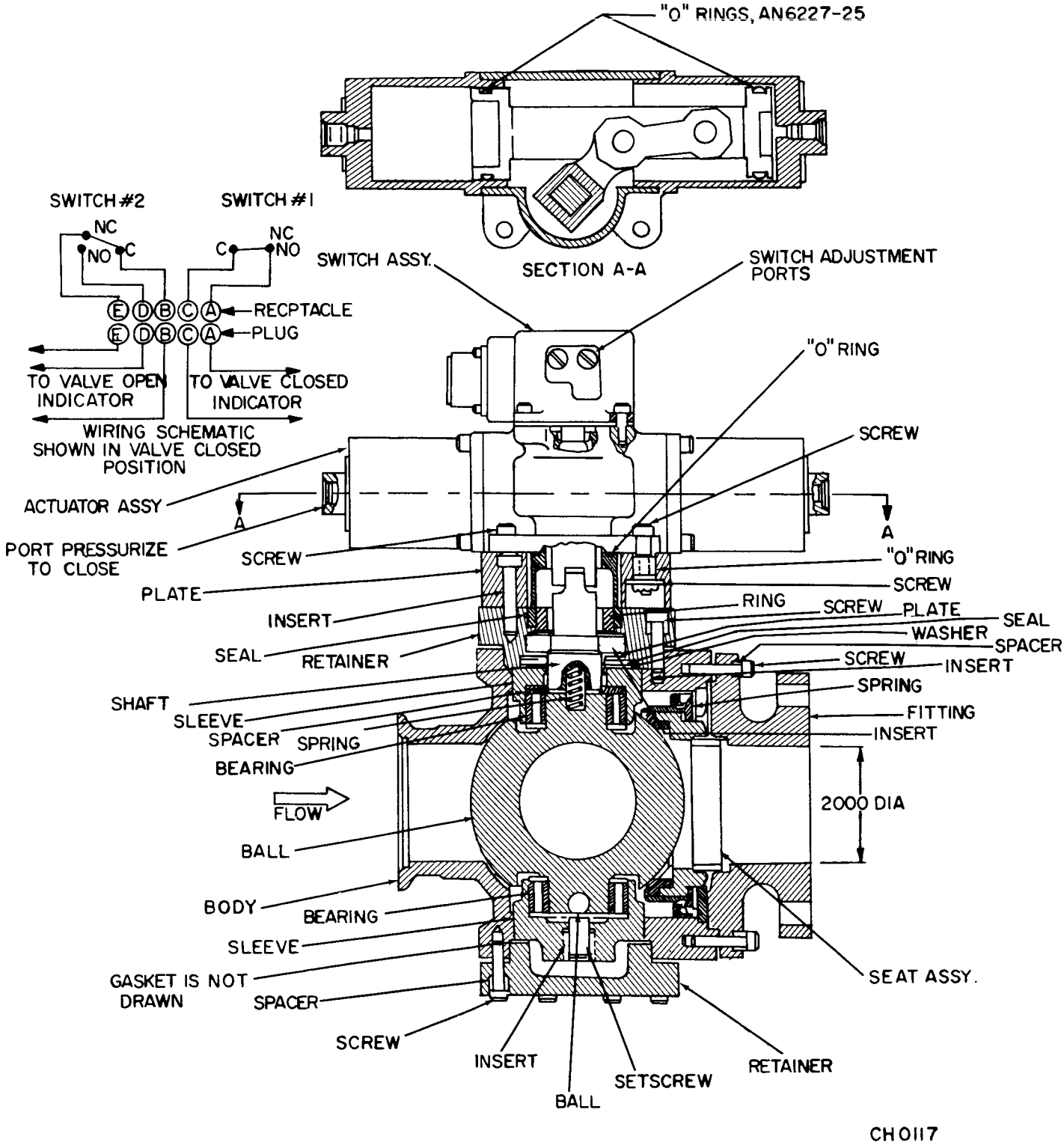

4.3.22 LOX REPLENISHING VALVE 10414003
SECTIONAL VIEW

THIS PAGE INTENTIONALLY LEFT
BLANK

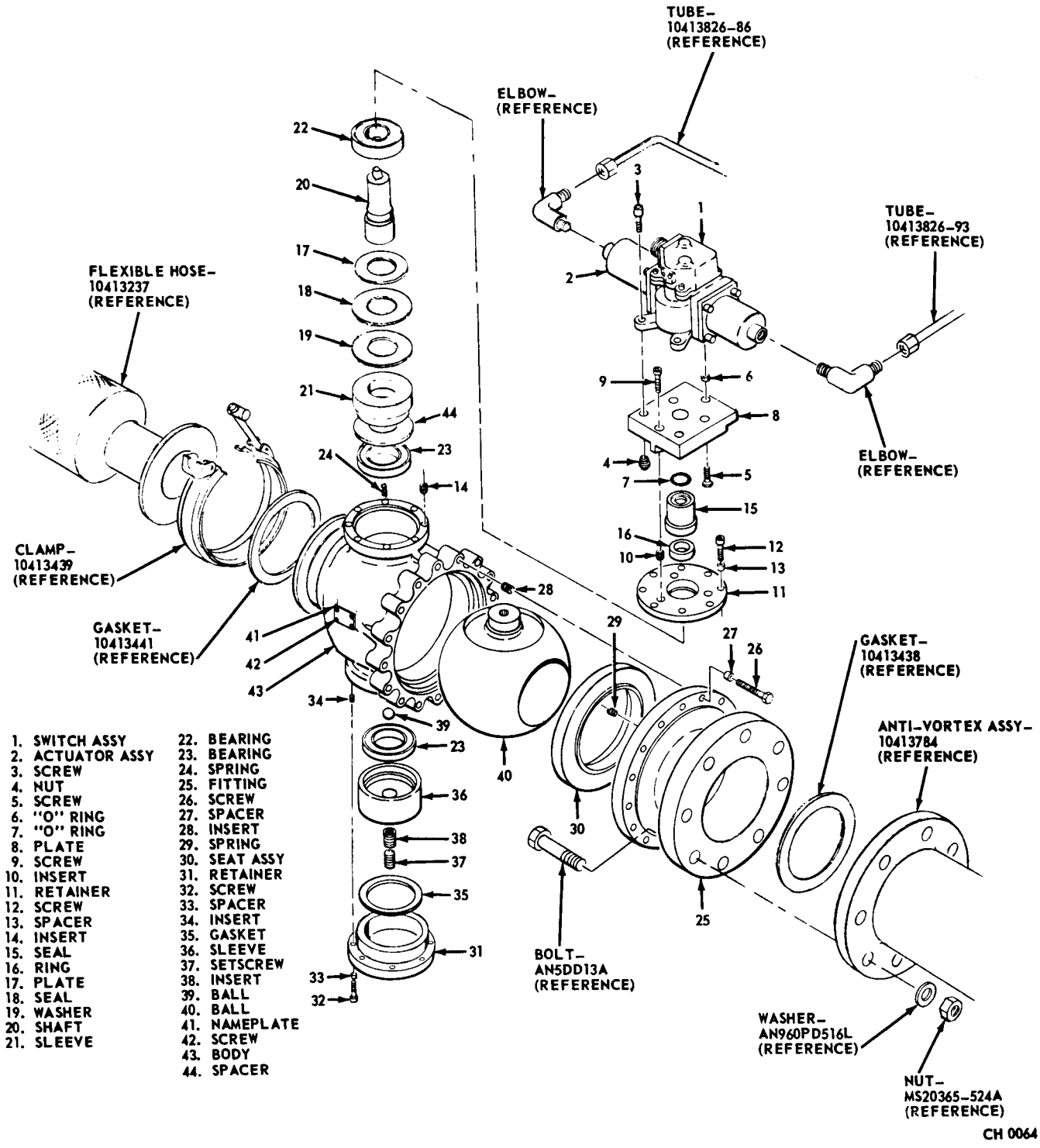

1. SWITCH ASSY
2. ACTUATOR ASSY
3. SCREW
4. NUT
5. SCREW
6. "O" RING
7. "O" RING
8. PLATE
9. SCREW
10. INSERT
11. RETAINER
12. SCREW
13. SPACER
14. INSERT
15. SEAL
16. RING
17. PLATE
18. SEAL
19. WASHER
20. SHAFT
21. SLEEVE
22. BEARING
23. BEARING
24. SPRING
25. FITTING
26. SCREW
27. SPACER
28. INSERT
29. SPRING
30. SEAT ASSY
31. RETAINER
32. SCREW
33. SPACER
34. INSERT
35. GASKET
36. SLEEVE
37. SETSCREW
38. INSERT
39. BALL
40. BALL
41. NAMEPLATE
42. SCREW
43. BODY
44. SPACER

4.3.23 LOX REPLENISHING VALVE - EXPLODED VIEW

LOX RELIEF VALVE ASSEMBLY, PART NO. 10414000

The LOX relief valve assemblies (B160 and B161) controlled by the control valves (B214 and B215), are safety valves to maintain container pressure during vehicle flight. The relief valve assemblies are also used for emergency relief during filling operation.'

1. LOCATION - Station 847 in LOX tanks Nos. 1 and 2.
2. SERVICE - Gaseous oxygen, gaseous nitrogen, and helium.
3. PRESSURE -
   a. Minimum operating: 600 psig.
   b. Nominal operating: 750 psig.
   c. Proof: 1125 psig.
   d. Burst: 1875 psig.
   e. Cracking: 59 ± 2 per square inch gage with GOX. With the poppet unseated, the valve shall vent GOX at the rate of 950 scim.
4. ELECTRICAL -
   a. Switch actuation: The magnetic switch shall indicate that the valve is closed when the poppet is within 0.100 inch maximum to 0.010 inch minimum of the seat.
   b. Continuity: With the valve in the closed position, the maximum allowable resistance between Pins A and B shall be 0.5 ohm.
   c. Insulation Resistance: With the valve in the open position, the insulation resistance between Pin A and valve body, and Pin B and valve body, and Pins A and B, shall be a minimum of 50 megohms.
5. ORIFICE - Solenoid vent, 0.035 inch.
6. LEAKAGE ALLOWANCES -
   a. Control cylinder: 40 scim helium maximum at operating ambient temperature and 750 psig.
   b. Internal, past main seat lipseal: 40 scim gaseous oxygen maximum at operating ambient temperature and 50 ± 1 - 0 psig.
7. POPPET TRAVEL - 1.100 inches minimum.
8. LUBRICATION -
   a. Seals and sliding surface: Thoroughly rub in dry Molykote, Type Z, and blow off excess with dry nitrogen gas.
   b. Flexitallic gaskets: Apply KEL-F-10-200 sealing wax to both sides.
9. Continue turning seal 10414267 one-fourth to one-half turn after flange contacts mating part.
10. TORQUE - Torque fittings per ABMA-STD-18.

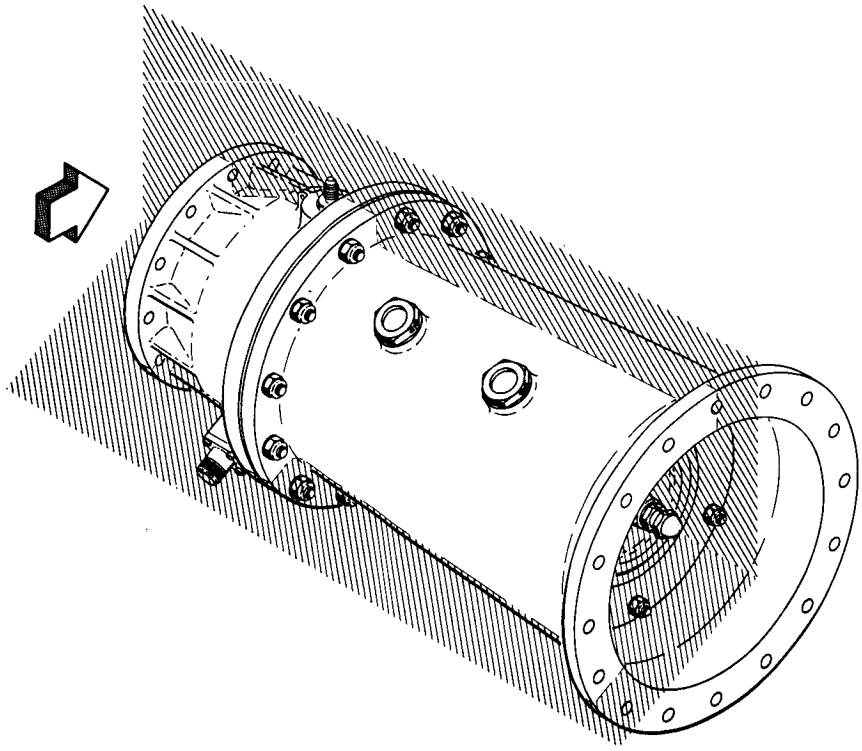

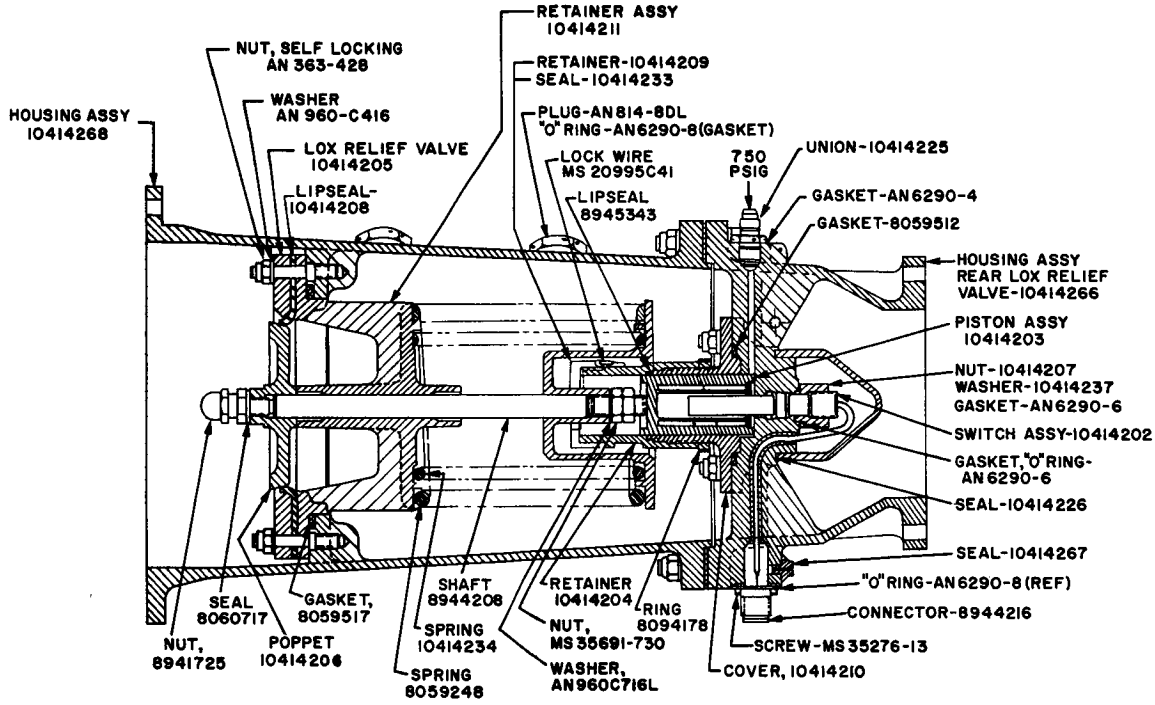

4.3.24 LOX RELIEF VALVE ASSEMBLY, 10414000
SECTIONAL VIEW

LOX VENT VALVE ASSEMBLY, PART NO. 10414001

The LOX valve (B162) is installed in the LOX vent system and is used as an emergency relief valve during flight, and a vent valve during ground filling of the LOX container. The LOX vent valve (B162) is opened by the control valve (B213).

1. VENDOR - NORTH AMERICAN AVIATION, INC., PART NO. 9512-48410-61.
2. LOCATION - Station 850 on LOX Tank No. 3.
3. SERVICE -
   a. Venting Chamber - GOX
   b. Control Chamber - GN_2, Helium, Air
4. PRESSURE -
   a. Operating:
      1. Minimum: 500 psig.
      2. Nominal: 750 psig.
   b. Proof: 1125 psig.
   c. Burst: 1875 psig.
5. OPERATING TIME -
   a. Open: 150 millisecond, switch to switch.
   b. Close: 300 millisecond, switch to switch.
6. ELECTRICAL - Switch must actuate at 2 plus 1° minus 0° before end of gate travel with 750 psig on control cylinder.
7. LEAKAGE ALLOWANCES -
   a. Control cylinders, vent and mating surfaces: 5 scim maximum at 750 psig.
   b. Internal: With 60 psig on line and valve in both open and closed positions alternately:
      1. Shaft seals - 20 scim maximum .
      2. Gate pin seals - 2 scim maximum.
      3. Main seat - 5 scim maximum.
8. RUBBER SEALS - Must meet requirements of Specification MSFC-STD-10509311.
9. LUBRICATION -
   a. Lubricate all O-Rings and sliding surfaces in pneumatic actuator portion of valve with DC No. 55 grease.
   b. Lubricate seals and sliding surfaces exposed to GOX with Molykote Z.
10. Remove Nipple (AN 816-4C) as furnished by Vendor and replace with plug (MS 20913-1D).
11. TEMPERATURE -
    a. Control Chamber - Minus 65° F to plus 165°F.
    b. Venting Chamber - Minus 150° to plus 165°F.
12. Remove lidseal as furnished by vendor and replace with 10414548.

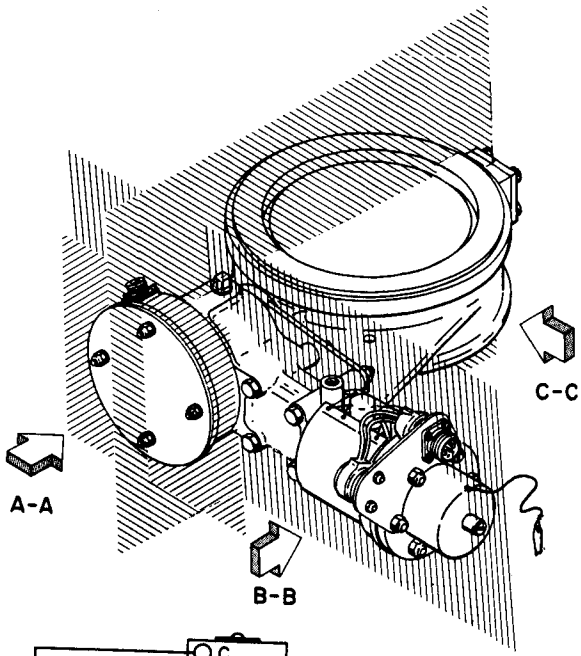

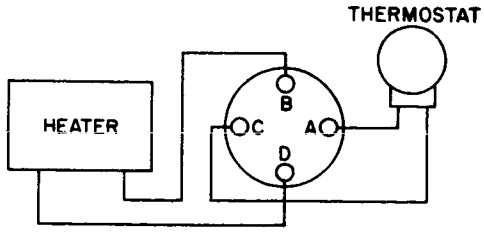

HEATER WIRING DIAGRAM

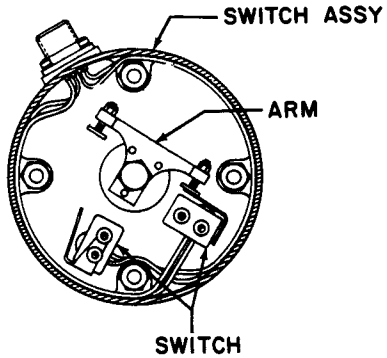

SECTION A-A

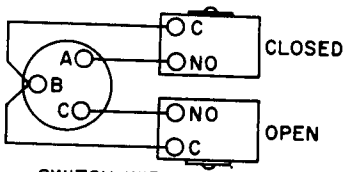

SWITCH WIRING DIAGRAM

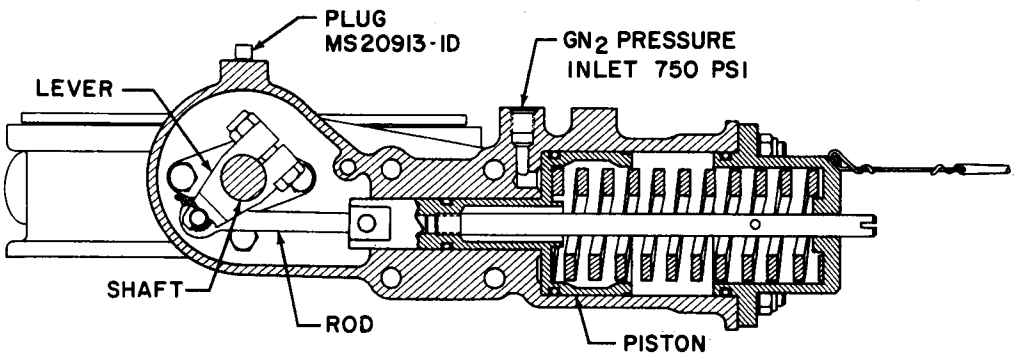

SECTION B-B

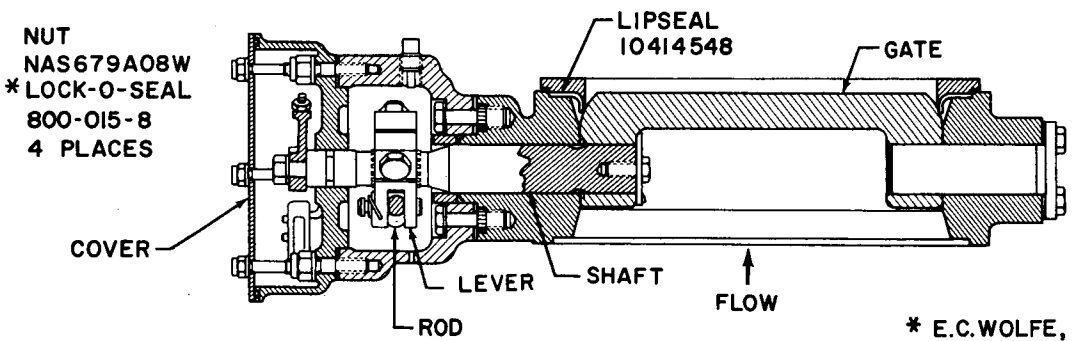

SECTION C-C

* E.C. WOLFE, INC.
CULVER CITY, CALIF.

4.3.25 LOX VENT VALVE ASSEMBLY, 10414001
SECTIONAL VIEW

THIS PAGE INTENTIONALLY LEFT
BLANK

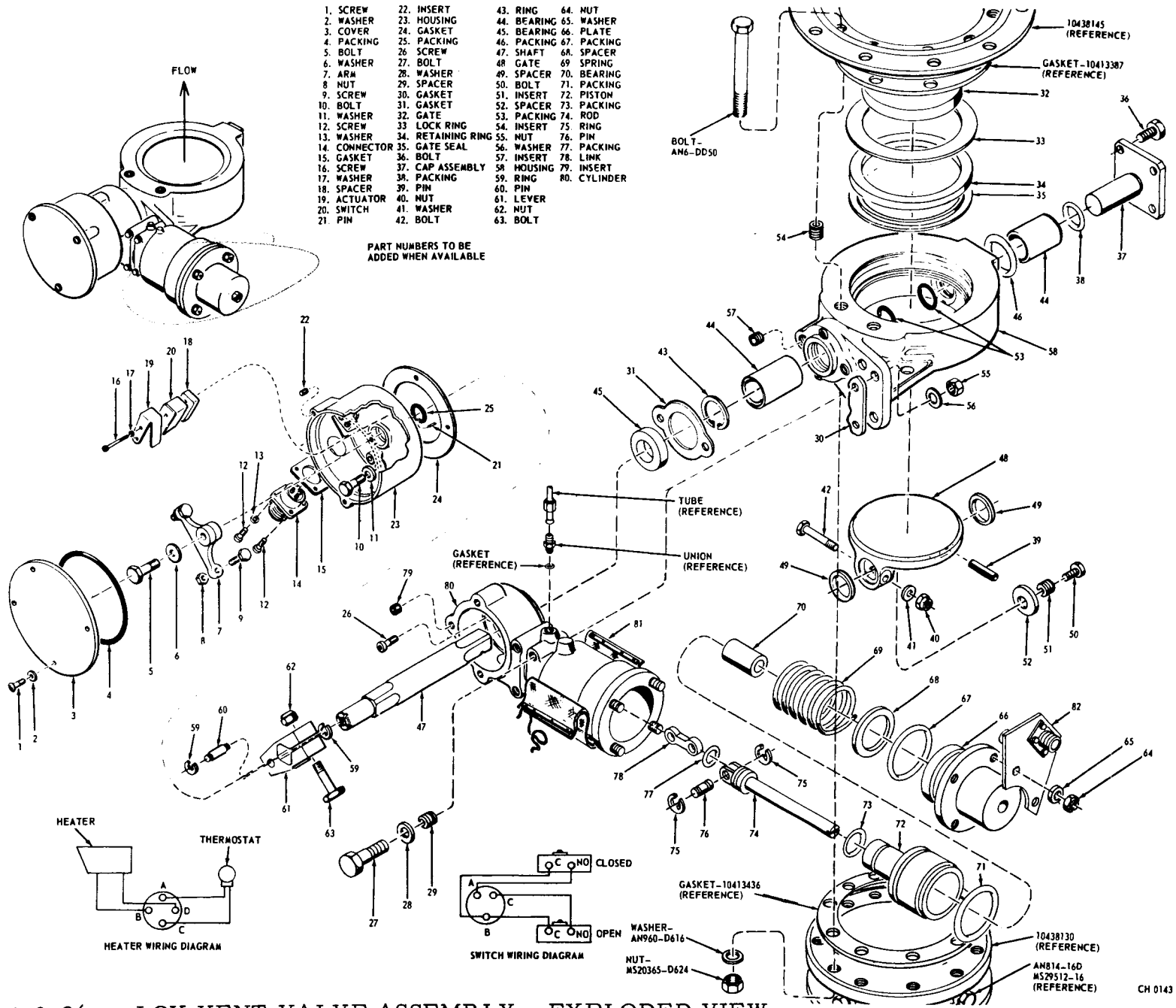

4.3.26 LOX VENT VALVE ASSEMBLY - EXPLODED VIEW

LOX LEVEL SWITCH, PART NO. 10414045

The LOX level switch is one of three measuring devices utilized to control the LOX level in the missile tanks. The switch is float operated and contains a precheck solenoid.

1. VENDOR - UNITED CONTROL CORP., PART NO. 1093-1.
2. LOCATION - Station 830 in center LOX tank.
3. SERVICE - Hydrocarbon fuels, particularly RP-1 and LOX. Actuation and deactuation levels are given for LOX (measured from connector end of switch to top of float - deactuation level falling fluid).
4. TEMPERATURE - OPERATING - Minus 320° F to plus 165° F, (also applies to electrical leads).
5. THERMAL SHOCK - Immediate shock from plus 70° F to minus 320° F.
6. ELECTRICAL LOAD - 0.5 amp inductive, at rated voltage, 28 ± 2 vdc, steady operation.
7. PRESSURE -
   a. External operating pressure: 100 psig.
   b. External proof pressure: 150 psig.
   c. External burst pressure: 250 psig.
8. PRECHECK SOLENOID - Must withstand energization at 28 vdc at room temperature for 60 seconds without adverse effects within 10 minute period. Solenoid resistance shall be 14 ± 2 ohm and operating voltage 22 - 32 vdc, nominal 28 vdc. Pullin: 22 volts maximum; drop-out: 12 volts maximum, 1 volt minimum.
9. SWITCH CONTINUITY - Operate with precheck solenoid
   a. Low level contacts, green and black leads: Deactuation 0.5 ohm maximum; actuation 500,000 ohm minimum.
   b. High level contacts, white and black leads: Deactuation 500,000 ohm minimum; actuation 0.5 ohm maximum.

SECTIONAL VIEW WILL BE SUPPLIED
WHEN AVAILABLE

THIS PAGE INTENTIONALLY LEFT
BLANK

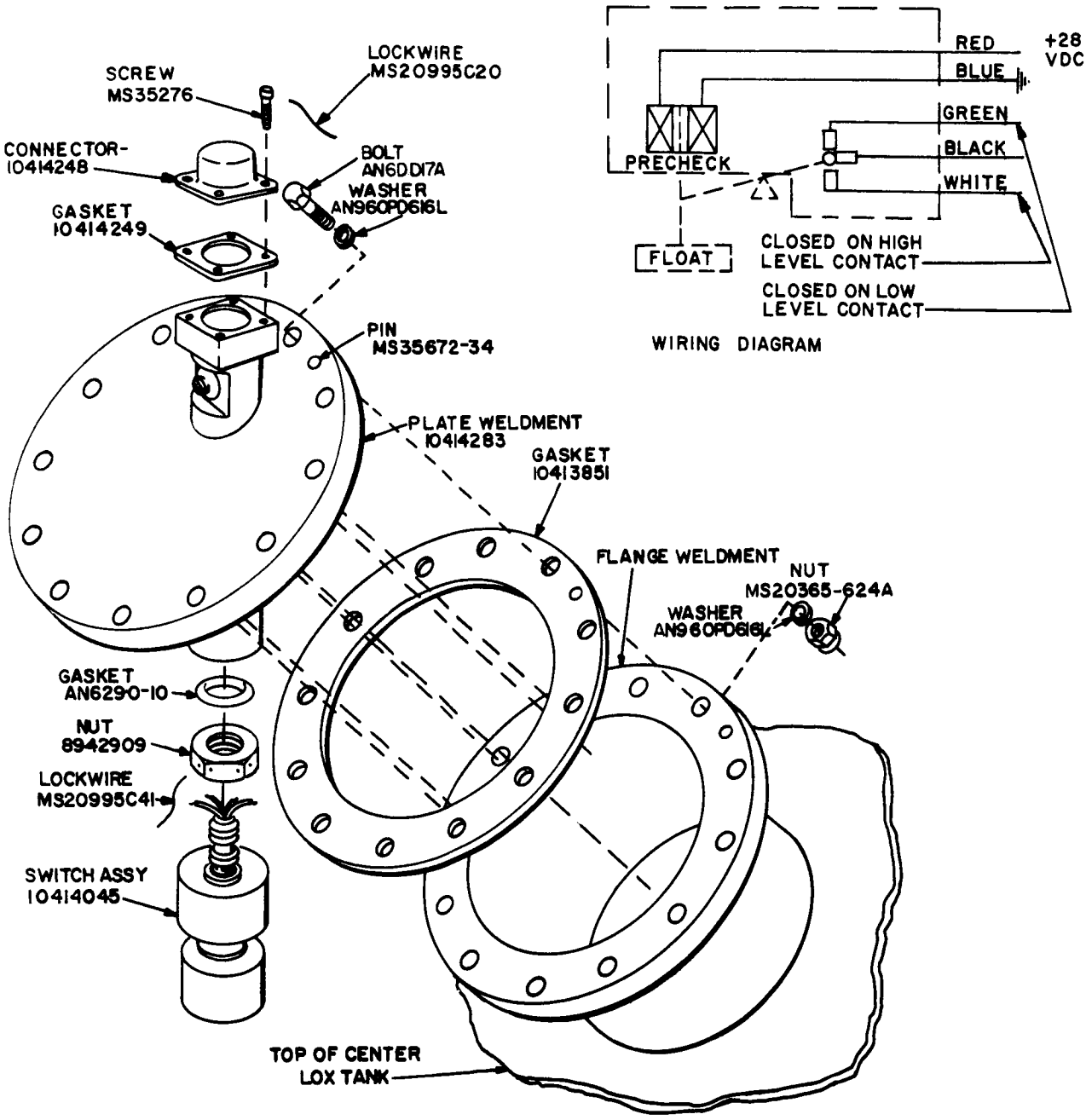

4.3.28 LOX LEVEL SWITCH AND CONNECTOR ASSEMBLY 10414045
EXPLODED VIEW

LOX FILL AND DRAIN FLANGE, PART NO. 10416427

The flange (B 164) is used in the LOX fill and drain system in conjunction with the ground quick-disconnect assembly.

1. LOCATION - Station 224, LOX Tank No. 3.
2. SERVICE - LOX
3. PRESSURE -
   a. Operating: 50 psig.
   b. Proof: 75 psig.
   c. Burst: 125 psig.

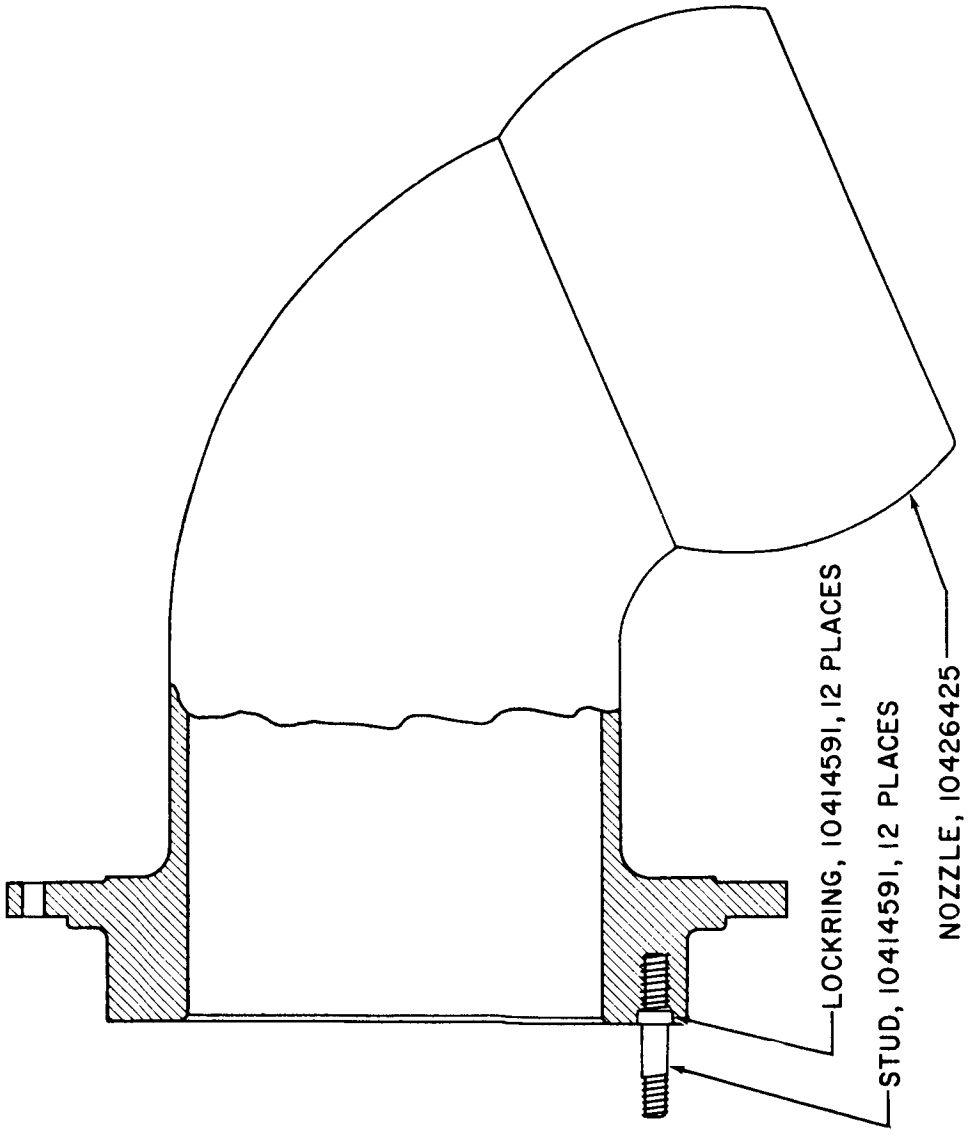

4.3.29 LOX FILL AND DRAIN FLANGE SECTIONAL VIEW

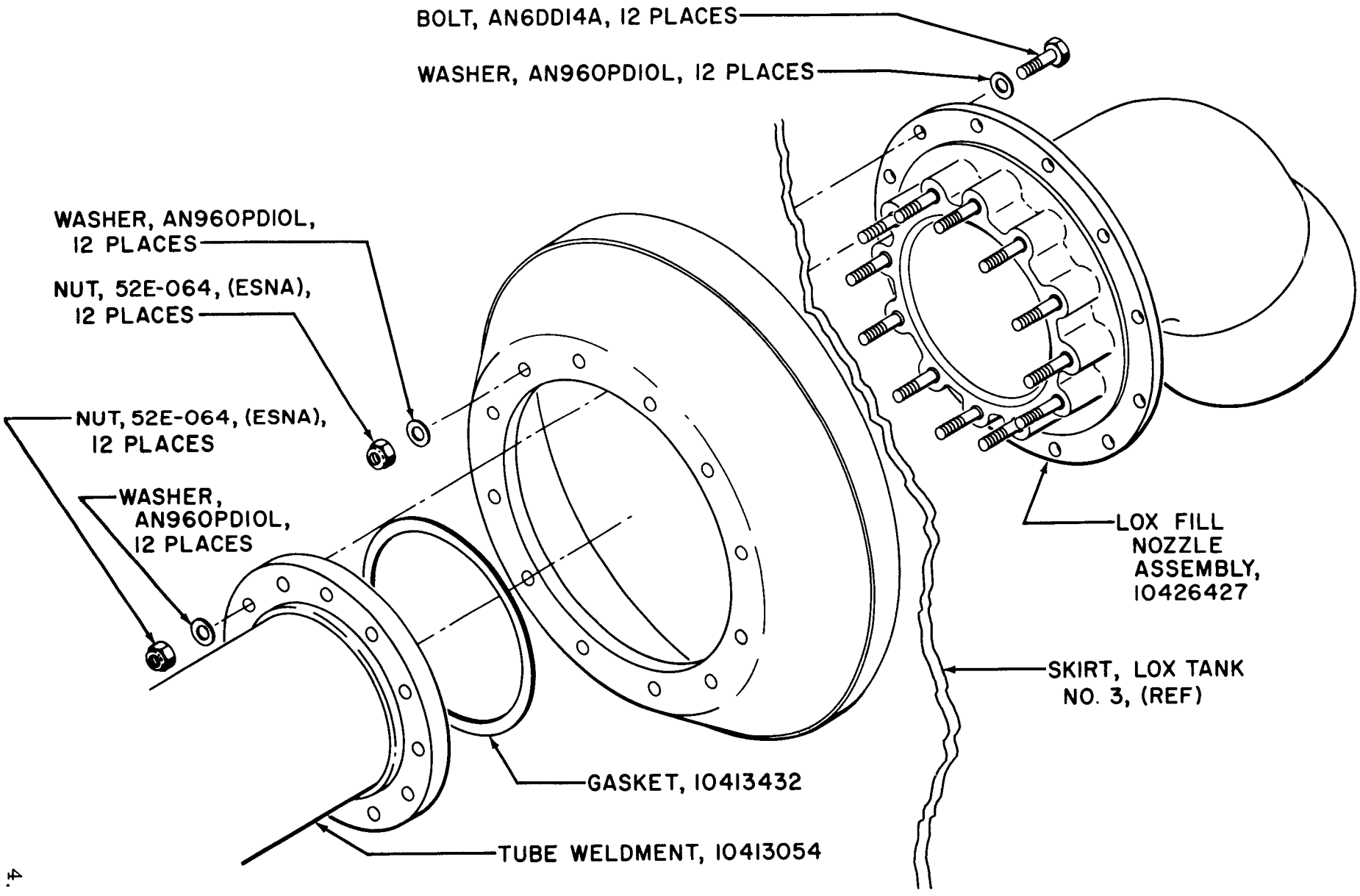

4.3.30 LOX FILL AND DRAIN FLANGE, 10414004

QUICK-DISCONNECT COUPLING, PART NO. 10414065

1. VENDOR - E. B. WIGGINS OIL TOOL CO., INC., PART NO. 6005R70A8
2. LOCATION - Station 174 fin 2 on short cable mast connection point.
3. SERVICE - Gaseous nitrogen, LOX vapor, Helium
4. TEMPERATURE - OPERATING - Minus 65° F plus 160° F.
5. PRESSURE -
   a. Operating: 3000 psig.
   b. Proof: 4500 psig.
   c. Burst: 7500 psig.
6. LEAKAGE ALLOWANCES -
   a. Internal: 2 scim maximum at operating pressure and temperature.
   b. External: No leakage.
7. LUBRICATION - Lubircate seals with Molykote Z.

The quick disconnect coupling is the connection point for the LOX Bubbling line. Helium is passed through the line and into the LOX Suction lines; agitates the LOX and maintains an even temperature throughout the LOX lines.

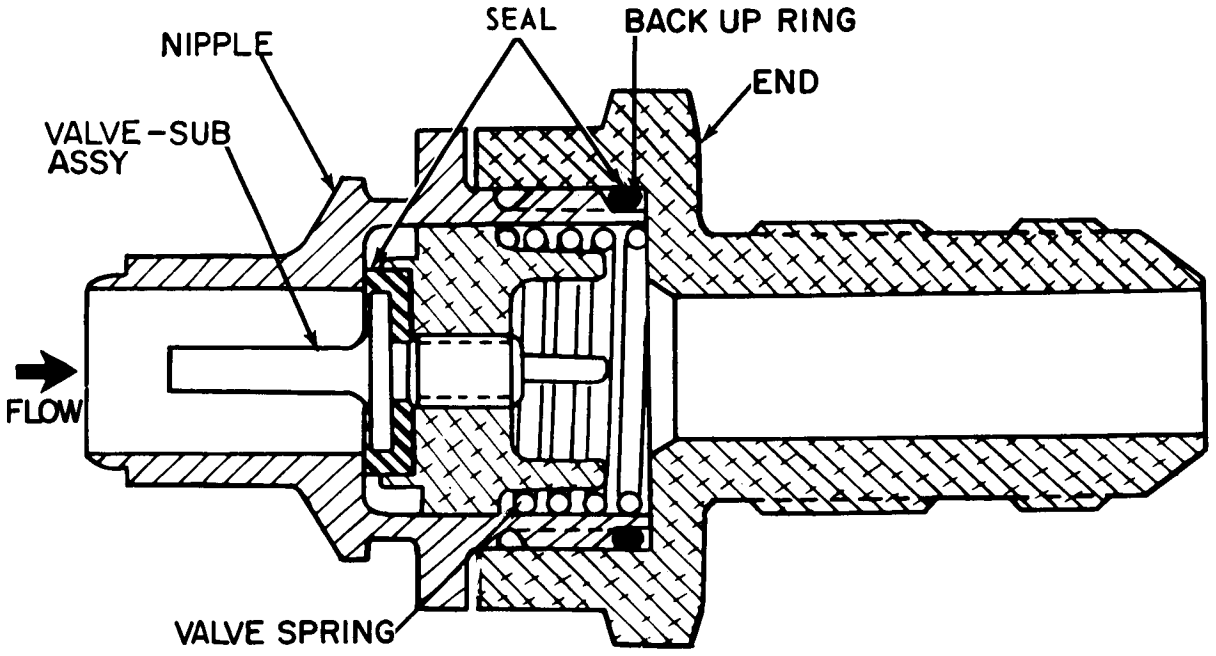

4.3.31 QUICK-DISCONNECT COUPLING 10414065 SECTIONAL VIEW

THIS PAGE INTENTIONALLY LEFT
BLANK

65 PSI LOX VENT EMERGENCY SWITCH
PART NO. 10414341

The LOX vent emergency switch (B183) is set for 65 psia and is used for emergency in event the LOX pressurizing and relief switch (B184) does not actuate.

1. VENDOR - THE FREBANK COMPANY PART NO. 4184-2.
2. LOCATION - Station 839 at center LOX tank.
3. SERVICE - Gaseous oxygen, gaseous nitrogen.
4. PRESSURE -
   a. Actuation:
      1. Increasing 65 plus or minus 1.0 psia.
      2. Differential 1.0 psi maximum, 3.5 psi minimum.
   b. Proof: 90 psig.
   c. Burst: 150 psig.
5. TEMPERATURE - OPERATING - Minus 65° F to plus 165°F.
6. ELECTRICAL -
   a. Contact Resistance: Maximum
   b. Continuity: Between pins B & C and B & A 5 ohms.
   c. Voltage: 18 to 30 vdc.
   d. Insulation Resistance: Pin connections to case 50 megohms.
   e. Current: 2.5 amp inductive.
7. LUBRICATION - Lubricate all seals and sliding surfaces with Molykote Z.
8. LEAKAGE -
   a. Internal - None from 0 to 100 psia
   b. External - None

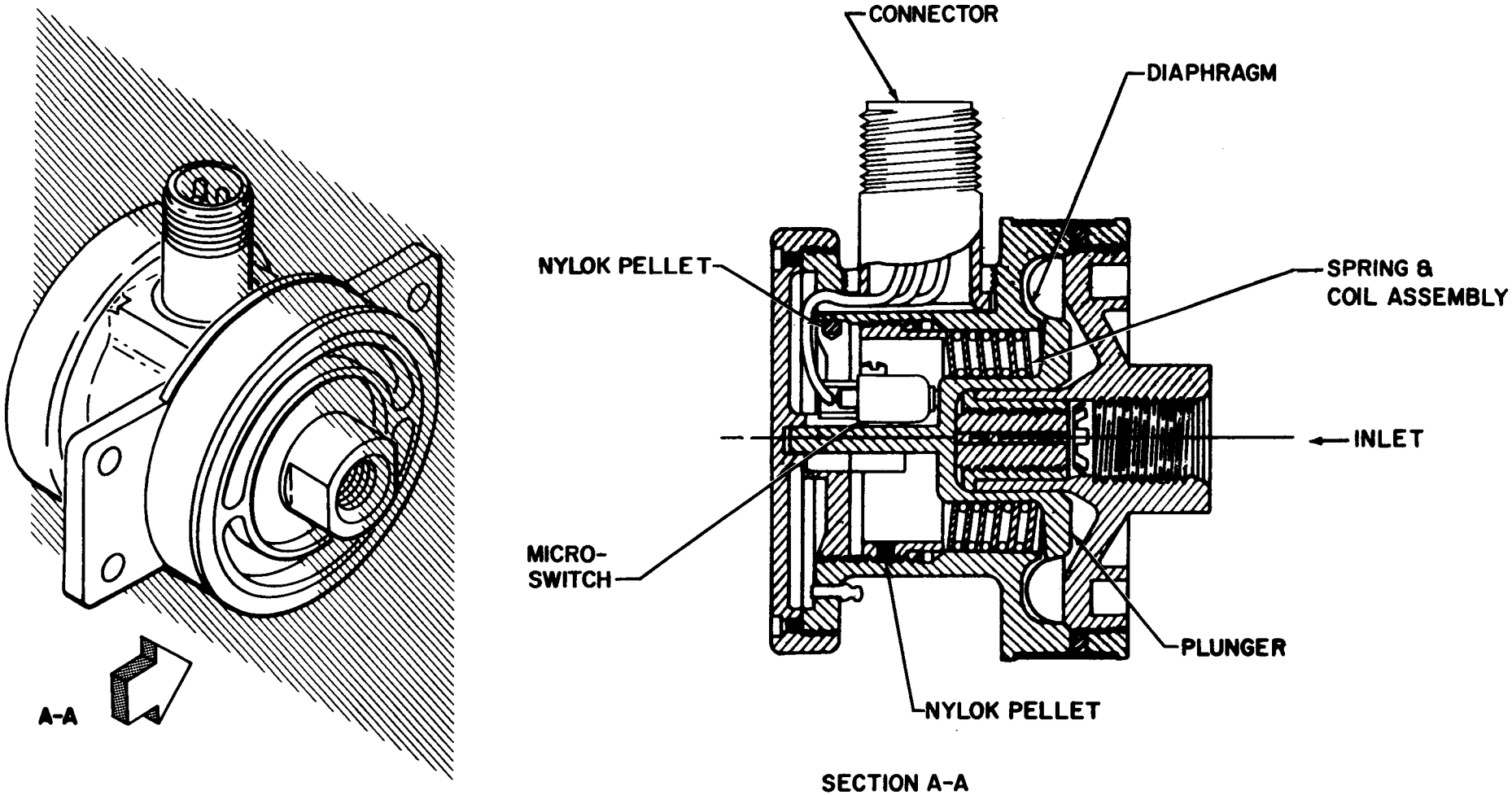

4.3.32 LOX VENT EMERGENCY SWITCH ASSEMBLY
10414341 - SECTIONAL VIEW

60 PSI LOX PRESSURIZING AND RELIEF SWITCH
PART NO. 10414340

The LOX pressurizing and relief switch (B184) is set for 60 psia and is used to monitor and shut off LOX tank pressurization ground supply.

1. VENDOR - CENTURY ELECTRONICS AND INSTRUMENTS, INC., PART NO. 58104 A-2.
2. LOCATION - Station 839 at center LOX tank.
3. SERVICE - Gaseous oxygen, gaseous nitrogen.
4. PRESSURE -
   a. Actuation:
      1. Increasing 60 plus or minus 1.0 psia
      2. Differential plus 1.0 maximum and minus 3.5 psi minimum.
   b. Proof: 90 psig.
   c. Burst: 150 psig.
5. TEMPERATURE - OPERATING - Minus 65° F to plus 165° F.
6. ELECTRICAL -
   a. Continuity: Between pins B & C and B & A 5 ohm.
   b. Voltage: 18 to 30 vdc.
   c. Current: 2.5 amp inductive.
   d. Insulation Resistance: Bell
7. LUBRICATION - Lubricate all seals and sliding surfaces with Molykote Z.
8. LEAKAGE -
   a. Internal - None from 0 to 100 psig
   b. External - None.

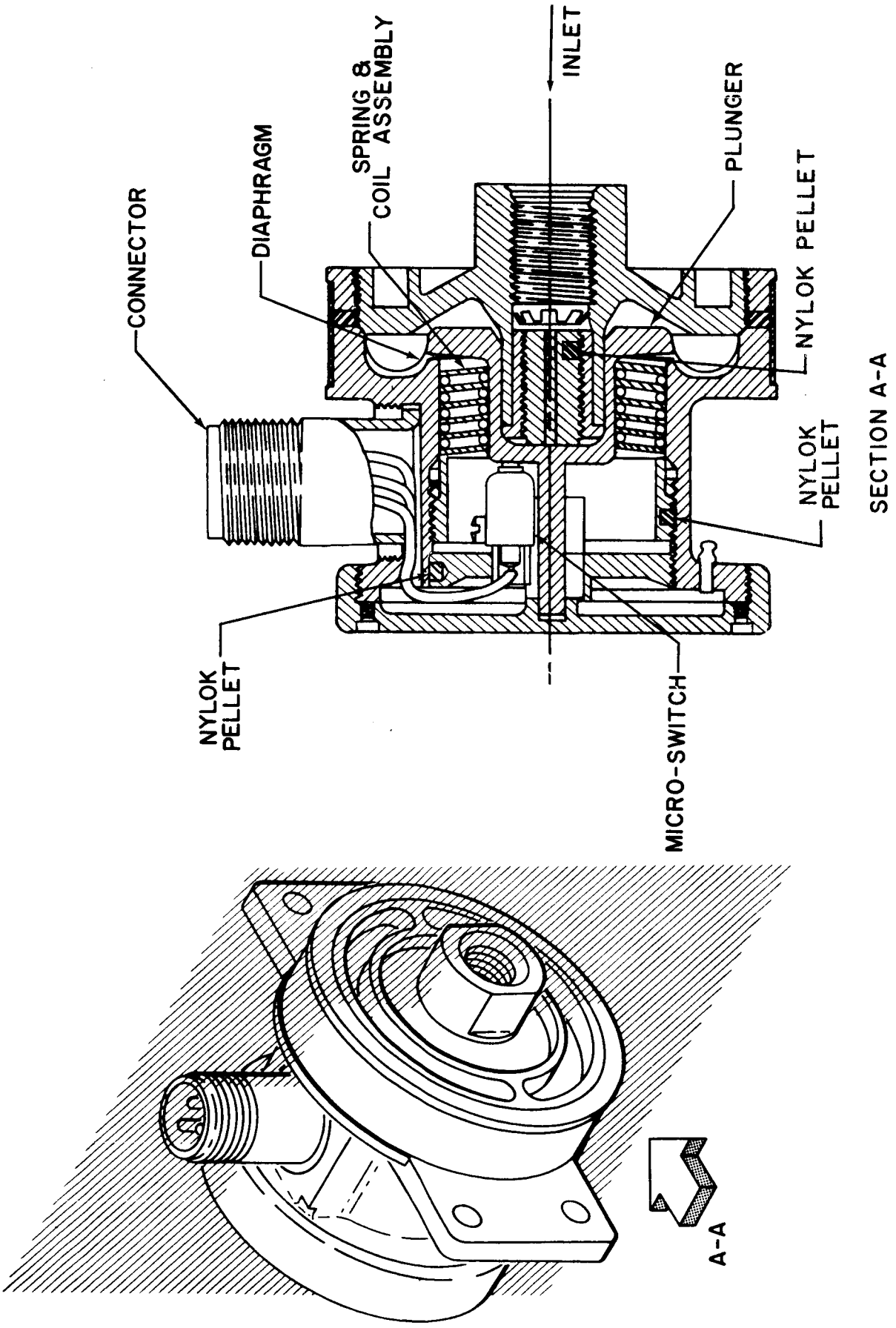

4.4.33 LOX PRESSURIZING AND RELIEF SWITCH, 60 PSI, 10414340-SECTIONAL VIEW

THIS PAGE INTENTIONALLY LEFT
BLANK

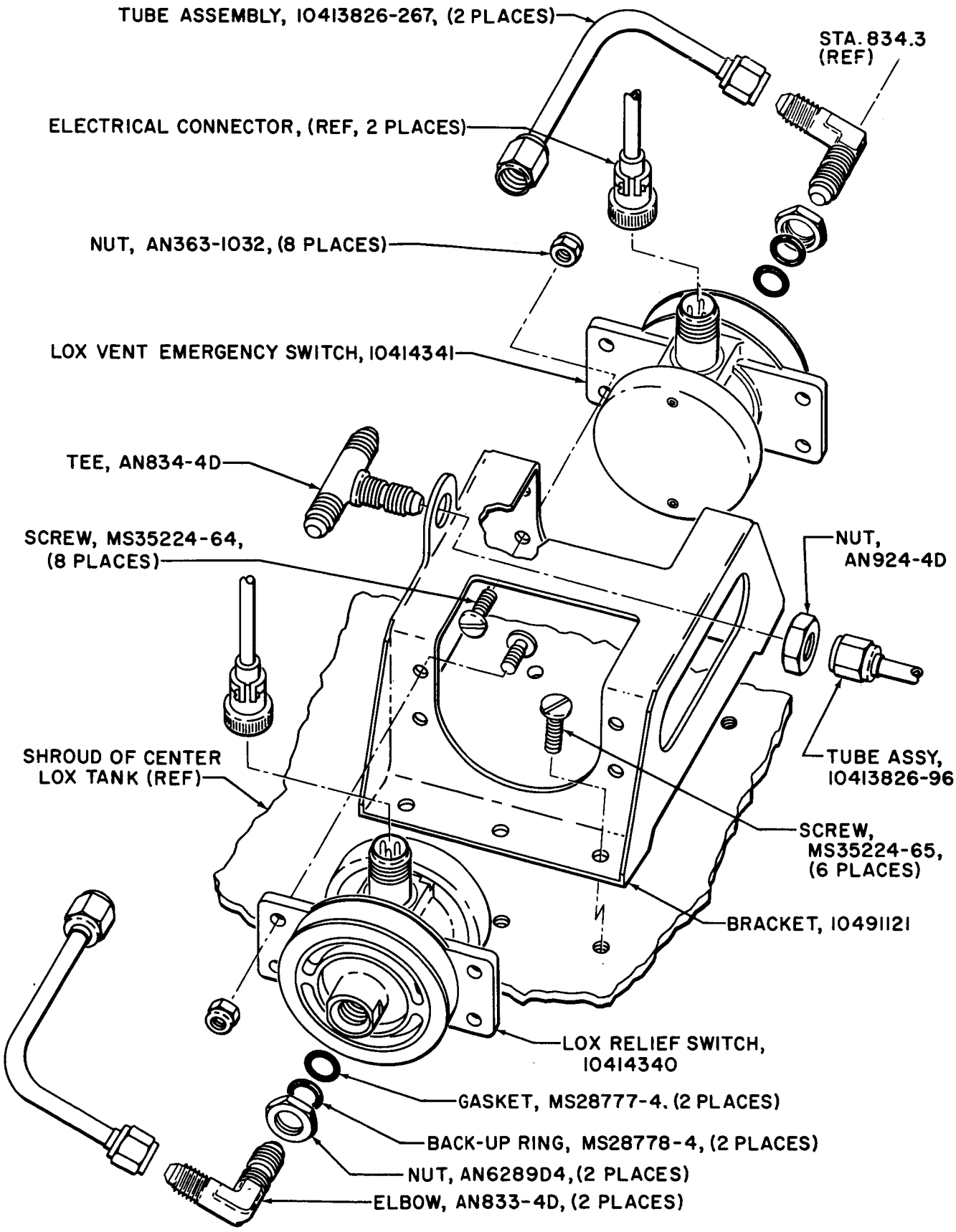

4.3.34 LOX VENT EMERGENCY SWITCH AND LOX PRESSURIZING AND RELIEF SWITCH

INBOARD ENGINE CUTOFF SWITCH
PART NO. 10414347

The inboard cutoff switch (B165, B166) inititate engine cutoff when the LOX level drops to a predetermined level.

1. VENDOR - ACOUSTICA ASSOCIATES INC.
   PART NO. ASL108-1
2. LOCATION - Bottom of LOX tanks 2 and 4.
3. SERVICE - LOX
4. PRESSURE - 150 psig maximum
5. TEMPERATURE - Minus 55° F to plus 165° F with heater off. Minus to 320° F to plus 165° F with heater on.
6. ELECTRICAL -
   a. Excitation: Control unit: 22 to 32 vdc.
      Heater: 110 to 120 VAC, 110 VAC nominal.
   b. Accuracy: On decreasing liquid level the level shall be indicated within plus or minus .12 for Excitations from 26 to 30 VDC and plus or minus .25 for Excitations from 22 to 26 and 30 to 32 VDC.
   c. Switch: Single Role double throw, contacts rated at 2 amps D.C.
   d. Resistive closed contacts: Less than .5 ohms resistance.
   e. Heater: 60 watts output at 110 VAC.

Operation of the Switches (B165, B166) is similar to the switches (B117, B119). Refer to page 4.1.39 for sectional view.

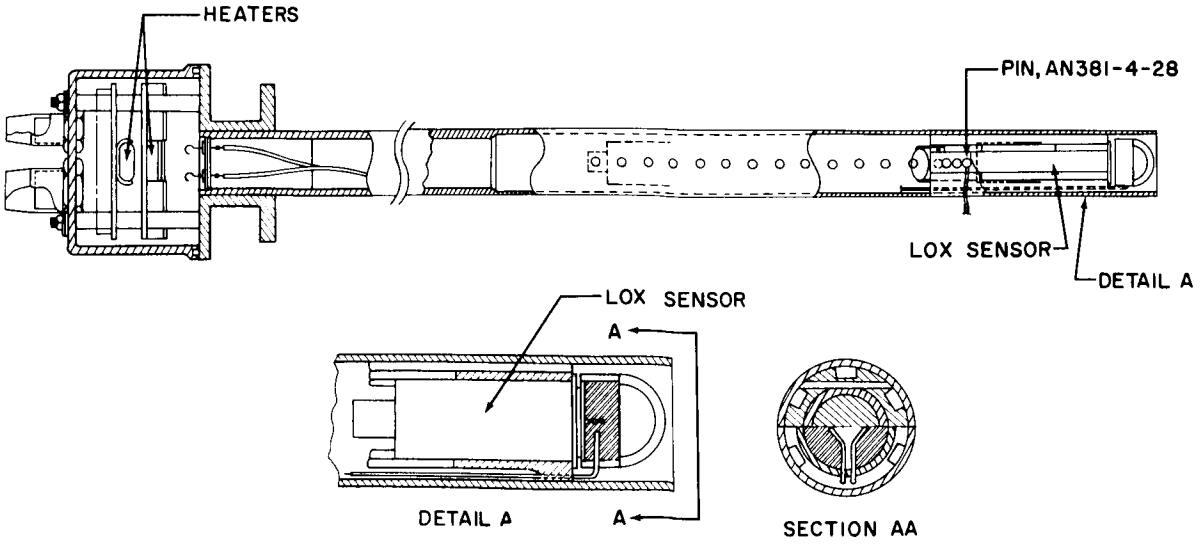

4.3.34A INBOARD ENGINE CUTOFF SWITCH

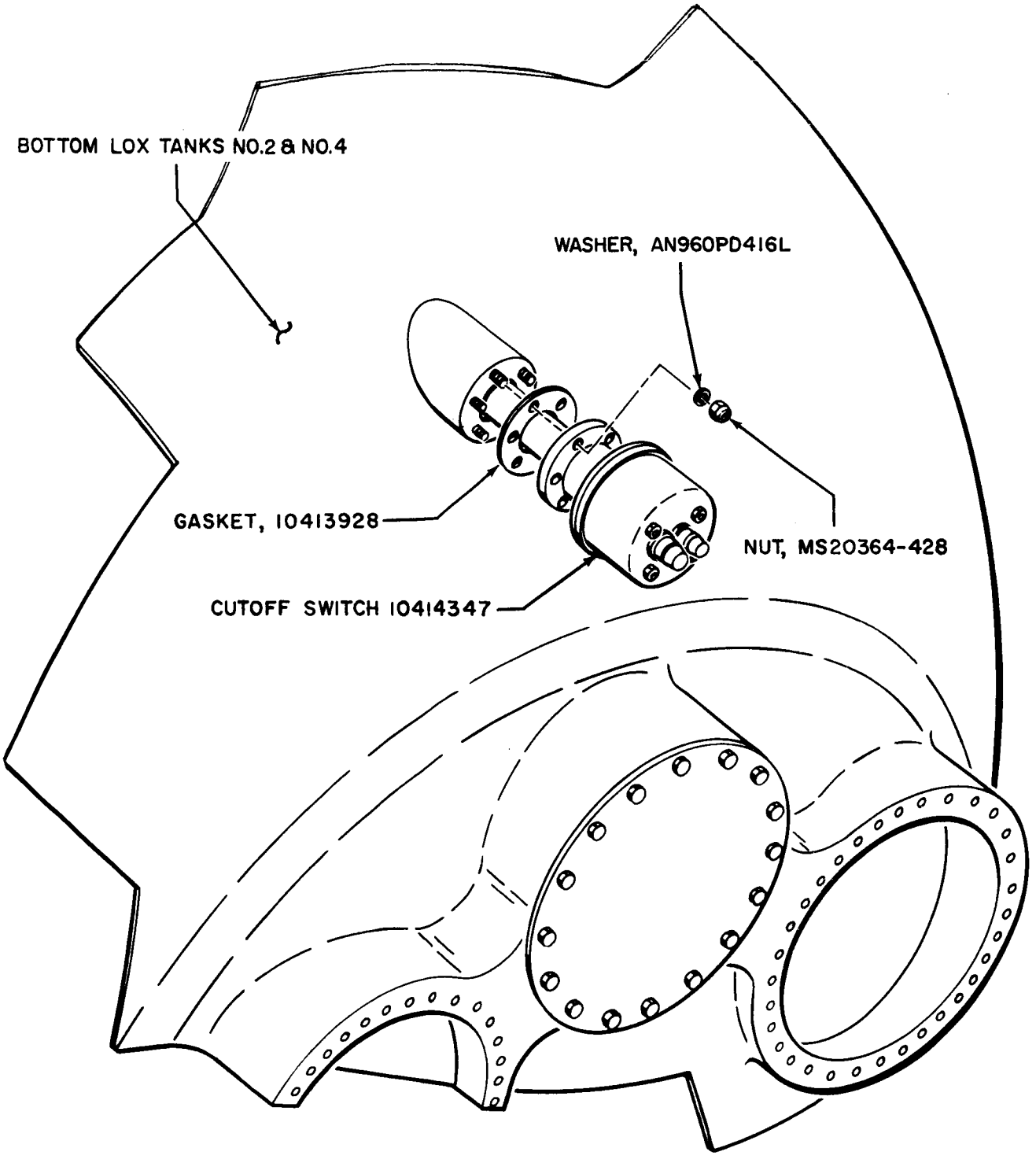

4.3.35 INBOARD ENGINE CUTOFF SWITCH-INSTALLATION

ORIFICE BUTTERFLY LOX PRESSURIZING VALVE
PART NO. 10414318

The orifice valves (B186) are used to equalize the LOX tank pressurization prior to vehicle liftoff through interconnecting lines between the four LOX tanks.

1. VENDOR - NORTH AMERICAN AVIATION, INC. PART NO. 9512-48410-61.
2. LOCATION - Station 844, between center LOX tank and each of the other LOX tanks.
3. SERVICE -
   a. Venting Chamber - GOX
   b. Control Chamber - GN_2, Helium, Air
4. PRESSURE -
   a. Operating:
      1. Minimum - 500 psig.
      2. Nominal - 750 psig.
   b. Proof: 1125 psig.
   c. Burst: 1875 psig.
5. OPERATING TIME -
   a. Open: 150 millisecond, switch to switch.
   b. Close: 300 millisecond, switch to switch.
6. ELECTRICAL - Switch must actuate 2 plus 1° minus 0° before end of gate travel with 750 psig on control cylinder.
7. LEAKAGE ALLOWANCES -
   a. Control cylinders, vent, and mating surfaces: 5 scim maximum at 750 psig.
   b. Internal: With 60 psig on line and valve in both open and closed positions alternately:
      1. Shaft seals - 20 scim maximum.
      2. Gate pin seals - 2 scim maximum.
      3. Main seat - 5 scim maximum.
8. RUBBER SEALS - Must meet requirements of Specification MSFC-STD-10509311.
9. LUBRICATION - Lubricate all seals and sliding surfaces with Molykote Z.
10. Remove Nipple (AN816-4C) as furnished by vendor and replace with plug (MS 2913-10).
11. TEMPERATURE -
    a. Control Chamber: Minus 65° F to plus 165° F.
    b. Venting Chamber: Minus 150° to plus 165° F.
12. Remove Pre Valve Gate as furnished by Vendor and replace with:
    AN 5C-12A
    AN 960C516
    AN363C524
    10414510
    10414509

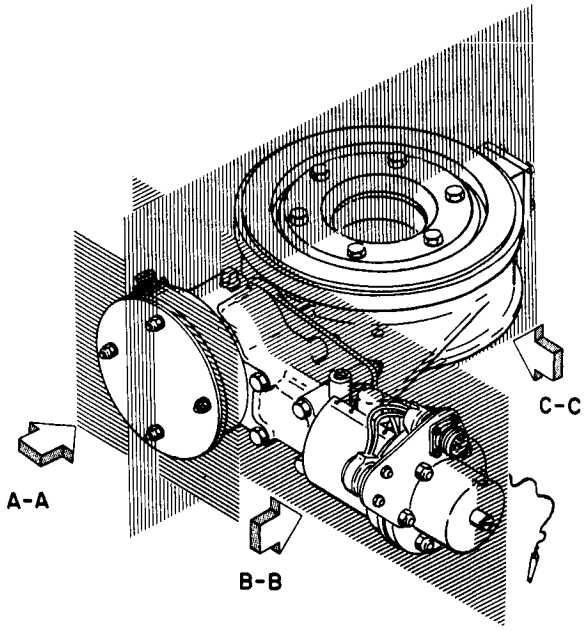

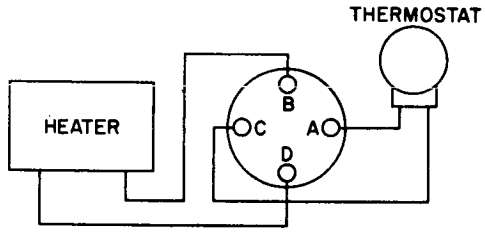

HEATER WIRING DIAGRAM

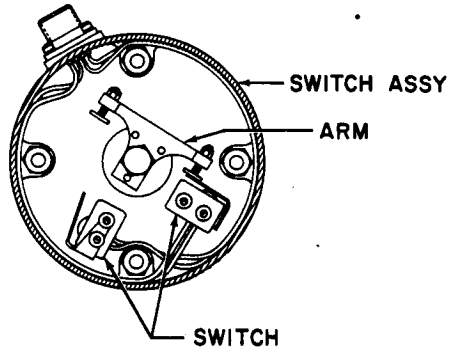

SECTION A-A

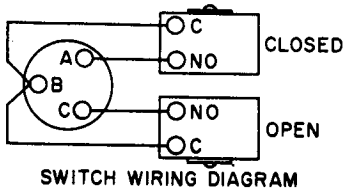

SWITCH WIRING DIAGRAM

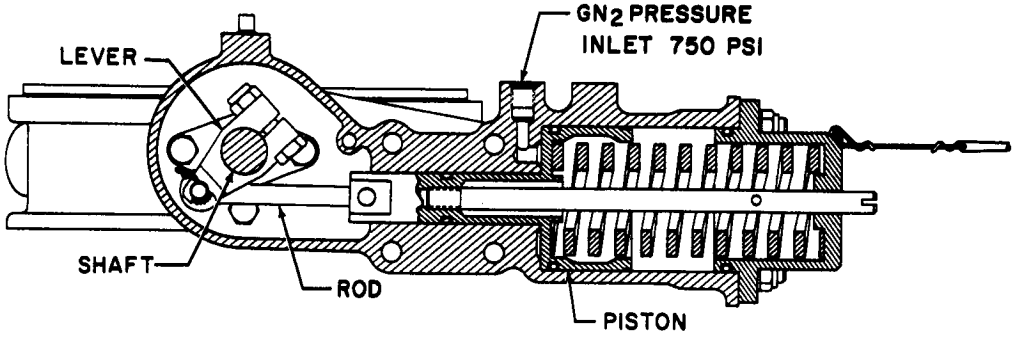

SECTION B-B

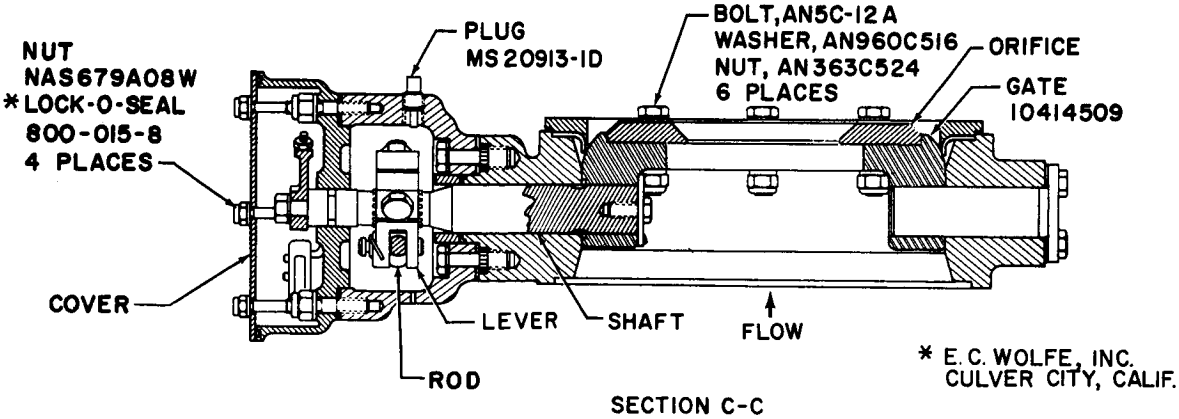

SECTION C-C

4.3.36 ORIFICE BUTTERFLY LOX PRESSURIZING VALVE, 10414318 - SECTIONAL VIEW

THIS PAGE INTENTIONALLY LEFT
BLANK

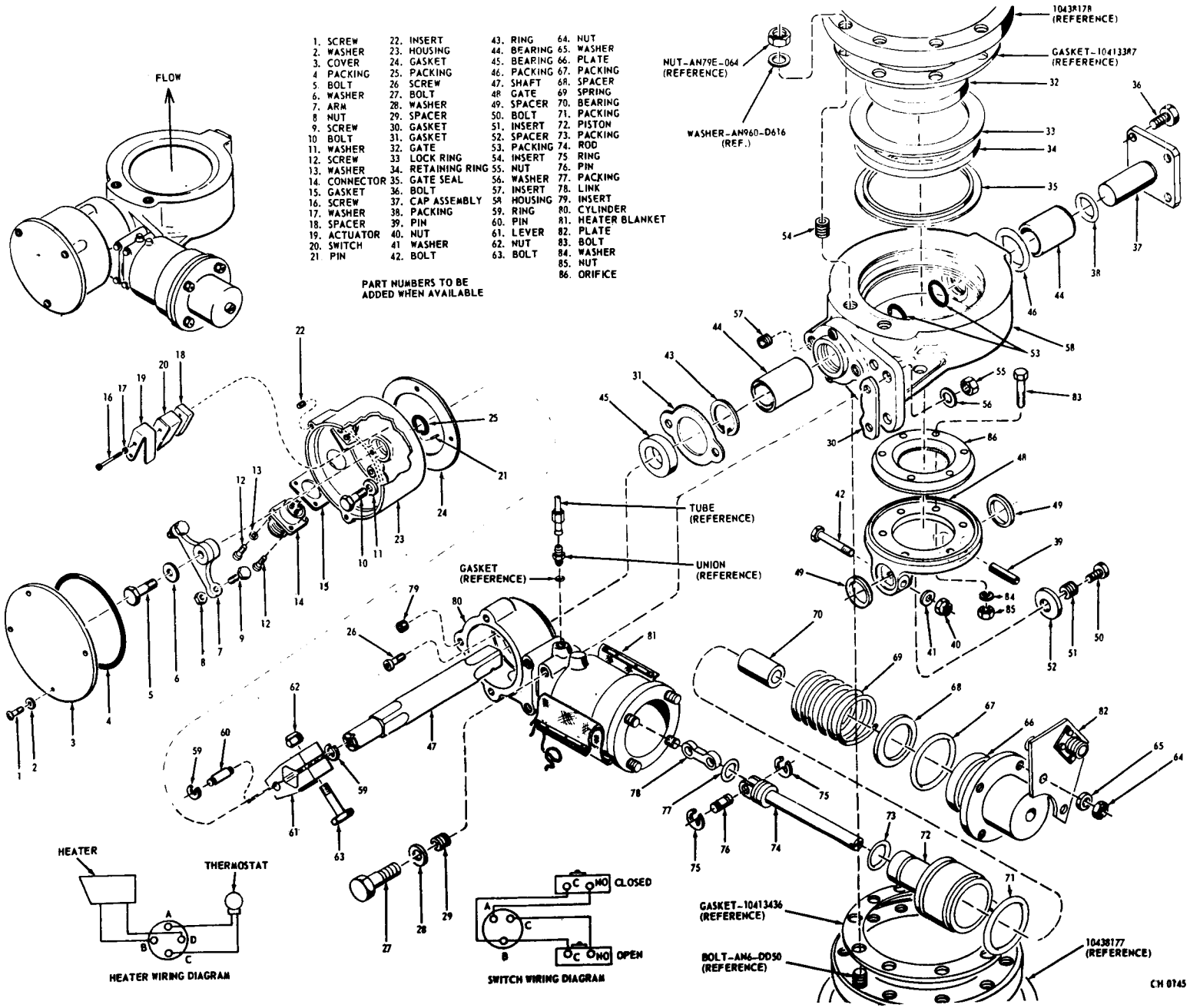

4.3.37 ORIFICE BUTTERFLY LOX PRESSURIZING VALVE EXPLODED VIEW

LOX LEVEL DISCRETE SENSOR
PART NO. 8968380

The LOX level probes (B403, B427) are located in each of the LOX tanks. The probes are used to indicate a differential head at any given time during flight. By virtue of design, the probe vibrates at a known frequency in free air. When submerged in LOX, the probe vibrates at a different frequency due to the density of the LOX, head and material density. When the submerged frequency is related to the known frequency of free air, the head and therefore the LOX level in each tank may be determined.

Drawing not released.

Technical data and sectional view to be supplied when available.

THIS PAGE INTENTIONALLY LEFT
BLANK

LOX FLOWMETER, PART NO. 10413034

The flowmeter (B152) measures the LOX consumption of each engine during flight.

Additional data to be supplied when available.

1. VENDOR - POTTER AERONAUTICAL CORP., PART NO. SE8-5014.
2. LOCATION - On each LOX suction line at approximately station 111.
3. SERVICE -
   LOX at minus 300°F Maximum
   Fuel at plus 1250° F.
4. PRESSURE - OPERATING - 80 to 140 psig.
5. TEMPERATURE: Minus 300° F to plus 125° F
6. LEAKAGE - External: None.

Sectional view will be supplied when available.

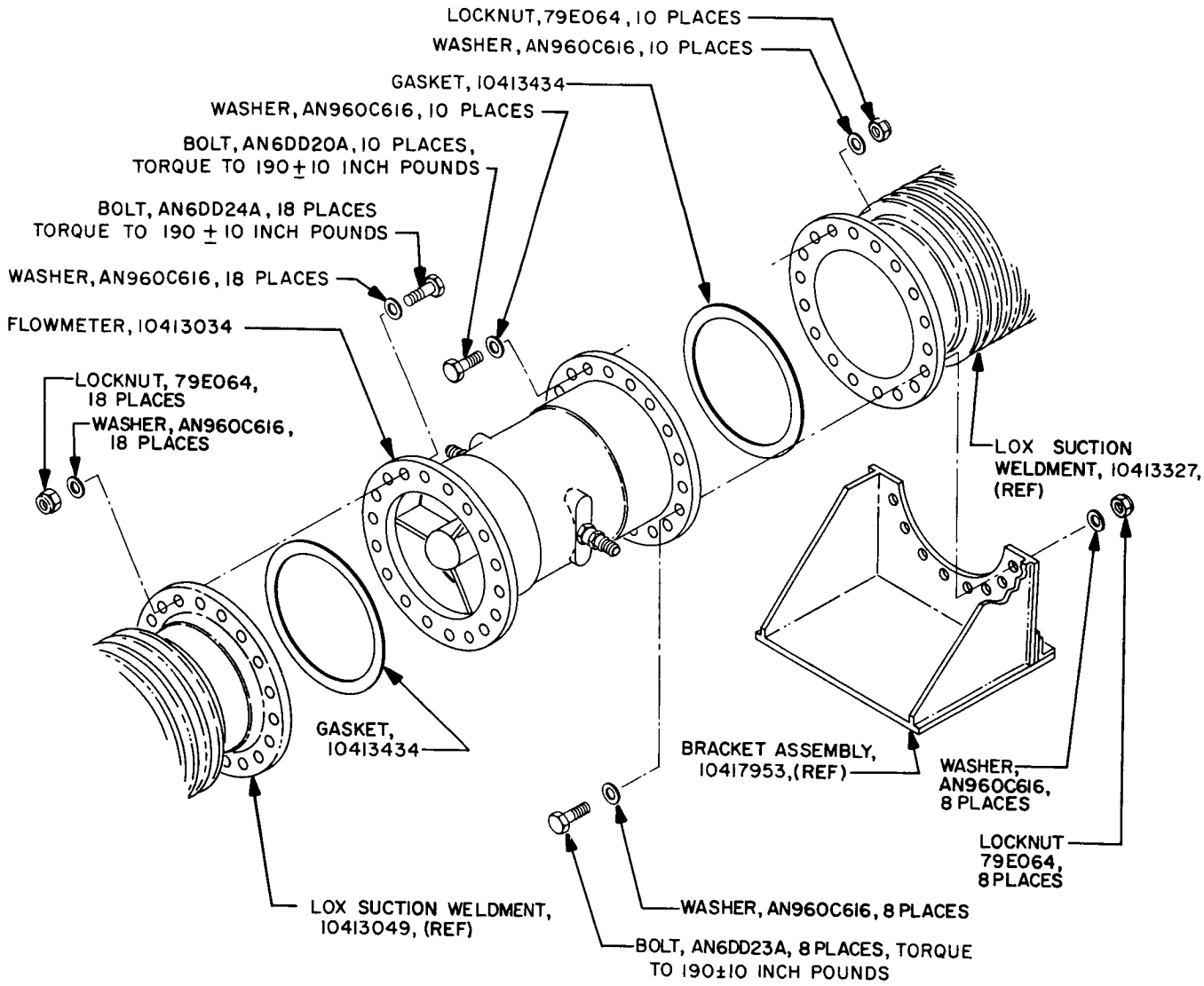

4.3.40 LOX FLOWMETER OUTBOARD - INSTALLATION

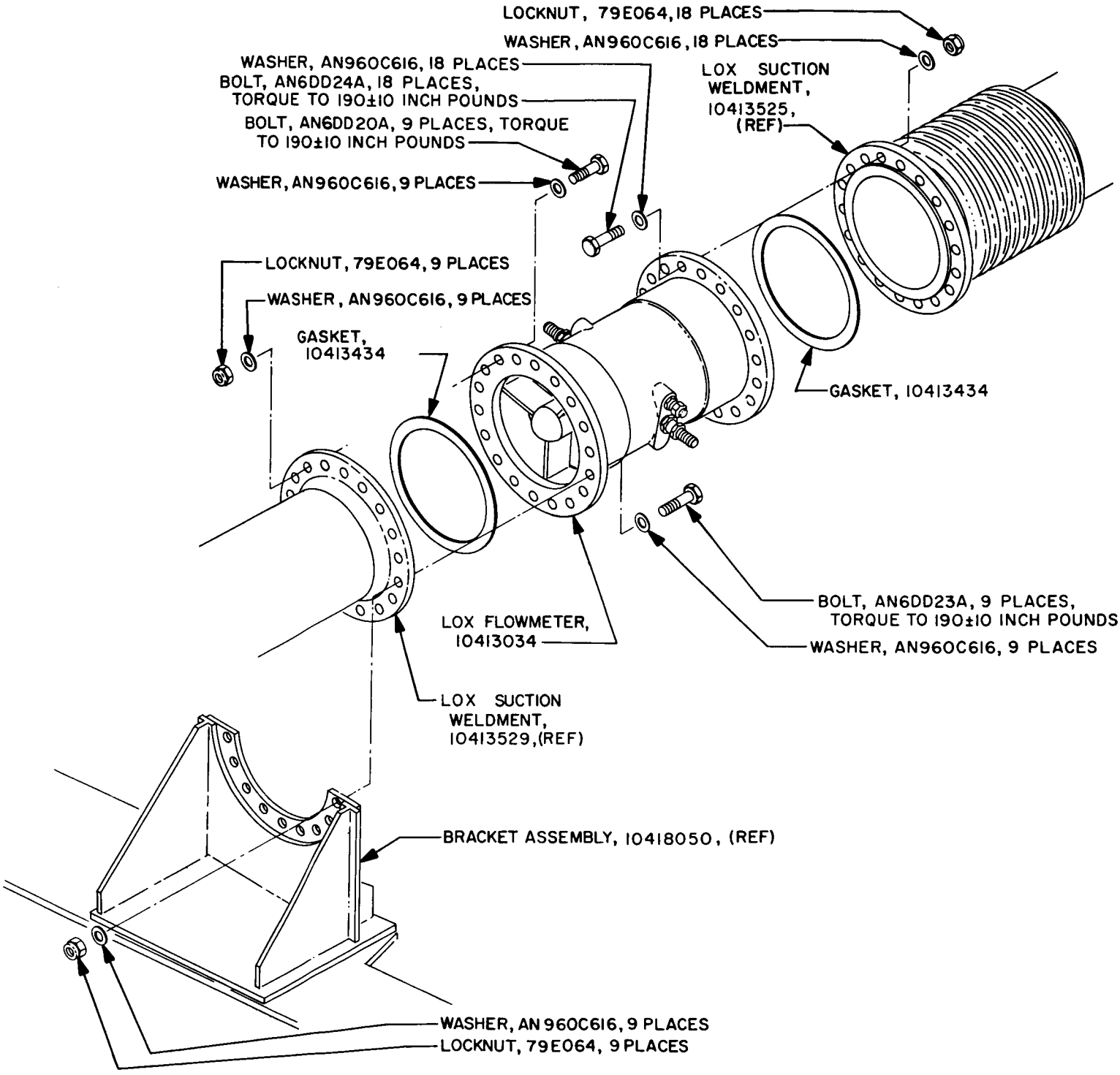

4.3.41 LOX FLOWMETER INBOARD - INSTALLATION

LOX CONTAINER PRESSURE QUICK DISCONNECT COUPLING
PART NO. 10414300

The quick disconnect couplings (B181, B191) are used for LOX container ground pressurizing line.

1. VENDOR - E. B. WIGGINS OIL TOOL CO., INC. PART NO. 6005R 92A16.
2. LOCATION - Short cable mast fin IV at station 150.
3. SERVICE - GN_2
4. PRESSURE -
   a. Operating: 450 psig.
   b. Proof: 675 psig.
   c. Burst: 1125 psig.
5. TEMPERATURE - Minus 65° F to plus 165° F.
6. LUBRICATION - Molykote Z.

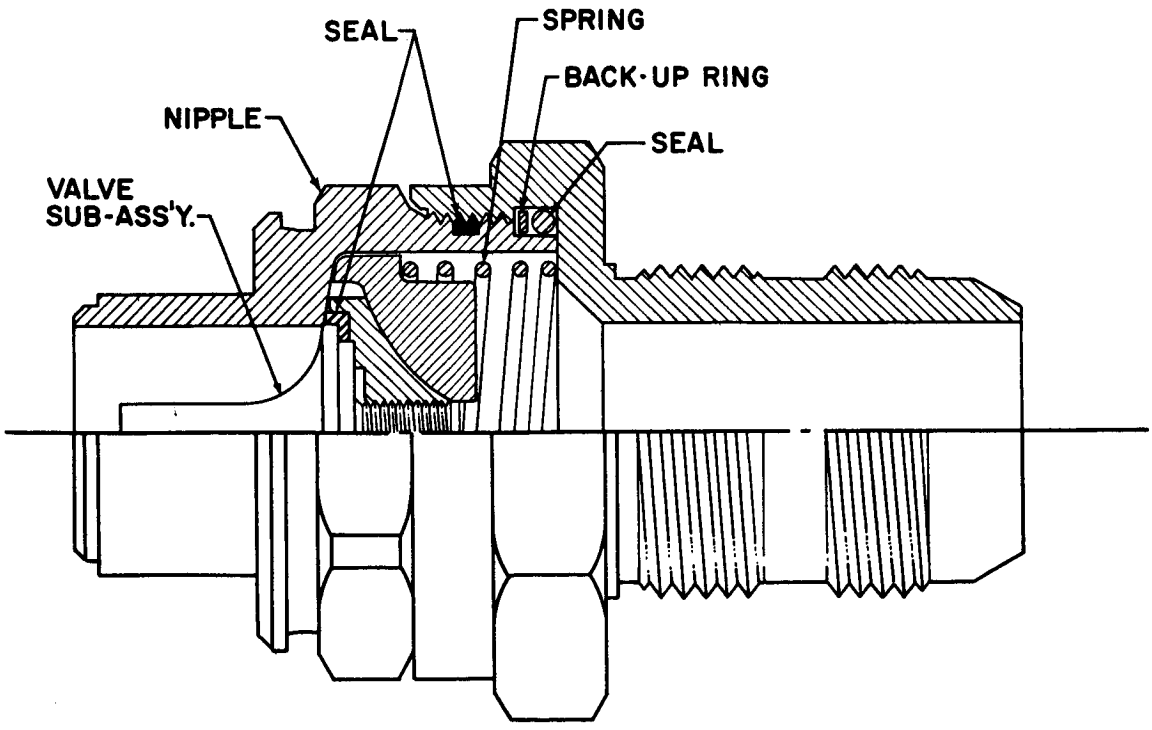

4.3.42 LOX CONTAINER PRESSURE QUICK DISCONNECT COUPLING, 10414300 - SECTIONAL VIEW

LOX BUBBLING QUICK DISCONNECT COUPLING
PART NO. 10414320

The coupling (B64) is the connection point between the LOX coupling (B444) and the suction line.

1. VENDOR - AEROQUIP CORP. PART NO. 320547-4.
2. LOCATION - Above each outboard engine, approximately at station 110.
3. SERVICE - GN_2
4. PRESSURE -
   a. Operating - 125 psig.
   b. Proof - 190 psig.
   c. Burst - 320 psig.
5. TEMPERATURE - Minus 65° F to plus 165° F.
6. LUBRICATION - Lubricate seals with QC-2-0093.

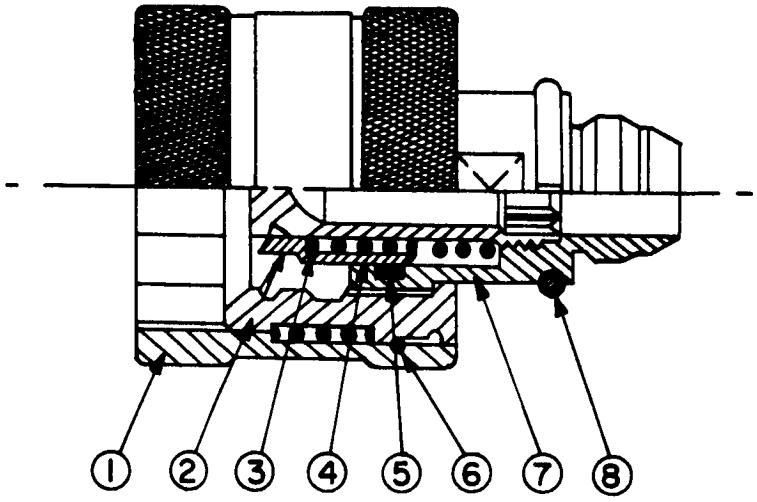

1. FITTING
2. COUPLING
3. FITTING
4. POPPET
5. SEAL
6. RING
7. BODY
8. SEAL

4.3.43 QUICK DISCONNECT COUPLING 10414320
SECTIONAL VIEW

LOX BUBBLING QUICK DISCONNECT COUPLING
PART NO. 10414319

The quick disconnect coupling (B444) is the connection point for the LOX Bubbling line. Helium is passed through the line and into the LOX suction lines; agitates the LOX and maintains an even temperature through the LOX lines.

1. VENDOR - AEROQUIP CORPORATION PART NO. 340243-4
2. LOCATION - Above each outboard engine approximately at station 112.
3. SERVICE - GN_2
4. PRESSURE -
   a. Operating: 125 psig.
   b. Proof: 190 psig.
   c. Burst: 320 psig
5. TEMPERATURE - Minus 65° F to plus 275° F.
6. LUBRICATION - QC-2-0093 by Dow-Corning Corporation.

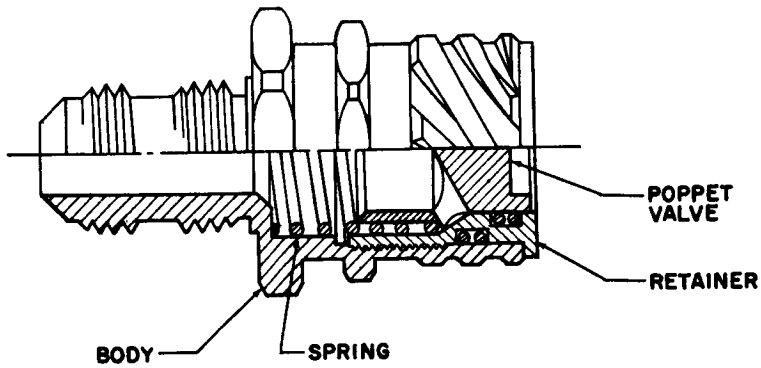

4.3.44 LOX BUBBLING QUICK DISCONNECT COUPLING, 10414319 - SECTIONAL VIEW

THIS PAGE INTENTIONALLY LEFT
BLANK

4.10 CONTROL PRESSURE SYSTEM

The following pages, 4.4.1 through 4.4.62 and Figures 4.4.1 through 4.4.37 deal with the components on the control pressure system. A system schematic, Figure 4.4.1, and the callout list on page 4.4.2 show the find numbers, quantity used, nomenclature, parts numbers, and page locations of the components listed.

CONTROL PRESSURE SYSTEM

High-pressure nitrogen is supplied from the 2.5 cubic feet capacity storage spheres. System pressure is regulated to approximately 750 psi and is used to actuate the various control, vent, relief and pre-valves. The control pressure system is utilized to pressurize the propellant containers, in addition to purging the turbopump gearbox, calorimeter and LOX seal.

CONTROL PRESSURE SYSTEM CALLOUT LIST

FIND NO.	QTY.	COMPONENTS	PART NO.	PAGE
B187	1	LOX Pressurizing Valve	10414027	4.4.8
B200	1	Q.D. Coupling, Sphere Filling	10414064	4.4.19
B201	1	Filter, Sphere Filling	10414026	4.4.20
B202	1	Check Valve, Sphere Filling	10414013	4.4.24
B203	1	1.5 Cu. Ft. Sphere	10438153	4.4.5
B204	1	Filter, Control Pressure	10414026	4.4.20
B205	1	750-psi Regulator, Control Pressure	10414038	4.4.26
B206	1	750-psi Pressure Switch, Control Pressure	10414042	4.4.28
B207	1	3-Way Needle Valve, Control Pressure	10414076	4.4.34
B208	1	Relief Valve, 750 psi	10414054	4.4.34
B209	1	3-Way Needle Valve, Control Pressure	10414076	4.4.32
B210	1	Bottle Fill and Vent Valve	10414030	4.4.40
B211	1	Control Valve, Fuel Vent	10414027	4.4.8
B212	1	Control Valve, Fuel Vent	10414027	4.4.8
B213	1	Control Valve, LOX Vent	10414027	4.4.8
B214	1	Control Valve, LOX Relief	10414310	4.4.44
B215	1	Control Valve, LOX Relief	10414310	4.4.44
B216	1	High-Pressure O.K. Switch, Control Pressure	10414029	4.4.46
B217	1	Control Valve, Fuel Fill and Drain	10414027	4.4.8
B218	1	Control Valve, LOX Fill and Drain	10414355	4.4.8
B219	1	Control Valve, LOX Replenishing	10414027	4.4.8
B220	1	3-Way Needle Valve	10414087	4.4.50
B221	8	Control Valve, LOX and Fuel Prevalve	10414027	4.4.8
B222	1	Calorimeter, Type No. 3	8961581	
B223	1	1.0 Cu. Ft. Sphere	10438152	4.4.52
B224	1	Manifold, Control Pressure	10413666	4.4.58
B225	1	Solenoid Valve, Calorimeter Purge	10414093	4.4.54
B226	1	Control Valve, LOX Replenishing	10414027	4.4.8
B227	6	Orifice, Prevalve	10414506	4.1.7
B228	1	Orifice Fuel Pre-valve Control Line	10414507	4.1.7
B229	1	Q.D. Coupling, Fuel Bubbling	10414063	4.1.32
B233	1	Calorimeter, Type No. 3	8961581	

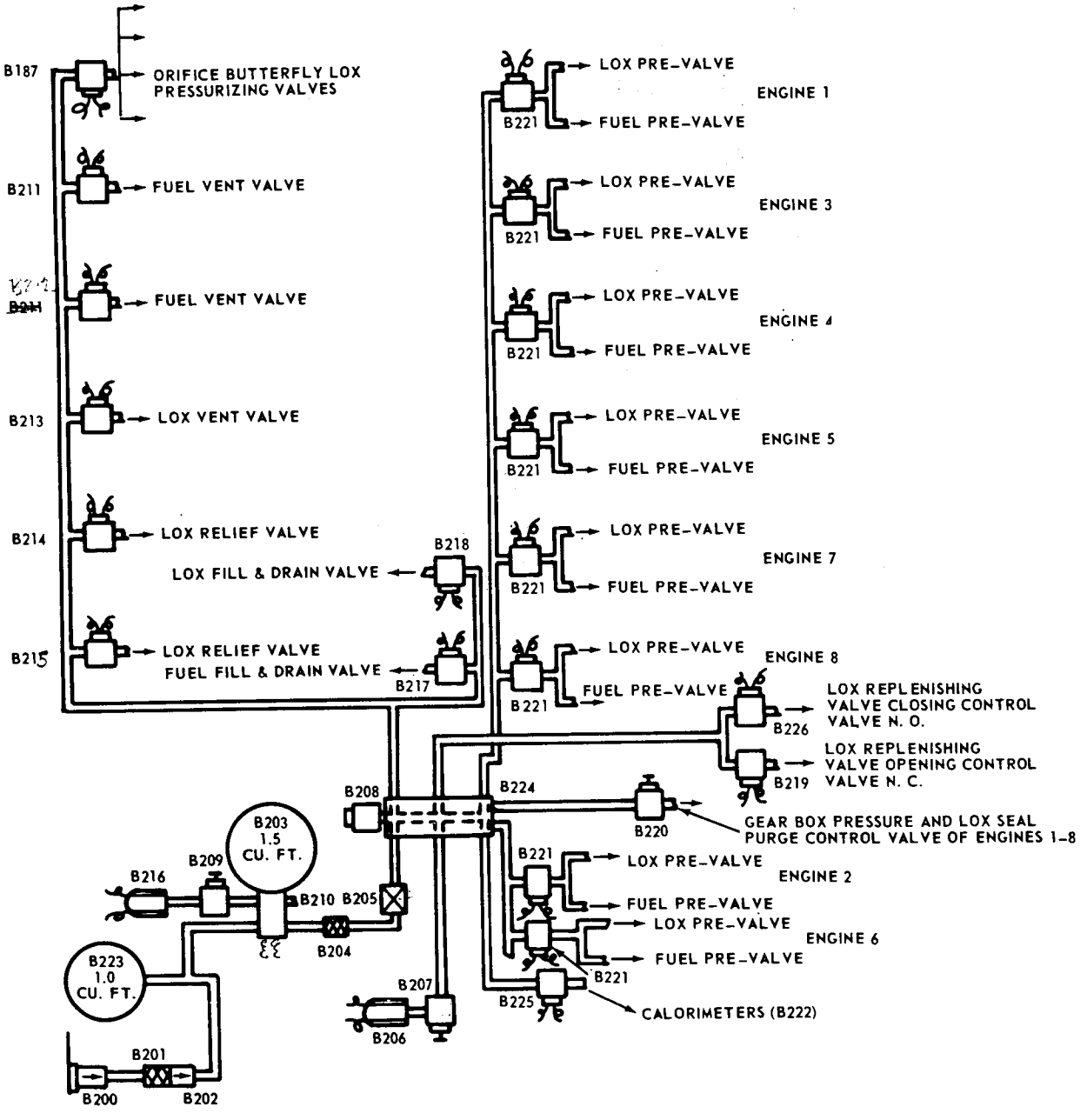

CH 0161

4.4.1 CONTROL PRESSURE SCHEMATIC

HIGH-PRESSURE SPHERE ASSEMBLY PART NO. 10413938

The 1.5 cubic feet sphere is used in conjunction with a 1 cubic foot sphere to contain the GN_2 supply for the control system. Components for filling, filtering, regulating and monitoring the supply are included in the assembly.

1. VENDOR-UTICA DIV., BENDIX AVIATION CORP., PART NO. 19E23-12UD.
2. LOCATION - Station 190 to 240 in fuel tank No. 2.
3. SERVICE - Air, helium, gaseous nitrogen.
4. PRESSURE -
   a. Operating: 3000 psig.
   b. Proof: 5000 psig.
   c. Burst: 6660 psig.
5. TEMPERATURE - OPERATING - Plus 32° F to plus 125° F.
6. ULTIMATE LIFE - 1000 cycles.
7. LEAKAGE ALLOWANCES - Apply 3000 psig air to bottle fill and vent valve 10414030 with regulator to manifold assembly 10413666 set to 750 psi; no leakage allowed except as specified on component.
8. CONSTRUCTION - Epoxy resin impregnated fiber glass wound laminated with a GRS liner.
9. CAPACITY - 1.5 cubic feet.
10. DUTY - Continuous.
11. TORQUE - Torque strap assembly 8942522 to 90 in-lbs maximum.
12. Cure data control per MSFC 10509311.

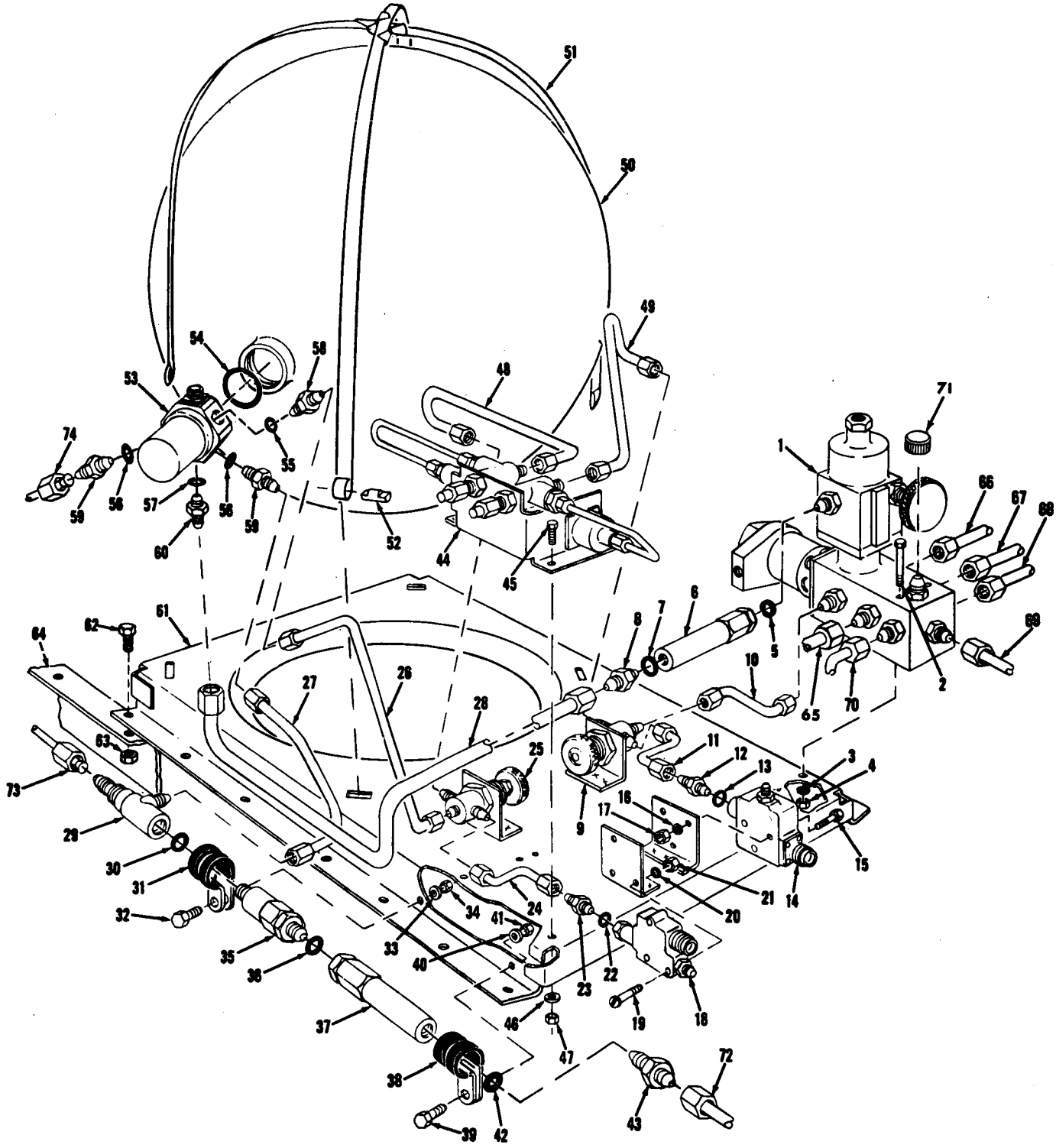

1. MANIFOLD ASSY - 10413666
2. BOLT - AN4DDH26A
3. WASHER - AN960PD416L
4. NUT - MS20365D428
5. "O" RING - MS29512-6
6. FILTER ASSY - 10414026
7. "O" RING - MS29512-6
8. REDUCER - 8942989
9. NEEDLE VALVE ASSY - 10414076
10. TUBING ASSY - 10413826-50
11. TUBING ASSY - 10413826-268
12. UNION - 8944360
13. "O" RING - MS29512-4
14. PRESSURE SWITCH - 10414042
15. BOLT - AN3DDH20A
16. LOCK WASHER - AN960PD10L
17. NUT - MS20365D1032
18. H. P. SWITCH ASSY - 10414029
19. SCREW - MS35277-50
20. WASHER - AN960PD8L
21. NUT - MS20365D832
22. "O" RING - MS29512-4
23. UNION - 8944360
24. TUBING ASSY - 10413826-268
25. NEEDLE VALVE ASSY - 10414076
26. TUBING ASSY - 10413826-47
27. TUBING ASSY - 10413826-46
28. TUBING ASSY - 10413826-45
29. TEE - AN784D6
30. "O" RING - MS29512-6
31. CLAMP - 82626SS-17
32. BOLT - AN3DDH4A
33. LOCK WASHER - AN960PD10L
34. NUT - MS20365D1032
35. CHECK VALVE ASSY - 10414013
36. "O" RING - MS29512-6
37. FILTER ASSY - 10414026
38. CLAMP ASSY - 82626SS-16
39. BOLT - AN3DDH4A
40. LOCK WASHER - AN960PD10L
41. NUT - MS20365D1032
42. "O" RING - MS29512-6
43. UNION - 8944362
44. PRESSURE GAGE ASSY - 10413817
45. BOLT - AN3DDH5A
46. LOCK WASHER - AN960PD10L
47. NUT - MS20365D1032
48. TUBING ASSY - 10413826-52
49. TUBING ASSY - 10413826-54
50. SPHERE - 10438153
51. BAND - 10438389
52. PIN, BAND ASSY - 8940347
53. BOTTLE FILL AND VENT VALVE - 10414030
54. "O" RING - MS29512-16
55. "O" RING - MS29512-4
56. "O" RING - MS29512-6
57. "O" RING - MS29512-8
58. UNION - 8944360
59. UNION - 8944362
60. UNION - 8944363
61. PLATE ASSY - 10413684
62. SCREW - MS35224-80 (REFERENCE)
63. NUT - AN363-428 (REFERENCE)
64. SUPPORT - 10410218-1 (REFERENCE)
65. TUBING ASSY - 10413826-39 (REFERENCE)
66. TUBING ASSY - 10413826-13 (REFERENCE)
67. TUBING ASSY - 10413826-32 (REFERENCE)
68. TUBING ASSY - 10413826-18 (REFERENCE)
69. TUBING ASSY - 10413826-23 (REFERENCE)
70. TUBING ASSY - 10413826-105 (REFERENCE)
71. CAP - AN929-4 (REFERENCE)
72. TUBING ASSY - 10413826-141 (REFERENCE)
73. TUBING ASSY - 10413826-53 (REFERENCE)
74. TUBING ASSY - 10413826-33 (REFERENCE)

4.4.2 HIGH PRESSURE SPHERE ASSEMBLY, 10413938 - EXPLODED VIEW

HIGH PRESSURE SPHERE GAGE ASSEMBLY PART NO. 10413817

The sphere gage assembly is used to measure pneumatic pressure in the sphere assembly 1043938.

1. LOCATION - Station 197 in fuel tank No. 2.
2. PRESSURE GAGES -
   a. Part No. 8968267
      1. Vendor: Bourns Laboratories, Inc., Model No. 725
      2. Range : 0 to 800 psig.
   b. Part No. 8968274
      1. Vendor: Edcliff Instruments, Model No. 2-8-6.
      2. Range : 0 to 3500 psig.
3. Pressure of Model No. 2-8-6 is:
   Operating: 0 to 3500 psig.
   Burst: The sensing element burst pressure shall be at least two times the range of the unit.
4. Pressure of Model No. 725 is:
   Operating: 0 to 3500 psig.
   Proof: 5250
   Burst: 8750
5. Temperature of Model No. 725 is:
   Minus 65° F to plus 165° F.
6. Temperature of Model No. 2-8-6 is:
   Minus 65° F to plus 300° F.

Refer to page 4.4.5 for installation.

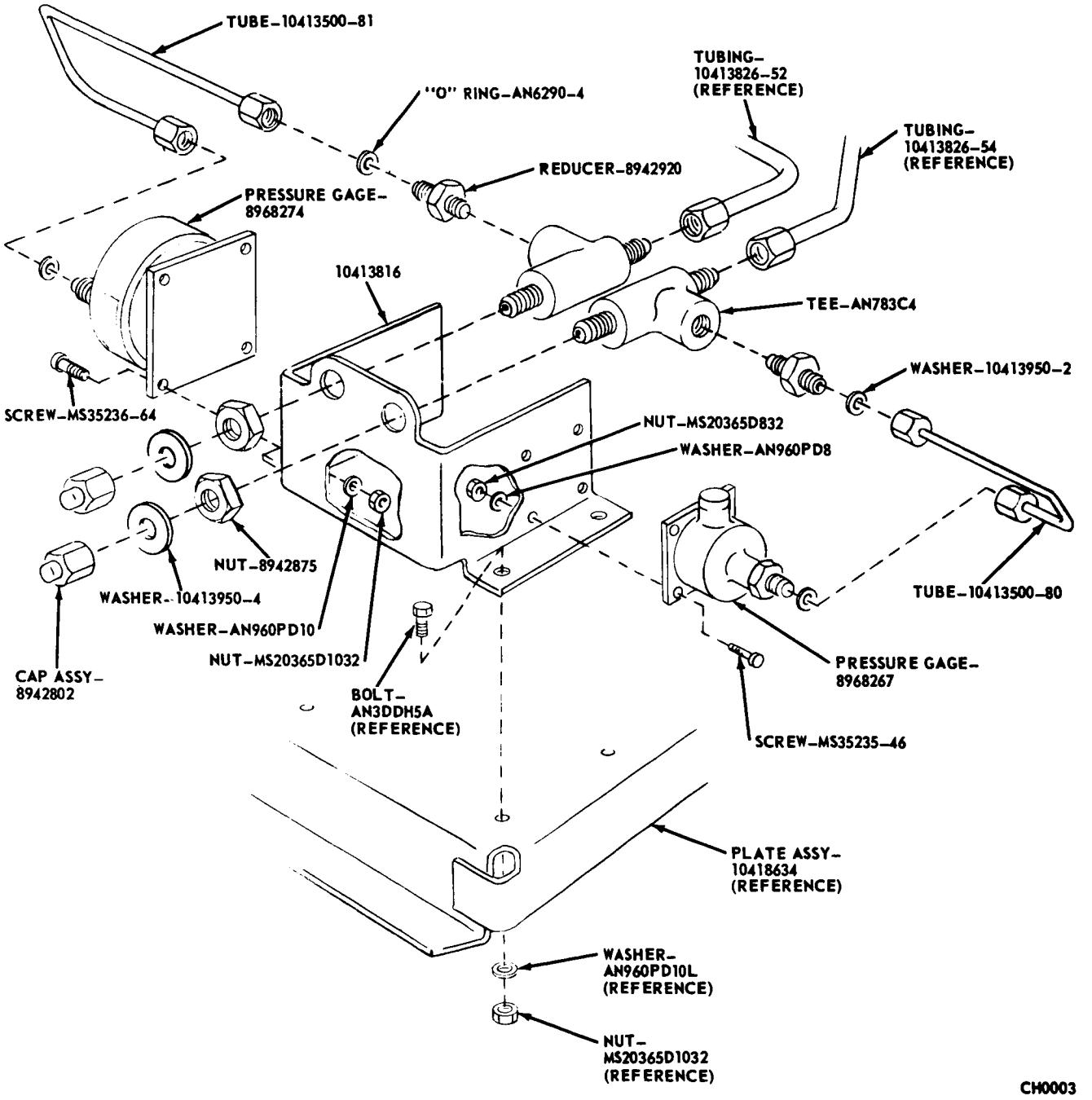

4.4.3 HIGH PRESSURE SPHERE GAGE ASSEMBLY
EXPLODED VIEW

CONTROL VALVE, PART NO. 10414027

LOX PRESSURIZING CONTROL VALVE

The four orifice-butterfly LOX pressurizing valves (B186) are operated by the LOX pressurizing control valve (B187). The control valve (B187) is electrically actuated to allow pneumatic pressure to operate the butterfly valves to equalize LOX container pressure prior to vehicle liftoff. The valve (B187) is located at Station 987.

FUEL VENT VALVE CONTROL VALVE

The two fuel vent valves (B108 and B109) are operated by the control valves (B212 and B211) and are opened to prevent excessive pressure build-up or decrease in the fuel tanks. One of the valves is over fuel tank No. and the other is over fuel tank No. 4. Both control valves are at Station 890.

LOX VENT VALVE CONTROL VALVE

The LOX vent valve (B162) is operated by the control valve (B213). The control valve (B213) is electrically actuated to allow pneumatic pressure to open or close the LOX vent valve thereby preventing over or under pressurization of the LOX tanks. The control valve is located at station 891 over LOX tank No. 3.

FUEL FILL AND DRAIN VALVE CONTROL VALVE

The fuel fill and drain valve (B100) is pneumatically operated by the fuel fill and drain valve control valve (B217). The control valve is electrically controlled thus providing control of the fuel fill and drain valve. The control valve (B217) is located at station 208 in fuel tank No. 1.

LOX FILL AND DRAIN VALVE CONTROL VALVE PART NO. 10414355

The LOX fill and drain valve control valve (B218) is electrically operated to pneumatically control the operation of the LOX fill and drain valve (B150). The control valve (B218) is located at Station 222 in fuel tank No. 2. The valve (B218) is a 10414027 valve with different unions installed. See page 4.4.16.

LOX REPLENISHING VALVE CONTROL VALVES

One of the LOX replenishing valve control valves (B226) is normally open and the other (B219) is normally closed. The control valves are electrically controlled by the LOX ground computer. These control valves allow pneumatic pressure to reach the opening or closing port on the LOX replenishing valve or vent this pressure, thus pneumatically controlling the LOX replenishing valve (B157). The control valves are located at station 200 in fuel tank No. 2.

LOX AND FUEL PREVALVES CONTROL VALVES

The normally closed fuel prevalves (B101) and LOX prevalves (B151) are opened by the fuel and LOX prevalve control valves (B221) when control pressure is available. All prevalve control valves are identical although four of them have mounting brackets on the opposite side from the remaining four valves. The prevalve control valves are located in pairs at Station 217 in each fuel container.

1. VENDOR - MAROTTA VALVE CORP. PART NO. 202873
2. SERVICE - Air, helium, gaseous nitrogen.
3. PRESSURE -
   a. Operating: 750 psi.
   b. Proof: 1125 psig.
   c. Burst: 1875 psig.
4. TEMPERATURE - OPERATING - Minus 65° F to plus 160° F.
5. ELECTRICAL -
   a. Continuity: Coil, at 70° F, 23 plus or minus 2 ohms maximum resistance.
   b. Insulation Resistance: 500 volt Megger test each isolated terminal to valve body; 50 megohms minimum.
   c. Amperage: 0.94 to 1.2 at 24 plus or minus 0.5 volts.
   d. Solenoid Pull-in. 18 volts maximum (Excessive pull-in can be adjusted with screw on bottom of valve, provided stroke is within tolerance.)
6. LEAKAGE ALLOWANCES -
   a. Internal, past main seats: 5 scim maximum, with valve energized and de-energized.
   b. External: No leakage allowed.
7. TYPE - 3 way, 2 position, N.O. or N.C.
8. CAPACITY EQUIVALENT - Sharp edged orifice diameter .115 in.
9. DUTY - Continuous.
10. RUBBER SEALS - Must meet the requirements of Specification ABMA-STD-29.
11. LUBRICATION - Lubricate seals with Dow Corning DC 55 Grease.

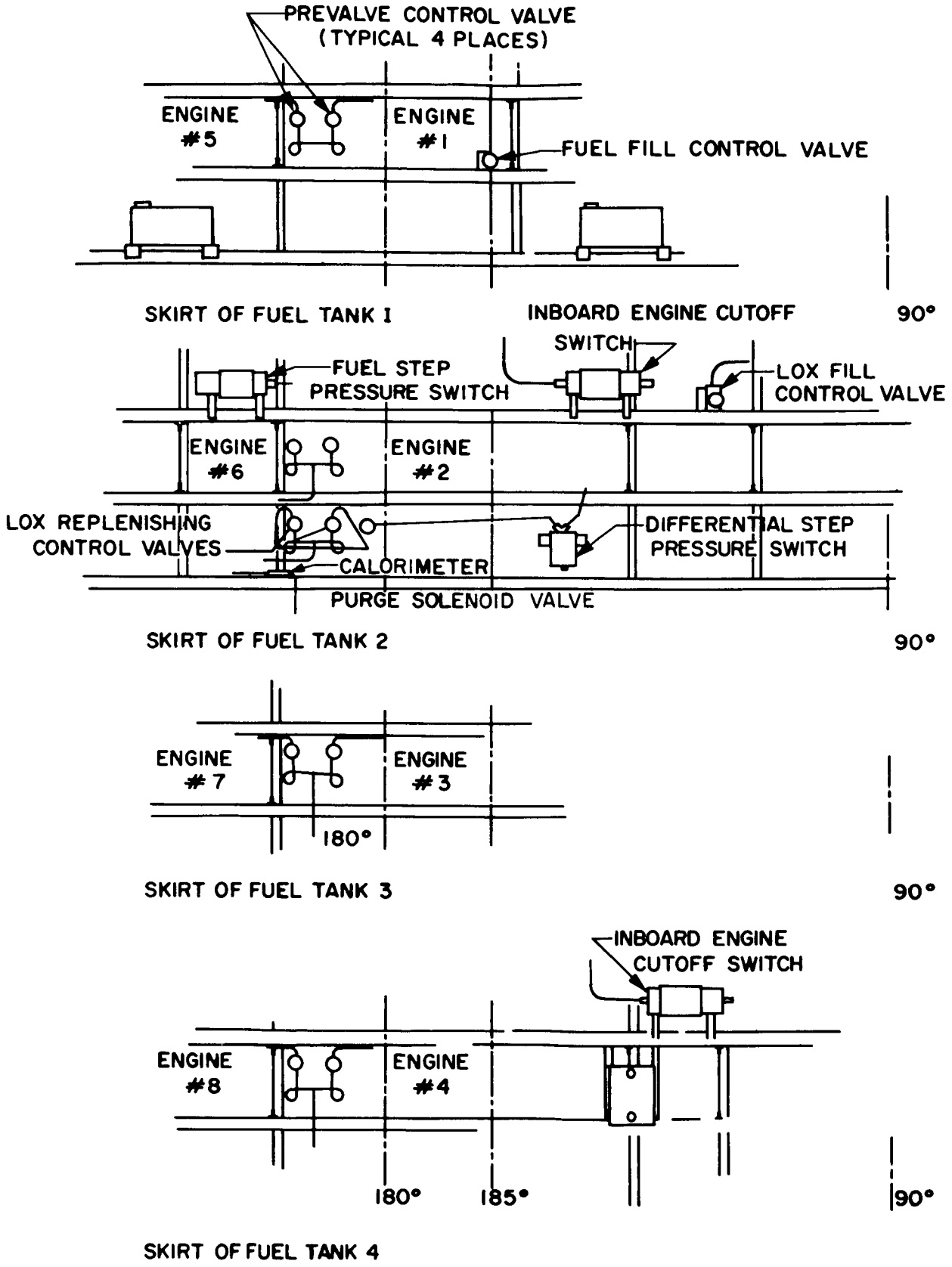

4.4.4 LOCATION OF COMPONENTS IN FUEL TANK SKIRTS

APPLICATION	PORT A	PORT B	PORT C
NORMALLY CLOSED	VENT	INLET	OUTLET
NORMALLY OPEN	INLET	VENT	OUTLET

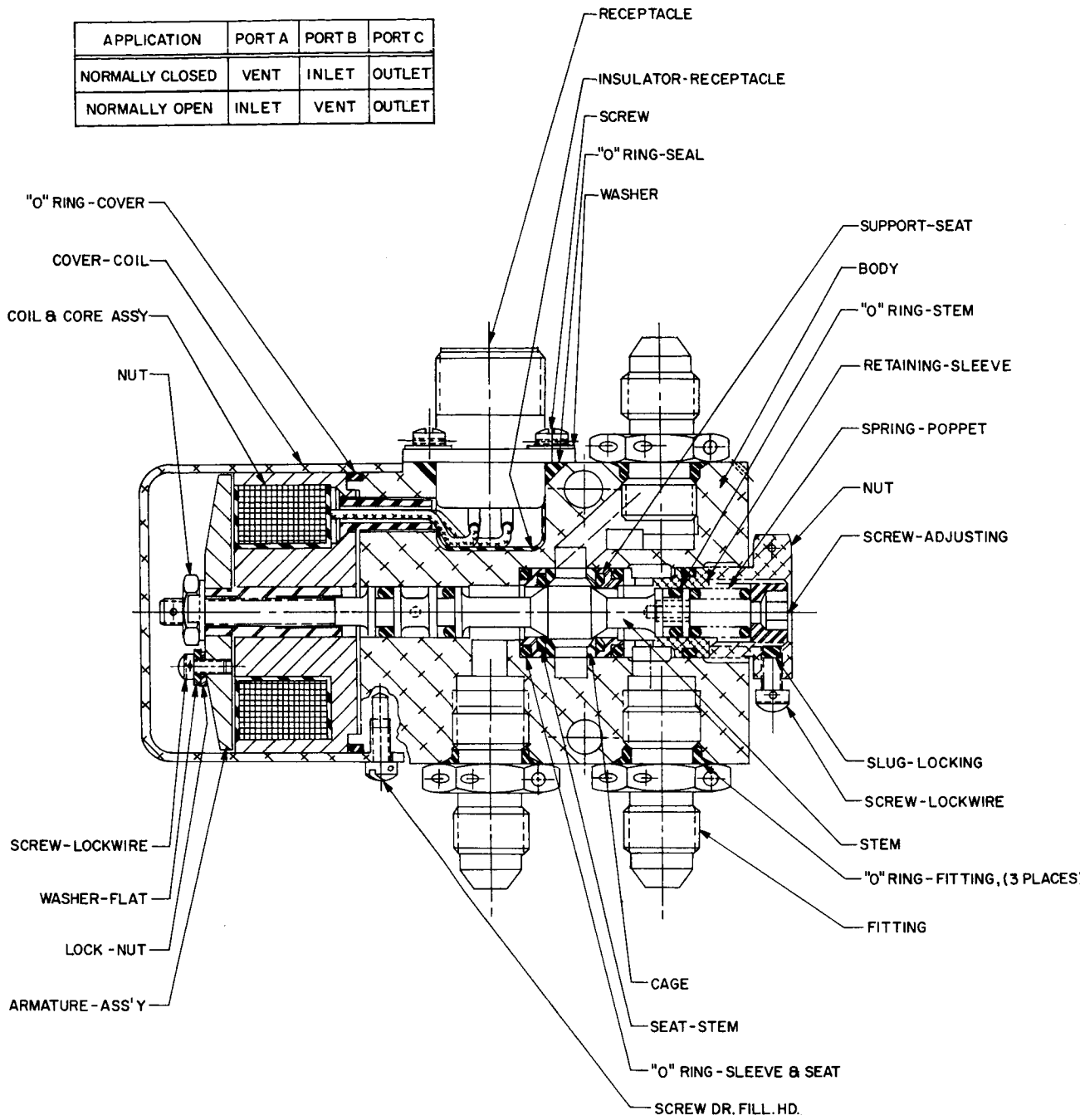

4.4.5 CONTROL VALVE 10414027
SECTIONAL VIEW

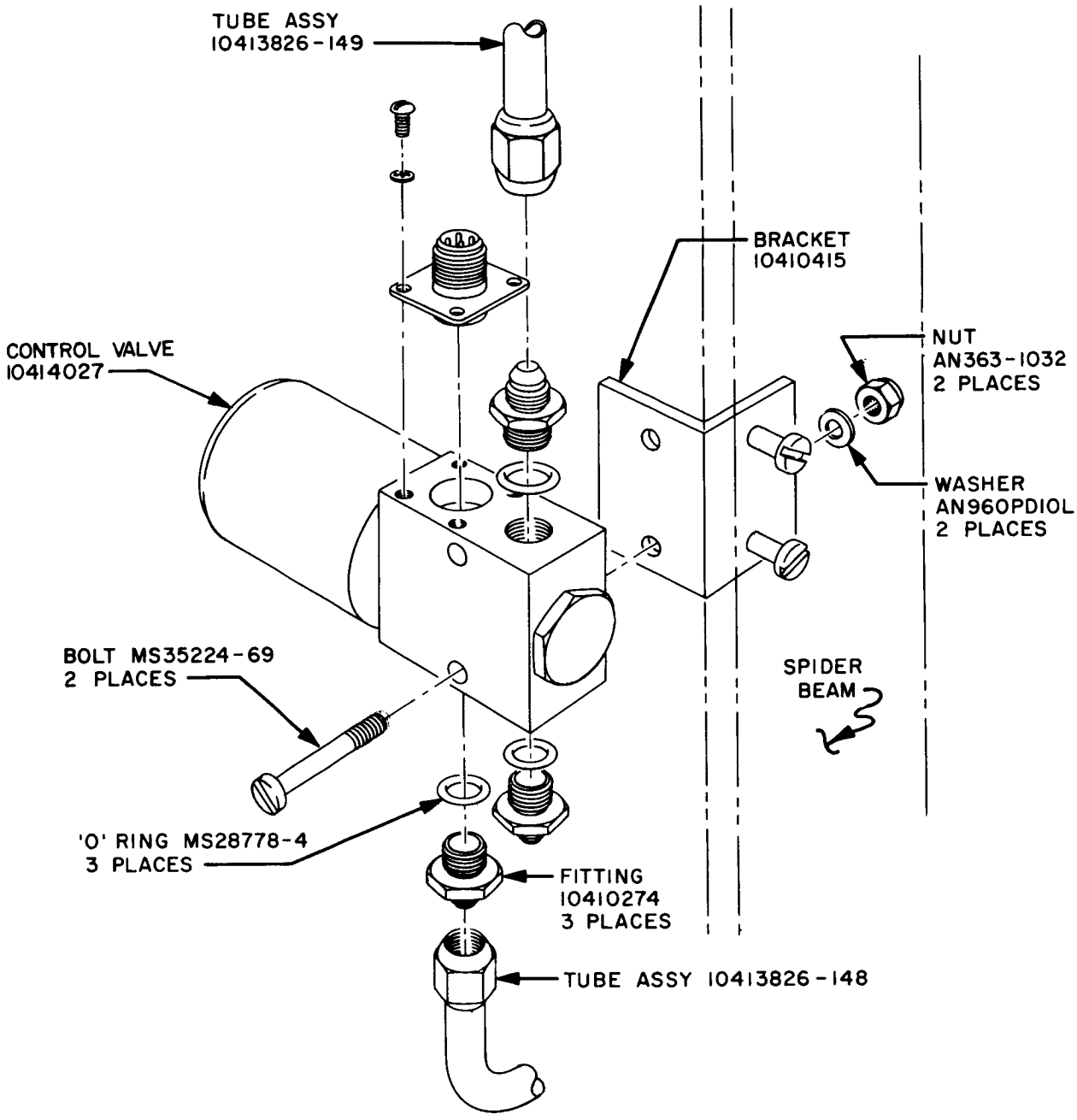

4.4.6 LOX PRESSURIZING CONTROL VALVE INSTALLATION

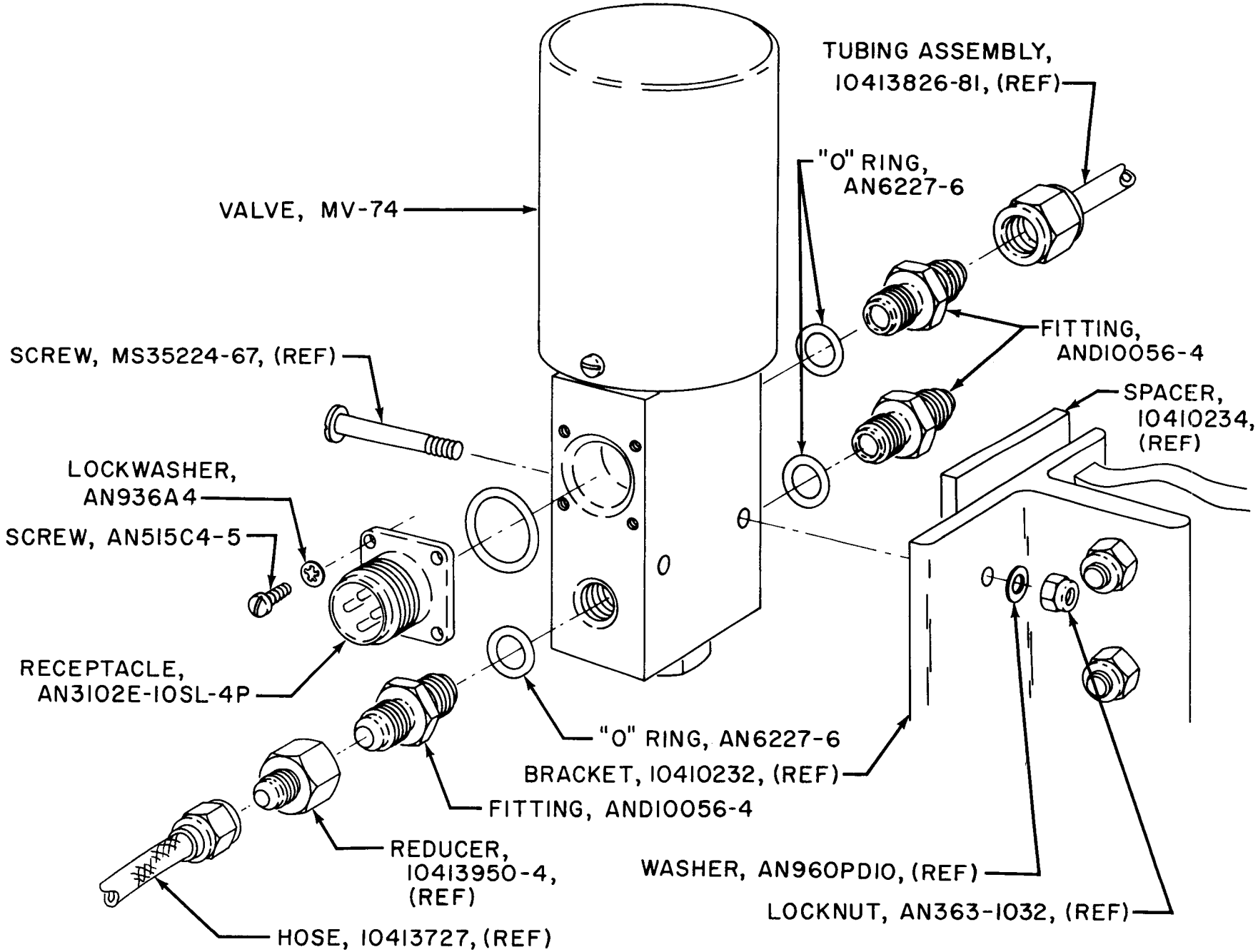

4.4.7 FUEL VENT CONTROL VALVE - INSTALLATION

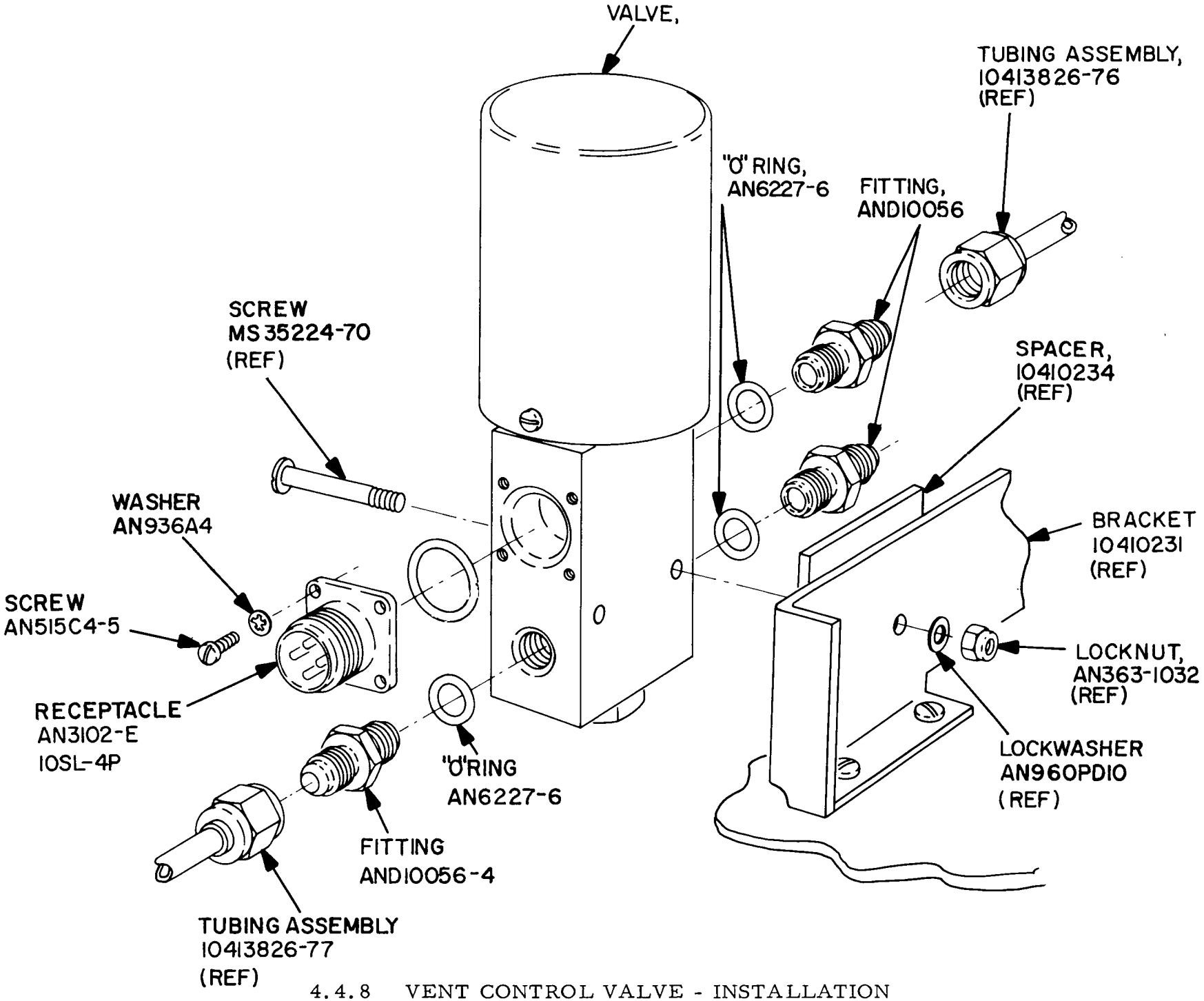

4.4.8 VENT CONTROL VALVE - INSTALLATION

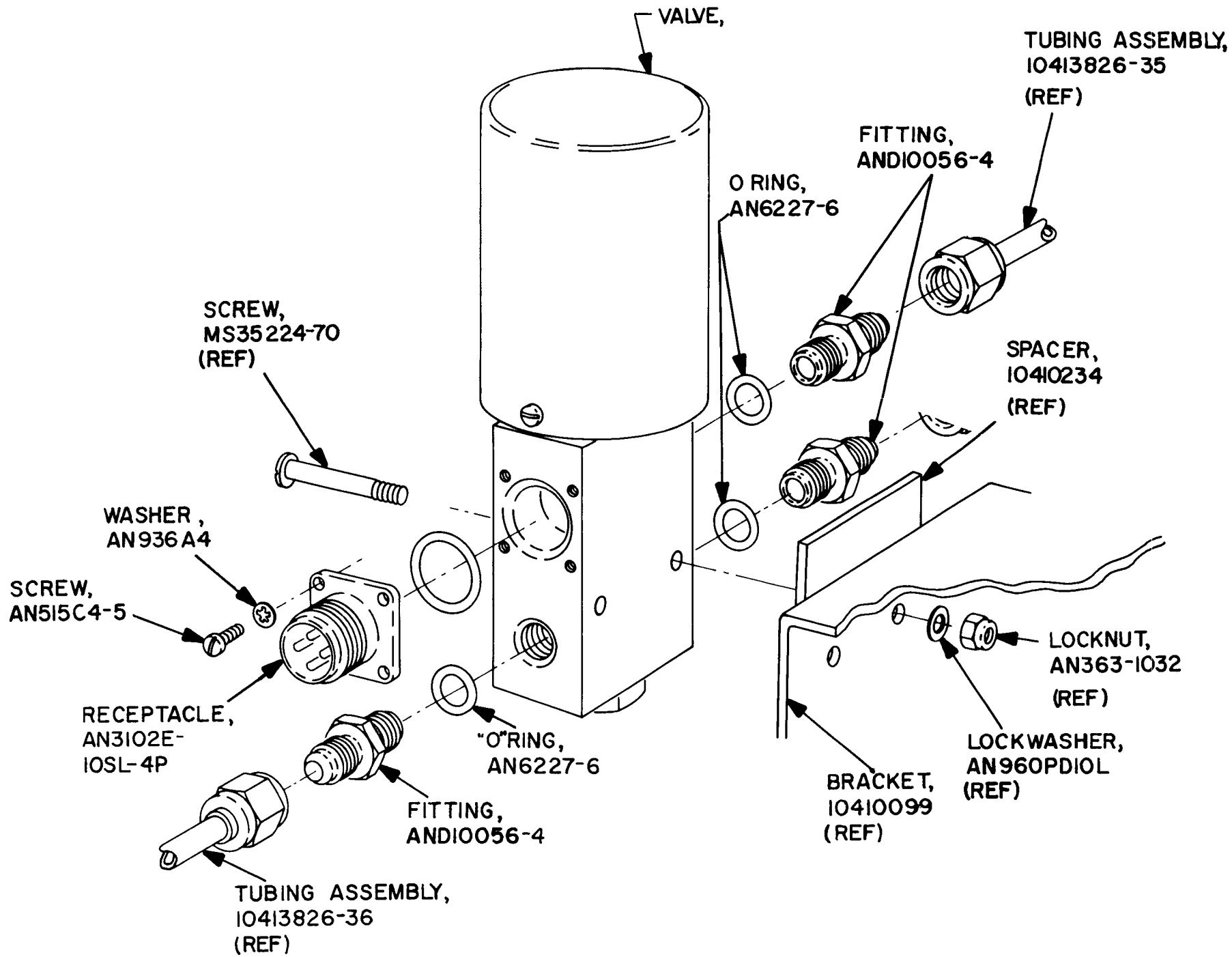

4.4.9 FUEL FILL AND DRAIN CONTROL VALVE - INSTALLATION

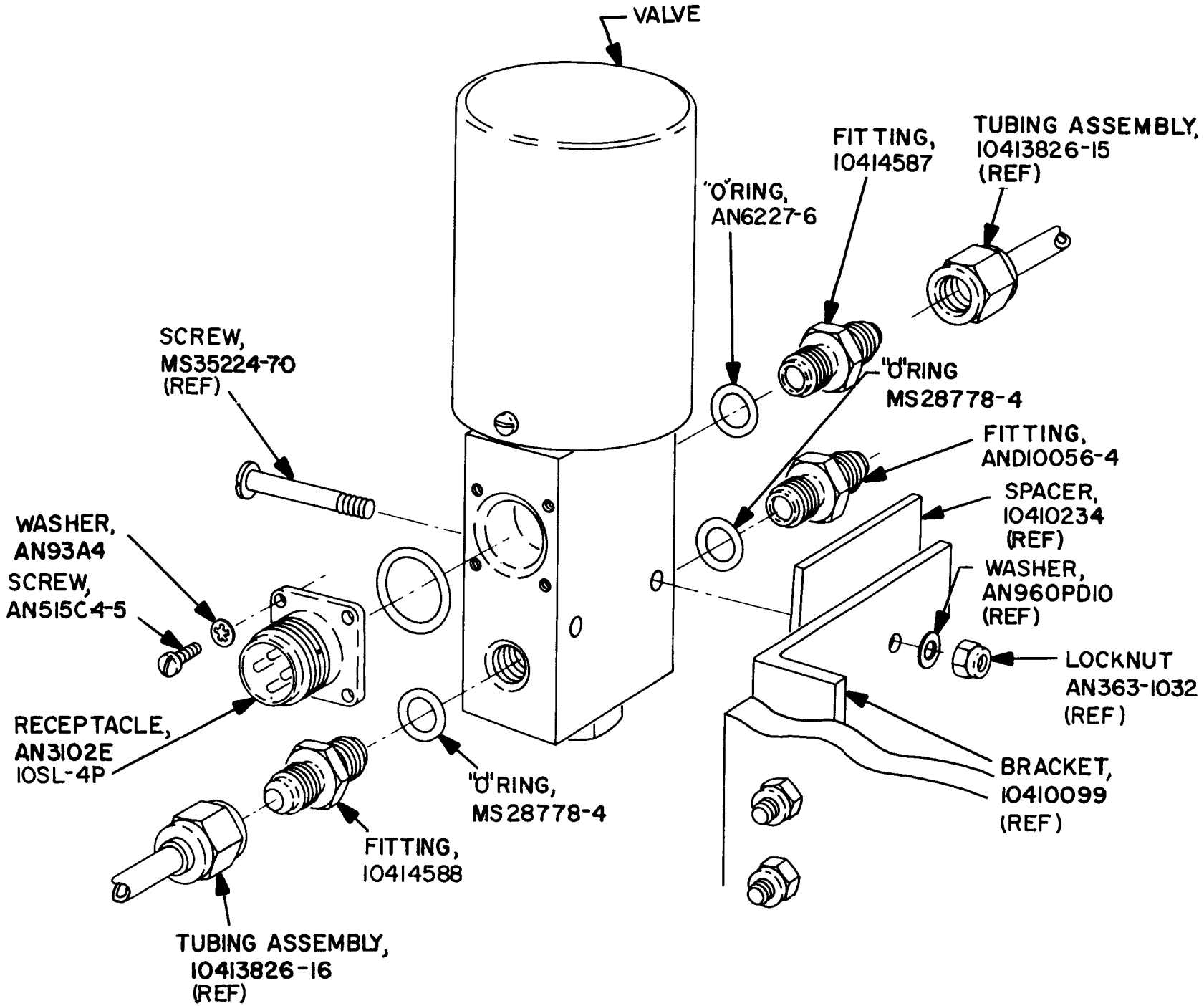

4.4.10 LOX FILL AND DRAIN CONTROL VALVE - INSTALLATION

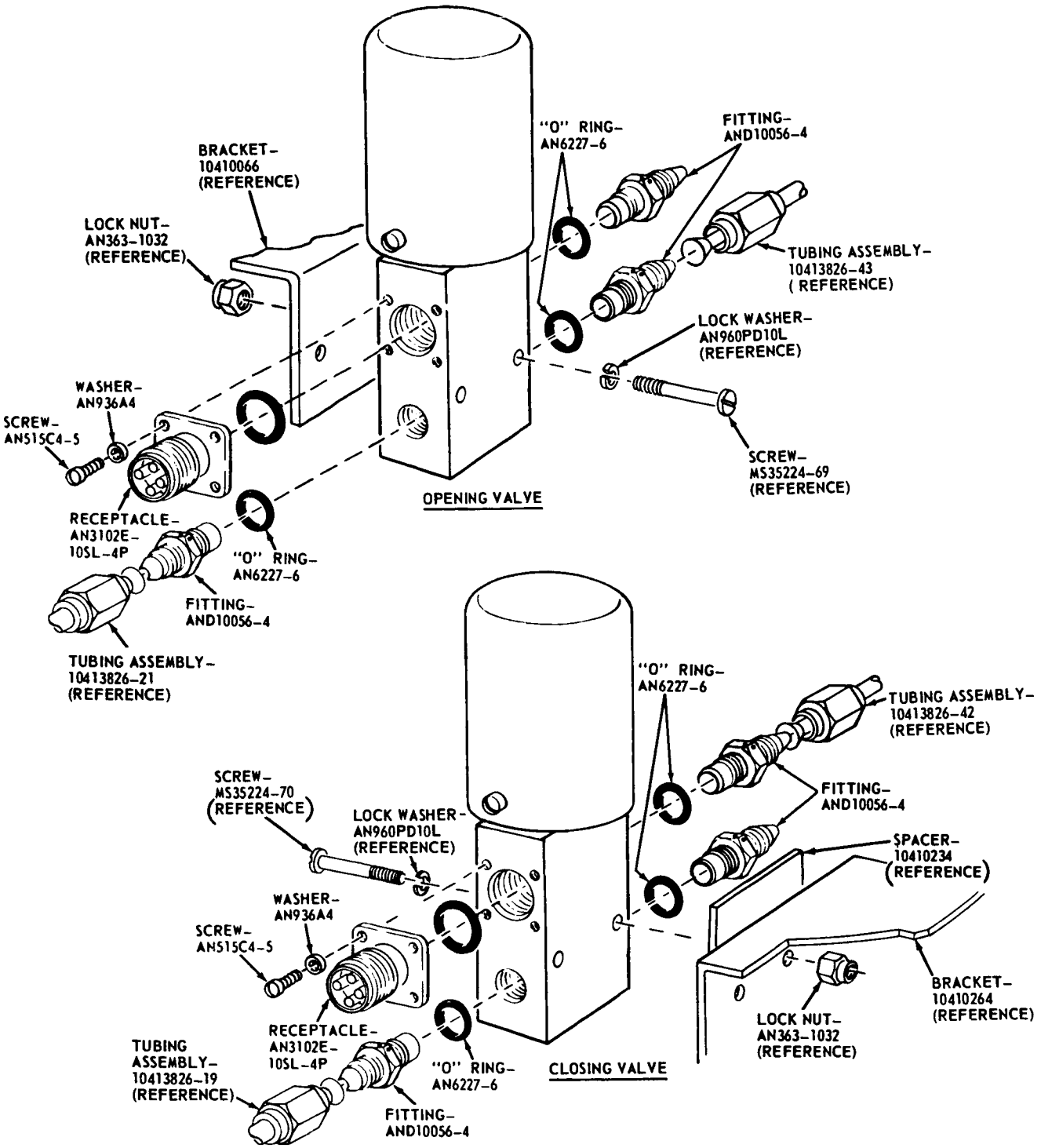

4.4.11 LOX REPLENISHING CONTROL VALVE

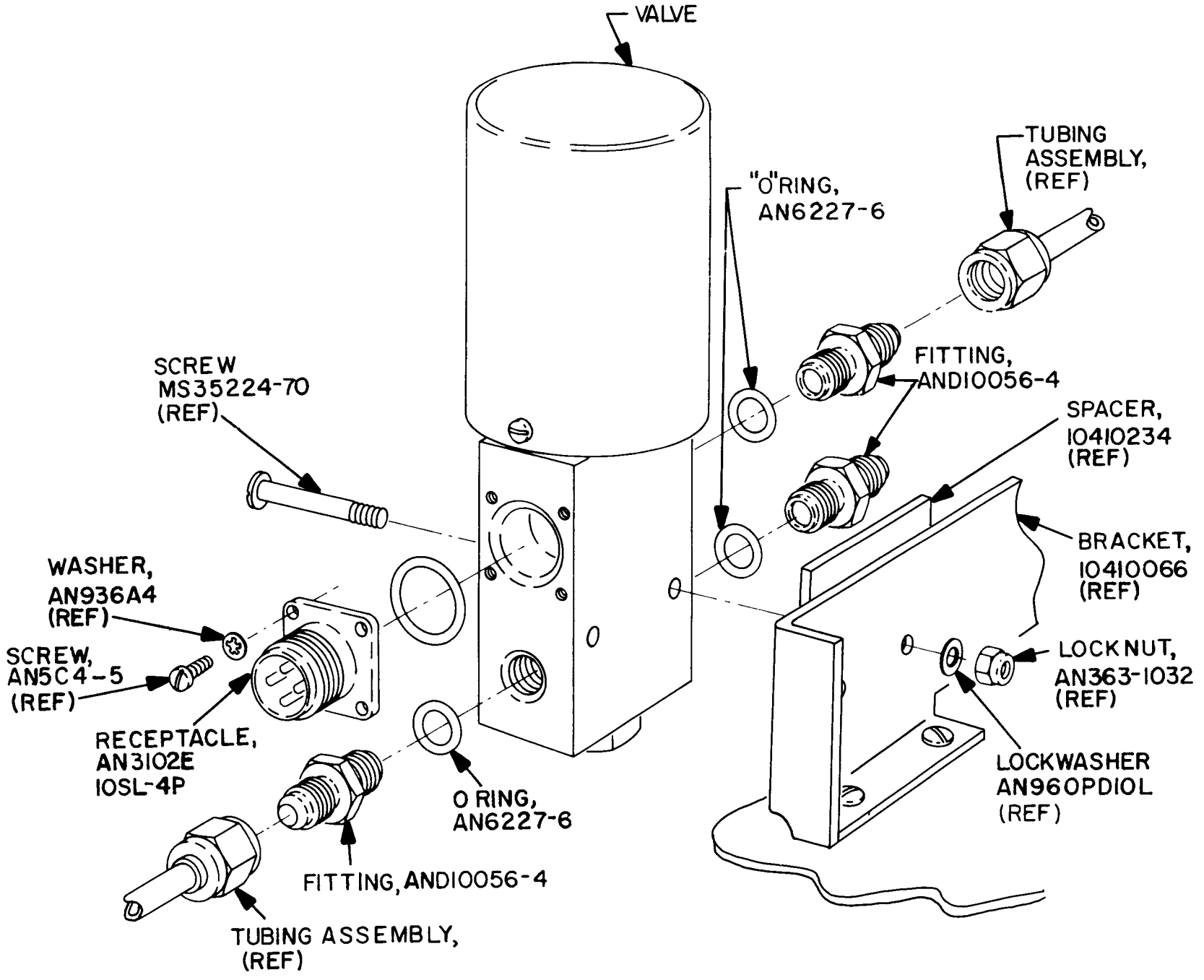

4.4.12 LOX AND FUEL PREVALVES CONTROL - INSTALLATION

QUICK DISCONNECT COUPLING PART NO. 10414064

The three-eight quick-disconnect coupling (B200) is used for the high-pressure tail battery filling and for fuel bubbling.

1. VENDOR - E. B. WIGGINS OIL TOOL CO., INC. PART NO. 6005 R67A6.
2. LOCATION - Station 158, fin No. 2 short cable mast 2 connection point.
3. SERVICE - gaseous nitrogen.
4. TEMPERATURE - OPERATING - Minus 65°F to plus 160°F.
5. PRESSURE -
   a. Operating: 3000 psig.
   b. Proof: 4500 psig.
   c. Burst: 7500 psig.
6. LEAKAGE ALLOWANCES - No external leakage.
7. LUBRICATION - Lubricate seals with 9970568 (KEL-F 10 OIL).

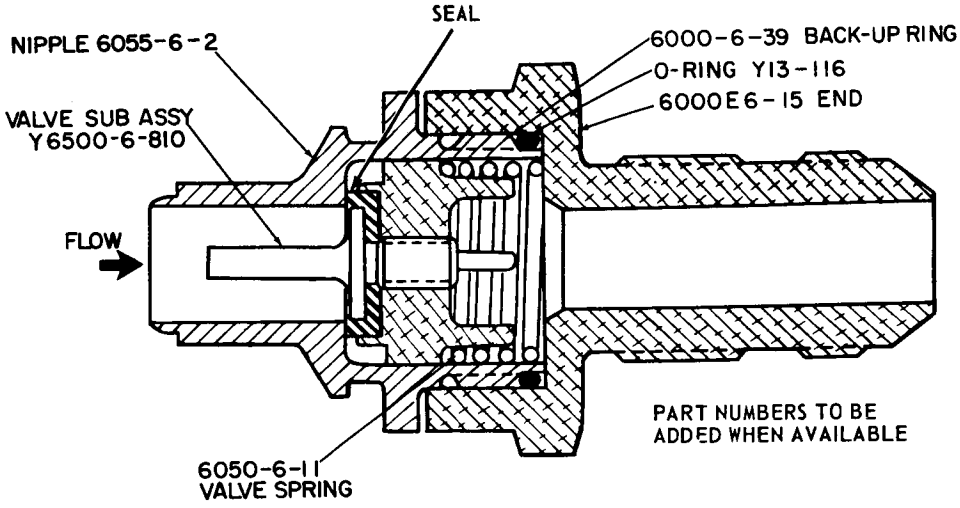

CH 0166

4.4.13 QUICK-DISCONNECT COUPLING 10414064
SECTIONAL VIEW

FILTER, PART NO. 10414026

SPHERE FILLING FILTER PART

The sphere filling filter (B201) is used in high-pressure battery fill line and the air bearing system.

CONTROL PRESSURE FILTER

The filter is located just upstream of the 750-psig regulator and serves to maintain cleaner GN_2 for the control system.

1. VENDOR - WALTER KIDDE AND COMPANY, INC., PART NO. 840473.
2. LOCATION - Station 200 in fuel tank No. 2.
3. SERVICE - Air, Helium, gaseous nitrogen.
4. PRESSURE -
   a. Operating: 3000 psig.
   b. Proof: 4500 psig.
   c. Burst: 7500 psig.
5. PRESSURE DROP -
   a. With 3000 psi on the line and a flow of 345 plus or minus 15 scfm Pressure Drop shall not exceed 24 psi, Type I ; 27 psi Type II
   b. With 3000 psi on the line and a flow of 1020 plus or minus 10 scfm into the filter the Pressure Drop shall not exceed 234 psi, Type I; 256 psi Type II.
6. TEMPERATURE - OPERATING - Minus 65° F to plus 180° F.
7. FILTRATION - (25 microns, type 1) (20 microns, type II)
8. RUBBER SEALS - Must meet the requirements of Specifications MSFC-STD-10509311.
9. LUBRICATION - Lubricate O-ring seals with 9970568 (KEL-F 10 Oil.)
10. LEAKAGE ALLOWANCE - External, no leakage allowed at 3000 psig.

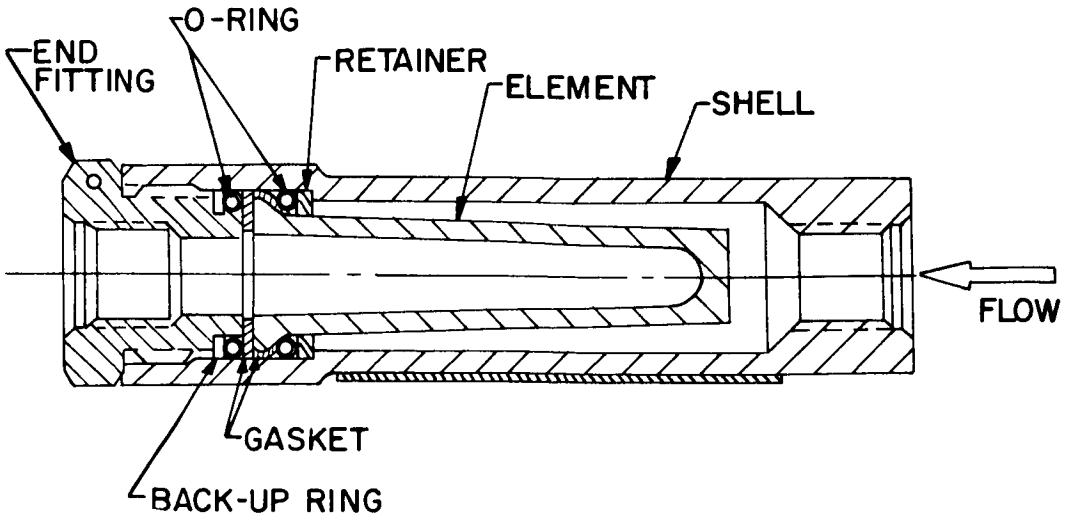

4.4.14 FILTER GN_2 LINE, 10414026, SECTIONAL VIEW CH 0180

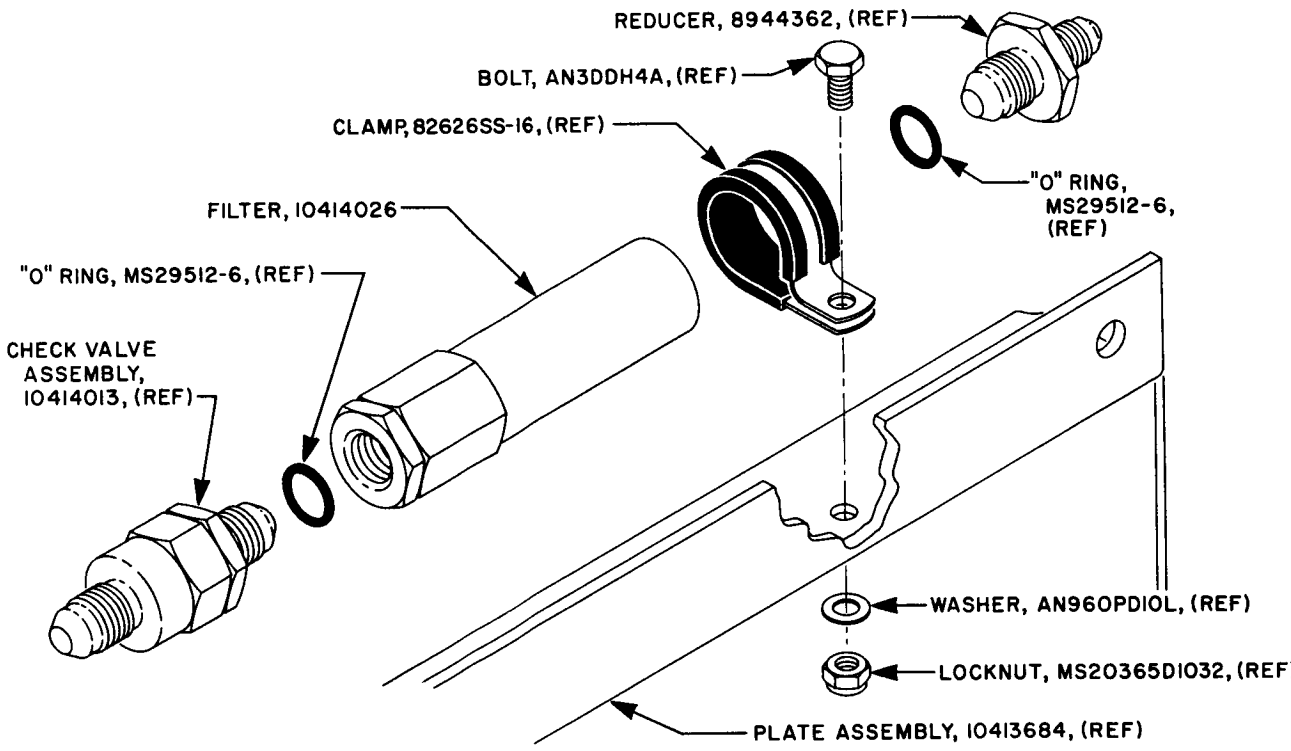

4.4.15 SPHERE FILLING FILTER 10414026 INSTALLATION

THIS PAGE INTENTIONALLY LEFT
BLANK

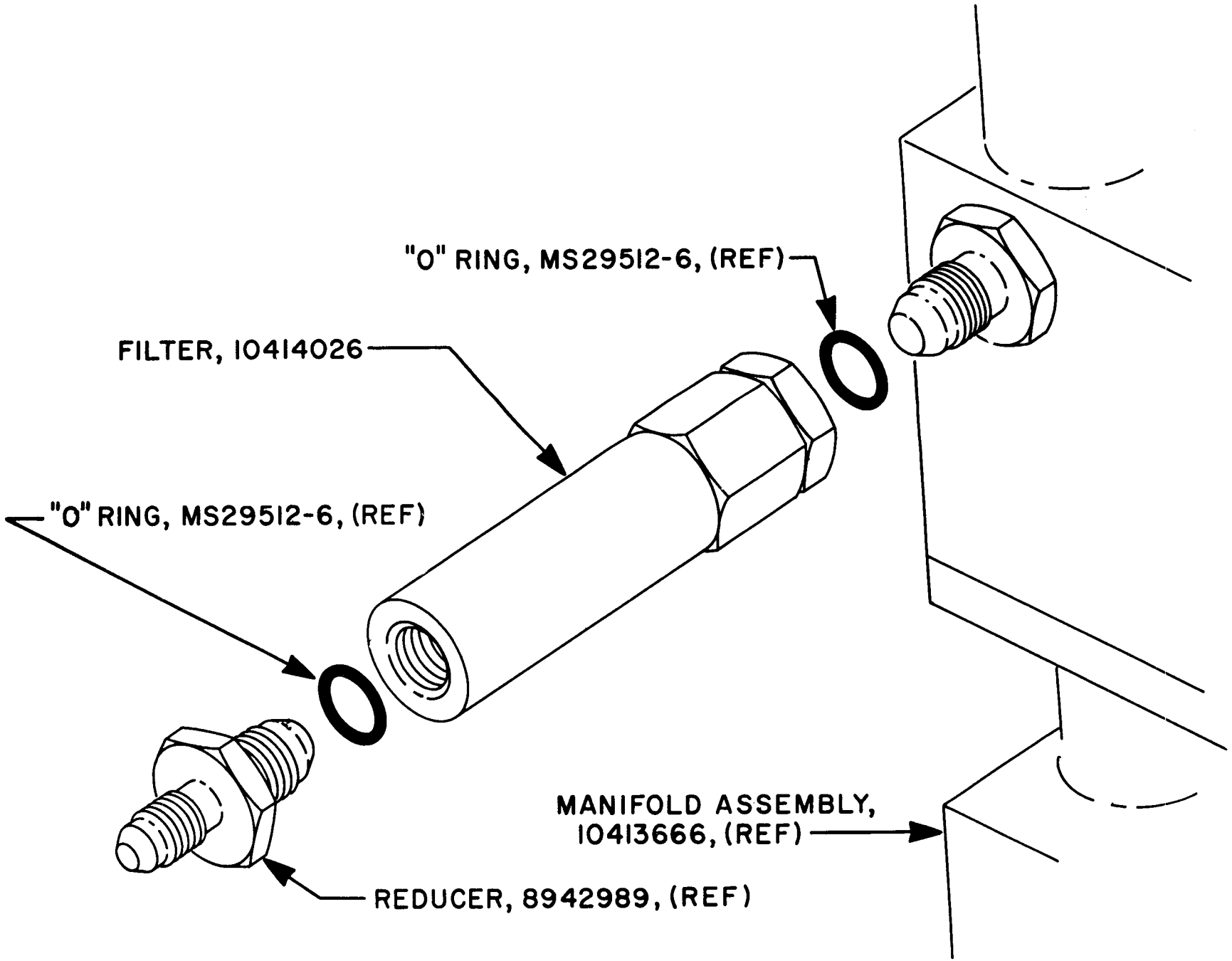

4.4.16 CONTROL PRESSURE FILTER, 10414026 - INSTALLATION

SPHERE FILLING CHECK VALVE PART NO. 10414013 (TYPE II)

The sphere filling check valve (B202), attached to the filter (B201), is used in the pneumatic fill line.

1. VENDOR-ADEL PRECISION PRODUCTS CORP., PART NO. 2989-1 and 23314-2.
2. LOCATION - Station 200 in fuel tank No. 2.
3. SERVICE - Air, helium, gaseous nitrogen.
4. PRESSURE -
   a. Operating: 3000 psig.
   b. Proof: 4500 psig.
   c. Burst: 7500 psig.
5. TEMPERATURE - OPERATING - Minus 65°F to plus 165°F.
6. LEAKAGE ALLOWANCES -
   a. Internal, past seat: 5 scim maximum at 500 to 3000 psig.
   b. External: No leakage allowed.
7. LUBRICATION - Lubricate seals with 9970568 (KEL-F 10 oil).
8. SPRING - Remove spring furnished by vendor.
9. RUBBER AGE CONTROL - Per A-10509311.

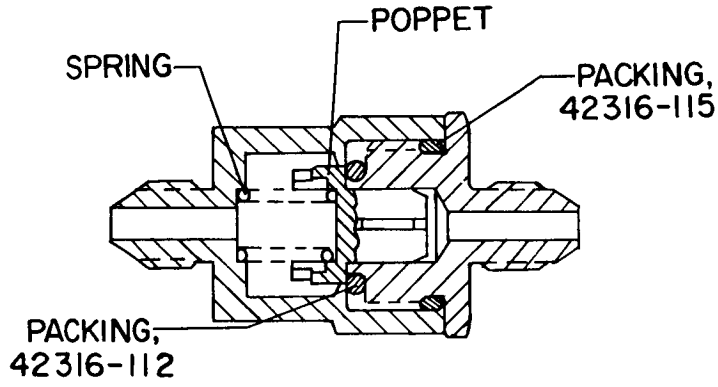

CH 0156

4.4.17 SPHERE FILLING CHECK VALVE, 10414013
SECTIONAL VIEW

4.4.24 1 June 1961

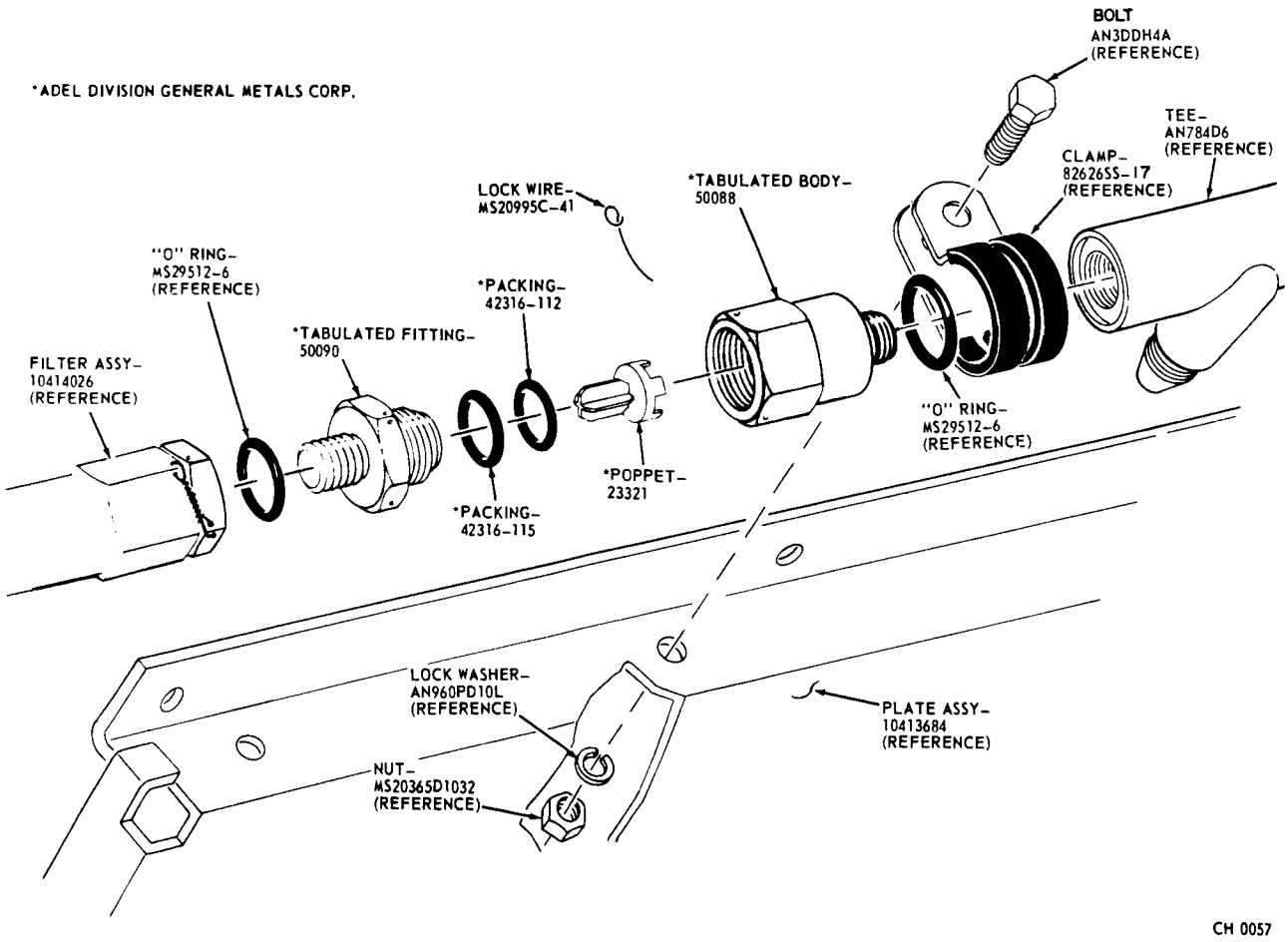

4.4.18 SPHERE FILLING CHECK VALVE 10414013
EXPLODED VIEW

15 September 1961

750 PSI CONTROL PRESSURE REGULATOR PART NO. 10414038

The manually operated 750-psi control pressure regulator (B205) is used to reduce high-pressure nitrogen to approximately 750 psig for the control pressure system.

1. VENDOR - NORTH AMERICAN AVIATION, INC., ROCKETDYNE, PART NO. 550278.
2. LOCATION - Station 200 in fuel tank No. 2.
3. SERVICE - Air, helium, gaseous nitrogen.
4. PRESSURE -
   a. Operating;
      1. Inlet 1000 to 3000 psig.
      2. Outlet 750 plus or minus psig.
   b. Proof: 4500 psig.
   c. Burst: 7500 psig.
   d. Relief: 940 plus or minus0 - 190 psig.
5. TEMPERATURE - OPERATING - Minus 25° F to plus 165° F.
6. LEAKAGE ALLOWANCES - With bleed valve closed, 3000 psig. on inlet port and regulated outlet pressure set at 750 psig.
   a. Bleed at plug 9512-959106-5-75 plus or minus 25 scim, Port B.
   b. Bleed at plug 9512-959106-7-150 plus or minus 50 scim, Port A.
   c. Leakage at bleed valve - 2 scim maximum
   d. Leakage at seat 9650-48019-10 scim maximum.
   e. External - No leakage allowed.
7. RUBBER SEALS - Must meet requirements of Specification MSFC-10509311.

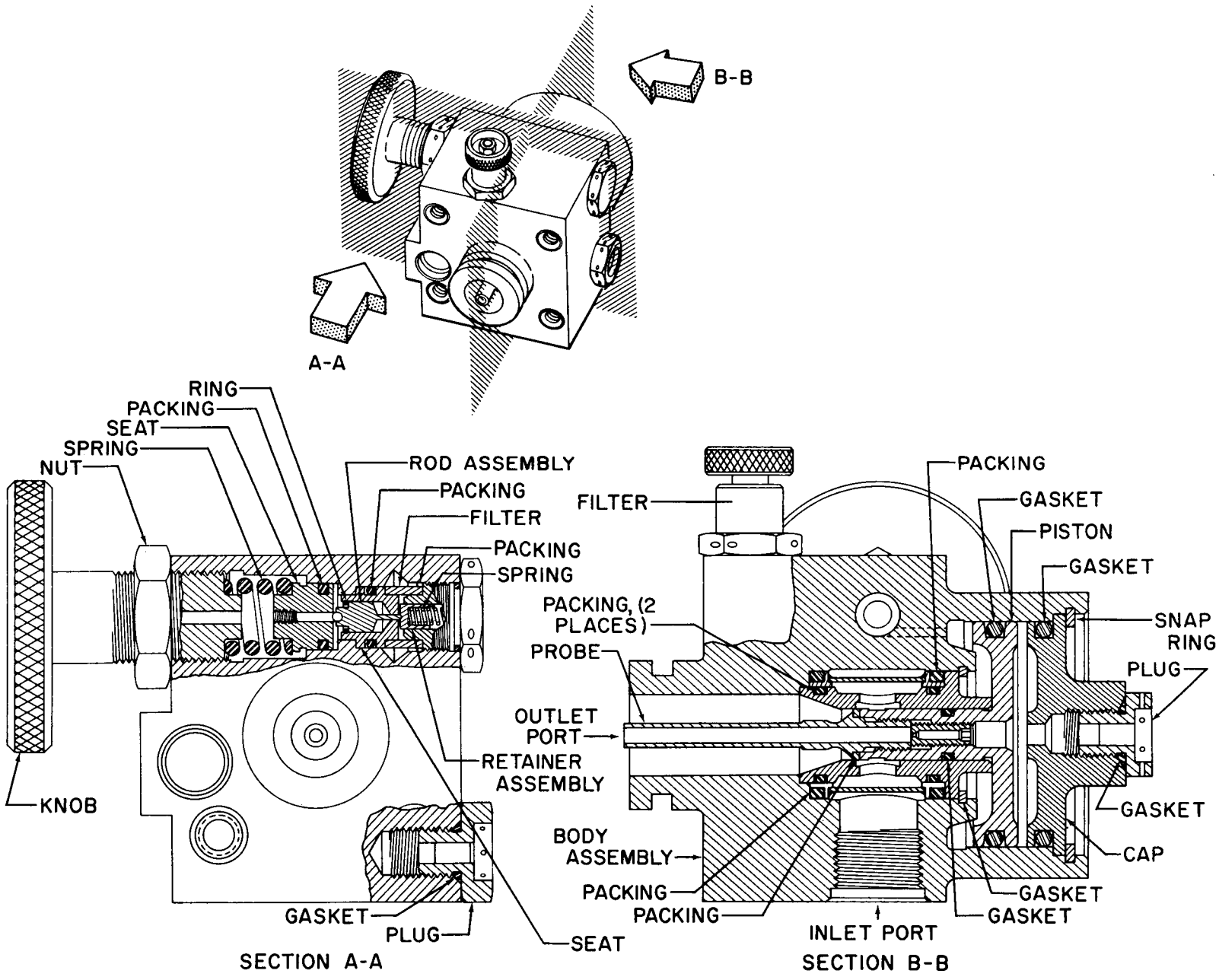

4.4.19 (Sheet 1 of 2) CONTROL PRESSURE REGULATOR, 750 PSI, 10414038

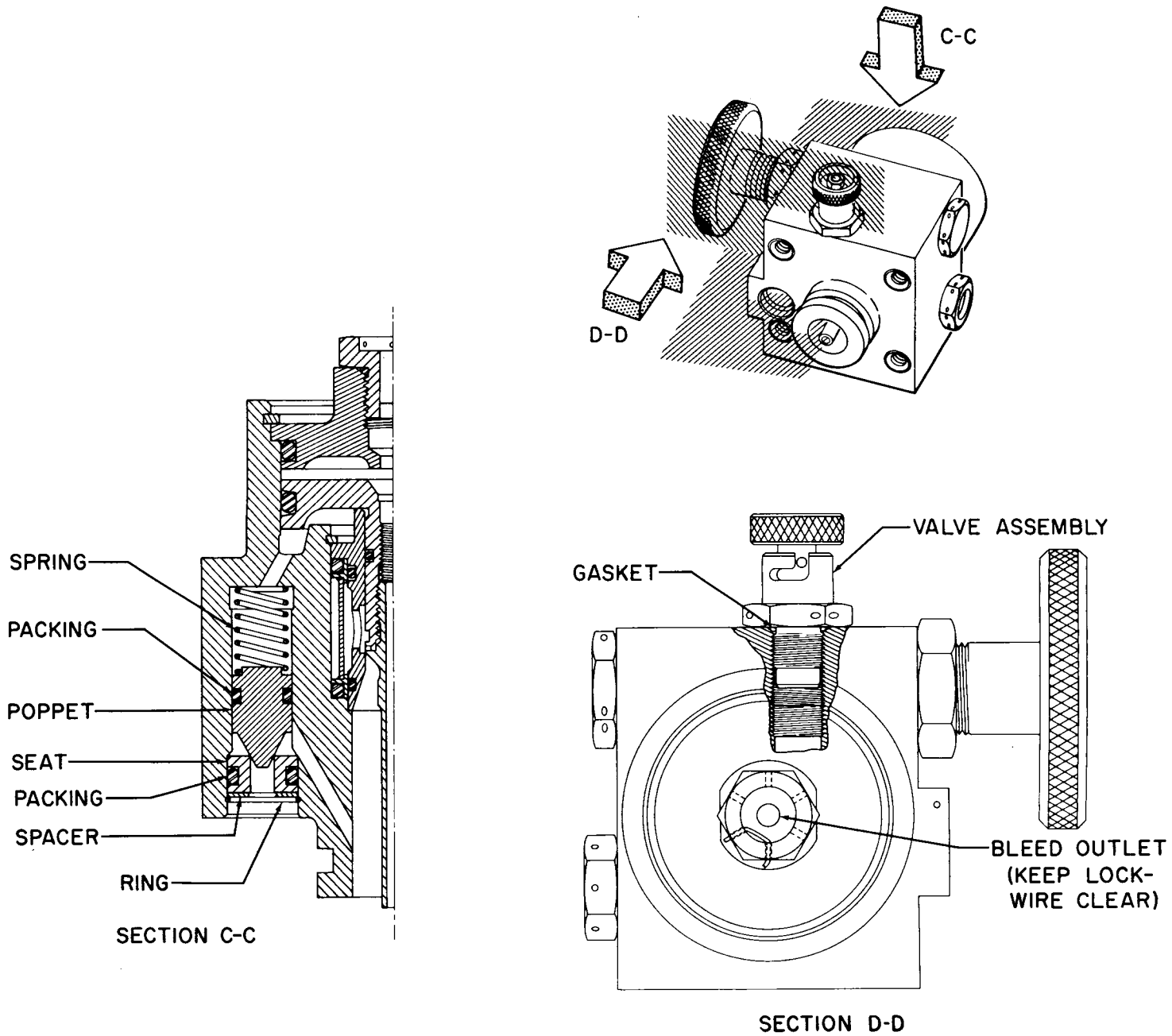

4.4.19 (Sheet 2 of 2) CONTROL PRESSURE REGULATOR, 750 PSI, 10414038

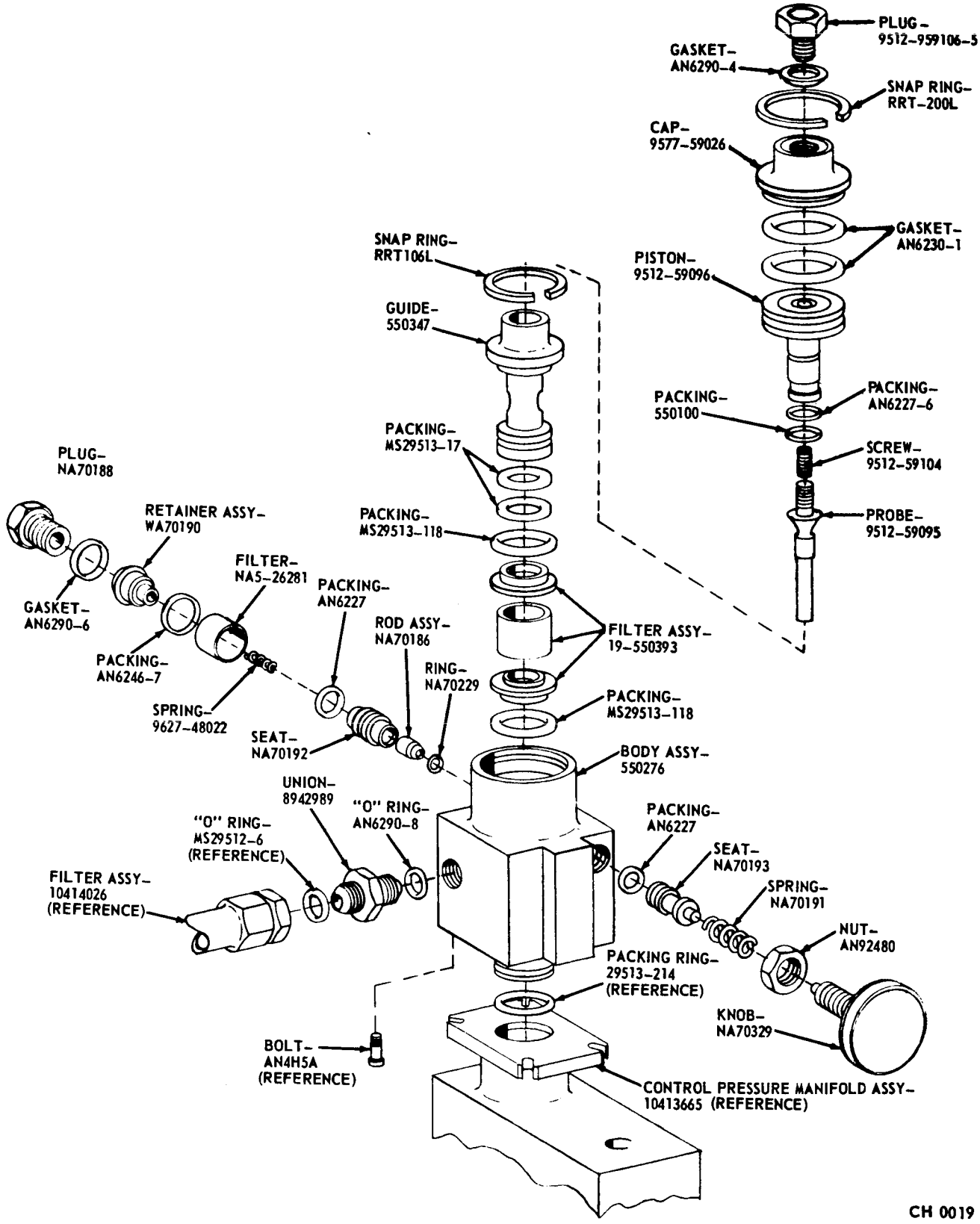

4.4.20 CONTROL PRESSURE REGULATOR, 750 PSI INSTALLATION

750 PSI O.K. CONTROL PRESSURE SWITCH PART NO. 10414042

The 750 psi pressure switch (B206) is installed in a pressure control line and senses the output of the control pressure regulator (B205). The pressure swtich is calibrated by the three-way needle valve (B207) and relief valve (B208).

1. VENDOR - SOUTHWESTERN INDUSTRIES, INC., PART NO. PS 5100A
2. LOCATION - Station 196 at fuel tank No. 2.
3. SERVICE - Gaseous nitrogen or air.
4. PRESSURE -
   a. Actuation:
      1. Increasing 625 plus or minus 25 psig.
      2. Differential 50 psig maximum.
   b. Proof: 1125 psig.
   c. Burst: 1875 psig.
5. TEMPERATURE, OPERATING - Minus 40° to plus 165° F.
6. ELECTRICAL -
   a. Continuity: N.C. Pins, "A" and "B", on decreasing pressure, Pins "B" and "C", 0.5 ohm maximum resistance allowed.
   b. Insulation resistance: 500 volt Megger test each isolated terminal to valve body, 50 megohms minimum.
   c. Indicating lights: At no time may both indicating lights for the N. O. and N. C. positions be off when power is applied.
   d. Voltage: 18 to 30 volt dc.
   e. Switch: Single Role, double throw, 2.5 resistive load at 28 volts VDC.
7. RUBBER SEALS - Must meet the requirements of Specification MSFC 10419909.
8. LUBRICATION - Lubricate O-ring seals with A-9970563 (KEL-F 10 OIL).

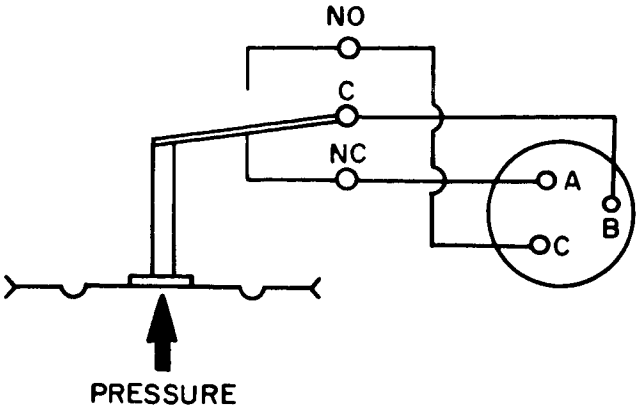

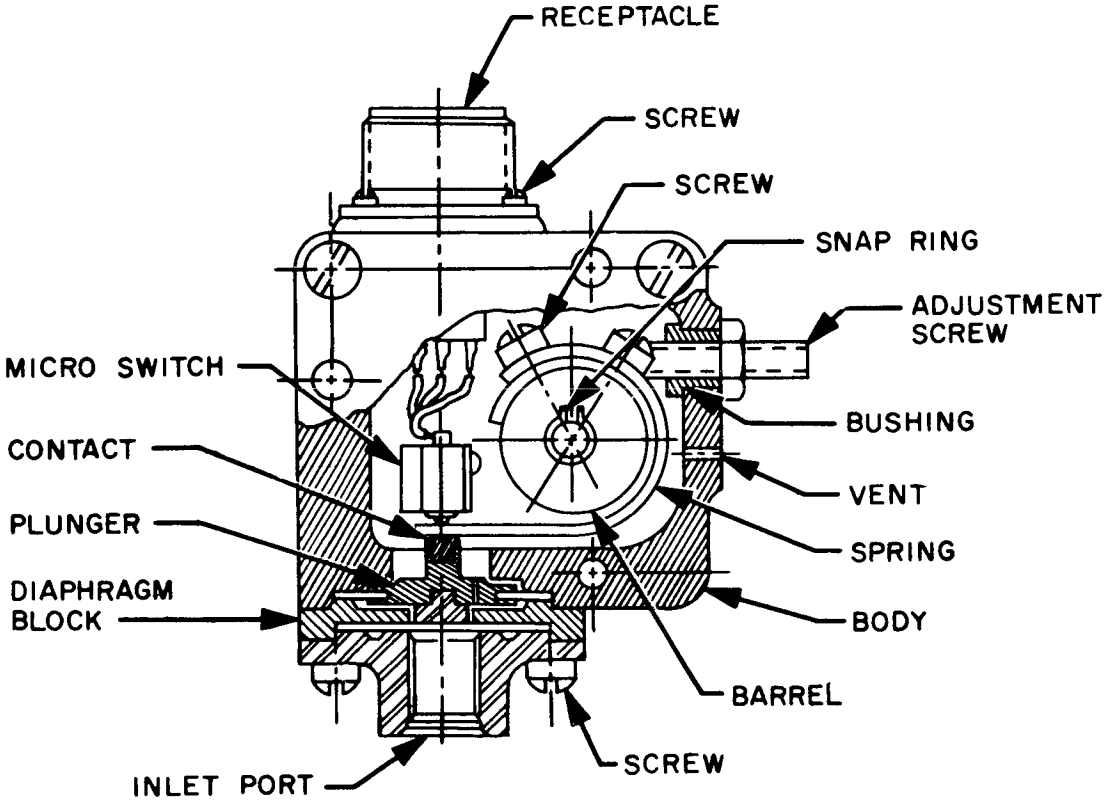

4.4.21 CONTROL PRESSURE O. K. SWITCH, 750 PSI SECTIONAL VIEW

THIS PAGE INTENTIONALLY LEFT
BLANK

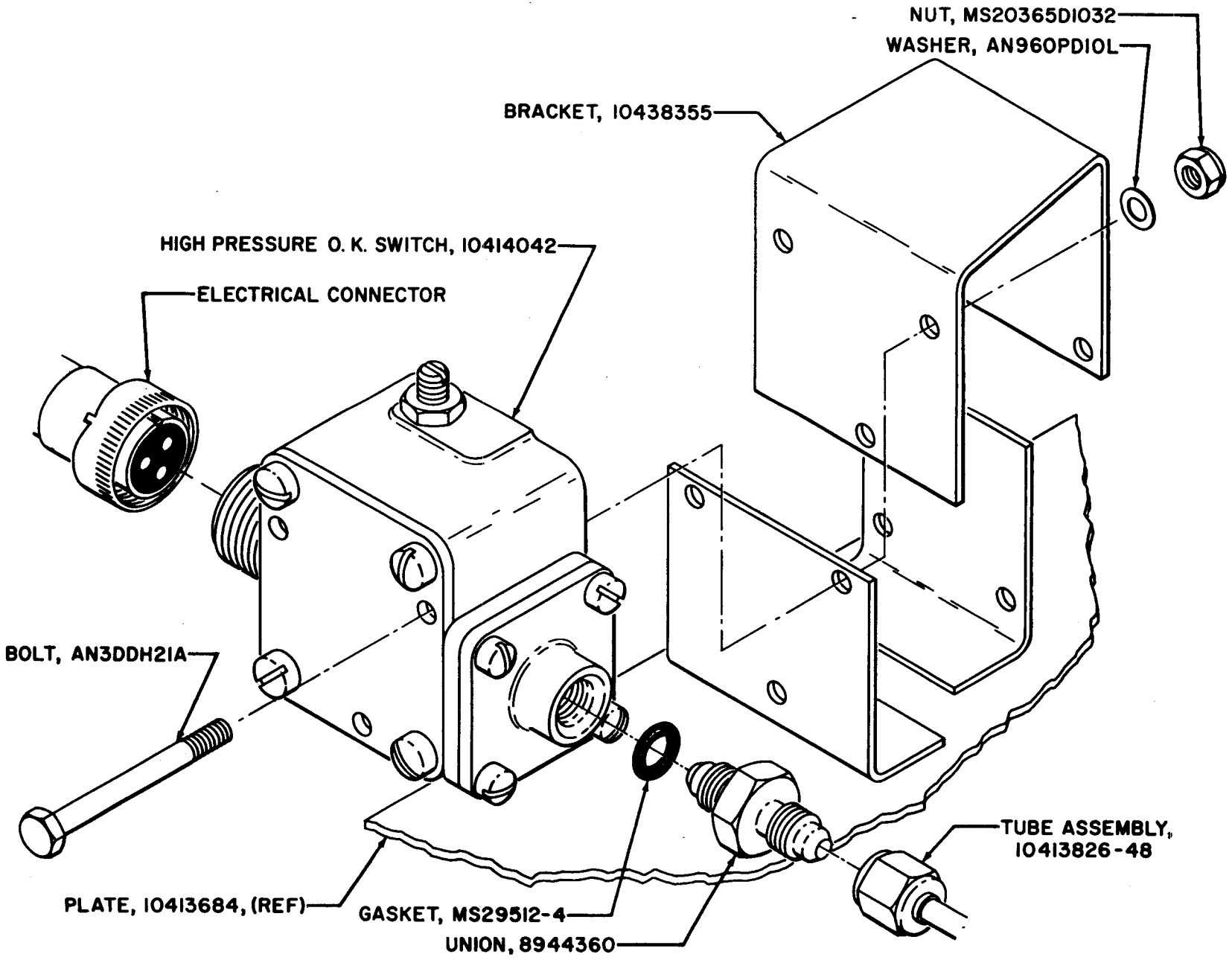

FIG. 4.4.22 CONTROL PRESSURE O.K. SWITCH, 750 PSI - INSTALLATION

CONTROL PRESSURE VALVE PART NO. 10414076

The manually operated control valve (B207) is used to calibrate the 750 psi pressure switch (B206).

The manually operated control valve (B209) is used to isolate the system or to calibrate the high-pressure o.k. switch (B216).

The key for attaching tube assemblies for the control pressure valves is as follows:

B207	B209
1. 10413826-54	1. 10413826-48
2. 10413826-50	2. 10413826-47
3. 10413826-48	3. 10413826-52

Refer to page 4.1.26, figure 4.1.15, for technical data and illustration.

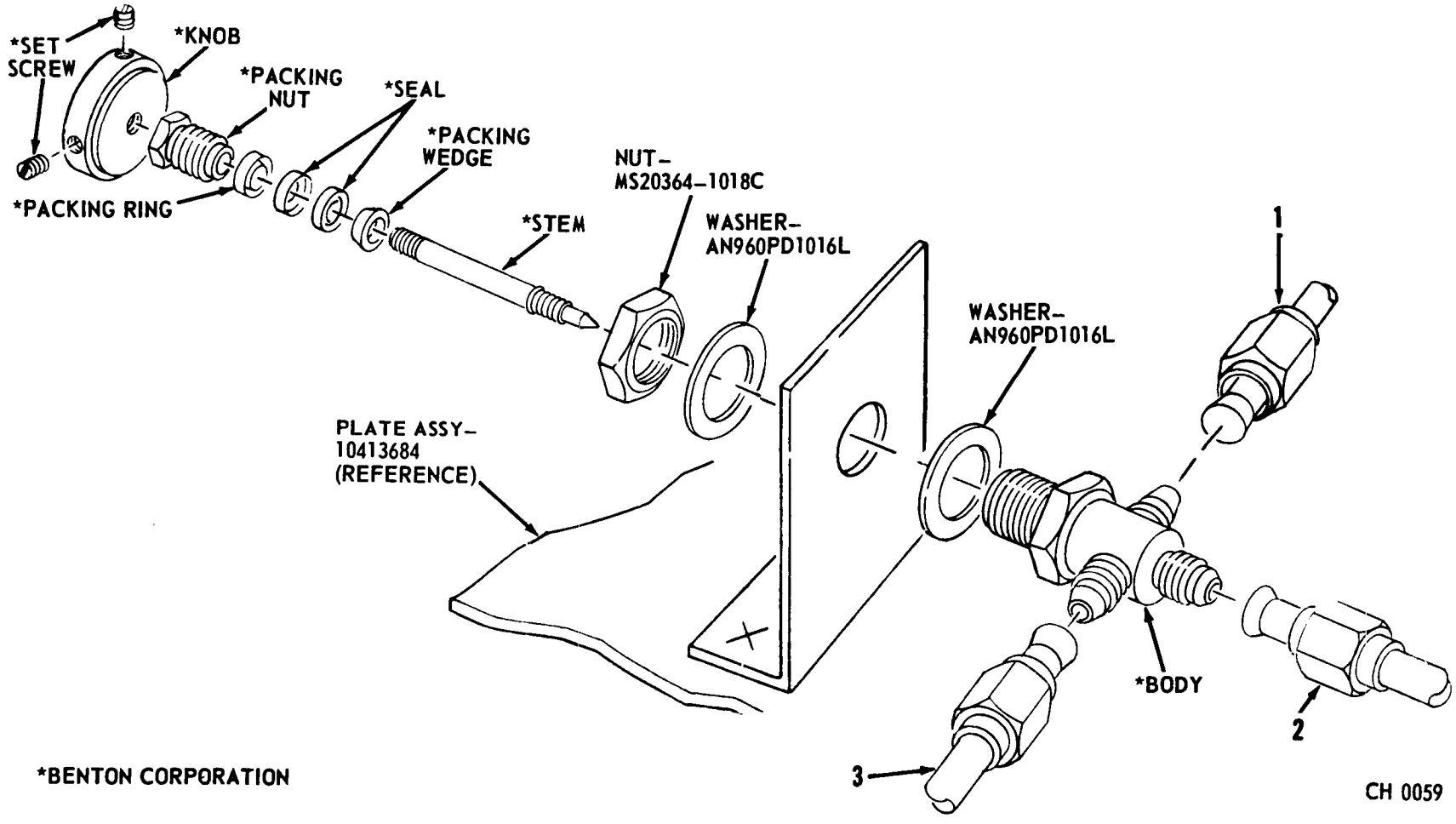

*BENTON CORPORATION

4.4.23 CONTROL PRESSURE VALVE 10414076 - EXPLODED VIEW

750 PSI PRESSURE RELIEF VALVE PART NO. 10414054

The 750 psi pressure relief valve (B208) is incorporated in the booster gaseous nitrogen control system to prevent excessive pressure build-up in the 750 psi lines in the event of regulator (B205) malfunction.

1. VENDOR - ROCKETDYNE THEIR PART NO. 550435.
2. LOCATION - The 10414054 valve is located at Station 205 in fuel tank No. 2.
3. SERVICE - Air, helium, or gaseous nitrogen.
4. RUBBER SEALS - Must meet the requirements of MSFC Specification 10509311.
5. OPERATING TEMPERATURE - Minus 65°F to plus 160°F.
6. LUBRICATION - All seals must be lubricated according to MIL-L-4343.
7. LEAKAGE ALLOWANCES -
   a. Internal:
      1. Through six main vent holes; two scim at 750 ± 15 psig.
      2. Through 1/4" vent; two scim maximum at 750 ± 15 psig.
   b. External: No leakage allowed.
8. PRESSURE -
   a. Nominal operating: 750 psig.
   b. Proof: 1125 psig.
   c. Burst: 1875 psig.
   d. Reseat: 845 psig. minimum.
   e. Valve to be set to relieve at 950 ± 20 psig.

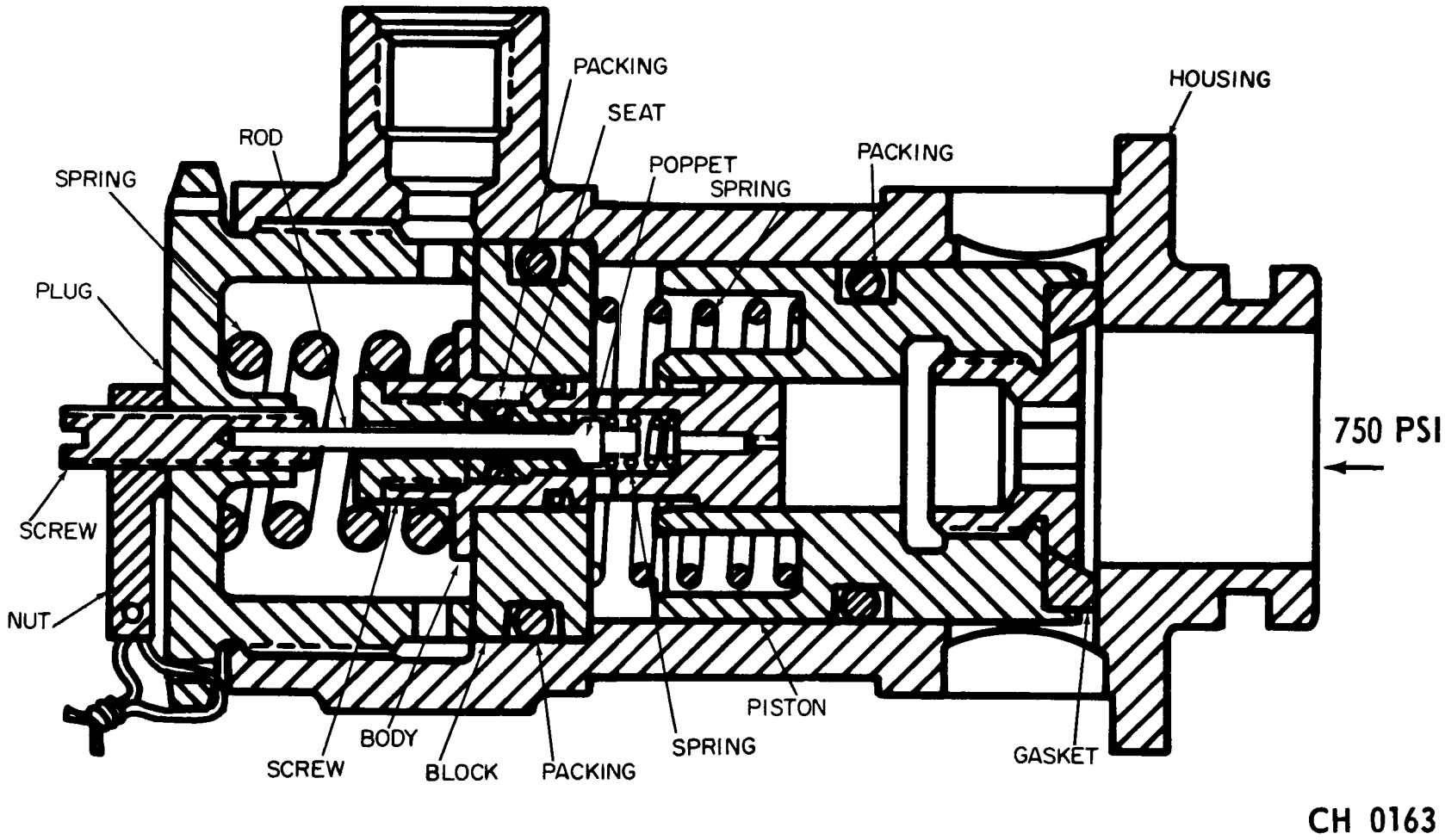

4.4.24 PRESSURE RELIEF VALVE, 750 PSI, 10414054 SECTIONAL VIEW

THIS PAGE INTENTIONALLY LEFT
BLANK

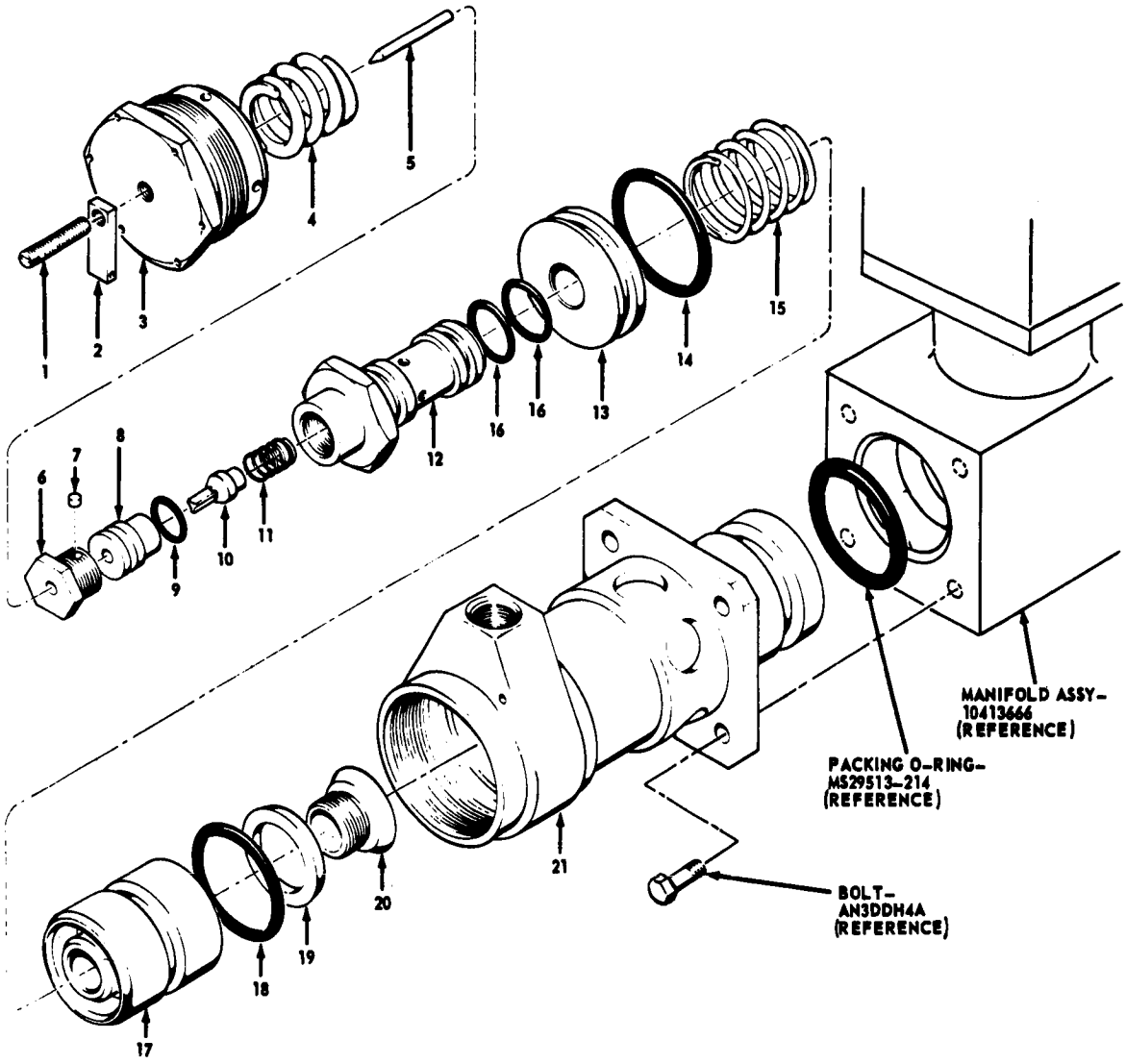

1 SCREW-550442
2 NUT-9627-59971
3 PLUG-550438
4 SPRING-550359
5 ROD-550353
6 SCREW-550355
7 INSERT-550444
8 SEAT-550357
9 PACKING-AN6227-2
10 POPPET-550358
11 SPRING-550361
12 BODY-550354
13 BLOCK-550436
14 PACKING-AN6227-21
15 SPRING-550443
16 PACKING-AN6227-6
17 PISTON-9512-45154
18 PACKING-AN6227-19
19 GASKET-9512-45156
20 NUT-550437
21 HOUSING-550861

CH 0004

4.4.25 PRESSURE RELIEF VALVE, 10414054, 750 PSI - EXPLODED VIEW

CONTROL PRESSURE FILL AND VENT VALVE PART NO. 10414030

The fill and vent valve (B210) is a control valve that serves as a fill and vent valve for the high-pressure pneumatic storage spheres (B203, B223).

1. VENDOR - MAROTTA VALVE CORP., PART NO. 213854.
2. LOCATION - Station 210 in fuel tank No. 2.
3. SERVICE - Air, helium, gaseous nitrogen.
4. PRESSURE -
   a. Operating: 3000 psig.
   b. Proof: 4500 psig.
   c. Burst: 7500 psig.
5. TEMPERATURE - OPERATING - Minus 65°F to plus 165°F.
6. ELECTRICAL -
   a. Continuity: Coil resistance; 18 ± 1.0 ohms at 68°F.
   b. Insulation Resistance: 500 volt Megger each isolated terminal to valve body; 50 megohms minimum.
   c. Current: 1.3 amp maximum at 24 vdc.
   d. Voltage: 18 to 28 vdc.
   e. Solenoid Pull-in: 18 volt maximum.
   f. Solenoid Drop-out: 10 volt maximum, 1 volt minimum at 3000 psig.
7. LEAKAGE ALLOWANCES -
   a. Internal, past main seat: 5 scim maximum at 3000 psig.
   b. External: No leakage allowed.
8. RUBBER SEALS - Must meet the requirements of Specification ABMA-STD-29.
9. LUBRICATION - Lubricate O-ring seals with 9970568 (KEL-F 10 OIL).

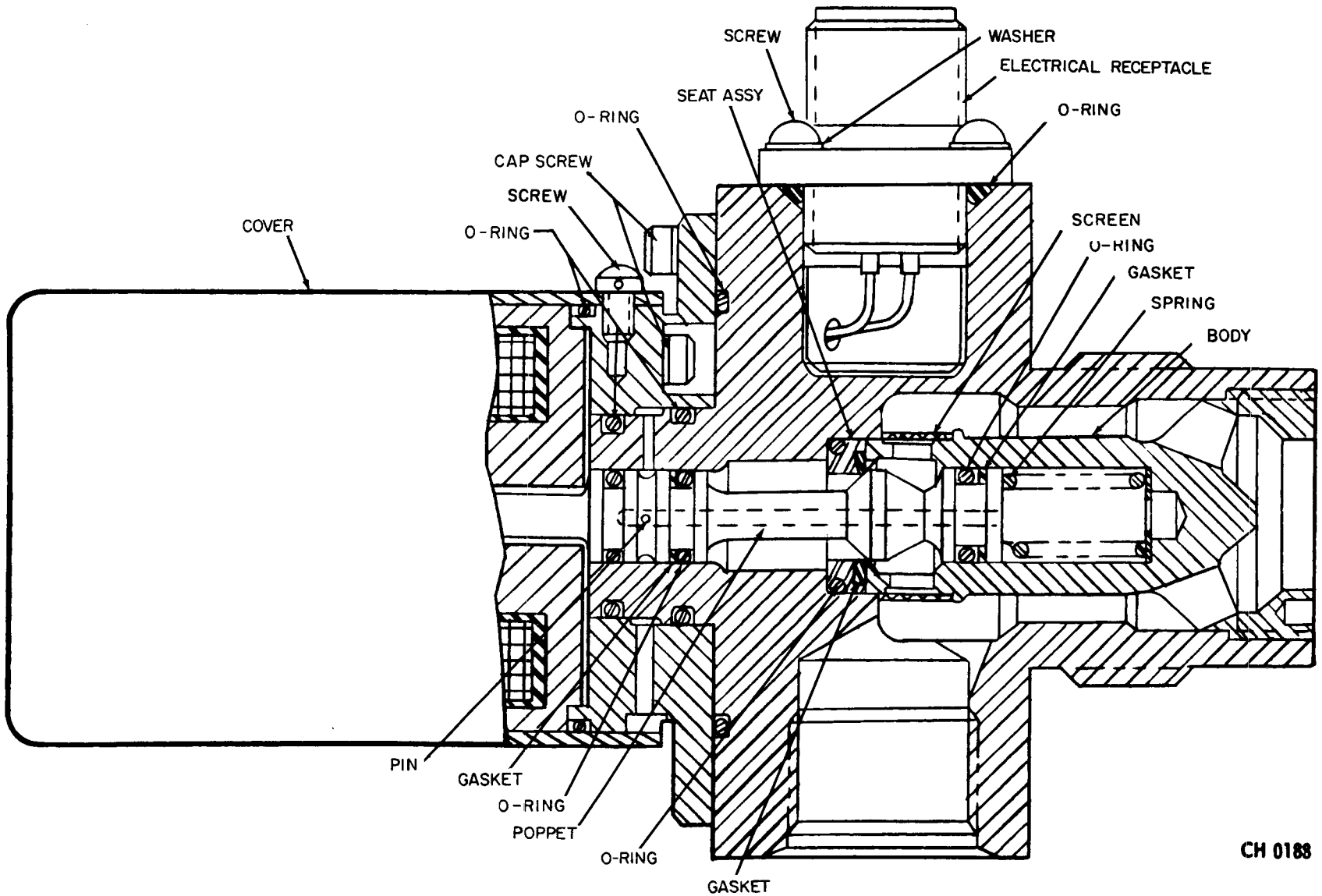

4.4.26 CONTROL PRESSURE FILL AND VENT VALVE, 10414030
SECTIONAL VIEW

THIS PAGE INTENTIONALLY LEFT
BLANK

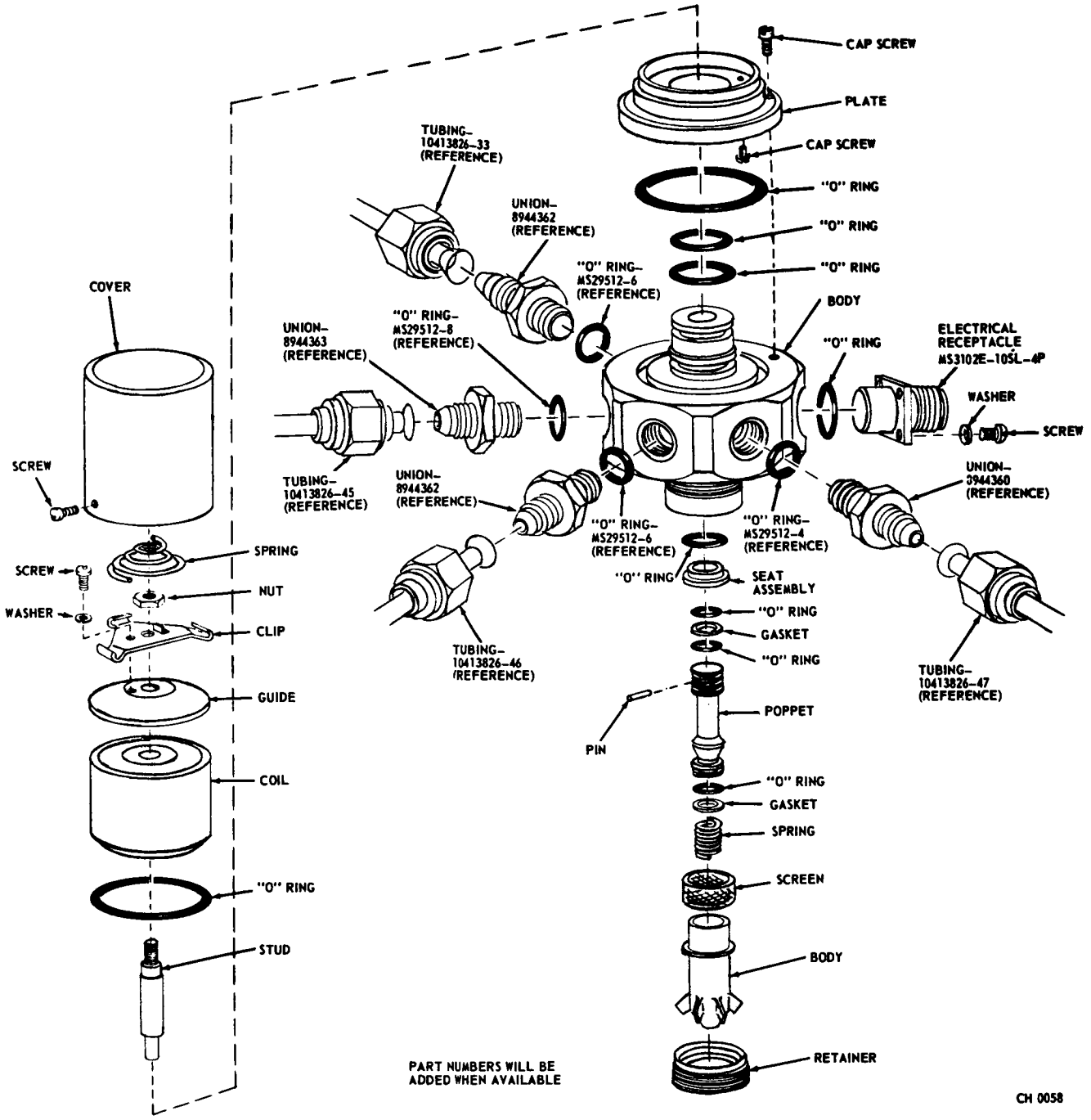

4.4.27 CONTROL PRESSURE FILL AND VENT VALVE, 10414030
EXPLODED VIEW

LOX RELIEF VALVE CONTROL VALVE PART NO. 10414310

LOX relief valves Nos. 1 and 2 are each controlled by a LOX relief valve control valve.

Prior to Lift-off, the LOX relief valves are closed by de-energizing their respective control valves in order to pressurize the tanks. Should the pressure in the LOX tanks exceed 60 psia, LOX relief valve No. 1 (B160) is opened by pressure and relief switch (B184) and control valve (B214). If this fails to maintain or reduce the pressure, emergency switch (B183) set for 65 psia, will signal LOX relief and vent control valves (B215 and B213) to open LOX relief and vent valves (B161 and B162). This will give sufficient relief to the LOX containers. Valve (B185) calibrates switches (B183 and B184).

1. VENDOR - MAROTTA VALVE CORP. PART NO. 214083-11.
2. LOCATION - Two 10414310 valves are used at Station 871. One over LOX tank No. 1 and one over LOX tank No. 2.
3. SERVICE - Air, helium, gaseous nitrogen.
4. PRESSURE -
   a. Operating: 750 psig.
   b. Proof: 1125 psig.
   c. Burst: 1875 psig.
5. TEMPERATURE - OPERATING - Minus 65°F to plus 160°F.
6. LEAKAGE ALLOWANCES -
   a. Internal, past main seats: 5 scim maximum, with valve energized and de-energized.
   b. External: No leakage allowed.
7. LUBRICATION - Lubricate rubber seals with Dow Corning DC-55 Grease.
8. ELECTRICAL -
   a. Continuity: Coil, at 70°F; 23 plus or minus 2 ohms maximum resistance.
   b. Insulation Resistance: 500 volt Megger tests each isolated terminal to valve body 50 megohms minimum.
   c. Solenoid Dropout: 10 volts maximum, 1 volt minimum.
   d. Solenoid Pull-in: 18 volts maximum. (Excessive pull-in can be adjusted with a screw on the bottom of the valve, provided stroke is within tolerance.)
   e. Amperage: 0.94 to 1.2 at 24 plus or minus 0.5 volts.
   f. Random selected units must withstand energization at 28 vdc for 4 hours without adverse effects to solenoid or function of valve.
9. RUBBER SEALS - Must meet requirements of ABMA-STD-29.
10. LOCKWIRE - All fittings per MS 33540.

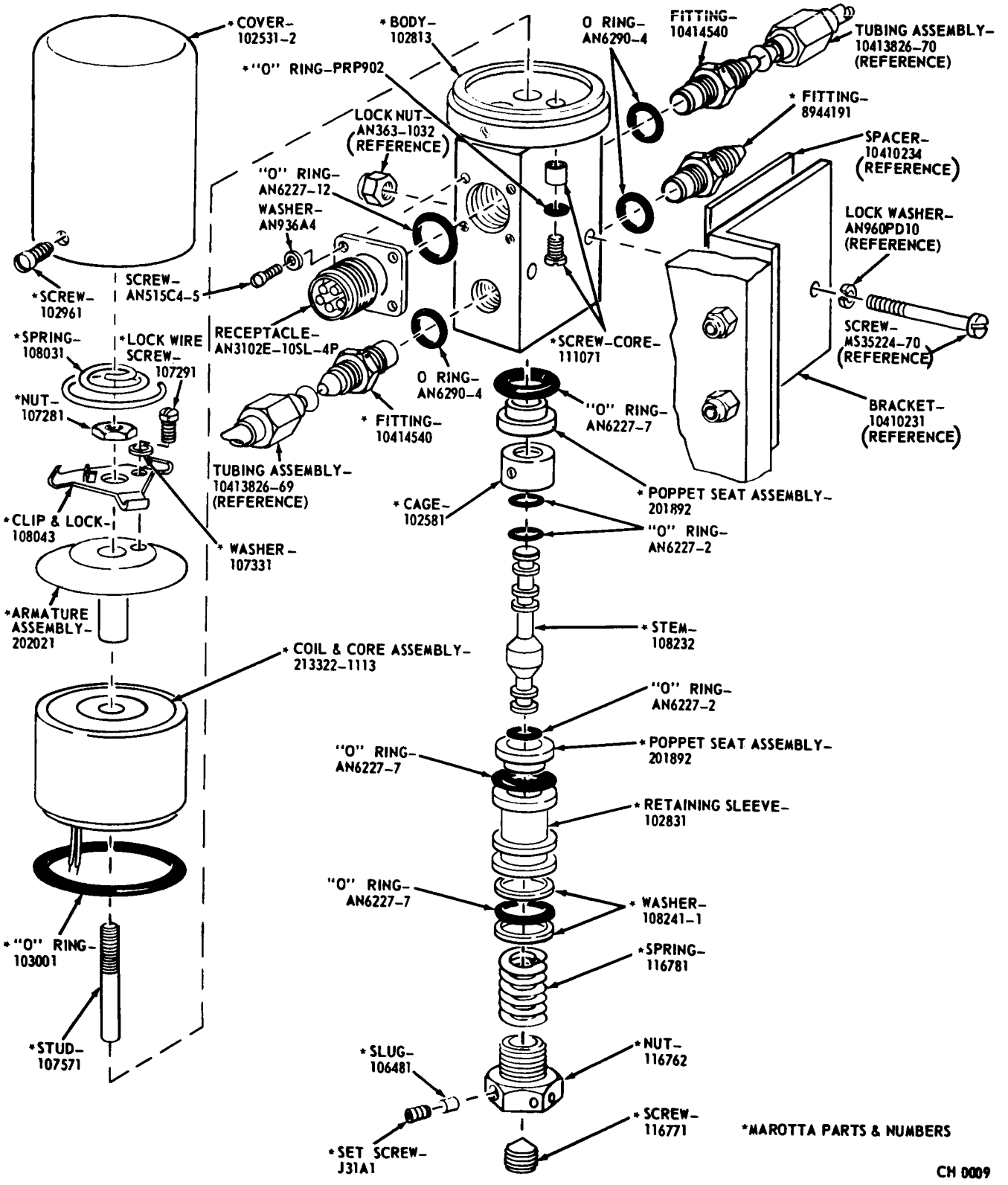

4.4.28 LOX RELIEF VALVE CONTROL VALVE, 10414310
EXPLODED VIEW

CONTROL PRESSURE HIGH PRESSURE O.K. SWITCH PART NO. 10414029

This switch (B216) is utilized to monitor the 3000 psig GN_2 in the control pressure storage spheres.

1. VENDOR-SOUTHWESTERN INDUSTRIES, INC., PART NO. PS-3800-3050.
2. LOCATION - Station 196 in fuel tank No. 2.
3. SERVICE - Air, or gaseous nitrogen.
4. PRESSURE -
   a. Operating: 3100 psig.
   b. Proof: 5000 psig.
   c. Switch actuation: Switch to actuate on increasing pressure at 3050 plus or minus 66 psig and dropout at 2850 psig minimum.
5. ELECTRICAL -
   a. Continuity: N.C. Pins, "A" and "B", on decreasing pressure, Pins "B" and "C", 0.5 ohm maximum resistance allowed.
   b. Insulation resistance: 500 volt Megger test each isolated terminal to valve body; 50 megohms minimum.
   c. Indicating lights: At no time may both indicating lights for the N.O. and N.C. positions be off when power is applied.
6. TEMPERATURE - OPERATING - Minus $40^{\circ}F$ to plus $160^{\circ}F$.
7. RUBBER SEALS - Rubber seals must meet requirements of Specification A 10509311.
8. LUBRICATION - Lubricate rubber seals with DC 33.
9. LEAKAGE - No Leakage.

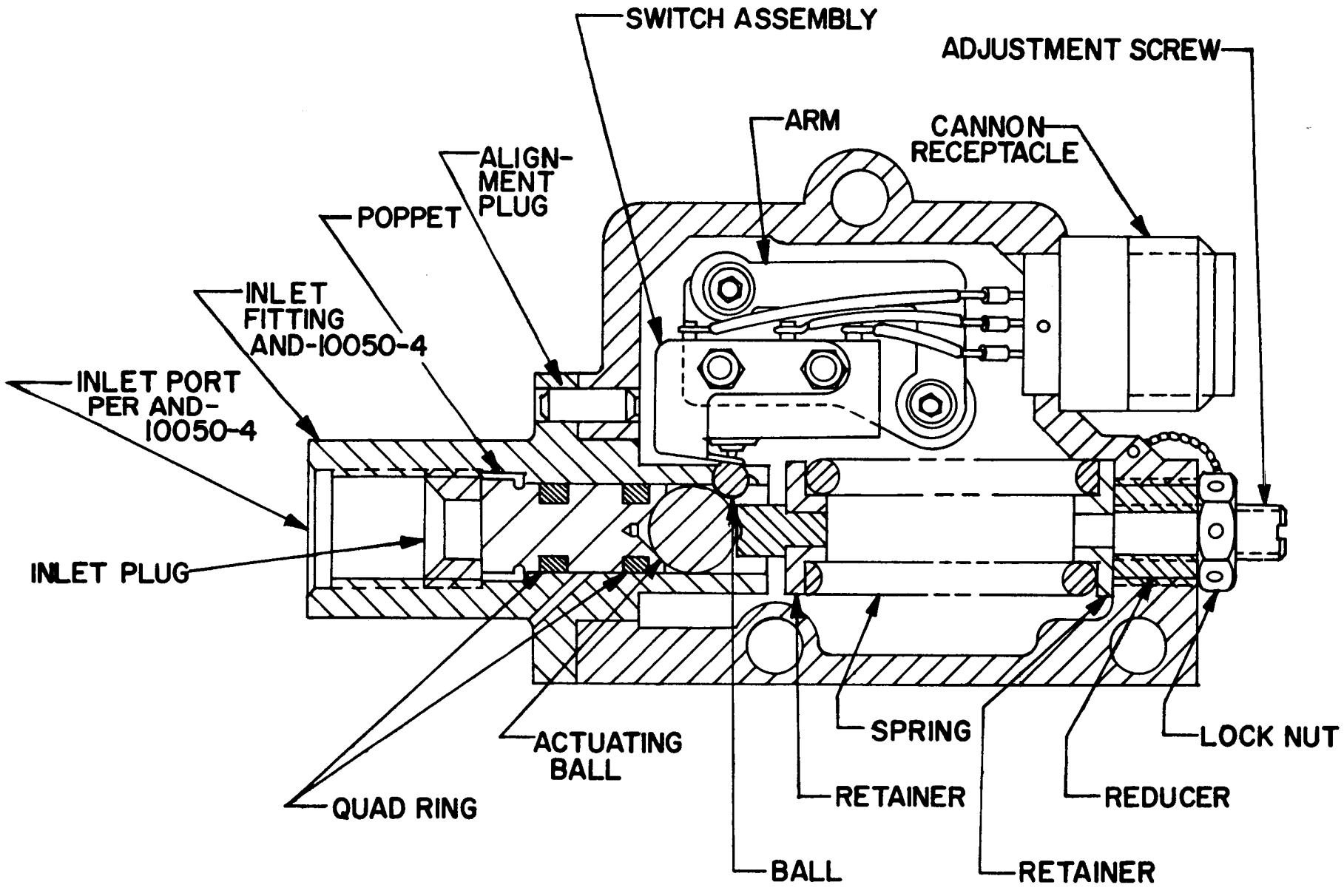

4.4.29 CONTROL PRESSURE HIGH PRESSURE O.K. SWITCH, 10414029
SECTIONAL VIEW

THIS PAGE INTENTIONALLY LEFT BLANK

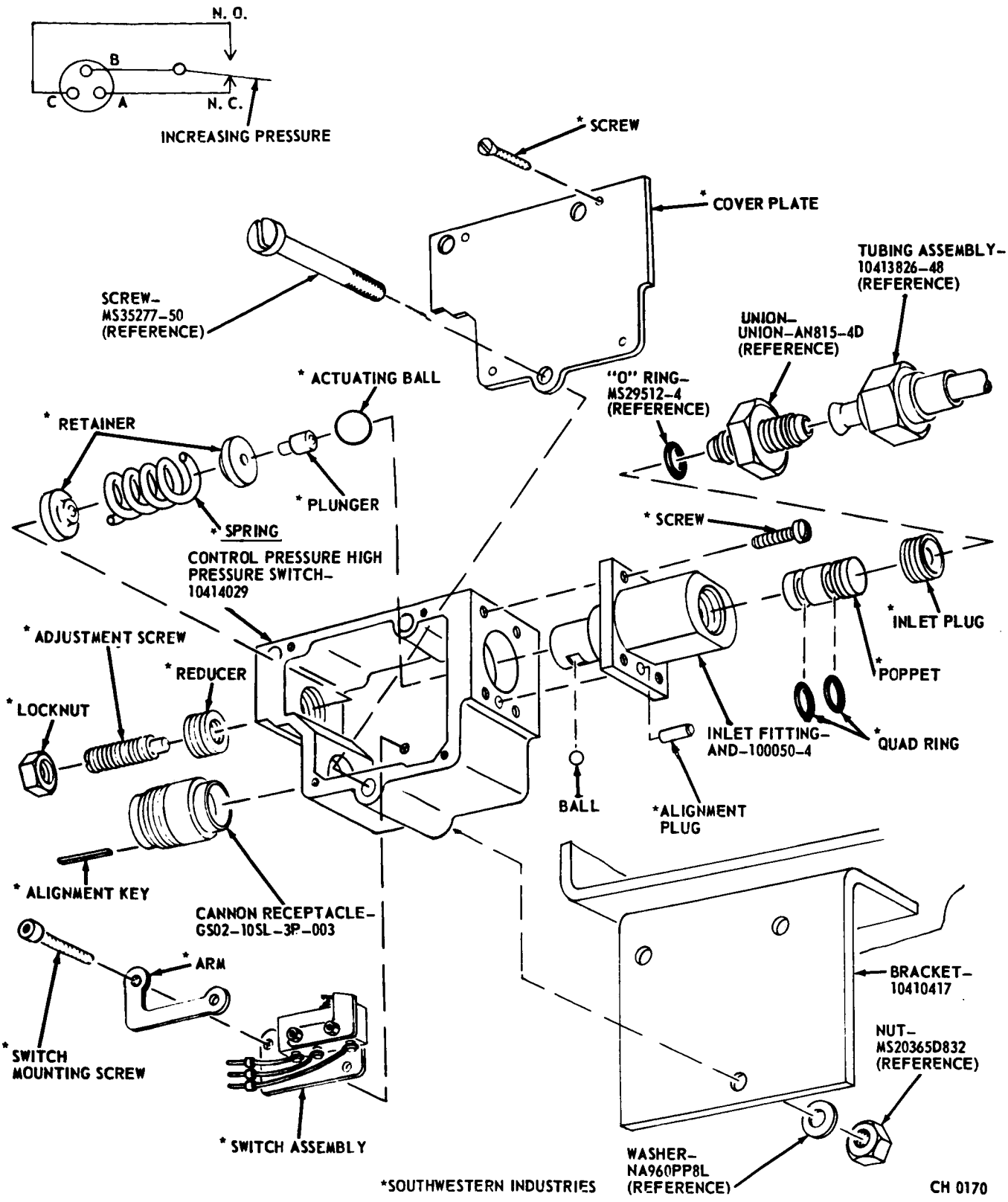

4.4.30 CONTROL PRESSURE HIGH PRESSURE O.K. SWITCH, 10414029
EXPLODED VIEW

TURBOPUMP PRESSURIZING AND LOX SEAL PURGE CONTROL VALVE PART NO. 10414087

The manually-operated control valve (B220) is used to supply 750 psi air to pressurize the turbopump gearbox during flight and purge the LOX seal of the turbopump. The control valve is located at Station 120.

Refer to page 4.3.28 and Figure 4.3.19 for technical data and illustration of the valve.

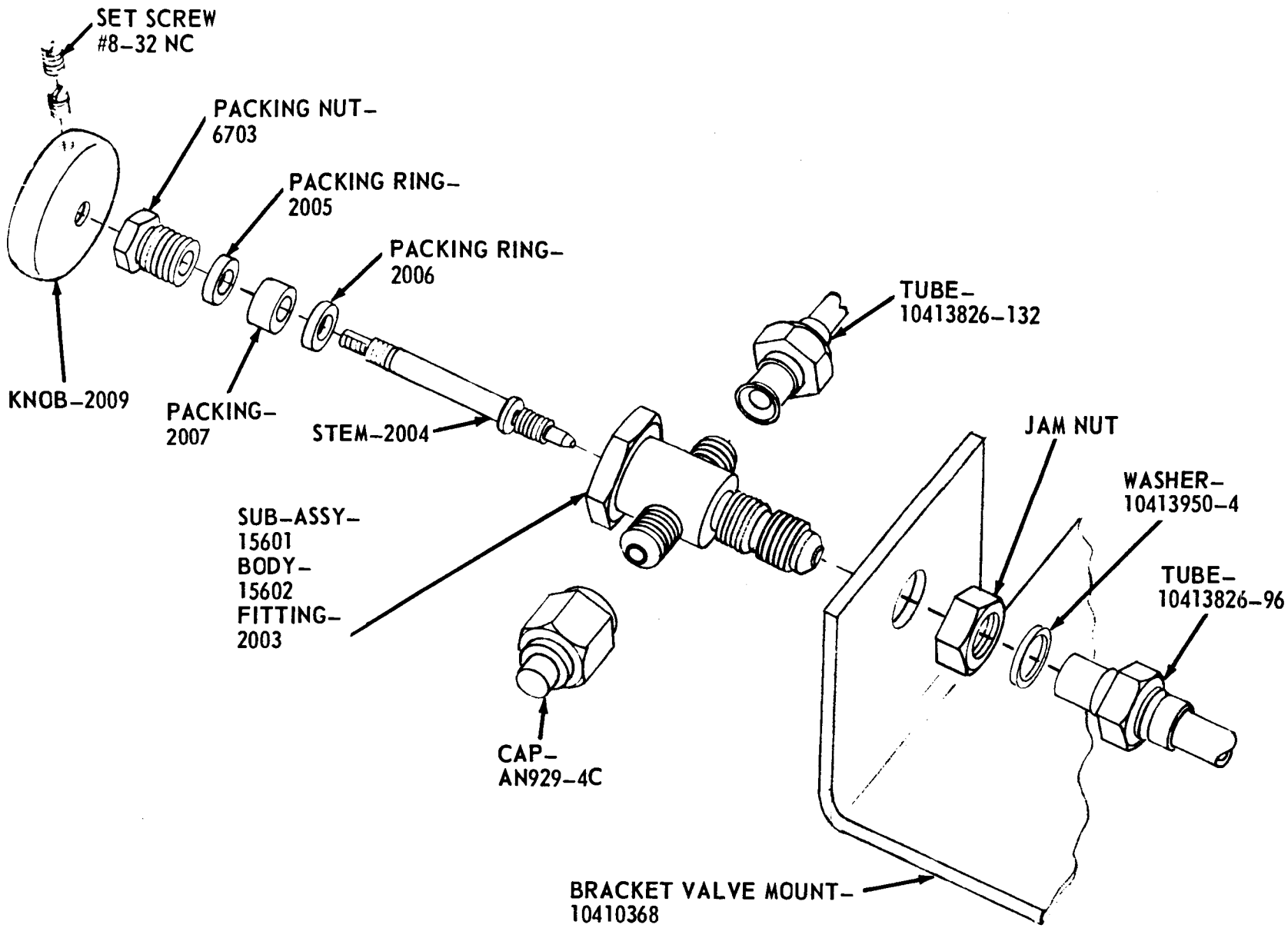

TURBOPUMP GEARBOX PRESSURIZING AND LOX PUMP SEAL PURGE CONTROL VALVE, 10414087 - EXPLODED VIEW

SPHERE ASSEMBLY, 1 CUBIC FOOT PART NO. 10413931

This sphere is used in conjunction with a 1.5 cubic foot sphere to contain the GN_2 supply for the 750-psig control system.

1. LOCATION - Station 235, in the skirt of fule tank No. 2.
2. SERVICE - Air, helium, and nitrogen.
3. PRESSURE -
   a. Operating: 3000 psig.
   b. Proof: 4500 psig.
   c. Burst: 7500 psig.
4. LEAKAGE ALLOWANCES - No Leakage allowed.
5. CURE DATE CONTROL - Per MSFC-STD 10500311.
6. LOCKWIRE - Per Specification MS33540.
7. TORQUE - Maximum torque of 90 in-lbs on 8944956.
8. TEMPERATURE - Minus 65° F to plus 200° F.

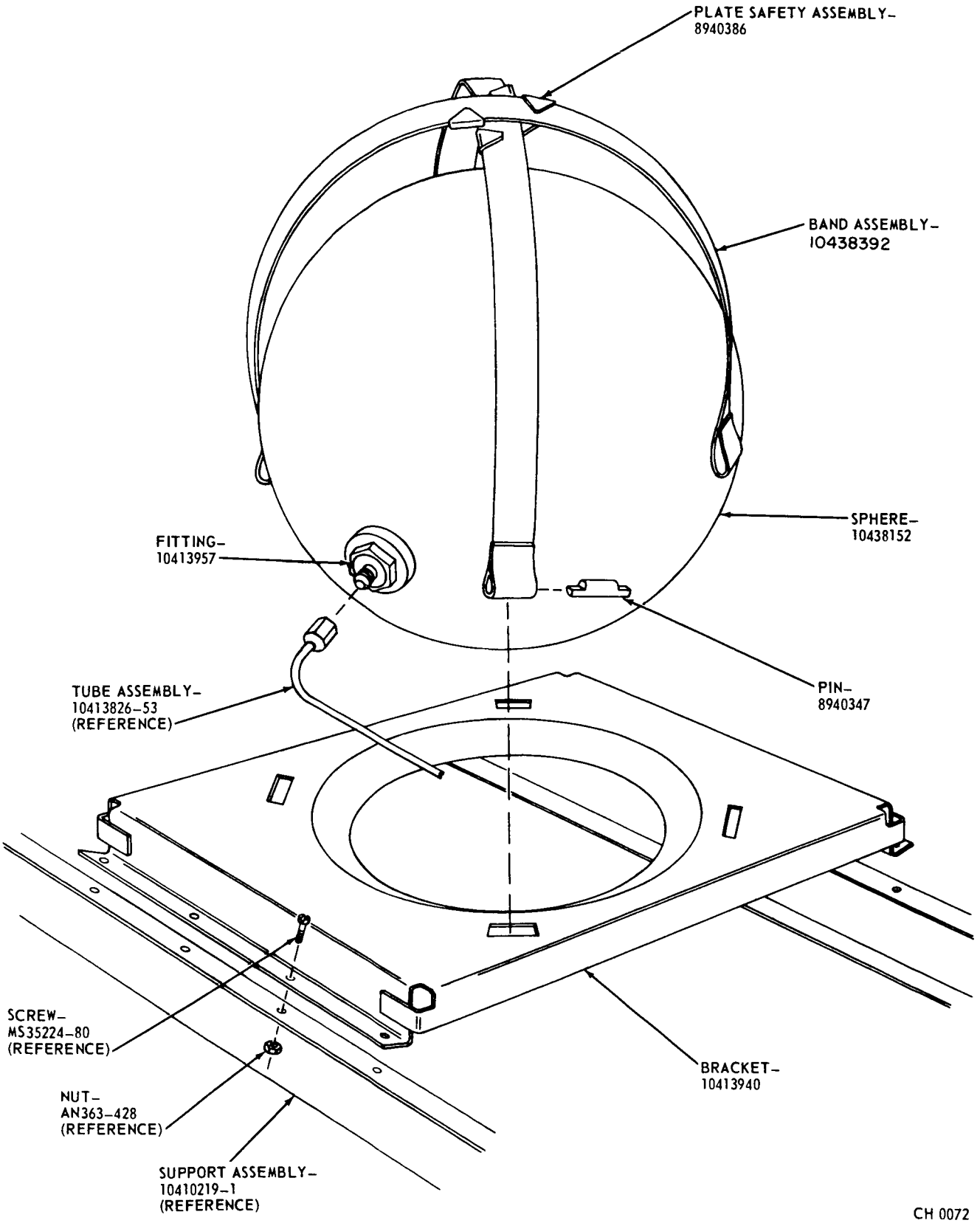

4.4.32 SPHERE ASSEMBLY, 1 CU. FT., 10413931
EXPLODED VIEW

CALORIMETER PURGE SOLENOID VALVE PART NO. 10414093

The solenoid operated N.C. valve (B225) is used as a control valve to allow control pressure to flow through the calorimeters (B222).

1. VENDOR - MAROTTA VALVE CORP., PART NO. 205903-12.
2. LOCATION - Station 192 in fuel tank No. 2.
3. SERVICE - Gaseous nitrogen.
4. PRESSURE -
   a. Operating: 750 psig.
   b. Proof: 1125 psig.
   c. Burst: 1875 psig.
5. TEMPERATURE - OPERATING - Minus 65° F to plus 160° F.
6. ELECTRICAL -
   a. Continuity: Coil at 68° F, 24 plus or minus 1.0 ohm resistance.
   b. Insulation resistance: 500 volt Megger test each isolated terminal to valve body; 50 megohm minimum at 70° F to 100°F.
   c. Amperage: 1.0 at 24 vdc.
   d. Solenoid Pull-in: 18 volt maximum at 750 psig.
   e. Solenoid Drop-out: 2 volt minimum at 750 psig.
   f. Duty: Continuous.
   g. Test: Random selected units must withstand energization at 32 vdc for four hours without adverse effects to solenoid or proper operation of valve.
7. CAPACITY EQUIVALENT - Sharp edged orifice .170 diameter.
8. LUBRICATION - Lubricate O-ring seals with Dow Corning DC-55 Grease.
9. LEAKAGE: Internal - Leakage past main valve seat 5 scim at 750 psig on inlet port and valve closed. No leakage at vent holes with valve in open position.
10. AGE CONTROL - Rubber shall conform to A-10509311.

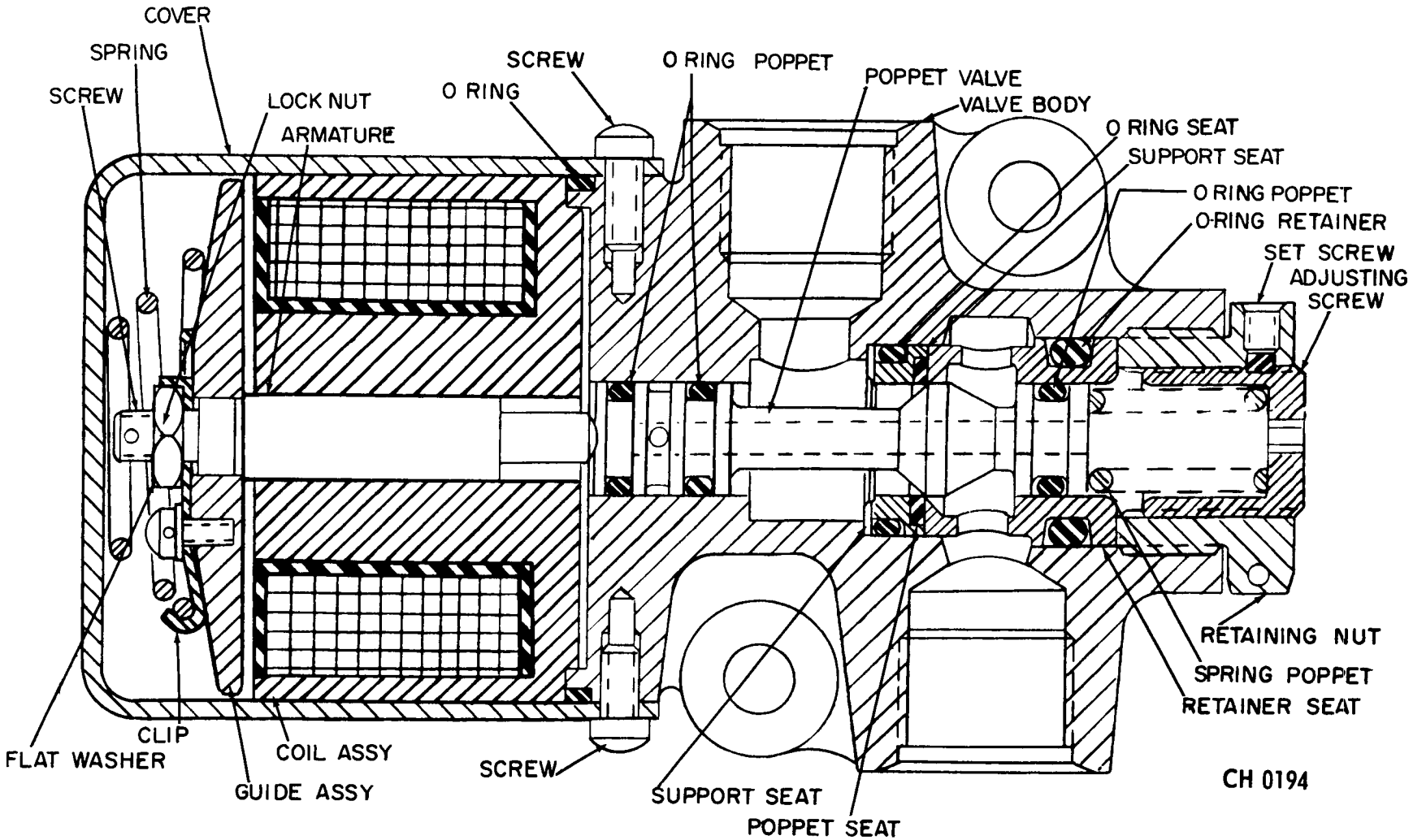

4.4.33 Calorimeter Purge Solenoid Valve 10414093 - Sectional View

THIS PAGE INTENTIONALLY LEFT
BLANK

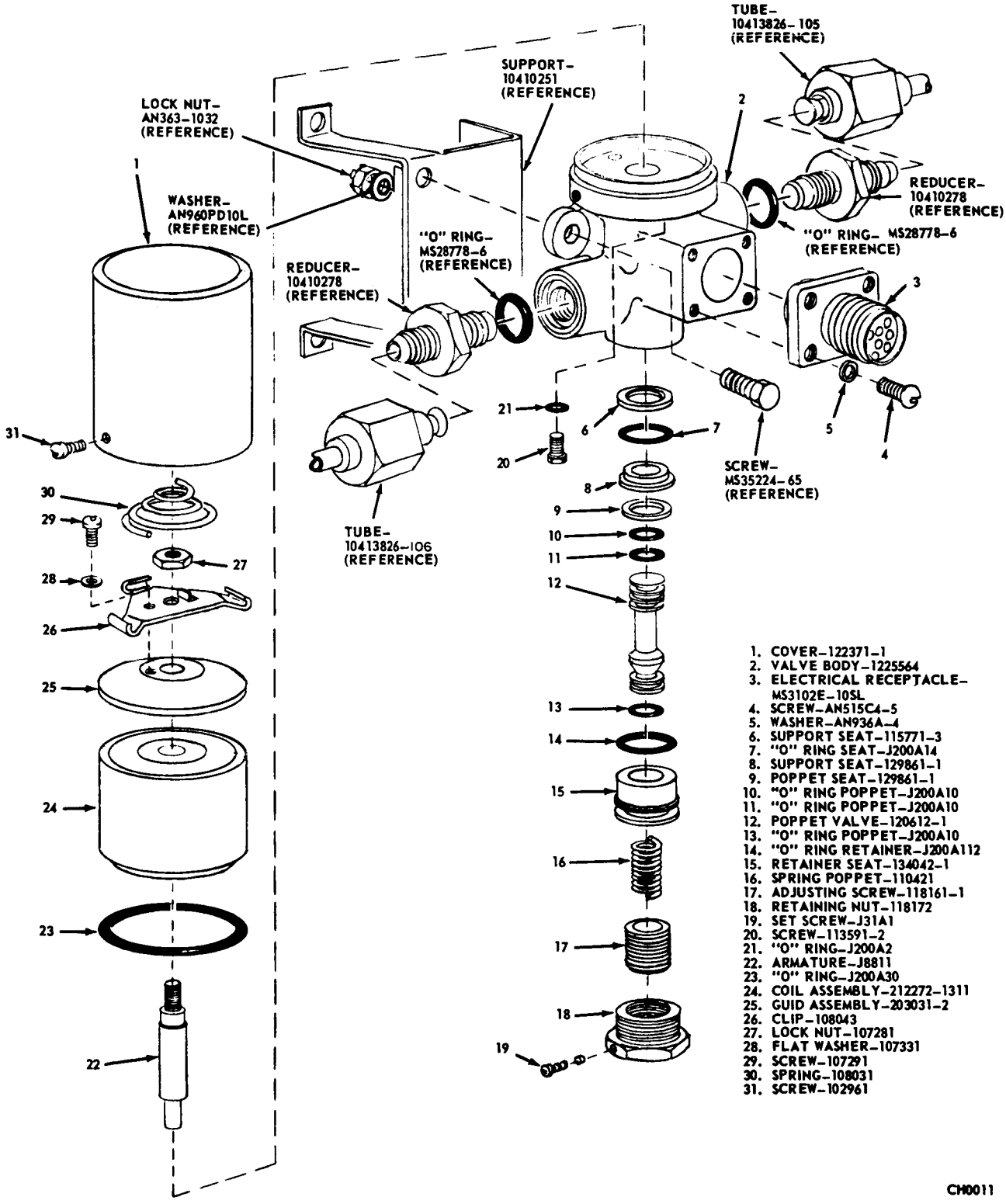

4.4.34 Calorimeter Purge Solenoid Valve - Exploded View

750 PSI CONTROL PRESSURE MANIFOLD PART NO. 10413666

The pressure manifold (B224) supplies controlled 750-psig pressure to the control pressure system and also provides mounting surface for the 750-psig regulator (B205).

1. LOCATION - Station 200 in fuel tank No. 2.
2. SERVICE - Air, helium, nitrogen.
3. OPERATING PRESSURE - 3000 psig.
4. HYDROSTATIC TEST - Five minutes at 1500 psig, no leakage allowed.
5. TEMPERATURE - OPERATING - Plus 70°F.
6. CURE DATE - Cure date control per Specification ABMA-STD-29.

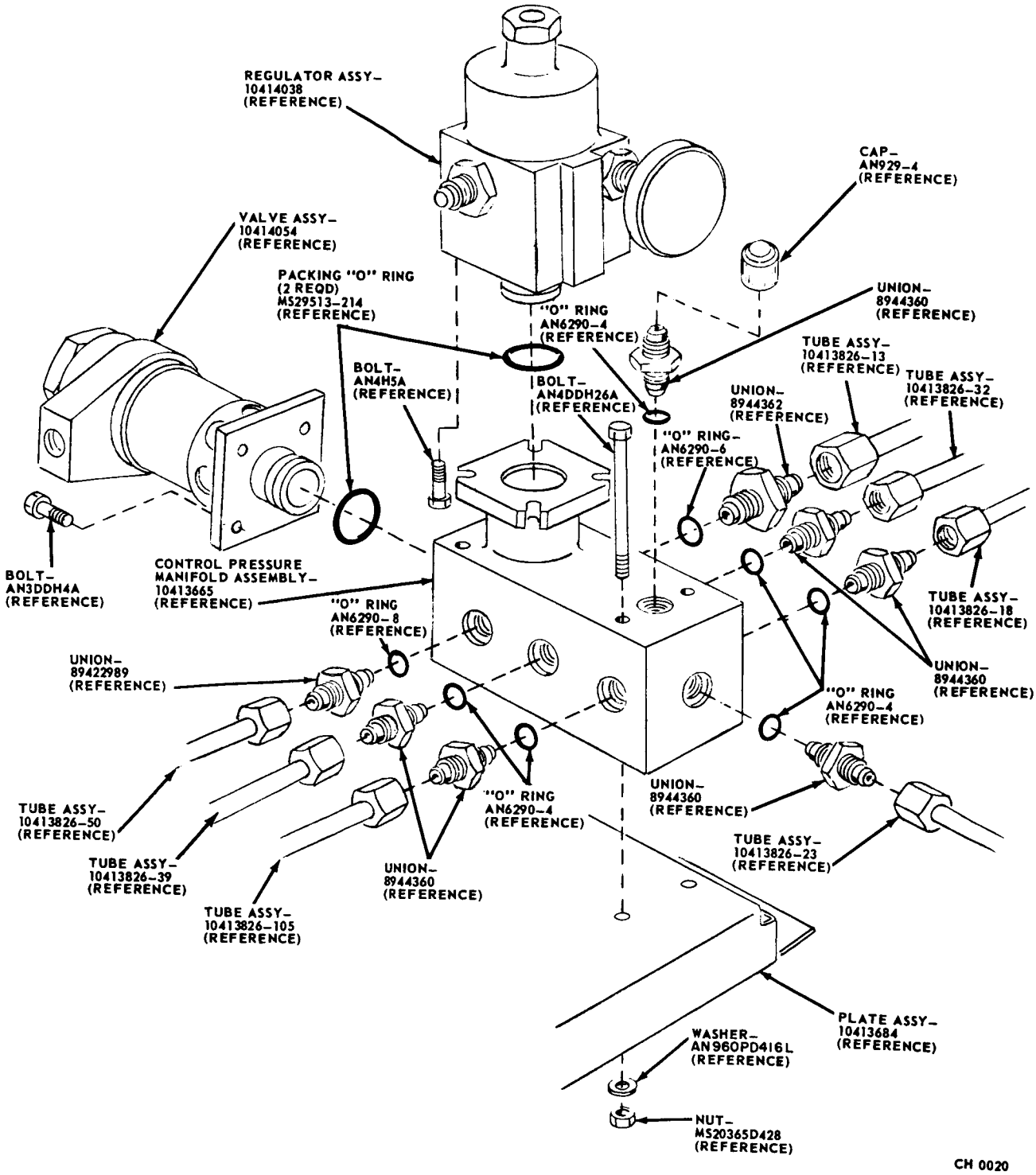

4.4.35 CONTROL PRESSURE MANIFOLD, 750 PSI
EXPLODED VIEW

THIS PAGE INTENTIONALLY LEFT
BLANK

4.11 HELIUM SYSTEM.

The following pages, 4.5.2 through 4.5.40 and figures 4.5.1 through 4.5.21, deal with the components on the helium system. A system schematic, figure 4.5.1 and the callout list on page 4.5.2 show the find numbers, quantity used, nomenclature, parts numbers, and page locations of the components listed.

HELIUM SYSTEM

The SATURN SA-1 vehicle helium supply is contained in a 50-cubic inch bottle at 3000 psi. Helium is utilized for propellant utilization and slosh measurements. The 3000 psi helium is regulated to 450 psi for operational use.

HELIUM SYSTEM CALLOUT LIST

Helium Supply Pressure Assembly	10413654	4.5.2
Pressure Regulating Valve Assembly	10413622	4.5.6

FIND NO.	QTY.	COMPONENTS	PART NO.	PAGE
B113	1	Q.D. Coupling, Density Sensing Line Lo Pressure	10414063	4.1.32
B115	1	Q.D. Coupling, Density Sensing Line Hi Pressure	10414063	4.1.32
B400	1	Q.D. Coupling, Helium Supply Line	10414316	4.5.8
B401	1	Pressure Transducer	8968258	4.5.10
B402	1	Tube Weldment	10413724	4.5.12
B404	1	Pressure Transducer	8968257	4.5.14
B405	1	Pressure Transducer	8968257	4.5.14
B406	8	Constant Flow Regulator Valve	10414088	4.5.17
B407	1	Constant Flow Regulator Valve	10414089	4.5.17
B408	1	Orifice, P.U. Bypass	10414259	4.5.18
B409	1	Control Valve, P.U. Bypass (LOX)	10414027	4.5.40
B410	1	Regulator, LOX Slosh Purge	10414090	4.5.19
B411	1	Filter, Helium Supply	10414026	4.5.22
B412	1	Check Valve, Helium Supply	10414014	4.5.24
B413	1	Bottle	10413640	4.5.4
B414	1	High Pressure O.K. Switch	10414029	4.5.26
B415	1	Three-Way Needle Valve	10414076	4.5.28
B416	1	Regulator	10414090	4.5.19
B417	4	Constant Flow Regulator Valve	10414088	4.5.17
B418	1	Differential Transducer	8968256	4.5.14
B419	1	Differential Transducer	8968256	4.5.14
B420	1	Control Valve	10414027	4.5.40
B421	1	Constant Flow Regulator Valve	10414089	4.5.17
B422	1	Orifice, Bypass	10414259	4.5.18
B423	1	P. U. Computer	10414067	4.5.30

HELIUM SYSTEM CALLOUT LIST (Cont'd)

FIND NO.	QTY.	COMPONENTS	PART NO.	PAGE
B424	1	Pressure Transducer	8968259	4.5.33
B428	1	Tube Weldment	10413706	4.5.12
B429	1	Helium Supply Gage Connection	MS28889-1	4.5.34
B430	1	Helium Supply Gage Connection	MS28889-1	4.5.34
B432	1	Pressure Transducer	8968257	4.5.14
B433	1	Pressure Transducer	8968257	4.5.14
B434	2	Three-Way Needle Valve	10414084	4.5.36
B435	2	Three-Way Needle Valve	10414084	4.5.36
B436	2	Three-Way Needle Valve	10414084	4.5.36
B437	2	Three-Way Needle Valve	10414084	4.5.36
B438	2	Three-Way Needle Valve	10414084	4.5.36
B439	2	Three-Way Needle Valve	10414084	4.5.36
B440	2	Three-Way Needle Valve	10414084	4.5.36
B441	2	Three-Way Needle Valve	10414084	4.5.36
B442	2	Three-Way Needle Valve	10414087	4.5.38

THIS PAGE INTENTIONALLY LEFT
BLANK

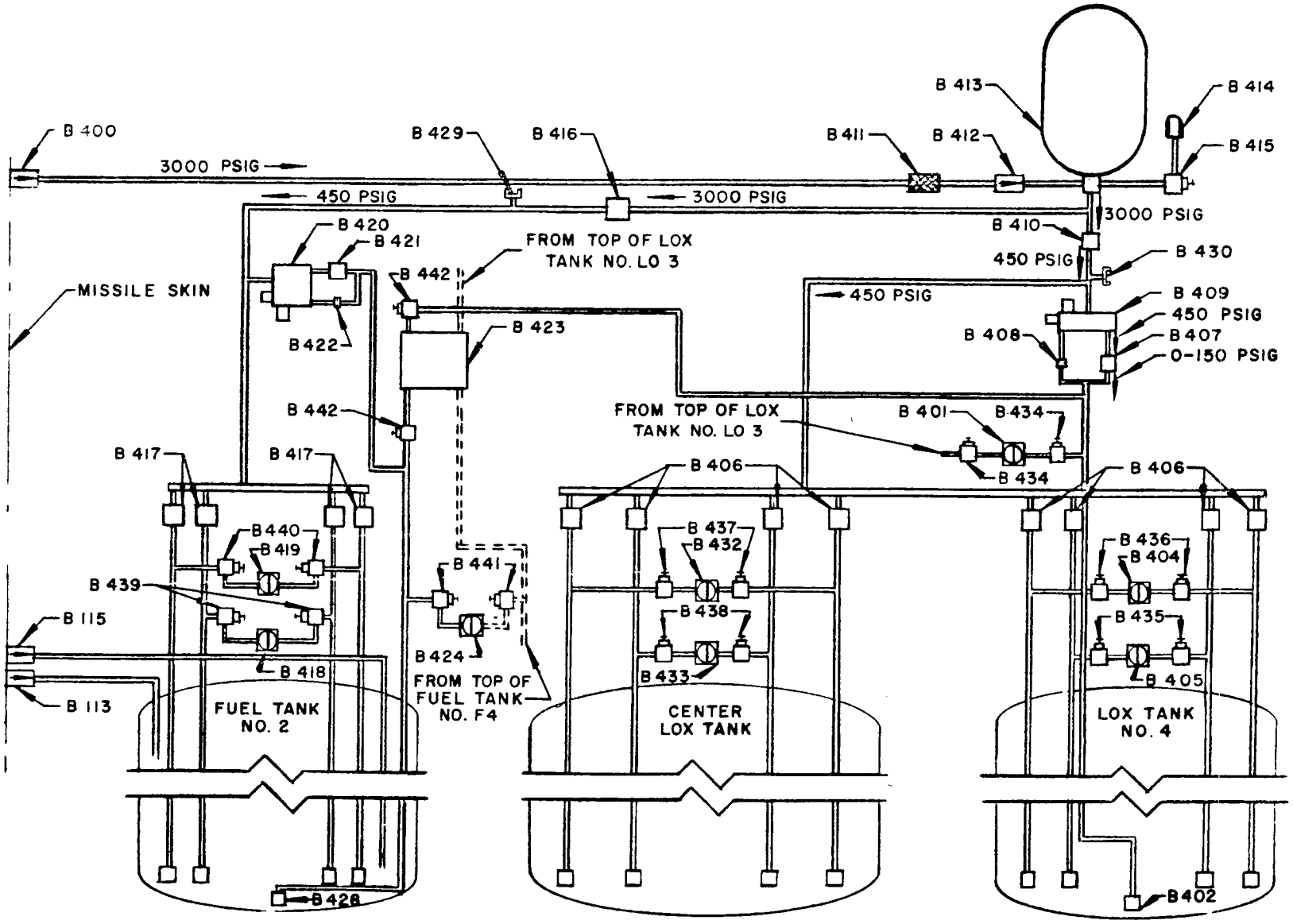

CH 0159

4.5.1 HELIUM SYSTEM SCHEMATIC

HELIUM SUPPLY PRESSURE BOTTLE ASSEMBLY
PART NO. 10413654

The helium supply pressure bottle assembly (B413) is used to store helium under pressure and then routed to fuel slosh purge regulator (B416) and to LOX slosh purge regulator (B410).

1. VENDOR - WALTER KIDDE AND CO., INC., PART NO. 840448.
2. LOCATION - Station 880 between LOX tank No. 2 and fuel tank No. 2.
3. SERVICE - Helium.
4. PRESSURE -
   a. Operating: 3000 psig.
   b. Proof: 5000 psig.
   c. Burst: 6667 psig.
5. TEMPERATURE - OPERATING - Plus 32° F to plus 125° F.
6 LEAKAGE ALLOWANCE - No leakage allowed.

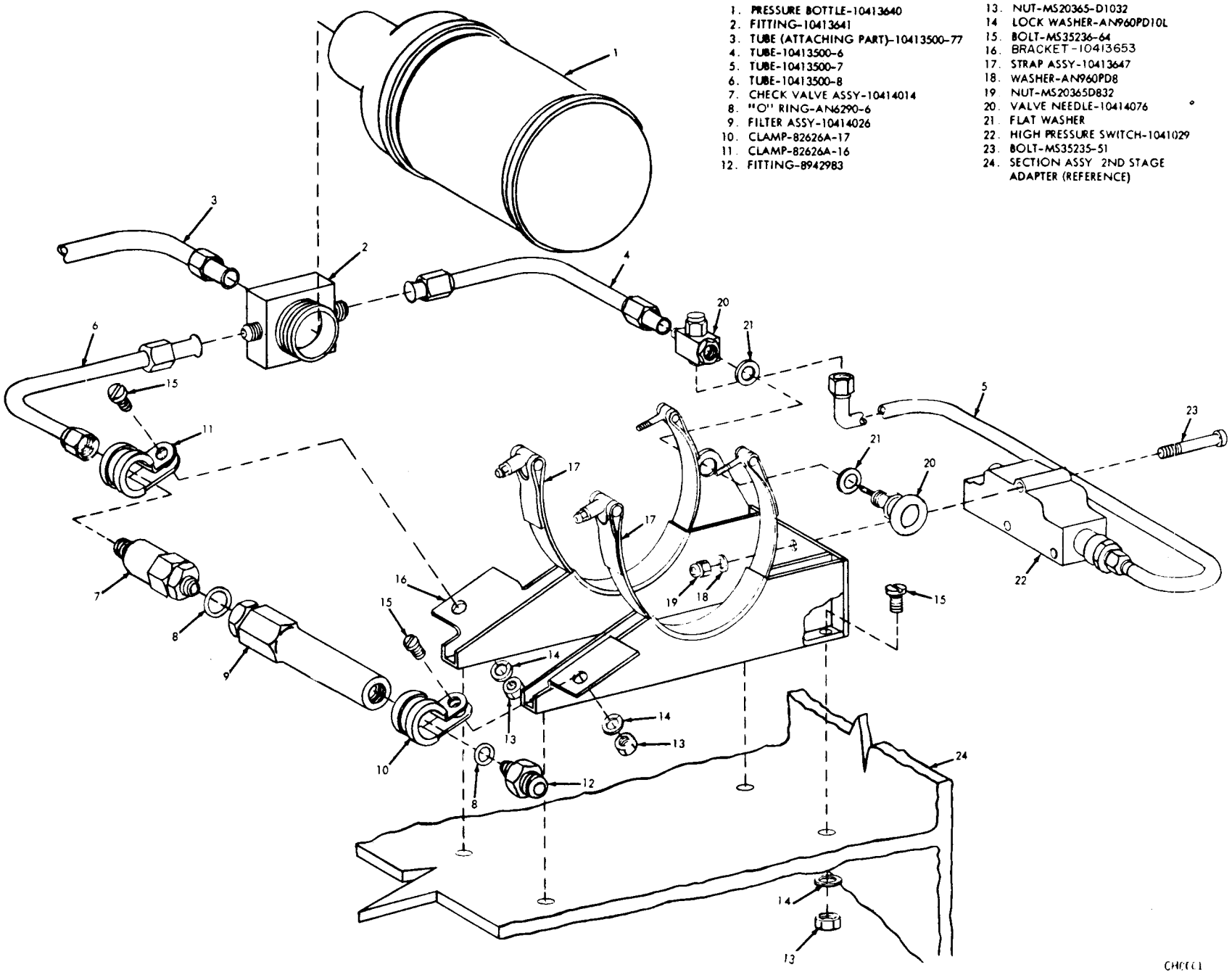

4.5.2 HELIUM SUPPLY PRESSURE BOTTLE ASSEMBLY 10413654 - EXPLODED VIEW

PRESSURE REGULATING VALVE ASSEMBLY
PART NO. 10413622

The pressure regulating valve assembly, containing two regulators, 10414090, is installed in a high-pressure line and is used to control a constant pressure from the helium supply.

1. VENDOR - WALLACE O. LEONARD, INC., PART NO. 128390-2.
2. LOCATION - Station 875.
3. PRESSURE -
   a. Operating: Inlet 3000 to 600 psig; Outlet 450 $\pm$ 20 psig.
   b. Proof: Inlet 4500 psig; Outlet 700 psig.
   c. Burst: Inlet 7500 psig; Outlet 1200 psig.
4. FLOW RATE -
   a. 3 scfm at 600 psig inlet.
   b. 4 scfm at 700 psig inlet.
   c. 5 scfm at 800 psig. inlet.
5. LEAKAGE ALLOWANCE - No external leakage allowed.

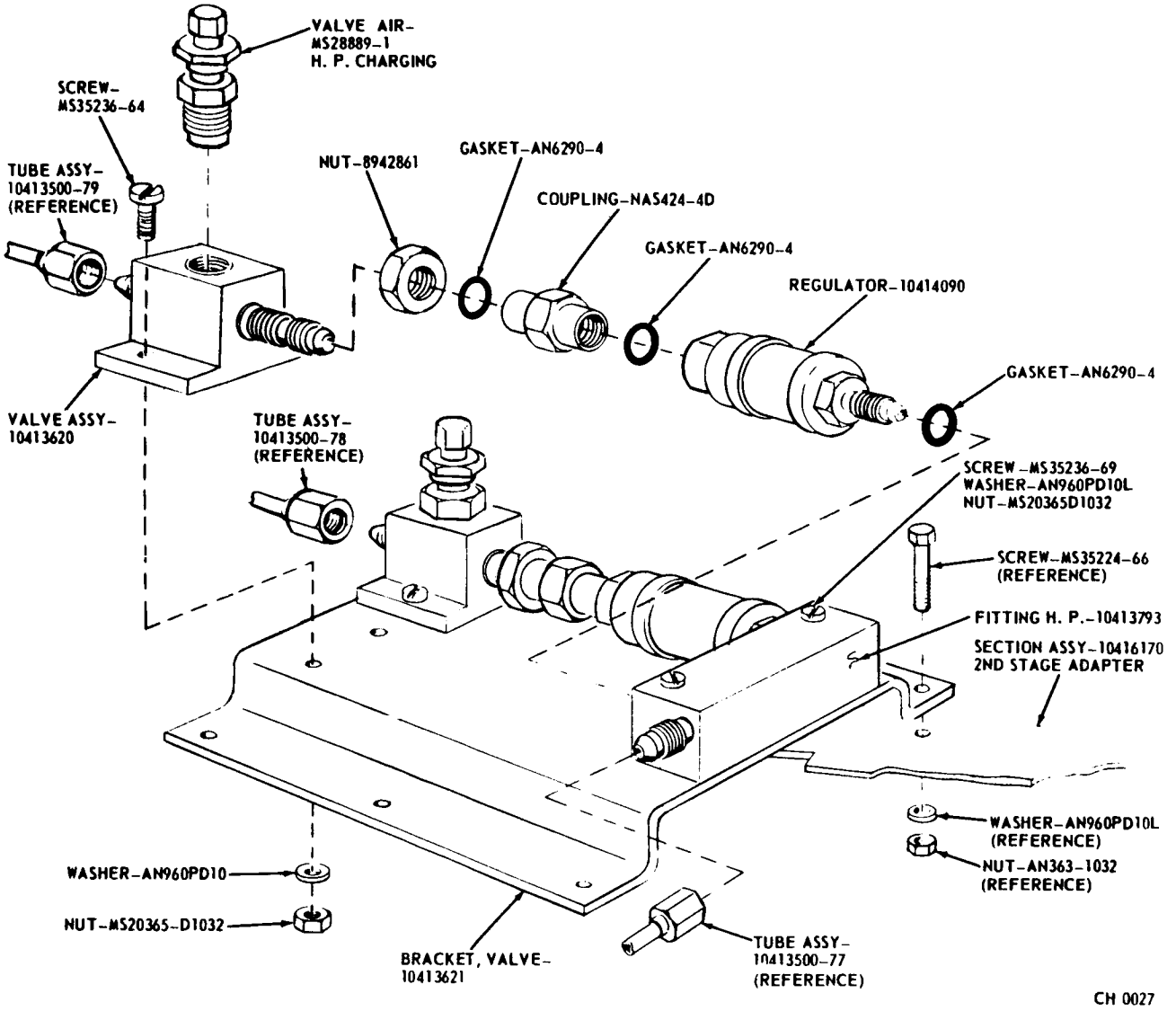

4.5.3 Pressure Regulating Valve Assembly 10413622 - Exploded View

QUICK-DISCONNECT COUPLING PART NO. 10414316

The one-fourth inch quick-disconnect coupling (B400) is used for the helium supply line. The coupling is located on the long cable mast connection point.

Refer to page 4.1.32 and figure 4.1.19 for technical data and illustraction of the coupling.

THIS PAGE INTENTIONALLY LEFT
BLANK

LOX DIFFERENTIAL PRESSURE TRANSDUCER
PART NO. 8968258

Assembly (B401), 10410158, contains pressure transducer 8968258, the function of which is to measure the pressure differential between the bottom and the top of the LOX tank 0-4.

Tube Routings: see bubbled callouts, Figure 4.5.4.

1. Tubing assembly 10413500-15 to valve and bracket assembly 10410150 and constant flow regulator valve, LOX tank 0-4.

2. Tubing assembly 10413500-16 to valve and bracket assembly 10410153 and constant flow regulator valve, LOX tank 0-4.

3. Tubing assembly 10413500-18 to pressure transducer assembly 10413765.

4. Tubing assembly 10413500-19 to PU-LO.

5. Tubing assembly 10413500-20 to PU-HI.

6. Tubing assembly 10413500-22 into LOX tank 0-4.

7. Tubing assembly 10413500-23 to needle valve of pressure transducer assembly 10413763.

8. Tubing assembly 10413500-24 to needle valve of pressure assembly 10413763.

9. Tubing assembly 10413500-27 to LOX HI fitting, P.U. Computer.

10. Tubing assembly 10413500-38 to LOX LO fitting P.U. Computer.

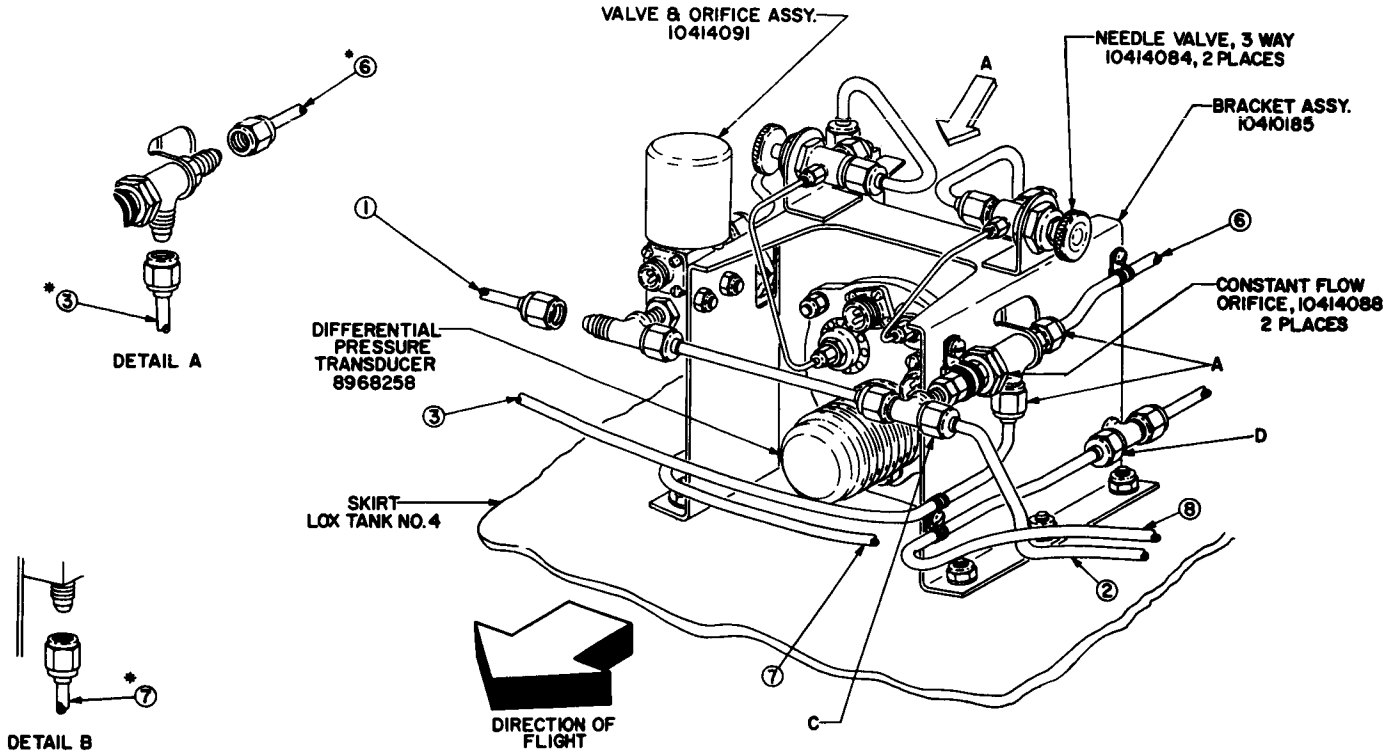

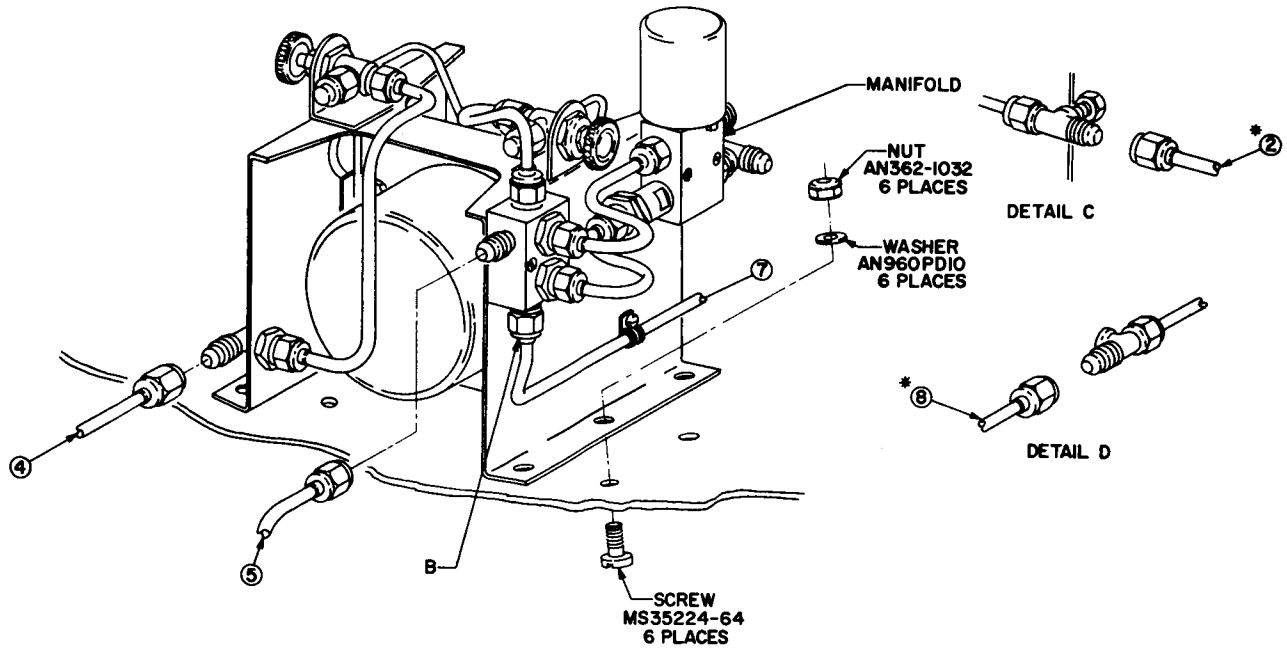

* BUBBLED CALLOUTS IDENTIFY ATTACHING TUBING ASSEMBLIES AND ROUTINGS, SEE PAGE 4.5.10 FOR CALLOUT LIST

VIEW A

4.5.4

LOX DIFFERENTIAL PRESSURE TRANSDUCER ASSEMBLY 10410158

PROPELLANT UTILIZATION SENSING TUBE WELDMENT
PARTS NOS. 10413724 (B402) and 10413726 (B428)

These weldments are tubing assemblies which terminate at the bottom of LOX tank 0-4 and fuel tank No. 2, for the purpose of providing a bottom probe to furnish pressure differential information for use in the propellant utilization system.

1. LOCATION -
   a. B402 - Station 248.36 LOX tank 0-4.
   b. B428 - Station 267.85 fuel tank No. 2.

2. SERVICE -
   a. B402 - LOX helium.
   b. B428 - fuel helium.

3. OPERATING PRESSURE - 100 psig.

4. TEMPERATURE - Minus 300° F to plus 32° F.

5. LEAKAGE - None.

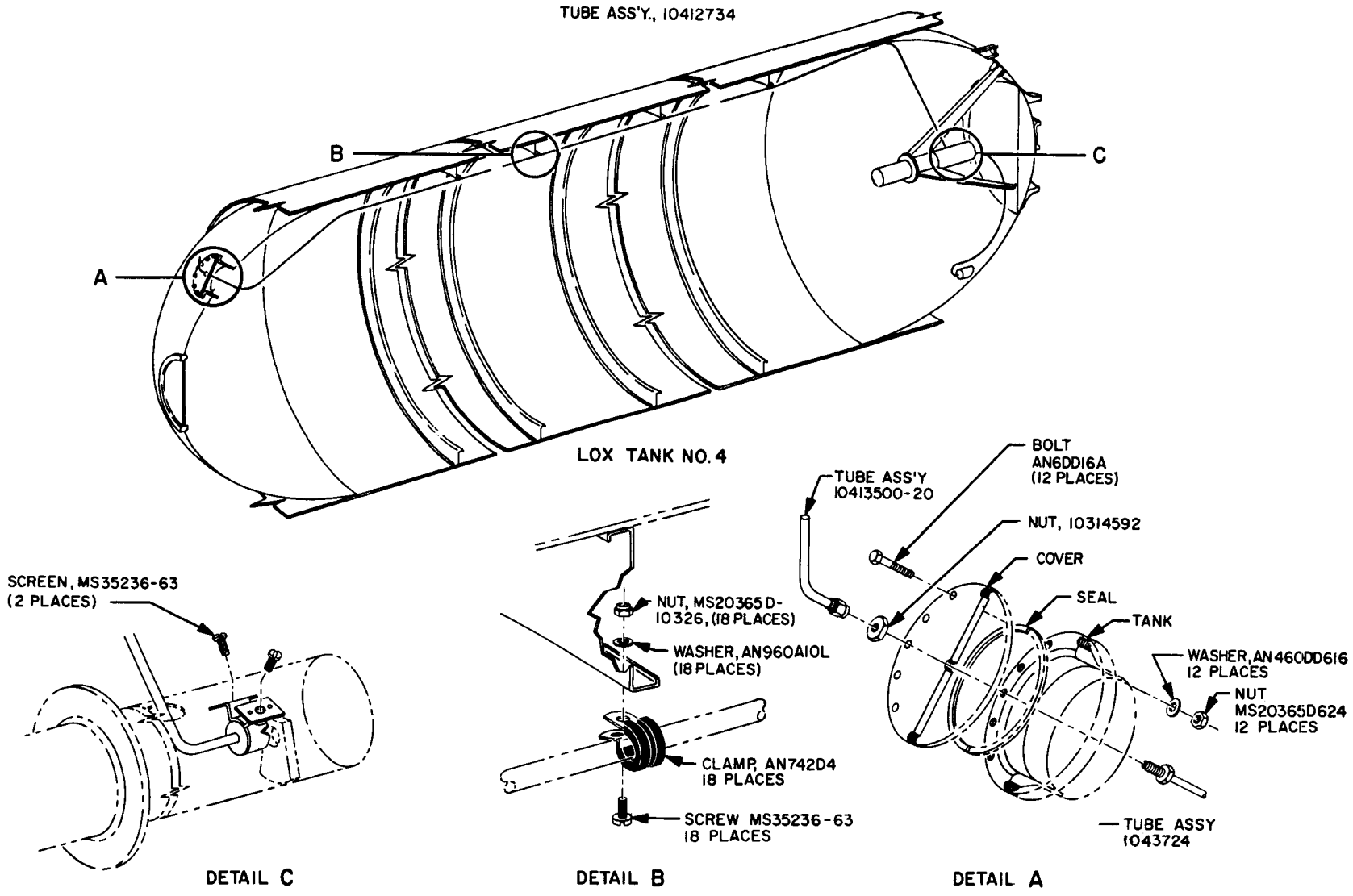

4.5.5 TUBE WELDMENT INSTALLATION PU HI (LOX) 10413706

SLOSH PRESSURE TRANSDUCERS
PARTS NOS. 8968256, 8968257

These pressure transducers, B404, B405, B418, B419, B432, B433, function as slosh measuring devices in fuel tank No. 2, and the center and No. 4 LOX tanks.

1. VENDOR - G. M. GIANNINI AND COMPANY, INC.
   PART NO. 45176CY.

2. LOCATION -
   a. B404, B405, 8968757 - Station 856.0 LOX tank No. 4.
   b. B432, B433, 8968257 - Station 857.0 Center LOX tank.
   c. B418, B419, 8968256 - Station 851.0 Fuel tank No. 2.

3. SERVICE - Helium.

4. PRESSURE - Range: .5 psid to plus or minus 5 psid.

5. TEMPERATURE - Minus 65° F to plus 160° F.

6. LEAKAGE - With a pressure of 30 psig applied simultaneously to both pressure ports, and the ports sealed off, the pressure shall not change by more than 0.05 psi at the end of one minute.

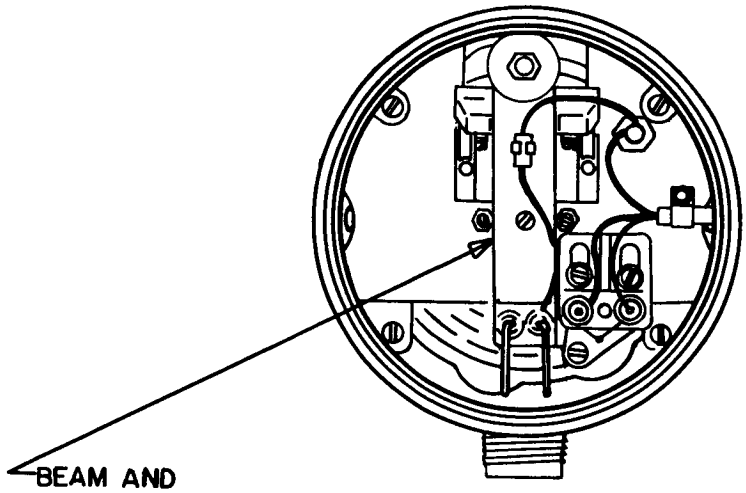

TOP VIEW
COVER REMOVED FOR
CLARITY

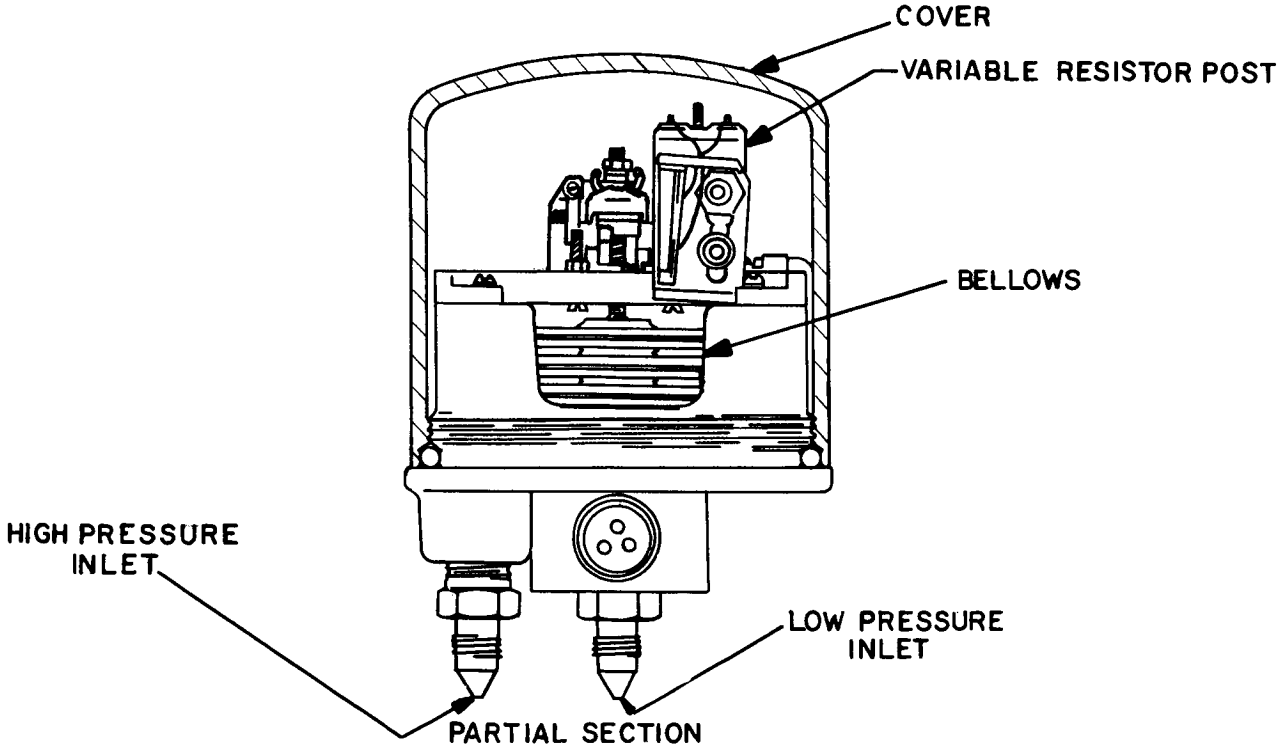

4.5.6 DIFFERENTIAL PRESSURE TRANSDUCER
8968256, 8968257 SECTIONAL VIEW

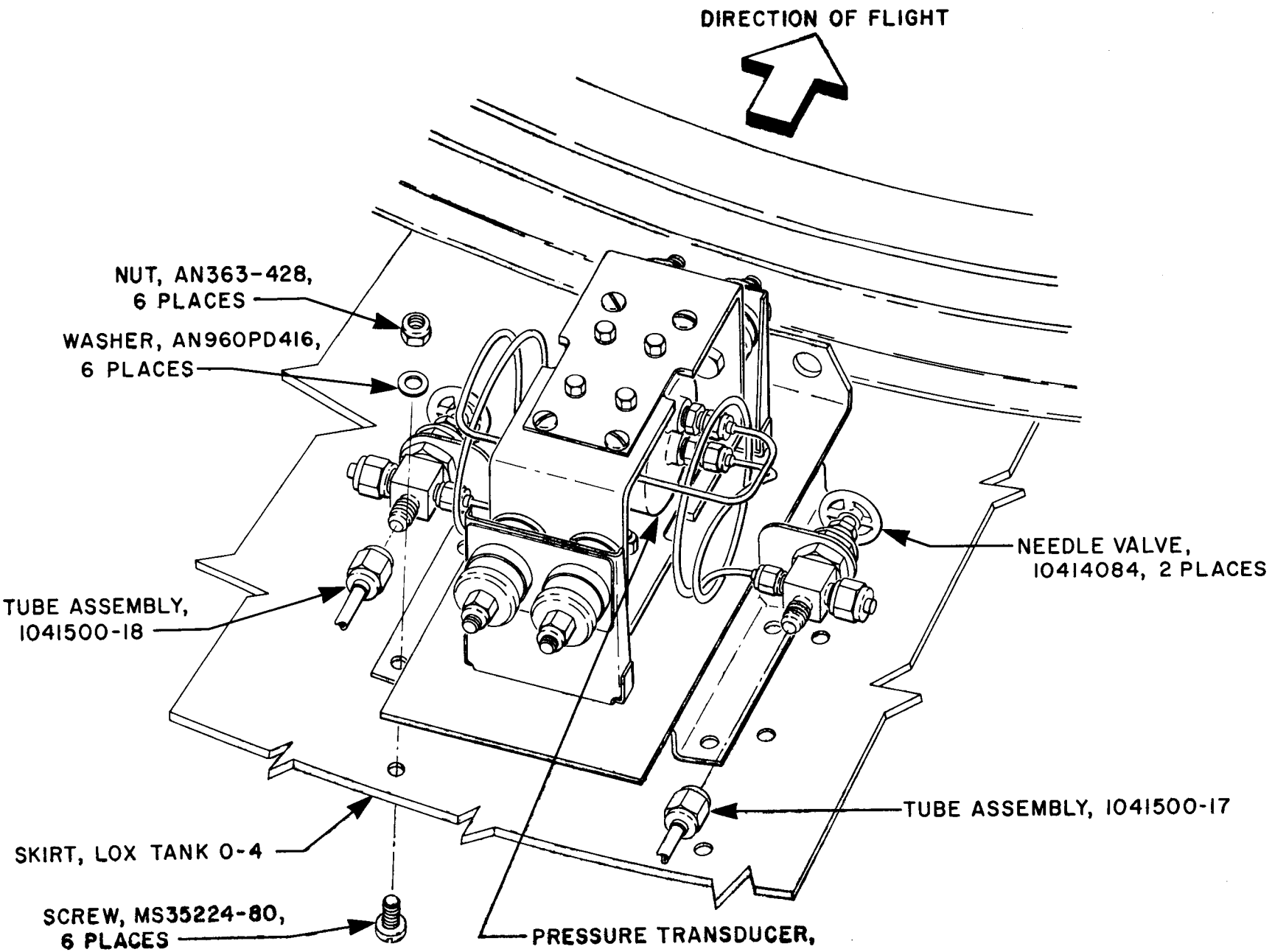

4.5.7 PRESSURE TRANSDUCER 10413765-INSTALLATION

CONSTANT FLOW REGULATOR VALVES
PARTS NOS. 10414088, 10414089

Valve 10414088 functions in the following manner: As B406, the valve controls a constant supply of helium to LOX tank 0-4 and LOX tank 0-C for a propellant level sensing system as utilized in slosh measurement. As B417, the valve controls a constant supply of helium to fuel tank No. 2, for propellant level sensing as utilized in slosh measurement.

Valve 10414089 functions in the following manner: As B407, to provide a constant supply of helium to the high pressure side of LOX tank No. 4. As B421, to provide a constant supply of helium to the high pressure side of fuel tank No. 2. Both valves are used in the propellant utilization system.

1. VENDOR - WALLACE O. LEONARD, INC.,
   PARTS NOS. B406, B417 - 156040-2.
   B407, B421 - 156040-3.
2. LOCATION -
   a. B406, B417, 10414088 - 8 between stations 847 & 860 on tank skirts of LOX tanks 0-4 and 0-C.
   b. B407, B421, 10414089 - 4 at station 853 fuel tank No. 2 lines.
3. SERVICE - Helium.
4. TEMPERATURE - Minus 65° F to plus 165° F.
5. PRESSURE -
   a. Inlet: 450 plus or minus 20 psig.
   b. Outlet: (back Pressure): 0 to 150 psig.
6. FLOW RATE -
   a. B406 and B417: 1.25 plus or minus 0.20 scfh of helium.
   b. B407 and B421: 1.50 plus or minus 0.25 scfh of helium.
7. LEAKAGE: None.

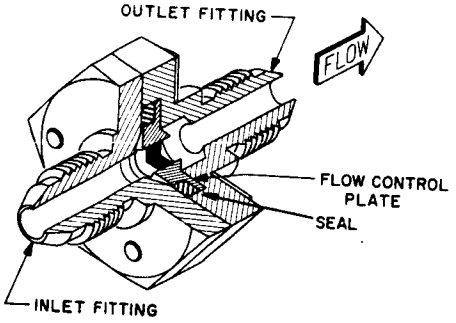

4.5.8 CONSTANT FLOW REGULATOR VALVE 10414088 SECTIONAL VIEW

ORIFICE, BY-PASS - PROPELLANT UTILIZATION
PART NO. 10414259

Two of these valves exist in the helium system. One, B408, functions in conjunction with the LOX P-U bypass control valve B409, and the other, B422, with the fuel P-U bypass control valve B420. From a predetermined time until five seconds after liftoff, a solenoid in each of the control valves is energized and helium flow is bypassed through orifices B408 and B422, respectively, providing an increased helium flow rate during this period for purging the P-U tube assemblies.

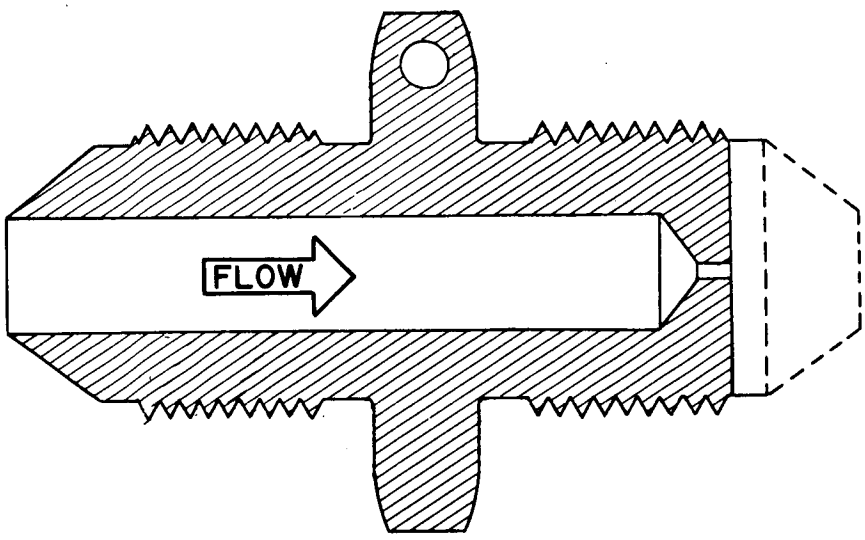

4.5.9 ORIFICE P.U. BYPASS, 10414259

LOX SLOSH PURGE REGULATOR
PART NO. 10414090

The 450-psi, constant flow regulator (B410) is used in the helium system to regulate flow of helium to purge LOX tanks 0-4 & 0-C.

1. VENDOR - WALLACE O. LEONARD, INC., PART NO. 128390-2.
2. LOCATION - Station 875 at Fin 2.
3. SERVICE - Helium.
4. TEMPERATURE - OPERATING - Minus 40° F to plus 160°F.
5. PRESSURE -
   a. Inlet: 3000 to 600 psig.
   b. Outlet: 450 plus or minus 20 psig.
6. FLOW RATE -
   a. 3 scfm of helium at 600 psig inlet.
   b. 4 scfm of helium at 700 psig inlet.
   c. 4 scfm of helium at 800 psig inlet.
7. PRESSURE ADJUSTMENT - Turn outlet fitting counter-clockwise to increase pressure setting.
8. LUBRICATION - Lubricate seals with 9970568 (KEL-F 10 Oil).

Refer to page 4.5.7, figure 4.5.3 for installation.

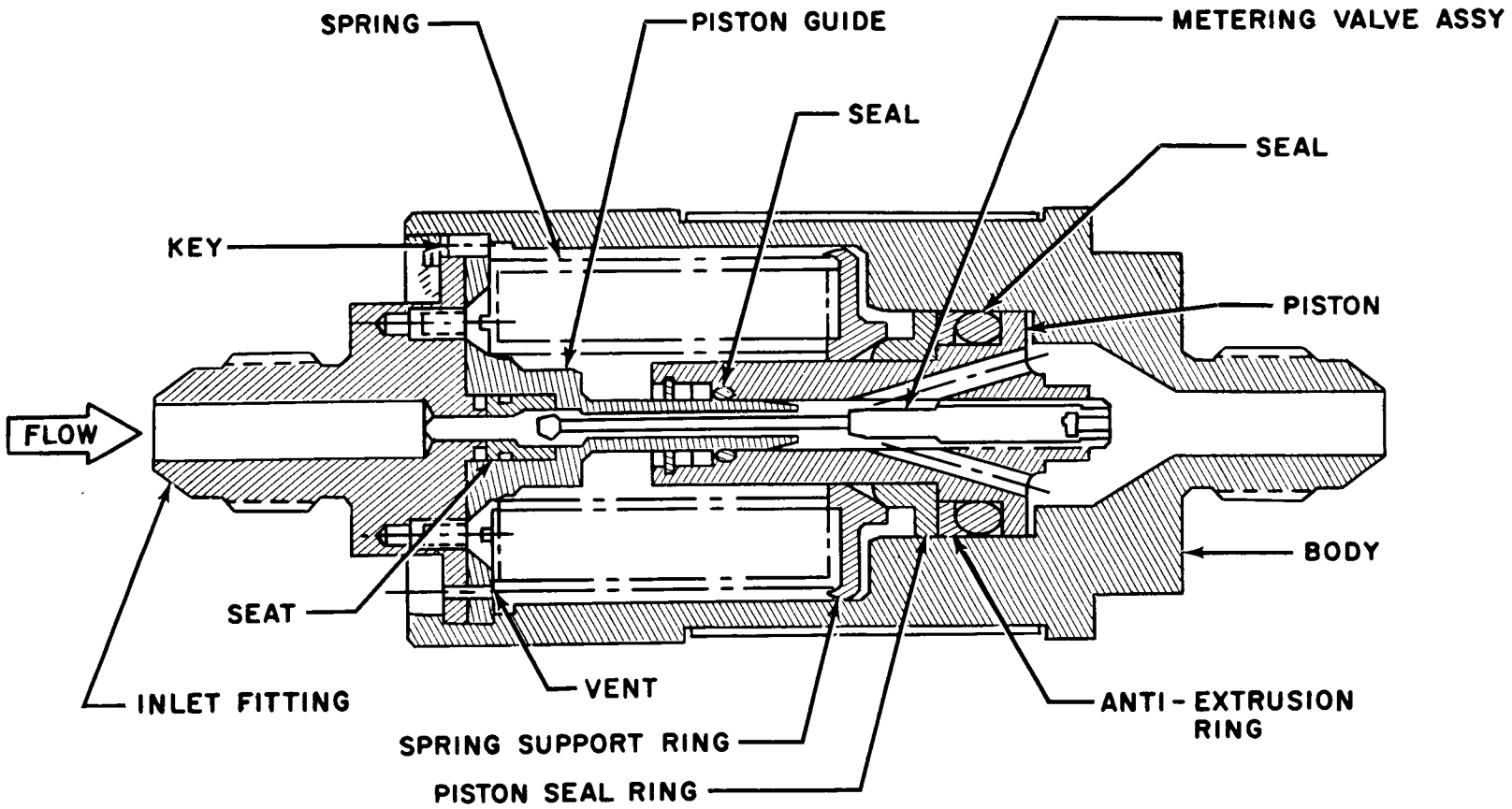

4.5.10 LOX SLOSH PURGE REGULATOR 10414090
SECTIONAL VIEW

THIS PAGE INTENTIONALLY LEFT
BLANK

HELIUM SUPPLY FILTER, PART NO. 10414026

The supply line filter (B411) is used in the helium system ground supply system between the coupling (B400) and the helium pressure bottle (B413).

1. VENDOR - WALTER KIDDE,
   PART NO. 840473.
2. LOCATION - Station 894, ST-90 high pressure sphere assembly 10413945.
3. SERVICE - GN_2 .
4. PRESSURE -
   a. Operating: 3000 psi.
   b. Proof: 4500 psi.
   c. Burst: 7500 psi.
5. TEMPERATURE RANGE - Minus 65° F to plus 180° F.
6. LEAKAGE - 3cc/hr. maximum.
7. FLOW FACTOR - .8.
8. FILTER RATING - Filter will filter all particles larger than 25 microns on largest diameter.
9. WEIGHT - .3 pound.

Refer to page 4.4.20, figure 4.4.14. for sectional view.

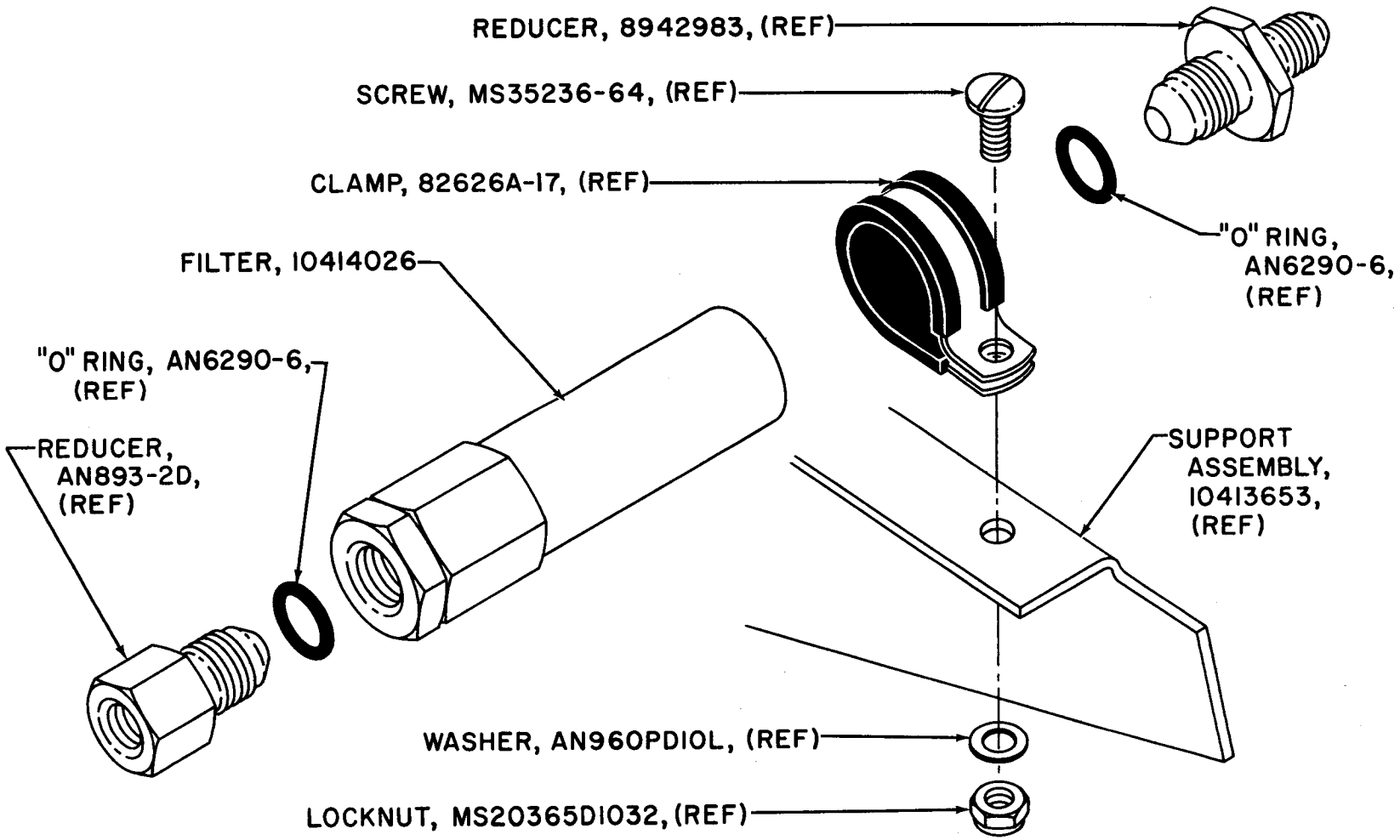

4.5.11 HELIUM SUPPLY FILTER 10414026 - INSTALLATION

HELIUM SUPPLY CHECK VALVE PART NO. 10414014

The helium supply check valve (B412), used in the helium fill line, permits the flow in the supply direction and completely restricts the flow in the opposite direction after supply pressure is stopped.

1. VENDOR - ADEL PRECISION PRODUCTS, 29891.
2. LOCATION - Station 880 on fin No. 2.
3. SERVICE - Air, helium, gaseous nitrogen.
4. PRESSURE -
   a. Operating: 3000 psig.
   b. Proof: 4500 psig.
   c. Burst: 7500 psig.
5. TEMPERATURE - OPERATING - Minus 65° F to plus 165° F.
6. LEAKAGE ALLOWANCES -
   a. Internal, past seat: 5 scim maximum at 500 to 3000 psig.
   b. External: No leakage allowed.
7. LUBRICATION - Lubricate 0-ring seals with 9970568 (KEL-F 10 Oil).

Refer to page 4.5.5, figure 4.5.2 for installation view.

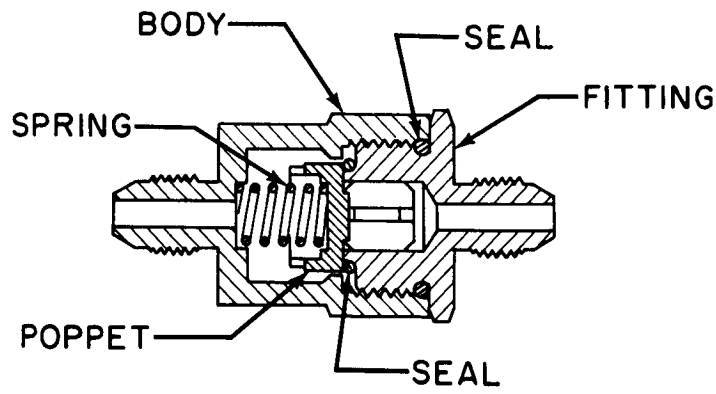

4.5.12 HELIUM SUPPLY CHECK VALVE 10414014 - SECTIONAL VIEW

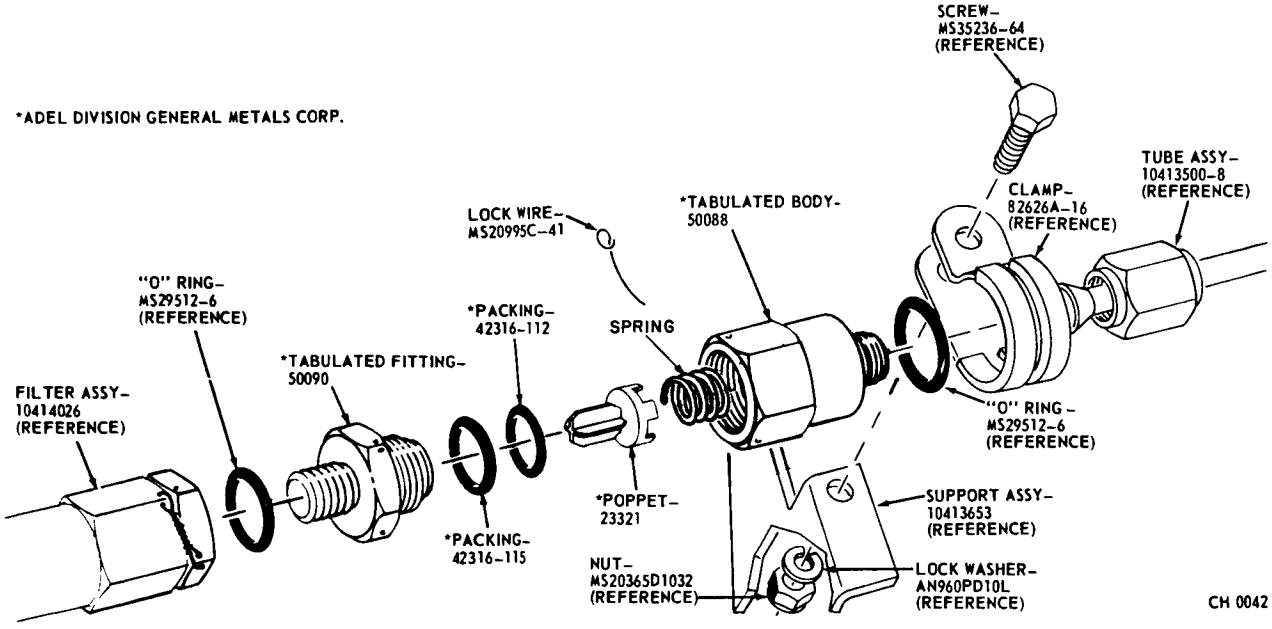

4.5.13 HELIUM SUPPLY CHECK VALVE 10414014
EXPLODED VIEW

HELIUM SUPPLY HIGH PRESSURE O.K. SWITCH PART NO. 10414029

The high-pressure o.k. switch B414 is used to monitor the 3000 psig storage bottle, indicating whenever this 3000 psig is exceeded.

1. VENDOR - SOUTHWESTERN INDUSTRIES, INC., PART NO. PS-3800-3050.
2. LOCATION - Station 885 on fin No. 2 between LOX tank No. 2 and fuel tank No. 2 on the LOX side.
3. SERVICE - Helium
4. PRESSURE -
   a. Operating: 3100 psig.
   b. Proof: 5000 psig.
   c. Switch Actuation: Switch to actuate on increasing pressure at 3050 plus or minus 66 psig and dropout at 2850 minimum.
5. ELECTRICAL -
   a. Continuity: N.C. Pins, "A" and "B", on decreasing pressure, Pins "B" and "C", 0.5 ohm maximum resistance allowed.
   b. Insulation resistance: 500 volt Megger test each isolated terminal to valve body; 50 megohms minimum.
   c. Indicating lights: At no time may both indicating lights for the N.O. and N.C. positions be off when power is applied.
6. TEMPERATURE - OPERATING - Minus 40° F to plus 160° F.
7. RUBBER SEALS - Rubber seals must meet requirements of Specification ABMA-STD-29.
8. LUBRICATION - Lubricate rubber seals with DOW CORNING DC 33.

Refer to page 4.4.47 for sectional view.

Refer to page 4.5.5 figure 4.5.2 for installation on Assembly 10413654

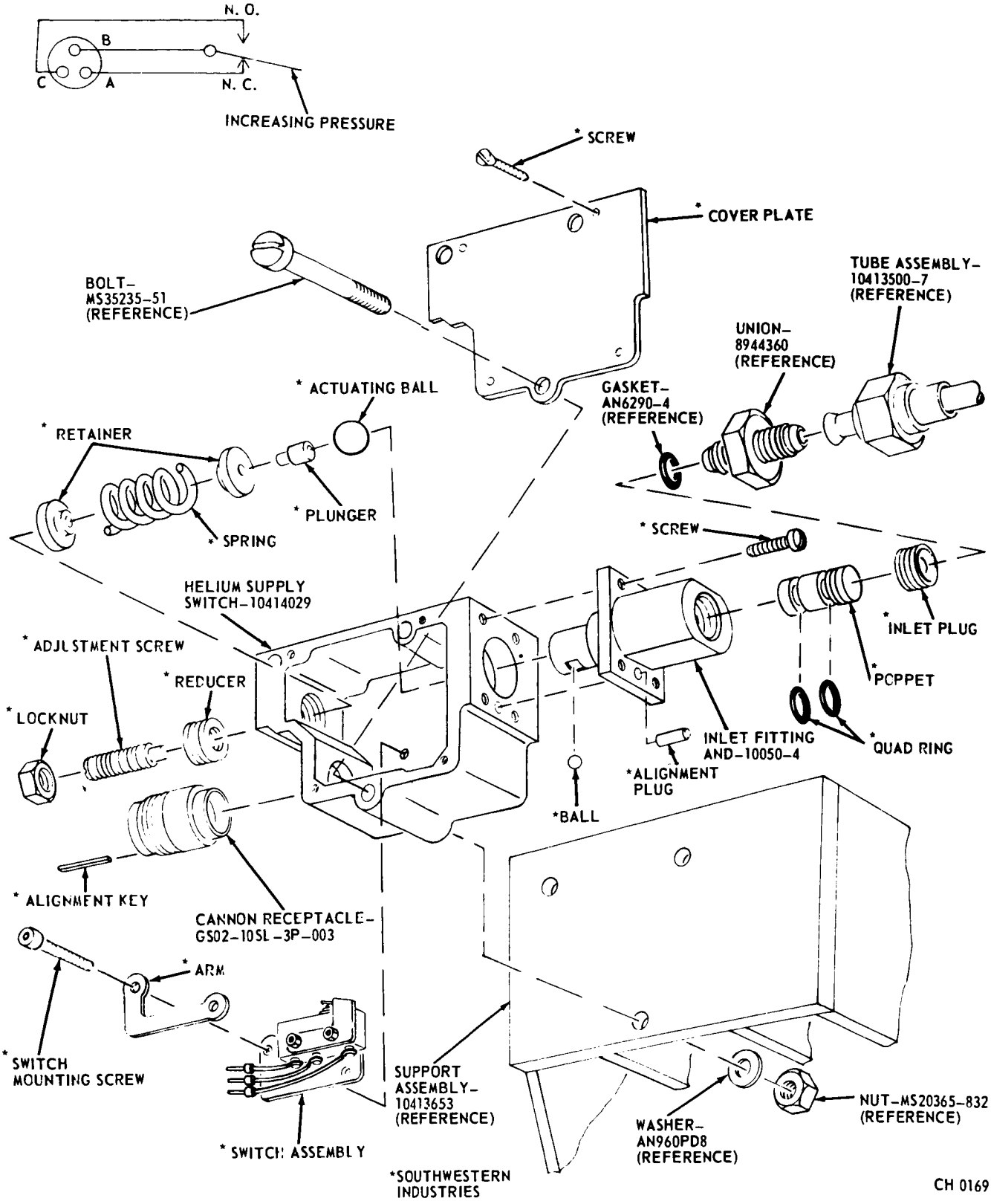

4.5.14 HELIUM SUPPLY HIGH PRESSURE O.K. SWITCH
10414029 INSTALLATION

CHECKOUT NEEDLE VALVE, PART NO. 10414076

The three-way needle valve (B415) is used to calibrate the helium supply high-pressure o.k. switch (B414) in the helium system.

1. VENDOR - BENTON CORPORATION, PART NO. B-17500.
2. LOCATION - Station 883 at fin No. 2 between LOX tank No. 2 and fuel tank No. 2.
3. PACKING MATERIAL - Teflon.
4. PRESSURE -
   a. Operating: 3000 psig.
   b. Proof: 4500 psig.
   c. Burst: 7500 psig.
5. LEAKAGE ALLOWANCE - Internal and external - no leakage allowed.
6. TEMPERATURE - OPERATING - Minus 65° F to plus 350° F.
7. SERVICE - Air, nitrogen, helium, H_2O_2, fuel, combustible gas, hydraulic oil, and lube oil.
8. LUBRICATION - None allowed.
9. TORQUE - Packing nut 2008 to 50-60 in/lb.

Refer to page 4.5.5, figure 4.5.2, for sectional view.

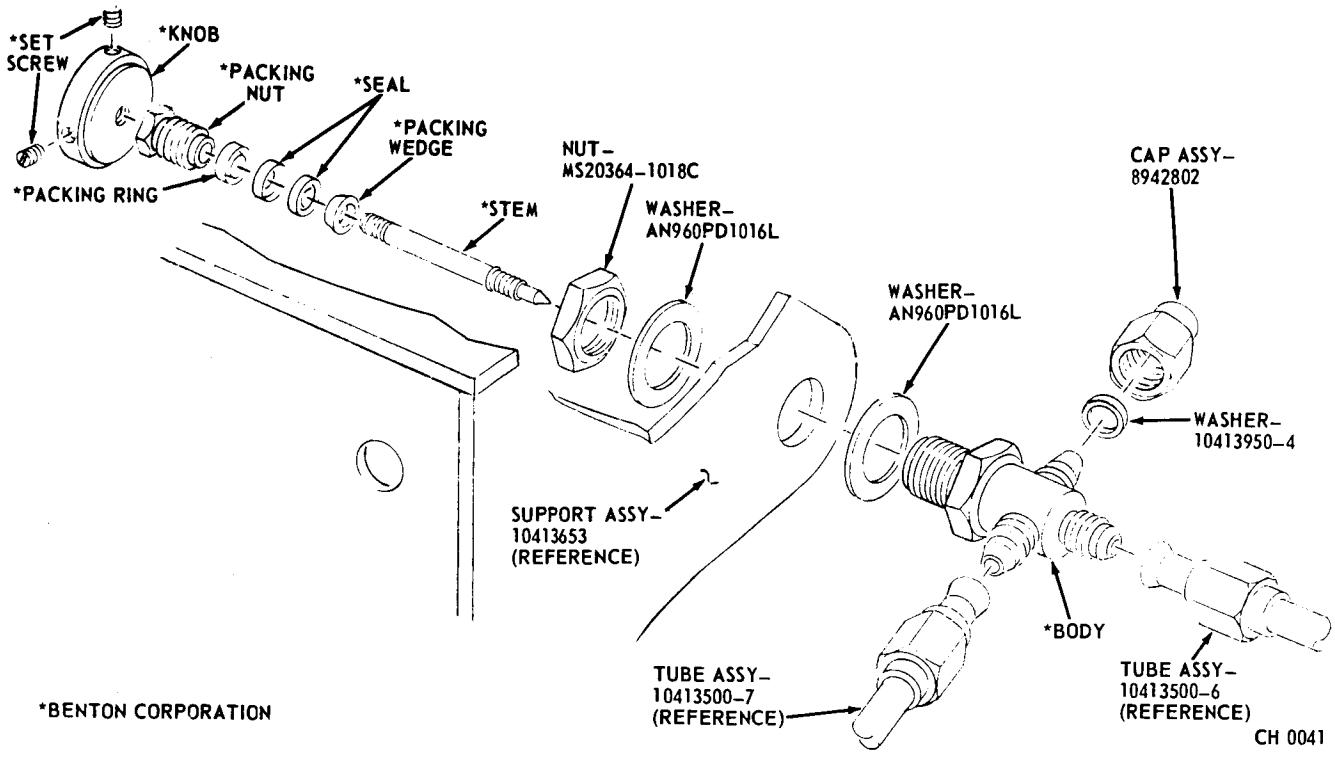

4.5.15 CHECKOUT NEEDLE VALVE 10414076 - INSTALLATION

PROPELLANT UTILIZATION COMPUTER PART NO. 10414067

The Propellant Utilization Computer (Sensor) is a servo driven force balance differential pressure ratio instrument. The sensor operates on 115 volts, 400 c.p.s., and 28 v.d.c. The outputs of the sensor are two (2) signals given by two (2) potentiometers positioned by the servomechanism system. The sensor measures the ratio of the differential pressure across two (2) of the liquid oxygen tanks to the differential pressure across two (2) of the fuel tanks. As this ratio LOX bottom-LOX top fuel bottom -fuel top pressure ratio, is transmitted to ground by telemetry, it provides a complete history of propellant utilization throughout the booster operation.

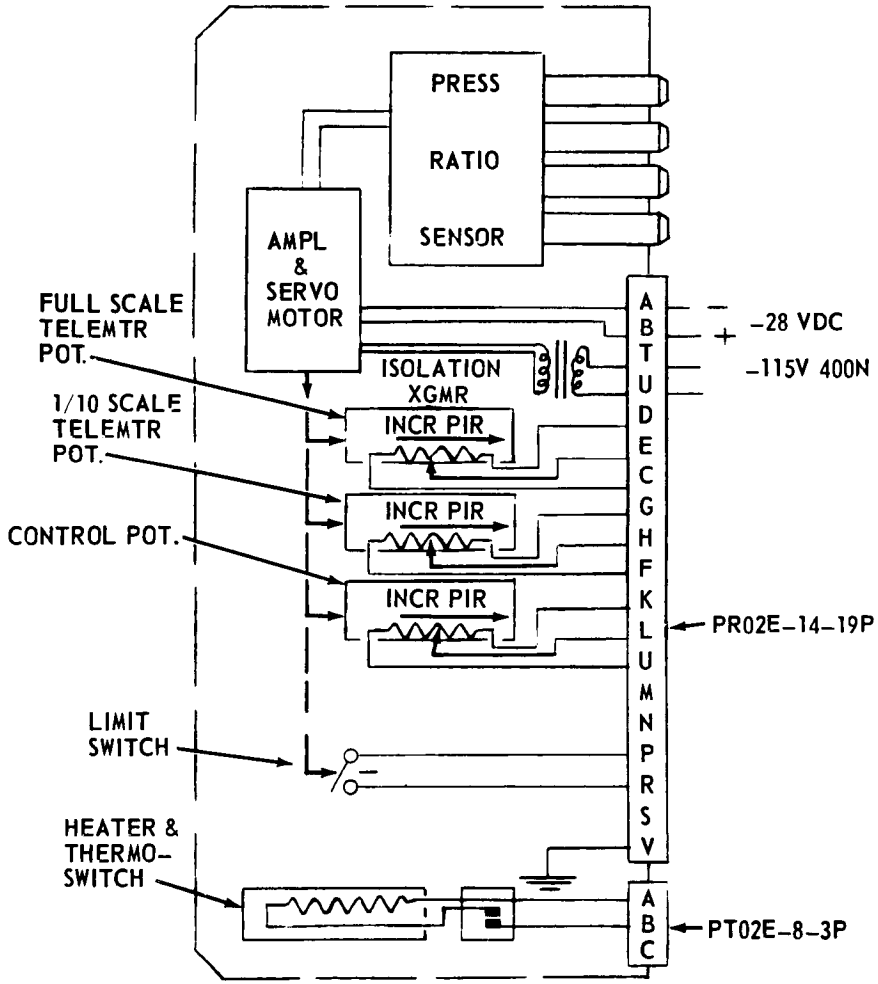

WIRING SCHEMATIC

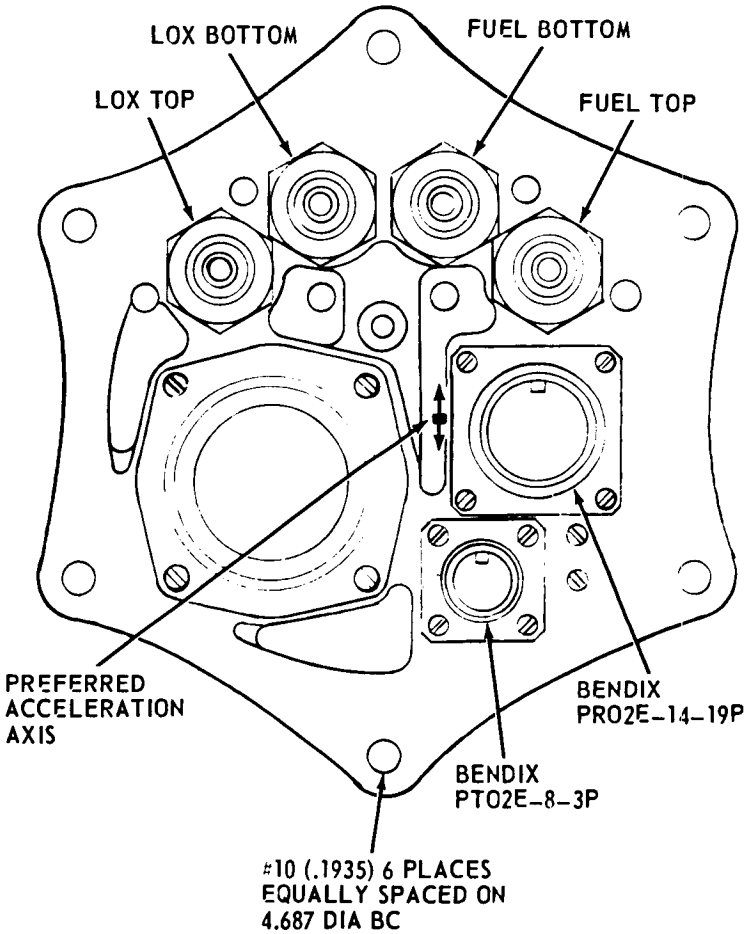

CH 0192

4.5.16 COMPUTER, PROPELLANT UTILIZATION SCHEMATIC 10414067

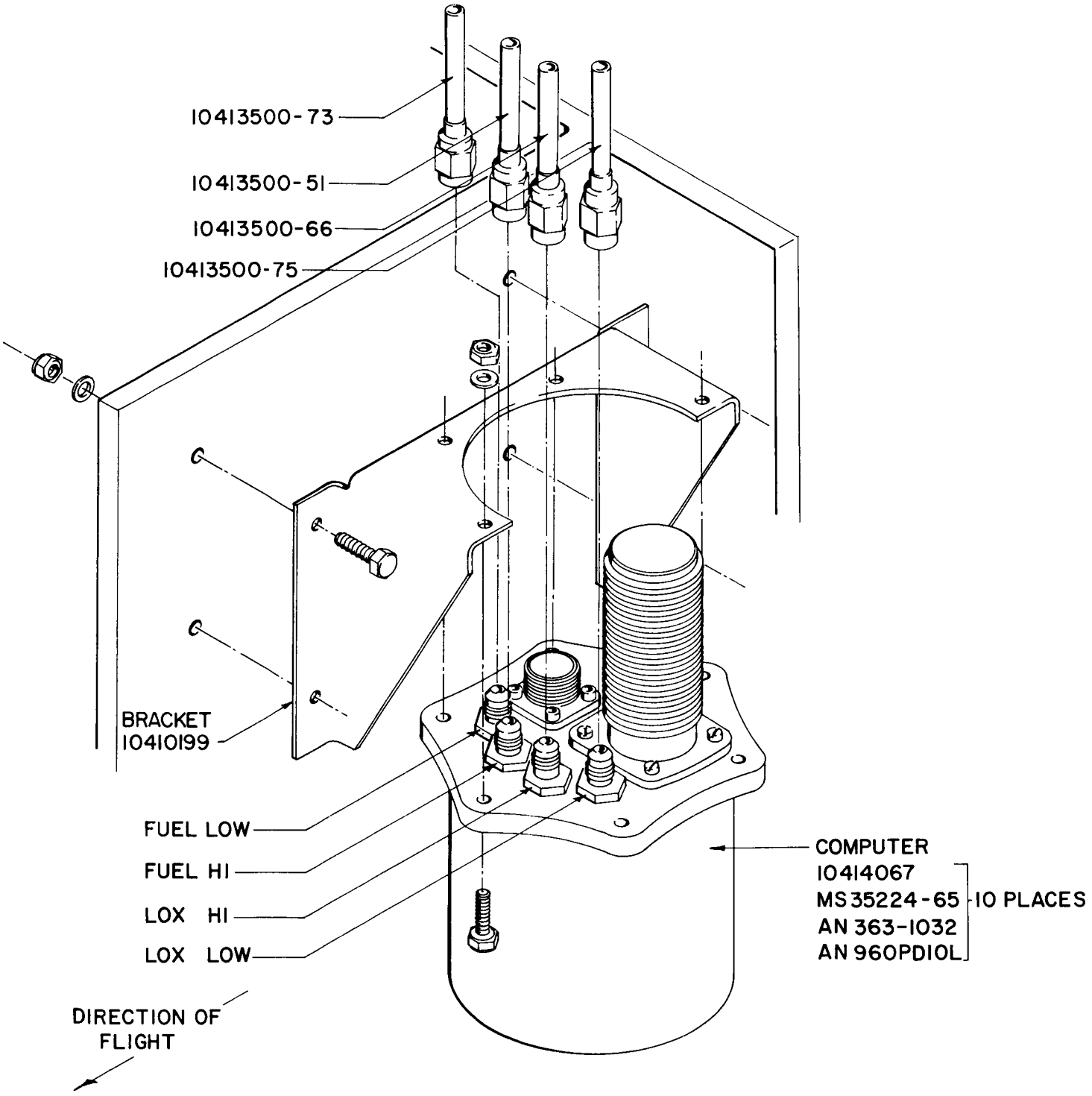

4.5.17 PROPELLANT UTILIZATION COMPUTER
10414067-INSTALLATION

FUEL DIFFERENTIAL PRESSURE TRANSDUCER
PART NO. 8968259

Technical data and illustration to be supplied when available.

HELIUM SUPPLY CHARGING VALVES
PART NO. MS28889-1

The air charging valves, B429 and B430, used on the pressure regulating valve assembly 10413622, provide a connection for charging the regulated 450 psi system.

1. LOCATION - Station 875.
2. PRESSURE -
   a. Operating: 1500 psig.
   b. Working: 5000 psig maximum.
3. LEAKAGE - None.
4. LUBRICATION - None allowed.

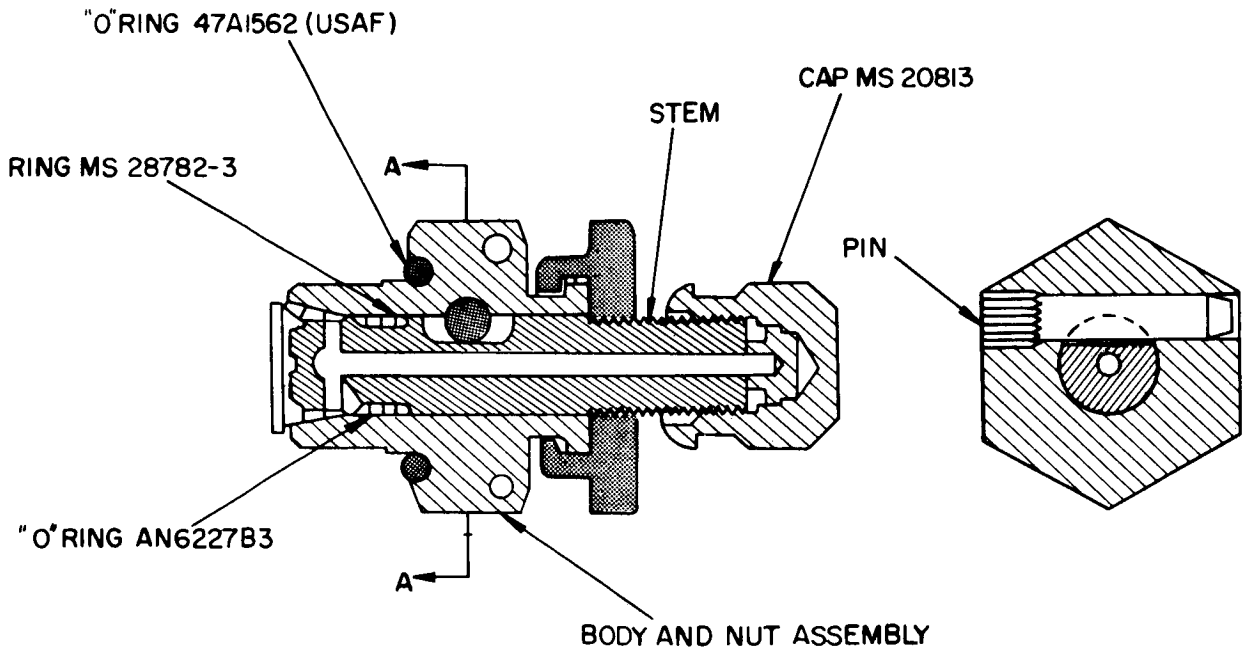

4.5.18 HIGH PRESSURE AIR CHARGING VALVE
MS 28889-1 SECTIONAL VIEW

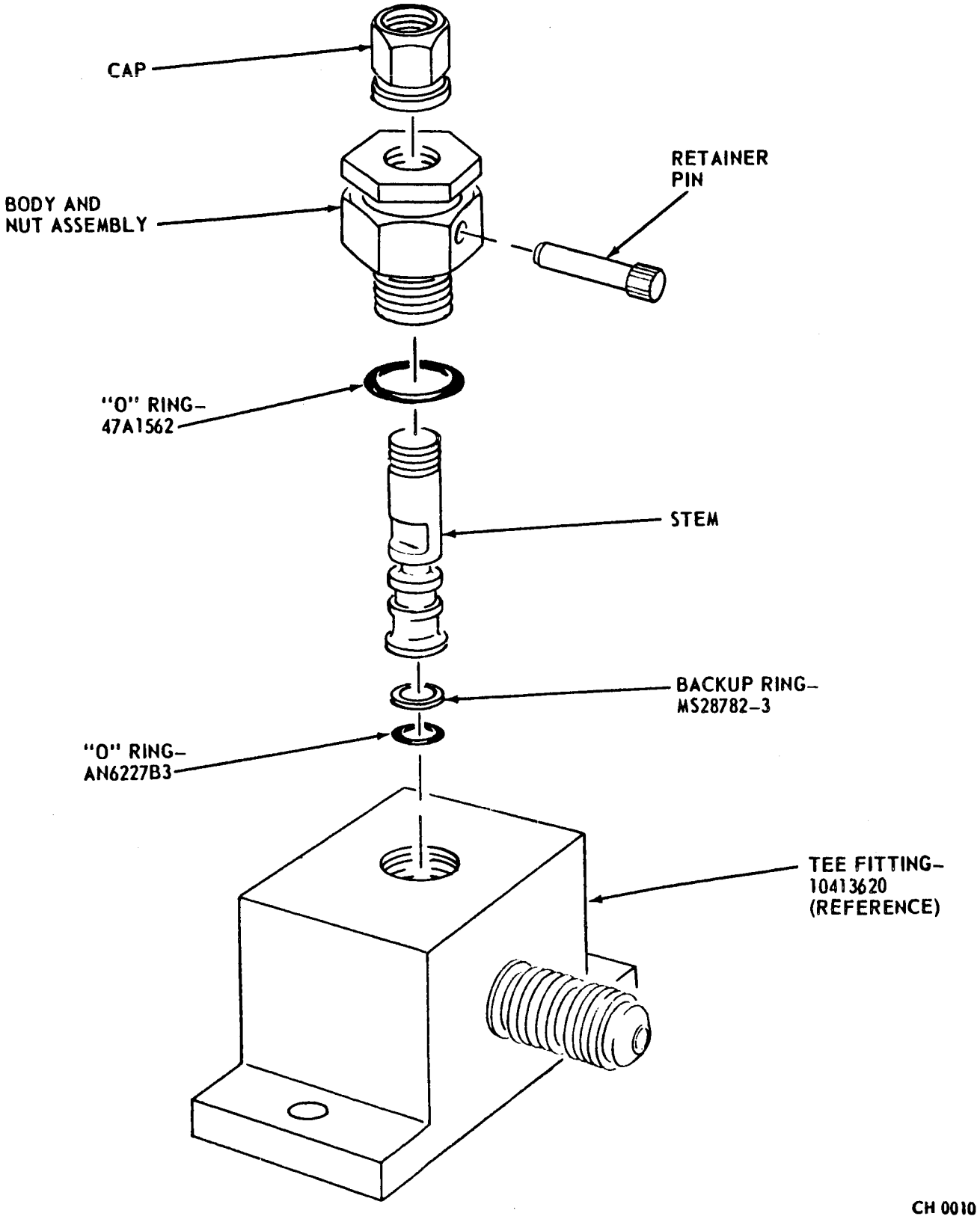

4.5.19 HIGH PRESSURE AIR CHARGING VALVES EXPLODED VIEW

THREE-WAY NEEDLE VALVES, PART NO. 10414084

The three-way needle valves are used in the measuring system. (Reference numbers are from B434 through B441).

1. VENDOR - BENTON CORPORATION, PART NO. B-4100.
2. LOCATION - Helium system.
3. SERVICE - Air, helium, H_2O_2, fuel, nitrogen, hydraulic oil, combustible gas, lube oil.
4. PRESSURE -
   a. Operating: 3000 psig.
   b. Proof: 4500 psig.
   c. Burst: 7500 psig.
5. LEAKAGE ALLOWANCES - Internal and external - no leakage allowed.
6. TEMPERATURE - OPERATING - Minus 100° F to plus 550° F.
7. LUBRICATION - None allowed.
8. PACKING MATERIAL - Teflon.

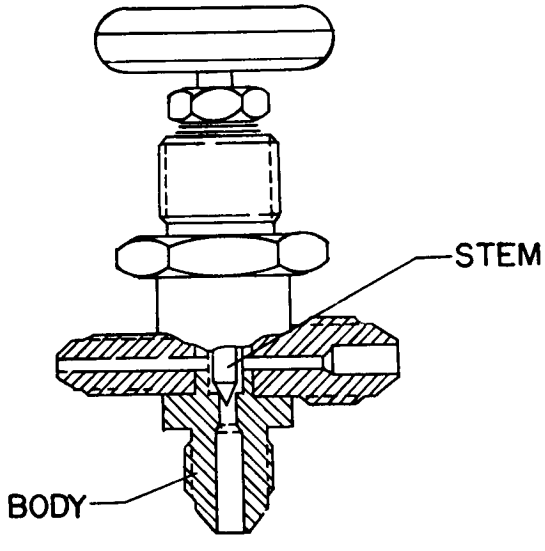

CH 0156

4.5.20 THREE-WAY NEEDLE VALVE 10414084 SECTIONAL VIEW

THIS PAGE INTENTIONALLY LEFT
BLANK

CHECKOUT VALVE, PART NO. 10414087

The three-way needle checkout valve (B442) is used to calibrate the computer (B423).

1. VENDOR - BENTON CORPORATION, PART NO. B15600.
2. LOCATION - Station 880, one required over LOX tank No. 4.
3. SERVICE - Air, nitrogen, helium, H_2O_2, fuel, combustible gas, hydraulic oil, lube oil, gaseous oxygen.
4. PRESSURE -
   a. Operating: 3000 psig.
   b. Proof: 4500 psig.
   c. Burst: 7500 psig.
5. TEMPERATURE - OPERATING - Minus 100° F to plus 550°F
6. LEAKAGE ALLOWANCES - Internal and external, no leakage allowed.
7. PACKAGING MATERIAL - Teflon.
8. LUBRICATION - None allowed.

Refer to 4.3.28, figure 4.3.19 for sectional view.

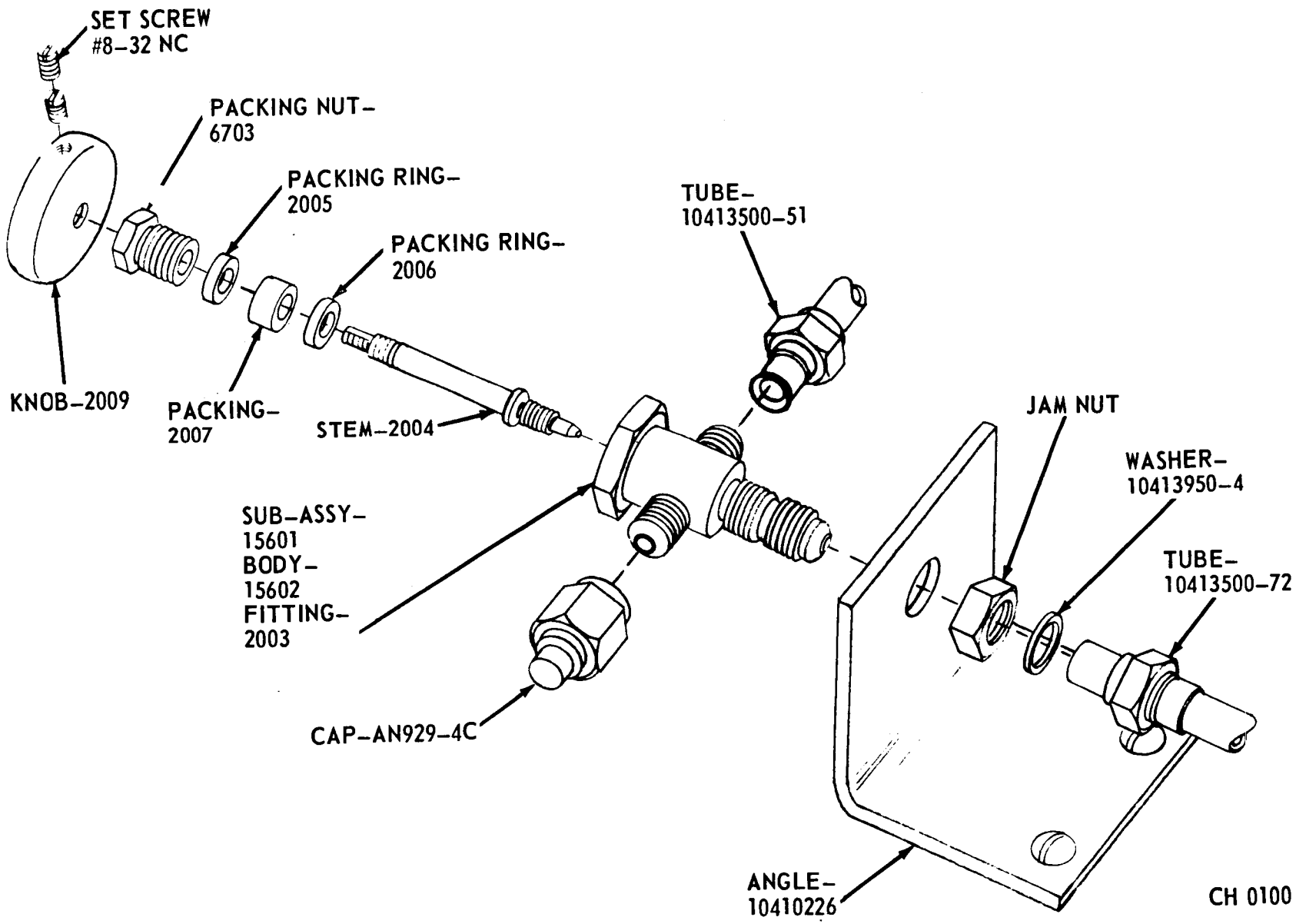

4.5.21 CHECKOUT VALVE 10414087 - INSTALLATION

PROPELLANT UTILIZATION BYPASS CONTROL VALVE
PART NO. 10414027

The solenoid-operated control valves (B409 and B420) normally direct helium flow through the constant flow regulator valves (B407, B421). .Five seconds after liftoff, the solenoid is energized and helium flor is bypassed through the orifices (B408, B422), providing increased helium flow for purging the propellant utilization tube assemblies.

Refer to page 4.4.9 and figure 4.4.5 for technical data and illustration.

SECTION V
S-IV STAGE

5.1 GENERAL

The S-IV stage on the SA-1 vehicle is a "boilerplate" version of live S-IV stage. The dummy S-IV stage simulates the weight and center of gravity of the live S-IV stage. This simulation is accomplished by a water ballast tank. The S-IV stage is shown in figure 1.1.2.

The access doors and service points of S-IV stage are shown in figures 1.1.13 and 1.1.18. The following pages show the S-IV stage schematic and a description of each S-IV component.

5.2 BALLAST TANK

The ballast tank used in the S-IV stage to simulate the weight and center of gravity of the live S-IV stage is structurally supported and requires no pressurization. However, to protect the tank from collapse when empty, a vacuum relief check valve located in the forward tank area is provided. The tank is filled and drained through a hand-operated fill and drain valve and a hand-operated over-flow and vent valve.

After the ballast tank is filled to a pre-determined level, the vent and overflow valve is closed. During flight an air pressure regulator installed on the forward end of the tank maintains a ullage area pressure of 16 to 12 psia.

CALLOUT LIST

FIND NO.	QTY	COMPONENT	PART NO.	PAGE
E1	1	Ballast Tank	10412900	5.1.3
E2	1	Vacuum Relief Check Valve Assembly	10414033	5.1.4
E3	1	Tank Pressurization Air Pressure Regulator	10414354	5.1.6
E4	1	Manual Tank Vent and Overflow Valve and Adapter	10426001	5.1.8
E5	1	Manual Tank Fill and Drain Valve and Adapter	10426001	5.1.8

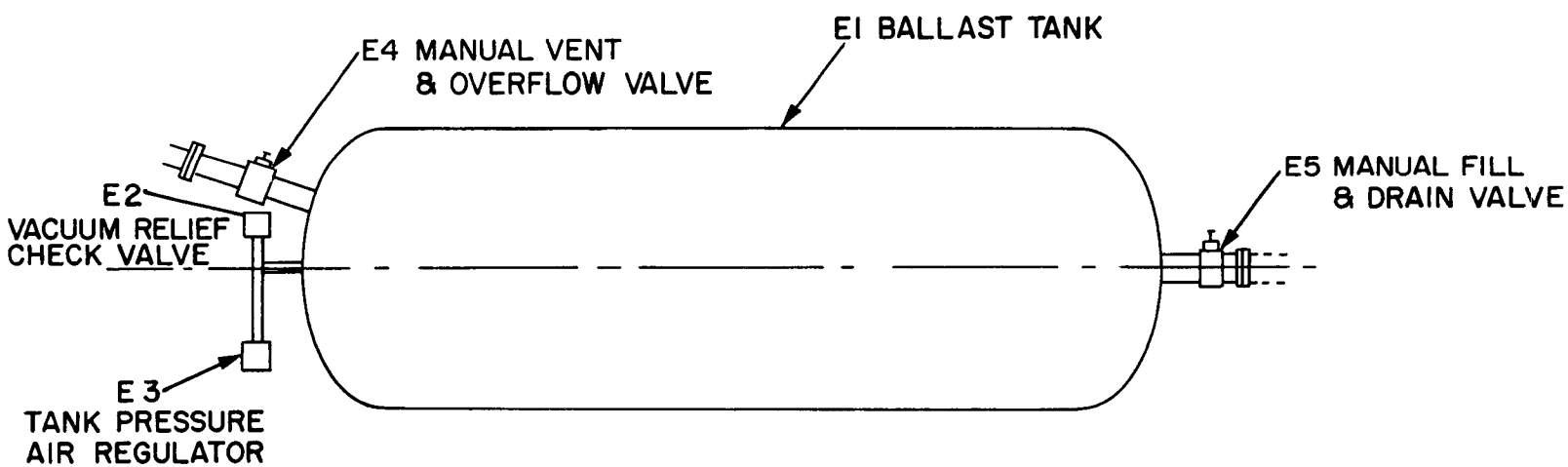

5.1.1 S-IV DUMMY STAGE SCHEMATIC

VACUUM RELIEF CHECK VALVE ASSEMBLY, PART NO. 10414033

The check valve (E2) relieves any vacuum due to a sudden change in ambient pressure or temperature around the ballast tank.

1. VENDOR - MAROTTA VALVE CORP., PART NO. 204022
2. LOCATION - On top of S-IV stage ballast tank station 1366.677
3. SERVICE - Air or GN_2
4. PRESSURE OPERATING -
5. LUBRICATION - Rubber components shall be lubricated with M. W. Kellogg KEL-F No. 10 oil.
6. LEAKAGE - None

Refer to page 4.2.22 for sectional view.

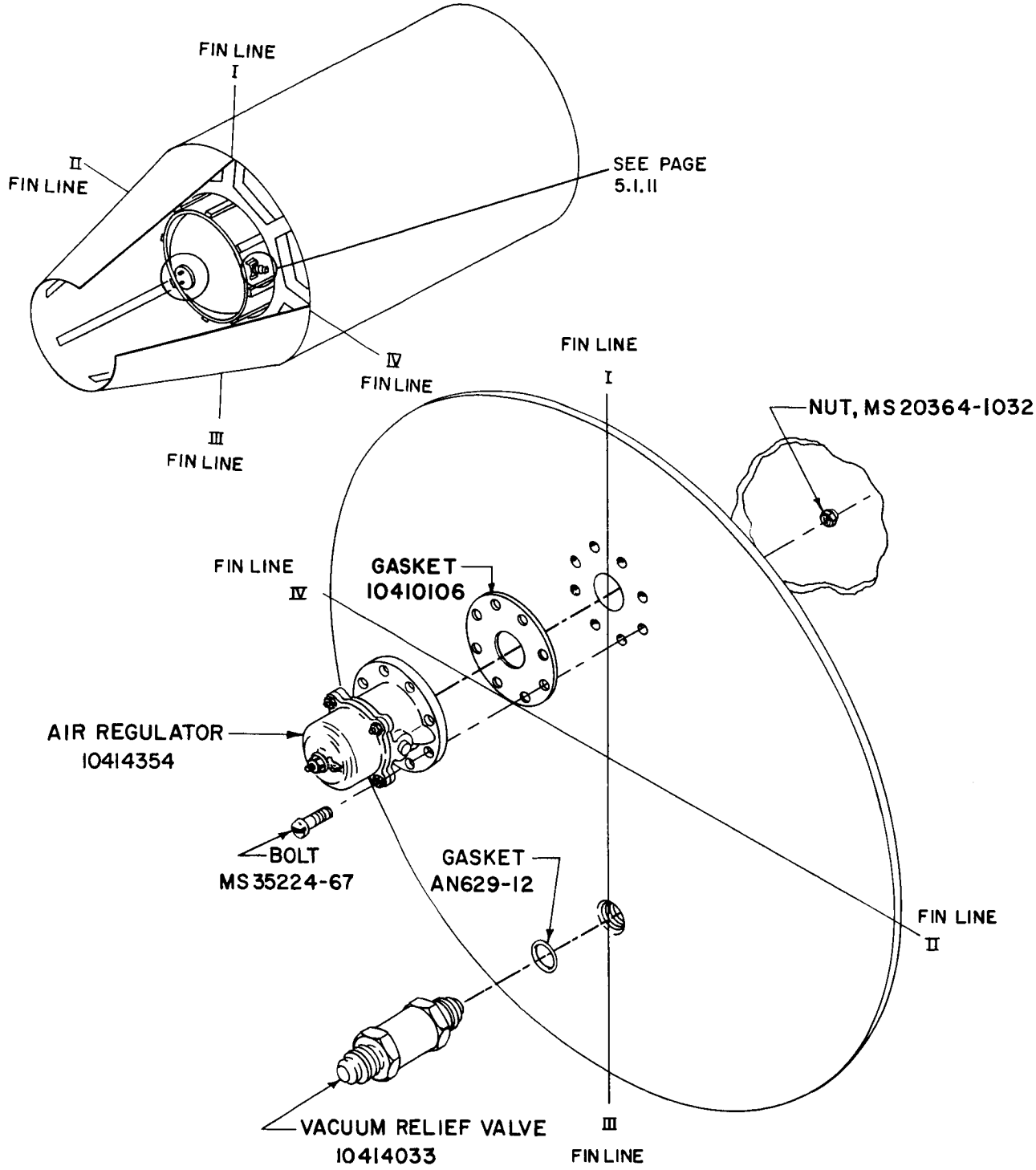

5.1.2 TANK PRESSURIZATION AIR PRESSURE REGULATOR AND CHECK VALVE INSTALLATION

15 September 1961

TANK PRESSURIZATION AIR PRESSURE REGULATOR, PART NO. 8941682

The air regulator (E3) is used to maintain the proper pressure in the ballast tank. Prior to liftoff and after the ballast tank is filled, the ullage area of the tank is atmospheric. As the vehicle rises, ambient pressure decreases and the regulator vents enough pressure to maintain 16 to 12 psia tank pressure.

1. VENDOR - AIR RESEARCH MANUFACTURING CO. PART NO. 102302
2. LOCATION - On top of S-IV stage ballast tank, station 1366.677
3. SERVICE - Air; carbon dioxide, and GN_2
4. PRESSURE -
   a. Operating Pressure: 14.5 psia nominal. The valve will maintain a tank pressure of 16.0 to 12.0 psia at the flow range of .100 to 35 scfm.
   b. Proof Pressure: 25 psia
5. TEMPERATURE - Minus 65° F to plus 125° F
6. LUBRICATION - Lubricate O-rings with M. W. Kellogg KEL-F No. 10 oil.

Refer to page 5.1.5 for installation.

5.1.4 MANUAL TANK VENT AND OVERFLOW VALVE AND ADAPTER - SECTIONAL VIEW

to be supplied when available

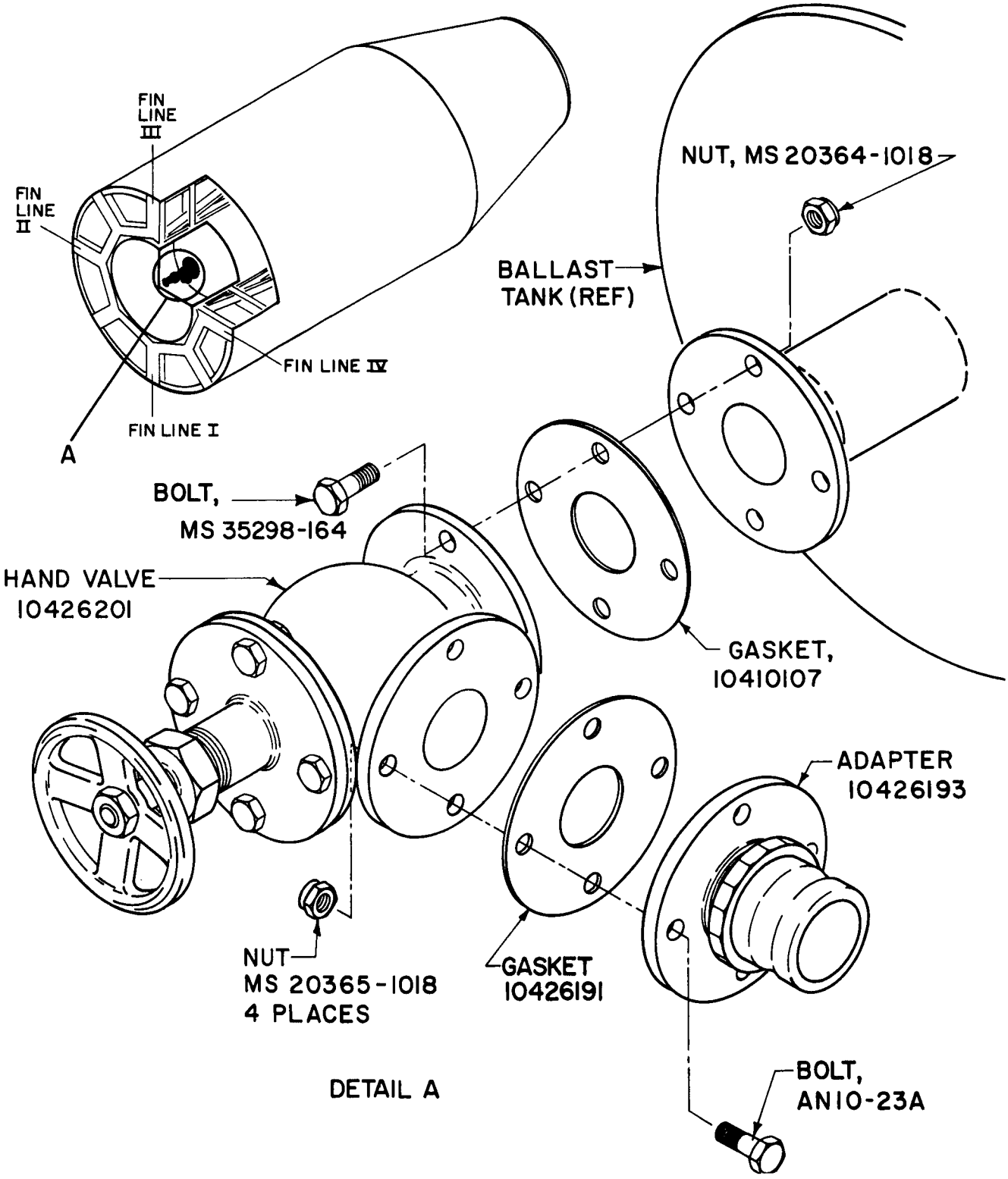

5.1.5 MANUAL TANK FILL AND DRAIN VALVE, AND ADAPTER INSTALLATION

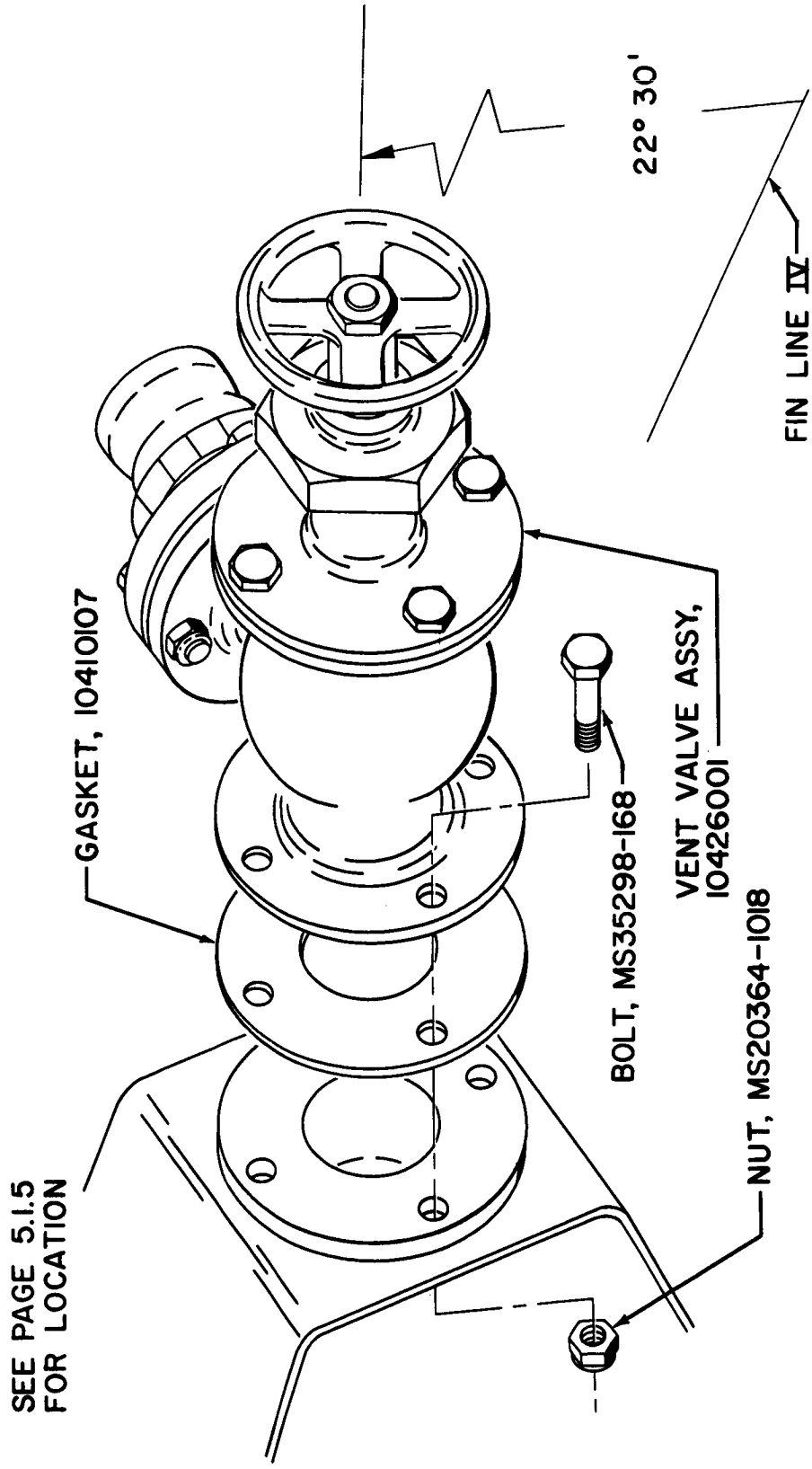

5.1.6 MANUAL TANK VENT AND OVERFLOW VALVE, AND ADAPTER INSTALLATION

THIS PAGE INTENTIONALLY LEFT
BLANK

SECTION VI
S-V STAGE

6.1 GENERAL

The S-V stage on the SA-1 vehicle is a "boilerplate" version of the live S-V stage. The dummy S-V stage simulates the weight and center of gravity of the live S-V stage. This simulation is accomplished by a water ballast tank. The S-V stage is shown in Figure 1.1.3. The access doors and service points of the S-V stage are shown in Figures 1.1.13 and 1.1.19.

6.2 BALLAST TANK, BALLAST TANK PRESSURIZATION AND ALPHA METER PRESSURIZATION SYSTEMS.

The ballast tank, which simulates the weight and center of gravity of the live S-V stage, is filled and drained through a hand-operated fill and drain valve. The tank is pressurized to maintain structural integrity. To protect the tank from collapse due to a sudden change in ambient pressure when depressurized or empty, a hand-operated vent and overflow valve, a pressure regulator and a relief valve are located in the forward area.

The pressurization system pressurizes the alpha meter system and the above mentioned ballast tank. The pressurization supply is contained in the .5 cubic foot sphere at 3000 psig. Prior to launch, GN_2 is supplied to alpha meters for purging and pressurization. After pressurization, a solenoid valve is closed to seal GN_2 under pressure in the alpha meters. The supply sphere is used in flight to pressurize only the ballast tank, and is filled from the triplex spheres supply line.

CALLOUT LIST

FIND NO.	QTY.	COMPONENT	PART NO.	PAGE
F1	1	Water Ballast Tank	10410016	
F2	1	Manual Tank Vent and Overflow Valve	27-08108-3	
F3	1	Ullage Cap	AN929-16C	
F4	1	Ullage Bulkhead Fitting	MS24405-16	
F5	1	GN_2 High Pressure Bleed Baffle	10438349	6.1.4
F6	1	Manual Tank Fill and Drain Valve	88-30900-293	
F7	1	Adapter Tank Vent and Overflow	10426172	6.1.14
F8	1	Adapter Tank Fill and Drain	10426193	6.1.14
F200	1	GN_2 Pressurizing Pressure Transducer	8968273	6.1.6
F202	1	GN_2 Fill Solenoid Valve	10414358	6.1.8
F203	1	GN_2 Supply .5 Cu. Ft. Sphere	10438154	6.1.4
F204	1	High Pressure O.K. Switch	10414029	6.1.12
F205	1	GN_2 Filter Assembly	10414026	6.1.13
F206	1	GN_2 System Regulator	55-80015-3	6.1.16
F207	1	GN_2 System Relief Valve	55-80015-3	6.1.16
F208	1	GN_2 System Solenoid Valve Assembly	10414358	6.1.8
F209	1	Tank Vent Solenoid Valve	10414358	6.1.8

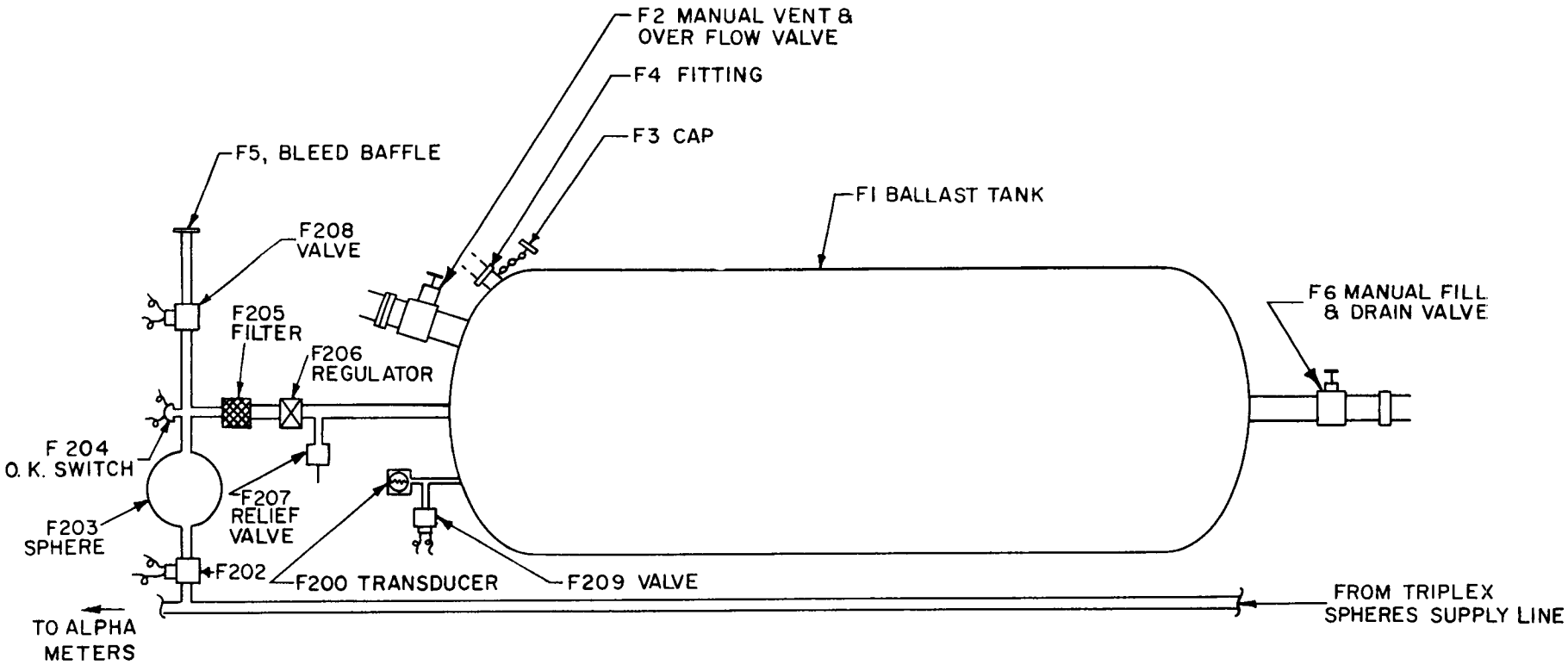

6.1.1 S-V DUMMY STAGE SCHEMATIC

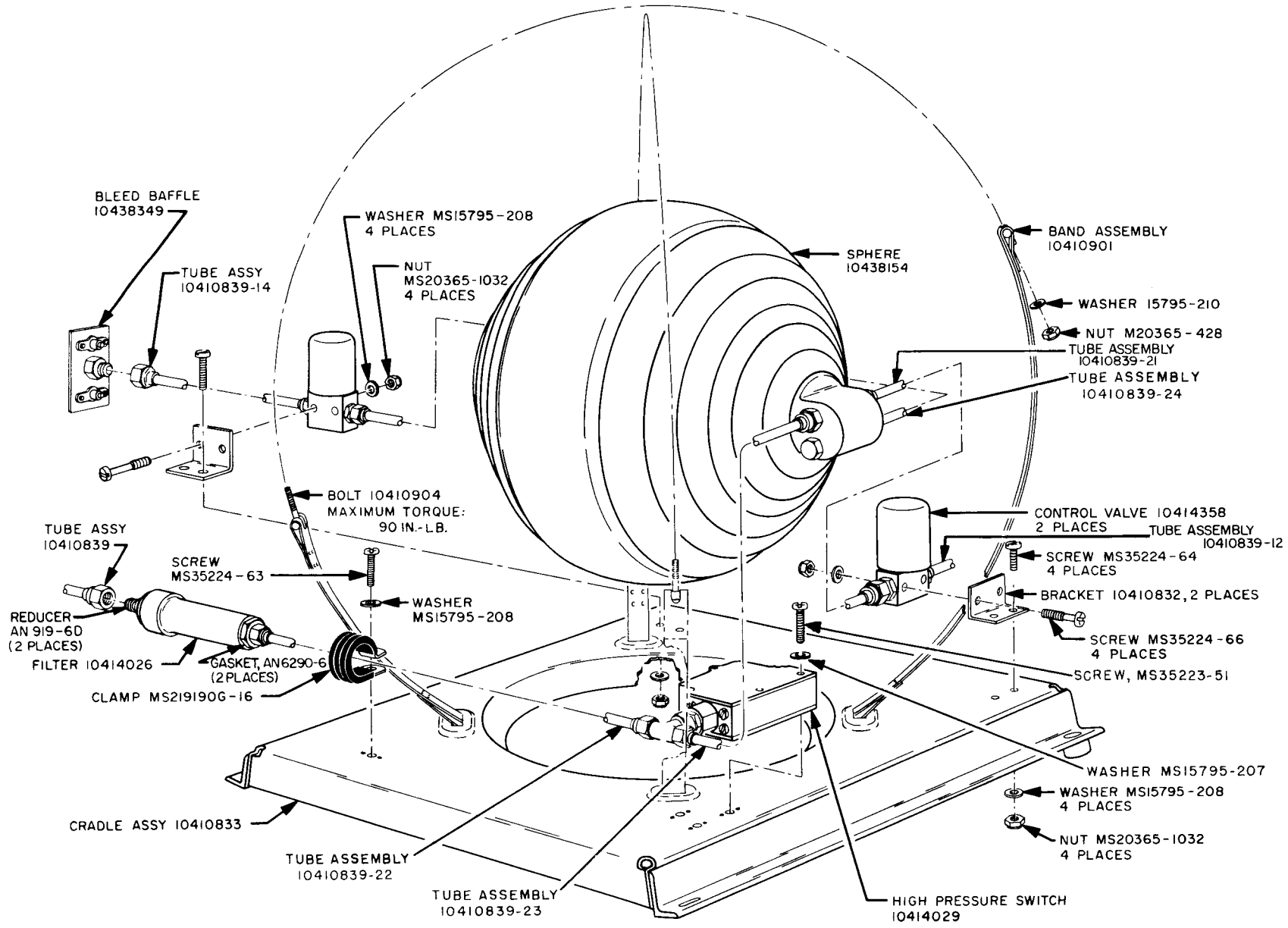

6.1.2 GN_2 HIGH PRESSURE BOTTLE ASSEMBLY
10410825-INSTALLATION

THIS PAGE INTENTIONALLY LEFT
BLANK

GN_2 PRESSURIZING PRESSURE TRANSDUCER, PART NO. 8968273

The transducer (F200) monitors the ballast tank (F1) pressures. Should the pressure exceed a predetermined load, the transducer signals the vent valve, to relieve the tank.

Drawing not released, technical data and sectional view to be supplied when available.

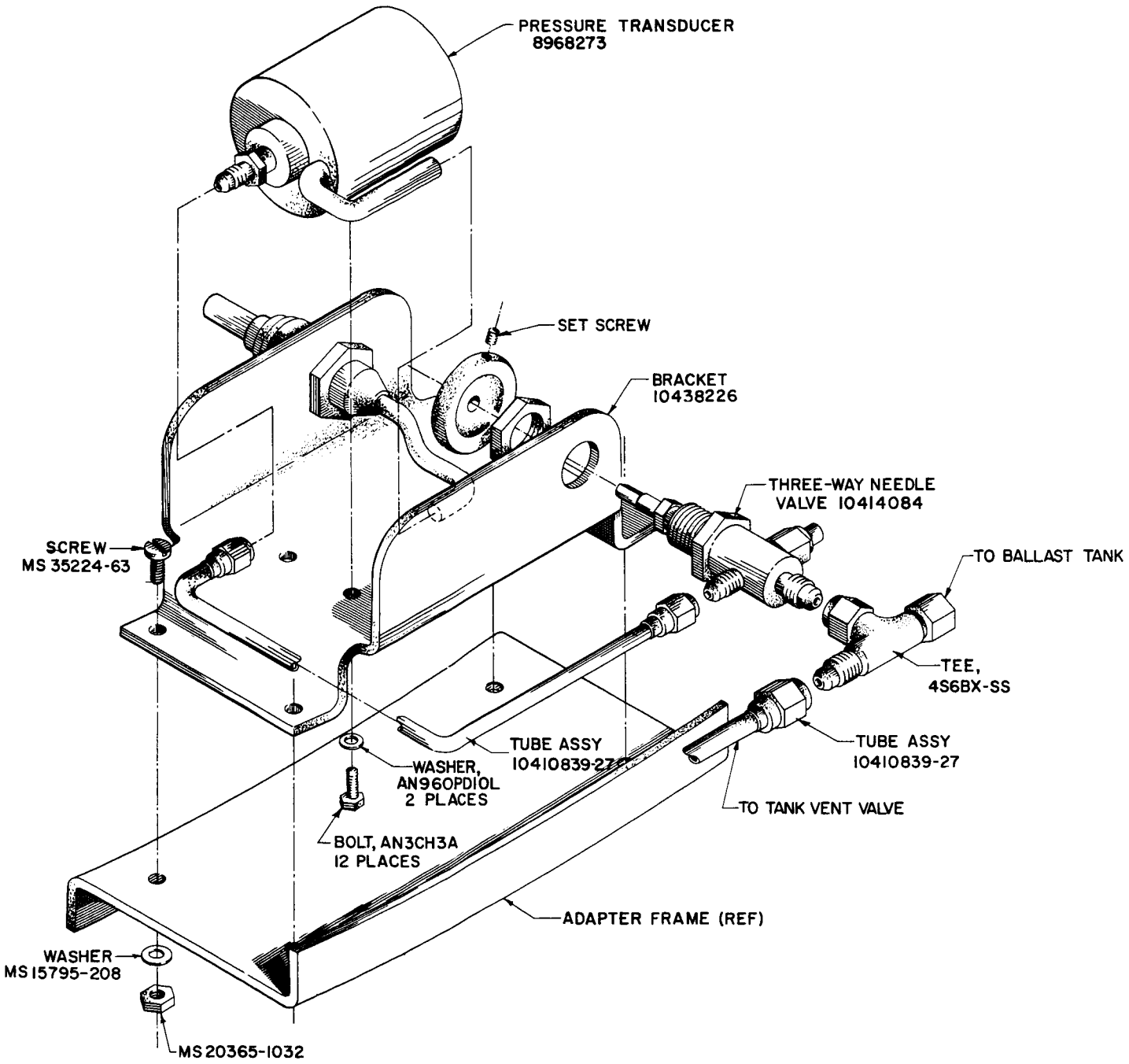

6.1.3 GN_2 PRESSURIZING PRESSURE TRANSDUCER INSTALLATION

GN_2 SYSTEM SOLENOID CONTROL VALVE, PART NO. 10414358

GN_2 Fill Solenoid Valve

The fill valve (F202) controls the filling of the storage sphere (F203). The normally closed valve is actuated from the ground and sphere is filled from the supply line from the triplex spheres fill line.

Refer to page 6.1.4 for installation.

GN_2 System Solenoid Vent Valve Assembly

The valve (F208) controls the pressure in the storage sphere (F203). The pressure is monitored by the pressure switch (F204) and if the pressure exceeds 3000 psig, the switch sends a signal to the valve to open and vent the excess pressure.

Refer to page 6.1.4 for installation.

Tank Vent Solenoid Valve Assembly

The valve (F209) controls the pressure in the ballast tank (F1). The transducer (F200) monitors the ballast tank pressure and if pressure should exceed a determined valve, the valve (F209) is opened and vents the tank to a proper pressure level.

1. VENDOR - MAROTTA VALVE CORP., PART NO. 206003
2. LOCATION - SV stage adapter at Station 1762
3. SERVICE - Air, GN_2 or helium
4. PRESSURE -
   a. Operating: 3000 psig
   b. Proof: 4500 psig
   c. Burst: 7500 psig
5. LEAKAGE -
   a. Internal: 5 scim at 3000 psig
   b. External: None
6. LUBRICATION - Lubricate all seals and sliding surfaces with DC-55 grease or equivalent.
7. TEMPERATURE - Minus 65° F to plus 125° F
8. ELECTRICAL -
   a. Solenoid Action: The solenoid shall actuate to open position when 10 to 18 v.d.c. is applied and shall return to normal or closed position at reduced power of 10 to 2 v.d.c.
   b. Insulation Resistance: The resistance between each terminal and the valve body shall be no less than 50 megohms.

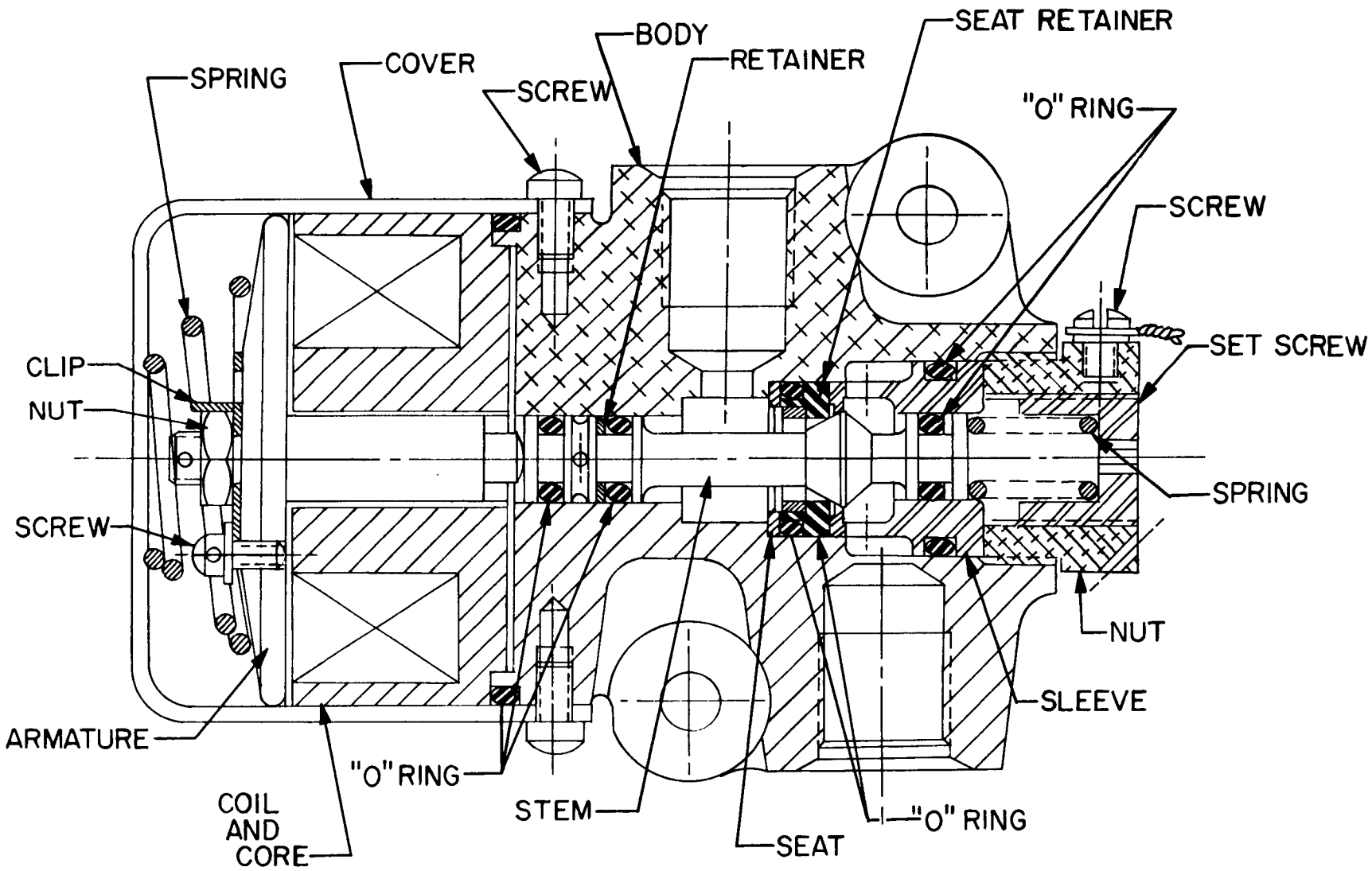

6.1.4 GN_2 SYSTEM SOLENOID CONTROL VALVE, 10414358
SECTIONAL VIEW

THIS PAGE INTENTIONALLY LEFT
BLANK

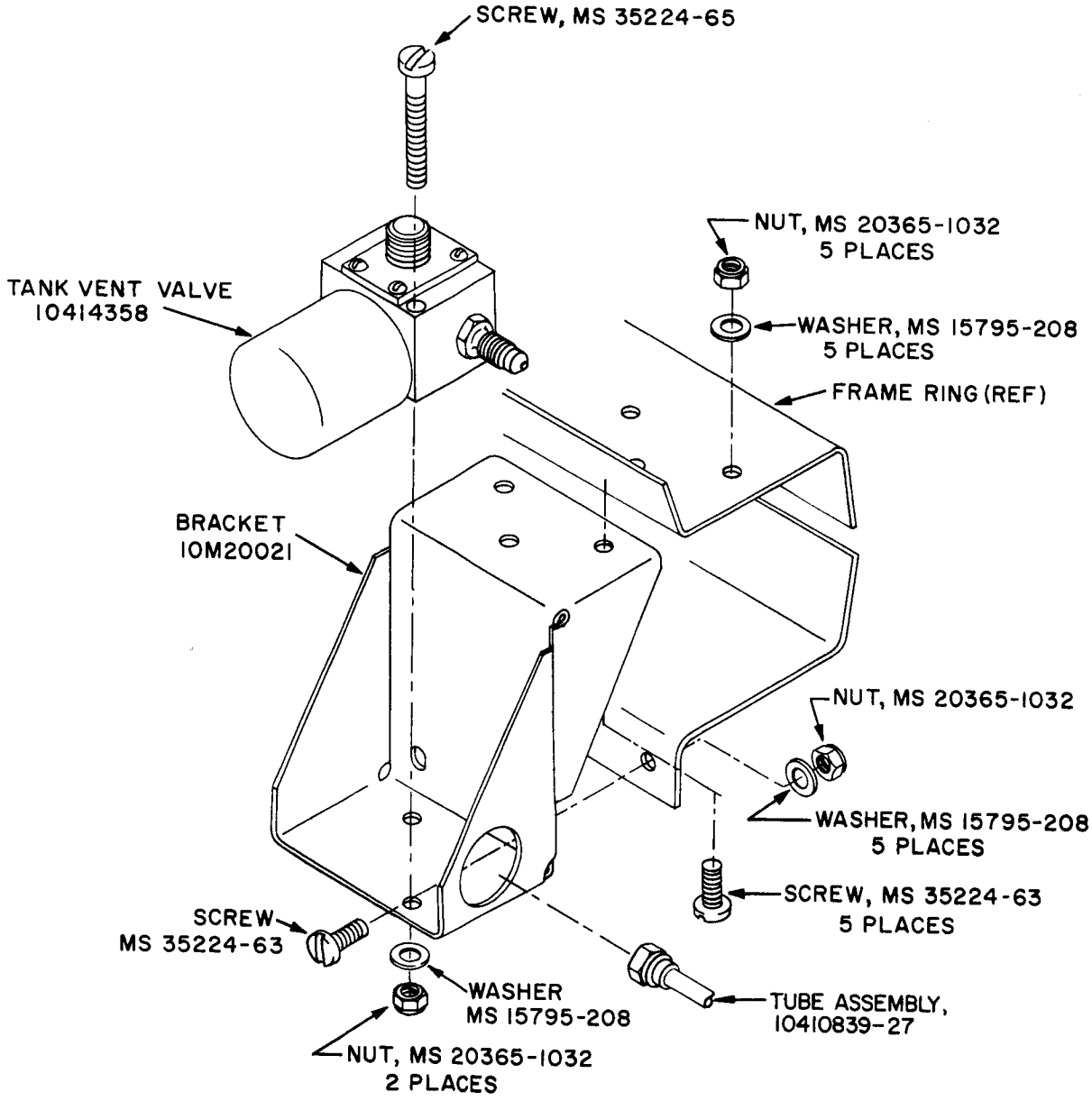

6.1.5 TANK VENT SOLENOID VALVE ASSEMBLY INSTALLATION

GN_2 HIGH PRESSURE O. K. SWITCH, PART NO. 10414029

The O. K. switch is used in the S-V stage pressurization system to monitor the 3000 psig pressure in the storage sphere. If the pressure exceeds 3000 psig, the O.K. switch activates the solenoid valve assembly (F208) which relieves the excess pressure through the bleed baffle (F5).

1. VENDOR - SOUTH WESTERN INDUSTRIES, INC., PART No. PS-3800-3050
2. LOCATION - S-V stage adapter at station 1740.
3. SERVICE - Air, GN_2 or oxygen
4. PRESSURE -
   a. Operating: 3100 psig
   b. Proof: 5000 psig
   c. Switch Actuation: Switch to actuate on increasing at 3050 ± 66 psig and dropout at 2850 minimum.
5. ELECTRICAL -
   a. Continuity: N. C. Pin "A" and "B", on decreasing pressure, Pins "B" and "C", -5 ohms maximum resistance allowed.
   b. Insulation Resistance: 500 volt. Megger test each isolated terminal to valve body, 50 megohms minimum.
   c. Indicating Lights: At no time may both indicating lights for the N. O. and N. C. positions be off when power is applied.
6. TEMPERATURE - OPERATING - Minus 40°F to plus 160° F.
7. LUBRICATION - Lubricate rubber seals with DC 33 (Dow Corning)

Refer to page 4. 4. 47 for sectional view.

Refer to page 6. 14 for installation

GN_2 FILTER, PART NO. 10414026

The filter (F205) is used in the ballast tank pressurization line between the O.K. switch (F204) and the ballast tank. The filter removes any particles that could cause failure of the tank vent valve (F209) or the pressure transducer (F200).

1. VENDOR - WALTER KIDDE AND COMPANY, INC., PART NO. 840473
2. LOCATION - S-V stage adapter of Station 1740.
3. SERVICE - Air, helium, GN_2
4. PRESSURE -
   a. Operating: 3000 psig
   b. Proof: 4500 psig
   c. Burst: 7500 psig
5. TEMPERATURE - OPERATING - Minus 65° F to plus 80° F.
6. RUBBER SEALS - Must meet the requirements of specification MSFC-STD-10409311
7. FILTRATION - 25 Microns
8. LUBRICATION - Lubricate O-rings with 9970568 (KEL-F No. 10 oil.
9. LEAKAGE - No external leakage

Refer to page 4.4.20 for sectional view.

TANK VENT AND OVERFLOW ADAPTER, PART NO. 10426172
TANK FILL AND DRAIN ADAPTER, PART NO. 10426193

The adapters (F7 and F8) are the connections for the ground lines to the ballast tank (F1) for fill and drain operations.

1. LOCATIONS - Tank vent and overflow adapter (F7) on top of ballast tank (F1) at station 1730. Tank fill and drain adapter (F8) at bottom of ballast tank at station 1495
2. SERVICE - Water
3. PRESSURE AND TEMPERATURE - Normal hydrant
4. LEAKAGE - None allowed at 75 psig

THIS PAGE INTENTIONALLY LEFT
BLANK

GN_2 SYSTEM-REGULATOR AND RELIEF VALVE
PART NO. 55-80015-3

The regulator (F206) and the relief valve (F207) maintain the proper pressure in the ballast tank (F1). The regulator portion maintains the pressure in the tank, and the relief valve vents the tank when excess pressure occurs.

1. VENDOR - GLADDEN PRODUCTS CORP., PART NO. 416040
2. LOCATION - On top of S-V stage ballast tank, station 1728
3. SERVICE - GN_2
4. PRESSURE -
   a. Regulated: 19 plus or minus 1 psia
   b. Relief Valve:
      1) Cracking - 20.5 psia
      2) Full Flow - 23 psia
   c. Proof: 40 psig
   d. Burst: 50 psig
5. TEMPERATURE – 0° to 120° F.

APPENDIX I

TABLE I

ABMA-STD-18 TORQUE VALUES FOR TIGHTENING STEEL FASTENERS

BOLT STUD OR SCREW SIZE	TORQUE VALUES IN INCH-POUNDS		
	Standard Steel Nuts, Studs and Screws Having a Tensile Strength of 125,000 to 140,000 psi		High Strength Steel Bolts, Nuts and Screws Having a Tensile Strength of 160,000 psi and Over. Any Nut Except Shear Type (MS20064 through MS20020, or Equivalent)
	Shear Type Nuts (AN316, AN364, or Equivalent	Tension Type Nuts and Threaded Machine Parts (AN310, AN365, or Equivalent)	
8-36	7-9	12-15	
10-32	12-15	20-25	
1/4-28	30-40	50-70	70-90
5/16-24	60-85	100-140	140-200
3/8-24	100-110	160-190	290-350
7/16	270-300	450-500	500-750
1/2-20	300-400	500-650	700-950
9/16-18	500-600	800-1000	1000-1400
5/8-18	700-750	1100-1300	1300-2100
3/4-16	1300-1500	2300-2500	2500-4500
7/8-14	1500-1800	2500-3000	3000-6300
1-14	2200-3000	3700-5500	5500-9000
1 1/18-12	3000-4200	5000-8000	8000-14,000
1 1/4-12	5400-6600	9000-11,000	11,000-25,000

APPENDIX I

TABLE II

ABMA-STD-18 TORQUE VALUES FOR TIGHTENING ALUMINUM FASTENERS

BOLT, STUD OR SCREW SIZE	TORQUE VALUES IN INCH-POUNDS	
	Shear Type Nuts (AN316, AN364 or Equivalent)	Tension Type Nuts and Threaded Machine Parts
8-36	5-6	7-9
10-32	8-10	10-13
1/4-28	20-25	30-40
5/16-24	40-60	60-85
3/8-24	65-75	100-110
7/16-20	180-200	270-300
1/2-20	200-275	300-400
9/16-18	350-400	500-600
5/8-18	450-500	700-750
3/4-16	900-1000	1300-1500
7/8-14	1000-1200	1500-1800
1-14	1500-2200	2200-3300
1 1/8-12	2000-2800	3000-4200
1 1/4-12	3500-4400	5400-6600

APPENDIX I

TABLE III

TORQUE VALUES FOR FASTENERS USED ON H-1 ROCKET ENGINE

BOLT, STUD SCREW OR NUT SIZE	FASTENER USE	TORQUE VALUES (INCH-POUNDS UNLESS OTHERWISE NOTED)
NAS 625-7	Turbine to Gear Box	140-203
NAS 1005-11A	Turbine Inlet to GG	120-172
NAS 1004-14A	Turbine Exhaust Flange to Duct	60-80
NAS 1004-12A	Turbine Exhaust Duct to Heat Exchanger	60-80
NAS 1004-12A	Heat Exchanger to Aspirator	60-80
NAS 1005-10A	GG Duct to Turbine Spinner Nozzle Assembly	190-210
NAS 679C5	GG Conisphere to Manifold	85-100
RD111-4002-6758	LOX Adapter to Volute - Thru Bolts	550-570
NAS 1006-12A	LOX Pump Outlet to Duct	244-298
NAS 1006-11A	LOX Duct to MLV	244-298
NAS 1006-9A	MLV to LOX Dome	244-298
454737	LOX Adapter to Volute - Short Bolts	550-570
454106	Fuel Flange to Volute	550-650
MS20006-9	Fuel Pump Outlet to Duct	316-386
NAS 1006-12A	Fuel Duct to MFV	244-298
MS20006-9	MFV to Fuel Manifold	316-386
AN365 820 Nut	Upper Gimbal to Retainer	690-990
MS20008H12	Lower Gimbal to Retainer	690-990
NAS 566-29	Gimbal Assembly to LOX Dome	316-386
MS20007-100	Gimbal Bearing to LOX Dome	125-150 Diagonally in 10 lb Increments
MS20007-H9	Turbopump to Fitting (Front)	681-831
402794 Nut	Fitting to Mounting Assembly (Front)	200-250
AN363-1216 Nut	Mounting Assembly to Turbo-pump Support Brackets	20-30
MS20007H9	Turbopump to Fitting (Rear)	681-831
MS20012 H22	Fitting to Mounting Assembly (Rear)	2000-2500, Then Back off to 0, Retorque to 200-400
RD111-1001-0067	LOX Dome to Thrust Chamber	75-80 Ft-lbs
MS520008 H34	LOX Dome to Thrust Chamber	75-80 Ft-lbs
NAS 1108-19D	Outrigger to Thrust Chamber (Front)	290-410

TABLE III
(continued)

TORQUE VALUES FOR FASTENERS USED
ON H-1 ROCKET ENGINE

BOLT, STUD SCREW OR NUT SIZE	FASTENER USE	TORQUE VALUES (INCH-POUNDS UNLESS OTHERWISE NOTED)
NAS 1110-16D	Outrigger to Thrust Chamber (Rear)	660-780
AN4H15A	Hypergol Container to Thrust	63-77
AN4H6A	Chamber	63-77
AN4-11A	Fuel Bootstrap Line to Fuel Manifold	50-70
AN3H4A	LOX Bootstrap Line to LOX Dome	23-27
304545	GG LOX Housing to GG Manifold	400±15
AN502-416-12	GG Fuel Valve End Plate to Housing	63-77
AN540A	GG Mounting Support to T/P Mount Fitting	100-140
NAS679A5 Nut	GG Support Connect Studs	120-172
NAS1005-36A	GG Support to Conisphere	120-172
NAS679A4		
AN3H-7A	Conax Valve to Conax Manifold	23-27
NAS1004-17A	Conax Manifold to T/ P Mount	72-88
AN104714	FABU Cylinder to Housing Assembly	50-70
NAS679A4W		50-70
AN104712	FABU Cylinder	50-70
453642-3		35-45
453642-5	FABU Cylinder Housing	35-45
NAS679A5		35-45
MS20073-03-02	FABU Outlet to Housing Assembly	23-27

APPENDIX I

TABLE IV

TORQUE VALUES FOR AN818 COUPLING NUTS
USED ON H-1 ROCKET ENGINE

TUBE O. D. Inches	TORQUE IN INCH-POUNDS		
	Aluminum Alloy		Stainless Steel
	WW-T-787 52S-0	MIL-T-7081 COND-T6	MIL-T-6845
1/8	20-25		60-80
3/16	25-35	30-70	90-140
1/4	40-65	70-120	135-185
5/16	60-80	70-120	180-230
3/8	75-125	130-180	270-345
1/2	150-250	300-400	450-525
5/8	200-350	430-550	650-750
3/4	400-500	650-800	900-1100
1	500-700	900-1100	1200-1400
1 1/4	600-900	1200-1450	1500-1800
1 1/2	600-900	1550-1850	2000-2300
1 3/4	700-1000	2000-2350	2600-2900
2	800-1110	2500-2900	3200-3600

THIS PAGE INTENTIONALLY LEFT
BLANK

ALPHABETICAL INDEX

ITEM	PAGE
A	
Access Doors and Service Points	1.1.28
S-I Stage, Part I	1.1.31
S-I Stage, Part II	1.1.32
S-I Stage, Part III	1.1.33
Saturn SA-I	1.1.30
S-IV Stage	1.1.35
S-V Stage	1.1.36
Accumulator, Hydraulic System, 10415151	
Technical Data	2.3.14
Callout List	2.3.15
Sectional View	2.3.17
Actuator Assembly, 10420014	
Technical Data	2.3.10
Sectional View	2.3.11
Adapter, Second Stage, Section III	3.1.1
Adapter, Second Stage, Fairing Details	3.1.3
Air Bearing Air Supply System	3.1.7
Callout List	3.1.8
Schematic	3.1.9
Anti-Sloshing Devices Text	4.1.1
B	
Bottle	
GN_2 High Pressure, 10410825	
Installation	6.1.4
Helium Supply Pressure, 10413654	
Technical Data	4.5.4
Exploded View	4.5.4
Blower, ST-90 Platform, 10417306	
Technical Data	3.2.12
Sectional View	3.2.12
Installation View	3.2.13
C	
Cable Mast	
Long, Disconnect Panel Callout List	3.1.4
Long, Disconnect Panel Assembly View	4.1.5
Short, Details	1.1.34

ITEM	PAGE
C	
Canister	
Instrument, No. 13	
Technical Data	3.3.1
Callout List	3.3.2, 3.3.3 & 3.3.4
Assembly View	3.3.5
Instrument, No. 14	
Technical Data	3.4.1
Callout List	3.4.2, 3.4.3 & 3.4.4
Assembly View	3.4.5
Instrument,No. 15	
Technical Data	3.5.1
Callout List	3.5.2, 3.5.3, 3.5.4 & 3.5.5
Assembly View	3.5.6 & 3.5.7
Instrument, No. 16	
Technical Data	3.6.1
Callout List	3.6.2, 3.6.3 & 3.6.4
Assembly View	3.6.5
Cooling System	
Technical Data	3.2.1
Callout List	3.2.2
Schematic	3.2.3
Components, Propellant Containers, Location of	4.1.1
Computer, Propellant Utilization, 10414067	4.5.30
Technical Data	4.5.31
Schematic	4.5.32
Installation	4.5.32
Connection, Gage, MS28889-1	
Technical Data	3.1.16
Container, Center LOX	
Bottom View	4.3.9
Top View	4.3.10
Control Pressure System	
Technical Data	4.4.1
Callout List	4.4.2
Schematic	4.4.3

ITEM	PAGE
C	
Coupling, LOX Replenishing, 10414235	
Technical Data	4.3.30
Sectional View	4.3.31
Coupling, Half, 340232-8	
Technical Data	2.2.59
Coupling, Half, Fuel Additive Unit Inlet, 340206-8	
Technical Data	2.2.55
D	
Dummy Stage, S-IV	
Technical Data	5.1.1
Callout List	5.1.3
Schematic	5.1.3
Dummy Stage, S-V	
Technical Data	6.1.1
Callout List	6.1.2
Schematic	6.1.3
E	
Engine	
Components	
Technical Data	2.2.1
Connection Points Gasket and Seals Callout List	2.2.2
Schematic	2.2.3
Inboard - Schematic	2.2.4
Callout List	2.2.5
Schematic	2.2.7
Inboard Service Points	
Callout List	1.1.38
Location View	1.1.39
Outboard Service Points	
Callout List	1.1.41
Location View	1.1.43
Outboard Hydraulic Service Points	
Callout List	1.1.42
Location View	1.1.43
Outboard-Schematic	2.2.11
Callout List	2.2.8 & 2.2.9
Propellant Feed System	2.2.19
Installation	2.2.16
Callout List	2.2.17
Fuel Control Valve	
Technical Data	2.2.2

ITEM	PAGE
F	
Filter	
Air Bearing Supply Line, 10414026	
Technical Data	3.1.26
Exploded View	3.1.27
Air, 1014028	
Technical Data	4.2.21
Sectional View	4.2.21
Control Pressure, 10414026	
Technical Data	4.4.20
Sectional View	4.4.20
Installation	4.4.23
GN_2, 10414026	
Technical Data	3.2.17
Sectional View	3.2.17
Fuel Bubbling, 10414314	
Technical Data	4.1.44
Sectional View	4.1.44
Installation	4.1.45
GN_2, 10414026	
Technical Data	6.1.13
Hydraulic System Filter Element, 10415071	
Technical Data	2.3.18
Helium Supply, 10414026	
Technical Data	4.5.22
Exploded View	4.5.23
Lube System, NA52678	
Technical Data	2.2.27
Sectional View	2.2.27
Sphere Filling, 10414026	
Technical Data	4.4.20
Installation	4.4.21
Flowmeter	
Fuel, 10413034	
Technical Data	4.1.50
Sectional View	4.1.50
Installation	4.1.51
LOX, 10413034	
Technical Data	
Installation, Inboard	4.3.65
Installation, Outboard	4.3.66

ITEM	PAGE
F	
Fuel Additive Mixer Unit, 454075	
Technical Data	2.2.28
Sectional View	2.2.29
Exploded View	2.2.31
Fuel Additive Mixer Unit Spool, 453385	
Technical Data	2.2.32
Exploded View	2.2.33
Fuel Container Pressurization System	
Technical Data	4.2.1
Callout List	4.2.2
Schematic	4.2.3
Fuel Fill and Drain Connector, 10414022	
Technical Data	4.1.42
Sectional View	4.1.42
Installation	4.1.43
Fuel Level Control Line Coupling, 10414053	
Technical Data	4.1.18
Sectional View	4.1.18
Installation	4.1.19
Fuel Pressurization Spheres	
Detail View I	4.2.5
Detail View II	4.2.6
Detail View III	4.2.7
Detail View IV	4.2.8
Detail View V	4.2.9
Detail View VI	4.2.10
Fuel System	
Tank Pressure	4.1.1
Technical Data	4.1.3
Callout List	4.1.4
G	
Gas Generator and Control, Rocket Engine	
Installation	2.2.14 & 2.2.15
Callout List	2.2.12 & 2.2.13
Gas Turbine Assembly, 4541003	
Technical Data	2.2.60
Sectional View	2.2.61

ALPHABETICAL INDEX (Continued)

ITEM	PAGE
H	
Hazardous Materials	
Location View	1.1.19
Heat Exchanger Assembly and 1.5 Inch GOX Line	
Inboard Assembly View	2.2.21
Outboard Assembly View	2.2.39
Heat Shield	
Text	2.1.3
Heater, Air Bearing Air Supply, 10414078	
Technical Data	3.1.14
Sectional View	3.1.15
Helium System	
Technical Data	4.5.1
Callout List	4.5.2
Schematic	4.5.3
Hydraulic System	
Technical Data	2.1.5 & 2.3.1
Callout System	2.3.2
Schematic	2.3.3
Installation	2.3.4 & 2.3.5
Hypergolic Cartridge and Container	
Technical Data	1.1.21
Sectional View	1.1.21
I	
Indicator, Hydraulic System Differential Pressure, 10415272	
Technical Data	2.3.8
L	
Line	
Fuel Suction on Inboard Engines	4.1.7
Fuel Suction on Outboard Engines	4.1.8
GOX Distribution	4.3.11
LOX Fill	4.3.4
LOX Relief	4.3.13
LOX Replenishing	4.3.7
Suction Test	4.1.1

ALPHABETICAL INDEX (Continued)

ITEM	PAGE
L	
Line	
LOX Suction, Inboard Engine Assembly	4.3.5
LOX Suction, Outboard Engine Assembly	4.3.6
LOX Tank Pressure	4.1.1
LOX Vent	4.3.12
Triplex Spheres Supply	4.2.11
LOX Fill and Drain Flange, 10414004	
Technical Data	4.3.46
Sectional View	4.3.46
Installation	4.3.47
M	
Manifold	
Fuel and Fill Line	4.1.6
GOX, Assembly	4.3.8
Control Pressure, 750 PSI, 10413666	
Technical Data	4.4.58
Exploded View	4.4.59
Pressure and Vent Assembly	4.2.4
Mechanical Control System	
Part I Schematic	1.1.13
Part II Schematic	1.1.15
O	
Oxygen System	
Technical Data	4.3.1
Callout List	4.3.2
Schematic	4.3.3
Orifice, 10414299	
Technical Data	3.2.28
Sectional View	3.2.28
P	
Panel	
Long Cable Disconnect	
Callout List	3.1.4
Assembly	3.1.5

ITEM	PAGE
P	
Primacord Detonator	1.1.27
Primacord in Propellant Tanks	
Location View	1.1.24
Technical Data	1.1.24
Primacord on Top of Propellant Tanks	1.1.25
Platform, ST-90 Stabilizing, 8970195	
Technical Data	3.1.34
Probe	
Propellant Utilization Sensing Tube	
Weldment, 10413726 and 10413724	
Technical Data	4.5.12
Installation	4.5.13
Fuel Level, 8968379	
Technical Data	4.1.48
Sectional View	4.1.48
Installation	4.1.49
Pump	
Auxiliary, 10415082	
Technical Data	2.3.23
Variable Delivery Hydraulic, 10415145	
Technical Data	2.3.20
Sectional View	2.3.21
Q	
Quick-Disconnect Coupling	
Fuel Additive Mixer Inlet, Half, 340206-8	
Technical Data	2.2.56
LOX Dome Purge and Fuel Injector	
Purge, 10414305	
Technical Data	2.2.54
Sectional View	2.2.54
Part No. 10414063	
Technical Data	3.1.24
Sectional View	3.1.24
Part No. 10414048	
Technical Data	4.1.20
Sectional View	4.1.20
Installation 4.1.21	
Part No. 10414062	
Technical Data	4.3.26
Sectional View	4.3.26
Installation	4.3.27

ITEM	PAGE
Q	
Quick-Disconnect Coupling	
Part No. 10414063	
Technical Data	3.1.24 & 4.1.32
Sectional View	3.1.24 & 4.1.32
Installation	4.1.33
Part No. 10414064	
Technical Data	4.4.19
Sectional View	4.4.19
Part No. 10414065	
Technical Data	4.1.48
Sectional View	4.1.48
Helium Supply Line, 10414063	4.5.8
Technical Data	4.5.8
Quick-Disconnect Nipple	
High Pressure Filling, 10415554	2.3.27
Technical Data	2.3.27
Sectional View	2.3.27
Low Pressure Return, 10415555	2.3.26
Technical Data	2.3.26
Sectional View	2.3.26
R	
Regulator	
Air Bearing, 10414071	
Technical Data	3.1.32
Air Bearing, 10413893	
Installation	3.1.13
Air Bearing Monitor	
Interface View	3.1.12
Control Pressure, 750 PSI, 10414038	
Technical Data	4.4.26
Sectional View	4.4.27
Installation	4.4.29
LOX Slosh Purge, 10414090	
Technical Data	4.5.19
Sectional View	4.5.20
Tank Pressurization Air Pressure, 8941682	
Technical Data	5.1.6
Sectional View	5.1.7

ITEM	PAGE
S	
Saturn	
Launch Vehicle SA-1 Payload	1.1.9
Nomenclature Chart	2.1.2
SA-1 Configuration	1.1.2
S-IV Dummy Cutaway View	1.1.6
S-V Dummy Cutaway View	1.1.7
Sensor, LOX Level Discrete	
Technical Data	4.3.62
Sectional View	4.3.62
Sphere	
GN_2, Fill Line Coupling, 10414304	
Technical Data	4.2.20
Sectional View	4.2.20
High Pressure, Assembly, 10413938	
Technical Data	4.4.4
Installation	4.4.5
High Pressure, Gage Assembly, 10413817	
Technical Data	4.4.6
Installation	4.4.7
1-Cubic Foot, 10413931	
Technical Data	4.4.52
Installation	4.4.53
ST-90 High Pressure, Assembly, 10413945	
Technical Data	3.1.10
Installation	3.1.11
Stabilizing Platform, ST-90	3.1.34
Switch	
Absolute Pressure, 10414085	
Technical Data	3.2.20
Sectional View	3.2.20
Installation	3.2.21
Air Bearing Air Supply High Pressure, 10414029	
Technical Data	3.1.18
Sectional View	3.1.19
Exploded View	3.1.21
Air Bearing Air Supply Low Pressure, 10414092	
Technical Data	3.1.22
Exploded View	3.1.23
Control, High Pressure, O.K., 10414029	
Technical Data	4.4.46
Sectional View	4.4.47
Exploded View	4.4.49

ITEM	PAGE
S	
Switch	
Fuel Level, 10414047	
Technical Data	4.1.34
Sectional View	4.1.35
Installation	4.1.37
Fuel Level and Connector Assembly	
Installation	4.1.37
Fuel Pressure, High Pressure, O.K., 10414029	
Technical Data	4.2.24
Exploded View	4.2.25
Fuel Step Pressure, 10414081	
Technical Data	4.1.28
Sectional View	4.1.29
Exploded View	4.1.31
Fuel Tank Pressure, 10414019	
Technical Data	4.2.30
Sectional View	4.2.31
Exploded View	4.2.33
GN_2 High Pressure O.K., 10414029	
Technical Data	6.1.12
Helium Supply High Pressure O.K., 10414029	
Technical Data	4.5.26
Exploded View	4.5.27
Hydraulic Thermal, 10415293	
Technical Data	2.3.25
Inboard Engine Cutoff, 10414098	
Technical Data	4.1.38
Sectional View	4.1.39
Installation	4.1.41
LOX Differential Step Pressure, 10414068	
Technical Data	4.3.22
Sectional View	4.3.23
Installation	4.3.25
LOX Pressurizing and 60 PSI Relief, 10414009	
Technical Data	4.3.54
Sectional View	4.3.55
Exploded View	4.3.57
LOX Vent Emergency, 65 PSI, 10414010	
Technical Data	4.3.50
Sectional View	4.3.51
Installation	4.3.53
LOX Level and Connector, 10414045	
Technical Data	4.3.42
Sectional View	4.3.43
Installation	4.3.45

ITEM	PAGE
S	
Switch	
O. K. Control, 750 PSI, 10414042	
Technical Data	4.4.30
Sectional View	4.4.31
Installation	4.4.33
Thrust O. K. Pressure	
Technical Data	2.2.38
Tail Section	
Technical Data	2.1.1
Nomenclature Chart	2.1.2
Thermostat, 10417187	3.2.26
Technical Data	3.2.26
Installation	3.2.27
T	
Tanks	
Location of Components in Fuel Tank Skirts	4.4.10
Schematic	4.4.10
Transducer	
Fuel Differential Pressure, 8968259	4.5.33
GN_2 Pressurizing Pressure, 8968273	
Technical Data	6.1.6
Sectional View	6.1.6
Installation	6.1.7
LOX Differential Pressure, 10410158	
Technical Data	4.5.10
Installation	4.5.11
Pressure, 10480614	
Technical Data	2.3.28
Slosh Pressure, 8968256 and 8968257	
Technical Data	4.5.14
Sectional View	4.5.15
Installation	4.5.16
Turbine Assembly, Gas	
Technical Data	2.2.60
Sectional View	2.2.61
Turbine, Starter	
Technical Data	1.1.22
Sectional View	1.1.23

ITEM	PAGE
V	
Valve	
Air Bearing Air Supply Line Check, 10414013	
Technical Data	3.1.28
Exploded View	3.1.29
Air Bearing Air Supply Line Needle, 10414076	
Technical Data	3.1.30
Sectional View	3.1.30
Exploded View	3.1.31
Bypass Control, Helium Supply, 10414027	4.5.40
Calorimeter Purge Solenoid, 10414093	
Technical Data	4.4.54
Sectional View	4.4.55
Exploded View	4.4.57
Check, Instrument Cooling, 10417222	
Technical Data	3.2.4
Sectional View	3.2.4
Installation	3.2.5
Checkout Needle, Helium System, 10414076	
Technical Data	4.5.28
Exploded View	4.5.29
Checkout, 10414087	
Technical Data	4.5.38
Exploded View	4.5.39
Conax	
Technical Data	1.1.18
Sectional View	1.1.18
Constant Flow Regulator, 10414088 and 10414089	
Technical Data	4.5.17
Sectional View	4.5.17
Control Pressure Fill and Vent, 10414030	
Technical Data	4.4.40
Sectional View	4.4.41
Exploded View	4.4.42
Control Pressure, 10414076	
Technical Data	4.4.34
Sectional View	4.4.35
Control, 10414027	
Technical Data	4.4.11
Sectional View	4.4.11
Fuel Sequence, 401340	2.2.34
Technical Data	2.2.34
Sectional View	2.2.35
Exploded View	2.2.37

ITEM	PAGE
V	
Valve	
Fuel Vent, 10414027	
Installation	4.4.13
GN_2 System Solenoid, 10414358	6.1.8
Technical Data	6.1.8
Sectional View	6.1.9
Installation	6.1.4 & 6.1.11
GN_2 Pressure Charging, MS288889-1	
Technical Data	2.3.13
Sectional View	2.3.13
GOX Line and Check	
Installation	2.2.33
Gas Generator Propellant Control	
Installation	2.2.26
Heat Exchanger Check, 10414006	
Technical Data	2.2.56
Sectional View	2.2.56
Heat Exchanger Check and GOX Line	
Installation	2.2.57
Heat Exchanger LOX Line Check, NA5-26032-2	
Technical Data	2.2.58
Helium Supply Check, 10414014	
Technical Data	4.5.24
Sectional View	4.5.24
Exploded View	4.5.25
High Pressure Accumulator Relief, 10415297	
Technical Data	2.3.6
High Pressure Air Charging, MS28889-1	
Technical Data	4.5.34
Sectional View	4.5.34
Hydraulic System Check, 10415134-5 & 10415134-8	
Technical Data	2.3.22
Sectional View	2.3.22
Control, 10414027	
Technical Data	4.4.8 & 4.4.9
Sectional View	4.4.11
Fuel Bubbling Check, 10414014	
Technical Data	4.1.46
Installation	4.1.47
Fuel Container Safety, 10414039	
Technical Data	4.2.16
Sectional View	4.2.17
Exploded View	4.2.19

ITEM	PAGE
V	
Valve	
Fuel Control	
Technical Data	2.2.22
Sectional View	2.2.23
Installation	2.2.26
Fuel Fill and Drain Control, 10414027	
Installation	4.4.15
Fuel Fill and Drain, Assembly, 10414020	
Technical Data	4.1.10
Sectional View	4.1.11
Exploded View	4.1.13
Fuel Injector Purge Check, NA5-26260	
Technical Data	2.2.47
Fuel Level Control, 10414055	
Technical Data	4.1.22
Sectional View	4.1.23
Exploded View	4.1.25
Fuel Pressurization, 10414308	
Technical Data	4.2.26
Sectional View	4.2.27
Callouts	4.2.28
Exploded View	4.2.29
Fuel Prevalves, 10414024	
Technical Data	4.1.14
Sectional View	4.1.15
Exploded View	4.1.17
Hydraulic System Low Pressure Relief, 10415553	
Technical Data	2.3.19
Sectional View	2.3.19
Iris Mixing, 10417100 and 10481703	
Technical Data	3.2.18
Installation	3.2.19
LOX and Fuel Prevalve Control, 10414027	
Installation	4.4.18
LOX Dome Purge Check, NA5-26252	
Technical Data	2.2.46
Igniter Purge Gearbox Pressurization, Injector Purge and Lube Drain Line Check	
Technical Data	2.2.20
Sectional View	2.2.20
LOX Fill and Drain Control 10414355	
Installation	4.4.16

ITEM	PAGE
V	
Valve	
LOX Fill and Drain, 10414002	
Technical Data	4.3.14
Sectional View	4.3.15
Exploded View	4.3.17
LOX Pressurizing Control, 10414027	
Installation	4.4.12
LOX Prevalve, 10414005	
Technical Data	4.3.18
Sectional View	4.3.19
Exploded View	4.3.21
LOX Relief, 10414000	
Technical Data	4.3.36
Sectional View	4.3.37
LOX Relief Valve Control, 10414310	
Technical Data	4.4.44
Exploded View	4.4.45
LOX Replenishing Control, 10414027	
Installation	4.4.17
LOX Replenishing, 10414003	
Technical Data	4.3.32
Sectional View	4.3.33
Exploded View	4.3.35
LOX Vent Control	
Installation	4.4.14
LOX Vent, 10414001	
Technical Data	4.3.38
Sectional View	4.3.39
Exploded View	4.3.41
Main Fuel, 403092	
Technical Data	2.2.48
Sectional View I	2.2.49
Sectional View II	2.2.50
Exploded View I	2.2.51
Exploded View II	2.2.53
Main LOX, 402267	
Technical Data	2.2.40
Sectional View I	2.2.41
Sectional View II	2.2.42
Exploded View I	2.2.43
Exploded View II	2.2.45

ITEM	PAGE
V	
Valve	
Manual Tank Fill and Vent, 10426001	
Technical Data	5.1.8
Sectional View	5.1.9
Installation	5.1.10
Moog Servo Control	
Technical Data	2.3.12
Sectional View	2.3.12
Manual, 10426001	
Technical Data	5.1.9
Sectional View	5.1.9
Installation	5.1.10
Orifice, Butterfly, LOX Pressurizing, 10414310	
Technical Data	4.3.58
Sectional View	4.3.59
Exploded View	4.3.61
Orifice, Bypass, Propellant Utilization, 10414259	
Technical Data	4.5.18
Sectional View	4.5.18
Oxidizer Control, 306580	
Technical Data	2.2.24
Sectional View	2.2.25
Installation	2.2.26
Precooling, 10417068	
Technical Data	3.2.6
Sectional View	3.2.7
Installation	3.2.8
Rocket Engine Fuel Control	
Technical Data	2.2.22
Sectional View	2.2.23
Pressure Checkout, 10414087	
Technical Data	4.3.28
Sectional View	4.3.28
Installation	4.3.29
Pressure Regulating, 10413622	
Technical Data	4.5.6
Exploded View	4.5.7
Pressure, 750 PSI Relief, 10414054	
Technical Data	4.4.36
Sectional View	4.4.37
Exploded View	4.4.39

ITEM	PAGE
V	
Valve	
Pressurizing Control, 10414082	
Technical Data	3.2.22
Sectional View	3.2.23
Installation	3.2.24
Rocket Engine Main Fuel, 402090	
Technical Data	2.2.48
Sphere Filling Check, 10414013	
Technical Data	4.4.24
Sectional View	4.4.24
Exploded View	4.4.25
Spheres Filling Check, 10414033	
Technical Data	4.2.22
Sectional View	4.2.22
ST-90 Container, Absolute Pressure, 10414080	
Technical Data	3.2.14
Sectional View	3.2.15
Installation	3.2.16
ST-90 Cooling Control, 10417001	
Technical Data	3.2.10
Installation	3.2.11
Three-Way Needle Checkout, 10414076	
Technical Data	4.1.26 & 4.2.23
Sectional View	4.1.26
Exploded View	4.1.27
Three-Way Needle, 10414084	
Technical Data	4.5.36
Sectional View	4.5.36
Turbopump Pressurizing and LOX Seal Purge Control, 10414087	
Technical Data	4.4.50
Exploded View	4.4.51
Triplex Spheres Supply Line Fuel Vent, 10414021	
Technical Data	4.2.12
Sectional View	4.2.12
Exploded View	4.2.15
Vacuum Relief Check, 10414033	
Technical Data	5.1.4
Installation	5.1.5