TID/SNA--462

To AEC-NASA Space Nuclear Systems Office

F008-NAS02-W224

NERVA ALTITUDE SIMULATION SYSTEM
EXHAUST DUCT SYSTEM PRELIMINARY DESIGN

PRELIMINARY FACILITY INTERFACE SHEETS (S-055)
VOLUME IV

NERVA Program, Contract SNP-1

May 1971

AEROJET NUCLEAR SYSTEMS CO.

AEROJET NUCLEAR SYSTEMS COMPANY
A DIVISION OF AEROJET-GENERAL

DISTRIBUTION OF THIS DOCUMENT UNLIMITED

N-2446

F008-NAS02-W224

NERVA ALTITUDE SIMULATION SYSTEM
EXHAUST DUCT SYSTEM PRELIMINARY DESIGN

PRELIMINARY FACILITY INTERFACE SHEETS (S-058)
VOLUME IV

NERVA Program

Contract SNP-1

May 1971

Prepared by R. V. Lichtenberger

NOTICE

The report was prepared as an account of work sponsored by the United States Government. Neither the United States nor the United States Atomic Energy Research and Development Administration, nor any of their employees, nor any of their contractors, subcontractors, or their employees, makes any warranty, express or implied, or assumes any legal liability or responsibility for the accuracy, completeness or usefulness of any information, apparatus, product or process disclosed, or represents that its use would not infringe privately owned rights.

G. D. Westcot
Manager
Test and Manufacturing Operations
Aerojet Nuclear Systems Company

Classification Category
UNCLASSIFIED

Classifying Officer — Date 4/29/71

F008-NAS02-W224
Volume IV

PRELIMINARY

FACILITY INTERFACE SHEETS (S-058)

TABLE OF CONTENTS

INTRODUCTION

SUMMARY

ATTACHMENTS

F008-NAS02-W224
Volume IV

PRELIMINARY FACILITY INTERFACE SHEETS (S-058)

INTRODUCTION

This volume, Preliminary Facility Interface Sheets, F008-NAS02-W224, May 1971, is submitted in partial fulfillment of the requirements of EDS PDR. This volume supersedes Volume IV, F003-NAS01-W224, August 1970.

SUMMARY

The Preliminary Facility Interface sheets (S-058) of Attachment 1 are based upon the NASS EDS preliminary design (F008-NAS02-W224, May 1971) pages 1 through 6 contain data relative to the EDS assembly. Pages 7 through 22 provide data for separate EDS components. The information contained in the left column relates primarily to the environmental requirements and effects of the EDS and its components, while the information contained in the right column relates primarily to the design requirements for those facilities interfacing with EDS.

The environmental data are complete except for exhaust-plume temperature and temperature distribution. Significant data yet to be defined include: (1) water and steam control requirements; (2) detailed safety provisions (e.g., safety system and GN_2 purge); (3) the vault inerting wall; and (4) the exhaust-gas ignitors.

The S-058 data sheets were prepared in accordance with Form 9, (Attachment 2) as coordinated with SNSC.

ATTACHMENTS

1. Preliminary Facility Interface Sheets (S-058 Data Item)
2. Form 9 for Data Item S-058

ATTACHMENT 1

PRELIMINARY

FACILITY INTERFACE SHEETS (S-058)

FACILITY INTERFACE SHEET	A. NOMENCLATURE AND CEI NUMBER NASS EXHAUST DUCT SYSTEM CEI 090222B	
B. ORIGINATOR ANSC, N5310	C. SITE EFFECTIVITY 3333 ETS-1 FACILITY	D. REFERENCE FUNCTION 4.3 NASS EDS (TOTAL SYSTEM) SHEET 1 OF 6

E. ENVIRONMENTAL REQUIREMENTS

	SYMBOL CATEGORY		
(1) VIBRATION, SHOCK/ACOUSTIC LEVEL		(6) ELECTROMAGNETIC INTERFERENCE/COMPATIBILITY	NA
(2) TEMPERATURE AND HUMIDITY		(7) CONTAMINATION LEVEL	
(3) FORCED VENTILATION/AIR CHANGES	NA	(8) HAZARDS SAFETY	
(4) ILLUMINATION	NA	(9) HEAT REJECTION RATE	
(5) PERSONNEL OCCUPANCY		(10) CRITICAL TIME FACTORS	NA
		(11) OTHER SPECIAL REQUIREMENTS	

(1) EDS Design acoustic loads are presented in Table I, NASS EDS Acoustic Loading.

(1) Data provided by Table II, NASS EDS Support and Fluid Requirements, shall be utilized for facility EDS mounts vibration and shock design. See Appendix C, F008-NAS02-W224 for detailed information.

(2) The exhaust plume presents a potential hazard to the facility. The facility shall provide protection from this thermal and acoustic load. The SE closure door has been designed for installation below grade to permit flooding with water.

(5) Personnel occupancy in the duct vault is prohibited following nuclear testing.

(7) The maximum size of foreign matter in the water supplied to the EDS interfaces shall not exceed 1/4-in in any dimension.

(7) The exhaust gases from the engine contain radioactive contamination which is deluged with water spray from the water injection subsystem and then exhausted to atmosphere. Contamination level TBD.

(7) The water spray from the water injection subsystem which cools the engine gases may entrain radioactive

(Cont'd)

F. INTERFACE DESIGN REQUIREMENTS

	SYMBOL CATEGORY		
(1) ENVELOPE AND WEIGHT		(6) ACCESS	
(2) MOUNTING PROVISIONS		(7) POSITION LOCATION	
(3) ELECTRIC POWER	NA	(8) HANDLING PROVISIONS	
(4) ELECTRICAL GROUNDING		(9) FIRE/HAZARD PROVISIONS	
(5) WATER AND GAS SERVICE		(10) OTHER SPECIAL INTERFACE CONSIDERATIONS	

(1) See EDS design drawings, Volume II, F008-NAS02-W224 for details of the EDS and its components.

(1) The EDS is 200 feet long (approx.), 58 feet high (approx), and 22 feet wide.

(1) The weight of the EDS is approximately 382,000 lb dry and 439,000 lb operating. See Table III for total and component weight estimates.

(2) The EDS is mounted on six trunnions (see turning plenum and SE) and attaches to the facility bottom shield (see PE). See Table II for loads. (See Appendix C, F008-NAS02-W224 for detailed information.) Mounting provisions for the trunnions shall be supplied.

(2) A mid-span support is provided for seismic loads (see SE). Mounting provisions shall be supplied.

(2) The closure door mounts below grade at the SE exit. Installation provisions shall be supplied.

(2) The adequacy of attachment provisions for the upper bellows and flange to the facility bottom shield shall be verified.

(4) Separable components of the EDS shall be electrically bonded and the EDS ground shall be bonded to the facility ground with a maximum resistance to ground of TBD ohms.

(Cont'd)

FACILITY INTERFACE SHEET	A. NOMENCLATURE AND CEI NUMBER NASS EXHAUST DUCT SYSTEM CEI 090221B		
B. ORIGINATOR ANSC, N5310	C. SITE EFFECTIVITY 3333 ETS-1 FACILITY	D. REFERENCE FUNCTION 4.3 NASS EDS (TOTAL SYSTEM)	SHEET 2 OF 6

E. ENVIRONMENTAL REQUIREMENTS	SYMBOL CATEGORY		SYMBOL CATEGORY
(1) VIBRATION, SHOCK/ACOUSTIC LEVEL		(6) ELECTROMAGNETIC INTERFERENCE/COMPATIBILITY	NA
(2) TEMPERATURE AND HUMIDITY		(7) CONTAMINATION LEVEL	
(3) FORCED VENTILATION/AIR CHANGES	NA	(8) HAZARDS SAFETY	
(4) ILLUMINATION	NA	(9) HEAT REJECTION RATE	
(5) PERSONNEL OCCUPANCY		(10) CRITICAL TIME FACTORS	NA
		(11) OTHER SPECIAL REQUIREMENTS	

F. INTERFACE DESIGN REQUIREMENTS	SYMBOL CATEGORY		SYMBOL CATEGORY
(1) ENVELOPE AND WEIGHT		(6) ACCESS	
(2) MOUNTING PROVISIONS		(7) POSITION LOCATION	
(3) ELECTRIC POWER	NA	(8) HANDLING PROVISIONS	
(4) ELECTRICAL GROUNDING		(9) FIRE/HAZARD PROVISIONS	
(5) WATER AND GAS SERVICE		(10) OTHER SPECIAL INTERFACE CONSIDERATIONS	

contamination. This water does not accumulate in the EDS, but is removed by the plenum water removal system. Contamination level TBD.

(8) The EDS will be activate by the nuclear engine radiation and contaminated by fission products from the reactor and will be a radiation hazard to personnel following the initial engine power test.

(9) The hydrogen/steam plume from the secondary ejector venting to atmosphere shall require further analyses to evaluate the effects of plume heating and potential random combustion on the facility.

(11) No maintenance of the EDS in the duct vault will be permitted after the first engine test due to radiation levels.

(11) The upper end of the PE shall be protected to prevent damage to the seal surface and to prevent entry of foreign objects.

(11) The effects of sudden degradation of altitude simulation shall be evaluated at the facility/engine level and appropriate safety systems developed or special procedures specified.

(5) The maximum total water flow rate to be made available shall be 30,000 gpm at pressures of 175 to 200 psig, and at ambient temperature. Flow duration is established by the engine test requirements. Individual component requirements are listed on component sheets.

(5) The minimum treatment of water supplied to the EDS shall be the addition of 2 ppm sodium hexametaphosphate.

(5) All EDS water systems shall be flushed with deionized water and drained following each test period. Coolant passage surfaces shall not be allowed to dry except after the deionized water flush.

(5) The GN_2 total flow rate shall be 2 lb/sec (est) at a pressure of 90 psig and ambient temperature for operation of severance clamp actuators and 0.04 lb/sec ambient GN_2 total at 5 (est) psig for bellows and clamp purges.

(6) The lower section of the PE is installed on the turning plenum prior to installation in ETS-1. Facility clearances shall permit installation of this configuration.

(6) The bottom facility shield penetration shall be 82.0" minimum in diameter to accommodate the ED PE and associated plumbing including the potential for collar coolant or gas lines.

(Cont'd)

FACILITY INTERFACE SHEET	A. NOMENCLATURE AND CEI NUMBER NASS EXHAUST DUCT SYSTEM CEI 090221B	
B. ORIGINATOR ANSC, N5310	C. SITE EFFECTIVITY 3333 ETS-1 FACILITY	D. REFERENCE FUNCTION 4.3 NASS EDS (TOTAL SYSTEM) SHEET 3 OF 4

E. ENVIRONMENTAL REQUIREMENTS

	SYMBOL CATEGORY		SYMBOL CATEGORY
(1) VIBRATION, SHOCK/ACOUSTIC LEVEL		(6) ELECTROMAGNETIC INTERFERENCE/COMPATIBILITY	NA
(2) TEMPERATURE AND HUMIDITY		(7) CONTAMINATION LEVEL	
(3) FORCED VENTILATION/AIR CHANGES	NA	(8) HAZARDS SAFETY	
(4) ILLUMINATION	NA	(9) HEAT REJECTION RATE	
(5) PERSONNEL OCCUPANCY		(10) CRITICAL TIME FACTORS	NA
		(11) OTHER SPECIAL REQUIREMENTS	

F. INTERFACE DESIGN REQUIREMENTS

	SYMBOL CATEGORY		SYMBOL CATEGORY
(1) ENVELOPE AND WEIGHT		(6) ACCESS	
(2) MOUNTING PROVISIONS		(7) POSITION LOCATION	
(3) ELECTRIC POWER	NA	(8) HANDLING PROVISIONS	
(4) ELECTRICAL GROUNDING		(9) FIRE/HAZARD PROVISIONS	
(5) WATER AND GAS SERVICE		(10) OTHER SPECIAL INTERFACE CONSIDERATIONS	

(11) The duct vault is inerted with GN_2 during engine testing.

(11) The ETC has zero (minimal) leakage of air.

(7) Engine/EDS alignment requirements with different test article nozzle area ratios shall be as follows:

Area ratio = 28.64:1

The test article nozzle centerline shall have zero nominal (lateral plus angular) misalignment with the EDS PE/collar assembly under any operating conditions unless subsequent verification demonstrates that misalignment is allowable.

Area Ratio = 24:1

The test article nozzle centerline shall not exceed 2.0-in. (lateral plus angular) misalignment with the EDS PE/collar assembly under any operating conditions This permits up to $\pm 1/2^{\circ}$ engine gimbaling.

Reference: Data Item E106-CP090290-F1, ICD 1137421 Interface No. 5.

(7) The SE closure door is to be mounted below grade which requires excavation in the general area of EDS assembly and installation.

(8) Installation and removal equipment shall be provided by the facility. Requirements are specified by the individual component requirements.

(Cont'd)

FACILITY INTERFACE SHEET	A. NOMENCLATURE AND CEI NUMBER NASS EXHAUST DUCT SYSTEM CEI 090221B	
B. ORIGINATOR ANSC, N5310	C. SITE EFFECTIVITY 3333 ETS-1 FACILITY	D. REFERENCE FUNCTION 4.3 NASS EDS (TOTAL SYSTEM) SHEET 4 OF 6

E. ENVIRONMENTAL REQUIREMENTS

	SYMBOL CATEGORY		SYMBOL CATEGORY
(1) VIBRATION, SHOCK/ACOUSTIC LEVEL		(6) ELECTROMAGNETIC INTERFERENCE/COMPATIBILITY	NA
(2) TEMPERATURE AND HUMIDITY		(7) CONTAMINATION LEVEL	
(3) FORCED VENTILATION/AIR CHANGES	NA	(8) HAZARDS SAFETY	
(4) ILLUMINATION	NA	(9) HEAT REJECTION RATE	
(5) PERSONNEL OCCUPANCY		(10) CRITICAL TIME FACTORS	NA
		(11) OTHER SPECIAL REQUIREMENTS	

F. INTERFACE DESIGN REQUIREMENTS

	SYMBOL CATEGORY		SYMBOL CATEGORY
(1) ENVELOPE AND WEIGHT		(6) ACCESS	
(2) MOUNTING PROVISIONS		(7) POSITION LOCATION	
(3) ELECTRIC POWER	NA	(8) HANDLING PROVISIONS	
(4) ELECTRICAL GROUNDING		(9) FIRE/HAZARD PROVISIONS	
(5) WATER AND GAS SERVICE		(10) OTHER SPECIAL INTERFACE CONSIDERATIONS	

(9) Safety systems to prevent air backflow into the EDS in the event of a malfunction of the engine of the facility shall be provided.

(9) An ignition source for the hydrogen exhaust gas at the exist of the EDS shall be provided. Failure of this system can result in critical hazards to the EDS and facility.

(9) Safe disposal of the radioactive effluents from the EDS which includes excess plenum water shall be provided.

(9) All severance plane clamps (power and control) shall be deactivated prior to engine operation to preclude inadvertent operation.

(10) A hydraulic system shall be provided for closure door operation. (see SE)

(10) All EDS functions during engine test shall be conducted from the ETS-1 control room.

(10) Adequacy of all interfacing subsystems and/or components shall be established by analysis, inspection and testing prior to use in conjunction with the NASS.

(10) The EDS equipment outside the duct vault may be serviced and maintained in accordance with the

(Cont'd)

FACILITY INTERFACE SHEET	A. NOMENCLATURE AND CEI NUMBER NASS EXHAUST DUCT SYSTEM CEI 090221B	
B. ORIGINATOR ANSC, N5310	C. SITE EFFECTIVITY 3333 ETS-1 FACILITY	D. REFERENCE FUNCTION 4.3 NASS EDS (Total System) SHEET 5 OF 6

E. ENVIRONMENTAL REQUIREMENTS	SYMBOL CATEGORY	F. INTERFACE DESIGN REQUIREMENTS	SYMBOL CATEGORY
(1) VIBRATION, SHOCK/ACOUSTIC LEVEL		(1) ENVELOPE AND WEIGHT	
(2) TEMPERATURE AND HUMIDITY		(2) MOUNTING PROVISIONS	
(3) FORCED VENTILATION/AIR CHANGES	NA	(3) ELECTRIC POWER	NA
(4) ILLUMINATION	NA	(4) ELECTRICAL GROUNDING	
(5) PERSONNEL OCCUPANCY		(5) WATER AND GAS SERVICE	
(6) ELECTROMAGNETIC INTERFERENCE/COMPATIBILITY	NA	(6) ACCESS	
(7) CONTAMINATION LEVEL		(7) POSITION LOCATION	
(8) HAZARDS SAFETY		(8) HANDLING PROVISIONS	
(9) HEAT REJECTION RATE		(9) FIRE/HAZARD PROVISIONS	
(10) CRITICAL TIME FACTORS	NA	(10) OTHER SPECIAL INTERFACE CONSIDERATIONS	
(11) OTHER SPECIAL REQUIREMENTS			

manufacturers recommendations within the requirements of this document.

(10) Instrumentation shall be provided to ensure safe operation of the EDS & provide data for future EDS design. Types and quantities of instrumentation shall be determined by the EDS final designer.

(10) Instrumentation shall be compatible with or be protected from local thermal and radiation environments.

(10) The following list defines the EDS vent and drain bosses. See EDS design drawings, Volume II, F008-NAS02-W224, for details. The interfacing vent and drain system shall be provided by the facility.

Vents

Upper PE 12" water line expansion joints (2)
Upper PE water inlet manifold (2)
Upper PE water outlet manifold (2)
Lower PE 12" water line expansion joints (2)
Lower PE water outlet manifold (2)
Deflector plate inlet manifold (1)

(Cont'd)

FACILITY INTERFACE SHEET	A. NOMENCLATURE AND CEI NUMBER NASS EXHAUST DUCT SYSTEM CEI 090221B	
B. ORIGINATOR ANSC, N5310	C. SITE EFFECTIVITY 3333 ETS-1 FACILITY	D. REFERENCE FUNCTION 4.3 NASS EDS (TOTAL SYSTEM) SHEET 6 OF 6

E. ENVIRONMENTAL REQUIREMENTS

SYMBOL CATEGORY

(1) VIBRATION, SHOCK/ACOUSTIC LEVEL
(2) TEMPERATURE AND HUMIDITY
(3) FORCED VENTILATION/AIR CHANGES NA
(4) ILLUMINATION NA
(5) PERSONNEL OCCUPANCY
(6) ELECTROMAGNETIC INTERFERENCE/COMPATIBILITY NA
(7) CONTAMINATION LEVEL
(8) HAZARDS SAFETY
(9) HEAT REJECTION RATE
(10) CRITICAL TIME FACTORS NA
(11) OTHER SPECIAL REQUIREMENTS

F. INTERFACE DESIGN REQUIREMENTS

SYMBOL CATEGORY

(1) ENVELOPE AND WEIGHT
(2) MOUNTING PROVISIONS
(3) ELECTRIC POWER NA
(4) ELECTRICAL GROUNDING
(5) WATER AND GAS SERVICE
(6) ACCESS
(7) POSITION LOCATION
(8) HANDLING PROVISIONS
(9) FIRE/HAZARD PROVISIONS
(10) OTHER SPECIAL INTERFACE CONSIDERATIONS

Drains

Upper PE 12" water inlet line (2)
Upper PE water inlet manifold (2)
Upper PE water outlet manifold (2)
Lower PE water inlet manifold (2)
Lower PE water outlet manifold (2)
Water injection subsystem inlet lines (4)
Deflector plate water inlet line (1)

FACILITY INTERFACE SHEET	A. NOMENCLATURE AND CEI NUMBER NASS EXHAUST DUCT SYSTEM CEI 090221B	
B. ORIGINATOR ANSC, N5310	C. SITE EFFECTIVITY 3333 ETS-1 FACILITY	D. REFERENCE FUNCTION 4.3 NASS EDS (Primary Ejector Collar**) SHEET 1 OF 3

E. ENVIRONMENTAL REQUIREMENTS

	SYMBOL CATEGORY		
(1) VIBRATION, SHOCK/ACOUSTIC LEVEL	*	(6) ELECTROMAGNETIC INTERFERENCE/COMPATIBILITY	NA
(2) TEMPERATURE AND HUMIDITY		(7) CONTAMINATION LEVEL	*
(3) FORCED VENTILATION/AIR CHANGES	NA	(8) HAZARDS SAFETY	
(4) ILLUMINATION	NA	(9) HEAT REJECTION RATE	
(5) PERSONNEL OCCUPANCY	NA	(10) CRITICAL TIME FACTORS	NA
		(11) OTHER SPECIAL REQUIREMENTS	NA

F. INTERFACE DESIGN REQUIREMENTS

	SYMBOL CATEGORY		
(1) ENVELOPE AND WEIGHT		(6) ACCESS	*
(2) MOUNTING PROVISIONS		(7) POSITION LOCATION	*
(3) ELECTRIC POWER	NA	(8) HANDLING PROVISIONS	*
(4) ELECTRICAL GROUNDING	*	(9) FIRE/HAZARD PROVISIONS	NA
(5) WATER AND GAS SERVICE	*	(10) OTHER SPECIAL INTERFACE CONSIDERATIONS	*

* See 4.3 NASS EDS (Total System) for additional requirements.

(1) If the collar is convectively cooled, the EDS dynamic analysis, Appendix C, F008-NAS02-W224, shall be reevaluated for the increase in weight over the uncooled collar.

(2) If the collar is of an uncooled design, a purge film cooling system shall be incorporated to prevent the collar heated boundary from increasing the heat transfer to the PE. See App A, Add 2, F008-NAS02-W224 for details.

(7) Uncooled collar residual activation radiation level is shown in App D, F008-NAS02-W224. Convectively-cooled collar residual activation radiation level is TBD.

(8) Post-test radiation levels in the test stand require that the collar be remotely removed and replaced.

(9) The design hg for the collar is 11.4×10^{-4} BTU/in.^{2}-sec-°R. The maximum collar temperature is TBD °R. Heat rejection rate to the EDS and facility is TBD.

(1) Different collar lengths are required depending on the nozzle area ratio of the test article. The approximate dimensions and weights of collars for use with planned test articles are:

Area Ratio	ID	OD	Length	Weight
28.64:1	64"	TBD	9.5"	TBD lb
24:1	64"	TBD	16.6"	TBD lb

See EDS design drawings, Vol II, F008-NAS02-W224, and interface control dwg, Interface #5, ICD 1137421, E106-CP090290-F1, for details.

(2) The collar shall mount on and be secured to the PE inlet interface. See EDS design drawings, Vol II, F008-NAS02-W224 for details. Structure integrity of the total interface shall be verified by the collar designer.

(5) TBD gpm of cooling water is required to cool a convectively cooled collar, if used, and TBD scfm of GH_2 at TBD psig and ambient temperature is required for boundary layer cooling at the collar/PE interface if an uncooled collar is used. Failure of either cooling systems results in critical hazards to the EDS.

(6) Access for remote handling equipment is required. (See (8) below.)

** Collar to be designed at future date by others.

FACILITY INTERFACE SHEET	A. NOMENCLATURE AND CEI NUMBER NASS EXHAUST DUCT SYSTEM CEI 09C221B	
B. ORIGINATOR ANSC, N5310	C. SITE EFFECTIVITY 3333 ETS-1 FACILITY	D. REFERENCE FUNCTION 4.3 NASS EDS (Primary Ejector Collar**) SHEET 2 OF 3

E. ENVIRONMENTAL REQUIREMENTS

	SYMBOL CATEGORY		SYMBOL CATEGORY
(1) VIBRATION, SHOCK/ACOUSTIC LEVEL	*	(6) ELECTROMAGNETIC INTERFERENCE/COMPATIBILITY	NA
(2) TEMPERATURE AND HUMIDITY		(7) CONTAMINATION LEVEL	*
(3) FORCED VENTILATION/AIR CHANGES	NA	(8) HAZARDS SAFETY	
(4) ILLUMINATION	NA	(9) HEAT REJECTION RATE	
(5) PERSONNEL OCCUPANCY	NA	(10) CRITICAL TIME FACTORS	NA
		(11) OTHER SPECIAL REQUIREMENTS	NA

F. INTERFACE DESIGN REQUIREMENTS

	SYMBOL CATEGORY		SYMBOL CATEGORY
(1) ENVELOPE AND WEIGHT		(6) ACCESS	*
(2) MOUNTING PROVISIONS		(7) POSITION LOCATION	*
(3) ELECTRIC POWER	NA	(8) HANDLING PROVISIONS	*
(4) ELECTRICAL GROUNDING	*	(9) FIRE/HAZARD PROVISIONS	NA
(5) WATER AND GAS SERVICE	*	(10) OTHER SPECIAL INTERFACE CONSIDERATIONS	*

* See 4.3 NASS EDS (Total System) for additional requirements.

**Collar to be designed at future date by others.

(6) Access for gas or water piping and instrumentation cables is required between the PE and the facility bottom shield.

(7) The collar shall have 0.0 to 0.2-in. smaller inside radius than the PE.

(7) The collar shall provide a gas seal with the PE. Seal leakage results in potential critical hazards to the EDS and facility.

(8) The initial collar may be manually installed in the test stand. Following the initial nuclear test, remote removal and installation of collars shall be required utilizing the EIV.

(8) The EIV is required to hold and install the collar within a 100-in. width.

(8) All handling and installation fixtures and tools for installing the collar shall be provided by the facility.

(10) After use, the collars shall be removed, transported to the E-MAD building, inspected for potential reuse, and stored in the radioactive materials storage area.

10

FACILITY INTERFACE SHEET	A. NOMENCLATURE AND CEI NUMBER NASS EXHAUST DUCT SYSTEM CEI 0902218	
B. ORIGINATOR ANSC, N5310	C. SITE EFFECTIVITY 3333 ETS-1 FACILITY	D. REFERENCE FUNCTION 4.3 NASS EDS (Primary Ejector Collar**) SHEET 3 OF 3

E. ENVIRONMENTAL REQUIREMENTS

	SYMBOL CATEGORY		SYMBOL CATEGORY
(1) VIBRATION SHOCK/ACOUSTIC LEVEL	*	(6) ELECTROMAGNETIC INTERFERENCE/COMPATIBILITY	NA
(2) TEMPERATURE AND HUMIDITY		(7) CONTAMINATION LEVEL	*
(3) FORCED VENTILATION/AIR CHANGES	NA	(8) HAZARDS SAFETY	
(4) ILLUMINATION	NA	(9) HEAT REJECTION RATE	
(5) PERSONNEL OCCUPANCY	NA	(10) CRITICAL TIME FACTORS	NA
		(11) OTHER SPECIAL REQUIREMENTS	NA

*See 4.3 NASS EDS (Total System) for additional requirements.

**Collar to be designed at future date by others.

F. INTERFACE DESIGN REQUIREMENTS

	SYMBOL CATEGORY		SYMBOL CATEGORY
(1) ENVELOPE AND WEIGHT		(6) ACCESS	*
(2) MOUNTING PROVISIONS		(7) POSITION LOCATION	*
(3) ELECTRIC POWER	NA	(8) HANDLING PROVISIONS	*
(4) ELECTRICAL GROUNDING	*	(9) FIRE/HAZARD PROVISIONS	NA
(5) WATER AND GAS SERVICE	*	(10) OTHER SPECIAL INTERFACE CONSIDERATIONS	*

10) Six (est) channels of instrumentation shall be provided to measure collar cooling water temperature and pressure if a cooled collar is used, or for boundary layer cooling gas flow and pressure if an uncooled collar is used.

10) The facility and engine shall provide I&C to detect and correct (gimbal engine) engine nozzle/collar alignment. Failure to align within the tolerances specified under Item 7 of 4.3 NASS EDS (Total System) results in potential critical hazards to the EDS, facility, and engine.

10) Collar installation and replacement shall be compatible with the three-day turnaround time criterion.

FACILITY INTERFACE SHEET	A. NOMENCLATURE AND CEI NUMBER NASS EXHAUST DUCT SYSTEM CEI 090221B	
B. ORIGINATOR ANSC, N5310	C. SITP EFFECTIVITY 3333 ETS-1 FACILITY	D. REFERENCE FUNCTION 4.3 NASS EDS (Primary Ejector (PE)) SHEET 1 OF 3

E. ENVIRONMENTAL REQUIREMENTS

	SYMBOL CATEGORY		SYMBOL CATEGORY
(1) VIBRATION, SHOCK/ACOUSTIC LEVEL	*	(6) ELECTROMAGNETIC INTERFERENCE/COMPATIBILITY	NA
(2) TEMPERATURE AND HUMIDITY		(7) CONTAMINATION LEVEL	*
(3) FORCED VENTILATION/AIR CHANGES	NA	(8) HAZARDS SAFETY	*
(4) ILLUMINATION	NA	(9) HEAT REJECTION RATE	NA
(5) PERSONNEL OCCUPANCY	*	(10) CRITICAL TIME FACTORS	NA
		(11) OTHER SPECIAL REQUIREMENTS	NA

F. INTERFACE DESIGN REQUIREMENTS

	SYMBOL CATEGORY		SYMBOL CATEGORY
(1) ENVELOPE AND WEIGHT		(6) PIPING	*
(2) MOUNTING PROVISIONS	*	(7) POSITION LOCATION	*
(3) ELECTRIC POWER	NA	(8) HANDLING PROVISIONS	*
(4) ELECTRICAL GROUNDING	*	(9) FIRE/HAZARD PROVISIONS	*
(5) WATER AND GAS SERVICE	*	(10) OTHER SPECIAL INTERFACE CONSIDERATIONS	*

* See 4.3 NASS EDS (Total System) for additional requirements.

(2) See Item (2), 4.3 NASS EDS (Primary Ejector Collar) for thermal environment.

(4) The upper bellows flange thermal analysis assumes zero heat input from the interfacing facility bottom shield. This shall be verified by thermal analysis.

(9) The channel coolant water enters the PE at ambient temperature and exits at 100°F higher into the existing duct water outlet line. Flow rate is 11,000gpm.

(9) The upper bellows and flange coolant water exits into the duct vault at approximately inlet (ambient) temperature. Water flow rate is 100 gpm.

(9) The PE/collar bolt and PE lifting lugs coolant water exists into the duct vault at approximately inlet (ambient) temperature. Water flow rate is 100 gpm.

(1) The PE is approximately 37'9" long and 13'6" wide on the maximum dimensions, see EDS design drawing, Volume II, F008-NAS02-W224 for details.

(2) The PE is mounted to and supported by the turning plenum.

(2) The PE interfaces with the facility bottom shield at the upper PE bellows flange providing a gas seal for the RTC.

(5) The facility shall interface with the two 12-in. PE coolant channel inlet lines. Flow conditions for the combined lines are; 11,000 gpm maximum flow rate at 175 psia minimum and ambient temperature at the interface. Failure of the water supply results in critical hazards to the EDS.

(5) The facility shall also interface with the 36" PE coolant channel water discharge line and shall accommodate the 11,000 gpm flow. Temperature rise and pressure drop for a 500 psia engine chamber pressure test 100°F and 154 psi respectively.

(5) GN_2 purge gas shall be provided at 5 psig, ambient temperature at a flow rate of 0.01 (est) lb/sec to the upper bellows flange double seal and to the upper to lower PE severance flange double seal (0.02 lb/sec total)

(Cont.)

FACILITY INTERFACE SHEET	A. NOMENCLATURE AND CRI NUMBER NASS EXHAUST DUCT SYSTEM CEI 090221B	
B. ORIGINATOR ANSC, N5310	C. SITE EFFECTIVITY 3333 ETS-1 FACILITY	D. REFERENCE FUNCTION 4.3 NASS EDS (Primary Ejector (PE)) SHEET 2 OF 3

E. ENVIRONMENTAL REQUIREMENTS

	SYMBOL CATEGORY		SYMBOL CATEGORY
(1) VIBRATION, SHOCK/ACOUSTIC LEVEL	*	(6) ELECTROMAGNETIC INTERFERENCE/COMPATIBILITY	NA
(2) TEMPERATURE AND HUMIDITY		(7) CONTAMINATION LEVEL	*
(3) FORCED VENTILATION/AIR CHANGES	NA	(8) HAZARDS SAFETY	*
(4) ILLUMINATION	NA	(9) HEAT REJECTION RATE	NA
(5) PERSONNEL OCCUPANCY	*	(10) CRITICAL TIME FACTORS	NA
		(11) OTHER SPECIAL REQUIREMENTS	NA

*See 4.3 NASS EDS (Total System) for additional requirements.

F. INTERFACE DESIGN REQUIREMENTS

	SYMBOL CATEGORY		SYMBOL CATEGORY
(1) ENVELOPE AND WEIGHT		(6) ACCESS	*
(2) MOUNTING PROVISIONS	*	(7) PHYSICAL LOCATION	*
(3) ELECTRIC POWER	NA	(8) HANDLING PROVISIONS	*
(4) ELECTRICAL GROUNDING	*	(9) FIRE/HAZARD PROVISIONS	*
(5) WATER AND GAS SERVICE	*	(10) OTHER SPECIAL INTERFACE CONSIDERATIONS	*

(5) Actuation CN_2 gas at 85-90 psig, ambient temperature & TBD flow rate shall be provided for upper to lower PE flange, the 4 - 12" water lines, and the 36" water outlet line remote severance clamp activation.

(5) Cooling water shall be provided to the facility-to-bellows flange and the bellows at 100 gpm, ambient temperature and 2 psig (est).

(8) The upper section PE shall be supported from the lifting lugs during installation and removal.

(10) Thirty (est) channels of instrumentation shall be provided to record and monitor pressure, temperature, flow, vibration, etc., of the water, gas, & structure.

(10) Instrumentation shall be provided to monitor potential anomalous flow behavior (PE multi-pressure profile) using TBD pressure transducers at TBD locations.

(10) Installation of instrumentation bosses on the PE shall not degrade the PE cyclic life below 1000 cycles.

(10) The use of the existing ETS-1 Marman flange for the mid-PE severance plane is permitted. Salvage & determination of reusability shall be accomplished prior to NASS EDS contract award. Two existing 36" Marman flanges may be reused. Four 12" templex bellows may be reused if thermal struct analysis permits.

REVISION 1 DATE: MAY 1971 APPROVAL: .....

DOCUMENT # F005-NAS02-U224, Volume IV

FACILITY INTERFACE SHEET	A. NOMENCLATURE AND CEI NUMBER NASS EXHAUST DUCT SYSTEM CEI 090221B	
B. ORIGINATOR ANSC, N5310	C. SITE EFFECTIVITY 3333 ETS-1 FACILITY	D. REFERENCE FUNCTION 4.3 NASS EDS (Primary Ejector (PE)) SHEET 3 OF 3

E. ENVIRONMENTAL REQUIREMENTS

SYMBOL CATEGORY

(1) VIBRATION, SHOCK/ACOUSTIC LEVEL	*	(6) ELECTROMAGNETIC INTERFERENCE/COMPATIBILITY	NA
(2) TEMPERATURE AND HUMIDITY		(7) CONTAMINATION LEVEL	*
(3) FORCED VENTILATION/AIR CHANGES	NA	(8) HAZARDS SAFETY	*
(4) ILLUMINATION	NA	(9) HEAT REJECTION RATE	NA
(5) PERSONNEL OCCUPANCY	*	(10) CRITICAL TIME FACTORS	NA
		(11) OTHER SPECIAL REQUIREMENTS	NA

* See 4.3 NASS EDS (Total System) for additional requirements.

F. INTERFACE DESIGN REQUIREMENTS

SYMBOL CATEGORY

(1) ENVELOPE AND WEIGHT		(6) ACCESS	*
(2) MOUNTING PROVISIONS	*	(7) POSITIONING LOCATION	*
(3) ELECTRIC POWER	NA	(8) HANDLING PROVISIONS	*
(4) ELECTRICAL GROUNDING	*	(9) PIPE/HOSE AND PROVISIONS	*
(5) WATER AND GAS SERVICE	*	(10) OTHER SPECIAL INTERFACE CONSIDERATIONS	*

(10) The water supply and removal system loads to the PE water lines shall not exceed that specified in Table VI.

FACILITY INTERFACE SHEET	A. NOMENCLATURE AND CEI NUMBER NASS EXHAUST DUCT SYSTEM CEI 090221B	
B. ORIGINATOR ANSC, N5310	C. SITE EFFECTIVITY 3333 ETS-1 FACILITY	D. REFERENCE FUNCTION 4.3 NASS EDS (Turning Plenum) SHEET 1 OF 3

E. ENVIRONMENTAL REQUIREMENTS

	SYMBOL CATEGORY		SYMBOL CATEGORY
(1) VIBRATION, SHOCK/ACOUSTIC LEVEL	*	(6) ELECTROMAGNETIC INTERFERENCE/COMPATIBILITY	NA
(2) TEMPERATURE AND HUMIDITY	NA	(7) CONTAMINATION LEVEL	*
(3) FORCED VENTILATION/AIR CHANGES	NA	(8) HAZARDS SAFETY	*
(4) ILLUMINATION	NA	(9) HEAT REJECTION RATE	
(5) PERSONNEL OCCUPANCY	*	(10) CRITICAL TIME FACTORS	NA
		(11) OTHER SPECIAL REQUIREMENTS	*

F. INTERFACE DESIGN REQUIREMENTS

	SYMBOL CATEGORY		SYMBOL CATEGORY
(1) ENVELOPE AND WEIGHT		(6) ACCESS	*
(2) MOUNTING PROVISIONS	*	(7) POSITION LOCATION	
(3) ELECTRIC POWER	NA	(8) HANDLING PROVISIONS	
(4) ELECTRICAL GROUNDING	*	(9) FIRE/HAZARD PROVISIONS	*
(5) WATER AND GAS SERVICE	*	(10) OTHER SPECIAL INTERFACE CONSIDERATIONS	*

*See 4.3 NASS EDS (Total System) for additional requirements

(9) The deflector plate coolant water exits into the duct vault at approximately inlet (ambient) temperature. Water flow rate is 1000 gpm.

(1) The envelope of the plenum is approx. 52' long, 22' wide, and 25' high. See EDS design drawings, Volume II, F008-NAS02-W224 for details.

(2) The plenum is mounted on two fixed trunnions and two sliding trunnions. Facility supplied, remotely activated trunnion mounts shall be provided. Detailed location of the trunnion mounts shall be in accordance with the EDS design drawings, Volume II, F008-NAS02-W224, and shall satisfy the PE to engine alignment requirement specified in this document.

(5) Coolant water shall be provided at the deflector plate 6" supply line at 1000 gpm maximum at 50 psig (nominal) and ambient temperature. This water is discharged to the duct vault and is available for other uses.

(5) GN_2 purge gas shall be provided at 5 psig, ambient temperature and at a flow rate of 0.01 (est) lb/sec for purge of the plenum to PE double seal and to the steam line bellows (0.02 lb/sec total).

(5) Actuation GN_2 gas at 85-90 psig, ambient temperature and TBD flow rate shall be provided for the remote severance steam line and deflector plate water inlet clamp actuation.

FACILITY INTERFACE SHEET	A. NOMENCLATURE AND CEI NUMBER NASS EXHAUST DUCT SYSTEM CEI 090221B	
B. ORIGINATOR ANSC, N5310	C. SITE EFFECTIVITY 3333 ETS-1 FACILITY	D. REFERENCE FUNCTION 4.3 NASS EDS (Turning Plenum) SHEET 2 OF 3

E. ENVIRONMENTAL REQUIREMENTS

	SYMBOL CATEGORY		SYMBOL CATEGORY
(1) VIBRATION, SHOCK/ACOUSTIC LEVEL	*	(6) ELECTROMAGNETIC INTERFERENCE/COMPATIBILITY	NA
(2) TEMPERATURE AND HUMIDITY	NA	(7) CONTAMINATION LEVEL	*
(3) FORCED VENTILATION/AIR CHANGES	NA	(8) HAZARDS SAFETY	*
(4) ILLUMINATION	NA	(9) HEAT REJECTION RATE	
(5) PERSONNEL OCCUPANCY	*	(10) CRITICAL TIME FACTORS	NA
		(11) OTHER SPECIAL REQUIREMENTS	*

F. INTERFACE DESIGN REQUIREMENTS

	SYMBOL CATEGORY		SYMBOL CATEGORY
(1) ENVELOPE AND WEIGHT		(6) ACCESS	*
(2) MOUNTING PROVISIONS	*	(7) POSITION LOCATION	
(3) ELECTRIC POWER	NA	(8) HANDLING PROVISIONS	
(4) ELECTRICAL GROUNDING	*	(9) FIRE/HAZARD PROVISIONS	*
(5) WATER AND GAS SERVICE	*	(10) OTHER SPECIAL INTERFACE CONSIDERATIONS	*

* See 4.3 NASS EDS (Total System) for additional requirements.

(8) Integrally mounted trucks on the plenum are provided by the design for use in installing the plenum. The trucks are to ride on the duct vault track rails which are on 18'-4" centers.

(8) A jacking system shall be provided by others to lift the plenum (and lower PE section) into position.

(9) The steam line clamp is to be thermally cycled and retightened during checkout to assure a tight seal so that failure of the double seal may be judged non-credible.

(10) The plenum drain line is designed to accommodate 745 lb/sec of water flow to the plenum water removal system (to be provided by the facility) during engine operation. Flow rates in excess of the design value may cause water accumulation in the plenum which will create a critical hazard to the EDS.

(10) Thirty (est) channels of I&C to record & monitor pressure, temp, etc., shall be provided.

FACILITY INTERFACE SHEET	A. NOMENCLATURE AND CEI NUMBER NASS EXHAUST DUCT SYSTEM CEI 090221B	
B. ORIGINATOR ANSC, N5310	C. SITE EFFECTIVITY 3333 ETS-1 FACILITY	D. REFERENCE FUNCTION 4.3 NASS EDS (Turning Plenum) SHEET 3 OF 3

E. ENVIRONMENTAL REQUIREMENTS

	SYMBOL CATEGORY		SYMBOL CATEGORY
(1) VIBRATION, SHOCK/ACOUSTIC LEVEL	*	(6) ELECTROMAGNETIC INTERFERENCE/COMPATIBILITY	NA
(2) TEMPERATURE AND HUMIDITY	NA	(7) CONTAMINATION LEVEL	*
(3) FORCED VENTILATION/AIR CHANGES	NA	(8) HAZARDS SAFETY	*
(4) ILLUMINATION	NA	(9) HEAT REJECTION RATE	
(5) PERSONNEL OCCUPANCY	*	(10) CRITICAL TIME FACTORS	NA
		(11) OTHER SPECIAL REQUIREMENTS	*

F. INTERFACE DESIGN REQUIREMENTS

	SYMBOL CATEGORY		SYMBOL CATEGORY
(1) ENVELOPE AND WEIGHT		(6) ACCESS	*
(2) MOUNTING PROVISIONS	*	(7) POSITION LOCATION	
(3) ELECTRIC POWER	NA	(8) HANDLING PROVISIONS	
(4) ELECTRICAL GROUNDING	*	(9) FIRE/HAZARD PROVISIONS	*
(5) WATER AND GAS SERVICE	*	(10) OTHER SPECIAL INTERFACE CONSIDERATIONS	*

*See 4.3 NASS EDS (Total System) for additional requirements.

(10) Provide water level indication over the lower 30" plenum height. Water levels in excess of 22" shall require test termination.

(10) The water supply system loads on the deflector plate water line shall not exceed that specified in Table VI.

REVISION 1 DATE: MAY 1971 APPROVAL: _____ DOCUMENT # F008-NAS02-U224, Volume IV PAGE [illegible]

FACILITY INTERFACE SHEET	A. NOMENCLATURE AND CEI NUMBER NASS EXHAUST DUCT SYSTEM CEI 090221B	
B. ORIGINATOR ANSC, N5310	C. SITE EFFECTIVITY 3333 ETS-1 FACILITY	D. REFERENCE FUNCTION 4.3 NASS EDS (Water Injection Subsystem) SHEET 1 OF 2

E. ENVIRONMENTAL REQUIREMENTS

	SYMBOL CATEGORY		SYMBOL CATEGORY
(1) VIBRATION, SHOCK/ACOUSTIC LEVEL	*	(6) ELECTROMAGNETIC INTERFERENCE/COMPATIBILITY	NA
(2) TEMPERATURE AND HUMIDITY	NA	(7) CONTAMINATION LEVEL	*
(3) FORCED VENTILATION/AIR CHANGES	NA	(8) HAZARDS SAFETY	*
(4) ILLUMINATION	NA	(9) HEAT REJECTION RATE	
(5) PERSONNEL OCCUPANCY	*	(10) CRITICAL TIME FACTORS	NA
		(11) OTHER SPECIAL REQUIREMENTS	

F. INTERFACE DESIGN REQUIREMENTS

	SYMBOL CATEGORY		SYMBOL CATEGORY
(1) ENVELOPE AND WEIGHT	*	(6) ACCESS	
(2) MOUNTING PROVISIONS		(7) POSITION LOCATION	NA
(3) ELECTRIC POWER	NA	(8) HANDLING PROVISIONS	NA
(4) ELECTRICAL GROUNDING	*	(9) FIRE/HAZARD PROVISIONS	
(5) WATER AND GAS SERVICE	*	(10) OTHER SPECIAL INTERFACE CONSIDERATIONS	*

* See 4.3 NASS EDS (Total System) for additional requirements.

(9) The water from the water injection subsystem is injected into the hot H_2 gas stream to lower the temperatures to below 1000°R. A maximum of 745 lb/sec of saturated water can fall out of the gas stream onto the plenum floor.

(11) The design of the water injection subsystem allows changes in size and number of the nozzles in the subsystem except for the five each 1-1/2 dia nozzles prior to the first engine test.

(1) The water injection subsystem envelope and weight are included in the turning plenum data.

(2) The water injection subsystem is an integral part of the upper portion of the plenum.

(5) Three coolant water supply lines are required. See EDS design drawings, Volume II, F008-NAS02-W224 for interface sizes and locations.

(5) Cooling water shall be supplied to the manifolds within the ranges specified by Table IV, Water Injection System Coolant Water Flow Requirements. Failure of the water flow rates to remain within the specified tolerances can result in a critical hazard to the EDS.

(5) Accumulated hydrogen in the water lines and manifold shall be purged following each engine test.

(5) Actuation gas for operating the three water line remote clamps is required at 85-90 psig, ambient temperature and at a flow rate of TBD scfm.

REVISION 1 DATE: MAY 1971 APPROVAL: _____ DOCUMENT # F008-NAS02-W224, Volume IV PAGE [illegible]

FACILITY INTERFACE SHEET	A. NOMENCLATURE AND CEI NUMBER NASS EXHAUST DUCT SYSTEM CEI 090221B	
B. ORIGINATOR ANSC, N5310	C. SITE EFFECTIVITY 3333 ETS-1 FACILITY	D. REFERENCE FUNCTION 4.3 NASS EDS (Water Injection Subsystem) SHEET 2 OF 2

E. ENVIRONMENTAL REQUIREMENTS

	SYMBOL CATEGORY		SYMBOL CATEGORY
(1) VIBRATION, SHOCK/ACOUSTIC LEVEL	*	(6) ELECTROMAGNETIC INTERFERENCE/COMPATIBILITY	NA
(2) TEMPERATURE AND HUMIDITY	NA	(7) CONTAMINATION LEVEL	*
(3) FORCED VENTILATION/AIR CHANGES	NA	(8) HAZARDS SAFETY	*
(4) ILLUMINATION	NA	(9) HEAT REJECTION RATE	
(5) PERSONNEL OCCUPANCY	*	(10) CRITICAL TIME FACTORS	NA
		(11) OTHER SPECIAL REQUIREMENTS	

F. INTERFACE DESIGN REQUIREMENTS

	SYMBOL CATEGORY		SYMBOL CATEGORY
(1) ENVELOPE AND WEIGHT	*	(6) ACCESS	
(2) MOUNTING PROVISIONS		(7) POSITION LOCATION	NA
(3) ELECTRIC POWER	NA	(8) HANDLING PROVISIONS	NA
(4) ELECTRICAL GROUNDING	*	(9) FIRE/HAZARD PROVISIONS	
(5) WATER AND GAS SERVICE	*	(10) OTHER SPECIAL INTERFACE CONSIDERATIONS	*

*See 4.3 NASS EDS (Total System) for additional requirements

(6) A clearance of 1'6" around the water manifolds shall be maintained to permit removal and replacement of the nozzles during installation and checkout.

(9) The nozzles shall be staked into the water manifolds following checkout and flow testing to prevent loosening.

(10) Ten (est) channels of I&C for monitoring and recording water flow and pressure data shall be provided.

(10) The water supply system loads to the water injection subsystem shall not exceed that specified in Table VI.

FACILITY INTERFACE SHEET	A. NOMENCLATURE AND CEI NUMBER NASS EXHAUST DUCT SYSTEM CEI 090221B	
B. ORIGINATOR ANSC, N5310	C. SITE EFFECTIVITY 3333 ETS-1 FACILITY	D. REFERENCE FUNCTION 4.3 NASS EDS (Plenum Drain Line) SHEET 1 OF 2

E. ENVIRONMENTAL REQUIREMENTS

	SYMBOL CATEGORY		SYMBOL CATEGORY
(1) VIBRATION, SHOCK/ACOUSTIC LEVEL	*	(6) ELECTROMAGNETIC INTERFERENCE/COMPATIBILITY	NA
(2) TEMPERATURE AND HUMIDITY	NA	(7) CONTAMINATION LEVEL	*
(3) FORCED VENTILATION/AIR CHANGES	NA	(8) HAZARDS SAFETY	*
(4) ILLUMINATION	NA	(9) HEAT REJECTION RATE	NA
(5) PERSONNEL OCCUPANCY	*	(10) CRITICAL TIME FACTORS	NA
		(11) OTHER SPECIAL REQUIREMENTS	NA

*See 4.3 NASS EDS (Total System) for additional requirements.

F. INTERFACE DESIGN REQUIREMENTS

	SYMBOL CATEGORY		SYMBOL CATEGORY
(1) ENVELOPE AND WEIGHT	*	(6) ACCESS	NA
(2) MOUNTING PROVISIONS		(7) POSITION LOCATION	NA
(3) ELECTRIC POWER	NA	(8) HANDLING PROVISIONS	NA
(4) ELECTRICAL GROUNDING	*	(9) FIRE/HAZARD PROVISIONS	*
(5) WATER AND GAS SERVICE		(10) OTHER SPECIAL INTERFACE CONSIDERATIONS	*

(1) The drain line is 5' long an 24" in diameter, see EDS design drawings, Volume II, F008-NAS02-W224, for details.

(1) The weight of the drain line is included in the turning plenum weight.

(2) The drain line is welded to the plenum drain nozzle and will interface with the plenum water removal system provided by the facility.

(5) The facility plenum water removal system shall dispose of water at the following flow rates and operating conditions at the interface with the EDS.

Engine P_c PSIA	Plenum PSIA	$\dot{W}$ H_2O lb/sec	H_2O Temp
0	Ambient	0-745*	Ambient
0	7-8	0-700	Ambient
4-30	2-3	0-700	Saturated
0-350	7-13	0-700	Saturated
500	15-16	745	Saturated

*Water flow rates or durations shall be limited such that the plenum water level does not exceed 22 inches during

FACILITY INTERFACE SHEET	A. NOMENCLATURE AND CEI NUMBER NASS EXHAUST DUCT SYSTEM CEI 090221B	
B. ORIGINATOR ANSC, N5310	C. SITE EFFECTIVITY 3333 ETS-1 FACILITY	D. REFERENCE FUNCTION 4.3 NASS EDS (Plenum Drain Line) SHEET 2 OF 2

E. ENVIRONMENTAL REQUIREMENTS

	SYMBOL CATEGORY		SYMBOL CATEGORY
(1) VIBRATION, SHOCK/ACOUSTIC LEVEL	*	(6) ELECTROMAGNETIC INTERFERENCE/COMPATIBILITY	NA
(2) TEMPERATURE AND HUMIDITY	NA	(7) CONTAMINATION LEVEL	*
(3) FORCED VENTILATION/AIR CHANGES	NA	(8) HAZARDS SAFETY	*
(4) ILLUMINATION	NA	(9) HEAT REJECTION RATE	NA
(5) PERSONNEL OCCUPANCY	*	(10) CRITICAL TIME FACTORS	NA
		(11) OTHER SPECIAL REQUIREMENTS	NA

F. INTERFACE DESIGN REQUIREMENTS

	SYMBOL CATEGORY		SYMBOL CATEGORY
(1) ENVELOPE AND WEIGHT	*	(6) ACCESS	NA
(2) MOUNTING PROVISIONS		(7) POSITION LOCATION	NA
(3) ELECTRIC POWER	NA	(8) HANDLING PROVISIONS	NA
(4) ELECTRICAL GROUNDING	*	(9) FIRE/HAZARD PROVISIONS	*
(5) WATER AND GAS SERVICE		(10) OTHER SPECIAL INTERFACE CONSIDERATIONS	*

*See 4.3 NASS EDS (Total System) for additional requirements.

water system testing when flow rates as high as 1700 lb/sec are possible.

Failure of the plenum water removal system can cause an accumulation of water in the plenum resulting in a critical hazard to the EDS.

(9) Air intrusion into the EDS due to drain failure can result in a critical hazard to the EDS.

(10) Four (est) channels of I&C for use in monitoring and recording water flow and temperature shall be provided.

(10) Plenum water removal system loads on the drain line shall not exceed that specified in Table VI about the drain line to plenum attachment point while accommodating 2.0" of plenum thermal expansion.

(10) The drain system is to be designed to permit remote EDS removal. Salvage of the line or plenum is not required.

FACILITY INTERFACE SHEET	A. NOMENCLATURE AND CEI NUMBER NASS EXHAUST DUCT SYSTEM CEI 090221B	
B. ORIGINATOR ANSC, N53[illegible]	C. SITE EFFECTIVITY 3333 ETS-1 FACILITY	D. REFERENCE FUNCTION 4.3 NASS EDS (Secondary Ejector (SE)) SHEET 1 OF 3

E. ENVIRONMENTAL REQUIREMENTS

	SYMBOL CATEGORY		SYMBOL CATEGORY
(1) VIBRATION, SHOCK/ACOUSTIC LEVEL	*	(6) ELECTROMAGNETIC INTERFERENCE/COMPATIBILITY	NA
(2) TEMPERATURE AND HUMIDITY	*	(7) CONTAMINATION LEVEL	*
(3) FORCED VENTILATION/AIR CHANGES	NA	(8) HAZARDS SAFETY	*
(4) ILLUMINATION	NA	(9) HEAT REJECTION RATE	*
(5) PERSONNEL OCCUPANCY		(10) CRITICAL TIME FACTORS	NA
		(11) OTHER SPECIAL REQUIREMENTS	NA

*See 4.3 NASS EDS (Total System) for additional requirements.

(5) The secondary ejector is located outside of the duct vault and is accessible to personnel, if required.

F. INTERFACE DESIGN REQUIREMENTS

	SYMBOL CATEGORY		SYMBOL CATEGORY
(1) ENVELOPE AND WEIGHT	*	(6) ACCESS	
(2) MOUNTING PROVISIONS	*	(7) POSITION LOCATION	*
(3) ELECTRIC POWER	NA	(8) HANDLING PROVISIONS	*
(4) ELECTRICAL GROUNDING	*	(9) FIRE/HAZARD PROVISIONS	*
(5) WATER AND GAS SERVICE		(10) OTHER SPECIAL INTERFACE CONSIDERATIONS	*

(1) The secondary ejector is 148' (est) long; 19'-7" (est) wide' 22' (est) high. See EDS design drawings, F008-NAS02-W224 for details.

(2) Two sliding trunnions; one on each side of the SE near the exit end, support the secondary ejector. Facility supplied trunnion mounts shall be provided.

(2) Temporary support near the plenum joint will be required during welding of the secondary ejector to the plenum.

(2) A mid-span support is provided and shall be used during non-operating periods for potential seismic incidents.

(2) The closure door is mounted below grade at the SE exit. This closure door shall be used during engine test standby conditions.

(5) The closure door pit shall be filled with water prior to operation and maintained filled during testing.

(5) A drain is provided at the 45° elbow of the ejector. This drain shall be attached to the plenum water removal system

FACILITY INTERFACE SHEET	A. NOMENCLATURE AND CEI NUMBER NASS EXHAUST DUCT SYSTEM CEI 090221B	
B. ORIGINATOR ANSC, N5310	C. SITE EFFECTIVITY 3333 ETS-1 FACILITY	D. REFERENCE FUNCTION 4.3 NASS EDS (Secondary Ejector (SE)) SHEET 2 OF 3

E. ENVIRONMENTAL REQUIREMENTS

	SYMBOL CATEGORY		SYMBOL CATEGORY
(1) VIBRATION, SHOCK, ACOUSTIC LEVEL	*	(6) ELECTROMAGNETIC INTERFERENCE/COMPATIBILITY	NA
(2) TEMPERATURE AND HUMIDITY	*	(7) CONTAMINATION LEVEL	*
(3) FORCED VENTILATION/AIR CHANGES	NA	(8) HAZARDS SAFETY	*
(4) ILLUMINATION	NA	(9) HEAT REJECTION RATE	*
(5) PERSONNEL OCCUPANCY		(10) CRITICAL TIME FACTORS	NA
		(11) OTHER SPECIAL REQUIREMENTS	NA

F. INTERFACE DESIGN REQUIREMENTS

	SYMBOL CATEGORY		SYMBOL CATEGORY
(1) ENVELOPE AND WEIGHT	*	(6) ACCESS	
(2) MOUNTING PROVISIONS	*	(7) POSITION LOCATION	*
(3) ELECTRIC POWER	NA	(8) HANDLING PROVISIONS	*
(4) ELECTRICAL GROUNDING	*	(9) FIRE/HAZARD PROVISIONS	*
(5) WATER AND GAS SERVICE		(10) OTHER SPECIAL INTERFACE CONSIDERATIONS	*

* See 4.3 NASS EDS (Total System) for additional requirements.

(8) Installation and removal of the secondary ejector shall require temporary supports, cables and jacks.

(9) Failure of the steam flow can cause a critical hazard to the facility, EDS, and engine.

(9) A safety purge gas system shall be provided which will permit safe test termination from all operating conditions.

(9) Failure of the hydraulic system to open the closure door can cause a critical hazard to the facility, EDS and engine.

(10) Twenty (est) channels of I&C to monitor, record and control temperatures, pressures, flows and for control of the closure door shall be provided.

(10) The maximum required steam flow rate is 1930 lb/sec at 200 psig (in the SE steam nozzle) and saturated temp.

(10) The normal steam flow rate is 1100 lb/sec at 114 psig (in the SE steam nozzle) and saturated temperature.

(10) The facility shall provide a hydraulic system with a 3000 psig capability at a flow rate of TBD gpm. The system shall have redundant features to ensure the capability of opening the closure door under all operating conditions.

FACILITY INTERFACE SHEET	A. NOMENCLATURE AND CEI NUMBER NASS EXHAUST DUCT SYSTEM CEI 090221B	
B. ORIGINATOR ANSC, N53.0	C. SITE EFFECTIVITY 3333 ETS-1 FACILITY	D. REFERENCE FUNCTION 4.3 NASS EDS (Secondary Ejector (SE)) SHEET 3 OF 3

E. ENVIRONMENTAL REQUIREMENTS

SYMBOL CATEGORY

(1) VIBRATION, SHOCK/ACOUSTIC LEVEL *
(2) TEMPERATURE AND HUMIDITY *
(3) FORCED VENTILATION/AIR CHANGES NA
(4) ILLUMINATION NA
(5) PERSONNEL OCCUPANCY
(6) ELECTROMAGNETIC INTERFERENCE/COMPATIBILITY NA
(7) CONTAMINATION LEVEL *
(8) HAZARDS SAFETY *
(9) HEAT REJECTION RATE *
(10) CRITICAL TIME FACTORS NA
(11) OTHER SPECIAL REQUIREMENTS NA

F. INTERFACE DESIGN REQUIREMENTS

SYMBOL CATEGORY

(1) ENVELOPE AND WEIGHT *
(2) MOUNTING PROVISIONS *
(3) ELECTRIC POWER NA
(4) ELECTRICAL GROUNDING *
(5) WATER AND GAS SERVICE
(6) ACCESS
(7) POSITION LOCATION *
(8) HANDLING PROVISIONS *
(9) PIPE/HAZARD PROVISIONS *
(10) OTHER SPECIAL INTERFACE CONSIDERATIONS *

* See 4.3 NASS EDS (Total System) for additional requirements.

(10) The SGDS steam line loads on the EDS portion of the steam line shall not exceed that specified in Table VI.

4.3 NASS EDS

(TOTAL INSTALLED EXHAUST DUCT SYSTEM)

TABLE I

NASS EDS ACOUSTIC LOADING

Location	Condition	Acoustic Loading	
Inside Plenum (Top surface of deflector plate and floor of plenum)	Facility Experimental Plan, Quench Water Flow Test	Deflector Plate	Plenum Floor
		± 144 lbf	± 165 lbf
		Significant Spectrum: 0.30 to 30 Hz	
Inside Plenum	100% Power	Octave Band Center Freq.	OBSPL
		13.2 Hz	162.3 db
		26.5	167.2
		53	170.9
		106	167.2
		212	166.0
		424	163.0
		db re .0002 dy/cm^2	
Outside NASS at Duct Exit	100% Power	Octave Band Center Freq.	OBSPL
		13.2 Hz	143.8 db
		26.5	146.5
		53	147.9
		106	148.7
		212	147.0
		424	145.0
		db re .0002 dy/cm^2	
Outside NASS at Secondary Ejector Mid-Point	100% Power	Octave Band Center Freq.	OBSPL
		13.2 Hz	133.2 db
		26.5	137.6
		53	139.1
		106	140.3
		212	138.3
		424	135.3
		db re .0002 dy/cm^2	

LEGEND: OBSPL - Octave Band Sound Pressure Level

lbf - Pounds Force

NASS EXHAUST DUCT SYSTEM, CEI 090221B

4.3 NASS EDS

(TOTAL INSTALLED EXHAUST DUCT SYSTEM)

TABLE I

NASS EDS ACOUSTIC LOADING (Cont.)

Location	Condition	Acoustic Loading	
Inside Secondary Ejector	Pulse Cooldown	Center Freq.	OBSPL
		13.2 Hz	170.3 db
		26.5	177.9
		53	174.6
		106	168.8
		212	166.0
		424	163.6
		db re .0002 dy/cm^2	
Inside Plenum (Top surface of deflector plate and floor of plenum)	100% Power	Deflector Plate	Plenum Floor
		± 8080 lbf	± 8080 lbf
		Significant Spectrum:	
		3.08 to 197 Hz	
Inside Primary Diffuser	100% Power	Center Freq.	OBSPL
		6.6 Hz	161.1 db
		13.2	162.8
		26.5	162.1
		53	161.5
		106	165.4
		212	164.7
		424	163.1
		db re .0002 dy/cm^2	

LEGEND: OBSPL - Octave Band Sound Pressure Level

lbf - Pounds Force

NASS EDS TRUNNION LOADS TABULATION

LOAD TYPES (See Note 4 for load combinations)	TRUNNION LOCATIONS									Special Notes
	Ⓐ			Ⓑ			Ⓒ			
	P_V	P_{II}	P_L	P_V	P_{II}	P_L	P_V	P_{II}	P_L	
Seismic (Nuclear Test) Loads	73,200	176,100	146,400	122,100	0	244,600	41,200	0	82,400	1
Dead Load	99,500	0	0	139,000	0	0	41,200	0	0	
Temperature Expansion Loads	0	43,600	0	0	26,000	0	0	8300	0	
Earthquake Loads	10,000	17,700	19,900	13,000	0	26,000	4200	0	8300	1
Engine Test Loads (Including Steam Flow Loads)	15,100	187,500	0	29,200	0	0	0	0	0	2
Special Notes			3			3			3	

SPECIAL NOTES:
1. P_V, P_{II}, & P_L DO NOT OCCUR SIMULTANEOUSLY
2. LOADS VARY DURING TEST SEQUENCES.
3. LATERAL LOADS ARE RESISTED ON ONE SIDE ONLY.
4. LOAD COMBINATIONS: SEE STRESS ANALYSIS, APP B, ADD 1, 2008-NAS62-W224, FOR APPLICATION
   A. LOADS GIVEN ARE FOR EACH TRUNNION
   B. DEAD LOAD + SEISMIC LOAD (THREE AXIS APPLICATION, NON-SIMULTANEOUS) + TEMPERATURE EXPANSION LOAD.
   C. DEAD LOAD + E.Q. LOAD + TEMPERATURE EXPANSION LOAD + ENGINE TEST LOADS.
5. ALL LOADS TABULATED ARE IN UNITS OF POUNDS.

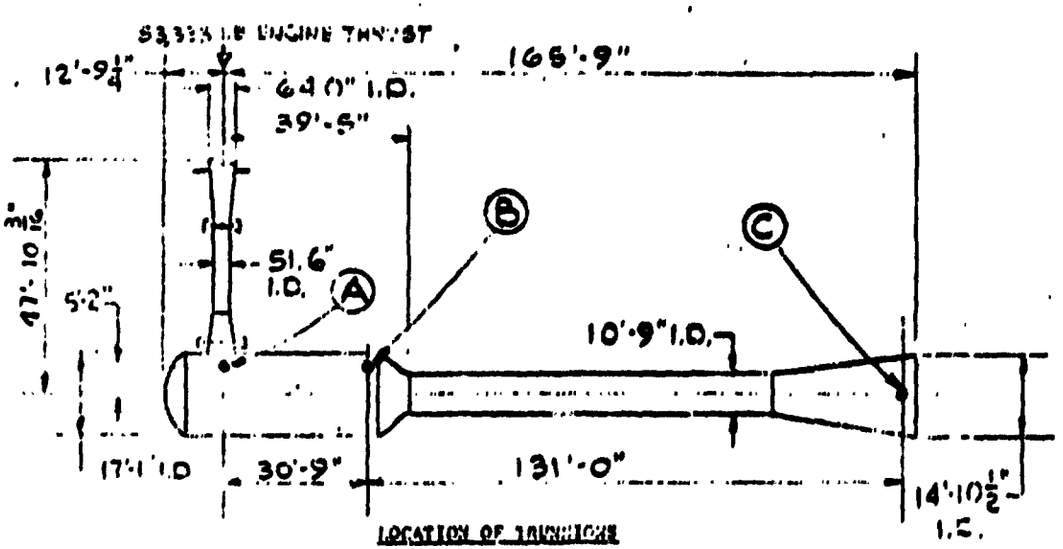

LOCATION OF TRUNNIONS

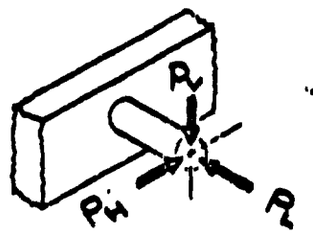

LOCATION OF LOAD APPLICATION

MAXIMUM FLUID REQUIREMENTS					
SERVICE	FLOW RATE	TEMP.	MIN PRESS	FUNCTION	TOTAL FLOW
WATER	30,000 GPM	AMB	175 PSIG	H_2O SUPPLY	1.[illegible] x 10^6 GAL
WATER	11,000 GPM	600°R	50 PSIG	H_2O RETURN	6.[illegible] x 10^5 GAL
GN_2	.04 LB/SEC	AMB	5 PSIG	SEAL/BELLOWS PURGE	
STEAM	1930 LB/SEC	SAT.	200 PSIA	TO STEAM EJECTOR	TBD
GN_2	2 LB/SEC	AMB	100 PSIA	ACTUATORS	TBD

NASS EDS SUPPORT AND FLUID REQUIREMENTS

TABLE III

NASS EDS WEIGHT SUMMARY (LB)

(MAXIMUM FOR DESIGN)

WET WEIGHT

Primary Ejector		
Upper Section	19,500	
Lower Section	24,100	
Total Primary Ejector		43,600
Turning Plenum		240,400
Secondary Steam Ejector (Excluding Closure Door)		155,000
Total EDS Wet Weight		439,000 lb

DRY WEIGHT

Primary Ejector		
Upper Section	12,000	
Lower Section	17,000	
Total Primary Ejector		29,000
Turning Plenum		198,000
Secondary Steam Ejector (Excluding Closure Door)		155,000
Total EDS Dry Weight		382,000 lb

NASS EXHAUST DUCT SYSTEM - CEI 090221B
4.3 NASS EDS
(WATER INJECTION SUBSYSTEM)

TABLE IV

INJECTION WATER SYSTEM
COOLANT WATER FLOW REQUIREMENTS

			Injected Water			
			Minimum		Maximum	
Engine Pressure Pc, psia	Primary Ejector Exit Pressure P_1, psia	Water Injection Manifold Number	Manifold Pressure psid	Flow Rate lb/sec	Manifold Pressure psid	Flow Rate lb/sec
100	6.8	1	5	71.0	8	89.0
		2	5	95.0	8	121.0
		3	10	282.0	40	564.0
				448.0		774.0
200	8.5 - 8.9	1	5	71.0	8	89.0
		2	5	95.0	18	181.0
		3	40	564.0	60	690.0
				730.0		960.0
300	12.4 - 13.2	1	5	71.0	8	89.0
		2	30	234.0	40	272.0
		3	80	797.0	120	978.0
				1102.0		1339.0
350	13.4 - 15.4	1	5	71.0	8	89.0
		2	30	234.0	55	316.0
		3	100	894.0	130	1016.0
				1199.0		1421.0
450	15.4 - 16.9	1	10	100.0	12	110.0
		2	60	331.0	90	405.0
		3	160	1128.0	165	1145.0
				1559.0		1660.0
500	15.8 - 18.1	1	10	100.0	15	125.0
		2	80	382.0	100	428.0
		3	165	1145.0	175	1180.0
				1627.0		1733.0

TABLE VI

ALLOWABLE FACILITY LOADS AT STEAM AND WATER LINE INTERFACES

	Tension and Compression 1000 lb	Shear 1000 lb	Bending 1000 in-lb.
Steamline	5	1	50
Water Injection Lines to:			
Manifold No. 1	TBD	TBD	TBD
Manifold No. 2	TBD	TBD	TBD
Manifold No. 3	TBD	TBD	TBD
Deflector Plate Supply	TBD	TBD	TBD
Deflector Plate Drain	TBD	TBD	TBD
Plenum Drain	6	TBD	50
PE Water Inlets	Loads not to exceed allowable travel of ± 3/4 tx -3/8 in. of the pressure compensating expansion joints.		
PE Water Outlet	Loads not to exceed allowable travel of ± 1/4 lb. of the pressure compensating expansion joints.		

ATTACHMENT 2

S-058 DATA ITEM DESCRIPTION (FORM 9)

DATA ITEM DESCRIPTION

TITLE: FACILITY INTERFACE SHEETS	NUMBER: S-058
	DATE: 6-15-70
	RESPONSIBLE AGENCY
	APPROVAL: SMPO-M/FEO
	APPROVAL DATE
	REFERENCES

PURPOSE

Facility interface sheets, FIS, are the means for transmitting facility interface data to the Facility Engineering Office (FEO), for all test operations and or maintenance equipments for the MERVA program at NRDS. One S-58 is prepared for each facility or operational CEI and details the specific physical interface needs of the equipment or system at the facility. The FIS becomes a working tool for the FEO to collect and collate all interface requirements imposed on a particular facility subsystem.

APPLICATION/INTERRELATIONSHIP

For the current MERVA Development Program, the FIS shall be identified and collated for each specific test facility. (e.g., ETS-1, E/STS-2, TC "C", E-MAD, etc). For collating purposes, system and NRDS facility matrices are used as shown on Figure 2 and identified on the FIS, Figure 1. The relationship of this data element in the system engineering process is shown in Figure 3. Primarily, the FIS shall be generated for completion of a PDR, (F-008) effort, and will impact on the Facility Design Criteria Document (F-007) by updating of that data item.

PREPARATION

1. Facility Interface Sheets. The facility interface sheets shall be submitted in the format illustrated in figure 1 and prepared in accordance with the following requirements.

a. Block A: Nomenclature and CEI Number. Enter the nomenclature and identification of the equipment for which the facility requirements are being identified.

b. Block B Originator. Enter the identification of the contractor, AMSC, WANL Dept. No. or other agency originating the sheet and equipment identified in Block A.

c. Block C Site Effectivity. Enter the site, location, or general area of use of the equipment identified in block A in accordance with code of Figure 2. If the equipment location is fixed within a particular facility area, this area should be identified along with the major location. If the equipment is portable, state this and identify general area of use. Amplify the location information as necessary in the specific requirements.

d. Block D, Reference Functions. Enter the function numbers for which the equipment identified in block A is used and the appropriate RAS reference numbers where the functions are doccumented. Identify subsystem impacted in accordance with code of Figure 2.

e. Block E. Environmental Requirements. Using the checklist at the top of the column, enter the requirements data for each checklist heading, using the numeric designation from the checklist. These entries will be derived from the appropriate sections of the design sheet; e.g., Environmental, Human Performance, Safety, etc. Entries will be as brief as possible, stressing quantitative values, but complete enough to fully portray the environmental requirements and criteria

Preparation Information: (Continued)

of the equipment as outlined in the description of each heading (see below).

When the checklist heading is not applicable to the equipment identified in block A, indicate this with an "N/A" entry for the corresponding checklist heading number.

(1) Vibration/Shock/Acoustic Level. The maximum limits that the equipment should be subjected to by the facility environment will be stated in qualitative terms. Likewise, if the equipment itself creates vibration, shock, or acoustics that will influence the facility environment or surrounding equipment, this will be stated and the quantities entered.

(2) Temperature and Humidity. Enter the temperature and humidity extremes (high and low) that must be provided for the equipment by the facility environment.

(3) Forced Ventilation/Air Changes. If equipment requires forced ventilation from facility air supply, state requirements in terms of minimum and maximum temperatures and humidity, and flow in CFM. Air-change requirements in facility controlled spaces will be stated in air changes per hour.

(4) Illumination. State maximum or minimum illumination levels to be provided on console or work surfaces of equipment in foot candles for each surface of interest.

(5) Personnel Occupancy. State number of personnel required for normal operation and their proximity to equipment. If special provision must be made for significant numbers of maintenance personnel, so state.

(6) Electromagnetic Interference/Compatibility. Enter tolerance limits of equipment, for radiated electromagnetic interference (EMI) in terms of frequency and power level, and for power line/ground interference potentials in terms of volts, etc., and frequency. If the equipment itself produces radiation or power-line harmonics that will affect the facility environment, then these must be stated.

(7) Contamination Level. Enter any constraints on facility environment imposed by contaminant level tolerance of equipment; e.g., air in room shall contain less than 100 particles .5 microns or greater per 100 cubic feet of air. Also, if equipment releases contaminants or has potential of creating contamination hazards, these limits will be stated.

(8) Hazards/Safety. Enter qualitative and quantitative values of hazards or safety to personnel and/or the facility imposed by installation of the equipment in the facility environment, not covered under other headings.

(9) Heat Rejection Rate. If equipment releases heat to facility environment, not covered under other headings, so state.

(10) Critical Time Factors. Enter any time-critical operating or accessibility considerations that will affect facility environment; e.g., equipment must operate for a maximum of 28 hours continuously every 48 hours without access for service or degradation of facility environment.

(11) Other Special Environmental Requirements. Enter any other special environmental considerations not covered by one of the above headings.

f. Block F, Interface Design Requirements. In a similar manner to block E, this block and checklist will be used to state the design requirements data for the physical interfaces between the equipment identified in block A and the appropriate

15 June 1970

S-058 (Continued)

Preparation Information: (Continued)

facilities. The data for these entries will be derived from the applicable sections of the design sheet to satisfy the following checklist descriptions:

(1) Envelope and Weight. Enter the physical envelope dimensions of the equipment and its total installed weight. If special fixtures are required for its movement or installation, enter these weight and size parameters also.

(2) Mounting Provisions. Enter method, location, and controlling dimensions for fixed equipment; e.g., wall-mounted in duct with center line 3 feet above floor level; floor bolted on 3' x 6' pad within pipe chase etc. Portable equipment will be indicated as portable, bench rest; portable, caster mounted; etc.

(3) Electric Power. State power required to operate equipment in terms of volts, watts, frequency, power factor, stability, and tolerances: e.g., 480 ±4 volts, 1.5 k.w., 9 p.f. 60 ±0.5 c.p.s. State connection requirements; i.e., permanently wired, special connectors, source fuzed, etc. If electrical load is large (500w or greater) and cyclical in nature, st state time-variant nature related to system functions and time.

(4) Electrical Grounding. State grounding requirements in terms of ohms, connection points, wire size, type, method of connection; i.e. solder, lugs etc.

(5) Water and Gas Service. Enter requirements for water, gas or other fluids to be supplied by facilities in terms of minimum-maximum pressures, flow rates, purity requirements, and minimum-maximum temperatures.

(6) Access. Enter any controlled dimension requirements, special platforms, etc., required to operate or maintain the equipment in its installed configuration; e.g., clear access required behind console 72" deep by 20" wide by 34" high for removal of mercury column.

(7) Position/Location. Enter detailed position, orientation, or location information where critical to operation of equipment; e.g., console face must be within 10 feet maximum and 6 feet minimum of display panel with top rear of console toward panel.

(8) Handling Provisions. Enter requirements imposed on facility to handle or move portable equipment into its location of use; e.g., provide hoisting means to place equipment.

(9) Fire/Hazard Provisions. Enter specific location or configuration requirements for facility protective or removal devices; e.g., a minimum of 800-GPM water deluge, will be provided distributed evenly over top and four sides of equipment inclosure, to be actuated on command of controller. Ninety-nine per cent containment and removal in enclosed drain required for toxic deluge products.

(10) Other Special Interface Considerations. Any special interface requirements not covered by the above will be entered under this category. Include critical time envelopes not covered under other headings.

(a) It is emphasized that the information entered in block F (see above) does not replace or substitute for interface control drawings. Depending on the point in the system engineering process, this sheet may be the input to the development of the definitive interface control drawings,

Preparation Information: (Continued)

at which time the drawings become a supplement to the facility interface sheet to graphically illustrate and detail the physical interface. When the facility-interface drawing has been issued, the appropriate heading entry will refer to this drawing and the drawing will be appended to the facility interface sheet.

(b) Facility interface sheet entries are subject to iteration with the system engineering process. Entries will always be made as completely as possible. Where certain information is recognized as a requirement but simply is not available, the entry will indicate the missing but recognized requirement with a blank; e.g., "Required electric power will be 220 + 18V, 60 + 10 c.p.s. 3φ _____ K.W. at _____ p.f." Subsequent updating of the form will continue by originator until all requirements are stated and blanks filled in. Where a reasonable estimate can be established, it will be entered, followed by the designation (est). When verified, the "(est)" designation will be removed by revision to the facility interface sheet.

2. Identifying Information. Appropriate identifying information including the revision letter, date, approval, document number, and page number shall be entered on the bottom of the sheet. Pages will be numbered consecutively starting from one for each end item, and no consecutively by submittal or system.

3. Example of Facility Interface Sheet. For an example of a completed facility interface sheet, see Figure 4. The example illustrates a component of the NASS Exhaust Duct System, CEI 090221A. This is one page of the total NASS facility interface sheet input and describes the Primary Ejector Collar facility and maintenance interface.

FACILITY INTERFACE ASSY	A. DESIGNATION AND CEI NUMBER: NASS EXHAUST DUCT SYSTEM CEI 090221A	
B. DESIGNATOR: ANSC DEPT 7280	C. FACILITY: 3300 ETS-1 FACILITY	D. REFERENCE FUNCTION: 4.3 NASS DUCT (PRIMARY EJECTOR COLLAR)

E. ENVIRONMENTAL REQUIREMENTS — STORAGE CATEGORY: A/1

(1) VIBRATION, SHOCK / ACOUSTIC LEVEL N/A
(2) TEMPERATURE AND HUMIDITY
(3) FORCED VENTILATION / AIR CHANGES N/A
(4) ILLUMINATION N/A
(5) PERSONNEL OCCUPANCY N/A
(6) ELECTROMAGNETIC INTERFERENCE/COMPATABILITY
(7) CONTAMINATION LEVEL N/A
(8) HAZARDS-SAFETY
(9) HEAT REJECTION RATE N/A
(10) CRITICAL TIME FACTORS N/A
(11) OTHER SPECIAL REQUIREMENTS N/A

F. INTERFACE DESIGN REQUIREMENTS — STORAGE CATEGORY

(1) ENVELOPE AND WEIGHT
(2) MOUNTING PROVISIONS
(3) ELECTRIC POWER N/A
(4) ELECTRICAL GROUNDING N/A
(5) WATER AND GAS SERVICE
(6) ACCESS N/A
(7) POSITION LOCATION
(8) HANDLING PROVISIONS
(9) FIRE / HAZARD PROVISIONS N/A
(10) OTHER SPECIAL INTERFACE CONSIDERATIONS

(2)	O.D. Temperature = 2000°R (est.)	(1)	WT = 200 lbs (est.) I.D. = 54 IN ; O.D. = 72 IN length = 5 (291) ; L = 13 IN (24:1)
(3)	HOST FIRE RADIATION LEVELS REQUIRES REMOTE REMOVAL VIA EIV.	(2)	MOUNTS INDEPENDENTLY ON TOP OF PRIMARY DUCT
		(5)	COOLANT WATER REQ'D: TBD GPM
		(6)	CAN BE MANUALLY INSTALLED INITIALLY IN A "COLD" STAND. REMOTE REMOVAL & INSTALLATION
			REQ'D BY EIV. EIV WILL NEED TO HOLD & INSTALL INSIDE A 30 INCH DIA. HOLE. PROVISIONS TO HANDLE TWO COLLAR LENGTHS. NEW COLLAR REQ'D FOR EA. NEW ENGINE TEST.
		(10)	AFTER TEST REMOVE IN C-MAD AND MEASURE I.D. FOR EROSION. DISPOSE AT RMSA.
		(10)	PROVIDE 12 (est.) channels of T/Couple monitor O.D. Temp. of 2000°R (est.)
			Tristr. lines will need to be gas cooled and radiation hardened.

REVISION _____ DATE _____ APPROVAL _____ DOCUMENT NO. FEO XXXX PAGE 3 OF 10

FIGURE 1. SAMPLE FACILITY INTERFACE SHEET

NRDS FACILITY IMPACT

Ident.	Area
3000	NRDS Wide
3100	RCP (Reactor Control Pt)
3200	TC "C (Test Cell "C")
3300	ETS-1 (Eng. Test Stand #1)
3400	R-MAD (Reactor, Maint., Assy., & Disassembly Facility)
3500	TC "A" (Test Cell "A")
3900	E-MAD (Engine Maint., Assy., & Disassembly Facility)

FACILITY SUBSYSTEM IMPACT

3.0	TEST SUPPORT SYSTEM
3.3	GN_2
3.4	LN_2
3.5.1	GH_2
3.5.2	GH_2
3.5.3	GHe
3.6	PROCESS WATER
3.7.1	FLARE SYSTEMS
3.7.2	VACUUM SYSTEMS
3.7.3	HYDRAULIC SYSTEMS
3.7.4	FUEL STA. & VESSELS
3.7.5	COMP/ECUP/SUP
4.0	MASS
4.3	MASS DUCT
4.4	SCDS
4.5	SCRUBBER
4.6	RAD WASTE
5.0	INSTRUMENTATION & CONTROLS
5.3	DAS
5.4	FCS
5.5	GTCS
5.6	COMM. SYSTEMS
5.7	SAFETY SYSTEMS
5.8	ADP
5.9	NEUTRONICS
6.0	STRUCTURES
6.3	T.S. SUB-STRUCTURES
6.4	T.S. SUPER-STRUCTURE
6.5	CTC
7.0	BUILDINGS
7.3	AREA 10
7.4	AREA 20
7.5	AREA 30
7.6	AREA 40
7.7	AREA 50
8.0	UTILITIES
8.3	DOMESTIC (UTIL) H_2O
8.4	WASTE DISPOSAL
8.5	ELECTRICAL
8.6	AIR CONDITIONING
8.7	LIFE SUPPORT
8.8	COMPRESSED AIR
9.0	SITE WORK
9.3	ROADS
9.4	RAILROADS
9.5	GRADING & DRAINAGE
9.6	SOIL INVESTIGATION

FIGURE 2

NRDS FACILITY & SYSTEM CODIFICATION

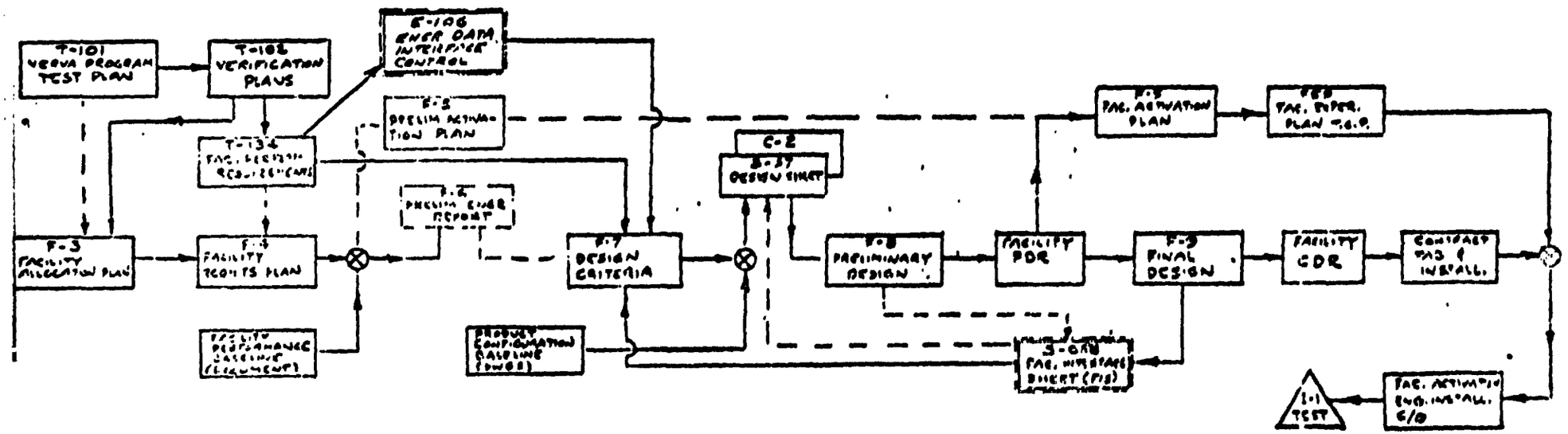

FIGURE 3 FACILITY DOCUMENTATION LOGIC