NASA TM X-73,094 FAA-RD-75-222

A SIMULATOR EVALUATION OF TENTATIVE STOL AIRWORTHINESS CRITERIA

Volume II – Background Information

(NASA-TM-X-73094) A SIMULATOR EVALUATION OF TENTATIVE STOL AIRWORTHINESS CRITERIA. VOLUME 2: BACKGROUND INFORMATION (NASA) 178 p HC $7.50 CSCL 01C N76-19130 Unclas G3/03 20696

Robert K. Heffley, John M. Lehman, and Robert L. Stapleford
Systems Technology, Inc.
Mountain View, Calif. 94043

Barry C. Scott
Federal Aviation Administration
Ames Research Center
Moffett Field, Calif. 94035

Charles S. Hynes
Ames Research Center
Moffett Field, Calif. 94035

MAR 1976
RECEIVED
NASA STI FACILITY
INPUT BRANCH

November 1975

SYSTEMS TECHNOLOGY, INC.

2672 BAYSHORE FRONTAGE ROAD • MOUNTAIN VIEW, CALIFORNIA 94043 • PHONE (415) 961-4674

STI TECHNICAL REPORT NO. 1047-3

A SIMULATOR EVALUATION OF TENTATIVE STOL AIRWORTHINESS CRITERIA

Volume Two

Background Information

Robert K. Heffley, John M. Lehman, and Robert L. Stapleford
Systems Technology, Inc.
Mountain View, California

Barry C. Scott
Federal Aviation Administration

Charles S. Hynes
National Aeronautics and Space Administration

Ames Research Center
Moffett Field, California

November 1975

Contract NAS2-7926

Ames Research Center
National Aeronautics and Space Administration
Moffett Field, California

1. Report No. NASA TM X-73,094 FAA-RD-75-222	2. Government Accession No.	3. Recipient's Catalog No.
4. Title and Subtitle A SIMULATOR EVALUATION OF TENTATIVE STOL AIRWORTHINESS CRITERIA VOLUME II: BACKGROUND INFORMATION		5. Report Date 6. Performing Organization Code
7. Author(s) Robert K. Heffley,* John M. Lehman,* Robert L. Stapleford,* Barry C. Scott,† and Charles S. Hynes‡		8. Performing Organization Report No. A-6403
9. Performing Organization Name and Address *Systems Technology, Inc., Mountain View, Calif. 94043 †Federal Aviation Administration, Ames Research Center, Moffett Field, Calif. 94035 ‡Ames Research Center, Moffett Field, Calif. 94035		10. Work Unit No. 505-10-42-06 11. Contract or Grant No. NAS2-7926
12. Sponsoring Agency Name and Address U.S. Department of Transportation, Federal Aviation Administration, Washington, D. C. 20590, and National Aeronautics and Space Administration, Washington, D.C. 20546		13. Type of Report and Period Covered Technical Memorandum 14. Sponsoring Agency Code
15. Supplementary Notes		

16. Abstract

A simulation program was conducted to examine specific airworthiness criteria proposed by the STOL Standards Development Working Group. The simulation included an airplane model which was deliberately designed to just meet as many of the proposed criteria as possible. The specific areas of investigation were longitudinal flight path/flight reference control, limiting flight conditions and safety margins, and propulsion system failure. Simulation results largely confirmed the approaches taken by the Working Group and aided in providing additional numerical definition of criteria.

17. Key Words (Suggested by Author(s))	18. Distribution Statement
Short takeoff and landing (STOL) Powered lift Airworthiness criteria Aircraft	Unlimited STAR Category – 03

19. Security Classif. (of this report)	20. Security Classif. (of this page)	21. No. of Pages	22. Price*
Unclassified	Unclassified	178	$7.00

*For sale by the National Technical Information Service, Springfield, Virginia 22161

TABLE OF CONTENTS

	Page
SECTION I - INTRODUCTION	1
SECTION II - DETAILED MODEL DESCRIPTION	2
A. Model Development	2
B. Detailed Physical Description	5
C. Operational Procedures and Flight Limitations	35
1. Piloting Technique with All Engines Operating	35
2. Piloting Technique with One Engine Inoperative	41
3. Operating Limitations	41
SECTION III - COMPLIANCE WITH AIRWORTHINESS CRITERIA	45
A. General Requirement Principles	45
B. Minimum Flight Reference Criteria	45
C. Safety Margins	46
D. Approach Path Control	50
E. Flare and Touchdown	65
SECTION IV - PILOT EVALUATIONS	66
REFERENCES	168

LIST OF FIGURES

		Page
II-1	General Arrangement of EBF Point Design (Taken from Reference 2)	3
II-2	Lift-Drag Data Match	4
II-3	Untrimmed Lift-Drag Characteristics	7
II-4	Propulsion System Block Diagram	12
II-5	Gross Thrust and Mass Flow	13
II-6	Longitudinal Control and Stability Augmentation System	17
II-7	Pitch SAS Response	19
II-8	Longitudinal Feel System Characteristics	20
II-9	Lateral Control and Stability Augmentation System	21
II-10	Directional Control and Stability Augmentation System	22
II-11	Lateral-Directional Feel System Characteristics	23
II-12	Direct Lift Control System	25
II-13	Instrument Panel Layout	26
II-14	Instrument Panel Diagram	27
II-15	Aircraft General Arrangement	30
II-16	Trim γ - V Contours, All Engines Operating	32
II-17	Trim γ - V Contours, One Engine Inoperative, Zero Sideslip	33
II-18	Glide Slope vs Headwind Envelope	42
III-1	Safety Margins, α vs δ_T, AEO	47
III-2	Safety Margins, One Engine Inoperative	48
III-3	Speed Margin vs Power and Flight Reference, All Engines Operating	49

Page

III-4 Maneuver Capability in Turn 51

III-5 Flight Path Response/Throttle Step, Attitude Hold/ Nominal Approach 52

III-6 Time Required to Level Flight 53

III-7 Flight Path Response, Lags and Decay, τ_E = 0.1 sec 55

III-8 Flight Path Response, Lags and Decay, τ_E = 1.0 sec 56

III-9 Flight Path Response, Lags and Decay, τ_E = 3.0 sec 57

III-10 Flight Path Response: τ_E = 0.1 sec 58

III-11 Flight Path Response: τ_E = 1.0 sec 59

III-12 Flight Path Response: τ_E = 2.0 sec 60

III-13 Flight Path Response: τ_E = 1.0 sec, τ_θ = 1 sec 61

III-14 Flight Path Response: τ_E = 1.0 sec, τ_θ = 1 sec, DLC 62

III-15 Flight Reference vs Time: $\Delta\theta$ = 10 deg, τ_θ = 1 sec 63

III-16 Control Sensitivity 64

LIST OF TABLES

		Page
II-1	Longitudinal Aerodynamics Coefficients	8
II-2	Lateral-Directional Aerodynamic Coefficients	10
II-3	Propulsion Characteristics	16
II-4	Key to Instrument Panel Layout	28
II-5	Geometrical and Inertial Characteristics	31
II-6	Stability Derivatives	34
II-7	Transfer Functions	36
II-8	Operating Limitations	44
IV-1	Index of Pilot Comments	67

LIST OF ABBREVIATIONS

A/C	Aircraft
ADI	Attitude Director Indicator
AEO	All Engines Operating
CDI	Course Deviation Indicator
c.g.	Center of Gravity
CTOL	Conventional Takeoff and Landing
DLC	Direct Lift Control
EBF	Externally Blown Flap
FP	Flight Path
FR	Flight Reference
GPI	Glide Path Intercept
G/S	Glide Slope
IAS	Indicated Airspeed
I.C.	Initial Condition
IFR	Instrument Flight Rules
ILS	Instrument Landing System
IVSI	Instantaneous Vertical Speed Indicator
OEI	One Engine Inoperative
PIO	Pilot Induced Oscillation
PLA	Power Lever Angle
RMS	Root Mean Square
RPM	Revolutions Per Minute

SAS	Stability Augmentation System
STAI	STOL Tactical Aircraft Investigation
STOL	Short Takeoff and Landing
VFR	Visual Flight Rules

LIST OF SYMBOLS

b	Wing span
$\bar{c}$	Mean aerodynamic chord
C_D	Drag coefficient
C_L	Lift Coefficient
$C_{L_{max}}$	Maximum value of lift coefficient
C_{L_α}	Lift curve slope
C_ℓ	Rolling moment coefficient
C_{m_α}	Derivative of pitching moment coefficient with respect to angle of attack
C_n	Yawing moment coefficient
C_μ	Blowing coefficient
D_{RAM}	Ram drag
F_G	Gross thrust
h	Altitude
$\dot{h}$	Rate of climb
m	Mass of vehicle
$\dot{m}$	Engine mass flow rate
n	Load factor
N_H	Engine RPM (% maximum)

N_b^a	Transfer function numerator for "a" response due to "b" control
$N_{b\ d}^{a\ c}$	Coupling numerator
q	Pitch rate
$\bar{q}$	Dynamic pressure
s	Laplace operator
S	Reference wing area
u	x-component of perturbed velocity
V	Airspeed
V_{MC}	Minimum control speed
V_{Ref}	Reference airspeed
w	z-component of perturbed velocity
x_{TD}	x distance at touchdown
α	Angle of attack
α_{max}	Maximum angle of attack
β	Sideslip angle
γ	Flight path angle
δ	Control deflection
Δ	Open loop transfer function denominator
θ	Pitch attitude
τ_E	Engine lag
φ	Bank angle

SECTION I

INTRODUCTION

Volume Two contains detailed background information for the simulation experiment reported in Volume One. Section II is a detailed description of the airplane model. In Section III the model characteristics are compared with the tentative powered-lift airworthiness criteria developed by the STOL Standards Development Working Group (SSDWG). Pilot evaluations are given in Section IV. These include transcripts of tape-recorded pilot comments and written responses to the pilot evaluation questionnaire.

SECTION II

DETAILED MODEL DESCRIPTION

This section describes the development of the airplane model, its physical characteristics, and the presumed operating procedures and flight limitations.

The airplane model described is referred to as "STOL-X". Although it does not represent any specific airplane, considerable care was taken to make it as realistic as possible.

A. MODEL DEVELOPMENT

The basis of the subject aircraft model was a design arising from the Air Force STOL Tactical Aircraft Investigation (STAI). The particular design used as a starting point was the externally blown flap (EBF) point design developed and described in Reference 1.

The original point design was a 150,000 lb gross weight (125,000 lb landing weight) cargo and troop transport with a payload of approximately 30,000 lb. It was a four-engine, high-wing airplane with a high lift system consisting of 45 deg double slotted flaps externally blown by high bypass ratio turbofan engines. The physical characteristics are summarized in Figure II-1.

The objective in modifying this design was to produce an airplane which just met the proposed SSDWG criteria. The design modifications made for the simulation began with an increase in the approach and landing flap deflection from 45 deg to 60 deg in order to negotiate a 6 deg glide slope (in calm air) while maintaining a 10 kt speed margin and the ability to fly down 4 deg steeper (γ = -10 deg). While this was a substantial modification, the aerodynamic data used for the increased flap angle were closely matched to the 60 deg flap wind tunnel data from the same design study. This match is shown in Figure II-2.

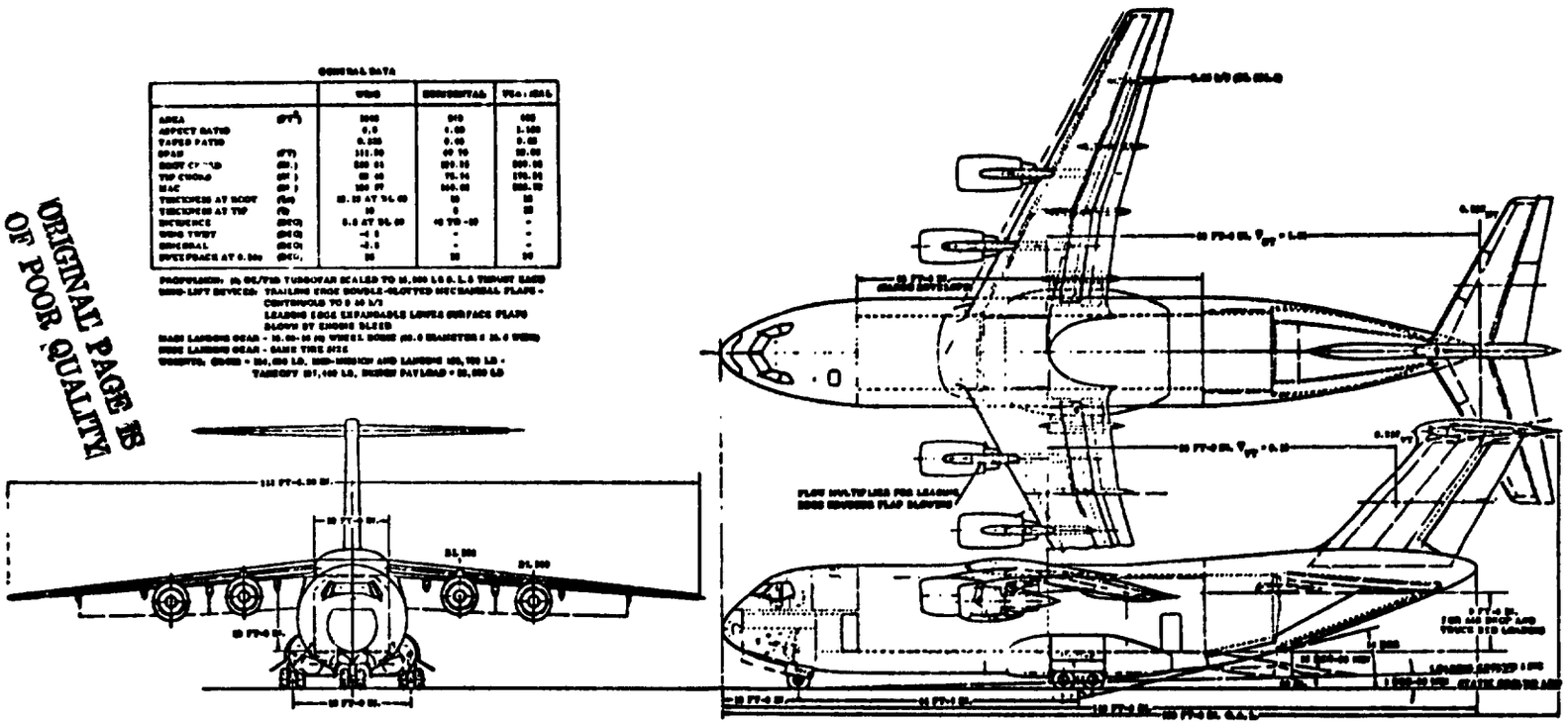

ORIGINAL PAGE IS
OF POOR QUALITY

Figure II-1. General Arrangement of EBF Point Design (Taken From Ref. 1)

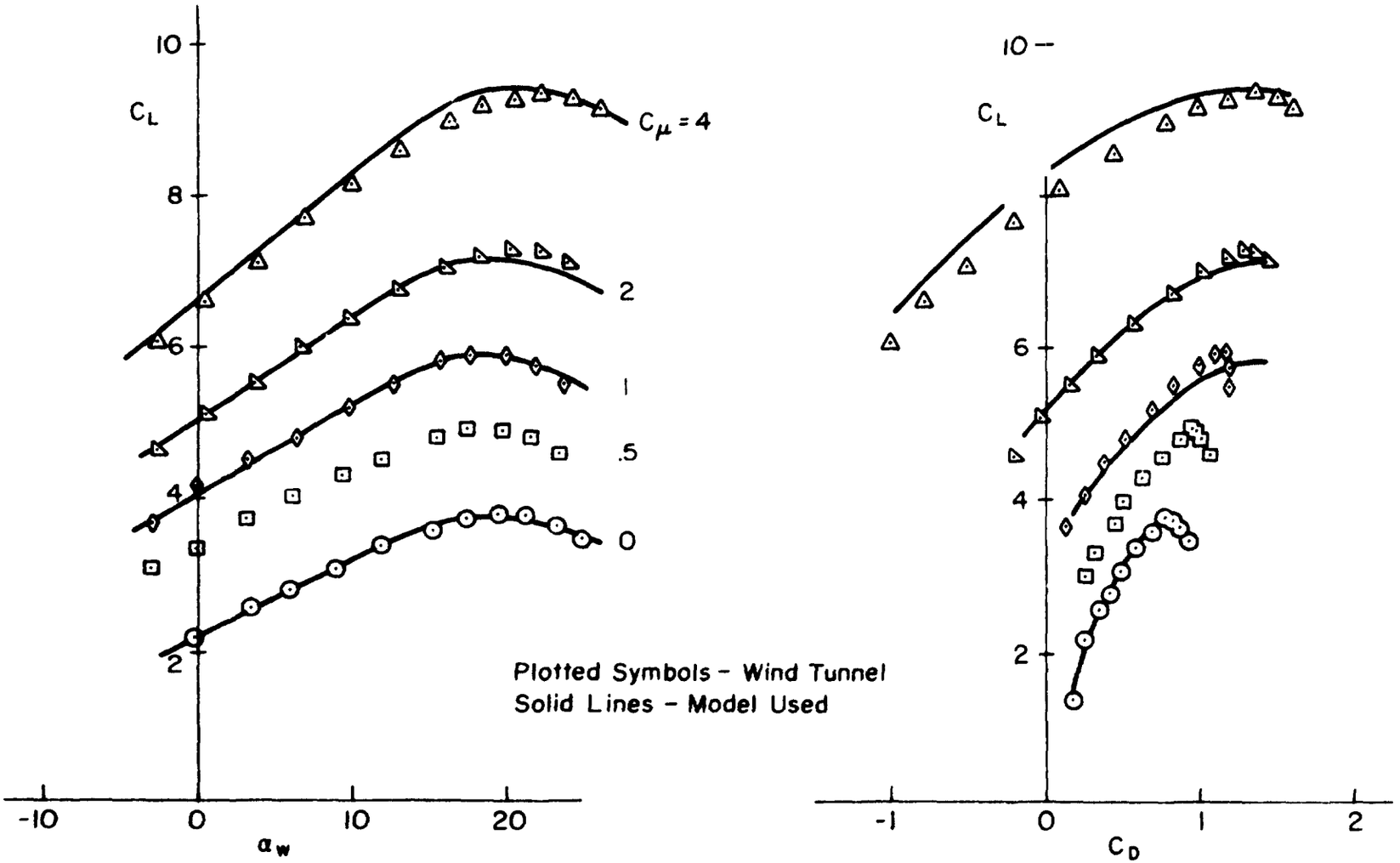

Figure II-2. Lift-Drag Data Match

Longitudinal static stability was set using a horizontal tail contribution based on wind tunnel measurements of tail effectiveness and downwash, and the assumption that the tail-off wing body center of pressure was .1 $\bar{c}$ ahead of the c.g. This provided a representative short-period frequency and retention of a stable C_{m_α} through stall.

Longitudinal dynamic stability derivatives were estimated using the values for another STAI design (Reference 2) and adjusted for the geometry used here.

Lateral-directional characteristics for the subject aircraft were those of the STI Generic STOL airplane model which are described in Reference 3. No geometry adjustments were made since the dynamics were ultimately altered by the lateral-directional SAS of Reference 3, which was also used in most of the previous STOL simulations of this program.

The propulsion model was based on the engine used in the point design but with maximum continuous gross thrust increased 10% from 15,000 lb to 16,500 lb per engine. This was required to provide level flight capability at a 10 kt speed margin above $C_{L_{max}}$. Engine response was modeled by a first order lag of 1 sec.

B. DETAILED PHYSICAL DESCRIPTION

The physical description of the model used in the simulation is arranged in the following order:

- Aerodynamics
- Propulsion
- Control System
- Cockpit Instrumentation
- Geometry, Mass, and Inertia Characteristics
- Performance
- Flight Dynamics.

The mathematical model was based on the Generic STOL computer program described in Reference 3, and each of the above elements are described in terms of that program. Where the model is complex, as in the case of aerodynamics and propulsion, only tabulations of model parameters are given. The reader is referred to Reference 3 for a complete definition of those parameters.

The model description given includes the baseline configuration as well as the various configuration modifications used in the simulation.

1. Aerodynamics

The longitudinal aerodynamics are summarized in Figure II-3 by plots of lift and drag over the ranges of angle of attack and blowing coefficient used in this simulation. The complete list of longitudinal aerodynamic coefficients which define the model are given in Table II-1. The reader is referred to Reference 3 for a complete description of the coefficients.

The lateral-directional aerodynamics are identical to those used in Reference 3. The coefficient values are given in Table II-2 and are defined in Reference 3.

2. Propulsion

The propulsion model was designed to account for effects of asymmetric power, variations in thrust with airspeed, and lags in response of thrust to throttle movement. The structure of the model was based on that of Reference 3 with numerical values set to be representative of the STOL-X design.

The essential structure of the propulsion system is shown in block diagram form in Figure II-4. Each of the four propulsion units is separately modeled in order to give independent cockpit revolutions per minute (RPM) indications and ram drag effects. The blowing coefficients are combined to provide the separate left side and right side effects required for propulsion failure. This structure is detailed in the following paragraphs and in the description of geometrical and inertial characteristics in subpart 5.

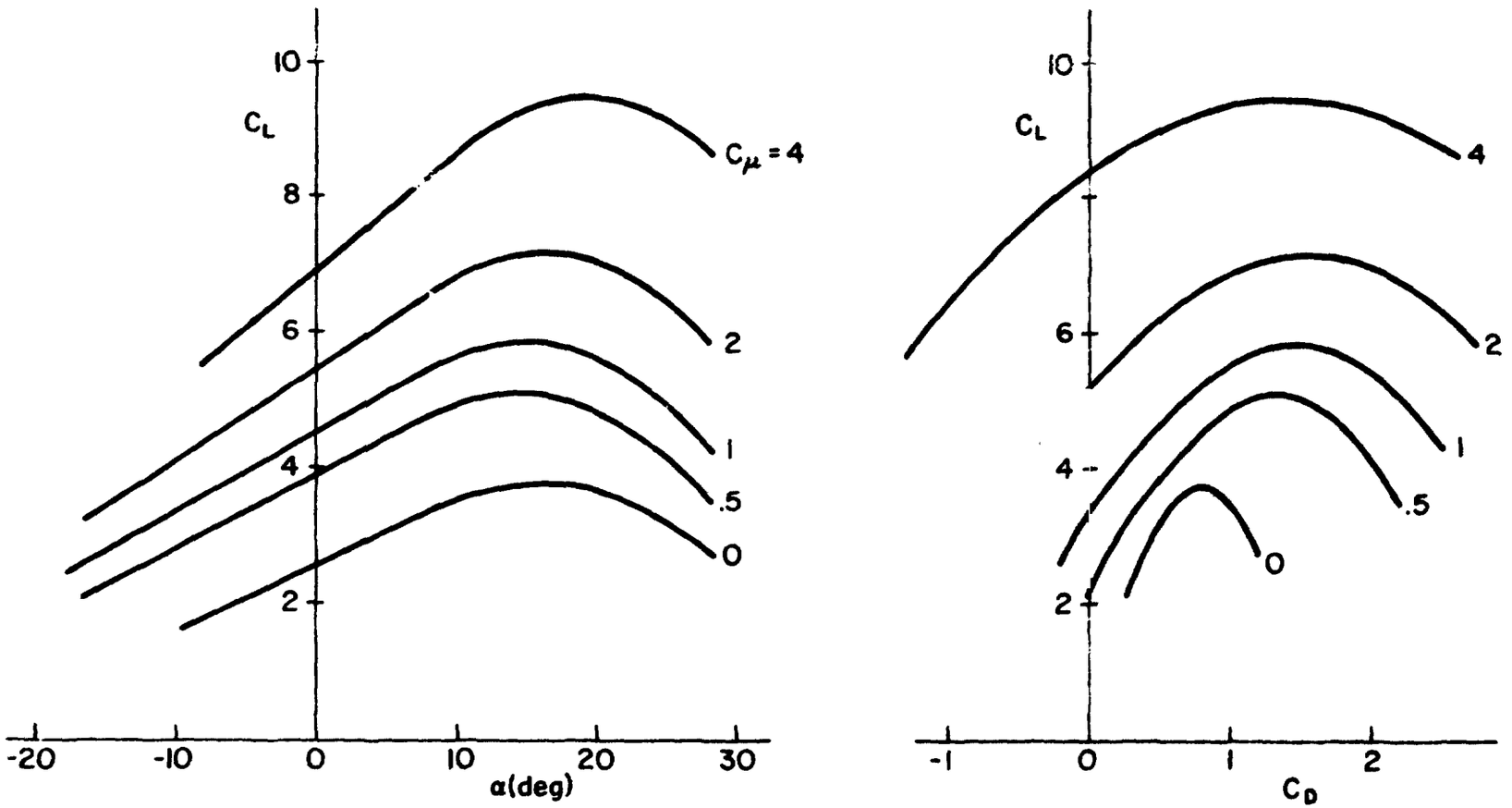

Figure II-3. Untrimmed Lift-Drag Characteristics

TABLE II-1

LONGITUDINAL AERODYNAMIC COEFFICIENTS*

$a_o = 2.52703$	$g_o = 0$
$a_1 = 1.75606$	$g_1 = 0$
$a_2 = .218064$	$g_2 = 0$
$b_o = 5.66502$	$g_3 = .9$
$b_1 = .00208186$	$n_o = -2.50$
$b_2 = 1.02056$	$n_1 = 0$
$c_o = 3.7494$	$n_2 = 0$
$c_1 = 1.34741$	$p_o = .75$
$c_2 = .753665$	$p_1 = -1.147$
$d_o = 44.7018$	$p_2 = 1.11$
$d_1 = 16.6602$	
$d_2 = -2.82556$	
$e_o = .160$	
$e_1 = -.20$	
$e_2 = -.38$	
$f_o = .06$	
$f_1 = 0$	
$f_2 = 0$	

* These coefficients are defined in Reference 3 along with a complete description of the Generic STOL airplane model.

TABLE II-1 (Concluded)

$C_{D_{max}} = 1.28$	$h_1 = 10.0$	$k_{m_{A_1}} = -.01752$
$k_{L_{A_1}} = .2617$	$k_{D_{A_1}} = .1226$	$k_{m_{A_2}} = -.8855$
$k_{L_{A_2}} = 4.970$	$k_{D_{A_2}} = 1.9635$	$k_{m_{A_3}} = .3890$
$k_{L_{A_3}} = -3.799$	$k_{D_{A_3}} = -.39144$	$k_{m_{A_4}} = -.4891$
$k_{L_{A_4}} = 1.329$	$k_{D_{A_4}} = .8468$	$k_{m_{A_5}} = .3123$
$k_{L_{A_5}} = .940$	$k_{D_{A_5}} = .8938$	$k_{m_{A_6}} = -.2464$
$C_{\mu_1} = 1.2$	$C_{\mu_2} = 1.2$	$k_{m_{A_7}} = -.4870$
$C_{\mu_3} = .6$		
$K_{L_{\beta_1}} = -.8697$	$K_{L_{\beta_2}} = K_{L_{\beta_3}} = K_{L_{\beta_4}} = 0$	
$K_{D_{\beta_1}} = -.921$	$K_{D_{\beta_2}} = K_{D_{\beta_3}} = K_{D_{\beta_4}} = 0$	
$K_{m_{\beta_1}} = -.4246$	$K_{m_{\beta_2}} = K_{m_{\beta_3}} = K_{m_{\beta_4}} = 0$	
$K_{L_{sp_1}} = -.678$	$K_{L_{sp_2}} = K_{L_{sp_3}} = K_{L_{sp_4}} = 0$	
$K_{D_{sp_1}} = .0542$	$K_{D_{sp_2}} = K_{D_{sp_3}} = K_{D_{sp_4}} = 0$	
$K_{m_{sp_1}} = .1356$	$K_{m_{sp_2}} = K_{m_{sp_3}} = K_{m_{sp_4}} = 0$	
$K_{L_{Gr}} = .10$	$K_{D_{Gr}} = .05$	$n = 2.0$
$C_{L_{\dot{\alpha}}} = 1.8$	$C_{L_q} = 12.1$	$k_{m_{Gr}} = 0.0$
$C_{m_q} = -55$	$C_{L_{\delta_e}} = 2.046$	$C_{m_{\dot{\alpha}}} = -10$

TABLE II-2

LATERAL-DIRECTIONAL AERODYNAMIC COEFFICIENTS*

$K_{\beta_o} = 1.0$	$K_{\beta_1} = .2005$	$K_{\beta_2} = -1.3407$	$\beta_1 = .250$
$C_{n_{\beta_o}} = .2664$	$C_{n_{\beta_1}} = -.006675$	$\alpha_1 = .3019$	$h_{MG_1} = 125.0$
$n_{Gr_o} = 1.529$	$n_{Gr_1} = -1.5075$	$n_{Gr_2} = 1.5410$	$n_{Gr_3} = -.5598$
$C_{n_{\dot{\beta}_o}} = -.0150$	$C_{n_{\dot{\beta}_1}} = .1910$	$C_{n_{\dot{\beta}_2}} = .03581$	$\alpha_2 = .2793$
$C_{n_{r_o}} = -.2645$	$C_{n_{r_1}} = -.2977$	$C_{n_{r_3}} = 3.0245$	$\alpha_3 = .4119$
$C_{n_{p_o}} = -.2667$	$C_{n_{p_1}} = -1.0497$	$C_{n_{p_2}} = 2.6528$	$\alpha_4 = .1937$
$K_{W_o} = 1.0$	$K_{W_1} = -6.7323$	$\alpha_5 = .3944$	$\alpha_6 = .08116$
$\Delta C_{n_{W_o}} = .14$	$\Delta C_{n_{W_1}} = -.1501$	$\alpha_7 = .3040$	
$K_{\beta_{R_o}} = 1.0$	$K_{\beta_{R_1}} = -.8697$	$\beta_2 = .4447$	
$C_{n_{Rud_1}} = -.2561$	$C_{n_{Rud_2}} = -.1268$	$\delta_{R_1} = .3197$	
$K_{\beta_{\ell_o}} = 1.0$	$K_{\beta_{\ell_1}} = -.8216$	$\beta_3 = .1745$	
$C_{\ell_{\beta_o}} = -.2410$	$C_{\ell_{\beta_1}} = .006007$	$\alpha_8 = .06981$	
$C_{\ell_{\dot{\beta}_o}} = 0.0$			
$C_{\ell_{r_o}} = .80$	$C_{\ell_{r_1}} = 1.7028$		
$C_{\ell_{p_o}} = -.542$	$C_{\ell_{p_1}} = 0.0$		

* These coefficients are defined in Reference 3 along with a complete description of the Generic STOL airplane model.

TABLE II-2 (Concluded)

$C_{\ell_{\delta_a}} = .07735$			
$\Delta C_{\ell_o} = .1452$	$\Delta C_{\ell_1} = .05202$	$\Delta C_{\ell_2} = -.1181$	$\alpha_9 = .4075$
$K_{sp_o} = 1.9937$	$K_{sp_1} = .5551$	$\delta_{sp_1} = .3153$	
$K_{\alpha_{R_o}} = .9677$	$K_{\alpha_{R_1}} = -3.5523$		
$C_{\ell_{R_1}} = .05093$	$C_{\ell_{R_2}} = .02488$	$\delta_{R_2} = .3040$	
$K_{Y_{\beta_o}} = -1.0886$	$K_{Y_{\beta_1}} = 0.0$		
$C_{Y_{\mu_o}} = 1.0$	$C_{Y_{\mu_1}} = .259$	$C_{Y_{\mu_2}} = .152$	$C_{\mu_4} = .772$
$Y_{Gr_o} = 1.1382$	$Y_{Gr_1} = -.3555$	$Y_{Gr_2} = .2433$	$h_{MG_2} = 100$
$C_{Y_{\dot{\beta}_o}} = .03226$	$C_{Y_{\dot{\beta}_1}} = -.4107$	$\alpha_{10} = .3142$	
$C_{Y_{p_o}} = .3032$	$C_{Y_{p_1}} = .9242$	$C_{Y_{p_2}} = -2.7943$	$\alpha_{11} = .3932$
$C_{Y_{r_o}} = .2159$	$C_{Y_{r_1}} = -1.0915$	$C_{Y_{r_2}} = -10.012$	$\alpha_{12} = .4246$
$C_{Y_{R_1}} = .4688$	$C_{Y_{R_2}} = .2667$	$\delta_{R_3} = .3716$	

ORIGINAL PAGE IS
OF POOR QUALITY

Figure II-4

Propulsion System Block Diagram

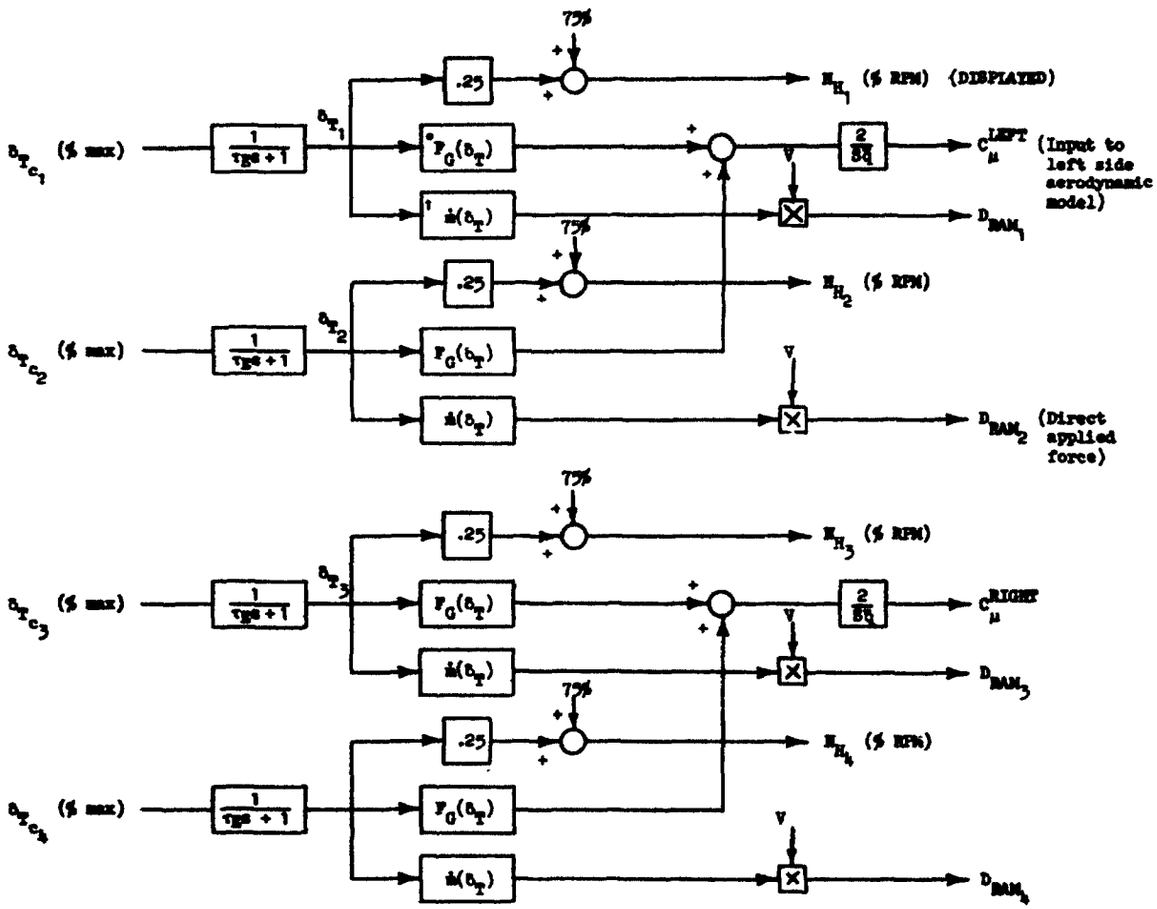

* Gross thrust function shown in Figure II-5

† Mass flow rate function shown in Figure II-5

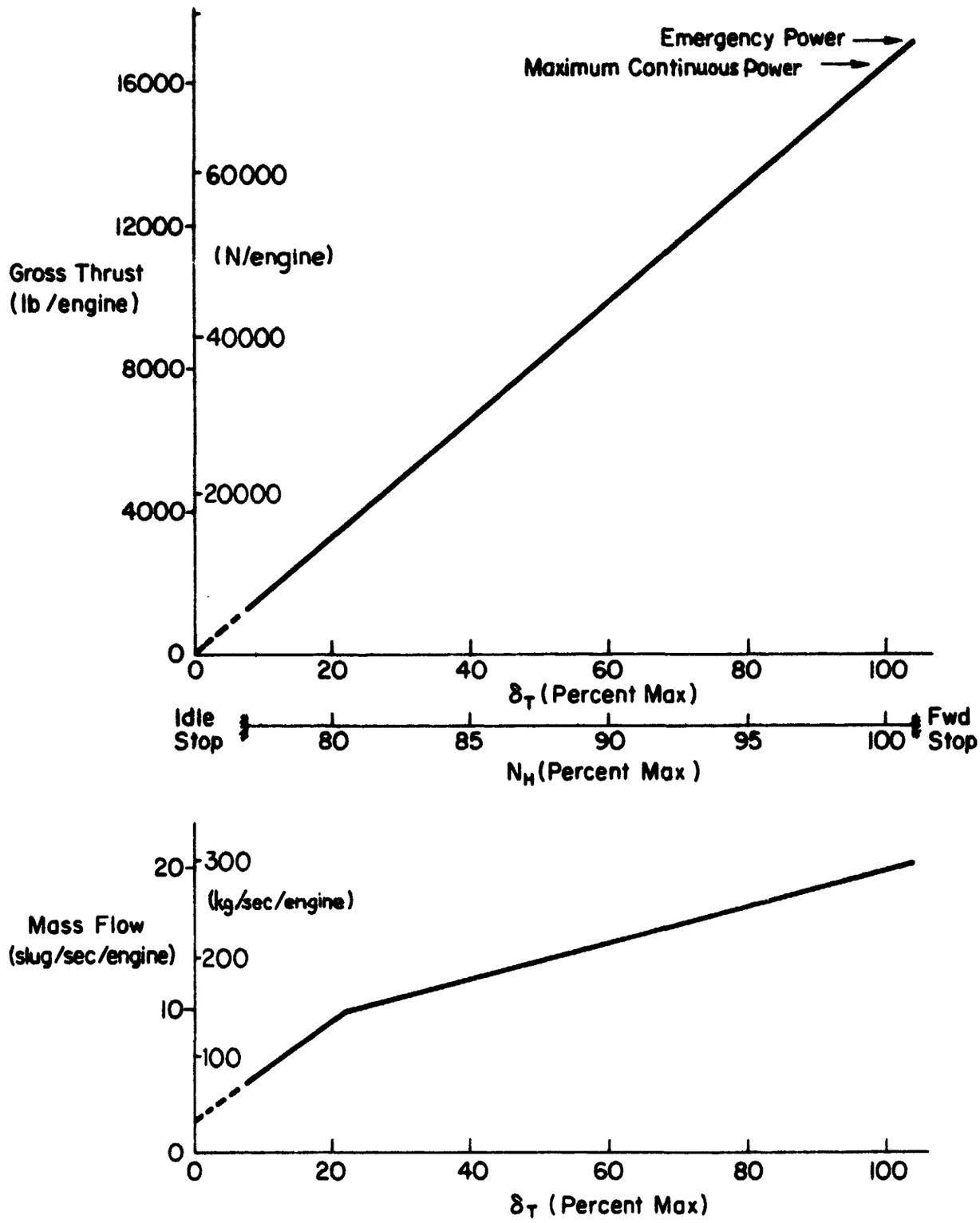

Figure II-5. Gross Thrust and Mass Flow

Power for each engine is displayed in units of percent maximum revolutions per minute (RPM). The RPM is simply a linear function of gross thrust, i.e.,

$$N_H = .25\,\delta_T + 75\%$$

Where δ_T is the percentage of maximum rated gross thrust

Note that the RPM indication is downstream of the engine lag.

Similarly the ram drag is computed separately for each engine. The magnitude for each is used as direct applied force acting along the instantaneous velocity vector at the lateral position of each engine.

To model the engine out asymmetries it was assumed that there were no powered-lift interference effects between the left and right wings. Then the lift and drag coefficients are given by:

$$C_L = 0.5\left[C_L\left(C_\mu^{Left}\right) + C_L\left(C_\mu^{Right}\right)\right]$$

$$C_D = 0.5\left[C_D\left(C_\mu^{Left}\right) + C_D\left(C_\mu^{Right}\right)\right]$$

where

$$C_\mu^{Left} = \frac{2}{\bar{q}S}\left[F_{G_1} + F_{G_2}\right]$$

$$C_\mu^{Right} = \frac{2}{\bar{q}S}\left[F_{G_3} + F_{G_4}\right]$$

$$C_\mu = \frac{1}{\bar{q}S}\left[F_{G_1} + F_{G_2} + F_{G_3} + F_{G_4}\right] = 0.5\left[C_\mu^{Left} + C_\mu^{Right}\right]$$

$C_L(C_\mu)$ and $C_D(C_\mu)$ are the symmetrical-thrust lift and drag functions of Figure II-3.

The rolling and yawing moment coefficients were computed from:

$$C_\ell = \frac{y_e}{b}\left[C_L\left(C_\mu^{Left}\right) - C_L\left(C_\mu^{Right}\right)\right]$$

$$C_n = \frac{y_e}{b}\left[C_D\left(C_\mu^{Right}\right) - C_D\left(C_\mu^{Left}\right)\right]$$

The effective moment arm, y_e, was 8.9 m (29.1 ft) which was the outboard engine location (only failures of an outboard engine were simulated).

The values used in the propulsion portion of the Generic STOL computer model of Reference 3 are listed in Table II-3.

3. Control System

The control system is described below in three parts:

- Pitch axis control
- Lateral-directional control
- Direct lift control (DLC).

For the baseline configuration the pitch axis was not augmented while the lateral-directional axes were. Pitch augmentation and DLC, however, were used in special cases.

a. Pitch Axis Control: The pitch axis control system is diagrammed in Figure II-6. With the SAS switch off (normal position) the control system was a conventional irreversible design. With the SAS switch on, the pitch axis control system was attitude command and the "autotrim" feature could also be used.

The attitude command SAS was used to reduce pilot workload in the inner loop regulation of pitch attitude. One feature of the SAS, however, that should be noted is its relatively slow response

TABLE II-3

PROPULSION CHARACTERISTICS*

δ_{T_1}	=	22.0
$\dot{m}_o$	=	2.0
$\dot{m}_1$	=	.3182
$\dot{m}_2$	=	.1154
F_{B_1}	=	0.0
F_{H_1}	=	150.0
F_{F_1}	=	0.0
K_{T_m}	=	1.1
K_p	=	0.0
SW4	=	1.0
ℓ_e	=	0.0
Z_e	=	0.0

* See Reference 3 for detailed description of parameters.

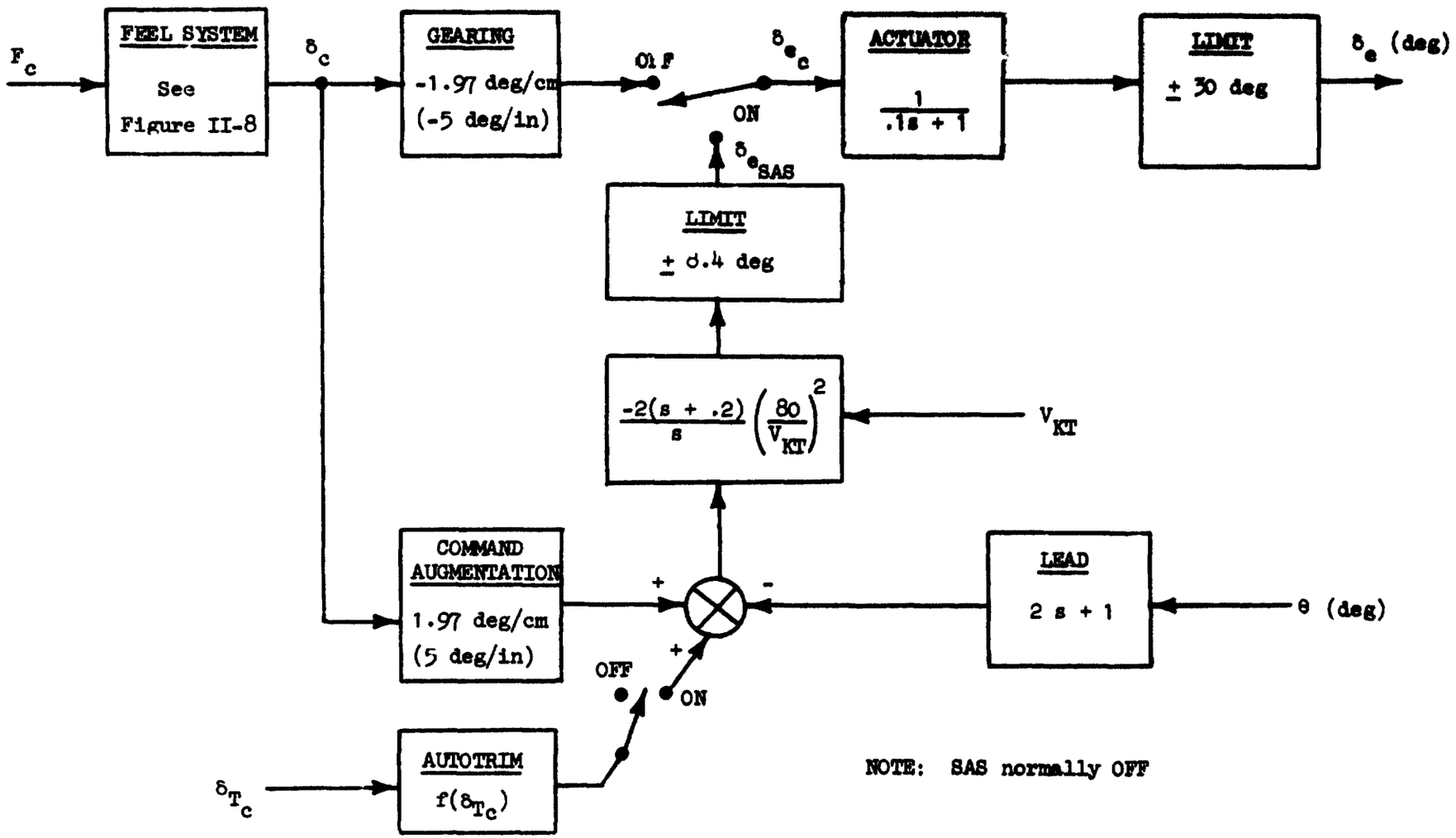

Figure II-6: Longitudinal Control and Stability Augmentation System

to pitch attitude commands. Figure II-7 shows a time history of the pitch response to a step attitude command. The response is heavily damped and relatively slow.

With both the SAS switch and the autotrim switch on, the pitch axis control system acted to maintain a constant steady state flight reference. To do this, a throttle command was crossfed to the pitch SAS. This was mechanized as:

$$f(\delta_{T_c}) = -10.91 + .059\,\delta_{T_c} + .000919\,\delta_{T_c}^{\;2} = \theta_c\,(\delta_{T_c})$$

This had the effect of further reducing pilot workload by removing the flight reference regulation task.

For both the manual and automatic stabilization modes the feel characteristics consisted of a breakout and constant force gradient. The feel characteristics are depicted in Figure II-8.

b. Lateral-Directional Control: The lateral control system is shown in Figure II-9. The multi-surface control system, consisting of both ailerons and spoilers, was used to give capabilities typical of this type of aircraft. A lateral stability and control augmentation system was normally used. The salient features of the lateral SAS were the feedback of body axis roll rate, p_B, to improve roll damping, and body axis yaw rate, r_B, to improve spiral stability.

The directional control system is diagrammed in Figure II-10. The main features of the directional SAS were a low pass aileron-to-rudder crossfeed to reduce adverse yaw, and a pseudo $\dot{\beta}$ feedback (i.e., $r_s - \frac{g\phi}{V}$) to improve turn coordination and increase dutch roll damping.

Figure II-11 shows the feel system characteristics for the lateral-directional control system. Just as in pitch axis they were characterized by only breakout and a constant force gradient.

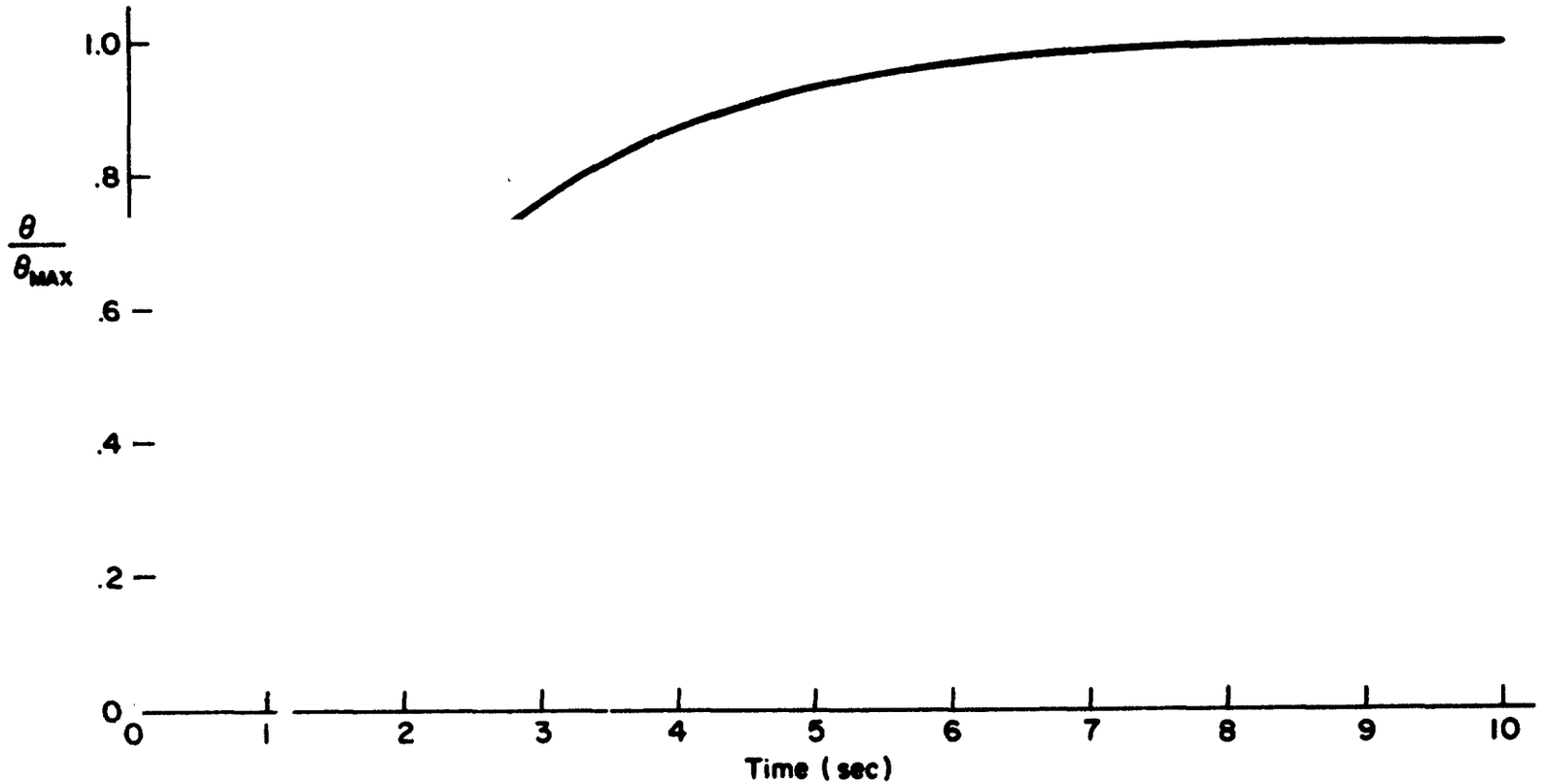

Figure II-7. Pitch SAS Response; STOL-X; FR = 0; γ = −6 deg; Step θ_c Input

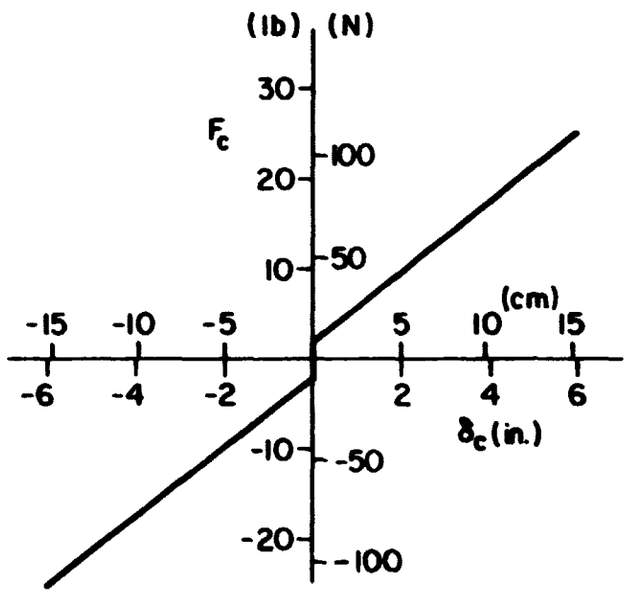

Figure II-8. Longitudinal Feel System Characteristics

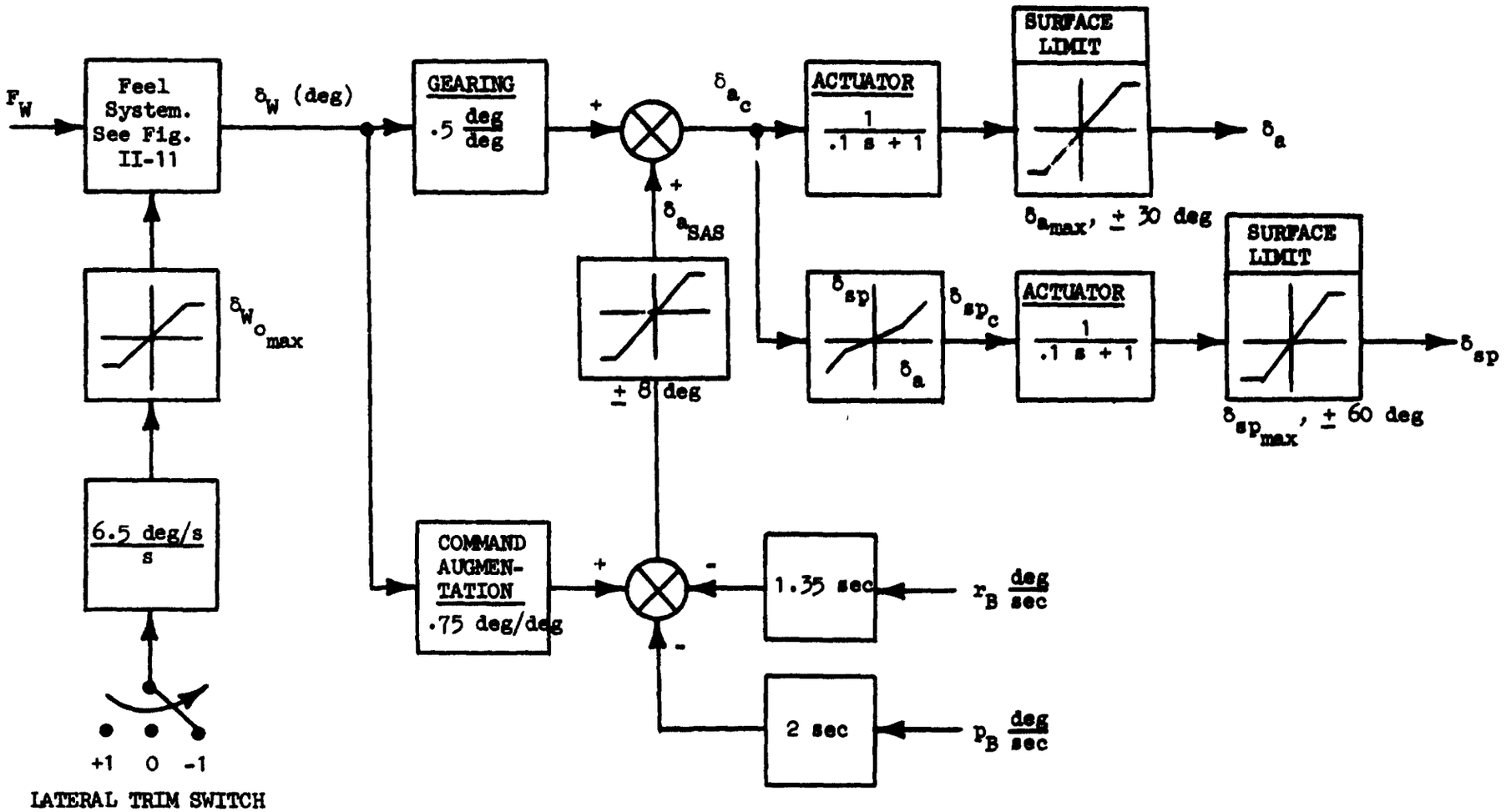

Figure II-9: Lateral Control and Stability Augmentation System

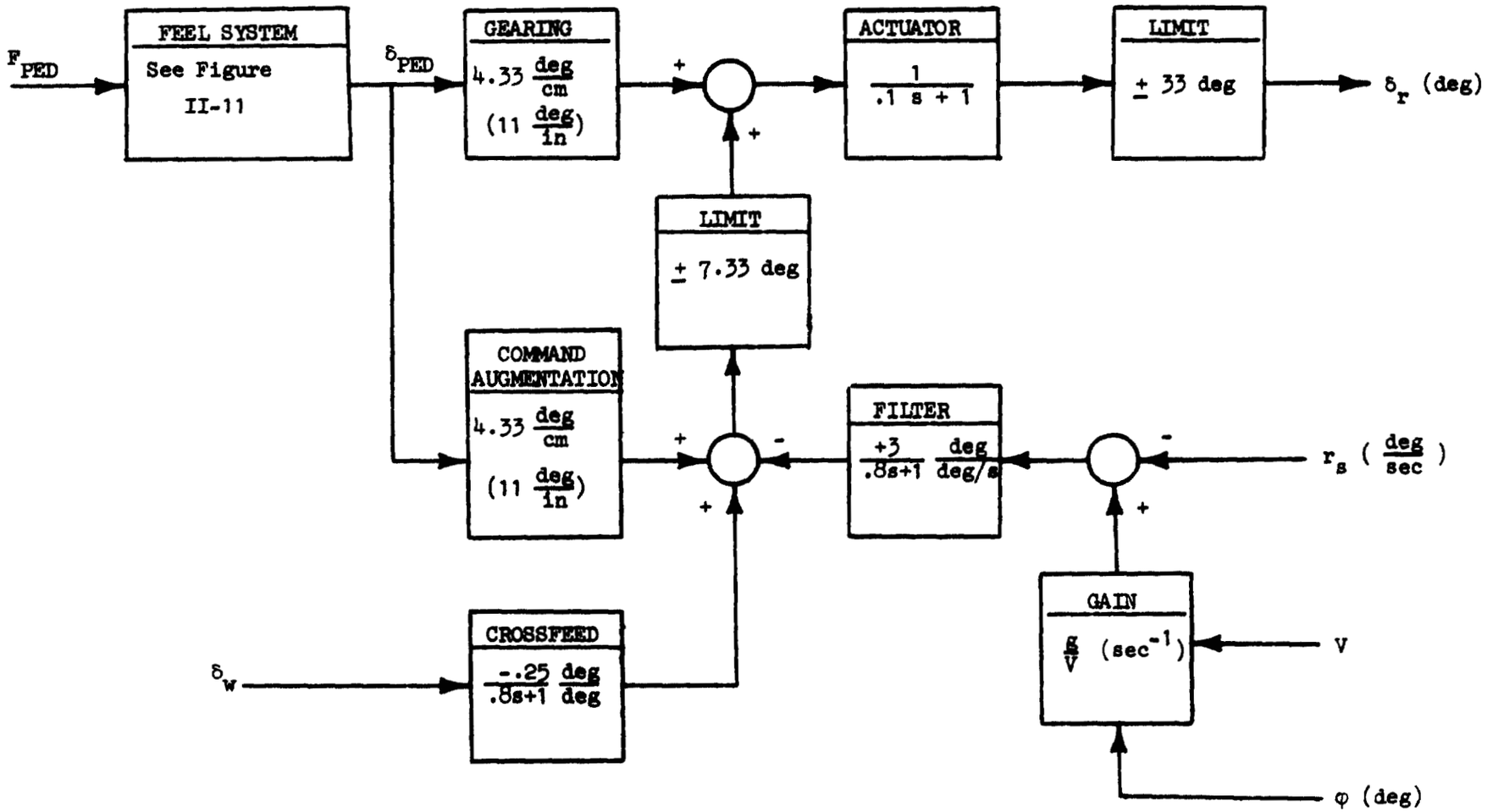

Figure II-10: Directional Control and Stability Augmentation System

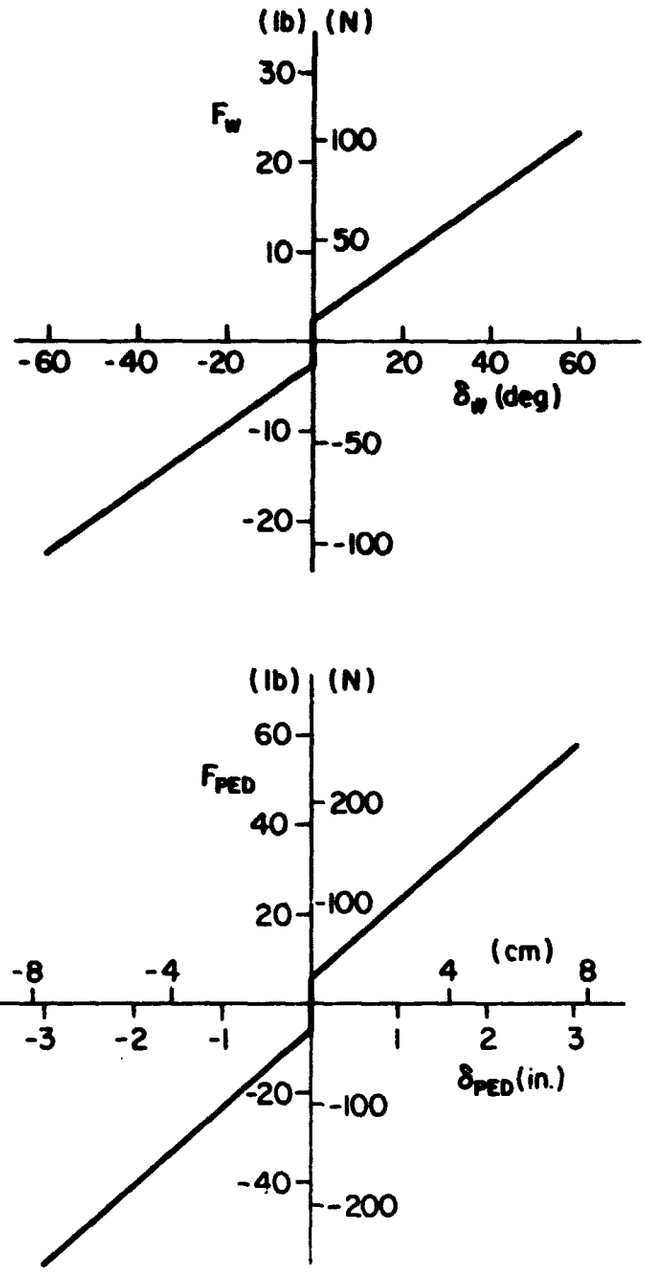

Figure II-11. Lateral-Directional Feel System Characteristics

c. Direct Lift Control: The DLC system was used in some experiments. Various mechanizations were considered. The values of constants used are presented in Figure II-12 along with a block diagram. The net effect of the DLC was to alter short term flight path response. Moderate amounts of DLC could be used to enhance flight path response time. Greater amounts were used to obtain excessive flight path overshoot. The DLC was mechanized in three distinct versions, the parameters for each version are listed in Figure II-12.

4. Cockpit Instrumentation

The instrument layout resembled that of a conventional transport aircraft. The specific instrument arrangement is depicted in Figures II-13 and II-14. A key is provided in Table II-4.

One instrument that was of particular importance to this simulation experiment was the flight reference gauge. Ordinarily the flight reference gauge appeared as a circular angle of attack indicator (see Figures II-13 and II-14). Instead of displaying angle of attack, however, special forms of flight reference were displayed.

The nominal flight reference used for STOL-X consisted of a "pseudo α" mechanization. This was so called because the flight reference law was predominately angle of attack with a small component added proportional to throttle position. Specifically,

$$FR\ (\text{units}) = \begin{cases} \alpha\ (\text{deg}) - .04\ \delta_{T_c}\ (\%\ \text{max}) & \text{AEO} \\ \alpha\ (\text{deg}) + .04\ \delta_{T_c}\ (\%\ \text{max}) - 1.5\ \text{deg} & \text{OEI} \end{cases}$$

Upon failure of an engine the flight reference scheme was automatically switched from the AEO mode to OEI.

A second flight reference scheme used was the "pseudo θ". The dynamics of this reference were related to attitude rather than angle of attack although the steady state γ - V relationship for both the pseudo α and

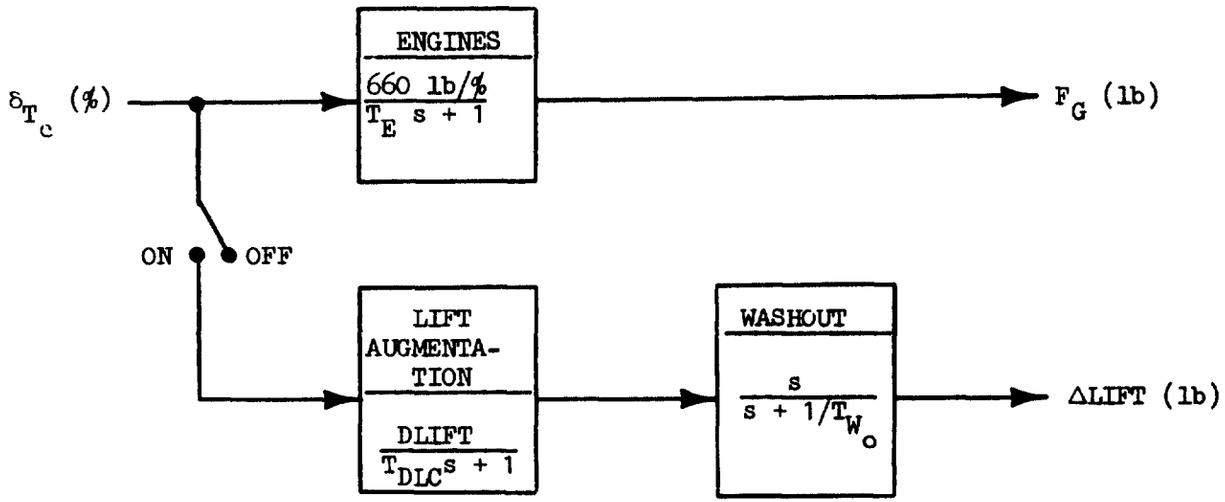

PARAMETER VALUES

	τ_E (sec)	DLIFT - lb/%	τ_{DLC} (sec)	T_{W_o} (sec)
Nominal DLC	1	2330	1	3
DLC 1	1	350	0	3.3
DLC 2	1	500	0	2.8

Figure II-12: Direct Lift Control System

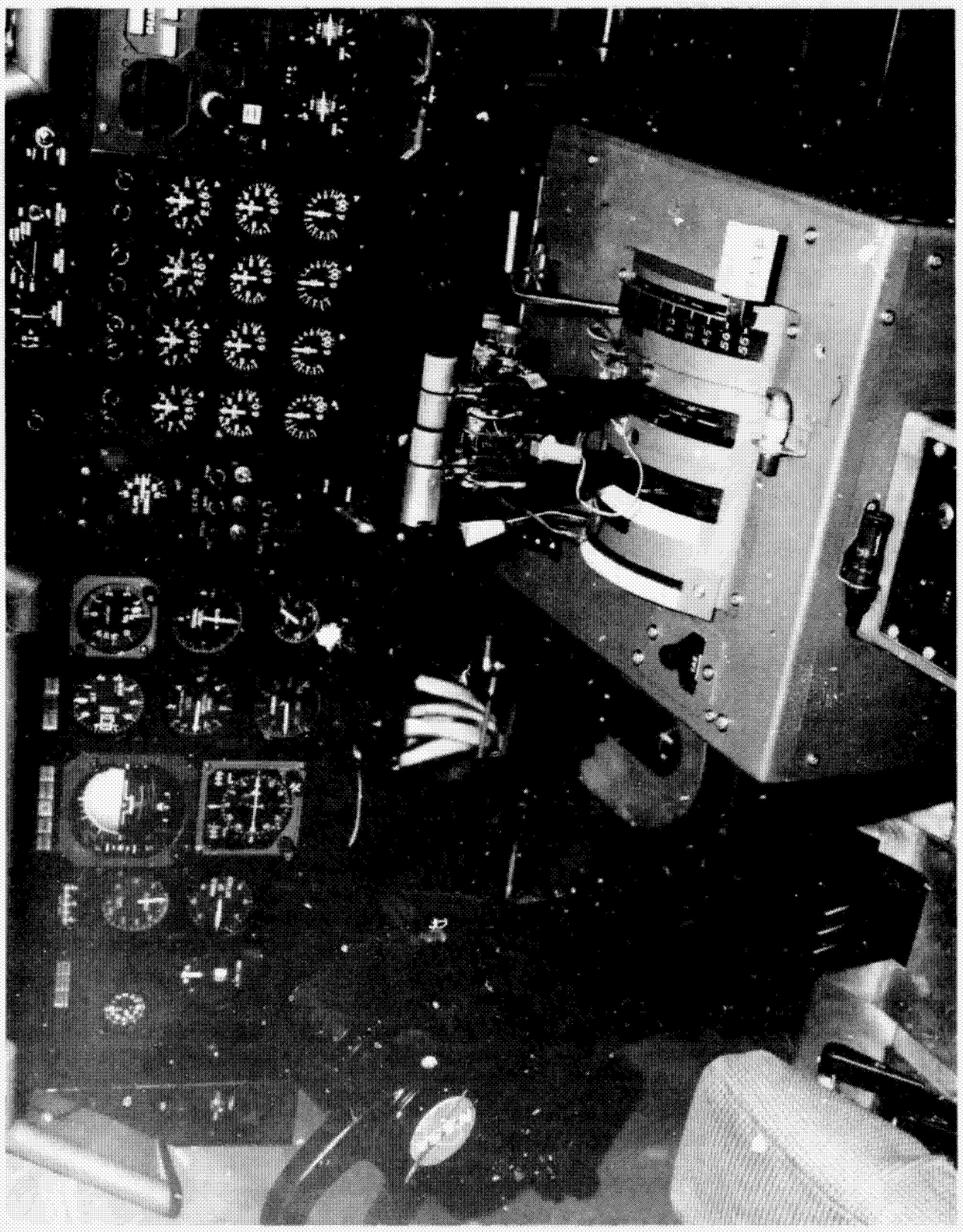

Figure II-13: Instrument Panel Layout

ORIGINAL PAGE IS
OF POOR QUALITY

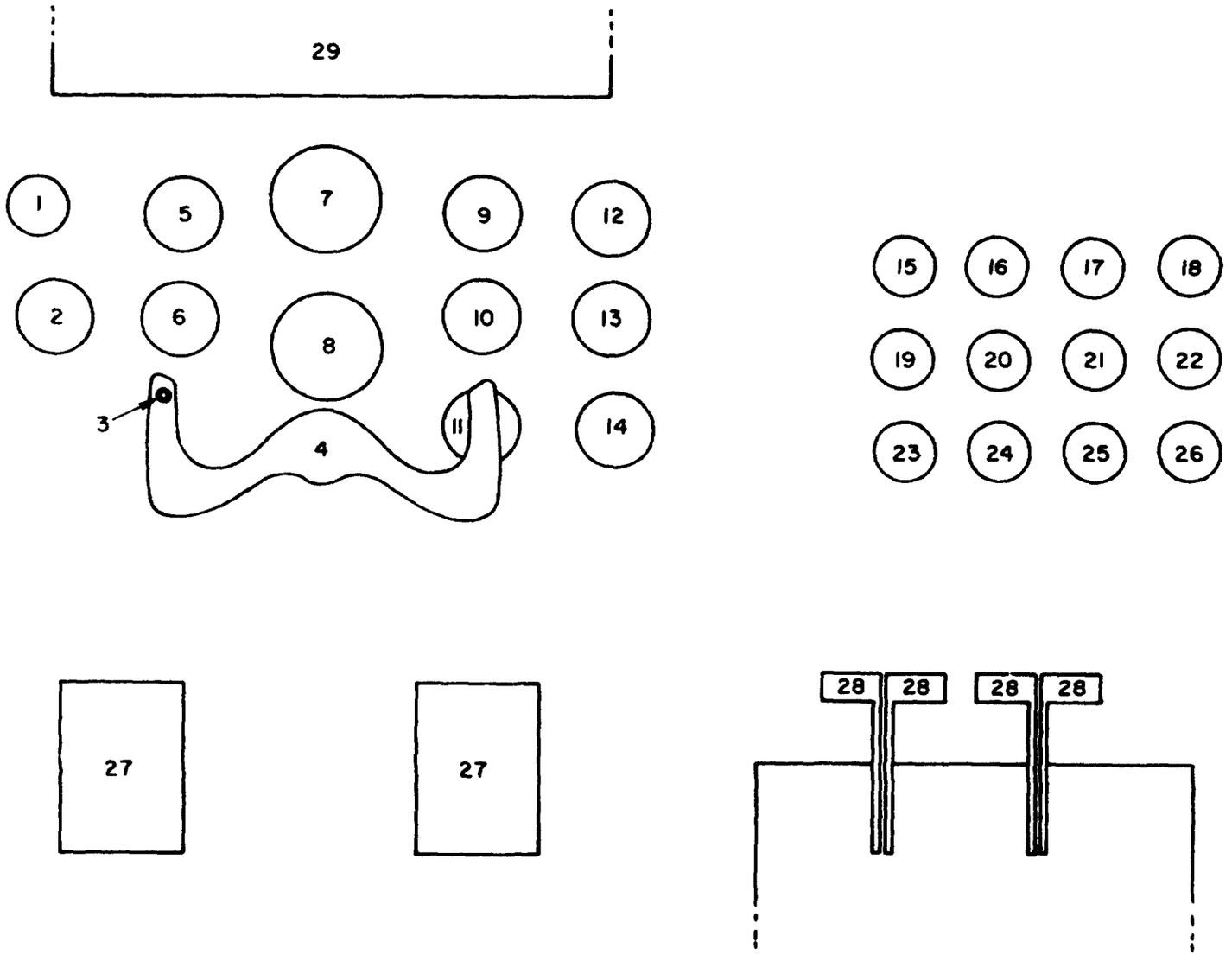

Figure II-14: Instrument Panel Diagram

TABLE II-4

KEY TO INSTRUMENT PANEL LAYOUT

1. Clock
2. Turn and Bank Indicator
3. Trim Button
4. Control Wheel
5. Flight Reference Indicator
6. Airspeed Indicator
7. Artificial Horizon
8. Horizontal Situation Indicator
9. Altimeter
10. Instantaneous Vertical Speed Indicator
11. Aileron Indicator
12. Radar Altimeter
13. Accelerometer
14. Elevator Position Indicator
15. Not Used
16. Not Used
17. Not Used
18. Not Used
19. No. 1 Engine RPM
20. No. 2 Engine RPM
21. No. 3 Engine RPM
22. No. 4 Engine RPM
23. Not Used
24. Not Used
25. Not Used
26. Not Used
27. Rudder Pedals
28. Throttles
29. Redifon Visual Scene

pseudo θ flight references was the same for FR = 0. The pseudo θ flight reference law was:

$$FR = \theta - .059\,\delta_T - .000919\,\delta_T^2 + 10.91$$

No OEI condition was considered for this mechanization.

5. Geometrical and Inertial Characteristics

The geometrical and inertial characteristics were determined using the point design of Reference 1. A three-view drawing of the aircraft and some important parameters are listed in Figure II-15. The related Generic STOL program input parameters are listed in Table II-5. Definitions of the latter are given in Reference 3.

6. Airplane Performance

The important performance characteristics for the simulation model are summarized by the steady state γ - V plots in Figures II-16 and II-17 for all engines operating and one engine inoperative, respectively. The primary contours on these plots are constant pitch attitude, θ, and constant power setting, δ_T (or N_H). In addition, contours of flight reference, column shaker, column pusher, and α_{max} are shown.

7. Flight Dynamics

The longitudinal flight dynamics are described by sets of dimensional stability derivatives and transfer functions for a variety of cases considered in the simulation experiment. Table II-6 presents the dimensional stability derivatives for the aircraft at a variety of flight path/flight reference trim conditions. In general, the variation in stability derivatives is smooth enough so that stability derivatives for intermediate trim configurations can be determined by interpolation. The OEI trim point is given for a zero sideslip trim condition.

ORIGINAL PAGE IS OF POOR QUALITY

Wing Area	144.0 m^2 (1550 ft^2)
Wing Span	33.9 m^2 (111.36 ft^2)
Mean Aerodynamic Chord	4.60 m (15.08 ft)
Weight (Max Landing)	556027.7 N (125000 lb)
I_x (FRL Body Axis System)	1.4914×10^6 kg-m^2 (1.1×10^6 slug-ft^2)
I_y	3.3895×10^6 kg-m^2 (2.5×10^6 slug-ft^2)
I_z	4.3386×10^6 kg-m^2 (3.2×10^6 slug-ft^2)
I_{xz}	0.2712×10^6 kg-m^2 ($.2 \times 10^6$ slug-ft^2)

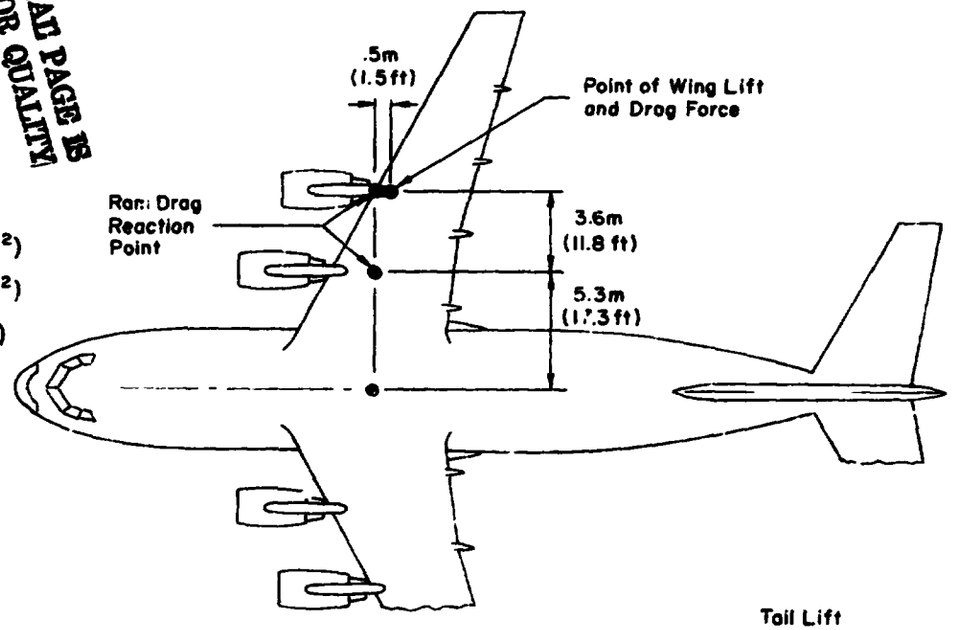

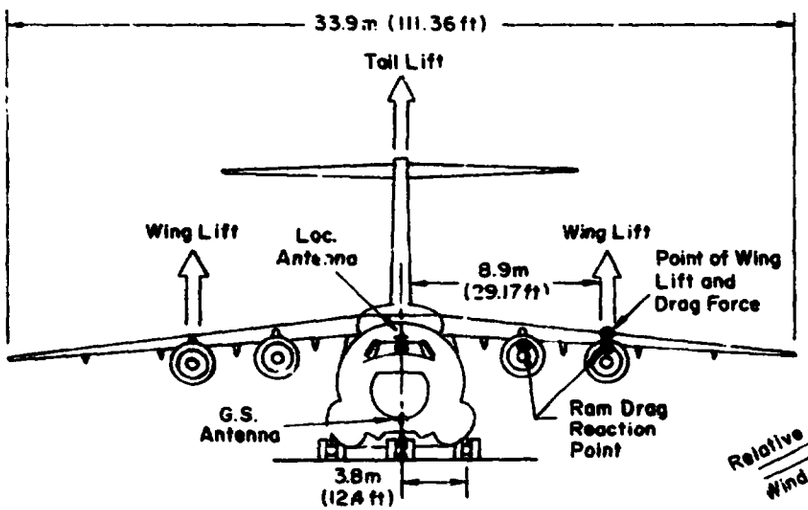

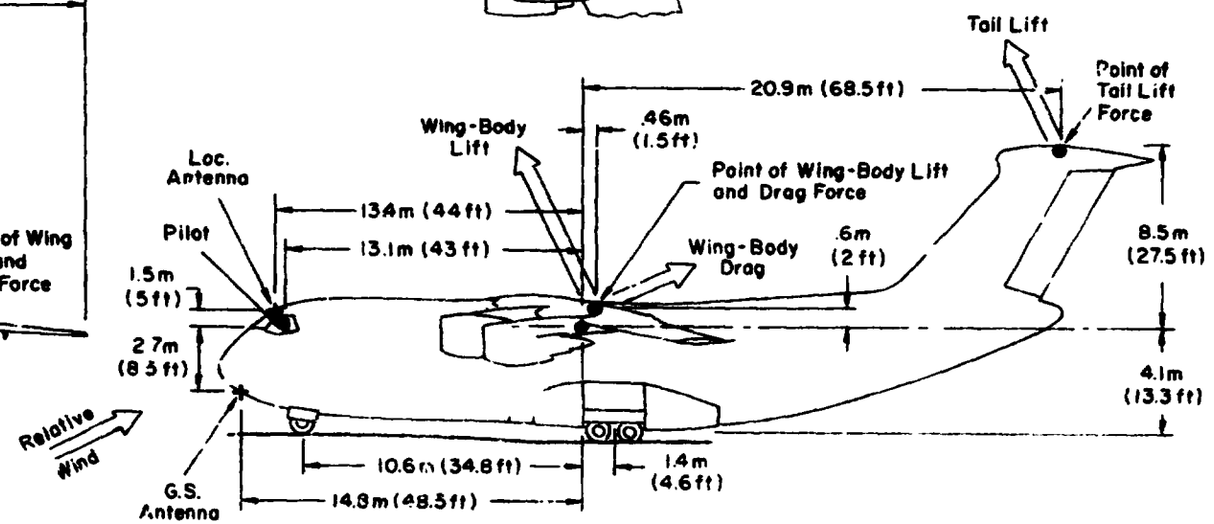

Figure II-15. Aircraft General Arrangement (not to scale)

TABLE II-5

GEOMETRICAL AND INERTIAL CHARACTERISTICS

$S = 144.0\ m^2\ (1550\ ft^2)$

$S_H = 51.0\ m^2\ (549\ ft^2)$

$\bar{c} = 4.6\ m\ (15.08\ ft)$

$b = 33.9\ m\ (111.36\ ft)$

$\ell_H = 20.9\ m\ (68.5\ ft)$

$z_H = -8.5\ m\ (-27.8\ ft)$

$\ell_w = -.46\ (-1.508\ ft)$

$z_w = -.61\ (-2.0\ ft)$

$\ell_{EI} = 0$

$z_{EI} = 0$

$\ell_E = 0$

$z_E = 0$

$W = 556027.7\ N\ (125{,}000\ lb)$

$I_X = 1.4914 \times 10^6\ kg\text{-}m^2\ (1.1 \times 10^6\ slug\text{-}ft^2)$

$I_Y = 3.3895 \times 10^6\ kg\text{-}m^2\ (2.5 \times 10^6\ slug\text{-}ft^2)$

$I_Z = 4.3386 \times 10^6\ kg\text{-}m^2\ (3.2 \times 10^6\ slug\text{-}ft^2)$

$I_{XZ} = .2712 \times 10^6\ kg\text{-}m^2\ (.2 \times 10^6\ slug\text{-}ft^2)$

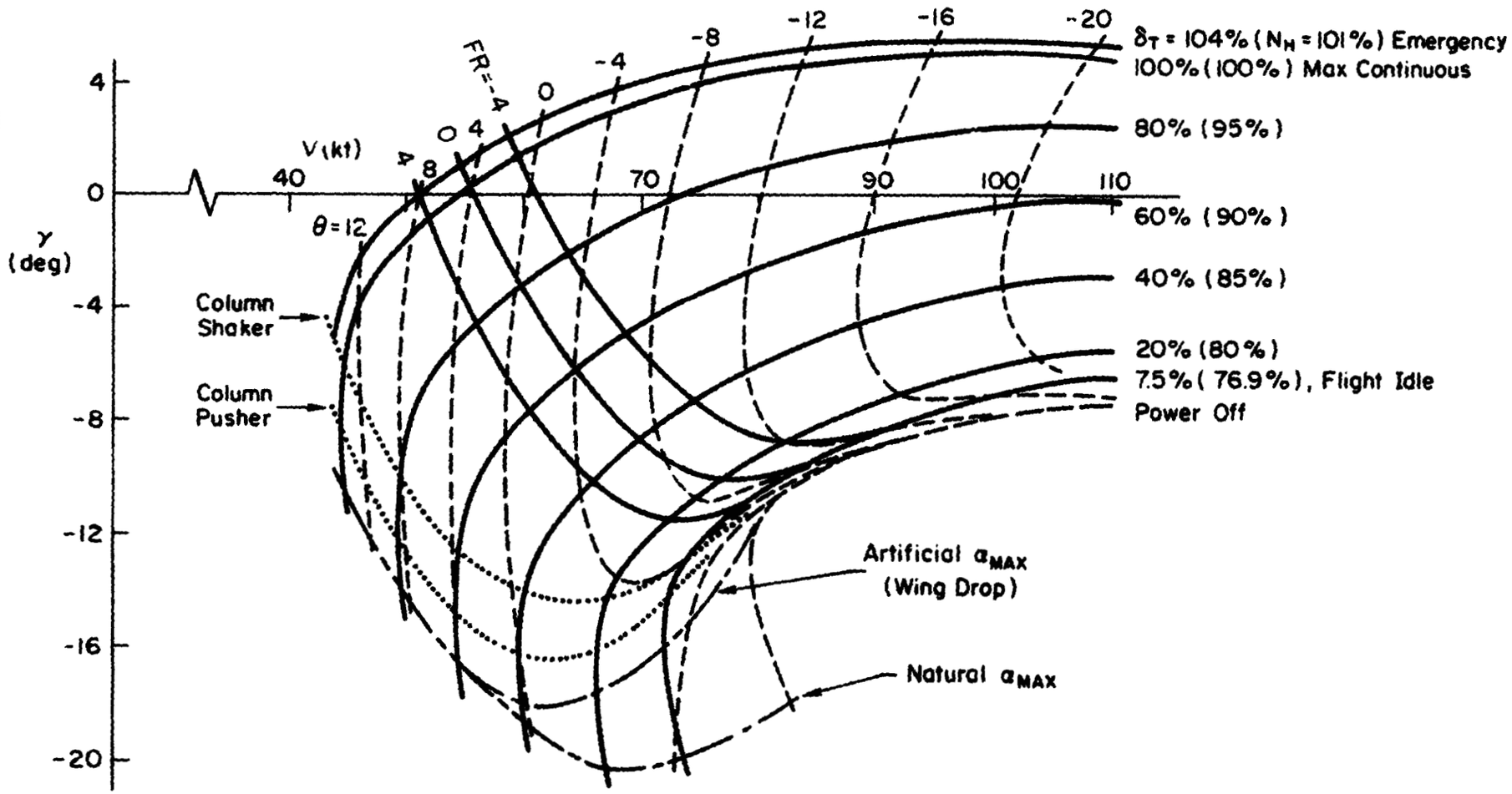

Figure II-16. Trim γ-V Contours, All Engines Operating

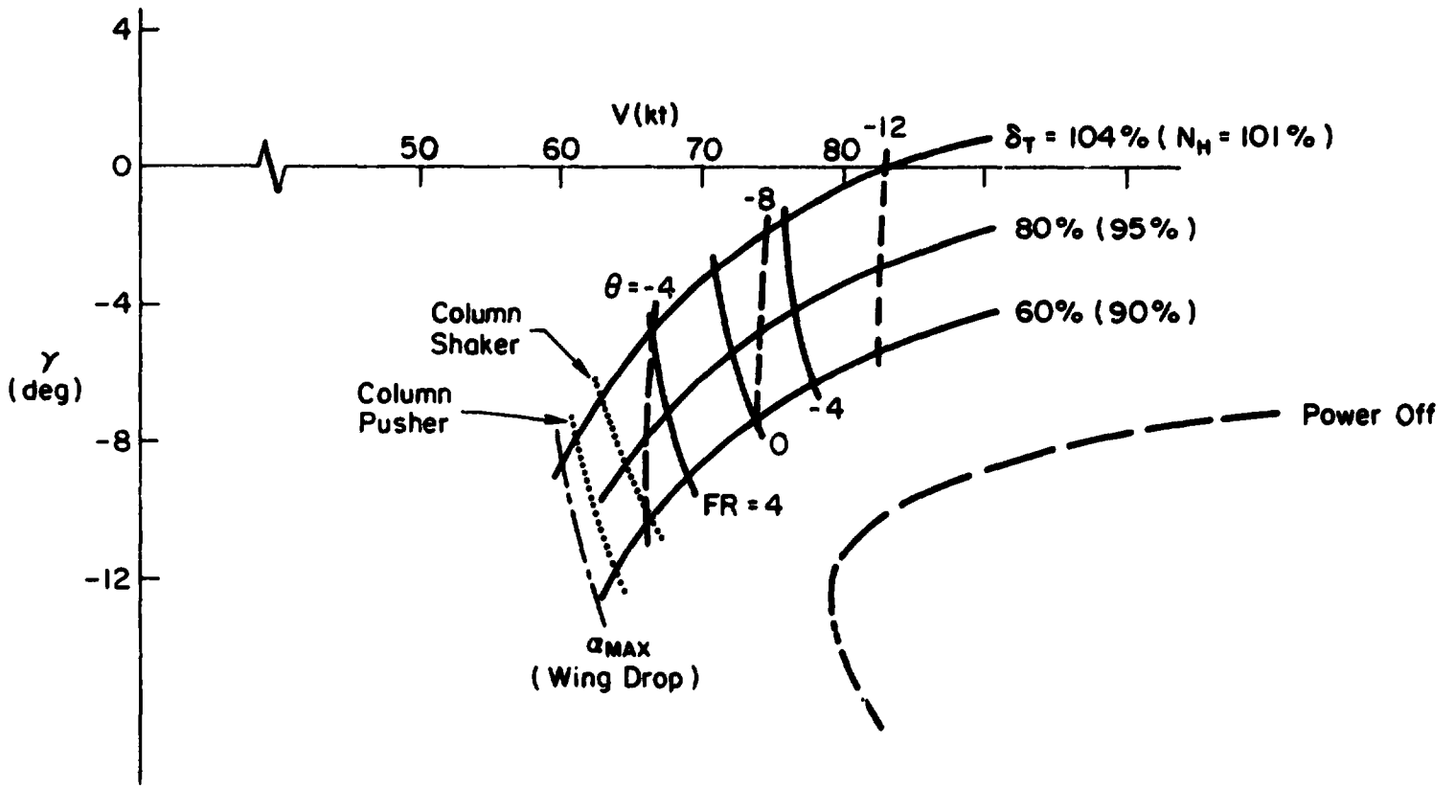

Figure II-17. Trim γ-V Contours, One Engine Inoperative, Zero Sideslip

TABLE II-6

STABILITY DERIVATIVES

TRIM CONDITION

Approach Configuration	Baseline	Shallow	Fast	Slow	OEI
γ_o (deg)	-6	-3	-6	-6	-6
V_o (kt)	63.5	59.1	70.6	57.6	72.0
FR (deg)	0	0	-4	+4	0
θ_o (deg)	-3.46	.290	-7.37	.935	-7.45
N_H (% RPM)	90.8	95.6	88.3	93.1	94.4
δ_T (%)	63.3	82.4	53.2	72.4	77.6

DIMENSIONAL DERIVATIVES (Stability Axes)

X_u^* (1/sec)	-.11779	-.13740	-.09050	-.14705	-.10440
Z_u^* (1/sec)	-.4188	-.4232	-.3947	-.4376	-.4076
X_w (1/sec)	.09051	.09321	.09163	.08697	.09528
Z_w (1/sec)	-.4223	-.4289	-.4259	-.4256	-.4357
Z_w' (1/sec)	-.3987	-.4073	-.3981	-.4050	-.3914
Z_u' (ft/sec^2)	-42.76	-40.66	-47.47	-39.40	-47.60
$X_u - g$ (ft/sec^2)	-22.49	-22.90	-21.27	-23.74	-20.61
g/U_o (1/sec)	.300	.323	.270	.331	.265
$\tan^{-1}\left[\frac{-Z_{\delta_T}}{X_{\delta_T}}\right]$ (deg)	73.1	65.6	76.4	71.1	72.0
M_u^* (1/sec-ft)	-.00016632	-.0000 8362	-.0002023	-.00011203	-.0019160
M_w (1/sec-ft)	-.002558	-.002350	-.002911	-.002287	-.004662
$M_{\dot{w}}$ (1/ft)	-.0008379	-.0008379	-.0008379	-.0008379	-.0008353
M_q (1/sec)	-.4942	-.4600	-.5492	-.4483	-.5587
$Z_{\dot{w}}$ (1/1)	-.006441	-.006441	-.006441	-.006441	-.006420
M_{δ_e} (1/sec^2)	-.4279	-.3724	-.5123	-.3606	-.5335
Z_{δ_e} (ft/sec^2-rad)	-3.956	-3.427	-4.884	-3.255	-5.069
X_{δ_T} (ft/sec^2-%)	.04578	.06056	.03875	.05079	.03857
Z_{δ_T} (ft/sec^2-%)	-.15106	-.13367	-.16048	-.14819	-.11856
M_{δ_T} (rad/sec^2-%)	.00014083	.00005055	.0002275	.00007517	.00013310
$\frac{\delta_{T_c}}{\delta_{PLA}}$ (% thrust/in)	8.8	8.8	8.8	8.8	8.8
$\left(1 - \frac{M_w}{Z_w}\frac{Z_{\delta_e}}{M_{\delta_e}}\right)$	.9440	.9496	.9348	.9515	.8983

ORIGINAL PAGE IS OF POOR QUALITY

Standard dimensional stability derivatives are presented, along with some additional parameters that provide an added measure of insight into the airplane dynamics. The parameters $Z_w^{\dagger}$ and $Z_\alpha^{\dagger}$ are modifications of the normal Z_w and Z_α stability derivatives which include the effects of trim elevator. The term $\left(1 - \frac{M_w Z_{\delta_e}}{Z_w M_{\delta_e}}\right)$ is the conversion factor used to so modify Z_w and Z_α; that is, $Z_\alpha^{\dagger} = \left(1 - \frac{M_w Z_{\delta_e}}{Z_w M_{\delta_e}}\right) \cdot Z_\alpha$. The parameter $\tan^{-1}\left(-Z_{\delta_T}/X_{\delta_T}\right)$ is the effective thrust angle relative to the velocity vector.

The term $\delta_{T_c}/\delta_{PLA}$ represents the gearing between the cockpit power levers, δ_{PLA}, and the percent of maximum gross thrust commanded, δ_T.

Table II-7 presents the transfer functions for the respective trim points and aircraft configurations. The five trim points of Table II-6 are also presented in Table II-7 and represent the aircraft at its nominal configuration. Additionally, transfer functions are given for the aircraft at its nominal trim point (γ = -6 deg, FR = 0, V = 63.5 kt) in the modified configurations used in the experiment. These modifications pertain to flight reference, augmentation, and use of DLC.

C. OPERATIONAL PROCEDURES AND FLIGHT LIMITATIONS

The following operational procedures were developed prior to the simulation. They were designed to explore the limits of the airworthiness criteria of the SSDWG. These procedures were limited to the approach and landing phases of flight.

1. Piloting Technique with All Engines Operating

Control of flight path in the vertical plane required a "STOL" piloting technique, that is, throttle was the primary control and pitch attitude was secondary. Thrust response to throttle had a lag of 1.0 sec. The airframe

ORIGINAL PAGE IS
OF POOR QUALITY

TABLE II-7

TRANSFER FUNCTIONS

Approach Configuration	Baseline	Shallow	Fast	Slow	OEI
TRIM CONDITION					
γ_o (deg)	-6	-3	-6	-6	-6
FR (deg)	0	0	-4	+4	0
V_o (kt)	63.5	59.1	70.6	57.6	72.0
DENOMINATOR					
Δ	[.0923;.230][.741;.726]	[.0931;.252][.757;.699]	[.0836;.238][.718;.782]	[.0998;.259][.764;.686]	[.1273;.205][.618;.927]
ELEVATOR NUMERATORS					
$N^{\theta}_{\delta_e}$	-.425[.887;.291]	-.369[.882;.309]	-.508[.911;.269]	-.358[.884;.312]	-.529[.888;.279]
$N^{u}_{\delta_e}$	-.356(.558)(-26.7)	-.317(.565)(-26.7)	-.445(.590)(-24.1)	-.281(.537)(-30.1)	-.480(.598)(-22.6)
$N^{w}_{\delta_e}$	-3.93(12.08)[.1965;.351]	-3.40(11.30)[.1947;.364]	-4.85(13.03)[.1704;.322]	-3.23(11.21)[.222;.378]	-5.04(13.34)[.1942;.318]
$N^{\dot{w}}_{\delta_e}$	3.91(-.0828)(-1.766)(2.49)	3.40(-.0930)(-1.733)(2.44)	4.83(-.0661)(-1.843)(2.58)	3.22(-.0982)(-1.705)(2.42)	5.01(-.0453)(-1.849)(2.59)
$N^{\dot{u}}_{\delta_e}$	3.93(-.1230)(-1.686)(2.44)	3.40(-.1143)(-1.691)(2.42)	4.85(-.1003)(-1.775)(2.53)	3.23(-.1449)(-1.613)(2.37)	5.04(-.0775)(-1.783)(2.54)
$N^{FR}_{\delta_e}$ 1/	-.037(12.08)[.196;.351]	-.032(11.3)[.196;.364]	-.045(13.0)[.170;.322]	-.030(11.2)[.222;.378]	-.041(13.3)[.194;.318]
$N^{FR}_{\delta_e}$ 2/	-.425[.887;.291]				
THROTTLE NUMERATORS					
$N^{\theta}_{\delta_T}$	.000267(.254)(1.557)	.0001618(.335)(1.964)	.000361(.1947)(1.461)	.0001985(.304)(1.763)	.000232(.256)(2.21)
$N^{u}_{\delta_T}$	.0458(-.440)[.693;.827]	.0606(-.300)[.701;.760]	.0387(-.550)[.686;.907]	.0508(-.377)[.699;.771]	.0586(-.456)[.609;1.033]
$N^{w}_{\delta_T}$	-.1501(-.0981)[.860;.429]	-.1328(-.0428)[.927;.428]	-.1595(-.1351)[.821;.427]	-.1472(-.0619)[.906;.418]	-.1178(-.203)[.713;.605]
$N^{\dot{w}}_{\delta_T}$	.1445(.205)[.542;.580]	.1295(.300)[.564;.510]	.1545(.1475)[.520;.666]	.1411(.277)[.551;.503]	.1131(.1149)[.471;.836]
$N^{\dot{u}}_{\delta_T}$	.1501(.1649)[.564;.589]	.1328(.272)[.583;.515]	.1595(.1155)[.536;.672]	.1472(.226)[.586;.513]	.1178(.0857)[.482;.842]
$N^{FR}_{\delta_T}$ 1/	-.04(-.00934)(.313)(.450)(2.37)	-.04(.0618)(.200)(.607)(2.14)	-.04(-.0382)(.330)(.421)(2.37)	-.04(.0254)(.256)(.505)(2.48)	-.04(-.112)(1.53)[.931;.626]
$N^{FR}_{\delta_T}$ 2/	-.175[.0878;.247][.741;.728]				

TABLE II-7: Continued

Approach Configuration	Baseline	Shallow	Fast	Slow	OEI
			ELEVATOR-THROTTLE COUPLING NUMERATORS		
$N^{\theta}_{\delta_e \delta_T}$	-.01944(.0976)	-.0224(.201)	-.01969(.01351)	-.01818(.1502)	-.0204(.0955)
$N^{u}_{\delta_e \delta_T}$	.1799(-.862)(12.96)	.206(-.633)(11.94)	.1880(-.980)(14.03)	.1642(-.832)(12.06)	.1943(-.719)(14.08)
$N^{\dot{\alpha}}_{\delta_e \delta_T}$	-.0624(.248)	-.0484(.331)	-.0803(.1884)	-.0511(.301)	-.0610(.234)
$N^{\dot{\theta}}_{\delta_e \delta_T}$	-.0648(.243)	-.0496(.328)	-.0828(.1841)	-.0533(.296)	-.0635(.230)
$N^{\dot{u}}_{\delta_e \delta_T}$	-.1789(-3.26)(3.77)	-.206(-2.89)(3.37)	-.1870(-3.46)(4.03)	-.1633(-3.19)(3.65)	-.1932(-3.09)(3.67)
$N^{FR}_{\delta_e \delta_T}$ [1/]	-.065(.243)	-.050(.328)	-.083(.184)	-.053(.296)	-.0635(.230)
$N^{FR}_{\delta_e \delta_T}$ [2/]	.688(-.115)(-1.71)(2.46)				

1/ Pseudo α flight reference

2/ Pseudo θ flight reference

ORIGINAL PAGE IS
OF POOR QUALITY

TABLE II-7: (Continued)

TRIM CONDITION			
T_E (sec)	1	1	1
DLIFT (lb/%)	2330	350	500
T_{DLC}	1	0	0
T_{W_o}	3	3.3	2.8
DENOMINATOR			
Δ	(.333)(1)[.0923;.25][.741;.726]	(.303)(1)[.092;.25][.741;.726]	(.357)(1)[.092;.25][.741;.726]
ELEVATOR NUMERATORS			
$N^{\theta}_{\delta_e}$	-.425(.333)(1)[.887;.291]	-.425(.303)(1)[.887;.291]	-.425(.357)(1)[.887;.291]
$N^{u}_{\delta_e}$	-.356(.333)(.558)(1)(-26.7)	-.356(.303)(.558)(1)(-26.7)	-.356(.357)(.558)(1)(-26.7)
$N^{w}_{\delta_e}$	-3.931(.333)(1)(12.08)[.196;.351]	-3.93(303)(1)(12.1)[.196;.351]	-3.93(.357)(1)(12.1)[.196;.351]
$N^{\dot{u}}_{\delta_e}$	3.909(-.0828)(-1.766)(.333)(1)(2.486)	3.91(-.083)(.303)(1)(-1.77)(2.49)	3.91(-.083)(.357)(1)(-1.77)(2.49)
$N^{q}_{\delta_e}$	3.931(-.123)(-1.69)(.333)(1)(2.437)	3.93(-.123)(.303)(1)(-1.69)(2.44)	3.93(-.123)(.357)(1)(-1.69)(2.44)
$N^{FR}_{\delta_e}$	-.0366(.333)(1)(12.076)[.196;.351]	-.037(.303)(1)(12.1)[.196;.351]	-.037(.357)(1)(12.1)[.196;.351]
THROTTLE NUMERATORS			
$N^{\theta}_{\delta_{T_c}}$	.000766(2.591)[.836;.133]	.0000749(1.33)(5.98)[.909;.232]	.000107(1.26)(4.98)[.882;.236]
$N^{u}_{\delta_{T_c}}$	.0458(.0789)(-1.322)[.564;.979]	.038(.227)(-.635)[.713;.876]	.034(.243)(-.728)[.723;.900]
$N^{w}_{\delta_{T_c}}$	-.746(-.0840)(.445)[.900;.180]	-.089(-.0943)(.343)(2.47)[.844;.339]	-.128(-.0935)(.401)(1.96)[.804;.320]
$N^{\dot{u}}_{\delta_{T_c}}$	.737[.910;.127][.538;.529]	.089(2.35)[.952;.214][.513;.561]	.127(1.87)[.941;.221][.506;.553]
$N^{q}_{\delta_{T_c}}$	.746[.854;.115][.555;.539]	.089(2.40)[.961;.193][.535;.572]	.128(1.90)[.952;.199][.528;.565]
$N^{FR}_{\delta_{T_c}}$	-.04(.327)[.0891;.234][.814;.775]	-.041(.302)[.106;.243][.756;.733]	-.041(.356)[.104;.243][.759;.731]

ORIGINAL PAGE IS OF POOR QUALITY

TABLE II-7: (Continued)

T_E (sec)	1	1	1
DLIFT (lb/%)	2320	350	500
		ELEVATOR-THROTTLE COUPLING NUMERATORS	
$N^{\partial u}_{\delta_e \delta_{T_c}}$	-.0194(-.0456)(-.712)	-.016[.713;.190]	-.014[.618;.216]
$N^{uw}_{\delta_e \delta_{T_c}}$	.180(-.0696)(-3.391)(15.75)	.180(.218)(-2.08)(7.43)	.180(.232)(-3.09)(5.55)
$N^{\theta \dot{h}}_{\delta_e \delta_{T_c}}$	-.316[.849;.128]	-.038(2.35)[.909;.229]	-.055(1.86)[.881;.233]
$N^{\theta \dot{d}}_{\delta_e \delta_{T_c}}$	-.320[.822;.128]	-.038(2.40)[.906;.228]	-.055(1.89)[.877;.233]
$N^{\dot{u} \dot{h}}_{\delta_e \delta_{T_c}}$	-.179(.0934)(-6.26)(7.01)	-.179(.234)(2.42)(-6.58)	-.179(.253)(2.09)(-8.28)
$N^{FR \dot{d}}_{\delta_e \delta_{T_c}}$	.157(-.076)(.288)(-2.14)(2.88)	.157(-.0864)(.298)(-1.96)(2.43)	.157(-.0857)(.348)(-2.02)(2.40)

ORIGINAL PAGE IS
OF POOR QUALITY

TABLE II-7: (Concluded)

	TRIM CONDITION	
Configuration	θ SAS	θ SAS and AUTOTRIM
γ_o (deg)	-6	-6
FR (deg)	0	0
V_o (kt)	63.5	63.5
	DENOMINATOR	
Δ	(.116)(.798)(1)[.666;.313][.975;5.02]	(.116)(.798)(1)[.666;.313][.975;5.02]
	NUMERATORS	
$N^{\theta}_{\theta_c}$	13.48(.2)(1)[.888;.291]	13.48(.2)(1)[.888;.291]
$N^{u}_{\theta_c}$	11.29(.2)(.558)(1)(-26.7)	11.29(.2)(.558)(1)(-26.7)
$N^{w}_{\theta_c}$	124.8(.2)(1)(12.1)[.196;.351]	124.8(.2)(1)(12.1)[.196;.351]
$N^{\dot{h}}_{\theta_c}$	-124.1(-.0828)(.2)(1)(-1.77)(2.49)	-124.1(-.0828)(.2)(1)(-1.77)(2.49)
$N^{\dot{d}}_{\theta_c}$	-124.8(-.123)(.2)(1)(-1.69)(2.44)	-124.8(-.123)(.2)(1)(-1.69)(2.44)
$N^{FR}_{\theta_c}$	1.16(.2)(1)(12.1)[.196;.351]	1.16(.2)(1)(12.1)[.196;.351]
	THROTTLE NUMERATORS	
$N^{c}_{\delta_{T_c}}$	.000267(0)(.254)(1.56)(10)	.042(1.04)(2.03)[.889;.283]
$N^{u}_{\delta_{T_c}}$	.046(.827)[.236;.112][.973;5.05]	.046(.465)(.890)(-2.00)(2.92)(9.19)
$N^{w}_{\delta_{T_c}}$	-.15(.603)[.944;.215][.985;4.89]	.233(15.4)[.0790;.396][.989;1.36]
$N^{\dot{h}}_{\delta_{T_c}}$	.144(.182)(.211)(.701)[.969;5.02]	-.236(-.0395)(3.27)(-5.87)[.940;.999]
$N^{\dot{d}}_{\delta_{T_c}}$	.15(.709)[.982,.193][.969;5.03]	-.233(-.0648)(3.26)(-6.06)[.939;.982]
$N^{FR}_{\delta_{T_c}}$	-.04(.120)(.807)[.681;.321][.975;5.02]	-.04(-.00457)(.832)[.602;.377][.983;4.98]
	ELEVATOR-THROTTLE COUPLING NUMERATORS	
$N^{\theta}_{\delta_e \delta_T}$	NOT APPLICABLE DUE TO SAS	NOT APPLICABLE DUE TO SAS
$N^{u}_{\delta_e \delta_T}$		
$N^{w}_{\delta_e \delta_T}$		
$N^{\dot{h}}_{\delta_e \delta_T}$		
$N^{\dot{d}}_{\delta_e \delta_T}$		
$N^{FR}_{\delta_e \delta_T}$		

ORIGINAL PAGE IS
OF POOR QUALITY

response to thrust with pitch attitude held constant was well behaved with little overshoot in $\dot{h}$ (or γ) for a step input.

The flight reference was displayed on the angle of attack gauge. The pitch attitude had to be varied to maintain zero units on the flight reference.

Lateral flight path control was aided by a turn coordination SAS, thus only a small amount of rudder was required in establishing a turn. Roll attitude control was enhanced by a low gain roll damper, and spiral stability was enhanced by feedback of yaw rate to the ailerons.

Landings were executed by flaring with power to a target touchdown sink rate of .9 m/sec (3 ft/sec). (The assumed structural touchdown sink rate limit was 3 m/sec [10 ft/sec].) Between 15 m (50 ft) and flare initiation, pitch attitude had to be raised to nose level in order to clear the nose wheel at touchdown.

Approaches in crosswind components of up to 10 kt were permitted. Landings had to be made with the airplane decrabbed.

2. Piloting Technique with One Engine Inoperative

Following an engine failure, immediate lateral control had to be applied to counter the loss of powered lift on the failed engine side. As lateral forces were trimmed out, the nose had to be pitched down approximately 4 deg to reacquire zero flight reference. A continued approach OEI involved a higher approach speed than for AEO although the flight reference indication was unchanged. An RPM increase of about 4% was required to maintain the original flight path angle.

3. Operating Limitations

The normal approach operating envelope was limited to aerodynamic flight path angles between -3 deg and -6 deg and a flight reference of zero units. The resulting glide slope/headwind component envelope is shown in Figure II-18.

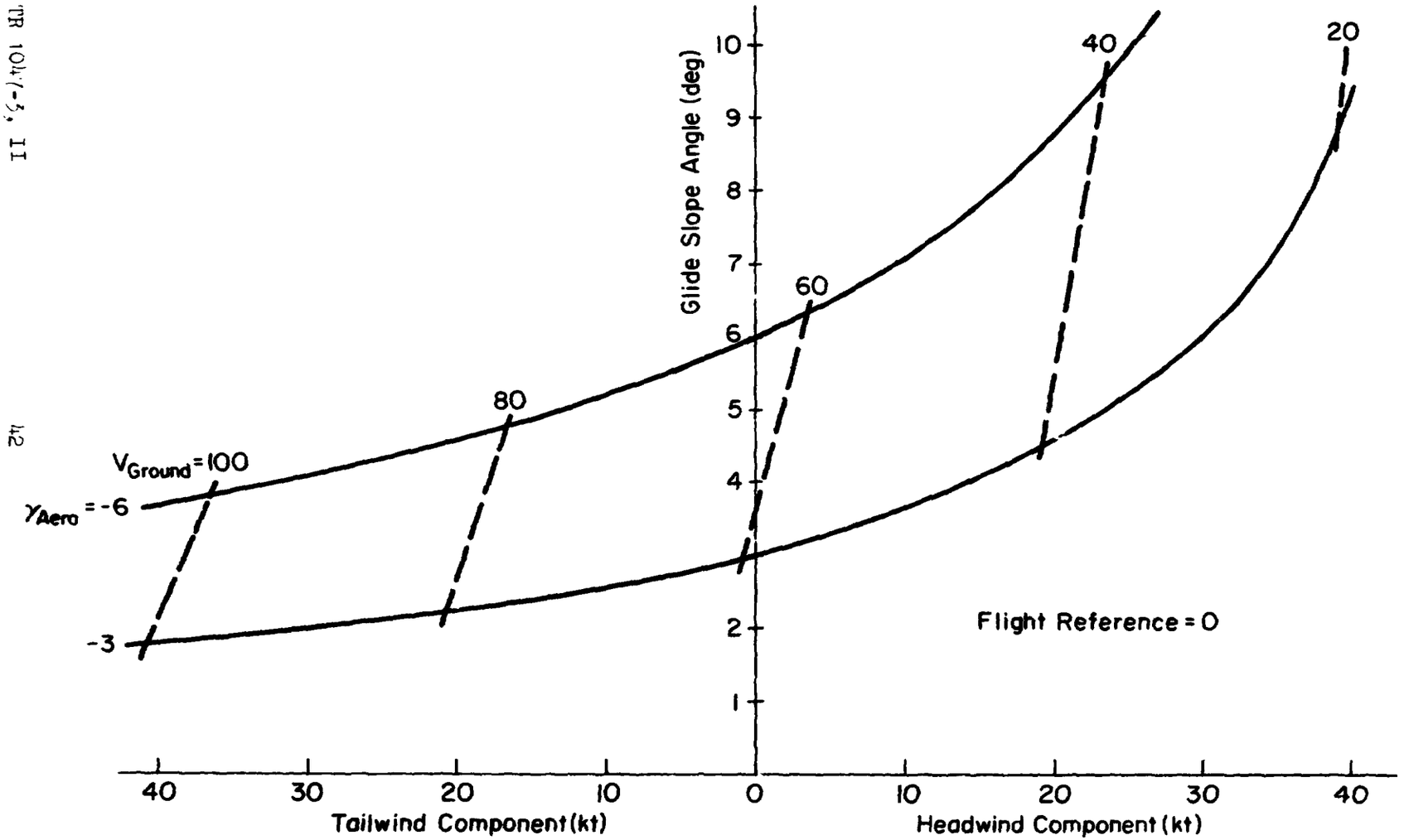

Figure II-18. Glideslope vs. Headwind Envelope

If an engine failure occurred during an approach, the approach could have been continued only for an aerodynamic flight path angle of -6 deg. For shallower angles a STOL approach had to be aborted.

Other operating limitations are summarized in Table II-8. Maximum continuous power had to be set with reference to RPM gauges. Emergency power could be selected with the throttles on the forward stop.

"Stall" warning was provided by a column shaker. A column pusher served as an artificial deterrent. No attempt was to be made to overpower the pusher because of the catastrophic nature of α_{max}, i.e., a complete loss of lift on one side resulting in a sharp roll acceleration.

TABLE II-8

OPERATING LIMITATIONS

ENGINE RPM

Emergency power - - - - - - - -	101.0%
Maximum continuous power - -	100.0%
Flight idle - - - - - - - - - -	76.9%

AIRSPEED (Approach Flaps)

V_{FE} - - - - - - - - - - - - - -	90.0 kt
V_s, idle power - - - - - - - -	79.5 kt
V_s, max cont pwr - - - - - - -	44.5 kt
V_{MCL_o} - - - - - - - - - - - - -	55.0 kt

FLIGHT REFERENCE

Minimum approach speed - - -	0 units
Column shaker, idle power - -	9
Column shaker, max cont pwr -	16
Column pusher - - - - - - - - -	3 units above shaker
V_{FE}, idle power - - - - - - - -	-4
V_{FE}, max cont pwr - - - - - - -	-23

SECTION III

COMPLIANCE WITH AIRWORTHINESS CRITERIA

This section describes the STOL-X design with respect to the proposed SSDWG airworthiness criteria. It includes consideration of the various means of modifying the design to affect compliance of specific requirements.

A. GENERAL REQUIREMENT PRINCIPLES

1. Application of "Powered-Lift Criteria"

STOL-X was designed to operate at approximately 75% of its power-off stall speed and therefore met the proposed definition of a powered-lift airplane.

2. Postulation of Abuses

All values used for the size of abuses were based on the specific requirements or suggestions of the SSDWG.

3. Flight and Operational Technique

The piloting technique assumed throughout was that outlined in Section II.

B. MINIMUM FLIGHT REFERENCE CRITERIA

1. Definition of α_{max}

At α_{max} this design suffered from an abrupt loss of lift on one side which was presumably uncontrollable. (This characteristic was intentional

and would not necessarily be present in the basic airframe design.) α_{max} varied linearly with power as shown in Figure III-1 for AEO and Figure III-2 for OEI.

2. Identification of α_{max}

A column pusher was used as an artificial identification of and deterrent to α_{max}. The pusher actuated at an angle of attack 2 deg lower than α_{max}.

3. Definition of V_{min}

For this design V_{min} was defined as the airspeed corresponding to the trim $C_{L_{max}}$ for a given power setting.

4. Warning of V_{min} or α_{max}

A column shaker was used as an artificial identification at V_{min} or 5 deg before α_{max}, whichever occurred first.

C. SAFETY MARGINS

1. Margin from V_{min}

The prescribed flight reference value of zero indicated angle of attack provided a 10 kt speed margin from $C_{L_{max}}$ with all engines operating. For one engine inoperative the margin from $C_{L_{max}}$ increased in order to meet the incremental flight path increment of +2 deg from a 6 deg angle of descent. Speed margins for all engines operating are plotted versus power setting in Figure III-3.

2. Margin from α_{max}

The α_{max} margin was artificially set such that for FR = 0 there was an angle of attack margin of arcsin 20 kt/V_{Ref} for all engines operating and

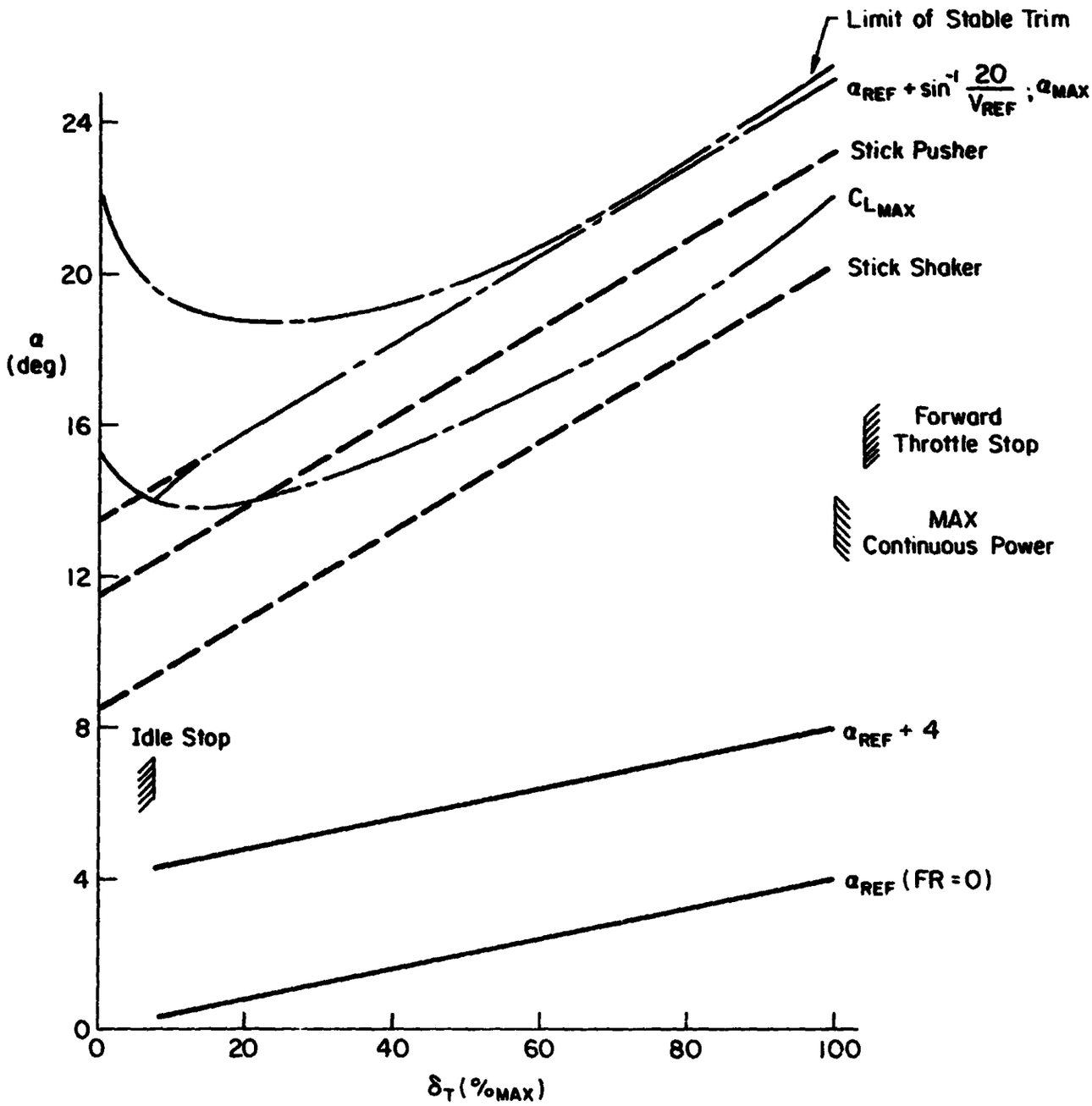

Figure III-1. Safety Margins, α vs. δ_T, AEO

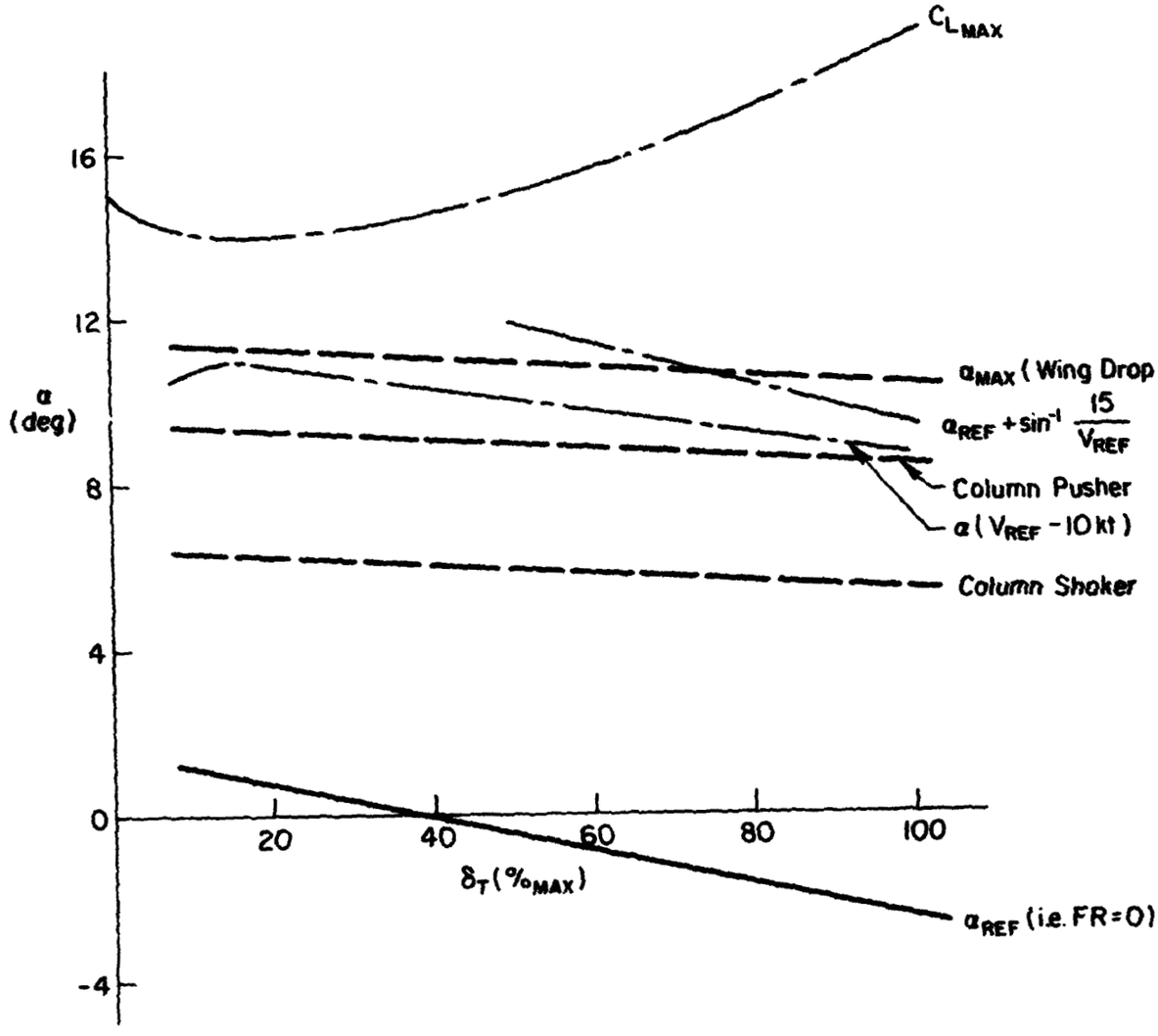

Figure III-2. Safety Margins, One Engine Inoperative

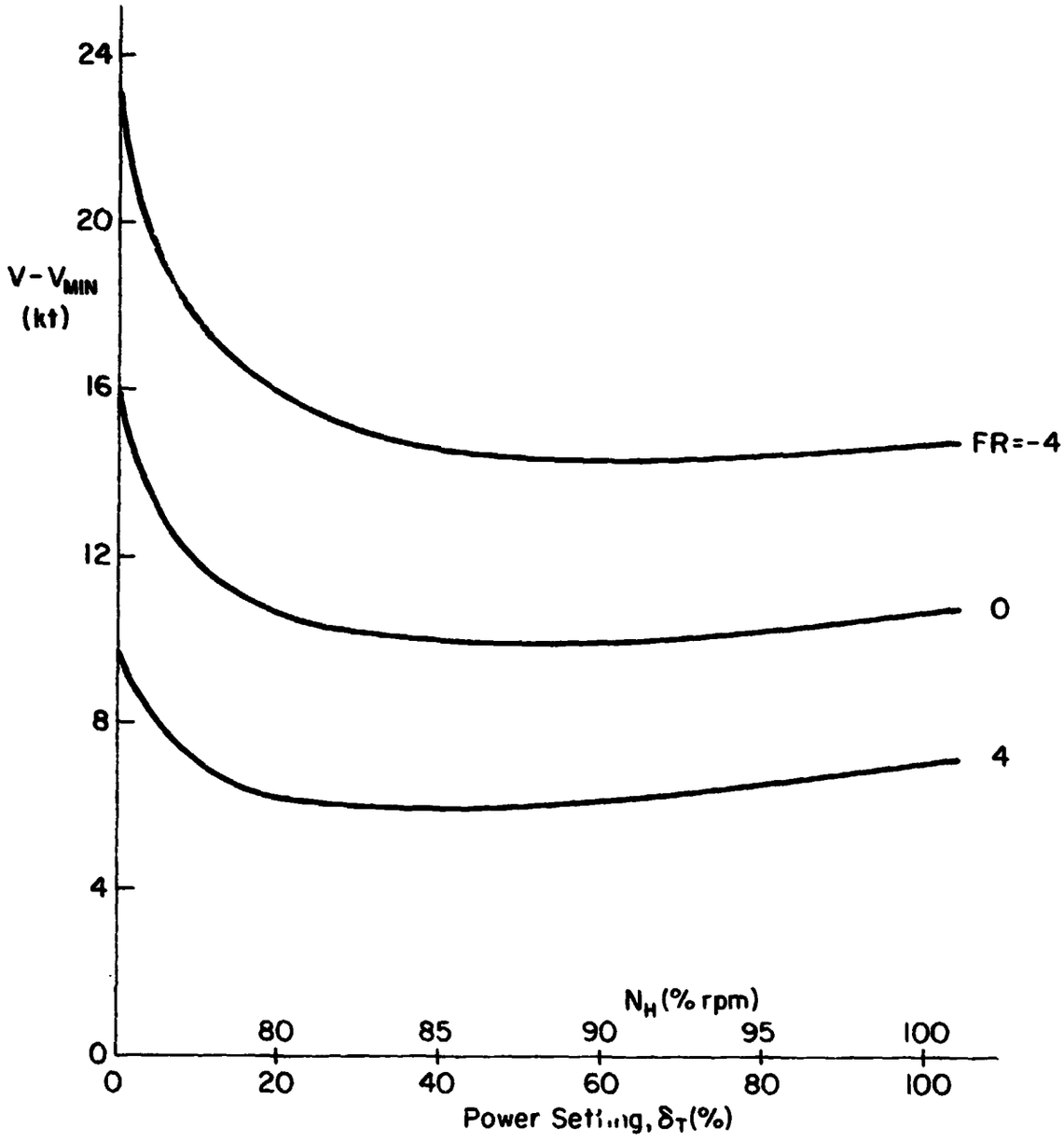

Figure III-5. Speed Margin vs. Power and Flight Reference, All Engines Operating

arcsin 15 kt/V_{Ref} for one engine inoperative. This is shown in Figures III-1 and III-2.

3. Margin from V_{MCL}

V_{MCL} for this model was to be determined by simulation

4. Maneuver Capability

The maneuver capability for all engines operating and FR = 0 is shown in Figure III-4. Note that the Δn_z capability was less than the required .2 g for all power settings in excess of 81% N_H.

D. APPROACH PATH CONTROL

1. Definition of Primary and Secondary Controls

The primary flight path control for approach and landing was power; the secondary control was pitch attitude.

2. Steady-State Flight Path Change Capability

Steady-state flight path change capability is shown in Figure II-16 (AEO) and Figure II-17 (OEI).

3. Maneuverability About the Nominal Flight Path

The ability of the basic STOL-X to make a flight path angle change in excess of $\pm$ 2 deg in 3 sec is shown in Figure III-5. The time required to attain level flight when starting from flight idle (or other power settings) is shown in Figure III-6. Note that the most critical case was for an intermediate power setting.

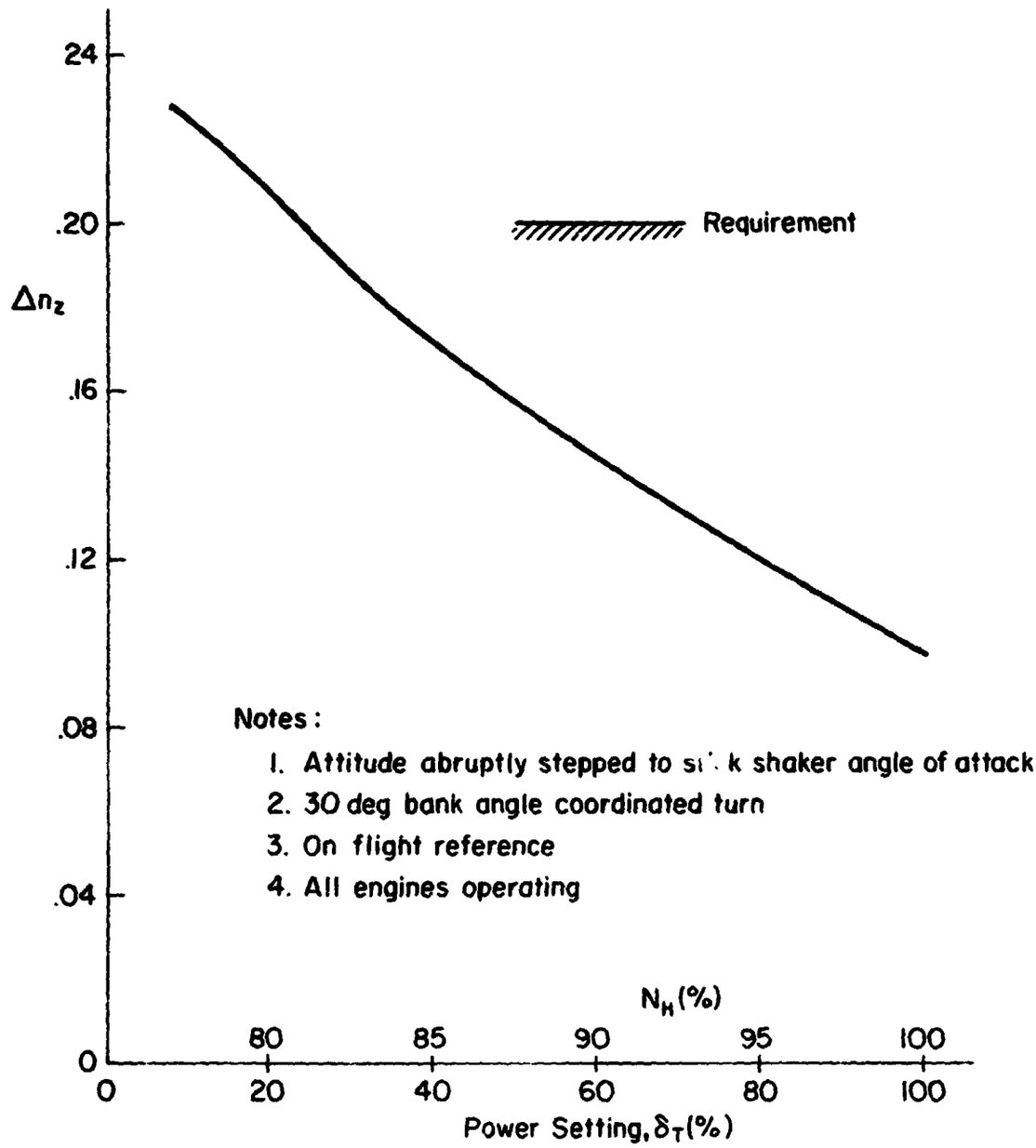

Figure III-4. Maneuver Capability in Turn

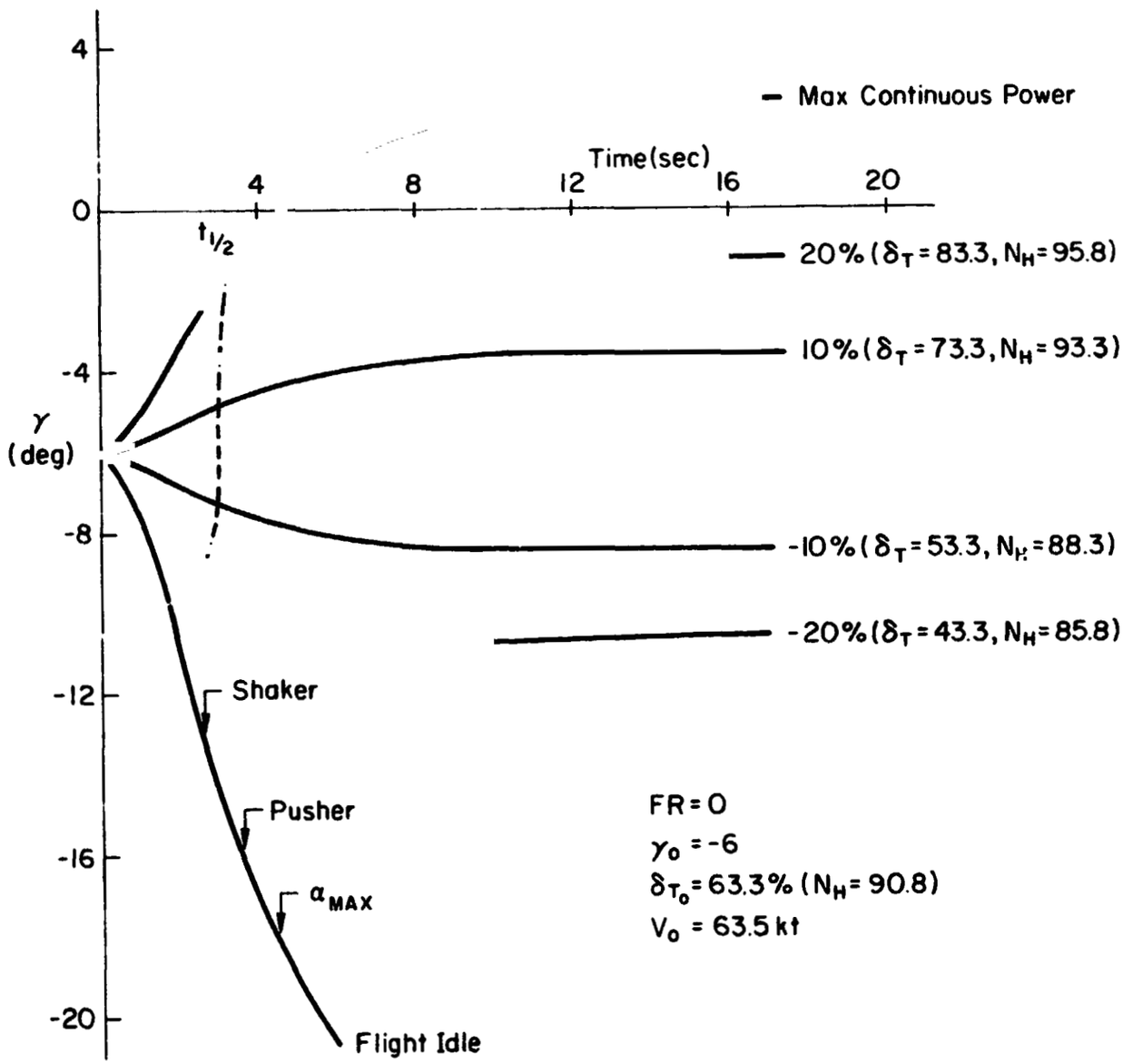

Figure III-5. Flight Path Response, Throttle Step, Attitude Hold, Nominal Approach

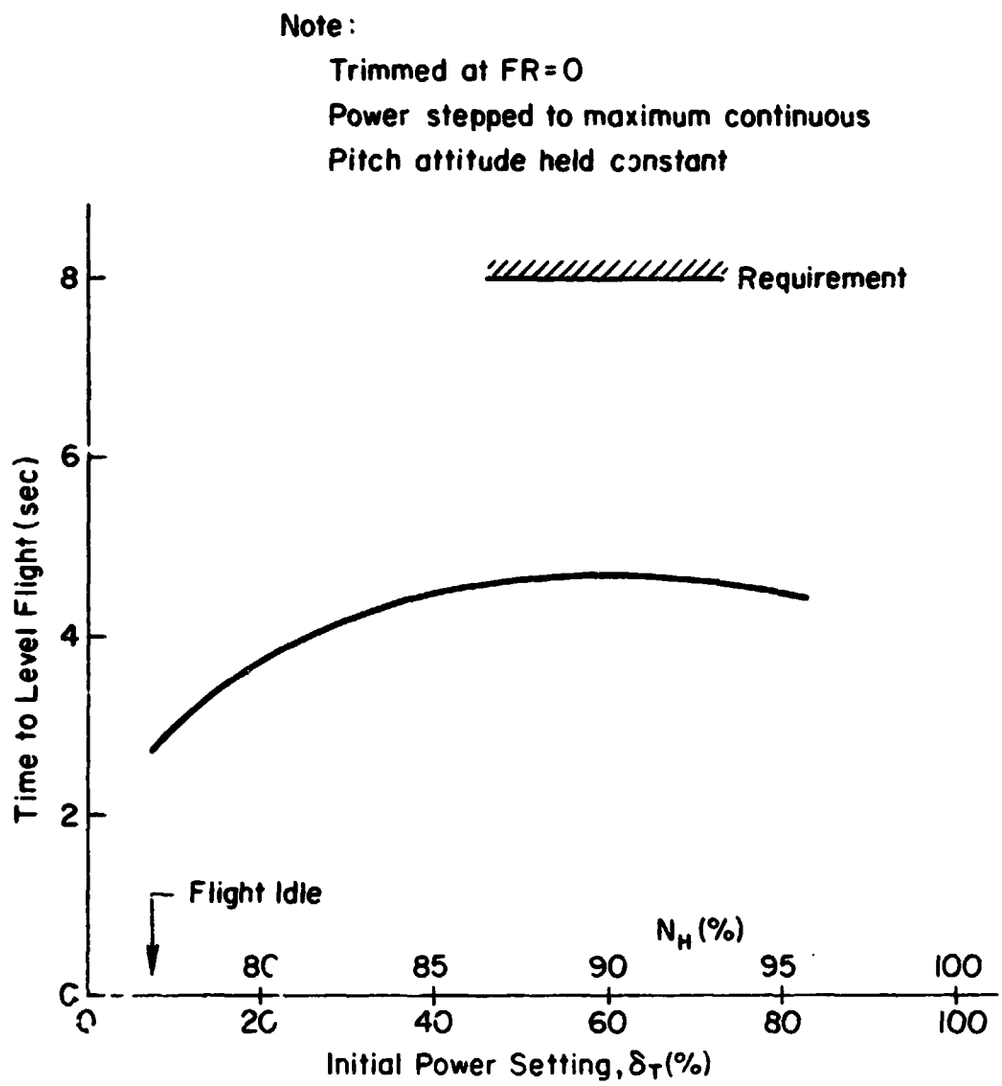

Figure III-6. Time Required to Level Flight

4. Flight Path Response Lags

The response of the aircraft to a commanded step input of the primary control, acting through engine lags of 0.1, 1.0, and 2.0 sec, is shown in Figures III-7 through III-9. The responses are based upon the aircraft's linearized transfer functions. The amplitude and phase characteristics are shown in Figures III-10 through III-12. The rise time proposed criterion of 3 sec was met by the configurations with engine lags of 0.1 and 1.0 sec but none of the configurations met the proposed phase lag criterion of 60 deg or less at 0.5 rad/sec.

5. Flight Path/Airspeed Coupling

Figure III-13 depicts the flight path response of the aircraft to a commanded step input of the primary control, both with a step secondary control sufficient to restore the flight reference and without the secondary control input. The secondary control input was made 6 sec after the primary control input. Figure III-14 depicts the same response for the aircraft with a DLC added to the control system.

6. Secondary Control Power

The flight reference response of the aircraft to a step attitude command of 10 deg (acting through a 1 sec control lag) for flight path angles of 0, -6 (nominal), and -10 deg are shown in Figure III-15. The initial conditions were flight path angle as indicated, FR = 0. Prior to 3 sec, the responses for $\gamma = -10$ and $\gamma = -6$ deg were indistinguishable.

7. Control Sensitivity

Figure III-16 shows the steady state FR/θ and γ/δ_T values for a variety of flight path angles and flight reference values. The "trim limit" indication for $\gamma = 0$ and $\gamma = -10$ represents the maximum and minimum values, respectively, of flight reference which can be achieved at that flight path angle.

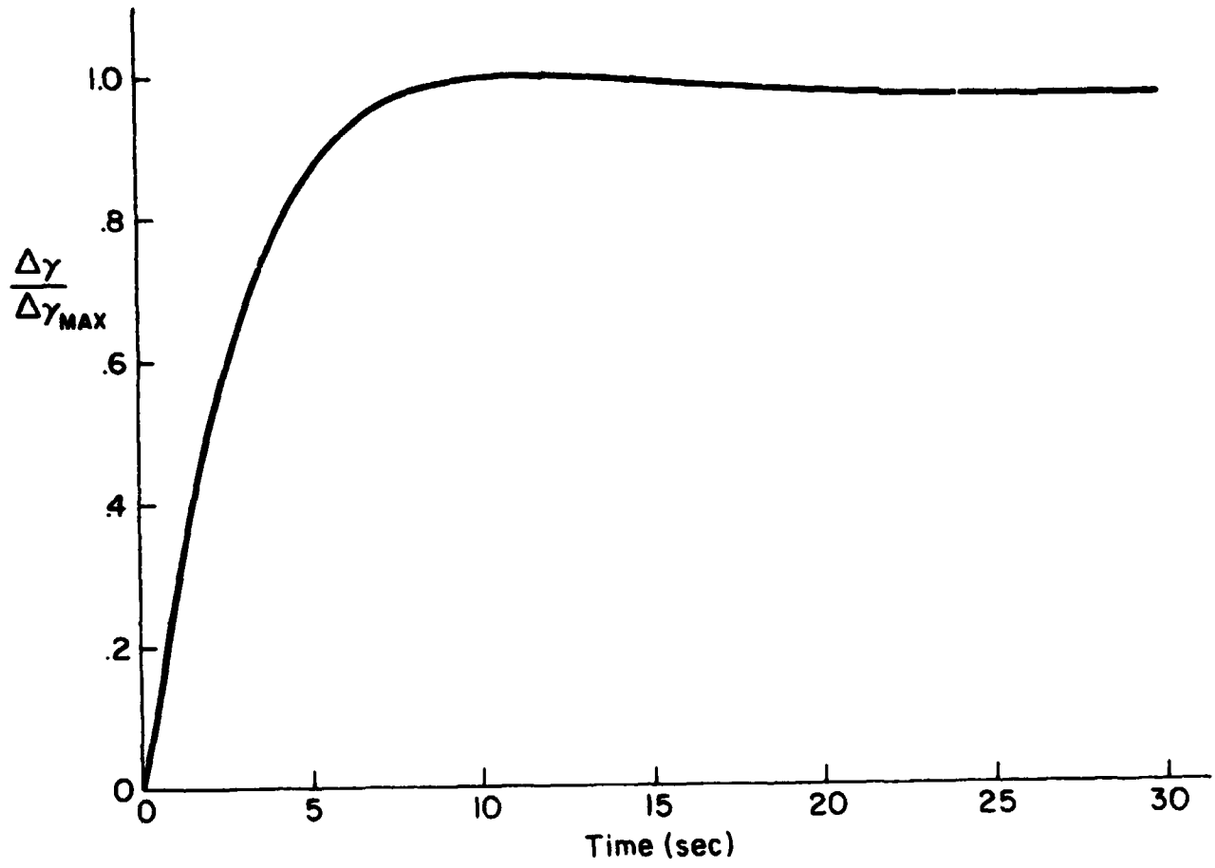

Figure III-7. Flight Path Response, Lags and Decay; STOL-X; 63.5 kt; -6° γ, $T_E = 0.1$ sec; Primary Control, Power; $\Delta\theta = 0$

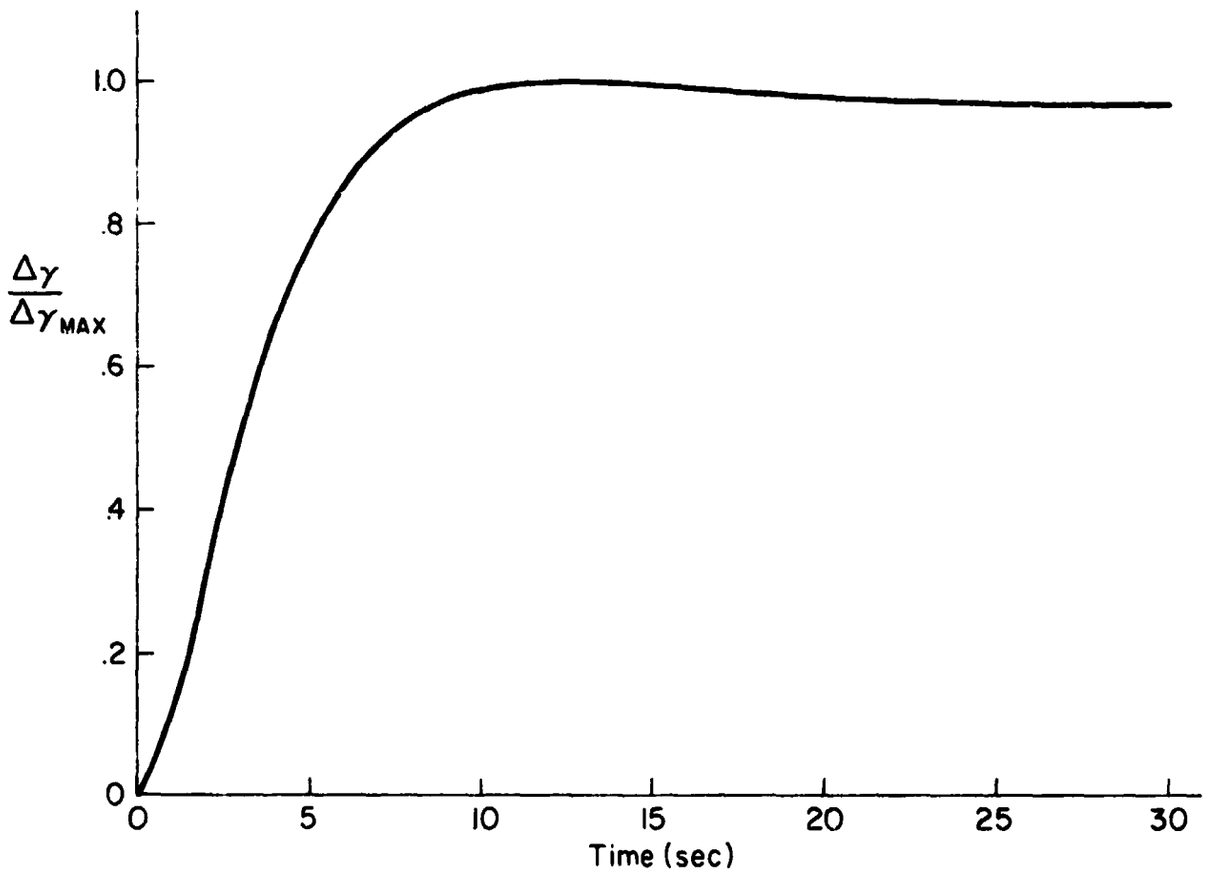

Figure III-8. Flight Path Response, Lags and Decay; STOL-X; 63.5 kt; -6° γ; T_E = 1 sec; Primary Control, Power; $\Delta\theta$ = 0

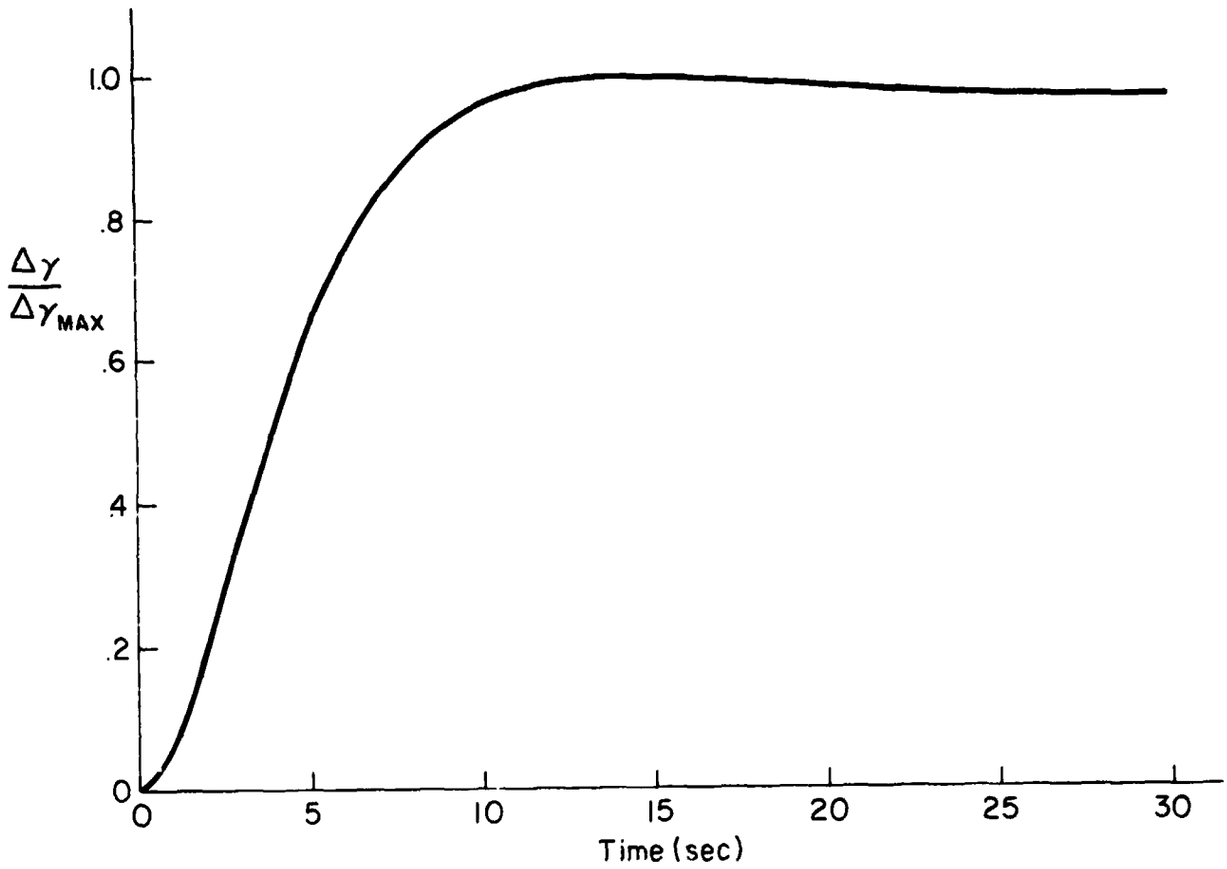

Figure III-9. Flight Path Response, Lags and Decay; STOL-X; [illegible] kt; $-[illegible]^{\circ}$ γ; FR [illegible] 0; T_E - [illegible].0 sec; Primary Control, Power

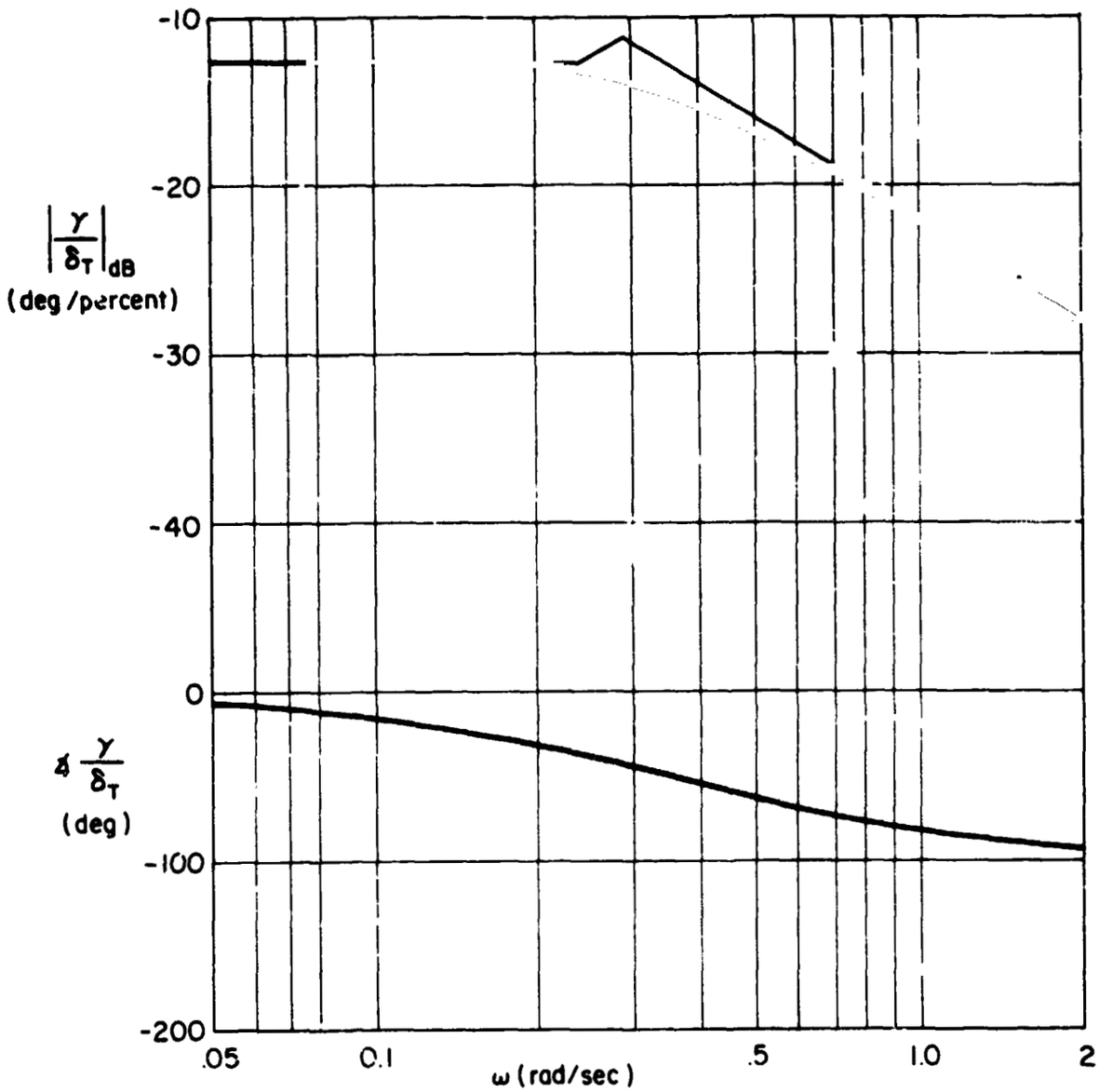

Figure III-10. Flight Path Response; STOL-X; 63.5 kt; -6° γ; T_E = 0.1 sec; Primary Control, Power; $\Delta\theta$ = 0

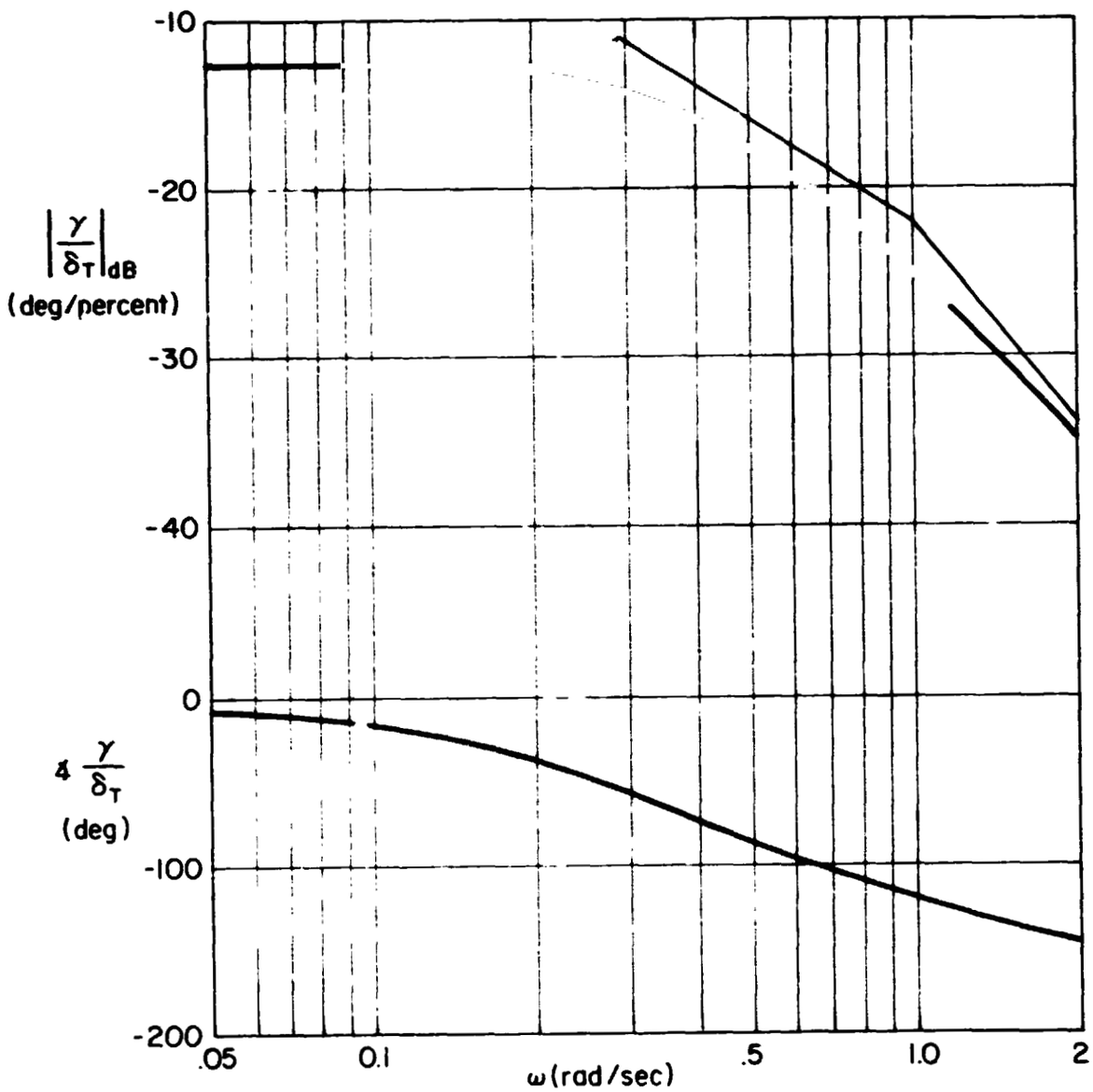

Figure III-11. Flight Path Response; STOL-X; 63.5 kt; -6° γ; T_E = 1 sec; Primary Control, Power, $\Delta\theta$ = 0

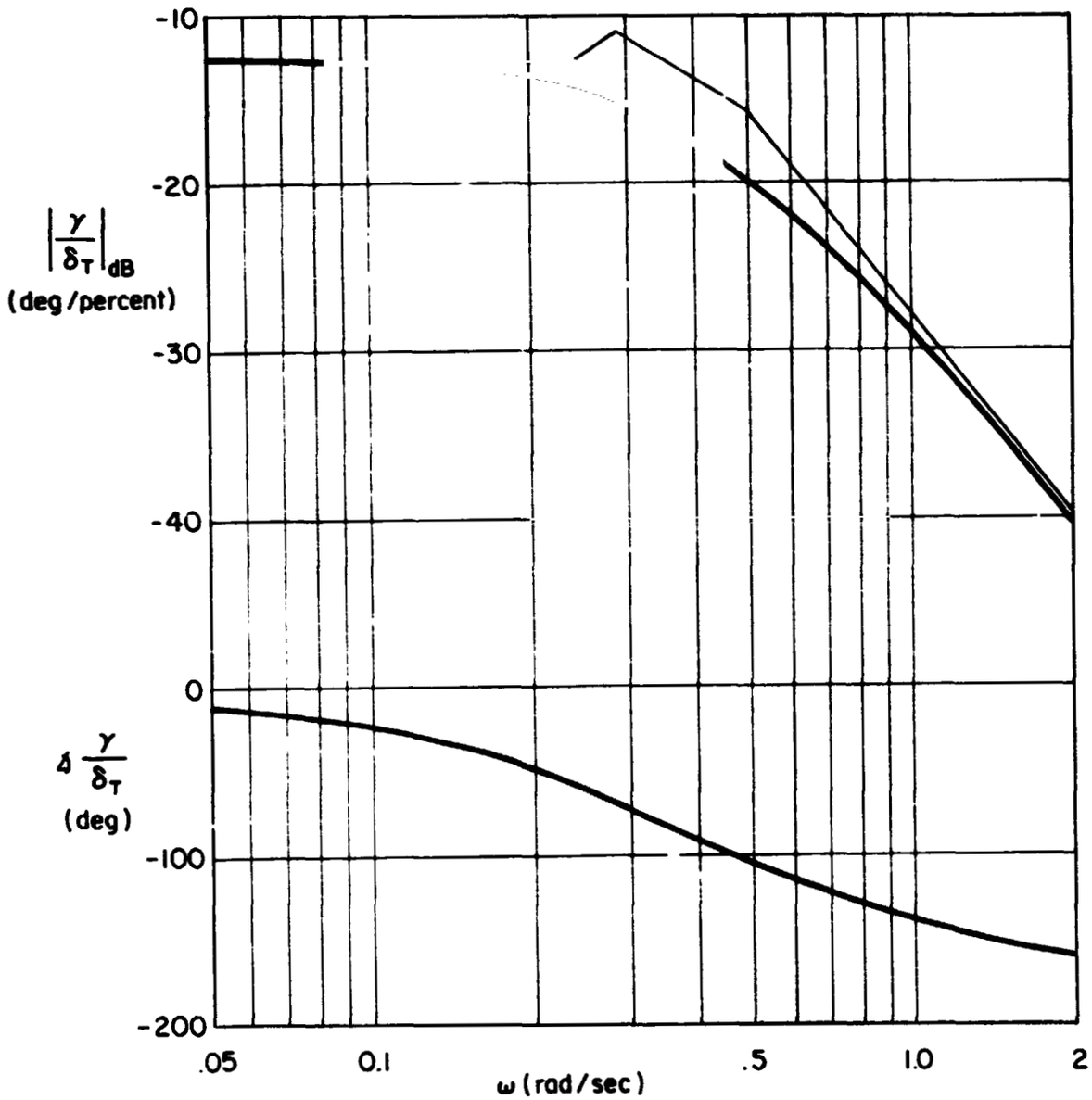

Figure III-12. Flight Path Response; STOL-X; 63.5 kt; -6° γ; T_E = 2.0 sec; FR = 0

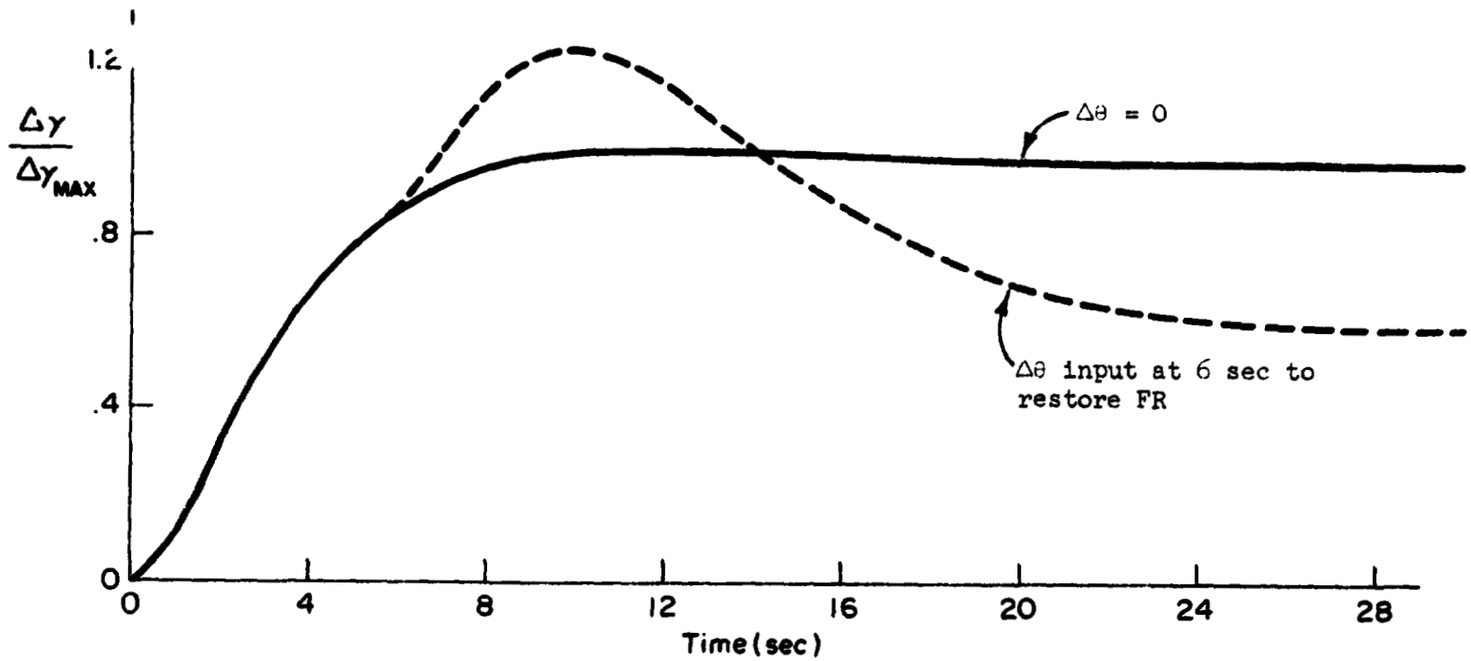

Figure III-13. Flight Path Response; STOL-X; 63.5 kt; -6° γ; FR = 0; T_E = 1 sec; T_θ = 1 sec

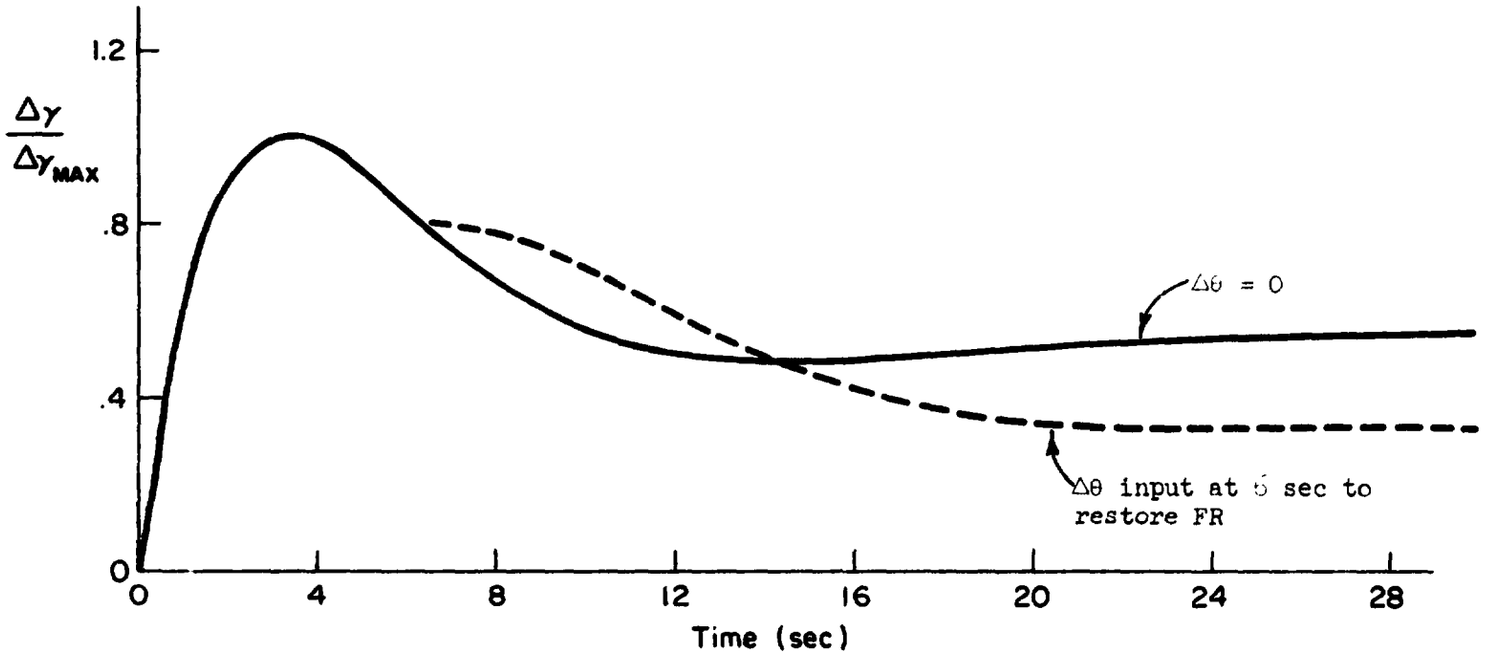

Figure III-14. Flight Path Response; STOL-X; 63.5 kt; -6° γ; DLC; T_E = 1 sec; T_θ = 1 sec

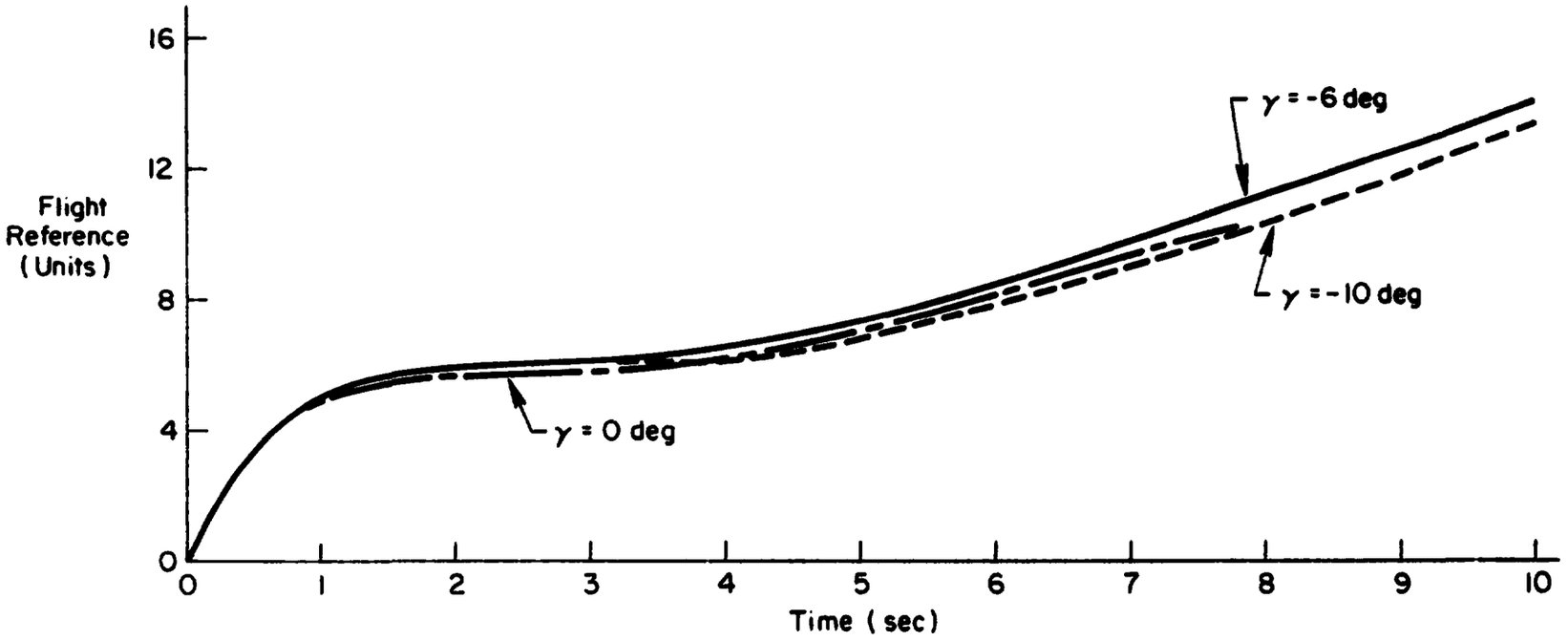

Figure III-15. Flight Reference Versus Time; STOL-X; Initial FR = 0; γ as Indicated; $\Delta\theta$ = 10 deg; T_0 = 1 sec

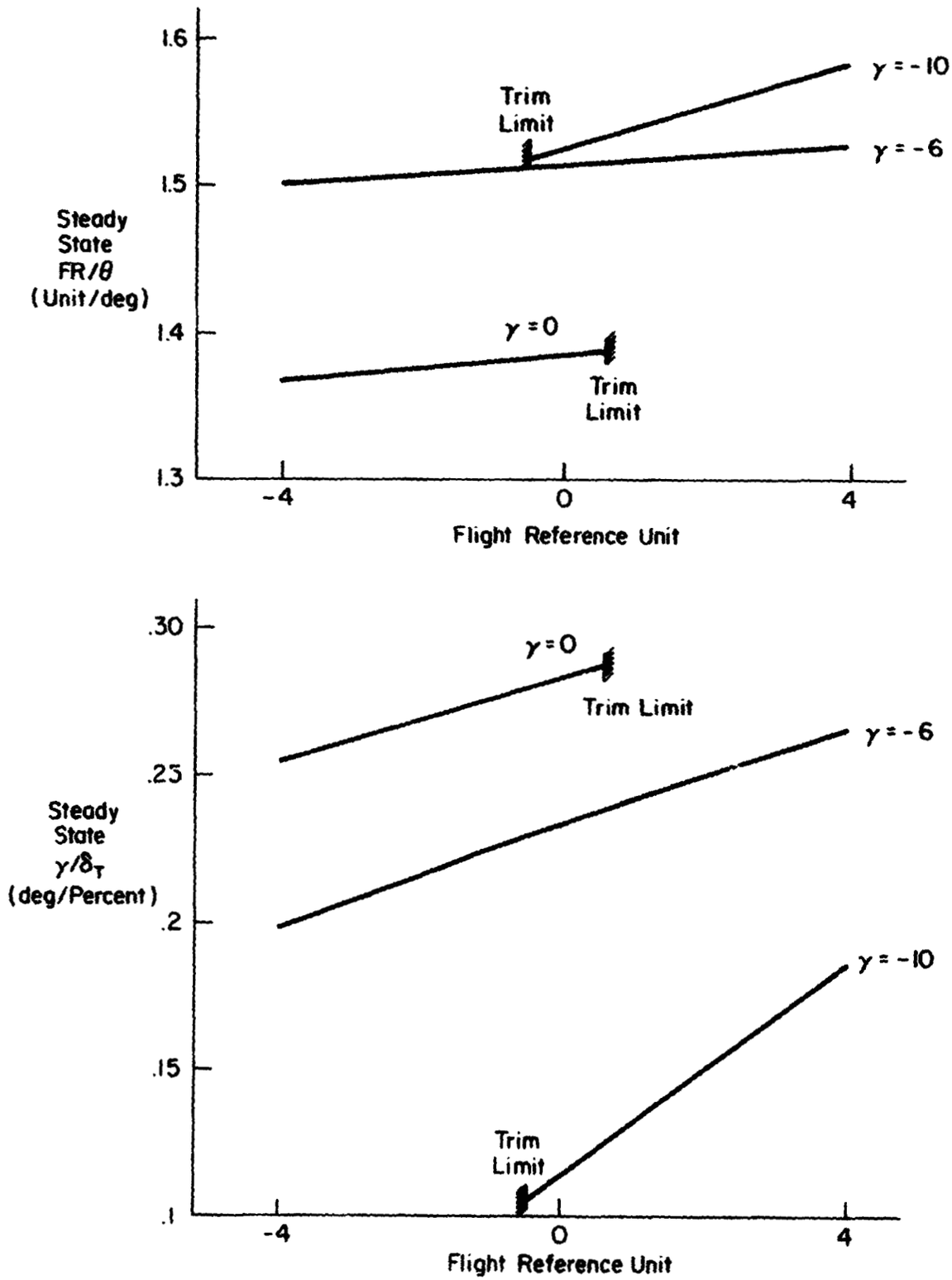

Figure III-16. Control Sensitivity, STOL-X

8. Attitude Fixed Stability

With pitch attitude held fixed by the column, the oscillatory mode has a damping ratio of 0.89 and thus satisfies the proposed criterion.

E. FLARE AND TOUCHDOWN

1. Undercarriage Strength Criteria

Assumed maximum touchdown sink rate was 3 m/sec (10 ft/sec), assumed target touchdown sink rate was .9 m/sec (3 ft/sec).

2. Recommended Flare Technique

Power control was primary flare control with attitude control used only to achieve and maintain touchdown pitch attitude.

3. Flight Path Control During Flare

Short term and steady state flight path control characteristics were identical to those of the approach phase.

SECTION IV

PILOT EVALUATIONS

This section contains complete transcripts of taped pilot comments as well as the written responses to the pilot evaluation questionnaires. These comments are arranged first by pilot, then in chronological order. An index of the comments showing task, airplane configuration, and date is given in Table IV-1. Questions not answered on the pilot evaluation questionnaires were not retyped, but the original numbering sequence was retained.

TABLE IV-1

INDEX OF PILOT COMMENTS

PILOT	PURPOSE	DEVIATIONS FROM BASIC MODEL	DATE	PAGE
A	Familiarization (OEI)	None	12/02-04/74	69
B	Familiarization	Overall engine lag increased by 1 second	11/18-19/74	70
B	Familiarization	None	11/20/74	78
B	Airworthiness Evaluation in Various Environmental Conditions	None	11/21/74	82
B	Airworthiness Evaluation of Engine Failure at Modified Flight Condition	Flight reference redefined as 75 kt IAS, AEO and OEI	11/21/74	86
C	Familiarization	Overall engine lag increased by 1 second	11/12-15/74 11/18-19/74	87
C	Airworthiness Evaluation	Flight condition at FR = -4 units	11/20-21/74	92
D	Familiarization	Overall engine lag increased by 1 second	11/12-15/74	98
D	Airworthiness Evaluation	Overall engine lag increased by 1 second	11/18/74	104
D	Modification of Flare Technique and Response	---	11/19/74	110

ORIGINAL PAGE IS OF POOR QUALITY

TABLE IV-1 (Continued)

PILOT	PURPOSE	DEVIATIONS FROM BASIC MODEL	DATE	PAGE
D	Airworthiness Evaluation	Flight condition at FR = -4 units	11/21/74	111
D	Modification of Flight Path/ Flight Reference Cross Coupling	---	11/20,22/74	115
D	Demonstration of Margins	---	11/26/74	117
E	Familiarization	None	11/26-27/74	119
E	Airworthiness Evaluation	None	12/03/74	125
E	Response and Coupling Investigations	Engine lag decreased by .9 sec, improved response DLC	12/04/74	129
E	Airworthiness Evaluation Flare Demonstration	None Flare using pitch attitude	12/05/74	131
F	Familiarization	Overall engine lag increased by 1 second	11/12-15/74	133
F	Airworthiness Evaluation	Overall engine lag increased by 1 second	11/18-19/74	140
F	Modification of Flight Path/ Flight Reference Cross Coupling	---	11/20/74	145
F	Airworthiness Evaluation	Flight condition at FR = -4 units	11/21/74	147
G	Familiarization	None	12/03/74	152
G	Response Investigation	Decreased engine lag vs DLC	12/05/74	156

TABLE IV-1 (Concluded)

PILOT	PURPOSE	DEVIATIONS FROM BASIC MODEL	DATE	PAGE
G	Airworthiness Evaluation	None	12/06/74	158
H	Familiarization	None	11/26/74	161
H	Modification of Response	Engine lag decreased by .5 seconds	11/27/74	162
H	Modification of Response/Coupling	---	12/03/74	164
H	Evaluation in Varying Wind Conditions	---	12/04/74	165

PILOT: A

DATE: 2-4 December 1974

PURPOSE: Familiarization (OEI)

DEVIATIONS FROM BASIC MODEL: None

TAPED COMMENTS: 2-4 December 1974

These engine out approaches, the first thing you learn on these engine losses is that it's strictly an aileron exercise. The thing that happens is that the aircraft starts to roll -- it's not yawing so you don't need any rudder in there, you need aileron only. As a matter of fact, if you put rudder in you increase your drag and increase your problem. So if you keep your feet on the floor and/or you don't put in any rudder, your problems are a lot simpler in terms of lateral control, anyway, and controlling side slip. It's a kind of a learning process to learn to push your nose over and go through this acceleration maneuver. Once you're there you have plenty... once you've accelerated you've got plenty of performance and lateral-directional control. The lower you get on the engine cuts, the more you have to be on top of it. At this point in time even when I'm spring loaded knowing I'm going to get a cut at 200 ft to 300 ft, you've really got to hop to it in order to get accelerated and go through your acceleration maneuver and get to the runway. If you're the least bit slow, you're not going to make it. We did this one cut at 100 ft, I don't know, maybe with some practice you could claim that one but that looks like a real toughy, there.

PILOT: B

DATE: 18, 19 November 1974

PURPOSE: Familiarization

DEVIATIONS FROM BASIC MODEL: Overall engine lag increased by 1 second

TAPED COMMENTS: 18 November 1974

(re approach and landing)

The main problems on familiarization sorting, I think, come down to one of inability to control sink rate in the flare or near the flare. The thrust lag is such that it is quite easy to get to an oscillatory flight path situation and, on some occasions, shears are cropping up that, even though I'm trying to anticipate with power as best I can, I just can't cope with them; I can't get the sink rate off before touchdown. So, one gets into a situation either of being very long because one doesn't want to set up a fairly high sink rate so you just close the runway very gently to avoid being caught up by a shear; or you get to the point where you're nicely set up and the shear comes right into you in the flare and you just can't cope with it and you get a heavy touchdown, sometimes early. Apart from that, really, everything seemed to fit into place pretty well.

No great difficulty flying angle of attack. I was tending to, I think, fly a bit too tightly on α to begin with and I was tending to loosen off a bit towards the end. One or two occasions, I found I was responding in the wrong sense; when I had a high α I was tending to pitch the nose up to meet the needle. But apart from that, no real problems.

The dynamics of the aircraft seem very adequate in terms of pitch and roll response. Crosswinds, I was having no great difficulty in taking the drift angle out at a fairly low altitude, at about the 50 ft point, taking it out on rudder and the response and the forces were entirely reasonable. Crosswinds seemed to produce very little problem.

I had difficulty in the early stages of appreciating sink...I think h more than h; I think h was reasonably easy to appreciate from the fairly early stage. But I certainly had very little feel for where the wheels were, when I was going to touch down. And I found that I was having to rely on the radar altimeter to a large extent. Towards the end, certainly, I did seem to be getting a better feel for the height and I was using the radar altimeter a great deal less.

The step input of pitch attitude required near the flare or in the flare never really produced any problems. I found in the early stages that I was tending to use the pitch attitude to try and help me flare. I was instinctively rotating the aircraft farther nose up in the flare. I think towards the end I was getting out of this and I was making my step input in pitch attitude 'round about, oh, I'd estimate 50 ft and then just holding that reasonably constant. No great workload required. I found even towards the end there that I still was using the ADI to give me a clue as to the pitch attitude that I had dialed. No real problems on that.

TAPED COMMENTS: 19 November 1974

(re OEI approaches)

Now on that one I got the impression that I regained my flight condition reasonably. I got some power on, which is the instinctive thing to do; and I didn't really get a great divergence in the glide slope during that initial condition. When you get back to the new condition, there's some reluctance to take all the power off, and from that moment on I was just getting a bit fast and a bit high and I was continuously coming back on the power all the way. So by the time I went into the flare, I was really getting a loop on it because I thought that I was coming down fairly steep with fairly low power on, and the α was 'round about right. So I put some power on in the flare to help me around the corner. But the flare didn't seem too bad, from my point of view.

It's not a terribly easy task laterally. One of the things that strikes me, and it struck me during the V_{MC}'s, is that the amount of sideslip is very evident. I seem to have quite a considerable drift angle on and this is something that you don't get in a conventional airplane. The amount of sideslip in a conventional airplane is comparatively low and to all intents and purposes you can ignore it. You can still point the airplane at the place at which you want to land with no crosswind. But in this thing, it's quite apparent that you've got to pick up this drift, which is presumably just a sideslip due to asymmetric thrust, or you're instantly diverging off. The other thing that is a bit difficult laterally is that it's difficult to get a steady wheel angle even with a fairly steady power; you're hunting a bit in roll, it's difficult to keep the bank angle absolutely constant, to keep the wheel angle constant, and this was something, again, that came out of the V_{MC} tests, if you remember.

The nose-down pitch and the initial control inputs are fairly instinctive at that point as is the increase in power. So really, apart from the problems we've already mentioned, it's a fairly straightforward case, that.

These engine failures -- first of all I find that the effect of the engine failure is a wee bit delayed. As long as I don't jump to any premature conclusions as to which engine has failed, there's no problem in the controllability immediately following the engine failure, I can get the rudder in to hold the heading or to stop the yaw rate, the aileron in to stop the

roll rate and it's not enormous amounts of either. Now, at the greater heights, around about 200 ft and above, it's fairly instinctive to pitch the aircraft nose down to regain the flight reference and at the same time I found that it was instinctive to go up to a considerably higher power setting on the remaining engines. And there was no real controllability problem in terms of roll or yaw rate. Subsequently I found that I had a lateral problem which was caused more by the sideslip that I had - holding wings level with asymmetric thrust. I think Bob said he saw a sideslip angle of about 15 deg. And the effect of this is just as though a sudden crosswind has come in because if you are going to continue tracking the centerline, the localizer, you've got to pick up that drift, equal to the sideslip, so that you continue to track down the centerline. And that was giving me some problems to begin with but eventually you get the hang of that and you manage to get the drift in; but it still leaves you with a problem at the end because in the flare you've got to take all that drift off. And really, I was rarely successful in taking all that drift off. I notice as the failures get lower, below 200 ft, there is a considerable reluctance to pitch the aircraft nose down on the failure to regain the flight reference. At 100 ft and at 60 ft I don't really think I was pitching the aircraft nose down much more than a degree or two, if that. I still come up rapidly with power and there's no real controllability problem in terms of roll and yaw. On most of these low altitude ones, 100 and 60 ft, I was getting to emergency power on the remaining three engines. And the problem there is just that I don't have enough flare capability. I haven't really any flight reference and so the α, the flight reference in the flare is a much higher α than it should be, and even though I'm pulling right through to the shake and push, I'm just not killing the sink rate. Maybe I could get something more out of θ if I just went on pulling but the pusher obviously keeps one from doing that and I've already got full power on so there's not much more I can do to arrest the sink rate. So, on these low altitude ones, 60 and 100 ft, we frequently had sink rates of 12 - 15 fps, that sort of order. But generally, I was just about making the runway.

The other problem is that I think there is a change of technique required in the flare depending on where the failure has occurred. If the failure occurs about 200 ft or above and you've regained the flight reference, then you can flare on θ to a large extent. There's a much larger θ change required anyway and that seems pretty effective in killing the sink rate. But at the lower heights, where the engines are failed at a lower height, there is a change of technique required assuming even if you haven't got full power, you would need it. You would have to go back to a flare on power technique rather than on θ because the flight reference is higher, θ obviously is going to do less for you and there's not as much θ to pull anyway.

WRITTEN COMMENTS: 19 November 1974 Pilot Evaluation Form

(Approach)

Pilot Ratings: Calm Air = 4

Turbulence = 6 (due to thrust lags and resultant poor glide slope tracking below 200 ft. Learning curve may improve ratings.)

1. Q -- Describe the technique you used to make flight path corrections.

   A -- Change of thrust.

2. Q -- Describe the technique you used to make flight reference corrections.

   A -- Change of θ, but FR response was fairly slow and there was initially a tendency to chase it. On a few occasions I responded to a FR error in the wrong sense.

3. Q -- Describe any difficulties you had in making flight path or flight reference corrections.

   A -- G/S tracking in last 200 ft of approach tended to be poor, and there was some reluctance to make the large thrust changes apparently necessary. This reluctance seemed to be due to the thrust lag; large changes tended to produce an oscillatory heave situation.

4. Q -- Was there noticeable control cross coupling? If yes, describe it and how it affected flight path/flight reference control.

   A -- Thrust on FR coupling was noticeable but did not give undue problems once a fairly loose control of FR was adopted. (Errors of $\pm$ 2 deg were accepted in the short term.)

5. Q -- Evaluate throttle sensitivity and thrust margins (up and down).

   A -- No real problems here.

6. Q -- Describe the effects of turbulence level on flight path/flight reference control.

   A -- FR - no real problems. Variations due to turbulence seemed acceptably low.

   FP - problems of G/S tracking in the later stages were exaggerated. $\pm$ 1 dot error was frequently seen.

8. Q -- Describe the effects of crosswinds on flight path/flight reference control.

   A -- No problem.

9. Q -- How tightly did you regulate flight path/flight reference and why?

   A -- FP - not tightly, due to oscillatory heave problems if large ΔT correction made.

   FR - not tightly. Did not seem too sensitive to reasonable errors and u. tight control tended to produce oscillatory θ situation and high workload.

10. Q -- Describe any difficulties in trimming the aircraft.

A -- None. Very little if any trimming was done for short term errors and out of trim forces were low.

11. Q -- Did you try any deliberate flight reference or flight path abuses? If yes, describe the effects of the abuses on the aircraft characteristics.

A -- FR – none made.

FP – errors in early stages of approach produced no problems, but corrections were made fairly slowly.

12. Q -- Describe any difficulties in hitting a reasonable flare window.

A -- Yes; errors of $\pm$ 1 dot or more were frequently seen particularly in turbulence, due to reluctance to make large thrust changes.

13. Q -- What were the most significant effects of going from VFR to IFR?

A -- All VFR.

14. Q -- Relative to the approach task, what, in your opinion, would be the major factors influencing whether or not this aircraft could be certified.

A -- Thrust lags, making accurate G/S tracking at low heights difficult.

(Flare and landing)

Pilot Ratings: Calm Air = 3

Turbulence = 6 (All engines <u>only</u>. Learning curve may improve.)

15. Q -- Describe in detail all flare techniques which you tried.

A -- Flare on thrust and step θ input. Best technique seemed to be $\Delta\theta$ input at 50 ft and almost mechanical thrust increase following _____. Thrust lags made it difficult to modulate thrust in response to visual $\dot{h}$ cues (which seemed good) and achieve constant TD sink rates, particularly in turbulence.

16. Q -- Which technique did you select and why?

A -- See above.

17. Q -- What secondary control action was required for flare? How did this affect your selection of the flare technique?

A -- None, apart from step θ input. No other techniques used.

18. Q -- Evaluate your ability to consistently control touchdown position and sink rate.

A -- Not bad in smooth air, with fairly mechanical actions. Both very poor in turbulence due to thrust lags and G/S errors at window. High sink rates on T/D and full thrust selections* frequently seen but greater thrust would not necessarily improve the situation — the main problem was the thrust lag.

---

* Selections to the stop must be permissible; the present situation is not acceptable for this type of operation.

20. Q -- Describe any problems encountered during OEI flare and landings.

A -- See below.

21. Q -- Describe how flight path abuses affected flare and landing.

A -- Don't understand question completely. G/S errors affected T/D position as already explained.

24. Q -- Did you experience any particularly severe wind shears or turbulence near touchdown? If so, how did these affect the above rating?

A -- Shears — yes. Affected rating very significantly.

25. Q -- Relative to flare and landing, what, in your opinion, would be the major factors influencing whether or not this aircraft could be certified.

A -- Thrust lags, resulting in inconsistent T/D position and sink rate in turbulence (with shears).

(General)

26. Q -- Did the lateral-directional characteristics significantly affect your evaluation? If yes, describe.

A -- No. In X winds, drift kick off in flare produced no problems.

27. Q -- Would you certificate this aircraft for all or some of the operational conditions you experienced? If for only some operational conditions, describe the operational restrictions you would impose and explain why.

A -- No, not even for smooth air.

28. Q -- Do you feel you have had sufficient training for this configuration? How confident are you of the above evaluations?

A -- No. Not really. Learning curve could well be fairly prolonged.

29. Q -- Any additional comments?

A -- Engine Failures

Static V_{MC} established with remaining engines at fire wall at being about 60 kt (FR about 12°) with wings level. 5° bank would have reduced this, but could not be demonstrated due to pusher (wings level case was just about at push). V_{MC} wings level required full rudder to hold heading and almost full aileron to hold bank. Available roll rate was negligible. When 0 FR was re-established (68 kt approx.), available roll rate was not good (10° - 10°, i.e. 20° total in 4 seconds.)

The technique used following an engine failure was as follows:

Roll - Wait until aircraft responded in roll (the delay seemed unrealistically long) then apply wheel angle necessary to hold wings level. There was subsequently a slight PIO in roll.

Yaw - Wait until aircraft responded in yaw (again, the delay seemed long) then apply rudder to hold zero yaw rate.

Pitch/FR - At heights of 200 ft or greater, it was fairly instinctive to pitch down and attempt to regain 0 FR. There was increasing reluctance to pitch down as engine fail height was lowered. At 100 ft and below virtually no pitch down was achieved.

Power - It was instinctive to increase power on remaining 3 engines immediately following failure. At the greater fail heights, this power increased, whilst holding G/S during regain of FR then tended to get aircraft high and fast as there was some reluctance to take power off again sufficiently or rapidly enough. Thus, technique was developed of making a smaller power increase following failure, and accepting an error of 1 dot approx. below G/S for remainder of approach. At 100 ft and below full power was applied on remaining engines, but even this (in absence of θ correction to regain FR) was insufficient to prevent very high sink rates and short touchdowns, with stick push fairly early in flare.

There were no real lateral or directional controllability problems at 64 kt with full power on remaining 3 engines.

Localizer Tracking - With wings level, the sideslip angle (and thus, required crab angle to track localizer) was very large - about 10°. Once appreciated this could be set up fairly easily, but the kick off of this crab in flare added to the

task. The use of bank towards live engines should reduce this sideslip angle, but this was not attempted.

Ratings - Mild turbulence only, VFR, and assumming engine failures are expected to be survivable wherever they occur.

Below 200 ft: 7

Above 300 ft: 6

PILOT B

DATE: 20 November 1974

PURPOSE: Familiarization

DEVIATIONS FROM BASIC MODEL: None

TAPED COMMENTS: None

WRITTEN COMMENTS: 20 November 1974 Pilot Evaluation Form

(Approach)

Pilot atings: Calm Air = 2

10% Turbulence = 5 (Due to γ/FR cross-coupling)

1. Q -- Describe the technique you used to make flight path corrections.

   A -- Change of thrust.

2. Q -- Describe the technique you used to make flight reference corrections.

   A -- Change of θ.

3. Q -- Describe any difficulties you had in making flight path or flight reference corrections.

   A -- G/S tracking with reduced thrust lag was considerably easier and tighter than before, and quite large ΔT's could be applied near flare window without inducing a heave oscillation; however, these produced large FR errors, and there was a reluctance, particularly near the window, to made the θ corrections necessary to hold FR = 0.

4. Q -- Was there noticeable control cross coupling? If yes, describe it and how it affected flight path/flight reference control.

   A -- Yes -- T on FR. There was a reluctance, as stated above, to correct ar thus FR was ignored for long periods and an approximately constant θ technique used instead.

   [illegible] throttle sensitivity and thrust margins (up and down).

   [illegible]ems

6. Q -- Describe the effects of turbulence level on flight path/flight reference control.

A -- FP – much better control than with 2 sec lags, but large power changes made produced large FR errors.

7. Q -- Describe the effects of flight path angle on flight path/flight reference control.

A -- Only one angle tried.

8. Q -- Describe the effects of crosswinds on flight path/flight reference control.

A -- X wind component seemed to be very variable. This produced a considerable localizer tracking workload IFR, with frequent heading changes to prevent errors developing.

9. Q -- How tightly did you regulate flight path/flight reference and why?

A -- FP – quite tightly, with adequate control and acceptable lags.

FR – Loosely as stated. I've gone right off α based FR!

10. Q -- Describe any difficulties in trimming the aircraft.

A -- None. Very little trimming done.

11. Q -- Did you try any deliberate flight reference or flight path abuses? If yes, describe the effects of the abuses on the aircraft characteristics.

A -- FP – yes. Reasonably easy to correct quickly and dead beat.

12. Q -- Describe any difficulties in hitting a reasonable flare window.

A -- No unacceptable difficulties.

13. Q -- What were the most significant effects of going from VFR to IFR?

A -- Localizer tracking task as stated.

14. Q -- Relative to the approach task, what, in your opinion, would be the major factors influencing whether or not this aircraft could be certified.

A -- Degree of cross coupling between T and FR.

(Flare and Landing)

Pilot Ratings: Calm Air = 4

Turbulence = 6

15. Q -- Describe in detail all flare techniques which you tried.

A -- Flare on thrust and θ input. Initially θ was being changed progressively to 3 - 5 deg NU, but this tended to confuse control of sink rate in flare. Subsequently a step θ input to 0 - 2 deg NU was made early (at 50 - 60 ft) and this eased flare control workload.

17. Q -- What secondary control action was required for flare? How did this affect your selection of the flare technique?

A -- θ input as stated.

18. Q -- Evaluate your ability to consistently control touchdown position and sink rate.

A -- Results — even in turbulence seem reasonable. But at no time did I feel in complete control of $\dot{h}$ due to thrust lags being larger than desirable. Full power was seen on several occasions.

20. Q -- Describe any problems encountered during OEI flare and landings.

A -- Only one done — unexpected at 200 ft. I was pitched adequately and a lot of power was applied but subsequently not taken off sufficiently. This gave a very deep fast T/D.

21. Q -- Describe how flight path abuses affected flare and landing.

A -- No abuses deliberately — held to flare window.

22. Q -- Describe how pitch attitude abuses affected flare and landing.

A -- θ input certainly seemed to effect $\dot{h}$, and variable θ, confused the power requirement to flare.

24. Q -- Did you experience any particularly severe wind shears or turbulence near touchdown? If so, how did these affect the above rating?

A -- Seemed fewer severe shears than yesterday — this impression may be due to lower lags.

25. Q -- Relative to flare and landing, what, in your opinion, would be the major factors influencing whether or not this aircraft could be certified.

A -- (a) Thrust lags giving a loose control of $\dot{h}$ in flare.

(b) Effect of θ errors on consistency of flare profile.

(General)

26. Q -- Did the lateral-directional characteristics significantly affect your evaluation? If yes, describe.

    A -- No.

27. Q -- Would you certificate this aircraft for all or some of the operational conditions you experienced? If for only some operational conditions, describe the operational restrictions you would impose and explain why.

    A -- No. Poor apparent control of flare profile in spite of consistency of T/D point and sink rate.

28. Q -- Do you feel you have had sufficient training for this configuration? How confident are you of the above evaluations?

    A -- Barely. Not really.

29. Q -- Any additional comments?

    A -- 1. FP response criteria appear to be in right ball park.

    2. Worse rating for calm air with reduced thrust lag is thought to be due to the rather mechanical technique adapted yesterday (with long lags), plus the greater variability of θ on T/D today.

PILOT B

DATE:	21 November 1974
PURPOSE:	Airworthiness Evaluation in Various Environmental Conditions
DEVIATIONS FROM BASIC MODEL:	None
TAPED COMMENTS:	None
WRITTEN COMMENTS:	21 November 1974 Pilot Evaluation Form (Questions 1 through 28)

(Approach)

Pilot Ratings: Calm Air = (none evaluated)

VFR Turbulence = 5
IFR Turbulence = 7
} Unease on margins ignored for these ratings

1. Q -- Describe the technique you used to make flight path corrections.

   A -- Thrust changes -- frequently large to counter severe shears.

2. Q -- Describe the technique you used to make flight reference corrections.

   A -- Technique used was to hold substantially constant θ, as FR fluctuations and large thrust changes made this (FR) impossible to track.

3. Q -- Describe any difficulties you had in making flight path or flight reference corrections.

   A -- FP – surprisingly tight control considering severity of shears

   FR – see above. No difficulty holding θ approximately constant.

4. Q -- Was there noticeable control cross coupling? If yes, describe it and how it affected flight path/flight reference control.

   A -- Not with technique used.

5 Q -- Evaluate throttle sensitivity and thrust margins (up and down).

   A -- Acceptable.

6. Q -- Describe the effects of turbulence level on flight path/flight reference control.

A -- FP – large thrust changes, which never produced an oscillatory heave situation. No real problem.

FR – very active. Ignored.

9. Q -- How tightly did you regulate flight path/flight reference and why?

A -- FP – aiming generally for $\pm \frac{1}{2}$ dot, but short term errors up to 1 dot were frequently seen.

FR – didn't! But θ was held within 2 deg — arbitrary θ inputs were made following large power changes.

11. Q -- Did you try any deliberate flight reference or flight path abuses? If yes, describe the effects of the abuses on the aircraft characteristics.

A -- No.

12. Q -- Describe any difficulties in hitting a reasonable flare window.

A -- No real difficulties bearing in mind level of turbulence.

13. Q -- What were the most significant effects of going from VFR to IFR?

A -- High workload; turbulence was affecting θ, φ, glide slope, and heading (and thus localizer). All suffered, but localizer tracking most of all. Heading errors built up rapidly with no apparent motion cues.

14. Q -- Relative to the approach task, what, in your opinion, would be the major factors influencing whether or not this aircraft could be certified.

A -- 1) Holding constant θ, there is some unease on adequacy of α margins (though no shaker operation occurred).

2) IFR workload. (Though off-condition situations on going visual at 200 ft can be sorted out with relative ease.)

(Flare and Landing)

Pilot Ratings: Calm Air = (none evaluated)

Turbulence = 7-8

15. Q -- Describe in detail all flare techniques which you tried.

A -- Step θ to 0 - 2 deg NU at 40 - 45 ft; modulating T to control $\dot{h}$.

17. Q -- What secondary control action was required for flare? How did this affect your selection of the flare technique?

A -- See No. 15

18. Q -- Evaluate your ability to consistently control touchdown position and sink rate.

A -- Very poor. Atmosphere largely in control. One has to guess what the shear would be doing a few seconds later and adjust power accordingly — and rapidly. Fire wall was frequently reached — on some occasions when it was not needed.

22. Q -- Describe how pitch attitude abuses affected flare and landing.

A -- θ was set effectively to constant value, so abuses were not done.

23. Q -- Describe the effects of other off-nominal conditions (e.g., flight reference or power) at the flare window on the flare characteristics.

A -- These effects were dominated by atmospherics in flare itself.

24. Q -- Did you experience any particularly severe wind shears or turbulence near touchdown? If so, how did these affect the above rating?

A -- Yes. Entirely responsible.

25. Q -- Relative to flare and landing, what, in your opinion, would be the major factors influencing whether or not this aircraft could be certified.

A -- Thrust lags.

(General)

26. Q -- Did the lateral-directional characteristics significantly affect your evaluation? If yes, describe.

A -- No.

27. Q -- Would you certificate this aircraft for all or some of the operational conditions you experienced? If for only some operational conditions, describe the operational restrictions you would impose and explain why.

A -- No.

28. Q -- Do you feel you have had sufficient training for this configuration? How confident are you of the above evaluations?

A -- Yes. Fairly confident.

PILOT B

DATE:	21 November 1974
PURPOSE:	Airworthiness Evaluation of Engine Failure at Modified High Condition
DEVIATIONS FROM BASIC MODEL:	Flight Reference Redefined as 75 kt IAS, AEO and OEI
TAPED COMMENTS:	None
WRITTEN COMMENTS:	21 November 1974 Pilot Evaluation Form (Question No. 29 - Additional Comments)

Using all engines conditions of 75 kt, 6 deg nominal γ, -10 deg θ, -4 deg FR, 88%; maintaining speed and θ after failure. Mild turbulence only, VFR.

In terms of pitch and heave control, this was simple. Failure produced no change of IAS or θ, and increased roll could be compensated easily with fairly small power increase. Even late failures produced no additional touchdown position or sink rate problems. (Flare was made on θ — this was not ideal as large θ change required reduced visual cues of $\dot{h}$ and h). However, there was a tendency to develop a PIO in roll following failure at 100 ft and below, and roll inputs had to be made slowly and deliberately to avoid this. The impression was also gained that the margin above V_{MC} (based on control deflection) was no better and possibly worse than the lower speed (64 kt) case even when this lower speed was maintained (which tended to be the case with failures at low height).

C-2

PILOT C

DATE: 12-15 November 1974, 18-19 November 1974

PURPOSE: Familiarization

DEVIATIONS FROM BASIC MODEL: Overall engine lag increased by 1 second

TAPED COMMENTS: 14 November 1974

My only comment on this series of approaches would be the fact that the very short time that the pilot is allowed to make various decisions during the last 100 ft -- things happen a little too fast to be able to sort out properly the necessary power requirements in order to assure a good touchdown. So, other than practicing here and I do feel we do still have some problems with the Redifon -- the ratcheting -- I think the visual scene tends to mislead -- to give misleading cues as far as altitude is concerned. And all these things come together, it seems, right now at least, to be an almost impossible task to land this airplane consistently within the touchdown zone with acceptable vertical speeds.

TAPED COMMENTS: 15 November 1974

I've only one comment on the all engines operating, straight in approach and landing: I noticed a significant difference in my ability to make good the target touchdown zone with the GPI moved closer to the runway threshold. I assume it's still there. It had proved to be and I was able to hit the touchdown zone more consistently. No big problems with calm or moderate or rather light turbulence, it's just a matter of coordination of nose up attitude with application of power -- smooth but at a fairly good rate. To touch down, the technique I use is, at flare height with the power application, I begin increasing power and continue to increase power until I've touched down. There's no big difference in the crosswind cases other than the decrabbing at the higher altitude. I was decrabbing at a lower altitude just prior to flare and it didn't work out so good so I began to decrab at a higher altitude, about 150 ft or so, and it just required almost the wings level attitude there with a slight amount of rudder. No problem with the crosswind in moderate turbulence. The only additional problem with the turbulence was, of course, the added workload -- the added uncertainty of what to do with the power during the flare, I don't know if this will improve. It certainly would improve with pilot proficiency but there's still an area there where the pilot needs more help than he's ever going to get. In a case like this, it's unpredictable what the power requirements really are.

It's sort of like hit and miss, you guess at it and hope for the best. So it's a very high workload, the pilot needs some power commands during the flare, I think, I don't know how you'd do it but it could certainly help me.

The engine out cases, the first one I experienced, I over-reacted, I overcorrected. The final opinion I have right now with engine out is it is certainly a heavy workload; it is manageable, it's flyable, with regard to keeping the airplane under control. However, from what I've seen, it would be highly unlikely that the pilot could, with any consistency at all, hit the touchdown zone with an engine out. But it is controllable, it flies quite well if you don't overcorrect. It required a slight amount of roll and very little rudder once you've got the thing established then you can always come back wings level and, with your pitch over, it maintains your new airspeed fairly well, for flight reference. If you fly your new flight reference, and there's very little difference in the power requirement, once you get established for the engine out and it's standard procedure after that, other than hitting the target touchdown zone.

TAPED COMMENTS: 18 November 1974

On the engine cuts, the initial transient is not bad here. You get an abrupt pitch up indication, flight reference is high, and you pitch over; and that's pretty straight forward. It requires almost immediate attention but it's, I would say, satisfactory -- that portion of the engine failure. Identification of the engine has been somewhat the problem to me. Initially I don't get the proper asymmetry to identify the engine and Bob has been calling it out; but I feel that if he waited about calling it out I may be searching for the proper indication of which engine is out. That could add some problems to the overall task, I think, too much delay in that. But the initial thing is to pitch over and get the flight reference and that isn't difficult to do. At the altitudes of 400 or above, the 300 ft engine cut is...the lower you get, it simply adds to the pilot's task. The 200 ft engine cut is probably, at this point in my learning curve, about the most I can expect to cut. With 200 ft, lateral control becomes a problem in the flare. The lower the engine cut the more lateral problem you seem to have in the flare. There just doesn't seem to be time to square it all away. So, that's the only comment I have right now.

WRITTEN COMMENTS: 15 November 1974

(Approach)

1. Q -- Describe the technique you used to make flight path corrections.

   A -- I was attempting to make flight path corrections with power only — works good in calm air — some difficulty in determining how much power is required when turbulence is added.

2. Q -- Describe the technique you used to make flight reference corrections.

A -- Pitch for FR - calm air required $\theta = 3.5 \pm 2.5$

turbulence required $\theta = 3.5 \pm$ approx. 5

3. Q -- Describe any difficulties you had in making flight path or flight reference corrections.

A -- Turbulence added to pilot workload, making both FP and FR very difficult to hold.

4. Q -- Was there noticeable control cross coupling? If yes, describe it and how it affected flight path/flight reference control.

A -- No objectionable cross coupling with small power changes (less than 2%); however, there was always some retrim necessary after large power changes greater than 2%.

6. Q -- Describe the effects of turbulence level on flight path/flight reference control.

A -- Significant increase in workload due to constant power changes required to maintain acceptable FP. Decided to live with $\pm$ 4 on FR and not work so hard to maintain near zero.

8. Q -- Describe the effects of crosswinds on flight path/flight reference control.

A -- No significant effects beyond the added workload to maintain directional control. FP and FR, in themselves, were not effected by crosswinds.

9. Q -- How tightly did you regulate flight path/flight reference and why?

A -- In the beginning I was attempting to regulate FR as tight as possible along with FP, but later decided to fly FP as close as possible and monitor FR not to exceed $\pm$ 4. This seemed to get the best overall results.

10. Q -- Describe any difficulties in trimming the aircraft.

A -- No difficulties in trimming, but lots of trimming is required if you expect to fly a tight FR. Not the amount of trim but rather the frequency of trimming task.

11. Q -- Did you try any deliberate flight reference or flight path abuses? If yes, describe the effects of the abuses on the aircraft characteristics.

A -- None, other than α_{max} in the beginning for stick shaker and pusher.

12. Q -- Describe any difficulties in hitting a reasonable flare window.

A -- Not too bad in calm VFR. High workload in turbulence (1%). Very often found myself high or low on G/P at 50 ft height.

13. Q -- What were the most significant effects of going from VFR to IFR?

A -- Directional control added to workload and resulted in hitting a good flare window less often.

14. Q -- Relative to the approach task, what, in your opinion, would be the major factors influencing whether or not this aircraft could be certified.

A -- Poor handling qualities in turbulence — translated to workload.

(Flare and Landing)

15. Q -- Describe in detail all flare techniques which you tried.

A -- (1) At flare height, pitch up to $\theta = 0$ and control sink rate with additional power. I found it best to continue adding power to TD but this is very difficult to regulate during the flare to assure not exceeding 100%.

(2) Pitch up beyond $\theta = 0$ and power in a more conventional way.

16. Q -- Which technique did you select and why?

A -- I selected (1) as the better because I had better control of sink rate using only power. (2) would be a better technique should you be fast in the flare.

17. Q -- What secondary control action was required for flare? How did this affect your selection of the flare technique?

A -- Using the (1) technique, pitch was secondary after the initial pitch up.

18. Q -- Evaluate your ability to consistently control touchdown position and sink rate.

A -- Fair in calm. Poor in turbulence.

20. Q -- Describe any problems encountered during OEI flare and landings.

A -- I had lateral control problem which I never really solved. I showed some improvement with practice but never could consistently control TD position or sink rate. Always short and hard. Always low on FP after failure below 400 ft.

24. Q -- Did you experience any particularly severe wind shears or turbulence near touchdown? If so, how did these affect the above rating?

A -- On one landing I experienced a shear equal to a .3% probability. I had no control over sink rate or position and resulted in being short and hard.

25. Q -- Relative to flare and landing, what, in your opinion, would be the major factors influencing whether or not this aircraft could be certified.

A -- Lack of good control of sink rate during the flare seems to be the major factor — should be limited to some small amount of turbulence.

(General)

26. Q -- Did the lateral-directional characteristics significantly affect your evaluation? If yes, describe.

A -- Yes, for OEI. Too much uncontrollable drift during the flare.

27. Q -- Would you certificate this aircraft for all or some of the operational conditions you experienced? If for only some operational conditions, describe the operational restrictions you would impose and explain why.

A -- (1) No operation in turbulence worse than 10% — because of workload and hard landings, and outside of TD zone.

(2) No STOL mode operation with failed power plant. Unable to maintain acceptable FP (low) when failure occurs below 400 ft. Unable to control TD position or sink rate to an acceptable level.

28. Q -- Do you feel you have had sufficient training for this configuration? How confident are you of the above evaluations?

A -- My performance would no doubt improve with practice but I feel fairly confident of the evaluation.

29. Q -- Any additional comments?

A -- I understand that the characteristics of this model is representative of the worse airplane which could be certificated under the requirements which were proposed by the Working Group.

My only comment is, "what went wrong?"

PILOT C

DATE: 20-21 November 1974

PURPOSE: Airworthiness Evaluation

DEVIATION FROM BASIC MODEL: Flight condition at FR = -4 units

TAPED COMMENTS: 21 November 1974

That was a shallow approach. From the standpoint of comparing the shallow approach to the steep approach, my opinion is that the shallow one, overall, is an easier task because you simply have more time to make your corrections -- things aren't happening as fast. From the breakout point, from the 200 ft point, down to the flare height, you have ample time to establish your flight path and then get a nice visual reference to the runway. [Question: Would you say that it is the closure rate with the runway that is giving you all this time?] Um, frankly, it's the closure rate on the steep approach that gives me the big problem, I would think, because the shallow approach, by comparison, was a piece of cake. And I think that's the only comparison I can make right now with those two -- the steep approaches are just a high workload, I didn't try one in calm air or the lesser turbulence, but the lateral control of the airplane still gives me a lot of problems with the turbulence which causes me to hit a bad flare window.

Right now, this is for the purpose of the recording, from what I've seen, the steeper the approach, the more difficult the overall task. (I just flew a 6 after having flown the 9.5, and the 3, and the 2, and then back to the 6) and as far as the task difficulty, the 6 seems to be about in the middle of the other two. So I guess we can relate it to sink rate.

Comments on the 1% turbulence: the only thing in my mind is the comparison again of the task. Workload certainly increases considerably with the increase of turbulence. The shallow approaches are less of a workload and easier to fly than the steeper approaches. You have more time to make the necessary corrections. The crosswind cases increases the task and the workload, because of having to fly the course CDI indications as tightly as possible to assure yourself of hitting a good flare window. So I guess after a comparison of the two -- it's an obvious conclusion, I think, it's just much worse. It has the same characteristics, just everything gets worse in the 1% turbulence.

In general, the 6 deg aerodynamic glide slope along with the 6 deg electronic glide slope seems to be fairly satisfactory in the 10% turbulence. I would judge that the 6 deg glide slope in turbulence was worse and that

10 deg becomes questionable. The handling qualities, the flare ability, my ability to properly flare the airplane and manage the power and sink rate as it needs to be done, are very difficult with the 6 deg approach in 1% turbulence. The task increases as the glide slope increases and 9.5 deg glide slopes were very difficult even in the 10% turbulence because, I think, of the sink rate problem during the flare -- I was never able really to know exactly what my condition was in the flare. I was willing to accept touchdown in any position so long as the sink rate was acceptable. The task with the lower angles was much better. It was a little more satisfactory in the 10% turbulence and, with the exception of flare and landing, the approach was satisfactory also. In the lower angles with the 1% turbulence, I would judge the up capability as questionable on the last low approach. The last low approach that I flew (holding about 100% or 101% power) I was trying to correct back up to glide slope and I was barely able to manage that. So I would judge it, overall, questionable to unacceptable in 1% turbulence, at least in the flare and landing regime.

WRITTEN COMMENTS: 21 November 1974 Pilot Evaluation Form

(Approach)

Pilot Ratings: Calm Air = 3

Turbulence = 6

1. Q -- Describe the technique you used to make flight path corrections.

   A -- Change of power.

2. Q -- Describe the technique you used to make flight reference corrections.

   A -- Change of pitch attitude.

3. Q -- Describe any difficulties you had in making flight path or flight reference corrections.

   A -- OK in 10% turbulence for all FP angles flown. For 1% turbulence, had some problem with getting high on G/S during the final phase of the approaches, especially in the 9.5 deg cases. FR was a little more difficult to hold when a lot of power is taken off to get back down.

4. Q -- Was there noticeable control cross coupling? If yes, describe it and how it affected flight path/flight reference control.

   A -- FR moves around quite a lot with FP correcting in 1% turbulence -- especially in the higher angles.

5. Q -- Evaluate throttle sensitivity and thrust margins (up and down).

   A -- OK.

6. Q -- Describe the effects of turbulence level on flight path/flight reference control.

   A -- Workload goes up with turbulence level. Lateral-directional workload increases which results in less pilot performance in FR and FP control. Greater effects of cross coupling increases workload.

7. Q -- Describe the effects of flight path angle on flight path/flight reference control.

   A -- The higher the FP angle, the more difficult the FR is to manage - espe ially in 1% turbulence. Flare window is difficult to hit consistently. Better at the lower angles — more time to make corrections.

8. Q -- Describe the effects of crosswinds on flight path/flight reference control.

   A -- Normal problems expected with crosswinds -- more work for the pilot and the lateral control of this model is not really all that good. Requires a lot of attention to hold headings.

9. Q -- How tightly did you regulate flight path/flight reference and why?

   A -- Most of my attention was on FP but not always held tight. Generally, FP control was tight and FR was allowed to fluctuate between $\pm$ 4 before getting concerned. Pitch attitude is easier to use as reference to assure acceptable FR of 0 $\pm$ 4.

10. Q -- Describe any difficulties in trimming the aircraft.

    A -- Acceptable FR requires the constant retrimming but no difficulties other than workload.

11. Q -- Did you try any deliberate flight reference or flight path abuses? If yes, describe the effects of the abuses on the aircraft characteristics.

    A -- On one of the low angle approaches, the A/C got low on G/S and 100% power would hardly bring it back to level flight for G/S capture from below.

12. Q -- Describe any difficulties in hitting a reasonable flare window.

    A -- Very difficult in turbulence. I really believe that part of the problem is in the turbulence model. There just seems to be too much sink rate problem related to the turbulence and always around the flare window or the TD. Too much side gusts introduced as turbulence which would not be expected without crosswind.

13. Q -- What were the most significant effects of going from VFR to IFR?

A -- The usual workload increase - more lateral-directional control problems. OEI in IFR presents great controllability problems to me. FR suddenly becomes too critical, especially at the lower attitudes (400 ft) and pilot reaction time is a big factor in controllability.

14. Q -- Relative to the approach task, what, in your opinion, would be the major factors influencing whether or not this aircraft could be certified.

A -- Unsatisfactory in approach task for all conditions except 10% turbulence or better.

(Flare and Landing)

Pilot Ratings: Calm Air, OEI = 5
Calm Air, AEO = 4

Turbulence, OEI = 8
Turbulence, AEO = 7

15. Q -- Describe in detail all flare techniques which you tried.

A -- (1) Flare with power after pitch up to 0 -- best for the higher approach paths.

(2) Flare with pitch for the faster approaches worked out OK without much power change.

(3) The lower approach paths required less power change for flare maneuver.

16. Q -- Which technique did you select and why?

A -- Generally, the flare with power gave the best overall performance because the sink rate best controlled with power and the sink rate seems to be the most critical part of flare.

17. Q -- What secondary control action was required for flare? How did this affect your selection of the flare technique?

A -- Pitch was used as secondary means of controlling sink rate. Pitch change without power change for flare would not be adequate to arrest the sink rate.

18. Q -- Evaluate your ability to consistently control touchdown position and sink rate.

A -- Calm air - fair. Turbulence - poor (unsatisfactory).

20. Q -- Describe any problems encountered during OEI flare and landings.

A -- Lateral controllability was bad -- roll rate left and right seemed to be different. Also, could not control TD position.

21. Q -- Describe how flight path abuses affected flare and landing.

A -- No FP abuses made.

22. Q -- Describe how pitch attitude abuses affected flare and landing.

A -- Excessive pitch over just prior to the flare in order to get down on FP caused excessive speed and decreased the sink rate to an unacceptable amount. Definitely not the best way to correct down.

23. Q -- Describe the effects of other off-nominal conditions (e.g., flight reference or power) at the flare window on the flare characteristics.

A -- Many hard landings resulted from misuse of power in flare due to turbulence/shears. Not acceptable.

24. Q -- Did you experience any particularly severe wind shears or turbulence near touchdown? If so, how did these affect the above rating?

A -- Yes. Increased the turbulence ratings by 1.

25. Q -- Relative to flare and landing, what, in your opinion, would be the major factors influencing whether or not this aircraft could be certified.

A -- Sink rate and TD position control is unacceptable in all but calm conditions, assuming 3 fps sink rate at TD and 200 ft TDZ.

8 fps with 500 ft TDZ would be more suitable for this A/C.

(General)

26. Q -- Did the lateral-directional characteristics significantly affect your evaluation? If yes, describe.

A -- Yes. Too much time required for control of track (workload).

27. Q -- Would you certificate this aircraft for all or some of the operational conditions you experienced? If for only some operational conditions, describe the operational restrictions you would impose and explain why.

A -- (1) I would not certificate this A/C for any of the operational conditions I experienced except the approach in <u>calm</u> air with <u>all engines</u>.

(2) Flare and landing in calm unsatisfactory because of consistent sink rate control problem.

(3) None of the conditions are operationally acceptable in turbulence or OEI.

28. Q -- Do you feel you have had sufficient training for this configuration? How confident are you of the above evaluations?

A -- Yes. Enough.

PILOT D

DATE: 12-15 November 1974

PURPOSE: Familiarization

DEVIATIONS FROM BASIC MODEL: Overall Engine Lag Increased by 1 Second

TAPED COMMENTS: 12 November 1974

The instrumentation here, for some reason, is confusing me as far as flight path control and maintaining my reference; I still haven't really sorted it out. Right now the main objection I have is too much pitch activity to stay on flight reference; somehow the sense of the needle was giving me the wrong information. Then I did notice an abuse, especially a high abuse from glide path, to get back on it but there's so much response from a pitch input that it makes the problem of locking onto the glide slope very difficult. You tend to overshoot and you're not in step with power; ended up with a scis[illegible]; action down over the glide slope that finally damped out. Then I'm s[illegible]ot happy with any flare that I've tried yet, I don't have the precision for landing. You have crosswinds -- the thing seems real awkward laterally when you try to hold a sideslip to cancel out the wind in the final stages, it seems like it's kinda' fighting you. I think I was getting that damped out but it's still not a very good feeling airplane I'd say the response to power on glide path is pretty close to minimal. Stress in the flare is trying to hold recommended level attitude, stop sink with power, a[illegible] doesn't work out too well. It finally takes a little bit of increase[illegible] attitude and I think you can finally get that point worked out.

TAPED COMMENTS: 13 November 1974

I'm still not really happy with the way the thing flies and I think I'll get it sorted out. But the main problem is the vast amount of pitch change you have to do here to keep the reference anywhere near happy. And it seems like I still am getting some bothersome cues, especially close in from making a pitch change. It looks like it does affect flight path angle momentarily. Guess I'm still kinda' wondering what it really needs, what stops the sink rate. So what I initially started doing was a mechanical input -- a little bit of thrust; I think gradually I'm getting the work down, but I don't think I'm ever going to get really consistent in landing. The lateral task in this thing is really awkward and I think some of this is complicated by the Redifon. I know we are still getting some y glitches

but it looks like the best technique is to decrab really early, at least I'm working on it. Looks like I cross about 100 ft before I ever get lined up pretty good and then you have to keep working on it the whole way down.

TAPED COMMENTS: 14 November 1974

The familiarization approaches and landings in relatively calm air are getting to where they are fairly easy to do and I think some consistency in the landings -- I'm still not happy with touchdown. At least I'm starting to get some consistency in the calm air but in turbulence the thing just really degrades. The degradation was with the wind on the nose, and then there's one more increment when you go to crosswind landings that just compounds it. And generally this thing is lacking in down response to power. You have to carry the power in turbulence at an uncomfortably low level most of the time and that gives you a pretty uncomfortable nose-down attitude. But it doesn't respond like I like it to -- it takes too long. This may be the sky scene problem.

For the engine failures, they're extremely subtle as far as feel or perturbation of the airplane. The only way you can notice it is if you're looking at your flight reference indicator - it's real power up there. So that the thing to do up there is to instantly get that back to where it's supposed to be, namely zero. And then the most bothersome thing from then on is taking care of the lateral misstrim, I was doing it in that kind of order. When I first push over I stuck in a little but of nose-down trim and then took care of the rest with the lateral trim. And the 300 ft engine cuts - you don't seem to have enough time to really get everything stabilized and trimmed up before you hit the ground.

WRITTEN COMMENTS: 15 November 1974 Pilot Evaluation Form

(Approach)

Pilot Ratings: Calm Air = 2
Turbulence = 4

1. Q -- Describe the technique you used to make flight path corrections.

   A -- Predominantly power with pitch follow up. The pitch change seems to follow power change naturally, i.e., power off, nose down and vice versa.

2. Q -- Describe the technique you used to make flight reference corrections.

   A -- Pitch attitude, after the natural tendency described in (1). A pilot input is required in a natural manner, i.e., some push for power off and vice versa, but the attitude change (degrees) is undesirably large.

3. Q -- Describe any difficulties you had in making flight path or flight reference corrections.

   A -- Down γ is very difficult in turbulence, barely adequate in calm. Takes almost flight idle in many cases and a very uncomfortable nose down attitude for flight reference. Up seems adequate, but response for up or down is too slow.

4. Q -- Was there noticeable control cross coupling? If yes, describe it and how it affected flight path/flight reference control.

   A -- Seems to be a slight coupling between pitch and power (see 1.). Complements flight reference control but complicates flight path control because initial response is misleading, i.e., seems to produce good correction but doesn't unless power change follows.

5. Q -- Evaluate throttle sensitivity and thrust margins (up and down).

   A -- Throttle sensitivity is barely adequate (or maybe inadequate) with respect to flight path change. Up is better than down.

6. Q -- Describe the effects of turbulence level on flight path/flight reference control.

   A -- Down control is degraded, gets marginal regarding flight path. Flight reference oscillates about aim but is not troublesome.

7. Q -- Describe the effects of flight path angle on flight path/flight reference control.

   A -- Less wind makes down control approach marginal.

8. Q -- Describe the effects of crosswinds on flight path/flight reference control.

   A -- I had trouble with flight path during decrab. May have been visual simulation problem. No problem with FR.

9. Q -- How tightly did you regulate flight path/flight reference and why?

   A -- Flight path looser than I like due to poor power response, especially down. Flight reference -- I keep pretty tight with objectionable pitch attitude.

10. Q -- Describe any difficulties in trimming the aircraft.

A -- OEI lateral trim is difficult. Seems indefinite(.). Longitudinal trim not too bad. Seems to be lateral limited on OEI FR.

11. Q -- Did you try any deliberate flight reference or flight path abuses? If yes, describe the effects of the abuses on the aircraft characteristics.

A -- Tried high and low FP abuses and high and low speed abuses. High path difficult due to poor down capability. High speed makes FP easier but complicates landing due to float.

12. Q -- Describe any difficulties in hitting a reasonable flare window.

A -- High speed at window worst case.

13. Q -- What were the most significant effects of going from VFR to IFR?

A -- IFR confusing due to conflicting(?) information; FR nose up versus FP fly down, etc. Smoothed out with practice.

14. Q -- Relative to the approach task, what, in your opinion, would be the major factors influencing whether or not this aircraft could be certified.

A -- (1) Marginal FP control, especially down.

(2) Excessive pitch attitude manipulation for FR control.

(Flare and Landing)

Pilot Ratings: Calm Air = 5

Turbulence = 7.5

15. Q -- Describe in detail all flare techniques which you tried.

A -- Task was to obtain consistent 3 fps TD in zone. Got zone OK but couldn't get less than about 6 fps TD consistent. Used "recommended" technique of flare to level pitch at about 50 ft and modulate power to TD. Often made "panic" pitch up to 3 deg to 6 deg nose up just before TD.

16. Q -- Which technique did you select and why?

A -- Just used "recommended". Didn't like effect on FP of "open loop" pitch change. Gives an instantaneous "up" FP which then complicated the power task. Consistently came in late with power.

17. Q -- What secondary control action was required for flare? How did this affect your selection of the flare technique?

A -- Manipulate elevator to maintain pitch attitude. Seemed OK.

18. Q -- Evaluate your ability to consistently control touchdown position and sink rate.

A -- Unacceptable due to workload. On max thrust "stops" often. Seldom "blew" engines due to lags.

20. Q -- Describe any problems encountered during OEI flare and landings.

A -- Limited lateral control.

21. Q -- Describe how flight path abuses affected flare and landing.

A -- High. Fast. Very hard.

22. Q -- Describe how pitch attitude abuses affect flare and landing.

A -- Panic nose up inputs seemed to salvage landings.

23. Q -- Describe the effects of other off-nominal conditions (e.g., flight reference or power) at the flare window on the flare characteristics.

A -- High - Fast — unacceptable. Low - Slow — OK.

24. Q -- Did you experience any particularly severe wind shears or turbulence near touchdown? If so, how did these affect the above rating?

A -- Very hard to offset shears, apparently due to thrust lag.

25. Q -- Relative to flare and landing, what, in your opinion, would be the major factors influencing whether or not this aircraft could be certified.

A -- Hard to control $\dot{h}$ due to lags.

(General)

26. Q -- Did the lateral-directional characteristics significantly affect your evaluation? If yes, describe.

A -- AEO lat/dir complicates longitudinal task.

OEI lat/dir limited to landing.

27. Q -- Would you certificate this aircraft for all or some of the operational conditions you experienced? If for only some operational conditions, describe the operational restrictions you would impose and explain why.

A -- No. Too hard to control $\dot{h}$.

28. Q -- Do you feel you have had sufficient training for this configuration? How confident are you of the above evaluations?

A -- Yes. Pretty confident.

PILOT D

DATE:	18 November 1974
PURPOSE:	Airworthiness Evaluation
DEVIATIONS FROM BASIC MODEL:	Overall engine lag increased by 1 second
TAPED COMMENTS:	18 November 1974

I think the first thing I tried was like a 7.5 deg electronic slope with a 9.5 deg aerodynamic. That really isn't too tough; through the IFR portion it seems to be easier to hold a higher sink rate and get the IFR part over with. When you burst out VFR it doesn't look too horrible to me, the picture you get of the ground. Then it seemed like I was able to make the airplane do pretty much what I wanted and as you progressively lower the slope, both electronically and aerodynamically (the aerodynamic 3 is an electronic 6) was really a γ and that didn't seem too bad, except maybe having the power up pretty high. I guess I would say, generally, the flat slopes are the hardest because of the ridiculously low sink rate and the turbulence is actually cancelling out your sink rate so it keeps you pretty busy on the throttles. I guess the easiest of the shallow slopes was a 6 deg electronic with a 3 deg aerodynamic. Everything seemed to be right on that even though it was a slow sink rate. But the 3 deg electronic with a 3 deg aerodynamic is very difficult. You're up at pretty high power settings. As I said, if I would have done it again, I wouldn't even have tried to flare; I did try to but I don't think I should have. And that complicated it because the thing wanted to float and the next thing I had to pull off the power and that's why I had the hard landing, hard and long.

OK, with the 6 and 6, that was with no wind, just turbulence. The thing I noticed about that was it was quite difficult to maintain a more or less constant sink rate. I usually try to keep a sink rate in a kind of a band. There was quite a bit of throttle movement to try to stabilize it in the IFR portion. Once it was VFR, it didn't seem too bad. You can see the sink rate pretty good from the picture; I didn't see too much trouble to latch onto it. The ground speed was not troublesome. I think with these things I'm sort of glad to get them over with so I'm glad it's going faster.

In the 2 deg glide slope, the biggest problem there was once you burst out VFR was to see the runway, so what I did I just stayed on the instruments and on down to about 100 ft. I was closer in then; I could see the runway. Again, it seemed like everything was swept together -- control and sink rate and all of that; and I did go ahead and do what I thought I would do and that was not flare, just drill it right on in and I was kinda' surprised

at the sink rate on that, it was something like 7 fps. I guess I really thought it would be a little less than that. And again, the ground speed was no particular problem, for some reason, it might be the way of looking at the runway.

The 1% turbulence is worse than the 10% turbulence, I guess that's my first observation. The net effect on flying the thing is that it just magnifies the difficulty of all the jobs. I guess the worst thing I've noticed is the little power you have to carry a pretty high percent of the time to stay on the path. This last one I just flew with almost a direct crosswind and no headwind – is a real tuffy from that standpoint; you have to really be back in flight idle.

Let's see, I think we did fly a flat slope in this turbulence, what I don't understand is what a difficult tracking it became because it seems that pretty gross inputs of directional when you're IFR and then when we broke out it was lateral-directional --- it was weird. I was up against the stops, at least with the ailerons.

WRITTEN COMMENTS: 18 November 1974 Pilot Evaluation Form

(Approach)

Pilot Ratings: Calm Air = 3 (not a 2 because of FR display)

10% Turbulence = 4 (10% isn't routine)

1% Turbulence = 5

1. Q -- Describe the technique you used to make flight path corrections.

   A -- Power. Note: on the flatter approaches, ignored IVSI angle because it was over-reactive at low R/D (too many climb indications).

2. Q -- Describe the technique you used to make flight reference corrections.

   A -- Normal technique for me — which includes δ_T for long term FR corrections, mainly (solely) θ for short term.

3. Q -- Describe any difficulties you had in making flight path or flight reference corrections.

   A -- Shallow γ's ran out of δ_T, not enough up. Steeper γ's didn't like required θ changes to hold FR.

4. Q -- Was there noticeable control cross coupling? If yes, describe it and how it affected flight path/flight reference control.

   A -- Favorable coupling. Pull δ_T nose goes down but not quite enough. Fairly comfortable.

5. Q -- Evaluate throttle sensitivity and thrust margins (up and down).

   A -- Throttle has marginal lag all the time. Up margin is marginal in shallow approaches.

6. Q -- Describe the effects of turbulence level on flight path/flight reference control.

   A -- The 1% turbulence caused acceptance of increased excursions in FR, but there was really no profound effect in the task. Biggest problem was lateral in 10 and 1%, but it was worse in 1%.

7. Q -- Describe the effects of flight path angle on flight path/flight reference control.

   A -- The steeper you get, the easier it is. On flat approach, you have a hard time with up. Down is still marginal for steep, but for flat -- felt that down required too much PLA change to get a correction. See 3.

8. Q -- Describe the effects of crosswinds on flight path/flight reference control.

   A -- The visual decrab is the ball game. It took more of everything during flatter γ's. Difference between 10% and 1% was not as profound as steep to shallow.

9. Q -- How tightly did you regulate flight path/flight reference and why?

   A -- FR — 10% +2, -4 deg; 1% +3, -5 deg with excursions to +5 and -10 deg.

   γ — Emphasized γ during shallow approaches (see 1). Tried to correct for 1/4 dot but saw 1 dot or more.

10. Q -- Describe any difficulties in trimming the aircraft.

    A -- None. Didn't notice mistrim during engine failure. Have had problems in the past — may not have noticed during this flight due to workload.

11. Q -- Did you try any deliberate flight reference or flight path abuses? If yes, describe the effects of the abuses on the aircraft characteristics.

    A -- Are you kidding?

12. Q -- Describe any difficulties in hitting a reasonable flare window.

    A -- Are you kidding. See items 1 through 10. Lateral workload hardest. Always felt like the situation was in hand, but lateral was the hardest to control.

13. Q -- What were the most significant effects of going from VFR to IFR?

A -- There's something hard to sort out here - lateral workload was heavy during both - but more believable VFR. VFR things smoother, I think maybe an instrument problem. See 29. Visual decrab more difficult during flatter approaches.

14. Q -- Relative to the approach task, what, in your opinion, would be the major factors influencing whether or not this aircraft could be certified.

A -- Lateral workload too severe. Could be certificated both 1 and 10%, possibly even with lateral workload.

(Flare and Landing)

Pilot Ratings: Calm Air = 3

10% Turbulence = 3

1% Turbulence = 5

15. Q -- Describe in detail all flare techniques which you tried.

A -- Level θ, add δ_T. Sometimes added δ_T but didn't get it prior to TD. On two approaches, didn't know what to do with δ_T. Will forgive the beast for that because this happens on CTOL.

16. Q -- Which technique did you select and why?

A -- See 15.

17. Q -- What secondary control action was required for flare? How did this affect your selection of the flare technique?

A -- Level θ required, but when a high sink was developing, would go as high as 5 deg.

18. Q -- Evaluate your ability to consistently control touchdown position and sink rate.

A -- Obviously 3 fps is unrealistic. To me, the biggest problem is the visual cue when θ is added to level. I feel I cannot slow $\dot{h}$ any more than 4 - 4 1/2, no way, but I can control it. Control is the key -- not performance.

19. Q -- Describe any problems encountered during balked landings.

A -- Couldn't get the co-pilot to put the flaps up.

20. Q -- Describe any problems encountered during OEI flare and landings.

A -- First cue was huge lateral jump. Got the stick shaker which made me dump the nose. Landing could have been very controllable without the ≈ 1000 ft lateral jump. World slipped sideways. See 29.

21. Q -- Describe how flight path abuses affected flare and landing.

A -- Shallow operational γ left very little δ_T for flare (actually it was quite controllable), so did not flare, just flew it in.

22. Q -- Describe how pitch attitude abuses affected flare and landing.

A -- Didn't deliberately abuse — but result of unintentional abuse effects are obvious. Last minute abuse (+ θ) can salvage a bad situation.

23. Q -- Describe the effect of other off-nominal conditions (e.g., flight reference or power) at the flare window on the flare characteristics.

A -- Should be careful to keep FR on. Has become an important part of action due to seeing effect of -5 deg FR the other day.

24. Q -- Did you experience any particularly severe wind shears or turbulence near touchdown? If so, how did these affect the above rating?

A -- Are you kidding? Had several. Very hard to control TD point more than $\dot{h}$, the computing of $\dot{h}$ wiped out distance.

25. Q -- Relative to flare and landing, what, in your opinion, would be the major factors influencing whether or not this aircraft could be certified.

A -- Control of TD, $\dot{h}$, and x. More control than performance. Felt like I could control it but if I didn't it was my fault. Am willing to forgive A/C on this point. It was trying to tell me I was wrong but I don't think I responded right. I may not forgive it later.

(General)

26. Q -- Did the lateral-directional characteristics significantly affect your evaluation? If yes, describe.

A -- [Pilot makes strong comment to the affirmative] See 29.

27. Q -- Would you certificate this aircraft for all or some of the operational conditions you experienced? If for only some operational conditions, describe the operational restrictions you would impose and explain why.

A -- Yes, but it's a pretty good handle on the minimum. Shallow γ marginal in up but OK for approach; not so good for landing. Both steep and shallow γ's had a down problem. Shallow because you don't know how much to take off and steep because at idle it was hard to recapture.

28. Q -- Do you feel you have had sufficient training for this configuration? How confident are you of the above evaluations?

A -- Yes. Confident.

29. Q -- Any additional comments?

A -- I strongly feel that there was either or both a localizer or visual lateral problem. Lateral workload during all approaches bordered on intense. There seems to be a glitch (in y) tied to rudder. Was on the lateral stops a very significant amount of the time.

PILOT D

DATE: 19 November 1974

PURPOSE: Modification of flare technique and response

DEVIATION FROM BASIC MODEL: ---

TAPED COMMENTS: 19 November 1974

I really don't think I have the total difference between the no-flare and the way we've been flying it all along. I think I'm probably misunderstanding somewhere. But as I see it, what we're hoping for in this no-flare thing is to have everything set up right at a very low window, like 50 ft off the ground; that is, have the power at optimum, the reference at optimum; attitude; and everything. Then rotate the nose level and accept the landing that follows with the GPI being closer in like this, you know you're going to hit in the zone and you don't much worry about the impact. In order to do this, I'm kind of abandoning the throttles -- it's lousing me up, that is, I'll stop manipulating them, attempt to have things at optimum at 50 ft. So, in my opinion, the other way, which is manipulating the throttles until you hit the zone, is more satisfactory. That's what I see so far.

The flare with attitude looks pretty darned consistent to me. Nice control with sink rate. I was manipulating power a little bit this last run, I added power on account of I was real high on the path just prior to the time a wind or some kind of up...but so far this looks pretty precise as long as you don't lose sight of the runway so what I'm doing is flaring until I can still make out the runway and still get some kind of h cues of whether to go on in. Due to better engine responses, I guess quicker response, it's almost too good. I felt myself get more than I wanted and having to fine-tune it. I really think this is an improvement over the slow landing. It might not be that this is the exact lag you want, looks like the better response is in the right direction.

That last change, whatever it was, I don't think was any improvement. To me it was still a little worse than the baseline by itself. It was a funny situation where small throttle inputs were giving you big effects too late. So I was making small adjustments, again, a big output, but it seemed to take a long time. So it got me where I didn't want to monkey with the power down close to the flare. To me it seemed a little worse than the base airplane, I guess.

PILOT D

DATE: 21 November 1974

PURPOSE: Airworthiness Evaluation

DEVIATION FROM BASIC MODEL: Flight condition at FR = -4 units

TAPED COMMENTS: 21 November 1974

This airplane, with the 4 deg nose-down reference reset to zero is, I think, just about optimum condition for...it's, I say, at least one number better than the basic airplane in that the picture added to it that I see from this condition (this is approaching the flare) is just off what I like. I still am pushing over a little bit more. I was getting fast and it's right close to what I like to start the flare but I think I didn't draw much from that basic airplane. And the control to touchdown, to me, is right in there. Just about what I like. The way I've been doing it is flare to what I thought was a level attitude and then applying power the rest of the way.

WRITTEN COMMENTS: 21 November 1974 Pilot Evaluation Form

(Approach)

Pilot Ratings: Calm Air = 2
Turbulence = 3

1. Q -- Describe the technique you used to make flight path corrections.

   A -- Power.

2. Q -- Describe the technique you used to make flight reference corrections.

   A -- Pitch and power. Any power change seems to cause a pitching moment in the proper direction and it's very easy to follow up.

3. Q -- Describe any difficulties you had in making flight path or flight reference corrections.

   A -- Very acceptable.

4. Q -- Was there noticeable control cross coupling? If yes, describe it and how it affected flight path/flight reference control.

   A -- Lots of pitch coupling for FR control but it is sensible in feel and pitch naturally follows power (see 2). This case of higher speed makes aim reference control easier.

5. Q -- Evaluate throttle sensitivity and thrust margins (up and down).

   A -- Up - good; down - minimum acceptable, sensitivity - minimum acceptable.

6. Q -- Describe the effects of turbulence level on flight path/flight reference control.

   A -- At the higher speed in this case FR control (aim) is easier.

7. Q -- Describe the effects of flight path angle on flight path/flight reference control.

   A -- None noticed.

8. Q -- Describe the effects of crosswinds on flight path/flight reference control.

   A -- No adverse effect.

9. Q -- How tightly did you regulate flight path/flight reference and why?

   A -- $\pm$ 2 units -- excursions to 5 or 6.

10. Q -- Describe any difficulties in trimming the aircraft.

    A -- None.

11. Q -- Did you try any deliberate flight reference or flight path abuses? If yes, describe the effects of the abuses on the aircraft characteristics.

    A -- One dot high FP abuse from 500 ft I.C. with 1% turbulence -- no problem. No FR abuse.

12. Q -- Describe any difficulties in hitting a reasonable flare window.

    A -- Very acceptable.

13. Q -- What were the most significant effects of going from VFR to IFR?

    A -- Lateral-directional task is easier.

14. Q -- Relative to the approach task, what, in your opinion, would be the major factors influencing whether or not this aircraft could be certified.

A -- Lateral-directional workload.

(Flare and Landing)

Pilot Ratings: Calm Air = 3

Turbulence = 4

15. Q -- Describe in detail all flare techniques which you tried.

A -- Just used recommended technique of pitch to $\theta = 0$ deg and control $\dot{x}$ and $\dot{h}$ with power. This airplane was very easy to control with precision except that the attitude which looked level to me relative to runway was 4 deg nose down. If this was not a visual simulation problem.

16. Q -- Which technique did you select and why?

A -- See 15.

17. Q -- What secondary control action was required for flare? How did this affect your selection of the flare technique?

A -- Modulate elevator control to maintain level attitude.

18. Q -- Evaluate your ability to consistently control touchdown position and sink rate.

A -- Good.

21. Q -- Describe how flight path abuses affected flare and landing.

A -- Adequate control.

22. Q -- Describe how pitch attitude abuses affected flare and landing.

A -- If I didn't have a visual problem -- this airplane lands nicely with a nose low abuse.

23. Q -- Describe the effects of other off-nominal conditions (e.g., flight reference or power) at the flare window on the flare characteristics.

A -- Not bad.

24. Q -- Did you experience any particularly severe wind shears or turbulence near touchdown? If so, how did these affect the above rating?

A -- Good control.

25. Q -- Relative to flare and landing, what, in your opinion, would be the major factors influencing whether or not this aircraft could be certified.

A -- Probably GPI for ILS.

(General)

26. Q -- Did the lateral-directional characteristics significantly affect your evaluation? If yes, describe.

A -- Yes. Hardest task.

27. Q -- Would you certificate this aircraft for all or some of the operational conditions you experienced? If for only some operational conditions, describe the operational restrictions you would impose and explain why.

A -- Yes. Possibly GPI, touchdown geometry.

28. Q -- Do you feel you have had sufficient training for this configuration? How confident are you of the above evaluations?

A -- Yes. Good.

29. Q -- Any additional comments?

A -- I like the relationship of θ deg to FR deg at this speed at aim, or trim conditions. The FR and pitch attitude seem harmonious, almost 1 for 1 in changing. Also, the pitch attitude relative to FP seems good too, i.e., going where I'm looking!

PILOT D

DATE: 20, 22 November 1974

PURPOSE: Modification of Flight Path/Flight Reference Cross Coupling

DEVIATIONS FROM BASIC MODEL: ---

TAPED COMMENTS: 20 November 1974

Flying with this mechanization as a reference is much easier. It's quite smooth. To me it seemed like we did have adequate warning of being out of the good zone when you're off reference. I don't think that you could easily abuse it just by flying any reasonable glide path from a loop. So, so far I'm pretty impressed with it. I do have one reservation, we're going to talk about it later on. But, so far I like it.

In my opinion, this flight reference we've got here with the angle of attack logic in it, that, with it jittering around, I don't know whether you can say it's difficult to fly, it's certainly less; it's nicest with the other mechanization that you have a steady needle. I prefer the steady needle myself. I don't think I'm working any harder one way or the other but I like the readout on the other one and it didn't seem to lead you into any bad problems unless you worked at it so, I'd say that it was pretty nice.

OK, pitch stabilization here, attitude command, does make the tracking job easier and I guess I can't notice all that much difference in the flare. It might be just a little bit harder in the flare. The tracking is easier and I don't notice any real bad effects on the flare.

TAPED COMMENTS: 22 November 1974

With this DLC...I don't like the first response you get out of it. I find myself tracking the glide slope and I'm constantly moving the throttle; I've gotten to where I'm making an input and then backing off slightly to keep the IVSI just anywhere near comfortable; it's constantly in motion even at that. After the flare and landing, it was pretty much the same thing. You get what seems to me...overdoes the initial response, which makes it pretty easy to stop the $\dot{h}$, but it sure makes it tough for x because I find myself just kinda' modulating throttle all the way down to touchdown. I usually pitch into too much power, that's why I landed long.

This may be more in learning, but my first impression of this thing is that I don't like it too well. With this attitude-hold stabilization it seems to be quite helpful in the IFR and has a very small workload as far as pitch. But it seems like the problems begin when you get VFR, I can't get my aim attitude, whether it's right or wrong. I had an aim attitude in mind so I just sat back and made aim attitude and the first one was most noticeable, the second one I decided to just accept what attitude I ended up with and that does smooth it out a little bit. (I'm talking about the flare.) This last one, I was doing the same thing, and it got me behind on the coming in with power.

OK, this configuration definitely simplifies the glide path tracking and I guess it probably didn't...I'm not so sure whether it improved performance on localizer in getting more time and it was nice during the approach to the flare. It's still on the 6 deg slope there and it's kind of nice to know that things take care of the reference. But the fun begins at the flare because it's definitely fighting you. Again, it's just a hard time to stabilize on a nice attitude, get everything swept together each time.

OK, this configuration, with no initial pitch with change of power, isn't too bothersome at all, especially IFR. It does get a little bothersome VFR because there's nothing telling you what's happening and that your reference in this one has a real different feel than the other way. The first thing, I just kinda' felt like I was in the dark and that resulted in my tending to get myself fast, trying to pick an attitude that I knew was pretty good, which usually turned out to be fast. But once you get to where you feel like you're OK with the level attitude, it wasn't all that bad and it's pretty easy to get into that level attitude.

The pitching moment due to power change with this is noticeable and it seems obviously stronger to me than the base airplane, and that the throttle does overdo it. It will overshoot your nominal attitude for maintaining aim reference. I guess what was happening to me was I was setting myself up for a high error and consequently had to come back on the power, which means the thing would try to pitch over and it would tend to just go too far, usually. I was getting the reference back to where I was supposed to be and I still couldn't get down, I don't understand that at all. It does seem like more of a workload to get to your aim with it, this particular initial response, as compared to the basic airplane that is.

OK, that first one engine inoperative we entered at a higher reference. Since I didn't have a reference to look at, I guess, I got slow going and definitely ran out of lateral control. And the second one, apparently the reference worked and at that higher speed, control is adequate, just barely, I'd say in the latter stages of the flare. What it looks like with the slowing down, you're doing it just before touching the ground. That's kinda' critical. There's just no adequate touchdown. Not too surprised with the up I got out of the thing after it failed, I just stuffed in max power, probably overdid it as a matter of fact, and as I was getting high in speed, I almost ran it back through the glide path.

PILOT D

DATE: 26 November 1974

PURPOSE: Demonstration of Margins

DEVIATIONS FROM BASIC MODELS: ---

TAPED COMMENTS: 26 November 1974

We just tried the proposed demonstration from a maneuver margin, which is a 30 deg bank and stabilize on pitch sink rate; and with secondary control pitched...increase the load factor to the stick shaker; and it wasn't such a bad maneuver as I had envisioned it to be. Apparently we all expected something horrible but it looks like you can pull this thing off. I don't know what it's proving, but it might tell something.

OK, I'm at V_{MC} and it's the static V_{MC} backing into it that was pretty obvious. It looked like it was about, I guess, at 60 or a little above 60 based on one of the things prior to go. But the interesting thing is as you back into it, this wheel is more and more displaced. We never did reach the stops. That's a significant thing, we weren't getting any response from it. There are the nonlinearities that are bothersome, which are apparently due to SAS saturation and chances are you could get real low in there and if you went to the stops...

OK, we tracked a V_{MC} static with increased SAS authority ($\pm$ 30 deg) and I guess it did lower V_{MC} about 1 kt and it did enable you to get in, enabled me anyway, to get in full control whereas with the normal SAS authority I seemed to lose it at some point before full throw, and this occurred somewhere around 64 kt. A satisfactory roll rate at 60 kt, right around 60 kt it was shown real marginal, with only 1 kt above V_{MC}. Then we tried it SAS off and I immediately got a dutch roll oscillation going and I knew that I couldn't sort that one out. So, I guess it tells you the SAS was helpful in that situation.

You get the feeling you've got too much power on going into the flare and I'm actually reducing a little bit and it looks like that's not the answer.

OK, it looks like for this attitude situation that might be handy but...I'm going to worry about it a bit more before I answer.

Yeh, you know you've got too much power and you know you're going to float but you don't know what power level to reach for, so I think on that one, I finally stabilized on an attitude and then I played with the power a little bit. I suspected it was going to be firm.

Yeh, that's getting up towards more severities. When you get into that problem you don't know what to do with power.

PILOT E

DATE:	26, 27 November 1974
PURPOSE:	Familiarization
DEVIATIONS FROM BASIC MODEL:	None
TAPED COMMENTS:	26 November 1974

First exposure to the aircraft - I just completed two familiarization approaches, here. The initial impression is the very hard task of maintaining attitude. As far as the power to flight path reference coupling there didn't seem to be any problem there. It's in a proverse sense. Flares have been no problem. I noticed we were approaching fairly slowly. There was a headwind in these approaches which lowers the forward speed even more. Yes, I had a very low sink rate. I feel that there's plenty of time in the flare. On the first flare I unconsciously used attitude to flare and it came in with a little bit of power but a very nice landing. I think on the second one I tried to do it strictly by power but I was groping a little bit more on that one.

I've made several more approaches and landings now and I think I've gotten at least some degree of familiarity with the pitch control now. It used to be a problem although it's certainly not a desirable system. The flaring with power, it was pointed out to me, I was using quite a bit of attitude. If you flare with power at the speeds we were coming in, everything happens so slow that it seems you have plenty of time but it does feel a littl bit open loop. No control column input is required at all. When you add power, the pitching moment with power brings up the nose just about the right amount. Charlie asked whether the reference is easy to follow for glide slope tracking. And I think that it's...I call it proverse coupling between the power and the flight reference. It also has proverse coupling on the attitude, that is, as you move the throttles, the attitude goes in the right direction at about the right amount so that no trimming is required, and also it's natural in the sense that if you want to come down you lower the nose. In summary, then, I think we covered the glide slope tracking pretty well. In the crosswinds I think the thing that was most noticeable was the lack of apparent side force on the fuselage, that is, once you got the fuselage aligned with the runway, it took very little wing down to maintain zero sideslip. I'm still having a little trouble with the flare with power only, it's pretty hard to get out of that. Switching in the turbulence from 1.5 RMS to 4.5 RMS increases the workload significantly and the runway dispersions; but for the conditions we looked at tonight, the airplane seems pretty reasonable, I think.

TAPED COMMENTS: 27 November 1974

This is my second night - the night before Thanksgiving. We just made a few initial runs here, with the very light winds and light crosswinds... I'll just reaffirm what I said last night; nothing new, I'm still having problems using power only for flare.

I could make some comments on the tape for the turbulence runs we've done so far. The turbulence certainly does increase the workload. It looks like adequate performance is, you know, not too bad to hit as long as you're willing to accept a go-around occasionally. I think in real-life situations, you might have a few less go-arounds than I would tend to have in a simulator. I think you'd pick up the cues a little faster.

Comments on the IFR tracking down to 200 - 300 ft with landings with the 10% turbulence: pretty hairy workload -- the glide slope tracking isn't too bad, except down to breakout -- it's pretty hard to develop a fairly high frequency on the glide slope tracking so you tend to end up just a little bit off without really enough time to get set up comfortably again to complete the landing.

I'm going to make some comments on my initial impressions on the engine out stuff. The main problem is the lateral upset, well, there's not really the lateral upset, the lateral upset isn't so bad but it's the lateral forces to hold it. And then the process of retrimming it seems to be the only real task and it looks like it's going to be a problem if you have a low altitude failure -- you'll be fighting the very heavy wheel forces or trying to retrim. It keeps you too busy to try and do anything else. Once you get there, there's plenty of control authority. We tried an approach with a 30 deg bank angle into the dead engine and there was no problem. There appears to be plenty of performance; looks like about 97% holds it on the glide slope... 96 or 97 on the remaining three engines. It looks like maybe with some lighter forces on the wheel it would be a little easier situation to handle.

This is some more comments on the engine out stuff. As I mentioned earlier, the main problem is the wheel force and the difficulty to make small inputs for controlling the aircraft about the heavy wheel input. This requires that you retrim the airplane. Initially I was having a heck of a time retrimming the airplane but as we've made more runs, I've learned, in an open-loop sense, how much trim to put in and this cuts down on the amount of time to retrim. I feel this a little bit unfair because, in an actual engine-out case, it's going to be a while since you practiced one and you won't be able to retrim the airplane quite as fast; and I suggest we lower the wheel gradient here such that the wheel force to hold the unbalanced moment without retrimming is low enough that you can still make small inputs about it.

We just had two failures at 200 ft altitude and this brought up another problem area with engine-out cases that I hadn't really picked up at the higher altitudes; and that is that if you want to arrest the sink rate to get the performance out of the vehicle you've got to get the nose down and at those lower altitudes it's a little harder to push the nose over. I'm going to try one at 100 ft now.

OK, we had a couple of failures at 100 ft there and it's going to take a lot more practice for me to get so I can catch those. I think it's an unacceptable situation. You could learn to do it, perhaps. It looks like the basic performance is there but it looks like, in this situation, you either need a lot more power so you can get a positive climb gradient or you need to approach at the faster speed such that when you lose the engine you don't have to accelerate.

OK, this is Gordon Hardy with concluding remarks on the night before Thanksgiving. We tried two runs there, doing what I had suggested, approaching at the speed necessary so that when you lose the engine the flight reference goes to its correct value for an engine-out situation. That makes all the difference in the world.

WRITTEN COMMENTS: 27 November 1974 Pilot Evaluation Form

(Approach)

Pilot Ratings: Calm Air = 4.5

Turbulence = 6.5

1. Q -- Describe the technique you used to make flight path corrections.

   A -- $\delta_T \longrightarrow \dot{h}$. Let pitching moment with δ_T control α.

2. Q -- Describe the technique you used to make flight reference corrections.

   A -- See (1).

3. Q -- Describe any difficulties you had in making flight path or flight reference corrections.

   A -- No trouble VFR. IFR (not too many runs), I felt like I couldn't keep the G/S tracking frequency high enough to break out close enough for a reasonable approach and landing (with turbulence).

4. Q -- Was there noticeable control coupling? If yes, describe it and how it affected flight path/flight reference control.

   A -- Yes, have to pitch down for downward correction. This is natural and aided by thrust pitching moment. No large effect.

5. Q -- Evaluate throttle sensitivity and thrust margins (up and down).

   A -- OK AEO. Marginal to inadequate for OEI. Throttle sensitivity OK.

6. Q -- Describe the effects of turbulence level on flight path/flight reference control.

   A -- Significant increase in workload.

8. Q -- Describe the effects of crosswinds on flight path/flight reference control.

   A -- Insignificant.

9. Q -- How tightly did you regulate flight path/flight reference and why?

   A -- Fairly loosely to keep the workload down.

10. Q -- Describe any difficulties in trimming the aircraft.

    A -- Insignificant.

12. Q -- Describe any difficulties in hitting a reasonable flare window.

    A -- See (3).

13. Q -- What were the most significant effects of going from VFR to IFR?

    A -- See (3).

14. Q -- Relative to the approach task, what, in your opinion, would be the major factors influencing whether or not this aircraft could be certified.

    A -- I feel that a Flight Director might be mandatory for the IFR task simulated. This would ensure arriving at a suitable window for VFR landing.

(Flare and Landing)

Pilot Ratings: Calm Air = 4

Turbulence = 6.5 - 7.0

15. Q -- Describe in detail all flare techniques which you tried.

    A -- (1) Rotate to level and add power simultaneously to arrest sink rate.

    (2) Add power and rotate to arrest sink rate.

16. Q -- Which technique did you select and why?

A -- (15.1). Like (15.2) best but want to give (15.1) a fair try.

17. Q -- What secondary control action was required for flare? How did this affect your selection of the flare technique?

A -- See (15).

18. Q -- Evaluate your ability to consistently control touchdown position and sink rate.

A -- Pretty good except in 10% turbulence where wind shears are too high a frequency to cope with.

19. Q -- Describe any problems encountered during balked landings.

A -- Won't climb.

20. Q -- Describe any problems encountered during OEI flare and landings.

A -- No problem with flare and landing if set up on flight reference and glide slope. Had a problem getting flight reference with low altitude failures.

23. Q -- Describe the effects of other off-nominal conditions (e.g., flight reference or power) at the flare window on the flare characteristics.

A -- Fairly sensitive to power.

24. Q -- Did you experience any particularly severe wind shears or turbulence near touchdown? If so, how did these affect the above rating?

A -- Yes. Strongly.

25. Q -- Relative to flare and landing, what, in your opinion, would be the major factors influencing whether or not this aircraft could be certified.

A -- Must approach faster to give some Δn with θ or have a higher frequency throttle.

(General)

26. Q -- Did the lateral-directional characteristics significantly affect your evaluation? If yes, describe.

A -- No.

27. Q -- Would you certificate this aircraft for all or some of the operational conditions you experienced? If for only some operational conditions, describe the operational restrictions you would impose and explain why.

A -- No. See the last comment in each of the proceeding sections.

28. Q -- Do you feel you have had sufficient training for this configuration? How confident are you of the above evaluations?

A -- More IFR tracking might be beneficial. Fairly confident of landing evaluations.

PILOT E

DATE:	3 December 1974
PURPOSE:	Airworthiness Evaluation
DEVIATIONS FROM BASIC MODEL:	None
TAPED COMMENTS:	3 December 1974

Here's a table of the previous works' evaluation; it's my first night since...well, it's been five nights since my last one...it takes me a little time to get back into the swing. We first looked at holding the aerodynamic flight path angle at 6 deg and varying the geometric flight path angle by varying the wind and holding the aerodynamic angle at 6 deg. For that case, I felt the big problem was the change in the visual scene from run to run. We had things like 9.5, 7.5, and 6 deg geometric flight path angles. I tend to rely very strongly on the visual scene for the last 30 sec of the flight path and it tends to foul that up. Other than that, I don't think there was any problem.

OK, next we went to a case of constant geometric flight path angle, we switched back and forth on a 6 deg flight path angle, geometric, and moved the aerodynamic flight path angle from -6 to -3 deg. I was surprised at the difficulty of controlling the glide slope and handling the gust disturbances on the shallower aerodynamic flight path angle and I really can't sort it out, it must be something associated with the very low ground speed.

We just completed a series of 1% turbulence runs on a 7.5 deg geometric glide path, 6 deg aerodynamic. When compared with the 10% turbulence, it's noticeably but not significantly a harder task. You increase your percentage of go-arounds slightly.

WRITTEN COMMENTS: 3 December 1974 Pilot Evaluation Form

(Approach)

Pilot Ratings: Calm Air = 3

Turbulence = 4

1. Q -- Describe the technique you used to make flight path corrections.

   A -- Same as 27 November 1974 Familiarization.

2. Q -- Describe the technique you used to make flight reference corrections.

   A -- Same as 27 November 1974 Familiarization.

3. Q -- Describe any difficulties you had in making flight path or flight reference corrections.

   A -- Same as 27 November 1974 Familiarization.

4. Q -- Was there noticeable control cross coupling? If yes, describe it and how it affected flight path/flight reference control.

   A -- Same as 27 November 1974 Familiarization.

5. Q -- Evaluate throttle sensitivity and thrust margins (up and down).

   A -- Adequate.

6. Q -- Describe the effects of turbulence level on flight path/flight reference control.

   A -- Same as 27 November 1974 Familiarization.

7. Q -- Describe the effects of flight path angle on flight path/flight reference control.

   A -- Geometric Angle: Change in visual picture quite bothersome.

   Aero Angle: Had a lot of trouble with slow shallow, couldn't sort out why.

9. Q -- How tightly did you regulate flight path/flight reference and why?

   A -- Same as 27 November 1974 Familiarization.

10. Q -- Describe any difficulties in trimming the aircraft.

    A -- Same as 27 November 1974 Familiarization.

12. Q -- Describe any difficulties in hitting a reasonable flare window.

A -- Not as much trouble as 27 November 1974 Familiarization.

13. Q -- What were the most significant effects of going from VFR to IFR?

A -- No problem tonight.

14. Q -- Relative to the approach task, what, in your opinion, would be the major factors influencing whether or not this aircraft could be certified.

A -- High workload due to poor θ control, scan pattern required. Flight director would be very beneficial.

(Flare and Landing)

Pilot Ratings: Calm Air = 5.0

Turbulence = 6.5 - 7.0

15. Q -- Describe in detail all flare techniques which you tried.

A -- (1) $\theta \longrightarrow 0$, $\delta_T \longrightarrow \dot{h}$.

16. Q -- Which technique did you select and why?

A -- (1) only one tried.

17. Q -- What secondary control action was required for flare? How did this affect your selection of the flare technique?

A -- See (15).

18. Q -- Evaluate your ability to consistently control touchdown position and sink rate.

A -- Not bad but slow throttle response makes last minute $\dot{h}$ corrections due to gusts marginal.

24. Q -- Did you experience any particularly severe wind shears or turbulence near touchdown? If so, how did these affect the above rating?

A -- See (18).

25. Q -- Relative to flare and landing, what, in your opinion, would be the major factors influencing whether or not this aircraft could be certified.

A -- Ability to make high frequency $\dot{h}$ changes close to the ground.

(General)

26. Q -- Did the lateral-directional characteristics significantly affect your evaluation? If yes, describe.

    A -- No.

27. Q -- Would you certificate this aircraft for all or some of the operational conditions you experienced? If for only some operational conditions, describe the operational restrictions you would impose and explain why.

    A -- Wouldn't certify for gusts simulated.

28. Q -- Do you feel you have had sufficient training for this configuration? How confident are you of the above evaluations?

    A -- Yes. Fairly confident.

PILOT E

DATE:	4 December 1974
PURPOSE:	Response and coupling investigations
DEVIATIONS FROM BASIC MODEL:	Engine lag decreased by .9 sec, improved response DLC
TAPED COMMENTS:	4 December 1974

We just ran out a series where we started out without any DLC and then we brought in some DLC to see if it would help this problem that we do have in the flare with the aircraft where you are primarily relying on the thrust in flare and the response is just not fast enough. By using the DLC, the level of DLC we were using in this series of runs, quickens it just enough that I think it takes it from the marginally acceptable/unacceptable airplane into an acceptable airplane, for this level of turbulence. It's good enough that you even feel confident in actually modulating the thrust slightly during the flare; in other words, taking some power off if necessary to start down and still have enough time to get it back on.

We just completed a series where we've taken the DLC out but decreased the engine time response and I can't detect the difference between the case where the engine responses have been improved and/or the case where the poor engine has the DLC.

We just did a series of runs where we had a very powerful DLC which gives us a very fast initial response on the flight path but washes out, apparently to about 33% of the peak value, if you hold the flight reference constant. Wasn't too much trouble holding the flight reference constant, although it's more difficult to hold the flight reference than without this DLC. But as far as controlling the glide slope tracking I found it actually improved, I think, over the basic airplane. The real quick response really seems to help - most of my trouble with this system is during the flare -- several times, maybe even 30% of the landings, I had a tendency to get into a PIO during the flare. That is, I could see I was sinking fast so I'd add some throttle and the thing would start up and I'd see it was too much so I'd jerk the throttle off just about the same time that the vehicle was starting to come down by itself and tended to get a little PIO there.

Bob just asked me if this overshoot on the flight path response really bothers me. I think I've said a little about it but let me go a little bit further. During the glide slope tracking I feel that it actually helps me.

The faster response helps me and the overshoot or the decay doesn't seem to bother me too much. I think you tend not to see it, like Bob says, you're closing the loop, you're coming in with changes fast enough to kind of mask it out. Having flown this one and one of Sam Craig's earlier, recalling now I can remember having the same experience with his. As long as this overshoot and decay isn't accompanied by a severe cross coupling into your airspeed or into your flight reference, I think it actually helps you a little bit in glide slope tracking.

We just made a run with the basic vehicle followed by a run with the pitch attitude hold SAS and it's pretty much what I felt it would be -- the pitch SAS, of course, gives you a little more stability in pitch. You don't have to be quite so careful with your inputs but this is countered by the fact that, with the bare airframe, the pitching moments with the throttle are in the correct direction to help you maintain your flight reference. So when you use the pitch attitude SAS you are actually holding force on the column a little more than you'd like. In summary, I think you're just trading off one factor for the other and the workload is about the same.

We just made two runs where the pitch SAS has an interconnect with the throttle so that when you advance the throttle the aircraft pitches, at least in the steady state, to the correct value of pitch to hold the flight reference right on and I think that's a big improvement. It really cuts down the workload in the longitudinal mode: you could fly the whole approach with just a single control, throttle. It turns out that the amount you add for flare is just enough to rotate the vehicle to align the attitude.

We just tried flying the basic vehicle with this flight reference that's mechanized through power and θ and I think, as far as ease of flying, it's a definite improvement, well, it's a definite improvement, now, just how much of an improvement...how much it reduces the workload, I think the way I'm flying the vehicle I tended to try and close a very tight attitude loop and not watch the flight reference all that closely anyway so I don't think it cuts down on the workload all that much but it does cut it down some, oh, on the order of .5 pilot rating or something like that.

PILOT E

DATE: 5 December 1974

PURPOSE: Airworthiness evaluation flare demonstration

DEVIATIONS FROM BASIC MODEL: None, flare using pitch attitude

TAPED COMMENTS: 5 December 1974

We've just been looking at a series of VFR landings from 500 ft, using about a -2 or -2.5 flight reference instead of 0 and using attitude for flare instead of power. I think this configuration and technique is comparable to the basic airplane with the decreased thrust lags or the DLC. It's like you have a very high frequency control over the heave during the flare with the attitude and at this airspeed it puts the attitude in a very comfortable regime. You can see the runway very well. Again, for this level of turbulence (we looked to up to 1% turbulence); 10% turbulence has a pretty high workload, the pilot rating would be somewhere in the vicinity of 5 or 5.5; with the 1% it starts slipping on down towards 6 to 6.5.

We're going through the flare demonstration maneuver. We just completed a series of seven nominals for baseline which was a 6 deg approach, now we went to an 8 deg approach with zero wind and we tried to use the ground rule -- we'd flare at the same altitude and not bring the power to flare back up above the trim power and then go ahead and flare and see how it turned out. It worked out very consistently, we were getting good firm landings. It took a very high rotation rate to arrest the sink rate but I would consider them safe -- in fact very much like some of the landings I was seeing in the 1% turbulence with the nominal glide slope. We put the pilot ratings around 6 to 6.5 again, you know.

Comments on the flare demonstration using pitch for flare, heave modulation. We just did a couple of fast abuses. We were coming in 75 kt, -6 on the flight reference versus the nominal of -2, and no problem at all. The only concern you have is for touching down on the nose wheel. We didn't even have to reduce power to get the aircraft on the ground. The difference in the L_α isn't too sensitive. Charlie just asked me how this abuse compares with what we saw in turbulence. I don't think in turbulence I ever had any runs when I was that far off that I was that close to touching down on the nose wheel. We touched down, I noticed one time, right at zero pitch. I think maybe in that respect this abuse is slightly severe, slightly.

We just did a slow abuse and we are flying at about 60 kt with a flight reference of about +2. It's a very high attitude, relatively high attitude, just 2 deg --- not all that high really, but it changes the picture of the runway coming in, I know the different airspeed really felt like the sink rate was very much lower which gave me a tendency to kind of hold off on initiation of the flare yet when you went to flare you'd rotate and nothing would happen. And after the third run I just automatically flared at my same altitude which I've been using which is 40 ft and I'd start rotating and I'd still touch down fairly severely with a fairly rapid rotation rate and fairly short. I don't feel during any of the turbulence runs that I've abused the flight reference anywhere near this amount. I tended to abuse it on the high side more than I do on the low side.

We just did another slow abuse where we were down to about 63.5 kt, flight reference right on zero. Now I think this more closely corresponds to a realistic abuse in the turbulence as I saw it. In fact my abuses tend to be even centered on the plus side of the flight reference so that was a plenty severe abuse and I think it showed up that if you try to use the same pitch rate during the initial part of the flare using the same flare altitude, that it still makes the same landing, here, we touched down a little bit firm but not bad. It's a pretty good maneuver.

We just tried to do (it's a little bit more difficult a maneuver) we tried to do some power abuses coming into the flare and it's a little tricky trying to get the power, and the flight path, and everything else set so that you aren't sinking exceptionally and we're shooting for a couple percent low. I feel 2% is a big abuse -- I don't think I've ever seen numbers that large in the turbulence stuff we were running there yet we did get some pretty severe landings there. Looks like it would be pretty easy to do; you'd have to be pretty careful. Probably a pretty good way to do it would be build some stops in on the quadrant and jerk it back would help out. No, no I think this is closer to being in the right ballpark. You know, if someone asked me how many percent, I'd say somewhere around 1.5 or something like that, maybe. 2 to 2.5% was what we were shooting for here. No I don't think so. Now Charlie said he wanted to see one, maybe jerk it all the way off. We could give that one a try, Charlie. I think we're asking for it.

OK, Charlie just had me try one abuse where I brought the throttles to idle slowly as you would do in a CTOL vehicle and we got quite a hard touchdown and it was very apparent, visually, that something was a little awry and we had a high sink rate and so we had quite a large attitude in but we did touch down. Also got stick shaker and I guess, really I've got more pad on stick shaker than I really should have, and I ain't got the stick shaker there.

PILOT F

DATE: 12-15 November 1974

PURPOSE: Familiarization

DEVIATIONS FROM BASIC MODEL: Overall engine lag increased by 1 second

TAPED COMMENTS: 12 November 1974

This is subject pilot F and this is a snap flight, first flight on the Generic STOL Model. This covers Runs 14 - 26. We've done very light turbulence just as an introduction, and then graduating to some crosswind from either side, and then finally into a little heavier turbulence, 4.5 fps. The difficulties really compound when the turbulence starts to make you deviate from your targeted numbers on your various instruments. There's a cross coupling between attitude and speed change that's very annoying. My original tendency was to ignore the flight reference in the calm air because there wasn't very much happening. There is a certain amount of confusion factor that the pilot sees when he gets into the heavier turbulence. I've only seen two runs so far and I don't have it all felt out but some of the things the instruments are telling me to do are, at least at this stage of practice, going against what I really feel like doing, particularly nose attitude.

TAPED COMMENTS: 13 November 1974

The main difference I've seen today is that I pay less attention to what the attitude indicator is doing and attempt to fly the reference angle of attack with pitch, and the glide path with power, and accept a certain amount of transients that you get in attitude. This seems to be working out better for me. I wouldn't care to comment on the landings too much on today's flights because we've all kinds of picture problems and of course they tend to be harder in the higher turbulence level.

The engine out stuff that we did, once again aside from the landings, the biggest difficulty I had there was to trim the thing out laterally and force myself to get the nose over to put the reference angle of attack back up. You feel like you dive away from the glide path and the difficulty in trimming laterally is that you're very busy trimming longitudinally, and you can't hardly do it both ways, I don't think. The other significant thing on the engine out work is that it kind of catches you by surprise when you get down to flare to find out that you've got a lot more energy than you think you have. The tendency then is to go ahead, you pick up a little

speed by nosing down and then you do your flare and think you need a lot of power when you really don't need quite so much; so the tendency for me was to overfly the spot, on a couple at least.

The engine failures from 700 ft on in, the technique I've been using is to hold the pitch forces, trim out the roll forces, and then drive in with the wheel off in the direction as much as it needs to be. However, on that particular run, during the landing I had to use full aileron because the wing came up a bit and it took everything to bring it back down and hold it.

Flaring at this altitude, we're doing our cuts at 400 ft, there really isn't an awful lot of time to try to get the aircraft back to some force-free symmetrical way of flying by the time you get down to the ground. Also it's very difficult to school yourself to push your nose over because you see your flight path going flat. OK, once you get back on your reference speed there's a tendency, for me at least, to overfly this flight because I've put a lot of power in to get rid of the flat approach to start with and you're still far enough out that you don't necessarily pick up the fact that you've killed all the sink rate or most of the sink rate until you have gotten to an overshoot position, almost. Also, I'm finding out that I'm not really paying an awful lot of attention to glide path or anything else under these conditions; I'm just flying eye-ball.

Now on that run, I started really crowding the ground and reverted to instinct and pulled the nose a little higher than I should have. Got stick shaker just before I crunched. OK, on these engine cuts the obvious must is to get the nose over and maintain the speed because if you don't you run out of control; and of course the forces get horrendously high along with it, it seems. That was manageable as long as I was spring-loaded for it and got the power on and the nose over immediately. Of course, performance would go all to blazes on every one of them that I did, I think, because coming very flat in on most of them. It would be a consideration for uh, well, of course it would be probably the most critical condition for covering landing performance. Finally, I think, for me at least at this stage of the game, I'm not paying any attention inside the cockpit at all, except in the latter couple of runs, to check the flight path reference. But the tendency is really to keep your eyes outside, for me at least. You don't have to particularly concern yourself with glide path and the rest of it.

TAPED COMMENTS: 14 November 1974

This flight represents a regression as far as I'm concerned. I wasn't really able to do anything much at all with the approach and landings. Probably acceptable in calm air but as soon as I got into turbulence, I was in trouble. I could never be sure when I was going to hit the spot or how hard. I'm trying to search for the reason, I don't have a radar

altimeter light, I think maybe I lean on that a little bit harder than I thought I did, but nevertheless, I've used throttle very poorly, I have to flare in landing, and I'm putting it down to the fact that I don't seem to get anything that seems to tell me how to do it. I think a touch of cloudiness might have something to do with it; you can't do what you can't see and I don't think I'm seeing it well enough. The closure rate of the runway seems to be my problem.

WRITTEN COMMENTS: 15 November 1974 Pilot Evaluation Form

(Approach)

1. Q -- Describe the technique you used to make flight path corrections.

   A -- After experimentation it becomes a mix between power and pitch. I think of power as primary but pitch attitude follows to keep flight path reference.

2. Q -- Describe the technique you used to make flight reference corrections.

   A -- Used pitch only unless a substantial attitude change was required; then combined pitch and power.

3. Q -- Describe any difficulties you had in making flight path or flight reference corrections.

   A -- Lag between power correction and sink rate (or climb) response was moderately objectionable - but tracking was OK. Just resulted in too many overshoots when correcting.

4. Q -- Was there noticeable control cross coupling? If yes, describe it and how it affected flight path/flight reference control.

   A -- Quite confusing at first because pilot would see substantial attitude change from nominal and perhaps need even more change in the same direction to keep flight path reference.

5. Q -- Evaluate throttle sensitivity and thrust margins (up and down).

   A -- See (3) above.

6. Q -- Describe the effects of turbulence level on flight path/flight reference control.

   A -- Increased workload, of course. But did not feel nervous about transients that I saw in 10% turbulence ($\pm$ 5 units).

8. Q -- Describe the effects of crosswinds on flight path/flight reference control.

A -- Only significant effect was increased workload and possible effect on performance, which is unknown.

9. Q -- How tightly did you regulate flight path/flight reference and why?

A -- FP and FR as tightly as possible because of desire to hit an ideal window for flare.

10. Q -- Describe any difficulties in trimming the aircraft.

A -- For me, very busy on longitudinal trim since I tend to fly with trim. Busy because ideal trim attitude varies with power. During engine out - serious trim problems. Need to trim both lat. and long. but one must wait for the other.

11. Q -- Did you try any deliberate flight reference or flight path abuses? If yes, describe the effects of the abuses on the aircraft characteristics.

A -- Yes, but no surprises.

12. Q -- Describe any difficulties in hitting a reasonable flare window.

A -- Very little margin for error. Very slight mistakes can result in unacceptable landings in either position or sink rate.

13. Q -- What were the most significant effects of going from VFR to IFR?

A -- Extra workload to track localizer.

14. Q -- Relative to the approach task, what, in your opinion, would be the major factors influencing whether or not this aircraft could be certified.

A -- Ability to hit an acceptable TD zone and sink rate. Ability to handle engine failure safely.

(Flare and Landing)

15. Q -- Describe in detail all flare techniques which you tried.

A -- About two degrees nose up and then gradually add power to touchdown while doing what is necessary to hold the selected attitude.

16. Q -- Which technique did you select and why?

A -- Above technique seemed to work fairly well.

17. Q -- What secondary control action was required for flare? How did this affect your selection of the flare technique?

A -- Addition of power.

18. Q -- Evaluate your ability to consistently control touchdown position and sink rate.

A -- Fairly well grouped but mistakes in use of power gave some as long as 700+ feet and others, short of the zone.

20. Q -- Describe any problems encountered during OEI flare and landings.

A -- Getting too slow and running out of lateral control.

21. Q -- Describe how flight path abuses affected flare and landing.

A -- Abuses result in greater scatter in sink rate and position.

23. Q -- Describe the effects of other off-nominal conditions (e.g., flight reference or power) at the flare window on the flare characteristics.

A -- Nose low abuse causes you to overfly the zone.

24. Q -- Did you experience any particularly severe wind shears or turbulence near touchdown? If so, how did these affect the above rating?

A -- A couple, which probably effected sink rate and TD position.

25. Q -- Relative to flare and landing, what, in your opinion, would be the major factors influencing whether or not this aircraft could be certified.

A -- Ability to make consistently good landings in turbulence and shears.

(General)

26. Q -- Did the lateral-directional characteristics significantly affect your evaluation? If yes, describe.

A -- No.

27. Q -- Would you certificate this aircraft for all or some of the operational conditions you experienced? If for only some operational conditions, describe the operational restrictions you would impose and explain why.

A -- Need to see more before making this judgment, particularly OEI.

28. Q -- Do you feel you have had sufficient training for this configuration? How confident are you of the above evaluations?

A -- Performance was reasonably good so I'm happy with the evaluations.

29. Q -- Any additional comments?

A -- This write up encompasses more than one flight and I saw distinct differences on these flights. On the first flight I was able to flare with pitch followed by power using visual cues and was reasonably content with performance except for 1% turbulence.

It should be noted that in my rating scheme a 4 should be acceptable for routine airline operations.

1st FLIGHT

CONDITION	APPROACH	FLARE AND LANDING
1. Light turbulence	3	3
2. 10% turbulence	3	4
3. 1% turbulence	5	10

2nd FLIGHT

CONDITION	APPROACH	FLARE AND LANDING
1. Light turbulence	3	7
2. 10% turbulence	3	7
3. 1% turbulence	5	10

The reason for the unacceptable ratings in flare and landing are because I was unable to rely on visual cues to land and had to resort to mechanical application of power which is not acceptable.

I'm not sure which times we flew 1%.

PILOT F

DATE:	18-19 November 1974
PURPOSE:	Airworthiness Evaluation
DEVIATIONS FROM BASIC MODEL:	Overall engine lag increased by 1 second
TAPED COMMENTS:	19 November 1974

The impressions are rather mild for the two runs that I took. There didn't seem to be any really objectionable characteristics except perhaps just a tiny bit more difficulty in judging just how to use that power at that new approach picture. Not serious. I think the airplane feels OK in that approach but I think it's probably the learning curve that the pilot goes through.

On that particular case, even though I was holding a higher power, I didn't get into any limiting situation with the power. It seems like it takes a little bit more fine tuning to keep everything where you want it at the flatter attitude and with a 300 ft nominal indicated sink rate, that seemed to make it a little bit more difficult but perhaps that's learning curve, too. I didn't hit the stops on power at all and was able to track with a relatively good degree of accuracy.

What I think I'm doing, or did, on that run is OK. I knew I was going to be flat. I was flat but once I broke out I started reacquiring a steeper slope just automatically; because I'm used to the other picture and I like it better, so I automatically started to steepen the approach, at least I think I did, anyway. I don't like that one that much, it's a poor feeling dragging it in from that far.

The real flat approach is pretty uncomfortable. You're really dragging the ground after being used to the steeper approach and I landed short of the zone. I think the tendency is to really not exactly know what to do with power...you just as well maybe overshoot as undershoot, I believe, on these flat approaches. It just doesn't feel like you get a very good cue on what to do with power on those.

Now the problem with that one, I think, is pretty obvious if you watched it. You're coming in with a whole lot of speed, you've got an awful lot of float capability there, and, again, it would take kind of a learning process to decide -- you'd have to look at it a couple of times to decide -- really what to do with power. I still had power on when I touched down. I felt I was going to touch any second with that real flat attitude; it's hard to tell just when your wheels are going to settle in. So we can't hardly say that's acceptable.

You can't really say which is doing it to you, the flat approach which is certainly confusing you as to when your wheels are going to touch, I think, at least I felt that way, and of course the high ground speed crowds you into making rapid throttle action which you know is going to hurt you if you do it so it's a pretty uneasy kind of an approach.

In the 1% turbulence, the significant thing that occurs to me is that I think, once again, we have a situation here where, if I happen to get the wrong shears I'll feel one way about it and if I happen to do enough runs and don't get bad shears at the wrong time maybe I'll [illegible] another way about it. I happened to see a bad situation there because right at the end [illegible] got a sink rate, filled in full power, and couldn't control that sink rate so that's definitely a no, no. We were starting to get to the limits of the airplane with these kinds of things, here.

Right up to the time, almost, the pilot hits the stops he doesn't complai[illegible] so much but if he hits it in tracking too often or certainly in a land[illegible], then he won't like it.

On the engine out, I did hit lateral stops a couple of times, even though I think I was pretty close to my flight reference attitude. Once again, I didn't pick up the altitude where you failed at. Where was it? [400 ft.] But I was still trimming it as I got down to the ground. It is an unbalanced airplane. I accepted the longitudinal forces as not really being bad but I still had lateral force in. I'm not sure what to say about that reaction of poking your nose over right fast...that's another learning process, I guess. But, you know, it is certainly distinctive of regular aircraft, I think. So, maybe I don't think that's too troublesome either. I usually pump a little in there if I have the airspace to do it just to note whether I'm going to keep speed while I'm doing some other things. Maybe that's something I should be doing some thinking about.

WRITTEN COMMENTS: 19 November 1974 Pilot Evaluation Form

(Approach)

1. Q -- Describe the technique you used to make flight path corrections.

   A -- Generally, power for flight [illegible]h. Some mixing at times comes naturally when pilot coordinates attitude and power.

2. Q -- Describe the technique you used to make flight reference corrections.

   A -- No absolute technique, particularly in turbulence when needle is bouncing. Most times I expect to need to pitch down after power reduction but on some occasions I had to pitch up and vice versa.

3. Q -- Describe any difficulties you had in making flight path or flight reference corrections.

   A -- Mostly the heavy workload in coping with turbulence and shears. These are more and more difficult as you near your window for flare.

4. Q -- Was there noticeable control cross coupling? If yes, describe it and how it affected flight path/flight reference control.

   A -- Becoming much less a problem than on previous flights.

5. Q -- Evaluate throttle sensitivity and thrust margins (up and down).

   A -- Throttle to A/C response still too sluggish, particularly in flare. Pilot is forced to mechanically begin to add power for flare before pilot cues demand this power. This is not acceptable because there will certainly be times when, because of late flight path corrections, any addition of power may cause severe overshoots.

6. Q -- Describe the effects of turbulence level on flight path/flight reference control.

   A -- Same as always — increased workload – somewhat sloppier performance.

7. Q -- Describe the effects of flight path angle on flight path/flight reference control.

   A -- None noticeable except that in 10% turbulence pilot is aware he is near the stops, in 1% turbulence he finds he is on the stops (fly up) during shallow approach paths where he is carrying high power anyway. This is not very comfortable.

8. Q -- Describe the effects of crosswinds on flight path/flight reference control.

   A -- Slightly poorer performance, higher workload.

9. Q -- How tightly did you regulate flight path/flight reference and why?

   A -- As tight as I could on path and reference due to knowing that I want to hit an ideal flare window.

10. Q -- Describe any difficulties in trimming the aircraft.

    A -- A fairly continual need in turbulence in pitch, also laterally, could not completely settle down in heading when tracking G/S.

11. Q -- Did you try any deliberate flight reference or flight path abuses? If yes, describe the effects of the abuses on the aircraft characteristics.

    A -- No.

12. Q -- Describe any difficulties in hitting a reasonable flare window.

A -- Had fairly good grouping. But still a few long and a few short.

13. Q -- What were the most significant effects of going from VFR to IFR?

A -- Increased lateral workload.

14. Q -- Relative to the approach task, what, in your opinion, would be the major factors influencing whether or not this aircraft could be certified.

A -- Ability to maintain acceptable margins during engine out.

(Flare and Landing)

15. Q -- Describe in detail all flare techniques which you tried.

A -- Nose up to slightly above level and "mechanically" begin to add power for balance of flare.

16. Q -- Which technique did you select and why?

A -- As above. Thrust lag made mechanical input necessary.

17. Q -- What secondary control action was required for flare? How did this affect your selection of the flare technique?

A -- As above.

18. Q -- Evaluate your ability to consistently control touchdown position and sink rate.

A -- Pretty good but still covered from about 180 ft to 720 ft approx.

20. Q -- Describe any problems encountered during OEI flare and landings.

A -- Had one at 400 ft IFR -- landed safely but not happily since no time to trim out asymmetry.

23. Q -- Describe the effects of other off-nominal conditions (e.g., flight reference or power) at the flare window on the flare characteristics.

A -- Stretched out performance TD and sink rate.

24. Q -- Did you experience any particularly severe wind shears or turbulence near touchdown? If so, how did these affect the above rating?

A -- Yes. During 1% turbulence.

25. Q -- Relative to flare and landing, what, in your opinion, would be the major factors influencing whether or not this aircraft could be certified.

A -- Improve engine lag and try in 1% turbulence.

(General)

26. Q -- Did the lateral-directional characteristics significantly affect your evaluation? If yes, describe.

A -- Not particularly except for OEI.

27. Q -- Would you certificate this aircraft for all or some of the operational conditions you experienced? If for only some operational conditions, describe the operational restrictions you would impose and explain why.

A -- Certainly not more than 10% turbulence.

28. Q -- Do you feel you have had sufficient training for this configuration? How confident are you of the above evaluations?

A -- Yes.

Pilot Ratings:

CONDITION	APPROACH	FLARE & LANDING
Light turbulence	3	7
10% turbulence	3	7
1% turbulence	5	10

The reason for unacceptable ratings in landing in light turbulence and 10% turbulence is that it was necessary for me to add power mechanically before I had the cue to do so, in order to achieve desired performance.

PILOT F

DATE: 20 November 1974

PURPOSE: Modification of Flight Path/Flight Reference Cross Coupling

DEVIATIONS FROM BASIC MODEL: ---

TAPED COMMENTS: 20 November 1974

I just now began to evaluate the effect of a washout signal. It's a DLC setup on the throttle and the signal is washing out after so many seconds. It seems to me that the effect this has in the tracking task is to increase the workload and it's not too desirable because you make a throttle input too, particularly if you're the kind that flies IVSI fairly close, you're looking for a nominal sink rate or something, or whatever you're looking for you'd like to be able to ease the throttle to that point and keep it but you don't so that means checking back to the instrument again in a second or so and making another correction. So you're really trying to interpolate how much washout you're going to get in response. So that's my major objection to it in the tracking problem. However, it seems to be that as far as tracking in shears are concerned, you could probably do pretty good in that respect. That is, probably if we did enough of them, performance might look better from this standpoint of large divergences in glide path. I'm not sure about that.

In the flare and landing, though, it seems to be a very demanding kind of thing. You get a response and you think everything's fine and then things start changing. So once again, you're very, very busy in the flare with your power and probably pitch attitude also to try to get this thing on the ground. It's much harder to do with this combination.

Well, no, Bob, certainly [the pilot rating is worse by] two points, maybe more, mostly for the...well, maybe a point less for the tracking and at least 2 points for the flare. Number one, I didn't use the fast/slow needle, I forgot, to tell you the truth. And so I was still using the angle of attack needle and no, I didn't notice any difference because I don't think I'm flying it terribly tight; I'm sort of, with the side of my eye, knowing where it is and then occasionally I'll look over and retrim to where I think I ought to be. But I haven't seen any difference as far as that part is concerned, no.

The configuration we're looking at now is with pitch SAS and we've also got the better throttle setting, and it is the best thing I've seen. With

the pitch SAS, the workload is diminished tremendously as far as the pitch attitude or even, for that matter, the flight path reference because the fact that you're not getting a lot of bobbling around in the nose gives you much more well behaved flight path reference. So your workload is down in that area. Tracking is much better, that is, as far as workload is concerned; and it's no problem for the pitch attitude in flare -- everything works out much better, considerably better. Until you go to 1% turbulence and there, it's probably still better than anything else we've seen but, unfortunately, we just don't have enough aircraft response to handle that kind of turbulence. That's about it, I think.

It's the best combination that we've seen so far. It just takes the workload really out of the job almost completely. The only place where it seems to lack anything is in the 1% turbulence. Even there, the workload is considerably lower and of course you're more than likely going to hit a better, at least, flight reference window down low but it still doesn't help with the judgment problem you have because those big shears, both laterally and longitudinally. I can't really say you aren't any better off with the pitch SAS except from the workload standpoint.

As far as everything else, all the way up...well, first of all, tracking in anything up to 10% turbulence is like a 2 because there isn't very much that you need to do. I don't want to put a number on the 1% turbulence, but certainly tracking is easier with the pitch SAS. Once again, the 1% turbulence seems to be the culprit in the whole picture that would tend to degrade the ratings.

Pitch SAS with auto trim is what we're flying. That's a little bit subtle, I think. Certainly you're getting there with so much less work but I don't know that the performance is going to be terribly much better. I think maybe so; up until the 10% turbulence case, yes. Because you get to fly up to a pretty good window more consistently even though I haven't looked at that many of them. I feel pretty strongly that you would end up rating the flare and landing higher in this also because it's certainly not at all annoying to the pilot. On several of the approaches I was short, maybe because I was getting too lazy on the throttle, I don't know, or maybe it was a shear situation, but the fellows here pointed out that I would get 5 deg nose up and I wasn't perturbed by any forces or anything in the controls fighting me at all. So I really was pleased with it.

With the auto trim pitch SAS in, the flight reference was much more well behaved and, in fact, the pilot could almost ignore it. All he's doing is monitoring it and it was very well behaved and stayed within a very narrow band.

We just changed sensing system for the flight reference where you're feeding in throttle and attitude to drive the needle. It's easier for the pilot to fly -- it's taking all the chatter out of the needle that he sees when he's hooked to angle of attack and as far as what he does with the airplane is concerned, there's nothing that he has to change in the way of activity here. He just sees a better behaved needle.

PILOT F

DATE:	21 November 1974
PURPOSE:	Airworthiness Evaluation
DEVIATIONS FROM BASIC MODEL:	Flight condition at FR = -4 units
TAPED COMMENTS:	21 November 1974

We're flying a 4 deg nose-down reference which they've fixed to read zero in the cockpit. It means your nominal attitude for approach is about 7 deg nose down and that you're flying...indicating 70 as opposed to 61 on the previous flights. I haven't seen anything that's really outstandingly different. The rotation, of course, in the flare -- you have more of a rotation to make to get to level but it doesn't leave me any impression that it's difficult to get to that rotation. You're still doing whatever the window you hit tells you to do with power, which is no different than what we were doing previously. I can't honestly say I feel any big differences in the airplane characteristics, flying at the higher speed. There is the one major difference that the pilot notices, that is if he compares the slower speed with this speed, and that is he doesn't get all the radical attitude excursions at this speed that he got when making power changes at the slower speed.

OK, we're flying the 1% turbulence and the chief difficulty that I'm having in the IFR situation is just getting to an ideal window. I find that my flare and landings are a lot more difficult to judge because I'm out of the window; and that's been pretty standard with most of the things we've flown. I'm still having an awful lot of throttle activity during the landing to try to get into the zone and into the target sink rate. So the workload gets pretty heavy at the end, there.

OK, on the 1% turbulence -- I started to say when we were using the 10% turbulence that the airplane was better behaved than in the 1% turbulence, but I was mistaken. However, I will reiterate that. It's a little more subtle now but it does seem to be a little better behaved in 1% turbulence with respect to tracking. However, in the flare and landing, what I'm seeing there is that you get a real hand full in mixing pitch and power to get down into that zone. So I'm doing all kinds of things with pitch and power to the point where I'm pitching over at times and up at other times and adding and taking off power -- it gets to be a whole mix there. You can't really use a nice cue or simple technique.

Fixed-base, flying approach demonstration of approach to V_{min} and α_{min}. A very, very slow approach. Let's say you're approaching α_{max} at a speed less than 1 kt/sec, this gives you about 18 deg at pusher and shaker, really there's very little change between the two, and 52 kt. If you speed up the rate of approach to something higher than 1 kt/sec you get a lower flight reference angle and a lower speed for initiation of shaker and pusher. As far as the entry into shaker and pusher are concerned, when you're talking about a rate entry, it looks to me like one of the safeguards is the horrendous attitude change that you have to make to get there and I could see perhaps an evasive maneuver doing that to you, or a kind of winding up a turn on an approach when you'd want to overshoot windline or something of that sort. But it is a very substantial change that gets you there and I don't think many pilots would leave off their instruments or accept that much change. I can't envision a situation where they wouldn't be back to work on their flight reference long before they got to the attitude change that would give them the problem. It almost goes for a slow entry, too. And, of course, in a slow entry you have a lot more warning between shaker and pusher. Maybe we are set up pretty good here; I'm not prepared to say what rate we should set up for a demonstration just yet. In a 30 deg bank turn where a pilot is just gradually trimming nose up, I went through about 450 deg probably of turn, gradually trimming, trimming, trimming before I ever got into the shaker and that's quite a while to be not making reference to your flight path reference someplace along the line. You have to be pretty well preoccupied with things outside and be getting some sort of a continual force that you trim out. That's a fairly unlikely situation.

WRITTEN COMMENTS: 21 November 1974 Pilot Evaluation Form

(Approach)

1. Q -- Describe the technique you used to make flight path corrections.

   A -- Same as before [see 19 November 1974] (FR with θ) (FP with power) but with much less mixing of the two because change of pitch attitude with power was noticeably reduced.

2. Q -- Describe the technique you used to make flight reference corrections.

   A -- Normally expected to pitch down slightly with power reduction and vice versa but not always due to turbulence sometimes nose up might be required. You learn to use pitch trim button on what FR calls for.

3. Q -- Describe any difficulties you had in making flight path or flight reference corrections.

   A -- It seemed to me that I trimmed more consistently in the nose up direction to keep from having a negative FR. Also was more apt to get high on slope than low and it seemed slightly harder to get back on from high side.

4. Q -- Was there noticeable control cross coupling? If yes, describe it and how it affected flight path/flight reference control.

   A -- Cross coupling was quite natural; made FR control easier although those corrections that were needed were most often nose up.

5. Q -- Evaluate throttle sensitivity and thrust margins (up and down).

   A -- Acceptable for tracking but should be improved for flare and landing.

6. Q -- Describe the effects of turbulence level on flight path/flight reference control.

   A -- Just increased workload and less precise performance — increasing as turbulence increased.

8. Q -- Describe the effects of crosswinds on flight path/flight reference control.

   A -- Not significant.

9. Q -- How tightly did you regulate flight path/flight reference and why?

   A -- Tight as I could for the turbulence conditions. Desire to hit optimum window. Did not see quite such large transients in FR with this configuration, probably $\pm$ 4 in 1% turbulence.

10. Q -- Describe any difficulties in trimming the aircraft.

    A -- None.

11. Q -- Did you try any deliberate flight reference or flight path abuses? If yes, describe the effects of the abuses on the aircraft characteristics.

    A -- No.

12. Q -- Describe any difficulties in hitting a reasonable flare window.

    A -- No huge difficulties in getting to the window except those expected in turbulence and shear. But, not sure the window we had was optimum for this condition. GPI needed to be closer to threshold.

13. Q -- What were the most significant effects of going from VFR to IFR?

    A -- Workload only.

14. Q -- Relative to the approach task, what, in your opinion, would be the major factors influencing whether or not this aircraft could be certified.

A -- None. It is acceptable in the approach. Not including OEI considerations. This part is unacceptable from a performance standpoint but handling qualities much better at this speed.

(Flare and Landing)

15. Q -- Describe in detail all flare techniques which you tried.

A -- Approached the flare with the intent of pitching to a desired attitude and finishing with power but found I often had to do a lot of mixing to try to hit zone. Many times would pitch up then resorted to a pitch down to feel for zone all the while modulating power in various directions.

16. Q -- Which technique did you select and why?

A -- See above.

17. Q -- What secondary control action was required for flare? How did this affect your selection of the flare technique?

A -- See above.

18. Q -- Evaluate your ability to consistently control touchdown position and sink rate.

A -- Not acceptable -- for me too much work, too many judgments needed so that the resultant landing feels like too much chance involved.

20. Q -- Describe any problems encountered during OEI flare and landings.

A -- Inadequate performance - could not make runway.

23. Q -- Describe the effects of other off-nominal conditions (e.g., flight reference or power) at the flare window on the flare characteristics.

A -- Effected touchdown zone and $\dot{h}$ adversely.

24. Q -- Did you experience any particularly severe wind shears or turbulence near touchdown? If so, how did these affect the above rating?

A -- Only flew two in 1% turbulence. Impression was that this configuration is slightly better behaved but still not acceptable in 1% turbulence.

25. Q -- Relative to flare and landing, what, in your opinion, would be the major factors influencing whether or not this aircraft could be certified.

A -- TD and $\dot{h}$ scatter and consistent technique plus evaluation of workload in achieving desired performance.

(General)

26. Q -- Did the lateral-directional characteristics significantly affect your evaluation? If yes, describe.

A -- No.

27. Q -- Would you certificate this aircraft for all or some of the operational conditions you experienced? If for only some operational conditions, describe the operational restrictions you would impose and explain why.

A -- Light turbulence only due to previously described problems in flare and landing.

28. Q -- Do you feel you have had sufficient training for this configuration? How confident are you of the above evaluations?

A -- Yes -- but might change evaluations if GPI were tailored to the A/C.

29. Q -- Any additional comments?

A -- RATINGS

CONDITIONS	APPROACH	FLARE & LANDING
(1) Calm Air	3	5
(2) 10% Turbulence	3	7
(3) 1% Turbulence	4	10

No differences VFR or IFR.

PILOT G

DATE: 3 December 1974

PURPOSE: Familiarization

DEVIATIONS FROM BASIC MODEL: None

TAPED COMMENTS: 3 December 1974

Our basic problem with the engine out failure during the approach appears to be...the pilot has to be aware that rudder applications are going to hinder recovery rather than assist in recovery. The recovery should be made almost exclusively with the use of aileron and once the desired bank angle and recovery is made, those forces should be trimmed out using lateral or aileron trim. A pilot should force himself to keep his feet on the floor, with no rudder inputs. He's got a performance problem and he's got to get right with the remaining throttles to continue the approach. He has to push over initially to maintain his flight reference. It's a somewhat natural tendency but it may confuse some pilots; again they may make the exact opposite application with the elevator and pull the nose up, trying to stretch the glide.

During the all engine approach, it's a reasonably easy task for glide slope control in calm air; the problem is a little bit more pronounced in turbulence; the crosswind problem is solvable too with a little bit of practice. I could get comfortable with the crosswinds that I saw today, with a little bit of practice. And again, the problem with the crosswind, like the engine out situation, is that you're not going to need very much rudder; it's mainly an aileron problem. I think I would like to reserve further comments until I've a little bit more time in this simulation.

For engine failures during the approach, if you've already got the higher reference speed, then of course because you don't have to do the acceleration maneuver, since you're already there, and the engine loss problem there appears to be a lot less.

WRITTEN COMMENTS: 3 December 1974 Pilot Evaluation Form

(Approach)

Pilot Ratings: Calm Air = 4

Turbulence = 5

1. Q -- Describe the technique you used to make flight path corrections.

   A -- Throttle application.

2. Q -- Describe the technique you used to make flight reference corrections.

   A -- Attitude (pitch) control with elevator.

3. Q -- Describe any difficulties you had in making flight path or flight reference corrections.

   A -- Down side.

4. Q -- Was there noticeable control cross coupling? If yes, describe it and how it affected flight path/flight reference control.

   A -- Yes, mild pitch change with throttle.

5. Q -- Evaluate throttle sensitivity and thrust margins (up and down).

   A -- Satisfactory.

6. Q -- Describe the effects of turbulence level on flight path/flight reference control.

   A -- Pilot workload increased. FP/FR control satisfactory.

7. Q -- Describe the effects of flight path angle on flight path/flight reference control.

   A -- Increased γ seemed to increase FP/FR control.

8. Q -- Describe the effects of crosswinds on flight path/flight reference control.

   A -- Increased pilot workload — lateral/directional problem.

9. Q -- How tightly did you regulate flight path/flight reference and why?

   A -- Within $\pm \frac{1}{4}$ dot until about 150 ft — flight path corrections after 150 ft complicate the flare.

10. Q -- Describe any difficulties in trimming the aircraft.

A -- Aileron trim – satisfactory. Pitch trim – satisfactory.

11. Q -- Did you try any deliberate flight reference or flight path abuses? If yes, describe the effects of the abuses on the aircraft characteristics.

A -- Yes — increased α reduced controllability/maneuverability; required more power for approach and sink rate control was degraded.

12. Q -- Describe any difficulties in hitting a reasonable flare window.

A -- 10% turbulence caused difficulty but overall, satisfactory.

13. Q -- What were the most significant effects of going from VFR to IFR?

A -- Required closer cross check of CDI — slow approach speeds caused higher turn rates/bank angle.

14. Q -- Relative to the approach task, what, in your opinion, would be the major factors influencing whether or not this aircraft could be certified.

A -- Consistent and repeatable $\dot{h}$ and x_{TD} – no tendency to overcontrol during flare under all anticipated crosswind, turbulence, engine out, under reasonable abuses cases.

(Flare and Landing)

Pilot Ratings: Calm Air = 5

Turbulence = 6

15. Q -- Describe in detail all flare techniques which you tried.

A -- (1) Power only.

(2) Pitch only.

(3) Both power and pitch.

16. Q -- Which technique did you select and why?

A -- No. (3) — power to slow $\dot{h}$ and pitch to clear nose wheel and secondarily to control (refine) $\dot{h}$.

17. Q -- What secondary control action was required for flare? How did this affect your selection of the flare technique?

A -- Pitch control — none as power was required for successful flare.

18. Q -- Evaluate your ability to consistently control touchdown position and sink rate.

A -- I was unable to consistently control x and $\dot{h}$ with 10% turbulence.

24. Q -- Did you experience any particularly severe wind shears or turbulence near touchdown? If so, how did these affect the above rating?

A -- Yes — 1% — unsaturated — probably not real world.

25. Q -- Relative to flare and landing, what, in your opinion, would be the major factors influencing whether or not this aircraft could be certified.

A -- See 14.

(General)

26. Q -- Did the lateral-directional characteristics significantly affect your evaluation? If yes, describe.

A -- No.

PILOT G

DATE:	5 December 1974
PURPOSE:	Response investigation
DEVIATIONS FROM BASIC MODEL:	Decreased engine lag versus DLC
TAPED COMMENTS:	5 December 1974

Comments regarding the basic airplane and the flare mode using primarily power and pitch for the rotation for flare. I don't see any severe difficulties in controlling glide path and the flight reference both in calm air and in turbulence to the approach phase and getting into an acceptable window for flare. In general, the workload is increased with turbulence; however, for this flare specifically in calm air the workload is not severe. There is a problem of engine lag and rotation and the visual cues as to when to do both of those but with practice you can normally come in and land, with training, with reasonable consistency. However, with the overall, the touchdown dispersion and the touchdown sink rates are just on the bare edge of satisfactory and I would think the significant portion, to a 95 percentile, on x and $\dot{h}$ would be unsatisfactory. It seems to be marginal and it definitely is unsatisfactory with any degree of turbulence introduced into the problem.

These will be some comments regarding use of DLC and its effect on the flare and landing distance. I felt the differences were subtle with and without DLC. DLC appears to give you a greater heave and a more responsive airplane and also a greater ability to control your touchdown point and sink rate, howsomever. And in the turbulence I was finding it difficult to stay consistent and, in the degree of turbulence that I was seeing, now this may be a learning curve and will improve with practice but on the basis of what I've seen so far, I would have to say that they both would be unsatisfactory with the degree of turbulence I've noted.

On these last runs we've been flying with a quickened throttle response and it has very significantly improved my control, during the flare, of touchdown distance and sink rate. I'm not exactly sure as to why the aircraft response is so much different in my mind than it is with DLC but I feel much more comfortable with the DLC off, just the response based on increased throttle response.

Alright. we went back and looked at the original DLC and we made two runs. I have to stick with my original conclusion, that the airplane appears to behave better, I'm more comfortable during the flare maneuver and have more control with the quickened throttle response rather than the DLC.

Although the DLC is...I'm feeling more and more comfortable with it; I'm not as comfortable with it as I am with throttle.

These comments are regarding the decreased DLC. We had a series of runs. Overall, the airplane controllability was increased significantly and the target touchdown sink rates and distance could be controlled more than the original DLC and more than the increased throttle response. It would take practice to get consistent but once this had been learned, I think you have the controllability there to land specifically where you want to; you do have additional control. But I do think this would take some learning and there's a definite tendency with this additional control to over-control and this would cause problems like I had on one landing where I had controlled my sink and touchdown too closely and skipped along and got airborne and then bounced down the runway but I think with this additional control you do have...you are more comfortable in the flare but there's more learning involved.

We just did a run with a short engine lag and I find myself liking the glide path control; I found it easier than with the increased DLC and I find myself more comfortable in the flare. I learn the task easier when I'm more comfortable. I'm not sure I have as much controllability but I can...but there's not as much of a tendency to over-control as a result. I'm happier with it. I think that's all.

We've gone back to the original airplane on this last run before the break and we're back to a 1 sec throttle response and, again, these engine lags cause me much more trouble and less confidence in the flare and to compensate for that I generally start my flare a little bit earlier and wait for the throttle response and consequently the airplane response, and this doesn't give me the amount of control I had with the increased engine response. I don't like it as much and I just don't have that additional control.

Regarding the second level of the DLC with the higher controllability that provided that it would appear on the basis of just a few short runs that this increased controllability that the airplane might be (in a slight across that area) might be considered satisfactory. I would take a lot more data to bear me out on pilot comments but the airplane is definitely more controllable, maybe too controllable. This added problem causes enough dispersion to be considered unsatisfactory but with a little bit of learning it could well be the other direction, it could be satisfactory.

On the basis of two runs using this DLC with a .3 sec...I would say it's the cross coupling case, DLC----at any rate, the aircraft response to throttle input was very pronounced. Quite a bit of difficulty in controlling my pitch attitude and controlling sink rate, touchdown point, and in the flare seemed to work out. I found during the approach the control was there but in the flare the initial response was such that it was unknowlingly called for more than I needed and consequently I over-controlled it. Overall, it was unsatisfactory.

PILOT G

DATE:	6 December 1974
PURPOSE:	Airworthiness evaluation
DEVIATIONS FROM BASIC MODEL:	None
TAPED COMMENTS:	6 December 1974

We've just been doing a series of runs with the pitch attitude of the aircraft set at 1 deg nose up using a no-flare technique, with the glide slope path set to intercept the runway at 400 ft midway in the touchdown zone and no turbulence. I've been setting up at about a target of 11 fps and no turbulence. My overall feeling is that the touchdown zone is very controllable and with a little practice you can get extremely consistent touchdowns in the middle of the zone. During my runs I was consistently short. At that, I feel with a little learning you could consistently get right into the middle of the zone and very reliably do so with a minimum amount of practice.

10% turbulence was introduced to the problem along with a crosswind and finally crosswind and turbulence. Each of these separate problems add to the pilot workload but I think, with the no-flare technique, that basically the overall task is still satisfactory and one in which you can accomplish under these conditions fairly repeatably and get in the touchdown zone. All in all, I'm fairly pleased with the results and I think with a little bit of learning it would be a task that the average pilot could accomplish, even with the 1 sec engine lag which, again, complicates that response.

We're evaluating a steeper glide slope of 8 deg and higher sink rates and we're trying to determine whether or not this is equivalent to something that we might see in turbulence; these higher sink rates ending close to the ground - at about the time pilot flare action would be required. Insofar as that's possible because of down gusts and you might be seeing because of turbulence that these higher sink rates during these approaches could tend to bring out the type of pilot response required to bring this touchdown down into the target range. The dynamics of this particular exercise are for calm winds, 8 deg. Doesn't make this simulation perhaps as valid as the actual turbulence but you may see these kinds of sink rates close to the ground and have to put in similar-type of pilot actions, there, and the throttle responses and whatnot required to accomplish this task after you flare.

We've just demonstrated a series of runs at a higher speed. We went up to 70 kt and the attitude was set at -4 θ and higher speed appeared to give you a higher sense of controllability. On the flare technique, all I did was leave the throttle set, by and large, and just rotate to clear the nose wheel for touchdown. I think most of my landings were in the zone and actually the flare and the sink rates were actually below nominal. The abuse that we're trying to simulate with this higher speed is the higher touchdown sink rates which didn't manifest themselves or the tendency to go long which was only slightly demonstrated. All in all it was a pretty nice flying airplane at this speed and I think it tends to degrade the overall evaluation that we're trying to accomplish.

The question was raised whether or not we are seeing these kinds of speeds during some of the turbulence we've been in. I don't believe I've seen as much in a steady state condition, and a steady state condition of 70 kt is quite enjoyable but in the last seconds, that a turbulence of this nature would cause the speed to go 70 or not I don't think is as important as the change in attitude that this turbulence may have caused. And I do believe we've seen as much as 5 or 6, -4 about 5 or 6 deg of θ during some of these abuses in turbulence and consequently we'd see the pilot reaction and that a response would have to be similar, and particularly for near the ground where it's time to flare and you have to make a more conscious effort of raising the nose to clear the nose wheel for touchdown, so in that respect the simulation is valid.

OK, we've just looked at the flight reference change of 4 deg nominally changed to about +8 and the θ for the approach was about 7 or 8, whatever. We managed to get most of the landings, again, into the zone at these higher touchdown rates, no flare was done with the control column, just the power that was required to drive it into the touchdown zone. This type of abuse is not representative, in my mind, of the type of abuse you would see in turbulence. I don't think, in and around the flare altitude, you're going to see gusts, or shears, or anything like that which might cause an increase in α of 4 deg. I don't remember seeing it during any of the simulations in turbulence and anything causing the airplane to pitch to an attitude like that, so in this particular area of investigation, I don't think the simulation represents what we'd see in real life. I think for a target area for future simulations that α excursions on the range of maybe 2 deg might be more appropriate and certainly ought to be investigated but I think the 4 we just looked at isn't representative.

These are comments regarding the 1% turbulence. We made 6 to 8 runs. In general, pilot workload was increased significantly. Flight path control was degraded combined with the 1 sec engine lag, the overall pilot task was not easily accomplished and well outside the target touchdown sink rate and distance. Overall, the task is unsatisfactory with that degree of turbulence. I do question the validity of the turbulence model but should there be turbulence of those extremes, this airplane would not be capable of coping with the problem.

We've just made a series of runs at 9 deg γ. On the first case we made the correction from our nominal rate of descent, which was around 1000 fpm at 9 deg, and the idea was to add throttle to bring it down to around 600 fpm for the touch. I brought in throttle, in a step motion sort of open loop, at approximately 100 ft on the first case and it was easily accomplished. It wasn't a rapid and dynamic last-minute-ditch pilot reaction as it would occur normally when he realized that he had a high rate of descent close to the ground. So on the second run we delayed with open-loop response until 50 ft where it became readily apparent to the pilot that he indeed was off the nominal glide path and with a high rate of descent so we made a last-ditch throttle input and we took what we could get and as a result we wound up getting pretty close to the middle of the target zone, touchdown sink rate, and distance. The intent of this increased γ, from the original abuse case of 2 deg, from 6 to 8, (now we're going another degree to 9) was to determine, in the no-flare case, whether an increased abuse was appropriate, i.e., since the pilot was not flaring could he tolerate a higher sink rate up to the flare point and compensate for that. In the last two cases you can still get into the window and it would seem to be appropriate to examine the no-flare case with an increased γ of say as much as 3 deg abuse of scheduled γ for an airplane that would be operational with no-flare.

We just looked at 2 cases in which we had a headwind component on the order of 30 kt and in one case the vertical speed was kept constant and the glide slope was increased to about 9.5 deg. My initial feeling there was that it was not a realistical operational thing that would occur. What would more than likely occur in the situation would be that the glide slope would be constant, i.e., around 6 deg scheduled and that the rate of descent would be varied to meet that glide slope. I would have to say that of the two that I flew, that the steeper glide slope ultimately...now in both cases, the ground speed was the same but the flight path angle varied. I think I had more trouble with the second case. The higher glide path angle, although uncomfortable, you still have the same ground speed and you have plenty of time to compensate to get it on the runway. Strangely enough, I thought that the low rate of sink, low vertical velocity around 300 - 400 fpm, with that low ground speed, would be a simple pilot task and we did this IFR down to a couple hundred feet and then broke out and in every instance even glide path control was harder, tracking was difficult, and a lot of pilot compensation was made. I had all the time in the world to make the changes but still those changes were required, over-controlling was evident and it seemed like a reasonably busy task for the pilot, strangely enough.

I guess this concludes my comments for this entire session on 6 December 1974.

PILOT H

DATE: 26 November 1974

PURPOSE: Familiarization

DEVIATIONS FROM BASIC MODEL: None

TAPED COMMENTS: 26 November 1974

First we make some runs starting 500 ft in light turbulence, almost calm air. And it seems to me that they were better than they were yesterday. I got some good landings but we've no repetition. In turbulence, 10% turbulence, I felt there was something wrong in the last, say, 200 ft. When I make an abuse case from above the glide path, I use the power on the most on the stop and when I regain the slope, the total lag of engine and aircraft response is too low so that I'm always going below the glide path. For the landing in turbulence, some are good and the others are no good, I think. It's because the total lag of engine plus aircraft response is too long. The pilot cannot fly to stop the sink rate; and the landings are not repeatable. Then we fly IFR and I feel that at 200 ft or 300 ft there is no problem to fly the glide path. Then we run engine failure and with failures at 400 ft or 300 ft, the main problem is the problem of lateral control because we need to trim the plane to fly and below 300 ft there is a problem of lateral control but also forward control. You can recover better when your forward control is first and you change the attitude 2 or 3 sec after. But anyway, when you fly on the same pitch attitude that you must have with a one engine failure, it's very, very better. You have no more problem.

PILOT H

DATE:	27 November 1974
PURPOSE:	Modification of response
DEVIATIONS FROM BASIC MODEL:	Engine lag decreased by .5 sec
TAPED COMMENTS:	27 November 1974

At the beginning the problem of the abuse case, say, 1 dot on the glide slope indicator at about 300 ft to recapture the glide slope, is if you want to recapture it, do it rapidly; you start an oscillation up and down above and below the glide slope and from that time it's very difficult to make a safe landing.

I found that pitch easier to fly and easier to land the plane. But I flew the pitch at 4 deg and hardly looked at the flight reference.

The difference between the 1 sec and the 0.5 sec lag: the difference is that you need not so much movement of the throttle so that on the short final you do not oscillate on each part of the glide slope and especially when you make an abuse case at 200 ft of 1 dot of glide slope.

We wanted to see pitch 8 deg down and fly the pitch at the flight reference criteria. We saw that it does not work, especially during the flare because it takes too much time to make the 8 deg rotation and this rotation has too much action on the vertical speed when pitch attitude comes dynamically up to zero. Then we change the lag of the engine to 0.5 sec and that seems to give it very good tracking even with the 10% turbulence. And we made that in evidence by making some abuse cases above the glide path, say 1 dot, and 1 dot below the glide path -- between 400 ft and 200 ft. Even in turbulence there are no oscillations about the glide path, it comes back smoothly on the flight path. So, I should say that what I don't take out on the last two runs, about tracking in low altitude and VFR, disappear with 0.5 sec lag.

We made some IFR approaches just to see how I was tracking with the 1 sec lag and IFR so that we have something like a closure loop with throttle. I could look at the vertical speed indicator. I think in IFR we don't track to the glide path so tightly and it seems we have less oscillation because we have an instrument which gives me vertical speed indicator to give indication to fly with throttle as a primary control.

On the SAS, I think it does not give some good thing. Maybe it gives some oscillation during the landings. It also diminished the margin because we have the tendency to keep the pitch down at 4 deg.

On this landing it seems I can very easily reach the touchdown zone and I make a big change in attitude, say to more than zero deg. To reach more than between zero deg and sometimes 3 to 5 deg and add with power slowly, it gets you a landing that's about the same.

About these landings, they are 8 deg of flight path. I had two landings with bounce because when you are 1 sec late you have too much power and you have a tendency to bounce. I think the 5 or 6 deg of rotation which are necessary to flare and to bring the pitch to zero attitude is a limitation of this plane because it gives a C_{L_α} which makes up everything with power you want.

That seems to be a good abuse case. About 35 ft at the beginning of the runway, I had some trouble just about 20 to 40 ft and I think that should be a good abuse to judge the quality of the landing and even the landing distance.

On the abuse, making a step backward on the throttle to simulate, in calm air, a vertical gust downward is very hard to do. I felt I was always short and had the feeling the aircraft was going down in a frightening way. I pulled the nose up and put my full power on and every time I touched down about 9 fps and I make a bounce and I lose about maybe 300 feet of the runway.

PILOT H

DATE: 3 December 1974

PURPOSE: Modification of response/coupling

DEVIATIONS FROM BASIC MODEL: ---

TAPED COMMENTS: 3 December 1974

At the end of Run 37, I've been doing approaches starting at 1100 ft, IFR. With a ceiling at about 300 ft. After the first approach it felt like a normal plane even in the 10% turbulence level. I could control the ILS flight path localizer and glide path very well to 300 ft and well in VFR, too. Also during the landings, it seems to be well behaved.

For the first time I thought I could land the plane where I wanted. If I had, after this first step power input for flare, too much power I could come back slowly on the power and land 100 ft or 200 ft longer but at least I could do something.

We have made five runs with a slow flight reference, +4, and it seems to work well. I make good landings even with that flight reference set at 35 ft.

I just made about 10 runs in 10% turbulence with that DLC and it seemed always to me that it works well, and that I can fly the plane in turbulence and land almost where ever I want, I would say. After we made some abuse cases, using the DLC on the 8 deg glide slope in calm air, there was no problem to land within a reasonable distance and just about on the touchdown zone and a pretty low sink rate. The pilot feels the airplane has a good response. I flew two flight reference abuse cases at +4 and it's easy to land in calm air. You don't feel that it's really dangerous to fly that flight reference. And with the crosswind, the airplane is too controllable and it seemed that it could land almost unassisted, which is a matter of configuration of the lateral control. And with the 1% level of turbulence you fly well the plane which is just a little bit more difficult than the 10% level.

We performed a series of tests to evaluate V_{MC}. With the left engine reduced, we slowed the speed to 58 kt, wings level, and full rudder on the right. After we make aerodynamic V_{MC}, the speed generally preferred by the pilot should be around 70 kt.

PILOT H

DATE: 4 December 1974

PURPOSE: Evaluation in Varying Wind Conditions

DEVIATIONS FROM BASIC MODEL: ---

TAPED COMMENTS: 4 December 1974

For this second run, the technique I employed was 2 deg of left bank and try to keep the runway heading with about 2/3 of the rudder authority to the right, and that seems to work too well, I found.

This run was made keeping the heading of the runway with 2 deg left bank and adding small amount of rudder; but you can work well the rudder, especially at low altitude, to keep to the heading of the runway, and we had 10 deg sideslip.

On the last run, I made a decrab only with rudder, keeping the wings level and it seemed to work well, too. Decrab was made around, say, 20 ft.

The last run was meant to see how to follow the heading of the runway with a sideslip about 12 deg and a bank angle of about 2 deg and half of the rudder deflection. This run was made with a left 10 deg bank and keeping the heading of the runway with the rudder, about half of the deflection. Sideslip was about 10 deg at the touchdown.

This run, I try to maintain the heading of the runway during the approach, let's say from 200 ft only with adding the (.....) about back. This one was made with 20 kt of crosswind, and I tried to fly that and keep the heading of the runway but you need too much movement on the rudder and it's not very precise so I think we land about...

Now this run was made keeping the left wing low, about 2 deg, and heading not more than 10 deg different from the runway heading, at low attitude, working on the rudder to try to keep the runway heading.

OK, this run was made...of course I couldn't see the runway with that 20 deg difference of heading...so I made the approach with 2 deg left wing low to keep a heading of 10 deg difference to the runway and then in short while I added a little more rudder and the landing seemed to be good and I controlled the plane well.

OK, on this failure, I had full rudder to the left and 10 deg of slip and the difference from all engine that we have seen in crosswind is that you cannot control it any more in this axis with the rudder.

That failure was made about 300 ft, at 70 kt, flying 8 deg pitch down and there is much difference. You can control it but maybe the aileron seems to be very sluggish for that kind of control but you can, with aileron and rudder, keep the heading of the runway.

OK, that was about the same as the run before. I tried to fly that plane without trimming because it seemed like there was not enough time to trim the plane laterally and maybe it's because the button is not well placed, so I had oscillation in pitch and roll and I had about 75 kt so the ailerons seemed a little better.

This was much better, the same condition, 70 kt but with 0 deg of pitch and it seems very much better than when you have -8 deg.

OK, at this time, that was the same failure as before but during the approach, I try to have...that was a right-hand engine failure...I tried to keep the rudder half way of the maximum movement and in that case you should feel that the roll control is much better.

On this run with turbulence, I have enough rudder, on the left, and I don't know why but I seem to actually be at 80 kt, maybe it's because I had too many runs with 4 deg pitch down before. This time I tried to keep more aileron, and tried to keep the rudder half way on the left, but it's very difficult because you have to use rudder to keep the runway heading and so sometimes you have a more lucky engine, sometimes not.

OK, at this time, I didn't have to use too much rudder during the approach and up to flare altitude; and when I added power I lost the control in roll. I think there the first thing that is missing on this plane is to have a trim rudder.

We made some runs starting at 500 ft and offset off the centerline of the runway of 500 ft. There is not too much problem to come back. Using a 20 deg heading change, and using much rudder to come back on the centerline. We think this offset is maybe too large, we ask for an offset of 300 ft in calm air and the plane flying 70 kt seems to tolerate it well and has good maneuverability.

The first maneuver with the right engine failed at 70 kt and tried to come back on the centerline, and it's not too easy, and very dangerous. The left engine ones, I had 20 deg sideslip and I could not do anything.

OK, I came back well on the centerline with the left engine failed and on reaching the centerline, I tried to keep it but I had about 15 to 20 deg of slip.

OK, in the next run which was a right engine failure, 70 kt, 400 ft, and coming back on the centerline almost only with rudder, keeping the wings level - that's not too bad.

REFERENCES

1. Hebert, J., et al, STOL TACTICAL AIRCRAFT INVESTIGATION, Volume I: Configuration Definition, AFFDL-TR-73-21-Vol. I, May 1973.

2. Vincent, James H., STOL TACTICAL AIRCRAFT INVESTIGATION, Volume V, Part II, Flight Control Technology: Piloted Simulation of a Medium STOL Stransport with Vectored Thrust/Mechanical Flaps, AFFDL-TR-73-19-Vol. V, Part II, May 1973.

3. Jewell, Wayne F. and Craig, Samuel J., IDENTIFICATION OF MINIMUM ACCEPTABLE CHARACTERISTICS FOR MANUAL STOL FLIGHT PATH CONTROL, Volume II: STOL Aircraft Characteristics, Generic Model, and Test Configurations, STI TR 1035-3, Vol. II, April 1974 (Forthcoming FAA RD).