~~CONFIDENTIAL~~

Z65·11545

ARM-10

Copy No. 39

APOLLO TECHNICAL MANUAL

Reliability (U)

15 October 1963

CLASSIFICATION CHANGE

To UNCLASSIFIED

By authority of GDS-GP-4 Date 7-75

Changed by L. Shirley

Classified Document Master Control Station, NASA

Scientific and Technical Information Facility

AVAILABLE TO NASA HEADQUARTERS ONLY

This document contains information affecting the national defense of the United States within the meaning of the Espionage Laws. Title 18 U.S.C. Section 793 and 794. Its transmission or revelation of its contents in any manner to an unauthorized person is prohibited by law.

NORTH AMERICAN AVIATION, INC.
SPACE and INFORMATION SYSTEMS DIVISION

Downgraded at 3-year intervals: declassified after 12 years; DOD DIR 5200.10.

Pub No. 502-G

~~CONFIDENTIAL~~

NASA and NASA Contractors Only

FOREWORD

This manual is one of a series of Apollo System Engineering Manuals which are internal control documents prepared for the purpose of providing a contemporary source of quantitative design or allied data necessary to design major components of the vehicle.

This manual designated ARM-10 contains fundamental information on the reliability program for the Apollo Spacecraft which is to be designed and constructed so that the probability of successfully completing a mission is 0.9638. Included in this concept of achievement is the probability of 0.99958 that the crew will not be exposed to conditions which exceed emergency limits.

The first section of the ARM-10 manual contains data pertaining to the Apollo Reliability Program in general and specifically to each of the Apollo subsystems. A separate section provided for each of the subsystems consists of reliability studies and the related qualification test program plans.

B. H. Hershkowitz
APOLLO
Reliability Engineering Manager

CONTENTS

Section		Page
1.0	APOLLO RELIABILITY CRITERIA	1.1
1.1	Introduction	1.1
1.2	Reliability Objectives	1.1
1.3	NAA/S&ID Objectives	1.3
1.4	Terminology	1.5
1.5	Mission Phase Time Line	1.6
1.6	Mission Essential Equipment	1.8
1.7	Mission Success Logic Diagrams	1.9
1.8	Test Program	1.10
2.0	STRUCTURAL AND MECHANICAL SUBSYSTEMS	2.1
2.1	Introduction	2.1
2.2	Separation Systems	2.1
2.3	Launch Escape Tower Separation System	2.1
2.4	Forward Compartment Heat Shield Separation System	2.5
2.5	Command Module to Service Module Separation System	2.5
2.6	Adapter Separation Systems	2.7
2.7	Qualification Test	2.7
3.0	ELECTRICAL POWER SYSTEM	3.1
3.1	Introduction	3.1
3.2	Configuration Analysis	3.1
3.3	Failure Effects Analysis	3.1
3.4	Qualification Test	3.39
4.0	EARTH LANDING SUBSYSTEM	4.1
4.1	Introduction	4.1
4.2	Analysis	4.1
4.3	Qualification Test	4.1
5.0	CRYOGENIC STORAGE SYSTEM	5.1
5.1	Introduction	5.1
5.2	Analysis	5.1
5.3	Qualification Test	5.18
5.4	Qualification Test Schedule	5.18
6.0	SERVICE MODULE REACTION CONTROL SUBSYSTEM	6.1
6.1	Introduction	6.1
6.2	Analysis	6.1
6.3	Failure Effects Analysis	6.3
6.4	Qualification Tests	6.8
6.5	Qualification Test Schedule	6.19

Section		Page
7.0	COMMAND MODULE REACTION CONTROL SUBSYSTEM	7.1
7.1	Introduction	7.1
7.2	Analysis	7.1
7.3	Failure Effects Analysis	7.1
7.4	Qualification Tests	7.15
7.5	Qualification Test Schedule	7.18
8.0	ENVIRONMENTAL CONTROL SUBSYSTEM	8.1
8.1	Introduction	8.1
8.2	Analysis	8.1
8.3	Qualification Tests	8.39
9.0	SERVICE PROPULSION SYSTEM	9.1
9.1	Introduction	9.1
9.2	Configuration Analysis	9.1
9.3	Summary of Failure Effects Analysis	9.4
9.4	Qualification Test	9.4
10.0	STABILIZATION AND CONTROL	10.1
10.1	Summary	10.1
10.2	Analysis	10.1
10.3	Subsystem Description	10.21
10.4	Special Studies	10.29
10.5	Development Tests	10.35
10.6	Subsystem Qualification Tests	10.36
11.0	GUIDANCE AND NAVIGATION	11.1
11.1	Summary	11.1
11.2	Analysis	11.1
11.3	Subsystem Description (G&N)	11.5
11.4	Qualification Test	11.16
12.0	COMMUNICATIONS AND DATA	12.1
12.1	Summary	12.1
12.2	Failure - Effects Analysis	12.1
12.3	Reliability Logic Diagram Descriptions	12.1
12.4	Qualification Testing	12.59

Section		Page
13.0	INSTRUMENTATION SUBSYSTEM	13.1
13.1	Introduction	13.1
13.2	Central Timing Equipment	13.1
13.3	In-Flight Test System	13.1
13.4	Television System	13.10
13.5	Apollo Antennas	13.10
13.6	Radiation Detection Equipment	13.11
13.7	Entry Monitor Display	13.11
13.8	Failure Effects Analysis	13.12
13.9	In-Flight Testing and Maintenance	13.12
13.10	Qualification Tests	13.12
13.11	Reliability Assessment Model	13.16
13.12	Criticality and Hardware Requirements	13.17
13.13	Qualification Test Schedule	13.21
14.0	LAUNCH ESCAPE SUBSYSTEM	14.1
14.1	Introduction	14.1
14.2	Analysis	14.1
14.3	Launch Escape Motor	14.1
14.4	Pitch Control Motor	14.6
14.5	Tower Jettison Motor	14.6
14.6	Tower Separation Mechanics	14.6
14.7	Failure Effects Analysis	14.7
14.8	Qualification Tests	14.7

ILLUSTRATIONS

Figure		Page
1.1	Phase I - Launch Through Earth Orbit	1.15, 1.16
1.2	Phase II - Translunar Injection/LEM Recovery	1.17, 1.18
1.3	Phase III - Transearth Through Separation	1.19, 1.20
1.4	Phase IV - Earth Reentry Through Recovery	1.21, 1.22
2.1	Launch Escape Tower Separation (Bolt, Typical Four Places)	2.3
2.2	Forward Compartment Jettison	2.4
2.3	Forward Heat Shield Separation System Logic Diagram	2.5
2.4	Command Module/Service Module Separation (Typical, Three Places)	2.6
2.5	Adapter Separation System - LOR Mission	2.8
2.6	Adapter Separation Sequence	2.9
2.7	Pressure Cartridge Reliability Assessment Model	2.10
2.8	Explosive Bolt Reliability Assessment Model	2.10
2.9	Pressure Cartridge Qualification Test Schedule	2.12
2.10	Explosive Bolt Qualification Test Schedule	2.13
3.1	Reliability Electrical Power System Logic Diagram	3.3
3.2	EPS Reliability Assessment Model (Less Fuel Cell)	3.40
3.3	EPS Qualification Test Schedule	3.43
3.4	Fuel Cell Reliability Assessment Model	3.44
3.5	EPS Fuel Cells Qualification Test Schedule	3.45
4.1	Earth Landing System Logic Diagram	4.5
4.2	ELS Test Oriented Reliability Logic Diagram	4.7
4.3	ELS Parachute Disconnects Qualification Test Schedule	4.9
4.4	ELS Drogue and Pilot Mortars Qualification Test Schedule	4.10
4.5	ELS Sequence Controller Qualification Test Schedule	4.11
4.6	ELS Parachute Fabric Samples Qualification Test	4.12
5.1	Cryogenic Storage System Schematic Diagram	5.3
5.2	Service and Command Module Cryogenic Storage, EPS and ECS Integrated Systems	5.5, 5.6
5.3	Cryogenic Storage System Mission Success Mode Logic Diagram	5.7
5.4	Cryogenic Storage System Crew Safety Mode Logic Diagram.	5.8
5.5	Mission Success (14-Day Mission) Logic Diagram	5.9
5.6	Airframe 009 Oxygen System Schematic	5.16
5.7	Cryogenic Reliability Assessment Model	5.19
5.8	Cryogenic Subsystem Qualification Test Schedule, Phase A	5.20
5.9	Cryogenic Subsystem Qualification Test Schedule, Phase B	5.21

[redacted]

Figure		Page
6.1	Service Module Reaction Control System Schematic	6.4
6.2	C/M RCS Test Oriented Reliability Logic Diagram	6.5
6.3	Quad System Mathematical Models	6.6
6.4	S/M RCS Test Oriented Reliability Logic Diagram	6.18
6.5	S/M RCS Engine Test Schedule	6.20
6.6	S/M RCS Propellant Feed (Less Tanks) Qualification Test Schedule (Sheet 1 of 2)	6.21, 6.22
7.1	Command Module Reaction Control System Logic Diagram	7.5, 7.6
7.2	C/M RCS Test Oriented Reliability Logic Diagram	7.16
7.3	C/M RCS Engine Test Schedule	7.19
7.4	C/M RCS Propellant Feed (Less Tanks) Qualification Test Schedule	7.20
8.1	Environmental Control System "E" Revision	8.3, 8.4
8.2	Pressure Suit Subsystem Logic Diagram	8.5, 8.6
8.3	Water-Glycol Circuit Logic Diagram	8.7, 8.8
8.4	Command Module Pressure and Temperature Control, Logic Diagram	8.9, 8.10
8.5	Oxygen Regulation Subsystem, Logic Diagram	8.13, 8.14
8.6	Back Pack Oxygen Supply, Logic Diagram	8.15
8.7	Water Regulation, Logic Diagram	8.17, 8.18
8.8	ECS Test Oriented Reliability Logic Diagram	8.39
8.9	ECS Qualification Test Schedule	8.41
9.1	SPS Test Oriented Reliability Logic Diagram	9.7, 9.8
9.2	SPS Engine Test Schedule	9.16
9.3	Propellant Feed Components (Less Tanks) Qualification Test Schedule	9.18
10.1	Accelerometer Package	10.7
10.2	Body-Mounted Attitude Gyro	10.8
10.3	Delta Velocity Display	10.9
10.4	Electronic Control Assembly, Roll	10.9
10.5	Electronic Control Assembly, Thrust	10.10
10.6	Electronic Control Assembly, Pitch Yaw	10.10
10.7	Electronic Control Assembly, Thrust Vector	10.11
10.9	Flight Director Rate Indicator	10.12
10.10	Attitude Gyro Coupling Unit	10.13
10.11	Gimbal Position Indicator	10.14
10.12	Level Detector	10.14
10.13	Minimum Impulser	10.14
10.14	Rate Gyro Package	10.14
10.15	Reaction Jet Drivers, Command Module	10.15
10.16	Reaction Jet Drivers, Service Module	10.17, 10.18
10.17	SCS Control Panel	10.19
10.18	Back-Up Entry Switch	10.19
10.19	Translational Control	10.19
10.20	Three-Axis Rotational Control-Direct	10.19
10.21	Three Axis-Rotational Control-Normal	10.20
10.22	Universal Power Supply	10.20

[redacted]

Figure		Page
10.23	Stabilization and Control Subsystem Navigational Sighting Logic Diagram	10.27, 10.28
10.24	SCS Reliability Assessment Model	10.37
10.25	SCS Qualification Test Schedule	10.39, 10.40
11.1	Guidance and Navigation System Logic Diagram	11.7, 11.8
11.2	Guidance and Navigation Reliability Assessment Model	11.17
12.1	Communications and Data Subsystem Subassemblies Logic Diagram	12.47, 12.48
12.2	Audio Center Receiver (ACRC)	12.49
12.3	Audio Center Transmitter (ACTM)	12.49
12.4	Audio Center Voice Operated Transmit and Controls (ACVC)	12.49
12.5	VHF/AM Transmitter-Receiver Controls (AMCC)	12.50
12.6	VHF/AM Receiver (AMRC)	12.50
12.7	VHF/AM Transmitter (AMTM)	12.50
12.8	C-Band Transponder (CBX)	12.51
12.9	VHF/FM Transmitter (FMX)	12.51
12.10	High Frequency Transceiver (HFX)	12.51
12.11	Headset (MHHS)	12.52
12.12	Microphone (MHMM)	12.53
12.13	Pulse Code Modulation Telemetry (PCM)	12.54
12.14	Pulse Code Modulation Oscillator (PCMO)	12.55
12.15	Premodulation Processor Data Discriminator (PMDD)	12.55
12.16	Premodulation Processor Data Modulator (PMDM)	12.55
12.17	Premodulation Processor Key (PMEK)	12.55
12.18	Premodulation Processor Voice (PMEV)	12.55
12.19	Premodulation Processor Network (PMMN)	12.55
12.20	Premodulation Processor Near-Earth Down-Data (PMND)	12.56
12.21	Premodulation Processor Power Supply (PMPS)	12.56
12.22	Premodulation Processor Voice Discriminator (PMVD)	12.56
12.23	Premodulation Processor Voice Modulator (PMVM)	12.56
12.24	Signal Conditioners (SCR)	12.56
12.25	S-Band Power Amplifier (SPA)	12.57
12.26	Unified S-Band Receiver	12.57
12.27	Unified S-Band Transmitter (USBT)	12.57
12.28	Unified S-Band Power Supply and Controls (USPC)	12.58
12.29	VHF Recovery Beacon	12.58
12.30	Telemetry Assessment Model	12.60
12.31	Near-Earth Assessment Model	12.60
12.32	Deep-Space Assessment Model	12.60
12.33	Recovery Assessment Model	12.60
12.34	Communications and Data Subsystem Qualification Test Schedule (Criticality 2)	12.63
12.35	Communications and Data Subsystem Qualification Test Schedule (Criticality 3)	12.64

Figure		Page
13.1	CTE Reliability Assessment Model and Logic Diagram	13.4
13.2	Single Sensor and Comparator In-Flight Test System Block Diagram	13.8
13.3	Monitor Logic for Sparing	13.15
13.4	Recovery Antenna Assessment Model	13.18
13.5	High Gain Antenna Assessment Model	13.18
13.6	IFTS Reliability Assessment Model	13.18
13.7	TV Equipment Qualification Test Schedule	13.22
13.8	CTE Qualification Test Schedule	13.23
13.9	HF Recovery Qualification Test Schedule	13.24
13.10	VHF Recovery Qualification Test Schedule	13.25
13.11	VHF Recovery (Back-Up) Qualification Test Schedule	13.26
13.12	Two kmc High-Gain Qualification Test Schedule	13.27
13.13	C-Band Beacon Qualification Test Schedule	13.28
13.14	C&D Qualification Test Schedule	13.29
14.1	Normal Mission Tower Jettison Reliability Logic Diagram	14.3
14.2	Launch Abort and Tower Jettison Reliability Logic Diagram	14.4
14.3	LES Test Oriented Reliability Logic Diagram	14.10
14.4	LES Tower Jettison Motor Test Schedule	14.12
14.5	Launch Escape Motor Qualification Test Schedule	14.14
14.6	Pitch Control Motor Qualification Test Schedule	14.15

TABLES

Table		Page
1.1	Major Element Reliability Objectives	1.2
1.2	Apollo Command Module and Service Module Mission Reliability	1.4
1.3	Mission Phase Time Line	1.7
2.1	Structural & Mechnaical Subsystem Mission Reliability (LOR)	2.2
2.2	System Parameters for Qualification Testing	2.11
3.1	Electrical Power Subsystem Mission Reliability (LOR).	3.2
3.2	Electrical Power System Failure Effects Analysis	3.5-3.33
3.3	Fuel Cell Module Failure—Mode Analysis	3.34-3.38
3.4	EPS Parameters for Qualification Testing	3.41
3.5	Fuel Cell Parameters for Qualification Testing	3.44
4.1	Earth Landing Subsystem Mission Reliability (LOR)	4.3, 4.4
4.2	Earth Landing Reliability Predictions	4.6
4.3	ELS Parameters for Qualification Testing	4.8
5.1	Cryogenic Storage Subsystem Mission Reliability (LOR).	5.2
5.2	Cryogenic Storage System Failure Effects Analysis	5.10-5.13
5.3	Predicted Failure Rates and Reliability Values	5.14
5.4	Cryogenic System Parameters for Qualification Testing	5.18
6.1	Service Module Reaction Control Subsystem Mission Reliability (LOR).	6.2
6.2	Reaction Control Subsystem Reliability Comparison	6.3
6.3	Service Module Reaction Control System Failure Effects Analysis	6.9-6.16
6.4	S/M RCS Rocket Engine Parameters for Qualification Testing	6.17
6.5	S/M RCS Propellant Feed Parameters for Qualification Testing	6.19
7.1	Command Module Reaction Control Subsystem Mission Reliability (LOR)	7.2-7.4
7.2	Command Module Reaction Control Subsystem Failure Effects Analysis	7.7-7.14
7.3	C/M RCS Engine Parameters for Qualification Testing	7.17
7.4	C/M RCS Propellant Feed Parameters for Qualification Testing	7.17
8.1	Environmental Control Subsystem Mission Reliability (LOR).	8.2
8.2	Environmental Control Subsystem Failure Effects Analysis	8.20-8.38
8.3	ECS Parameters for Qualification Testing	8.40

Table		Page
9.1	Service Propulsion Subsystem Mission Reliability	9.2
9.2	Automatic Versus Manual Propellant Utilization Reliability Comparison	9.3
9.3	Service Module Service Propulsion System Failure Effects Analysis	9.9-9.14
9.4	SPS Engine Parameters for Qualification Testing	9.15
9.5	SPS Propellant Feed Parameters for Qualification Testing	9.15
10.1	Comparison of NAA/S&ID and Minneapolis-Honeywell Failure Rates	10.1-10.6
10.2	Thrust Vector Control Circuit Apportionment and Predictions	10.6
10.3	Stabilization and Control Subsystem Mission Reliability (LOR)	10.22, 10.23
10.4	Stabilization and Control Failure Effects Analysis	10.24-10.26
10.5	Stabilization and Control Subsystem Equipment	10.30-10.32
10.6	Preliminary Subassembly Spares List	10.33-10.35
10.7	System Parameters for Qualification Testing	10.38
11.1	Guidance and Navigation Subsystem Mission Reliability (LOR)	11.2
11.2	MIT Guidance and Navigation Subsystem Apportionment and Predictions	11.3
11.3	Inertial Measurement Unit Failure Rate Comparisons	11.4
11.4	Guidance and Navigation Failure Effects Analysis	11.9-11.11
11.5	G&NS Parameters for Qualification Testing	11.16
12.1	Subsystem Mission Reliability (LOR)	12.2, 12.3
12.2	Audio Center Failure Effects Analysis	12.4, 12.5
12.3	VHF/AM Transmitter-Receiver Failure Effects Analysis	12.6, 12.7
12.4	C-Band Transponder Failure Effects Analysis	12.8-12.13
12.5	Unified S-Band Transponder Failure Effects Analysis	12.14
12.6	S-Band Power Amplifier Failure Effects Analysis	12.15
12.7	VHF/FM Transmitter Failure Effects Analysis	12.16,12.17
12.8	VHF Recovery Beacon Failure Effects Analysis	12.18-12.20
12.9	Signal Conditioners Failure Effects Analysis	12.20-12.22
12.10	Data Storage Failure Effects Analysis	12.23,12.24
12.11	Premodulation Processor Failure Effects Analysis	12.25-12.29
12.12	HF Transceiver/Receiver Module Failure Effects Analysis	12.30-12.43
12.13	PCM Telemetry Failure Effects Analysis	12.44 12.45
12.14	Communications and Data Subsystem Parameters for Qualification Testing	12.61

Table		Page
13.1	Instrumentation Subsystem Mission Reliability (LOR).	13.2, 13.3
13.2	In-Flight Test, Subsystem Mission Reliability (LOR).	13.5, 13.6
13.3	Failure Effects Analysis	13.13, 13.14
13.4	TV & CTE System Parameters for Qualification Testing	13.19
13.5	Antenna Systems Parameters for Qualification Testing	13.19
13.6	C&D Parameters for Qualification Testing	13.20
14.1	Launch Escape Subsystem Mission Reliability (LOR)	14.2
14.2	Launch Escape Motor Apportioned and Predicted Failures Per 10^6 Motors	14.5
14.3	Pitch Control Motor Apportioned and Predicted Failures Per 10^6 Motors	14.5
14.4	Tower Jettison Motor Apportioned and Predicted Failures	14.6
14.5	Launch Escape Motor, Pitch Control Motor, and Tower Jettison Motor	14.8, 14.9
14.6	LES Rocket Motor Criticality and Hardware Requirements	14.11
14.7	Program for Test Articles, Tower Jettison and Launch Escape Motors	14.13
14.8	Program for Test Articles, Pitch Control Motor	14.16

DISTRIBUTION LIST

Name	Office	No. of Copies	Copy No.
Bailis, I.	043-50	10	1-10
Bellamy, C. W.	696-300	1	11
Cole, E. G.	697-600	1	12
Cook, P. P.	North American Aviation, Inc. S&ID Apollo Representative Bldg. A, Room 10 6001 Gulf Freeway Houston 23, Texas	1	13
Cooper, E. D.	699-200	1	14
Dodds, J. I.	696-700	1	15
Hershkowitz, B. H.	043-50	1	16
Johnson, J. H.	696-400	1	17
Kilmer, H. A.	096-700	1	18
Linsler, M. R.	696-500	1	19
Levine, D. S.	697-500	1	20
Nelson, N. H.	697-800	1	21
Nicholas, R. F.	696-200	1	22
Pomykata, J. M.	699-300	1	23
Pyle, R. W.	693-100	1	24
Steverson, H. L.	043-50	1	25
Templeton, R. R.	698-300	1	26
Webster, B. C.	697-700	1	27
Wells, J. G.	697-200	1	28
Wheelock, M. E.	043-50	1	29
NASA Resident Engineer-Downey	Chief of the Engineering Branch NASA Resident Engineer Apollo Spacecraft Project Office S&ID, Downey, California	1	30

DISTRIBUTION LIST

Office	No. of Copies	Copy No.
NASA Headquarters 1520 H. Street Washington, D. C. Attn: Mr. G.M. Low, MD (P)	2	31, 32
National Aeronautics and Space Administration Atlantic Missile Range Operations Port Canaveral, Florida Attn: Mr. B.P. Brown	2	33, 34
National Aeronautics and Space Administration Post Office Drawer D White Sands Missile Range White Sands, New Mexico	2	35, 36
National Aeronautics and Space Administration Resident Apollo Spacecraft Project Office Grumman Aircraft Engineering Corporation Bethpage, Long Island, New York	1	37
National Aeronautics and Space Administration Resident Apollo Spacecraft Project Office MIT Instrumentation Laboratory 75 Cambridge Parkway Cambridge 39, Massachusetts	1	38
National Aeronautics and Space Administration Manned Spacecraft Center Apollo Document Control Center (SP) Houston 1, Texas	12	39-50

LIST OF CURRENT PAGES

Page No.	Date	Revised	Classification

SECTION 1.0

APOLLO RELIABILITY CRITERIA

1.1 Introduction

The Apollo reliability program includes a procedure for assessment and review of the reliability concept, effort and achievements, throughout the design phase of the contract. Primary consideration is given to: (1) safety and integrity of systems, subsystems, and components; (2) conservative designs reflecting the maximum reliability attainable, consistent with performance, weight, and cost considerations; (3) early detection of actual and potential deficiencies, system incompatibility, and trends or conditions that could jeopardize flight or crew safety; and (4) elimination of unsatisfactory conditions through a system of rapid corrective action.

A reliability system analysis is presented for each subsystem of the spacecraft. Each analysis contains a subsystem reliability apportionment and prediction with a table of component reliabilities, system reliability logic diagrams, system reliability calculations and failure effects analyses. As test data become available from the integrated program of tests, evaluations will be made to derive reliability assessments for the subsystems and the spacecraft mission.

The Apollo test program and qualification test plan are described in section 1. Individual qualification test plans and schedules are included under the separate subsections for each subsystem.

1.2 Reliability Objectives

The reliability objectives for the complete mission, the safety of the crew and some of the major hardware elements are specified by NASA in terms of probability of success. Reliability objectives for the remaining major elements have been defined by NAA/S&ID and are based upon an apportionment as described under Terminology, subsection 1.4. The reliability values include the effects of the ground complex, launch vehicle, navigation and guidance system and the Apollo command, service and lunar excursion modules. Effects excluded from the mission probability objectives are the consideration of energetic particle radiation and meteoroid impact.

1.2.1 NASA Objectives

The probability of accomplishing the Apollo objective shall be 0.90. The probability that none of the crewmen shall have been subjected to conditions greater than the emergency limits, discussed under Reliability Design Criteria, subsection 1.3, shall be 0.999. NASA specified reliability objectives in addition to the above are given in Table 1.1.

Table 1.1

Major Element Reliability Objectives

Item	Mission Success Reliability	Crew Safety Reliability
GSE	.9999	.99999
GOSS Complex	.999	.99999
Launch Vehicle	.95 *	.99994
Command and Service Modules	.9638	.99958
Lunar Excursion Module	.984 *	.9995 *
Total Mission Success Reliability	.90 *	
Total Crew Safety Reliability (Emergency)		.999 *

* Values per NASA Statement of Work dated December 19, 1961, Revised August 14 and December 5, 1962.

[redacted]

1.2.2 NAA/S&ID Objectives

The spacecraft is to be designed so that the probability of successfully completing a mission without failure that would preclude mission success is 0.9638. Furthermore, the spacecraft design is to be such that the probability of the crew not being exposed to environments or conditions which exceed the emergency limits is at least 0.99958. These and other NAA/S&ID objectives for major Apollo hardware elements are presented in Table 1.1. The values given in Table 1.1 are further apportioned among the spacecraft subsystems as shown in Table 1.2. The individual elements comprising each subsystem and their reliability values are given in the subsystem sections 2 and following.

1.3 Reliability Design Criteria

The ultimate objective of the crew safely completing the mission is determined by the equipment which must be designed to accomplish the varied mission operations. The equipment functions and the manner in which they must be accomplished comprise the basic reliability design criteria discussed below.

1.3.1 Mission Success (Lunar Orbital Rendezvous Mission, LOR)

The mission shall be considered successful if the following functions are accomplished without incurring a failure that necessitates an abort:

The spacecraft successfully reaches the vicinity of the moon and enters lunar orbit.

The Lunar Excursion Module (LEM) and its crew are deployed, land on the moon, and a minimum exploration and stay time of two hours is accomplished.

Assuming the LEM meets its requirements, the LEM and spacecraft rendezvous and the personnel are transferred to the spacecraft without exposing the personnel to environments greater than the emergency limits.

The spacecraft returns to earth and lands without exposing the personnel to environments greater than the emergency limits.

1.3.2 Crew Safety

Crew safety shall be considered successful when the spacecraft personnel will not be exposed to environments exceeding the emergency limits during the complete mission or that portion thereof plus the

Table 1.2 Apollo Command Module and Service Module Mission Reliability *

(LOR Mission)

Subsystem Name	Reliability			Remarks
	Apportioned	Predicted	Assessed	
1. Structural and Mechanical	.999920[B]	.999926[A]	N.A.	Structures and heat protection = .99993; Mechanical = .99999; TOTAL = .99992 (SID 62-203)
2. Electrical Power	.998289[A]	.993400[A]	N.A.	SID 62-203 (App. was .9955)
3. Earth Landing	.999940[B]	.999940[A]	N.A.	Spec. MC999-0001 B
4. Cryogenic Storage	.998900[B]	.998900[A]	N.A.	Spec. MC901-0005 B
5. S/M Reaction Control	.996000[B]	.998434[A]	N.A.	SID 62-203
6. C/M Reaction Control	.999960[B]	.993473[A]	N.A.	SID 62-203
7. Environmental Control	.993500[B]	.980500[A]	N.A.	Spec. MC999-0034
8. Service Propulsion	.999770[B]	.964700[A]	N.A.	SID 62-203
9. Stabilization and Control	.995000[B]	.524922[A]	N.A.	Spec. MC901-0012C
10. Guidance and Navigation	.994000[B]	.953132[A]	N.A.	SID 62-203
11. Communication and Data	.992500[B]	.996000[A]	N.A.	SID 62-203
12. Instrumentation	.995500[B]		N.A.	SID 62-203
13. Launch Escape	.999950[A]	.999994[A]	N.A.	SID 62-203
Apollo C/M and S/M * * (Includes Launch Escape)	.9638	.3761	N.A.	

N.A.: Not Available

Mathematical Technique:
A Analytical Model (Logic diagram and known failure rate data)
B Analytical Method (Weighted subjective experience)

abort operations, including earth landing. Safety of the crew provisions are extended to include upon landing the spacecraft capability to sustain the crew for one day within and for six days in the vicinity of the landing point.

1.3.3 Emergency Limits

Emergency limits are those environments or conditions beyond which there is a high probability of permanent injury, death or incapacity to such an extent that the crew could not perform well enough to survive.

1.3.4 Safe Abort

For design purposes it is to be considered that the mission will be aborted if enough failures occur in operating systems or equipment so that one additional failure would eliminate the capability of safe abort. This consideration does not apply to non-operating systems such as structures. The criteria may be modified in individual cases if it is determined that an unacceptable tradeoff between mission success and crew safety reliability would occur.

1.4 Terminology

The reliability and failure rate terms apportioned, predicted and assessed are defined as follows:

1.4.1 Mission Success Reliability

Mission success reliability is the value expressing the probability of successfully completing the mission functions described above under Mission Success. The method utilized to obtain the value qualifies the term as follows:

Apportioned - The allocation of the system reliability requirement to subsystems and components in accordance with their complexity and other factors by such methods that if each component or subsystem meets its apportioned value the required system reliability will be obtained.

Predicted - Predicted Mission Success Reliability is a computed value derived from analysis of failure modes, redundancy and other attributes expected to affect performance, and supported by past experience with similar items, synthesis of detail part failure rate data and other quantitative data.

Assessed - Assessed Mission Success Reliability is a computed value derived from test data of the item. Integration of tests performed on elements comprising the item and its development models provides additional data which will be utilized to obtain

reliability assessments of the item prior to its test or use. Table 1.1 values for Assessed Mission Success Reliability will be provided as test data availability permits derivation of the assessments.

1.4.1.1 Failure Rate

Failure Rate is the number of failures per unit time or per unit cycle in a specified equipment. The failure rate is the reciprocal of Mean Time Between Failure. The method utilized to obtain the value qualifies the term as follows:

1. Apportioned - The Apportioned Failure Rate is apportioned in the same manner as Mission Success Reliability is apportioned or is computed from the Mission Success Reliability Apportioned value by use of the equation:

$$R = e^{-t/m}$$

where (e) is the base of the natural logarithms, approximately 2.71828
t is the time of interest (or cycles)
m is the Mean Time Between Failure. The failure rate is 1/m.

2. Predicted - The Failure Rate obtained from data based upon past experience with similar items and synthesis of detail part failure rate data.

3. Assessed - The Failure Rate derived from test data.

1.4.2 Crew Safety Reliability

To be furnished.

1.4.2.1 Failure Rate

To be furnished.

1.5 Mission Phase Time Line

The Lunar Orbital Rendezvous Mission has been separated into 59 phases as shown in Table 1.3. This separation is necessary because some of the equipment is operated for only specific times during the mission and the equipment required to perform functions during particular phases varies. The mission phases defined in Table 1.3 and the time duration listed for each are utilized to obtain the failure effects analyses and predicted component reliability and provide the basis for the mathematical logic and equations for derivation of subsystem predicted reliability values. The phase time in hours is the maximum anticipated for the two week Lunar Orbital Rendezvous Mission.

Table 1.3 Mission Phase Time Line

Phase	Beginning of Phase Time	End of Phase Time	Phase Time (hr)	Phase	Beginning of Phase Time	End of Phase Time	Phase Time (hr)
1 Launch to 100,000 feet	0.00	0.028	0.028	31 Command module navigational sightings	145.660	146.660	1.000
2 100,000 feet to jettison of LET	0.028	0.042	0.014	32 LEM lunar surface stay period 2	146.660	162.160	15.500
3 LET jettison to earth orbit injection	0.042	0.280	0.158	33 Lunar ascent to circular orbit at 50,000 feet	162.160	162.230	0.070
4 Earth orbit stay (3 orbits)	0.200	4.700	4.500	34 Ascent to 80 nautical miles	162.230	163.200	0.970
5 Translunar injection	4.700	4.780	0.080	35 Rendezvous and docking	163.200	170.900	7.700
6 Translunar coast cisearth period 1	4.780	4.947	0.167	36 Lunar orbit navigations	170.900	172.900	2.000
7 LEM transfer	4.947	5.447	0.500	37 Lunar orbit coast	172.900	196.230	23.330
8 First midcourse correction	5.447	7.947	2.500	38 Lunar orbit navigation sightings	196.230	197.230	1.000
9 Translunar coast period 2	7.947	25.947	18.000	39 Lunar orbit coast	197.230	221.570	24.340
10 Second midcourse correction	25.947	27.947	2.000	40 Lunar orbit navigation sightings	221.570	222.570	1.000
11 Translunar coast period 3	27.947	33.947	6.000	41 Lunar orbit coast	222.570	245.900	23.330
12 Navigation sighting	33.947	34.947	1.000	42 Lunar orbit navigation period 3	245.900	248.900	3.000
13 Translunar coast period 4	34.947	46.947	12.000	43 Transearth injection	248.900	245.940	0.040
14 Navigation sighting	46.947	49.947	3.000	44 Transearth midcourse correction 1	248.940	251.940	3.000
15 Translunar coast period 5	49.947	63.780	13.833	45 Transearth coast period 1	251.940	271.940	20.000
16 Third midcourse correction	63.780	65.780	2.000	46 Transearth midcourse correction 2	271.940	273.940	2.000
17 Translunar coast period 6	65.780	71.780	6.000	47 Transearth coast period 3	273.940	281.360	7.420
18 Navigational sighting	71.780	72.780	1.000	48 Navigational sightings	281.360	282.360	1.000
19 Translunar coast period 7	72.780	78.780	6.000	49 Transearth coast period 4	282.360	297.200	14.840
20 Fourth midcourse correction	78.780	81.780	3.000	50 Navigational sightings	297.200	300.200	3.000
21 Lunar orbit injection at 80 nautical miles	81.780	81.870	0.090	51 Transearth coast period 5	300.200	315.100	14.900
22 Lunar orbit navigation period 1	81.870	83.870	2.000	52 Transearth midcourse correction 3	315.100	317.100	2.000
23 Lunar orbit coast	83.870	122.870	39.000	53 Transearth coast period 6	317.100	324.520	7.420
24 Crew transfer and check out	122.870	123.870	1.000	54 Navigational sighting	324.520	325.520	1.000
25 Injection into "Equal Period Orbit"	123.870	123.880	0.010	55 Transearth coast period 7	325.520	332.940	7.420
26 Transfer to 50,000 feet	123.880	124.370	0.490	56 Transearth midcourse correction 4	332.940	335.930	2.990
27 Equal period orbit stay	124.370	130.020	5.650	57 Service module separation	335.930	335.940	0.010
28 Perilune retro (50,000 to 1,000 feet)	130.020	130.120	0.100	58 Entry	335.940	336.273	0.333
29 Hover, translation, and touchdown	130.120	130.160	0.040	59 Deploy drogue chute through landing	336.273	336.410	0.137
30 LEM lunar surface stay period 1	130.160	145.660	15.500	60 Postlanding		408.410	72.000

[redacted]

~~CONFIDENTIAL~~

1.6 Mission Essential Equipment

The following is a list of the Apollo equipment items which are construed to be mission essential and which, if they fail, will cause the mission to be aborted. This list is given by individual subsystems. An equipment is considered as having failed after failure of all redundancy (operational or standby) as well as all spares. Examples of equipment to which the above criteria do not apply are the launch escape system, the command module reaction control system, the heat shield, the communication and data subsystem recovery equipment.

1.6.1 Navigation and Guidance Subsystem

Space Sextant
Scanning Telescope
Coupling Display Unit - Optics
Scanning Telescope Manual Drive (Handcrank)
Inertial Measuring Unit
Coupling Display Unit - Inertial Measuring Unit
Apollo Guidance Computer
Optical Hand Controller

1.6.2 Stabilization and Control Subsystem

Electronic Control Assembly - Roll
Electronic Control Assembly - Pitch, Yaw
Electronic Control Assembly - Thrust
Electronic Control Assembly - Thrust Vector
Stabilization and Control - Control Panel
Body Mounted Attitude Gyros
Rate Gyro Package
Minimum Impulser
Gimbal Position Indicator
Flight Director Attitude Indicator (Attitude error, total attitude)
Delta Velocity On/Off
Delta Velocity Display
Delta Velocity Emergency Ullage
Translational Control
Three-Axis Rotational Control
Reaction Jet Drivers (5 out of 16 units)
Accelerometer Package

1.6.3 Communications and Data, Instrumentation Subsystems

Unified S-Band Equipment
Premodulation Processor - Deep Space Voice
Audio Center - Receiver (2 out of 3 units)
Audio Center - Transmitter
VHF 2KMC Omni Antenna

The following criteria are applicable during near earth phases:

(1) 2 KMC High Gain Antenna; and the S-Band Power Amplifier.

(2) In Flight Test System and any one of the following: FM Transmitter, Signal Conditioner, Pulse Code Modulation Telemetry, Sensors, Central Timing Equipment (1024 KC Oscillator).

(3) C-Band Transponder or the C-Band Antenna and any one of the following: Central Timing Equipment (1024 KC Oscillator), Sensors, Signal Conditioner, Pulse Code Modulation Telemetry, FM Transmitter, Premodulation Processor-Near Earth Data, Flight Director Rate Indicator (SCS).

1.6.4 Command Module Structures

Any puncture is an abort - greater than 0.5 inch hole is crew safety degradation.

1.6.5 Service Module Propulsion Subsystem (Launch to 4th Midcourse Correction)

1.6.6 Environmental Control Subsystem

Suit Circuit Compressors (1 out of 2 units)
Water Glycol Pumps (1 out of 2 units)
Water Separator Accumulators (1 out of 2 units)

1.6.7 Electrical Power Subsystem

Fuel Cells (2 out of 3 units)
Batteries (2 out of 3 units)
AC Buss (1 out of 2 units)
DC Buss (1 out of 2 units)
Inverters (2 out of 3 units)

1.6.8 Cryogenic Storage Subsystem

Circuits (1 out of 4 units)

1.6.9 Service Module Reaction Control Subsystem

Quandrants (2 out of 4 units)

1.7 Mission Success Logic Diagrams

This section contains the logic diagrams that define the equipment necessary for mission success. The diagrams are presented for the various phases of the mission, as described previously under Mission Phase Time Line. The diagrams show the equipments that must operate successfully to preclude an abort up to lunar excursion module

rendezvous and docking. From this time to earth landing, any combinations of equipments which will allow successful return to earth are considered sufficient for mission success and are so shown on the diagrams. Blocks that appear in a continuous chain are serial equipments; that is, each must operate properly in order to successfully complete the mission. Equipments shown in parallel are redundant to one another; i.e., either path may be followed for successful mission completion. Where parallel equipments are connected with arrowheads, the alternate component is either an on-board spare or is in stand-by redundancy, which means it does not operate until the primary component fails.

1.7.1 Logic Diagrams and Subsystem Operation

The first block diagram shown, Figure 1.1, covers the time phase of earth orbit. During this phase, it is required that all equipment operate without failure or that a spare part be available to replace a failed component; hence, all of the navigation and guidance, stabilization and control, and telecommunications equipment that operates during this phase is shown in series. Although this equipment is not being utilized to perform the guidance and control function, which is performed by S-IV equipment, these parts are operating, and their failure would cause a mission abort. Spare parts carried on board would replace the flight director attitude indicator, the delta velocity indicator, the audio center or the VHF/AM transceiver, and one of the three environmental control system units. Hence, in the event of failure of only these modules, the module would be replaced and the mission continued. The service module - service propulsion system, service module - reaction control system, command module - reaction control system, earth landing system, and command module - forward heat shield are not shown in Phase I because they are in a quiescent state. Redundancies are available for crew safety in the environmental control system, electrical power system, and cryogenic storage system; however, these redundancies cannot be considered for mission success. Should one of the redundant crew safety components fail in Phase I, the mission would be aborted. The service module to command module separation mechanism is not called upon to operate within Phase I and is left out of the structure.

Figure 1.2 indicates the equipment necessary during the translunar phase. The most necessary function performed by the electronic equipment during this phase is that of midcourse correction. The first function is that of inertial measurement units alinement. This is done by placing the spacecraft in the automatic control mode, rotating the spacecraft to a position from which a stellar sighting can be made, stabilizing the spacecraft in this position, and sighting a star with the sextant. The spacecraft is then held in a stabilized position while the inertial measurement unit is being automatically

erected, utilizing the guidance and navigation equipment. Hence, the navigational and control equipments, except the spare parts for the electronic control assemblies and the three-axis rotational control, are all shown in series for this function, since an abort would be indicated in the event of a failure. The DSIF transponder and audio center are also shown in series because they provide backup for the navigational equipment. In the event of their failure, the mission would be aborted, since no additional backup equipment would be available. Spares are carried for the DSIF equipment and the audio center. Further redundancy exists within the audio center, a unit being provided for each crew member, any one of which can be utilized for communications. The 2kmc high-gain antenna is the normal mode of operation, but this equipment is backed up by the power amplifier and the discone antenna. A spare power amplifier is also provided. The service module - service propulsion system is fired for midcourse correction and lunar orbit injection. Subsequent time within Phase II is considered crew safety for this system (Phase III diagram). All other systems, except service module - reaction control system, must operate until lunar excursion module ascent from the lunar surface to qualify for mission success. The command module - reaction control system, earth landing system, service module - command module separation mechanism, and command module - forward heat shield are still omitted. Even though environmental control system redundancies cannot be used during this phase, the load is reduced to one-third after lunar excursion module separation from command module. The service module - reaction control system has its most difficult task during lunar excursion module rendezvous and docking. Not only must attitude control be maintained, but also translation in all directions must be available. More complete definition of the docking method is required before relaxation of these functions can be allowed. Mission success logic must then apply to the service module reaction control system through lunar excursion module docking. Helium regulators within the service module - service propulsion system are not considered an abort item, because no means is available for detecting a failed closed condition.

The third phase (Figure 1.3) covers a time period from lunar excursion module rendezvous to entry. Since no aborts are possible during this phase, all modes of operation which are possible for navigation and guidance are considered adequate for mission success. This block diagram does not show the primary modes of operation, which are identical to those utilized in the translunar phase, but only shows the minimum equipments necessary to successfully complete the mission.

The first function performed during this phase is the establishment of an angular inertial reference, using either the inertial measurement unit or the body-mounted attitude gyro. When the inertial measurement unit is being utilized, the equipment shown in series with it is also required. This includes the coupling display unit, a power and

servo amplifier, and the Apollo guidance computer. If the body-mounted attitude gyro is being used because of an inertial measurement unit failure, it is also necessary to utilize the flight director attitude indicator. During this alinement process, the automatic stabilization system will normally be used, which includes the electronic control assembly, stabilization and control system control panel, three axis rotational control, and the rate gyro package. The three axis rotational control is provided with a spare, as is the electronic control assembly. In the event of a failure of the electronic control assembly and its spare, the manual emergency control is used.

The next function to be performed is the determination of the required ΔV for midcourse correction. This could be determined either through the use of the guidance and navigation equipment, including the inertial measurement unit, Apollo guidance computer, coupling display unit, and power servo amplifier, or communication with earth through the DSIF and GOSS equipment. Communication with earth can be achieved through the discone antenna, utilizing the power amplifier. Also required for communication is one of the three audio centers, or if these are failed, the key used in conjunction with the central timing equipment is necessary, since timing data cannot be transmitted via cw.

The next function, the rotation of the spacecraft prior to application delta velocity, is achieved, using either the automatic or manual stabilization and control equipment described for the inertial measurement unit alinement phase. These equipments are also utilized for stabilization of the spacecraft during the ΔV application. The control of the ΔV application is normally through the use of the inertial measurement unit, Apollo guidance computer, and associated equipment. In the event of failure of this equipment, the ΔV's can be manually applied, using the stabilization and control system accelerometer package and the ΔV indicator. Two propulsion means are available for this ΔV application: (1) fine control with aft firing service module - reaction control engines and (2) course control with the service module - service propulsion system. The magnitude of correction by the service module - reaction control system is limited to the availability of the propellants in tanks and quadrants still working. The service module - service propulsion system is the only means for transearth injection and is dependent, in general, on the operation of single elements; i.e. chamber, injector, flexible piping, fuel tank, oxidizer tank, and helium tanks. Many items can now be considered in full redundancy for crew safety, because any means of safe return is acceptable. For example, one main propellant valve set (oxidizer and fuel) can fail, either open or closed, and another valve set will be available for functional replacement. One quadrant of the service module - reaction control

system can fail and the attitude control, propellant settling, and separation functions will be retained. Translation in one direction will be lost, but the need for three-axis translation will be past. Opposite quadrants must be retained for settling propellants or separating command module from service module, and one adjacent quadrant must be available for pitch or yaw. The electrical power system becomes entirely redundant; any one fuel cell out of three, either d-c bus; any one inverter out of three, either a-c bus, and any two batteries out of three. The command module and service module structures are still required, but the anticipated margins of safety and internal redundancies make this a highly reliable system. Omitted from Phase III are the command module - reaction control system, earth landing system, and command module - forward heat shield.

The final phase is the entry phase (Figure 1.4). The basic mode of operation for this phase utilizes the guidance equipment and the automatic control electronics. A spare electronic control assembly is carried. The first alternate mode of operation is through the use of the entry corridor display. The spacecraft can be controlled either through the use of the automatic equipment, including the electronic control assembly and rate gyro package, or in the event of failure, through the use of the manual emergency controls. In either case, the three-axis rotational control must be utilized. The tertiary mode of operation is through the use of communication equipment via the VHF/AM transceiver, utilizing the discone antenna and GOSS. A spare VHF transceiver is provided. The C-band transponder and antenna are required for spacecraft tracking. As shown in previous diagrams, the audio center is also required. Jettisonning of the service module deletes any trajectory correction until atmosphere reentry. Attitude control until drogue chute deployment is provided by redundant halves of the command module-reaction control system. Electrical power is provided by batteries alone, any two out of three.

All elements of command module structure are required for this maneuver of reentry, including the forward heat shield, a single, critical element without redundancy. Earth landing system is redundant internally; i.e., redundant circuits for aft heat shield release mechanism, redundant baro-switches and circuits is the sequencer, a redundant main parachute, and several recovery aids which are redundant among themselves.

1.8 Test Program

The General Test Plan for Project Apollo spacecraft defines the manner in which the testing will be accomplished to qualify the spacecraft for manned flight. The test plan is comprised of a series of time sequenced development tests employed in testing each

[redacted]

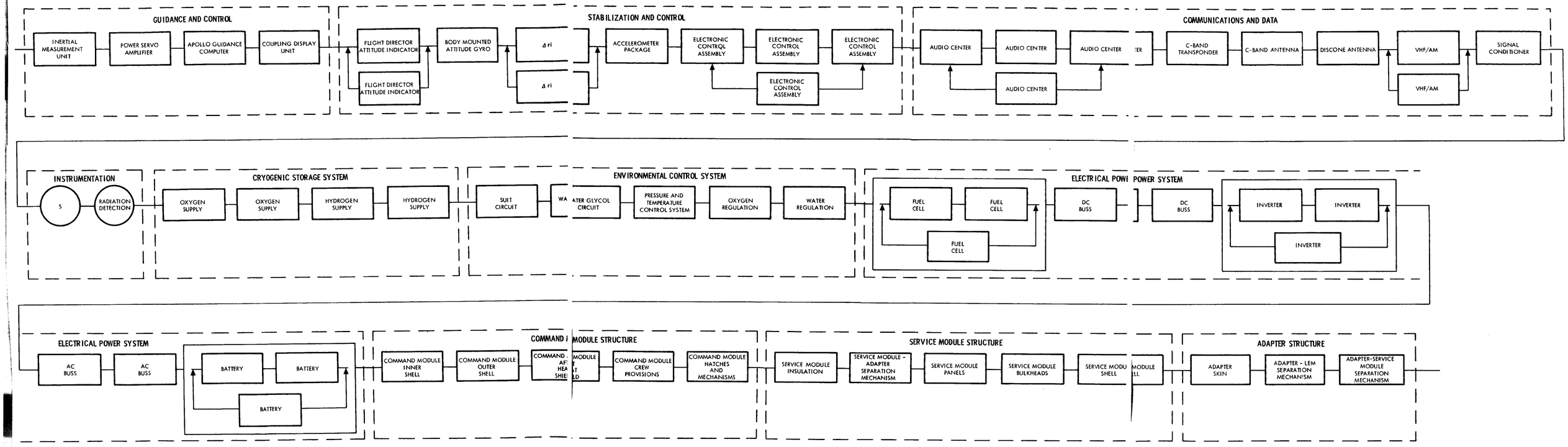

Figure 1.1 Phase I - Launch Through Earth Orbit

[redacted]

[redacted]

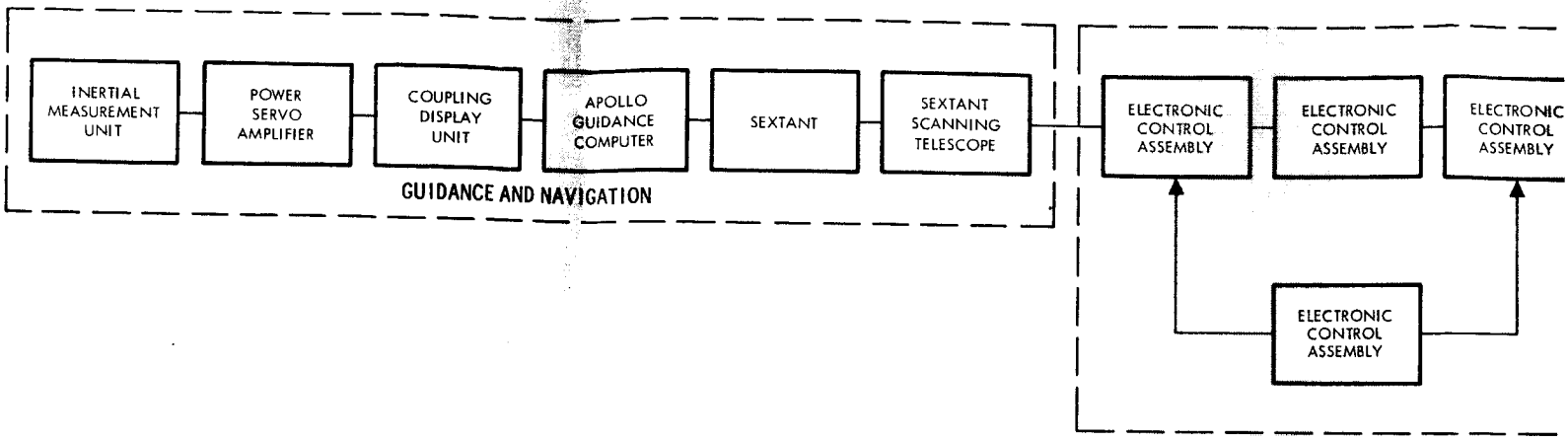

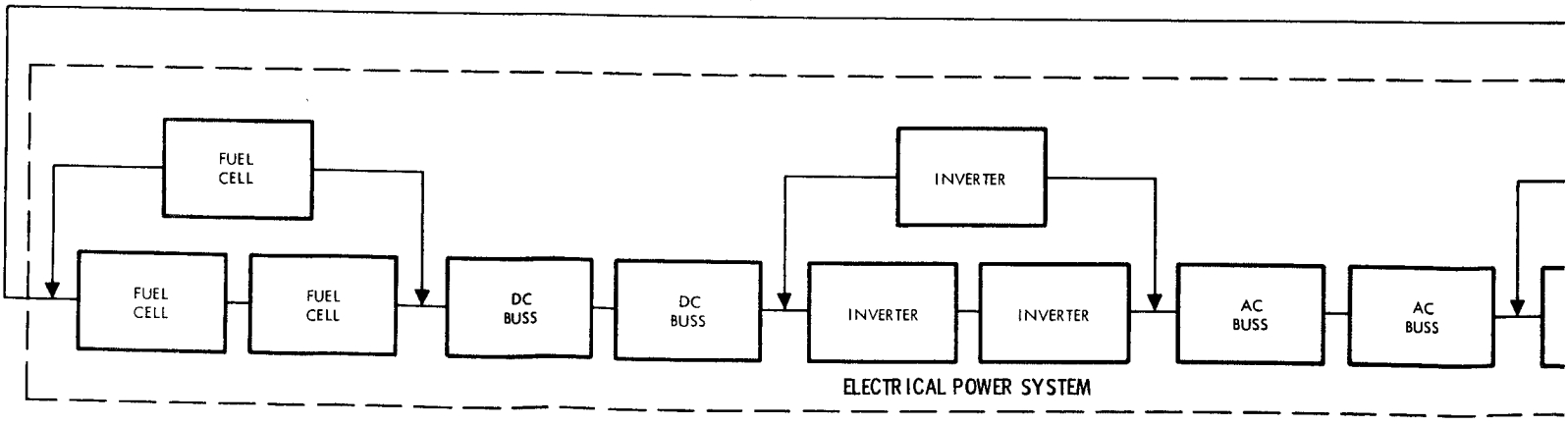

FOLDOUT 1

[redacted]

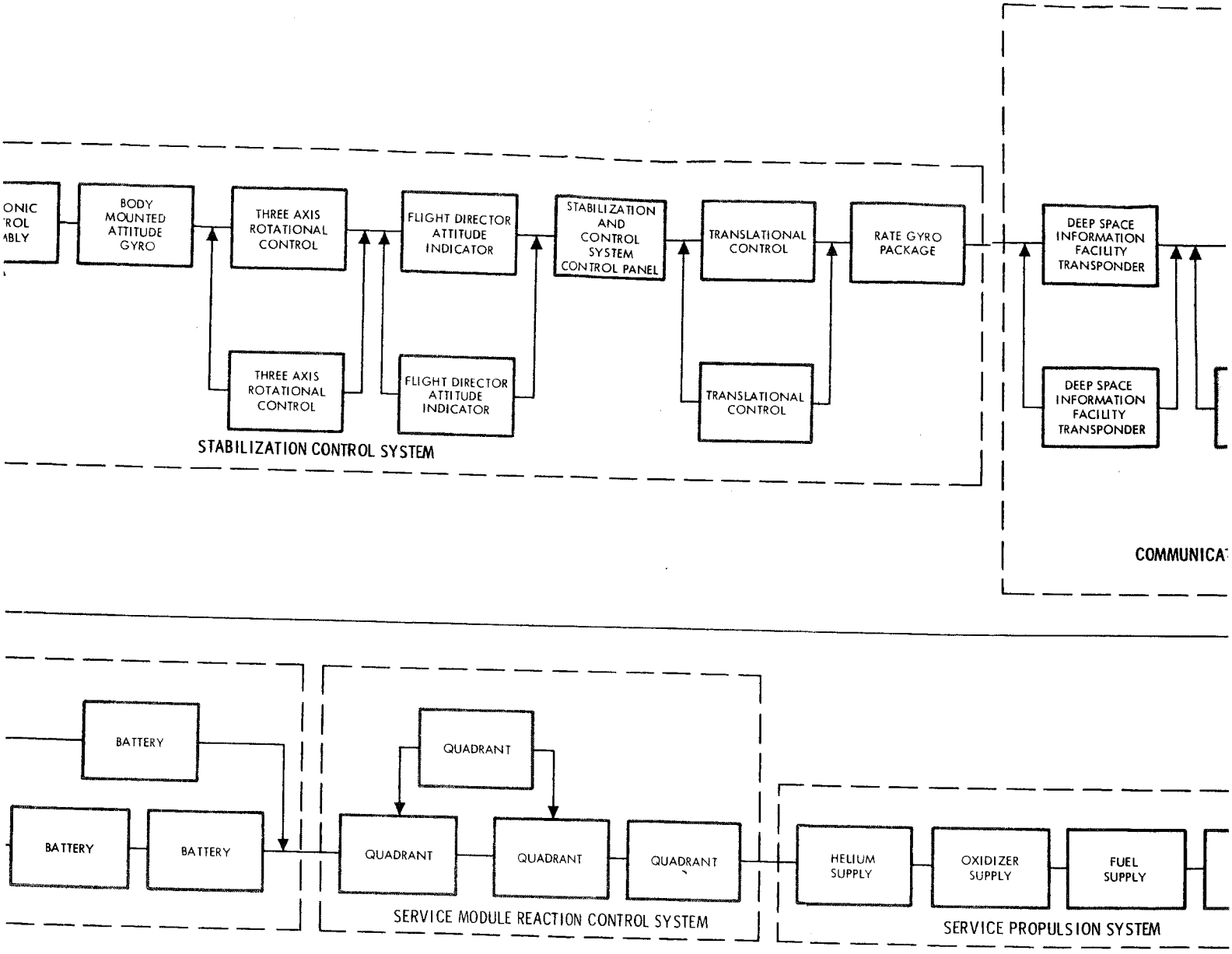
ONIC
TROL
ABLY
BODY MOUNTED ATTITUDE GYRO
THREE AXIS ROTATIONAL CONTROL
THREE AXIS ROTATIONAL CONTROL
FLIGHT DIRECTOR ATTITUDE INDICATOR
FLIGHT DIRECTOR ATTITUDE INDICATOR
STABILIZATION AND CONTROL SYSTEM CONTROL PANEL
TRANSLATIONAL CONTROL
TRANSLATIONAL CONTROL
RATE GYRO PACKAGE
STABILIZATION CONTROL SYSTEM
DEEP SPACE INFORMATION FACILITY TRANSPONDER
DEEP SPACE INFORMATION FACILITY TRANSPONDER
COMMUNICA
BATTERY
BATTERY
BATTERY
QUADRANT
QUADRANT
QUADRANT
QUADRANT
SERVICE MODULE REACTION CONTROL SYSTEM
HELIUM SUPPLY
OXIDIZER SUPPLY
FUEL SUPPLY
SERVICE PROPULSION SYSTEM

FOLD OUT 2

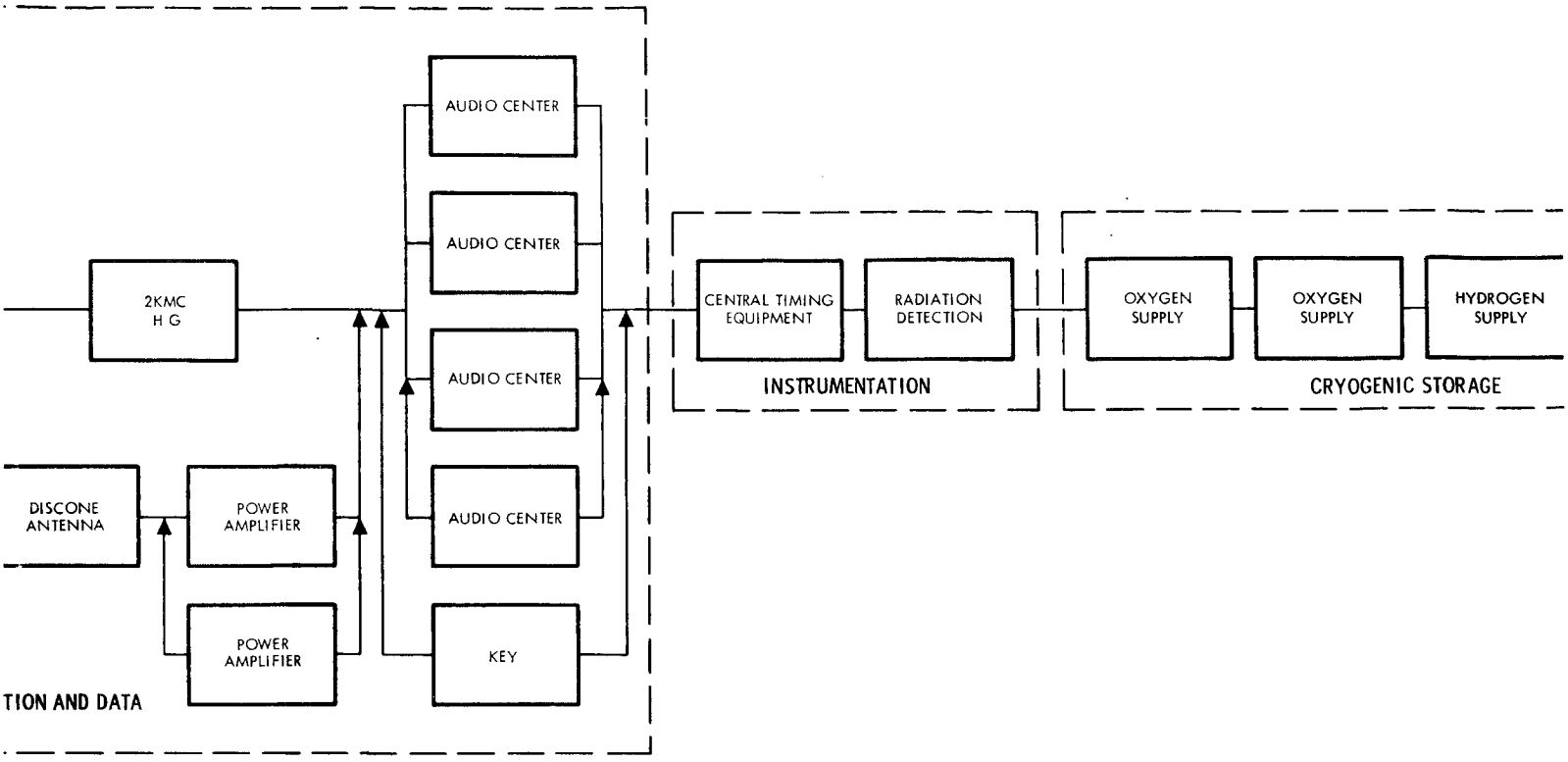
AUDIO CENTER
AUDIO CENTER
AUDIO CENTER
AUDIO CENTER
2KMC
H G
DISCONE
ANTENNA
POWER
AMPLIFIER
POWER
AMPLIFIER
KEY
TION AND DATA
CENTRAL TIMING
EQUIPMENT
RADIATION
DETECTION
INSTRUMENTATION
OXYGEN
SUPPLY
OXYGEN
SUPPLY
HYDROGEN
SUPPLY
CRYOGENIC STORAGE

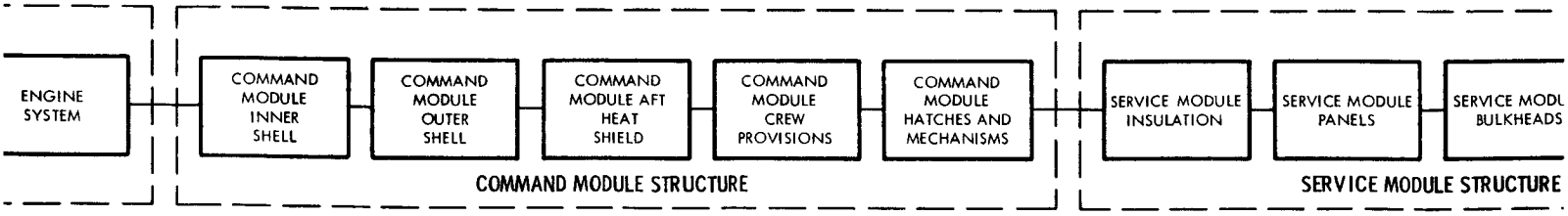
ENGINE
SYSTEM
COMMAND
MODULE
INNER
SHELL
COMMAND
MODULE
OUTER
SHELL
COMMAND
MODULE AFT
HEAT
SHIELD
COMMAND
MODULE
CREW
PROVISIONS
COMMAND
MODULE
HATCHES AND
MECHANISMS
COMMAND MODULE STRUCTURE
SERVICE MODULE
INSULATION
SERVICE MODULE
PANELS
SERVICE MODU
BULKHEADS
SERVICE MODULE STRUCTURE

FOLD OUT 3

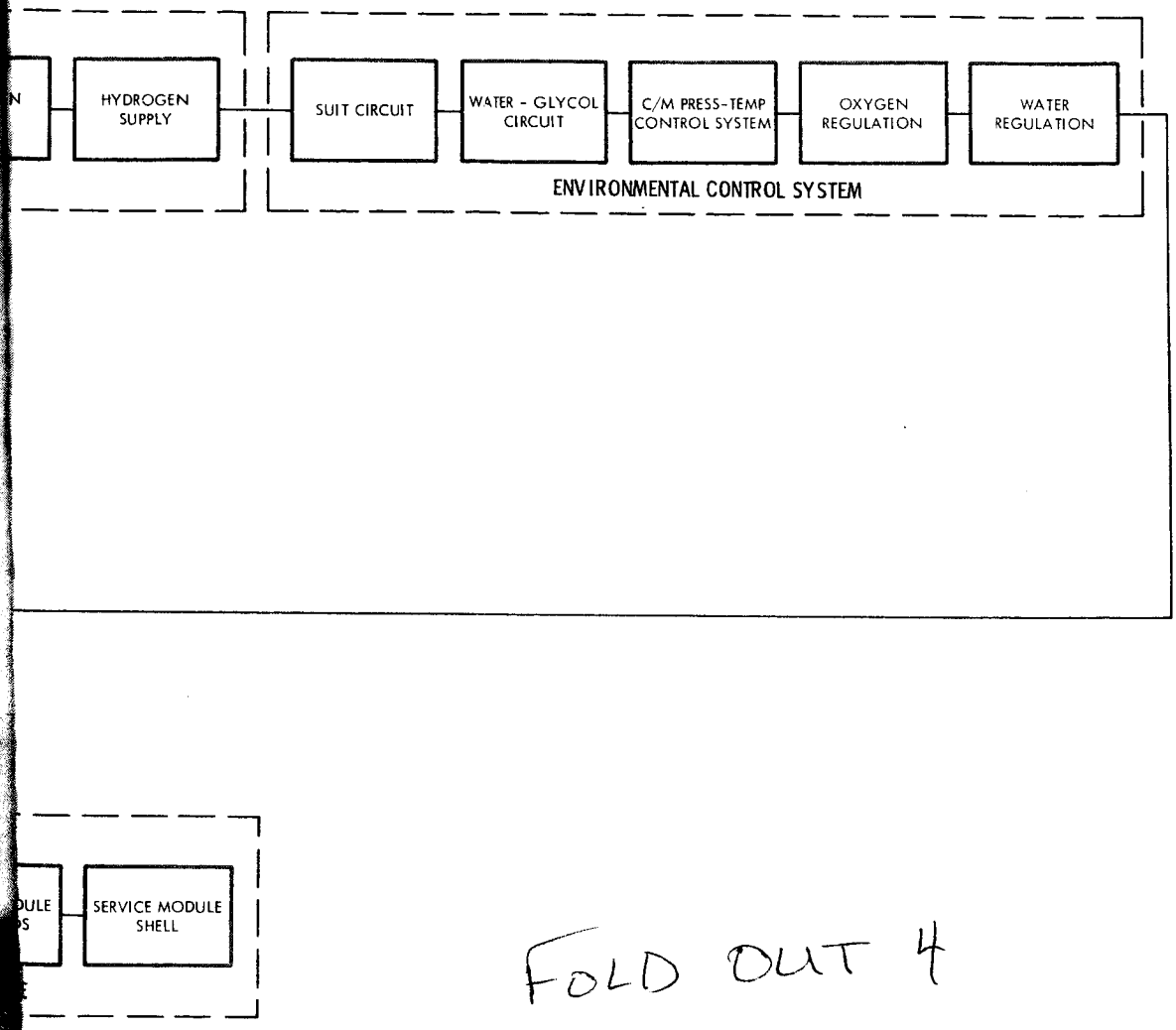

FOLD OUT 4

Figure 1.2 Phase II - Translunar Injection/LEM Recovery

[redacted]

[redacted]

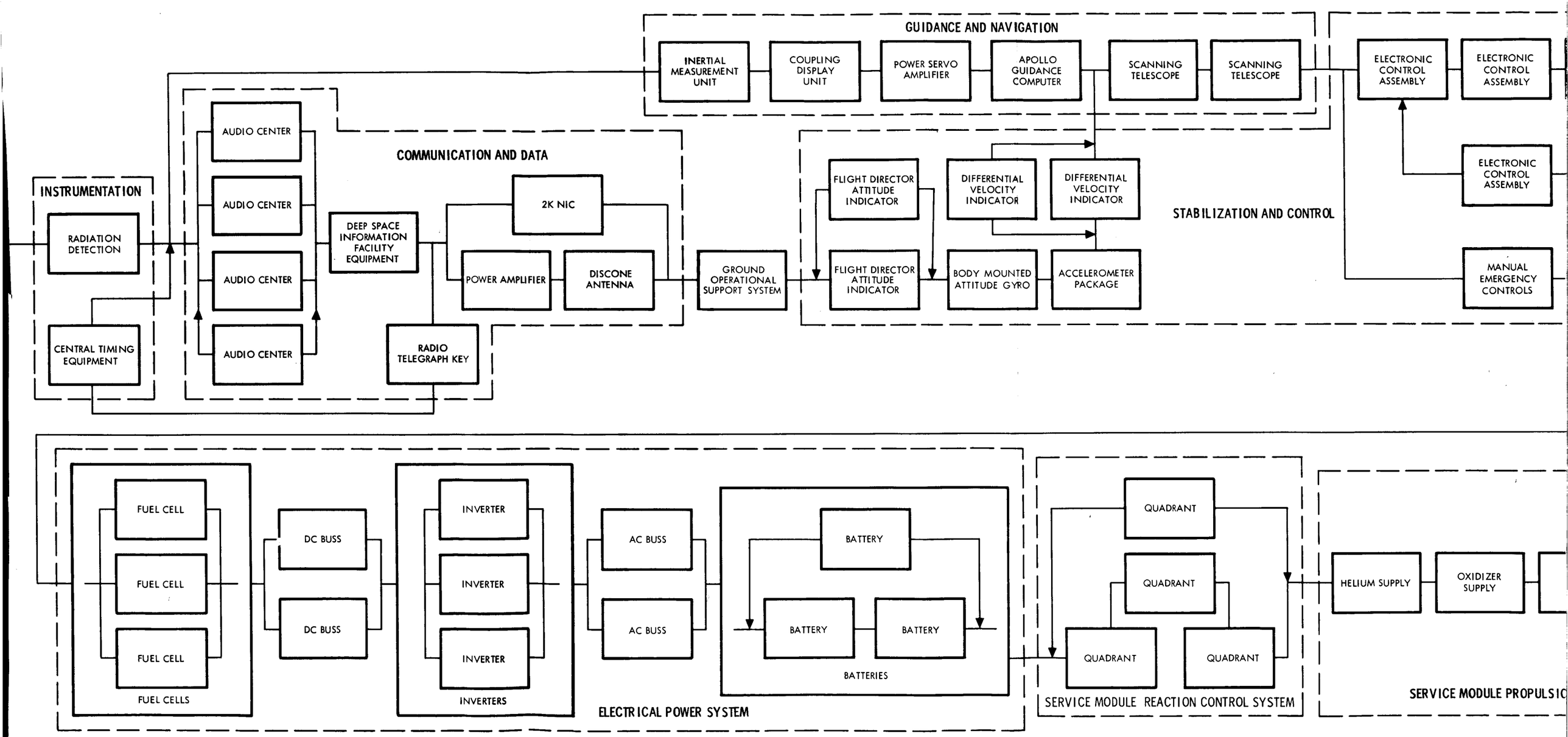

FOLD OUT #1

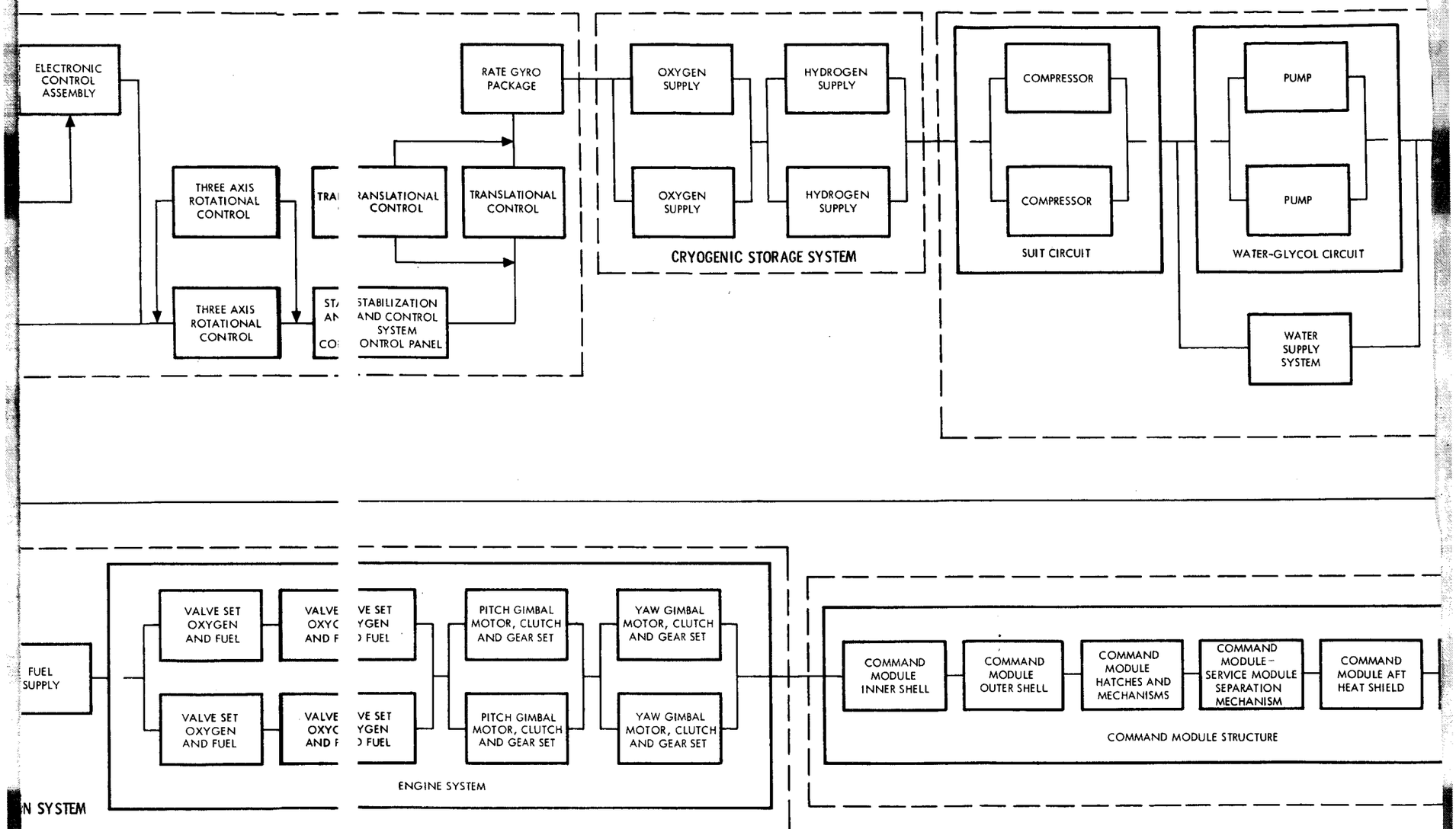
ELECTRONIC CONTROL ASSEMBLY
THREE AXIS ROTATIONAL CONTROL
THREE AXIS ROTATIONAL CONTROL
TRANSLATIONAL CONTROL
TRANSLATIONAL CONTROL
STABILIZATION AND CONTROL SYSTEM CONTROL PANEL
RATE GYRO PACKAGE
OXYGEN SUPPLY
OXYGEN SUPPLY
HYDROGEN SUPPLY
HYDROGEN SUPPLY
CRYOGENIC STORAGE SYSTEM
COMPRESSOR
COMPRESSOR
SUIT CIRCUIT
PUMP
PUMP
WATER-GLYCOL CIRCUIT
WATER SUPPLY SYSTEM
FUEL SUPPLY
VALVE SET OXYGEN AND FUEL
VALVE SET OXYGEN AND FUEL
PITCH GIMBAL MOTOR, CLUTCH AND GEAR SET
PITCH GIMBAL MOTOR, CLUTCH AND GEAR SET
YAW GIMBAL MOTOR, CLUTCH AND GEAR SET
YAW GIMBAL MOTOR, CLUTCH AND GEAR SET
ENGINE SYSTEM
COMMAND MODULE INNER SHELL
COMMAND MODULE OUTER SHELL
COMMAND MODULE HATCHES AND MECHANISMS
COMMAND MODULE-SERVICE MODULE SEPARATION MECHANISM
COMMAND MODULE AFT HEAT SHIELD
COMMAND MODULE STRUCTURE

FOLD OUT #2

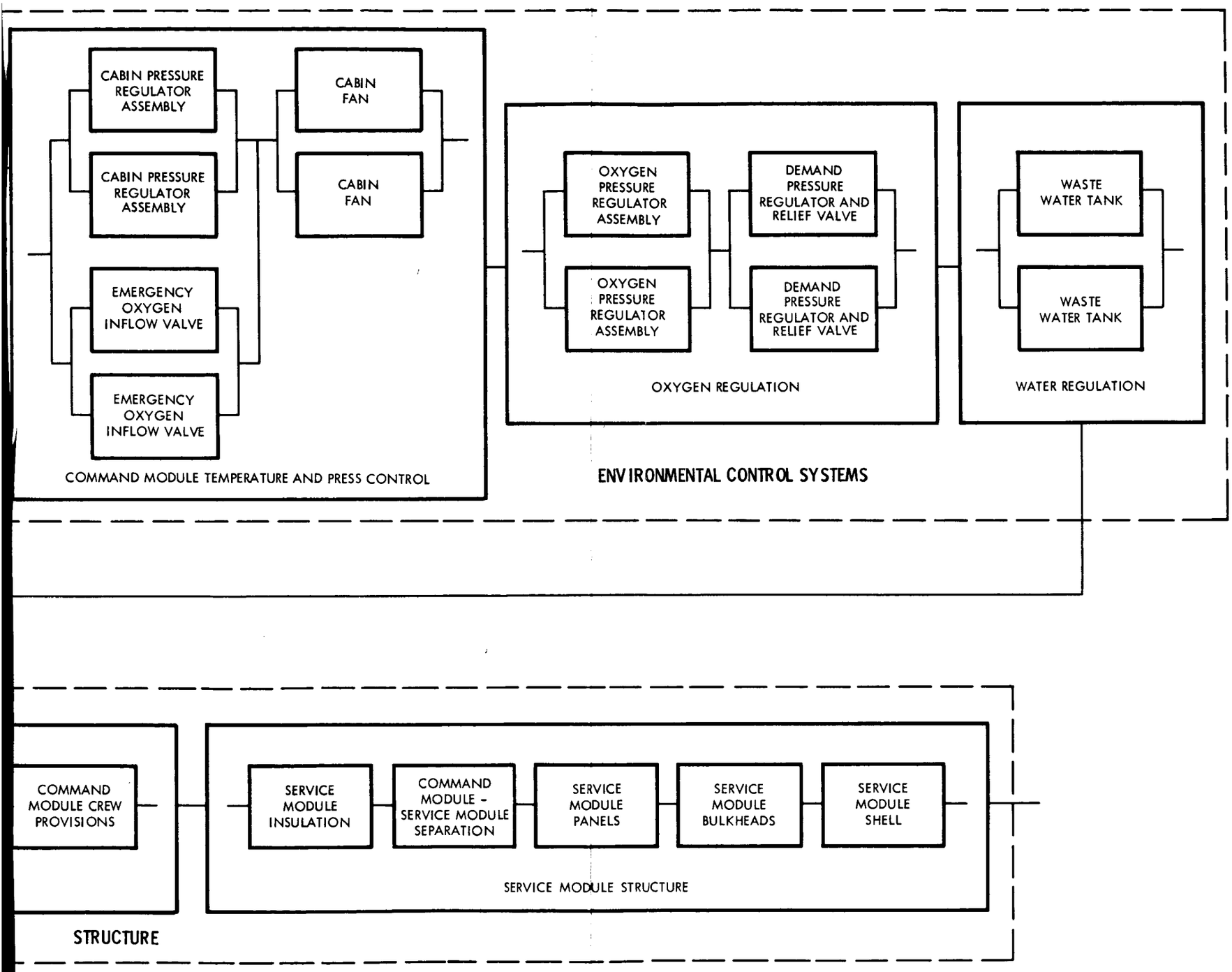

Figure 1.3 Phase III - Transearth Through Separation

FOLD OUT #3

[redacted]

[redacted]

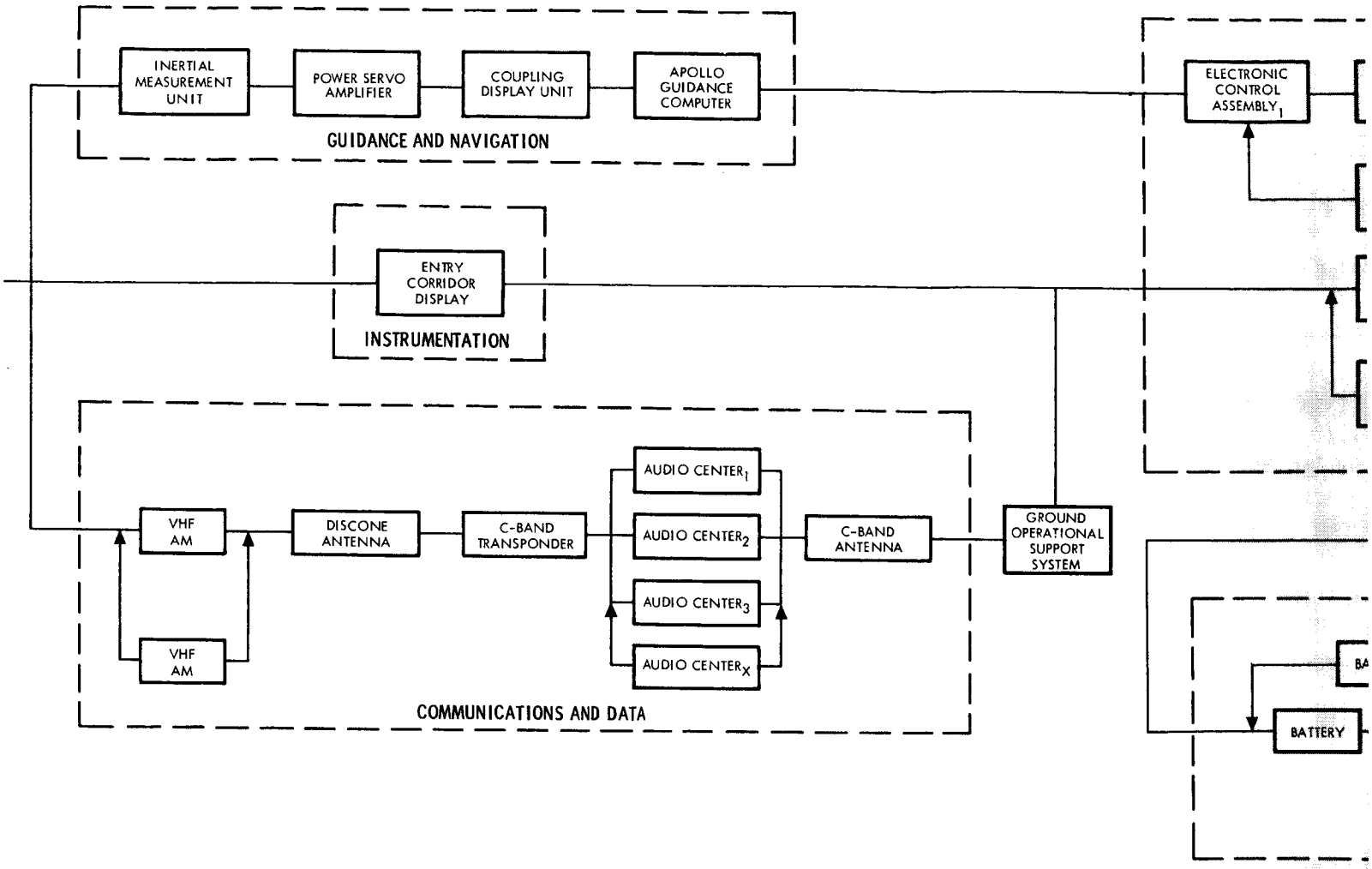

FOLD OUT 1

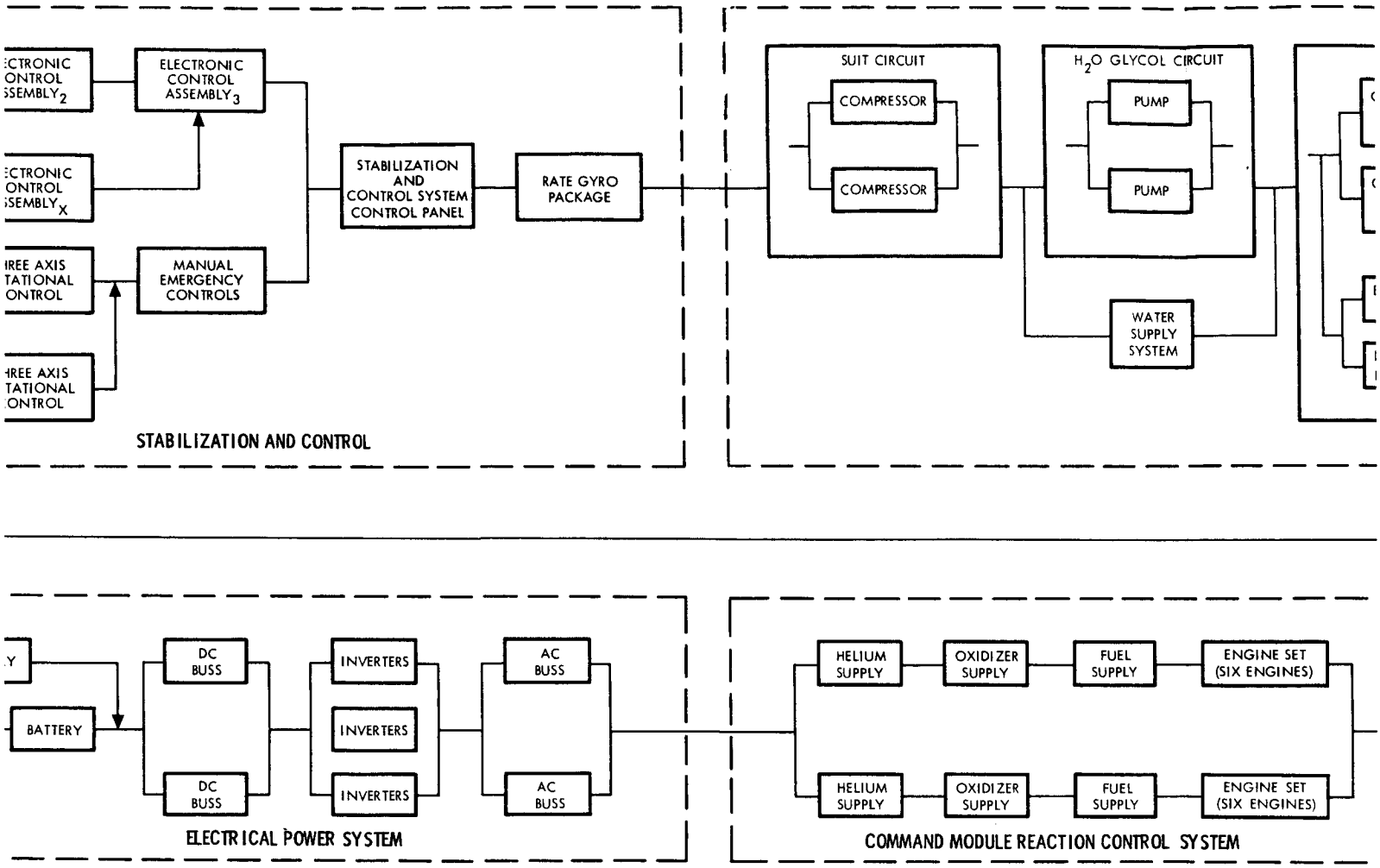
ELECTRONIC CONTROL ASSEMBLY 3
STABILIZATION AND CONTROL SYSTEM CONTROL PANEL
RATE GYRO PACKAGE
MANUAL EMERGENCY CONTROLS
STABILIZATION AND CONTROL
SUIT CIRCUIT
COMPRESSOR
COMPRESSOR
H_2O GLYCOL CIRCUIT
PUMP
PUMP
WATER SUPPLY SYSTEM
BATTERY
DC BUSS
DC BUSS
INVERTERS
INVERTERS
INVERTERS
AC BUSS
AC BUSS
ELECTRICAL POWER SYSTEM
HELIUM SUPPLY
OXIDIZER SUPPLY
FUEL SUPPLY
ENGINE SET (SIX ENGINES)
HELIUM SUPPLY
OXIDIZER SUPPLY
FUEL SUPPLY
ENGINE SET (SIX ENGINES)
COMMAND MODULE REACTION CONTROL SYSTEM

FOLD OUT 2

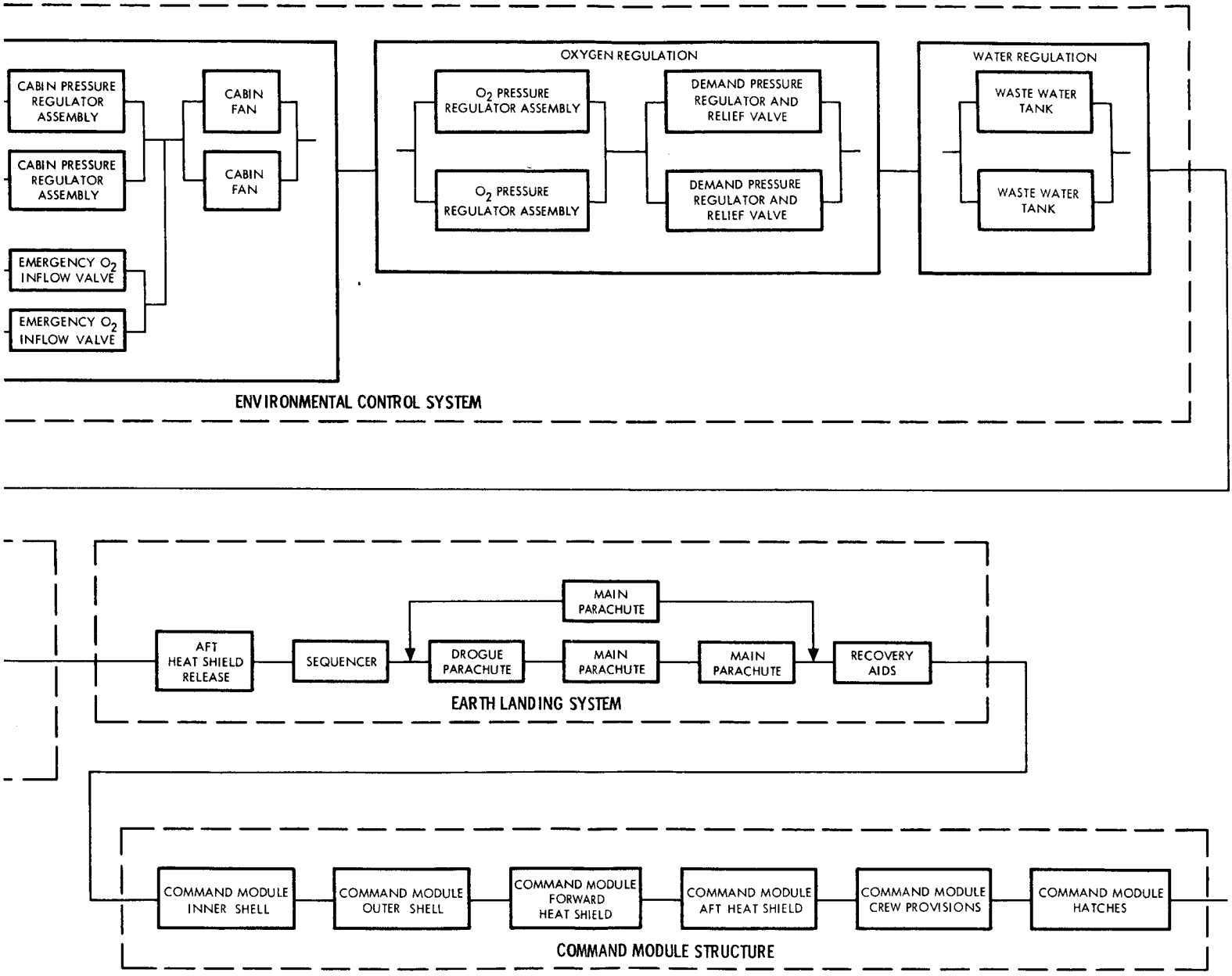

Figure 1.4 Phase IV - Earth Reentry Through Recovery

FOLD OUT 3

[redacted]

spacecraft subsystem. The interim objective of all testing is qualification for manned earth-orbital flight; the ultimate objective is qualification for safe manned lunar flight. Future issues of the General Test Plan will present test program plans for the latter objective.

The General Test Plan is presented in five quarterly revised volumes of SID 62-109-1 through -5, entitled General Test Plan, Research and Development for Project Apollo Spacecraft. Volume I of the General Test Plan presents the test logic for the Apollo spacecraft and gives a management-oriented summary. Volume II contains the test plans for Apollo individual systems, such as reaction control subsystem. Volume III describes the Apollo ground qualification test program, including ground support equipment. Volume IV describes the acceptance criteria for each level of Apollo equipment assembly. Volume V contains the detailed test plans for the multiple systems tests, including ground and flight tests.

1.8.1 Qualification Program

The Qualification Test Program provides the integrating medium required to assure complete qualification of all subsystems by phase as each step in the spacecraft program is completed. The ground qualification test plan is completed by progressive assembly of the separately qualified subsystems into an integrated Apollo spacecraft system for the verification of the dimensional and functional subsystem interfaces. This phase of the test plan referred to as Integrated Systems Qualification will be defined in future issues of the General Test Plan.

1.8.2 Qualification Program Scope

The ground qualification program provides an optimum compromise from a statistically rigorous demonstration of all required design parameters to a reasonable program that can be done within development constraints. The program consists of a logical combination of tests designed to explore all potential weak points in every component and then demonstrate the design margin relevant to these weak points both in the environmental and time domains.

1.8.3 Program Logic

The environmental capabilities are explored and verified during the Design Proof Phase of tests. These are conducted at the component level and basically are designed to verify that the component is capable of surviving the levels of a given environment. The Off-Limit Test goes a step further and determines the design margin relative to

the potential and or critical failure modes. The Mission Simulation Life Tests are conducted at the subsystem level and are designed to explore these parameters in the time domain. They are conducted under natural combinations of environments to be expected during a normal space flight. The term normal is herein defined as that condition wherein no critical malfunctions or combination of circumstances exists that might cause a malfunction and prejudice mission success or crew survival. These tests provide data on the repeatability of the design parameters with time and between like items and subsystems.

1.8.4 Qualification Tests

The individual subsystem qualification test plans feature the variant physical characteristics and unique mission requirements of each subsystem. Each test plan has been designed to verify subsystem capability to perform within design specification requirements for a sufficient length of time to fulfill mission operational requirements. Another test plan objective is to demonstrate repeatability of functional and quality characteristics.

Each test plan has been made optimum within the program constraints as defined in SID 62-109-3, General Test Plan, Research and Development, Ground Qualification Tests. Test-oriented reliability logic diagrams, listings of system parameters for qualification testing, and qualification test schedules are delineated. Schedules are defined within the limitations of information available.

LIST OF CURRENT PAGES

Page No.	Date	Revised	Classification

SECTION 2.0

STRUCTURAL and MECHANICAL SUBSYSTEMS

2.1 Introduction

A reliability summary in tabulated form (Table 2.1) is presented for each of the mechanical subsystems. The analyses for the mechanical subsystems contains a reliability apportionment and prediction, and a table of component reliabilities. These analyses are based upon failure mode and effects analysis and a comparison of configuration analysis of the present subsystem and proposed modifications.

As test data becomes available from the integrated test program, evaluations will be made to derive mission success reliability assessments for mechanical subsystems.

2.2 Separation Systems

All of the spacecraft separation systems are based on using redundant initiators to ignite a pyrotechnic device that in turn fails a structural tie. The same type of initiator is used throughout and has a predicted failure probability of 0.001. When used redundantly, as is the case in all Apollo applications, the probability of failure decreases to 0.000001.

2.3 Launch Escape Tower Separation System

The present configuration for separating the tower from the command module, Figure 2.1 consists of four explosive bolts with a removable cartridge on each bolt. Each cartridge is comprised of dual hot-wire initiators and a main charge. The hot-wire initiator has an electrical connector, bridgewire, primary explosive, and secondary explosive. The cartridge can be removed and checked away from the command module.

The predicted system reliability for successful operation of all four bolts is 0.999996, which exceeds the apportioned reliability of 0.999995.

The predicted reliability is based on the assumption that all four bolts must operate. During a normal tower jettison the launch escape motor could be utilized to break a failed bolt, but this would constitute an abort, since the ablative material surrounding the failed bolt would likely be crushed as the bolt is broken because of a combination of axial and bending loads. Since a failed bolt would constitute an abort, utilizing the launch escape motor to break a failed bolt would improve crew safety but would not affect mission success. For an abort which occurs before normal tower jettison the

Table 2.1

STRUCTURAL & MECHANICAL

SUBSYSTEM MISSION RELIABILITY (LOR)

COMPONENT NAME	ITEMS	MISSION TIMES (HRS.)	FAILURE RATE PER 10^6 HOURS OR CYCLES			RELIABILITY		
			APPORTIONED	PREDICTED	ASSESSED	APPORTIONED	PREDICTED	ASSESSED
STRUCTURAL & MECHANICAL SUBSYSTEM	-	-	-	-	N.A.	.999920[B]	0.999926[A]	N.A.
Service Module Adapter Structure	1	5.447hrs.	0.1800	0.1800[3]	N.A.	.999999*	.999999[A]	N.A.
Service Module Adapter Separation	1	1 Cycle	1.0000	1.0000[1]	N.A.	.999999*	.999999[A]	N.A.
LEM Adapter Structure	1	5.447hrs.	0.1800	0.1800[3]	N.A.	.999999*	.999999[A]	N.A.
LEM Adapter Separation	1	1 Cycle	1.0000	1.0000[1]	N.A.	.999999*	.999999[A]	N.A.
Service Module Structure	1	335.94hrs.	0.0090	0.0090[3]	N.A.	.999997*	.999997[A]	N.A.
Service Module Separation	1	1 Cycle	3.0000	3.0000[1]	N.A.	.999997*	.999997[A]	N.A.
Ablation	1	336.41hrs.	0.1480	0.1480[2]	N.A.	.999950	.999950[A]	N.A.
Command Module Structure	1	336.41hrs.	0.0400	0.0400[3]	N.A.	.999985*	.999985[A]	N.A.
The components listed below have not been included within the Structural & Mechanical Subsystem apportionment & are presented only for information.								
LET Structure	1	0.014hr.	714.0	71.4	N.A.	.999990*	.999999[A]	
LET Separation	N.A.	1 Cycle	1.0	1.0	N.A.	.999999**	.999999[A]	
APEX Heat Shield Release Mech.	1	1 Cycle	1.0	1.0	N.A.	.999999[A]	.999999[A]	

DATA SOURCE:
1. Pyrotechnic Mfg.'s Test Data & Reliability Engineering Judgement.
2. AVCO
3. Reliability Engineering Judgement.

N.A.: Not available
* No Spec. NAA apportioned by Method "A"
**Reliability per bolt;connector Spec not released

MATHEMATICAL TECHNIQUE:
A. Analytical Model (Logic Diagram & Known Failure Rate Data)
B. Analytical Method (Weighted Subjective Experience)

CONFIDENTIAL

[redacted]

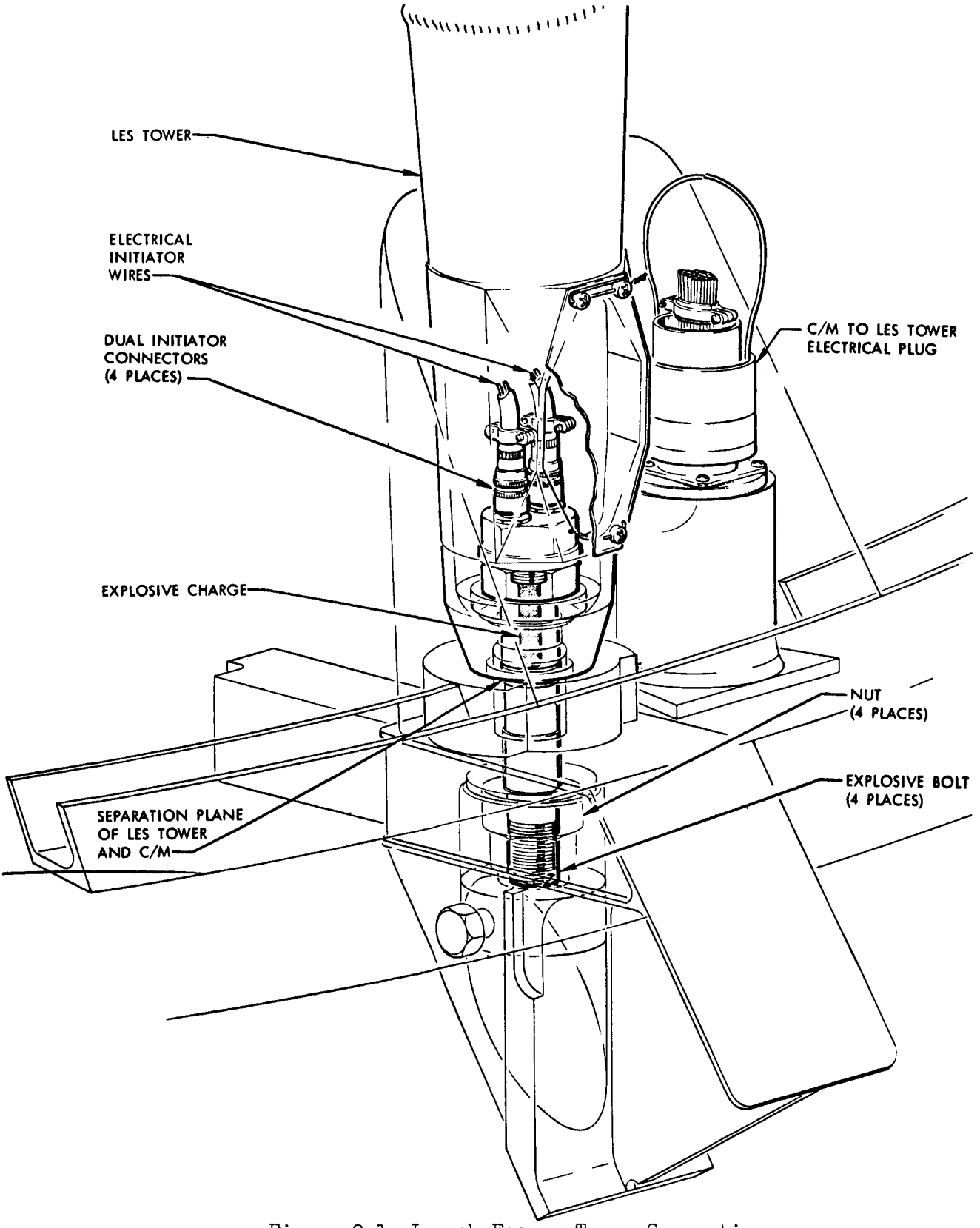

Figure 2.1 Launch Escape Tower Separation
(Bolt, Typical, Four Places)

[redacted]

~~CONFIDENTIAL~~

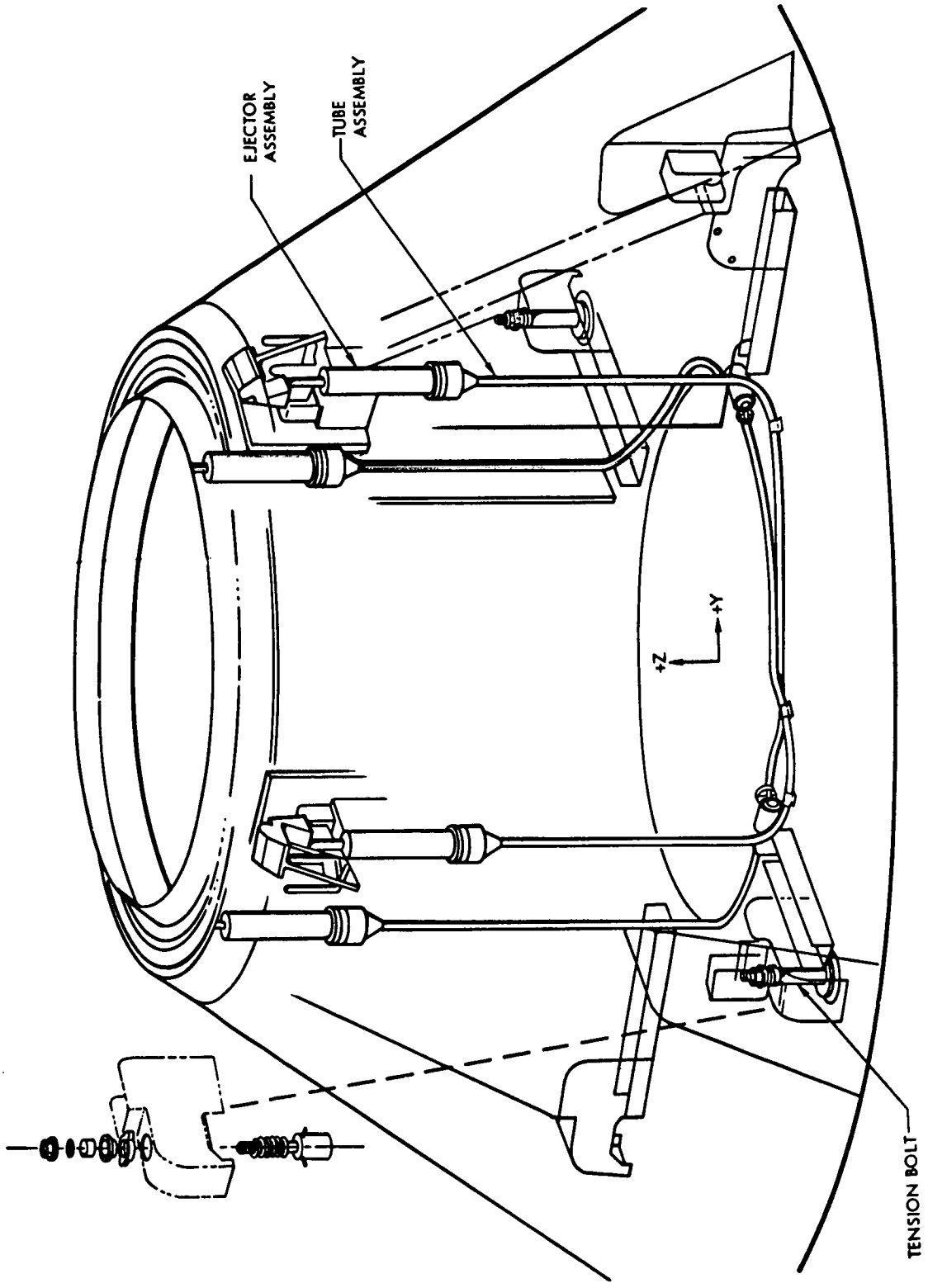

Figure 2.2 Forward Compartment Jettison

launch escape motor could not be utilized since the motor would have burned out before tower jettison. Reliability studies of the tower separation system are continuing in co-ordination with Design Engineering.

2.4 Forward Compartment Heat Shield Separation System

The four explosive bolts previously used in the forward heat shield separation system have been replaced with two tension failure bolts. (See Figure 2.2.) The predicted reliability of the system is 0.9999985, which exceeds the apportioned reliability of 0.999995. Using tension failure bolts simplifies the previous system, resulting in an increase in reliability. A logic diagram of the forward heat shield separation system, Figure 2.3, is shown below.

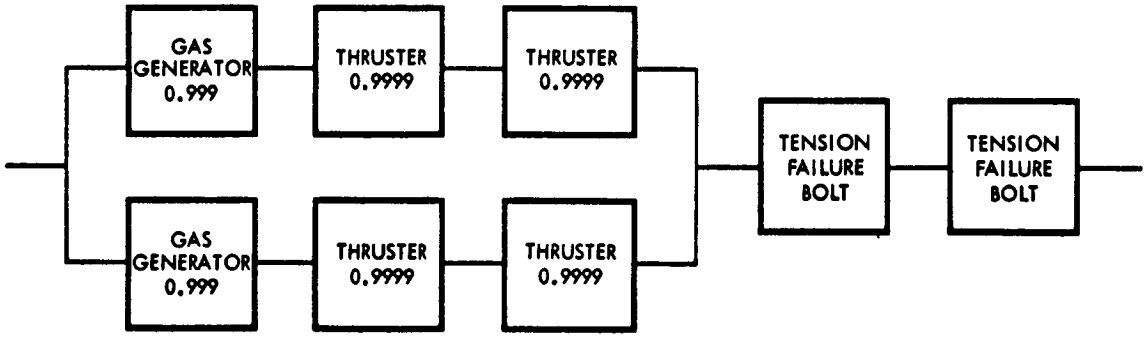

*The tension failure bolts are not included in calculating the reliability, since neither bolt has a function within itself.

Figure 2.3 Forward Heat Shield Separation System Logic Diagram

Each bolt is designed to fail at 6135 ± 5 pounds. Each of the four thrusters are designed to peak at about 9500 pounds thrust. If one of the redundant gas generators fails, the two thrusters that would be actuated will provide 19,000 pounds thrust. This is a 55 percent margin over the thrust required to break the two bolts.

2.5 Command Module to Service Module Separation System

Flexible linear shaped charges, Figure 2.4, are used to cut the three straps that attach the command module to the service module. The

~~CONFIDENTIAL~~

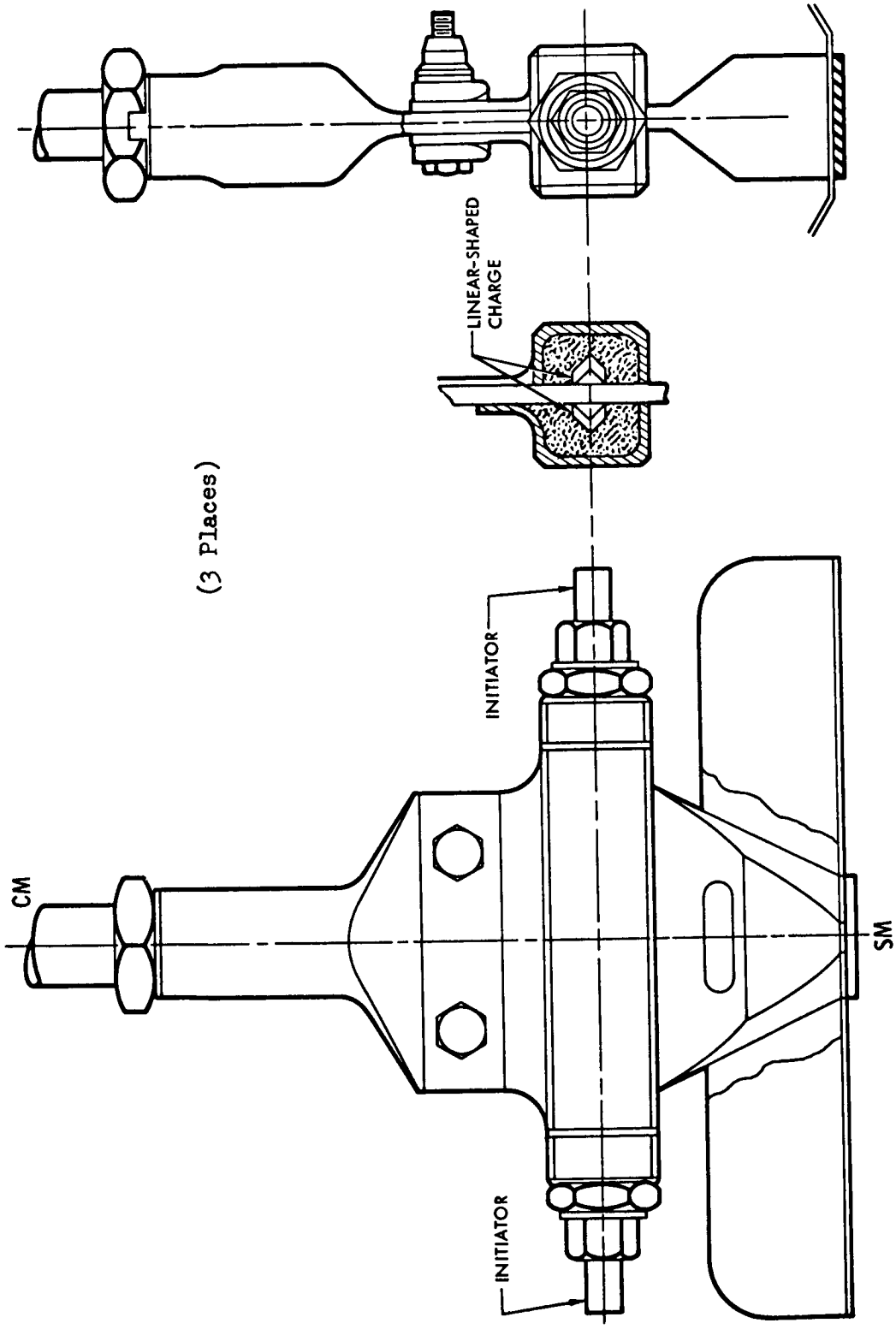

Figure 2.4 Command Module/Service Module Separation (Typical, 3 places)

predicted reliability is 0.999997, which exceeds the apportioned reliability of 0.999995. Two flexible linear-shaped charges are used on each strap, either of which will cut the strap. These charges are both initiated at each end by dual initiators.

2.6 Adapter Separation Systems

A reliability evaluation was made of the system separating the service module adapter and lunar excursion module adapters. A schematic of the system is shown in Figure 2.5 and the sequence of operation appears in Figure 2.6. Each of the adapters uses flexible linear-shaped charges along the adapter structure. The linear-shaped charges on each adapter are detonated by dual squib-ignited mild detonating fuses. A linear-shaped charge has an initiation point at each end, but there are several ways of reaching each end due to the interconnection of the shaped charges. For this reason, the reliability of separating each adapter is approximately equal to the reliability of the dual squibs. Since the reliability of one pair of dual squibs is 0.999999, the reliability of separating the service module and lunar excursion module adapters is 0.999997. This exceeds the apportioned reliability of 0.999995.

Studies will be continued on the adapter separation systems, and design changes or improvements will be suggested when necessary to improve reliability.

2.7 Qualification Test

2.7.1 Forward Heat Shield Separation System

The separation of the forward heat shield from the command module, prior to operation of the earth landing system, will be accomplished by firing two cartridges, which will operate as gas generators. The gas pressure will operate four thrusters that will break two tie bolts. The qualification test program for the cartridges will subject 118 specimens to mission environments and firing tests.

2.7.2 Test-Oriented Reliability Logic Diagram

Forward Heat Shield Separation System

Figure 2.7 depicts the test-oriented reliability logic diagram for the forward heat shield separation system. The logic diagram illustrates the reliability configuration of the extent of system testing to be performed.

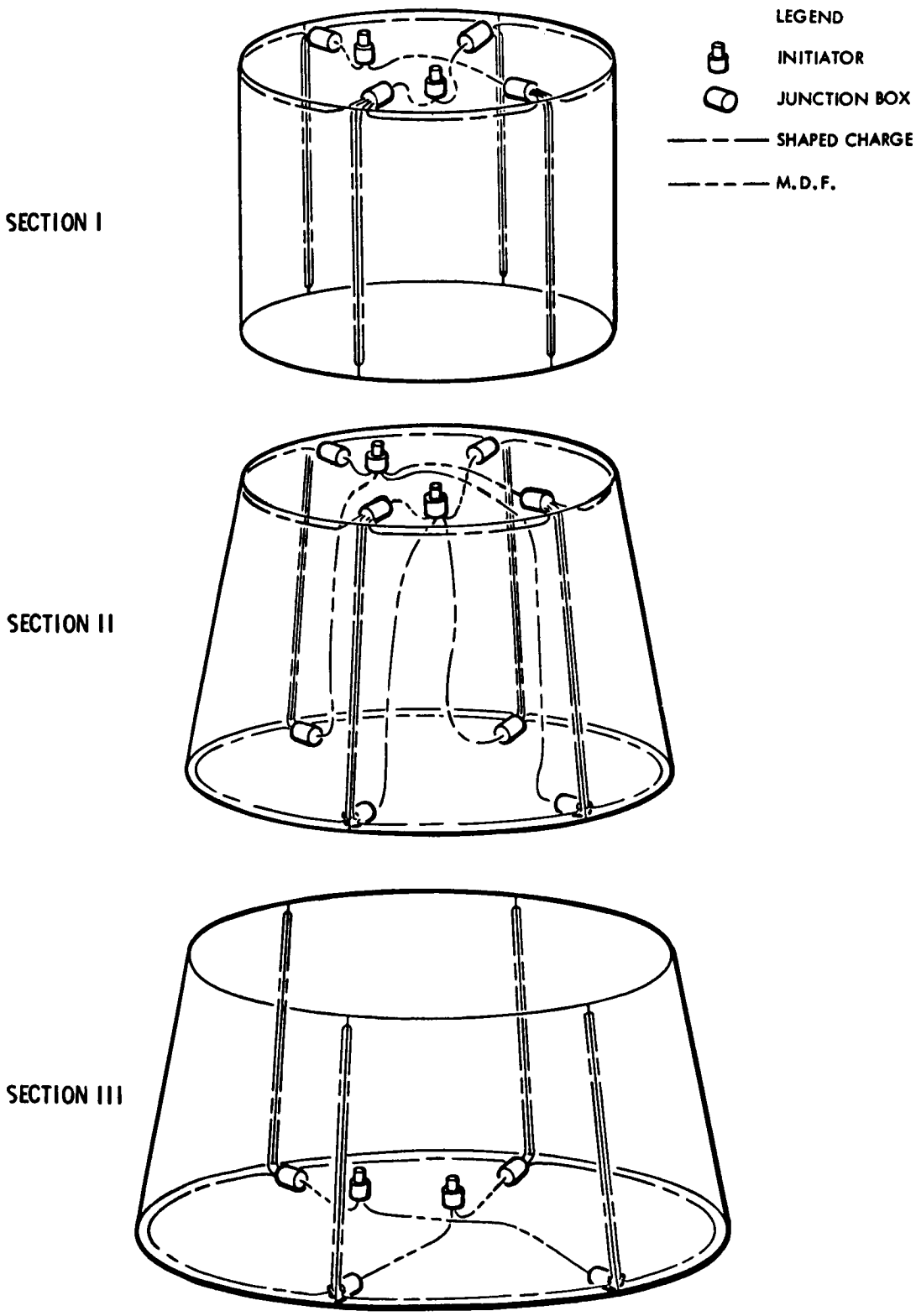

Figure 2.5 Adapter Separation System—LOR Mission

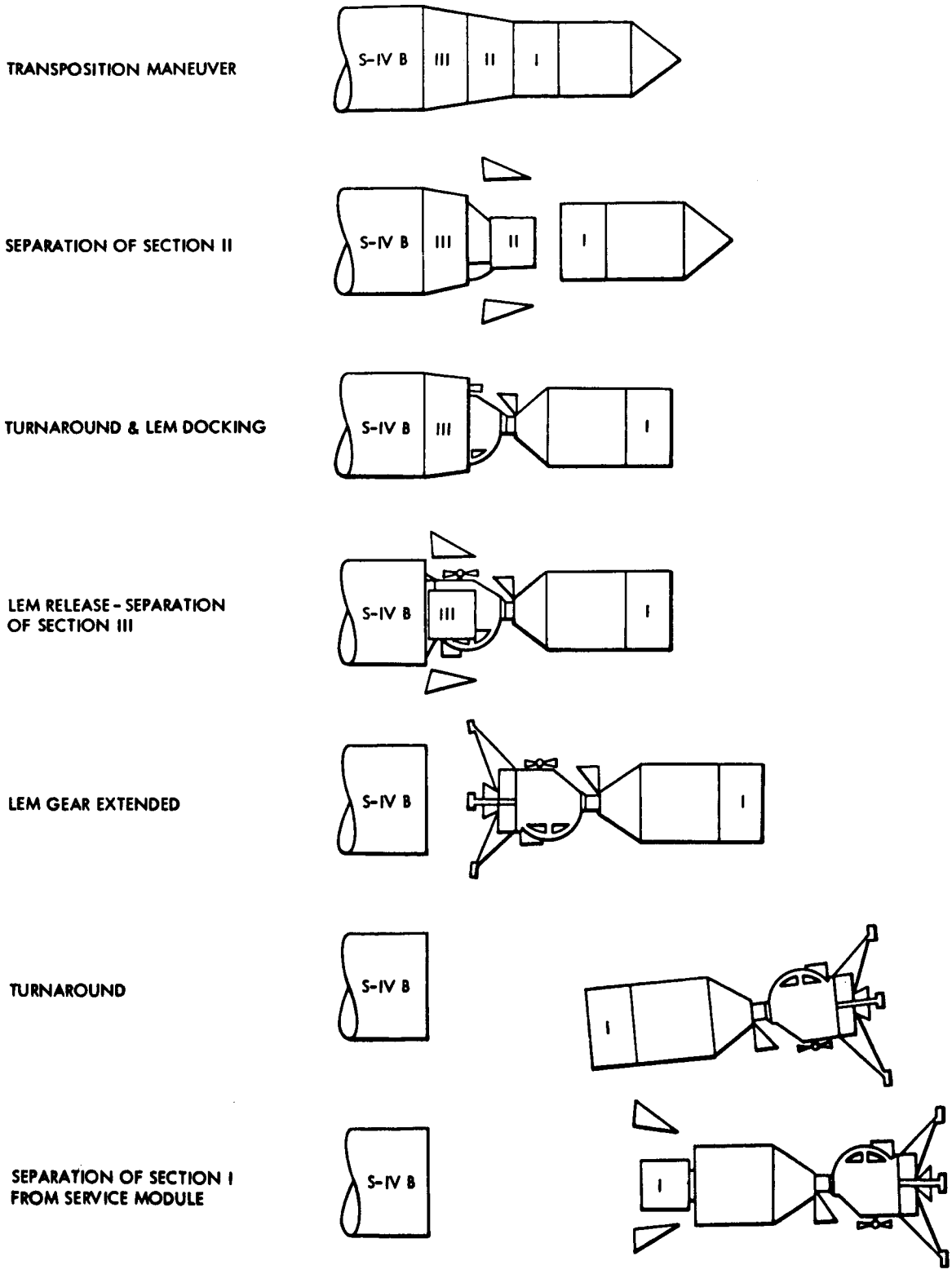

Figure 2.6 Adapter Separation Sequence

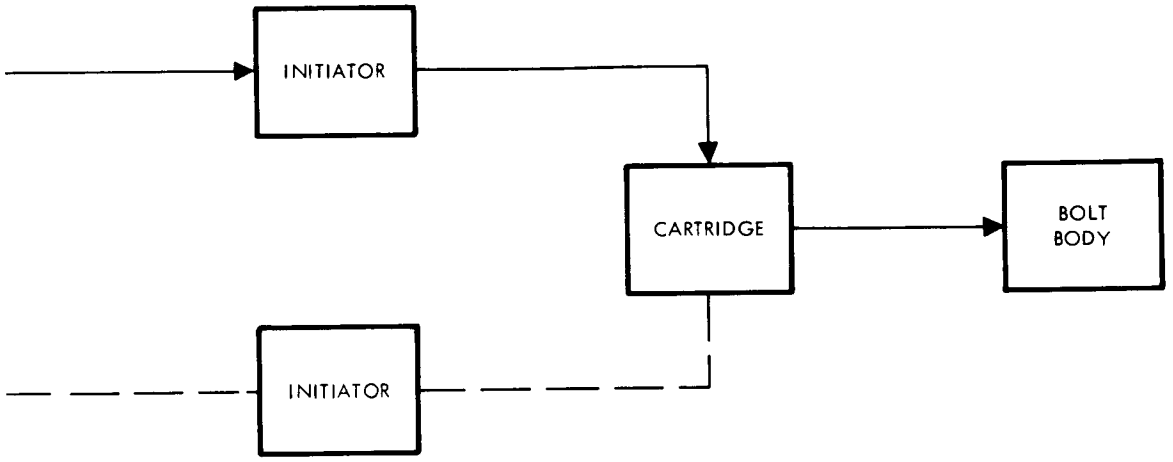

Figure 2.7 Pressure Cartridge Reliability Assessment Model

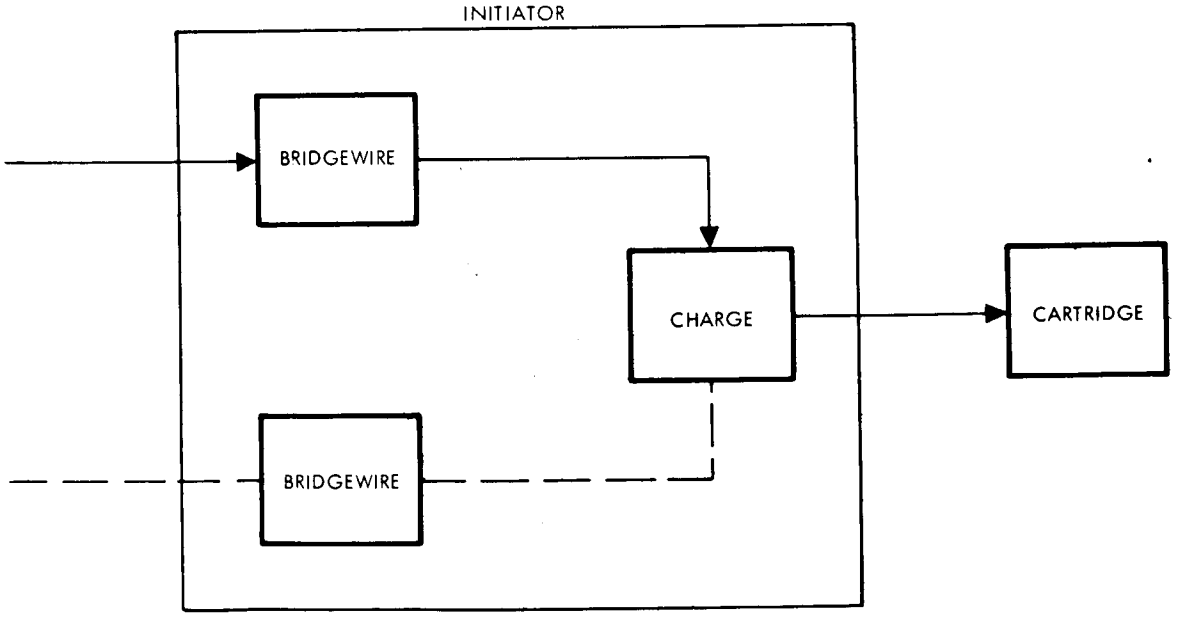

Figure 2.8 Explosive Bolt Reliability Assessment Model

Launch Escape Tower Separation System.

Figure 2.8 depicts the test-oriented reliability logic diagram for the LET separation system. The logic diagram illustrates the reliability configuration of the extent of system testing to be performed.

2.7.3 Criticality and Hardware Requirements

Table 2.2 designates the criticality class, as defined in Section 2.4 of SID 62-109-3 for the components of the mechanical devices. The table enumerates the hardware requirements for a minimum qualification program, as established in Section 2.5 of SID 62-109-3. The distribution of the hardware through the subsystem qualification test phases, as described in Section 2.3 of SID 62-109-3, is shown. The location of the components in the spacecraft is indicated by spacecraft zone numbers, as defined in Section 4.2 of SID 62-109-3.

Table 2.2 System Parameters for Qualification Testing

Component	S/C Zone	Criticality	Required Hardware	Qualification Test Phase Distribution		
				A-1	A-2	B
Cartridge, forward compartment heat shield separation	1	1	118	70	48	None
Explosive bolt, launch escape tower separation	1	1	133	66	67	None

2.7.4 Qualification Test Schedule

2.7.4.1 Forward Heat Shield Separation System

Figure 2.9 displays the qualification test schedule for the forward heat shield separation system and defines the test utilization of cartridges enumerated in Table 2.2. The specific test levels to be applied in qualification testing are found in the tables of environmental test criteria in Section 4.2 of SID 62-109-3 and are a function of the zone location of the equipment in the spacecraft. The zone number is given in Table 2.2.

2.7.4.2 Launch Escape Tower Separation System

Figure 2.10 displays the qualification test schedule for the LET separation system and defines the test utilization of the explosive

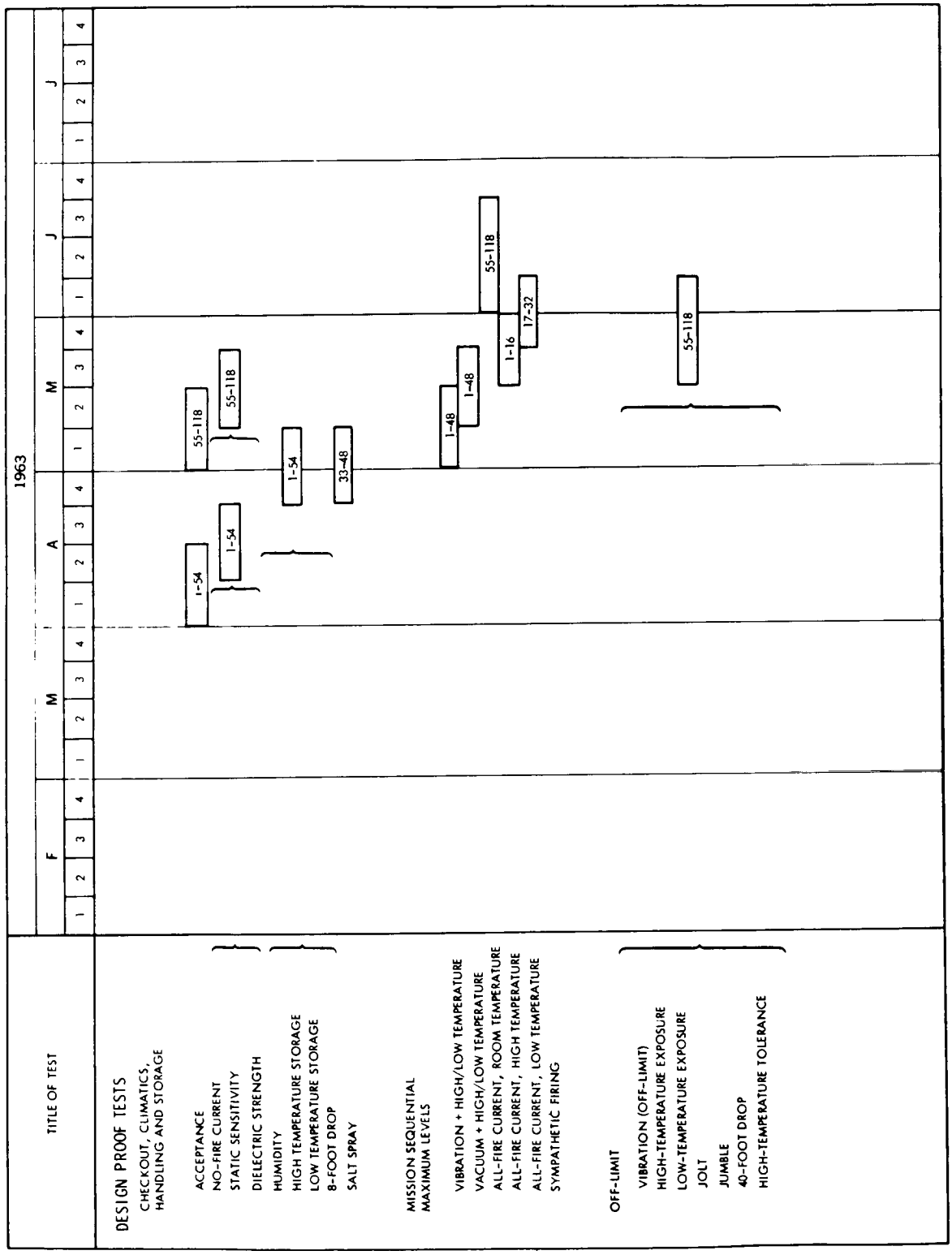

Figure 2.9 Pressure Cartridge Qualification Test Schedule

[redacted]

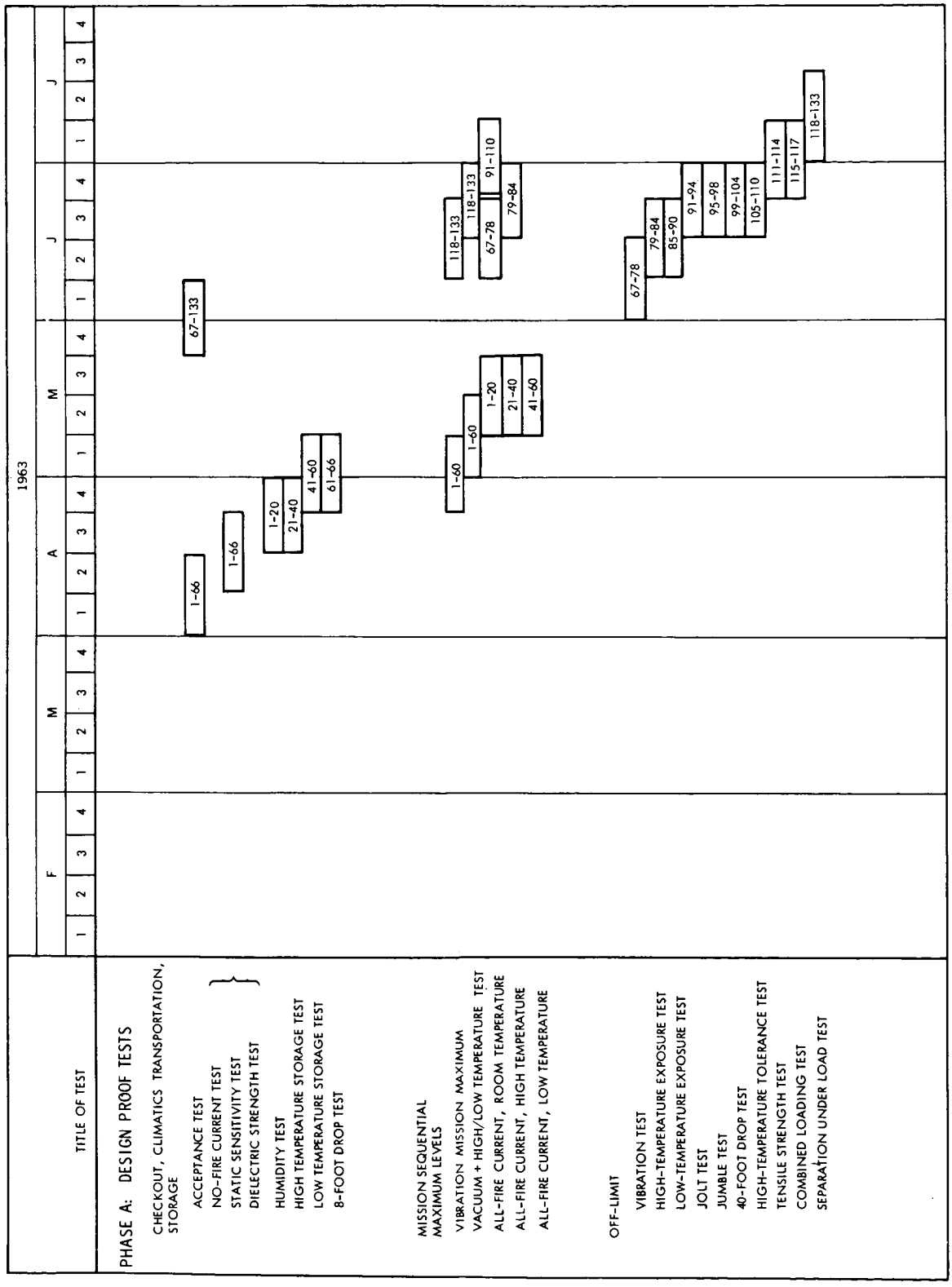

Figure 2.10 Explosive Bolt Qualification Test Schedule

[redacted]

bolts enumerated in Table 2.2. The specific test levels to be applied in qualification testing are found in the tables of environmental test criteria in Section 4.2 of SID 62-109-3 and are a function of the zone location of the equipment in the spacecraft. The zone number is given in Table 2.2.

LIST OF CURRENT PAGES

Page No.	Date	Revised	Classification

SECTION 3.0

ELECTRICAL POWER SYSTEM

3.1 Introduction

Reliability effort devoted to the Electrical Power System has been divided into two primary tasks; (1) apportionment of system reliability goals and evaluation of various design approaches; and, (2) evaluation of test data and system operation to insure that these goals are achieved.

Table 3.1 indicates present estimates of component reliability. These estimates are subject to change as development and qualification test data become available, and thus, will be maintained current in subsequent revisions to this section.

In an effort to insure accurate reliability evaluation, the EPS has been subdivided into subsystems which consist of a group of isolated components which perform a specific task. A description of these components and their operating criteria is presented in detail on other pages of this section.

3.2 Configuration Analysis

Figure 3.1 presents the logic block diagram which is based upon the failure effects analysis. This diagram has been utilized to obtain the mathematical formula from which the subsystem predicted reliability is obtained.

3.3 Failure Effects Analysis

Table 3.2 presents results of failure effects analysis of the Electrical Power Subsystem. The analysis has provided a basis for formulating mathematical logic necessary for deriving predicted reliability values.

TABLE 3.1

ELECTRICAL POWER

SUBSYSTEM MISSION RELIABILITY (LOR)

COMPONENT NAME	ITEMS	MISSION TIMES (HRS.)	FAILURE RATE PER 10^6 HOURS OR CYCLES			RELIABILITY		
			APPORTIONED	PREDICTED	ASSESSED	APPORTIONED	PREDICTED	ASSESSED
ELECTRICAL POWER SUBSYSTEM	-	-	-	-	N.A.	.998289[A]	0.993400[A]	N.A.
Fuel Cell	3	336 hrs.	N.A.	N.A.	N.A.	.971000*	.902259[A]	N.A.
Radiator	2	336 hrs.	0.104	N.A.	N.A.	.999965[A]	N.A.	N.A.
Battery Charger	1	200 hrs.	25.0000	25.0000[3]	N.A.	.995000**	.995000**	N.A.
Inverters	3	336 hrs.	64.3000	109.8000[1]	N.A.	.978600 .999737[A](all)	.963500[A] .999299(all)	N.A. N.A.
Batteries	3	336 hrs.	4.7620	4.7620[1]	N.A.	.998400 .999993[A](all)	.998400[A] .999993(all)	N.A.
A.C. Bus Systems	2	336 hrs.	9.4110	9.4110[2]	N.A.	.996838[A] .999990 (all)	.996838[A] .999990(all)	N.A.
D.C. Bus Systems	2	336 hrs.	16.8360	16.5710[2]	N.A.	.994345[A] .999968 (all)	.994432[A] .999969(all)	N.A.

DATA SOURCE:
1. Pratt-Whitney
2. NAA
3. I.T.T.

N.A.: Not Applicable
* For 400 hrs. of operation
** Not required for mission success.

MATHEMATICAL TECHNIQUE:
A. Analytical Model (Logic Diagram & Known Failure Rate Data)
B. Analytical Method (Weighted Subjective Experience)

[redacted]

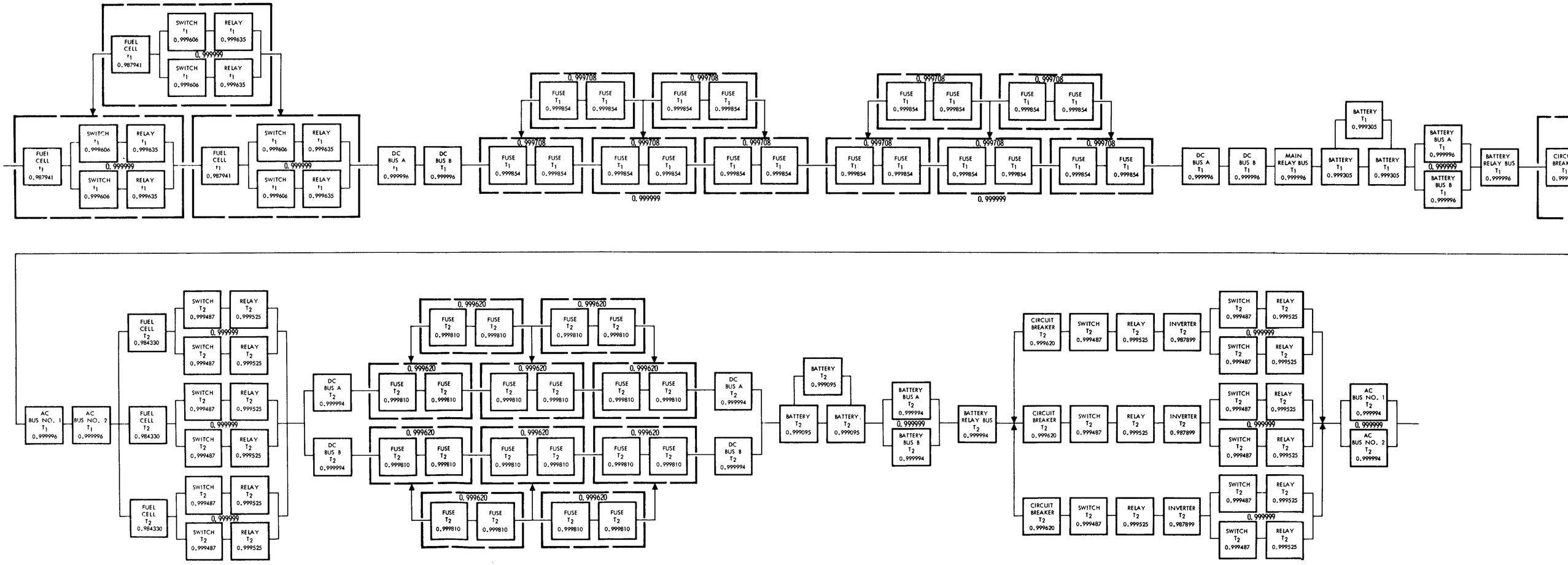

Fold-out 1

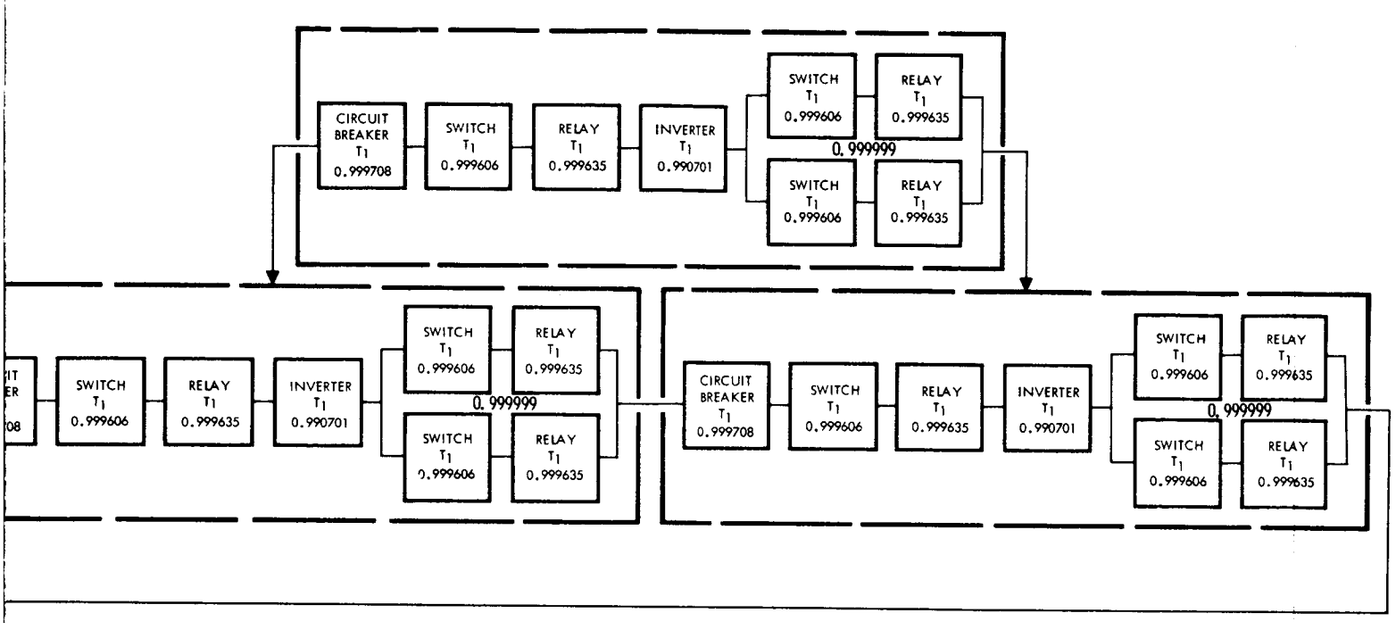

LEGEND

T_1 = 147 HOURS (LIFT-OFF TO BEGINNING OF LUNAR SECOND-STAY PHASE)
T_2 = 189 HOURS
R_T = 0.998953 (TOTAL SYSTEM RELIABILITY)

FOLD OUT 2

ELECTRICAL POWER SYSTEM

t_1 = 107 HOURS — COMPLETE MATH MODEL — t_2 = 189 HOURS

$$
\begin{aligned}
R_{\text{MISSION SUCCESS}} = {} & \Big\{ \Big[R_{F/C} \left(1 - \left[1 - R_{SW} R_R\right]^2\right) \Big]_{t_1}^3 \Big[\left\{ R_{F/C} \left(1 - \left[1 - R_{SW} R_R\right]^2\right) \right\}^3 + 3 \left\{ R_{F/C} \left(1 - \left[1 - R_{SW} R_R\right]^2\right) \right\}^2 \left\{ 1 - \left(R_{F/C}\right) \right. \\
& \left. \left(1 - \left[1 - R_{SW} R_R\right]^2\right) \right\} + 3 \left\{ R_{F/C} \left(1 - \left[1 - R_{SW} R_R\right]^2\right) \right\} \left\{ 1 - \left(R_{F/C}\right) \left(1 - \left[1 - R_{SW} R_R\right]^2\right) \right\}^2 \Big]_{t_2} + \\
& \Big[3 \left\{ R_{F/C} \left(1 - \left[1 - R_{SW} R_R\right]^2\right) \right\}^2 \left\{ 1 - \left(R_{F/C}\right) \left(1 - \left[1 - R_{SW} R_R\right]^2\right) \right\} \Big] \Big[\left\{ R_{F/C} \left(1 - \left[1 - R_{SW} R_R\right]^2\right) \right\}^2 + \\
& \left\{ 2 R_{F/C} \left(1 - \left[1 - R_{SW} R_R\right]^2\right) \right\} \left\{ 1 - \left(R_{F/C}\right) \left(1 - \left[1 - R_{SW} R_R\right]^2\right) \right\} \Big]_{t_2}^1 \Big\} \Big\{ \Big[R_{D-C\ BUS} \left(R_F^5 + 5 R_F^4 \left[1 - R_F\right] + \right. \\
& \left. 10 R_F^3 \left[1 - R_F\right]^2\right) \Big]_{t_1}^2 \Big[\left\{ R_{D-C\ BUS} \left(R_F^5 + 5 R_F^4 \left[1 - R_F\right] + 10 R_F^3 \left[1 - R_F\right]^2\right) \right\}^2 + 2 \left\{ \left(R_{D-C\ BUS}\right) \left(R_F^5 + 5 R_F^4 \left[1 - R_F\right] \right. \right. \\
& \left. \left. + 10 R_F^3 \left[1 - R_F\right]^2\right) \right\} \left\{ 1 - \left(R_{D-C\ BUS}\right) \left(R_F^5 + 5 R_F^4 \left[1 - R_F\right] + 10 R_F^3 \left[1 - R_F\right]^2\right) \right\} \Big]_{t_2} \Big\} \Big\{ R_{MAIN\ RELAY\ BUS_{t_1}} \Big\} \\
& \Big\{ \left(R_{BATT}^3 + 3 R_{BATT}^2 \left[1 - R_{BATT}\right]\right)_{t_1} \left(R_{BATT}^3 + 3 R_{BATT}^2 \left[1 - R_{BATT_{t_2}}\right]\right) \Big\} \Big\{ \left(1 - \left[1 - R_{BATT\ BUS\ A\&B}\right]^2\right)_{t_1} \left(1 - \left[1 - R_{BATT\ BUS\ A\&B}\right]^2\right)_{t_2} \Big\} \\
& \Big\{ \left(R_{BATT\ RELAY\ BUS}\right)_{t_1} \left(R_{BATT\ RELAY\ BUS}\right)_{t_2} \Big\} \Big\{ \left(R_{CB}\right) \left(R_{SW}\right) \left(R_R\right) \left(R_{INV}\right) \left(1 - \left[1 - R_{SW} R_R\right]^2\right) \Big]_{t_1}^3 \Big[\Big\{ \left(R_{CB}\right) \left(R_{SW}\right) \left(R_R\right) \left(R_{INV}\right) \\
& \left(1 - \left[1 - R_{SW} R_R\right]^2\right) \Big\}^3 + 3 \Big\{ \left(R_{CB}\right) \left(R_{SW}\right) \left(R_R\right) \left(R_{INV}\right) \left(1 - \left[1 - R_{SW} R_R\right]^2\right) \Big\}^2 \Big\{ 1 - \left(R_{CB}\right) \left(R_{SW}\right) \left(R_R\right) R_{INV}) \left(1 - \left[1 - R_{SW} R_R\right]^2\right) \Big\} \\
& + 3 \Big\{ \left(R_{CB}\right) \left(R_{SW}\right) \left(R_R\right) \left(R_{INV}\right) \left(1 - \left[1 - R_{SW} R_R\right]^2\right) \Big\} \Big\{ 1 - \left(R_{CB}\right) \left(R_{SW}\right) \left(R_R\right) \left(R_{INV}\right) \left(1 - \left[1 - R_{SW} R_R\right]^2\right) \Big\}^2 \Big]_{t_2} + \\
& \Big[3 \Big\{ \left(R_{CB}\right) \left(R_{SW}\right) \left(R_R\right) \left(R_{INV}\right) \left(1 - \left[1 - R_{SW} R_R\right]^2\right) \Big\}^2 \Big\{ 1 - \left(R_{CB}\right) \left(R_{SW}\right) \left(R_R\right) \left(R_{INV}\right) \left(1 - \left[1 - R_{SW} R_R\right]^2\right) \Big\} \Big]_{t_1} \Big[\Big\{ \left(R_{CB}\right) \left(R_{SW}\right) \\
& \left(R_R\right) \left(R_{INV}\right) \left(1 - \left[1 - R_{SW} R_R\right]^2\right) \Big\}^2 + 2 \Big\{ \left(R_{CB}\right) \left(R_{SW}\right) \left(R_R\right) \left(R_{INV}\right) \left(1 - \left[1 - R_{SW} R_R\right]^2\right) \Big\} \Big\{ \Big(1 - \left(R_{CB}\right) \left(R_{SW}\right) \left(R_R\right) \left(R_{INV}\right) \\
& \left(1 - \left[1 - R_{SW} R_R\right]^2\right) \Big\} \Big]_{t_2} \Big\} \Big\{ \Big[\left(R_{A-C\ BUS\ \#1\ \&\ \#2}\right)^2 \Big]_{t_1} \Big[\left(R_{A-C\ BUS\ \#1\ \&\ \#2}\right)^2 + 2 R_{A-C\ BUS\ \#1\ \&\ \#2} \left(1 - R_{A-C\ BUS\ \#1\ \&\ \#2}\right) \Big]_{t_2} \Big\}
\end{aligned}
$$

Figure 3.1 Reliability Electrical Power System Logic Diagram

CONFIDENTIAL

Table 3.2 Electrical Power System Failure Effects Analysis

Item	Drawing No.	Electrical Reference Designation	Function	Failure Type	Mission Phase	Failure Effect			Possible Crew Action
						Component Performance	Subsystems Performance	Apollo	
Relay	V14-945101 dated 10/25/62	K5	Inverter 1 to bus 1 relay	Fails open		Relay inoperative	No ac power available at bus 1 while inverter 1 is on	None	Loads can be switched to bus 2, or inverter 2 or 3 can be switched in.
				Fails short		Relay inoperative	No effect	None	In the event of a short on bus 1, circuit breakers CB65, CB67 and CB69 can be opened and power can be switched to 2.
Relay	V14-945101 dated 10/25/62	K4	Inverter 1 to bus 2 relay	Fails open		Relay inoperative	No ac power available at bus 1 while inverter 1 is on	None	Loads can be switched to bus 1, or inverter 2 or 3 can be switched in.
				Fails short		Relay inoperative	No effect	None	In the event of a short on bus 2, circuit breakers CB64, CB66 and CB68 can be opened and power can be switched to bus 1.
Circuit breaker	V14-945101 dated 10/25/62	CB65	Inverter 1, ϕA_1, output to bus 1 circuit breaker (short circuit protection for inverter 1, ϕA_1)	Fails open		Loss of circuit breaker	No ac power available at ϕ A, bus 1, while inverter 1 is on	None	Loads can be switched to bus 2, or inverter 2 or 3 switched in.
				Fails short		Loss of circuit breaker	No short circuit protection for inverter 1, A1, from ϕA, bus 1	None	In the event of a short on ϕA, bus 1, inverter 1 can be shut off and inverter 2 or 3 can be switched in.

Table 3.2 Electrical Power System Failure Effects Analysis (Continued)

Item	Drawing No.	Electrical Reference Designation	Function	Failure Type	Mission Phase	Failure Effect			Possible Crew Action
						Component Performance	Subsystems Performance	Apollo	
Circuit breaker	V14-945101 dated 10/25/62	CB64	Inverter 1, $\emptyset A_2$, output to $\emptyset$A bus 2 circuit breaker (short circuit protection for inverter 1 $\emptyset A_2$)	Fails open		Loss of circuit breaker	No ac power available at $\emptyset$A, bus 2, while inverter 1 is on.	None	Loads can be switched to bus 1, or inverter 2 or 3 can be switched in.
				Fails short		Loss of circuit breaker	No short circuit protection for inverter 1, $\emptyset$A2, from $\emptyset$A, bus 2	None	In the event of $\emptyset$A short on a bus 2, inverter 1 can be shut off and inverter 2 or 3 can be switched in.
Relay	V14-945101 dated 10/25/62	K1	DC input power relay to inverter 1	Fails open		Relay inoperative	Inverter 1 would not be available.	None	Inverter 2 or 3 can be switched in to restore power.
				Fails short		Relay inoperative	No effect	None	In the event of a short, inverter 1 can be shut off and inverter 2 or 3 can be switched in.
Relay	V14-945101 dated 10/25/62	K2	DC input power relay to inverter 2	Fails open		Relay inoperative	Inverter 2 would not be available.	None	Inverter 1 or 3 can be switched in to restore power.
				Fails short		Relay inoperative	No effect	None	In the event of a short, inverter 2 can be shut off and inverter 1 or 3 can be switched in.
Relay	V14-945101 dated 10/25/62	K3	DC input power relay to inverter 3	Fails open		Relay inoperative	Inverter 3 would not be available.	None	Inverter 1 or 2 can be switched in to restore power.
				Fails short		Relay inoperative	No effect	None	In the event of $\emptyset$A short, inverter 3 can be shut off and inverter 1 or 2 can be switched in.

[redacted]

Table 3.2 Electrical Power System Failure Effects Analysis (Continued)

Item	Drawing No.	Electrical Reference Designation	Function	Failure Type	Mission Phase	Failure Effect			Possible Crew Action
						Component Performance	Subsystems Performance	Apollo	
Circuit breaker	V14-945101 dated 10/25/62	CB71	Inverter 2, $\emptyset A_1$, output to $\emptyset A$, bus 1 circuit breaker (short circuit protection for inverter 2 $\emptyset A_1$)	Fails open		Loss of circuit breaker	No ac power available at $\emptyset A$, bus 1, while inverter 2 is on	None	Loads can be switched to bus 2, or inverter 1 or 3 can be switched in.
				Fails short		Loss of circuit breakers	No short circuit protection for inverter 2, $\emptyset A_1$, from $\emptyset A$, bus 1	None	In the event of a short on bus 1, inverter 2 can be shut off and inverter 1 or 3 can be switched in.
Circuit breaker	V14-945101 dated 10/25/62	CB70	Inverter 2, $\emptyset A_2$, output to $\emptyset A$, bus 2 circuit breaker (short circuit protection for inverter 2 $\emptyset A_2$)	Fails open		Loss of circuit breaker	No ac power available at $\emptyset A$, bus 2, while inverter 2 is on	None	Loads can be switched to bus 1, or inverter 1 or 3 can be switched in.
				Fails short		Loss of circuit breaker	No short circuit protection for inverter 2, $\emptyset A_2$, from $\emptyset A$, bus 2	None	In the event of a short on $\emptyset A$, bus 2, inverter 2 can be shut off and inverter 1 or 3 can be switched in.
						Loss of circuit breaker	No ac power available at $\emptyset A$, bus 1, while inverter 3 is on	None	Loads can be switched to bus 2, or inverter 1 or 3 can be switched in.
Circuit breaker	V14-945101 dated 10/25/62	CB77	Inverter 3, $\emptyset A_1$, output to $\emptyset A$, bus 1 circuit breaker (short circuit protection for inverter 3 $\emptyset A_1$)	Fails open		Loss of circuit breaker	No short circuit protection for inverter 3, $\emptyset A_1$, from $\emptyset A$, bus 1	None	In the event of a short on $\emptyset A$, bus 1, inverter 3 can be shut off and inverter 1 or 2 can be switched in.
				Fails short		Loss of circuit breaker	No short circuit protection for inverter 3, $\emptyset A_1$, from $\emptyset A$, bus 1	None	In the event of a short on $\emptyset A$, bus 1, inverter 3 can be shut off and inverter 1 or 2 can be switched in.

[redacted]

[redacted]

Table 3.2 Electrical Power System Failure Effects Analysis (Continued)

Item	Drawing No.	Electrical Reference Designation	Function	Failure Type	Mission Phase	Failure Effect			Possible Crew Action
						Component Performance	Subsystems Performance	Apollo	
Circuit breaker	V14-945101 dated 10/25/62	CB76	Inverter 3, $\emptyset A_2$, output to $\emptyset A$, bus 2 circuit breaker (short circuit protection for inverter 3 $\emptyset A_2$)	Fails open		Loss of circuit breaker	No ac power available at $\emptyset A$, bus 2, while inverter 3 is on	None	Loads can be switched to bus 1, or inverter 1 or 2 can be switched in.
				Fails short		Loss of circuit breaker	No short circuit protection for inverter 3 from $\emptyset A$, bus 2	None	In the event of a short on $\emptyset A$, bus 2, inverter 3 can be shut off and inverter 1 or 2 can be switched in.
Circuit breaker	V14-945101 dated 10/25/62	CB67	Inverter 1, $\emptyset B_1$, output to $\emptyset B$, bus 1 circuit breaker (short circuit protection for inverter 1 $\emptyset B_1$)	Fails open		Loss of circuit breaker	No ac power available to $\emptyset B$, bus 1, while inverter 1 is on	None	Loads can be switched to bus 2, or inverter 2 or 3 can be switched in.
				Fails short		Loss of circuit breaker	No short circuit protection for inverter 1, $\emptyset B_1$, from $\emptyset B$, bus 1	None	In the event of a short on $\emptyset B$, bus 1, inverter 1 can be shut off and inverter 2 or 3 can be switched in
Circuit breaker	V14-945101 dated 10/25/62	CB66	Inverter 1, $\emptyset B_2$, output to $\emptyset B$, bus 2 circuit breaker (short circuit protection for inverter 1 $\emptyset B_2$)	Fails open		Loss of circuit breaker	No ac power available to $\emptyset B$, bus 2, while inverter 1 is on	None	Loads can be switched to bus 1, or inverter 2 or 3 can be switched in.
				Fails short		Loss of circuit breaker	No short circuit protection for inverter 1, $\emptyset B_2$, from $\emptyset B$, bus 2	None	In the event of a short on $\emptyset B$, bus 2, inverter 1 can be shut off and inverter 2 or 3 can be switched in.
Circuit breaker	V14-945101 dated 10/25/62	CB73	Inverter 2, $\emptyset B_1$, output to $\emptyset B$, bus 1 circuit breaker (short circuit protection for inverter 2, $\emptyset B_1$)	Fail open		Loss of circuit breaker	No ac power available to $\emptyset B$, bus 1, while inverter 2 is on	None	Loads can be switched to bus 2, or inverter 1 or 3 can be switched in.

[redacted]

Table 3.2 Electrical Power System Failure Effects Analysis (Continued)

Item	Drawing No.	Electrical Reference Designation	Function	Failure Type	Mission Phase	Failure Effect			Possible Crew Action
						Component Performance	Subsystems Performance	Apollo	
Circuit breaker (Cont)	V14-945101 dated 10/25/62	CB73		Fail short		Loss of circuit breaker	No short circuit protection for inverter 2, $\emptyset B_1$, from $\emptyset B$, bus 1	None	In the event of a short on $\emptyset B$, bus 1, inverter 2 can be shut off and inverter 1 or 3 can be switched in.
Circuit breaker	V14-945101 dated 10/25/62	CB72	Inverter 2, $\emptyset B_2$, output to $\emptyset B$, bus 2 circuit breaker (short circuit protection for inverter 2 $\emptyset B_2$)	Fails open		Loss of circuit breaker	No ac power available to $\emptyset B$, bus 2, while inverter 2 is on	None	Loads can be switched to bus 1, or inverter 1 or 3 can be switched in.
				Fails short		Loss of circuit breaker	No short circuit protection for inverter 2 from $\emptyset B$, bus 2	None	In the event of a short on $\emptyset B$, bus 2, inverter 2 can be shut off and inverter 1 or 3 can be switched in.
Circuit breaker	V14-945101 dated 10/25/62	CB79	Inverter 3, $\emptyset B_1$, output to $\emptyset B$, bus 1 circuit breaker (short circuit protection for inverter 3, $\emptyset B_1$)	Fails open		Loss of circuit breaker	No ac power available to $\emptyset B$, bus 1, while inverter 3 is on	None	Loads can be switched to bus 2, or inverter 1 or 2 can be switched in.
				Fails short		Loss of circuit breaker	No short circuit protection for inverter 3, $\emptyset B_1$, from $\emptyset B$, bus 1	None	In the event of a short on $\emptyset B$, bus 1, inverter 3 can be shut off and inverter 1 or 2 can be switched on.
Circuit breaker	V14-945101 dated 10/25/62	CB78	Inverter 3, $\emptyset B_2$, output to $\emptyset B$, bus 2 circuit breaker (short circuit protection for inverter 3, $\emptyset B_2$)	Fails open		Loss of circuit breaker	No ac power available to $\emptyset B$, bus 2, while inverter 3 is on	None	Loads can be switched to bus 1, or inverter 1 or 2 can be switched in.
				Fails short		Loss of circuit breaker	No short circuit protection for inverter 3, $\emptyset B_2$, from $\emptyset B$, bus 2	None	In the event of a short on $\emptyset B$, bus 2, inverter 3 can be shut off and inverter 1 or 2 can be switched in.

[redacted]

Table 3.2 Electrical Power System Failure Effects Analysis (Continued)

Item	Drawing No.	Electrical Reference Designation	Function	Failure Type	Mission Phase	Failure Effect			Possible Crew Action
						Component Performance	Subsystems Performance	Apollo	
Circuit breaker	V14-945101 dated 10/25/62	CB81	Inverter 3, ØC1, output to ØC, bus 1 circuit breaker (short circuit protection for inverter 3 $ØC_1$)	Fails open		Loss of circuit breaker	No ac power available to ØC, bus 1, while inverter 3 is on	None	Loads can be switched to bus 2, or inverter 1 or 2 can be switched in.
				Fails short		Loss of circuit breaker	No short circuit protection for inverter 3, $ØC_1$, from ØC, bus 1	None	In the event of a short on ØC, bus 1, inverter 3 can be shut off and inverter 1 or 2 can be switched in.
Circuit breaker	V14-945101 dated 10/25/62	CB80	Inverter 3, $ØC_2$, output to ØC, bus 2 circuit breaker (short circuit protection for inverter 3, $ØC_2$)	Fails open		Loss of circuit breaker	No ac power available to ØC, bus 2, while inverter 3 is on	None	Loads can be switched to bus 1, or inverter 1 or 2 can be switched in.
				Fails short		Loss of circuit breaker	No short circuit protection for inverter 3, ØC2, from ØC, bus 2	None	In the event of a short on ØC, bus 2, inverter 3 can be shut off and inverter 1 or 2 can be switched in.
Circuit breaker	V14-945101 dated 10/25/62	CB75	Inverter 2, $ØC_1$, output to ØC, bus 1 circuit breaker (short circuit protection for inverter 3, ØC1)	Fails open		Loss of circuit breaker	No ac power available to ØC, bus 1, while inverter 2 is on	None	Loads can be switched to bus 2, or inverter 1 or 3 can be switched in.
				Fails short		Loss of circuit breaker	No short circuit protection for inverter 2, $ØC_1$, from ØC, bus 1	None	In the event of a short on ØC, bus 1, inverter 2 can be shut off and inverter 1 or 3 can be switched in.
Circuit breaker	V14-945101 dated 10/25/62	CB74	Inverter 2, $ØC_2$, output to ØC, bus 2 circuit breaker (short circuit protection for inverter 2, $ØC_2$)	Fails open		Loss of circuit breaker	No ac power available to ØC, bus 2, while inverter 2 is on	None	Loads can be switched to bus 1, or inverter 1 or 3 can be switched in.

[redacted]

Table 3.2 Electrical Power System Failure Effects Analysis (Continued)

Item	Drawing No.	Electrical Reference Designation	Function	Failure Type	Mission Phase	Failure Effect			Possible Crew Action
						Component Performance	Subsystems Performance	Apollo	
Circuit breaker (Cont)	V14-945101 dated 10/25/62	CB74		Fails short		Loss of circuit breaker	No short circuit protection for inverter 2, ØC2, from ØC, bus 2	None	In the event of a short on ØC, bus 2, inverter 2 can be shut off and inverter 1 or 3 can be switched in.
Circuit breaker	V14-945101 dated 10/25/62	CB69	Inverter 1, $ØC_1$, output to ØC, bus 1 circuit breaker (short circuit protection for inverter 1, $ØC_1$)	Fails open		Loss of circuit breaker	No ac power available to ØC, bus 1, while inverter 1 is on.	None	Loads can be switched to bus 2, or inverter 2 or 3 can be switched in.
				Fails short		Loss of circuit breaker	No short circuit protection for inverter 1, $ØC_1$, from ØC, bus 1	None	In the event of a short on ØC, bus 1, inverter 1 can be shut off and inverter 2 or 3 can be switched in.
Circuit breaker	V14-945101 dated 10/25/62	CB68	Inverter 1, $ØC_2$, output to ØC, bus 2 circuit breaker (short circuit protection for inverter 1, $ØC_2$)	Fails open		Loss of circuit breaker	No ac power available to ØC, bus 2, while inverter 1 is on	None	Loads can be switched to bus 1, or inverter 2 or 3 can be switched in.
				Fails short		Loss of circuit breaker	No short circuit protection for inverter 1, $ØC_2$, from ØC, bus 2	None	In the event of a short on ØC, bus 2, inverter 1 can be shut off and inverter 2 or 3 can be switched in.
Relay	V14-945101 dated 10/25/62	K7	Inverter 2 to bus 1 relay	Fail open		Loss of relay	No ac power available at bus 1 while inverter 2 is on	None	Loads can be switched to bus 2, or inverter 1 or 3 can be switched in.
				Fail short		Loss of relay	No effect	None	In the event of a short on bus 1, circuit breakers CB71, CB73, and CB75 can be opened and power can be switched to bus 2.

Table 3.2 Electrical Power System Failure Effects Analysis (Continued)

Item	Drawing No.	Electrical Reference Designation	Function	Failure Type	Mission Phase	Failure Effect			Possible Crew Action
						Component Performance	Subsystems Performance	Apollo	
Relay	V14-945101 dated 10/25/62	K9	Inverter 3 to bus 1 relay	Fail open		Loss of relay	No ac power available at bus 1 while inverter 3 is on	None	Loads can be switched to bus 2, or inverter 1 or 2 can be switched in.
				Fail short		Loss of relay	No effect	None	In the event of a short on bus 1, circuit breakers CB81, CB79, CB77 can be opened and power can be switched to bus 2.
Relay	V14-945101 dated 10/25/62	K6	Inverter 2 to bus 2 relay	Fail open		Loss of relay	No ac power available at bus 2 while inverter 2 is on	None	Loads can be switched to bus 1, or inverter 1 or 3 can be switched in.
				Fail short		Loss of relay	No effect	None	In the event of a short on bus 2, circuit breakers CB72, CB70, and CB74 can be opened and power can be switched to bus 1.
Relay	V14-945101 dated 10/25/62	K8	Inverter 3 to bus 2 relay	Fail open		Loss of relay	No ac power available at bus 2 while inverter 3 is on	None	Loads can be switched to bus 1, or inverter 1 or 2 can be switched in.
				Fail short		Loss of relay	No effect	None	In the event of a short on bus 2, circuit breakers CB80, CB78, and CB76 can be switched to bus 1.

[redacted]

Table 3.2 Electrical Power System Failure Effects Analysis (Continued)

Item	Drawing No.	Electrical Reference Designation	Function	Failure Type	Mission Phase	Failure Effect			Possible Crew Action
						Component Performance	Subsystems Performance	Apollo	
AC bus ØA bus 1	V14-945101 dated 10/25/62		Distributes power	Fail open		Loss of bus	No ac power available at ØA, bus 1	None	Loads can be switched to bus 2.
				Fail short		Loss of bus	No ac power available at ØA, bus 1	None	Loads can be switched to bus 2.
AC bus ØB bus 1	V14-945101 dated 10/25/62		Distributes power	Fail open		Loss of bus	No ac power available at ØB, bus 1	None	Loads can be switched to bus 2.
				Fail short		Loss of bus	No ac power available at ØB, bus 1	None	Loads can be switched to bus 2.
AC bus ØC bus 1	V14-945101 dated 10/25/62		Distributes power	Fail open		Loss of bus	No ac power available at ØC, bus 1	None	Loads can be switched to bus 2.
				Fail short		Loss of bus	No ac power available at ØC, bus 1	None	Loads can be switched to bus 2.
AC bus ØA bus 2	V14-945101 dated 10/25/62		Distributes power	Fail open		Loss of bus	No ac power available at ØA, bus 2	None	Loads can be switched to bus 1.
				Fail short		Loss of bus	No ac power available at ØA, bus 2	None	Loads can be switched to bus 1.
AC bus ØB bus 2	V14-945101 dated 10/25/62		Distributes power	Fail open		Loss of bus	No ac power available at ØB, bus 2	None	Loads can be switched to bus 1.
				Fail short		Loss of bus	No ac power available at ØB, bus 2	None	Loads can be switched to bus 1.

[redacted]

[redacted]

Table 3.2 Electrical Power System Failure Effects Analysis (Continued)

Item	Drawing No.	Electrical Reference Designation	Function	Failure Type	Mission Phase	Failure Effect			Possible Crew Action
						Component Performance	Subsystems Performance	Apollo	
AC bus ØC bus 2	V14-945101 dated 10/25/62		Distributes power	Fail open		Loss of bus	No ac power available at ØC, bus 2	None	Loads can be switched to bus 1.
				Fail short		Loss of bus	No ac power available at ØC, bus 2	None	Loads can be switched to bus 1.
Circuit breaker	V14-945101 dated 10/25/62	CB83	AC bus to fuel cell 1 circuit breaker	Fail open		Loss of circuit breaker	No ac power available to fuel cell 1.	None	None
				Fail short		Loss of circuit breaker	No short circuit protection for fuel cell 1 motors	None	None
Circuit breaker	V14-945101 dated 10/25/62	CB84	AC bus to fuel cell 2 circuit breaker	Fail open		Loss of circuit breaker	No ac power available to fuel cell 2	None	None
				Fail short		Loss of circuit breaker	No short circuit protection for fuel cell 2 motors	None	None
Circuit breaker	V14-945101 dated 10/25/62	CB85	AC bus to fuel cell 3 circuit breaker	Fail open		Loss of circuit breaker	No ac power available to fuel cell 3	None	None
				Fail short		Loss of circuit breaker	No short circuit protection for fuel cell 3 motors	None	None
Inverter 1	V14-945101 dated 10/25/62		Supplies AC power	No power output	Flight	Loss of inv	No ac power available to bus A or B	None	Switch standby inverter on
Inverter 2	V14-945101 dated 10/25/62		Supplies AC power	No power output	Flight	Loss of inv	No ac power available to bus A or B	None	Switch standby inverter on

[redacted]

Table 3.2 Electrical Power System Failure Effects Analysis (Continued)

Item	Drawing No.	Electrical Reference Designation	Function	Failure Type	Mission Phase	Failure Effect			Possible Crew Action
						Component Performance	Subsystems Performance	Apollo	
Inverter 3	V14-945101 dated 10/25/62		Supplies AC power	No power output	Flight	Loss of inv	No ac power available to bus A or B	None	Switch standby inverter on
Circuit breaker	V14-945101 dated 10/25/62	CB47	Post landing battery C to post landing bus circuit breaker	Fails open		Loss of circuit breaker	No dc power to post landing bus from battery C	None	Battery A or B can be switched in.
				Fails short		Loss of circuit breaker	No short circuit protection for battery C	None	Battery A or B can be switched in if battery C is shorted out.
Post landing Battery C	V14-945101 dated 10/25/62		Supplies DC power to post landing bus	No power output		Loss of battery C	No dc power available to post landing bus	None	Battery A or B can be switched in.
Battery A	V14-945101 dated 10/25/62		Supplies dc power to battery bus A	No power output		Loss of battery A	No dc power available to battery bus A	None	Battery B or C can be switched in.
Battery B	V14-945101 dated 10/25/62		Supplies dc power to battery bus B	No power output		Loss of battery B	No dc power available to battery bus B	None	Battery A or C can be switched in.
Circuit breaker	V14-945101 dated 10/25/62	CB45	Battery A to battery bus A circuit breaker	Fails open		Circuit breaker inoperative	No dc power available to battery bus A	None	Battery B or C can be switched in.
				Fails short		Circuit breaker inoperative	No short circuit protection for battery A	None	Battery B or C can be switched in if battery A is shorted out.
Circuit breaker	V14-945101 dated 10/25/62	CB46	Battery B to bus B circuit breaker	Fails open		Circuit breaker inoperative	No dc power available to battery bus B	None	Battery A or C can be switched in.
				Fails short		Circuit breaker inoperative	No short circuit protection for battery B	None	Battery A or C can be switched in if battery B is shorted out.

[redacted]

Table 3.2 Electrical Power System Failure Effects Analysis (Continued)

Item	Drawing No.	Electrical Reference Designation	Function	Failure Type	Mission Phase	Failure Effect			Possible Crew Action
						Component Performance	Subsystems Performance	Apollo	
Battery bus A	V14-945101 dated 10/25/62		Distributes power	Fails open		Loss of bus	No dc power at battery bus A	None	Power can be switched to battery bus B or post landing bus.
				Fails short		Loss of bus	No dc power at battery bus A	None	Power can be switched to battery bus B or post landing bus.
Battery bus B	V14-945101 dated 10/25/62		Distributes power	Fails open		Loss of bus	No dc power at battery bus B	None	Power can be switched to battery bus A or post landing bus.
				Fails short		Loss of bus	No dc power at battery bus B	None	Power can be switched to battery bus A or post landing bus.
Circuit breaker	V14-945101 dated 10/25/62	CBB	DC main bus A to inverter 1 circuit breaker	Fails open		Circuit breaker inoperative	No dc power available to inverter 1	None	Inverter 2 or 3 can be switched in.
				Fails short		Circuit breaker inoperative	No short circuit protection for inverter 1 input from dc main bus A	None	Inverter 2 or 3 can be switched in if inverter 1 is shorted out.
Diode	V14-945101 dated 10/25/62	CR17	Provides path for current flow dc main bus A to battery charger; also isolates dc main bus A from dc main bus B	Fails open		Diode inoperative	No dc power available to battery charger from dc main bus A	None	DC main bus B can be switched in to provide input power to battery charger.
				Fails short		Diode inoperative	No isolation between dc main bus A and dc main bus B	None	Circuit breaker CB 5 can be opened.

Table 3.2 Electrical Power System Failure Effects Analysis (Continued)

Item	Drawing No.	Electrical Reference Designation	Function	Failure Type	Mission Phase	Failure Effect			Possible Crew Action
						Component Performance	Subsystems Performance	Apollo	
Diode	V14-945101 dated 10/25/62	CR18	Provides path for current flow from dc main bus B to battery charger; also isolates dc main bus B from dc main bus A	Fails open		Diode inoperative	No dc power available to battery charger from dc main bus B	None	DC main bus A can be switched in to provide input power to battery charger.
				Fails short		Diode inoperative	No isolation between dc main bus B and dc main bus A	None	Circuit breaker CB6 can be opened.
Circuit breaker	V14-945101 dated 10/25/62	CB5	DC main bus A to battery charger circuit breaker	Fails open		Circuit breaker inoperative	No dc power available to battery charger from dc main bus A	None	Power can be switched to dc main bus B
				Fails short		Circuit breaker inoperative	No short circuit protection to battery charger from dc main bus A	None	Power can be switched to dc main bus B if a short occurs.
Circuit breaker	V14-945101 dated 10/25/62	CB6	DC main bus B to battery charger circuit breaker	Fails open		Circuit breaker inoperative	No dc power available to battery charger from dc main bus B	None	Power can be switched to dc main bus A.
				Fails short		Circuit breaker inoperative	No short circuit protection to battery charger from dc main bus B	None	Power can be switched to dc main bus B if a short occurs.
Circuit breaker	V14-945101 dated 10/25/62	CB34	Battery bus B to dc main bus A circuit breaker	Fails open		Circuit breaker inoperative	No dc power available to dc main bus A from battery bus B	None	DC main bus B can be switched in.
				Fails short		Circuit breaker inoperative	No short circuit protection for battery bus B from dc main bus A	None	DC main bus B can be switched in if a short occurs.

[redacted]

Table 3. 2. Electrical Power System Failure Effects Analysis (Continued)

Item	Drawing No.	Electrical Reference Designation	Function	Failure Type	Mission Phase	Failure Effect			Possible Crew Action
						Component Performance	Subsystems Performance	Apollo	
Relay	V14-945101 dated 10/25/62	K16	Battery bus B to dc main bus A relay	Fails open		Relay inoperative	No dc power available to dc main bus A or dc main bus B from battery bus B	None	Battery bus A can be switched in.
				Fails short		Relay inoperative	No short circuit protection for battery bus B from dc main bus A	None	Battery bus A can be switched in if a short occurs.
Diode	V14-945101 dated 10/25/62	CR9	Provides path for current flow from battery bus B to dc main bus A; also isolates battery bus B from dc main bus A	Fails open		Diode inoperative	No dc power available to dc main bus A from battery bus B	None	Battery bus A can be switched in or dc main bus B can be switched in.
				Fails short		Diode inoperative	No isolation between battery bus B and dc main bus A	None	Circuit breaker CB34 can be opened.
Circuit breaker	V14-945101 dated 10/25/62	CB36	Battery bus B to dc main bus B circuit breaker	Fails open		Circuit breaker inoperative	No dc power available from battery bus B to dc main bus B	None	DC main bus A can be switched in.
				Fails short		Circuit breaker inoperative	No short circuit protection for battery bus B from dc main bus B	None	DC main bus A can be switched in if a short occurs.
Diode	V14-945101 dated 10/25/62	CR10	Provides path for current flow from battery bus B to dc main bus B; also isolates battery bus B from dc main bus B	Fails open		Diode inoperative	No dc power available to dc main bus B from battery bus B	None	Battery bus A can be switched in or dc main bus A can be switched in.

Table 3. 2. Electrical Power System Failure Effects Analysis (Continued)

Item	Drawing No.	Electrical Reference Designation	Function	Failure Type	Mission Phase	Failure Effect			Possible Crew Action
						Component Performance	Subsystems Performance	Apollo	
Circuit breaker	V14-945101 dated 10/25/62	[illegible]	Battery bus A t main bus B circuit breaker	Fails open		Circuit breaker inoperative	No dc power available from battery bus A to dc main bus B	None	DC main bus A can be switched in.
				Fails short		Circuit breaker inoperative	No short circuit protection for battery bus A from dc main bus B	None	DC main bus A can be switched in if a short occurs.
Circuit breaker	V14-945101 dated 10/25/62	CB37	Battery bus A to dc main bus A circuit breaker	Fails open		Circuit breaker inoperative	No dc power available to dc main bus A from battery bus A	None	DC main bus B can be switched in.
				Fails short		Circuit breaker inoperative	No short circuit protection for battery bus A from dc main bus A	None	DC main bus B can be switched in if a short occurs.
Circuit breaker	V14-945101 dated 10/25/62	CB37	Battery bus A to pyro bus A circuit breaker	Fails open		Circuit breaker inoperative	No dc power available to pyro bus A from battery bus A	None	Battery bus B can be switched in.
				Fails short		Circuit breaker inoperative	No short circuit protection for battery bus A from pyro bus A	None	Battery bus B and pyro bus B can be switched in if a short occurs.
Circuit breaker	V14-945101 dated 10/25/62	CB43	Battery bus A to post landing bus circuit breaker	Fails open		Circuit breaker inoperative	No dc power available to post landing bus from battery bus A	None	Battery bus B can be switched in.
				Fails short		Circuit breaker inoperative	No short circuit protection for battery bus A from pyro bus A	None	Battery bus B can be switched in if a short occurs.

Table 3.2 Electrical Power System Failure Effects Analysis (Continued)

Item	Drawing No.	Electrical Reference Designation	Function	Failure Type	Mission Phase	Failure Effect			Possible Crew Action
						Component Performance	Subsystems Performance	Apollo	
Circuit breaker	V14-945101 dated 10/25/62	CB 39	Battery bus A to battery relay bus circuit breaker	Fails open		Circuit breaker inoperative	No dc power available to battery relay bus from battery bus A	None	Battery bus B can be switched in.
				Fails short		Circuit breaker inoperative	No short circuit protection for battery bus A from battery relay bus	None	Battery bus B can be switched in if a short occurs.
Diode	V14-945101 dated 10/25/62	CR15	Provides path for current flow from battery bus A to battery relay bus; also isolates battery bus A from battery relay bus	Fails open		Diode inoperative	No dc power available from battery bus A to battery relay bus	None	Battery bus B can be switched in.
				Fails short		Diode inoperative	No isolation between bus A and battery relay bus	None	Battery bus B can be switched in.
Circuit breaker	V14-945101 dated 10/25/62	CB38	Battery bus B to pyro bus B circuit breaker	Fails open		Circuit breaker inoperative	No dc power available from battery bus B to pyro bus B	None	Battery bus A and pyro bus A can be switched in if a short occurs.
				Fails short		Circuit breaker inoperative	No short circuit protection for battery bus B from pyro bus B	None	Battery bus A and pyro bus A can be switched in if a short occurs.
Circuit breaker	V14-945101 dated 10/25/62	CB44	Battery bus B to post landing bus circuit breaker	Fails open		Circuit breaker inoperative	No dc power available in post landing bus from battery bus B	None	Battery bus A can be switched in.
				Fails short		Circuit breaker inoperative	No short circuit protection for battery bus B from post landing bus	None	Battery bus A can be switched in if a short occurs.

Table 3.2 Electrical Power System Failure Effects Analysis (Continued)

Item	Drawing No.	Electrical Reference Designation	Function	Failure Type	Mission Phase	Failure Effect			Possible Crew Action
						Component Performance	Subsystems Performance	Apollo	
Circuit breaker	V14-945101 dated 10/25/62	CB40	Battery bus B to battery relay bus circuit breaker	Fails open		Circuit breaker inoperative	No dc power available to battery relay bus from battery bus B	None	Battery bus A can be switched in.
				Fails short		Circuit breaker inoperative	No short circuit protection for battery bus B from battery relay bus	None	Battery bus A can be switched in if a short occurs.
Diode	V14-945101 dated 10/25/62	CR16	Provides path for current flow from battery bus B to battery relay bus; also isolates battery bus B from battery relay bus	Fails open		Diode inoperative	No dc power available from battery bus B to battery relay bus	None	Battery bus A can be switched in.
				Fails short		Diode inoperative	No isolation between battery bus B and battery relay bus	None	Battery bus A can be switched in.
Diode	V14-945101 dated 10/25/62	CR7	Provides path for current flow from battery bus A to dc main bus A; also isolates battery bus A from DC main bus A	Fails open		Diode inoperative	No dc power available to dc main bus A from battery bus A	None	Battery bus B can be switched in.
				Fails short		Diode inoperative	No isolation between battery bus A and dc main bus A	None	Battery bus B can be switched in.
Diode	V14-945101 dated 10/25/62	CR8	Provides path for current flow from battery bus A to dc main bus B; also isolates battery bus A from dc main bus B	Fails open		Diode inoperative	No dc power available to dc main bus B from battery bus A	None	Battery bus B can be switched in.
				Fails short		Diode inoperative	No isolation between battery bus A and dc main bus B	None	Battery bus B can be switched in.

[redacted]

[redacted]

Table 3.2 Electrical Power System Failure Effects Analysis (Continued)

Item	Drawing No.	Electrical Reference Designation	Function	Failure Type	Mission Phase	Failure Effect			Possible Crew Action
						Component Performance	Subsystems Performance	Apollo	
Circuit breaker	V14-945101 dated 10/25/62	CB3	DC main bus A to post landing bus, circuit breaker	Fails open		Relay inoperative	No dc power available to post landing bus from dc main bus A	None	DC main bus B can be switched in.
				Fails short		Relay inoperative	No short circuit protection for dc main bus A from post landing bus	None	DC main bus B can be switched in if a short occurs.
Diode	V14-945101 dated 10/25/62	CR13	Provides path for current flow from dc main bus A to post landing bus; also isolates post landing bus from dc main bus A	Fails open		Diode inoperative	No dc power available to post landing bus from dc main bus A	None	DC main bus B can be switched in.
				Fails short		Diode inoperative	No isolation between post landing bus and dc main bus A	None	DC main bus B can be switched in.
DC main bus B	V14-945101 dated 10/25/62		Distributes power	Fails open		Loss of bus	No dc power available at dc main bus B	None	DC main bus A can be switched in.
				Fails short		Loss of bus	No dc power available at dc main bus B	None	DC main bus A can be switched in if a short occurs.
Circuit breaker	V14-945101 dated 10/25/62	CB15	DC main bus A to inverter 3 circuit breaker	Fails open		Loss of circuit breaker	No dc power available to inverter 3	None	Inverter 1 or 2 can be switched in.
				Fails short		Loss of circuit breaker	No short circuit protection for inverter 3 from dc main bus A	None	Inverter 1 or 2 can be switched in if a short occurs.
Circuit breaker	V14-945101 dated 10/25/62	CB14	DC main bus B to inverter 2 circuit breaker	Fails open		Loss of circuit breaker	No dc power available to inverter 2	None	Inverter 1 or 3 can be switched in.

[redacted]

Table 3.2 Electrical Power System Failure Effects Analysis (Continued)

Item	Drawing No.	Electrical Reference Designation	Function	Failure Type	Mission Phase	Failure Effect			Possible Crew Action
						Component Performance	Subsystems Performance	Apollo	
Circuit breaker				Fails short		Loss of circuit breaker	No short circuit protection for inverter 2 from dc main bus B	None	Inverter 1 or 3 can be switched in if a short occurs.
Switch	V14-945101 dated 10/25/62	S19	ON-OFF switch for inverter 3 dc power input	Fails open		Loss of switch	No dc power available to inverter 3	None	Inverter 1 or 2 can be switched in.
				Fails closed position 1		Loss of switch	No dc power available to inverter 3 from dc main bus B	None	DC main bus A can be switched in, or inverter 1 or 2 can be switched in.
				Fails closed position 2		Loss of switch	No dc power available to inverter 3 from dc main bus A	None	DC main bus B can be switched in, or inverter 1 or 2 can be switched in.
Circuit breaker	V14-945101 dated 10/25/62	CB4	DC main bus B to post landing bus circuit breaker	Fails open		Circuit breaker inoperative	No power available to post landing bus from dc main bus B	None	DC main bus A can be switched in.
				Fails short		Circuit breaker inoperative	No short circuit protection for dc main bus B from post landing bus	None	DC main bus A can be switched in if a short occurs.
Diode	V14-945101 dated 10/25/62	CR14	Provides path for current flow from dc main bus B to post landing bus; also isolates post landing bus from dc line bus B	Fails open		Diode inoperative	No power available from dc main bus B to post landing bus	None	DC main bus A can be switched in.
				Fails short		Diode inoperative	No isolation between post landing bus and dc main bus B	None	DC main bus A can be switched in.

[redacted]

Table 3.2 Electrical Power System Failure Effects Analysis (Continued)

Item	Drawing No.	Electrical Reference Designation	Function	Failure Type	Mission Phase	Failure Effect			Possible Crew Action
						Component Performance	Subsystems Performance	Apollo	
Pyro bus A	V14-945101 dated 10/25/62		Distributes power	Fails open		Loss of bus	No dc power available at pyro bus A	None	Pyro bus B can be switched in.
				Fails short		Loss of bus	No dc power available at pyro bus A	None	Pyro bus B can be switched in if a short occurs.
Pyro bus B	V14-945101 dated 10/25/62		Distributes power	Fails open		Loss of bus	No dc power available at pyro bus B	None	Pyro bus A can be switched in.
				Fails short		Loss of bus	No dc power available at pyro bus B	None	Pyro bus A can be switched in if a short occurs.
DC main bus A	V14-945101 dated 10/25/62		Distributes power	Fails open		Loss of bus	No dc power available at dc main bus A	None	DC main bus B can be switched in.
				Fails short		Loss of bus	No dc power available at dc main bus A	None	DC main bus B can be switched in if a short occurs.
Circuit breaker	V14-945101 dated 10/25/62	CB17	DC main bus A to battery relay bus circuit breaker	Fails open		Loss of circuit breaker	No dc power available to battery relay bus from dc main bus A	None	DC main bus B can be switched in.
				Fails short		Loss of circuit breaker	No short circuit protection for dc main bus A from battery relay bus	None	DC main bus B can be switched if a short occurs.
Circuit breaker	V14-945101 dated 10/25/62	CB18	DC main bus B to battery relay bus circuit breaker	Fails open		Loss of circuit breaker	No dc power available to battery relay bus from dc main bus B	None	DC main bus A can be switched in.

[redacted]

Table 3.2 Electrical Power System Failure Effects Analysis (Continued)

Item	Drawing No.	Electrical Reference Designation	Function	Failure Type	Mission Phase	Failure Effect			Possible Crew Action
						Component Performance	Subsystems Performance	Apollo	
Circuit breaker (Cont)				Fails short		Loss of circuit breaker	No short circuit protection for dc main bus B battery relay bus	None	DC main bus A can be switched in if a short occurs.
Circuit breaker	V14-945101 dated 10/25/62	CB23	DC main bus A to navigation and guidance circuit breaker	Fails open		Loss of circuit breaker	No dc power available to navigation and guidance from dc main bus A	None	DC main bus B can be switched in.
				Fails short		Loss of circuit breaker	No short circuit protection for dc main bus A from navigation and guidance	None	DC main bus B can be switched in if a short occurs.
Circuit breaker	V14-945101 dated 10/25/62	CB24	DC main bus B to navigation and guidance circuit breaker	Fails open		Loss of circuit	No dc power available to navigation and guidance from dc main bus B	None	DC main bus A can be switched in.
				Fails short		Loss of circuit	No short circuit protection for dc main bus B from navigation and guidance	None	DC main bus A can be switched in if a short occurs.
Circuit breaker	V14-945101 dated 10/25/62	CB25	DC main bus A to telecommunications circuit breaker	Fails open		Loss of circuit breaker	No dc power available to telecommunication from dc main bus A	None	DC main bus B can be switched in.
				Fails short		Loss of circuit breaker	No short circuit protection for dc main bus A from telecommunication	None	DC main bus B can be switched in if a short occurs.

[redacted]

Table 3.2 Electrical Power System Failure Effects Analysis (Continued)

Item	Drawing No.	Electrical Reference Designation	Function	Failure Type	Mission Phase	Failure Effect			Possible Crew Action
						Component Performance	Subsystems Performance	Apollo	
Circuit breaker	V14-945101 dated 10/25/62	CB26	DC main bus B to telecommunications circuit breaker	Fails open		Loss of circuit breaker	No dc power available to telecommunication from dc main bus B	None	DC main bus A can be switched in if a short occurs.
				Fails short		Loss of circuit breaker	No short circuit protection for dc main bus B from telecommunication	None	DC main bus A can be switched in if a short occurs.
Circuit breaker	V14-945101 dated 10/25/62	CB27	DC main bus A to stabilization and control circuit breaker	Fails open		Loss of circuit breaker	No dc power available to stabilization and control from dc main bus A	None	DC main bus B can be switched in.
				Fails short		Loss of circuit breaker	No short circuit protection for dc main bus A from stabilization and control	None	DC main bus B can be switched in if a short occurs.
Circuit breaker	V14-945101 dated 10/25/62	CB28	DC main bus B to stabilization and control circuit breaker	Fails open		Loss of circuit breaker	No dc power available to stabilization and control from dc main bus B	None	DC main bus A can be switched in.
				Fails short		Loss of circuit breaker	No short circuit protection for dc main bus B from stabilization and control	None	DC main bus A can be switched in if a short occurs.
Circuit breaker	V14-945101 dated 10/25/62	CB29	DC main bus A to reaction control circuit breaker	Fails open		Loss of circuit breaker	No dc power available to reaction control from dc main bus A	None	DC main bus B can be switched in.

[redacted]

Table 3.2 Electrical Power System Failure Effects Analysis (Continued)

Item	Drawing No.	Electrical Reference Designation	Function	Failure Type	Mission Phase	Failure Effect			Possible Crew Action
						Component Performance	Subsystems Performance	Apollo	
Circuit breaker (Cont)				Fails short		Loss of circuit breaker	No short circuit protection for dc main bus A from reaction control	None	DC main bus B can be switched in if a short occurs.
Circuit breaker	V14-945101 dated 10/25/62	CB30	DC main bus B to reaction control circuit breaker	Fails open		Loss of circuit breaker	No dc power available to reaction control from dc main bus B	None	DC main bus A can be switched in.
				Fails short		Loss of circuit breaker	No short circuit protection for dc main bus B from reaction control	None	DC main bus A can be switched in if a short occurs.
Circuit breaker	V14-945101 dated 10/25/62	CB1	DC main bus A to main relay bus circuit breaker	Fails open		Loss of circuit breaker	No dc power available to main relay bus from dc main bus A	None	DC main bus B can be switched in.
				Fails short		Loss of circuit breaker	No short circuit protection for dc main bus A from relay bus	None	DC main bus B can be switched in if a short occurs.
Circuit breaker	V14-945101 dated 10/25/62	CB2	DC main bus B to main relay bus circuit breaker	Fails open		Loss of circuit breaker	No dc power available to main relay bus from dc main bus B	None	DC main bus A can be switched in.
				Fails short		Loss of circuit breaker	No short circuit protection for dc main bus B from main relay bus	None	DC main bus B can be switched in if a short occurs.

[redacted]

Table 3.2 Electrical Power System Failure Effects Analysis (Continued)

Item	Drawing No.	Electrical Reference Designation	Function	Failure Type	Mission Phase	Failure Effect			Possible Crew Action
						Component Performance	Subsystems Performance	Apollo	
Diode	V14-945101 dated 10/25/62	CR11	Provides path for current flow from dc main bus A to main relay bus	Fails open		Loss of diode	No dc power available to main relay bus from dc main bus A	None	DC main bus B can be switched in.
				Fails short		Loss of diode	No isolation between dc main bus A and main relay bus	None	DC main bus B can be switched in.
Diode	V14-945101 dated 10/25/62	CR12	Provides path for current flow from dc main bus B to main relay bus	Fails open		Loss of diode	No dc power available to main relay bus from dc main bus B	None	DC main bus A can be switched in.
				Fails short		Loss of diode	No isolation between dc main bus B and main relay bus	None	DC main bus A can be switched in.
Circuit breaker	V14-945101 dated 10/25/62	CB61	Main relay bus to inverter 1 on-off switch circuit breaker	Fails open		Loss of circuit breaker	No dc power available to inverter 1	None	Inverter 2 or 3 can be switched in.
				Fails short		Loss of circuit breaker	No short circuit protection for main relay bus from inverter 1	None	Inverter 2 or 3 can be switched in if a short occurs.
Circuit breaker	V14-945101 dated 10/25/62	CB62	Main relay bus to inverter 2 on-off switch circuit breaker	Fails open		Loss of circuit breaker	No dc power available to inverter 2	None	Inverter 1 or 3 can be switched in.
				Fails short		Loss of circuit breaker	No short circuit protection for main relay bus from inverter 2	None	Inverter 1 or 3 can be switched in if a short occurs.
Circuit breaker	V14-945101 dated 10/25/62	CB62	Main relay bus to inverter 3 on-off switch circuit breaker	Fails open		Loss of circuit breaker	No dc power available to inverter 3	None	Inverter 1 or 2 can be switched in.

Table 3.2 Electrical Power System Failure Effects Analysis (Continued)

Item	Drawing No.	Electrical Reference Designation	Function	Failure Type	Mission Phase	Failure Effect			Possible Crew Action
						Component Performance	Subsystems Performance	Apollo	
Circuit breaker (Cont)				Fails short		Loss of circuit breaker	No short circuit protection for main relay bus from inverter 3	None	Inverter 1 or 2 can be switched in if a short occurs.
Switch	V14-945101 dated 10/25/62	S1	Inverter 1 on-off switch	Fails closed on position		Loss of switch	Inverter 1 cannot be turned off with switch S1.	None	Circuit breaker CB61 can be opened in event inverter 1 has to be shut off.
				Fails closed off position		Loss of switch	Inverter 1 cannot be turned on.	None	Inverter 2 or 3 can be switched in.
Switch	V14-945101 dated 10/25/62	S2	Inverter 2 on-off switch	Fails closed on position.		Loss of switch	Inverter 2 cannot be turned off with switch S2.	None	Circuit breaker CB62 can be opened in event inverter 2 has to be shut off.
				Fails closed off position		Loss of switch	Inverter 2 cannot be turned on.	None	Inverter 1 or 3 can be switched in.
Switch	V14-945101 dated 10/25/62	S3	Inverter 3 on-off switch	Fails closed on position		Loss of switch	Inverter 3 cannot be turned off with switch S3.	None	Circuit breaker CB63 can be opened in event inverter 3 has to be shut off.
				Fails closed off position		Loss of switch	Inverter 3 cannot be turned on.	None	Inverter 1 or 2 can be switched in.
Switch	V14-945101 dated 10/25/62	S4	Inverter 1 to bus 2 on-off switch	Fails closed on position		Loss of switch	With inverter 1 on ac, power cannot be removed from bus 2 by switch S4.	None	In the event of a short circuit, inverter 2 or 3 can be switched in.
				Fails closed off position		Loss of switch	No ac power available to bus 2 while inverter 1 is on	None	Inverter 2 or 3 can be switched in.

Table 3.2 Electrical Power System Failure Effects Analysis (Continued)

Item	Drawing No.	Electrical Reference Designation	Function	Failure Type	Mission Phase	Failure Effect			Possible Crew Action
						Component Performance	Subsystems Performance	Apollo	
Switch	V14-945101 dated 10/25/62	S5	Inverter 1 to bus 1 on-off switch	Fails closed on position		Loss of switch	With inverter 1 on AC, power cannot be removed from bus 1 by switch S5.	None	In the event of a short circuit, inverter 2 or 3 can be switched in.
				Fails closed off position		Loss of switch	No ac power available to bus 1 while inverter 1 is on.	None	Inverter 2 or 3 can be switched in.
Switch	V14-945101 dated 10/25/62	S6	Inverter 2 to bus 2 on-off switch	Fails closed on position		Loss of switch	With inverter 2 on ac, power cannot be removed from bus 2 by switch S6.	None	In the event of a short circuit, inverter 1 or 3 can be switched in.
				Fails closed off position		Loss of switch	No ac power available to bus 2 while inverter 2 is on.	None	Inverter 1 or 3 can be switched in.
Switch	V14-945101 dated 10/25/62	S7	Inverter 2 to bus 1 on-off switch	Fails closed on position		Loss of switch	With inverter 2 on ac, power cannot be removed from bus 1 by switch S7.	None	In the event of a short circuit, inverter 1 or 3 can be switched in.
Switch	V14-945101 dated 10/25/62	S8	Inverter 3 to bus 2 on-off switch	Fails closed off position		Loss of switch	No ac power available to bus 1 while inverter 2 is on.	None	Inverter 1 or 3 can be switched in.
				Fails closed on position		Loss of switch	With inverter 3 on, ac power cannot be removed from bus 2 by switch S8.	None	In the event of a short circuit, inverter 1 or 2 can be switched in.

Table 3.2 Electrical Power System Failure Effects Analysis (Continued)

Item	Drawing No.	Electrical Reference Designation	Function	Failure Type	Mission Phase	Failure Effect			Possible Crew Action
						Component Performance	Subsystems Performance	Apollo	
Switch (Cont)				Fails closed off position		Loss of switch	No ac power available to bus 2 while inverter 3 is on.	None	Inverter 1 or 2 can be switched in.
Switch	V14-945101 dated 10/25/62	S9	Inverter 3 to bus 1 on-off switch	Fails closed on position		Loss of switch	With inverter 3 on ac, power cannot be removed from bus 1 by switch S9.	None	In the event of a short circuit, inverter 1 or 2 can be switched in.
				Fails closed off position		Loss of switch	No ac power available to bus 1 while inverter 3 is on.	None	Inverter 1 or 2 can be switched in.
Switch	V14-945101 dated 10/25/62	S11	Fuel cell 1 to main bus A on-off switch	Fails closed on position		Loss of switch	Fuel cell 1 dc power cannot be removed from dc main bus A by switch S11.	None	None
				Fails closed off position		Loss of switch	No dc power available to dc main bus A from fuel cell 1	None	Switch to bus B
Switch	V14-945101 dated 10/25/62	S10	Fuel cell 1 to main bus B on-off switch	Fails closed on position		Loss of switch	Fuel cell 1 dc power cannot be removed from dc main bus B by switch S10.	None	None
				Fails closed off position		Loss of switch	No dc power available to dc main bus B from fuel cell 1.	None	Switch to bus A
Switch	V14-945101 dated 10/25/62	S13	Fuel cell 2 to main bus A on-off switch	Fails closed on position		Loss of switch	Fuel cell 2 dc power cannot be removed from dc main bus A	None	None

[redacted]

[redacted]

Table 3.2 Electrical Power System Failure Effects Analysis (Continued)

Item	Drawing No.	Electrical Reference Designation	Function	Failure Type	Mission Phase	Failure Effect			Possible Crew Action
						Component Performance	Subsystems Performance	Apollo	
Switch (Cont)				Fails closed off position		Loss of switch	No dc power available to dc main bus A from fuel cell	None	Switch to bus B
Switch	V14-945101 dated 10/25/62	S12	Fuel cell 2 to main bus B on-off switch	Fails closed on position		Loss of switch	Fuel cell 2 dc power cannot be removed from dc main bus B	None	None
				Fails closed off position		Loss of switch	No dc power available to dc main bus B from fuel cell 2	None	Switch to bus A
Switch	V14-945101 dated 10/25/62	S15	Fuel cell 3 to main bus A on-off switch	Fails closed on position		Loss of switch	Fuel cell 3 dc power cannot be removed from dc main bus A.	None	None
				Fails closed off position		Loss of switch	No dc power available to dc main bus A from fuel cell 3.	None	Switch to bus B
Switch	V14-945101 dated 10/25/62	S14	Fuel cell 3 to main bus B on-off switch	Fails closed on position		Loss of switch	Fuel cell 3 dc power cannot be removed from dc main bus B.	None	None
				Fails closed off position		Loss of switch	No dc power available to dc main bus B from fuel cell 3.	None	Switch to bus A
Circuit breaker	V14-945101 dated 10/25/26	CB55	Fuel cell 1 to main bus A circuit breaker	Fails open		Loss of circuit breaker	No dc power available to main bus A from fuel cell 1.	None	Main bus B can be switched in.
				Fails closed		Loss of circuit breaker	No short circuit protection for fuel cell 1 from main bus A.	None	Main bus B can be switched in if a short occurs.

[redacted]

[redacted]

Table 3.2 Electrical Power System Failure Effects Analysis (Continued)

Item	Drawing No.	Electrical Reference Designation	Function	Failure Type	Mission Phase	Failure Effect			Possible Crew Action
						Component Performance	Subsystems Performance	Apollo	
Circuit breaker		CB56	Fuel cell 1 to main bus B circuit breaker	Fails open		Loss of circuit breaker	No dc power available to main bus B from fuel cell 1.	None	Main bus A can be switched in.
				Fails closed		Loss of circuit breaker	No short circuit protection for fuel cell 1 from main bus B	None	Main bus A can be switched in if a short occurs.
Circuit breaker	V14-945101 dated 10/25/62	CB57	Fuel cell 2 to main bus A circuit breaker	Fails open		Loss of circuit breaker	No dc power available to main bus A from fuel cell 2.	None	Main bus B can be switched in.
				Fails closed		Loss of circuit breaker	No short circuit protection for fuel cell 2	None	Main bus B can be switched in if a short occurs.

[redacted]

Table 3.3 Fuel Cell Module Failure—Mode Analysis

Component	Failure Mode	Cause	Effect On		Remarks
			Mission Success	Crew Safety	
Torsion rod assembly	Leak KOH	Torsion, shear, tension, bending			Quality control very important.
Fuel cell element	Power output reduced, loss of KOH or reactants	Oxidation, brittle, failure	One - Module failure - none Two - Module failure - loss Three - Module failure - loss	One - Module failure - none Two - Module failure - none Three - Module failure - loss	Use of high factor of safety, and selection of approved materials will reduce failure possibility.
Module heaters	Short	Vibration, rubbing	No effect	No effect	Failure will be indicated prior to launch.
Heater harness	Short	Vibration	No effect	No effect	Failure will be indicated prior to launch.
Segmented manifold (module)	Loss of O_2 and H_2	Shear, fatigue	One - Module failure - none Two - Module failure - loss Three - Module failure - loss	One - Module failure - none Two - Module failure - none Three - Module failure - loss	Relocate squib on reactant manifold to prevent loss of all reactants.
Pre-heaters (reactants)	Loss of reactants or glycol	Fatigue	One - Module failure - none Two - Module failure - loss Three - Module failure - loss	One - Module failure - none Two - Module failure - none Three - Module failure - loss	Elimination of as many weld or braze areas as possible will increase reliability.
Accumulator glycol	Leak N_2 to glycol, loss	Fatigue, stress, rupture	One - Module failure - none Two - Module failure - loss Three - Module failure - loss	One - Module failure - none Two - Module failure - none Three - Module failure - loss	Redundant bellows will preclude failure.
Pump and condenser assembly manifolds	Leak H_2 and H_2O glycol leak	Shear	One - Module failure - none Two - Module failure - loss Three - Module failure - loss	One - Module failure- none Two - Module failure - none Three - Module failure - loss	Connections which require braze or weld should be kept to minimum.

[redacted]

Table 3.3 Fuel Cell Module Failure — Mode Analysis (Cont'd)

Component	Failure Mode	Cause	Effect On		Remarks
			Mission Success	Crew Safety	
Assembly of fuel cell module	Leak reactants, leak N_2 to atmosphere	Vibration, fatigue			
H_2 and H_2O pump differential transducer	Electrical connections or mechanical connections fail loss or H_2	Fatigue, stress, rupture			
Glycol differential pressure transducer	Leak glycol, electrical or mechanical connection failure				
H_2 and O_2 porous plug differential pressure transducer	Low reading, high reading, no pressure indication, leak reactant	Fatigue	One - Module failure - none Two - Module failure - loss Three - Module failure - loss	One - Module failure - none Two - Module failure - none Three - Module failure - loss	Failure to indicate pressure does not constitute failure.
O_2, N_2 and H_2 downstream absolute pressure transducer	Low reading, high reading, no pressure indication, leak reactant	Fatigue			
O_2 and H_2 upstream absolute pressure transducer	Low reading, high reading, no pressure indication, leak reactants	Fatigue			Low or no pressure indication will not cause module shutdown.
O_2 and H_2 porous plug	No flow, no indication, leak reactants	Contaminant, fatigue			No reading does not constitute failure - pilot can check pressure through redundancy.

[redacted]

Table 3.3 Fuel Cell Module Failure—Mode Analysis (Cont'd)

Component	Failure Mode	Cause	Effect on		Remarks
			Mission Success	Crew Safety	
Primary and secondary pump magnetic speed pick-up	Leak H_2O, H_2, or glycol	Fatigue, vibration			Hermetic seals of H_2 pump, placed on separator side to minimize H_2 leakage.
Surface temperature sensor instrumentation	False or no reading	Fatigue	No effect	No effect	Redundant; pilot can check.
Immersion temperature sensor instrumentation	Leak H_2 or O_2, false or no reading	Fatigue shear			Redundant; pilot can check; low or no indication does not cause failure.
Reference pressure primary regulator assembly	Leak H_2 into N_2	Vibration, fatigue	One - Module failure - none Two - Module failure - loss Three - Module failure - loss	One - Module failure - none Two - Module failure - none Three - Module failure - loss	Design to reduce plumbing stresses as much as possible.
Porous plug housing	False or no reading, leak H_2 or O_2	Shear, fatigue	One - Module failure - none Two - Module failure - loss Three - Module failure - loss	One - Module failure - none Two - Module failure - none Three - Module failure - loss	Any failure resulting in false reading does not constitute module failure; reactant leaks will cause module shutdown.
Bi-metal regenerator bypass valve	No control leakage	Seizing, brinelling			Careful inspection of surface finish, low stress

Table 3.3 Fuel Cell Module Failure—Mode Analysis (Cont'd)

Component	Failure Mode	Cause	Effect On		Remarks
			Mission Success	Crew Safety	
Secondary Regulator Valve by-pass	Loss of temp. control; leak	Out of Calibration, vibration	One - Module failure - none Two - Module failure - none Three - Module failure - loss	One - Module failure - none Two - Module failure - none Three - Module failure - loss	
Water discharge valve	Stop water flow; Leak H_2; H_2 in Water tank	Fatigue per-set of seals	One - Module failure - Two - Module failure - Three - Module failure -	One - Module failure - none Two - Module failure - none Three - Module failure - loss	Use of upstream check valve will preclude failure.
H_2 & O_2 purge valves	Leak, will not open	Vibration, creep	No effect	No effect	Addition of normally open solenoid valve downstream will preclude module failure should purge valve fail to close.
N_2 tank	Loss of N_2	Stress, rupture, fatigue	One - Module failure - none Two - Module failure - loss Three - Module failure - loss	One - Module failure - none Two - Module failure - none Three - Module failure - loss	Low stress conditions and good quality control in welding methods is necessary.
N_2 regulator	High pressure; none exists; low pressure; none exists	Fatigue, bending, or failure of pressure indicator	One - Module failure - none Two - Module failure - loss Three - Module failure - loss	One - Module failure - none Two - Module failure - none Three - Module failure - loss	Incorporation of rupture disk upstream will prevent module jacket rupture.
O_2 & H_2 regulators	High pressure; none exists; low pressure; none exists; leakage	Fatigue, bending, or failure of pressure indicator	One - Module failure - none Two - Module failure - loss Three - Module failure - loss	One - Module failure - none Two - Module failure - none Three - Module failure - loss	Redundancy of bellows, proper material selection, and reduction of stress should preclude leakage.
Condenser	Leak	Fatigue	One - Module failure - none	One - Module failure - none	Material selection important. Welded or brazed joints should be low-stressed.

Table 3.3 Fuel Cell Module Failure—Mode Analysis (Cont'd)

Component	Failure Mode	Cause	Effect On		Remarks
			Mission Success	Crew Safety	
Primary regenerator	Leak; loss of control	Fatigue, shear	One - Module failure - none	One - Module failure - none	Material selection important. Welded or brazed joints should be low-stressed.
Secondary loop regenerator	Leak; temperature tolerance not maintained; no temperature control	Fatigue, shear	One - Module failure - none	One - Module failure - none	Material selection important. Welded or brazed joints should be low-stressed.
Pump and separator assembly	Leak H_2; stop pumping; H_2 & H_2O	Shear, loss of lube per-set of seals	One - Module failure - none Two - Module failure - loss Three - Module failure - loss	One - Module failure - none Two - Module failure - none Three - Module failure - loss	Conservative stress, good quality control and material selection necessary; leakage prevented by using hermetic seals.
Fluid pump motor 105 cycles	Leak; stop pumping	Shear, loss of lube per-set of seals	One - Module failure - none Two - Module failure - loss Three - Module failure - loss	One - Module failure - none Two - Module failure - none Three - Module failure - loss	Conservative stress, good quality control and material selection necessary; leaking prevented by using hermetic seals.
Module jacket	Loss of N_2	Stress rupture	One - Module failure - none Two - Module failure - loss Three - Module failure - loss	One - Module failure - none Two - Module failure - none Three - Module failure - loss	Addition of blow-plug or press-valve vented overboard will increase mission success and crew survival.
Circulating fluid pump assembly	Pump stops; leak	Shear, loss of lube, seals fail	One - Module failure - none Two - Module failure - loss Three - Module failure - loss	One - Module failure - none Two - Module failure - none Three - Module failure - loss	Failure will require shutdown of module.
Secondary fluid pump motor, 400 cycles	Pump stops; leak	Shear, loss of lube, seals fail	One - Module failure - none Two - Module failure - loss Three - Module failure - loss	One- Module failure - none Two - Module failure - none Three - Module failure - fail	Failure will require shutdown of module.

[redacted]

In addition, a failure mode analysis, considering each component of an individual fuel cell module, is shown in tabulated form (Table 3.3). The failure mode analysis considers the component, failure modes of the component, probable cause of each failure, the effect of the failure on mission success and on crew safety. A remarks column shows possible corrective action to preclude a failure.

3.4 Qualification Test

3.4.1 Electrical Power System

The qualification program for the EPS has been designed to qualify the system for Apollo spacecraft use while determining optimum qualification test costs. The tests will verify design integrity and will provide S&ID with data to be integrated with other ground and flight test data for reliability assessment purposes. The components of the EPS are to be supplied to S&ID by different suppliers and subcontractors. Each supplier or subcontractor will perform the test, report and analyze failures, propose corrective action, and furnish S&ID with data to be used for reliability assessment. S&ID will monitor the tests and assist in failure analysis when necessary. S&ID will approve corrective actions, approve qualification results, and assess achieved reliability based on data supplied by the subcontractor or supplier. The qualification sample sizes were selected as the minimum required to accomplish engineering objectives. The number and type of tests will vary for the different components of the EPS depending on its use, operational characteristics, and location within the spacecraft.

3.4.1.1 Reliability Assessment Model

Figure 3.2 depicts the reliability assessment model for the EPS. The model will aid in establishing test continuity and in programming the collection of data for the assessment of reliability by illustrating the functional and reliability interrelationships of the system components.

3.4.1.2 Criticality and Hardware Requirements

Table 3.4 designates the criticality class, as defined in subsection 2.4 of SID 62-109-3 for the components of the EPS less the fuel cells. The table enumerates the hardware requirements for a minimum qualification program as established in subsection 2.5 of SID 62-109-3. The distribution of the hardware through the subsystem qualification

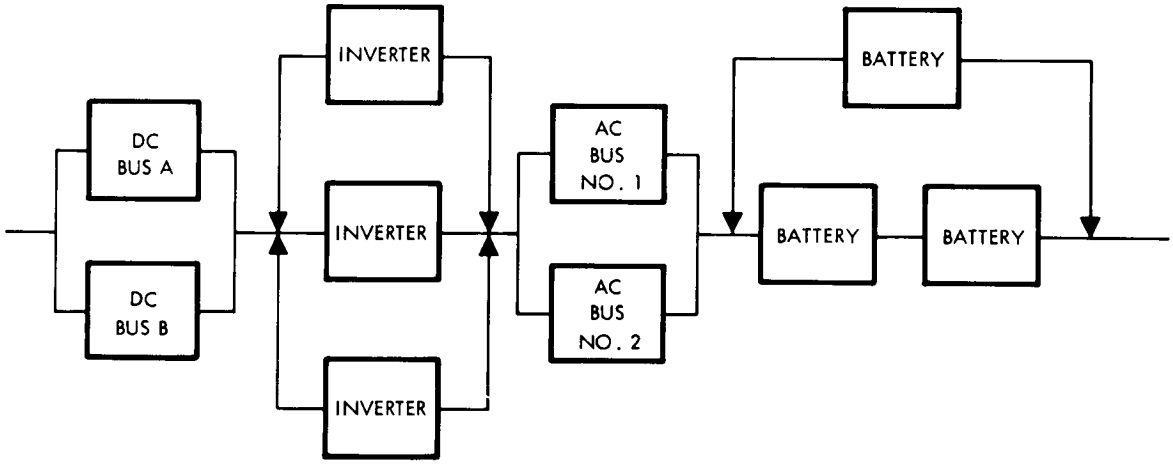

Figure 3.2 EPS Reliability Assessment Model (Less Fuel Cell)

Table 3.4 EPS Parameters for Qualification Testing

	S/C Zone	Criticality	Required Hardware
Static inverter	2	3	4
Battery	2	3	10
Battery charger	2	3	4
Circuit breakers	1 and 2	3	6 of each type 3 types
Relay general purpose	1 and 2	3	36
Connector, umbilical, electrical C/M to S/M	1 external	3	4
Connector, umbilical C/M to LES	1 external	3	4
Connector, general purpose	2	3	27 total 3 typed and 3 classes
Electrical feed through bulkhead	2	3	4 of each type 2 types
Firing unit, EBW	2	3	2
Initiator, EBS	2	3	440
Initiator, hot wire	2	3	460
Power transfer switch	2	3	6 of each type 3 types
Motor operated power switch and overcurrent relay	3	3	6
Floodlight fixtures	2	3	9 total 3 types
Ribbon cables C/M to S/M	1 external	3	6
Cable, electrical flat, 600 volts	1 external	3	6
Sequencer	2	3	
Relay - A			2
Relay - B			2
Solid state - C			2
Solid state - D			4

test phases, as described in subsection 2.3, (of SID 62-109-3) is shown in the qualification test schedule (Figure 3.3). The location of the components in the spacecraft is indicated in the table by spacecraft zone numbers as defined in subsection 4.2 of SID 62-109-3.

3.4.1.3 Test Schedule

Figure 3.3 displays the qualification test schedule for the EPS and defines the test utilization of the hardware enumerated in Table 3.4. The specific test levels to be applied in qualification testing are found in the tables of environmental test criteria in subsection 4.2 of SID 62-109-3 and are a function of the zone location of the equipment in the spacecraft. These zone numbers are given in Table 3.4.

3.4.2 Fuel Cells

Although its basic theory of operation has been known for decades, the fuel cell is a recent addition to practical power supplies. For this reason, the manufacturing "know-how" is new. The operating life (without replacement of parts) is still relatively short. The Apollo fuel cell power plant, as presently being developed, will have an operating life of 400 hours, which is 20 percent above the lunar mission time. The qualification test program has been carefully planned to verify that the fuel cell design will meet this operating life requirement. Because of the importance of the fuel cell to mission success, an active redundancy is used in the system (i.e., three fuel cells are used in parallel when any two will supply sufficient power).

Fuel cell qualification testing will be conducted by the subcontractor with surveillance by S&ID to insure conformance. Integrated system testing will be accomplished by boilerplate and airframe tests at S&ID.

3.4.2.1 Reliability Assessment Model

Figure 3.4 illustrates the reliability interrelationship of the fuel cells.

3.4.2.2 Criticality and Hardware Requirements

Table 3.5 designates the criticality class, as defined in subsection 2.4 of SID 62-109-3 for the components of the fuel cells. The table enumerates the hardware requirements for a minimum qualification program, as established in subsection 2.5 of SID 62-109-3. The distribution of the hardware through the subsystem qualification test phases, as described in subsection 2.3 of SID 62-109-3 is shown in the

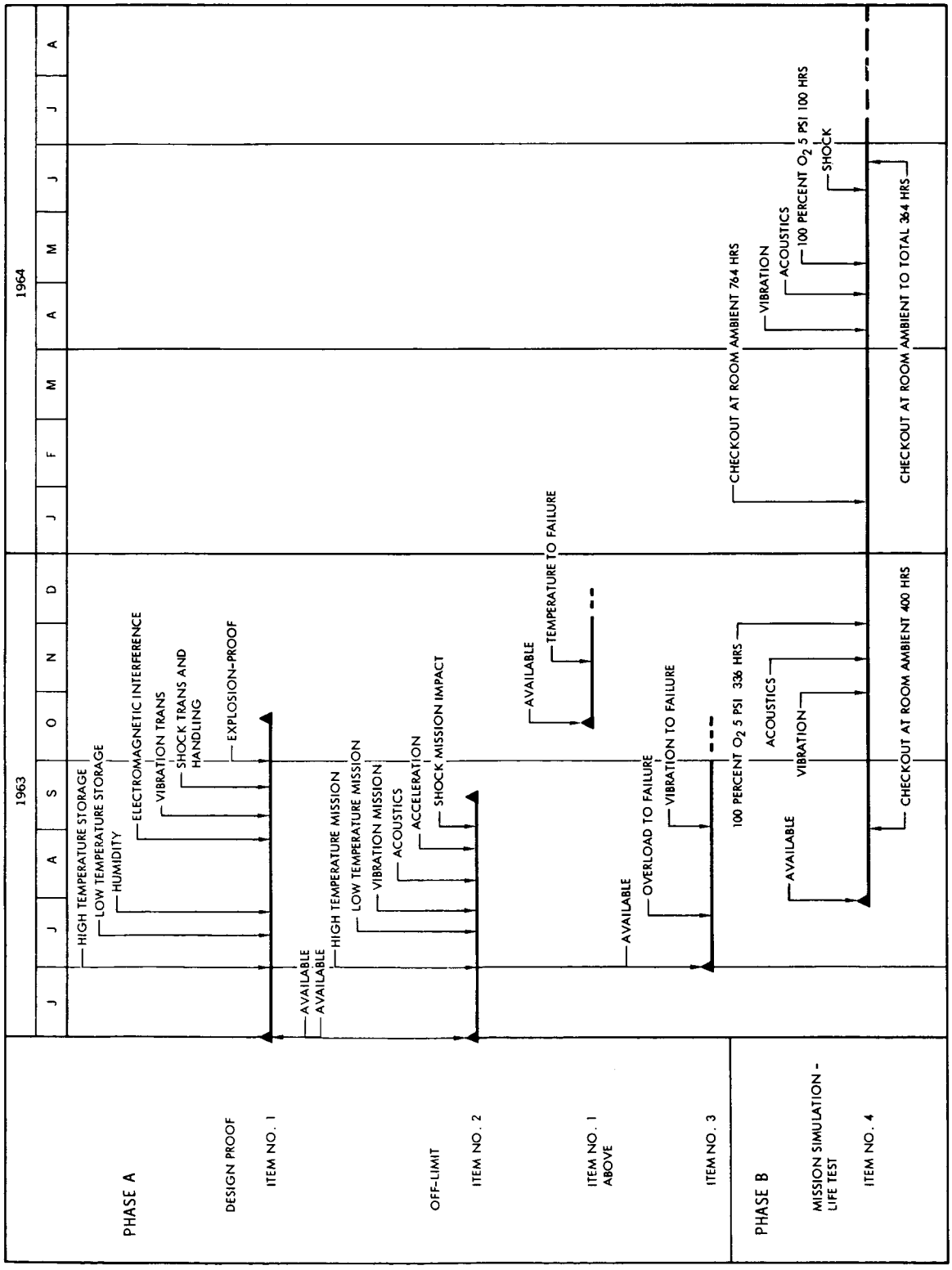

Figure 3.3 EPS Qualification Test Schedule

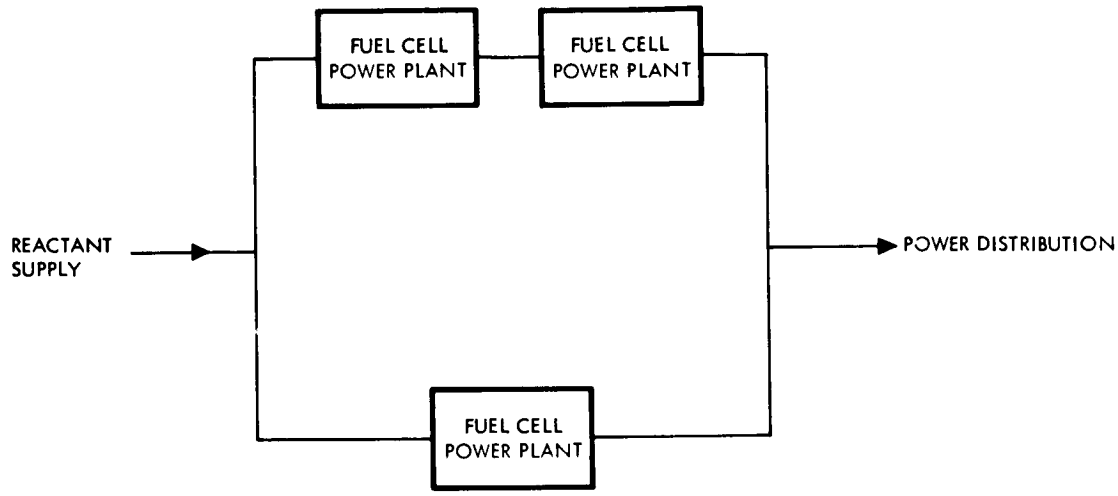

Figure 3.4 Fuel Cell Reliability Assessment Model

qualification test schedule (Figure 3.5). The location of the components in the spacecraft is indicated in the table by spacecraft zone numbers, as defined in subsection 4.2 of SID 62-109-3.

Table 3.5 Fuel Cell Parameters for Qualification Testing

Component	S/C Zone	Criticality	Required Hardware
Fuel Cell	3	3	4*

*One refurbishment is required on Unit 2.

3.4.2.3 Test Schedule

Figure 3.5 displays the qualification test schedule for the fuel cells and defines the test utilization of the hardware enumerated in Table 3.5. The specific test levels to be applied in qualification testing are found in the tables of environmental test criteria in subsection 4.2 of SID 62-109-3 and are a function of the zone location of the equipment in the spacecraft. These zone numbers are given in Table 3.5.

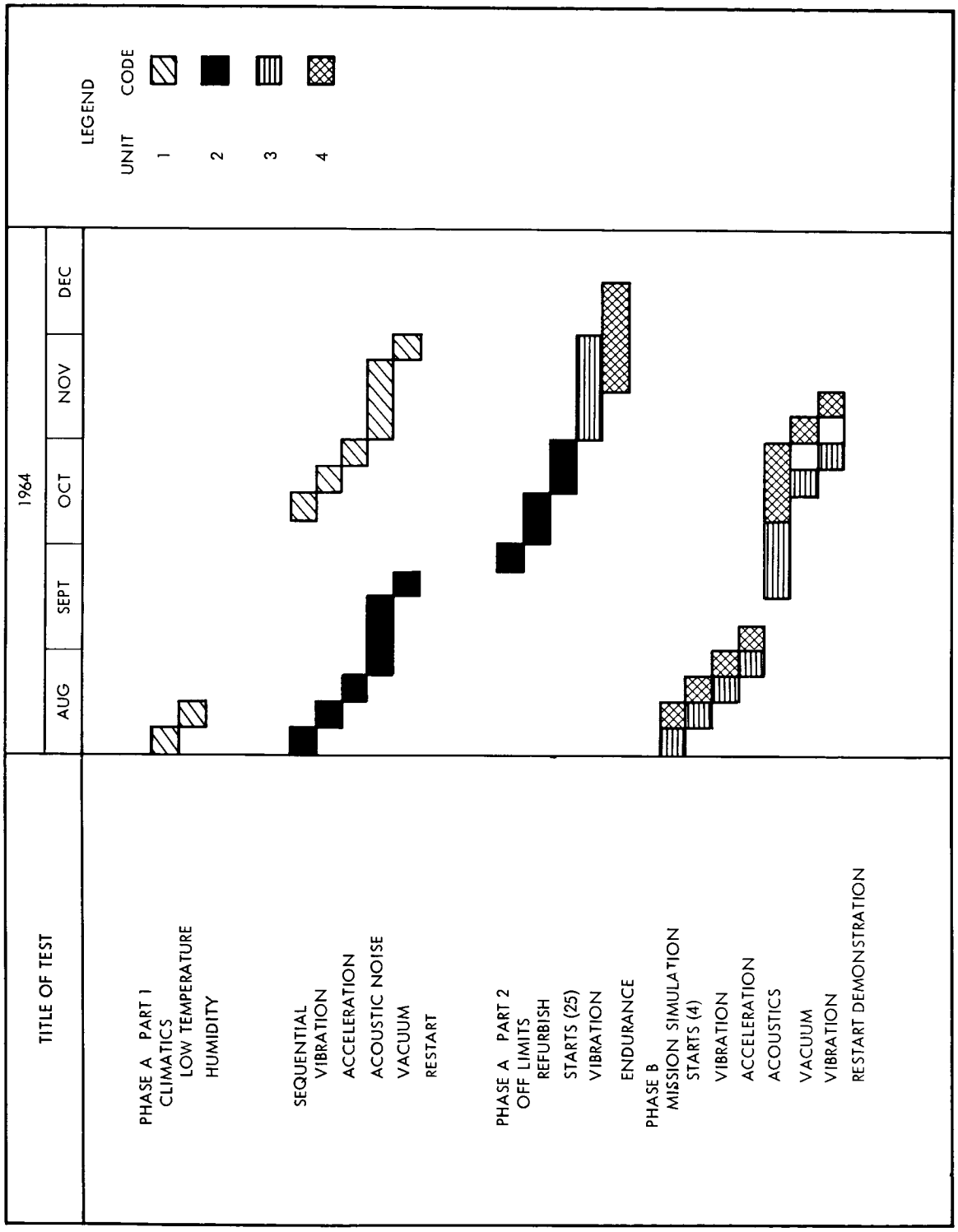

Figure 3.5 EPS Fuel Cells Qualification Test Schedule

LIST OF CURRENT PAGES

Page No.	Date	Revised	Classification

SECTION 4.0

EARTH LANDING SUBSYSTEM

4.1 Introduction

The primary purpose of the earth landing subsystem is to provide safe landing of the Apollo Command Module under re-entry or abort conditions. The apportioned reliability of 0.99994 will be met by the predicted reliability of present state-of-the-art components. A reliability summary is presented in tabulated form (Table 4.1) for each of the major components.

The subsystem consists of an apex heat shield release, a sequencer, a drogue chute, 3 pilot chutes, 3 main chutes and location aids. The ground rules under which this system is evaluated is successful operation of the single drogue and two out of three mains, or if the drogue fails, a successful deployment of two of the three mains will constitute a successful system operation. In the latter mode the reliability of the main chutes is lower than at design level because of the increased dynamic load. This assumption is based on the results of the Northrop-Ventura drop tests at El Centro. These tests indicate that the deployment of two of the three main chutes will land the command module safely. Individual parachute reliability is lower, however, due to higher dynamic pressure (Figure 4.1 shows a simplified logic diagram of the earth landing system (ELS) and Table 4.2 shows the predicted reliability figures for this concept).

4.2 Analysis

An ELS analysis indicates that if the probability of successful deployment of the individual main parachutes at high dynamic pressure is as high as 0.990, the parachute recovery portion of the ELS will successfully meet its reliability apportionment of 0.999940.

Under the above stated ground rules, the problem of the apex forward trim position still exists. The Command Module being stable apex forward from a high altitude abort will experience a dynamic pressure of approximately 140 q. In the case where the drogue fails, the main chutes would never survive this high q number.

4.3 Qualification Test

Figure 4.2 depicts the test-oriented reliability logic diagram for the ELS. The logic diagram will aid in establishing test continuity and in programming the collection of data for the assessment of reliability by illustrating the interactions of the system components and subassemblies.

TABLE 4.1

EARTH LANDING SUBSYSTEM MISSION RELIABILITY (LOR)

COMPONENT NAME	ITEMS	MISSION TIMES (HRS.)	FAILURE RATE PER 10^6 HOURS OR CYCLES			RELIABILITY		
			APPORTIONED	PREDICTED	ASSESSED	APPORTIONED	PREDICTED	ASSESSED
EARTH LANDING SUB-SYSTEM	-	-	-	-	-	0.999940	0.999940[A]	
Drogue Deployment Bag	1	1 Cycle	100	100	N.A.	.999900[A]	.999900[A]	N.A.
Pilot Deployment bag	3	1 Cycle	100	100[1]	N.A.	.999900[A]	.999900[A]	N.A.
Main Chute Deploy-ment Bag	3	1 Cycle	100	100[1]	N.A.	.999900[A]	.999900[A]	N.A.
Altitude Switches	8	1 Cycle	100	100[1]	N.A.	.999900[A]	.999900[A]	N.A.
Reefing Cutter	6	1 Cycle	1000	1000[1]	N.A.	.999000[A]	.999000[A]	N.A.
Cluster Attach (3-points)	1	1 Cycle	10	10 [1]	N.A.	.999990[A]	.999990[A]	N.A.
Diode	6	1 Cycle	100	100 [1]	N.A.	.999900[A]	.999900[A]	N.A.

DATA SOURCE:
1 Northrop Ventura

N.A.: Not Available
* Not included in top Spec Apportionment
** Apportionment & prediction on component level produced by Northrop Ventura.

MATHEMATICAL TECHNIQUE:
A. Analytical Model (Logic Diagram & Known Failure Rate Data)
B. Analytical Method (Weighted Subjective Experience)

TABLE 4.1 (CONT.)

EARTH LANDING SUBSYSTEM MISSION RELIABILITY (LOR)

COMPONENT NAME	ITEMS	MISSION TIMES (HRS.)	FAILURE RATE PER 10^6 HOURS OR CYCLES			RELIABILITY		
			APPORTIONED	PREDICTED	ASSESSED	APPORTIONED	PREDICTED	ASSESSED
Drogue Chute	1	1 Cycle	1500	1500[1]	N.A.	.998500[A]	.998500[A]	N.A.
Drogue Attach	1	1 Cycle	10	10[1]	N.A.	.999990[A]	.999990[A]	N.A.
Drogue Release	1	1 Cycle	1	1[1]	N.A.	.999999[A]	.999999[A]	N.A.
Main Harness	3	1 Cycle	1	1[1]	N.A.	.999999[A]	.999999[A]	N.A.
Harness Attach	1	1 Cycle	1	1[1]	N.A.	.999999[A]	.999999[A]	N.A.
Inertia Switch	2	1 Cycle	100	100[1]	N.A.	.999900[A]	.999900[A]	N.A.
Relay Non-Latching	12	1 Cycle	100	100[1]	N.A.	.999900[A]	.999900[A]	N.A.

DATA SOURCE:
1 Northrop Ventura

N.A.: Not Available.
* Not included in top Spec Apportionment
** Apportionment & prediction on component level produced by Northrop Ventura.

MATHEMATICAL TECHNIQUE:
A. Analytical Model (Logic Diagram & Known Failure Rate Data)
B. Analytical Method (Weighted Subjective Experience)

[redacted]

TABLE 4.1 (CONT.)

EARTH LANDING SUBSYSTEM MISSION RELIABILITY (LOR)

COMPONENT NAME	ITEMS	MISSION TIMES (HRS.)	FAILURE RATE PER 10^6 HOURS OR CYCLES			RELIABILITY		
			APPORTIONED	PREDICTED	ASSESSED	APPORTIONED	PREDICTED	ASSESSED
Mortar	4	1 Cycle	500	500[1]	N.A.	.999500[A]	.999500[A]	N.A.
Main Chute	3	1 Cycle	1500	1500[1]	N.A.	.998500[A]	.998500[A]	N.A.
Main Chute Release	3	1 Cycle	10	10[1]	N.A.	.999990[A]	.999990[A]	N.A.
Pilot Chute	3	1 Cycle	500	500[1]	N.A.	.999500[A]	.999500[A]	N.A.
Drogue Riser	1	1 Cycle	100	100[1]	N.A.	.999900[A]	.999900[A]	N.A.
Pilot Riser & Attach Mech	3	1 Cycle	100	100[1]	N.A.	.999900[A]	.999900[A]	N.A.
Main Chute Riser	3	1 Cycle	100	100[1]	N.A.	.999900[A]	.999900[A]	N.A.
Squib	16	1 Cycle	100	100[1]	N.A.	.999900[A]	.999900[A]	N.A.
Time Delay Solid State	6	1 Cycle	100	100[1]	N.A.	.999900[A]	.999900[A]	N.A.
Fusing Resistor	18	1 Cycle	100	100[1]	N.A.	.999900[A]	.999900[A]	N.A.
Apex Heat Shield Release Mech. Location Aids*	1	1 Cycle	1	1[1]	N.A.	.999999[A]* (Not Available)	.999999[A] (Not Available)	N.A.

DATA SOURCE:
1 Northrop Ventura

N.A.: Not Available
* Not included in top Spec Apportionment
** Apportionment & prediction on component level produced by Northrop Ventura.

MATHEMATICAL TECHNIQUE:
A. Analytical Model (Logic Diagram & Known Failure Rate Data)
B. Analytical Method (Weighted Subjective Experience)

[redacted]

[redacted]

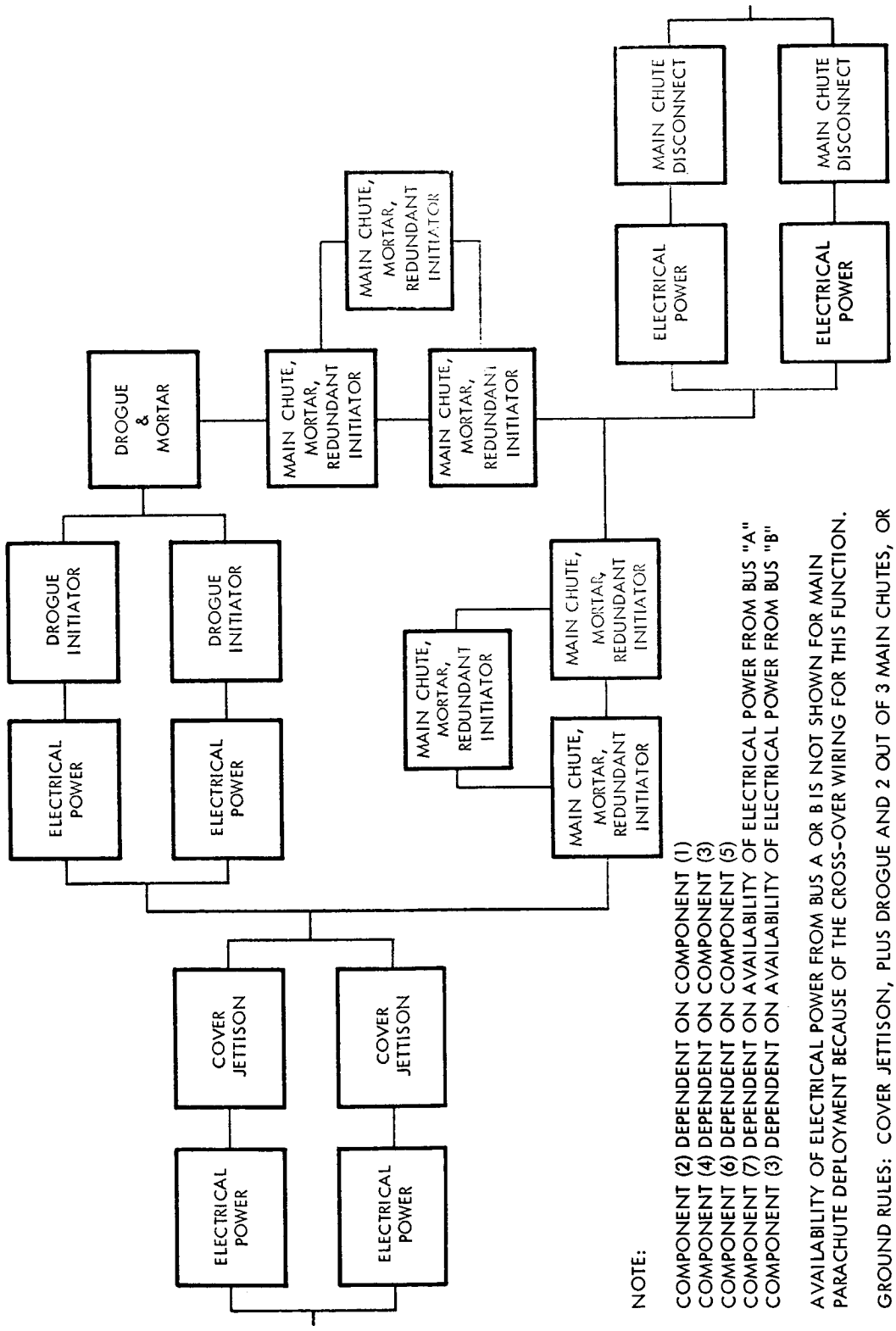

NOTE:

COMPONENT (2) DEPENDENT ON COMPONENT (1)
COMPONENT (4) DEPENDENT ON COMPONENT (3)
COMPONENT (6) DEPENDENT ON COMPONENT (5)
COMPONENT (7) DEPENDENT ON AVAILABILITY OF ELECTRICAL POWER FROM BUS "A"
COMPONENT (3) DEPENDENT ON AVAILABILITY OF ELECTRICAL POWER FROM BUS "B"

AVAILABILITY OF ELECTRICAL POWER FROM BUS A OR B IS NOT SHOWN FOR MAIN PARACHUTE DEPLOYMENT BECAUSE OF THE CROSS-OVER WIRING FOR THIS FUNCTION.

GROUND RULES: COVER JETTISON, PLUS DROGUE AND 2 OUT OF 3 MAIN CHUTES, OR 2 OUT OF 3 MAIN CHUTES AT A LOWER RELIABILITY THAN PREVIOUSLY; PLUS MAIN CHUTE DISCONNECT.

Figure 4.1 Earth Landing System Logic Diagram

[redacted]

Table 4.2 Earth Landing Reliability Predictions

Component	Operating Time (T56)	Predicted Mission Success Reliability	Remarks (T74)
Availiability of electrical power (7)	1 cycle	1.0	Assumed to be 100% successful for this evaluation
Availiability of electrical power (8)	1 cycle	1.0	
Cover jettison	1 cycle	0.99897	
Drogue initiator	1 cycle	0.999	
Drogue and mortar	1 cycle	0.9979	
Main chute, mortar, redundant initiator (1), (3), (5)	1 cycle	0.997899	
*Main chute, mortar, redundant initiator (2), (4), (6)	1 cycle	0.989899	Lower reliability due to high dynamic pressure
Main chute disconnect	1 cycle	0.999	
Parachute system	1 cycle	0.99998	

*Main chute reliability is assumed to be 0.990 instead of 0.998, due to higher than design dynamic pressure.

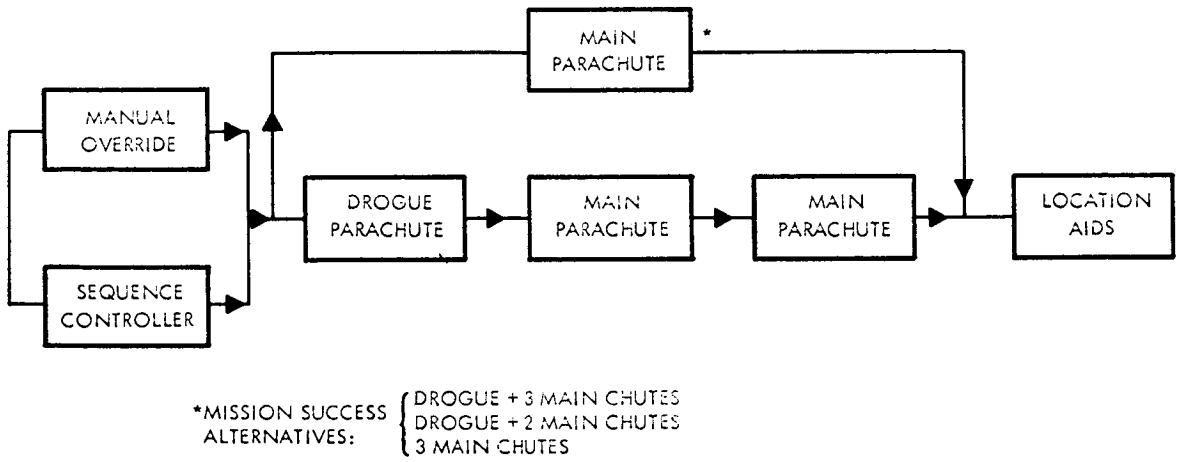

Figure 4.2 ELS Test Oriented Reliability Logic Diagram

4.3.1 Criticality and Hardware Requirements

Table 4.3 designates the criticality class, for the components of the ELS. The table enumerates the hardware requirements for a minimum qualification program as established in sub-section 2.5 of SID 62-109-3. The distribution of the hardware through the subsystem qualification test phases, as described in subsection 2.3 of SID 62-109-3 is shown in the respective qualification test schedule. The location of the components in the spacecraft is indicated by spacecraft zone numbers, as defined in subsection 4.2 of SID 62-109-3.

4.3.2 Drogue and Main Parachute Disconnects

Figure 4.3 displays the qualification test schedule for the ELS parachute disconnects and defines the test utilization of the hardware enumerated in Table 4.3. The specific test levels to be applied in qualification testing are found in the tables of environmental test criteria in subsection 4.2 of SID 62-109-3 and are a function of the zone location of the equipment in the spacecraft. These zone numbers are given in Table 4.3.

4.3.3 Drogue and Pilot Mortars

Figure 4.4 displays the qualification test schedule for the ELS mortars and defines the test utilization of the hardware enumerated in Table 4.3. The specific test levels to be applied in qualification testing are found in the tables of environmental test criteria in subsection 4.2 of SID 62-109-3 and are a function of the zone location of the equipment in the spacecraft. These zone numbers are given in Table 4.3.

Table 4.3 ELS Parameters for Qualification Testing

	S/C Zone	Criticality	Required Hardware
Main Chute disconnect	1	3	50
Drogue chute disconnect	1	3	50
Drogue chute mortar	1	3	4
Pilot chute mortar	1	3	4
Sequence controller	1	3	4
Parachute fabric sample	1	3	40 of each joint

4.3.4 Sequence Controller

Figure 4.5 displays the qualification test schedule for the ELS sequence controller and defines the test utilization of the hardware enumerated in Table 4.3. The specific test levels to be applied in qualification testing are found in the tables of environmental test criteria in subsection 4.2 of SID 62-109-3 and are a function of the zone location of the equipment in the spacecraft. These zone numbers are given in Table 4.3.

4.3.5 Parachute Fabric Samples

Figure 4.6 displays the qualification test schedule for the ELS parachute fabric samples and defines the test utilization of the hardware enumerated in Table 4.3. The specific test levels to be applied in qualification testing are found in the tables of environmental test criteria in subsection 4.2 of SID 62-109-3 and are a function of the zone location of the equipment in the spacecraft. These zone numbers are given in Table 4.3.

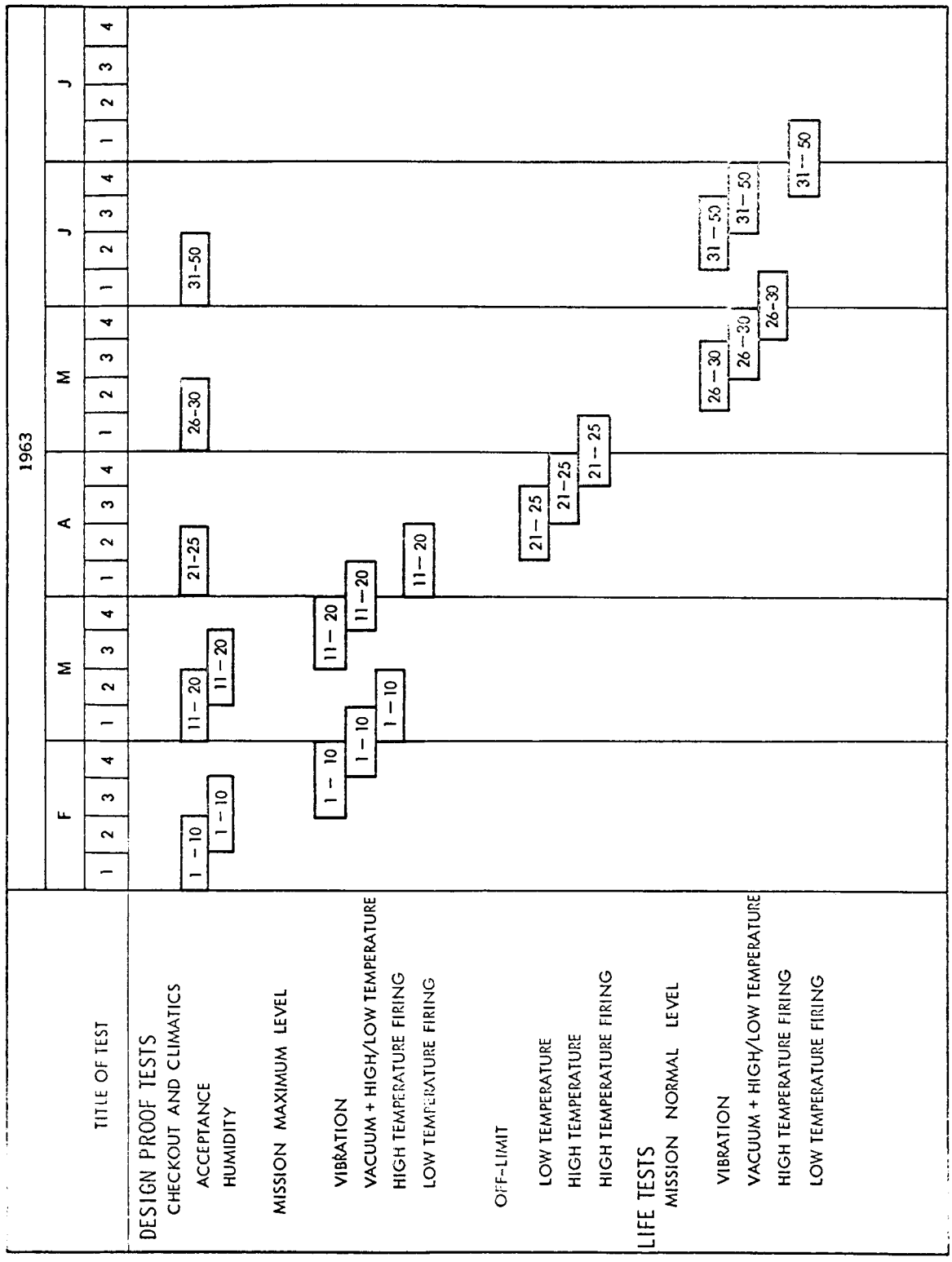

Figure 4.3 ELS Parachute Disconnects Qualification Test Schedule

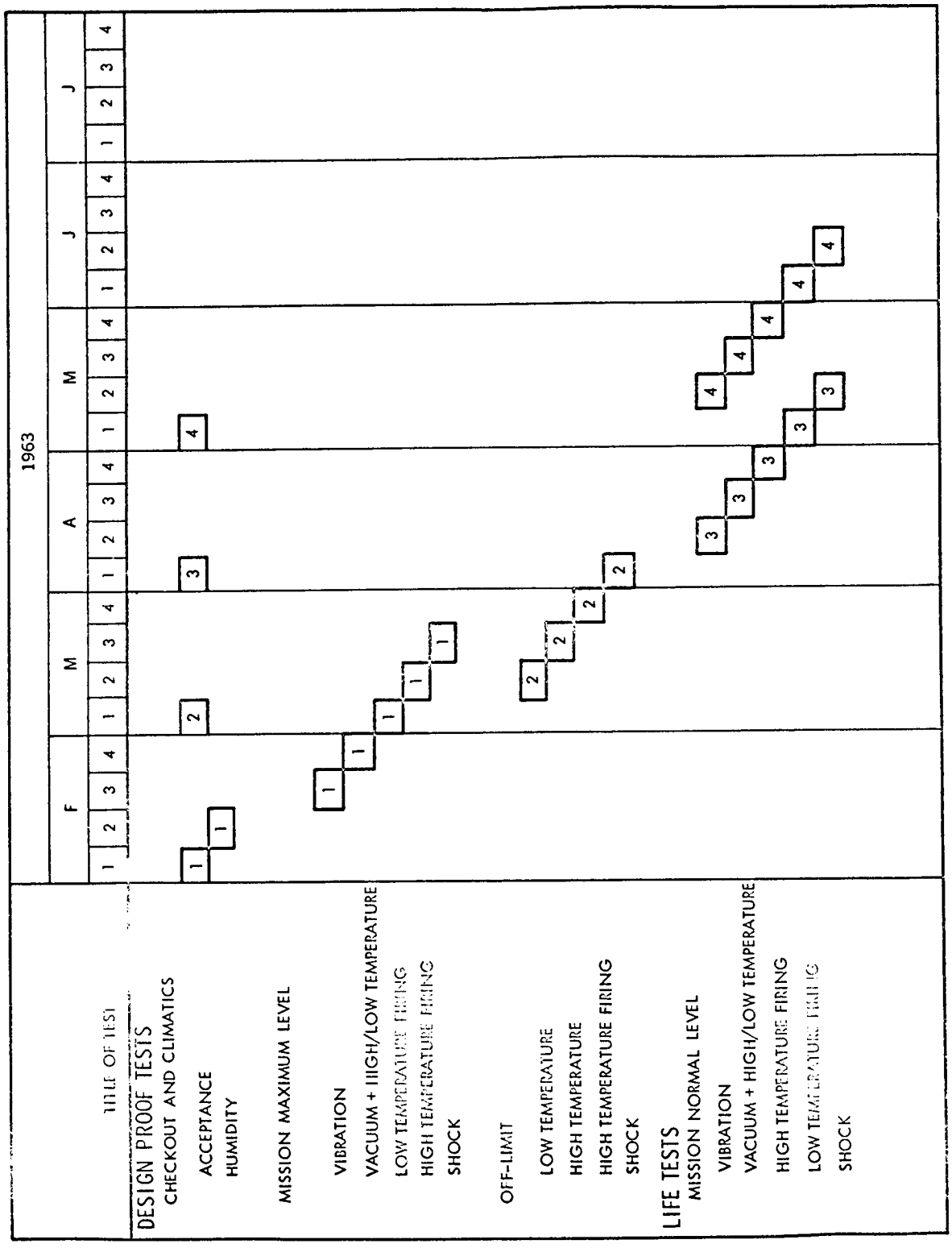

Figure 4.4 ELS Drogue and Pilot Mortars Qualification Test Schedule

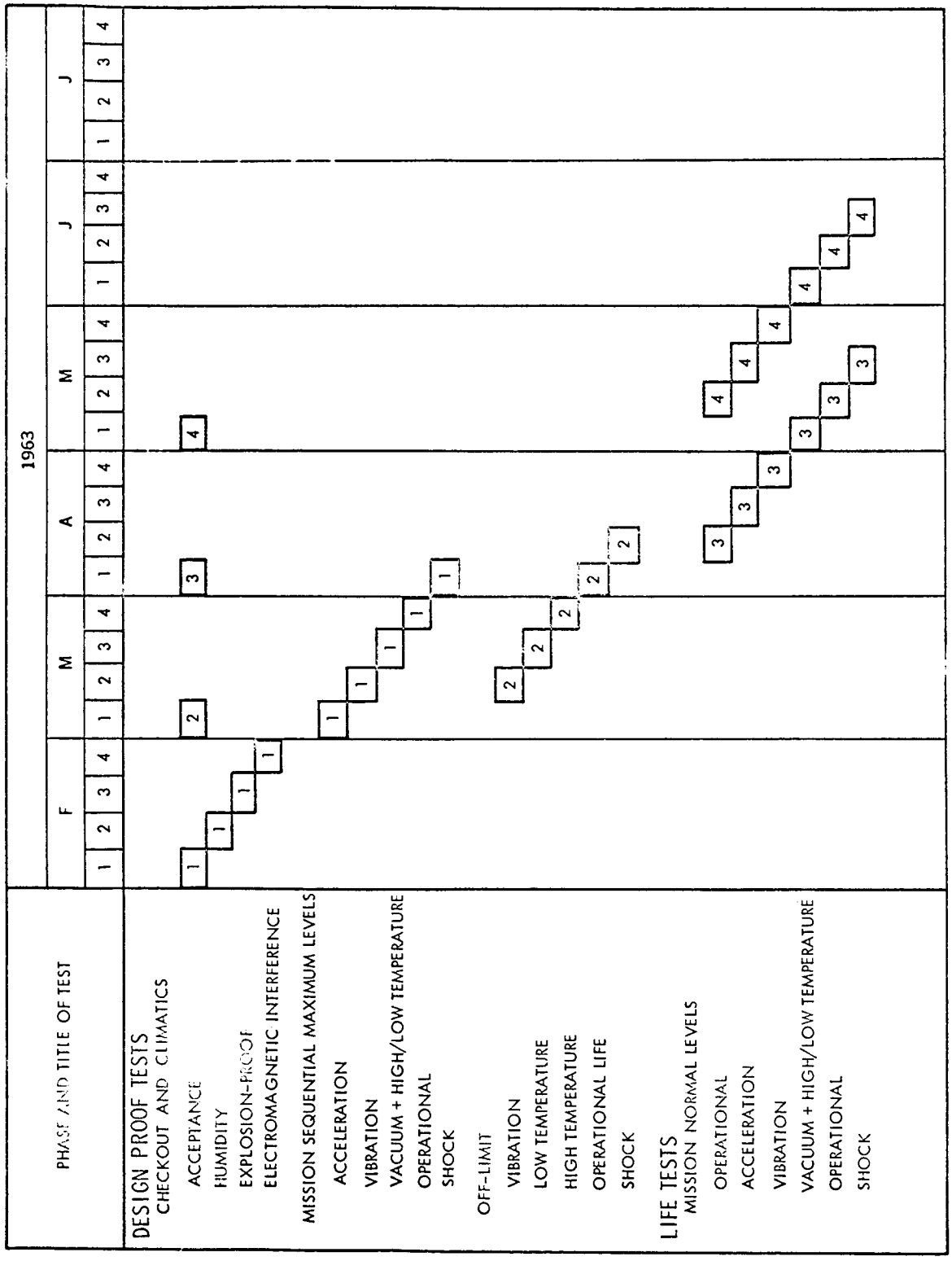

Figure 4.5 ELS Sequence Controller Qualification Test Schedule

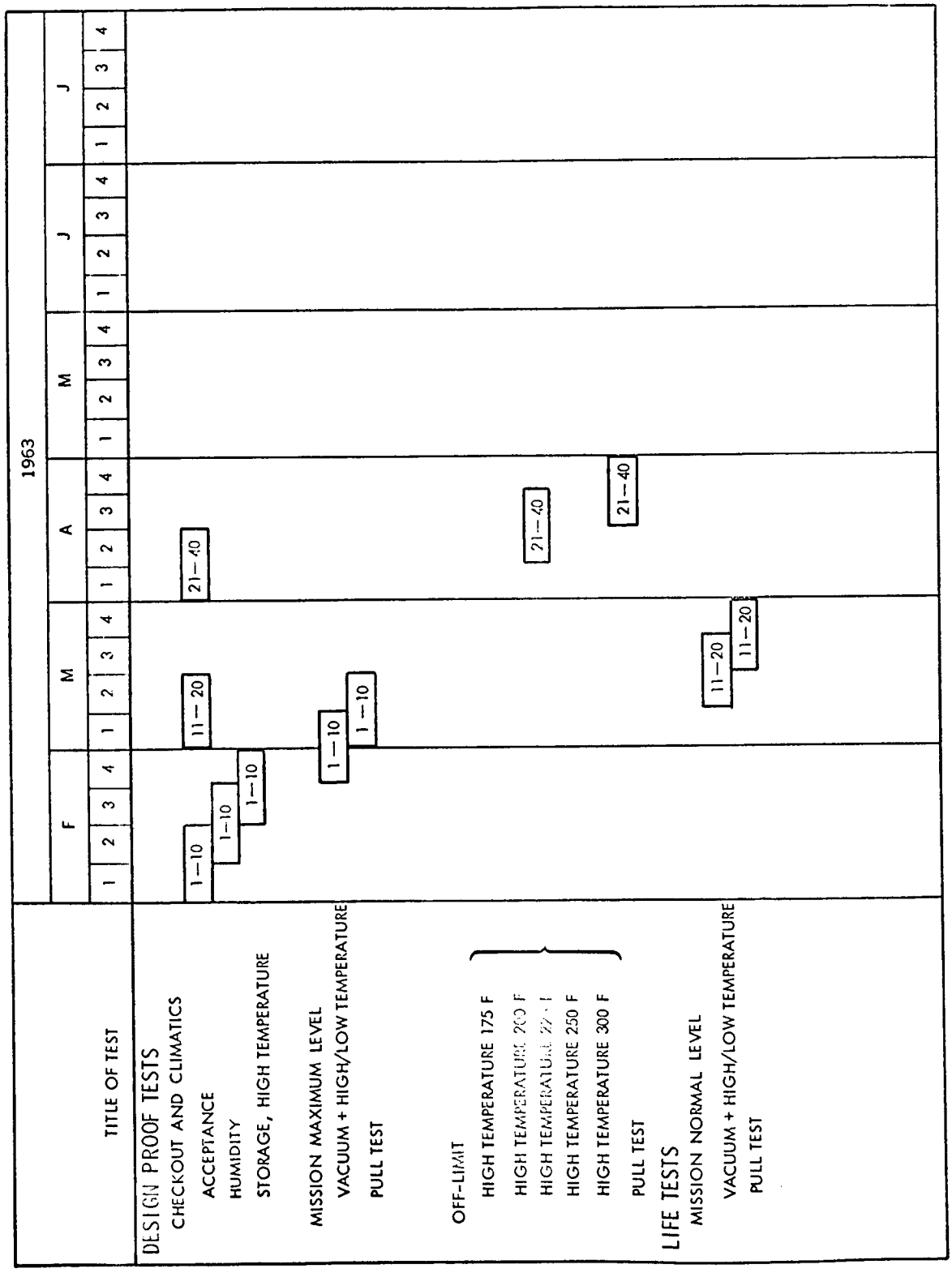

Figure 4.6 ELS Parachute Fabric Samples Qualification Test

LIST OF CURRENT PAGES

Page No.	Date	Revised	Classification

[redacted]

SECTION 5.0

CRYOGENIC STORAGE SYSTEM

5.1 Introduction

As a result of simplifying the cryogenic storage system (CSS), an analysis indicates that predicted reliability of the system is capable of meeting the apportioned mission success and crew safety goals. The revised predicted mission success and crew safety reliability values versus apportioned reliability are summarized in Table 5.1.

5.2 Analysis

The revised CSS design has been accepted by S&ID and is schematically illustrated in Figure 5.1. Figure 5.2 shows the cryogenics supply to the Environmental Control and Electrical Power system. The general system reliability logic diagrams employed in the system reliability analysis are shown in Figures 5.3 and 5.4.

The predicted reliability for mission success and crew safety, using state-of-the-art failure rates, exceeds the apportioned reliability for a 14-day mission. The time allocation for mission success calculations for the 14-day mission is 147 and 189 hours for the series and redundant-operating modes, respectively.

The logic diagram for mission success for the 14-day mission is presented in Figure 5.5. The mathematical models used to compute mission success and crew safety are presented in Figure 5.4. Critical failure modes and their effects on the mission are depicted in Table 5.2, Failure Effects Analysis. The predicted state-of-the-art failure rates for these critical failure modes are presented in Table 5.3.

5.2.1 Abort Criteria

The abort criterion for a 14-day mission is that the mission must be aborted whenever an additional failure could result in the loss of the spacecraft. To achieve mission success with this criterion, all singularly redundant critical components must be considered in series for mission success until lunar surface stay is completed.

After the spacecraft has proceeded to a transearth phase, the mission objectives will have been achieved if safe return to earth is accomplished. Therefore, after lunar surface stay is completed, the system may be considered in a redundant mode of operation because a single failure no longer aborts the mission.

[redacted]

TABLE 5.1 CRYOGENIC STORAGE

SUBSYSTEM MISSION RELIABILITY (LOR)

COMPONENT NAME	ITEMS	MISSION TIMES (HRS.)	FAILURE RATE PER 10^6 HOURS OR CYCLES			RELIABILITY		
			APPORTIONED	PREDICTED	ASSESSED	APPORTIONED	PREDICTED	ASSESSED
CRYOGENIC STORAGE SUBSYSTEM	-	-	-	-	N.A.	.998900	.998900[A]	N.A.
Tank	4	336 hrs.	0.8000	0.8000[1]	N.A.	.999973*	.999973[A]	N.A.
Solenoid Valve	4	1 Cycle	1.0600	.0600[1]	N.A.	.999999*	.999999[A]	N.A.
Relief Valve	4	336 hrs.	0.9600	0.9600[1]	N.A.	.999677*	.999677[A]	N.A.
Chopper	2	1 Cycle	0.0100	.0100[1]	N.A.	.999997*	.999997[A]	N.A.
Manual Closure	10	336 hrs.	0.00077	0.00077[1]	N.A.	.999999*	.999999[A]	N.A.
Quantity Balance	2	336 hrs.	0.2500	0.2500[1]	N.A.	.999916*	.999916[A]	N.A.
Fittings	48	336 hrs.	0.00077	0.00077[1]	N.A.	.999999*	.999999[A]	N.A.
Lines	32	336 hrs.	0.0017	0.0017[1]	N.A.	.999999*	.999999[A]	N.A.

DATA SOURCE:
1. AVCO

N.A.: Not applicable
* No Spec. NAA apportioned by method "B"

MATHEMATICAL TECHNIQUE:
A. Analytical Model (Logic Diagram & Known Failure Rate Data)
B. Analytical Method (Weighted Subjective Experience)

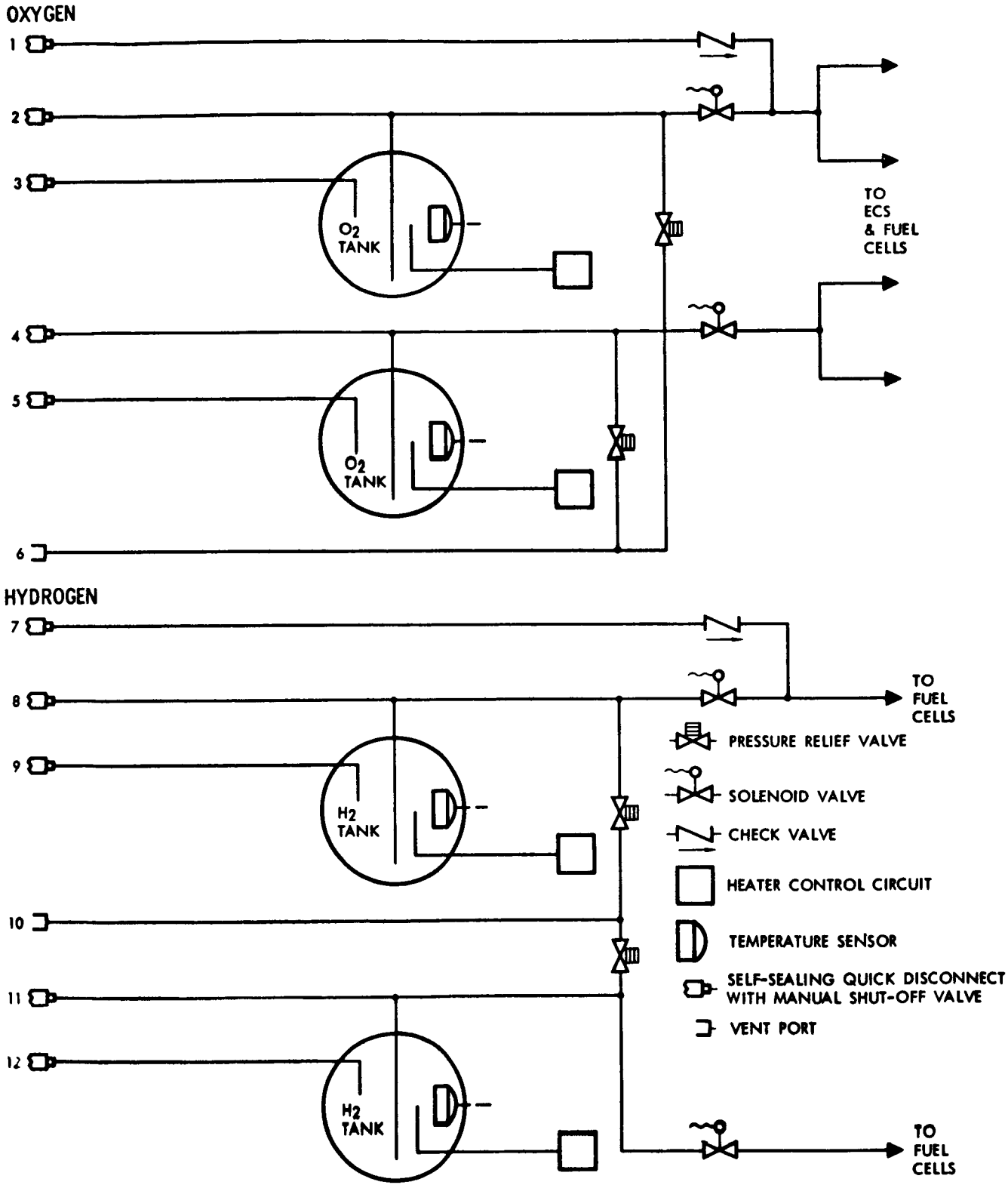

Figure 5.1 Cryogenic Storage System Schematic Diagram

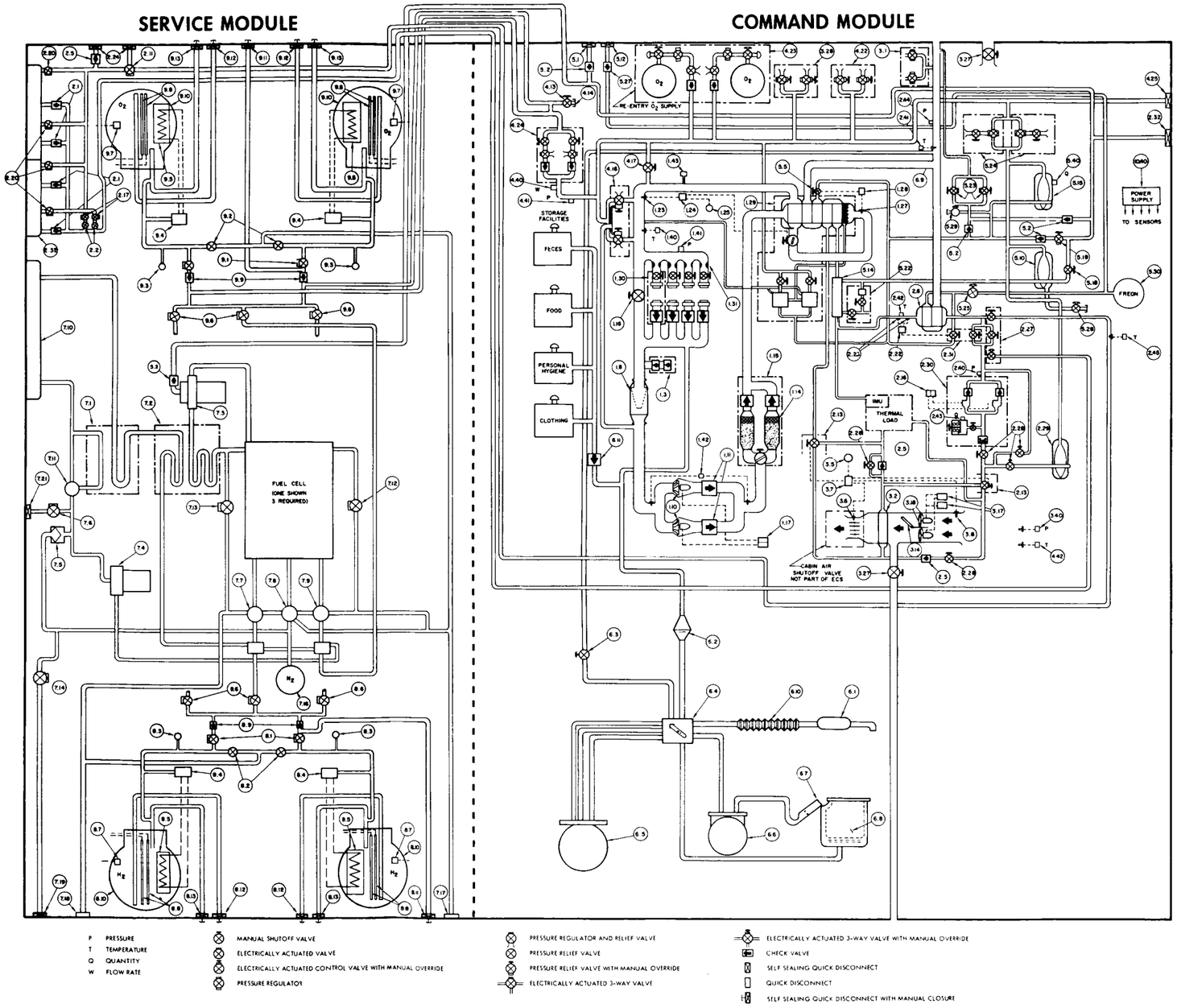

ITEM NO.	NO. REQ.	DESCRIPTION
		GROUP I - PRESSURE SUIT CIRCUIT
1.3	1	SUIT CIRCUIT RETURN AIR CHECK VALVE ASSEMBLY
1.8	1	DEBRIS TRAP
1.10	2	SUIT COMPRESSOR
1.11	2	SUIT COMPRESSOR CHECK VALVE
1.14	28	CO_2 AND ODOR ABSORBER REMOVABLE CONTAINER (26 REPLACEMENTS)
1.15	1	CO_2 AND ODOR ABSORBER PACKAGE
		LiOH CANISTER (2)
		CHECK VALVE (2)
		ISOLATION VALVE
1.16	1	SUIT BYPASS VALVE
1.17	2	SUIT COMPRESSOR SELECTOR SWITCH
1.23	1	SUIT AIR TEMPERATURE SENSOR
1.24	1	SUIT AIR TEMPERATURE CONTROL
1.25	1	SUIT AIR TEMPERATURE SELECTOR
1.27	1	SUIT EVAPORATOR TEMPERATURE SENSOR
1.28	1	SUIT EVAPORATOR TEMPERATURE CONTROL
1.29	1	HEAT EXCHANGER PACKAGE
		REGENERATIVE HEAT EXCHANGER
		REGENERATIVE HEAT EXCHANGER BYPASS VALVE
		SUIT EVAPORATOR
		GLYCOL-TO-SUIT AIR HEAT EXCHANGER
		WATER SEPARATOR
		WATER SEPARATOR PUMP ASSEMBLY
1.30	4	SUIT HOSE CONNECTOR PACKAGE
		SUIT SHUTOFF VALVE
		SUIT SUPPLY CONNECTION
		SUIT RETURN
		CHECK VALVE
1.31	4	SUIT FLOW LIMITER
		GROUP II - WATER - GLYCOL CIRCUIT
2.1	4	SPACE RADIATOR OUTLET CHECK VALVE
2.2	2	GLYCOL PRESSURE RELIEF VALVE
2.5	3	GLYCOL CHECK VALVE
2.6	1	GLYCOL EVAPORATOR
2.11	1	GLYCOL SHUTOFF VALVE
2.13	2	CABIN TEMPERATURE CONTROL VALVE
2.16	2	GLYCOL PUMP SELECTOR SWITCH
2.17	2	GLYCOL SHUTOFF VALVE
2.20	4	SPACE RADIATOR ISOLATION & VENT VALVE
2.22	1	GLYCOL TEMPERATURE CONTROL
2.23	2	GLYCOL TEMPERATURE SENSOR
2.24	2	GLYCOL FILL & VENT CONNECTION
2.27	1	MANUAL SHUTOFF VALVE
2.28	5	GLYCOL SHUTOFF VALVE
2.29	1	GLYCOL RESERVOIR
2.30	1	GLYCOL PUMP ASSEMBLY
		ACCUMULATOR
		ISOLATION VALVE
		PUMP (2)
		CHECK VALVE (2)
		FILTER
2.31	1	GLYCOL TEMPERATURE CONTROL VALVE
2.32	4	SPACE RADIATOR
2.33	1	LEM WATER SUPPLY QUICK DISCONNECT
		GROUP III - COMMAND MODULE PRESS & TEMP. CONTROL SYSTEM
3.1	1	CABIN OUTFLOW, PRESS. REG. & NEGATIVE RELIEF VALVE
3.2	1	CABIN HEAT EXCHANGER
3.5	1	CABIN TEMPERATURE SELECTOR
3.6	1	CABIN TEMPERATURE ANTICIPATOR
3.7	1	CABIN TEMPERATURE CONTROL
3.8	1	CABIN TEMPERATURE SENSOR
3.14	1	CABIN BLOWER DIVERTER VALVE
3.17	2	CABIN BLOWER SELECTOR SWITCH
3.18	2	CABIN RECIRCULATING BLOWER
3.27	2	CABIN VENT VALVE
3.28	1	CABIN PRESSURE REGULATOR
		GROUP IV - OXYGEN SUPPLY
4.13	1	BACK PACK SUPPLY SHUTOFF & PRESSURE RELIEF VALVE
4.14	1	BACK PACK SUPPLY CAP
4.16	1	DEMAND PRESSURE REGULATOR & RELIEF VALVE
4.17	1	MANUAL O_2 SUPPLY VALVE
4.22	1	EMERGENCY O_2 INFLOW CONTROL VALVE
4.23	1	RE-ENTRY O_2 SUPPLY SYSTEM
		O_2 TANK (2)
		O_2 FILL PORT (2)
		VALVE ASSEMBLY (2)
		PRESSURE REGULATOR (2)
		RELIEF VALVE (2)
		CHECK VALVE (2)
4.24	1	OXYGEN PRESSURE REGULATOR ASSEMBLY
		SHUTOFF VALVE (2)
		PRESSURE REGULATOR (2)
		RELIEF VALVE (2)
		CHECK VALVE (2)
4.25	1	LEM OXYGEN SUPPLY QUICK DISCONNECT
		GROUP V - WATER SUPPLY SYSTEM
5.1	1	WATER SUPPLY QUICK DISCONNECT
5.2	5	WATER CHECK VALVE
5.5	1	SUIT EVAPORATOR WATER INFLOW CONTROL VALVE
5.10	1	POTABLE WATER TANK
5.12	1	FREON QUICK DISCONNECT VALVE
5.14	1	WATER CHILLER
5.15	1	WASTE WATER TANK
5.18	1	WATER SHUTOFF VALVE
5.19	1	WATER TANK PRESSURE RELIEF VALVE
5.22	1	ROTAB II WATER SUPPLY ASSEMBLY
		SUPPLY VALVE (2)
		HEATER
5.23	2	WATER PRESSURE RELIEF VALVE
5.24	2	TANK PRESSURE CONTROL & RELIEF VALVE
5.25	1	FREON FLOW VALVE
5.27	1	FREON CHECK VALVE
5.28	1	SURVIVAL WATER SHUTOFF VALVE
5.29	1	EMERGENCY WATER SHUTOFF VALVE
5.30	1	FREON RESERVOIR TANK

ITEM NO.	NO. REQ	DESCRIPTION
		GROUP VI - WASTE MANAGEMENT SYSTEM
6.1	1	VACUUM BAG
6.2	1	BLOWER
6.3	1	SHUTOFF VALVE
6.4	1	SELECTOR SWITCH
6.5	1	URINE SEPARATOR
6.6	1	CHEMICAL TANK
6.7	1	RELIEF TUBE
6.8	1	FECES BAG
6.9	1	URINE OVERBOARD
6.10	1	FLEXABLE HOSE
6.11	1	STORAGE FACILITIES CHECK VALVE
		GROUP VII - FUEL CELL SYSTEM
7.1	1	REGENERATOR
7.2	1	CONDENSOR
7.3	1	CIRCULATION SYSTEM
		PUMP
		SEPARATOR
		MOTOR
7.4	1	SECONDARY LOOP COOLANT PUMP
7.5	1	ACCUMULATOR AND PRESSURE REGULATOR
7.6	1	FILL VALVE
7.7	1	HYDROGEN PRESSURE REGULATOR
7.8	1	NITROGEN PRESSURE REGULATOR
7.9	1	OXYGEN PRESSURE REGULATOR
7.10	1	FUEL CELL RADIATOR
7.11	1	TEMPERATURE CONTROL REGULATOR & REGENERATOR BYPASS VALVE
7.12	1	OXYGEN PURGE SYSTEM VALVE
7.13	1	HYDROGEN AUXILIARY COOLING SYSTEM VALVE
7.14	1	NITROGEN TANK FILL VALVE
7.16	1	NITROGEN TANK
7.17	1	OVERBOARD VENT
7.18	1	HYDROGEN VENT
7.19	1	NITROGEN SUPPLY QUICK DISCONNECT
7.21	1	COOLANT SUPPLY QUICK DISCONNECT
		GROUP VIII - HYDROGEN SYSTEM
8.1	2	TANK SHUT-OFF VALVE
8.2	2	PRESSURE RELIEF VALVE
8.3	2	PRESSURE TRANSDUCER
8.4	2	PRESSURE SWITCH
8.5	2	ELECTRICAL HEATER
8.6	3	FUEL CELL SUPPLY SHUTOFF VALVE
8.7	2	TEMPERATURE SENSOR PROBE
8.8	2	QUANTITY SENSOR PROBE
8.9	2	CHECK VALVE
8.10	2	HYDROGEN TANK
8.11	1	HYDROGEN PURGE LINE
8.12	2	HYDROGEN FILL LINE
8.13	2	HYDROGEN FILL VENT
		GROUP IX - OXYGEN SYSTEM
9.1	2	TANK SHUTOFF VALVE
9.2	2	PRESSURE RELIEF VALVE
9.3	2	PRESSURE TRANSDUCER
9.4	2	PRESSURE SWITCH
9.5	2	ELECTRICAL HEATER
9.6	3	FUEL CELL SUPPLY SHUTOFF VALVE
9.7	2	TEMPERATURE SENSOR PROBE
9.8	2	QUANTITY SENSOR PROBE
9.9	2	CHECK VALVE
9.10	2	OXYGEN TANK
9.11	1	OXYGEN PURGE LINE
9.12	2	OXYGEN FILL LINE
9.13	2	OXYGEN FILL VENT
		GROUP I - PRESSURE SUIT INSTRUMENTATION
1.40	1	TRANSDUCER, TEMP., INLET, SUIT SUPPLY MANIFOLD
	1	SENSOR
	1	AMPLIFIER
1.41	1	TRANSDUCER, PRESS., INLET SUIT SUPPLY MANIFOLD
1.42	1	TRANSDUCER, DIFFERENTIAL PRESS., SUIT COMPRESSOR
1.43	1	TRANSDUCER, PARTIAL PRESSURE, CO_2
		GROUP II - WATER - GLYCOL CIRCUIT INSTRUMENTATION
2.40	1	TRANSDUCER, PRESS., OUTLET, GLYCOL PUMP
2.41	1	TRANSDUCER, TEMP., GASEOUS, OUTLET, GLYCOL EVAPORATOR
	1	SENSOR
	1	AMPLIFIER
2.42	1	TRANSDUCER, TEMP., LIQUID, OUTLET, GLYCOL EVAPORATOR
	1	SENSOR
	1	AMPLIFIER
2.43	1	TRANSDUCER, PRESS., QUANTITY MEASUREMENT, GLYCOL ACCUMULATOR
2.44	1	TRANSDUCER, PRESS., GASEOUS, OUTLET, GLYCOL EVAPORATOR
2.45	1	TRANSDUCER, TEMP., OUTLET, SPACE RADIATOR
	1	SENSOR
	1	AMPLIFIER
		GROUP III - COMMAND MODULE PRESSURE & TEMP INSTRUMENTATION
3.40	1	TRANSDUCER, PRESSURE, CABIN TOTAL, COMMAND MODULE
		GROUP IV - OXYGEN SUPPLY INSTRUMENTATION
4.40	1	TRANSDUCER, FLOW, OXYGEN SUPPLY
4.41	1	TRANSDUCER, PRESS., OUTLET, REGULATOR, OXYGEN SUPPLY
4.42	1	TRANSDUCER, TEMP., COMMAND MODULE, AIR, CABIN AVERAGE
	1	SENSOR
	1	AMPLIFIER
		GROUP V - WATER SUPPLY SYSTEM INSTRUMENTATION
5.40	1	TRANSDUCER, PRESS., QUANTITY MEASUREMENT, WASTE WATER TANK
		GROUP X - POWER SUPPLY
10.40	1	POWER SUPPLY, TRANSDUCER, TEMPERATURE (USED WITH ITEMS 1.40, 2.41, 2.42, 2.45, 4.42)

Figure 5.2 Service and Command Module Cryogenic Storage, EPS and ECS Integrated Systems

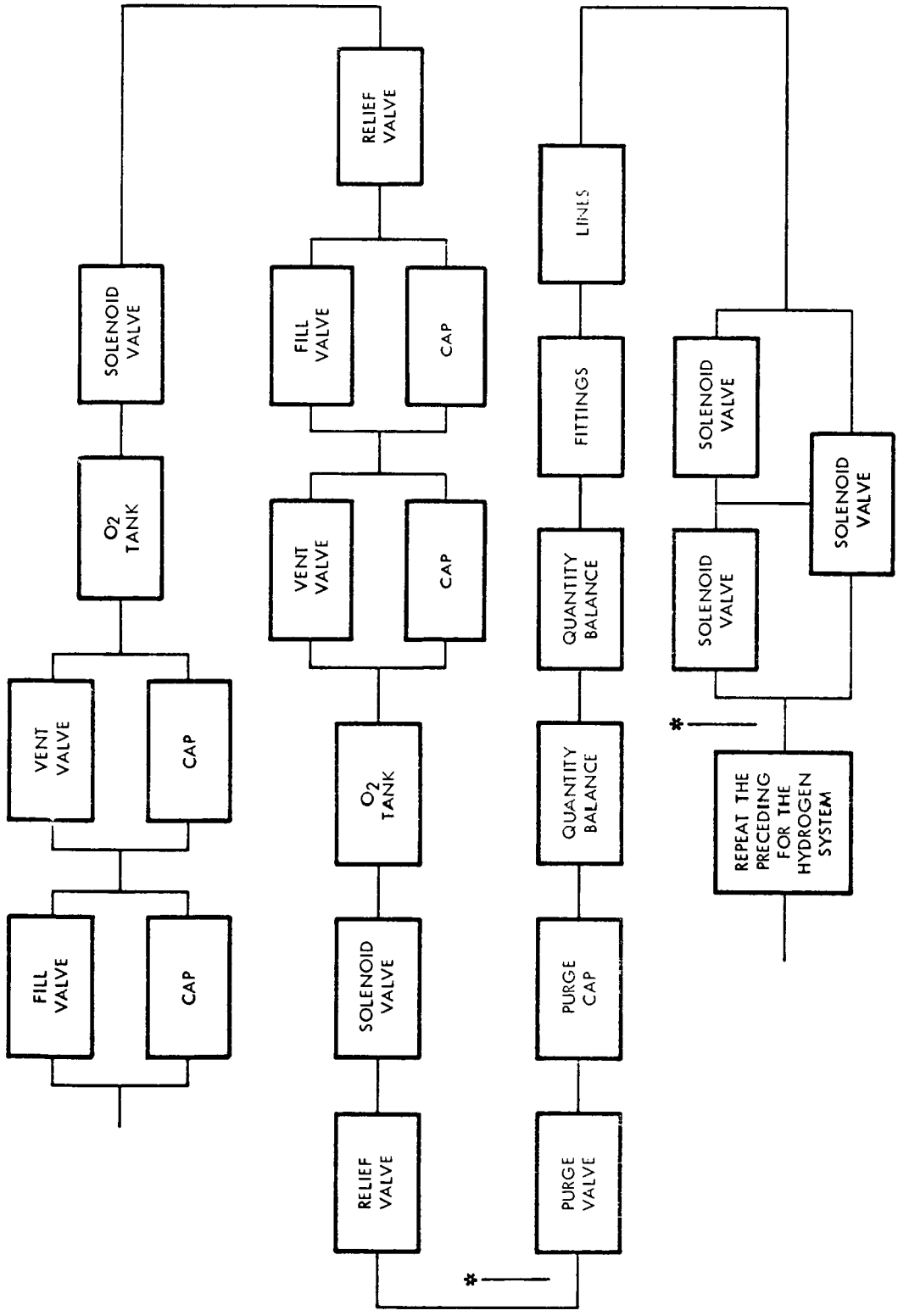

* BETWEEN THESE POINTS IS THE DISTRIBUTION SYSTEM

Figure 5.3 Cryogenic Storage System Mission Success Mode Logic Diagram

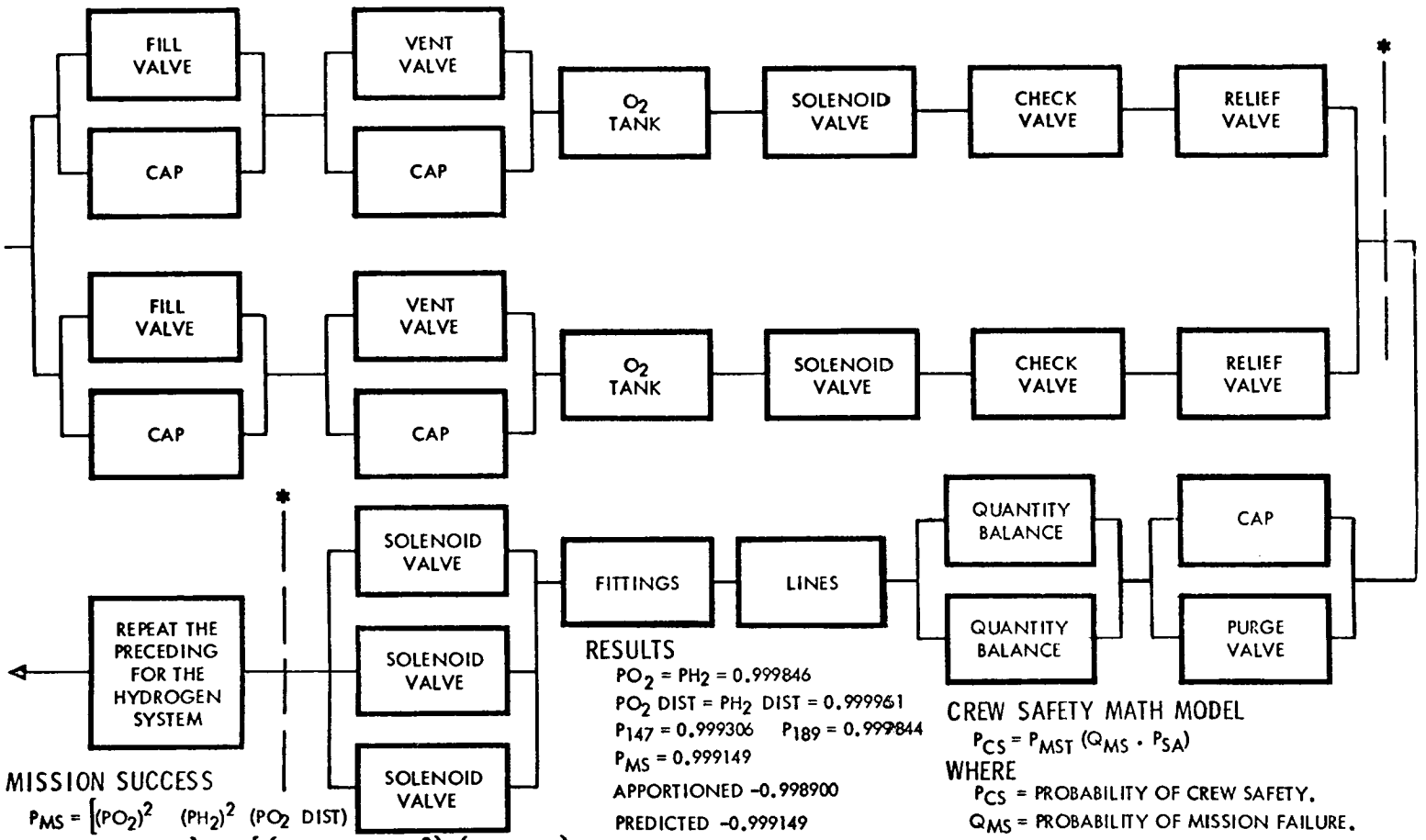

MISSION SUCCESS

$$P_{MS} = \left[(PO_2)^2 \quad (PH_2)^2 \quad (PO_2\ DIST)\ (PH_2\ DIST)\right]_{112} \left[\left\{2PO_2 - (PO_2)^2\right\}\left\{PO_2\ DIST\right\}\left\{2PH_2 - (PH_2)^2\right\}\left\{PH_2\ DIST\right\}\Big|_{82}\right]$$

WHERE

PO_2 = PROBABILITY OF SUCCESS OF HALF THE OXYGEN SUPPLY.
PH_2 = PROBABILITY OF SUCCESS OF HALF THE HYDROGEN SUPPLY.
PO_2 DIST = PROBABILITY OF SUCCESS OF THE OXYGEN DISTRIBUTION.
PH_2 DIST = PROBABILITY OF SUCCESS OF THE HYDROGEN DISTRIBUTION
P_{MS} = PROBABILITY OF MISSION SUCCESS.
SUBSCRIPTS 112 AND 82 REPRESENT TIME IN HOURS.

RESULTS

$PO_2 = PH_2 = 0.999846$
PO_2 DIST = PH_2 DIST = 0.999961
$P_{147} = 0.999306$ $P_{189} = 0.999844$
$P_{MS} = 0.999149$
APPORTIONED -0.998900
PREDICTED -0.999149

CREW SAFETY MATH MODEL

$P_{CS} = P_{MST}\ (Q_{MS} \cdot P_{SA})$

WHERE

P_{CS} = PROBABILITY OF CREW SAFETY.
Q_{MS} = PROBABILITY OF MISSION FAILURE.
P_{SA} = PROBABILITY OF SAFE ABORT.

P_{CS} HAS BEEN CALCULATED TO EXCEED 0.999999 VERSUS AN APPORTIONED VALUE OF 0.999990.

A RIGOROUS DERIVATION OF THE FOREGOING CREW SAFETY DENSITY FUNCTION, ($P_{CS} = P_{MST}\ (Q_{MS} \cdot P_{SA})$ IS GIVEN IN SID 62-557-4, PAGES 47 THROUGH 63.

* BETWEEN THESE POINTS IS THE DISTRIBUTION SYSTEM

Figure 5.4 Cryogenic Storage System Crew Safety Mode Logic Diagram

[redacted]

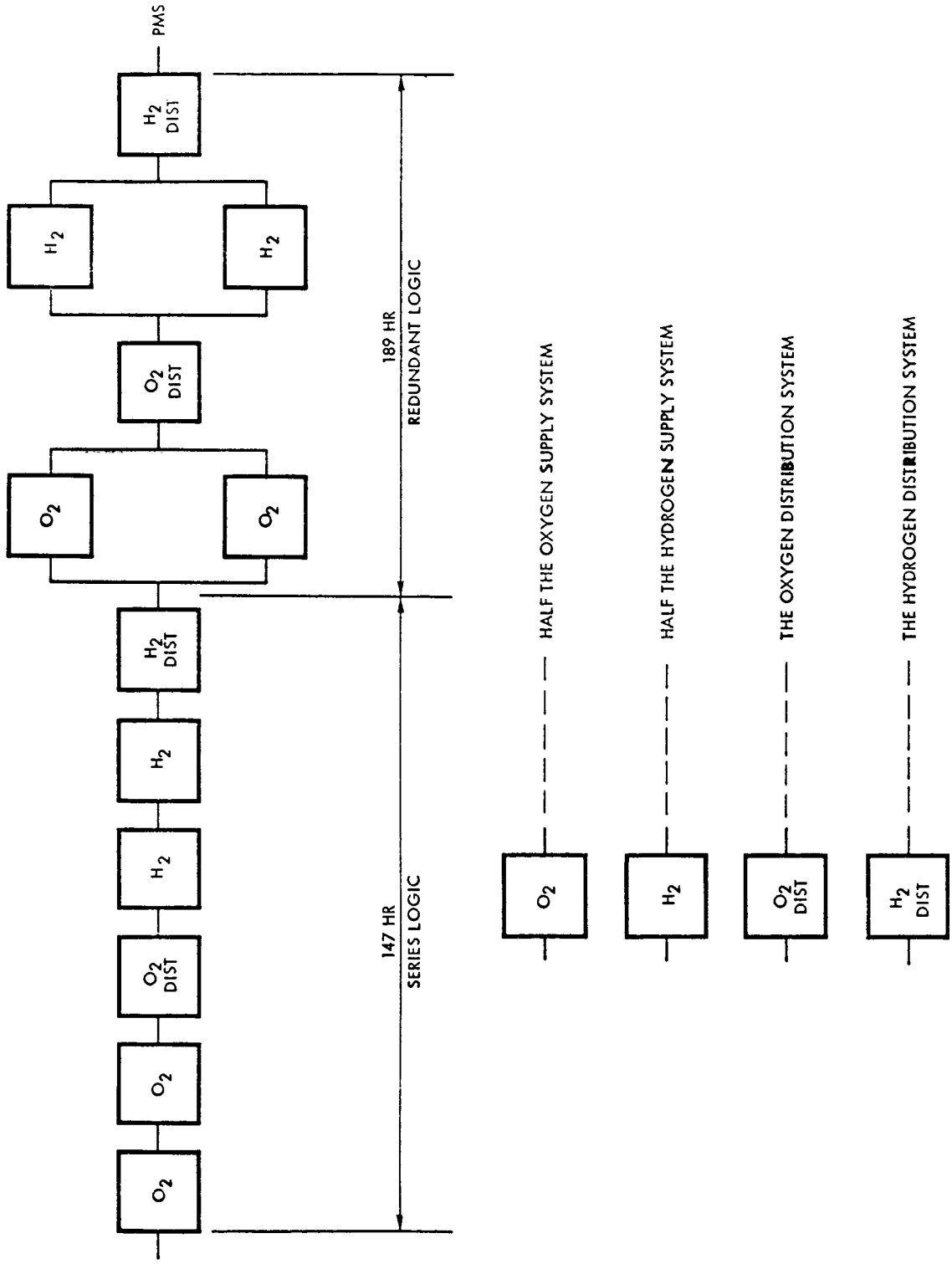

Figure 5.5 Mission Success (14-Day Mission) Logic Diagram

Table 5.2 Cryogenic Storage System Failure Effects Analysis

Item	Drawing Number	Electrical Reference Designation	Function	Failure Type	Mission Phase	Failure Effect			Possible Crew Action
						Component Performance	System Performance	Apollo	
Fill valve Vent valve Purge valve			Allows passage of fluid during the countdown. Must not leak throughout mission.	Leakage	Launch to SM disconnect	Erosion of seal	Loss of gas in excess of allowable losses	Abort mission	Close good supply. Use as much as possible of the failed system. Complete abort on good system.
Tank			Stores fluid	Leakage	Launch to SM disconnect	Wall rupture	Loss of gas in excess of allowable losses	Abort mission	Close good supply. Use as much as possible of the failed system. Complete abort on good system.
						Burst			Close failed system. Use good system to complete abort.
Relief valve			Relieves excess system pressure	Leakage - fail to re-seat	Launch to SM disconnect	Erosion of seal	Loss of gas in excess of allowable losses	Abort mission	Close good supply. Use as much as possible of the failed system. Complete abort on good system.
				Fail to open when required	Launch to SM disconnect		Excess pressure in system	None	None. The relief valve is backed up by relief valves in the ECS and EPS.
Solenoid valve (system shut-off)			System checkout prior to launch—locked open during mission	External leakage, case cracking, or rupture	Launch to SM disconnect	None	Loss of gas in excess of allowable losses	Abort mission	Close good supply. Use as much as possible of the failed system. Complete abort on good system.
Quantity and pressure control	Beech 13532-0030	N/A	Maintains system pressure and ensures the use of equal quantities of fluid from both tanks by controlling the amount of heat applied to the fluid in the tanks.	Open circuit (wiring)	Launch to SM separation	None	Pressure loss in one of the tanks and subsequent depletion of the other	Loss of redundant supply capability	Activate manual override circuit and maintain surveillance.

[redacted]

Table 5.2 Cryogenic Storage System Failure Effects Analysis (Cont)

Item	Drawing Number	Electrical Reference Designation	Function	Failure Type	Mission Phase	Failure Effect			Possible Crew Action
						Component Performance	System Performance	Apollo	
				Pressure switch fails open	Launch to SM separation	Component rendered useless	Pressure loss in one of the tanks and subsequent depletion of the other	Loss of redundant supply capability	Activate manual override circuit and maintain surveillance
				Pressure switch fails closed	Launch to SM separation	Component rendered useless	One tank will over-pressure and be depleted before the other.	Loss of redundant supply capability	Activate manual override circuit and maintain surveillance
				Resistor, open failure	Launch to SM separation	Component rendered useless	Pressure loss in one tank and subsequent depletion of the other	Loss of redundant supply capability	Activate manual override circuit and maintain surveillance
Quantity and pressure control				Resistor, short failure	Launch to SM separation	Component rendered useless	One tank will over-pressure and be depleted before the other.	Loss of redundant supply capability	Activate manual override circuit and maintain surveillance
				Resistor, out of tolerance	Launch to SM separation	Component's usefulness marginal	This is unpredictable. The effects may range from sluggish operation of circuit to complete open condition.	Variation of tank quantities out of 15 pound tolerance	Situation is marginal. Decision will have to be made on the basis of the seriousness of the problem at the time.

[redacted]

Table 5.2 Cryogenic Storage System Failure Effects Analysis (Cont)

Item	Drawing Number	Electrical Reference Designation	Function	Failure Type	Mission Phase	Failure Effect			Possible Crew Action
						Component Performance	System Performance	Apollo	
				Heater, open failure	Launch to SM separation	Component rendered useless	Pressure loss in one tank and subsequent depletion of the other	Loss of redundant supply capability	Activate manual override circuit and maintain surveillance under abort conditions.
				General SCR failure	Launch to SM separation	Component's usefulness marginal	This is unpredictable. The effects may range from sluggish operation of circuit to complete open condition.	Variation of tank quantities out of 15 pound tolerance	Situation is marginal. Decision will have to be made on the basis of the seriousness of the problem at the time.
				Warning light burn-out	Launch to SM separation	Component rendered useless	None	None	Will have to monitor pressure, temperature and quantity gages.
Quantity and pressure control				General transistor failure	Launch to SM separation	Component's usefulness marginal	This is unpredictable. The effects may range from sluggish operation of the circuit to complete open condition.	Variation of tank quantities out of 15 pound tolerance	Situation is marginal. Decision will have to be made on the basis of seriousness of the problem at the time.
				Short circuit (wiring)	Launch to SM separation	Component rendered useless	Loss of heater control or overpressure and subsequent depletion of one tank before the other.	Loss of redundant supply capability	Activate manual override circuit and maintain surveillance

[redacted]

Table 5.2 Cryogenic Storage System Failure Effects Analysis (Cont)

Item	Drawing Number	Electrical Reference Designation	Function	Failure Type	Mission Phase	Failure Effect			Possible Crew Action
						Component Performance	System Performance	Apollo	
Lines and fittings				Leakage	Launch to SM separation	Structurally weakened	Loss of gas	Insufficient gas to compute the 336 hour mission	Detect line or fitting and isolate it from the rest of the system by valve actuation if possible. Abort mission and maintain surveillance.

Table 5.3 Predicted Failure Rates and Reliability Values

Component	Failure Rate Per 10^6 Hr *	Critical Mode Failure Rate Per 10^6	Reliability Values		
			t = 147 (hr)	t = 189 (hr)	t = 336 (hr)
Tank	0.08	0.08	0.999988	0.999985	0.999973
Solenoid valve	4.60	1 Cycle standby	0.999999+	0.999999+	0.999999+
Relief valve	3.90	Fail open 0.96	0.999859	0.999819	0.999677
Fill valve	0.17	Fail open 0.01	0.999999	0.999998	0.999997
Lines	0.0017	0.0017	0.999999+	0.999999+	0.999999+
Fittings	0.00077	0.00077	0.999999+	0.999999+	0.999999+
Quantity balance (S)		0.25	0.999963	0.999953	0.999916
Quantity balance (D)		0.86	0.999999+	0.999999+	0.999999+

S = Series

D = Redundant

*State of the art

[redacted]

5.2.2 Single Versus Dual Supply Line Concept

An investigation was made to determine if a single supply line could be used instead of the dual supply line now employed in the simplified cryogenic storage system.

Three considerations in favor of the dual line were investigated. One consideration is that it is possible to have the check valves located as far as possible from the source of cold fluid to avoid excessive cycling of the valves, which would result in excessive wear and higher failure probability. A second consideration is that the check valves need not be installed in an opposed configuration in the same line. Installing opposed valves in the same line results in high pressure surges that will cause the valves to alternately slam into the valve seats. The third consideration is the additional measure of safety gained by a completely separate system. If one line should rupture or break, the crew can return on the gas supplied by the second line. As a result of this investigation, it was determined that the dual line offers more advantages from a reliability standpoint than does the single line. It was recommended that the present design remain as a part of the over-all cryogenic storage system configuration.

5.2.3 Single-Tank Cryogenic Storage System for Airframe 009

A reliability analysis was performed to determine the effect on crew safety if a single-tank cryogenic storage system is used in Airframe 009. The fuel cells will be carrying a dummy load throughout the mission and electrical power will be supplied by battery. Based on these considerations, a single-tank hydrogen storage system will be adequate, since it will not affect crew safety.

The oxygen storage system was investigated further because crew safety is directly dependent on oxygen supply. The system studied contained enough components to assure check-out and reactant delivery. The system contained the same redundant control circuitry as the dual-tank system. The results of the analysis showed the system reliability to be 0.999998 for the twenty-six minute mission time. This high reliability is a result of high reliability components, minimum number of components, and short mission time.

Reliability Engineering, considering the preceding analysis, approved the use of a single-tank cryogenic storage system in Airframe 009. The oxygen system schematic is shown in Figure 5.6.

In the event that at some time in the future a requirement is generated to use fuel cells for purposes of supplying primary electrical power, a reliability analysis of dual hydrogen supply system installation and operation must also be generated.

[redacted]

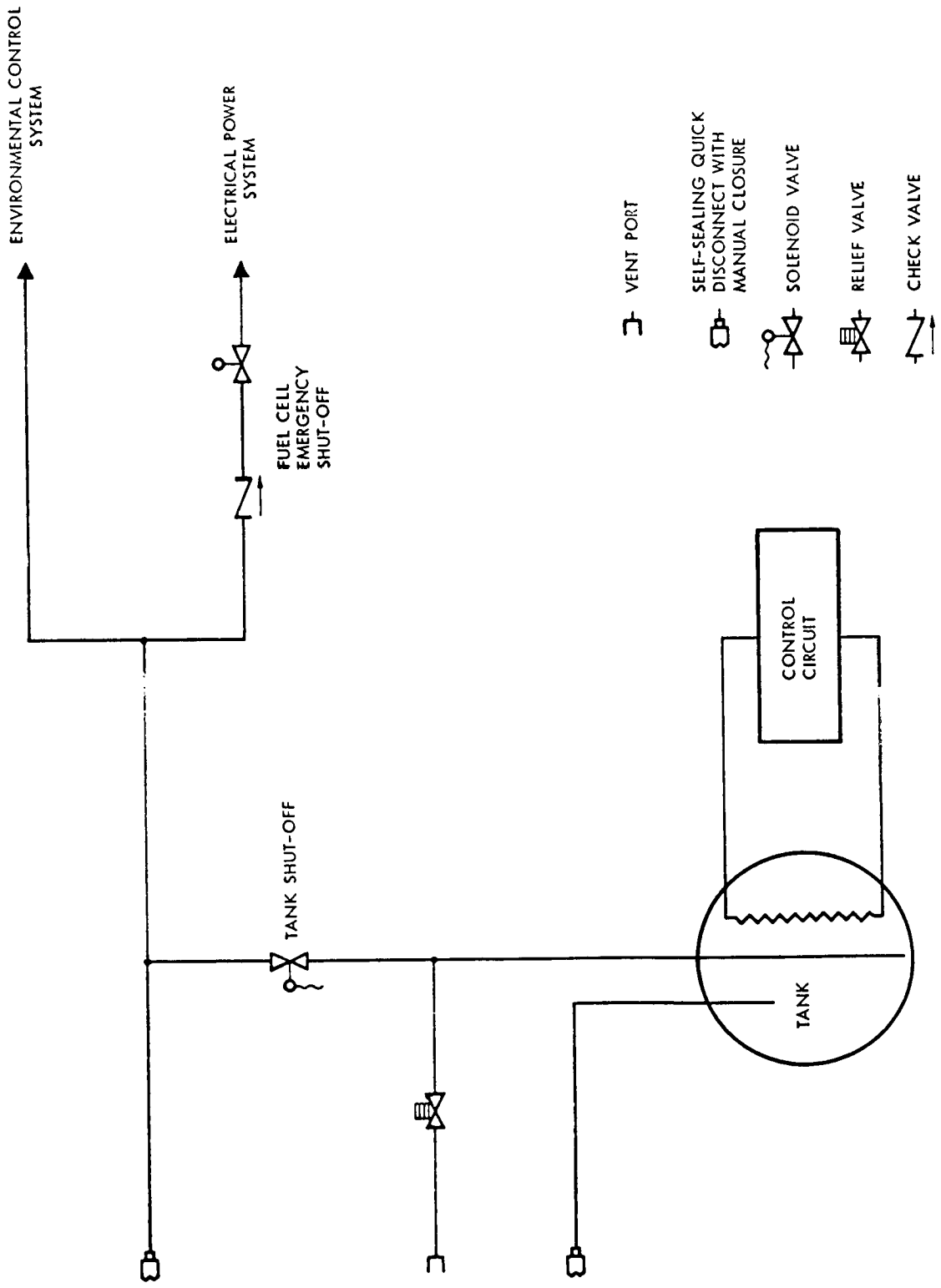

Figure 5.6 Airframe 009 Oxygen System Schematic

[redacted]

5.2.4 Deletion of Single-Tank Five-Minute Emergency Requirement

A reliability study was performed to determine the probability of a command module puncture and an oxygen storage system failure occurring within the mission time period. This situation would require the operation of a single-tank system under emergency flow conditions for 5 minutes. The analysis showed the probability of occurrence of the puncture and the system failure within the mission time period of 336 hours to be less than one occurrence in a million missions.

In view of the high improbability of the occurrence of a puncture, the requirement for a capability to maintain command module pressure for 5 minutes employing only one O_2 tank was deleted.

5.2.5 Command Module Repressurization

Beech Aircraft Corporation has suggested resizing the heaters to provide the one-hour repressurization utilizing both cryogenic oxygen storage tanks. The heaters that are currently utilized to maintain pressure in the cryogenic storage system provide sufficient heat for repressurization of the command module in one hour, employing one cryogenic oxygen storage tank. Beech indicated that the required electrical power will be half the present value if both tanks are utilized for repressurization.

Based on the following considerations, Reliability Engineering recommended that the heaters be resized to allow repressurization by both cryogenic oxygen tanks in one hour.

5.2.5.1 Repressurization of the command module is required only after a command module puncture or an extra-vehicular operation.

5.2.5.2 Extra-vehicular operation is not part of the mission plan. Any failures occurring will have to be handled by abort procedure because there is no provision for service module or command module external repairs.

5.2.5.3 The probability of a command module puncture coupled with an oxygen subsystem failure is less than one occurrence in a million missions.

5.2.5.4 In the event of a depressurization of the CM, the crew will don space suits. With crew in suits the length of time taken to repressurize the CM is not critical.

5.2.5.5 Reliability of the heater system will be enhanced if power requirements are lowered; for example, lower power requirements would result in extended heating intervals and fewer switching operations.

5.3 Qualification Test

Laboratory qualification of the cryogenic storage system and reliability assessment from data will be performed by the subcontractor.

5.3.1 Test-Oriented Reliability Logic Diagram

Figure 5.7 depicts the test-oriented reliability logic diagram for the cryogenic storage system. The logic diagram will aid in establishing test continuity and in programming the collection of data for the assessment of reliability by illustrating the interaction of the system components.

5.3.2 Criticality and Hardware Requirements

Table 5.4 designates the criticality class, as defined in subsection 2.4, for the components of the cryogenic subsystem. The table enumerates the hardware requirements for a minimum qualification program as established in subsection 2.5 of SID 62-109-3. The location of the components in the spacecraft is indicated by spacecraft zone numbers as defined in subsection 4.2 of SID 62-109-3.

Table 5.4 Cryogenic System Parameters for Qualification Testing

Component	S/C Zone	Criticality	Required Hardware
Oxygen subsystem	1 and 3	3	4 (less one tank each)
Hydrogen subsystem	1 and 3	3	4 (less one tank each)

5.4 Qualification Test Schedule

Figures 5.8 and 5.9 display the qualification test schedule for the cryogenic storage system and define the test utilization of hardware enumerated in Table 5.4. The specific test levels to be applied in qualification testing are found in the tables of environmental test criteria in subsection 4.2 of SID 62-109-3 and are a function of the zone location of the equipment in the spacecraft. These zone numbers are defined in Table 5-12 of SID 62-109-3.

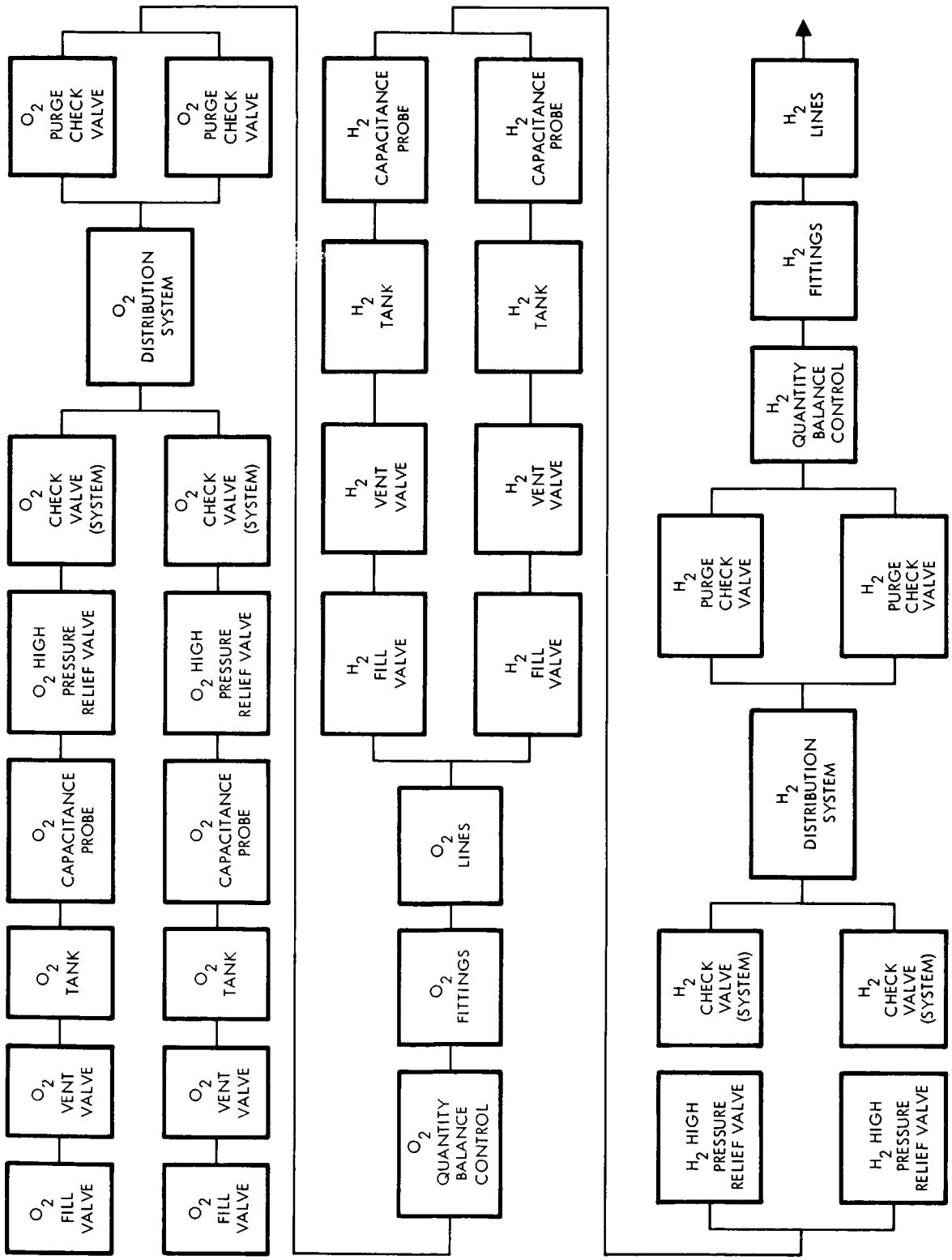

Figure 5.7 Cryogenic Reliability Assessment Model

[redacted]

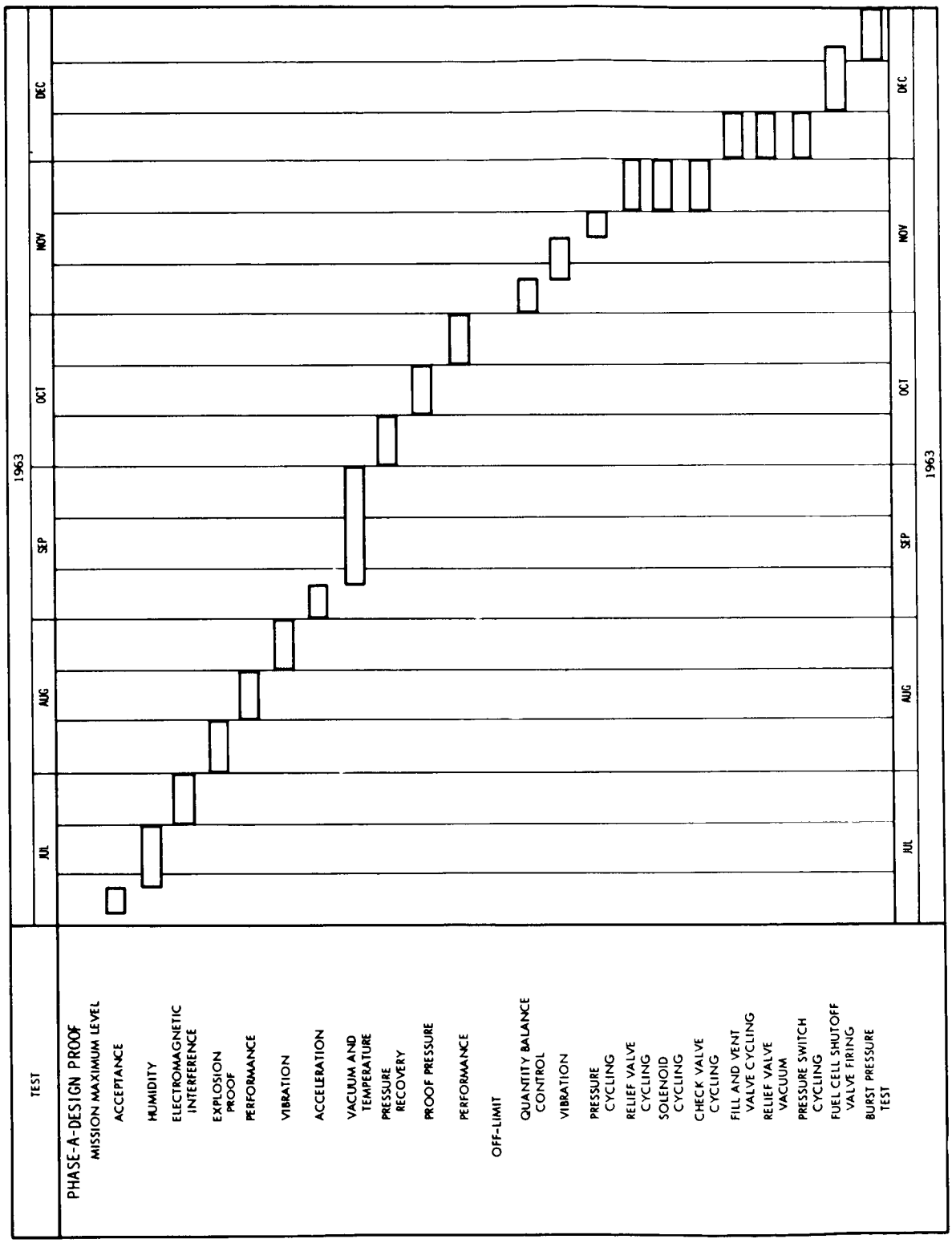

Figure 5.8 Cryogenic Subsystem Qualification Test Schedule, Phase A

[redacted]

[redacted]

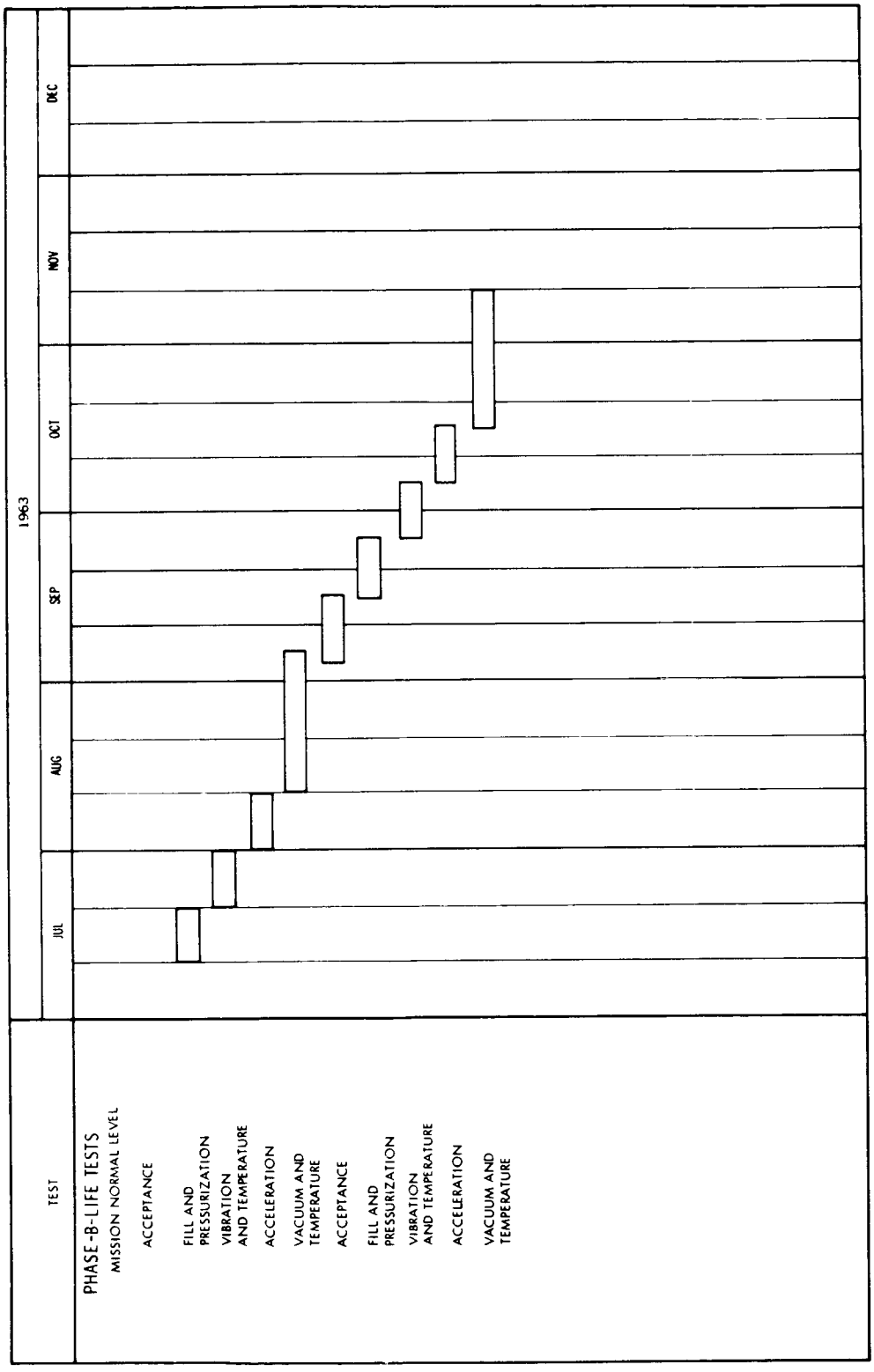

Figure 5.9 Cryogenic Subsystem Qualification Test Schedule, Phase B

[redacted]

LIST OF CURRENT PAGES

Page No.	Date	Revised	Classification

SECTION 6.0

SERVICE MODULE REACTION CONTROL SUBSYSTEM

6.1 Introduction

Table 6.1, **summarizes** in tabulated form the reliability analysis of the service module reaction control subsystem.

Evaluation of the presently proposed quad subsystem, evaluation of a modification to the presently proposed quad subsystem and a subsystem failure effects analysis have been performed for the service module reaction control subsystem. As a result of these analyses it has been determined that both the present quad and the modified quad meet the apportioned mission and crew safety reliabilities. Table 6.2 presents a summary of the results based on component apportioned reliability rates and on the component predicted failure rates.

6.2 Analysis

A reliability analysis was performed on the service module reaction control subsystem to investigate modifications proposed for the present quad system so that the exact magnitude of possible increased reliability could be determined. The modifications considered were (1) the physical isolation of the reaction control engines in order to minimize the extent of the damage in the event of an explosive engine failure, and (2) the addition of two solenoid valves in each quadrant to provide for a more selective engine shut-down capability. If an engine valve should fail in the present quad system, it would be necessary to shut down four engines. The proposed modifications would necessitate the shut down of only two engines if an engine valve should fail.

The results of the analysis presented in Table 6.2 indicate that the present quad subsystem is more reliable than the modifed subsystem for all cases and criteria considered. One reason why the modified subsystem has a lower reliability than the quad subsystem is because additional hardware is required to provide more selective engine shut-down capability. The opinion is that the modifications would be detrimental to the subsystem from a reliability viewpoint. The evaluation of subsystem crew safety is based on results of a derived density function. Table 6.1 presents a list of the component failure rates used in this study.

The diagrams in Figure 6.1 present in schematic form the component arrangements considered in the evaluation of the present and modified subsystem. A logic network for one quadrant utilized in the mathematical modelling to derive subsystem reliability comparison values is shown in Figure 6.2.

[redacted]

TABLE 6.1

SERVICE MODULE REACTION CONTROL
SUBSYSTEM MISSION RELIABILITY (LOR)

COMPONENT NAME	ITEMS	MISSION TIMES (HRS.)	FAILURE RATE PER 10^6 HOURS OR CYCLES			RELIABILITY		
			APPORTIONED	PREDICTED	ASSESSED	APPORTIONED	PREDICTED	ASSESSED
S/M Reaction Control Subsystem Components	-	-	-	-	N.A.	.996000[B]	.998434[A]	N.A.
Helium Tank	4	336 hrs.	0.1780	0.0800[1]	N.A.	.999940	.999973[A]	N.A.
Oxidizer Fill & Drain Valve	12	336 hrs.	0.0030*	0.1390[1]	N.A.	.999999*	.999953[A]	N.A.
Solenoid Valve	16	1 Cycle	11.0000	11.0000[1]	N.A.	.999989	.999989[A]	N.A.
Regulator	16	336 hrs.	2.9760[1]	7.5000[1]	N.A.	.999000	.997480[A]	N.A.
Check Valve	32	336 hrs.	2.9760 (0.0119**)	2.3000[1]	N.A.	.999996**	.999227[A]	N.A.
Relief Valve Assy.	8	336 hrs.	5.5920	3.9190[1]	N.A.	.998000	.998683[A]	N.A.
Vent Valve, Oxidizer & Fuel	8	336 hrs.	0.0030*	0.1390[1]	N.A.	.999999*	.999953[A]	N.A.
Oxidizer Tank	4	336 hrs.	0.2970	1.6010[1]	N.A.	.999900	.999462[A]	N.A.
Fuel Tank	4	336 hrs.	0.2970	1.6010[1]	N.A.	.999900	.999462A	N.A.
Propellant Gaging (Qty)	1	336 hrs.	2.0000	1.0000[1]	N.A.	.999328	.999664[A]	N.A.
Engine	16	336 hrs.	8.9280	39.4640[2]	N.A.	.997000	.986740[A]	N.A.

DATA SOURCE:
1. AVCO
2. Marquardt

*Requirement as listed includes Valve W/cap

**For Quad Arrangement

N.A.: Not Available

Mathematical Technique:

A - Analytical Model (Logic Diagram and known failure rate data)
B - Analytical Method (Weighted Subjective Experience)

[redacted]

Table 6.2 Reaction Control Subsystem Reliability Comparison

Configuration	Mission Success (3 out of 4)	Crew Safety (2 out of 4)
Based on Component Apportioned Failure Rates		
Quad	0.999732	0.999989
Modified quad	0.999675	0.999971
Reliability Apportionment	0.99600	0.999970
Based on Component Predicted Failure Rates		
Quad	0.996370	0.999398
Modified quad	0.994464	0.999013
Reliability Apportionment	0.99600	0.999970

6.3 Failure Effects Analysis

Table 6.3 presents results of the failure effects analysis of the service module reaction control subsystem components.

This analysis provides a basis for formulating mathematical logic and is compatible with previously defined subsystem logic that is still valid. Equations expressing in mathematical form the subsystem logic necessary to obtain the subsystem reliability values are presented in Figure 6.3.

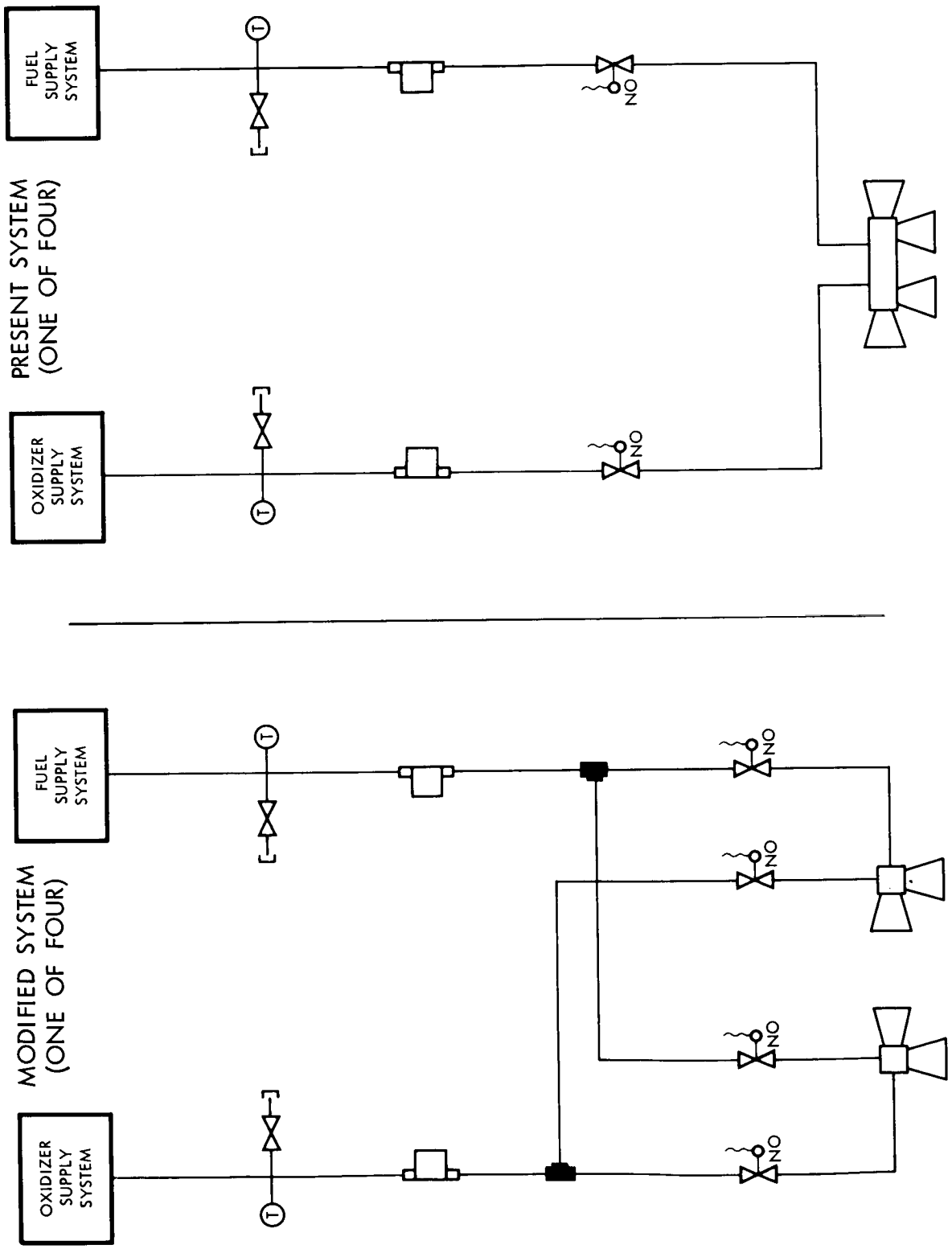

Figure 6.1 Service Module Reaction Control System Schematic

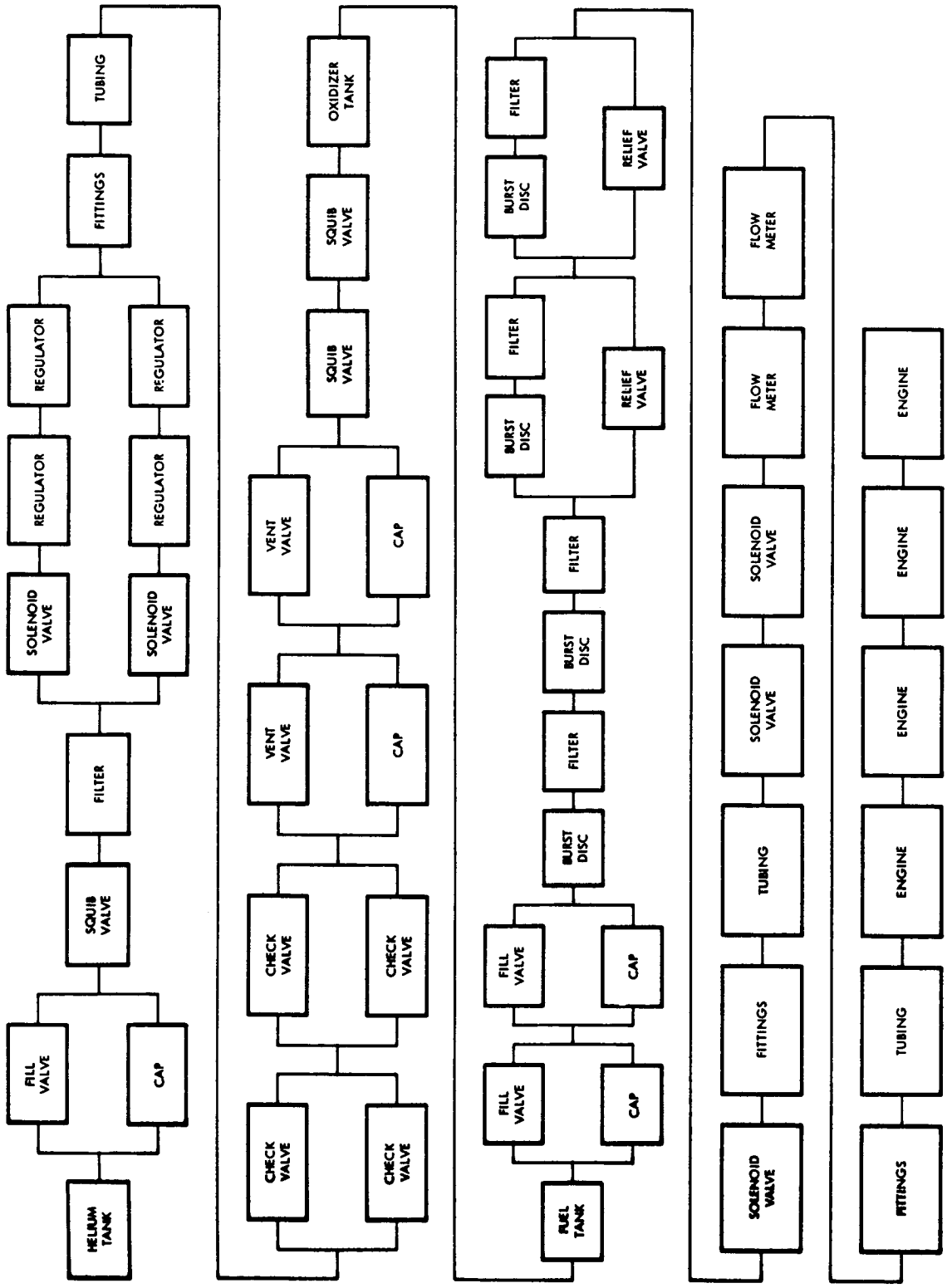

Figure 6.2 C/M RCS Test Oriented Reliability Logic Diagram

[redacted]

REGULAR QUAD

(Two of Four for Minimum Control)

MISSION SUCCESS

$$R_{\text{mission success}} = \left[R^4_{\text{module}}\right]\left[R^4_{2\ \text{module}} + 4R^3_{2\ \text{module}}(1 - R_{2\ \text{module}})\,R^2_{\text{solenoid}} + 6R^2_{2\ \text{module}}(1 - R_{2\ \text{module}})^2\,R^4_{\text{solenoid}}\right] + \left[4R^3_{\text{module}}(1 - R_{1\ \text{module}})\,R^2_{\text{solenoid}}\right]\left[R^3_{2\ \text{module}} + 3R^2_{2\ \text{module}}(1 - R_{2\ \text{module}})\,R^2_{\text{solenoid}}\right]$$

MODIFIED QUAD

(Two of Four for Minimum Control)

MISSION SUCCESS

$$R_{\text{mission success}} = \left[R^4_{1\ \text{propellant supply}}\,R^8_{1\ \text{engine subsystem}}\right]\left\{\left[R^4_{2\ \text{propellant supply}}\,R^8_{2\ \text{engine subsystem}}\right] + \left[4\,R^3_{2\ \text{propellant supply}}\,R^8_{2\ \text{engine subsystem}}(1 - R_{2\ \text{propellant supply}})\,R^4_{\text{solenoid valve}}\right] + 6\left[R^2_{2\ \text{propellant supply}}\,R^8_{2\ \text{engine subsystem}}(1 - R_{2\ \text{propellant supply}})^2\,R^8_{\text{solenoid valve}}\right] + 8\left[R^4_{2\ \text{propellant supply}}\,R^7_{2\ \text{engine subsystem}}\right.\right.$$

Figure 6.3 Quad System Mathamatical Models

$$(1 - R_{2\ \text{engine subsystem}})\ R^{2}_{\text{solenoid valve}}\Big]$$

$$+\ 28\Big[R^{4}_{2\ \text{propellant supply}}\ R^{6}_{2\ \text{engine subsystem}}$$

$$(1 - R_{2\ \text{engine subsystem}})^{2}\ R^{4}_{\text{solenoid valve}}\Big]$$

$$+\ 32\Big[R^{3}_{2\ \text{propellant supply}}\ R^{7}_{2\ \text{engine subsystem}}$$

$$(1 - R_{2\ \text{propellant supply}})$$

$$(1 - R_{2\ \text{engine subsystem}})\ R^{6}_{\text{solenoid valve}}\Big]$$

$$+\ \text{Three Failure (Negligible)}\Big\}$$

$$+\ 4\Big[R^{3}_{1\ \text{propellant supply}}\ R^{8}_{1\ \text{engine subsystem}}$$

$$(1 - R_{1\ \text{propellant supply}})\ R^{4}_{\text{solenoid valve}}\Big]$$

$$\Big\{\Big[R^{3}_{2\ \text{propellant supply}}\ R^{8}_{2\ \text{engine subsystem}}\Big]$$

$$+\ 8\Big[R^{3}_{2\ \text{propellant supply}}\ R^{7}_{2\ \text{engine subsystem}}$$

$$(1 - R_{2\ \text{engine subsystem}})\ R^{2}_{\text{solenoid valve}}\Big]$$

$$+\ 3\Big[R^{2}_{2\ \text{propellant supply}}\ R^{8}_{2\ \text{engine subsystem}}$$

$$(1 - R_{2\ \text{engine subsystem}})\ R^{4}_{\text{solenoid valve}}\Big]$$

$$+\ \text{Three Failure (Negligible)}\Big\}$$

$$+\ \Big[8\ R^{4}_{1\ \text{propellant supply}}\ R^{7}_{1\ \text{engine subsystem}}$$

$$(1 - R_{1\ \text{engine subsystem}})\ R^{3}_{\text{solenoid valve}}\Big]$$

Figure 6.3 Quad System Mathamatical Models (Cont)

$$
\begin{aligned}
&\Big\{\Big[R_2^4 \text{ propellant supply } R_2^7 \text{ engine subsystem}\Big] \\
&+ 4\Big[R_2^3 \text{ propellant supply } R_2^7 \text{ engine subsystem} \\
&\quad (1 - R_2 \text{ propellant supply})\, R^4_{\text{solenoid valve}}\Big] \\
&+ 7\Big[R_2^4 \text{ propellant supply } R_2^6 \text{ engine subsystem} \\
&\quad (1 - R_2 \text{ engine subsystem})\, R^2_{\text{solenoid valve}} \\
&+ \text{Three Failure (Neglibible)}\Big]\Big\}
\end{aligned}
$$

Figure 6.3 Quad System Mathamatical Models (Cont)

6.4 Qualification Tests

Qualification tests on the reaction control subsystem engines conform to the general requirements of MIL-E-5151 and include the following:

1. Calibration tests
2. Environmental tests (Design proof tests)
3. Electromagnetic interference and susceptibility tests
4. Mission simulation life tests

The number of test engines is predicated upon the requirement to assess compliance with the procurement specification and off-limit modes of operation. The number of qualification test samples for the components of the propellant feed subsystem is based on the criticality index, limited life requirements, service life considerations, and multiple use of the same test articles.

Table 6.3 Service Module Reaction Control System Failure Effects Analysis

Item	Function	Failure Type	Mission Phase	Failure Effect On Component Performance	Failure Effect On Sub-Systems Performance	Failure Effect On Apollo	Failure Detection	Possible Crew Action
Helium tank	Stores pressurization gas	1. Rupture 2. Leak at connection (a) Excessive vibration	1 through 56	Loss of helium pressurization gas	Rendered inoperative	Loss of redundancy	Loss of pressurization gas can be detected by use of the pressure gage located on the display console.	None
Helium solenoid valve (crew operated normally open)	Emergency shutoff of pressure to propellant supply in case of regulator failure	1. Failure to close (a) Short or broken solenoid coil wire (b) Binding of armature	1 through 56	Loss of pressurization (but precludes two regulator failures)	Renders RCS module inoperative (but precludes two regulator failures)	Loss of redundancy	Failure No. 1 can be detected since "talkback" information concerning the position of the valve is provided on the display console.	None
		2. Leak (a) Damaged seat	1 through 56	Eventual loss of pressurization gas	Eventually rendered inoperative	Loss of redundancy	Detection of the failure mode represented by failure No. 2 is possible thru the use of the pressure gage located on the display panel. The exact component however, cannot be identified.	Valve cycling
		3. Premature operation	1 through 56	None	None	None	Failure No. 3 can be detected since "talkback" information concerning the position of the valve is provided on the display console	Reopen valve

[redacted]

Table 6.3 Service Module Reaction Control System Failure Effects Analysis (Continued)

Item	Function	Failure Type	Mission Phase	Failure Effect On Component Performance	Failure Effect On Sub-Systems Performance	Failure Effect On Apollo	Failure Detection	Possible Crew Action
Helium fill and drain valve with cap	Ground: Provides access for GSE Inflight: Maintains pressure seal	1. Leak (mechanical) (a) Excessive vibration (flight)	1 through 56	Loss of helium pressurization gas	Rendered inoperative	Loss of redundancy	The loss of pressurization gas can be detected by use of the pressure gage located on the display console. The exact component, however, cannot be identified.	None
Regulator	Regulates propellant feed pressure	1. Failure to open (a) Binding (b) Broken spring	1 through 56	Loss of redundancy	Minor mission degradation	None	No single failure detection capability is available.	Actuation of helium solenoid shutoff valve
		2. Failure to close (a) Binding (b) Contamination	1 through 56	Loss of redundancy	Minor mission degradation	None		Actuation of helium solenoid shutoff valve
		3. "Lock up" (a) Damaged seat (b) Contamination	1 through 56	Loss of redundancy	Minor mission degradation	None		Actuation of helium solenoid shutoff valve
Helium check valve	Prevents mixing of fuel and oxidizer vapors in case of positive expulsion device failure	1. Failure to open (a) Binding	1 through 56	Loss of redundancy	Minor degradation	None	No detection capability available.	None
		2. Failure to close (a) Broken spring (b) Contamination (c) Damaged seat	1 through 56	None if one or two in parallel fail; possible explosion if two or more in series fail	Possible damage to service module major degradation	Possible loss of spacecraft; necessitates abort		None

Table 6.3 Service Module Reaction Control System Failure Effects Analysis (Continued)

Item	Function	Failure Type	Mission Phase	Failure Effect On Component Performance	Failure Effect On Sub-Systems Performance	Failure Effect On Apollo	Failure Detection	Possible Crew Action
Relief valve assembly (relief valve, filter, and burst)	Provides pressure relief in the event of overpressure conditions	1. Failure to open (a) Binding	1 through 56	Possible rupture of lines; loss of propellant pressure	Possibly rendered inoperative	Possible loss of redundancy	Failure No. 1 can be detected and identified by use of the pressure gage located on the display console.	None
		2. Failure to close (a) Broken spring (b) Contamination (c) Binding	1 through 56	Loss of pressurization	Rendered inoperative	Loss of redundancy	Detection of the failure mode represented by failure No. 2 is possible thru the use of the pressure gage located on the display panel. The exact component however, cannot be identified.	None
Helium tubing	Distributes and confines pressurization gas	1. Rupture	1 through 56	Loss of pressurization	Rendered inoperative	Loss of redundancy	Failure No. 1 can be detected by use of the pressure gage located on the display console, but identification location cannot be accomplished.	None
		2. Restricted flow (a) Contamination (b) "Pinch"	1 through 56	Reduction in flow pressure	Reduced performance	Possible loss of redundancy	Failure No. 2 can be detected by use of the pressure gage and the propellant gaging system, but no identification capabilities exist.	None

Table 6.3 Service Module Reaction Control System Failure Effects Analysis (Continued)

Item	Function	Failure Type	Mission Phase	Failure Effect On Component Performance	Failure Effect On Sub-Systems Performance	Failure Effect On Apollo	Failure Detection	Possible Crew Action
Helium fittings	Provides connections and maintains seal	1. Rupture	1 through 56	Loss of pressurization	Rendered inoperative	Loss of redundancy	Loss of pressurization gas can be detected by use of the pressure gage located on the display console. Identification of the location, however, cannot be accomplished.	None
Positive explusion tank	Contains propellant in usable condition	1. Tank rupture	1 through 56	Loss of pressure	Rendered inoperative	Loss of redundancy	Loss of pressurization gas can be detected by use of the pressure gage located on the display console. Identification of the location, however, cannot be accomplished.	Actuation of helium shutoff valves
		2. Tank leak at connection	1 through 56	Eventual loss of pressure	Eventually rendered inoperative	Loss of redundancy		Actuation of helium shutoff valves
		3. Failure of positive expulsion device	1 through 56	Reduced flow pressure and possible loss of engine start capability	Rendered inoperative	Loss of redundancy and possible explosion which would necessitate an abort	Detection of the resulting condition is possible through the use of the propellant gaging system.	Actuation of helium shutoff valves
Propellant fill and drain valve with cap	Ground: provides access for GSE Inflight: maintains pressure seal	1. Leak (a) Excessive vibration	1 through 56	Loss of propellant	Rendered inoperative	Loss of redundancy	Detection of the resulting condition is possible through the use of the propellant gaging system, but identification capabilities in regards to location and cause do not exist.	None

Table 6.3 Service Module Reaction Control System Failure Effects Analysis (Continued)

Item	Function	Failure Type	Mission Phase	Failure Effect On Component Performance	Failure Effect On Sub-Systems Performance	Failure Effect On Apollo	Failure Detection	Possible Crew Action
Propellant fittings	Provides connections and maintains seal	1. Rupture	1 through 56	Loss of propellant	Rendered inoperative	Loss of redundancy	Detection of the resulting condition is possible through the use of the propellant gaging system, but identification capabilities in regards to location and cause do not exist.	None
Propellant tubing	Distributes and contains propellant	1. Rupture	1 through 56	Reduction in flow pressure	Reduced performance	Possible loss of redundancy	Detection of the resulting condition is possible through the use of the propellant gaging system, but identification capabilities in regards to location and cause do not exist.	None
		2. Restricted flow (a) Contamination (b) "Pinch"	1 through 56	Reduction in flow pressure	Reduced performance	Possible loss of redundancy		None
Propellant solenoid valve (crew operated, normally open)	Emergency shutoff of propellant to engines in the event of an engine valve open failure	1. Failure to close	1 through 56	Loss of propellant and possible explosion	Possible explosion	Loss of redundancy and possible explosion	Detection is possible since "talk-back" information concerning the position of the valve is provided on the display console.	Valve cycling

Table 6.3 Service Module Reaction Control System Failure Effects Analysis (Continued)

Item	Function	Failure Type	Mission Phase	Failure Effect On Component Performance	Failure Effect On Sub-Systems Performance	Failure Effect On Apollo	Failure Detection	Possible Crew Action
		2. Leak (a) Damage seat	1 through 56	Loss of propellant and possible explosion	Possible explosion	Loss of redundancy and possible explosion	Detection of the resulting condition is possible through the use of the propellant gaging system, but identification capabilities in regards to location and cause do not exist.	None
		3. Premature operation	1 through 56	None	None	None	Detection is possible since "talkback" information concerning the position of the valve is provided on the display console.	Reopen valve
Solenoid injector valve (fuel and oxidizer)	Provides propellant to RCS engine in required amounts upon command	1. Failure of valve to open (a) Open coil (b) Excess temperature (c) Contamination	1 through 56	Engine rendered inoperative	Loss of redundancy	Loss of redundancy	No detection capability available.	Utilize manual operation
		2. Leak or failure of valve to close (a) Weak spring (b) Excess vibration (c) Residual magnetism (d) Wear of poppet (e) Contamination	1 through 56	Engine rendered inoperative, possible explosion	Loss of redundancy and possible explosion	Loss of redundancy		Detect failure and actuate propellant shutoff valves

[redacted]

Table 6.3 Service Module Reaction Control System Failure Effects Analysis (Continued)

Item	Function	Failure Type	Mission Phase	Failure Effect On Component Performance	Failure Effect On Sub-Systems Performance	Failure Effect On Apollo	Failure Detection	Possible Crew Action
		3. Frequency response rate out of tolerance (a) Shorted coil (b) Contamination	1 through 56	Performance degradation of engine	Minor degradation	Minor degradation	No detection capability available.	None
		4. Pressure drop out of tolerance (a) Cold flow of seat material	1 through 56	Performance degradation of engine	Minor degradation	Minor degradation		None
		5. Spontaneous actuation (a) RF noise	1 through 56	Excessive use of propellant	Minor degradation	None		None
Teflon seal	Ensures zero propellant leakage at interface of injector valve and head	1. Leak	1 through 56	Reduced engine thrust due to improper oxidizer-to-fuel ratio. Possible explosion if fuel and oxidizer can mix	Minor degradation, possible explosion, and loss of redundant propellant	Possible loss of redundancy	No detection capability available.	None
Injector head	Provides proper propellant flow pattern to combustion chamber	1. Leak (a) Vibration (b) Temp. cycle	1 through 56	Possible explosion and loss of engine	Possible loss of redundancy	Possible loss of redundancy	No detection capability available.	None
		2. Improper oxidizer-to-fuel ratio (a) Corrosion (b) Contamination	1 through 56	Performance degradation of engine	Minor degradation and loss of redundant propellant	Possible loss of redundancy		None
Metal seal	Prevents hot leakage at interface of injector head and combustion chamber	1. Leak (a) Deterioration	1 through 56	Engine failure due to excessive head temperature	Loss of redundancy	Minor degradation and loss of redundancy	Possible detection of the resulting condition may exist in the in-flight test system, but present status is unknown.	None

[redacted]

Table 6.3 Service Module Reaction Control System Failure Effects Analysis (Continued)

Item	Function	Failure Type	Mission Phase	Failure Effect On Component Performance	Failure Effect On Sub-Systems Performance	Failure Effect On Apollo	Failure Detection	Possible Crew Action
Combustion chamber	Maintains shape during engine operation	1. Burn through (a) Pin point erosion due to incomplete surface coating (b) Base metal contamination	1 through 56	Engine failure	Loss of redundancy	Minor degradation and loss of redundancy	No detection capability available.	None
		2. Explosion (a) Throat restriction	1 through 56	Loss of engine and possible damage to surrounding equipment	Possible loss of RCS module due to explosion	May possibly cause abort		None
Engine clamps, stud, etc.	Holds engine assembly together and properly attached to service module	1. Structural failure (a) Fatigue (b) Assembly error (over torquing, etc.)	1 through 56	Possible loss of redundancy	Possible loss of redundancy	Possible loss of redundancy	No detection capability available.	None

[redacted]

6.4.1 Reliability Logic Diagram

Figure 6.4 depicts the test oriented reliability logic diagram for the service module reaction control system. The diagram will aid in establishing test continuity and in programming the collection of data for the assessment of reliability by illustrating the inter-relationship of the components.

6.4.2 Criticality and Hardware Requirements

6.4.2.1 Engines

Table 6.4 designates the criticality class, as defined in subsection 2.4 of SID 62-109-3, for the components of the service module reaction control system engines. The table enumerates the hardware requirements for a minimum qualification program established in subsection 2.5 of the above reference. The location of the components in the spacecraft is indicated by spacecraft zone numbers as defined in subsection 4.2 of SID 62-109-3.

Table 6.4 S/M RCS Rocket Engine Parameters for Qualification Testing

Component	S/C Zone	Criticality	Required Hardware
Thrust chamber	1	3	13
Injector	1	3	9
Fuel valve	1	3	10
Oxidizer valve	1	3	10

6.4.2.2 Propellant Feed

Table 6.5 designates the criticality class, as defined in subsection 2.4 of SID 62-109-3 for the components of the S/M RCS propellant feed. The table enumerates the hardware requirements for a minimum qualification program as established in Section 2.5 of SID 62-109-3. The distribution of the hardware through the subsystem qualification test phases as described in subsection 2.3 (of SID 62-109-3) is shown. (Phase A-1 tests are conducted at maximum levels of environment anticipated for a typical Apollo mission. Phase A-2 consists of off-limit tests to verify design margins. Phase B consists of mission simulation life tests). The location of the components in the spacecraft is indicated by zone numbers, as defined in subsection 4.2 of SID 62-109-3.

[redacted]

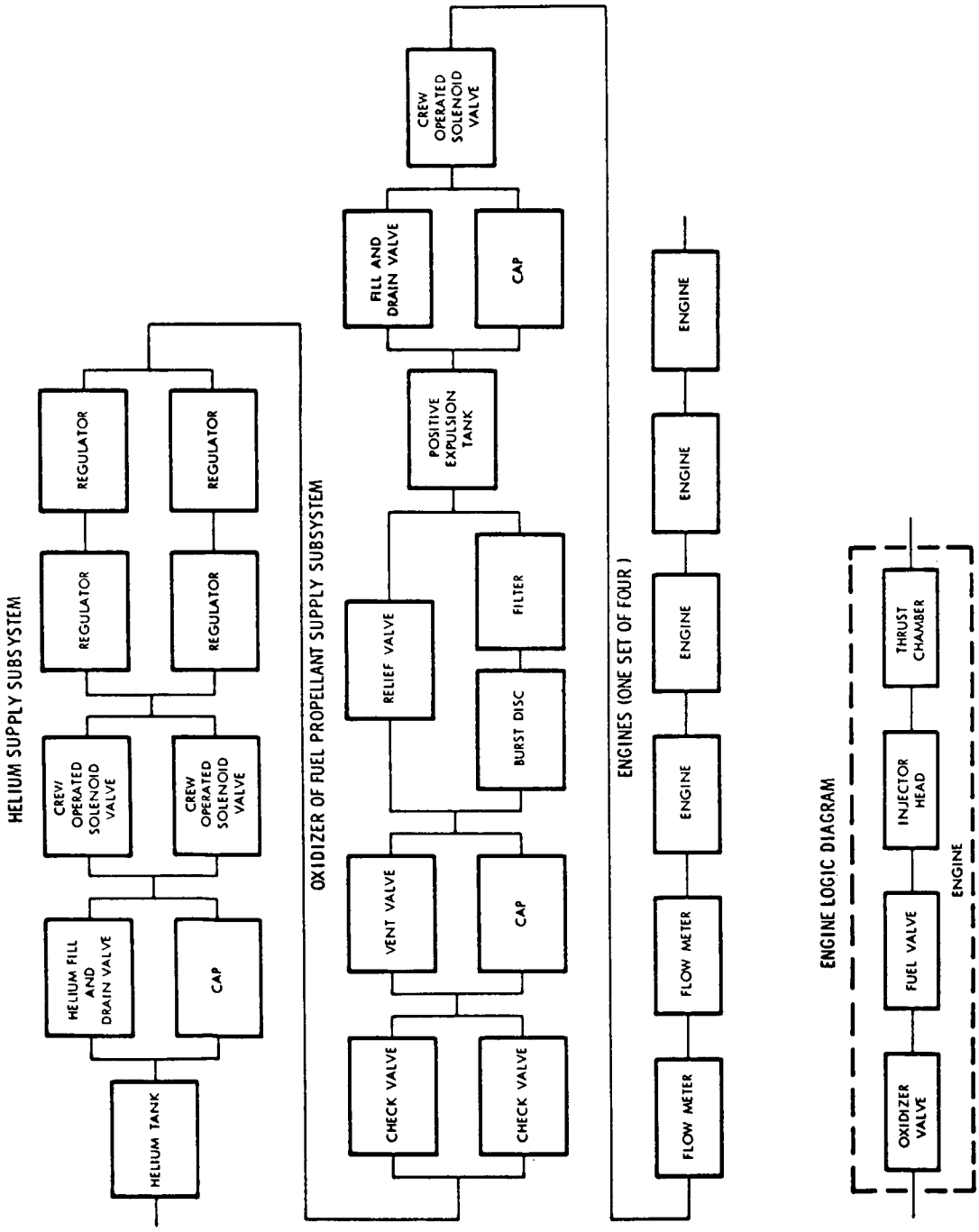

Figure 6.4 S/M RCS Test Oriented Reliability Logic Diagram

[redacted]

Table 6.5 S/M RCS Propellant Feed Parameters for Qualification Testing

Component	S/C Zone	Criticality	Required Hardware	Qualification Test Phase Distribution		
				A-1	A-2	B
Disconnect	1	3	4	1	1	2
Regulator	1	3	4	1	1	2
Valve	1	3	4	1	1	2
Tanks (3 types)	1	3	4	4	4	0

6.5 Qualification Test Schedule

6.5.1 Engine

Figure 6.5 is the qualification test schedule for the S/M RCS engines and defines the test utilization of hardware enumerated in Table 6.4. The qualification tests will use 8 complete engines and 4 replacement thrust chambers. The thirteenth thrust chamber will be used for component testing. The specific test levels to be applied in qualification testing are found in the tables of environmental test criteria in subsection 4.2 of SID 62-109-3 and are a function of the zone location of the equipment in the spacecraft. These zone numbers are given in Table 6.4.

6.5.2 Propellant Feed

Figure 6.6 presents the qualification test schedules for the S/M RCS propellant feed components and defines the test utilization of the hardware enumerated in Table 6.5. The specific test levels to be applied in qualification testing are found in the tables of environmental test criteria in subsection 4.2 of SID 62-109-3, and are a function of the zone location of the equipment in the spacecraft. These zone numbers are given in Table 6.5.

[redacted]

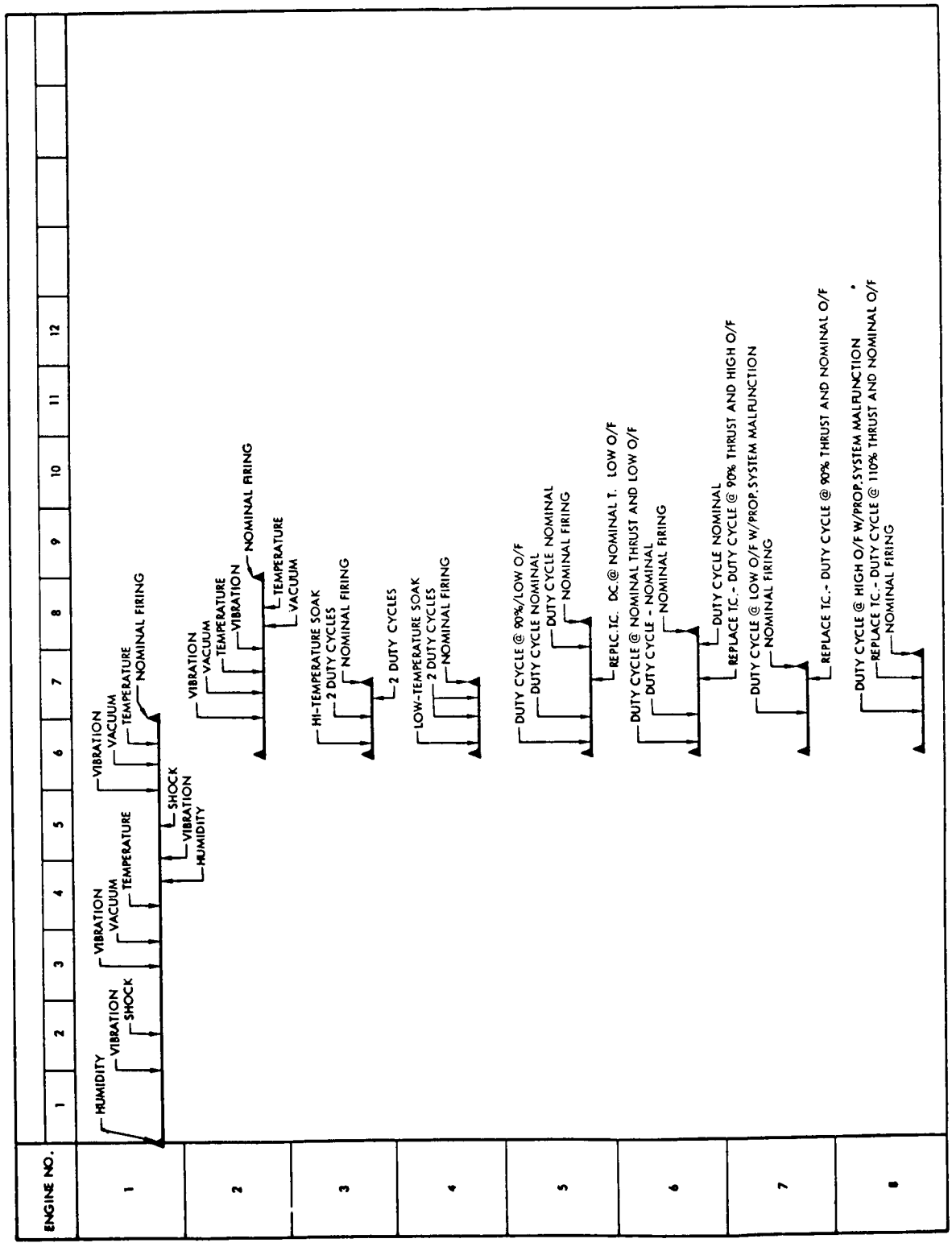

Figure 6.5 S/M RCS Engine Test Schedule

[redacted]

NOTE: EACH BLOCK COVERS ONE WORK WEEK

DISCONNECT, FILL, HELIUM DISCONNECT, TEST, HELIUM DISCONNECT, FILL, OXIDIZER DISCONNECT, TEST, OXIDIZER DISCONNECT, VENT, OXIDIZER DISCONNECT, FILL, FUEL DISCONNECT, TEST, FUEL DISCONNECT, VENT, FUEL	GROUND HALF 1	1 2 18 11 8 9 16 11 12
	2	1 2 18 11 8 9 11 12
	3	1 18 8 9 16
	4	1 18 8 9 11
	AIRBORNE HALF 1	1 2 18 6 8 9 10 16 6 12
	2	1 2 18 6 8 9 10 6 12
	3	1 15 13 16
	4	1 15 13 6
VALVE, SOLENOID, HELIUM VALVE, SOLENOID, FUEL VALVE, SOLENOID, OXIDIZER	1	1 3 4 6 5 8 9 16 12
	2	1 3 4 6 5 8 9 6 12
	3	1 13 15 16
	4	1 13 15 6
S/M RCS SOLENOID VALVES REGULATOR, PRESSURE, HELIUM	1	1 6 5 8 9 16 12
	2	1 6 5 8 9 16 12
	3	1 13 15 16
	4	1 13 15 16
S/M RCS REGULATOR VALVE, RELIEF, HELIUM	1	1 2 6 5 8 9 10 6 12
	2	1 2 6 5 8 9 10 17 12 16
	3	1 15 13 6 12
	4	1 15 13 16 12
S/M RCS RELIEF VALVE VALVE, CHECK	1	1 18 6 8 9 6 12
	2	1 18 6 8 9 6 12
	3	1 13 15 17 12
	4	1 13 15 17 12

LEGEND

1 ACCEPTANCE
2 HUMIDITY
3 ELECTROMAGNETIC INTERFERENCE
4 EXPLOSIVE ATMOSPHERE
5 ACCELERATION
6 VIBRATION
7 ACOUSTICS
8 TEMPERATURE, HIGH
9 TEMPERATURE, LOW
10 VACUUM
11 SHOCK
12 BURST PRESSURE
13 VACUUM, TEMPERATURE
14 VIBRATION, ACCELERATION
15 VIBRATION, TEMPERATURE
16 PERFORMANCE
17 SURGE PRESSURE
18 FLUID COMPATIBILITY

Figure 6.6 S/M RCS Propellant Feed (Less Tanks) Qualification Test Schedule (Sheet 1 of 2)

[redacted]

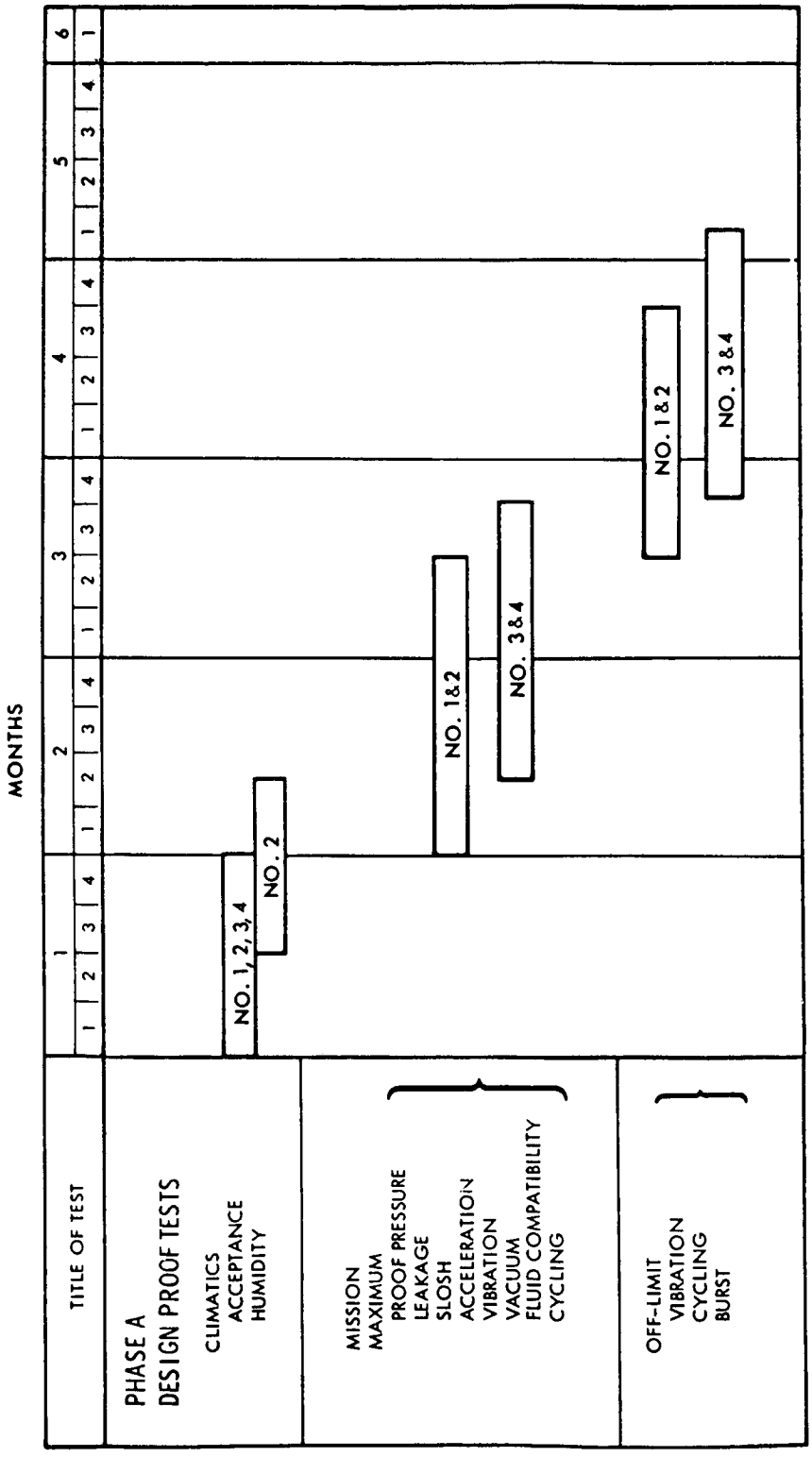

Figure 6.6 S/M RCS Propellant Feed (Tanks) Qualification Test Schedule (Sheet 2 of 2)

[redacted]

LIST OF CURRENT PAGES

Page No.	Date	Revised	Classification

SECTION 7.0

COMMAND MODULE REACTION CONTROL SUBSYSTEM

7.1 Introduction

The latest design configuration under consideration (i.e., propellant system-dual) has been analyzed and is described herein. The reaction control system mission success reliability apportionment is 0.999960 and can be achieved with the apportioned component reliability values as shown in Table 7.1. Present state-of-the-art component reliabilities require improvement since system predicted reliability synthesized from state-of-the-art values is only 0.993473.

7.2 Analysis

The purpose of the reaction control system (RCS) is to maintain spacecraft attitude control in the absence of atmosphere by providing controlled thrust about the three spatial axes. The command module RCS is specifically required to provide this attitude control for the command module after separation from the service module. Reorientation of the command module must be accomplished before reentry so that the heat shield will be in the required reentry position. During reentry, positive attitude control is absolutely necessary to achieve the highly restricted reentry window, flight path envelope, and parachute deployment. The system is designed to operate without gravity requirements and can be subdivided into pressurization, reactant supply, and engine bank subsystems. The pressurization subsystem provides, at the proper time, carefully regulated gas pressure to expell the hypergolic reactants from the reactant storage and supply subsystem in the required ratio to the reaction engine bank.

The configuration represented in logic block diagram form presented in Figure 7.1 is a composite version of six previously evaluated designs. Table 7.1 presents the component reliability values used in conjunction with Figure 7.1 logic to obtain the predicted reliability value of 0.993473 for the C/M RCS.

7.3 Failure Effects Analysis

A command module RCS failure effects analysis has been outlined for each type of failure for every item in the system and evaluates the effect of these failures on the performance of the system components, the system itself, and the spacecraft as a whole. The analysis is presented in Table 7.2. This failure effects analysis justifies the redundancy requirements illustrated in Figure 7.1 that were initially determined by preliminary considerations.

TABLE 7.1

COMMAND MODULE REACTION CONTROL
SUBSYSTEM MISSION RELIABILITY (LOR) (SHEET 1 OF 3)

COMPONENT NAME	ITEMS	MISSION TIMES (HRS.)	FAILURE RATE PER 10^6 HOURS OR CYCLES			RELIABILITY		
			APPORTIONED	PREDICTED	ASSESSED	APPORTIONED	PREDICTED	ASSESSED
C/M Reaction Control Subsystem	-	-	-	-	-	.99996****	.993473[A]	
Burst Disk	8	1 Cycle	17.000	132.0000[3]	N.A.	.999983	.999870[A]	N.A.
Cap *	10	0.48 hrs.	0.308	0.3080[2]	N.A.	.99999985****	.99999985[A]	N.A.
		336 hrs.	0.0043	0.0043	N.A.	.9999986****	.9999986[A]	
Filter(Mechanical, in line)	10	0.48 hrs.	25.000	120.0000[1]	N.A.	.999988****	.999942[A]	N.A.
*Fitting (Mechanical)	126	0.48 hrs.	0.3080	0.3080[2]	N.A.	.99999985****	.9999998[A]	N.A.
		336 hrs.	0.0043	0.0043		.9999986****	.9999986[A]	
Regulator(Pressure Pneumatic)	8	0.48 hrs.	608.3400	3000.0000[1]	N.A.	.999000	.998500[A]	N.A.
Rocket Engine	12	0.48 hrs.	9600.000	9600.000	N.A.	.999480	.995300[A]	N.A.
Tank, Helium(high pressure)	2	336 hrs.	0.1786	0.4480[1]	N.A.	.999940	.999850[A]	N.A.
Tank Positive Expulsion(dual diaphragm) Oxidizer and Fuel	4	336 hrs.	0.2976	15.1200[1]	N.A.	.999900	.995000[A]	N.A.

DATA SOURCE:
1 AVCO
2 B-70
3 Compiled or extrapolated data

*Component has different reliability according to operating time & its location within the system.
**Value for Quad arrangement
***Value for combination of valve W/cap

MATHEMATICAL TECHNIQUE:
A. Analytical Model (Logic Diagram & Known Failure Rate Data) B. Analytical Method (Weighted Subjective Experience)
****No Spec. NAA apportioned by method "B"

[redacted]

TABLE 7.1

COMMAND MODULE REACTION CONTROL
SUBSYSTEM MISSION RELIABILITY (LOR) (SHEET 2 OF 3)

COMPONENT NAME	ITEMS	MISSION TIMES (HRS.)	FAILURE RATE PER 10^6 HOURS OR CYCLES			RELIABILITY		
			APPORTIONED	PREDICTED	ASSESSED	APPORTIONED	PREDICTED	ASSESSED
Tubing(Hydraulic or pneumatic) *	74	0.48 hrs.	0.6875	0.6800[2]	N.A.	.99999967****	.99999967[A]	N.A.
		336 hrs.	0.0095	0.00952	N.A.	.9999968****	.9999968[A]	
Valve, Check	16	0.48 hrs.	0.0030** 666.6700	920.0000[1]	N.A.	.999999**	.999999** .999560[A]	N.A.
Valve, Fill(fuel) (disconnect)	4	336 hrs.	0.9524	0.9520[3]	N.A.	.999999*** .999680****	.999999*** .999680[A]	N.A.
Valve, Fill(pressure) He(disconnect)	2	336 hrs.	0.7738	0.7840[3]	N.A.	.999999*** .999740****	.999999*** .999740[A]	N.A.
Valve, Relief (pressure) He	4	0.48 hrs.	312.5000	1560.0000[1]	N.A.	.998000	.999250[A]	N.A.
Valve, Solenoid (Operational mode)	6	0.48 hrs.	22.9167	1840.0000[1]	N.A.	.999989	.999120[A]	N.A.
Valve, Solenoid (Stand-by mode) *	4	0.48 hrs.	0.3080	0.3080[2]	N.A.	.99999985****	.99999985[A]	N.A.
		336 hrs.	0.0043	0.0043		.9999986****	.9999986[A]	
Valve, Squib, He (Parallel filament-operational mode)	12	1 Cycle	1700.0	2000.0000[3]	N.A.	.998300	.998000[A]	N.A.

DATA SOURCE:
1 AVCO
2 B-70
3 Compiled or extrapolated data

* Component has different reliability according to operating time and its location within the system.
** Value for Quad arrangement
*** Value for combination of valve w/cap
**** No Spec. NAA apportioned by method "B"

MATHEMATICAL TECHNIQUE:
A. Analytical Model(Logic Diagram & known Failure Rate Data)
B. Analytical Method(Weighted Subjective Experience)

[redacted]

[redacted]

TABLE 7.1

COMMAND MODULE REACTION CONTROL
SUBSYSTEM MISSION RELIABILITY (LOR) (SHEET 3 OF 3)

COMPONENT NAME	ITEMS	MISSION TIMES (HRS.)	FAILURE RATE PER 10^6 HOURS OR CYCLES			RELIABILITY		
			APPORTIONED	PREDICTED	ASSESSED	APPORTIONED	PREDICTED	ASSESSED
Valve, Squib, He (stand-by mode) *	2	0.48 hrs.	0.3080	0.3080[2]	N.A.	.99999985****	.99999985[A]	N.A.
		336 hrs.	0.0043	0.0043	N.A.	.9999986****	.9999986[A]	
Valve, Vent	4	0.48 hrs.	66.6700	1560.0000[1]	N.A.	.999999*** .999850[A]	.999999*** .999260[A]	N.A.

DATA SOURCE:
1 AVCO
2 B-70
3 Compiled or extrapolated data

* Component has different reliability according to operating time and its location within the system.
** Value for Quad arrangement
*** Value for combination of valve w/cap
**** No Spec. NAA apportioned by method "B"

MATHEMATICAL TECHNIQUE:
A. Analytical Model(Logic Diagram & known Failure Rate Data)
B. Analytical Method(Weighted Subjective Experience)

[redacted]

~~CONFIDENTIAL~~

A. PRESSURIZATION

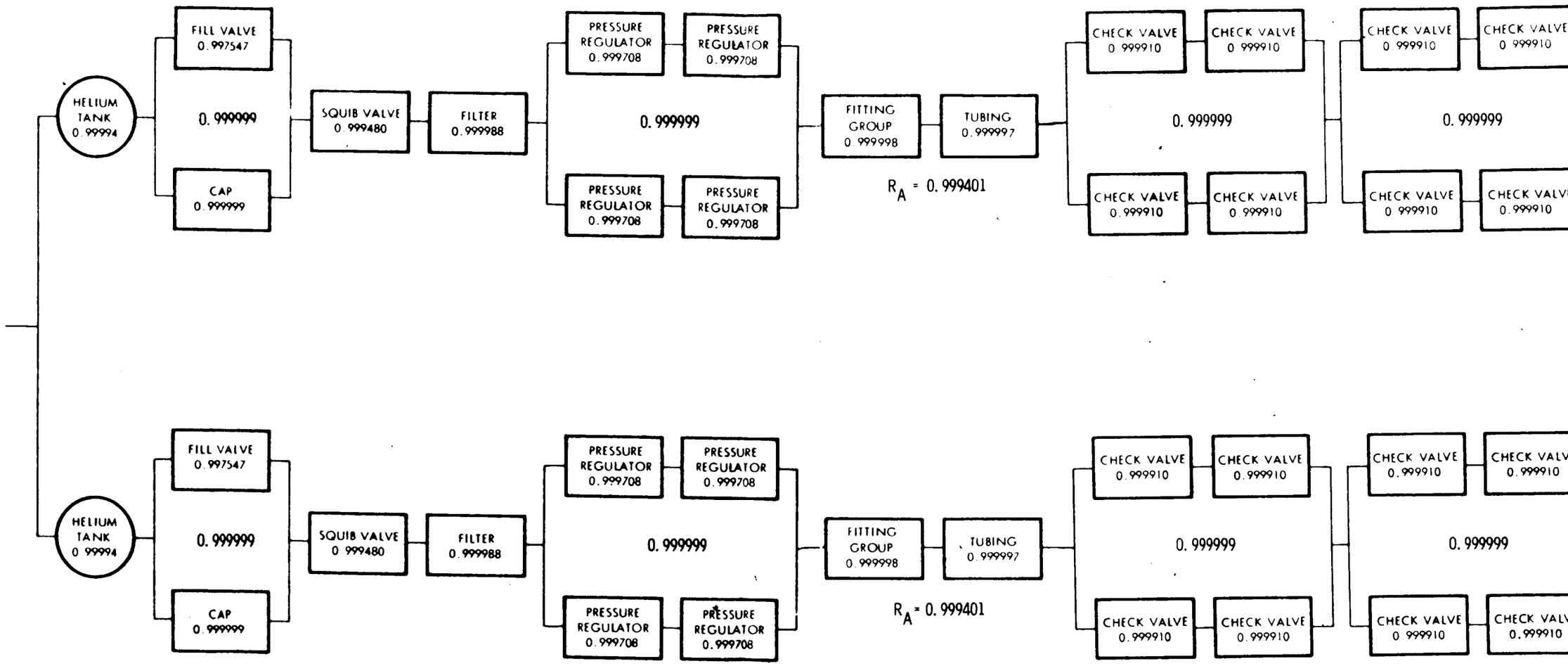

FOLD OUT #1

B_R REACTANT SUPPLY

C. ENGINE PA

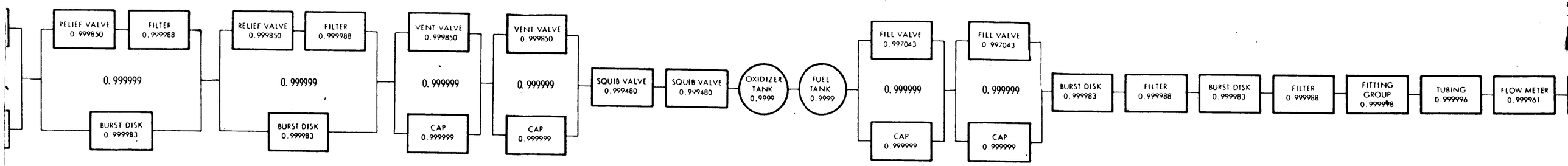

$R_{B_R} = 0.998687$

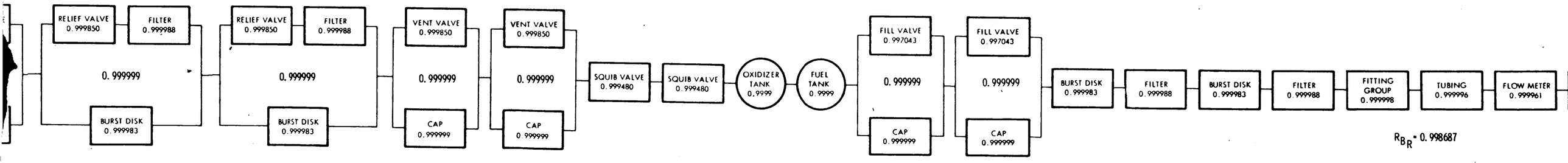

$R_{B_R} = 0.998687$

FOLD OUT #2

CKAGE

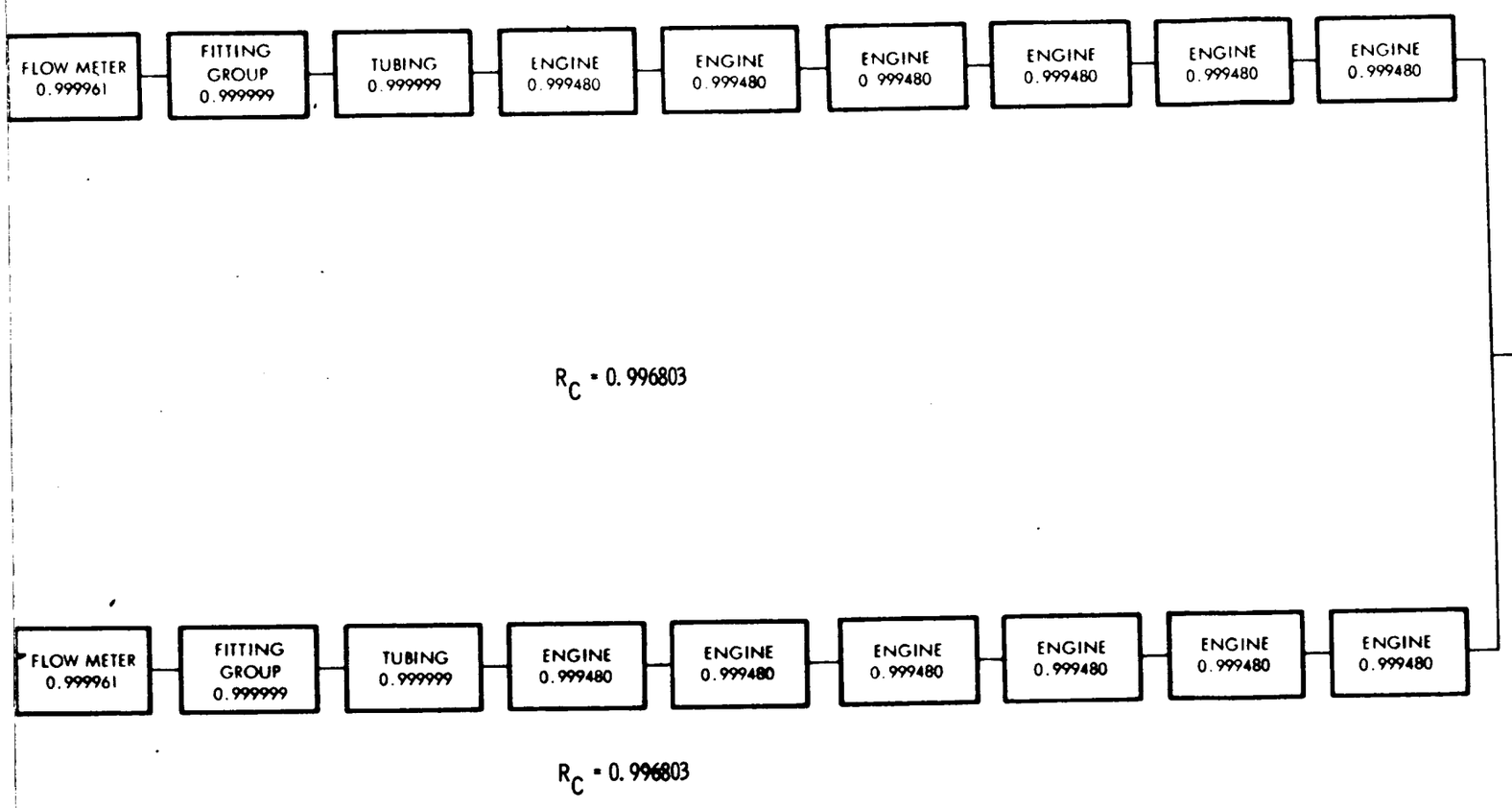

Mathematical Model For The Command Module Reaction Control System

Propellant System Dual Configuration Reliability = $R_{(PSD)} = R^2 + 2\,R\,q\,R_{vo}$

in which : $R = R_A\,R_B\,R_C$, $q = 1 - R$

where : $R_A = R_{helium\ tank}\,(R_{fill\ valve} + R_{cap} - R_{fill\ valve}\,R_{cap})\,R_{squib\ valve}\,R_{filter}\,(2\,R_{regulator}{}^2 - R_{regulator}{}^4)\,R_{fittings}\,R_{tubing}$

$R_B = (2\,R_{check\ valve}{}^2 - R_{check\ valve}{}^4)^2\,(R_{relief\ valve}\,R_{filter} + R_{burst\ disk} - R_{relief\ valve}\,R_{filter}\,R_{burst\ disk})^2\,(R_{vent.valve} + R_{cap} - R_{vent\ valve}\,R_{cap})^2\,R_{squib\ valve}{}^2\,R_{ox\ tank}\,R_{fuel\ tank}\,(R_{fill\ valve} + R_{cap} - R_{fill\ valve}\,R_{cap})^2\,(R_{burst\ disk}\,R_{filter})^2\,R_{fittings}\,R_{tubing}$

$R_C = R_{flow\ meter}{}^2\,R_{fittings}\,R_{tubing}\,R_{engines}{}^6$

and : $R = 0.994898$, $R^2 = 0.989822$, $q = 0.005102$, $R_{vo} = 0.999522$

therefore : $R_{(PSD)} = 0.989822 + 2\,(0.994898)\,(0.005102)\,(0.999522)$

$= \underline{0.999969}$

Definitions:

R_A = Reliability of Helium Pressurization Sybsystem

R_B = Reliability of Propellant Supply Subsystem

R_C = Reliability of Engine Package Subsystem

R_{vo} = Reliability of Solenoid Valve Operatipn (two valves)

R = Reliability of one side of the dual system

q = Probability of failure of one side of the dual system

$R_{(PSD)}$ = Reliability of Dual System

FOLD OUT #3

Figure 7.1 Command Module Reaction Control System Logic Diagram

[redacted]

Table 7.2 Command Module Reaction Control Subsystem Failure Effects Analysis

Item	Drawing No.	Electrical Reference Designation	Function	Failure Type	Mission Phase	Failure Effect			Possible Crew Action
						Component Performance	Subsystems Performance	Apollo	
Helium storage tank			Store pressurization gas	Rupture	All	Loss of pressurization	Render inoperative	Loss of redundancy	None
				Slow leak	1 to 58	Eventual loss of pressurization	Eventually render inoperative	Eventual loss of redundancy	None
				Support failure	All	Probably precipitate tubing failure (restriction or rupture)	Probably render inoperative or system degradation	Probable loss of redundancy, and possible structural damage to systems or spacecraft.	None
Helium fill valve with cap			Inflight: maintain high-pressure seal	Rupture	All	Loss of pressurization	Render inoperative	Loss of redundancy	None
			Ground: provide GSE access	Slow leak	1 to 58	Eventual loss of pressurization	Eventually render inoperative	Eventual loss of redundancy	None
Pressurization squib valve.			Isolate high pressure until desired	Failure to operate when energized	56, 57	No pressurization	Render inoperative	Loss of redundancy	None
				External leak	1 to 58	Eventual loss of pressurization	Eventually render inoperative	Eventual loss of redundancy	None
				Internal leak	1 to 58	Premature pressurization	Exceed design operating times, possibly precipitate additional failures	None	None
				Premature operation	1 to 58	Premature Pressurization	Exceed design operating times, possibly precipitate additional failures	None	None
Helium filter			Trap foreign particles from squib or gas	Failure to trap particles	56, 57	Possible interference with operation of regulators	Possible loss of redundancy	None	Operate solenoid valve of unregulated path.

[redacted]

[redacted]

Table 7.2 Command Module Reaction Control Subsystem Failure Effects Analysis (Cont)

Item	Drawing No.	Electrical Reference Designation	Function	Failure Type	Mission Phase	Failure Effect			Possible Crew Action
						Component Performance	Subsystems Performance	Apollo	
Helium filter (Cont)				Clogged filter	56, 57	Interference with gas flow and possibly with regulation	Possible system degradation	Possible loss of redundancy	None
				External leak	56, 57	Eventual loss of pressurization	Eventually render inoperative	Loss of redundancy	None
Helium solenoid valve			Isolate unregulated path.	Failure to operate when energized	56, 57	Loss of pressurization (but precludes two regulator failures)	Render inoperative (but precludes two regulator failures)	Loss of redundancy	None
				Premature operation	1 to 58	None	None	None	Reopen
				External leak	56, 57	Eventual loss of pressurization	Eventually render inoperative	Eventual loss of redundancy	Valve cycling
				Internal leak (precludes operation)	56, 57	Eventual loss of pressurization gas via relief valve	Render inoperative	Loss of redundancy	Valve cycling
Helium pressure regulator			Reduce to operating pressure and maintain.	Improper regution	56, 57	Loss redundancy	None	None	None
				Fail closed	56, 57	Loss of redundancy	None	None	None
				Fail open	1 to 58	Loss of redundancy	None	None	Operate isolating solenoid valve
				External leak	65, 57	Eventual loss of pressurization	Eventually render inoperative	Loss of redundancy	Operate isolating solenoid valve
Helium fitting			Provide connections and maintain pressure seal.	External leak (or rupture)	All	Loss of pressurization	Render inoperative	Loss of redundancy	None
Helium tubing			Distribute, confine, and retain pressurizing gas.	Rupture	All	Loss of pressurization	Render inoperative	Loss of redundancy	None
			Distribute, confine and retain pressurizing gas.	Restricted flow from "pinch" or excessive bend	56, 57	Reduced flow pressure	Reduced performance	Up to loss of redundancy	None

[redacted]

[redacted]

Table 7.2 Command Module Reaction Control Subsystem Failure Effects Analysis (Cont)

Item	Drawing No.	Electrical Reference Designation	Function	Failure Type	Mission Phase	Failure Effect			Possible Crew Action
						Component Performance	Subsystems Performance	Apollo	
Helium check valve			Maintain one-way flow of pressurizing gas and separation of leaking reactants.	Fail closed	56, 57	Loss of redundancy	None	None	None
				Fail open	all	Explosion (if permeation of both fuel and oxidizer diaphragm exceeds limits otherwise, none)	Explosion (if permeation of both fuel and oxidizer diaphragm exceeds limits otherwise, none) None	Loss of Apollo (if permeation of both fuel and oxidizer diaphragm exceeds limits otherwise, none) None	None
				External leak	56, 57	Eventual loss of pressurization	Eventually render inoperative	Loss of redundancy	None
Helium vent valve with cap			Inflight: maintain a pressure seal. Ground: provide GSE pressure equilization.	External leak or rupture	1 to 58	Loss of pressurization	Render inoperative	Loss of redundancy	None
Helium burst disk			Maintain pressure seal and relieve excess pressure	Burst above designed pressure	56, 57, 58	Depends upon burst pressure, if above system limit, then secondary damage is possible; otherwise, just loss of pressure	Render inoperative	Loss of redundancy	Timely actuation, and depressurization system.
				Burst below designed pressure	56, 57	Loss of pressurization	Render inoperative	Loss of redundancy	None
				Internal leak	56, 57	Loss of redundancy	None	None	None
				External leak	56, 57	Eventual loss of pressurization	Eventually render inoperative	Loss of redundancy	None
Burst disk filter			Trap foreign particles from burst disk or gas	Failure to trap particles	56, 57, 58	Possible interference with relief valve (precludes operation of burst disk)	Possibly render inoperative (precludes operation of burst disk)	Possible loss of redundancy (precludes operation of burst disk)	None

[redacted]

Table 7.2 Command Module Reaction Control Subsystem Failure Effects Analysis (Cont)

Item	Drawing No.	Electrical Reference Designation	Function	Failure Type	Mission Phase	Failure Effect			Possible Crew Action
						Component Performance	Subsystems Performance	Apollo	
Burst disk filter (Cont)				Clogged filter	56, 57, 58 and postlanding	Possibly exceed design pressure of system (precludes operation of burst disk)	Possibly render inoperative	Possible loss of redundancy	Timely actuation of system and depressurize system
				External leak	56, 57	Eventual loss of pressurization	Eventually render inoperative	Loss of redundancy	None
Helium relief valve			Back up to burst disk (i.e., maintain seal and relieve excess pressure)	Fail closed	56, 57, 58	Possibly exceed design pressure of system	Possibly render inoperative	Possible loss of redundancy	Timely actuation of system, and depressurize system
				Fail open	56, 57	Loss of pressurization	Render inoperative	Loss of redundancy	None
				External leak (All failures preclude operation of burst disk.)	56, 57	Eventual loss of pressurization	Eventually render inoperative	Loss of redundancy	None
Helium depressurization squib valve			Release pressurizing gas when desired	Failure to operate when energized	58	Possibly exceed design safety limits	Possible rupture of system	Possible explosion (pressure or chemical)	System actuation below excessive pressures
				Premature operation	1 to 58	Loss of pressurization	Render inoperative	Loss of redundancy	None
				External leak	1 to 58	Eventual loss of pressurization	Eventually render inoperative	Loss of redundancy	None
Positive expulsion tank			Provide reactant on demand in any attitude and from zero to maximum g loads	Rupture	all	Loss of pressure	Render inoperative	Loss of redundancy and possible corrosive action or fire	First attempt to exhaust reactant, then depressurize system.
				External leak	all	Eventual loss of pressure	Corrosive action and possible fire or explosion	Loss of redundancy. Corrosive action and possible fire or explosion	First attempt to exhaust reactant, then depressurize system.

[redacted]

Table 7.2 Command Module Reaction Control Subsystem Failure Effects Analysis (Cont)

Item	Drawing No.	Electrical Reference Designation	Function	Failure Type	Mission Phase	Failure Effect			Possible Crew Action
						Component Performance	Subsystems Performance	Apollo	
Positive expulsion tank (Cont)				Support failure	all	Possible tubing failure	Possibly render inoperative and possible corrosive action and fire or explosion	Possible loss of redundancy and possible corrosive action or fire or explosion	First attempt to exhaust reactant, then depressurize system.
				Failure of positive expulsion device-leak or excessive permeation (internal)	all	Reduced flow pressure; possible loss of pressure and possible explosion (precludes permeation of both tanks)	Render inoperative and possible explosion	Loss of redundancy and possible fire or explosion	First attempt to exhaust reactant, then depressurize system.
				Failure of positive expulsion device (to expel)	56, 57	No reactant flow	Render inoperative	Loss of redundancy	First attempt to exhaust reactant, then depressurize system.
Reactant fill valve with cap			In-flight: Maintain pressure seal	Rupture	all	Loss of reactant	Render inoperative	Loss of redundancy and possible corrosive action or fire	First attempt to exhaust reactant, then depressurize system.
			Ground: Provide GSE accessability	Leak	all	Eventual loss of reactant	Eventually render inoperative	Loss of redundancy and possible corrosive action or fire	First attempt to exhaust reactant, then depressurize system.
Reactant burst disk			Isolate reactant until desired	Burst above designed pressure (e.g., failure to burst.)	56, 57	No reactant flow	Render inoperative	Loss of redundancy	Ascertain that all downstream valves are open.
				Burst below designed pressure (or internal leak)	1 to 58	Exceed design operating times	None	None	None
				External leak	all		Eventually render inoperative	Loss of redundancy. Corrosive action and possible fire	First attempt to exhaust reactant, then depressurize system.

[redacted]

Table 7.2 Command Module Reaction Control Subsystem Failure Effects Analysis (Cont)

Item	Drawing No.	Electrical Reference Designation	Function	Failure Type	Mission Phase	Failure Effect			Possible Crew Action
						Component Performance	Subsystems Performance	Apollo	
Reactant filter			Trap foreign particles from burst disk or reactant	Failure to trap particles	56, 57	Possible interference with engine injector operation	Possible engine failure	Possible loss of redundancy	Operate isolating valves if necessary.
				Clogged filter	56, 57	Possible interference with reactant flow	System degradation	Possible loss of redundancy	None
				External leak	56, 57, 58 and postlanding	Eventual loss of reactant	Eventually render inoperative and possible corrosion action and fire	Loss of redundancy and possible corrosive action and fire	Attempt to exhaust reactant, then depressurize system.
Reactant fittings			Provide connections and maintain seal	External leak (or rupture)	all	Eventual loss of reactant	Eventually render inoperative and possible corrosive action and fire	Loss of redundancy and possible corrosive action and fire	Attempt to exhaust reactant, then depressurize system.
Reactant tubing			Distribute, confine, and retain reactant	Rupture	all	Loss of reactant	Render inoperative and possible corrosive action and fire	Loss of redundancy and possible corrosive action and fire	Attempt to exhaust reactant, then depressurize system.
				Restricted flow from pinch or bend	56, 57	System degradation	Possibly render inoperative	Possible loss of redundancy	None
Reactant solenoid valve			Isolate abnormally operating engine bank	Failure to operate when energized	56, 57, 58	Possible explosion or uncontrolled burning	Possible explosion or uncontrolled burning	Possible explosion or uncontrolled burning	Depressurize system.
				Premature operation	1 to 58	Single (or no) reactant flow - no thrust	Render inoperative, possible corrosive action and fire	Loss of redundancy, possible corrosive action and fire.	Cycle valve, and depressurize system.
				External leak	56, 57, 58 and postlanding	Eventual loss of reactant	Eventually render inoperative possible corrosive action and fire	Loss of redundancy, possible corrosive action and fire.	Cycle valve, exhaust reactant, and depressurize system.

[redacted]

Table 7.2 Command Module Reaction Control Subsystem Failure Effects Analysis (Cont)

Item	Drawing No.	Electrical Reference Designation	Function	Failure Type	Mission Phase	Failure Effect			Possible Crew Action
						Component Performance	Subsystems Performance	Apollo	
Reactant solenoid valve (Cont)				Internal leak (precludes engine failure and valve operation)	56, 57, 58 and postlanding	Loss of reactant, possible corrosive action and fire	Possible corrosive action and fire	Possible corrosive action and fire	Cycle valve, and depressurize system.
Reactant flow meter			Indicate to crew compartment the rate of reactant flow to engines	Fail closed	56, 57	Single reactant flow, no thrust	Render inoperative	Loss of redundancy	None
				Failure to indicate	56, 57	None	None	None (unless there are additional failures)	None
				External leak	56, 57, 58 and postlanding	Eventual loss of reactant	Eventually render inoperative, possible corrosive action and fire	Loss of redundancy, possible corrosive action and fire	Operate solenoid valves.
				Restricted flow	56, 57	System degradation, possible fire or explosion	System degradation, possible fire or explosion	Loss of redundancy	Operate solenoid valves.
Rocket engines			Provide thrust about control axes	Explosion	56, 57, 58 and postlanding	Loss of one axial thrust vector	System degradation, possible additional damage	Loss of redundancy, possible spacecraft damage or loss	Operate solenoid valves.
				Uncontrolled burning, fire	56, 57, 58 and postlanding	Loss of use	Render inoperative	Loss of redundancy, possible crew loss	Operate solenoid valves.
				Excessive ablation of throat	56, 57	Loss of use, possible fire	Render inoperative	Loss of redundancy	Operate solenoid valves.
				Failure to start	56, 57	No thrust for one (or more) axial vector	System degradation	Loss of redundancy	Cycle engine valves.
				Improper reactant ratio	56, 57	Reduced thrust, no thrust, and/or fire or explosion	System degradation or render inoperative	Loss of redundancy, possible spacecraft damage, possible crew loss	Operate solenoid valves.

Table 7.2 Command Module Reaction Control Subsystem Failure Effects Analysis (Cont)

Item	Drawing No.	Electrical Reference Designation	Function	Failure Type	Mission Phase	Failure Effect			Possible Crew Action
						Component Performance	Subsystems Performance	Apollo	
Rocket engines (Cont)				External leak	56, 57, 58 and postlanding	Eventual loss of reactant, possible corrosive action and fire	Eventually render inoperative, possible corrosive action and fire	Loss of redundancy, possible corrosive action and fire, possible crew loss	Operate solenoid valves.

7.4 Qualification Tests

Qualification tests on the reaction control subsystem engines conform to the general requirements of MIL-E-5151 and include the following:

1. Calibration tests

2. Environmental tests (Design proof tests)

3. Electromagnetic interference and susceptibility tests

4. Mission simulation life tests

The number of test engines is predicated upon the requirement to assess compliance with the procurement specification and off-limit modes of operation. The number of qualification test samples for the components of the propellant feed subsystem is based on the criticality index, limited life requirements, service life considerations, and multiple use of the same test articles.

7.4.1 Test-oriented Reliability Logic Diagram

Figure 7.2 depicts the test-oriented reliability logic diagram for the C/M RCS. The logic diagram will aid in establishing test continuity and in programming the collection of data for the assessment of reliability by illustrating the inter-relationship of system components.

7.4.2 Criticality and Hardware Requirements

7.4.2.1 RCS Engine

Table 7.3 designates the criticality class, as defined in subsection 2.4 of SID 62-109-3, for the C/M reaction control system rocket engine. The table enumerates the hardware requirements for a minimum qualification program as established in subsection 2.5 of SID 62-109-3. The location of the components in the spacecraft is indicated by spacecraft zone numbers as defined in subsection 4.2 of the above reference.

7.4.2.2 RCS Propellant Feed

Table 7.4 designates the criticality class, as defined in subsection 2.4 of SID 62-109-3, for the components of the C/M RCS propellant feed. The table enumerates the hardware requirements for a minimum qualification program, as established in subsection 2.5 of SID 62-109-3. The distribution of the hardware through the subsystem qualification test phases, as described in subsection 2.3

~~CONFIDENTIAL~~

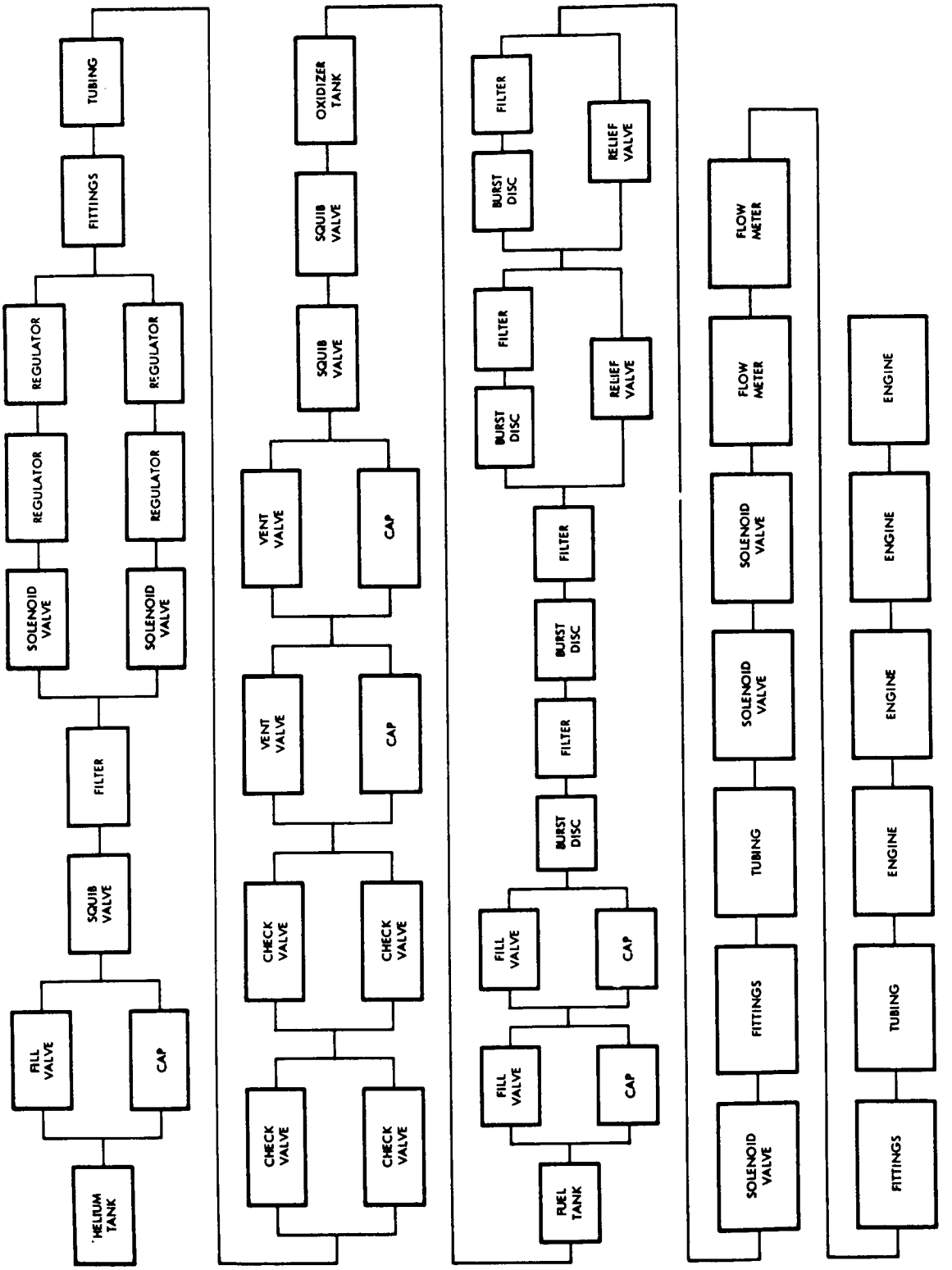

Figure 7.2 C/M RCS Test Oriented Reliability Logic Diagram

~~CONFIDENTIAL~~

of SID 62-109-3, is shown. (Phase A-1 tests are conducted at maximum levels of environment anticipated for a typical Apollo mission. Phase A-2 consists of off-limit tests to verify design margins. Phase B consists of mission simulation life tests.) The location of the components in the spacecraft is indicated by spacecraft zone numbers, as defined in subsection 4.2 of SID 62-109-3.

Table 7.3 C/M RCS Engine Parameters for Qualification Testing

Component	S/C Zone	Criticality	Required Hardware
Thrust Chamber	1	2	14
Injector	1	2	14
Fuel Valve	1	2	14
Oxidizer Valve	1	2	14

Table 7.4 C/M RCS Propellant Feed Parameters for Qualification Testing

Component	S/C Zone	Criticality	Required Hardware	Qualification Test Phase Distribution		
				A-1	A-2	B
Burst Disc	1	2	5	2	1	2
Squib Valve	1	2	5	2	1	2
Disconnect	1	3	4	1	1	2
Valves, solenoid check or relief	1	3	4	1	1	2
Regulator	1	3	4	1	1	2
Tanks (3 types)	1	2	4	4	4	0

7.5 Qualification Test Schedule

7.5.1 RCS Engine

Figure 7.3 displays the qualification test schedule for the C/M RCS engines and defines the test utilization of the hardware enumerated in Table 7.3. The specific test levels to be applied in qualification testing are found in the tables of environmental test criteria in subsection 4.2 of SID 62-109-3 and are a function of the zone location of the equipment in the spacecraft. These zone numbers are given in Table 7.3.

7.5.2 RCS Propellant Feed

Figure 7.4 displays the qualification test schedule for the C/M RCS propellant feed and defines the test utilization of the hardware enumerated in Table 7.4. The specific test levels to be applied in qualification testing are found in the tables of environmental test criteria in subsection 4.2 of SID 62-109-3 and are a function of the zone location of the equipment in the spacecraft. These zone numbers are given in Table 7.4.

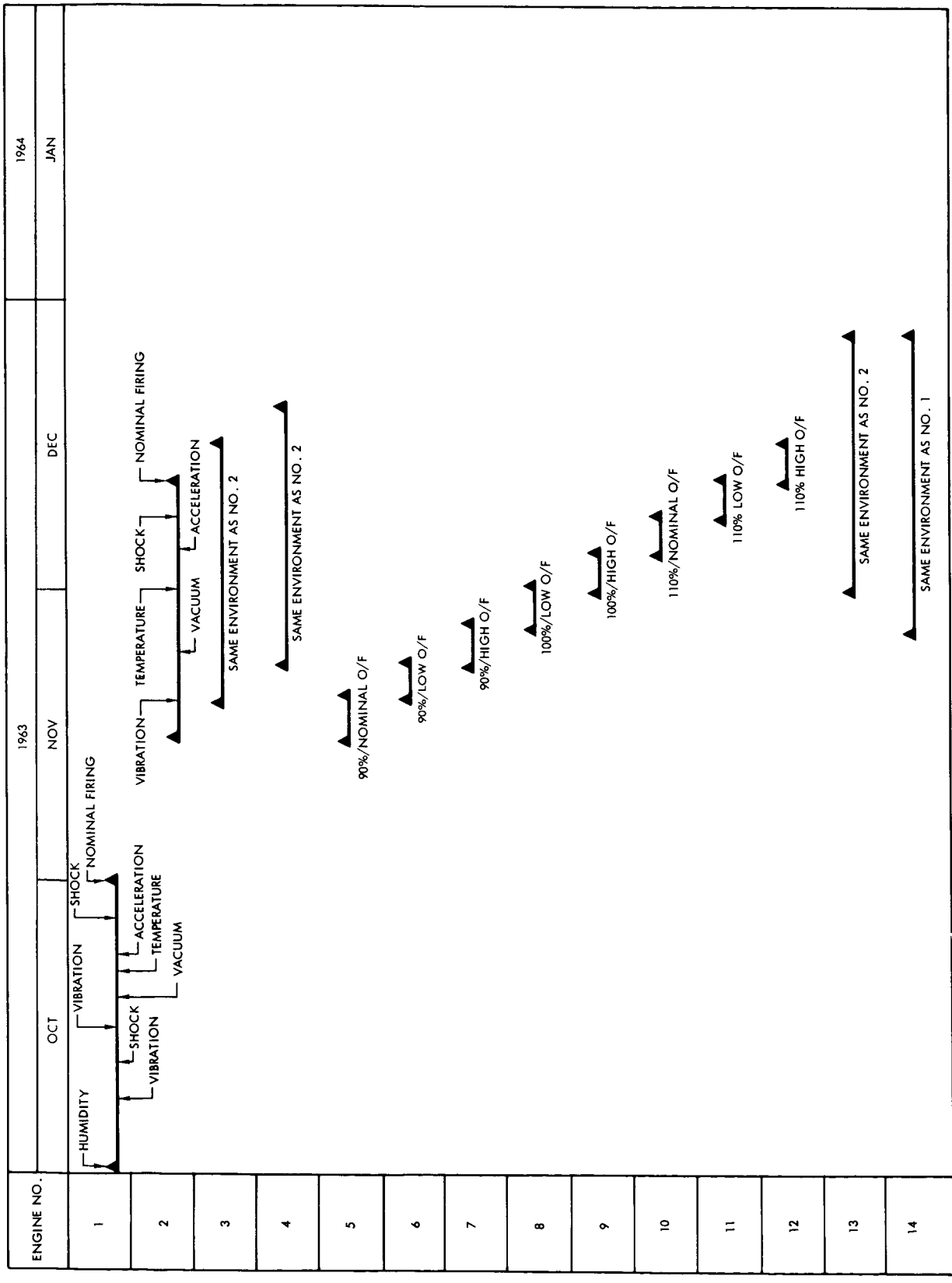

Figure 7.3 C/M RCS Engine Test Schedule

~~CONFIDENTIAL~~

COMPONENTS	ITEM NO.	WEEK NO. 1	2	3	4	5	6	7	8	9	10	11	12	13	14	15
VALVE, RELIEF, HELIUM	1	1	2	6	5	8	9	10	6	12						
	2	1	2	6	5	8	9	10	17	12	16					
	3	1	15	13	6	12										
	4	1	15	13	16	12										
VALVE, SOLENOID, HELIUM VALVE, SOLENOID, OXIDIZER VALVE, SOLENOID, FUEL	1	1	3	4	6	5	8	9	16	12						
	2	1	3	4	6	5	8	9	6	12						
	3	1	13	15	16											
	4	1	13	15	6											
VALVE, SQUIB, HELIUM	1	1	2	3	6	8	9	4								
	2	1	2	3	6	8	9	6	4	12						
	3	1	2	3	6	8	9	6	4	12						
	4	1	15	13	16											
	5	1	15	13	6	16	12									
DISC, BURST, OXIDIZER DISC, BURST, FUEL	1	1	2	6	8	9	11	6	12	18						
	2	1	2	6	8	9	11	6	12	18						
	3	1	2	6	8	9	11	6	12							
	4	1	15	13	18	6	12									
	5	1	15	13	18	6										
COMPONENT: REGULATOR, PRESSURE, HELIUM SAMPLE:	1	1	6	5	8	9	16	12								
	2	1	6	5	8	9	6	12								
	3	1	13	15	16											
	4	1	13	15	6											
C/M RCS REGULATOR COMPONENT: VALVE, CHECK SAMPLE:	1	1	18	6	5	8	9	6	12							
	2	1	18	6	5	8	9	6	12							
	3	1	13	15	17	12										
	4	1	13	15	17	12										
COMPONENTS: 1. DISCONNECT, FILL, HELIUM 2. DISCONNECT, TEST, HELIUM 3. DISCONNECT, FILL, OXIDIZER 4. DISCONNECT, TEST, OXIDIZER 5. DISCONNECT, VENT, OXIDIZER 6. DISCONNECT, FILL, FUEL 7. DISCONNECT, TEST, FUEL 8. DISCONNECT, VENT, FUEL SAMPLE: (AIRBORNE HALF)	1	1	2	18	11	8	9	10	16	6	12					
	2	1	2	18	11	8	9	10	6	12						
	3	1	15	13	16											
	4	1	15	13	6											
SAMPLE: (GROUND HALF)	1	1	2	18	11	8	9	16	11	12						
	2	1	2	18	11	8	9	11	12							
	3	1	18	8	9	16										
	4	1	18	9	8	11										

LEGEND

1 ACCEPTANCE
2 HUMIDITY
3 ELECTROMAGNETIC INTERFERENCE
4 EXPLOSIVE ATMOSPHERE
5 ACCELERATION
6 VIBRATION
8 TEMPERATURE, HIGH
9 TEMPERATURE, LOW
10 VACUUM
11 SHOCK
12 BURST PRESSURE
13 VACUUM, TEMPERATURE
14 VIBRATION, ACCELERATION
15 VIBRATION, TEMPERATURE
16 PERFORMANCE
17 SURGE PRESSURE
18 FLUID COMPATABILITY

Figure 7.4 C/M RCS Propellant Feed (Less Tanks) Qualification Test Schedule (Sheet 1 of 2)

~~CONFIDENTIAL~~

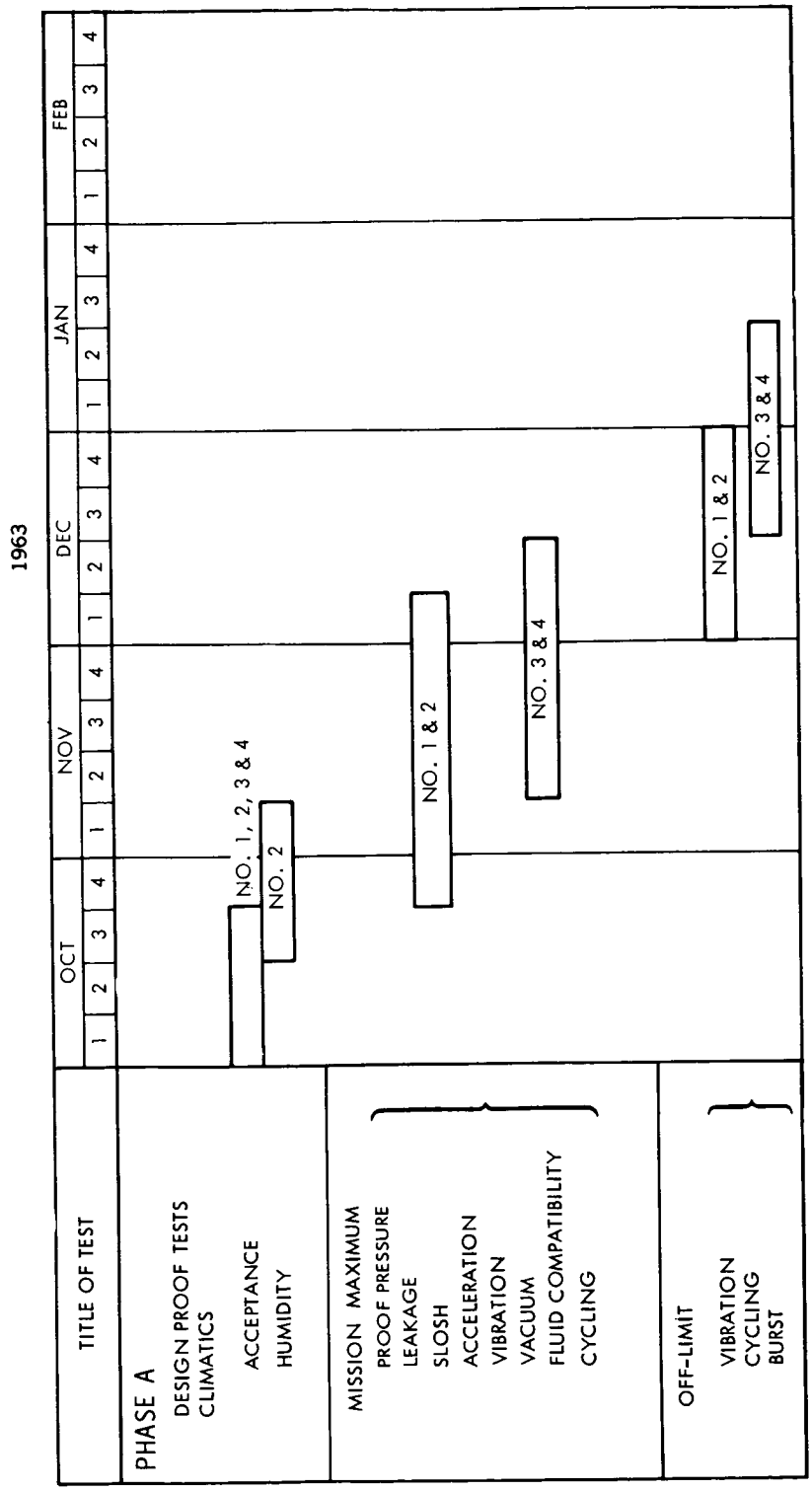

Figure 7.4 C/M RCS Propellant Feed (Tanks) Qualification Test Schedule (Sheet 2 of 2)

LIST OF CURRENT PAGES

Page No.	Date	Revised	Classification

SECTION 8.0

ENVIRONMENTAL CONTROL SUBSYSTEM

8.1 Introduction

The Environmental Control Subsystem is composed of five functional subsystems illustrated in the "E" revision of the ECS schematic, Figure 8.1, and in addition three associated subsystems which are tied to and function as part of the ECS. A summary of the reliability analyses of the ECS in tabulated form is presented in Table 8.1. The eight functional subsystems are described as follows:

8.2 Analysis

8.2.1 Pressure Suit Subsystem

The purpose of the pressure suit circuit is to automatically control the flow, pressure, temperature, and composition of the pressure suit gas. The subsystem, in conjunction with the command module pressure and temperature control subsystem, will also control the environmental conditions in the cabin when any or all the crew are out of their pressure suits. Figure 8.2 presents the subsystem logic block diagram.

8.2.2 Water-glycol Subsystem

The water-glycol subsystem is an intermediate heat transfer loop which permits heat to be transferred from the space vehicle interior to the space radiators. This function is accomplished by pumps, heat exchangers, valves, and controls. Figure 8.3 presents the subsystem logic block diagram.

8.2.3 Command Module Pressure and Temperature Control Subsystem

Although this subsystem serves several purposes, the principal function is to automatically maintain the pressure and temperature of the cabin within the prescribed limits. This function is accomplished in conjunction with the pressure suit subsystem by means of regulated oxygen inflow, recirculation blowers, a heat exchanger, a temperature control and sensors, vent valves, and other valves and controls as required. Figure 8.4 presents the subsystem logic block diagram.

8.2.4 Oxygen Supply Subsystem

The oxygen supply subsystem is sub-divided further into three subsystems: the normal oxygen supply system, the reentry oxygen supply system, and the back pack oxygen supply system. The normal oxygen supply system is capable of controlling the inflow of oxygen for the entire Apollo mission up to the reentry phase. This function is accomplished by suitable pressure regulators, demand regulators, and shutoff and check valves.

TABLE 8.1

ENVIRONMENTAL CONTROL
SUBSYSTEM MISSION RELIABILITY (LOR)

COMPONENT NAME	ITEMS	MISSION TIMES (HRS.)	FAILURE RATE PER 10^6 HOURS OR CYCLES			RELIABILITY		
			APPORTIONED	PREDICTED	ASSESSED	APPORTIONED	PREDICTED	ASSESSED
ENVIRONMENTAL CONTROL SUBSYSTEM	-	-	-	-	N.A.	.993500	.980500[A]	N.A.
Suit Circuit	1	336 hrs.	1.5200	2.6800[1]	N.A.	.999490[B]	.991000[A]	N.A.
Water-Glycol Circuit	-	336 hrs.	2.5800	2.4100[1]	N.A.	.999133[B]	.991900[A]	N.A.
Pressure & Temperature Circuit	-	336 hrs.	0.5600	2.0000[1]	N.A.	.999812[B]	.999320[A]	N.A.
Oxygen Supply	-	336 hrs.	0.3450	1.2000[1]	N.A.	.999884[B]	.999570[A]	N.A.
Water Supply	-	336 hrs.	1.5200	4.7000[1]	N.A.	.999490[B]	.998340[A]	N.A.
* ECS Radiators	4	N.A.	N.A.	N.A.	N.A.	.999950[A]	N.A.	N.A.
* Cold Plates	28	336 hrs.	0.1490	N.A.	N.A.	.999950[A]	N.A.	N.A.
* Waste Management	1	60 cycles	0.1040	N.A.	N.A.	.999965[A]	N.A.	N.A.

DATA SOURCE:

1. AiResearch

N.A.: Not Available.
* Apportioned values - design not finalized.

MATHEMATICAL TECHNIQUE:

A. Analytical Model (Logic Diagram & Known Failure Rate Data)
B. Analytical Method (Weighted Subjective Experience)

[redacted]

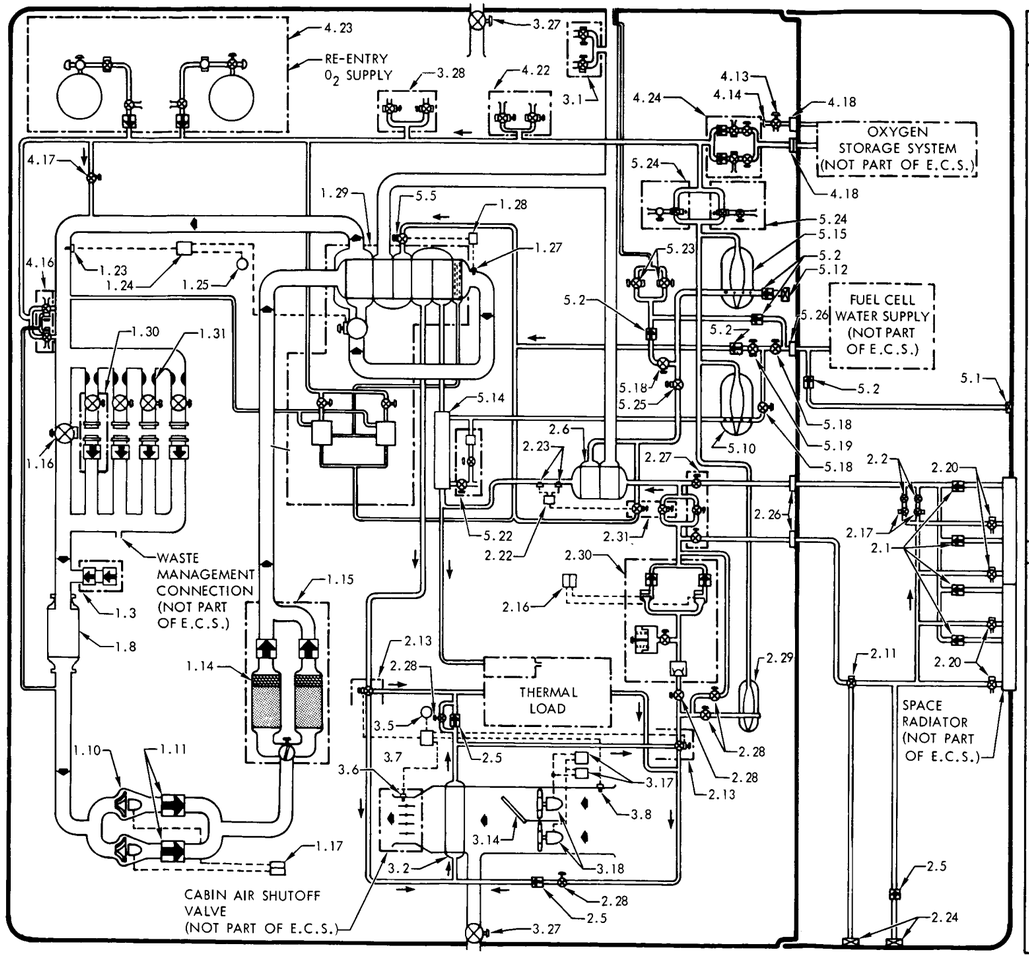

PART NO.	ITEM NO.	NO. REQUIRED	DESCRIPTION
			GROUP I - PRESSURE SUIT CIRCUIT
850022-1-1	1.3	1	SUIT CIRCUIT RETURN AIR CHECK VALVE ASSEMBLY
811100-1-1	1.8	1	DEBRIS TRAP
826000-1-1	1.10	2	SUIT COMPRESSOR
850052	1.11	2	SUIT COMPRESSOR CHECK VALVE
811450-1-1	1.14	28	CO_2 AND ODOR ABSORBER REMOVABLE CONTAINER (26 REPLACEMENTS)
811400-1-1	1.15	1	CO_2 AND ODOR ABSORBER PACKAGE
			L_1OH CANISTER (2)
			CHECK VALVE (2)
			ISOLATION VALVE
810500-1-1	1.16	1	SUIT BYPASS VALVE
820210-1-1	1.17	2	SUIT COMPRESSOR SELECTOR SWITCH
820100-1-1	1.23	1	SUIT AIR TEMPERATURE SENSOR
820010-1-1	1.24	1	SUIT AIR TEMPERATURE CONTROL
820020-2-1	1.25	1	SUIT AIR TEMPERATURE SELECTOR
820050-1-1	1.27	1	SUIT EVAPORATOR TEMPERATURE SENSOR
820010-1-1	1.28	1	SUIT EVAPORATOR TEMPERATURE CONTROL
813000-1-1	1.29	1	HEAT EXCHANGER PACKAGE
			REGENERATIVE HEAT EXCHANGER
			REGENERATIVE HEAT EXCHANGER BYPASS VALVE
			SUIT EVAPORATOR
			GLYCOL-TO-SUIT AIR HEAT EXCHANGER
			WATER SEPARATOR
			WATER SEPARATOR PUMP ASSEMBLY
810100-1-1	1.30	4	SUIT HOSE CONNECTOR PACKAGE
			SUIT SHUTOFF VALVE
			SUIT SUPPLY CONNECTION
			SUIT RETURN
			CHECK VALVE
810600-1-1	1.31	4	SUIT FLOW LIMITER
			GROUP II - WATER-GLYCOL CIRCUIT
827030-1-1	2.1	4	SPACE RADIATOR OUTLET CHECK VALVE
827530-1-1	2.2	2	GLYCOL PRESSURE RELIEF VALVE
827030-1-1	2.5	3	GLYCOL CHECK VALVE
812000-1-1	2.6	1	GLYCOL EVAPORATOR
827570-1-1	2.11	1	GLYCOL SHUTOFF VALVE
850006-1-1	2.13	1	CABIN TEMPERATURE CONTROL VALVE
820210-1-1	2.16	2	GLYCOL PUMP SELECTOR SWITCH
827580-1-1	2.17	2	GLYCOL SHUTOFF VALVE
820220-1-1	2.20	4	SPACE RADIATOR ISOLATION AND VENT VALVE
820010-1-1	2.22	1	GLYCOL TEMPERATURE CONTROL
820080-1-1	2.23	1	GLYCOL TEMPERATURE SENSOR
827060-1-1	2.24	2	GLYCOL FILL AND VENT CONNECTION
827590-1-1	2.26	2	GLYCOL QUICK DISCONNECT
827600-1-1	2.27	1	MANUAL SHUTOFF VALVE
827050-1-1	2.28	5	GLYCOL SHUTOFF VALVE
812800-1-1	2.29	1	GLYCOL RESERVOIR
850024-1-1	2.30	1	GLYCOL PUMP ASSEMBLY
			ACCUMULATOR
			ISOLATION VALVE
			PUMP (2)
			CHECK VALVE (2)
			FILTER
827390-1-1	2.31	1	GLYCOL TEMPERATURE CONTROL VALVE

PART NO.	ITEM NO.	NO. REQUIRED	DESCRIPTION
			GROUP III - COMMAND MODULE PRESSURE AND TEMPERATURE CONTROL SYSTEM
810400-1-1	3.1	1	CABIN OUTFLOW, PRESSURE REGULATOR AND NEGATIVE RELIEF VALVE
812100-1-1	3.2	1	CABIN HEAT EXCHANGER
820120-1-1	3.5	1	CABIN TEMPERATURE SELECTOR
820110-1-1	3.6	1	CABIN TEMPERATURE ANTICIPATOR
820010-1-1	3.7	1	CABIN TEMPERATURE CONTROL
820100-1-1	3.8	1	CABIN TEMPERATURE SENSOR
848010-1-1	3.14	1	CABIN BLOWER DIVERTER VALVE
820210-1-1	3.17	2	CABIN BLOWER SELECTOR SWITCH
826010-1-1	3.18	2	CABIN RECIRCULATING BLOWER
850014-1-1	3.27	2	CABIN VENT VALVE
810200-1-1	3.28	1	CABIN PRESSURE REGULATOR
			GROUP IV - OXYGEN SUPPLY
827140-1-1	4.13	1	BACK PACK SUPPLY SHUTOFF AND PRESSURE RELIEF VALVE
827140-1-1	4.14	1	BACK PACK SUPPLY CAP
827300-1-1	4.16	1	DEMAND PRESSURE REGULATOR AND RELIEF VALVE
827310-1-1	4.17	1	MANUAL OXYGEN SUPPLY VALVE
827810-1-1	4.18	2	OXYGEN QUICK DISCONNECT
827550-1-1	4.22	1	EMERGENCY OXYGEN INFLOW CONTROL VALVE
827240-1-1	4.23	1	REENTRY O SUPPLY SYSTEM
			OXYGEN TANK (2)
			OXYGEN FILL PORT (2)
			VALVE ASSEMBLY (2)
			PRESSURE REGULATOR (2)
			RELIEF VALVE (2)
			CHECK VALVE (2)
827330-1-1	4.24	1	OXYGEN PRESSURE REGULATOR ASSEMBLY
			SHUTOFF VALVE (2)
			PRESSURE REGULATOR (2)
			RELIEF VALVE (2)
			CHECK VALVE (2)
			GROUP V - WATER SUPPLY SYSTEM
827520-1-1	5.1		WATER SUPPLY QUICK DISCONNECT
827360-1-1	5.2	5	WATER CHECK VALVE
827010-1-1	5.5	1	SUIT EVAPORATOR WATER INFLOW CONTROL VALVE
812300-1-1	5.10	1	POTABLE WATER TANK
827520-1-1	5.12	1	FREON QUICK DISCONNECT VALVE
812400-1-1	5.14	1	WATER CHILLER
812200-1-1	5.15	1	WASTE WATER TANK
827410-1-1	5.18	3	WATER SHUTOFF VALVE
827820-1-1	5.19	1	WATER TANK PRESSURE RELIEF VALVE
812900-1-1	5.22	1	POTABLE WATER SUPPLY ASSEMBLY
			SUPPLY VALVE (2)
			HEATER
827830-1-1	5.23	2	WATER PRESSURE RELIEF VALVE
810300-1-1	5.24	2	TANK PRESSURE CONTROL AND RELIEF VALVE
827840-1-1	5.25	1	FREON FLOW VALVE
827850-1-1	5.26	1	WATER QUICK DISCONNECT

MANUAL SHUTOFF VALVE
ELECTRICALLY ACTUATED VALVE
ELECTRICALLY ACTUATED CONTROL VALVE WITH MANUAL OVERRIDE
PRESSURE REGULATOR
PRESSURE REGULATOR AND RELIEF VALVE
PRESSURE RELIEF VALVE
PRESSURE RELIEF VALVE WITH MANUAL OVERRIDE
ELECTRICALLY ACTUATED 3-WAY VALVE
ELECTRICALLY ACTUATED 3-WAY VALVE WITH MANUAL OVERRIDE
CHECK VALVE
SELF SEALING QUICK DISCONNECT
QUICK DISCONNECT

Figure 8.1 Environmental Control System "E" Revision

[redacted]

[redacted]

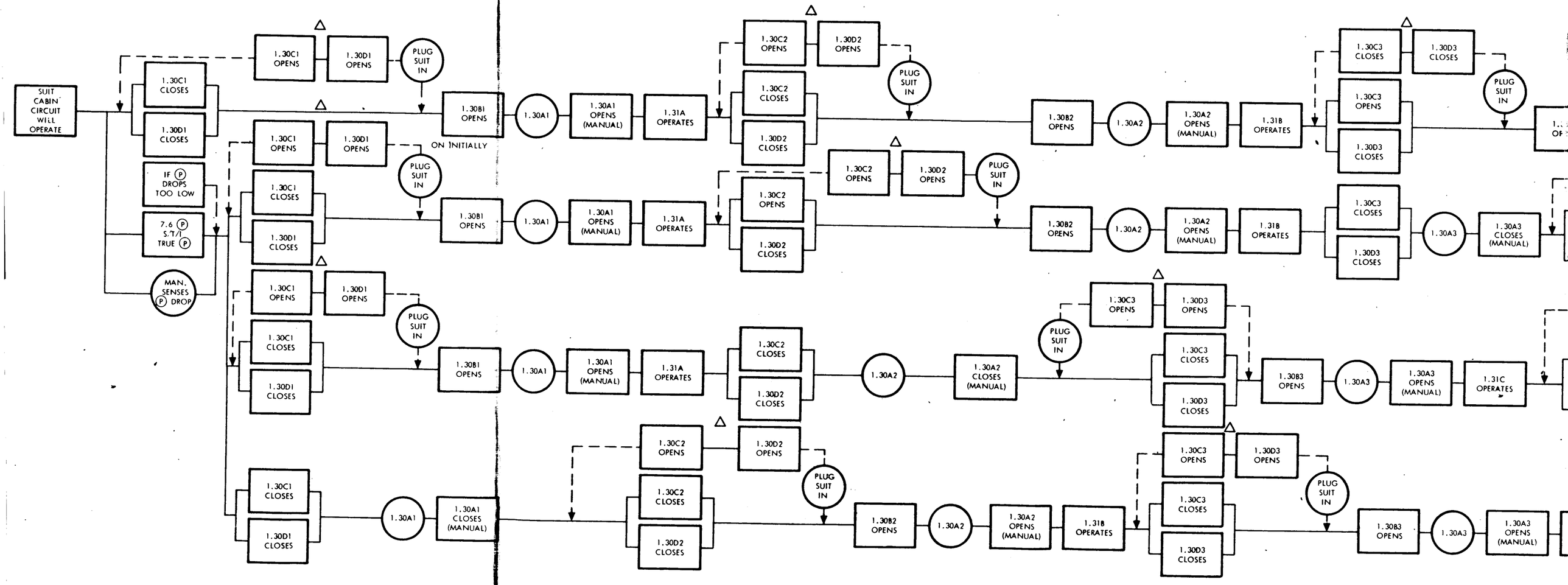

FOLD OUT #1

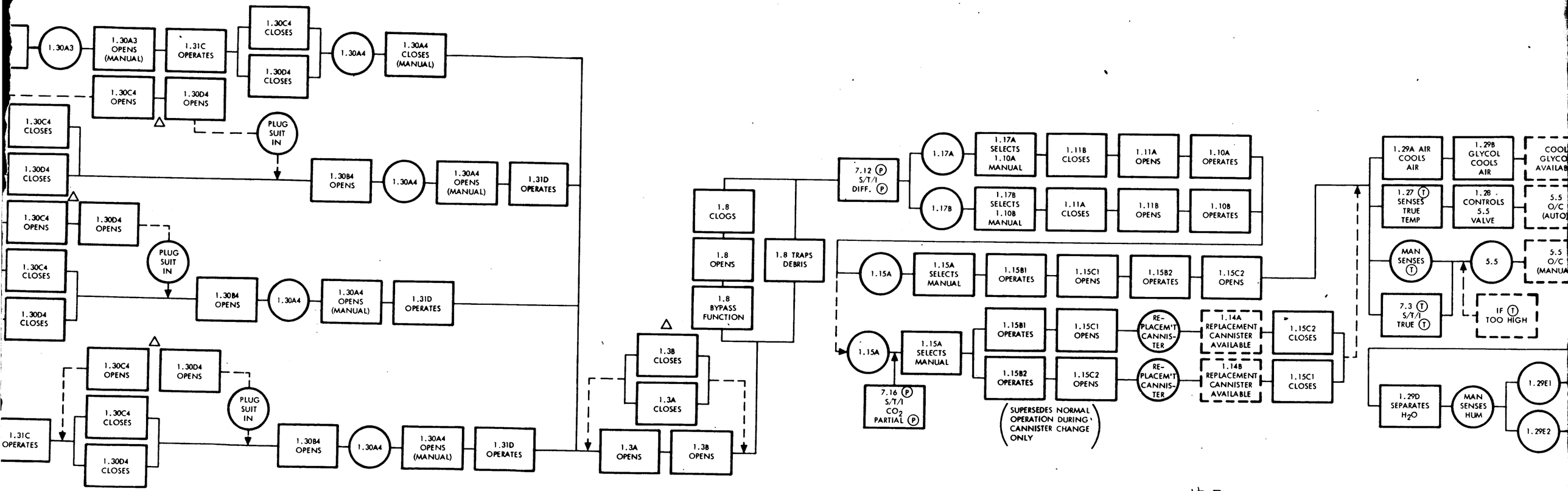
1.30A3
1.30A3 OPENS (MANUAL)
1.31C OPERATES
1.30C4 CLOSES
1.30D4 CLOSES
1.30A4
1.30A4 CLOSES (MANUAL)
1.30C4 OPENS
1.30D4 OPENS
PLUG SUIT IN
1.30B4 OPENS
1.30A4
1.30A4 OPENS (MANUAL)
1.31D OPERATES
1.31C OPERATES
1.8 CLOGS
1.8 OPENS
1.8 BYPASS FUNCTION
1.8 TRAPS DEBRIS
1.3B CLOSES
1.3A CLOSES
1.3A OPENS
1.3B OPENS
7.12 (P) S/T/I DIFF. (P)
1.17A
1.17A SELECTS 1.10A MANUAL
1.11B CLOSES
1.11A OPENS
1.10A OPERATES
1.17B
1.17B SELECTS 1.10B MANUAL
1.11A CLOSES
1.11B OPENS
1.10B OPERATES
1.15A
1.15A SELECTS MANUAL
1.15B1 OPERATES
1.15C1 OPENS
1.15B2 OPERATES
1.15C2 OPENS
7.16 (P) S/T/I CO_2 PARTIAL (P)
RE-PLACEM'T CANNIS-TER
1.14A REPLACEMENT CANNISTER AVAILABLE
1.14B REPLACEMENT CANNISTER AVAILABLE
1.15C2 CLOSES
1.15C1 CLOSES
(SUPERSEDES NORMAL OPERATION DURING CANNISTER CHANGE ONLY)
1.29A AIR COOLS AIR
1.29B GLYCOL COOLS AIR
1.27 (T) SENSES TRUE TEMP
1.28 CONTROLS 5.5 VALVE
MAN SENSES (T)
5.5
7.3 (T) S/T/I TRUE (T)
IF (T) TOO HIGH
1.29D SEPARATES H_2O
MAN SENSES HUM
1.29E1
1.29E2

FOLD OUT #2

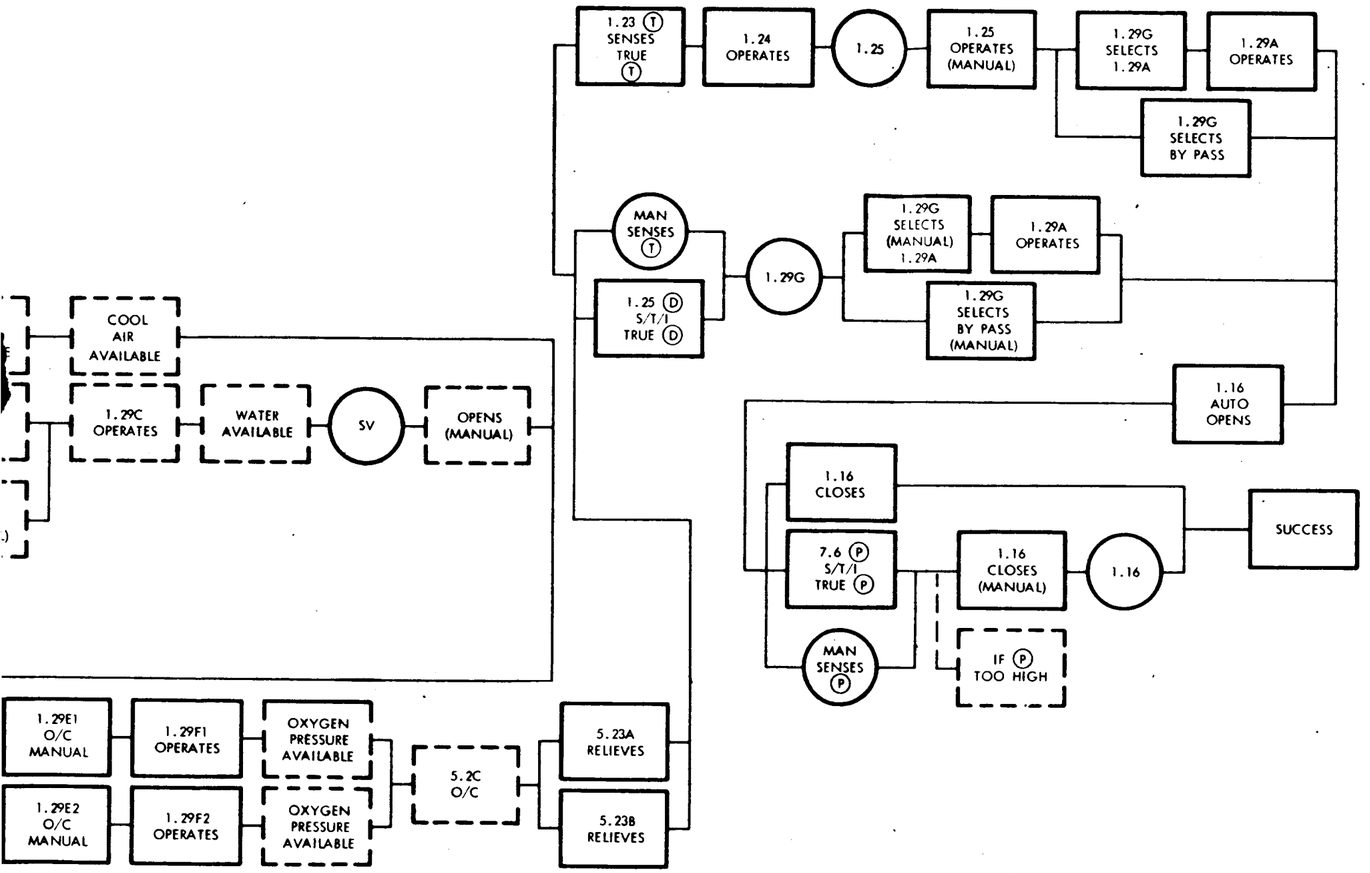

FOLD OUT #3

COMPONENT NUMBER	ITEM DESCRIPTION
1.1	VALVE, CHECK, RASPBERRY, NORMALLY CLOSED
1.2	HEAT EXCHANGER, AIR-AIR REGENERATION CROSS-FLOW
1.3	VALVE, CHECK, DUAL, BUTTERFLY, NORMALLY CLOSED
1.4	VALVE, LIMITING AND MANUAL SHUTOFF, NORMALLY OPEN
1.5	CONNECTOR, NORMALLY OPEN
1.6	VALVE, CHECK, FLAPPER, NORMALLY CLOSED
1.7	CONNECTOR, ORIFICE, NORMALLY CLOSED
1.8	DEBRIS TRAP, SCREEN FILTER
1.9	CATALYTIC FILTER
1.10	COMPRESSOR, CENTRIFUGAL, 10,000 RPM
1.11	VALVE, CHECK, RASPBERRY, NORMALLY CLOSED
1.12	VALVE, MANUAL SHUTOFF, NORMALLY OPEN
1.13	VALVE, CHECK RASPBERRY, NORMALLY CLOSED
1.14	CO_2 AND ODOR ABSORBER REMOVABLE CONTAINER (26 REPLACEMENTS)
1.15	CO_2 AND ODOR ABSORBER
1.16	VALVE, PRESSURE RELIEF WITH MANUAL OVERRIDE, NORMALLY CLOSED
1.17	SWITCH, ROTARY, FOUR-POSITION ASSEMBLY
1.18	VALVE, ELECTRICALLY ACTUATED CONTROL WITH MANUAL OVERRIDE
1.19	HEAT EXCHANGER, GLYCOL-AIR CROSS-FLOW
1.20	HEAT EXCHANGER, WATER-AIR CROSS-FLOW
1.21	VALVE, DIVERTER, MANUAL
1.22	WATER SEPARATOR, WITH SHUTOFF VALVE AND ACTUATOR
1.23	SUIT AIR TEMPERATURE SENSOR
1.24	TEMPERATURE CONTROL, MAGNETIC AMPLIFIER
1.25	TEMPERATURE SELECTOR, RHEOSTAT
1.27	SUIT EVAPORATOR TEMPERATURE CONTROL
1.28	TEMPERATURE CONTROL, MAGNETIC AMPLIFIER
1.29	HEAT EXCHANGER PACKAGE
	REGENERATIVE HEAT EXCHANGER
	REGENERATIVE HEAT EXCHANGER BYPASS VALVE
	SUIT EVAPORATOR
	GLYCOL-TO-SUIT AIR HEAT EXCHANGER
	WATER SEPARATOR
	WATER SEPARATOR PUMP ASSEMBLY
1.30	SUIT HOSE CONNECTOR PACKAGE
	SUIT SHUTOFF VALVE
	SUIT SUPPLY CONNECTION
	CHECK VALVE
1.31	SUIT FLOW LIMITER
5.2	WATER CHECK VALVE
5.23	WATER PRESSURE RELIEF VALVE
5.5	VALVE, ELECTRICALLY ACTUATED CONTROL WITH MANUAL OVERRIDE
5.13	VALVE, CHECK, QUADRUPLE ASSEMBLY, NORMALLY OPEN
7.1	SENSOR, AIR PRESSURE
7.3	SENSOR, AIR TEMPERATURE
7.6	SENSOR, PRESSURE DIFFERENTIAL
7.7	SENSOR, PRESSURE DIFFERENTIAL
7.9	SENSOR, AIR TEMPERATURE
7.10	SENSOR, VOLTAGE INDICATION
7.11	SENSOR, AIR TEMPERATURE
7.12	TRANSDUCER, PRESSURE, INLET SUIT SUPPLY MANIFOLD
7.16	TRANSDUCER, PARTIAL PRESSURE, CO_2

LEGEND

△ = CABIN EMERGENCY SUIT MODE
○ = HUMAN OPERATION
□ = MECHANICAL OPERATION
S/T/I = SENSES, TRANSMITS, AND INDICATES
S/T/W = SENSES, TRANSMITS, AND WARNS
D = POSITION
P = PRESSURE
T = TEMPERATURE
V = VOLTAGE
S/V = SERVO VALVE
O/C = OPEN OR CLOSED

NOTE:

A, B, C, ETC, AFTER COMPONENT NUMBER INDICATES POSITION IN CIRCUIT OF SUCCESSIVE IDENTICAL COMPONENT

NOTE: DOES NOT INCLUDE GROUND CHECK-OUT PROVISIONS
UNLESS OTHERWISE INDICATED PARALLEL REDUNDANCY IS ASSUMED RATHER THAN SEQUENTIAL REDUNDANCY
NORMAL OPERATION AND NORMAL CONDITIONS ASSUMED UNLESS OTHERWISE INDICATED
LOGIC BASED UPON REQUIREMENTS FOR SUCCESS

Figure 8.2 Pressure Suit Subsystem Logic Diagram

[redacted]

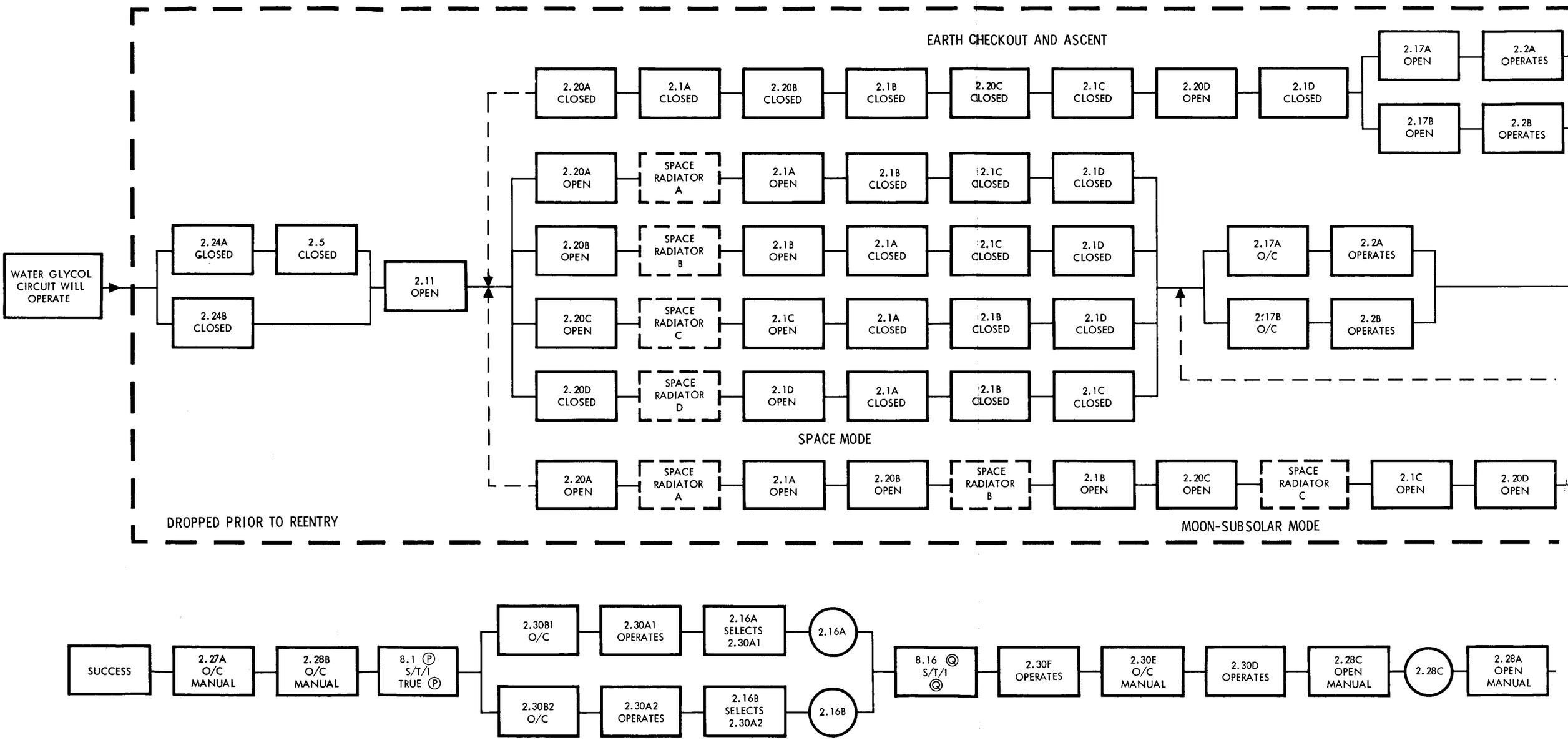

FOLD OUT #1

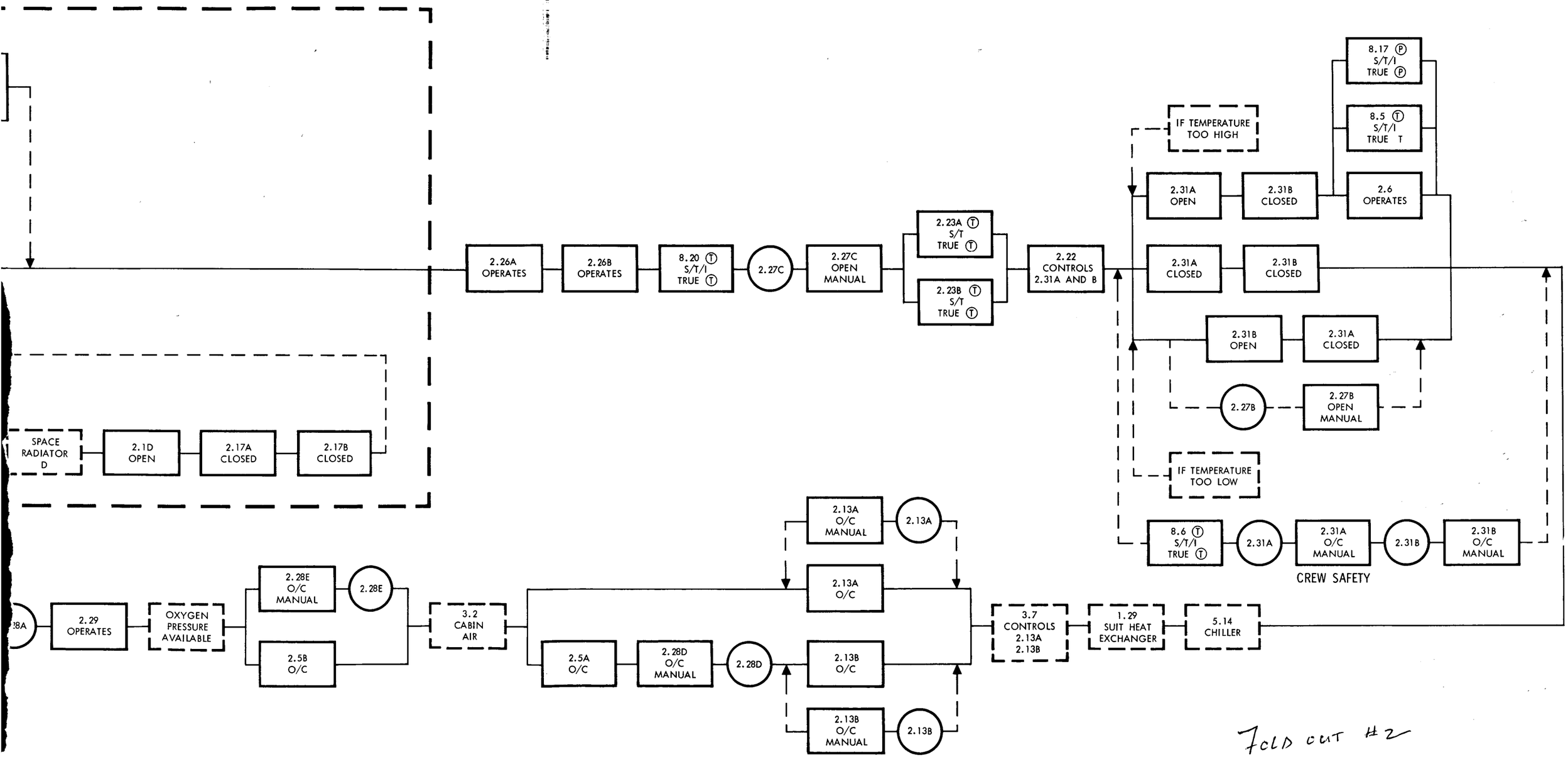
SPACE RADIATOR D
2.1D OPEN
2.17A CLOSED
2.17B CLOSED
2.26A OPERATES
2.26B OPERATES
8.20 T S/T/I TRUE T
2.27C
2.27C OPEN MANUAL
2.23A T S/T TRUE T
2.23B T S/T TRUE T
2.22 CONTROLS 2.31A AND B
IF TEMPERATURE TOO HIGH
2.31A OPEN
2.31B CLOSED
8.17 P S/T/I TRUE P
8.5 T S/T/I TRUE T
2.6 OPERATES
2.31A CLOSED
2.31B CLOSED
2.31B OPEN
2.31A CLOSED
2.27B
2.27B OPEN MANUAL
IF TEMPERATURE TOO LOW
8.6 T S/T/I TRUE T
2.31A
2.31A O/C MANUAL
2.31B
2.31B O/C MANUAL
CREW SAFETY
2.13A O/C MANUAL
2.13A
2.13A O/C
2.13B O/C
2.13B O/C MANUAL
2.13B
2.28A
2.29 OPERATES
OXYGEN PRESSURE AVAILABLE
2.28E O/C MANUAL
2.28E
2.5B O/C
3.2 CABIN AIR
2.5A O/C
2.28D O/C MANUAL
2.28D
3.7 CONTROLS 2.13A 2.13B
1.29 SUIT HEAT EXCHANGER
5.14 CHILLER

FOLD OUT #2

COMPONENT NUMBER	ITEM DESCRIPTION
1.29	HEAT EXCHANGER PACKAGE
	REGENERATIVE HEAT EXCHANGER
	REGENERATIVE HEAT EXCHANGER BYPASS VALVE
	SUIT EVAPORATOR
	GLYCOL-TO-AIR HEAT EXCHANGER
	WATER SEPARATOR
	WATER SEPARATOR PUMP ASSEMBLY
2.1	SPACE RADIATOR OUTLET CHECK VALVE
2.2	GLYCOL PRESSURE RELIEF VALVE
2.5	GLYCOL CHECK VALVE
2.6	GLYCOL EVAPORATOR
2.11	GLYCOL SHUTOFF VALVE
2.13	CABIN TEMPERATURE CONTROL VALVE
2.16	GLYCOL PUMP SELECTOR SWITCH
2.17	GLYCOL SHUTOFF VALVE
2.20	SPACE RADIATOR ISOLATION AND VENT VALVE
2.22	GLYCOL TEMPERATURE CONTROL
2.23	GLYCOL TEMPERATURE SENSOR
2.24	GLYCOL FILL AND VENT CONNECTION
2.26	GLYCOL QUICK DISCONNECT
2.27	MANUAL SHUTOFF VALVE
2.28	GLYCOL SHUTOFF VALVE
2.29	GLYCOL RESERVOIR
2.30	GLYCOL PUMP ASSEMBLY
	ACCUMULATOR
	ISOLATION VALVE
	PUMP (2)
	CHECK VALVE (2)
	FILTER
2.31	GLYCOL TEMPERATURE CONTROL VALVE
3.7	CABIN TEMPERATURE CONTROL
5.14	WATER CHILLER
8.1	TRANSDUCER, PRESSURE, OUTLET, GLYCOL PUMP
8.5	TRANSDUCER, TEMPERATURE, GASEOUS, OUTLET, GLYCOL EVAP. SENSOR
8.6	TRANSDUCER, TEMPERATURE, LIQUID, OUTLET, GLYCOL EVAP. SENSOR
8.16	TRANSDUCER, PRESSURE, QUANTITY MEASUREMENT, GLYCOL ACCOM.
8.17	TRANSDUCER, PRESSURE, GASEOUS, OUTLET, GLYCOL EVAPORATOR
8.20	TRANSDUCER, TEMPERATURE, OUTLET, SPACE RADIATOR SENSOR

LEGEND

○ = HUMAN OPERATION
□ = MECHANICAL OPERATION
O/C = OPEN OR CLOSED
Ⓟ = PRESSURE
Ⓠ = QUANTITY
S/T/I = SENSES, TRANSMITS, AND INDICATES
Ⓣ = TEMPERATURE

NOTE:
A, B, C, ETC., AFTER COMPONENT NUMBER INDICATES POSITION IN CIRCUIT OF SUCCESSIVE INDENTICAL COMPONENT

Figure 8.3 Water-Glycol Circuit Logic Diagram

FOLD OUT #3

[redacted]

~~CONFIDENTIAL~~

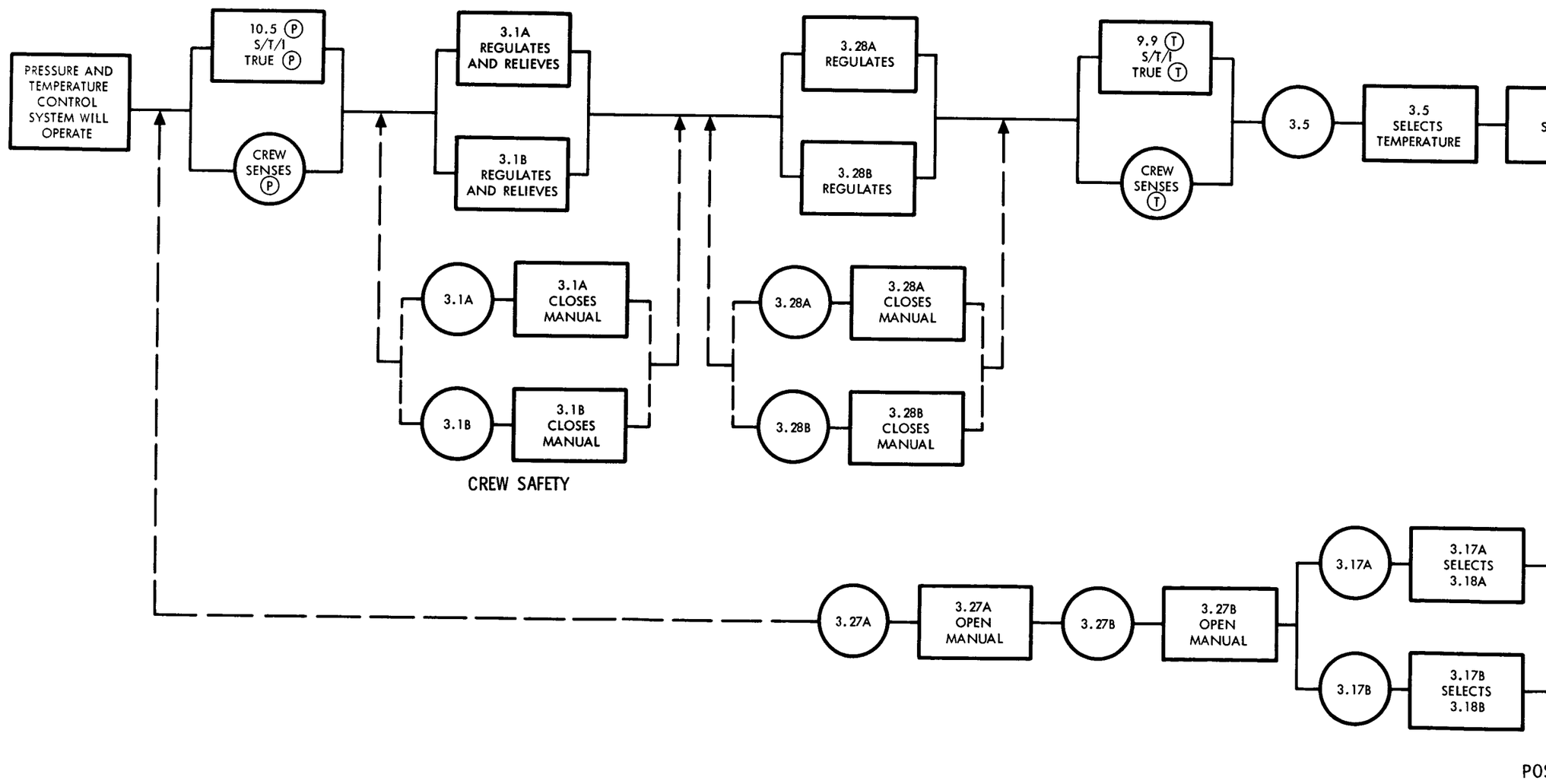

POS

FOLD OUT #1

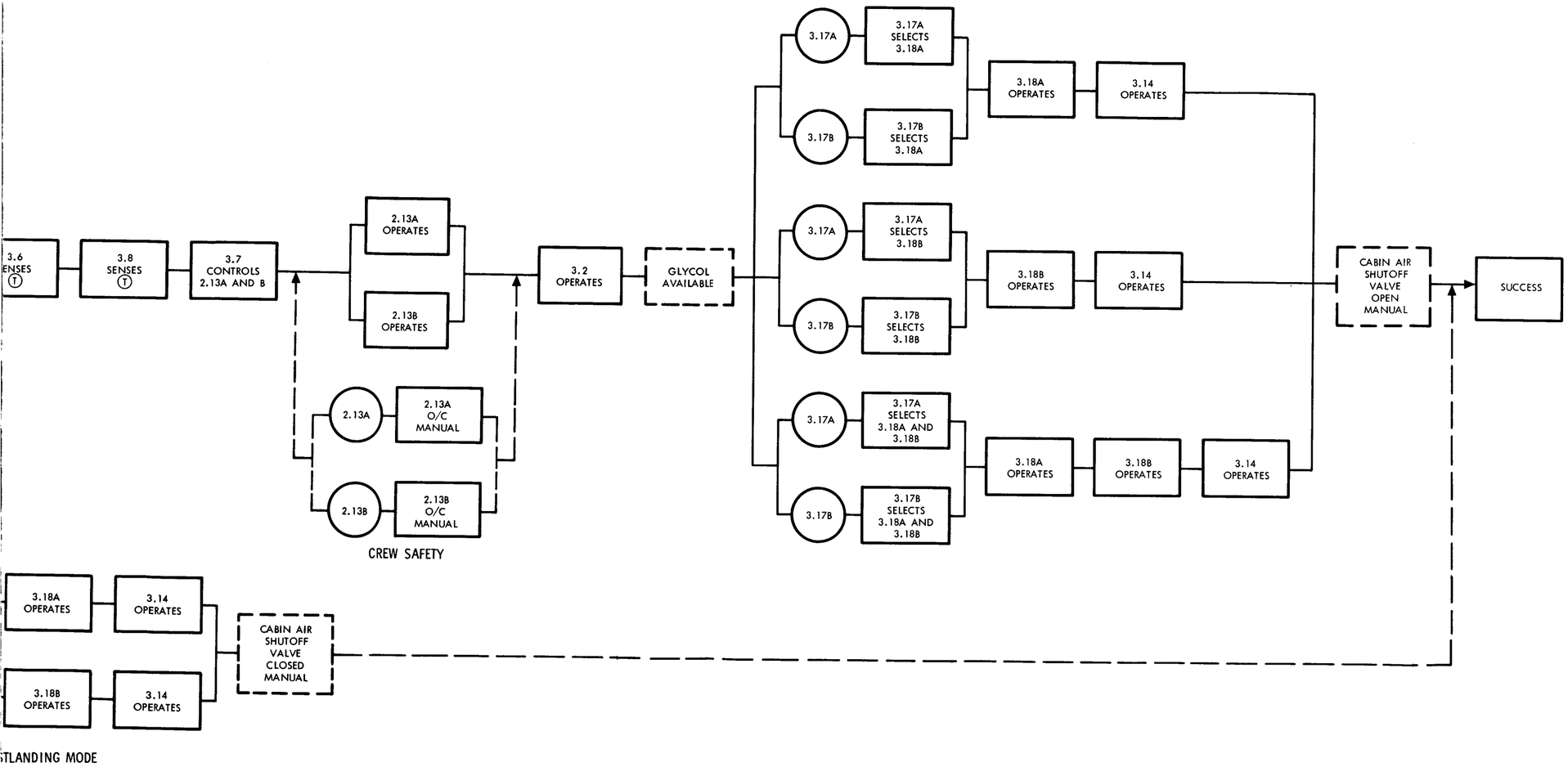

COMPONENT NUMBER	ITEM DESCRIPTION
2.13	CABIN TEMPERATURE CONTROL VALVE
3.1	CABIN OUTFLOW, PRESSURE REGULATOR AND NEGATIVE RELIEF VALVE
3.2	CABIN HEAT EXCHANGER
3.5	CABIN TEMPERATURE SELECTOR
3.6	CABIN TEMPERATURE ANTICIPATOR
3.7	CABIN TEMPERATURE CONTROL
3.8	CABIN TEMPERATURE SENSOR
3.14	CABIN BLOWER DIVERTER VALVE
3.17	CABIN BLOWER SELECTOR SWITCH
3.18	CABIN RECIRCULATING BLOWER
3.27	CABIN VENT VALVE
3.28	CABIN PRESSURE REGULATOR
9.9	TRANSDUCER, TEMPERATURE, COMMAND MODULE, AIR, CABIN SENSOR
10.5	SENSOR, COMMAND MODULE TOTAL PRESSURE

LEGEND

○ = HUMAN OPERATION

▭ = MECHANICAL OPERATION

O/C = OPEN OR CLOSED

(P) = PRESSURE

S/T/I = SENSES, TRANSMITS, AND INDICATES

(T) = TEMPERATURE

NOTE:
A, B, C, ETC., AFTER COMPONENT NUMBER INDICATES POSITION IN CIRCUIT OF SUCCESSIVE IDENTICAL COMPONENT

Figure 8.4 Command Module Pressure and Temperature Control, Logic Diagram

FOLD OUT #2

[redacted]

The reentry oxygen supply subsystem supplies the oxygen required for mission completion after separation of the service module from the command module. This function is accomplished by oxygen storage tanks, pressure regulators, and valves. The back pack oxygen supply system supplies the oxygen required for changing the back packs within the command module from the main oxygen tanks. This function is accomplished by a shut-off and pressure relief valve. Figure 8.5 presents the subsystem logic block diagram, and Figure 8.6 presents the back pack supply.

8.2.5 Water Supply Subsystem

The water supply subsystem collects, stores, and provides water for supplemental and emergency heat transfer operation and collects and stores potable water for consumption by the crew members. The above functions are accomplished, utilizing water tanks, pressure controls, and valves. This subsystem also contains several valves associated with other subsystems. Figure 8.7 presents the subsystem logic block diagram. As an aid to performing an ECS system reliability analysis, logic diagrams, Figures 8.2 through 8.7 were prepared for each ECS circuit. In addition, a failure mode and effects analysis for each ECS component is herein included.

8.2.6 ECS Radiators

The ECS radiators, although not considered part of the ECS, are connected to the water-glycol subsystem. The radiators provide the means of transferring to space the heat absorbed by the water-glycol. Two radiators are provided, which are mounted in the service modules. Each radiator is divided into independent circuits. The heat rejection rate may thus be varied for different heat loads by activating more or fewer numbers of the radiator tube passages, which, in turn, vary the amount of active radiating surface. The independent circuits in each radiator also provide crew safety by incorporating the capability of eliminating a leak in a radiator section caused by meteoroid impacts. Mission success and crew safety reliability for the radiators have been apportioned at 0.99995 and 0.999998 respectively.

8.2.7 Cold Plate Circuit

The cold-plate circuit is also connected to the ECS water-glycol circuit. Cold plates provide the means of cooling the electronic modules in the spacecraft. Approximately forty cold plates are provided as heat exchangers. The cold plates are in contact with the electronic modules requiring cooling. Cool water-glycol circulates through internal passages in the cold plates. The cool cold plate surfaces absorb heat from the electronic modules, which is in turn transmitted to the water-glycol circulating in the cold plates.

[redacted]

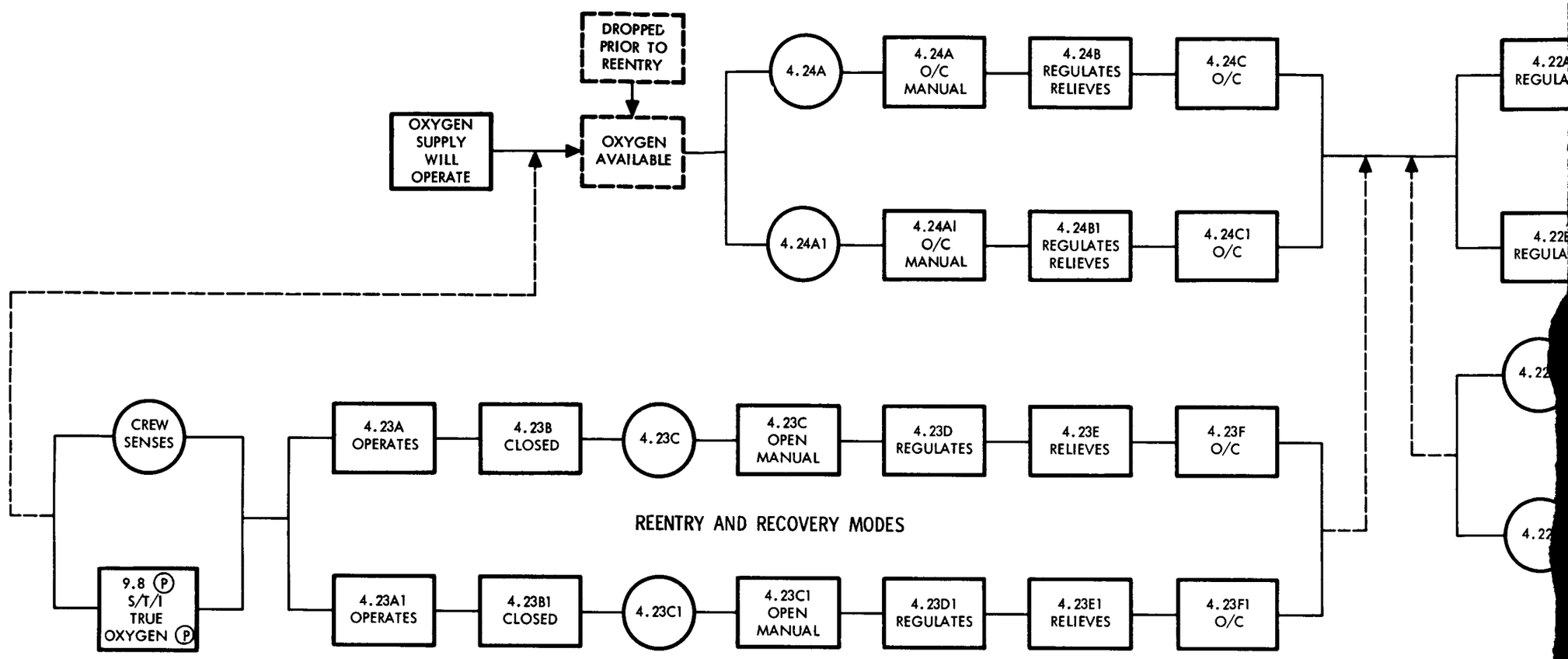

FOLD OUT #1

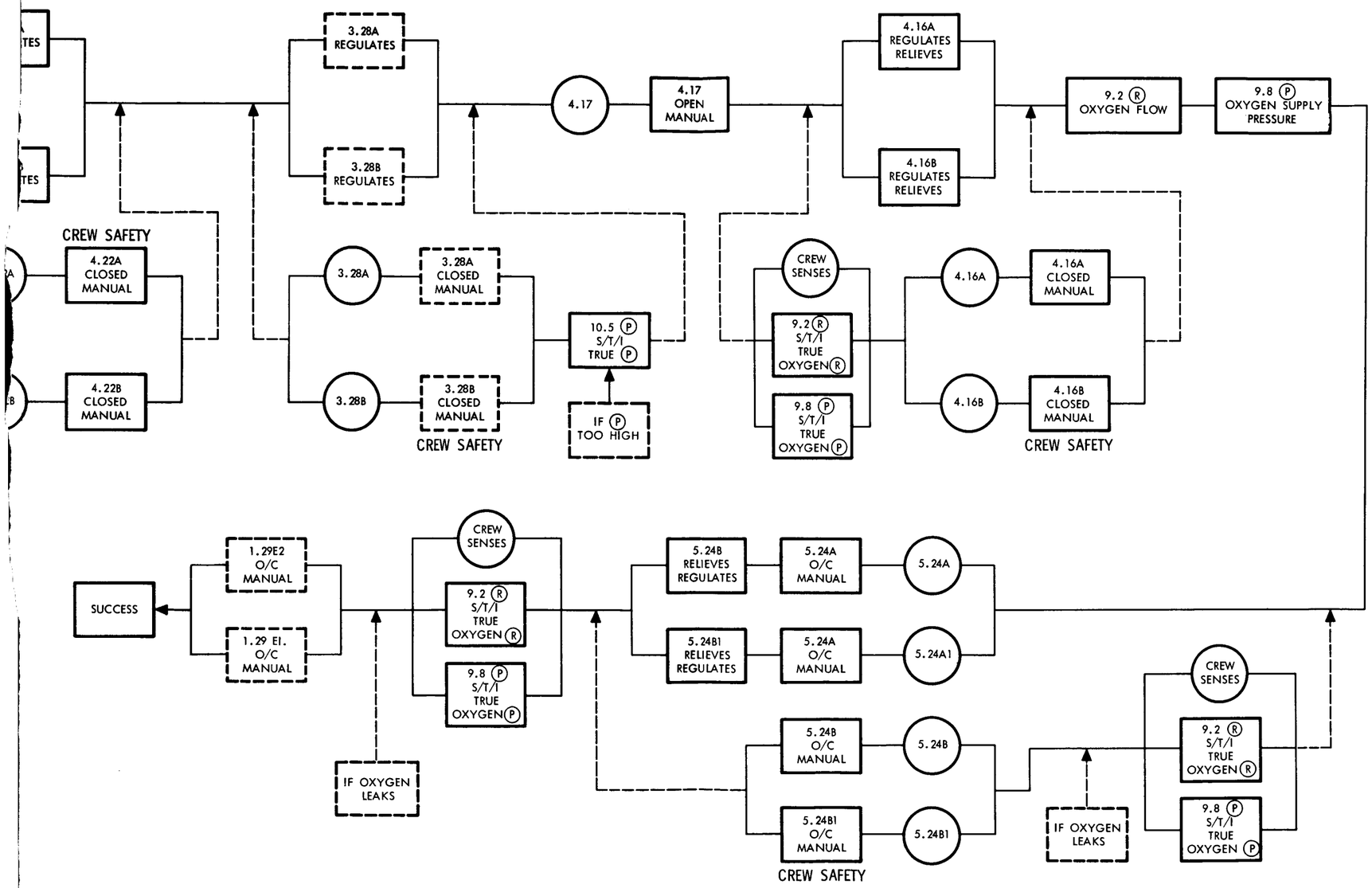

COMPONENT NUMBER	ITEM DESCRIPTION
1.29	HEAT EXCHANGER PACKAGE
	REGENERATIVE HEAT EXCHANGER
	REGENERATIVE HEAT EXCHANGER BYPASS VALVE
	SUIT EVAPORATOR
	GLYCOL-TO-SUIT AIR HEAT EXCHANGER
	WATER SEPARATOR
	WATER SEPARATOR PUMP ASSEMBLY
3.28	CABIN PRESSURE REGULATOR
4.16	DEMAND PRESSURE REGULATOR AND RELIEF VALVE
4.17	MANUAL OXYGEN SUPPLY VALVE
4.22	EMERGENCY OXYGEN INFLOW CONTROL VALVE
4.23	REENTRY OXYGEN SUPPLY SYSTEM
	OXYGEN TANK (2)
	OXYGEN FILL PORT (2)
	VALVE ASSEMBLY (2)
	PRESSURE REGULATOR (2)
	RELIEF VALVE (2)
	CHECK VALVE (2)
4.24	OXYGEN PRESSURE REGULATOR ASSEMBLY
	SHUTOFF VALVE (2)
	PRESSURE REGULATOR (2)
	RELIEF VALVE (2)
	CHECK VALVE (2)
5.24	TANK PRESSURE CONTROL AND RELIEF VALVE
9.2	SENSOR, OXYGEN FLOW RATE
9.8	SENSOR, OXYGEN PRESSURE
10.5	SENSOR, COMMAND MODULE TOTAL PRESSURE

LEGEND

○ = HUMAN OPERATION

□ = MECHANICAL OPERATION

(P) = PRESSURE

(R) = FLOW RATE

S/T/I = SENSES, TRANSMITS, AND INDICATES

O/C = OPEN OR CLOSED

NOTE:
A, B, C, ETC., AFTER COMPONENT NUMBER INDICATES POSITION IN CIRCUIT OF SUCCESSIVE IDENTICAL COMPONENT

Figure 8.5 Oxygen Regulation Subsystem, Logic Diagram

FOLD OUT #2

~~CONFIDENTIAL~~

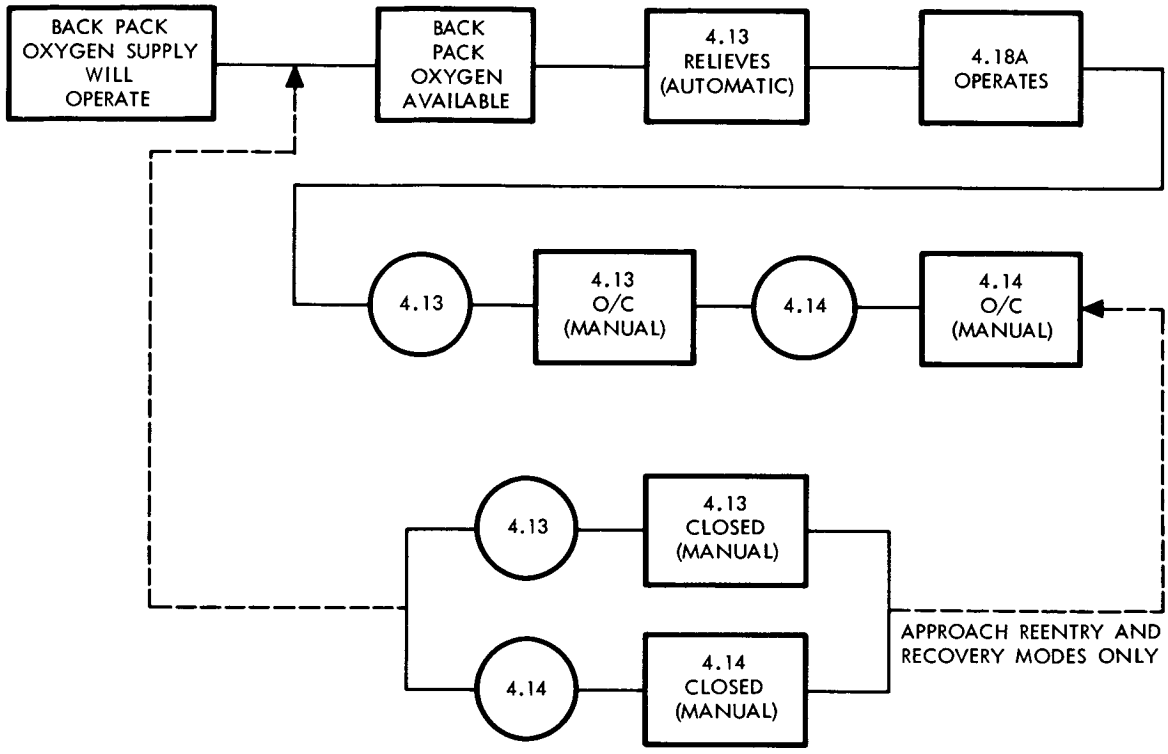

COMPONENT NUMBER	ITEM DESCRIPTION
4.13	VALVE, RELIEF AND MANUAL SHUTOFF, NORMALLY CLOSED
4.14	CAP, SEALING
4.18	DISCONNECT, (ONE CONNECTION)

LEGEND

○ HUMAN OPERATION

□ MECHANICAL OPERATION

O/C OPEN OR CLOSED

Figure 8.6 Back Pack Oxygen Supply, Logic Diagram

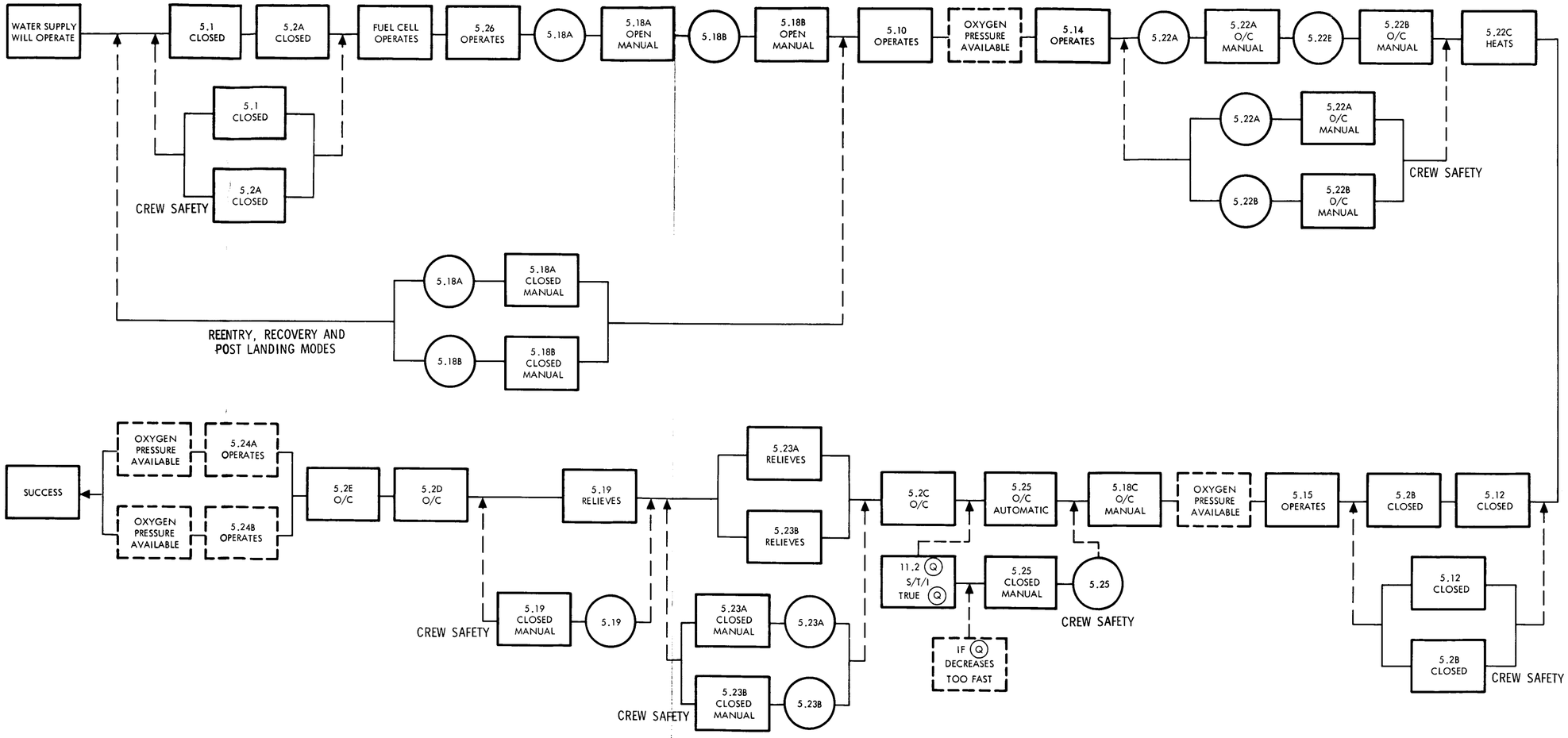

COMPONENT NUMBER	ITEM DESCRIPTION
5.1	DISCONNECT, SELF-SEALING, NORMALLY CLOSED
5.2	VALVE, CHECK, PRESET, NORMALLY CLOSED
5.10	WATER TANK, BLADDER
5.12	FREON QUICK-DISCONNECT VALVE
5.14	HEAT EXCHANGER, GLYCOL-WATER PARALLEL FLOW
5.15	WATER TANK, BLADDER
5.18	WATER SHUTOFF VALVE
5.19	WATER TANK PRESSURE RELIEF VALVE
5.22	POTABLE WATER SUPPLY ASSEMBLY
	SUPPLY VALVE (2)
	HEATER
5.23	WATER PRESSURE RELIEF VALVE
5.24	TANK PRESSURE CONTROL AND RELIEF VALVE
5.25	FREON FLOW VALVE
11.2	SENSOR, WATER QUANTITY

○ = HUMAN OPERATION
□ = MECHANICAL OPERATION
S/T/I = SENSES, TRANSMITS, AND INDICATES
Q = QUANTITY

NOTE:
A, B, C, ETC., AFTER COMPONENT NUMBER INDICATES POSITION IN CIRCUIT OF SUCCESSIVE IDENTICAL COMPONENT

Figure 8.7 Water Regulation, Logic Diagram

Mission success and crew safety reliability for the cold-plate circuit have been apportioned at 0.99995 and 0.999999, respectively.

8.2.8 Waste Management System

The waste management system's purpose is to provide control of human waste. The system's function may be broken down to provide the following functions.

Control of urine by collection, chemical treatment to kill bacteria, storage, and finally dumping into space.

Control of feces by collection and sanitized storage

Control of debris by collection with a vacuum cleaner

Mission success and crew safety reliability for the waste management system have been apportioned at 0.999965 and 0.999998 respectively.

Three variations of the waste management system were presented by the design group for reliability analysis. The major difference in each variation is the manner in which the mode selector valve and urine disposal lock are isolated to prevent inadvertent venting of the command module atmosphere to space through these components.

In system I, the urine lock is isolated both upstream and downstream by the mode selector valve, which is, in turn, isolated and backed up by a simple open-close manually operated valve downstream in the urine overboard vent line. This system which has the least complexity conforms to the apportioned reliability and is being developed for use in Apollo.

System II isolates the urine lock with an upstream solenoid valve and the mode selector valve downstream. The mode selector valve is in turn backed up by manual on-off valve downstream in the urine vent line.

System III employs a solenoid valve upstream from the urine lock, a solenoid valve downstream to prevent liquid (urine) flow, and a mode selector valve to prevent gas flow. The upstream solenoid valve and mode selector valve are backed up for atmospheric venting by the downstream solenoid valve.

8.2.9 Failure Effects Analysis

The results of the failure effects analysis performed on the ECS, schematic "E" change, are presented in Table 8.2

Table 8.2 Environmental Control Subsystem Failure Effects Analysis

Item	Drawing No.	Electrical Reference Designation	Function	Failure Type	Mission Phase	Failure Effect			Possible Crew Action
						Component Performance	Subsystems Performance	Apollo	
1.3 Valve suit circuit return	850022-1-1		Cabin gas-to-suit circuit	Fail open (cabin pressure suit pressure)	All	None	(A) (C)* None	None	None
				Fail open (cabin pressure suit pressure	All	None, in series with another check valve	(B)* None	None	Repair if failure is detected
				Fail closed	All	None	(A) (B)* None (C)* Loss of O_2 makeup	None abort	None. Don suits and connect suit circuit.
1.8 Trap, debris	811100-1-1		Remove solid contaminates from suit circuit	Main passage blocked	All	None, bypass will function	(A) (B) (C)* No debris removal	None	Clean or replace element
				**Bypass plugged	All	Loss of function	(A) (B) (C)* Loss of conditioned flow	Abort if unable to clean and repair	Don back packs during repair operation.
1.10 Compressor suit	826000-1-1		Suit circuit pressurization and circulation	Inoperative	All	None	(A) (B) (C)* Loss of gas flow	Abort	Use alternate compressor
				Operating speed low	All	None	(A) (B) (C)* Reduced gas flow and pressure	Abort	Use alternate compressor
				Burst	All	Loss of unit	(A) (B) (C)* No effect unless fragments cause other system damage.	Abort	Use alternate compressor or don back packs
1.11 Valve, suit compressor check	850052		Prevents reverse flow in compressor circuits	Fail open (associated compressor operating)	All	None	(A) (B) (C)* No effect	None	None
				Fail open (associated compressor failed)	All	Gas recirculates through failed compressor	(A) (B) (C)** Loss of gas to cabin or suits	Abort	None

* Primary Failure
** Secondary Failure
(A) In suits, cabin pressurized
(B) In suits, cabin unpressurized
(C) In shirtsleeves

[redacted]

Table 8.2 Environmental Control Subsystem Failure Effects Analysis (Continued)

Item	Drawing No.	Electrical Reference Designation	Function	Failure Type	Mission Phase	Failure Effect: Component Performance	Failure Effect: Subsystems Performance	Failure Effect: Apollo	Possible Crew Action
1.11 Valve, suit compressor check (Cont)				Fail closed	All	None	(A) (B) (C)** Loss associated compressor may overheat, also loss of gas to cabin or suits	Abort	Use alternate compressor.
Part of 1.15 valve, CO_2 and odor absorber check	811400-1-1		Prevents reverse flow during cannister change.	Fail open	All	None	(A) (B) (C)* No effect (B)** Loss of gas to suits if a previous leak failure occurred to absorber	None. Abort if leakage cannot be repaired	None. Don back packs and repair.
				Fail closed	All	None	(A) (B) (C) Loss of CO_2 and odor removal capacity	None. Redundant function	More frequent cannister replacement in alternate system.
1.15 Absorber CO_2 and odor	811400-1-1		Remove CO_2 and odors from suit circuit gas.	Leakage to ambient	All	Loss of redundant absorber	(A) (B) (C)* No effect	None	Use alternate absorber, repair leak replace cannister.
					All		(B)** Loss of gas to suits if a fail open condition occurred to valve 1.13	Abort if leakage condition is not repairable	Don back packs. Replace cannister.
				Failure to remove CO_2	All	Increased CO_2 level in suit circuit	(A) (B) (C)* None redundant absorber	None	Replace cannister.
Part of 1.15 CO_2 and odor absorber package valve, CO_2 and odor absorber isolation	811400-1-1		Isolates a cannister for element replacement and non-use	Jamming in any position	All	None	(A) (B) (C) No effect (B)** Loss of gas to suits if a previous leakage failure occurred to absorber	None. Abort if leakage condition cannot be repaired	None, don back pack.

* Primary Failure
** Secondary Failure
(A) In suits, cabin pressurized
(B) In suits, cabin unpressurized
(C) In shirtsleeves

[redacted]

[redacted]

Table 8.2 Environmental Control Subsystem Failure Effects Analysis (Continued)

Item	Drawing No.	Electrical Reference Designation	Function	Failure Type	Mission Phase	Failure Effect			Possible Crew Action
						Component Performance	Subsystems Performance	Apollo	
1.16 Valve, suit bypass control	810500-1-1		Bypass excess flow from suit circuit	Fail open	All	None	(A) (B) (C)* Reduction in suit flow	None	Use manual override
				Fail closed	All	None	(A) (B) (C)* Crew comfort slightly effected	None	Use manual override.
1.17 Switch suit compressor selector	820210-1-1		Selects compressor for desired operation	Inoperative	All	None, redundant switch provided	(A) (B) (C) None redundant switch provided	None	Use alternate switch
1.23 Sensor, suit air inlet temperature	820100-1-1		Provides temperature signal for auto suit air control	Inoperative or erratic	All	None	(A) (B) (C)* Loss of automatic temperature regulation.	None	Use manual control
1.24 Control, suit air temperature	820010-1-1		Amplifies signal from temperature sensor to electrically actuated bypass valve	(A) (B) (C) Control totally inoperative or operates erratically	All	Loss of automatic temperature control for suit circuit gas.	None	None	Manually operate heat exchanger bypass valve.
1.25 Selector, suit air temperature	820020-2-1		Provides selection of desired suit circuit 925 temperature.	(A) (B) (C)* Selector totally inoperative or operates erratically.	All	Loss of automatic suit circuit 925 temperature control.	None	None	Manually operate heat exchanger bypass valve.
1.27 Sensor, suit evaporator temperature	820050-H		Provides signal to controller for supplementary cooling by water boiling in suit heat exchanger.	Sensor open or short circuited.	All	If water valve 5.5 opened, loss of H_2O if 5.5 closed, loss of cooling capacity and H_2O removal.	None if detected	Abort if excessive H_2O is lost prior to detection.	Manually operate water valve 5.5.

* Primary Failure
** Secondary Failure
(A) In suits, cabin pressurized
(B) In suits, cabin unpressurized
(C) In shirtsleeves

[redacted]

Table 8.2 Environmental Control Subsystem Failure Effects Analysis (Continued)

Item	Drawing No.	Electrical Reference Designation	Function	Failure Type	Mission Phase	Failure Effect			Possible Crew Action
						Component Performance	Subsystems Performance	Apollo	
1.28 Control suit evaporator air temperature	820010-1-1		Amplifies signal from 1.27 sensor to electrically actuated water valve.	(A) (B) (C)* Control totally inoperative or operates erratically.	All	For a totally inoperative control, failure effects are the same as for the 1.27 sensor above. For erratic operation, water valve 5.5 will oscillate resulting in premature wearout loss of cooling capacity and H_2O removal.	None if detected	Abort if excessive H_2O is lost prior to detection.	Manually operate water valve 5.5.
Exchanger regenerate heat, part of 1.29 heat exchanger package	813000-1-1		Cool suit circuit gas	Leakage - hot to cold	All	Reduced effect.	(A) (B) (C)* Reduction in cooling capacity and water removal	No effect unless leakage causes loss of tolerable temperature conditions, then abort.	None
				Leakage hot to ambient (cabin)	All	Drastically reduced in effect	(A) (C)* Reduction in cooling capacity and water removal increased O_2 demand. (B)* Loss of gas to suits	Abort	None
								Abort	Don back packs; repair leak if possible.
				Leakage - cold to ambient (cabin)	All	Drastically reduced effect	(A) (C)* Reduction in cooling capacity and water removal, increased O_2 demand. (B)* Loss of gas to suits	Abort	None
								Abort	Don back packs; repair leak if possible.

* Primary Failure
** Secondary Failure
(A) In suits, cabin pressurized
(B) In suits, cabin unpressurized
(C) In shirtsleeves

CONFIDENTIAL

[redacted]

Table 8.2 Environmental Control Subsystem Failure Effects Analysis (Continued)

Item	Drawing No.	Electrical Reference Designation	Function	Failure Type	Mission Phase	Failure Effect			Possible Crew Action
						Component Performance	Subsystems Performance	Apollo	
Valve, regenerate heat exchanger by-pass. Part of 1.29 heat exchanger package			Mix warm and cool suit circuit gas to obtain desired temperature.	Electric actuator fails or valve fails in by-pass open or closed position	All	None	None	None	None, Use manual over-ride provided on valve
Evaporator, suit. Part of 1.29 heat exchanger package			Provide supplement cooling of suit circuit gas by boiling H_2O	Leakage of suit gas to vacuum or cabin ambient	All	Loss of conditioned suit circuit gas	Depletion of O_2 supply	Abort	Don back packs
Glycol to suit heat exchanger. Part of 1.29 heat exchanger package				Leakage of glycol to suit gas or to ambient	All	Loss of cooling capacity and contamination of atmosphere	Loss of water-glycol and equipment cooling capacity	Abort	Open clycol by-pass valve
			Provides primary cooling of suit circuit gas	Leakage of suit gas to ambient	All	Loss of O_2	Depletion of O_2 supply	Abort	Don back packs
Water separator part of 1.29 heat exchanger package			Remove water from suit circuit gas	Failure to remove H_2O	All	Humidity increase to intolerable levels	Humidity increase to intolerable levels	Abort	Use back packs if humidity too high
				Leakage to ambient	All	Loss of O_2	Depletion of O_2 supply	Abort	Use back packs
Water separator pump assembly part of heat exchanger package			Pump water from separator to waste water tank	Failure of pump to operate, H_2O leak to ambient, or O_2 leak to ambient	All	Increase in humidity and/or loss of O_2 supply	None	Abort if two systems fail	Use alternate system

* Primary Failure
** Secondary Failure
(A) In suits, cabin pressurized
(B) In suits, cabin unpressurized
(C) In shirtsleeves

[redacted]

[redacted]

Table 8.2 Environmental Control Subsystem Failure Effects Analysis (Continued)

Item	Drawing No.	Electrical Reference Designation	Function	Failure Type	Mission Phase	Failure Effect: Component Performance	Failure Effect: Subsystems Performance	Failure Effect: Apollo	Possible Crew Action
Valve, suit flow shutoff and limiting part of 1:30 suit connector package and 1:31 suit flow limiter	810100-1-1		Gas pressure to cabin and suits	Fail open	All	None None	(A) (C)* None (B)* Loss of gas to suit	None No effect; abort if two or more valves fail	Repair if detectable.
				Fail closed	All	None None	(A) (B)* Loss of gass to suits (C)* No effect	No effect; abort if two or more valves fail - None	Connect suit hose to alternate valve. None
Connector suit flow return part of 1:30 suit connector package	810100-1-1		Gas from suit to suit circuit	Mechanical damage	All	Connector useless	(A) (B) (C) * None	None	Use alternate connector.
Connection suit flow supply part of 1:30 suit connector package	810100-1-1		Suit pressure and flow	Mechanical damage	All	Connection useless for suit supply	(A) (B) (C)* None	None	Use alternate connector.
Valve, suit manifold return check, part of 1.30 suit connector package	810100-1-1		Suit circuit manifold return check	Fail open	All	None	(A) (C)* None (B)* Loss of gas to suits	None None unless two valves fail	None, Connect suit hose to failed open connection.
				Fail closed	All	Loss of function	(A) (B)* Loss of gas flow to suit (C)* None	None unless two valves fail. None	Connect suit hose to alternate connection. None
2.1 Valve, space radiator outlet check	827030-1-1		Prevents reverse coolant flow.	Fail open	Space flight	None	No effect unless previous leakage has occurred in radiator.	Abort	None
				Fail closed	Space flight	Loss of heat rejection capacity	Insufficient cooling for lunar orbit	Abort	Reorient S/C for minimum heat load.

* Primary Failure
** Secondary Failure
(A) In suits, cabin pressurized
(B) In suits, cabin unpressurized
(C) In shirtsleeves

[redacted]

Table 8.2 Environmental Control Subsystem Failure Effects Analysis (Continued)

Item	Drawing No.	Electrical Reference Designation	Function	Failure Type	Mission Phase	Failure Effect			Possible Crew Action
						Component Performance	Subsystems Performance	Apollo	
2.2 Valve, glycol pressure relief	827530-1-1		Protects against over-pressurization in glycol circuit.	Fail closed	Space flight	None, redundant valve and shutoff provided.	Possible pressure buildup and rupture of radiator	Abort	Use alternate valve.
				Fail open	Space flight	None, redundant valve and shutoff provided.	Loss of heat rejection	None	Use alternate valve.
2.4 Valve, glycol check (valve downstream of cabin heat exchanger)	827030-1-1		Prevents reverse coolant flow.	Fail open	All	None	Loss of heating capacity	Abort, if not able to control manually.	Manually operate valve 2.13.
				Fail closed	All	Loss of cooling capacity and/or heating capacity	During maximum heating or cooling effectiveness is reduced.	Abort, if not able to control manually.	Manually operate valve 2.13.
Valve upstream of cabin heat exchanger				Fail open	All	Loss of cooling capacity	During maximum cooling, effectiveness is reduced.	Abort, if not able to control manually	Manually operate valve 2.13.
				Fail closed	All	Loss of heating capacity	During maximum heating demand, system flow is blocked.	Abort, if not able to control manually.	Manually operate valve 2.13.
2.6 Evaporator glycol	812000-1-1		Cools glycol by water evaporation.	Leakage-glycol to steam	Space flight	None	Loss of coolant	Abort	None
				Leakage-glycol to cabin ambient	Space flight	None	Loss of coolant	Abort	None
				Leakage - cabin ambient to vacuum	Space flight	None	Loss of Oxygen	Abort	Use back packs.

* Primary Failure
** Secondary Failure
(A) In suits, cabin pressurized
(B) In suits, cabin unpressurized
(C) In shirtsleeves

[redacted]

[redacted]

Table 8.2 Environmental Control Subsystem Failure Effects Analysis (Continued)

Item	Drawing No.	Electrical Reference Designation	Function	Failure Type	Mission Phase	Failure Effect			Possible Crew Action
						Component Performance	Subsystems Performance	Apollo	
2.11 Valve, glycol shutoff	827570-1-1		Shuts off flow to radiators	Fail open	All	None	Redundant backup valve provided	None	None
				Fail closed	All	None	Loss of cooling capacity	Abort	None
2.13 Valve, cabin temperature control	812100-1-1		Shuts off flow to cabin heat exchanger	Jamming in any position	All	None, manual over ride provided	Loss of cabin temperature control	Abort, if not able to control temperature manually.	Use suits.
2.16 Switch, glycol pump selector	820210-1-1		Selects operation of glycol pumps	Inoperative	All	None	None, redundant switch provided	Abort	Use, alternate switch.
2.17 Valve, glycol shut off	827580-1-1		Allows space radiators to be bypassed by water-glycol	Fail open	Space flight	Diversion of coolant flow to radiator	Loss of cooling capacity	Abort if heat load too high.	Switch off unnecessary heat generating equipment.
				Fail closed	Space flight	None	Redundant backup valve provided	None	Use redundant valve.
2.20 Valve, space radiator isolation and vent	820220-1-1		Controls flow to sections of space radiator	Fail open	Space flight	None	None	None	None
				Fail closed	Space flight	Loss of one section of radiator	Loss of cooling capacity	Abort if heat load too high.	Switch off unnecessary heat generating equipment.
				Vent section fails open	Space flight	Loss of glycol	Loss of cooling capacity	Abort	Isolate radiator system.
				Vent section fails closed	Space flight	Unable to drain radiator when not in use	Possibility of frozen glycol mixture and rupture	Abort	Use remaining sections of radiator.
2.22 Control, glycol temperature	820010-1-1		Automatic control of glycol temperature	Inoperative or erratic operation	All	None, manually operated valve	Loss of auto glycol temperature control	None	Use manual control.

* Primary Failure
** Secondary Failure
(A) In suits, cabin pressurized
(B) In suits, cabin unpressurized
(C) In shirtsleeves

[redacted]

Table 8.2 Environmental Control Subsystem Failure Effects Analysis (Continued)

Item	Drawing No.	Electrical Reference Designation	Function	Failure Type	Mission Phase	Failure Effect: Component Performance	Failure Effect: Subsystems Performance	Failure Effect: Apollo	Possible Crew Action
2.23 Sensor, glycol temperature	820080-1-1		Glycol temperature sensing for automatic	Inoperative or erratic operation	All	None	None, alternate sensor provided	None	Switch to alternate sensor.
2.24 Connection, glycol fill and vent	827060-1-1		Ground servicing of glycol system	Fail open	Ground servicing	None	None, backup valves provided possible ground repair.	None	None
				Fail closed	Ground servicing	None	None detectable on ground during servicing.	None	None
2.26 Disconnect, glycol quick	827590-1-1		Prevents glycol loss, after C/M, S/M separation.	Fail open	Space flight	None	None, backup valve 2.27 provided.	None	Close valve 2.27
2.27 Valve, manual shutoff	827600-1-1		Glycol system shutoff to S/M	Fail closed	Space flight	None	Loss of heat rejection by radiator	Abort	Use suits.
				Fail open	Space flight	None	No manual shutoff for glycol	None, backup by 2.26 at S/M, C/M separation	None
2.28 Valve, glycol shutoff	827050-1-1		Backup valves in glycol system	Fail closed	All	Loss of cooling capacity (cabin)	Loss of cabin cooling or heating	Abort	Use suits.
				Fail open	All	None	None	None	None
2.29 Reservoir-glycol	812800-1-1		Provides for glycol makeup.	Bag rupture	All	Loss of function	No glycol make up available	Abort	Use suits.
				Glycol leakage	All	Loss of glycol	No glycol make up available	Abort	Use suits.
2.30 Pump assembly, glycol	850010-1-1				All				

* Primary Failure
** Secondary Failure
(A) In suits, cabin pressurized
(B) In suits, cabin unpressurized
(C) In shirtsleeves

Table 8.2 Environmental Control Subsystem Failure Effects Analysis (Continued)

Item	Drawing No.	Electrical Reference Designation	Function	Failure Type	Mission Phase	Failure Effect			Possible Crew Action
						Component Performance	Subsystems Performance	Apollo	
Accumulator			Provides makeup glycol	Leakage	All		Loss of glycol for make-up	Abort	Use reservoir glycol.
				Spring fails	All		Loss of glycol for make-up	Abort	Use reservoir glycol.
Isolation valve			Closes accumulator outlet	Fail open	Space flight	None	None	None	None
				Fail close	Space flight	Loss of function	Loss of glycol for make-up	Abort	Use reservoir glycol.
Pump				Inoperative or erratic operation	All	Loss of glycol flow and pressure	None, use alternate pump	Abort	Use alternate pump.
Valve, check			Prevents reverse glycol flow	Fail open	All	None	None, unless associated pump fails	Abort, if associated pump fails.	None
				Fail closed	All	Associated pump cannot be used.	Loss of an alternate pump	Abort	None
Filter			Filters glycol prior to entering pumps	Filter clogs	All	Reduced flow, high-pressure drop	Loss of cooling capacity	Abort	None
2.31 Valve, glycol temperature control	827390-1-1		Controls glycol flow for auto temperature	Fail open	All	None	Loss of temperature controlled glycol to exchanger	None	Use manual override.
				Fail closed	All	None	Loss of temperature controlled glycol to exchanger	None	Use manual override or alternate valve.
2.32 Valve, glycol pump diverter	827610-1-1		Manual flow control valve	Fail open	All	None	Loss of glycol system circulation	None	None
				Fail closed	All	None	None	None	None

* Primary Failure
** Secondary Failure
(A) In suits, cabin pressurized
(B) In suits, cabin unpressurized
(C) In shirtsleeves

Table 8.2 Environmental Control Subsystem Failure Effects Analysis (Continued)

Item	Drawing No.	Electrical Reference Designation	Function	Failure Type	Mission Phase	Failure Effect			Possible Crew Action
						Component Performance	Subsystems Performance	Apollo	
3.1 Valve, cabin outflow pressure regulator and negative relief	810400-1-1		Regulates pressure differential between cabin and exterior ambient	Fail open	All	Temporary drop in cabin pressure	None	None	Use manual override
				Fail closed	All	Alternate valve operates	None	None	None required unless both valves fail, then use manual override.
3.2 Exchanger, cabin heat	812100-1-1		Temperature conditions cabin gas	Glycol leak to ambient	All	Loss of conditioned gas	Loss of coolant and contamination of atmosphere	Abort	Override 2:13 temperature control valves to by pass heat exchanger and don suits if contamination severe. Use back packs and vent cabin prior to use of suits.
3.5 Selector, cabin temp	820120-1-1		Provides capability to select desired cabin temperature	Inoperative or erratic operation	All	Loss of automatic cabin temperature regulation	None	None	Manually operate 2.13 glycol temperature control valves
3.6 Anticipator, cabin temperature	820110-1-1		Provides signal of heat exchanger outlet gas temperature to 3.7 temperature control to eliminate hunting of 2.13 glycol control valves	Inoperative or erratic operation	All	Loss of automatic cabin temperature regulation	None	None	Manually operate 2.13 glycol temperature control valves
3.7 Control, cabin temperature	820010-1-1		Amplifies differential signal from 3.8 temperature sensor and 3.7 temperature anticipator to 2.13 glycol control valves	Inoperative or erratic operation	All	Loss of automatic cabin temperature regulation	None	None	Manually operate 2.13 glycol temperature control valves
3.8 Sensor, cabin temperature	820100-1-1		Senses cabin temperature and transmits signal to 3.7 temperature controller	Inoperative or erratic operation	All	Loss of automatic cabin temperature regulation	None	None	Use manual override on glycol control valve, 213.

* Primary Failure
** Secondary Failure
(A) In suits, cabin pressurized
(B) In suits, cabin unpressurized
(C) In shirtsleeves

[redacted]

Table 8.2 Environmental Control Subsystem Failure Effects Analysis (Continued)

Item	Drawing No.	Electrical Reference Designation	Function	Failure Type	Mission Phase	Failure Effect			Possible Crew Action
						Component Performance	Subsystems Performance	Apollo	
3.14 Valve, cabin recirculating blower selector	818010-1-1		Prevents back flow of gas through standby cabin blower	Jamming in any position	All	Inability to select alternate blower in the event of blower failure	If blower also fails, loss of capability to circulate cabin gas C.S. degraded	Abort	Don suits and use suit circuit.
3.17 Switch, cabin recirculating blower selector	820210-1-1		Allows selection of desired cabin circulation blower	Contact broken or fused together	All	Loss of standby switch capability	None C.S. degraded	None	Use alternate switch
3.18 Blower, cabin recirculating	826010-1-1		Circulates cabin gas	Inoperative or erratic operation	All	Loss of standby blower capability	None C.S. degraded	Abort	Use alternate blower. Don suits if both blowers fail.
3.27 Valve, cabin vent	850014-1-1		Provides ventillation during post landing phase	Leak to space failed to close	After earth landing	Loss of O_2 None	Depletion of O_2 supply None	Abort None	Don suits and use suit circuit. Open hatch
3.28 Regulator cabin pressure	810200-1-1		Provides regulated pressure within cabin	Fail open or closed or erratic operation	All	None	None	None	Use manual override to readjust or shut-off regulator and use alternate.
4.13 Valve, back pack supply shut off and pressure relief	827140-1-1		Controls oxygen supply for back pack charging	Fail open (relief or shutoff)	All	None	Loss of O_2 from storage if relief fails open	Abort	Use re-entry O_2 supply.
				Fail closed (relief)	All	Possible over-pressurization of back packs	None	None	Use valve to lower pressure to packs.
				Fail closed (shutoff)	All	Loss of ability to charge back packs	None	Abort	None

Primary Failure
Secondary Failure
(A) In suits, cabin pressurized
(B) In suits, cabin unpressurized
(C) In shirtsleeves

[redacted]

Table 8.2 Environmental Control Subsystem Failure Effects Analysis (Continued)

Item	Drawing No.	Electrical Reference Designation	Function	Failure Type	Mission Phase	Failure Effect			Possible Crew Action
						Component Performance	Subsystems Performance	Apollo	
4.14 Cap, back pack supply	827140-1-1		Protects and seals connection for O_2 back pack supply	Jammed on	All	Loss of ability to charge back packs	None	Abort	None
				Damaged and will not secure	All	None	None	None	None
4.16 Valve, demand pressure regulator and relief	827300-1-1		Maintains constant O_2 pressure in suit circuit	Fail open (regulator or relief)	All	Low suit circuit pressure	Loss of O_2	None, alternate valve provided	Use alternate valve.
				Fail closed (regulator or relief)	All	None	None, alternate valve provided	None unless two valves fail then abort	Use alternate valve.
4.17 Valve, manual O_2 supply	827310-1-1		Manual control of O_2 supply to suit circuit (back up for 4.16)	Fail open	All	High suit circuit pressure	Loss of O_2 supply by flooding system	Abort	Override with shutoff valves in 4.24 O_2 pressure regulator assembly.
				Fail closed	All	None	None	None	None
4.18 Disconnect, oxygen quick	827810-1-1		Oxygen supply connection command module to service module	Leakage	All	None	Loss of O_2 supply	Abort	None
4.22 Valve, emergency O_2 inflow control	827550-1-1		Provides method for flooding command module if leakage from command module should occur	Fail open	All	High C/M press.	Loss of O_2 supply	Abort, if unable to shut off	Use Manual override in 4.24 O_2 pressure regulator assembly shut off valves.
				Fail close	All	None	None	Alternate valve provided	Use alternate valve.
4.23 Reentry oxygen supply system	827240-1-1		Supplies oxygen to suit during reentry		Reentry				
Tank, oxygen			Oxygen storage for reentry	Leakage		Loss of reentry oxygen	None, alternate tank provided	Crew safety degraded	Use alternate tank.

* Primary Failure
** Secondary Failure
(A) In suits, cabin pressurized
(B) In suits, cabin unpressurized
(C) In shirtsleeves

[redacted]

Table 8.2 Environmental Control Subsystem Failure Effects Analysis (Continued)

Item	Drawing No.	Electrical Reference Designation	Function	Failure Type	Mission Phase	Failure Effect			Possible Crew Action
						Component Performance	Subsystems Performance	Apollo	
Port, O_2 fill			Ground servicing of O_2 tanks	Leakage		Loss of reentry oxygen	None, alternate tank provided	Crew safety degraded.	Use alternate tank.
Valve assembly			Oxygen tank shut off	Fail open		Loss of reentry oxygen	None alternate tank provided	Crew safety degraded.	Use alternate tank.
				Fail closed		Loss of available reentry oxygen	None, alternate tank provided	Crew safety degraded.	Use alternate tank.
Pressure regulator			Maintains regulated pressure to suits	Fail open		None	High pressure to suits	None	Use alternate tank.
				Fail closed		Loss of available reentry oxygen	None, alternate tank provided	Crew safety degraded.	Use alternate tank.
Relief valve			Protects reentry O_2 supply system from over-pressurization	Fail open		Loss of reentry oxygen to suits	None, alternate tank provided	Crew safety degraded	Use alternate tank.
				Fail closed		None	High pressure to suits possible	None	Use alternate tank.
Check valve			Prevents flow of O_2 to depleted O_2 storage tank	Fail open		None	Possible loss of O_2 to depleted tank	None	Close depleted storage tank shutoff valve.
				Fail closed		Loss of available reentry oxygen	None, alternate tank provided	Crew safety degraded.	Use alternate tank.
4.24 Oxygen pressure regulator assembly	827330-1-1		Supplies suit circuit, waterglycol circuit, and water supply circuit with regulated O_2.		All				

* Primary Failure
** Secondary Failure
(A) In suits, cabin pressurized
(B) In suits, cabin unpressurized
(C) In shirtsleeves

[redacted]

Table 8.2 Environmental Control Subsystem Failure Effects Analysis (Continued)

Item	Drawing No.	Electrical Reference Designation	Function	Failure Type	Mission Phase	Failure Effect: Component Performance	Failure Effect: Subsystems Performance	Failure Effect: Apollo	Possible Crew Action
Valve, shutoff			Shuts off O_2 from service module (in parallel lines)	Fail open		None	None	None	None
				Fail closed		None	Loss of alternate O_2 supply source	Abort	Use back packs if another failure occurs in supply system.
Valve, pressure regulator and relief			Regulates O_2 from service module (in parallel lines)	Fail open (regulator or relief)		Low O_2 pressure to environmental control system	Loss of O_2	Abort	Use alternate valve.
				Fail close (regulator or relief)		High O_2 pressure to environmental control system	Possible damage to down stream components	Abort	Use alternate valve.
Check valve			Prevents reverse O_2 flow in parallel supply lines and during reentry	Fail open		None	Loss of O_2 if another component fails in same line	None, if no other component in same line fails	None
				Fail closed		Loss of alternate supply of O_2	None	Abort if failure occurs in good line.	Use back packs.
5.1 Disconnect, water supply quick (self-sealing)	827520-1-1		Connection for ground servicing of water supply system	Leakage or fail open	All	None	None, system has check valve to prevent loss	None	None
5.2 Valve, water check	827360-1-1		Serves as back up for self-sealing quick disconnect to prevent loss of water	Fail open	All	None	None, loss of water would require disconnect to leak.	None	None
				Fail closed	All	None	None	None	None
			Prevents waste water from entering potable water system	Fail open	All	None	None	None	Shut valve 5.19.

* Primary Failure
** Secondary Failure
(A) In suits, cabin pressurized
(B) In suits, cabin unpressurized
(C) In shirtsleeves

[redacted]

Table 8.2 Environmental Control Subsystem Failure Effects Analysis (Continued)

Item	Drawing No.	Electrical Reference Designation	Function	Failure Type	Mission Phase	Failure Effect			Possible Crew Action
						Component Performance	Subsystems Performance	Apollo	
5.2 Valve, water check (Cont)				Fail closed	All	Loss of ability to replenish waste water supply from fuel cells	Reduced cooling capacity during maximum demand	Crew safety degraded.	Reduce thermal loads on environmental control system
			Serves as backup for freon self-sealing quick disconnect to prevent loss of waste water.	Fail open	All	None	None, loss of water would require disconnect to leak	None	None
				Fail closed	All	None	None	None	None
5.5 Valve, suit evaporator water inflow control	827010-1-1		Controls flow of water for evaporation to provide additional cooling of suit circuit gas	Fail open	All	Depletion of H_2O	Improper cooling at suit evaporator	None	Use manual override if failure is detected.
				Fail closed	All	Loss of cooling capacity	Loss of automatic cooling control during maximum demand	Degraded, valve has manual override	Control valve manually during maximum cooling demand.
5.10 Tank, potable water	812300-1-1		Stores metabolic and hygenic water for crew use	Bag rupture	All	Inability to expel water from tank	Loss of cooling capacity	Abort	Use emergency water supply.
				Leakage	All	Loss of water	Loss of cooling capacity	Abort	Use emergency water supply.
5.12 Disconnect, freon quick self-sealing	827520-1-1		Connection for freon to cool command module during prelaunch activities	Fail open	All	None, system has check valve as back up to prevent loss of water after launch	None	None	None
5.14 Chiller, water	812400-1-1		Cools potable water with glycol for crew use	Leakage-water to ambient	All	Loss of potable water	None	Abort	Use emergency water supply.
				Leakage-glycol to water	All	Contaminates potable water and loss of glycol	Loss of glycol cooling capacity	Abort	Use emergency water supply.

* Primary Failure
** Secondary Failure
(A) In suits, cabin pressurized
(B) In suits, cabin unpressurized
(C) In shirtsleeves

Table 8.2 Environmental Control Subsystem Failure Effects Analysis (Continued)

Item	Drawing No.	Electrical Reference Designation	Function	Failure Type	Mission Phase	Failure Effect			Possible Crew Action
						Component Performance	Subsystems Performance	Apollo	
5.15 Tank, waste water	812200-1-1		Supplies evaporators with water for extra cooling capacity during maximum demand	Bag rupture	All	Inability to expel water from tank	Loss of extra cooling capacity during maximum heat loads	Abort	None
				Water leakage	All	Loss of water	Loss of cooling capacity	Abort	None
5.18 Valve, water shut off	827410-1-1		1. Shuts off water flow to water tanks during ground servicing and during fuel cell operation	Fail open	All	None	None	None	None
				Fail closed	All	Unable to fill potable tank or waste tank during mission	Loss of extra cooling capacity and potable water aft tanks are dry	Abort	Use emergency drinking water supply.
			2. Controls flow at waste water tank	Fail open	All	None	None	None	None
				Fail closed	All	Loss of available waste water for cooling	Loss of cooling capacity	Abort	None
5.19 Valve, water tank pressure relief	827820-1-1		Priority valve allows potable water tank to be filled before waste water tank.	Fail open	All	Loss of potable water to waste water system	None, manual override on valve	None	Close valve manually.
				Fail closed	All	Possible damage to potable water tank	None, manual override on valve	None	Open valve manually.
5.25 Valve, freon flow	827840-1-1		Controls flow of freon flow cooling during prelaunch activities	Fail open	All	Loss of cooling water to glycol evaporator	Excessive glycol cooling	None, manual override on valve	Close valve manually.
				Fail closed		No cooling during prelaunch	Unable to cool glycol during prelaunch	None, manual override on valve	Manually operate valve.

* Primary Failure
** Secondary Failure
(A) In suits, cabin pressurized
(B) In suits, cabin unpressurized
(C) In shirtsleeves

[redacted]

Table 8.2 Environmental Control Subsystem Failure Effects Analysis (Continued)

Item	Drawing No.	Electrical Reference Designation	Function	Failure Type	Mission Phase	Failure Effect: Component Performance	Failure Effect: Subsystems Performance	Failure Effect: Apollo	Possible Crew Action
5.26 Disconnect water, quick	827850-1-1		Connects water supply from service module to command module and ground supply	Leakage	All	Loss of potable water from fuel cell	Loss of water from fuel cell during maximum cooling demand	Abort	None
5.22 Potable water supply assembly valve, supply	812900-1-1		Provides crew with metabolic and hygenic water		All				
			Cold water supply	Fail open		Loss of potable water	Loss of cooling capacity during emergency or maximum demand	Abort	Use emergency supply.
			Hot water supply	Fail closed		Unavailable cold drinking water	None	None	Use hot water or emergency supply.
			Hot water supply	Fail open		Loss of potable water	Loss of cooling capacity during emergency or maximum demand	Abort	Use emergency supply.
				Fail closed		Unavailable hot water	None	None	Use cold water.
Heater			Heats water for crew use	Inoperative		Unable to provide hot water	None	None	Use cold water.
5.23 Valve, water pressure relief	827830-1-1		Water evaporator systems pressure relief	Fail open	All	Loss of cooling water	None, alternate valve provided	None, unless two valves fail then abort	Use alternate valve.
				Fail closed		Possible overpressurization of evaporator systems	None, alternate valve provided	None, unless two valves fail then abort	Use alternate valve.

* Primary Failure
** Secondary Failure
(A) In suits, cabin pressurized
(B) In suits, cabin unpressurized
(C) In shirtsleeves

[redacted]

Table 8.2 Environmental Control Subsystem Failure Effects Analysis (Continued)

Item	Drawing No.	Electrical Reference Designation	Function	Failure Type	Mission Phase	Failure Effect			Possible Crew Action
						Component Performance	Subsystems Performance	Apollo	
5.24 Tank pressure control and relief valve	810300-1-1		Controls oxygen pressure for expelling water and gylcol from tanks	Fail open (pressure control)	All	High pressure to water and glycol systems	None, alternate valve provided	None unless two valves fail then abort	Use alternate valve.
				Fail closed (pressure control)	All	No O_2 pressure to water or glycol systems	None, alternate valve provided	None unless two valves fail then abort	Use alternate valve.
				Fail open (relief valve)		Loss of O_2	None, alternate valve provided	None unless two valves fail then abort	Use alternate valve.
				Fail closed (relief valve)		High pressure to water and glycol system	None, alternate valve provided	None unless two valves fail then abort	Use alternate valve.

* Primary Failure
** Secondary Failure
(A) In suits, cabin pressurized
(B) In suits, cabin unpressurized
(C) In shirtsleeves

8.3 QUALIFICATION TESTS

Complexity of the subsystem and its circuits with many components not in a common housing make qualification as a system difficult. For this reason, the subcontractor qualification program has been designed at the component, package and system level. The subcontractor will deliver the system on a component and package level to S&ID where they will be mounted in command module structures and again be tested as a system in boilerplates and airframes.

8.3.1 Test-Oriented Reliability Logic Diagram

Figure 8.8 depicts the test-oriented reliability logic diagram for the ECS. The logic diagram will aid in establishing test continuity and in programming the collection of data for the assessment of reliability by illustrating the interfaces of the system circuits and components.

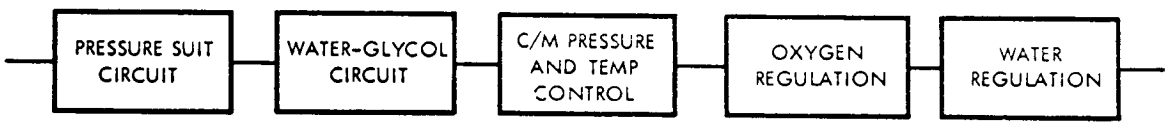

Figure 8.8 ECS Test Oriented Reliability Logic Diagram

8.3.2 Criticality and Hardware Requirements

Table 8.3 designates the criticality class, as defined in subsection 2.4 of SID 62-109-3, for the components of the ECS. The table enumerates the hardware requirements for a minimum qualification program as established in subsection 2.5 of SID 62-109-3. The location of the components in the spacecraft is indicated by spacecraft zone numbers as defined in subsection 4.2 of SID 62-109-3.

Table 8.3 ECS Parameters for Qualification Testing

Component	S/C Zone	Criticality	Required Hardware
Suit circuit	1	1	3
Water-glycol	1	1	3
C/M pressure and temperature control	1	1	3
Oxygen regulation	1	1	3
Water regulation	1	1	3

8.3.3 Qualification Test Schedule

Environmental Control System

Figure 8.9 displays the qualification test schedule for the ECS and defines the test utilization of the hardware enumerated in Table 8.3. The specific test levels to be applied in qualification testing are found in the tables of environmental test criteria in subsection 4.2 and are a function of the zone location of the equipment in the spacecraft. These zone numbers are given in Table 8.3.

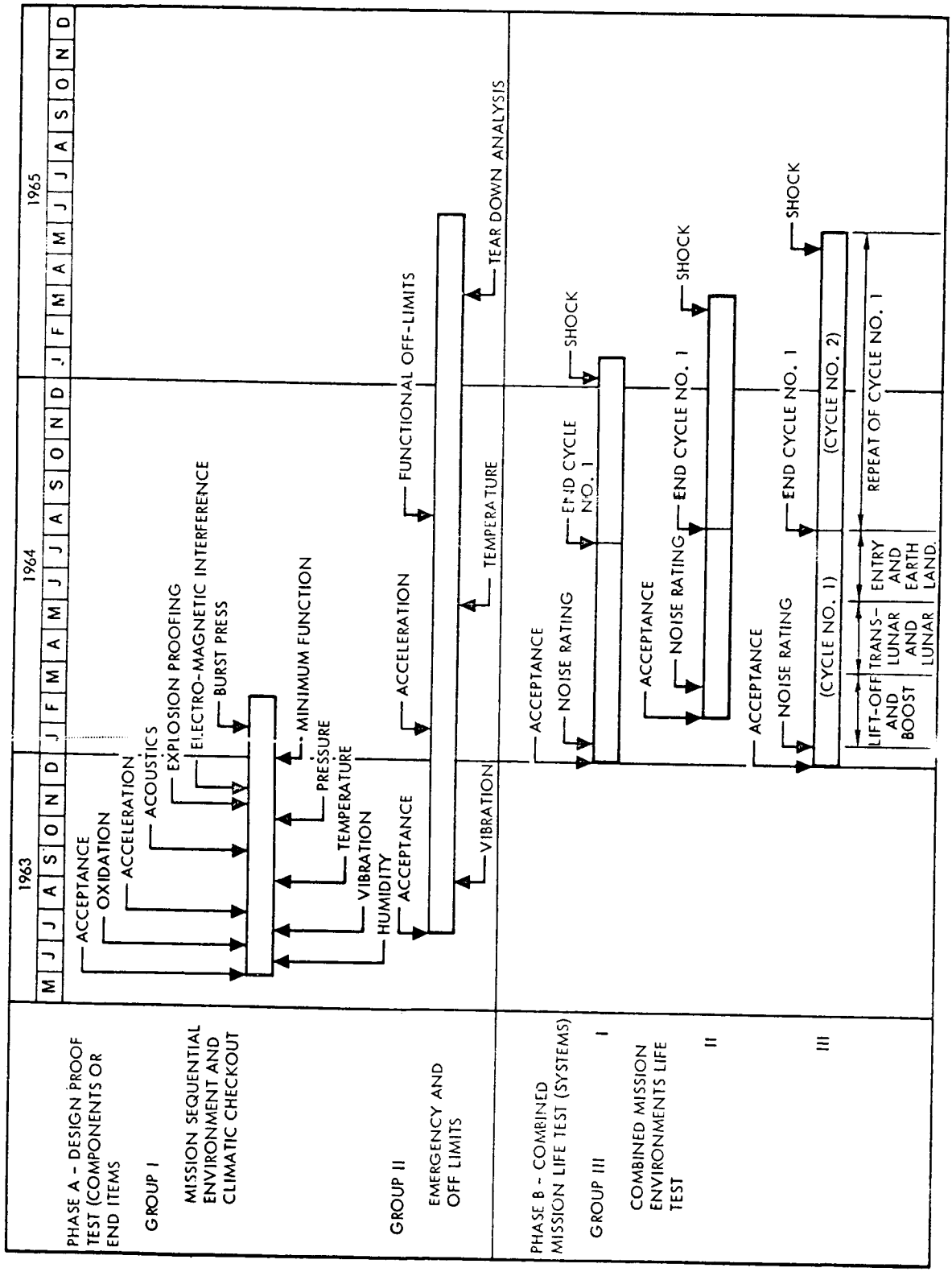

Figure 8.9 ECS Qualification Test Schedule

LIST OF CURRENT PAGES

Page No.	Date	Revised	Classification

SECTION 9.0

SERVICE PROPULSION SYSTEM

9.1 Introduction

Reliability studies of the service propulsion system (SPS) covers a revision of the reliability allocations on the Aerojet-General engine subsystem, a detailed failure effects analysis, a comparative analysis of various propellant utilization systems, and an analysis of a parallel feed system for SPS propellants.

The service propulsion system predicted and apportioned reliability values were calculated and the results are shown in Table 9.1.

9.2 Configuration Analysis

The service module service propulsion system is comprised of the following subsystems: helium pressurization, propellant feed, propellant utilization, and engine. The purpose of the service propulsion system is to provide thrust vector orientation and ΔV for midcourse corrections, lunar orbit injection, and transearth injection.

The helium pressurization subsystem supplies regulated helium to the propellant feed system and isolates the fuel and oxidizer vapors during coast.

The propellant feed system, in turn, supplies pressurized fuel to the engine control valves and propellants to the rocket engine.

The propellant utilization subsystem allows the crew to adjust the fuel to oxidizer mixture ratio, so that the propellants will be maintained at the proper ratio and reduce the residual propellants to a minimum.

Service propulsion system component failure rates used to calculate the system predicted reliability and apportioned reliability are shown in Table 9.1.

The effects of substituting a manually operated system for the automatic propellant utilization system in the service module service propulsion system was evaluated. A comparison of reliabilities using the two systems is shown in Table 9.2.

The reliability requirements of 26×10^{-6} must be met by whichever system is selected. A propellant quantity indicating system is a minimum requirement to assist the crew in abort decisions.

TABLE 9.1

SERVICE PROPULSION

SUBSYSTEM MISSION RELIABILITY (LOR)

COMPONENT NAME	ITEMS	MISSION TIMES (HRS.)	FAILURE RATE PER 10^6 HOURS OR CYCLES			RELIABILITY		
			APPORTIONED	PREDICTED	ASSESSED	APPORTIONED	PREDICTED	ASSESSED
Service Propulsion Subsystem	--	--	--	--	--	.999770[B]	.964700[A]	
Helium Tank	2	336 hrs.	.0149	.0800[1]	N.A.	.999995	.99997312[A]	N.A.
Fill & Drain Valve Cap	2	336 hrs.	.0030	.00298[1]	N.A.	.999999**	.999999[A]	N.A.
Solenoid Valve	2	336 hrs.	1.1000	.0327[1]	N.A.	.999600	.999989[A]	N.A.
Regulator	4	336 hrs.	2.9760	7.5000[1]	N.A.	.999000	.997480[A]	N.A.
Check Valve (He)	8	336 hrs.	2.9760	2.3000[1]	N.A.	.999996***	.9999982*** (.9992272[A])	N.A.
Fuel Relief Valve Assembly	2	336 hrs.	5.9000	3.9200[1]	N.A.	.998000	.99868288[A]	N.A.
Oxidizer Tank	2	336 hrs.	.0417	1.6010[1]	N.A.	.999986	.9999462[A]	N.A.
Fuel Tank	2	336 hrs.	.0417	1.6010[1]	N.A.	.999986	.9999462[A]	N.A.
Propellant Utilization System	1	336 hrs.	.0774	.0774*	N.A.	.999974	.999974*	N.A.
Vent Valve, Fuel & Oxidizer	2	336 hrs.	2.9760 (Valve only)	3.9238[1] (Valve only)	N.A.	.999999**	.9986816[A]	N.A.
Heat Exchanger Ox. & fuel	2	336 hrs.	.0268	.17857[1]	N.A.	.999991	.999940[A]	N.A.
Rocket Engine	1	336	.2976	90.1420[2]	N.A.	.999900	.970154[A]	N.A.

DATA SOURCE:

1. AVCO
2. Aerojet-General

N.A.: Not Applicable

*Predicted value not available. Apportioned value used as estimate.

**Requirement as listed includes valve w/cap.

MATHEMATICAL TECHNIQUE:

A. Analytical Model (Logic Diagram & Known Failure Rate Data)

B. Analytical Method (Weighted Subjective Experience)

*** Cluster of four.

[redacted]

[redacted]

Table 9.2 Automatic Versus Manual Propellant Utilization Reliability Comparison

System	System Reliability	Difference in Reliability	Estimated Residual Propellants	Difference in Residuals	Ratio 2:4	Estimated System Weight	Estimated Residual Weight of System
Automatic propellant utilization	$26X10^{-6}$		100			75	175
Manual propellant utilization	$20X10^{-6}$	$6X10^{-6}$	200	100	$6X10^{-8}$	65	265
Quantity indicating	$5X10^{-6}$	$21X10^{-6}$	450	350	$6X10^{-8}$	50	500

Deletion of the flow control requirements altogether would require that excess propellants be loaded to account for the variables introduced by engine, oxidizer fuel ratio, engine and propellant feed system mismatch and possible change in P during the mission. The automatic propellant utilization system is designed to maintain the residual propellants at 100 pounds. The propellant quantity gaging system alone would need an excess of 450 pounds of excess propellants. The reduced complexity of the system would reduce the probability of failure to 5 per 10^6 missions. On this basis, the ratio of system reliability to increase in residual propellants weight is 6×10^{-8} per pound of residual propellants (Table 9.2). The control and valve comprise approximately 1/3 of the total propellant utilization system weight. The manual flow control system is more complicated than the gaging system, with an apportionment of 20 per 10^6 missions (Table 9.2). A manual system, designed to maintain the residuals at 100 pounds over the automatic system, has a ratio of system reliability to increase in residual of 6×10^{-8} per pound of residual propellant, with a decrease in propellant utilization system weight of 15 pounds. The difference in residual weight of the Apollo spacecraft effected by use of the manual propellant utilization system over quantity indicating gaging only would be approximately 235 pounds.

The service module SPS parallel feed system approach to CG control after zero-g environment will be satisfactory, even though slight leakage past the tank outlet check valves may occur. Major loss of propellant from one tank to the other is critical; therefore, the parallel feed system must have parallel check valves at the outlet of each tank for reliability. A second approach using a floating-ball, antitransfer device was reviewed for test requirements to demonstrate a probability of failure of 2×10^{-6}.

9.3 Summary of Failure Effects Analysis

The individual components of the service propulsion system were analyzed and the failure modes determined. The effects of redundancy in eliminating most critical failures is shown in the failure effects analysis, Table 9.3. Other components which could cause catastrophic failure and where redundancy is not practical show up as affecting the Apollo spacecraft. These components, however, require a high reliability, and the current predicted and apportioned reliability are nearly the same.

9.4 Qualification Test

The qualification test plan for the service propulsion system will include environmental tests on components and the complete engine. It will consist of a sea level phase and a simulated altitude phase. Each test will employ an engine equipped with a thrust chamber that had been fired for a duration which did not exceed 30 seconds and an injector that had been fired for less than 1800 seconds. Some tests

will be conducted under abnormal conditions and environments for extended periods to exhibit equipment design margin capabilities. Selection of the number of engine tests is based on the requirements to assess engine capabilities under simulated mission environments and off-limit operating conditions.

9.4.1 Test-Oriented Reliability Logic Diagram

Figure 9.1 depicts the test-oriented reliability logic diagram for the service propulsion system. The logic diagram will aid in establishing test continuity and in programming the collection of data for the assessment of reliability by illustrating the interfaces of system components and subassemblies.

9.4.2 Criticality and Hardware Requirements

Service Propulsion System Engine

Table 9.4 designates the criticality class, as defined in subsection 2.4 of SID 62-109-3, (General Test Plan, Research and Development, Ground Qualification Tests) for the components of the service propulsion engine. The table enumerates the hardware requirements for a minimum qualification program as established in subsection 2.5 of the above reference. The location of the components in the spacecraft is indicated by spacecraft zone numbers as defined in subsection 4.2 of the reference above.

Propellant Feed

Table 9.5 designates the criticality class, as defined in subsection 2.4 of SID 62-109-3, for the components of the service propulsion system propellant feed. The table enumerates the hardware requirements for a minimum qualification program as established in subsection 2.5 of SID 62-109-3. The distribution of the hardware through the subsystem qualification test phases, as described in subsection 2.3 of SID 62-109-3 is shown. The location of the components in the spacecraft is indicated by spacecraft zone numbers as defined in subsection 4.2 of SID 62-109-3.

9.4.3 Qualification Test Schedule

9.4.3.1 Service Propulsion Engine

Figure 9.2 displays the qualification test schedule for the service propulsion system engine and defines the test utilization of the hardware enumerated in Table 9.4. The specific test levels to be applied in qualification testing are found in the tables of environmental test criteria in subsection 4.2 of SID 62-109-3 and are a function of the zone location of the equipment in the spacecraft. The zone number is given in Table 9.4.

[redacted]

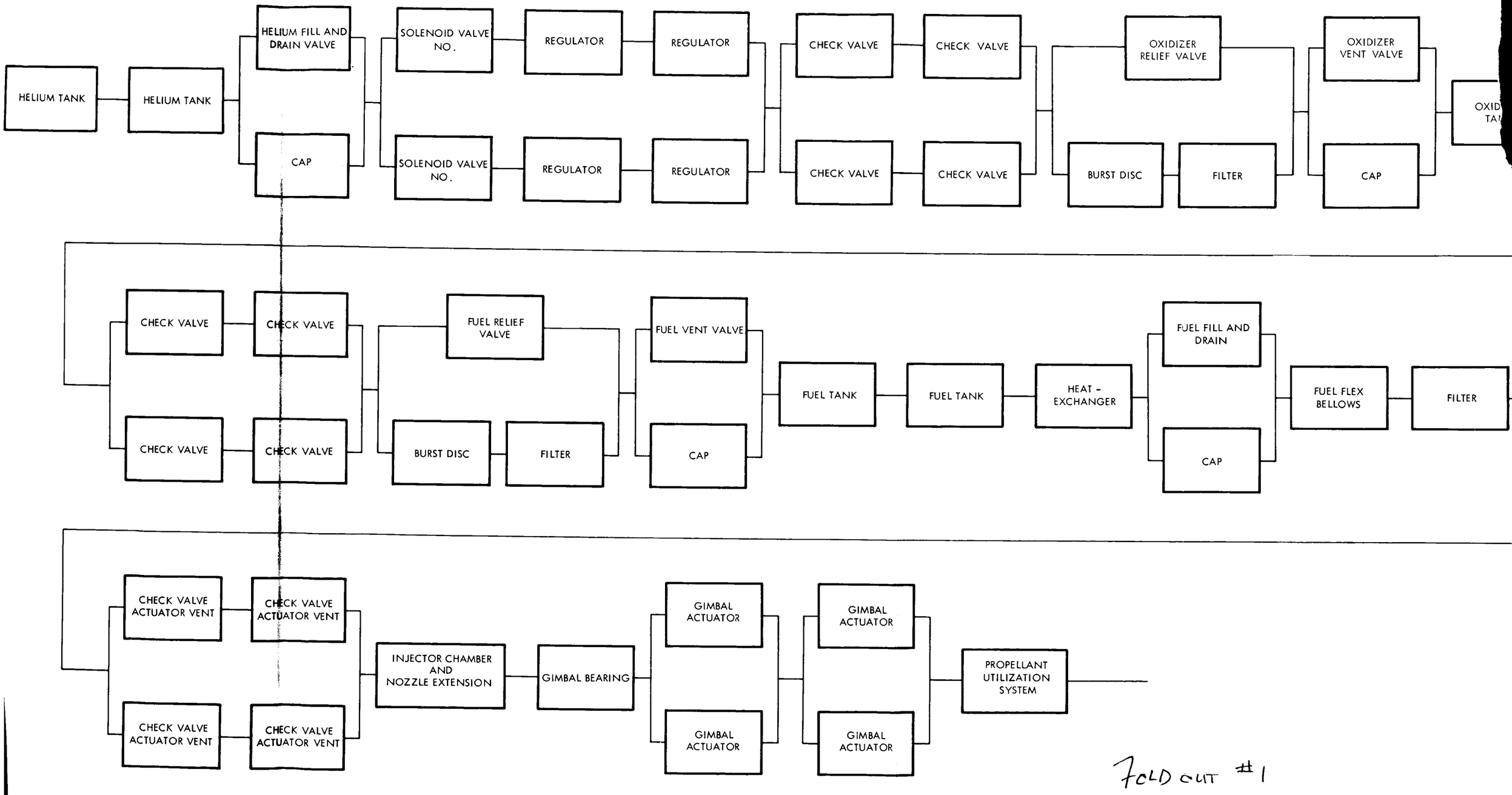

FOLD OUT #1

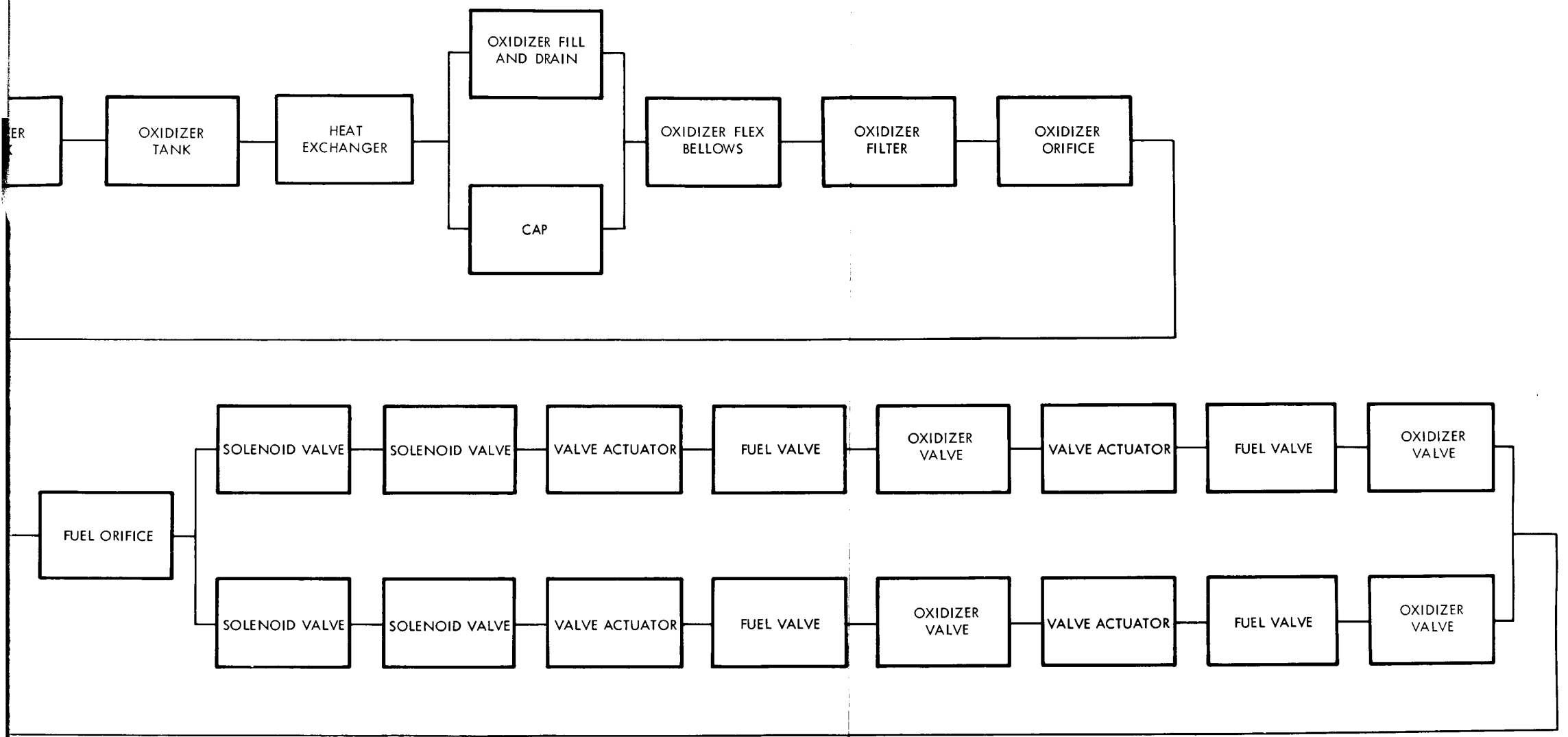

FOLD OUT #2

Figure 9.1 SPS Test Oriented Reliability Logic Diagram

Table 9.3 Service Module Service Propulsion System Failure Effects Analysis

Item	Drawing No.	Electrical Reference Designation	Function	Failure Type	Mission Phase	Failure Effect			Possible Crew Action
						Component Performance	Subsystems Performance	Apollo	
Cap			Seal vent valve	Leakage	Boost trans-lunar, lunar orbit, trans-earth	None, series redundant	None	None	None
Propellant tank			Store propellant	Leakage	Boost, trans-lunar, lunar orbit, trans-earth	Loss of propellant or pressurizing gas	Loss of propel-lant	Mission abort	Abort
				Over pressure		None, relief valve	Loss of pres-surizing gas	Mission abort	Abort
Fill propellant drain			Ground operation fill and drain	Leakage	Boost trans-lunar, lunar orbit, trans-earth	None, redundant cap	None	None	None
Cap			Seal propellant fill and drain valve	Leakage	Boost trans-lunar, lunar orbit, trans-earth	None, series redundant with fill and drain valve	None	None	None
Propellant line flex bellows propellant filter			Allow engine gimbaling Filter propellants	Leakage	Boost trans-lunar, lunar orbit, trans-earth	Loss of propellant	None, series redundant bellows	None	None
				Blockage		Excess ΔP	Mixture ratio error	Mission degra-dation	None
Propellant orifice			Balance system ΔP	Blockage	Boost trans-lunar, lunar orbit, trans-earth	Excess ΔP	Mixture ratio error	Mission degra-dation	None
Heat Exchanger			Heat helium	Leakage	Boost trans-lunar, lunar orbit, trans-earth	Loss of pressuri-zation gas	Loss of avail-able thrust	Mission abort	None

Table 9.3 **Service Module Service Propulsion System Failure Effects Analysis (Continued)**

Item	Drawing No.	Electrical Reference Designation	Function	Failure Type	Mission Phase	Failure Effect			Possible Crew Action
						Component Performance	Subsystems Performance	Apollo	
Propellant gaging			Continuous-propellant quantity reading	Short	Trans lunar, lunar orbit transearth	None, parallel redundant system	None	None	None
Crew display			Continuous-propellant quantity read-out	Short	Trans lunar, lunar orbit transearth	None, redundant crew display	None	None	None
Manual flow control			Intermittent flow control	Motor	Trans lunar, lunar orbit transearth	None, redundant	None	None	None
				Position indicator		None, redundant			Manual correction
Solenoid valve			Engine start valve	Leakage	Boost (abort only)	None, series redundant	None	None	None
				Fail to open	Trans lunar, lunar orbit, transearth	None, parallel redundant	None	None	None
				Fail to close		None, series redundant	None	None	None
Valve actuator			Open engine valves	Leakage	Boost (abort only) translunar, lunar orbit, transearth	None, bellows redundant	None	None	None
				Open		None parallel redundant	None	None	None
				Close		None series redundant	None	None	None

[redacted]

Table 9.3 **Service Module Service Propulsion System Failure Effects Analysis (Continued)**

Item	Drawing No.	Electrical Reference Designation	Function	Failure Type	Mission Phase	Failure Effect			Possible Crew Action
						Component Performance	Subsystems Performance	Apollo	
Fuel valve				Leakage	Boost (abort only) trans-lunar, lunar orbit, trans-earth	Series none, redundant	None	None	None
				Open		None, parallel	None	None	None
				Close		None, series	None	None	None
Oxidizer valve				Leakage	Boost (abort only) trans-lunar, lunar orbit, trans-earth	Series none, redundant	None	None	None
				Open		None, parallel	None	None	None
				Close		None, series	None	None	None
Check valve actuator vent				Leakage	Boost (abort only) trans-lunar, lunar orbit, trans-earth	Series none, redundant	None	None	None
				Fail to open		None, parallel	None	None	None
Injector				Orfice plugged	Boost (abort only) trans-lunar, lunar orbit, trans-earth	None	None	None	None
				Burnout		Loss of thrust chamber	Loss of thrust	Mission abort	None
Gimbal bearing				Flexture	Boost (abort only) trans-lunar, lunar orbit, trans-earth	None, redundant	None	None	None

Table 9.3 **Service Module Service Propulsion System Failure Effects Analysis (Continued)**

Item	Drawing No.	Electrical Reference Designation	Function	Failure Type	Mission Phase	Failure Effect			Possible Crew Action
						Component Performance	Subsystems Performance	Apollo	
Gimbal actuator ball screw				Stuck	Boost (abort only) trans lunar, lunar orbit, trans-earth	Loss of thrust vector control	Loss of thrust vector control	Mission abort	None
Motor				Open	Boost (abort only) trans lunar, lunar orbit, trans-earth	None, redundant loop	None	None	None
				Shorted					
				Binding					
Clutches				Open		None, redundant loop	None	None	None
				Shorted					
				Leakage					
Gear train				Mesh		None, redundant loop	None	None	None
				Jammed					
				Fatigue					
Chamber and nozzle exit				Excessive erosion	Boost (abort only) trans-lunar, lunar orbit, trans-earth	Low pc	Reduction in total impulse	Mission abort	Abort

Table 9.3 Service Module Service Propulsion System Failure Effects Analysis (Continued)

Item	Drawing No.	Electrical Reference Designation	Function	Failure Type	Mission Phase	Failure Effect			Possible Crew Action
						Component Performance	Subsystems Performance	Apollo	
Helium tank			Store pressurizing gas	Leakage tank wall fittings	Boost trans-lunar, lunar orbit, trans-earth	Loss of Pressurizing gas	Loss of available thrust	Mission degradation	Abort
				Over pressure		Rupture tank	Loss of sub-system	Mission abort	Abort
Helium fill and drain valve			Fill and drain helium	Leakage	Boost trans-lunar, lunar orbit, trans-earth	Loss of gas	None redundant with cap	None	None
Cap			Seal helium fill and drain valve	Leakage	Boost trans-lunar, lunar orbit, trans-earth	Loss of gas	None, redundant fill and drain valve	None	None
Solenoid valve normally open			Isolate failed open series regulator valves	Open	Boost trans-lunar, lunar orbit, trans-earth	Allow over-pressurization of propellant tanks	Vent the pressure through relief valve	None, required to operate only after double failure	None
				Closed		None	None	None-redundant path for regulation	None
Regulator			Regulate propellant tank pressure	Open	Boost trans-lunar, lunar orbit, trans-earth	None, redundant with another regulator	None	None	None
				Closed		None	None	None	None
				Burst		Loss of pressurization gas	Loss of available thrust	Mission abort	None

Table 9.3 Service Module Service Propulsion System Failure Effects Analysis (Continued)

Item	Drawing No.	Electrical Reference Designation	Function	Failure Type	Mission Phase	Failure Effect			Possible Crew Action
						Component Performance	Subsystems Performance	Apollo	
Check valve			Separate propellant vapors	Leak	Boost trans-lunar, lunar orbit, trans-earth	None, series redundant	None	None	None
				Closed		Redundant system increase in ΔP	Mixture ratio error propellant utilization system correction	None	None
Relief valve			Relieve propellant tank over pressurization	Open	Boost trans-lunar, lunar orbit, trans-earth	Loss of pressurizing gas	Loss of subsystem	Mission abort	Abort
				Closed		Tank over pressurization	Loss of subsystem	Mission abort	Abort
Burst disk			Prevent leakage until system failure causes over pressurization	Leak	Boost trans-lunar, lunar orbit, trans-earth	None, series redundant with relief valve	None	None	None
				Burst pressure high		High tank pressure	Mixture ratio error	None	None
Filter			Catch particals from burst disk and helium system	Blockage	Boost Trans-lunar, lunar orbit, trans-earth	Propellant tank over pressurization	Mission abort	Mission abort	None
Vent valve			Ground operation vent during fill	Leakage	Boost trans-lunar, lunar orbit, trans-earth	None, series redundant cap	None	None	None
				Open		None, ground operation	None	None	None
				Closed				None	None

Table 9.4 SPS Engine Parameters for Qualification Testing

COMPONENT	S/C ZONE	CRITICALITY	REQUIRED HARDWARE
Thrust Chamber	3	1	24
Valves	3	1	13
Actuator	3	1	14
Mount	3	1	11
Lines	3	1	11
Nozzle	3	1	6
Injector	3	1	12

Table 9.5 SPS Propellant Feed Parameters for Qualification Testing

COMPONENT	S/C ZONE	CRITICALITY	REQUIRED HARDWARE	QUALIFICATION TEST PHASE DISTRIBUTION		
				A-1	A-2	B
Heat Exchangers	3	1	7	3	1	3
Disconnects	3	3	4	1	1	2
Valves	3	3	4	1	1	2
Regulators	3	3	4	1	1	2
Tanks (3 types)	1	1	4	4	4	0

[redacted]

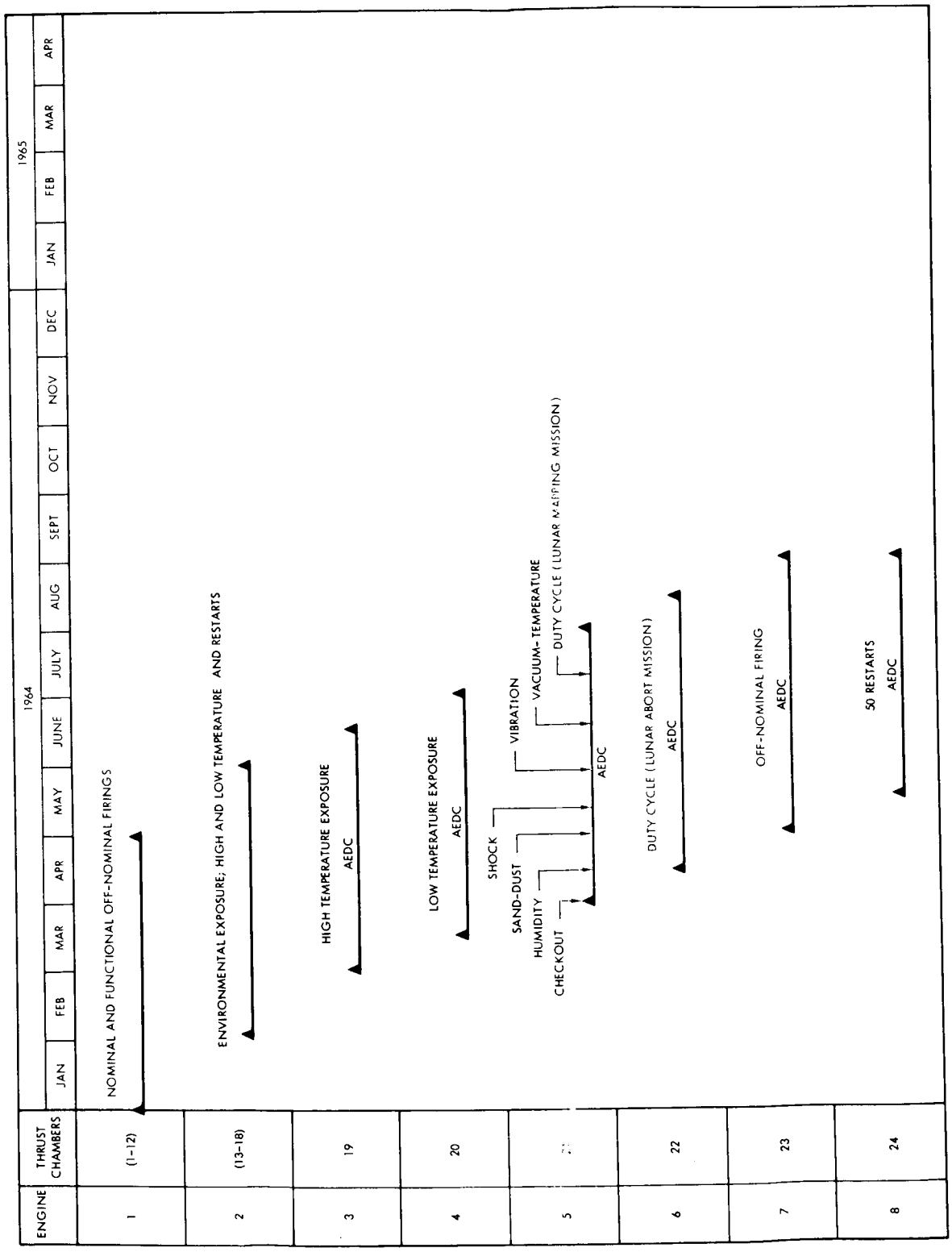

Figure 9.2 SPS Engine Test Schedule

[redacted]

9.4.3.2 Propellant Feed

Figure 9.3 displays the qualification test schedules for the SPS propellant feed components and defines the test utilization of the hardware enumerated in Table 9.5. The specific test levels to be applied in qualification testing are found in the tables of environmental test criteria in subsection 4.2 of SID 62-109-3 and are a function of the zone location of the equipment in the spacecraft. The zone number is given in Table 9.5.

[redacted]

COMPONENTS	ITEM NO.	WEEK NO. 1	2	3	4	5	6	7	8	9	10	11	12	13	14	15	16	17
HEAT EXCHANGER, OXIDIZER HEAT EXCHANGER, FUEL	1	1	2	6	8	9	12											
	2		2	6	8	9	17											
	3	1	2	6	8	9	6											
	4	1	6															
	5	1	17															
	6	1	15	13	17													
	7	1	15	13	12													
VALVE, CHECK	1	1	18	6	8	9	6	12										
	2	1	18	6	8	9	6	12										
	3	1	13	15	17	12												
	4	1	13	15	17	12												
VALVE, RELIEF, HELIUM	1	1	2	6	5	8	9	10	6	12								
	2	1	2	6	5	8	9	10	17	12	16							
	3	1	15	13	6	12												
	4	1	15	13	16	12												
REGULATOR, PRESSURE, HELIUM	1	1	6	5	8	9	16	12										
	2	1	6	5	8	9	16	12										
	3	1	13	15	16													
	4	1	13	15	16													
VALVE, SOLENOID, HELIUM	1	1	3	4	6	5	8	9	16	12								
	2	1	3	4	6	5	8	9	6	12								
	3	1	13	15	16													
	4	1	13	15	16													
DISCONNECT, FILL, HELIUM DISCONNECT, TEST, HELIUM DISCONNECT, FILL, OXIDIZER DISCONNECT, TEST, OXIDIZER DISCONNECT, VENT, OXIDIZER DISCONNECT, FILL, FUEL DISCONNECT, TEST, FUEL DISCONNECT, VENT, FUEL	GROUND HALF 1	1	2	18	11	8	9	16	11	12								
	GROUND HALF 2	1	2	18	11	8	9	11	12									
	GROUND HALF 3	1	18	8	9	16												
	GROUND HALF 4	1	18	8	9	11												
	AIRBORNE HALF 1	1	2	18	6	8	9	10	16	6	12							
	AIRBORNE HALF 2	1	2	18	6	8	9	10	6	12								
	AIRBORNE HALF 3	1	15	13	16													
	AIRBORNE HALF 4	1	15	13	6													
CONNECTOR, FUEL CONNECTOR, OXIDIZER	1 & 2	1	18	2	6	8	9	12										
	3 & 4	1	6															
	5	1	15	17	6													
	6 & 7	1	15	17	12													
SPS QUANTITY GAGING AND INDICATOR SUBSYSTEM	1 - 7	1	18	2	16	11	7	6	5	10	12							

LEGEND

1 ACCEPTANCE
2 HUMIDITY
3 ELECTROMAGNETIC INTERFERENCE
4 EXPLOSIVE ATMOSPHERE
5 ACCELERATION
6 VIBRATION
7 ACOUSTICS
8 TEMPERATURE, HIGH
9 TEMPERATURE, LOW
10 VACUUM
11 SHOCK
12 BURST PRESSURE
13 VACUUM, TEMPERATURE
14 VIBRATION, ACCELERATION
15 VIBRATION, TEMPERATURE
16 PERFORMANCE
17 SURGE PRESSURE
18 FLUID COMPATIBILITY

Figure 9.3 Propellant Feed Components (Less Tanks) Qualification Test Schedule (Sheet 1 of 2)

[redacted]

Figure 9.3 Propellant Feed Components (Tanks) Qualification Test Schedule (Sheet 2 of 2)

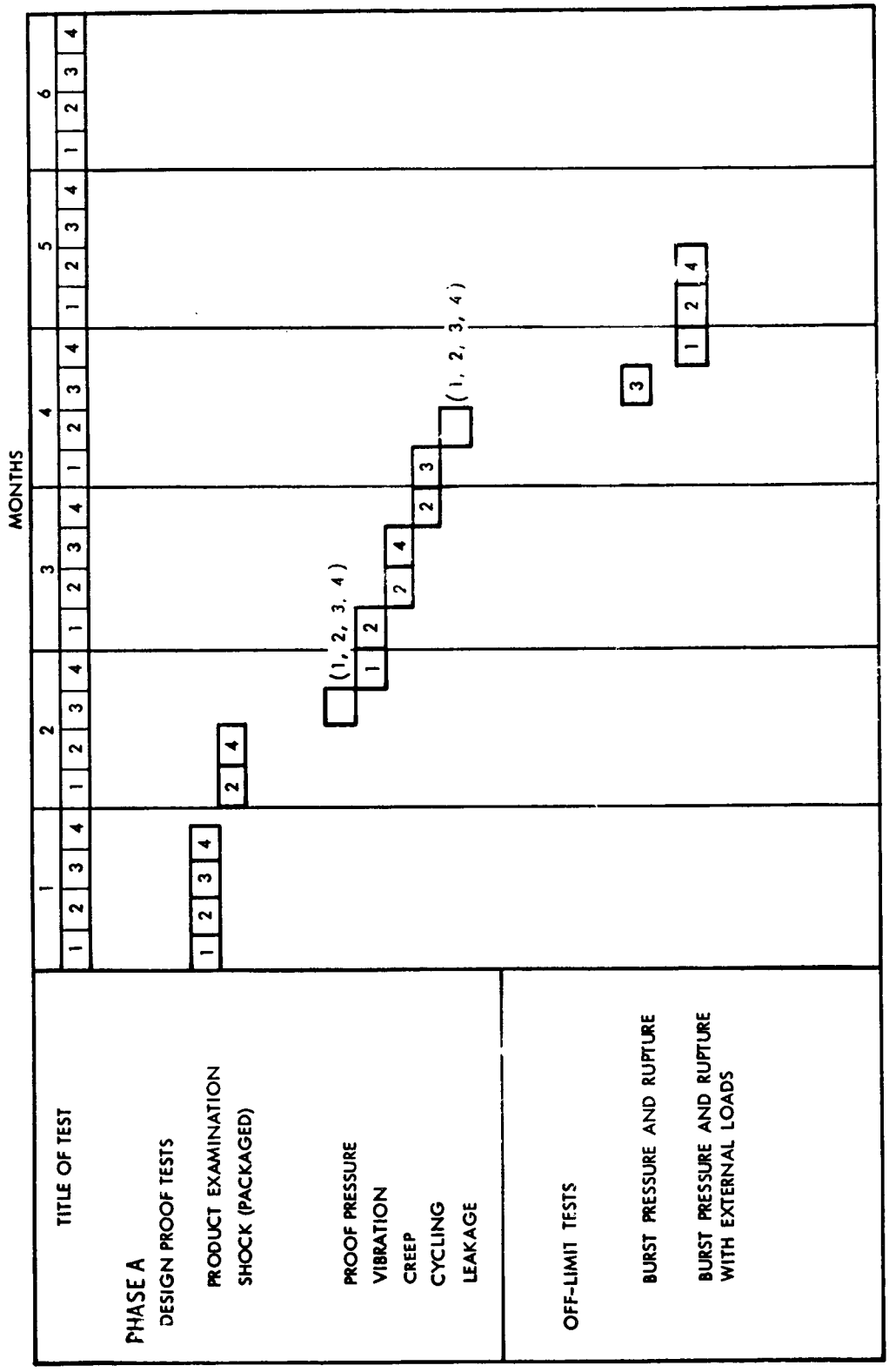

LIST OF CURRENT PAGES

Page No.	Date	Revised	Classification

SECTION 10.0

STABILIZATION AND CONTROL

10.1 Summary

Equipment of the stabilization and control subsystem are constantly being subjected to reliability analyses to ensure that each component attains its optimum reliability. Because of the complexity of the subsystem, problems have arisen. Failure effects analyses, circuit analyses, and sparing versus operational redundancy have been performed to realize solutions for these problem areas.

10.2 Analysis

Analyses have been performed by Minneapolis-Honeywell, which indicate that the mission success reliability apportionment can be met with a reasonable complement of on-board spares.

The preliminary subassemblies for this equipment have been determined, and configuration breakdowns are shown in Figures 10.1 through 10.22. A comparison of failure rates and weights of each subassembly being used by NAA/S&ID and Minneapolis-Honeywell are shown in Table 10.1. The logic used in this configuration is oriented toward maximum compatibility with the equipment mission-phase logic diagrams for safe abort.

Table 10.1 Comparison of NAA/S&ID and Minneapolis-Honeywell Failure Rates

Subassembly	Quantity	Failure Rates X 10^{-6} (hr)		Weight (lb) Each
		NAA	M-H	
Accelerometer	1	125.0	50.0	0.62
Accelerometer amplifier demodulator	1	2.49	4.317	0.75
Accelerometer integrator	1	4.5		1.5
Accelerometer mode select power supply	1	17.052	2.811	1.5
Accelerometer TC amplifier oscillator	1	2.746	1.989	0.75

Table 10.1 Comparison of NAA/S&ID and Minneapolis-Honeywell Failure Rates (Continued)

Subassembly	Quantity	Failure Rates X 10-6 (hr)		Weight (lb) Each
		NAA	M-H	
Roll body gyro	1	150.0	200.0	1.2
Pitch body gyro	1	150.0	200.0	1.2
Yaw body gyro	1	150.0	200.0	1.2
Roll Preamplifier buffer amplifier	1	2.353	1.367	0.75
Pitch Preamplifier buffer amplifier	1	2.353	1.367	0.75
Yaw Preamplifier buffer amplifier	1	2.353	1.367	0.75
Attitude gyro power supply	1	1.13	6.305	0.75
Roll torque amplifier demodulator	1	2.659	4.002	0.75
Pitch torque amplifier demodulator	1	2.659	4.002	0.75
Yaw torque amplifier demodulator	1	2.659	4.002	0.75
Roll TC amplifier and temperature override	1	10.372	8.213	0.75
Pitch TC amplifier and temperature override	1	10.372	8.213	0.75
Yaw TC amplifier and temperature override	1	10.372	8.213	0.75
Attitude error and switch	1	24.879	—	0.75
Gain network	1	0.108	6.174	0.75
Attitude error indicator	1	42.506	37.239	3.5
Attitude rate indicator	1	7.284	31.313	3.5
Attitude rate pitch	1	13.919	6.125	0.875
Attitude rate roll	1	13.919	6.125	0.875

Table 10.1 Comparison of NAA/S&ID and Minneapolis-Honeywell Failure Rates (Continued)

Subassembly	Quantity	Failure Rates X 10^{-6} (hr)		Weight (lb) Each
		NAA	M-H	
Attitude rate yaw	1	13.919	6.125	0.875
Summing network	1	0.108	6.174	0.5
Total attitude indicator	1	420.771	79.869	3.5
Amplifier demodulator	3	2.754	1.614	0.6
+40 v d-c regulator (A)	1	0.731	—	0.6
Logic	3	4.146	9.972	0.6
Motor coil driver	3	1.728	2.559	0.6
Mode select logic	1	16.897	—	0.6
Resolver assembly	1	372.0	158.0	6.6
A-c and d-c rectifier	1	0.839	4.348	0.6
+20 v d-c regulator	1	1.33	0.607	0.6
Gimbal position indicator electronics	1	25.638	20.327	0.625
Delta velocity display	1	73.321	44.815	2.5
Delta velocity on-off electronics	1	32.35		0.88
Delta velocity ullage electronics	1	8.818	1.778	1.0
Attitude gyro roll demodulator	1	11.799	6.625	0.6
Attitude gyro pitch demodulator	1	11.799	6.625	0.6
Attitude gyro yaw demodulator	1	11.799	6.625	0.6
Roll d-c amplifier	1	6.982	2.249	0.6
Pitch d-c amplifier	1	6.982	2.249	0.6

Table 10.1 Comparison of NAA/S&ID and Minneapolis-Honeywell Failure Rates (Continued)

Subassembly	Quantity	Failure Rates X 10^{-6} (hr) NAA	Failure Rates X 10^{-6} (hr) M-H	Weight (lb) Each
Yaw d-c amplifier	1	6.982	2.249	0.6
Engine thrust electronics	1	0.976	2.498	0.6
Roll rate gyro demodulator	1	12.732	6.637	0.6
Pitch rate gyro demodulator	1	12.732	6.637	0.6
Yaw rate gyro demodulator	1	12.732	6.637	0.6
Roll mode select logic	1	16.897	10.045	0.6
Pitch mode select logic	1	16.897	14.756	0.6
Yaw mode select logic	1	16.897	16.668	0.6
Roll a-c and d-c power transformer	1	2.843	5.483	0.6
Pitch a-c and d-c power transformer	1	2.843	5.483	0.6
Yaw a-c and d-c power transformer	1	2.843	5.483	0.6
Roll mode power relay	1	15.0	2.219	0.6
Pitch mode power relay	1	15.0	2.219	0.6
Yaw mode power relay	1	15.0	2.219	0.6
Roll d-c regulator	2	1.33	5.483	0.6
Pitch d-c regulator	2	1.33	5.483	0.6
Yaw d-c regulator	2	1.33	5.483	0.6
Yaw monitor and filter	1	4.946	7.048	0.6
Pitch monitor and filter	1	4.946	7.048	0.6
Yaw driver amplifier (A)	1	1.572	1.267	0.6

Table 10.1 Comparison of NAA/S&ID and Minneapolis-Honeywell Failure Rates (Continued)

Subassembly	Quantity	Failure Rates X 10^{-6} (hr)		Weight (lb) Each
		NAA	M-H	
Yaw driver amplifier (B)	1	1.572	1.267	0.6
Pitch driver amplifier (C)	1	1.572	1.267	0.6
Pitch driver amplifier (D)	1	1.572	1.267	0.6
Yaw integrator	1	9.528	0.327	0.6
Pitch integrator	1	9.528	0.327	0.6
Yaw rate and servo demodulator	4	5.954	7.308	0.6
Pitch rate and servo demodulator	4	5.954	7.308	0.6
Attitude error electronics	1	14.0	16.289	0.875
Gimbal position indicator	1	31.906	22.237	2.0
Level detector	1	0.54	—	0.6
Minimum impulser	1	5.0	—	2.0
Rate gyro electronics	1	0.971	4.702	1.0
Roll rate gyro	1	150.0	100.0	0.62
Pitch rate gyro	1	150.0	100.0	0.62
Yaw rate gyro	1	150.0	100.0	0.62
Reaction jet driver	16	1.74	4.528	0.6
Back-up entry switch	1	48.8	0.09	1.95
Channel disable	1	48.8	1.2	1.95
Deadband adjust	1	24.2	0.03	1.95
Mode select	1	13.075	5.084	1.95

[redacted]

Table 10.1 Comparison of NAA/S&ID and Minneapolis-Honeywell Failure Rates (Continued)

Subassembly	Quantity	Failure Rates X 10^{-6} (hr)		Weight (lb) Each
		NAA	M-H	
Translational control	2	4.15	1.05	9.0
Three-axis rotational control, direct	2	7.7	1.518	2.25
Three-axis rotational control, normal	2	27.8	7.862	9.6
Universal miscellaneous	1	24.176	5.072	0.942
Universal power supply	1	0.585	11.528	1.125

Several thrust vector control servo-amplifier circuits of the ECA equipment have been analyzed to determine the redundancy required to achieve apportioned reliability requirements. The results indicate that part (transistor) redundancy does not allow the apportionment to be met. Table 10.2 shows the apportioned, predicted (Apollo preferred), and part (transistor) redundant reliabilities of the thrust vector control circuits, as analytically determined.

Table 10.2 Thrust Vector Control Circuit Apportionment and Predictions

Amplifier	Mission Success		Reliability with Part (transistor) Redundancy
	Apportioned Reliability	Predicted Reliability (Apollo preferred)	
A4	0.9999998	0.9999964	0.9999989
A5, A6	0.9999998	0.9999966	0.9999992
A7, A8	0.9999999	0.9999969	0.9999995
Total	0.9999995	0.9999899	0.9999976

[redacted]

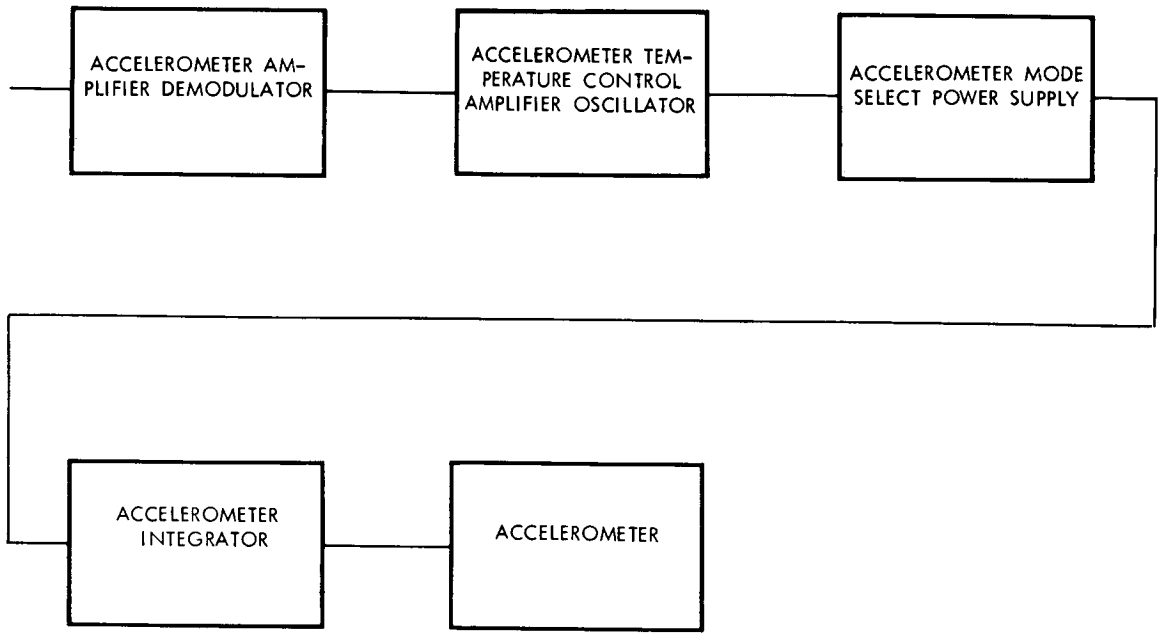

Figure 10.1 Accelerometer Package

[redacted]

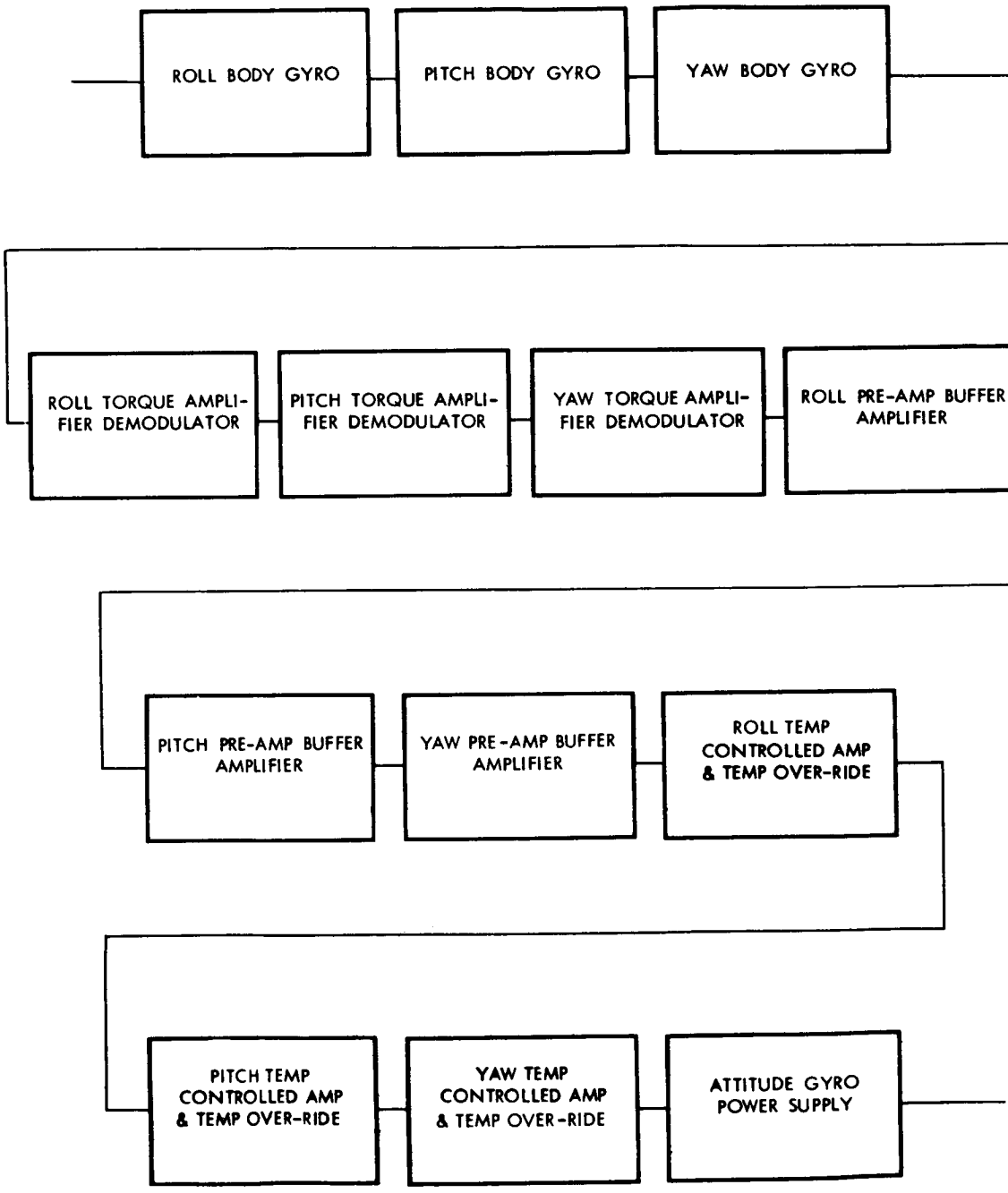

Figure 10.2 Body-Mounted Attitude Gyro

[redacted]

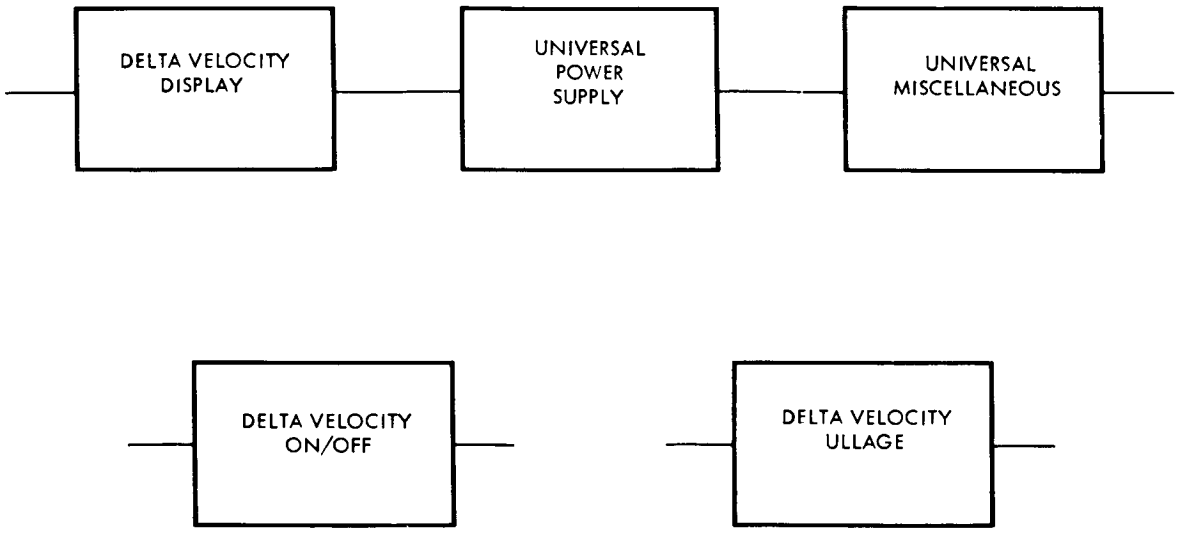

Figure 10.3. Delta Velocity Display

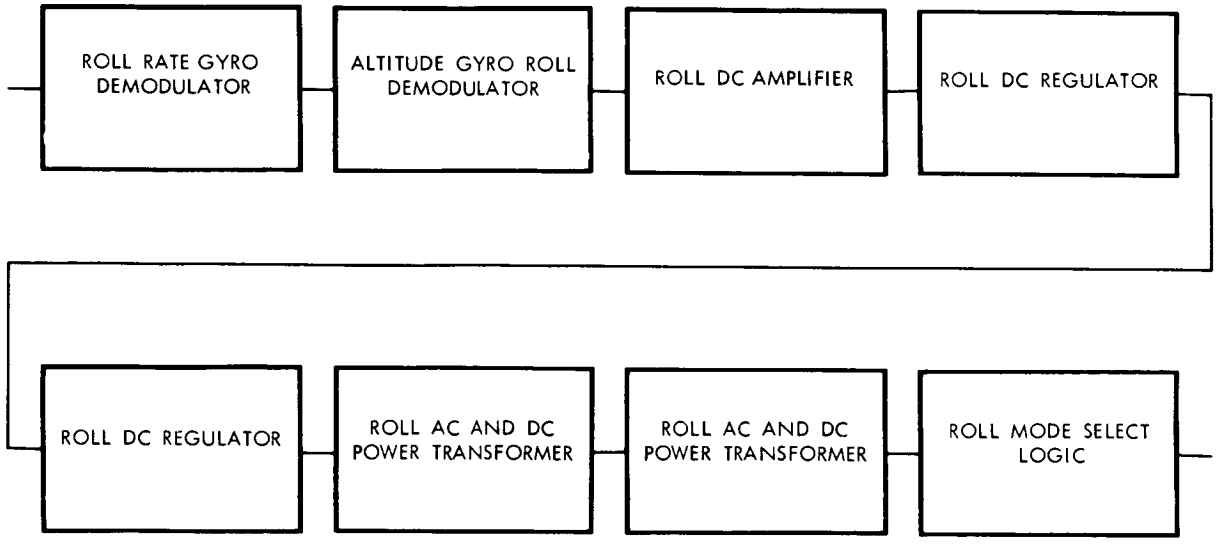

Figure 10.4 Electronic Control Assembly, Roll

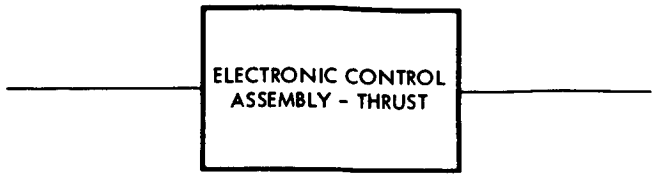

Figure 10.5 Electronic Control Assembly, Thrust

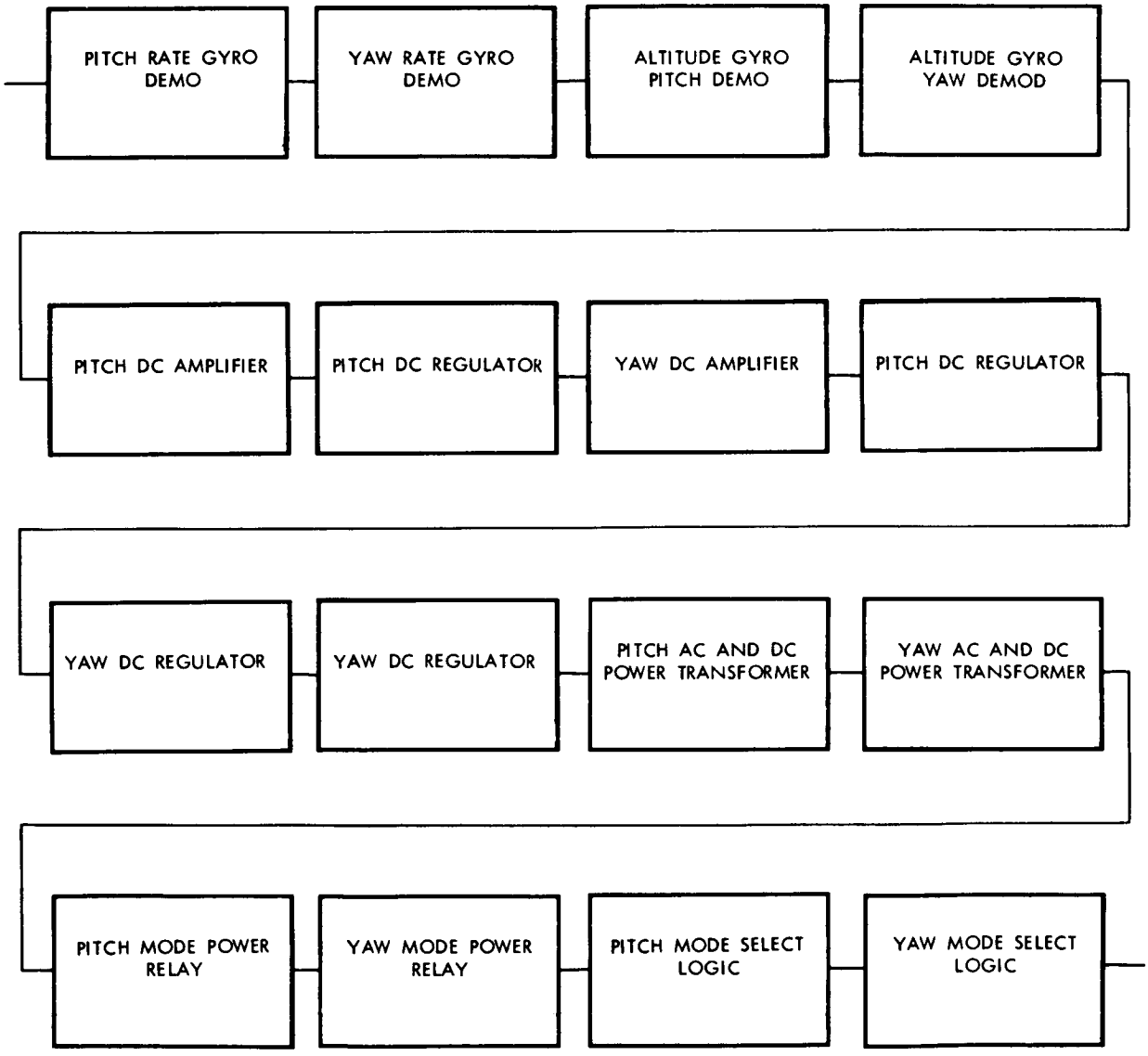

Figure 10.6 Electronic Control Assembly, Pitch Yaw

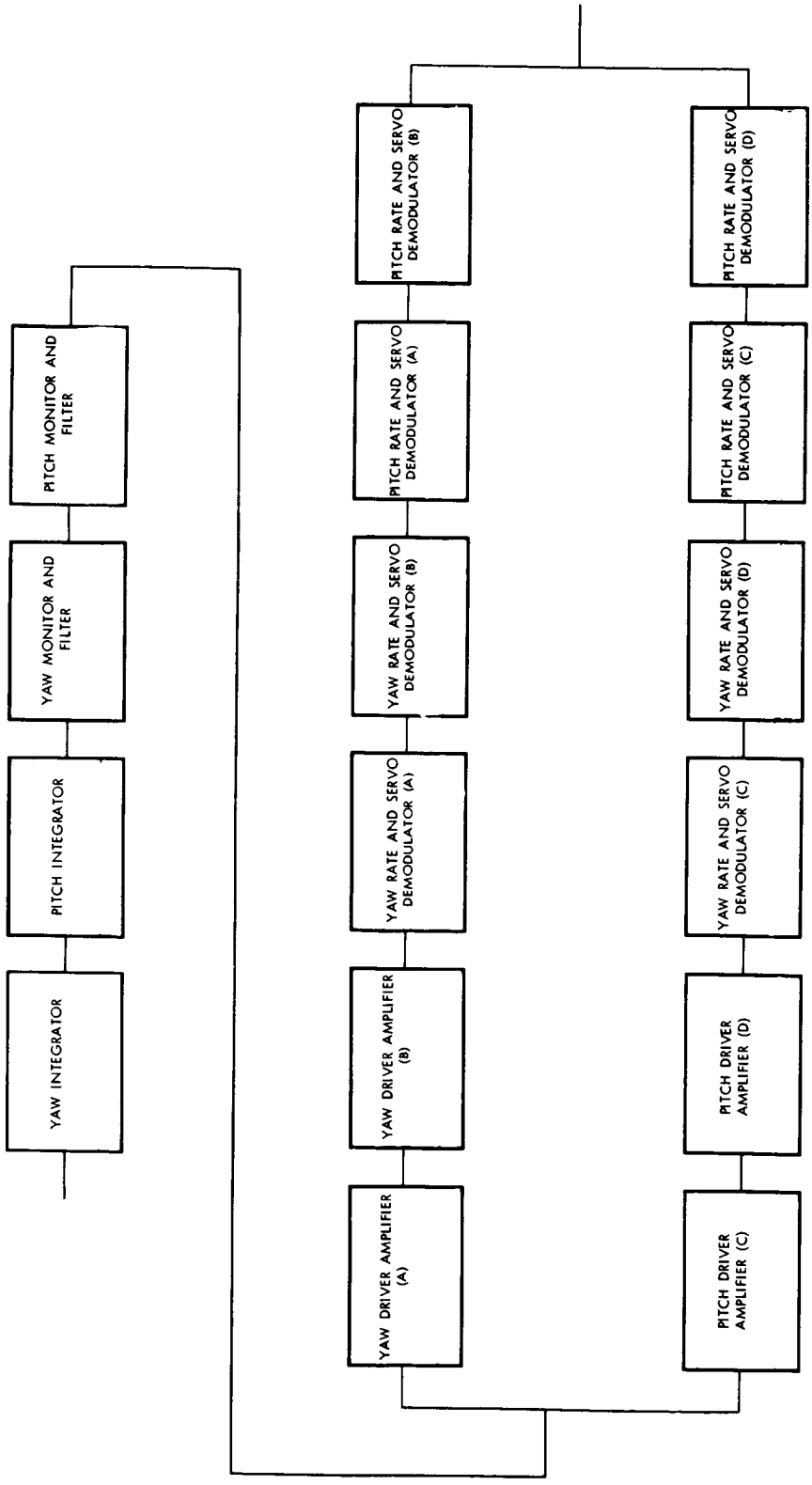

Figure 10.7 Electronic Control Assembly, Thrust Vector

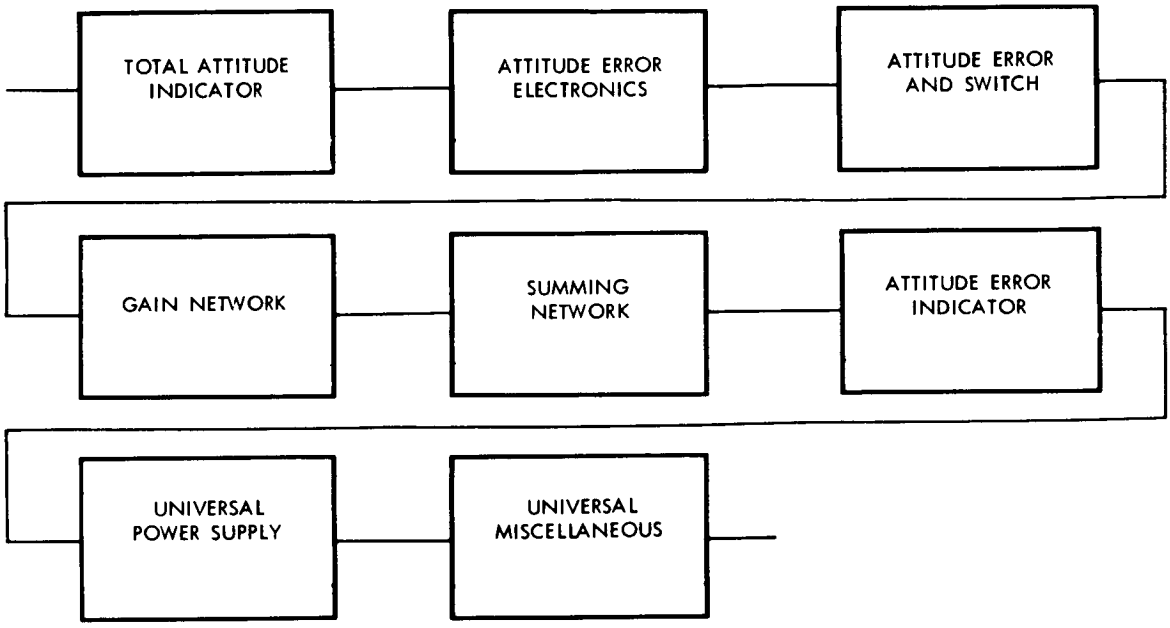

Figure 10.8 Flight Director Attitude Indicator

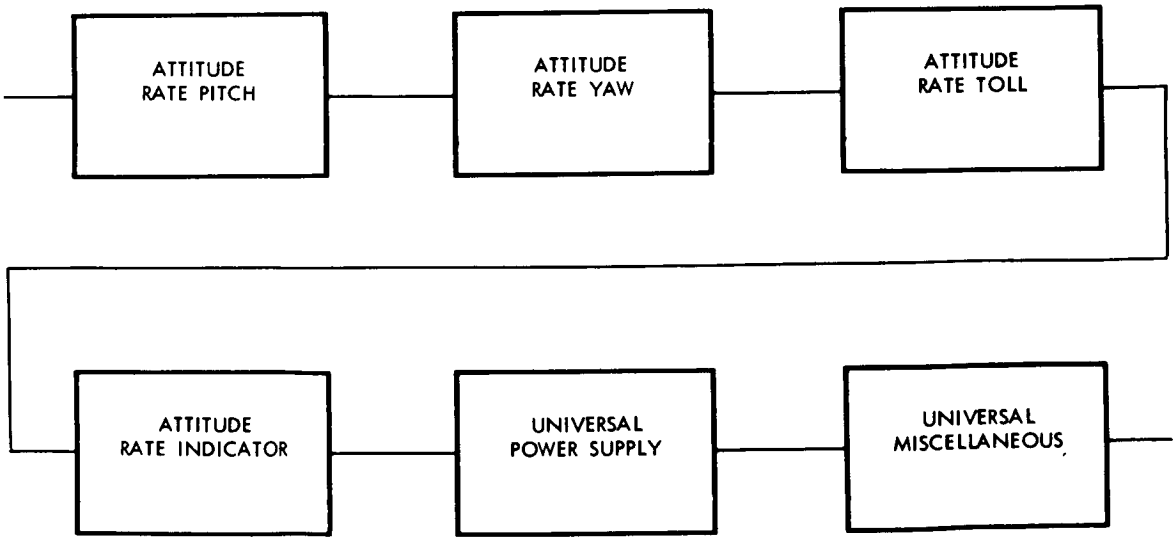

Figure 10.9 Flight Director Rate Indicator

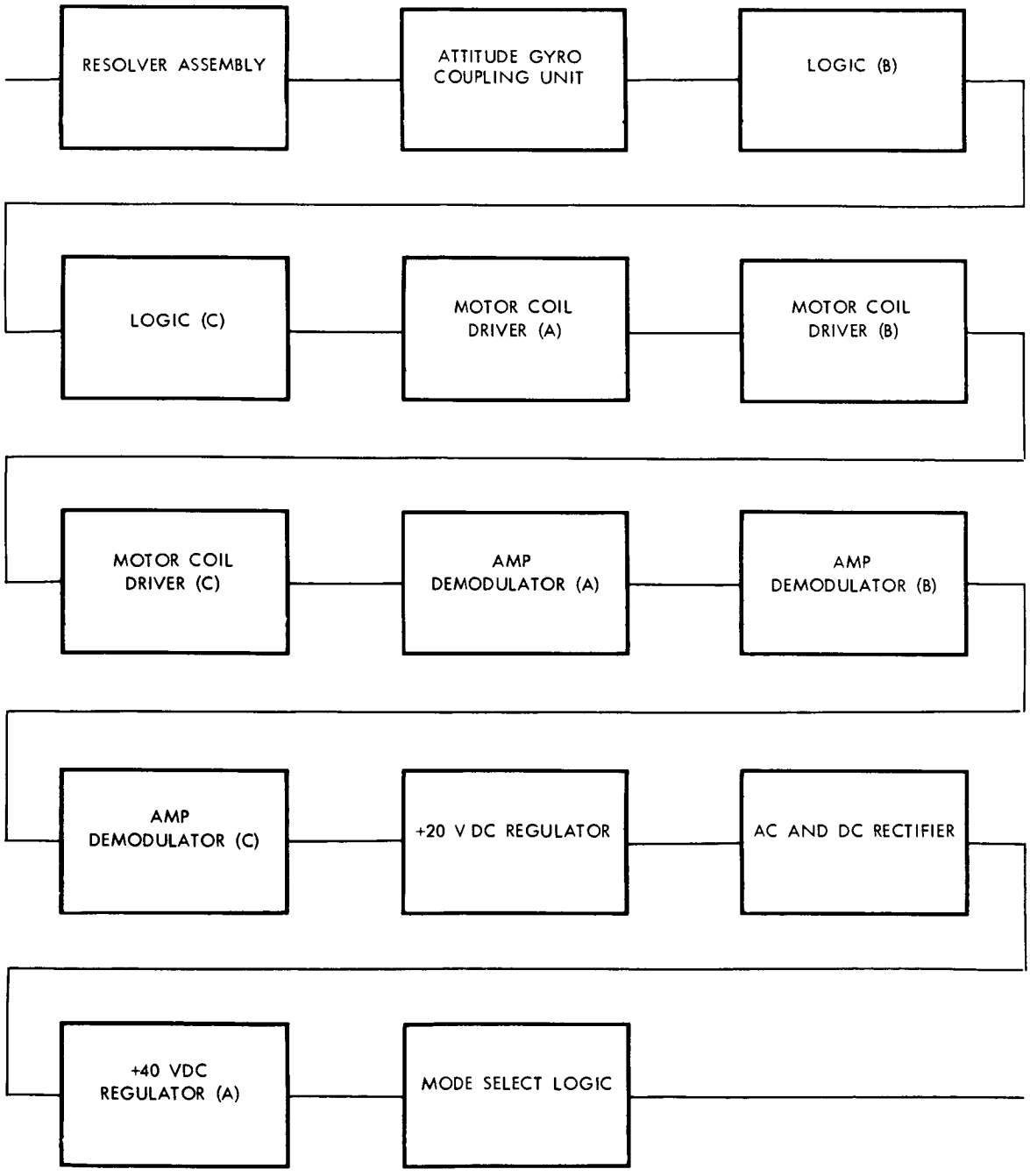

Figure 10.10 Attitude Gyro Coupling Unit

~~CONFIDENTIAL~~

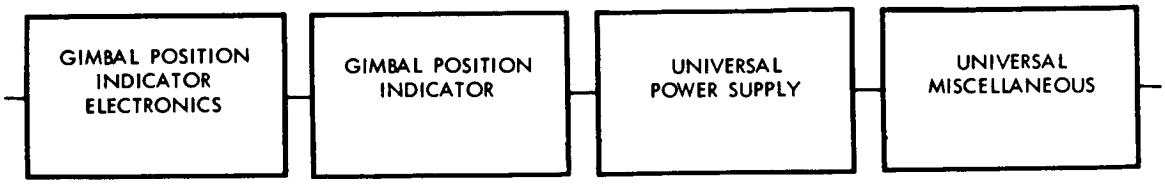

Figure 10.11 Gimbal Position Indicator

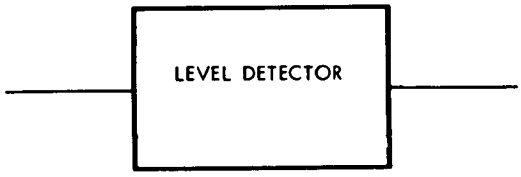

Figure 10.12 Level Detector

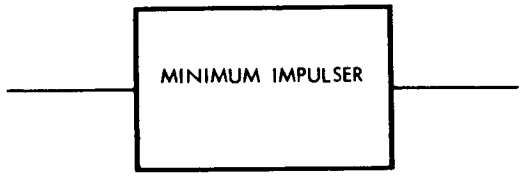

Figure 10.13 Minimum Impulser

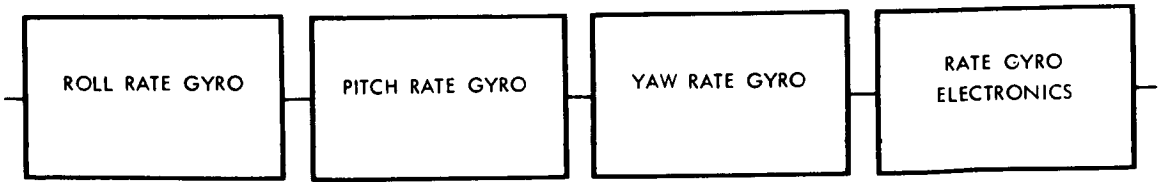

Figure 10.14 Rate Gyro Package

~~CONFIDENTIAL~~

CONFIDENTIAL

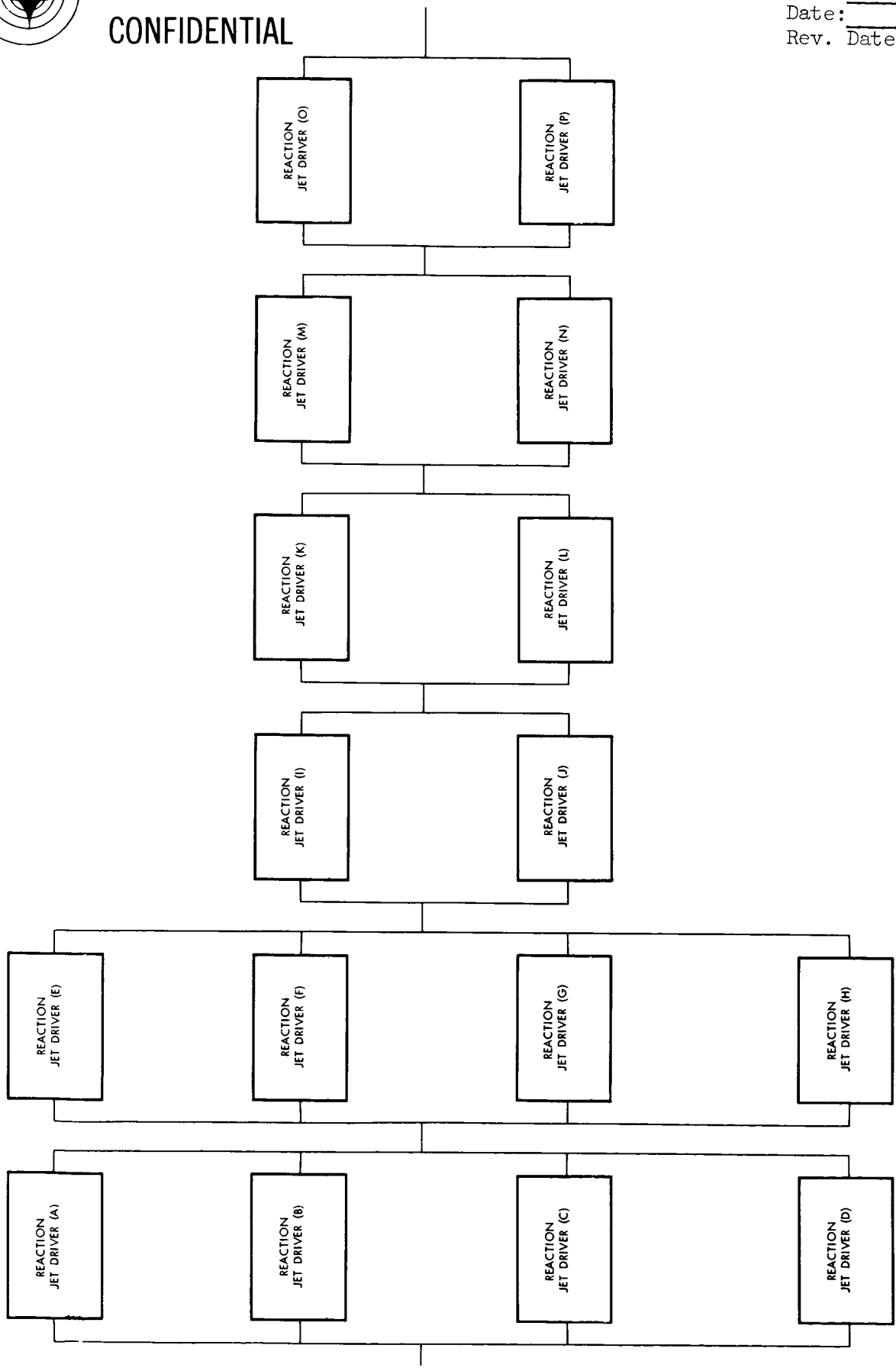

Figure 10.15 Reaction Jet Drivers, Command Module

~~CONFIDENTIAL~~

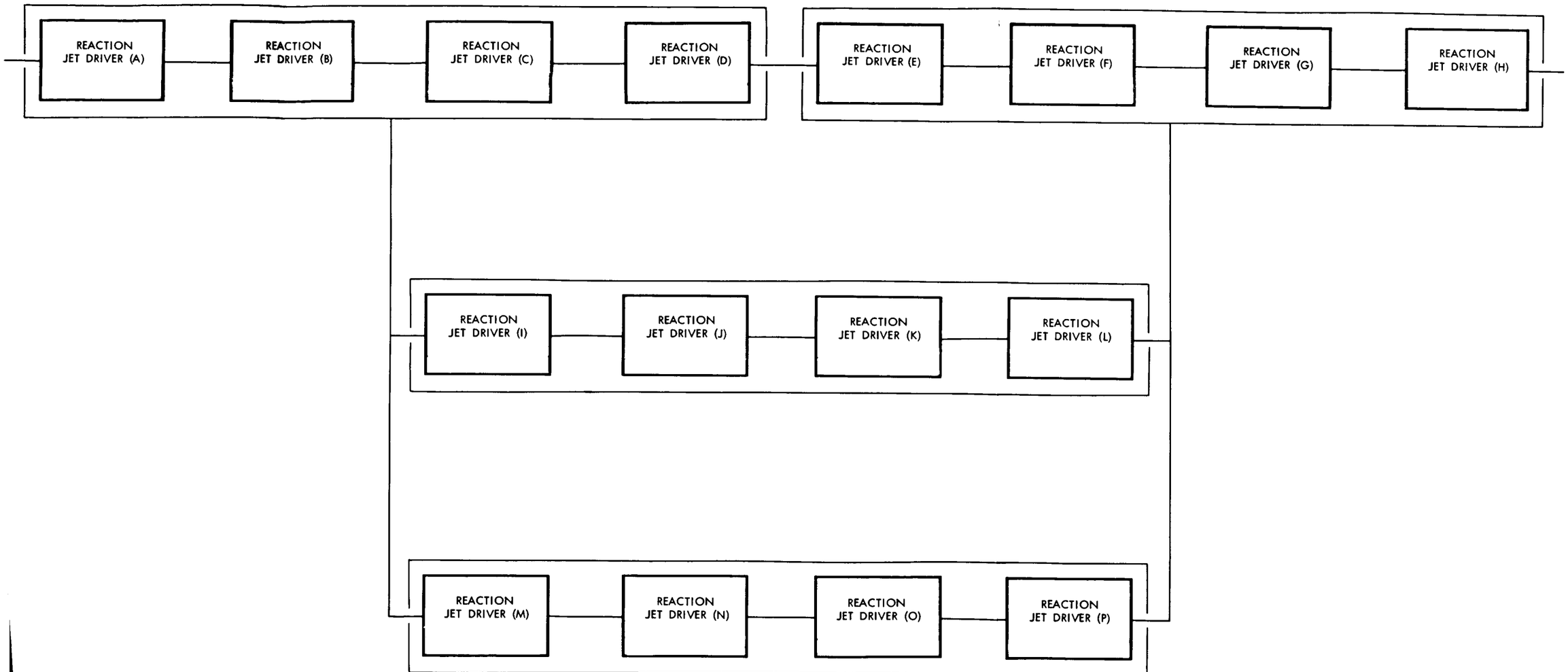

Figure 10.16 Reaction Jet Drivers, Service Module

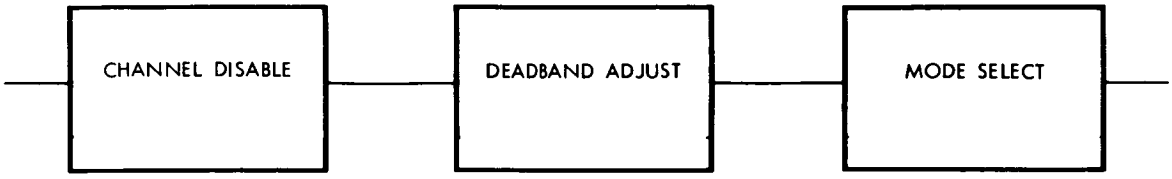

Figure 10.17 SCS Control Panel

Figure 10.18 Back-Up Entry Switch

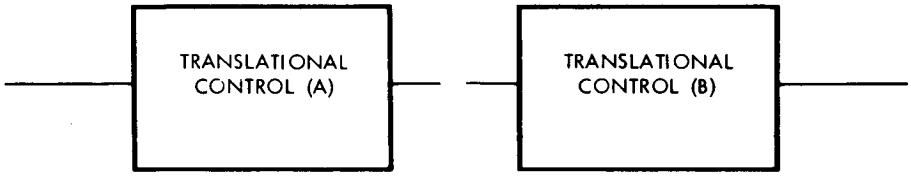

Figure 10.19 Translational Control

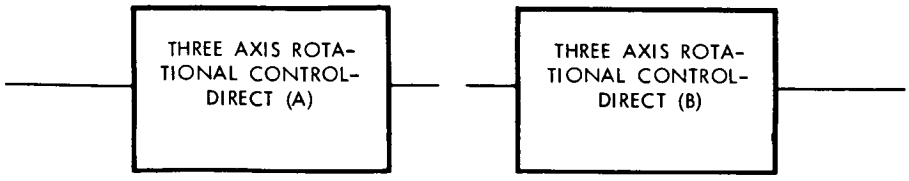

Figure 10.20 Three-Axis Rotational Control-Direct

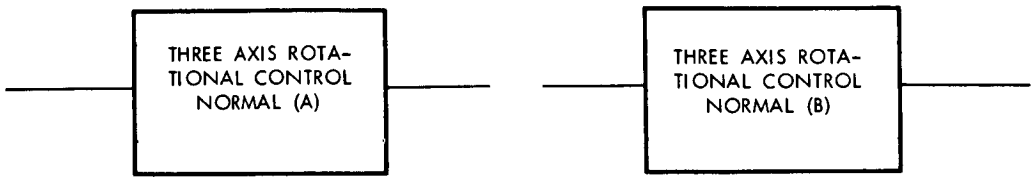

Figure 10.21 Three Axis-Rotational Control-Normal

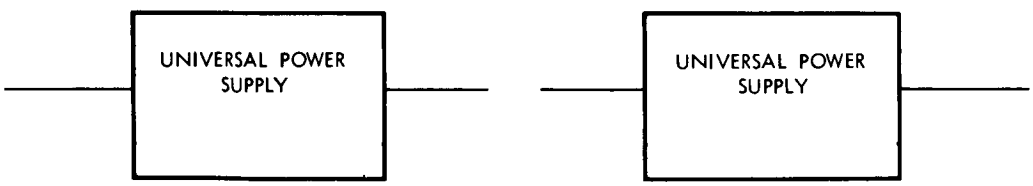

Figure 10.22 Universal Power Supply

Table 10.3 shows the latest analytically determined reliability predictions of the SCS on the component level based upon updated parts count on the subassembly level. The operating times for the components were derived from logic diagrams and the Apollo LOR Mission Profile.

10.2.1 Failure Effects Analysis

The results of preliminary failure effects analysis of the stabilization and control subsystem at the equipment level are given in Table 10.4.

10.3 Subsystem Description

A typical reliability logic diagram of the SCS broken down to the subassembly level for the navigational sighting function, is shown in Figure 10.23.

The diagram shows the series constraints of the subsystem and the redundancy on the subassembly level. The operational modes are the basis of this configuration. They are as follows:

1. A signal is generated from the guidance and navigation subsystem and sent into the SCS through the ECA pitch, roll and yaw, which is comprised of the following series subassemblies: roll, pitch, yaw, demodulators; roll, pitch, yaw dc amplifiers; and roll, pitch, yaw mode select logic. For these subassemblies to function, the following series elements must also function for power supply and regulation: roll, pitch, yaw ac and dc power transformers; roll, pitch and yaw mode power relays; and roll, pitch and yaw dc regulators. These subassemblies perform an attitude hold function in conjunction with the input from the rate gyro package consisting of the following series elements: rate gyros roll, pitch, yaw; and rate gyro electronics. Rate gyro inputs can be backed up by the body mounted attitude gyros when they are in the rate mode and consist of the following series elements: roll, pitch and yaw gyros; roll, pitch and yaw pre-amplifier buffers; attitude gyro power supply; roll, pitch, yaw torque amplifier demodulators; and the roll, pitch and yaw temperature control amplifier and temperature override. After the signal goes through limiting and other circuitry, it culminates in the reaction jet drivers which in turn drive the reaction jets of the RCS. The spacecraft attitude can be kept in a 5 or 0.5 degree deadband in any of the three axis.

2. This function can also be accomplished by switching to the SCS hold mode which requires the use of the SCS control panel. The panel is comprised of the following series elements: channel disable, deadband adjust, and mode select. This places the body mounted attitude gyros in the attitude mode and replaces

TABLE 10.3

Sheet 1 of 2

STABILIZATION AND CONTROL SUBSYSTEM MISSION RELIABILITY (LOR)

COMPONENT NAME	ITEMS	MISSION TIMES (HRS.)	FAILURE RATE PER 10^6 HOURS OR CYCLES			RELIABILITY		
			APPORTIONED	PREDICTED	ASSESSED	APPORTIONED	PREDICTED	ASSESSED
STABILIZATION AND CONTROL SUBSYSTEM	-	-	-	-	N.A.	.995000[A]	.594674[A]	N.A.
Flight Director	1	336 hrs.		231.39	N.A.		.925242[A]	N.A.
Gimbal Position Indicator	1	336 hrs.		16.570	N.A.		.994432[A]	N.A.
SCS Control Panel	1	336 hrs.		6.69[1]	N.A.		.997751[A]	N.A.
Delta V Indicator	1	336 hrs.		63.56[1]	N.A.		.978827[A]	N.A.
Body Mounted Attitude Gyro	1	336 hrs.		630.95[1]	N.A.		.808965[A]	N.A.
Electronic Control Assembly	1	336 hrs.		119.06[1]	N.A.		.960789[A]	N.A.
Reaction Jet Driver Assy	1	336 hrs.		0.277	N.A.		.960789	N.A.
Rate Gyro Package	1	316 hrs.		302.5485	N.A.		.908827	N.A.
Accelerometer Package	1	336 hrs.		57.5	N.A.		.980885	N.A.

DATA SOURCE:
1. Minuteman

MATHEMATICAL TECHNIQUES:
A - Logic Diagram and known failure rate data
B - Analytical Method (Weighted subjective experience)

[redacted]

TABLE 1.[illegible]3 (Continued)

Sheet 2 of 2

STABILIZATION AND CONTROL SUBSYSTEM MISSION RELIABILITY (LOR)

COMPONENT NAME	ITEMS	MISSION TIMES (HRS.)	FAILURE RATE PER 10^6 HOURS OR CYCLES			RELIABILITY		
			APPORTIONED	PREDICTED	ASSESSED	APPORTIONED	PREDICTED	ASSESSED
3-Axis Rotational Control	2	61.8 hrs.		11.0	N.A.		.999329 ea. .9999995[A]	N.A.
Translational Control	2	61.8 hrs.		1.13	N.A.		.999931[A] ea. .9999999[A]	N.A.
Engine Thrust Electronics	1	0.14 hrs.		0.99	N.A.		.999999+[A]	N.A.
Attitude Gyro Coupling Unit	1	336 hrs.		136.66	N.A.		.955137[A]	N.A.
Thrust Vector Control	1	5.6 hrs.		9.86	N.A.		.999945[A]	N.A.

DATA SOURCE:
1. Minuteman

MATHEMATICAL TECHNIQUE:
A - Logic Diagram and known failure rate data
B - Analytical Method (Weighted subjective experience)

CONFIDENTIAL

[redacted]

Table 10.4 Stabilization and Control Failure Effects Analysis

Item	Drawing Number	Elect. Reference. Desig.	Function	Failure Type	Mission Phase	Failure Effect On Component Performance	Failure Effect On Sub-Systems Performance	Failure Effect On Apollo	Possible Crew Action
Attitude display			Visual display of attitude information	Display incorrect, or input information incorrect			Eliminates accurate attitude information	These displays are very important during critical phases, especially during emergency control of large ΔV. If both displays are inoperative, an abort is suggested and should be successful if the display is only in error.	If only one is incorrect, repair or ignore it. Proceed with available information.
BMAG			Attitude error input, body axes	Short; open; hardover			Eliminates attitude error information if G&N is not functional. If G&N is functional, eliminates IMU back-up for attitude reference	If G&N is not functional, abort has probably been made. If repair can be made, safe return can be accomplished. If hardover occurs during entry, it might not be catastrophic.	If time allows, use G&N reference if available. If G&N is not available, disengage SCS, stabilize with rate and emergency control, and repair. If time does not allow, use best information available; control by emergency.
BMAG			Attitude -ate input, body axes	Hardover; open; short			Eliminates back-up to RGP; if RGP is not available, SCS is without-rate information	Effect would depend on conditions of malfunction. If time to repair or go to rate gyros, effect is negligible. During critical phases entry could be catastrophic.	Switch to rate gyros. If not usable, disengage SCS and stabilize displacement display and emergency control. Repair or replace gyro.

[redacted]

[redacted]

Table 10.4 Stabilization and Control Failure Effects Analysis (Cont)

Item	Drawing Number	Elect. Reference. Desig.	Function	Failure Type	Mission Phase	Failure Effect On Component Performance	Failure Effect On Sub-Systems Performance	Failure Effect On Apollo	Possible Crew Action
RGP			Body rates input	Hardover; short to ground			Eliminates rate reference and requires use of BMAG as rate reference	Effect of rate gyro failure depends on conditions. It will be almost impossible to make large ΔV without rate. A successful entry might be made only with one axis inoperative. Safety will depend on redundancy.	Repair of switch to BMAG as rate reference if it is functional.
Accelerometer package			Longitudinal acceleration	Small error; large error positive; large error negative			Higher rate of power consumption due to more usage of G&N and error in trajectory	Higher rate of power consumption due to more usage of G&N and error in trajectory. No need to abort.	Use OFF-ON signal from G&N in subsequent ΔV's. Use manual shut-off. Use G&N in subsequent ΔV's.
SCS control panel			Mode select; deadband adjust; limiter adjust	Switches fail to open or fail to close or short to ground. Proportional adjustments in error or short to ground			Elimination of the control capability, emergency controls must be used until repaired	Abort would be performed. Crew would probably survive.	The mode select panel is redundant. Use redundant control if mode select panel fails. If adjust panel fails, use emergency rate and attitude until faulty control can be isolated.
Gimbal position indicator			Gimbal positioning indication	Open; short; display incorrect			None	None, if automatic control performs gimbal positioning; if automatic fails, could be catastrophic.	None

[redacted]

~~CONFIDENTIAL~~

Table 10.4 Stabilization and Control Failure Effects Analysis (Cont)

Item	Drawing Number	Elect. Reference. Desig.	Function	Failure Type	Mission Phase	Failure Effect On Component Performance	Failure Effect On Sub-Systems Performance	Failure Effect On Apollo	Possible Crew Action
Three-axis rotational control			Attitude command, three axis	Open; short			Use of G&N for extended periods of time. Time in excess of the designed operating time will result in an intolerable reduction of G&N reliability	Degradation of G&N reliability is critical; abort will be made in this case. A successful entry can probably be made providing a permanent G&N failure does not occur.	Switch to G&N attitude control mode.
Delta velocity indicator			Displays; velocity change; provides manual control of SPS	Open; short; incorrect; display			Eliminates the capability of manually performing a ΔV maneuver	Abort would be performed.	Use automatic control, thereby eliminating the need for ΔV indicator.
Electronic control assembly			Signals to SM R/C, CM R/C, and SPS	Short; open			Increased use of fuel; attitude control performance degraded; accuracy of maneuvers are decreased	Abort would probably be made. A successful entry could be made; therefore, the crew would survive.	Use emergency controls.
Display electronics package			Signals to SCS displays	Open; short			Crew is required to use automatic mode, but there is no way to monitor	Abort would be made. A successful entry can be made with automatic control.	Use automatic controls.
Translational Control			Provide ON-OFF signals to reaction control systems	Short; open; control; malfunction			Increased use of G&N	Abort would be performed.	Switch to G&N for automatic translation maneuver.

~~CONFIDENTIAL~~

[redacted]

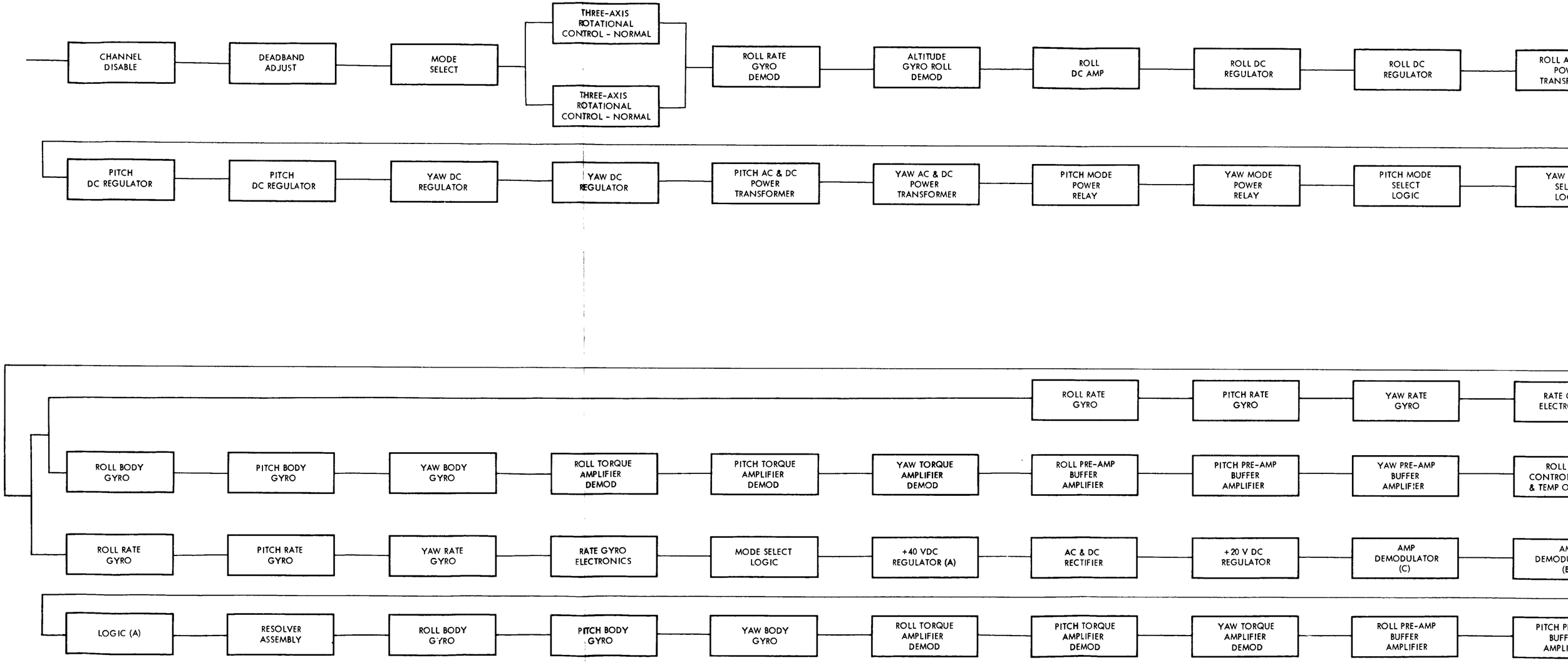

FOLD OUT #1

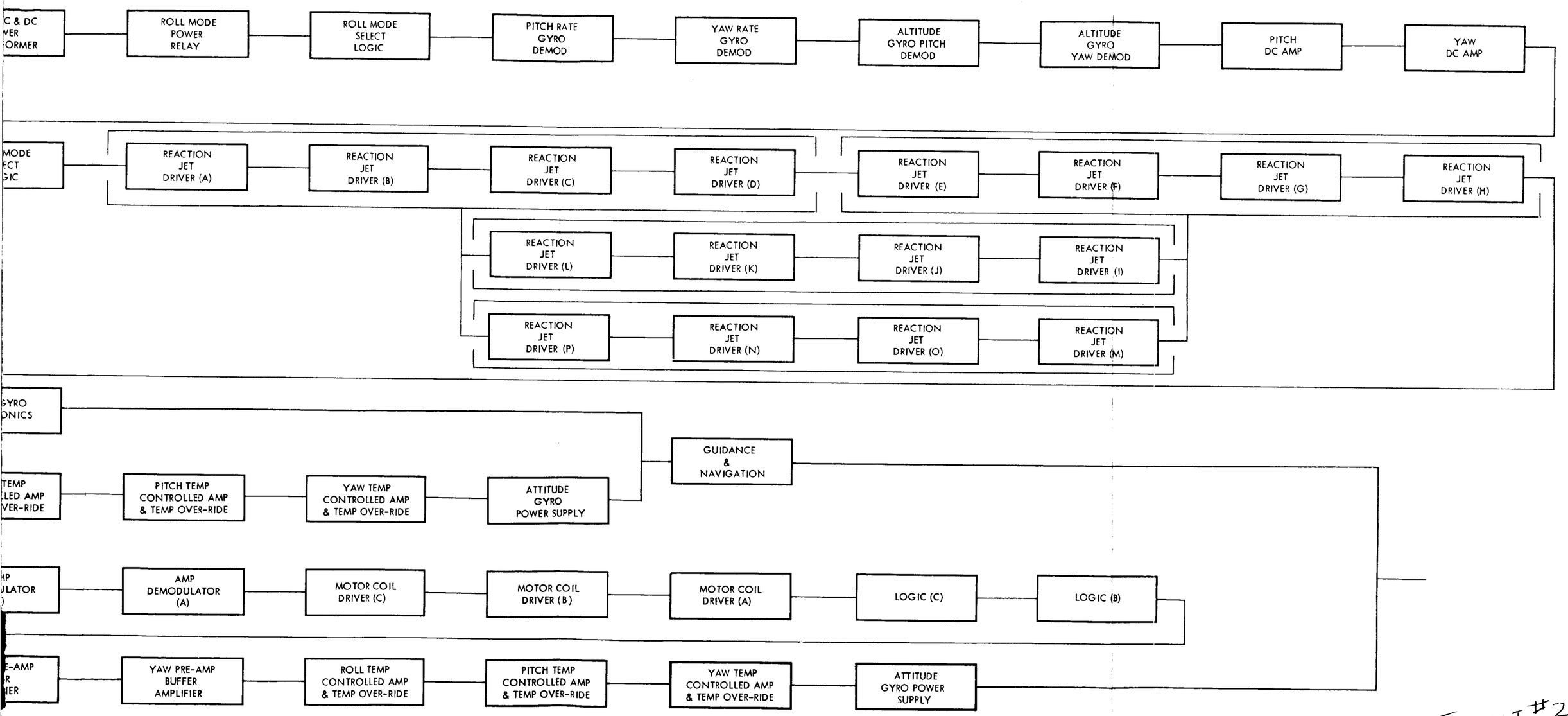

FOLD OUT #2

Figure 10.23 Stabilization and Control Subsystem Navigational Sighting Logic Diagram

CONFIDENTIAL

the signal generated from the navigation and guidance subsystem. In conjunction with the body mounted attitude, gyros, the following series elements are also needed: roll, pitch, yaw amplifier demodulators; roll, pitch, yaw logic; +40 volts dc regulator; +21 volts dc regulator; resolver assembly; motor-coil drivers; mode select logic; and ac and dc rectifier. Again in this mode all the electronic control subassemblies must be included in the series configuration.

3. In order to rotate the spacecraft, either of the two three-axis rotational controls are utilized.

A brief description of all SCS equipment is shown in Table 10.5.

10.4 Special Studies

NAA/S&ID and Minneapolis-Honeywell have completed preliminary in-flight spare studies. These studies were conducted with the realization of the spare weight restraints and the mission success reliability requirements. Certain specific areas of the over-all reliability have shown definite improvement as compared to previous estimates. This is due to the inherent redundancy of functioning subassemblies within the stabilization and control subsystem.

Table 10.6 shows a preliminary list of the subassemblies spared and their weight. This is a result of the first preliminary spares study. This study will continue until a reliability estimate has been made showing the results of the spares study.

Table 10.5 Stabilization and Control Subsystem Equipment

Equipment	Function
Rate gyro package	Contains sensing elements and circuitry to provide and display angular rate stabilization.
Attitude gyro, accelerometer package	Provides angular displacement signals for control and display. The body mounted accelerometer will provide x-axis acceleration data for delta velocity display and entry switching.
SCS control panel	Provides selection of any of the spacecraft control modes to adjust the deadband, to disable and re-enable the SCS outputs by channels to select the attitude gyros as a back-up rate source by channel, and to select the post 0.05-g switching configuration during entry modes.
Electronic control assembly, pitch axis	Contains circuitry for resolving, summing, shaping, and switching of the pitch channel sensors and manual input signals required to control the operation of the pitch reaction jets for the service module and the command module. The pitch channel circuitry also controls the pitch channel of the propulsion engine thrust vector circuits for the service module, and will provide pitch channel circuit isolation and signal conditioning elements required for ground and in-flight checkout, monitoring, and telemetry.
Electronic control assembly, roll axis	Contains circuitry for resolving, shaping, and switching of the roll channel sensors and manual input signals required to control the operation of the roll reaction jets for the service and the command modules. The roll channel will also provide roll channel circuit isolation and signal conditioning elements required for ground and in-flight checkout, monitoring, and telemetry.

Table 10.5 Stabilization and Control Subsystem Equipment (Continued)

Equipment	Function
Electronic control assembly, yaw axis	Contains circuitry for resolving, summing, shaping, and switching of the yaw channel sensors and manual input signals required to control the operation of the yaw reaction jets for the service and command modules. The yaw channel circuitry also controls the yaw channel of the propulsion engine thrust vector circuits for the service module, and provides yaw channel circuit isolation and signal conditioning elements required for ground and in-flight checkout, monitoring, and telemetry.
Electronic control assembly, auxiliary	Contains circuitry and components to provide propulsion engine on-off control, mode select logic, signal conditioning, attitude gyro coupling, and spin motor rotation detection.
Electronic control assembly, display and attitude gyro and accelerometer electronics	Contains circuitry and components for the flight director attitude indicator, delta velocity display, and the attitude set and gimbal position display. Circuitry for the body-mounted attitude gyros and the x-axis accelerometer will also be included.
Flight director attitude indicator	Displays spacecraft altitude and attitude errors from the Guidance and Navigation and SCS subsystems and angular rate information for manual control and monitoring purposes.
Attitude set and gimbal position display	Provides circuitry and components to enable the pilot to align the attitude indicator during SCS local vertical or SCS attitude control modes, to set and insert Euler angles so that the differences between these angles and the attitude gyro coupling unit shaft positions appear on the attitude error indicators as body-referenced error angles, to display the

Table 10.5 Stabilization and Control Subsystem Equipment (Continued)

Equipment	Function
Attitude set and gimbal position display (Continued)	angular position of the pitch and yaw SPS engine gimbals, and to provide a manual control device for engine gimbal positioning.
Delta velocity display	Displays delta velocity magnitude remaining for pilot monitoring and control purposes, manually inserts the desired delta velocity magnitude into the display electronics package, displays and initiates thrust on and off signals to the SPS engine, inserts tail-off corrections, and initiates direct ullage commands.
Translational control	Provides individual or simultaneous outputs for $\pm X$, $\pm Y$, and $\pm Z$ acceleration commands without cross coupling and provides a signal for manual SPS thrust-off command.
Three-axis rotational control	Provides simultaneous multi-axis actuation without cross coupling, provides proportional rate commands for $\pm p$, $\pm q$ and $\pm r$ with a threshold command of 0.1 degree per second and a maximum command of 17 degrees per second, provides direct commands for $\pm\dot{p}$, $\pm\dot{q}$ and $\pm\dot{r}$, and provides switching signals by channel to indicate with the SCS electronics presence of either normal or emergency commands.

Table 10.6 Preliminary Subassembly Spares List

Component	Subassembly	Number	Weight (lb)
Delta velocity display	Delta velocity on-off electronics	2	1.75
	Delta velocity ullage electronics	2	2.00
Electronic control assembly, roll; electronic control assembly, pitch yaw	Attitude gyro demodulator	1	0.60
	D-c amplifier	1	0.60
	Rate gyro demodulator	1	0.60
	Mode select logic	1	0.60
	A-c and d-c power transformer	1	0.60
	Mode power relay	1	0.60
	D-c regulator	1	0.60
Electronic control assembly, thrust vector	Monitor and filter	4	2.40
	Integrator	4	2.40
Attitude gyro coupling unit	Amplifier demodulator	1	0.60
	+40 v d-c regulator	1	0.66
	Logic	1	0.60
	Motor coil driver	1	0.60
	Mode select logic	1	0.60
	Resolver assembly	1	0.60
	A-c and d-c rectifier	1	0.60
	+20 dc regulator	1	0.60

Table 10.6 Preliminary Subassembly Spares List (Continued)

Component	Subassembly	Number	Weight (lb)
Electronic control assembly, thrust	Engine thrust electronics	4	2.40
Gimbal position indicator	Gimbal position indicator electronics	2	1.25
	Gimbal position indicator	2	4.00
Minimum impulser	Minimum impulser	1	2.00
Rate gyro package	Rate gyro	2	1.24
	Rate gyro electronics	1	1.00
Accelerometer package	Accelerometer	1	0.62
	Accelerometer amplifier demodulator	1	0.75
	Accelerometer integrator	1	1.50
	Accelerometer mode select power supply	1	1.50
	Accelerometer temperature control amplifier oscillator	1	0.75
Body-mounted attitude gyro	Body gyro	2	2.40
	Preamplifier buffer amplifier	2	1.50
	Attitude gyro power supply	2	1.50
	Torque amplifier demodulators	2	1.50
	Temperature-controlled amplifier and temperature override	2	1.50
Delta velocity display	Delta velocity display	2	5.00

Table 10.6 Preliminary Subassembly Spares List (Continued)

Component	Subassembly	Number	Weight (lb)
SCS control panel	Channel disable	2	3.90
	Deadband adjust	2	3.90
	Mode select	2	3.90
Universal power supply	Universal miscellaneous	3	2.83
	Universal power supply	3	3.38

10.5 Development Tests

Breadboard development tests of operational and switching amplifiers, reaction jet drivers, thrust vector control amplifiers, power supply, flip-flop circuits and DV oscillators to determine stability and performance under both ambient and temperature conditions were conducted during the quarter. The testing necessitated design modifications in some areas to achieve desired performance.

Life tests on components of the miniature integrating attitude gyros were initiated during the quarter. The spin motor running detector and the dualsyn have already completed six weeks of testing without any failures being reported. These development tests will determine the gyro's life expectancy.

Life tests on FDAI components also have been initiated. A slip ring assembly completed 150,000 cycles without failure and 5 servo amplifiers have successfully completed ambient and temperature tests.

The following number of materials have already completed the materials test program: gassing tests, 154; flammability tests, 78; high temperature aging, 108, and vacuum testing, 34. This testing will be continued. Parameter variation tests of critical circuits and application suitability tests of electronic parts will also be continued.

10.6 Subsystem Qualification Tests

10.6.1 Scope

The SCS qualification program has been designed to qualify the stabilization and control subsystem for Apollo use while optimizing qualification test costs. The tests will accomplish all engineering objectives and will provide S&ID with data to be integrated with all other ground and flight test data for reliability assessment purposes. The tests will be performed by the SCS subcontractor, Minneapolis-Honeywell Regulator Company, at their Aeronautical Division in Minneapolis, Minnesota. Honeywell will perform the tests, report and analyze failures, propose corrective action, and furnish S&ID with data to be used for reliability assessment. S&ID will monitor the tests, assist in failure analysis when necessary, approve corrective actions, approve qualification results and assess achieved reliability based on subcontractor-furnished data. The qualification sample sizes were selected as the minimum required to accomplish program objectives and represent the optimum hardware usage. Time and schedule constraints have necessitated the use of additional packages to bring the total sample size to six complete systems in cases where all systems are undergoing concurrent testing.

10.6.2 Reliability Assessment Model

Figure 10.24 depicts the reliability assessment model for the S&C system. The model will aid in establishing test continuity and in programming the collection of data for the assessment of reliability by illustrating the reliability and functional interrelationships of the system components.

10.6.3 Criticality and Hardware Requirements

Table 10.7 designates the criticality class, as defined in subsection 2.4 of SID 62-109-3 for the components of the SCS. The table enumerates the hardware requirements for a minimum qualification program as established in subsection 2.5 of SID 62-109-3. The distribution of the hardware through the subsystem qualification test phases, as described in subsection 2.3 of SID 62-109-3, is shown. The location of the components in the spacecraft is indicated by spacecraft zone numbers as defined in subsection 4.2 of SID 62-109-3.

10.6.4 Qualification Test Schedule

Figure 10.25 displays the qualification test schedule for SCS and defines the test utilization of the hardware enumerated in Table 10.7. The specific test levels to be applied in qualification testing are found in the tables of environmental test criteria in subsection 4.2 of SID 62-109-3 and are a function of the zone location of the equipment in the spacecraft. These zone numbers are given in Table 10.7.

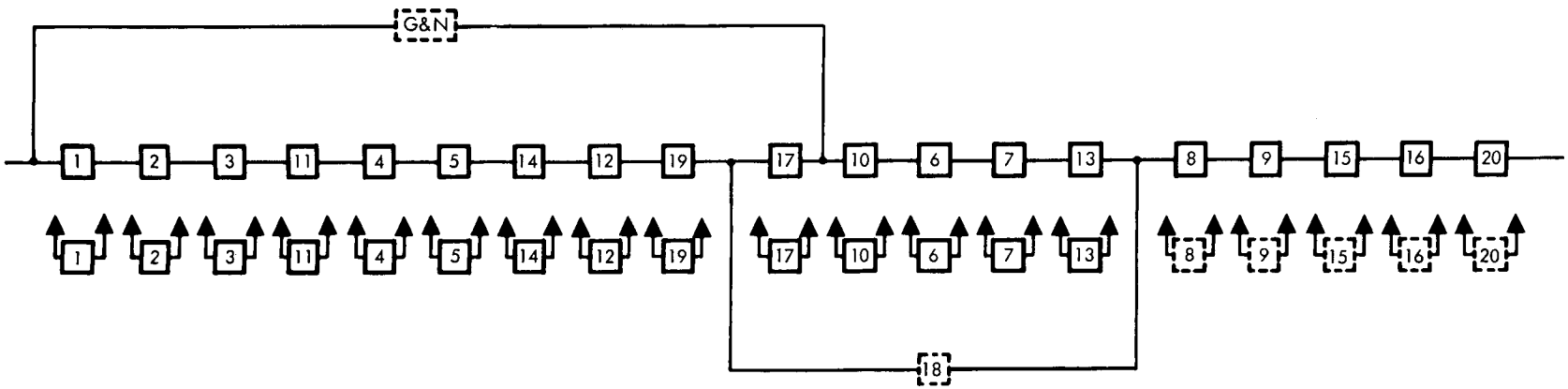

FUNCTIONAL BACK-UP PROVIDED BY OTHER SPACECRAFT SYSTEMS AND EMERGENCY MANUAL CONTROLS.

EQUIPMENT KEY

1. ATTITUDE GYROS - (BMAG)
2. ATTITUDE GYRO ELECTRONICS - (ECA-D)
3. ATTITUDE GYRO COUPLING UNIT - (ECA-X)
4. ACCELEROMETER AND ELECTRONICS - (BMAG)
5. INTEGRATOR - (ECA-D)
6. RATE GYROS - (RGP)
7. RATE GYRO ELECTRONICS - (RGP)
8. THRUST VECTOR CONTROL CIRCUITS - (ECA-P, Y)
9. ENGINE THRUST CIRCUITS - (ECA-X)
10. ATTITUDE CONTROL AND REACTION JET CIRCUITS - (ECA-P, Y, R)
11. ATTITUDE INDICATOR AND DEA - (FDAI, ECA-D)
12. ATTITUDE ERROR INDICATOR AND DEA - (FDAI, ECA-D)
13. ANGULAR VELOCITY INDICATOR AND DEA - (FDAI, ECA-D)
14. ΔV INDICATOR AND DEA - (VI, ECA-D)
15. GIMBAL POSITION INDICATOR AND DEA - (GPI, ECA-D)
16. DEA POWER SUPPLY - (ECA-D)
17. MANUAL ROTATIONAL CONTROLS, NORMAL
18. MANUAL ROTATIONAL CONTROLS, EMERGENCY
19. MANUAL TRANSLATIONAL THRUST CONTROLS, NORMAL
20. SCS CONTROL PANEL - (SCS-CP)

Figure 10.24 SCS Reliability Assessment Model

CONFIDENTIAL

Table 10.7 System Parameters for Qualification Testing

Component	S/C Zone	Criticality	Required Hardware	Qualification Test A-1	Qualification Phase A-2	Qualification Dist. B
Rate gyro package	2	1	7	3	* 2	4
Attitude gyro and accelerometer package	2	2	5	3	2	2
Electronics control assembly						
ECA - Pitch	2	1	6	3	2	3
ECA - Roll	2	1	6	3	2	3
ECA - Yaw	2	1	6	3	2	3
ECA - Auxiliary	2	1	6	3	2	3
ECA - Display	2	2	6	3	2	3
Gimbal position indicator	2	2	6	3	2	3
Three-axis-rotational control	2	2	6	3	2	3
Translation control	2	2	6	3	2	3
V display	2	2	6	3	2	3
Flight director attitude indicator	2	2	6	3	2	3
SCS control panel	2	1	5	3	2	2

*Samples for off limit tests are refurbished units from design proof test (A-1)

[redacted]

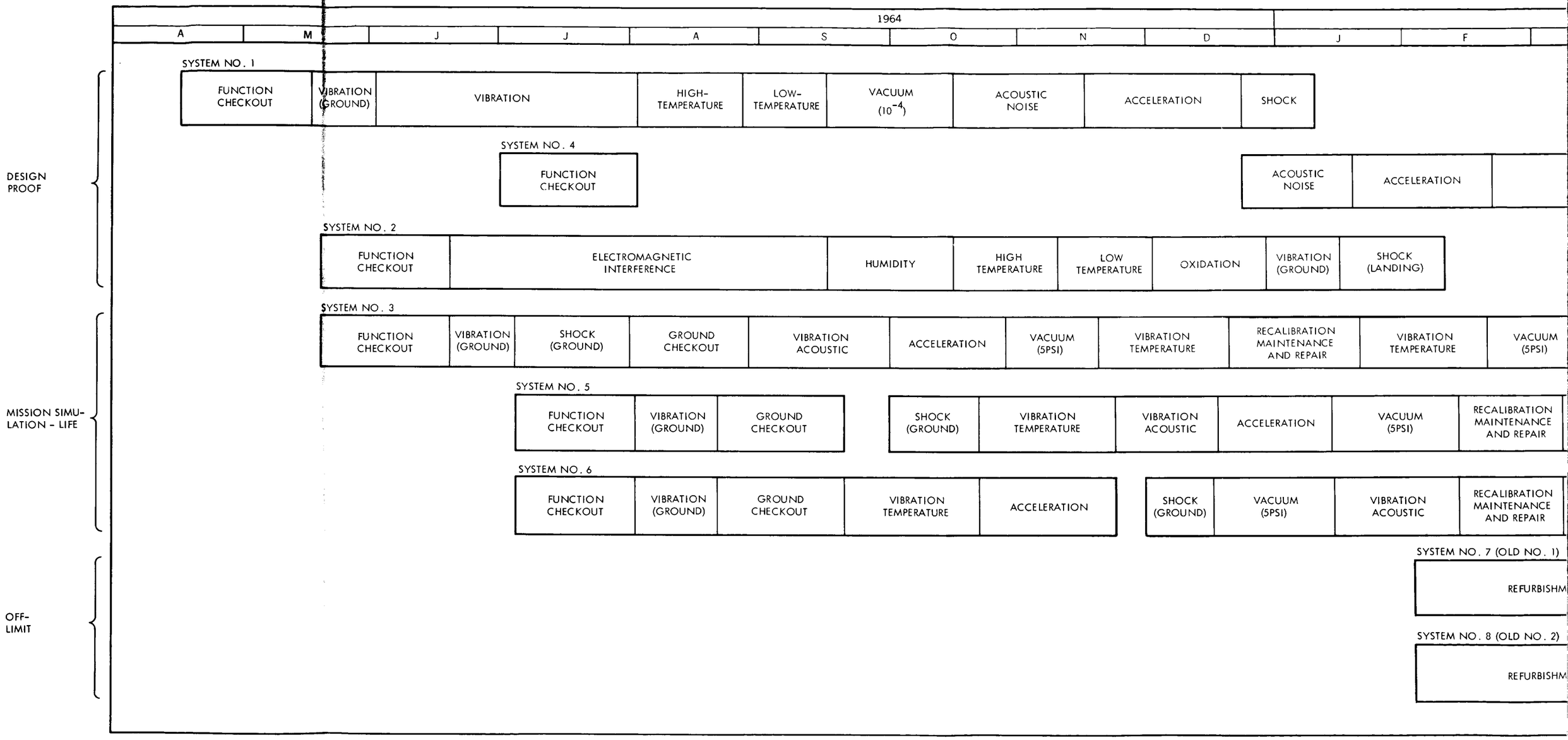

FOLD OUT #1

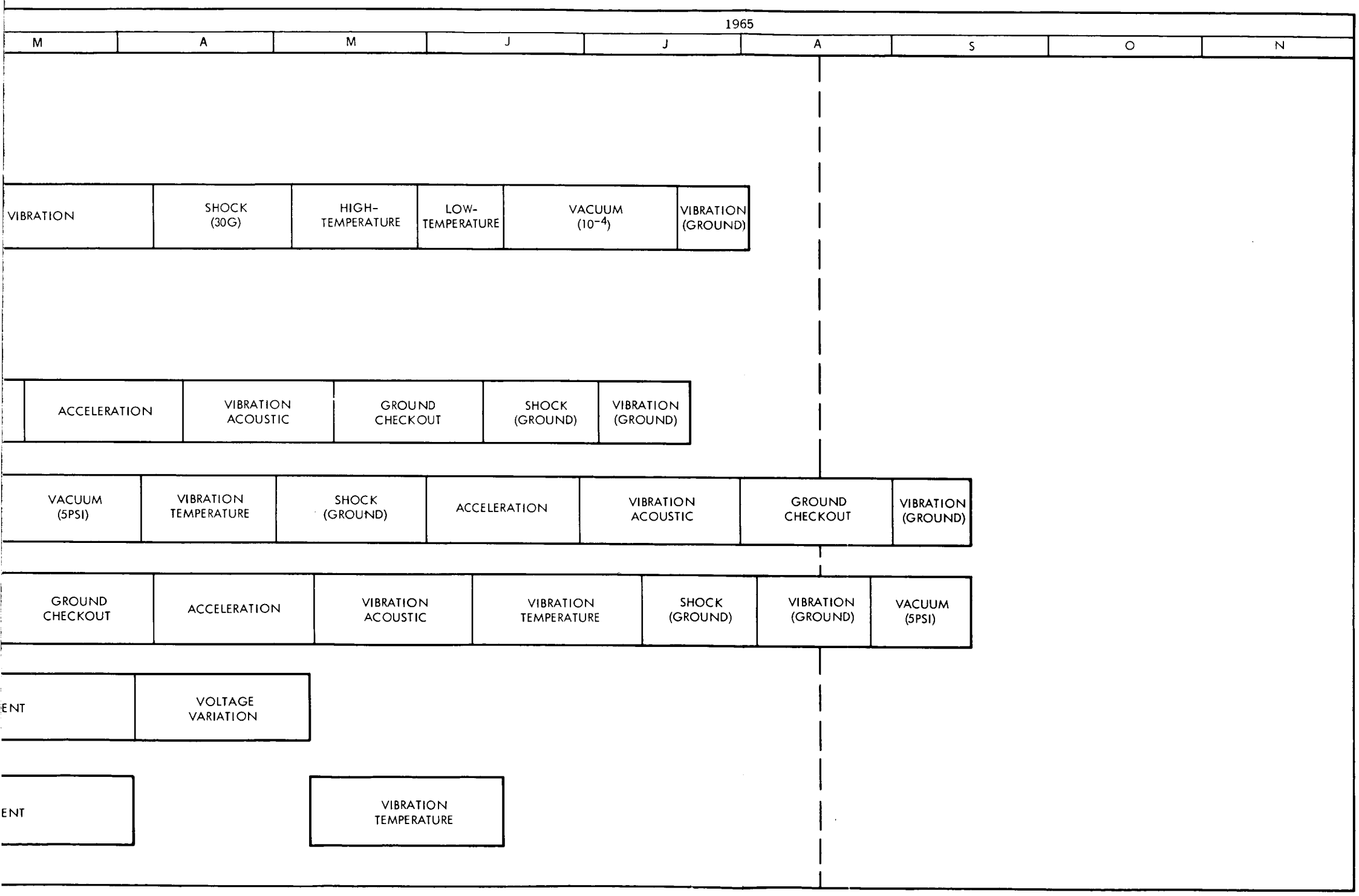

Figure 10.25 SCS Qualification Test Schedule

FOLD OUT #2

[redacted]

LIST OF CURRENT PAGES

Page No.	Date	Revised	Classification

SECTION 11.0

GUIDANCE AND NAVIGATION

11.1 Summary

Studies related to the guidance and navigation subsystem presently under way at NAA/S&ID are designed as follows:

1. To specify the requirements for the guidance and navigation system—spacecraft interfaces and over-all performance and reliability—in detail

2. To select a spacecraft configuration and an allotment of on-board spares that will assure the attainment of Apollo Spacecraft reliability objectives

3. To conduct continuous detailed quantitative system analyses to assess the adequacy of the systems to meet mission success and crew safety objectives

The objective of these studies is to emphasize the relationship between reliability and mission operations. Particular attention is directed toward alternate modes of operation and their effect on system reliability and backup requirements. Evaluations are being conducted to optimize the character, as well as the number, of on-board spares.

11.2 Analysis

Analyses performed by NAA/S&ID to determine the predicted reliability of the guidance and navigation subsystem, based on Apollo preferred or equivalent high reliability parts, yielded the results shown in Table 11.1.

Apollo Guidance and Navigation System Reliability Apportionments and Initial Analysis, MIT Report R-395, included a prediction of guidance and navigation subsystem reliability based on present state-of-the-art parts and "design excellence." The results of this study are shown in Table 11.2. These data have been included in the mission simulation analysis.

NAA/S&ID and MIT conducted their studies independently. The studies indicated that the analytical methods used by NAA/S&ID and MIT are consistent. As determined by MIT, the prediction of the basic reliability of the guidance and navigation system is 0.88054 (Table 11.2). This prediction, determined by NAA/S&ID with

[redacted]

TABLE 11.1
GUIDANCE AND NAVIGATION SUBSYSTEM MISSION RELIABILITY (LOR)

COMPONENT NAME	ITEMS	MISSION TIMES (HRS.)	FAILURE RATE PER 10^6 HOURS OR CYCLES			RELIABILITY		
			APPORTIONED	PREDICTED	ASSESSED	APPORTIONED	PREDICTED	ASSESSED
GUIDANCE & NAVIGATION SUBSYSTEM	-	-	-	-	N.A.	.994000[A]	.953132[A]	N.A.
Inertial Measuring Unit	1	39.88 hrs.	70.20711	821.60[1]	N.A.	.99720[C]	.967766[A]	N.A.
Power Servo Assy.	1	39.88 hrs.	2.50740	36.82[1]	N.A.	.99990[C]	.998532[A]	N.A.
Coupling Display Unit	5	39.88 hrs.	5.01470	24.48[1] 122.40 (all)	N.A.	.999800[C] .999000 (all)	.999024[A] .995119 (all)	N.A.
Apollo Guidance Computers	1	66.07 hrs.	15.13660	41.14[1]	N.A.	.999000[C]	.997282[A]	N.A.
Sextant	1	55.02 hrs.	18.17587	100.520[1]	N.A.	.999000[C]	.994469[A]	N.A.
Scanning Telescope	1	55.02 hrs.	1.81759	11.600[1]	N.A.	.999900[C]	.999362[A]	N.A.

DATA SOURCE:
1. Minuteman

N.A.: Not available.

MATHEMATICAL TECHNIQUE:
A. Analytical Model (Logic Diagram & Known Failure Rate Data)
B. Analytical Method (Weighted Subjective Experience)
C. Monte Carlo Computer Program.

[redacted]

Table 11.2 MIT Guidance and Navigation Subsystem Apportionment and Predictions

System	Operating Time (hr)			Mission Success Reliability	
	Full Power	Standby	Off	Apportioned (MIT)	Predicted (Without Spares)*
Coupling display unit	22		135	0.999983	0.99652
Sextant and scanning telescope	22		135	0.998585	0.99787
Apollo guidance computer	45	112		0.998667	0.89826
Inertial measurement unit gimbal assembly	22		135	0.998114	0.99626
Inertial measurement unit electronic	22	135		0.999333	0.9932
Space sextant and scanning telescope	22		135	0.999334	0.99635
Final approach equipment	2		155	0.999983	0.99992
Total				0.994	0.88054

*Based on State-of-the-Art failure rates.

comparable parts, is 0.88485. On the other hand, a prediction of the basic reliability determined by NAA/S&ID and based on the use of Apollo preferred or equivalent high reliability parts was 0.953132 (Table 11.1). While MIT appears willing to accept the 0.88054 value with the anticipation of using maintenance actions and spares to reach the 0.994 apportioned value, NAA/S&ID favors the 0.953132 value because it would serve to minimize in-flight maintenance and spares replacement. The difference between NAA/S&ID and MIT, therefore, is not one of technical approach but rather one of reliability philosophy.

Table 11.3 Inertial Measurement Unit Failure Rate Comparisons

Equipment	MIT Listed Failure Rate X 10^{-6} (hr)	*S&ID Parts Counts Failure Rate X 10^{-6} (hr)	MIT S&ID Difference	Apollo High Reliability Failure Rates X 10^{-6} (hr)
PSA6 Current Switch	7.701	7.385	-0.316	1.3788
PSA6 DC Differential Amplifier	2.756	2.775	+0.019	1.344
PSA3 AC Differential Amplifier	3.811	3.365	-0.446	0.734
PSA3 Interrogator	5.516	5.440	-0.076	0.848
PSA3 PIP Calibration Module	1.616	1.80	+0.184	0.800
PSA3 Gyro Calibration Module	1.716	1.70	-0.016	0.760
PSA3 Gimbal Servo Amplifier	2.671	2.625	-0.046	0.4622
PSA3 Gimbal Course Align	3.191	4.250	+1.059	3.009
PSA3 -28-v d-c P/S	3.82	3.545	-0.275	0.4761
Total	32.798	32.885		9.8121

*Using component failure rates from MIT listed in Table 4, R-395

The attainment of the reliability objective for mission success and crew safety requires high reliability parts in mission-essential equipments of the spacecraft. The importance of this requirement takes precedence over the function of in-flight maintenance in the assurance of equipment availability throughout various mission phases.

11.2.1 Module-Level Configuration Analysis

The analysis during this period consisted of breaking down equipments of the guidance and navigation system to the module level. The equipments used in the process of making mid-course navigational sightings are shown in Figure 11.1. The logic diagram is preliminary and will be updated as additional information is received from MIT.

11.2.2 Inertial Measurement Unit Failure Rate Comparisons

Comparisons have been made between the failure rate predictions for nine IMU electronic circuits and predictions based upon Apollo preferred high reliability parts. The results of the study are shown in Table 11.3. Included in the table is a list of circuits with their corresponding failure rates taken from MIT Report R-395. Failure rates calculated by NAA/S&ID based upon parts counts and individual part failure rates (MIT Report R-395) are shown. Since the differences between the MIT failure rates and the S&ID calculated failure rates indicate a +33 to -12 percent range from MIT numerical values, more than methodology is apparently involved. It seems imperative that information be made available, so that justified accounting can be given for deviations that may be experienced in the future. Failure rate predictions anticipated with Apollo preferred high reliability parts are listed. Results show a significant difference in reliability representing approximately one order of magnitude.

11.2.3 Failure Effects Analysis

The results of a preliminary failure effects analysis of the guidance and navigation subsystem at the equipment level are given in Table 11.4.

11.3 Subsystem Description (G&N)

11.3.1 Inertial Measurement Unit

The inertial measurement unit (IMU) is a three-axis gimbal assembly designed to space stabilize the stable member (SM). The SM is supported by the middle gimbal (MG) and free to rotate with respect to the MG about the inner axis. Similarly, the MG is

~~CONFIDENTIAL~~

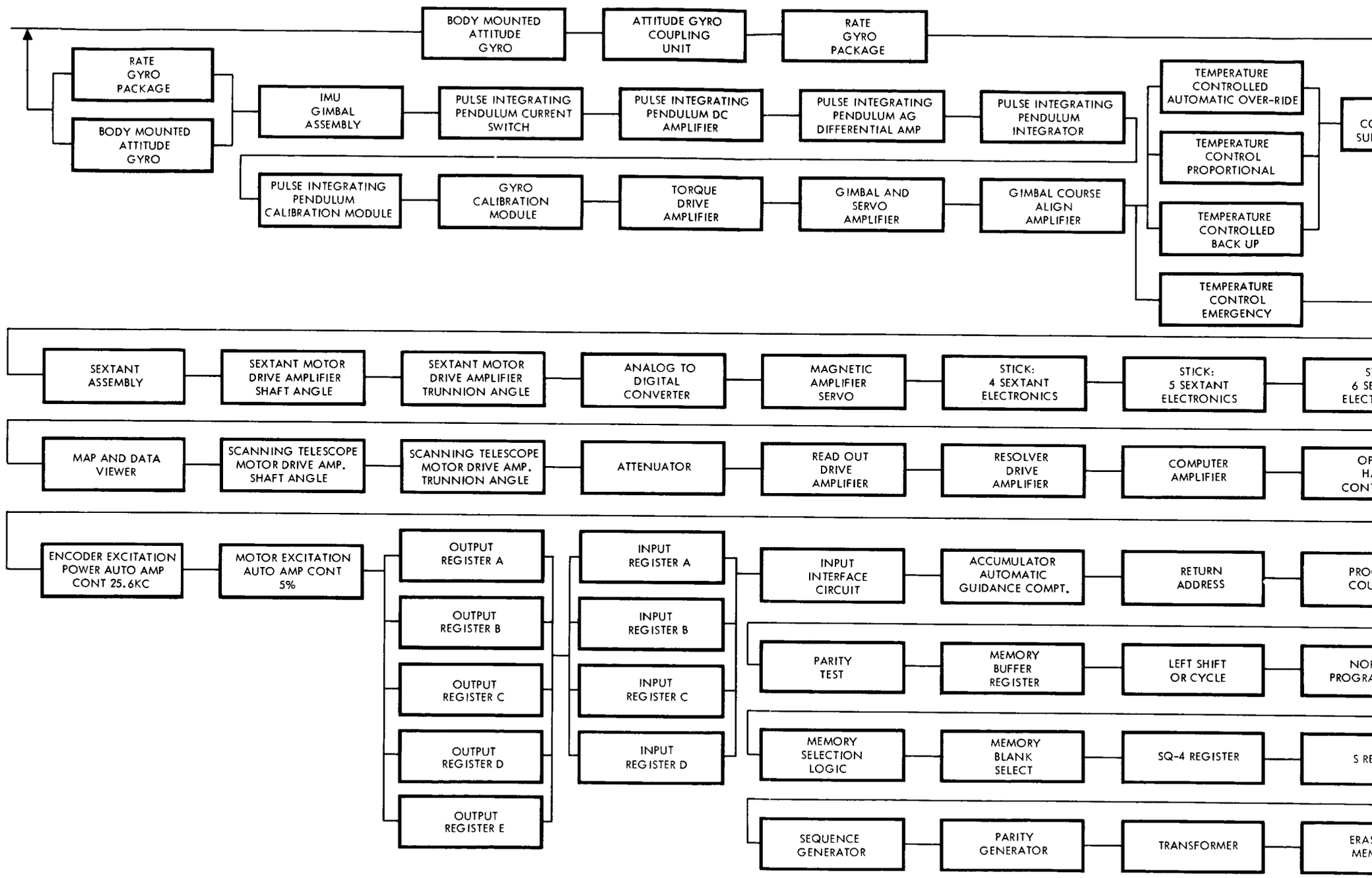

FOLD OUT #1

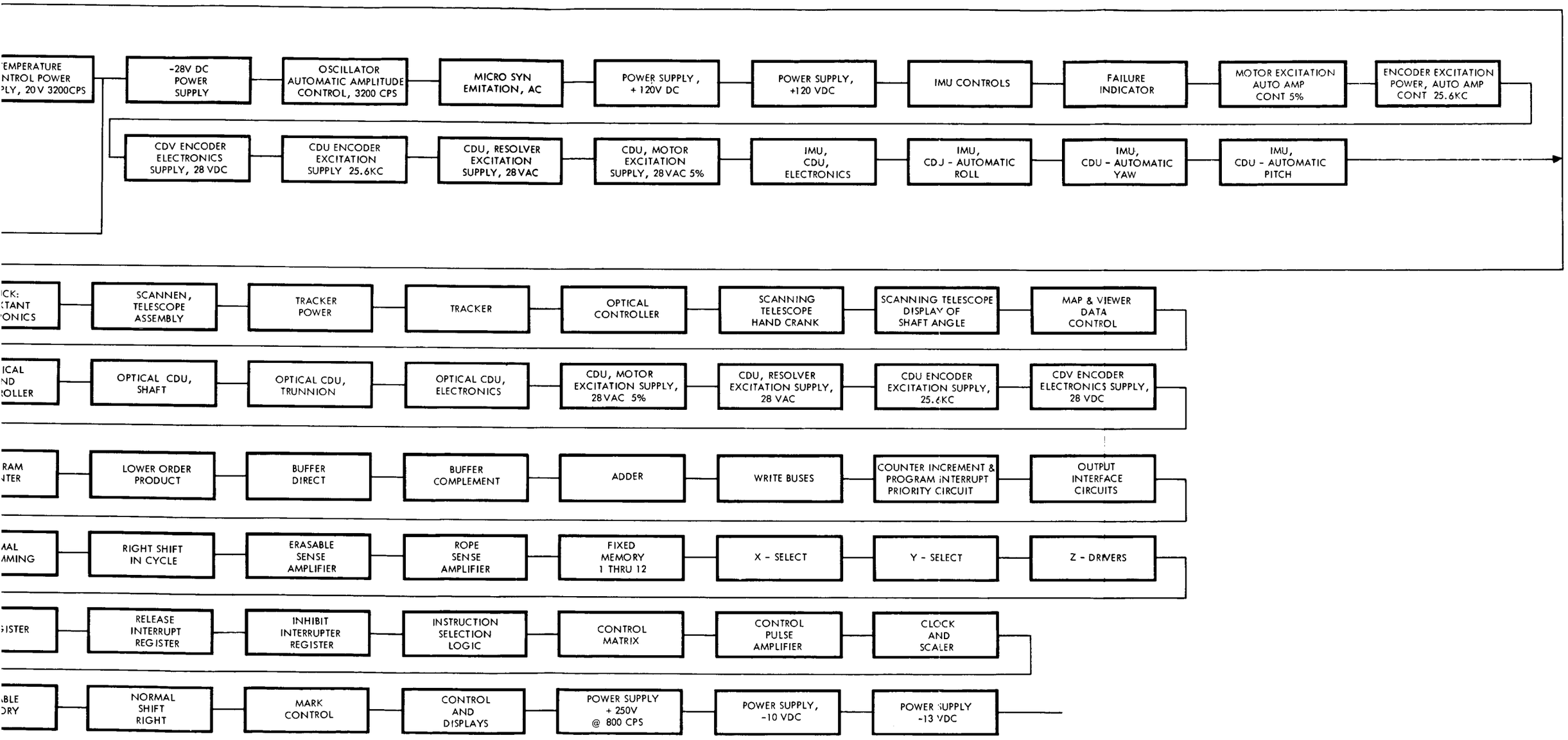

Figure 11.1 Guidance and Navigation System Logic Diagram

FOLD OUT #2

Table 11.4 Guidance and Navigation Failure Effects Analysis

Sheet 1 of 3

Item	Drawing Number	Elect. Reference. Desig.	Function	Failure Type	Mission Phase	Failure Effect On Component Performance	Failure Effect On Sub-Systems Performance	Failure Effect On Apollo	Possible Crew Action
IMU			Attitude and attitude error signal to electronics display	Size 16 IRIG error; middle gimbal error; outer gimbal error; X, Y, Z PIP error; IMU + 28-volt power loss; 3200-cps loss; wheel 800-cps loss; resolver tachometer 800-cps loss; 28-volt d-c loss		Erroneous or no outputs	1-Incorrect or no attitude reference causing possible drift. 2-Incorrect orientation on thrust causing larger terminal errors.	Abort	Switch to SCS mode.
IMU			Delta velocity signal to AGC	Size 16 IRIG error; middle gimbal error; outer gimbal error; X, Y, Z PIP error; IMU + 28-volt power loss; 3200-cps loss; wheel 800-cps loss; resolution tachometer 800-cps loss; 28-volt d-c loss		Erroneous or no outputs	Engine will not shut off properly during maneuver. If display or indicator is too fast, engine will be manually shut down too early. If indicator is too slow and automatic system does not function properly an over-connection will be made and waste fuel.	Abort	Use ΔV display ON-OFF controls and try to repair if possible.
SXT hand controller			Precision roll command signal to AGC	SXT LM trunnion angle; SXT shaft angle; SXT SL trunnion angle		Erroneous or no outputs	No N&G navigational sighting capability.	Possible abort or loss of spacecraft.	Use SCS mode and try to repair.
AGC			Precision roll command signal to SCS electronics	Computer power loss; computer error		Erroneous or no outputs	No N&G navigational sighting capability.	Possible abort or loss of spacecraft	Use SCS mode and repair if possible.
AGC			Command attitude signal to CDU's	Computer power loss; computer error		Erroneous or no outputs	No N&G attitude control.	Abort	Use SCS mode and repair if possible.

[redacted]

CONFIDENTIAL

Table 11.4 Guidance and Navigation Failure Effects Analysis (Cont)

Sheet 2 of 3

Item	Drawing Number	Elect. Reference. Desig.	Function	Failure Type	Mission Phase	Failure Effect On Component Performance	Failure Effect On Sub-Systems Performance	Failure Effect On Apollo	Possible Crew Action
AGC			Attitude signal to attitude indicator	Computer power loss; computer error		Erroneous or no outputs	None	None	Repair.
CDU			Attitude error signal to error indicator	Motor excitation loss; inner CDU error; middle CDU error; outer CDU error		Erroneous or no outputs	If signal to autopilot is functioning correctly, the vehicle will maintain attitude but no error will be indicated.	None	Repair if possible.
CDU			Attitude error signal to error indication and SCS electronics	Motor excitation loss; inner CDU error; middle CDU error; outer CDU error		Erroneous or no outputs		If repair is impossible because of extended use required of the SCS system, a large degradation of reliability would result; possible abort.	Repair if possible after checking by use of external reference.
CDU			Attitude error signal to SCS electronics	No signal to autopilot		Erroneous or no outputs	Failure to change or hold correct attitude.	Loose accuracy; possible abort.	After switching to SCS mode, repair if possible.
AGC			Thrust ON-OFF signal to SCS electronic engine control	Computer error; computer power failure		Erroneous or no outputs	Engine will not react to commands.	If repair cannot be done, degradation of reliability of SCS will happen due to excess operating time required; possible abort.	After switching to SCS mode, repair if possible.

CONFIDENTIAL

Table 11.4 Guidance and Navigation Failure Effects Analysis (Cont)

Sheet 3 of 3

Item	Drawing Number	Elect. Reference. Desig.	Function	Failure Type	Mission Phase	Failure Effect On Component Performance	Failure Effect On Sub-Systems Performance	Failure Effect On Apollo	Possible Crew Action
AGC			Time-to-go to thrust signal to time-to-go display	Computer power loss; computer error		Erroneous or no outputs	None as long as automatic system is functioning properly.	None	Check and repair.
SCT			Trunnion angle shaft angle signal to AGC	Shaft zero		Erroneous or no outputs	Degradation of performance.	Limited sighting accuracy	None if it cannot be repaired.
AGC power supply dc			-10 volts (rms), -13.5 volts (rms) and +1-3.0 volts (rms) signals to AGC	Power loss		Erroneous or no output	Failure of automatic N&G mode.	If it cannot be replaced, abort.	Replace failed stick in PSA.
PSA electronics d-c minus supply			-28-volt signal to IMU/servo amplifier	Power loss		Erroneous or no outputs	Complete failure of IMU and possibly N&G system.	Possible abort.	Repair if possible.
PSA 800-cps source			28-volt (rms) signal to gyro wheel blower (IMU) resolver tachometer servo motor excitation	Power loss		Erroneous of no output	Loss of N&G automatic mode.	Abort if it cannot be repaired.	Repair if possible.
PSA 3200-cps source			2-volt signal to gyro PIP's	Power loss		Erroneous or no output	Failure of N&G for maneuver.	None if stick is replaced; if it cannot be replaced, abort.	Replace stick in PSA.
PSA 25.6 kc			5-volt signal to sextant shaft to digital	Power loss		Erroneous or no output	No N&G navigation sighting capability.	None	Repair if possible by replacing stick in PSA.
PSA 25.6 kc			5-volt signal to IMU to CDU	Power loss		Erroneous or no output	Loss of N&G automatic mode.	None if it can be replaced.	Repair if possible with replacing stick in PSA.

supported by the outer gimbal (OG) and rotates about the middle axis, and the OG is supported by the gimbal case (GC) and rotates about the outer axis.

The SM supports six inertial components (IC) suitably oriented to each other; these are three size 25 inertial reference integrating gyros (25 IRIG) and three size 16 pulsed integrating pendulums (16 PIP). Also mounted on the SM are the necessary gimbal-mounted electronics (GME) modules associated with these inertial components.

The SM, MG, and OG are each supported, respectively, in the MG, OG, and GC by a pair inter-gimbal assemblies (IGA). The inter-gimbal assemblies consist of a stub shaft, bearings, bearing support, and such items as torquers, electromagnetic components, and slip ring assemblies, as are required for the axis in question.

The axis orientation of the IMU is such that with all gimbal angles zero (i.e., gimbal axis orthogonal), the inner axis will be aligned with the spacecraft pitch axis, the middle axis with the spacecraft yaw axis, and the outer gimbal axis with the spacecraft roll axis. All axes will have unlimited angular freedom. To avoid gimbal lock, provision will be made for accurately reorienting the stable member about the middle axis. The IMU will be space aligned by means of space sextant information, and because of this, the IMU and space sextant will be mounted in close proximity, with as much rigidity as necessary.

The inertial reference integrating gyroscopes have an angular momentum of 450,000 gm-cm^2 sec. These are floated integrating gyroscopes and geometrically stabilized in the case by the fluid and the magnetic suspension system (ducosyn). Signal information is transmitted by a microsyn signal generator. A microsyn torque generator will be utilized for realigning the IMU in flight and for preflight erection and alignment. The gyroscope will be pulse torqued for these alignments.

The accelerometers are pulse-torqued pendulums using the 16 PIP, as designed for the Apollo mission, and provide velocity increments of the integrated acceleration. The pendulums are geometrically stabilized in the case by the flotation fluid and the magnetic suspension (ducosyn). The pendulum also contains a microsyn signal generator and torque generator.

The IMU will provide a space stabilized coordinate system and measure the specific force. It may be used in the initial earth-launch guidance system. It will be used for rendezvous guidance, orientation and guidance for injection into the earth-lunar orbit, mid-course velocity correction measurements, guidance for lunar

landing and lunar takeoff and guidance for the earth reentry. Temperature control of the inertial components and heat dissipation for all power consuming items, such as the inertial components, torquers, and electromagnetic components, will be designed into the IMU.

11.3.2 Space Sextant

The space sextant will be primarily a visual instrument to be used by the astronaut to:

1. Measure the angle between line of sight to a star and line of sight to a landmark on the earth or lunar surface

2. Measure the elevation of line of sight to a star above horizon of the earth or moon

3. Detect the occultation of a star by the earth or moon

4. Provide erection signals for the inertial measurement unit

The instrument, as presently conceived, will consist of an optical assembly and a controller assembly. The optical assembly will have two lines of sight—one of which will incorporate high magnification optics and the other will incorporate low magnification optics with a wider field. Means for precise reading of the angle between two selected lines of sight will be provided. Articulation of the lines of sight will be accomplished by rotating the sextant head about an axis (shaft axis) perpendicular to the spacecraft surface and a second axis (trunnion axis) perpendicular to the lines of sight and the shaft axis. Depending on the results of research in high vacuum environment, the instrument will be mounted in the space environment (preferred) or behind an optically flat window.

Some spacecraft attitude maneuvering will be required to make sextant readings. The sextant controller will be used by the astronaut to provide resolved drive signals for the sextant and spacecraft attitude stabilization system during readings. The controller will also read the sextant angles into the Apollo guidance computer.

11.3.3 Scanning Telescope (SCT)

This instrument is essentially an articulated telescope with two degrees of freedom and a variable focal-length eyepiece, which adjusts the magnification and field continuously between 1 and 3 power and 60 and 20 degrees, respectively. The SCT is equipped

with both manual and servo drives. Electrical gear-tooth counter encoders and mechanical angle counters are provided for automatic and visual angle readouts, respectively.

The command module SCT is used for acquisition and identification of celestial bodies and for tracking of landmarks that have high angular rates with respect to the spacecraft. It is also used as a backup to the space sextant for star tracking during alignment of the IMU.

11.3.4 Computer

The principal structure of the computer consists of central flip-flop registers, the majority of which are addressable. The central registers communicate with one another and with the rest of the computer via write buses. Gating pulses for reading out of, and writing into, the central registers are formed in the control pulse amplifiers. For addressable registers, gating pulses are dependent, in part, upon memory selection logic.

Memory addressing is effected via registers that are used for memory bank selection. The oscillator output for the computer is divided into subharmonics with intermediate frequencies being used to perform specific computer functions. A controlled signal is taken from the computer oscillator output to serve as a synchronizing signal to the central timing equipment for the spacecraft.

The sequence generator of the computer directs time pulses, so that selected instructions will be executed after all counter requests are fulfilled. Other functions are under the central processing section, memory operation, parity test and generation, counter incrementing and wait list, and executive programs. Program interruption is provided by release-interrupt or inhibit-interrupt signals.

Computer programs are prepared to interpret pseudo-codes or interpretive instructions. These pseudo-codes include a variety of double-precision operations and a small number of triple-precision operations, together with a set of double-precision vector operations.

The computer functions to supply IMU pick-off information, accelerometer readouts as increments of velocity, sextant angle and drive readouts, and information for pilot display. It also serves as the basic unit for the display of information communicated to the spacecraft via the up data link. In addition to the computer function of computing projected trajectories for comparison with specific trajectories calculated for the normal

spacecraft flight path, it is the primary source for determining the precision roll commands necessary to assure survival during entry maneuvers.

11.3.5 Coupling Display Unit

The coupling display units are servo components that enable the computer to communicate with the inertial measurement unit, the optics, and the stabilization and control subsystem. The coupling display unit is composed of shafts driven by torque motors that may be controlled through a digital-to-analog converter by the computer. Incremental encoders mounted on the shafts supply the computer with information concerning the position of the coupling display unit shaft relative to IMU gimbal or optical shaft angle positions. This information is acquired from error signals, measured as differences in outputs, as determined by coupling display unit, inertial measurement unit, and optic component positions.

11.3.5 Power and Servo Assembly

Electrical apparatus for the distribution of power and signal conditioning within the G&N subsystem is contained in the power and servo assembly. The ternary current switch provides torquing signals to the pulse integrating pendulum accelerometers (PIPA) and to the inertial rate integrating gyros (IRIG), as well as ΔV signals to the computer. The d-c differential amplifier accepts demodulated coupling display unit (CDU) resolver signals and feeds them to the torque drive amplifier during the course align mode. Angular differientating accelerometer signals are also accepted from the IMU and fed into the torque drive amplifier. The a-c differential amplifier amplifies the coupling display unit one-time resolver signal for the 800-cycle demodulator. The interrogator reshapes the output wave of the gyro pick-off analog output to form an approximate square wave, and it detects the phase and magnitude of the wave form.

The pulse integrating pendulum calibration module provides a torquing feedback signal from the pulse torquing electronic circuits to the pulse integrating pendulum accelerometer. The gyro calibration module provides a feedback signal from the gyro pulse torquing electronics to the inertial rate integrating gyro assembly. The torque drive, gimbal servo amplifier provides excitation for the inertial measurement unit gimbal motors. The motor drive amplifier provides power to the coupling display unit shaft drive motors. The gimbal course align amplifier provides alignment signals to the inertial measurement unit gimbal torque motors in the course align mode. Power supplies include the 800-cps, 28-volts, 1-percent power amplifier, the 800-cps,

28-volts, 5-percent power amplifier, the 25.6-kc 28-volts, 1-percent power supply, and the 3200-cps, 20-volts, square wave, temperature control power supply. The 28-volts, d-c power serves to supply power for the temperature controller in the emergency mode.

11.4 Qualification Test

11.4.1 Scope

Efforts concerning the qualification testing of the guidance and navigation components, subsystems, and systems are specifically divided between the associate contractor and S&ID. The test programs conducted by the associate contractor and S&ID will be integrated to avoid duplication of effort and to provide maximum engineering confidence in the success of the Apollo mission.

11.4.2 Reliability Assessment Model

Figure 11.2 depicts the reliability assessment model for the G&NS. The model illustrates the reliability and functional interrelationships among the system components.

11.4.3 Criticality and Hardware Requirements

Table 11.5 designates the criticality class, as defined in subsection 2.4 of SID 62-109-3, for the components of the G&NS. The location of the components in the spacecraft is indicated by spacecraft zone numbers as defined in subsection 4.2 of SID 62-109-3.

Table 11.5. G&NS Parameters for Qualification Testing

Components	S/C Zone	Criticality	Required* Hardware
IMU	2	2	
PSA	2	2	
CDU	2	2	
D&C	2	2	
AGC	2	2	
OPTICS	2	2	
MDV	2	2	
NAV BASE	2	2	

*To be determined by associate contractor

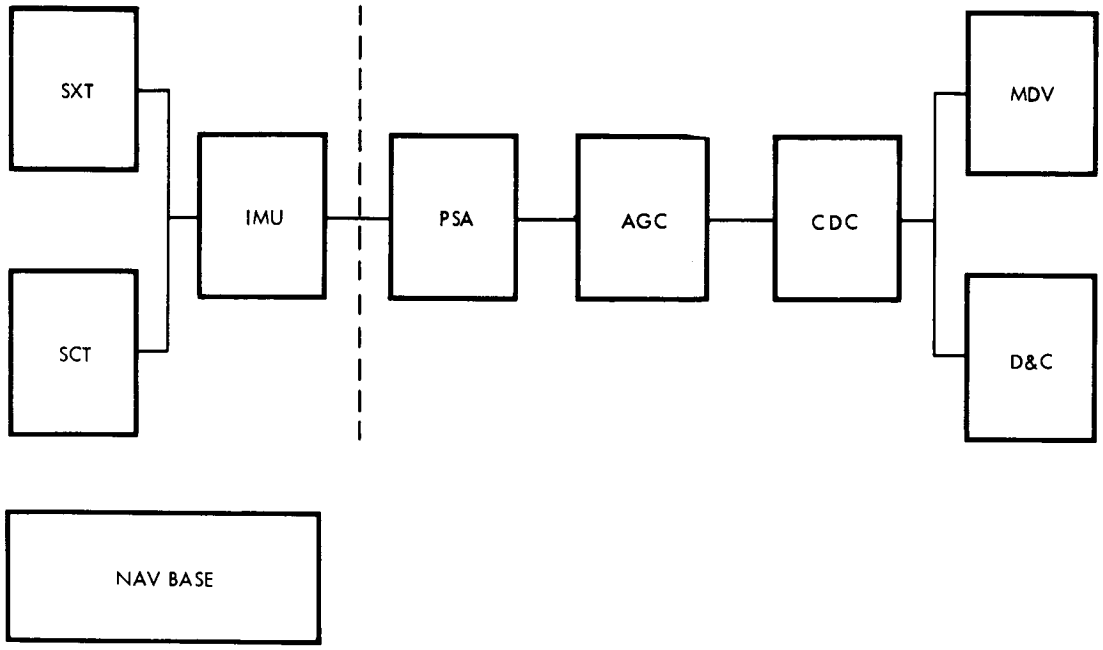

Figure 11.2. Guidance and Navigation Reliability Assessment Model

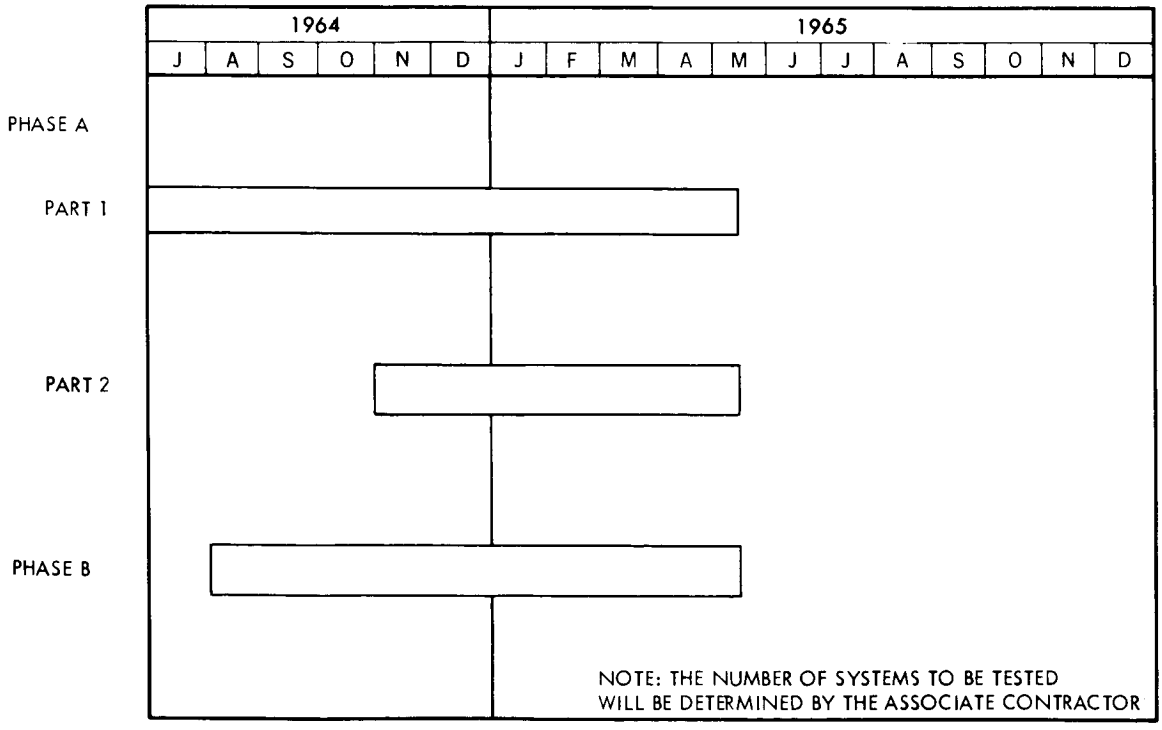

Figure 11.3 Guidance and Navigation Qualification Test Schedule

11.4.4 Qualification Test Schedule

Figure 11.3 displays the qualification test schedule for the G&NS. The qualification test program is negotiated between MIT and NASA.

LIST OF CURRENT PAGES

Page No.	Date	Revised	Classification

SECTION 12.0

COMMUNICATIONS AND DATA

12.1 Summary

The communications and data subsystem reliability estimates indicate that the requirements will be met with the minimum use of spare parts (sparing). Effort to maximize the reliability of the subsystem design by performing configuration studies in support of the design effort is continuing. The test plans and procedures of the subcontractor are being monitored to maximize the value of the qualification tests. The logic interactions with the other subsystems of the spacecraft and subsystems of the lunar excursion module are under continuous investigation for possible improvement.

The current mission success reliability predictions analytically determined for the equipment of the communications and data subsystem are given in Table 12.1.

12.2 Failure - Effects Analysis

The results of a preliminary failure - effects analysis of the communications and data subsystem for an earth orbital mission at the subassembly level are given in Tables 12.2 through 12.13.

12.3 Reliability Logic Diagram Descriptions

12.3.1 Subassemblies Logic Diagram

Figure 12.1 shows the expanded reliability logic diagram of the equipment in the communications and data and instrumentation subsystems. This equipment is used as an alternate mode to the guidance and navigation and stabilization and control subsystems equipment, which is necessary for performing a navigational sighting in the deep-space phases of the LOR mission. The communications and data subsystem subassemblies are shown in solid lines, the instrumentation subsystems subassemblies in dotted lines.

The equipment of the communications and data subsystem is used to complement the tracking and ranging function and to supply on-board capability for voice communications with the earth. Thus, tracking and ranging information can be relayed from the earth to the spacecraft via voice communications giving a navigational sighting.

Table 12.1 Communication and Data

Subsystem Mission Reliability (LOR) (Sheet 1 of 2)

Component Name	Items	Mission Times (hrs)	Failure Rate Per 10^6 Hours or Cycles			Reliability		
			Apportioned	Predicted	Assessed	Apportioned	Predicted	Assessed
Communication and Data Subsystem	1	72				.984000[A]	.983000[A]	
VHF Recovery Beacon	1	72	2.63[1]	13.61[2]		.999810[A]	.999020[A]	
H.F. Transceiver	1	72	3.88	13.89		.999720[A]	.999000[A]	
VHF/AM Transmitter Receiver	1	30	33.38	28.748		.999000[A]	.999140[A]	
VHF/FM Transmitter	1	10	39.0	17.548		.999960[A]	.999830[A]	
Audio Center	1	408	7.598	9.902		.996900[A]	.995960[A]	
Data Storage	1	87	80.46	86.09		.993000[A]	.992500[A]	
C-Band Transponder	1	10	50	90		.999500[A]	.999100[A]	
Unified S-Band Equipment	2	268	17.16	35.45		.995400[A]	.990500[A]	
S-Band Power Amplifier	2	118	26.27	56.783		.996900[A]	.993300[A]	

Data Source:
1. Minuteman
2. Collins Radio Company

Mathematical Technique:
A - Logic Diagrams and known failure rate data

Table 12.1 Communication and Data (Cont)

Subsystem Mission Reliability (LOR) (Sheet 2 of 2)

Component Name	Items	Mission Times (hrs)	Failure Rate Per 10^6 Hours or Cycles			Reliability		
			Apportioned	Predicted	Assessed	Apportioned	Predicted	Assessed
Premodulation Processor	1	336	9.82	78.12		.996700[A]	.974100[A]	
Signal Conditioner	1	336	35.98	78.12[2]		.988000[A]	.974100[A]	
PCM Telemetry	1	336	112.2	111.6[2]		.963000[A]	.963200[A]	

Table 12.2 Audio Center Failure Effects Analysis

Item	Drawing Number	Elect. Reference Desig.	Failure Detection	Function	Failure Type	Mission Phase	Failure Effect On Component Performance	Failure Effect On Sub-Systems Performance	Failure Effect On Apollo	Possible Crew Action
Audio center (3)				Provides audio amplification of voice for transmission and reception and voice operated transmit (VOX) for each crew member		All phases		One and two audio link failures, degradation of voice capability; three audio link failures, loss of voice communications	Degradation to or loss of alternate mode of performing navigational sighting and failure monitoring functions	One or two failures, no action; three failures, abort (use key in conjunction with S-band equipment and central timing equipment for transmission only) any crew member may share his individual audio center with one other crew member
Head set amplifier (3)				To amplify AF output of various equipments for reception by crew member	Loss of output		Loss of one receive mode			
					Degraded output		Weak or undetectable voice reception on affected audio center			
Mike amplifier (3)				To amplify AF output of crew member for transmission to GOSS by various equipments	Loss of output		Loss of one transmit mode			
					Degraded output		Weak or undetectable voice transmission on affected audio center			
VOX (3)				The VOX circuitry automatically chooses the transmit or receive mode of operation	Loss of output		Loss of one audio link			
					Degraded output		Loss or fluttering (off to on) of VOX for affected audio center			
Isolation pads and 7 diode switches				Provides individual or several modes selection and isolation	Loss of output		Loss of one transmit mode			
					Degraded output		Weak or undetectable transmission on affected audio center			

Table 12.2 Audio Center Failure Effects Analysis (Cont)

Item	Drawing Number	Elect. Reference Desig.	Failure Detection	Function	Failure Type	Mission Phase	Failure Effect On Component Performance	Failure Effect On Sub-Systems Performance	Failure Effect On Apollo	Possible Crew Action
Controls				To select: transmit/receive, off/receive for HF, S-band, VHF/AM and intercomm; push-to-talk; requiring depression of couch button to transmit/VOX; power: on/off; earphone volume control; VOX sensitivity	Failure of switch in one closed position	All phases	Loss of affected mode			
					Open switch		Loss of affected mode			
					Open control		Loss of VOX and/or receive mode			

Table 12.3 VHF/AM Transmitter-Receiver Failure Effects Analysis

Item	Drawing Number	Elect. Reference. Desig.	Failure Detection	Function	Failure Type	Mission Phase	Failure Effect On Component Performance	Failure Effect On Sub-Systems Performance	Failure Effect On Apollo	Possible Crew Action
VHF/AM transmitter receiver				Provides the primary mode of voice communications with GOSS		All phases			Loss of primary voice link	Use S-band equipment in conjunction with compatible antenna equipment
Transmitter				Converts the incoming AF signals from the audio center to the necessary RF level for output to the selected antenna	Loss of output		Loss of transmit signal	Loss of primary mode of voice transmission		
					Reduced or distorted output		Reduced or distorted transmit signal	Reduced or distorted signal to ground station; possible loss of transmit signal		
					Output frequency oscillates		Transmit signal oscillates	Loss of transmit data		
D-c to d-c converter				Converts a d-c line voltage to those voltages required to power transmitter	Loss of output		Loss of transmit signal	Loss of 150 v, 300 v, PA grid -26 v, and IFTS test signals		
					Reduced output		Reduced power to transmitter	Degraded transmit signal; possible loss of transmit signal		
					Ripple present at output		Distorted transmit signal	Distorted signal to ground station		
RF amplifier (receiver) (2)				Detects and mixes each RF signal (through separate RF amplifiers) from the multiplexer such that IF signals are produced	Loss of output		Loss of up-signal	Loss of voice from ground station		
					Reduced output		Reduced up-signal	Reduced voice from ground station; possible loss of voice		
					Local oscillator (LO) at wrong frequency		Loss of up-signal	Loss of voice from ground station		
IF amplifier (receiver)				Accepts IF signals from the RF amplifier, amplifies them, and converts them to AF signals	Loss of output		Loss of up-signal	Loss of voice from ground station		
					Reduced output		Reduced up-signal	Reduced voice from ground station; possible loss of voice		
					Distorted output		Distorted up-signal	Distorted voice from ground station; possible loss of voice		

CONFIDENTIAL
CONFIDENTIAL

Table 12.3 VHF/AM Transmitter-Receiver Failure Effects Analysis (Cont)

Item	Drawing Number	Elect Reference Desig	Failure Detection	Function	Failure Type	Mission Phase	Failure Effect On Component Performance	Failure Effect On Sub-Systems Performance	Failure Effect On Apollo	Possible Crew Action
AF amplifier (receiver)				To amplify the AF signal from the IF amplifier for reception at the audio center	Loss of output		Loss of up-signal	Loss of voice from ground station		
					Reduced output		Reduced up-signal	Reduced voice from ground station		
					Distorted output		Distorted up-signal	Distorted voice from ground station		
Power supply				Develops the necessary voltages for the receiver	Loss of output		Loss of up-signal	Loss of voice from ground station		
					Reduced output		Reduced up-signal	Reduced voice from ground station, possible loss of voice		
					Ripple present output		Distorted up-signal	Distorted voice from ground station		
Controls				To select: power, on/off switch, receive switch I/II.	Fail off		Loss of up-signal	Loss of voice from ground station		
					Fail on or in one mode		Receiver on at all times, only one of two signals could be received	Loss of one up-signal		

[redacted]

Table 12.4 C-Band Transponder Failure Effects Analysis

Item	Drawing Number	Elect. Reference Desig.	Failure Detection	Function	Failure Type	Mission Phase	Failure Effect On Component Performance	Failure Effect On Sub-Systems Performance	Failure Effect On Apollo	Possible Crew Action
C-band transponder				Primary means of providing response to interrogations from complementary ground radars for the purpose of enhancing and extending the ground tracking and ranging capability		All phases except recovery		Loss of primary ground tracking mode	Loss of secondary mode for obtaining a navigational sighting	Use unified S-band equipment in conjunction with necessary antenna equipment
Circulator (antenna)				Provides isolation between transmitter and receiver	Loss of output		Loss of signal to corresponding receiver; transmitter will operate into incorrect antenna	Loss of C-band transponder capability		
					Reduced output		Reduced input to corresponding receiver	Reduced signal to ground station; possible loss of C-band transponder capability		
					Loss of isolation		Destruction of appropriate receiver when transmitter operates; loss of transponder on corresponding antenna	Loss of C-band omnidirectional capability		
					Reduced output		Reduced signal to corresponding receiver	Loss of omni-directional capability		
Preselector				Provides rejection of image frequencies	Loss of output		Loss of signal to corresponding receiver	Loss of omni-directional capability		
					Reduced output		Reduced signal to corresponding receiver	Reduced signal to ground station		
					Reduced rejection		Distorted signal to corresponding receiver	Reduced signal to ground station		
Local oscillator circulator				Isolation between LO and antenna	Loss of output		Loss of appropriate receiver signal	Loss of omni-directional capability		
					Reduced output		Reduced signal from appropriate receiver	Reduced signal to ground station		
					Loss of isolation		Reduced LO signal to appropriate receiver; LO frequency radiated by antenna	Reduced signal to ground station		

[redacted]

Table 12.4 C-Band Transponder Failure Effects Analysis (Cont)

Item	Drawing Number	Elect. Ref. Des.	Failure Detection	Function	Failure Type	Mission Phase	Failure Effect On Component Performance	Failure Effect On Sub-Systems Performance	Failure Effect On Apollo	Possible Crew Action
Mixer				Mixes received and LO signals to provide IF	Loss of output	All phases except recovery	Loss of appropriate receive signal	Loss of omni-directional capability		
					Reduced output		Reduced signal from appropriate receiver	Reduced signal to ground station		
					Incorrect output frequency		Extremely reduced signal from appropriate receiver	Probable loss of omnidirectional capability		
					Distorted output		Distorted signal from appropriate receiver	Reduced signal to ground station		
IF amplifier (not including detector)				Amplifies IF and supplies input to log-linear amplifier	Loss of output		Loss of signal from appropriate receiver	Loss of omni-directional capability		
					Reduced output		Reduced signal from appropriate receiver	Reduced signal to ground station		
					Amplifier oscillates		Loss of signal from appropriate receiver	Loss of omni-directional capability		
					Distorted output		Distorted signal from appropriate receiver	Reduced signal to ground station		
					Supply voltage present on output		Distorted output signal	Reduced signal to ground station		
Detector				Detects information bearing signal	Loss of output		Loss of signal from appropriate receiver	Loss of omni-directional capability		
					Distorted output		Distorted signal from appropriate receiver	Reduced signal to ground station		
					Supply voltage present at output		Loss of appropriate receiver signal	Reduced signal to ground station		
Log-linear amplifier				Provides output to the comparator that is a function of signal power input and provides a linear output to the combiner	Amplifier oscillates		Loss of linear signal to comparator and combiner for appropriate channel	Reduced signal to ground station		
					Supply voltage present at output		Combiner becomes inoperative	Loss of C-band transponder capability		

Table 12.4 C-Band Transponder Failure Effects Analysis (Cont)

Item	Drawing Number	Elect. Reference Desig	Failure Detection	Function	Failure Type	Mission Phase	Failure Effect On Component Performance	Failure Effect On Sub-Systems Performance	Failure Effect On Apollo	Possible Crew Action
Combiner shaper				Provides pulse of constant width and amplitude to decoder	Loss of output	All phases except recovery	Loss of signal to comparator and transmitter	Loss of C-band transponder capability		
					Reduced output		Loss of triggering signal	Loss of C-band transponder capability		
					Distorted output		Modulator trigger will be incorrectly activated	Improperly timed C-band transponder signal to ground station		
					Amplifier oscillates		Transmitter triggered at all times	Loss of C-band transponder capability		
					Supply voltage present at output		Loss of triggering signal	Loss of C-band transponder capability		
Decoder system delay				Provides desired trigger signal to comparator and transmitter with appropriate delay to allow selection of the correct antenna and observance by earth of both the skin-track reply and transponder reply	Loss of output		Loss of transmit function and antenna selection	Loss of C-band transponder capability		
					Reduced output		Loss of transmit function and antenna selection	Loss of C-band transponder capability		
					Distorted output		Delayed transmitter pulse	Improperly timed C-band transponder signal to ground station		
					Decoder oscillator		Transmitter continuously triggered	Loss of C-band transponder capability		
					Supply voltage present at output		Loss of transmit function and antenna selection	Loss of C-band transponder capability		
Compilator (1 channel)				Provides signal to appropriate driver for antenna	Loss of output		Loss of transmit capability on appropriate antenna	Loss of omni-directional capability		
					Reduced output		Loss of antenna selection	Loss of omni-directional capability		
					Distorted output		Incorrect switching of antenna	Loss of omni-directional capability		

Table 12.4 C-Band Transponder Failure Effects Analysis (Cont)

Item	Drawing Number	Elect. Reference Desig	Failure Detection	Function	Failure Type	Mission Phase	Failure Effect On Component Performance	Failure Effect On Sub-Systems Performance	Failure Effect On Apollo	Possible Crew Action
					Oscillation on output	All phases except recovery	Incorrect operation of antenna select switch; transmitter will operate into incorrect antenna	Loss of omni-directional capability		
					Supply voltage present at output		Incorrect operation of antenna select switch; transmitter will operate into incorrect antenna switch	Loss of omni-directional capability		
Driver (channel)				Provides signal to antenna select switch	Loss of output		Loss of ability to switch to appropriate antenna; transmitter will operate into incorrect antenna	Loss of omni-directional capability		
					Reduced output		Loss of ability to switch to appropriate antenna; transmitter will operate into incorrect antenna	Loss of omni-directional capability		
					Distorted output		Switching of antenna delayed	Return signal to ground will be delayed or distorted		
					Oscillation present at output		Incorrect switching of appropriate antenna; transmitter will operate into incorrect antenna	Reduced signal to ground station		
					Supply voltage present at output		Incorrect operation of antenna select switch; transmitter will operate into incorrect antenna	Reduced signal to ground station		
Modulator enable				Provides trigger to modulator	Loss of output		Loss of transmit capability	Loss of C-band transponder capability		
					Reduced output		Loss of transmit capability	Loss of C-band transponder capability		
					Distorted output		Delayed and distorted transmit signal	Delayed and distorted signal to ground station		

Table 12.4 C-Band Transponder Failure Effects Analysis (Cont)

Item	Drawing Number	Elect. Reference Desig.	Failure Detection	Function	Failure Type	Mission Phase	Failure Effect On Component Performance	Failure Effect On Sub-Systems Performance	Failure Effect On Apollo	Possible Crew Action
Modulator				Provides signal to transmitter	Loss of output	All phases except recovery	Loss of transmit capability	Loss of C-band transponder capability		
					Reduced output		Loss of transmit capability	Loss of C-band transponder capability		
					Distorted output		Distorted transmit signal	Distorted signal to ground station		
					Oscillations present at output		Continuous transmit signal	Loss of C-band transponder capability		
Transmitter				Amplifies the transmit signal and provides it as input to ferrite circulator	Loss of output		Loss of transmit capability	Loss of C-band transponder capability		
					Reduced output		Reduced output signal	Reduced signal to ground station		
					Loss of isolation		Probable loss of transmitter	Loss of C-band transponder capability		
					Spurious oscillations at output		Probable loss of transmitter	Loss of C-band transponder capability		
Directions, coupler and detector				Couples transponder to antenna and provides an analog voltage as a function of the output power of the transmitter to facilitate failure detection and inflight maintenance	Loss of output (detector)		Loss of test voltage	No noticeable effect		
					Loss of output (antenna)		Loss of output signal	Loss of C-band transponder capability		
					Reduced output (detector)		Reduced Test voltage	No noticeable effect		
					Reduced output (antenna)		Reduced output signal	Reduced signal to ground station		
					Distorted output (both points)		Distorted test voltage; distorted output signal	Distorted signal to ground station		
Antenna selector switch S1				Switches most effective antenna to transmitter	Switch locked on one position		Transmit capability on one antenna only	Reduced signal to ground station		

[redacted]

Table 12.4 C-Band Transponder Failure Effects Analysis (Cont)

Item	Drawing Number	Elect. Refer-ence Desig	Failure Detection	Function	Failure Type	Mission Phase	Failure Effect On Component Performance	Failure Effect On Sub-Systems Performance	Failure Effect On Apollo	Possible Crew Action
					Switch open (any positions)	All phases except recovery	Loss of transmit capability on appropriate antennas	Reduced signal to ground station; loss of signal to ground station should all contacts open		
Power supply				Supplies electrical power to C-band transponder	Loss of output		C-band transponder becomes inoperative	Loss of C-band transponder capability		
					Reduced output		Reduced signal level - transmit and receive	Reduced signal level to ground station		
					Ripple present at output		Distorted signal, transmit and receive	Distorted reduced signal to ground station		
					Loss of regulation		Decreased efficiency slightly reduced output signal	Slightly reduced signal to ground station		
Local oscillator				Provides heterodyne signal to provide intermediate frequency	Loss of output		Loss of receive capability	Loss of C-band transponder capability		
					Reduced output		Reduced receive signal	No noticeable effect		
					Oscillation at incorrect frequency		Loss of receive capability	Loss of C-band transponder capability		
					Distorted output		Reduced and distorted output	Loss of C-band transponder capability		
					Supply voltage present at output		Slightly distorted receive signal	No noticeable effect		

CONFIDENTIAL

~~CONFIDENTIAL~~

Table 12.5 Unified S-Band Transponder Failure Effects Analysis

Item	Drawing Number	Elect. Reference Desig	Failure Detection	Function	Failure Type	Mission Phase	Failure Effect On Component Performance	Failure Effect On Sub-Systems Performance	Failure Effect On Apollo	Possible Crew Action
Unified S-band transponder (2)				Provides a secondary mode of voice communication, transmission of telemetry data, TV, and tracking and ranging information		All phases through earth entry			Loss of real-time transmission data	One failure, utilize spare; two failures use emergency voice mode
Transmitter				Provides FM, and PM as a means of transmitting the following information: voice, emergency voice and key, PCM, TV, range, analog, and biomedical data, the analog and biomedical data may be transmitted in real-time or on tape playback	Loss of output		Loss of transmit signal	Loss of data		
					Reduced output		Reduced transmit signal	Reduced signal to ground stations possible loss of data		
					Distorted output		Distorted transmit signal	Distorted transmit data; possible loss of data		
					Output frequency oscillates		Transmit signal oscillates	Loss of transmit data		
Receiver				Provides for reception of FM/PM voice and range data	Loss of output		Loss of up-signal	Loss of up-data		
					Reduced or distorted output		Reduced or distorted up-signal	Reduced or distorted up-data; possible loss of up-data		
					Incorrect LO frequency		Loss of up-signal	Loss of up-data		
Power supply				Provides regulated d-c power from a 115-volt, 3-phase source to the transmitter and receiver	Loss of output		Loss of ability to transmit and receive	Loss of transmit data and up-data		
					Reduced output		Reduced transmit and receive signal	Reduced transmit and receive data; possible loss of data		
					Ripple present at output		Distorted transmit and receive signal	Distorted transmit data and up-data		
					Loss of regulation		Slightly reduced transmit and receive signal	Slightly reduced up-data and transmit data		
Controls				Provides for on/off control, VCO/auxiliary crystal control, ranging control, and FM/PM control	Fail open		Loss of ability to transmit or receive	Loss of transmit data and up-data		
					Fail on or in one position		Loss of ability to switch modes or turn unit off	Unit is on at all times with loss of one or more modes		

~~CONFIDENTIAL~~

[redacted]

Table 12.6 S-Band Power Amplifier Failure Effects Analysis

Item	Drawing Number	Elect. Reference Desig	Failure Detection	Function	Failure Type	Mission Phase	Failure Effect On Component Performance	Failure Effect On Sub-Systems Performance	Failure Effect On Apollo	Possible Crew Action
S-band power amplifier				Provides the power necessary for the primary S-band mode of transmission		All phases through earth entry			Degraded transmission of data and loss of ability to transmit TV	Utilize narrow band telemetry and voice mode with high-gain antenna
Power supply				Converts normal bus voltage to those necessary for the traveling wave tube (TWT)	Loss of output		Loss of function	Loss of primary mode of transmission		
					Reduced output		Decreased transmit signal	Reduced signal to ground station		
					Ripple present at output		Distorted transmit signal	Distorted signal to ground station		
Traveling wave tube				Amplifies the 2.3 KMC transponder output to increase the output of 0.2 to 0.4 watts to 20 watts	Loss of output		Loss of 20-watt capability	Loss of primary mode of transmission		
					Reduced output		Decreased transmit signal	Reduced signal to ground station		
Attenuator				Attenuates the signal from the transponder to a level that is in the operating range of the TWT	Loss of output		Loss of function	Loss of primary mode of transmission		
					Reduced output		Reduced transmit signal	Reduced signal to ground station		
					Increased output		Increased transmit signal; possible loss of TWT	Increased transmit signal to ground station, possible distorted signal to ground station		
Diplexer				Provides isolation between the signals being received and transmitted so that one antenna can be used for both transmission and reception	Loss of output		Loss of either/both the transmit signal and the up-signal	Loss of either/both function(s)		
					Reduced output		Reduced either/both the transmit signal and the up-signal	Possible loss of either/both functions		
					Loss of isolation		Transmitter would destroy the receiver	Loss of both functions		

CONFIDENTIAL

Table 12.7 VHF/FM Transmitter Failure Effects Analysis

Item	Drawing Number	Elect. Reference Desig.	Failure Detection	Function	Failure Type	Mission Phase	Failure Effect On Component Performance	Failure Effect On Sub-Systems Performance	Failure Effect On Apollo	Possible Crew Action
VHF/FM transmitter				Provides transmission of telemetry information (data and TV)		All phases except recovery			Partial loss of telemetry and real-time undisplayed data	Use secondary mode utilizing S-band equipment
Power amplifier				Provides amplification of the FM signal to be transmitted	Loss of output		Loss of ability to transmit	Loss of VHF/FM transmitter function		
					Reduced output		Decreased transmit signal	decreased VHF/FM transmit signal; possible loss of function		
					Distorted output		Distorted transmit signal	Distorted VHF/FM transmit signal; possible loss of function		
					Amplifier oscillates		Loss of ability to transmit	Loss of VHF/FM transmit signal		
Power supply				Provides the necessary power to the unit	Loss of output		Loss of ability to transmit	Loss of VHF/FM transmit signal		
					Reduced output		Reduced transmit signal	Reduced VHF/FM transmit signal; possible loss of function		
					Ripple present at output		Distorted transmit signal	Distorted VHF/FM transmit signal		
					Loss of regulation		Slightly reduced transmit signal	Slightly reduced VHF/FM transmit signal		
Exciter				Excepts PCM and bio-medical data from the pre-modulation processor and transmits them by FM either individually or simultaneously	Loss of output		Loss of transmit signal	Loss of data		
					Reduced output		Reduced transmit signal	Reduced VHF/FM transmit signal, possible loss of data		
					Distorted output		Distorted transmit signal	Distorted VHF/FM data; possible loss of data		
					Output frequency varies		Loss of transmit signal	Loss of VHF/FM data		

CONFIDENTIAL

Table 12.7 VHF/FM Transmitter Failure Effects Analysis (Cont)

Item	Drawing Number	Elect. Reference. Desig.	Failure Detection	Function	Failure Type	Mission Phase	Failure Effect On Component Performance	Failure Effect On Sub-Systems Performance	Failure Effect On Apollo	Possible Crew Action
Controls				Provides on/off switch for power supply	Failed open	All phases except recovery	Loss of transmit signal	Loss of VHF/FM data		
					Failed closed		Loss of ability to turn off power supply	VHF/FM transmitter is on at all times		

Table 12.8 VHF Recovery Beacon Failure Effects Analysis

Item	Drawing Number	Elect. Reference Desig.	Failure Detection	Function	Failure Type	Mission Phase	Failure Effect On Component Performance	Failure Effect On Sub-Systems Performance	Failure Effect On Apollo	Possible Crew Action
VHF recovery beacon equipment				The VHF recovery beacon (interrupted) tone modulated CW provides line-of-sight direction finding capabilities during the earth landing and recovery phases to aid in locating the spacecraft		Earth landing and recovery phases			Loss of primary means of providing on-board direction finding aid during earth landing and recovery	Use HF transceiver or VHF/AM transmitter-receiver
Oscillator				Provides carrier signal	Loss of output		Loss of output signal	Loss of VHF recovery beacon capability		
					Distorted output		Distorted output signal	Reduced VHF recovery beacon signal on CW; possible loss of CW mode; no noticeable effect on pulse mode		
					Reduced output		Reduced output signal	Slightly reduced VHF recovery beacon signal; possible loss of function		
					Incorrect oscillation frequency (7±0.005)		Reduced signal output	Reduced signal output of recovery beacon on CW		
					Supply voltage present on output		Extremely distorted carrier signal	Noisy VHF recovery beacon signal		
Preamplifier				Voltage amplification prior to power amplifier	Loss of output		Loss of carrier signal	Loss of VHF recovery beacon capability		
					Distorted output		Distorted output signal	Reduced VHF recovery beacon signal on CW; possible loss of CW mode; no noticeable effect on pulse mode		
					Reduced output		Reduced output signal	Reduced VHF recovery beacon signal; possible loss of function		
					Amplifier oscillates		Loss of output signal	Loss of VHF recovery beacon capability		

[redacted]

Table 12.8 VHF Recovery Beacon Failure Effects Analysis (Cont)

Item	Drawing Number	Elect. Reference Desig.	Failure Detection	Function	Failure Type	Mission Phase	Failure Effect On Component Performance	Failure Effect On Sub-Systems Performance	Failure Effect On Apollo	Possible Crew Action
					Supply voltage present at output	Earth landing and recovery	Distorted carrier signal	Distorted and reduced VHF recovery beacon signal; possible loss of function		
Power amplifier (3 stage)				Final amplification of signal to be fed to antenna	Loss of output		Loss of output signal	Loss of VHF recovery beacon capability		
					Distorted output		Distorted output signal	Distorted pulse modulation signal; distorted reduced CW signal; possible loss of function		
					Reduced output		Reduced output signal	Reduced VHF recovery beacon signal; possible loss of function		
					Amplifier oscillates		Loss of desired output signal	Loss of VHF recovery beacon capability		
					Supply voltage present at output		Beacon becomes inoperative	Loss of VHF recovery beacon capability		
Pulse modulator				Provides pulse modulation signal to PA	Loss of output		Loss of pulse modulation	Loss of pulse modulation capability of VHF recovery beacon		
					Distorted output		Distorted pulse modulated signal	Distorted pulse modulated receiver signal; possible loss of pulse mode		
					Reduced output		Reduced output signal on pulse modulated mode	Reduced signal level on pulse modulation mode; possible loss of pulse mode		
					Supply voltage present at output		Loss of output signal	Loss of VHF recovery beacon capability		
					Pulse modulator becomes free running		Continuous pulse output, subsequent loss of output	Loss of VHF recovery beacon capabilities		

[redacted]

Table 12.8 VHF Recovery Beacon Failure Effects Analysis (Cont)

Item	Drawing Number	Elect. Reference. Desig.	Failure Detection	Function	Failure Type	Mission Phase	Failure Effect On Component Performance	Failure Effect On Sub-Systems Performance	Failure Effect On Apollo	Possible Crew Action
Power supply				Provides power to VHF recovery beacon	Loss of output	Earth landing and recovery	Recovery beacon inoperative	Loss of VHF recovery beacon capability		
					Ripple present at output		Noisy output signal	Noisy VHF recovery beacon signal; possible loss of function		
					Decreased output		Decreased output signal	Decreased VHF recovery beacon signal level; possible loss of function		
					Loss of regulation		Decreased efficiency; reduced pulse output	Reduced VHF recovery beacon signal in pulse mode; possible loss of pulse mode		

CONFIDENTIAL

Table 12.9 Signal Conditioners Failure Effects Analysis

Item	Drawing Number	Elect. Reference. Desig.	Failure Detection	Function	Failure Type	Mission Phase	Failure Effect On Component Performance	Failure Effect On Sub-Systems Performance	Failure Effect On Apollo	Possible Crew Action
Signal conditioning equipment				The signal conditioning equipment provides normalization for all sensory data prior to input to the pcm telemetry equipment, GSE, displays, and IFTS		All phases except recovery			Incorrect information or complete loss of information from affected channel(s)	None
D-c amplifier	512-3041 512-3042			To provide amplification of an individual sensor such that the normal range necessary for transmission and/or display will be achieved	Loss of output		Loss of one data channel	Loss of data handled by circuit involved		
					Decreased output		Erroneous signal level on one channel	Erroneous data reading from involved channel		
					Distorted output		Erroneous signal on one channel	Erroneous data reading from involved channel		
					Oscillation		Loss of one data channel	Loss of data handled by circuit involved		
D-c attenuator	512-3044 512-3045			To decrease the range of an individual sensor such that the normal range necessary for transmission and/or display will be achieved	Loss of output		Loss of one data channel	Loss of data handled by circuit involved		
					Increased output		Erroneous signal level on one channel	Erroneous data reading from involved channel		
					Distorted output		Erroneous signal on one channel	Erroneous data reading from involved channel		
					Oscillation		Loss of one data channel	Loss of data handled by circuit involved		
A-c to d-c converter	512-3047 512-3048			To convert a-c sensor signals to the normal d-c range necessary for transmission and/or display	Loss of output		Loss of one data channel	Loss of data handled by circuit involved		
					Decreased output		Erroneous signal level on one channel	Erroneous data reading from involved channel		
					Increased output		Erroneous signal level on one channel	Erroneous data reading from involved channel		
					Distorted output		Erroneous signal on one channel	Erroneous data reading from involved channel		

~~CONFIDENTIAL~~

Table 12.9 Signal Conditioners Failure Effects Analysis (Cont)

Item	Drawing Number	Elect. Reference Desig.	Failure Detection	Function	Failure Type	Mission Phase	Failure Effect On Component Performance	Failure Effect On Sub-Systems Performance	Failure Effect On Apollo	Possible Crew Action
Phase sensor demodulator	512-3126			To demodulate the phase characteristics of an individual sensor signal to the normal d-c range necessary for transmission and/or display	Loss of output	All phases except recovery	Loss of one data channel	Loss of data handled by circuit involved		
					Decreased output		Erroneous signal level on one channel	Erroneous data reading from involved channel		
					Distorted output		Erroneous signal on one channel	Erroneous data reading from involved channel		
Frequency sensor demodulator	512-3125			To demodulate the frequency characteristics of an individual sensor signal to the normal d-c range necessary for transmission and/or display	Loss of output		Loss of one data channel	Loss of data handled by circuit involved		
					Decreased output		Erroneous signal level on one channel	Erroneous data reading from involved channel		
					Distorted output		Erroneous signal on one channel	Erroneous data reading from involved channel		
					Off frequency		Erroneous signal on one channel	Erroneous data reading from involved channel		
Power supply	512-3124			To provide power to the signal conditioners and excitation voltage to the sensors	Loss of output		Loss of all conditioner outputs	Loss of all signal conditioners		
					Decreased output		Degraded conditioner performance	Possible loss of data and/or erroneous data from signal conditioners		
					Distorted output		Erroneous output from conditioners	Erroneous data readings from conditioners		
					Oscillation		Loss of all conditioner outputs	Loss of all signal conditioners		
					Loss of regulation		Erroneous output from conditioners	Erroneous data readings from conditioners		

~~CONFIDENTIAL~~

Table 12.10 Data Storage Failure Effects Analysis

Item	Drawing Number	Elect. Reference Desig	Failure Detection	Function	Failure Type	Mission Phase	Failure Effect On Component Performance	Failure Effect On Sub-Systems Performance	Failure Effect On Apollo	Possible Crew Action
Data storage equipment				Provides on-board telemetry data storage during critical periods and when real-time data transmission is not possible; provides playback for delayed time data		Powered phases and earth entry			Loss of on-board data storage and playback capabilities	Voice relay of delayed time data from visual displays (limited data)
Analog record amplifier (9)	512-2781			Amplify analog signals for recording on tape	Loss of output		Loss of affected analog channel	Loss of data from affected analog channel		
Analog reproduce amplifier (9)	512-2785			Amplify analog signals reproduced from tape	Loss of output		Loss of ability to reproduce data on affected analog channel	Loss of immediate use of data from affected analog channel; data remains recorded on tape		
Digital record amplifier (4)	512-2783			Amplify digital signals for recording on tape	Loss of output		Loss of affected digital channel	Loss of data from affected digital channel		
Digital record amplifier (clock pulse)					Loss of clock output		Loss of all digital channels	Loss of data from all digital channels		
Digital reproduce amplifier (4)	512-2787			Amplify digital signals reproduced from tape	Loss of output		Loss of ability to reproduce data from affected digital channel	Loss of immediate use of data from affected digital channel; data remains recorded on tape		
Digital reproduce amplifier (clock pulse)					Loss of clock output		Loss of ability to reproduce usable data from any digital channel	Loss of immediate use of data from any digital channel; data remains recorded on tape		
Serial to parallel converter	512-2793			Convert serial digital input to parallel form	Loss of output		Loss of all digital channels	Loss of data from all digital channels		
Parallel to serial converter				Convert parallel digital output to serial form	Loss of output		Loss of all digital output from data storage recorder	Loss of immediate use of all digital data; data remains recorded on tape in parallel form		

[redacted]

Table 12.10 Data Storage Failure Effects Analysis (Cont)

Item	Drawing Number	Elect. Reference. Desig.	Failure Detection	Function	Failure Type	Mission Phase	Failure Effect On Component Performance	Failure Effect On Sub-Systems Performance	Failure Effect On Apollo	Possible Crew Action
A-c to d-c converter	512-2795			Convert a-c power to d-c	Loss of output	Powered phases and earth entry	Loss of all data storage functions	Loss of data storage recorder		
					Decreased output		Degradation of data storage recorder performance	Possible loss of all data from data storage recorder		
D-c voltage regulator	512-2799			Provide regulation of d-c power	Loss of output		Loss of all data storage functions	Loss of data storage recorder		
					Decreased output		Degradation of data storage recorder performance	Possible loss of all data from data storage recorder		
					Increased output		Degradation of data storage recorder performance	Possible loss of all data from data storage recorder		
					Loss of regulation		Probable loss of usable data storage recorder output	Probable loss of usable data from storage recorder		
Bias oscillator	512-2789			Provide a-c bias to analog record amplifier and erase amplifier	Loss of output		Loss of all data storage output	Loss of data storage recorder		
Control logic	512-2797			Provide selection of data storage operation modes: Forward-reverse, Fast-slow, Record-playback, On-off	Loss of output		Loss of all data storage functions	Loss of data storage recorder		
Erase amplifier	512-2791			Provide signal to erase heads	Loss of output		Loss of ability to reuse any one tape	Amount of data handled by data storage recorder limited		
Tape transport	512-2760			To move tape over heads at constant (record-playback or fast) speeds	Loss of transport functioning		Loss of all data recording	Loss of data storage recorder		

CONFIDENTIAL

Table 12.11 Premodulation Processor Failure Effects Analysis

Item	Drawing Number	Elect. Reference Desig.	Failure Detection	Function	Failure Type	Mission Phase	Failure Effect On Component Performance	Failure Effect On Sub-Systems Performance	Failure Effect On Apollo	Possible Crew Action
Premodulation processor				The premodulation processor equipment provides the interface connections between the spacecraft data gathering equipments and the RF transmission equipments; it performs the switching, gating, and mixing necessary to obtain the various modes of information transmission and reception with the exception of the VHF/AM transmitter-receiver and the recovery equipments		All phases through earth entry			Loss of or degradation to all modes of data transmission and all modes of S-band voice transmission and reception	Select alternate available modes of information, transmission, and reception
Low pass filter				Accepts information from the PCM, eliminates high-frequency noise, attenuates a 0-6-volt input to a 0-3-volt output for VHF/FM transmitter	Loss of signal		Loss of VHF/FM transmitter input	Loss of VHF/FM telemetry S-band; provides redundancy		
					Decreased signal		Decreased VHF/FM transmitter input	VHF/FM output slightly decreased		
					Distorted signal		Distorted VHF/FM transmitter input	VHF/FM output slightly distorted		
					+28 v dc on output		Distorted VHF/FM transmitter input	VHF/FM output distorted		
Frequency doubler	513-2333-005	960C-1		Doubles the 512-KC signal and feeds it to the "module two" and "and" gate to be used as a subcarrier	Decreased signal		Decreased PCM output	Degradation PCM telemetry function		
					Distorted signal		Distorted PCM output	Degradation PCM telemetry function		
					Multi oscillates		Loss of PCM output	Loss of PCM telemetry function		
					+28 v dc on output		No noticeable effect	No noticeable effect		
					Loss of signal		Loss of PCM output	Loss of PCM telemetry function		
Band pass filter		960C-1		Two filters: one accepts PCM-NRZ information from the module two; the other accepts information from an "and" gate. They both eliminate noise and both outputs are fed to the PM mixing network	Loss of signal		Loss of 1.024 MC PCM signal	Reduced PCM/PM telemetry/tracking and FM telemetry (reduced number of channels); VHF/FM and S-band provide redundancy		

[redacted]

Table 12.11 Premodulation Processor Failure Effects Analysis (Cont)

Item	Drawing Number	Elect Reference Desig	Failure Detection	Function	Failure Type	Mission Phase	Failure Effect On Component Performance	Failure Effect On Sub-Systems Performance	Failure Effect On Apollo	Possible Crew Action
					Distorted signal	All phases through earth entry	Distorted 1.024 MC PCM signal	Distorted PCM/PM output		
					Decreased signal		Decreased 1.024 MC PCM signal	Decreased PCM/PM output		
					Mixer oscillates		Loss of 1.024 MC PCM or analog voice signal	Reduced PCM/PM telemetry/tracking capability; S-band (TV mode) and FM provide redundancy		
					Input supply on output		Distorted 1.024 MC PCM and analog voice signal	Distorted PCM/PM and PM/analog voice communication		
1.25 MC VCO	513-2322-005	960C-1		Accepts an analog voice from the audio center and applies it to a 1.25 MC subcarrier, which is fed to the PM mixing network, or the FM mixing network	Loss of signal		Loss of voice output	Loss of all voice communication except emergency voice HF and VHF/AM modes		
					Decreased signal		Decreased voice output	Degraded S-band voice communications		
					Distorted signal		Distorted voice output	Distorted S-band voice communications		
					Shifted circuit frequency		Distorted voice output	Distorted S-band voice communications		
					+28 v dc on output		No noticeable effect	No noticeable effect		
FM mixing network		960C-1		Accepts PCM-NRZ, key, TV, analog voice and 9 analog channels, mixes them, and feeds them to the unified S-band equipment	Loss of signal		Loss of PCM, voice, VCO, TV and telemetry signals	Loss of FM/telemetry, FM/analog voice, FM/tape playback, and TV modes. PM/PCM provide all redundancy except for TV		
					Decreased signal		Decreased PCM, voice, VCO, TV and telemetry signals	Decreased FM/telemetry, FM/analog voice, FM/tape playback, and TV signals		

[redacted]

[redacted]

Table 12.11 Premodulation Processor Failure Effects Analysis (Cont)

Item	Drawing Number	Elect Reference Desig	Failure Detection	Function	Failure Type	Mission Phase	Failure Effect On Component Performance	Failure Effect On Sub-Systems Performance	Failure Effect On Apollo	Possible Crew Action
					Distorted signal	All phases through earth entry	Distorted PCM, voice, VCO, TV and telemetry signals	Distorted FM/telemetry, FM/analog voice, FM/tape playback, and TV signals		
					Mixer oscillates		Loss of PCM, voice, VCO, TV and telemetry signals	Loss of FM/telemetry, FM/analog voice, FM/tape playback, and TV modes. PM/PCM provide all redundancy except TV		
					Input supply on output		Distorted PCM, voice, VCO, TV, and telemetry signals	Distorted FM/telemetry, FM/analog voice, FM/tape playback, and TV signals		
SCO mixing network		960C-1		Accepts analog inputs, mixes them, and feeds them to the FM mixing network	Loss of signal		Loss of DSE analog telemetry signals	Loss of data storage capabilities from unified S-band equipment (USBE)		
					Decreased signal		Decreased DSE analog telemetry signals	Decreased data storage signals from USBE		
					Distorted signal		Distorted DSE analog telemetry signals	Distorted data storage signals from unified S-band equipment		
					Mixer oscillates		Loss of DSE analog telemetry signals	Loss of data storage capability from unified S-band equipment		
					Input supply on output		Distorted DSE analog telemetry signals	Distorted data storage capabilities from unified S-band equipment		

[redacted]

[redacted]

Table 12.11 Premodulation Processor Failure Effects Analysis (Cont)

Item	Drawing Number	Elect. Reference Desig.	Failure Detection	Function	Failure Type	Mission Phase	Failure Effect On Component Performance	Failure Effect On Sub-Systems Performance	Failure Effect On Apollo	Possible Crew Action
Module two	513-2333-005	960C-1		Accepts information from PCM and PCM-NRZ, synchronizes the data and feeds it through a bi-phase modulator where bi-phase modulation is accomplished	Loss of signal	All phases through earth entry	Loss of PCM output	Loss of PCM telemetry		
					Decreased signal		Decreased PCM output	Possible loss of PCM telemetry		
					Distorted signal		Distorted PCM output	Possible loss of PCM telemetry		
					Circuit oscillates		Loss of PCM output	Loss of PCM telemetry		
					+28 v dc on output		Loss of PCM output	Loss of PCM telemetry		
PM mixing network		960C-1		Accepts information from the module two or key and analog voice from 1.25 MC SCO, mixes the inputs and feeds them to S-band equipment	Loss of signal		Loss of 1.024 MC PCM or analog voice signal	Reduced PCM/PM, telemetry/tracking capacity. S-band (TV mode) and FM provide redundancy		
					Distorted signal		Distorted 1.024 MC PCM and analog voice signal	Distorted PCM/PM and PM/analog voice communication		
					Decreased signal		Decreased 1.024 MC PCM and analog voice signal	Decreased PCM/PM and PM/analog voice communication		
Up-voice discriminator		960C-1		Accepts signal from the USBE, demodulates the voice carrier, and feeds the analog voice to the intercom system	Loss of signal		Loss of signal to audio center	Loss of ground to spacecraft voice communications		
					Distorted signal		Distorted signal to audio center	Distorted ground to spacecraft communications		
					Decreased signal		Decreased signal to audio center	Decreased ground to spacecraft communications		
					Shift of center frequency		Distorted signal to audio center	Distorted ground to spacecraft communications		
					Input supply on output		Distorted signal to audio center	Distorted ground to spacecraft communications		

[redacted]

Table 12.11 Premodulation Processor Failure Effects Analysis (Cont)

Item	Drawing Number	Elect. Reference. Desig.	Failure Detection	Function	Failure Type	Mission Phase	Failure Effect On Component Performance	Failure Effect On Sub-Systems Performance	Failure Effect On Apollo	Possible Crew Action
Up-data discriminator				Accepts data from the USBE, demodulates the data carriers, and feeds the information to the receiver-decoder package	Loss of signal	All phases through earth entry	Loss of signal to receiver-decoder	Loss of data		
					Distorted signal		Distorted signal to receiver-decoder	Possible loss of data		
					Decreased signal		Decreased signal to receiver-decoder	Possible loss of data		
					Shift of center frequency		Distorted signal to receiver-decoder	Possible loss of data		
					Input supply on output		Distorted signal to receiver-decoder	Possible loss of data		
Power supply	513-1137-005	960C-1		Provides 6 v dc to the emergency key and 28 v dc to the PMP	Loss of signal		Loss of premodulation processor capabilities	Loss of all data and voice transmission modes except VHF/AM, HF, and emergency voice		
					Ripple present on output		Possible loss of premodulation processor capabilities	Possible degrading of all data and voice transmission modes except VHF/AM, HF, and emergency voice		
					Decreased output (50 percent)		Loss of premodulation processor capabilities	Loss of all data and voice transmission modes except VHF/AM, HF, and emergency voice		
					Loss of regulation		Reduced efficiency	Possible degrading of all data and voice transmission modes except VHF/AM, HF, and emergency voice		

CONFIDENTIAL

Table 12.12 HF Transceiver/Receiver Module Failure Effects Analysis

Item	Drawing Number	Elect Reference Desig	Failure Detection	Function	Failure Type	Mission Phase	Failure Effect On Component Performance	Failure Effect On Sub-Systems Performance	Failure Effect On Apollo	Possible Crew Action
HF transceiver equipment				The HF transceiver equipment provides line-of-sight and beyond line-of-sight direction finding and communication capabilities to aid in locating the spacecraft during the recovery phase		Recovery			Loss of primary means of communications and alternate means of direction finding during recovery phase	Utilize other NF transceiver mode or VHF/AM transmitter-receiver for line-of-sight communications, as specified under "failure effect on subsystems performance"; utilize VHF recovery beacon or VHF/AM transmitter-receiver for direction finding
Audio amplifier	513-2426-006	718H-1E		Amplify audio output signal	Loss of signal		Loss of HF receiver signal	Loss of HF voice receive mode beyond line of sight. Line-of-sight redundancy provided by VHF/AM and HF/SSB		
					Decreased signal		Decreased HF receive signal	Decreased HF receiver capability; possible loss of function		
					Distorted signal		Distorted HF receive signal	Distorted HF receive signal; possible loss of function		
					Amplifier oscillates		Loss of HF receive signal	Loss of HF voice receive mode beyond line of sight, line-of-sight redundancy provided by VHF/AM and HF/SSB		
					B+ on output		Instability in HF receiver operation	Instability in HF receiver operation; possible loss of function		
AM detecter	513-2426-006	718H-1E		Recovering modulation from signal	Loss of signal		Loss of HF/AM receive signal	Loss of HF/AM receive mode, VHF/AM provides redundancy		

Table 12.12 HF Transceiver/Receiver Module Failure Effects Analysis (Cont)

Item	Drawing Number	Elect Reference Desig	Failure Detection	Function	Failure Type	Mission Phase	Failure Effect On Component Performance	Failure Effect On Sub-Systems Performance	Failure Effect On Apollo	Possible Crew Action
					Decreased signal	Recovery	Decreased HF/AM receive signal	Decreased HF/AM receive capability; possible loss of HF/AM mode		
					Distorted signal		Distorted HF/AM receive signal	Distorted HF/AM receive capability; possible loss of HF/AM mode		
					Reduced sensitivity		Decreased and distorted HF/AM receive signal	Decreased and distorted HF/AM receive capability; possible loss of HF/AM mode		
					B+ on output		Loss of HF receive signal	Loss of HF voice receive mode beyond line of sight; line-of-sight redundancy provided by VHF/AM		
SSB detector	513-2426-006	718H-1E		Provide upper SB operation	Loss of signal		Loss of HF/SSB signal	Loss of HF voice receive mode beyond line of sight; line-of-sight redundancy provided by UHF/AM and HF/AM		
					Decreased signal		Decreased HF/SSB Signal	Decreased HF/SSB receive signal. Possible loss of HF/SSB mode		
					Distorted signal		Distorted HF/SSB signal	Distorted HF/SSB receive signal. Possible loss of HF/SSB mode		
					Reduced sensitivity		Decreased and distorted HF/SSB receive signal	Decreased and distorted HF/SSB receive signal; possible loss of HF/SSB mode		

Table 12.12 HF Transceiver/Receiver Module Failure Effects Analysis (Cont)

Item	Drawing Number	Elect. Reference Desig.	Failure Detection	Function	Failure Type	Mission Phase	Failure Effect On Component Performance	Failure Effect On Sub-Systems Performance	Failure Effect On Apollo	Possible Crew Action
					B+ on output	Recovery	Loss of HF receive signal	Loss of HF voice receive mode beyond line of sight; line-of-sight redundancy provided by UHF/AM		
AGC detector	513-2426-006	718H-1E		Provide necessary feedback for stabilization	Loss of signal		Unstable RF amplifier test point signal; loss of feedback signal	HF receiver becomes unstable; possible loss of function		
					Distorted signal		Distorted feedback signal	HF receiver output is distorted; possible loss of function		
					Decreased signal		Decreased feedback signal	Degradation of function (decreased regulation of HF receiver)		
					Detector oscillates		Unstable RF amplifier test point signal; loss of feedback signal	HF receiver becomes unstable; possible loss of function		
					Reduced sensitivity		Decreased feedback signal	Degradation of function (decreased regulation of HF receiver)		
					B+ on output		Receive signal slightly distorted	Degradation of function (slightly distorted HF receiver output)		
IF amplifier (receive)	513-2426-006	718H-1E		Amplify intermediate frequency	Loss of signal		Loss of IF test signal; loss of HF receive signal	Loss of HF voice receive mode beyond line of sight; line-of-sight redundancy provided by VHF/AM		
					Decreased signal		Decreased HF receive signal	Decreased HF receive output; possible loss of function		

[redacted]

Table 12.12 HF Transceiver/Receiver Module Failure Effects Analysis (Cont)

Item	Drawing Number	Elect. Reference Desig	Failure Detection	Function	Failure Type	Mission Phase	Failure Effect On Component Performance	Failure Effect On Sub-Systems Performance	Failure Effect On Apollo	Possible Crew Action
					Distorted signal	Recovery	Distorted HF receive signal	Distorted HF receiver output; possible loss of function		
					Amplifier oscillates		Loss of IF test signal; loss of HF receive signal	Loss of HF voice receive mode beyond line of sight; line-of-sight redundancy provided by VHF/AM		
					B+ on output		Loss of IF test signal; loss of HF receive signal	Loss of HF voice receive mode beyond line of sight; line-of-sight redundancy provided by UHF/AM		
RF amplifier (receive)	513-2426-006	718H-1E		Amplify intermediate frequency	Loss of signal		Loss of IF test signal; loss of HF receive signal	Loss of HF voice receive mode beyond line of sight; line-of-sight redundancy provided by VHF/AM		
					Decreased signal		Decreased HF receive signal	Decreased HF receiver output; possible loss of function		
					Distorted signal		Slightly distorted HF receive signal	Slightly distorted HF receiver output		
					Amplifier oscillates		Loss of IF test signal; loss of HF receive signal	Loss of HF voice receive mode beyond line of sight; line-of-sight redundancy provided by VHF/AM		
					B+ on output		Loss of IF test voice signal; loss of HF receive signal	Loss of HF voice receive mode beyond line of sight; line-of-sight redundancy provided by VHF/AM		

[redacted]

[redacted]

Table 12.12 HF Transceiver/Receiver Module Failure Effects Analysis (Cont)

Item	Drawing Number	Elect. Reference Desig	Failure Detection	Function	Failure Type	Mission Phase	Failure Effect On Component Performance	Failure Effect On Sub-Systems Performance	Failure Effect On Apollo	Possible Crew Action
AGC attenuation	513-2426-006	718H-1E		Stabilization of AGC circuit	Loss of signal	Recovery	Loss of IF test signal; loss of HF receive signal	Loss of HF voice receive mode beyond line of sight; line-of-sight redundancy provided by VHF/AM		
					Increased signal		Distorted HF receive signal	Distorted HF receiver output; possible loss of function		
					Distorted signal		Distorted HF receive signal	Distorted HF receiver output; possible loss of function		
Mixer	513-2426-006	718H-1E		Shift RF to IF frequency	Loss of signal		Loss of IF test signal; loss of receive signal	Loss of HF voice receive mode beyond line of sight; line-of-sight redundancy provided by S/B VHF/AM		
					Distorted signal		Distorted transmitter signal	Distorted HF transmitter output; possible loss of function		
					Decreased signal		Slightly decreased transmitter signal	Slightly decreased transmitter output		
					Amplifier oscillates		Loss of RF and PA test point signals; loss of transmitter signal	Loss of HF voice transmitter mode beyond line of sight, line-of-sight redundancy provided by VHF/AM		
					B+ on output		Slightly distorted transmitter signal	Slightly distorted HF transmitter output		
Driver	513-2424-005	718H-1E		Amplify signal provided to PA	Loss of signal		Loss of PA test point signals; loss of transmitter signal	Loss of HF voice transmitter mode beyond line of sight; line-of-sight redundancy provided by VHF/AM		

[redacted]

Table 12.12 HF Transceiver/Receiver Module Failure Effects Analysis (Cont)

Item	Drawing Number	Elect Reference Desig	Failure Detection	Function	Failure Type	Mission Phase	Failure Effect On Component Performance	Failure Effect On Sub-Systems Performance	Failure Effect On Apollo	Possible Crew Action
					Distorted signal	Recovery	Distorted transmitter signal	Distorted HF transmitter output; possible loss of function		
					Decreased signal		Decreased PA test point signal; greatly decreased transmitter signal	Greatly decreased HF transmitter output; possible loss of function		
					Distorted signal		Distorted HF receive signal	Distorted HF receiver output; possible loss of function		
					Decreased signal		Decreased HF receive signal	Decreased HF receiver output; possible loss of function		
					Mixer oscillates		Loss of IF test signal; loss of receive signal	Loss of HF voice receive mode beyond line of sight; line-of-sight redundancy provided by VHF/AM		
					B+ on output		Loss of IF test signal; loss of receive signal	Loss of HF voice receive mode beyond line of sight; line-of-sight redundancy provided by VHF/AM		
RF amplifier	513-2424-005	718H-1E		Amplify RF signal	Loss of signal		Loss of RF and PA test point signals; loss of transmitter signal	Loss of HF voice transmitter mode beyond line of sight; line-of-sight redundancy provided by VHF/AM		
					Driver oscillates		Loss of PA test point signal; loss of transmitter signal	Loss of HF voice transmitter mode beyond line of sight; line-of-sight redundancy provided by VHF/AM		

Table 12.12 HF Transceiver/Receiver Module Failure Effects Analysis (Cont)

Item	Drawing Number	Elect. Reference Desig.	Failure Detection	Function	Failure Type	Mission Phase	Failure Effect On Component Performance	Failure Effect On Sub-Systems Performance	Failure Effect On Apollo	Possible Crew Action
Power amplifier	513-2424-005	718H-1E		Amplify transmitting signal	Loss of signal	Recovery	Loss of PA test point signal; loss of transmitter signal	Loss of HF voice transmitter mode beyond line of sight; line-of-sight redundancy provided by VHF/AM		
					Distorted signal		Distorted PA test point signal; greatly distorted signal	Greatly distorted HF transmitter output; possible loss of function		
					Decreased signal		Decreased PA test point signal; greatly decreased signal	Greatly decreased HF transmitter output; possible loss of function		
					Amplifier oscillates		Loss of PA test point signal; loss of transmitter signal	Loss of HF voice transmitter mode beyond line of sight; line-of-sight redundancy provided by VHF/AM		
ALC detector	513-2424-005	718H-1E		Provide stability in transmitter mode selection	Loss of signal		Loss of transmitter regulation	Degradation of function (loss of transmitter mode regulation)		
					Decreased signal		Decreased transmitter regulation	Degradation of function (decreased transmitter regulation, either mode)		
					ALC checkout oscillates		Loss of transmitter regulation	Degradation of function (loss of transmitter mode regulation)		
					Distorted signal		Distorted transmitter signal	Degradation of function (distorted transmitter output, either mode		

CONFIDENTIAL

Table 12.12 HF Transceiver/Receiver Module Failure Effects Analysis (Cont)

Item	Drawing Number	Elect. Reference Desig	Failure Detection	Function	Failure Type	Mission Phase	Failure Effect On Component Performance	Failure Effect On Sub-Systems Performance	Failure Effect On Apollo	Possible Crew Action
Receive buffer	513-2425-005	718H-1E		Isolate undesirable frequency	Loss of signal	Recovery	Loss of IFTS signals, PA test signal, loss of HF receive signal	Loss of HF voice receive mode beyond line of sight, line-of-sight redundancy provided by VHF/AM		
					Decreased signal		Slightly decreased HF receive signal	Slightly decreased HF receive capability		
					Distorted signal		Slightly distorted HF receive signal	Slightly distorted HF receive signal		
					Buffer oscillates		Loss of PA test signal, IFTS signal, loss of HF receive signal	Loss of HF voice receive mode beyond line of sight, line-of-sight redundancy provided by VHF/AM		
					B+ on output		Loss of PA test signal, loss of HF receive signal	Loss of HF voice receive mode beyond line of sight, line-of-sight redundancy provided by VHF/AM		
HF oscillator	513-2425-005	718H-1E		Provide HF carrier frequency	Loss of signal		Loss of HF oscillator, receive buffer IFTS and PA test signals, loss of HF carrier signal	Loss of HF capability beyond line of sight. UHF/AM provides line-of-sight redundancy		
					Decreased signal		Decreased HF carrier signal	Decreased HF transmitter output		
					Distorted signal		Slightly distorted HF carrier frequency	Degradation of function (slightly distorted HF transmitter and excursion output)		

Table 12.12 HF Transceiver/Receiver Module Failure Effects Analysis (Cont)

Item	Drawing Number	Elect. Reference Desig	Failure Detection	Function	Failure Type	Mission Phase	Failure Effect On Component Performance	Failure Effect On Sub-Systems Performance	Failure Effect On Apollo	Possible Crew Action
Transmit buffer	513-2425-005	718H-1E		Isolate undesirable frequency	Loss of signal	Recovery	Loss of IFTS signal, HF oscillator and RF output signals, loss of HF transmit signal	Loss of HF voice transmit mode beyond line of sight, line-of-sight redundancy provided by VHF/AM		
					Decreased signal		Slightly decreased HF transmit signal	Degradation of function (slightly decreased HF transmitter output)		
					Distorted signal		Slightly distorted HF transmit signal	Degradation of function (slightly distorted HF transmitter signal)		
					Buffer oscillates		Loss of IFTS signal, HF oscillator and RF output signals, loss of HF transmit signal	Loss of HF voice transmit mode beyond line of sight, line-of-sight redundancy provided by VHF/AM		
455-KC oscillator	513-2425-005	718H-1E		Provide IF frequency	Loss of signal		Loss of 455-KC test signals; loss of SSB signal	Loss of HF voice mode beyond line of sight, line-of-sight redundancy provided by HF/AM VHF/AM		

[redacted]

Table 12.12 HF Transceiver/Receiver Module Failure Effects Analysis (Cont)

Item	Drawing Number	Elect. Reference Desig.	Failure Detection	Function	Failure Type	Mission Phase	Failure Effect On Component Performance	Failure Effect On Sub-Systems Performance	Failure Effect On Apollo	Possible Crew Action
					Decreased signal	Recovery	Slightly decreased HF/SSB signal	Degradation of function (slightly decreased beyond line-of-sight capability)		
					Distorted signal		Slightly distorted HF/SSB signal	Degradation of function (slightly distorted HF/SSB signal)		
					Shift oscillator frequency		Decreased and distorted HF/SSB signal	Decreased and distorted HF/SSB signal; possible loss of function		
Balanced modulator	513-2427-006	718H-1E		Modulate audio signal with IF carrier	Loss of signal		Loss of IF clipper test signal; loss of HF transmit signal	Loss of HF voice transmit mode beyond line of sight; line-of-sight redundancy provided by VHF/FM		
					Decreased signal		Decreased HF transmit signal	Decreased HF transmitter capability; possible loss of function		
					Distorted signal		Distorted HF transmit signal	Distorted HF transmitter output; possible loss of function		
Mechanical filter	513-2429-006	718H-1E		Filter undesirable frequency	Loss of signal		Loss of IF clipper test signal; loss of transmit signal	Loss of HF voice transmit mode beyond line of sight; line-of-sight redundancy provided by VHF/AM		
					Decreased signal		Decreased HF transmit signal	Decreased HF transmitter capability; possible loss of function		
					Distorted signal		Slightly distorted HF transmitter signal	Degradation of function (slightly distorted HF transmitter signal)		

Table 12.12 HF Transceiver/Receiver Module Failure Effects Analysis (Cont)

Item	Drawing Number	Elect Reference Desig	Failure Detection	Function	Failure Type	Mission Phase	Failure Effect On Component Performance	Failure Effect On Sub-Systems Performance	Failure Effect On Apollo	Possible Crew Action
Carrier re-insert control	513-2427-006	718H-1E		Amplify IF signal	Loss of signal	Recovery	Loss of HF/SSB signal	Loss of HF voice transmit mode beyond line of sight; line-of-sight redundancy provided by VHF/AM		
					Decreased signal		Decreased HF/SSB signal	Decreased HF/SSB output; possible loss of HF/SSB mode		
					Distorted signal		Distorted HF/SSB signal	Distorted HF/SSB output; possible loss of HF/SSB mode		
					B+ on output		Loss of HF/SSB signal	Loss of HF voice transmit mode beyond line of sight; line-of-sight redundancy provided by VHF/AM		
IF amplifier	513-2427-006	718H-1E		Amplify IF signal	Loss of signal		Loss of IF clipper test signal; loss of HF transmit signal	Loss of HF voice transmit mode beyond line of sight; line-of-sight redundancy provided by VHF/AM		
					Decreased signal		Decreased HF transmit signal	Decreased HF transmit signal; possible loss of function		
					Distorted signal		Distorted HF transmit signal	Distorted HF transmit signal; possible loss of function		
					Amplifier oscillates		Loss of HF transmit signal	Loss of HF voice transmit mode beyond line of sight; line-of-sight redundancy provided by VHF/AM		

[redacted]

Table 12.12 HF Transceiver/Receiver Module Failure Effects Analysis (Cont)

Item	Drawing Number	Elect. Reference Desig	Failure Detection	Function	Failure Type	Mission Phase	Failure Effect On Component Performance	Failure Effect On Sub-Systems Performance	Failure Effect On Apollo	Possible Crew Action
					B+ on output	Recovery	Loss of IF clipper test signal, loss of HF transmit signal	Loss of HF voice transmit mode beyond line of sight; line-of-sight redundancy provided by VHF/AM		
Crystal filter	513-2427-006	718H-1E		Filter RF signal	Loss of signal		Loss of RF output test signal; loss of HF transmitter signal	Loss of HF voice transmit mode beyond line of sight; line-of-sight redundancy provided by VHF/AM		
					Decreased signal		Decreased HF transmitter signal	Decreased HF transmitter capability, possible loss of function		
					Distorted signal		Distorted HF transmitter signal	Distorted HF transmitter capability; possible loss of function		
Clipper	513-2427-006	718H-1E		Increase modulation power	Loss of signal		Loss of RF output; IF clipper test signals; loss of HF transmit signal	Loss of HF voice transmit mode beyond line of sight, line-of-sight redundancy provided by VHF/AM		
					Decreased signal		Slightly decreased HF transmit signal	Decreased HF transmitter output		
					Distorted signal		Slightly distorted HF transmit signal	Distorted HF transmit signal		
					Clipper oscillates		Loss of RF output, IF clipper test signals; loss of HF transmit signal	Loss of HF voice transmit mode beyond line of sight, line-of-sight redundancy provided by VHF/AM		

[redacted]

Table 12.12 HF Transceiver/Receiver Module Failure Effects Analysis (Cont)

Item	Drawing Number	Elect. Reference Desig	Failure Detection	Function	Failure Type	Mission Phase	Failure Effect On Component Performance	Failure Effect On Sub-Systems Performance	Failure Effect On Apollo	Possible Crew Action
					B+ on output	Recovery	Loss of RF output test signals, loss of HF transmit signal	Loss of HF voice transmit mode beyond line of sight; line-of-sight redundancy provided by VHF/AM		
Mixer	513-2427-006	718H-1E		Shift and mix IF to RF frequency	Loss of signal		Loss of RF output test signal; loss of HF transmit signal	Loss of HF voice transmit mode beyond line of sight; line-of-sight redundancy provided by VHF/AM		
					Decreased signal		Decreased HF transmit signal	Decreased HF transmitter output, possible loss of function		
					Distorted signal		Distorted HF transmitter signal	Distorted HF transmitter output; possible loss of function		
					Mixer oscillates		Loss of RF output test signal and PA test signal; loss of HF transmit signal	Loss of HF voice transmit mode beyond line of sight; line-of-sight redundancy provided by VHF/AM		
RF amplifier	513-2427-006	718H-1E		Amplify RF signal	Loss of signal		Loss of RF output test signal and PA test signal, loss of HF transmit signal	Loss of HF voice transmit mode beyond line of sight, line-of-sight redundancy provided by VHF/AM		
					Decreased signal		Decreased HF transmit signal	Decreased HF transmitter output; possible loss of function		
					Distorted signal		Distorted HF transmit signal	Distorted HF transmitter output; possible loss of function		

CONFIDENTIAL

CONFIDENTIAL

Table 12.12 HF Transceiver/Receiver Module Failure Effects Analysis (Cont)

Item	Drawing Number	Elect Reference Desig	Failure Detection	Function	Failure Type	Mission Phase	Failure Effect On Component Performance	Failure Effect On Sub-Systems Performance	Failure Effect On Apollo	Possible Crew Action
					Amplifier oscillates	Recovery	Loss of RF and amplifier output test signals; loss of HF transmit signal	Loss of HF voice transmit mode beyond line of sight; line-of-sight redundancy provided by VHF/AM		
					B+ on output		Loss of PA test signal; loss of HF transmit signal	Loss of HF voice transmit mode beyond line of sight; line-of-sight redundancy provided by VHF/AM		
Relay latching (PA module)	513-2424-005	718H-1E		T/R switching	Contact failure (sticking)		Loss of either transmitter or transceiver mode	Loss of either HF transmitter or transceiver voice beyond line of sight; line-of-sight redundancy provided by VHF/AM		
					Coil failure		Loss of transmit operation	Loss of HF voice transmit mode beyond line of sight; line-of-sight redundancy provided by VHF/AM		

[redacted]

~~CONFIDENTIAL~~

Table 12.13 PCM Telemetry Failure Effects Analysis

Item	Drawing Number	Elect. Reference Desig	Failure Detection	Function	Failure Type	Mission Phase	Failure Effect On Component Performance	Failure Effect On Sub-Systems Performance	Failure Effect On Apollo	Possible Crew Action
PCM telemetry equipment				The PCM telemetry equipment pulse code modulates all data prior to transmission to earth		All phases except recovery		Loss or degradation of ability to digitize analog data or process digital data prior to transmission to earth	Loss of all or part of data	Limited transmission of data by voice, TV link and the visual displays; use of data storage equipment or logs to record and store data
High-level analog gates (13)				Multiplexes 0-5 v d-c data from transducers and signal conditioners	Open or short output circuit		Loss of a portion of the high-level analog data	Same	Loss of or degradation to alternate means of detecting critical failures in the spacecraft	
Low-level analog gates (5)				Multiplex 0-40 mv data from transducers	Open or short output circuit		Loss of a portion of the low-level analog data	Same		
Clamped amplifier				Amplifies the multiplexed low-level analog data	No output, improper gain		Loss of degradation of all low-level data	Same		
High-speed gates				Multiplexes high-level analog data and amplified low-level analog data	Open or short output circuit		Loss of all or part of the analog data	Same		
Row and column drivers (2)				Drives high-speed gates and analog matrix cores according to format selected manually or automatically	No output, low gain		Causes loss or degradation of all analog data	Same		
Analog/digital coder				Digitizes all multiplexed analog sensory data	Open or short output circuit		Causes loss or inaccuracy of all analog data	Same		
Digital multiplexer				Multiplexes digital data and analog/digital coded data	Open or short output circuit		Causes loss of all or part of data	Same		
Programmer counters (2)				Supplies synchronization of commands to the analog and digital multiplexers, the analog/digital coder, and the shift register	Open or short circuit		Loss or degradation of all data	Same		
Programmer matrix (5)				Provides synchronization of commands with automatic and manual format changes	Open or short output circuit		Loss of degradation of all data	Same		

~~CONFIDENTIAL~~

Table 12.13 PCM Telemetry Failure Effects Analysis (Cont)

Item	Drawing Number	Elect. Reference Desig.	Failure Detection	Function	Failure Type	Mission Phase	Failure Effect On Component Performance	Failure Effect On Sub-Systems Performance	Failure Effect On Apollo	Possible Crew Action
Programmer miscellaneous				Provides additional "and" gates, "or" gates, and control circuits needed to synchronize and control commands.	Open or short output circuit	All phases except recovery	Loss or degradation of all data	Loss or degradation of ability to digitize analog data or process digital data prior to transmission to earth	Loss of all or part of data	Limited transmission of data by voice, TV link and the visual displays; use of data storage equipment or logs to record and store data
Calibration generator				Provides continuous calibration and fault isolation of analog channels	Open, short, or improper output		Causes inaccuracy of high-level and/or low-level analog data or inability to isolate defective module			
Power supply				Provides conversion of 3-phase, 400 cycles/second to the required d-c supply voltage	No output, improper output		Causes loss or degradation of all data			
Output shift register				Provides two identical NRZ serial data output channels and a split-phase output channel	Open or short output circuit		Causes loss or degradation of data			

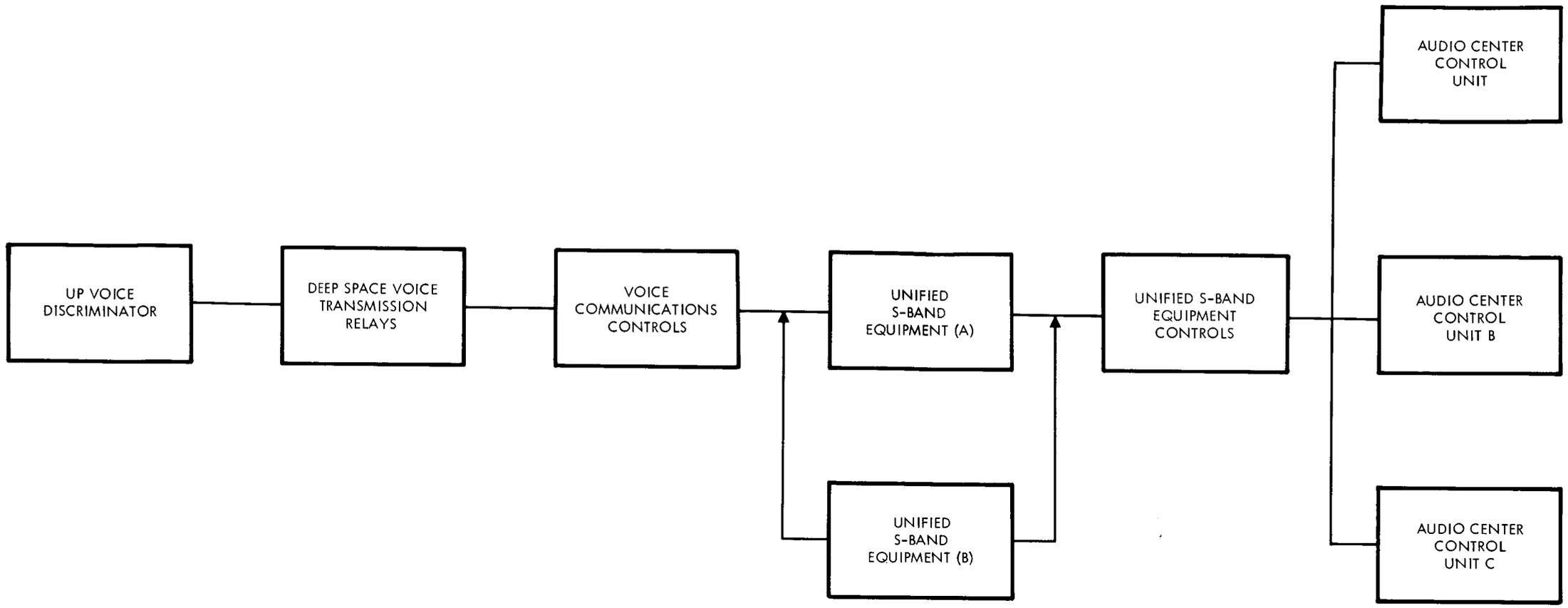

FOLD OUT #1

* THESE

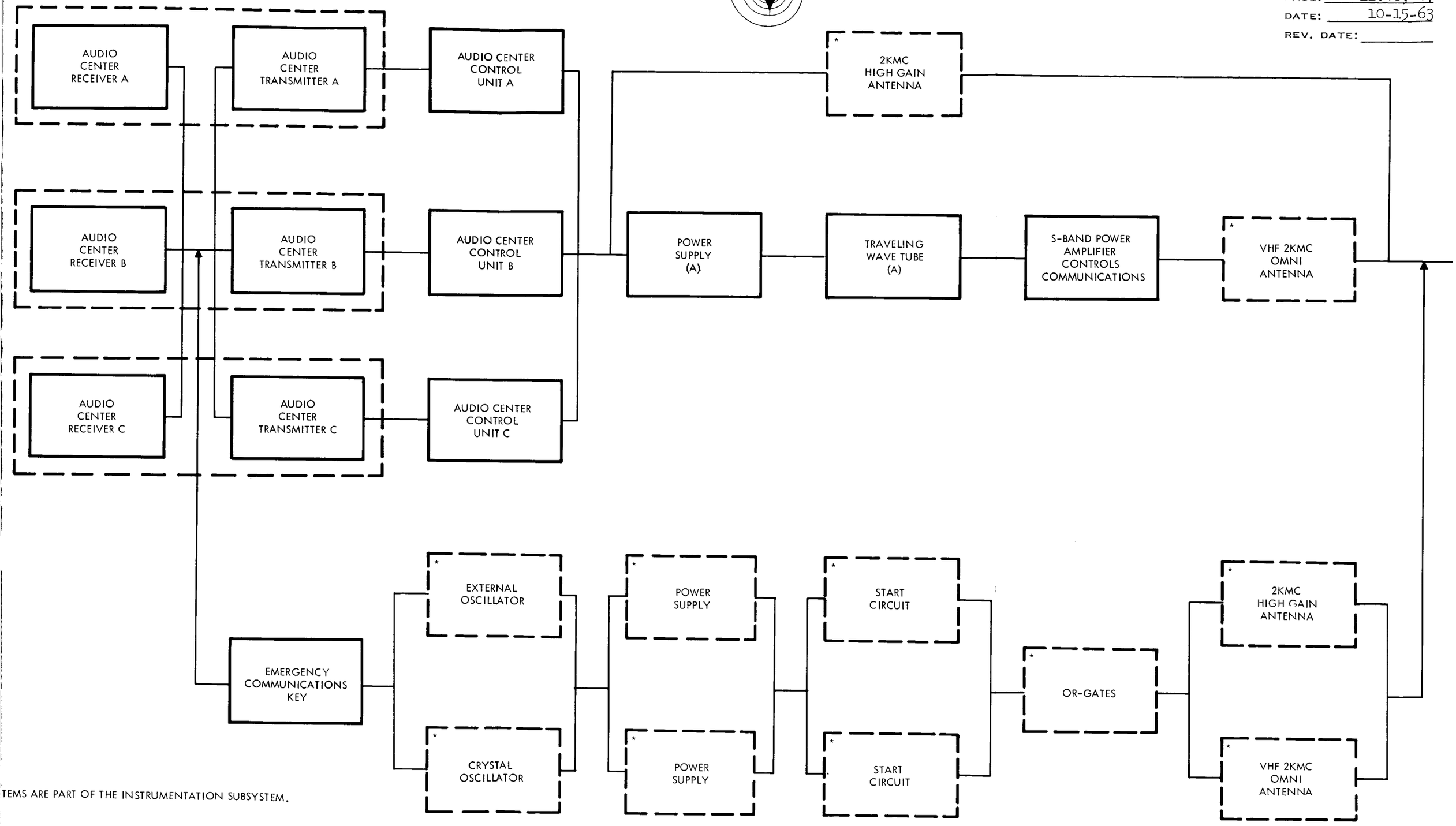

TEMS ARE PART OF THE INSTRUMENTATION SUBSYSTEM.

FOLD OUT #2

Figure 12.1 Communications and Data Subsystem Subassemblies Logic Diagram

12.3.1 Subassemblies Logic Diagram (cont)

The voice capability is supplied by the unified S-band equipment (USB) and associated components. Voice transmission is accomplished in the following manner: The audio voice signal is amplified by audio center equipment amplifiers in conjunction with the audio control centers. There is an audio center for each crew member. The proper mode of transmission is selected by means of switching relays (PDVR) located in the premodulation processor and associated controls (PDVC).

The voice signal is then modulated and amplified by the unified S-band equipment (either the primary unified S-band transponder or its standby, and the associated controls). The output is fed to either the 2KMC high-gain antenna (HGA) or the 2KMC omni portion of the VHF/2KMC omni antenna (DSC) in conjunction with the S-band power amplifier, which comprises a traveling-wave tube and its alternate, a power supply, and associated controls. The S-band power amplifier is necessary to allow the 2KMC omni antenna to radiate satisfactorily at lunar distances.

The audio link of the transmission function may also be accomplished by the emergency communications key (KEY) and a portion of the central timing equipment in conjunction with the HGA or the DSC. The central timing equipment subassemblies supply the carrier for the KEY. Voice reception is obtained in the same manner with the following exceptions: (1) the audio receiving amplifiers are utilized, (2) the S-band power amplifier is not necessary for reception utilizing the DSC, and (3) the up-voice discriminator is used instead of the PDVR and PDVC.

The tracking and ranging aid is supplied by a portion of the S-band equipment in conjunction with either antenna.

12.3.2 Component Logic Diagrams

The reliability logic diagrams for each component of the communications and data subsystem are given in Figures 12.2 through 12.29. Where possible, the diagrams have been constructed on the "spareable" subassembly level.

Subassemblies which are not spareable have been denoted by enclosure of double solid lines. Any group of subassemblies that must be spared as a unit has been denoted by an enclosure of dotted lines. When portions of a module appear in different components each portion is denoted by enclosure by dotted lines with a reference letter at the upper left hand corner.

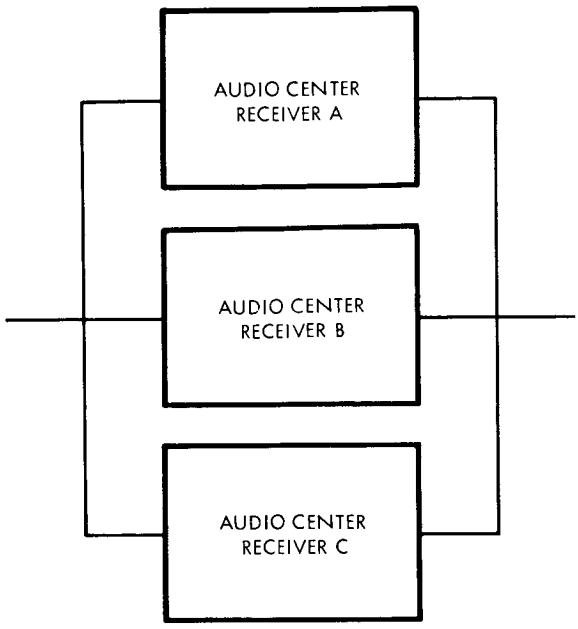

Figure 12.2 Audio Center Receiver (ACRC)

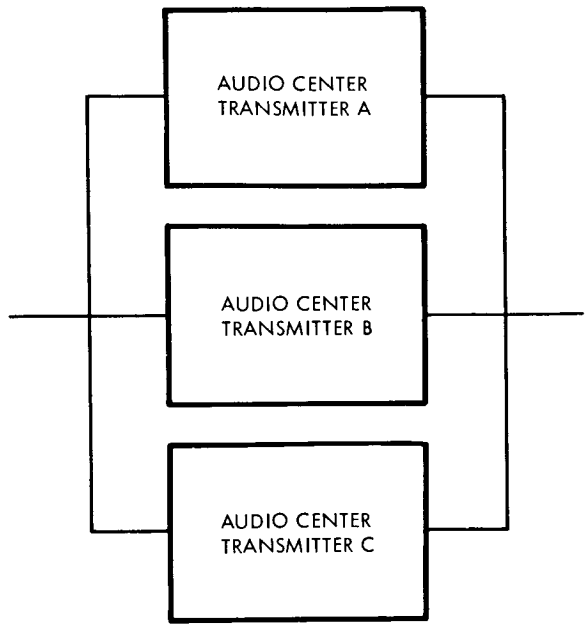

Figure 12.3 Audio Center Transmitter (ACTM)

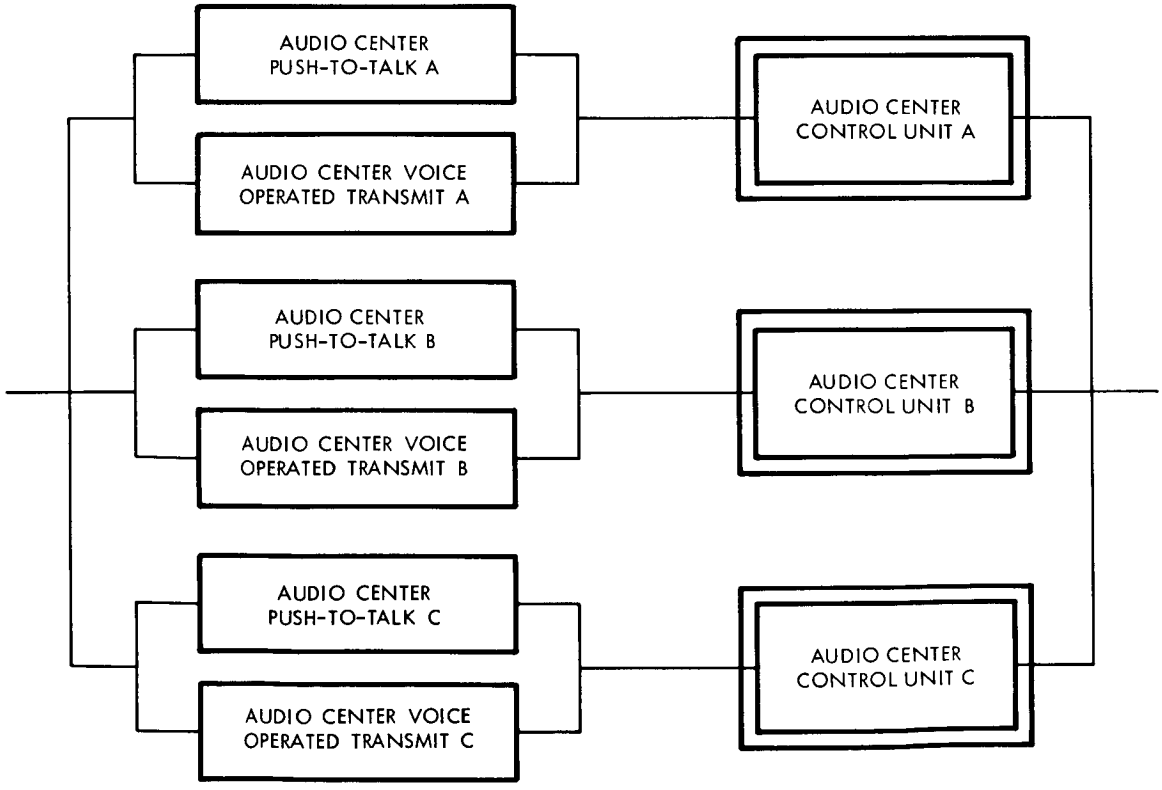

Figure 12.4 Audio Center Voice Operated Transmit and Controls (ACVC)

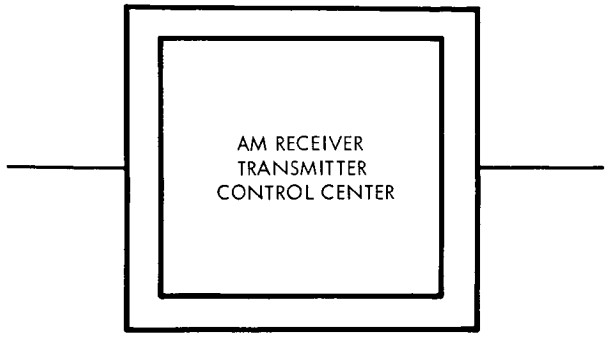

Figure 12.5 VHF/AM Transmitter-Receiver Controls (AMCC)

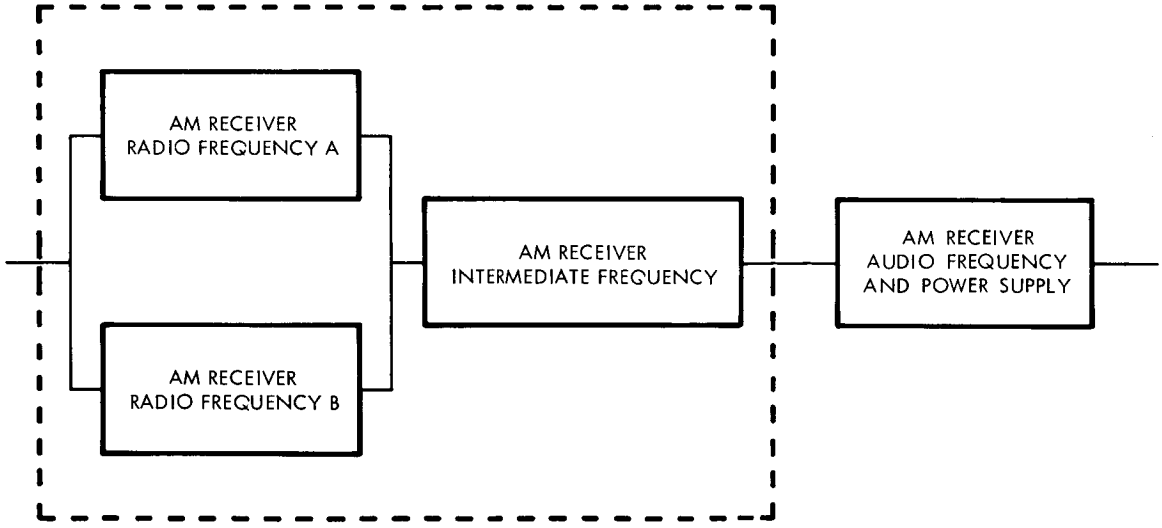

Figure 12.6 VHF/AM Receiver (AMRC)

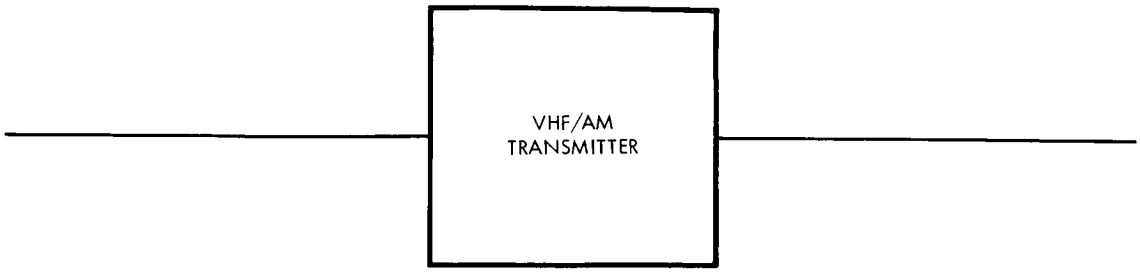

Figure 12.7 VHF/AM Transmitter (AMTM)

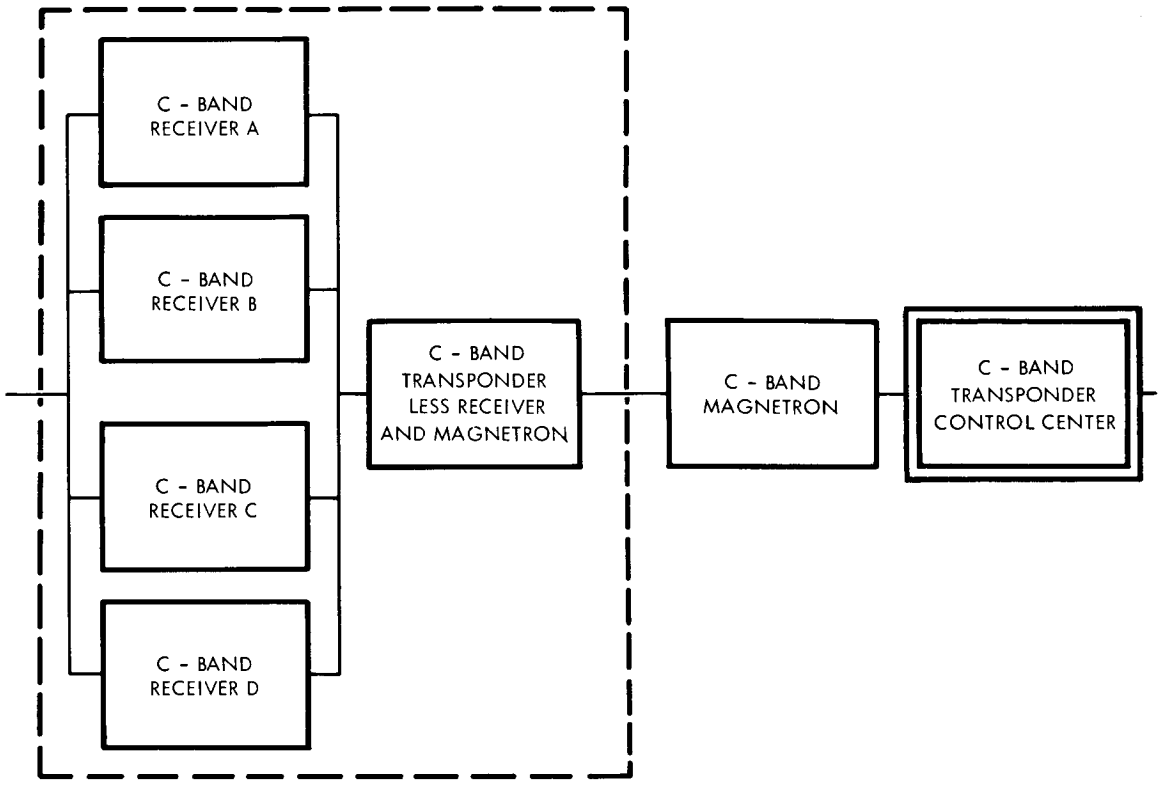

Figure 12.8 C-Band Transponder (CBX)

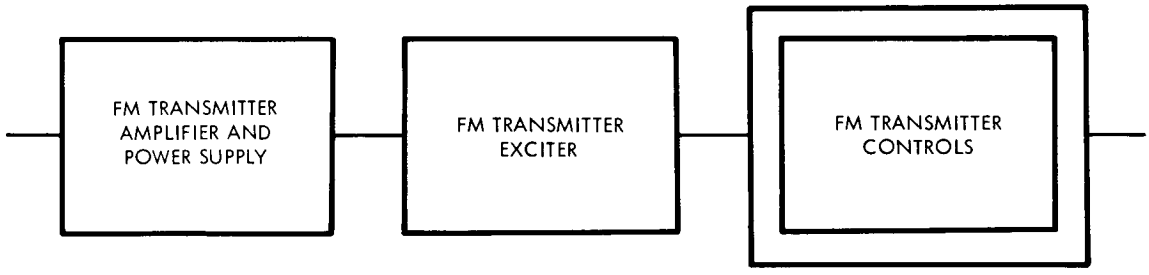

Figure 12.9 VHF/FM Transmitter (FMX)

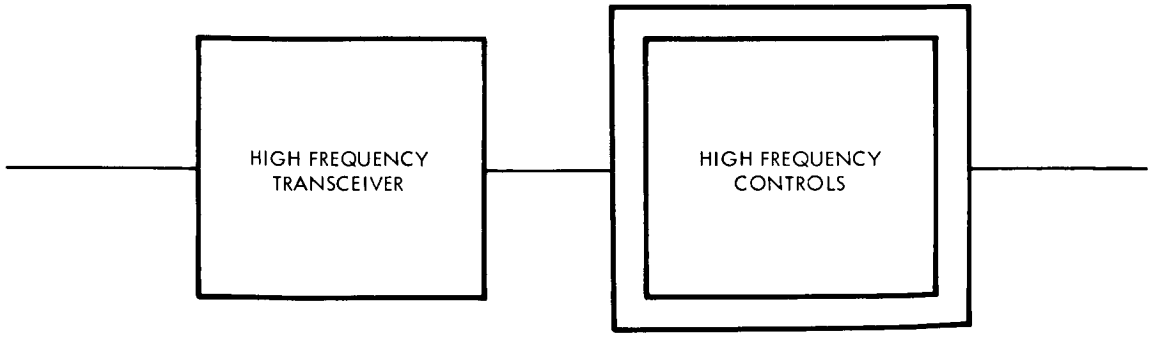

Figure 12.10 High Frequency Transceiver (HFX)

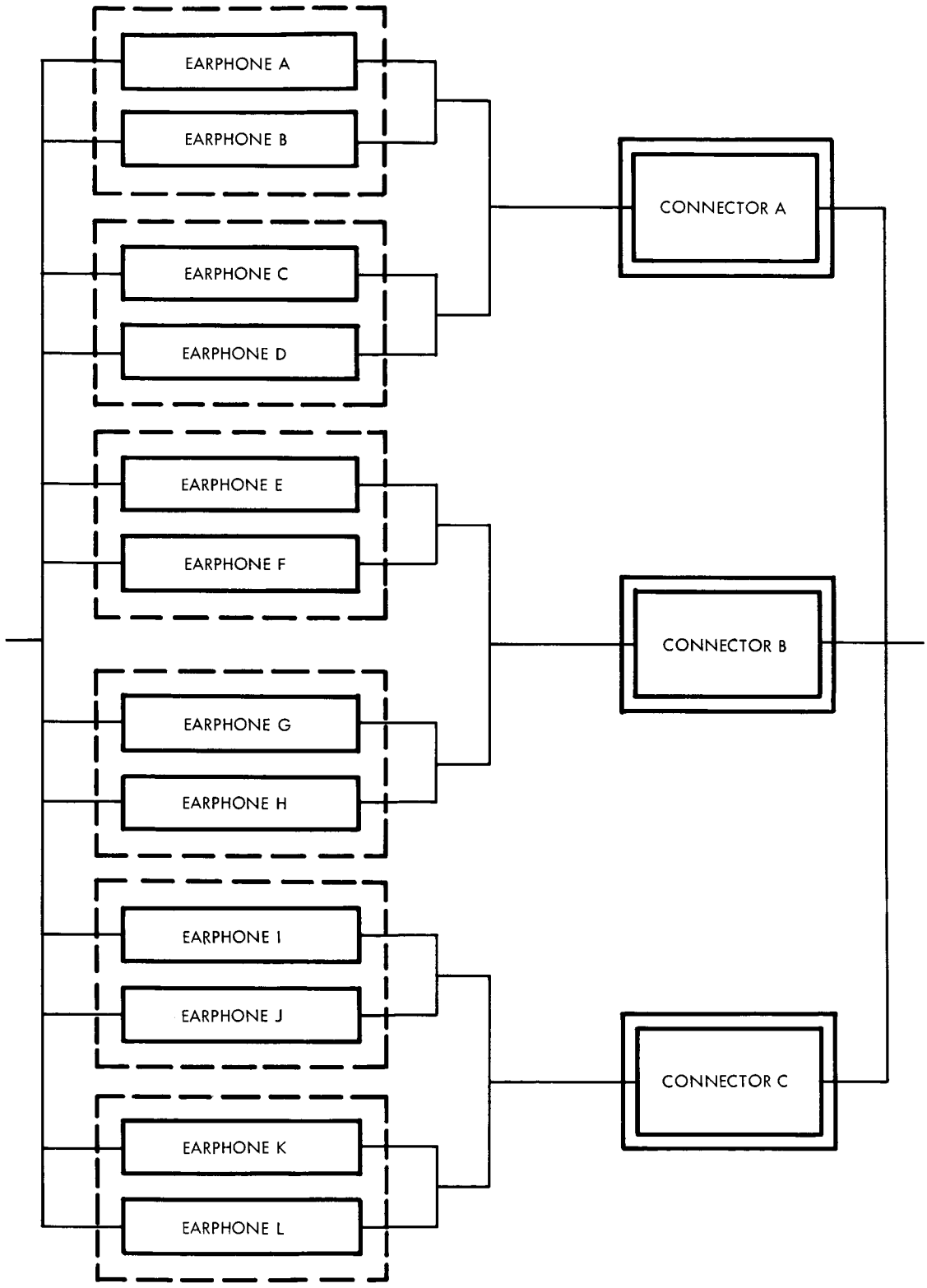

Figure 12.11 Headset (MHHS)

~~CONFIDENTIAL~~

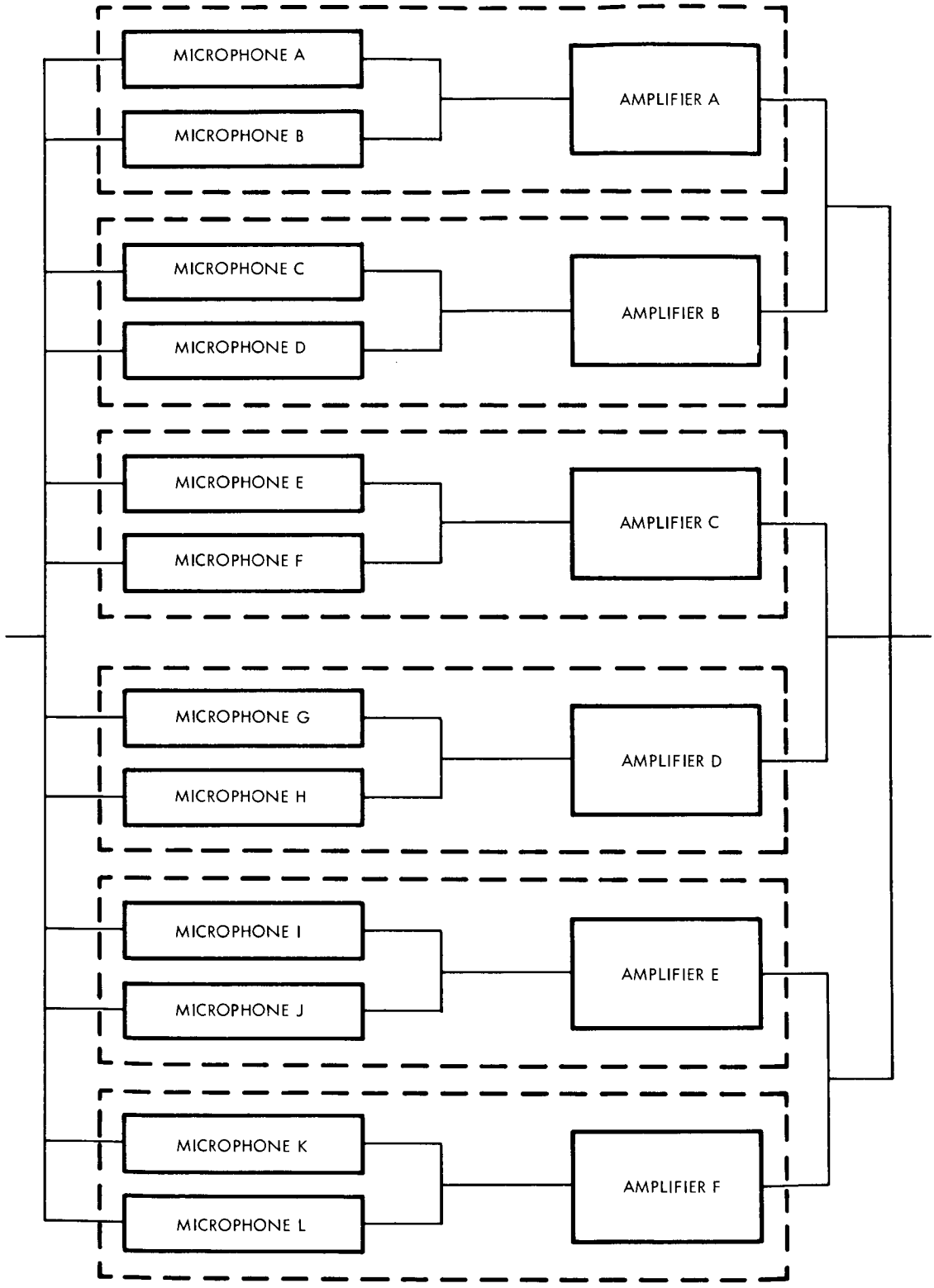

Figure 12.12 Microphone (MHMM)

~~CONFIDENTIAL~~

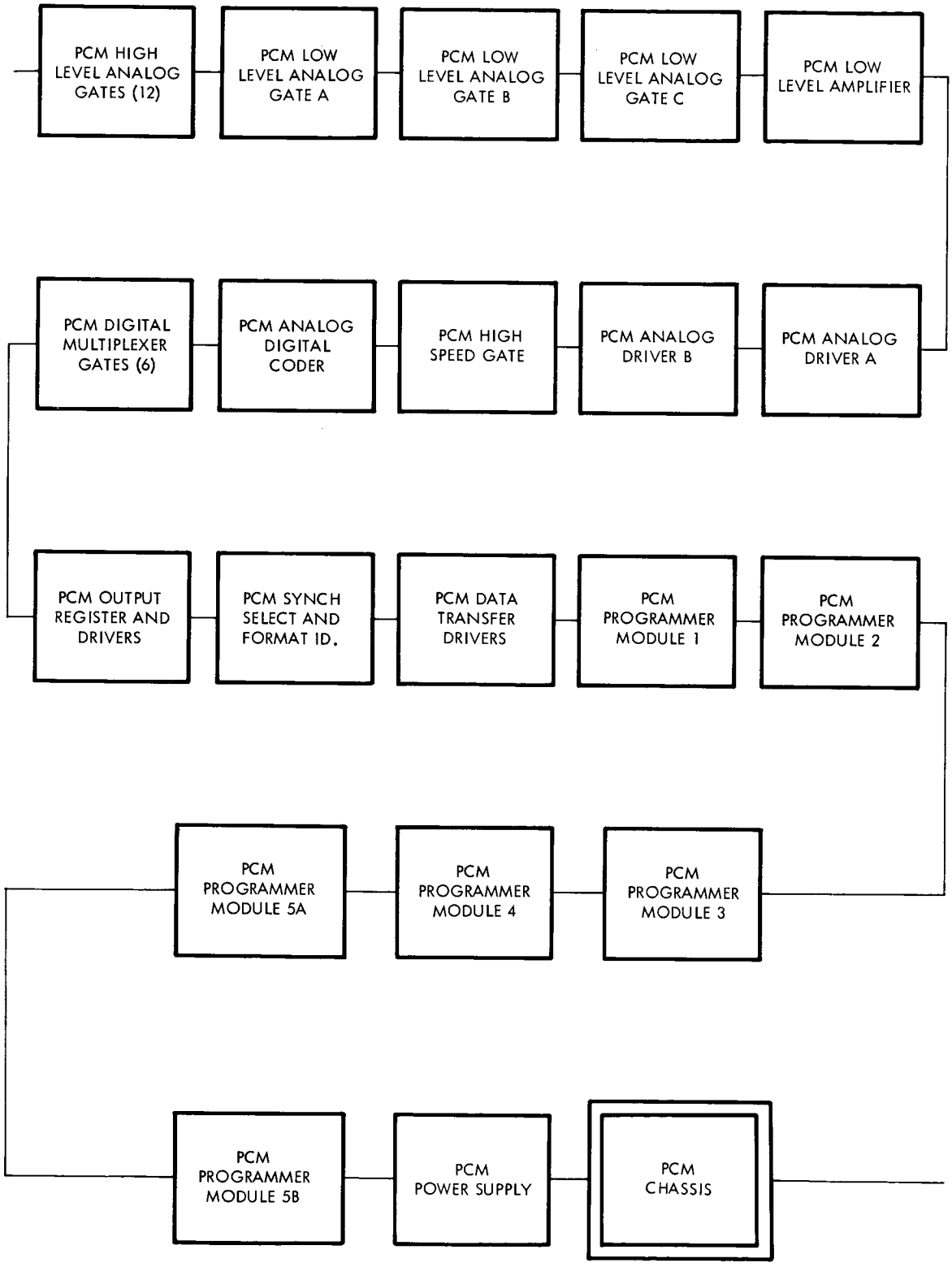

Figure 12.13 Pulse Code Modulation Telemetry (PCM)

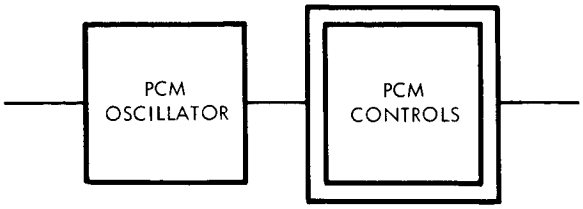

Figure 12.14 Pulse Code Modulation Oscillator (PCMO)

Figure 12.15 Premodulation Processor Data Discriminator (PMDD)

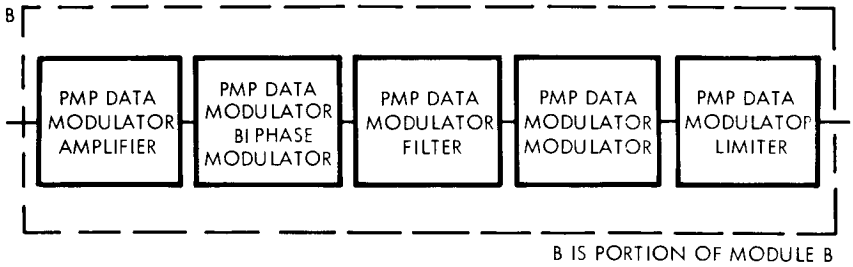

Figure 12.16 Premodulation Processor Data Modulator (PMDM)

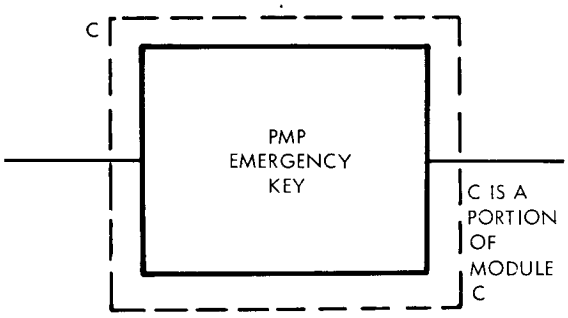

Figure 12.17 Premodulation Processor Key (PMEK)

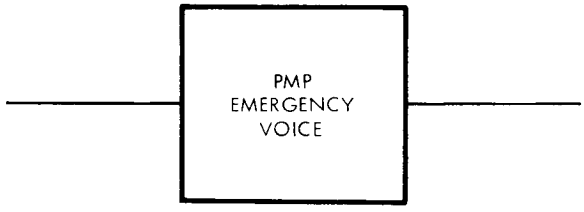

Figure 12.18 Premodulation Processor Voice (PMEV)

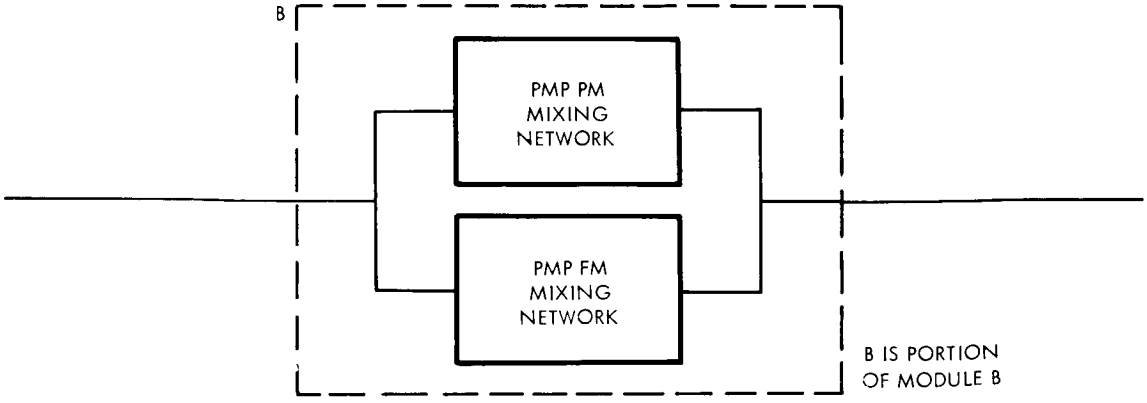

Figure 12.19 Premodulation Processor Network (PMMN)

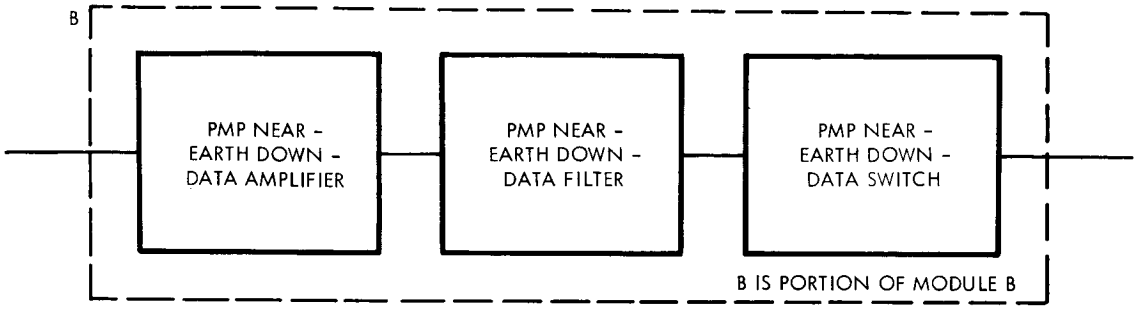

Figure 12.20 Premodulation Processor Near-Earth Down-Data (PMND)

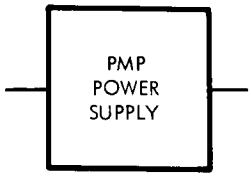

Figure 12.21 Premodulation Processor Power Supply (PMPS)

Figure 12.22 Premodulation Processor Voice Discriminator (PMVD)

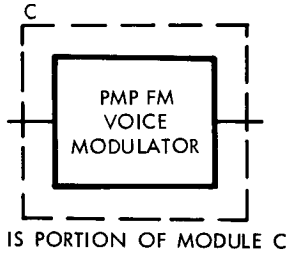

Figure 12.23 Premodulation Processor Voice Modulator (PMVM)

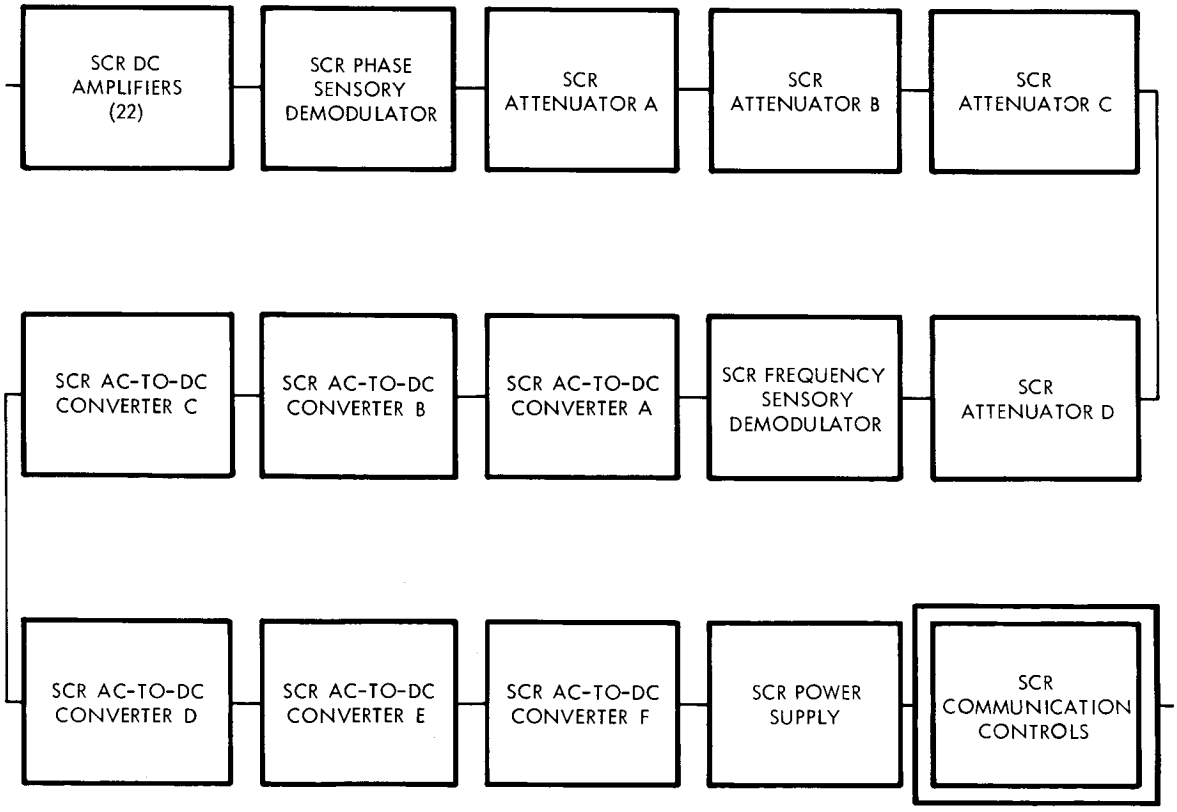

Figure 12.24 Signal Conditioners (SCR)

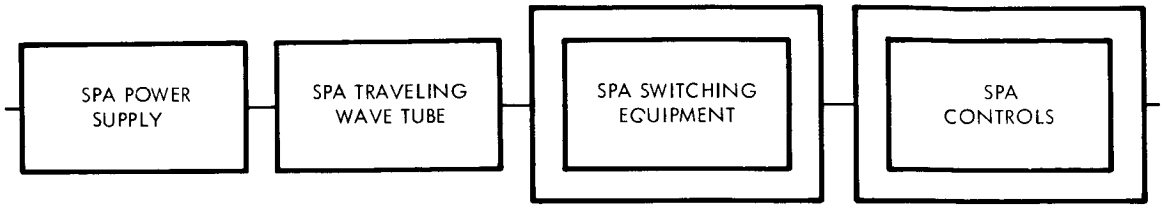

Figure 12.25 S-Band Power Amplifier (SPA)

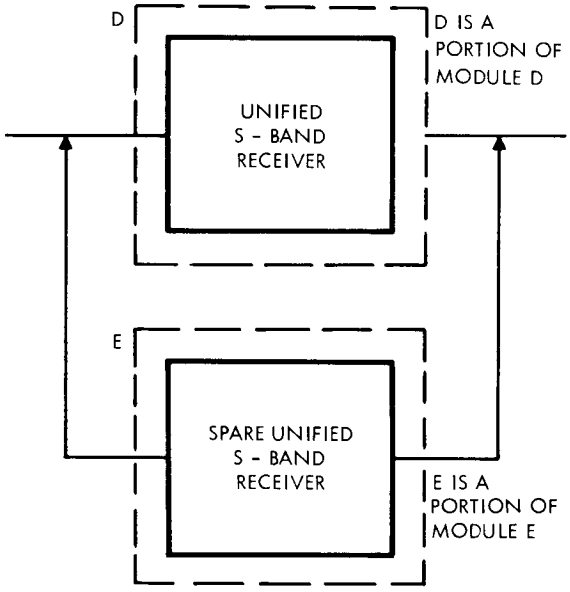

Figure 12.26 Unified S-Band Receiver (USBR)

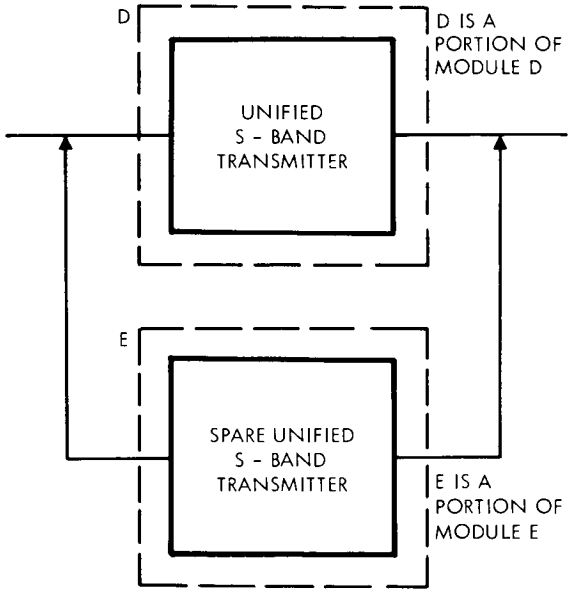

Figure 12.27 Unified S-Band Transmitter (USBT)

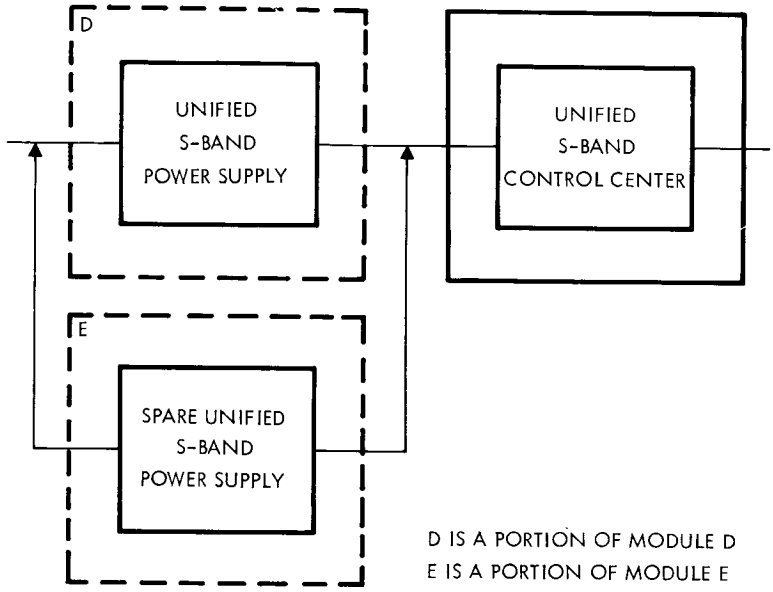

Figure 12.28 Unified S-Band Power Supply and Controls (USPC)

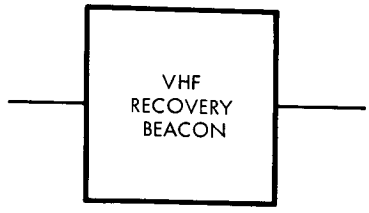

Figure 12.29 VHF Recovery Beacon

12.4 Qualification Testing

Qualification tests on the communications and data subsystem conform to the general requirements of MIL-R-27542 and include the following:

1. Calibration tests
2. Environmental tests
3. Electromagnetic interference
4. Susceptibility tests
5. Mission simulation-life tests

The number of test systems is predicated on the requirement to assess compliance with the procurement specification both in the normal and off-limit modes of operation. The number of qualification test samples of the communications and data subsystem components is based on the criticality index, limited life requirements, and service life considerations.

12.4.1 Reliability Assessment Models

Figure 12.30 depicts the reliability assessment model for the telemetry of the communications and data subsystem. Figure 12.31 depicts the reliability assessment model for the communications and data subsystem during the near-earth phase of the mission. Figure 12.32 depicts the reliability assessment model for the communications and data subsystem during the deep-space phase of the mission. Figure 12.33 depicts the reliability assessment model for the communications and data subsystem during recovery.

12.4.2 Criticality and Hardware Requirements

Table 12.14 exhibits the system parameters for qualification testing and designates the criticality class, as defined in subsection 2.4 of SID 62-109-3 for the components of the subsystems listed. The table enumerates the hardware requirements for a minimum qualification program as established in subsection 2.5 of SID 62-109-3. The distribution of the hardware through the subsystem qualification test phases, as described in subsection 2.3 of SID 62-109-3, is shown. The location of the components in the spacecraft is indicated by spacecraft zone numbers as defined in subsection 4.2 of SID 62-109-3.

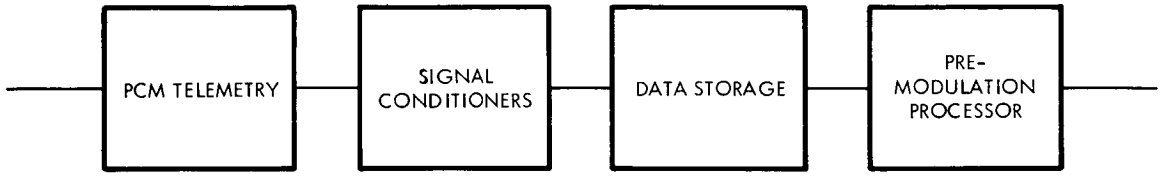

Figure 12.30. Telemetry Assessment Model

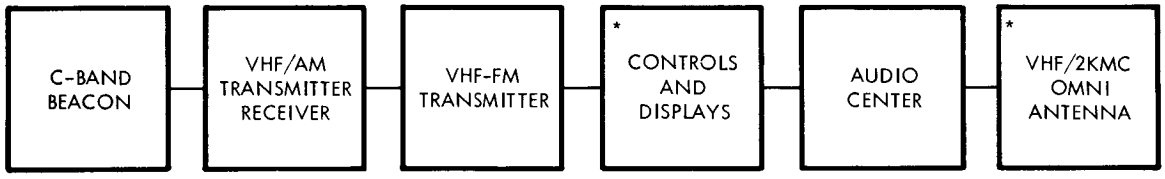

* THESE ITEMS ARE PART OF THE INSTRUMENTATION SYSTEM (SECTION 13)

Figure 12.31. Near-Earth Assessment Model

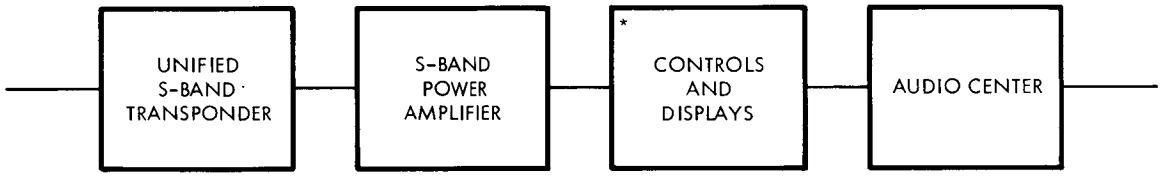

*THIS ITEM IS A PART OF THE INSTRUMENTATION SYSTEM (SECTION 13)

Figure 12.32. Deep-Space Assessment Model

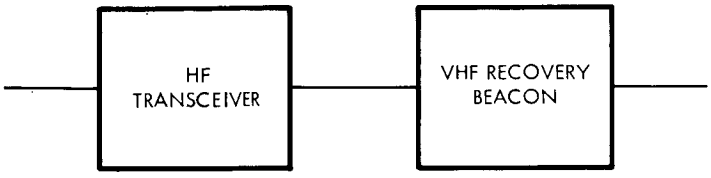

Figure 12.33 Recovery Assessment Model

Table 12.14 Communications and Data Subsystem Parameters for Qualification Testing

Component	Spacecraft Zone	Criticality	Required Hardware	Qualification Test Phase Distribution		
				A-1	A-2	B
Audio center equipment	2	2	4	2	2	1
VHF/FM transmitter	2	3	6	3	2	2
VHF/AM transmitter-receiver	2	2	7	3	2	3
C-Band transponder	2	2	5	2	2	2
DSIF transponder	2	2	7	3	2	3
DSIF power amplifier	2	2	7	3	2	3
VHF recovery beacon	2	3	5	3	2	1
HF transceiver	2	3	5	3	2	1
Premodulation processor	2	2	7	3	2	3
Signal conditioners	2	3	5	2	2	2
Data storage	2	3	5	2	2	2
Communication control panel	2	3	6	3	2	2
Audio control panel	2	3	6	3	2	2
PCM telemetry	2	3	5	3	2	1
Source	(Reissued 6/30/63) SID 62-109-3 Pg. 5-64					

12.4.3 Qualification Test Schedule

Figures 12.34 and 12.35 display the qualification test schedules for the subsystems of the communications and data system and define the test utilization of the hardware enumerated in Table 12.14. The specific test levels to be applied in qualification testing are found in the tables of environmental test criteria in subsection 4.2 of SID 62-109-3 and are a function of the zone location of the equipment in the spacecraft. The zone numbers of the communications and data subsystems and components are given in Table 12.14.

~~CONFIDENTIAL~~

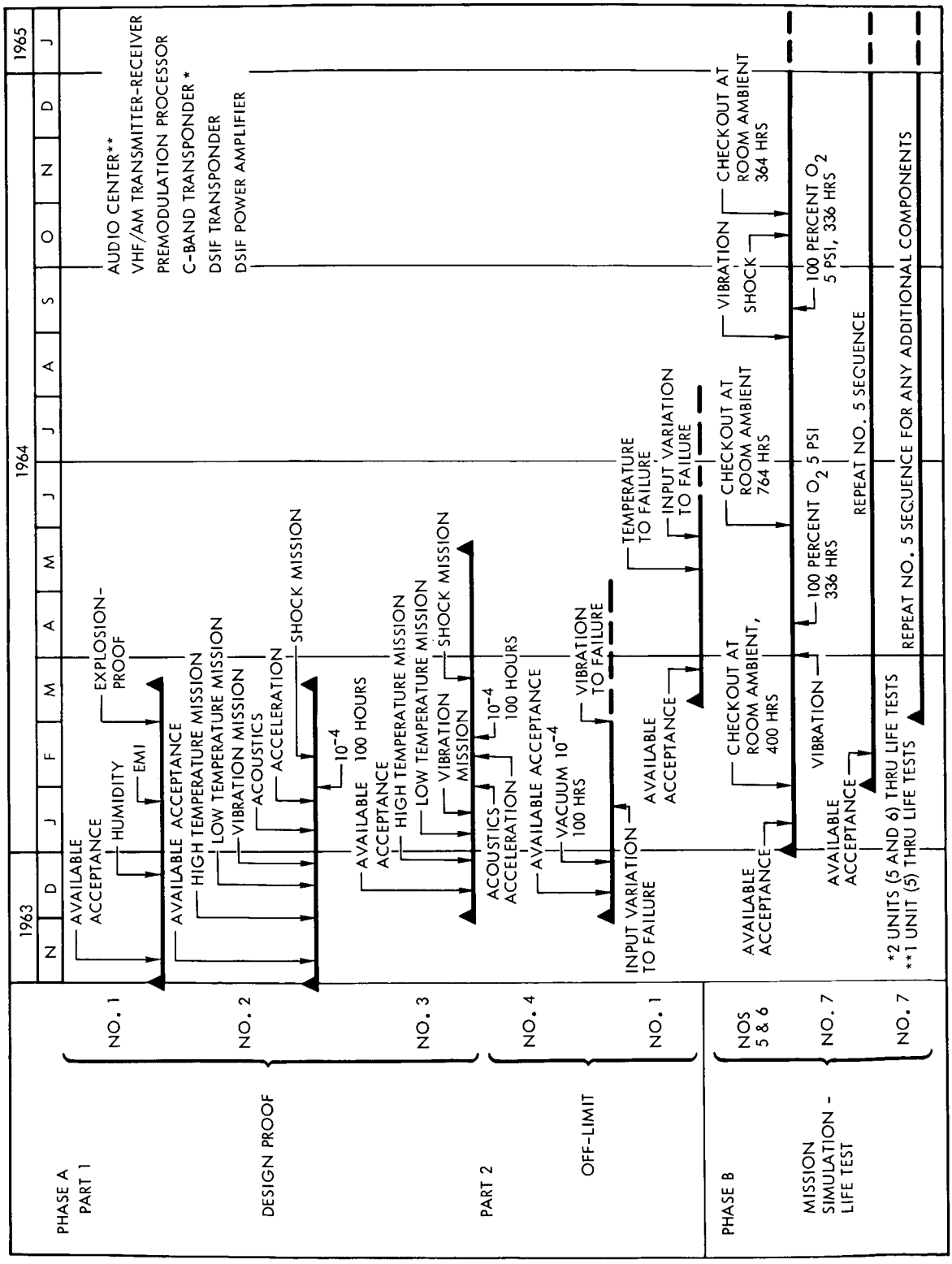

Figure 12.34 Communications and Data Subsystem Qualification Test Schedule (Criticality 2)

~~CONFIDENTIAL~~

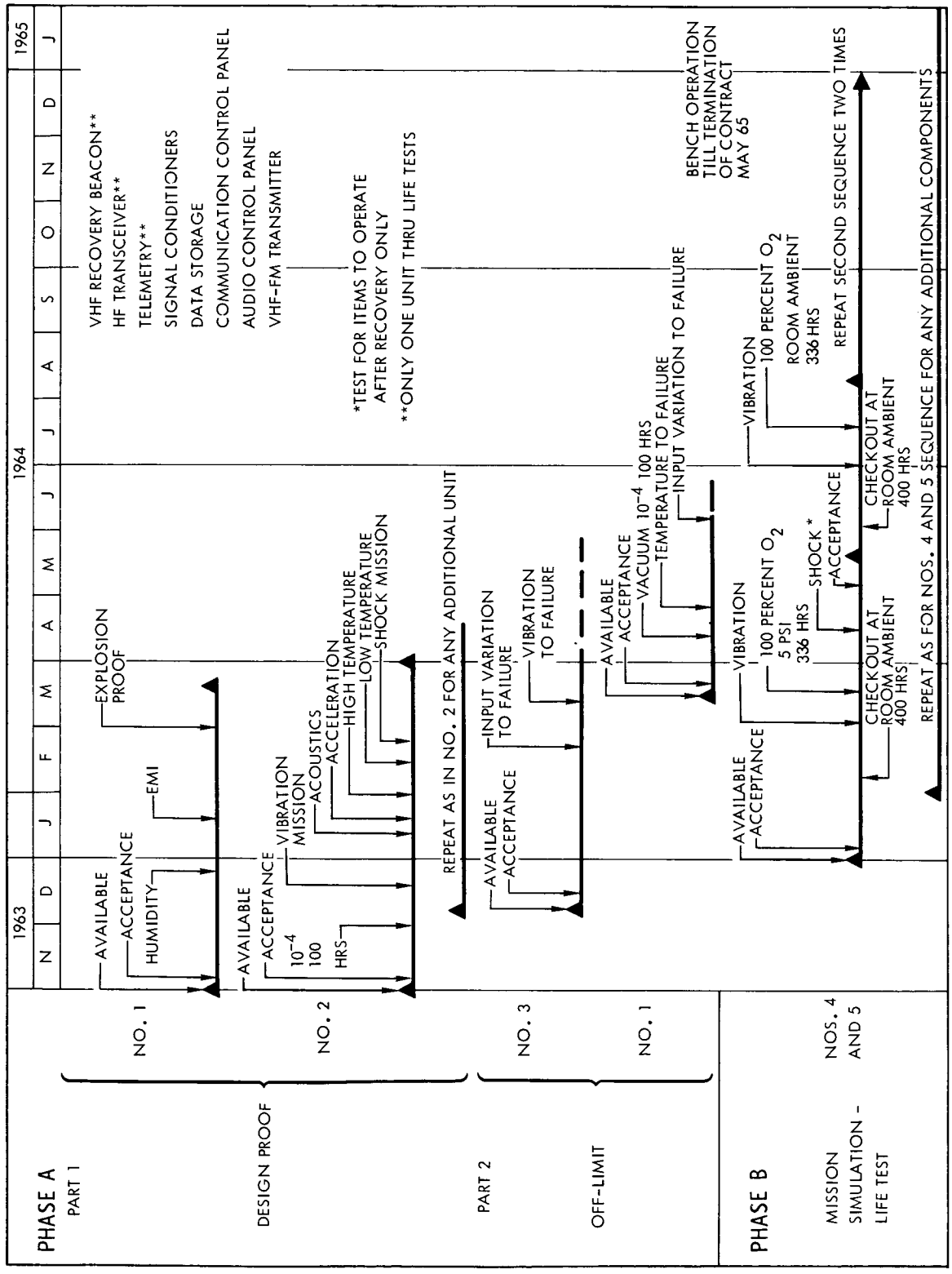

Figure 12.35 Communications and Data Subsystem Qualification Test Schedule (Criticality 3)

LIST OF CURRENT PAGES

Page No.	Date	Revised	Classification

SECTION 13.0

INSTRUMENTATION SUBSYSTEM

13.1 Introduction

Table 13.1 summarizes in tabulated form the reliability analysis of the components constituting the instrumentation subsystem. Discussions of the reliability studies conducted to date will be found under the respective component name headings that follow. The latter part of Section 13.0 outlines the qualification test program for the instrumentation subsystem. The Apollo reliability program criteria and techniques and the related ground qualification test plans are discussed in Section 1.0 of this manual.

13.2 Central Timing Equipment

The redundancy techniques illustrated in Figure 13.1, CTE logic diagram, indicate that the apportioned reliability of 0.9999995 can be achieved. Weight and power requirements can be met through the use of integrated circuits. However, sufficient information to substantiate indicated failure rates may be difficult to obtain. Information in this area is under investigation.

13.3 In-Flight Test System

The present system incorporates 225 individual comparator circuits, allowing that number of measurements to be made. It diagnoses indicated failure to a one - to three-module level. Test points are presently being defined and will be influenced by criticality, accessibility, and maintainability.

13.3.1 Configuration Analysis

The manual test set and its associated test panel have been deleted, with an associated decrease in diagnostic capability. The present configuration, however, may allow use of the system voltmeter at other than the 225 hardwired test points. A single measurement by the system must not have a probability of failure greater than .00012. This figure is based on high-reliability parts and an assumed duty cycle of approximately 10 percent (40 hours). Table 13.2 lists the components of the in-flight test system and provides apportioned mission success values and the related time of component operation. Since the IFTS is a precision analog system, redundancy on a parts level is impractical and all the parts in one channel are in series

TABLE 13.1

INSTRUMENTATION SUBSYSTEM MISSION RELIABILITY (LOR)

SHEET 1 OF 2

COMPONENT NAME	ITEMS	MISSION TIMES (HRS.)	FAILURE RATE PER 10^6 HOURS OR CYCLES			RELIABILITY		
			APPORTIONED	PREDICTED	ASSESSED	APPORTIONED	PREDICTED	ASSESSED
INSTRUMENTATION SUBSYSTEM	-	-			N.A.	.995500[B]	-	N.A.
Central Timing**	1	336 hrs.	0.0015	0.0030[1]	N.A.	.9999995	.999999[A]	N.A.
In-Flight Test System	1	40 hrs.	3.0000[1]	3.0000[1]	N.A.	.999880	.999880[A]	N.A.
T.V. System	1	40 hrs.	25.0000	17.7000[1]	N.A.	.999000	.999292[A]	N.A.
Sensor	1	336 hrs.	0.3274	3.6012	N.A.	.998900*	.9987904[A]	N.A.
C-Band Antenna	1	9.7 hrs.	0.1031	0.1031[1]	N.A.	.999999	.999999[A]	N.A.
VHF Recovery Antenna Equip.	1	72.3 hrs.	0.1380	0.0138[1]	N.A.	.999999	.999999[A]	N.A.
2KMC High Gain (Dish) Antenna	1	26.9 hrs.	3.7175	23.5688[1]	N.A.	.999900	.999366[A]	N.A.
VHF Recovery Antenna	1	72.0 hrs.	0.0139	1.000[1]	N.A.	.999999	.999928[A]	N.A.
Radiation Detection	1	200.0 hrs.	0.9500	2.5000[1]	N.A.	.999810*	.999500[A] ***	N.A.
Controls & Displays	1	336 hrs.	0.2976	0.2976[1]	N.A.	.999900*	.999900[A] ***	N.A.

DATA SOURCE:
1. Minuteman

* No Spec. NAA Apportioned by Method "A"
** Quad Redundancy on the part level.
*** Apportioned value used as best estimate for predicted value.
N.A.: Not Available

MATHEMATICAL TECHNIQUE:
A-Logic Diagram and known failure rate data.
B-Analytical Method (Weighted subjective experience)

~~CONFIDENTIAL~~

TABLE 13.1 (CONTINUED)

INSTRUMENTATION SUBSYSTEM MISSION RELIABILITY (LOR)
SHEET 2 OF 2

COMPONENT NAME	ITEMS	MISSION TIMES (HRS.)	FAILURE RATE PER 10^6 HOURS OR CYCLES			RELIABILITY		
			APPORTIONED	PREDICTED	ASSESSED	APPORTIONED	PREDICTED	ASSESSED
Up Date Link	1	336 hrs.	44.6429	23.8095[1]	N.A.	.985000	.992000[A]	N.A.
Entry Monitor Display	1	0.5 hrs.	380.0	190.0[1]	N.A.	.999810	.999905[A]	N.A.

DATA SOURCE:
1. Minuteman

* No Spec. NAA Apportioned by Method "A"
** Quad Redundancy on the part level.
*** Apportioned value used as best estimate for predicted value.
N.A.: Not Available

MATHEMATICAL TECHNIQUE:
A - Logic Diagram and known failure rate data.
B - Analytical Method (Weighted subjective experience)

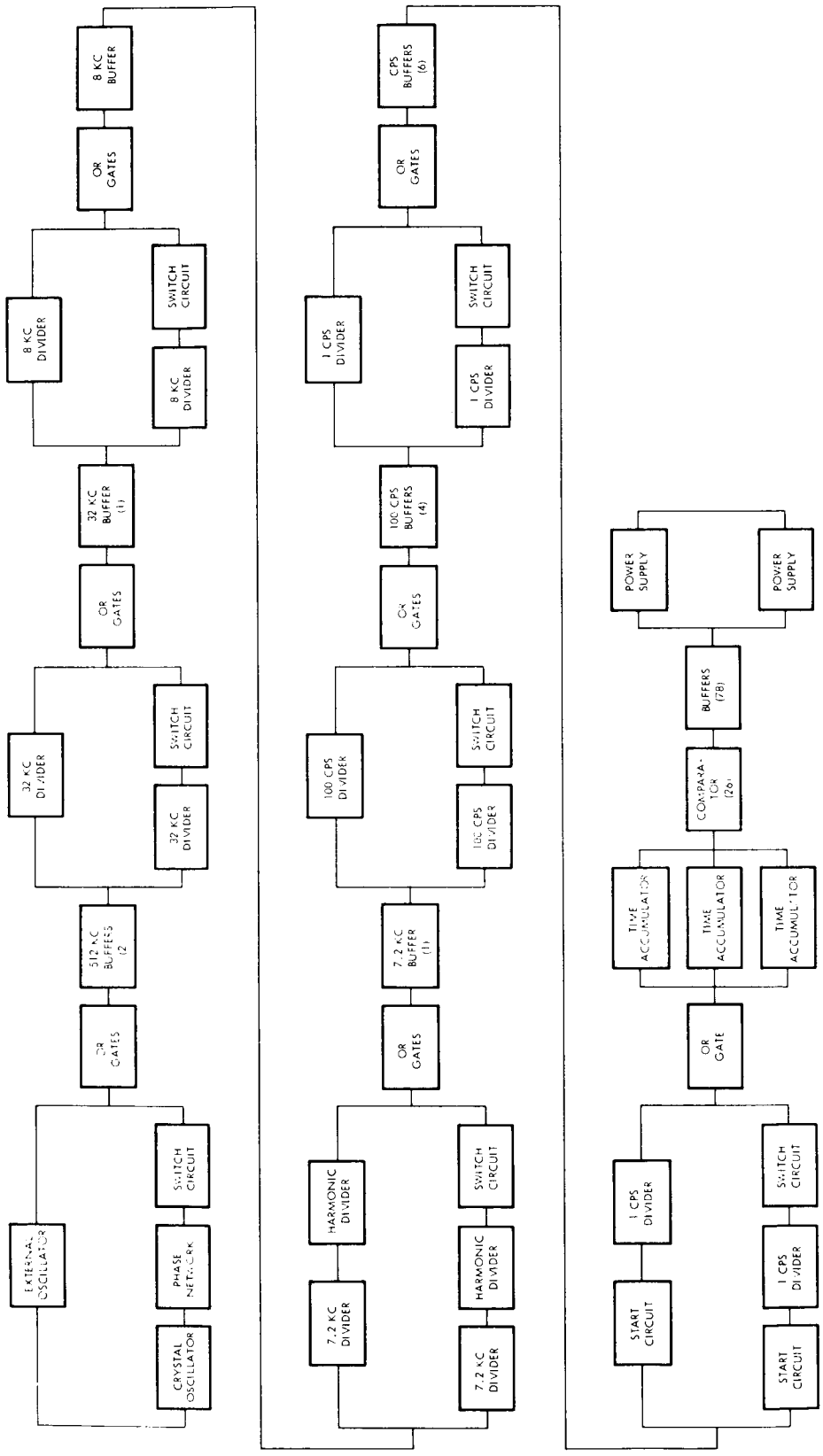

Figure 13.1 CTE Reliability Assessment Model and Logic Diagram

TABLE 13.2
SHEET 1 OF 2

IN-FLIGHT TEST

SUBSYSTEM MISSION RELIABILITY (LOR)

COMPONENT NAME	NO. OF ITEMS	OPERATING TIME (HR. OR CY.)	FAILURE RATE PER 10^6 HOURS OR CYCLES		RELIABILITY	
			APPORTIONED	PREDICTED	APPORTIONED	PREDICTED
IN-FLIGHT TEST SUBSYSTEM	1 Channel				.999880	
Comparator	1	40 hrs.	0.0824		.999997	
Transistor	10	40 hrs.	0.0630		.999998	
Resistor	21	40 hrs.	0.0044		.9999998	
Diode	7	40 hrs.	0.0150		.9999994	
Ref. & Power Supply	1	40 hrs.	0.1264		.999995	
Transistor	7	40 hrs.	0.0630		.999998	
Resistor	25	40 hrs.	0.0044		.9999998	
Diode	11	40 hrs.	0.0150		.9999994	
Capacitor	3	0.0140			.9999994	
Transformer	1	40 hrs.	0.0300		.999999	
Stimuli Generator	1	2 hrs.	0.0964		.9999998	
Transistor	5	2 hrs.	0.0630		.9999999	
Resistor	20	2 hrs.	0.0044		.9999999	
Diode	2	2 hrs.	0.0150		.9999999	
Capacitor	6	2 hrs.	0.0140		.9999999	
Switching						
3 Decks-6 pos.	1	100 cy.	0.0450		.9999955	
20 Decks-16 pos.	2	100 cy.	16.0		.998400	
SPST, Various	4	100 cy.	0.0200		.999998	
SPST, Inhibit	25	1 cy.	0.0500		.9999999	

DATA SOURCE:

1. Minuteman, modified

MATHEMATICAL TECHNIQUE:

A - Logic Diagram and known failure rate data
B - Analytical Method (Weighted subjective experience)

TABLE 13.2
SHEET 2 OF 2

IFT - VOLTMETER

SUBSYSTEM MISSION RELIABILITY (LOR)

COMPONENT NAME	NO. OF ITEMS	OPERATING TIME (HR. OR CY.)	FAILURE RATE PER 10^6 HOURS OR CYCLES		RELIABILITY	
			APPORTIONED	PREDICTED	APPORTIONED	PREDICTED
VOLTMETER, IFT.	1	85 hrs.			.999770	
Transformer	1	85 hrs.	0.0300		.9999974	
Transistor	4	85 hrs.	0.0630		.9999946	
Resistor	19	85 hrs.	0.0044		.9999996	
Diode	9	85 hrs.	0.0150		.9999987	
Capacitor	4	85 hrs.	0.0140		.9999988	
Switch	3	100 cy.	1.0430		.9998957	

DATA SOURCE:
1. Minuteman, modified

MATHEMATICAL TECHNIQUE:
A - Logic Diagram and known failure rate data
B - Analytical Method (Weighted subjective experience)

~~CONFIDENTIAL~~
~~CONFIDENTIAL~~

13.3.1 Configuration Analysis (Continued)

in the reliability model used. No firm design is available, since the vendor has not yet been approved, but on the basis of the proposals received and our own design efforts, estimates have been made of the types and numbers of parts which will be used in the major subassemblies of the system. These estimates, combined with the applicable duty cycles and derating factors, yield the proposed reliabilities of 0.99988 per channel and 0.99977 for the voltmeter which are presented in Table 13.2. In order to obtain the 0.99988 for each channel it was necessary to provide a redundant power supply - reference assembly, but not spare comparators.

Reliability ramifications of the present in-flight test system configuration are being investigated. Among the considerations are spares determination for over-all reliability, equipment availability, adjustment capabilities, crew availability, and abort causing failures (nonmaintainable).

13.3.2 Comparator & Voltmeter Redundancy

A typical voltmeter was analyzed giving a resultant reliability of .99977. The assumption was made that the voltmeter is a functional back-up to any comparator measurement. This allows effective comparator and voltmeter redundancy which results in an achievable reliability exceeding significantly the previously mentioned reliability for a single measurement. The limiting factor to complete redundancy is the unreliability of the self-test feature since there is a finite probability that failure of a comparator will not be discovered through self-test.

These facts were evaluated in consideration of the Apollo requirements and objectives and the resulting numerics were found to be consistent with same. Therefore, it was determined that this preliminary assessment would serve as a realistically achievable reliability apportionment for the IFTS.

13.3.3 Single Sensor & Comparator

In the event of a malfunction indication, the single sensor, illustrated in Figure 13.2 provides a voltage pick-off point to the in-flight test system comparator circuitry which compares the input signal with the reference signal provided by the reference supply. The comparison determines if a signal out-of-tolerance exists. If it does exist, the comparator generates an out-of-tolerance signal. This signal actuates an

indicator light advising the crew of the condition. Each comparator has an inhibit gate that blocks or passes an out-of-tolerance signal if the malfunction is determined to be not critical.

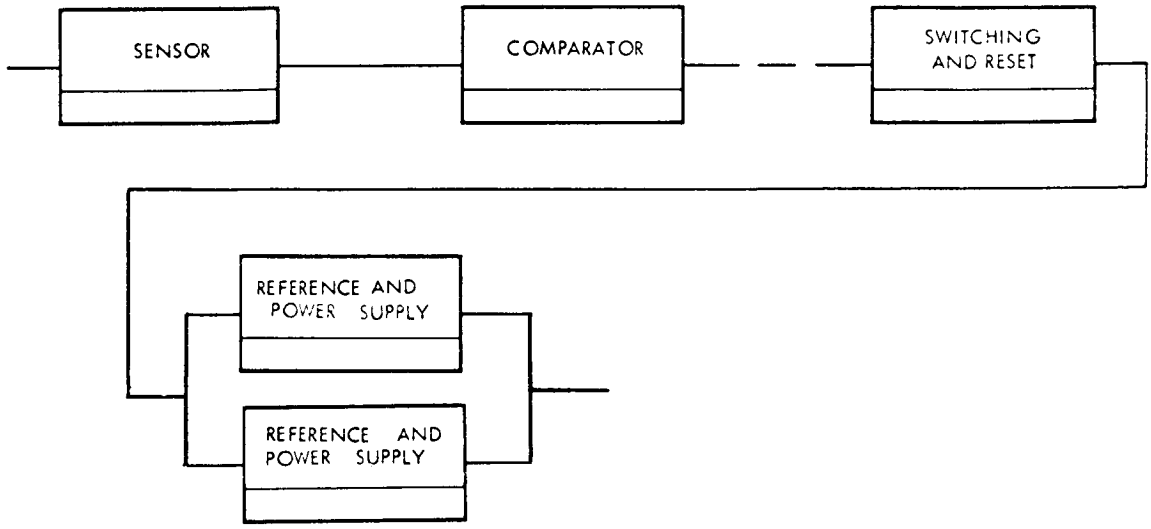

Figure 13.2 Single Sensor and Comparator In-Flight Test System Block Diagram

The IFTS also provides switching and reset circuitry that can transfer any selected analog input or conditioned stimulus signal to the voltmeter for a readout and to the telemetry system for GOSS confirmation. It also can transfer the IFTS stimulus signal into the spacecraft electronic systems to check out systems not actually in use at the time.

The reference and power supply provides the necessary power for the IFTS.

13.3.4 Equipment Availability

Equations have been developed, including the effect of the astronauts' ability to perform in-flight maintenance on the probabilities of mission success and crew safety. These equations were provided for use in setting the design requirements for the in-flight test system. The basic equation for equipment availability is given as

$$E = 1 - (e^{-\mu t}) \cdot (1 - e^{-\lambda T})$$

where

E = Equipment availability

$\mu = 1/\phi$ = Maintenance action rate

ϕ = Mean time to repair - $\frac{\text{total maintenance-action time in hours}}{\text{number of maintenance actions}}$

λ = Failure rate

T = Mission time

t = Maintenance time-constraint

The availability is defined as the probability that a stated percent of the equipment will perform satisfactorily for the time T, with no down time interval exceeding the maintenance time constraint. Thus, equipment availability is a function of reliability and maintainability. Based upon this basic equation, analyses may be performed for evaluation of mission availability, requirements for scheduled maintenance, redundancy factors, and requirements for spares.

13.3.5 Reliability Apportionment - IFTS

A logical apportionment of reliability for the IFTS would result from a simple equation based on the overall reliability requirement for the Apollo as specified by the NASA. This equation would be of the form:

$$R_A = R_I + Q_I R_{IF} P_S P_R P_n$$

Where:

R_A = NASA specified reliability for Apollo

R_I = Inherent design reliability of Apollo

Q_I = Inherent design unreliability of Apollo

R_{IF} = Reliability of the IFTS

P_S = Probability that a spare is provided for any failure that affects mission success

P_R = Reliability of all sub-spares

P_n = Product of other probabilities; e.g., repair can be effected within a time constraint, etc.

Many of these factors are unknown and the solution for RIF is impossible. Therefore, an alternate approach must be taken to establish a reliability requirement commensurate with the mission success and crew safety reliabilities imposed by the NASA. A typical IFTS design was generated to be consistent with the objectives of in-flight maintenance. This design was broken down to the part level and the inherent reliability was assessed assuming high reliability (Minuteman type) parts were used throughout. A single measurement channel (with associated power and stimuli supplies and switching) of .99988 reliability resulted. This numeric was utilized in an analysis of the overall spacecraft electronics systems and found to be compatible with the Apollo objectives and requirements. It therefore serves as an apportioned reliability requirement for an IFTS single channel measurement.

13.4 Television System

The Apollo television camera has been designated nonessential to mission success or crew safety. However, since periodic monitoring of the crew throughout the flight could have ramifications in these reliability areas, a reliability requirement of 0.999 has been imposed on this equipment for a minimum of 40 flight operating hours. The selected supplier of the camera has predicted a reliability closely approximating this requirement. Several nonstandard components must be evaluated and the design finalized before the actual reliability can be assessed. Since the establishment of the reliability requirement, the design has been changed to include oscillator and clock circuits. This timing was previously provided by the Central Timing Equipment. At NASA direction the change was made to allow the camera to be transferred to the LEM. Other design requirements were changed to allow lunar surface operation of the camera.

13.5 Apollo Antennas

13.5.1 Recovery Antenna Equipment

Inputs have been made to the procurement specification for this equipment to ensure contractual obligation of the successful bidder. The inputs include reliability design requirements of 0.999999 for 72-hours minimum operation, environmental conditions for design and packaging, and general quality assurance provisions.

13.5.2 2-KMC High-Gain Antenna

Technical proposals for this equipment from five bidding companies have been evaluated. Each predicted reliabilities in excess of the requirement of 0.9999 for fourteen days of

operation. However, none gave sufficient detailed information to substantiate these claims, and these deficiencies were noted as part of an internally distributed evaluation report. The efforts of the successful bidder will be closely monitored for conformance to the reliability requirement. Preliminary evaluations indicated that the design requirement can be achieved when the back-up hand-held antenna is utilized in the logic diagram of the equipment.

13.6 Radiation Detection Equipment

Sufficient information has been obtained to allow a preliminary apportionment of the radiation detection equipment. The present configuration involves basically two pieces of equipment: the radio detector and the proton detector. Available information indicates that one solar flare is expected during a maximum 14-day lunar mission. Therefore, the probability of a solar flare occurring must be considered 100 percent for a worst-case condition. The radio detector gives approximately 30-seconds warning of a proton shower from a solar flare. With the reaction control subsystem, the crew orients the spacecraft for maximum protection by mass obstruction. Initial proton encounter is detected by four proton detectors, allowing the crew to determine exact angle of collision and, therefore, optimum orientation of the spacecraft. Both types of detector required throughout the foregoing maneuver must be considered essential to crew safety in the event of a solar flare. Assuming equal complexity of the two types of equipment, apportioned reliabilities have been established at 0.99981 for the radio equipment and 0.99981 for each of the four proton detectors.

13.7 Entry Monitor Display

The function and present operational concept of the EMD have been analyzed utilizing the reliability logic diagram for reentry. The EMD is used to monitor reentry trajectory by displaying g loading as a function of velocity. It thus provides the astronaut with the information to determine whether the automatic reentry mode is functioning properly, permitting him to guide the command module manually to avoid skip-out or burn-up, if the automatic mode malfunctions. The required reliability of the EMD has been established based on the predicted reliabilities of the G&N and SCS equipment involved in the re-entry phase. The preliminary prediction of .999905 exceeds the requirement of .99981.

13.8 Failure Effects Analysis

The results of a preliminary failure effects analysis of the instrumentation subsystem at the equipment level are given in Table 13.3.

13.9 In-Flight Testing and Maintenance

A set of reliability logic diagrams related to in-flight testing and maintenance functions for continuity of operation requirements has been constructed for the respective phases of the LOR mission. These diagrams are shown in Figure 13.3. They will be utilized in the overall reliability assessment of the spacecraft. It should be noted that the IFTS is considered in a worst case condition, i.e., some display is required to determine that a failure has occurred. In many cases the astronauts would not require this failure indication prior to IFTS utilization.

13.10 Qualification Tests

13.10.1 Television Equipment and Central Timing Equipment

Qualification tests on the television equipment and CTE conform to the general requirements of MIL-E-5272 and include the following:

1. Calibration tests
2. Environmental tests
3. Electromagnetic interference
4. Susceptibility tests
5. Mission simulation-life tests

The number of test systems in predicated on the requirement to assess compliance with the procurement specification both in the normal and off-limit modes of operation. The number of qualification test samples of the television equipment and the CTE is based on the criticality index limited life requirements, service life considerations, and multiple use of test articles.

13.10.2 Antenna Systems

The antenna ground qualification test plan has been designed to accomplish three objectives. First, to test to the maximum

Table 13.3 Failure Effects Analysis
Sheet 1 of 2

Item	Drawing Number	Elect. Reference. Desig.	Function	Failure Type	Mission Phase	Failure Effect On Component Performance	Failure Effect On Sub-Systems Performance	Failure Effect On Apollo	Possible Crew Action
In-flight test system			Monitors spacecraft operations, revealing system or subsystem malfunctions automatically	Open or Circuit a) Comparator b) Control Panel c) Display Panel	All phases	Loss	None	None, unless one of the following: FM transmitter, signal conditioner, pulse code modulation, telemetry, sensors, or central timing equipment has failed, then abort (near earth)	Self-test mode and manual test set allow diagnosis for maintenance.
Central timing equipment			Provides primary mode of timing for various electronic equipments; provides accumulated time and time to event displays; correlates all data as an integral part of time—critical operations	Failed SYNC input from G&N plus failed internal oscillator; open or shorted outputs	All phases	Loss	Loss of the in-flight test system, the television, and the displays.	Abort if not corrected.	Repair or adjust if possible.
Television equipment			Provides ground monitoring of the crew	Open or shorted output; failed vidicon	All phases	Loss	None	None	Spare vidicon provided. No other compensation.
Radiation detection equipment			Monitors radiation levels interior and exterior to the CM; readouts provided for crew as well as telemetry	Open or shorted output	All phases	Loss	None	Possible crew radiation exposure excessive.	None
C-band antenna			C-band radar tracking antenna providing tracking up to 4000 miles from earth	Open or shorted input to the antenna	Near earth	Loss	None	Abort prior to the translunar injection. If one of the following has failed: CTE, sensors, signal conditioner, PCM telemetry, FMX, P-P near earth, flight director rate indicator.	None

Table 13.3 Failure Effects Analysis (Cont)
Sheet 2 of 2

Item	Drawing Number	Elect. Reference. Desig.	Function	Failure Type	Mission Phase	Failure Effect On Component Performance	Failure Effect On Sub-Systems Performance	Failure Effect On Apollo	Possible Crew Action
2KMC high-gain antenna			Cislunar communication antenna	Open or shorted input to the antenna	Deep-space	Loss	None	None, unless S-band power amp failed then abort.	None
VHF recovery antenna equipment (2-antennas)			Meets the antenna requirements for VHF recovery beacon which provides line-of-sight direction finding capabilities	Open or shorted input to the antenna; broken radiating element.	Parachute deployment through pickup	Loss	None	Degraded recovery capabilities. HF transceiver and antenna remain as recovery aids.	None
HF recovery antenna			Meets the antenna requirements for the HF transceiver for directional finding and communications during recovery	Open or shorted input to the antenna; deployment mechanism failure; broken radiator.	Recovery	Loss	None	Degraded recovery capabilities. VHF recovery equipment remains.	None
Sensors			Monitor various physical parameters and environmental conditions of the spacecraft and its systems. Information is provided to IFTS and/or is telemetered to Earth. Critical measurements are displayed directly to the crew	Structural failure; signal conditioner; open or shorted output	All phases	Loss	None	Possible crew and ground ignorance of failed critical system.	None
Entry monitor display			Display velocity versus acceleration and lift to provide a manual back to automatic reentry	Accelerometer failure	Entry	Loss	None	None, unless automatic reentry made fails, then probable loss of crew.	None

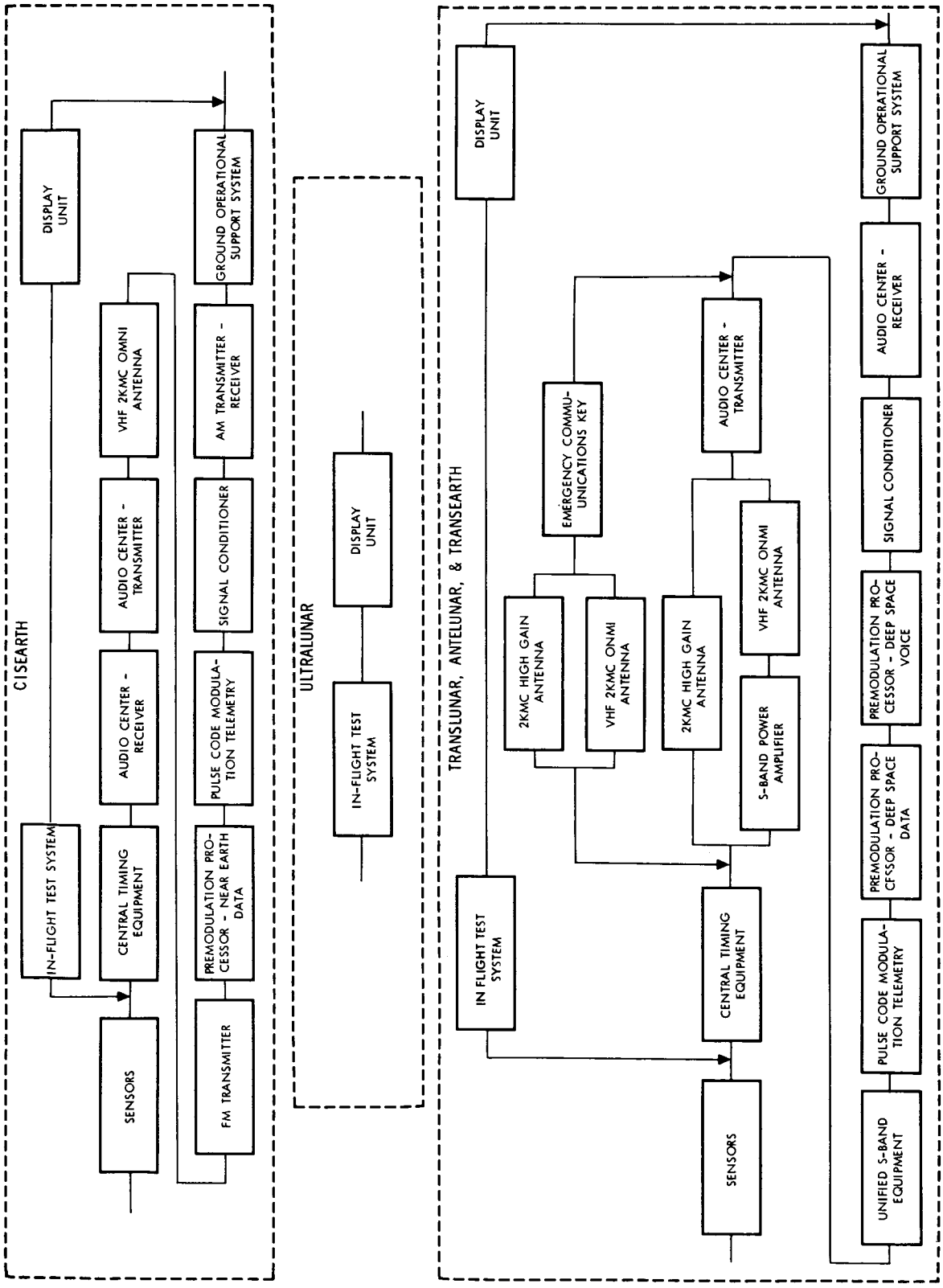

Figure 13.3 Monitor Logic for Sparing

levels of the mission environments; second, to test beyond design limits to determine the design margins in critical mission environments; and third, to conduct environmental testing in accordance with the mission sequence. If the antenna systems perform successfully after the subjection to the mission profile, first and third objectives, they are then considered qualified for use in flight qualification tests.

13.10.3 Controls and Displays

The controls and displays (C&D) system will be tested at three levels of assembly: part, subpanel, and complete control panel. The parts qualification program will consist of a complete environmental and stress testing program. Those parts which are standardized in several subpanel usage applications will be defined as criticality one parts, in order to achieve maximum test data from a smaller total sample size of each standardized part. This philosophy applies to parts such as meters, switches, wire, and connectors used in C&D subpanels of varying criticalities. Nonstandard parts will be qualified according to their particular criticality requirements.

At the subpanel level, the qualification program will include acceptance type tests, operational and wiring checkouts, some off-limit tests, and a modified Phase B or Mission Simulation-Life level test program.

A complete control panel will be assembled and tested through the dynamic and operational test phases. A combined vacuum and temperature operating test will be run also on the control panel. At the conclusion of all other testing, an off-limit shock test will be performed.

The supplier will qualify parts; S&ID will qualify the subpanels assembled in house and the complete control panel.

13.11 Reliability Assessment Model

13.11.1 Television Equipment and Central Timing Equipment

The reliability assessment model for the television equipment will be submitted with the next quarterly revision of the Apollo General Test Plan. Figure 13.1 depicts the reliability assessment model for the CTE. The models will aid in establishing test continuity and in programming the collection of data for the assessment of reliability of this equipment by illustrating the reliability and functional interrelationships of the system components.

13.11.2 Antenna Systems

Figure 13.4 depicts the reliability assessment model for the recovery antenna system. Figure 13.5 depicts the reliability assessment model for the high-gain antenna system. The models will aid in establishing test continuity and in programming the collection of data for the assessment of reliability of the antenna systems by illustrating the reliability and functional interrelationships of each system's components.

13.11.3 In-Flight Test System

Figure 13.6 depicts the reliability assessment model for the IFTS only. The individual system subpanels are a part of that system model and are used as such. The IFTS model will aid in establishing test continuity and in programming the collection of data for the assessment of reliability by illustrating the functional and reliability interrelationships of the system components.

13.12 Criticality and Hardware Requirements

The tables under this paragraph designate the criticality class, as defined in subsection 2.4 of SID 62-109-3, for the components of the subsystems listed. The table enumerates the hardware requirements for a minimum qualification program as established in subsection 2.5 of SID 62-109-3. The distribution of the hardware through the subsystem qualification test phases, as described in subsection 2.3 (SID 62-109-3), is shown. The location of the components in the spacecraft is indicated by spacecraft zone numbers as defined in subsection 4.2 (SID 62-109-3).

13.12.1 Television Equipment and Central Timing Equipment

Table 13.4 exhibits the system parameters for qualification testing for the television equipment and CTE.

13.12.2 Antenna Systems

Table 13.5 exhibits the system parameters for qualification testing of the antenna systems.

13.12.3 Controls and Displays

Table 13.6 exhibits the system parameters for qualification testing of the controls and displays equipment.

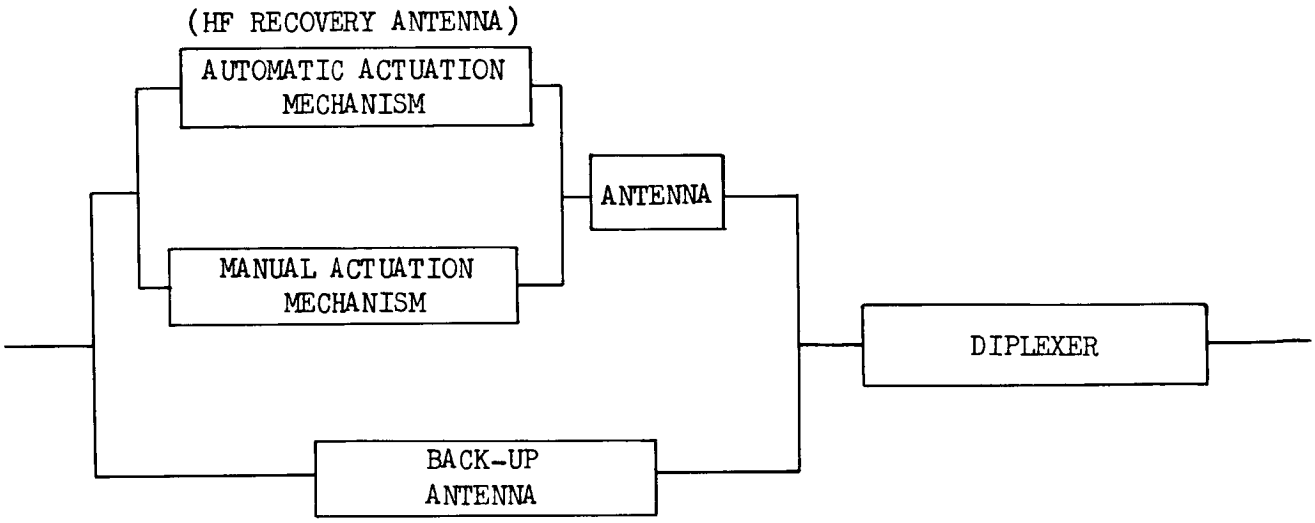

Figure 13.4 Recovery Antenna Assessment Model

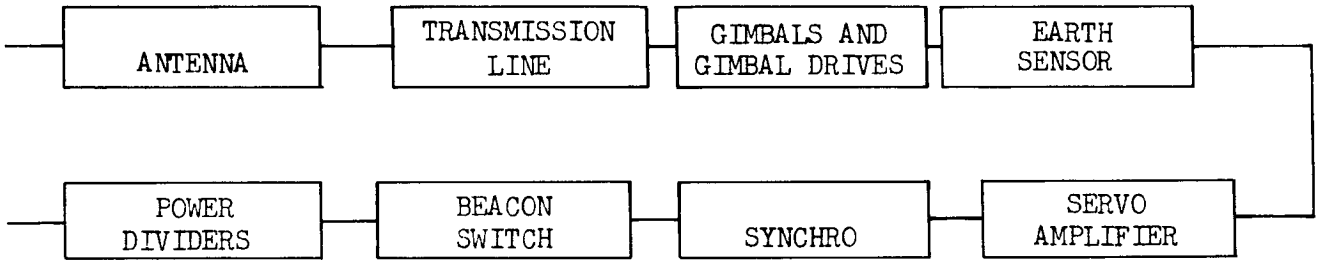

Figure 13.5 High Gain Antenna Assessment Model

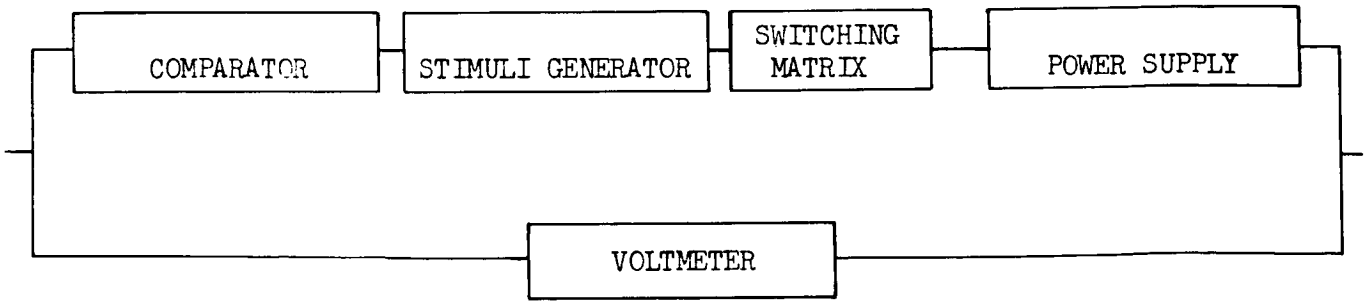

Figure 13.6 IFTS Reliability Assessment Model

Table 13.4 TV & CTE System Parameters for Qualification Testing

Component	S/C Zone	Criticality	Required Hardware	Qualification Test Phase Distribution		
				A-1	A-2	B
TV equip.	2	3	4	2	2	1
CTE	2	2	6	2	2	3

Table 13.5 Antenna Systems Parameters for Qualification Testing

Component	S/C Zone	Criticality	Required Hardware	Qualification Test Phase Distribution		
				A-1	A-2	B
HF recovery antenna	1	1	3	2	1	
VHF recovery antenna	1	3	3	2	1	
VHF backup recovery antenna	1	3	3	2	1	
High-gain antenna	3	2	6	2	1	3
C-Band antenna	1	2	3	2	1	

Table 13.6 C&D Parameters for Qualification Testing

Component	S/C Zone	Criticality	Required Hardware	Test Phase Distribution		
				A-1	A-2	B
Barometric pressure indicator	2	3	4	2	3	3
Event time indicator	2	3	4	2	3	3
Integrated display	2	2	5	2	3	3
Abort indicator	2	2	5	2	3	3
Gimbal angle indicator	2	2	5	2	3	3
SCS control panel	2	1	7	2	3	4
Rendezvous display panel	2	3	4	2	3	3
AV control panel	2	2	5	2	3	3
Entry monitor display unit	2	2	5	2	3	3
Master caution indicator group	2	2	5	2	3	3
Computer control and indicator	2	2	5	2	3	3
GMT time indicator	2	3	4	2	3	3
SPS management panel	2	2	5	2	3	3
RCS management panel	2	2	5	2	3	3
SCS power control panel	2	1	7	3	3	4
S/M thermal profile indicator	2	3	4	2	3	3
Audio control panel	2	3	6	3	3	2
IFTS scan select panel	2	3	4	2	3	3
Booster situation indicator	2	2	5	2	3	3
ECS (liquid) system management panel	2	2	5	2	3	3
Warning indicator group	2	1	7	3	3	4
Mechanical clock	2	3	4	2	3	3
Electrical power distribution control panel	2	2	5	2	3	3
Electrical power (AC) system management panel	2	2	5	[illegible]	3	3
Electrical power (DC) system management panel	2	2	5	2	3	3
Fuel cell system management panel	2	2	5	2	3	3
Communications control panel	2	3	6	3	3	2
Antenna control panel	2	2	5	2	3	3
Abort sequencer indicator and controls	2	1	7	3	3	4
Earth landing sequencer indicator and controls	2	1	7	3	3	4
Mission sequencer indicator and controls	2	1	7	3	3	4
Snorkel deployment control	2	3	4	2	3	4
Lighting controls	2	3	4	2	3	3
Radiation dosimeter display	2	1	7	3	3	3
Cables						
Harness installation, L.E.B.	2	1	7	3	3	3
Harness installation, C&D	2	1	7	3	3	3
In-flight test system	2	2	7	2	3	3

13.13 Qualification Test Schedule

The figures described in this paragraph display the qualification test schedules for the instrumentation system and define the test utilization of the hardware enumerated in the tables of subsection 13.12. The specific test levels to be applied in qualification testing are found in the tables of environmental test criteria in subsection 4.2 of SID 62-109-3 and are a function of the zone location of the equipment in the spacecraft. The zone numbers of the instrumentation sybsystems and components are given in the tables associated with the test schedules described.

13.13.1 Television Equipment and Central Timing Equipment

Figure 13.7 displays the qualification test schedule for the television equipment. Figure 13.8 displays the qualification test schedule for the central timing equipment. Table 13.4 lists the associated system parameters.

13.13.2 Antenna Systems

Figure 13.9 displays the qualification test schedule for the HF recovery antenna.

Figure 13.10 displays the qualification test schedule for the VHF recovery antenna.

Figure 13.11 displays the qualification test schedule for the VHF recovery (back-up) antennas.

Figure 13.12 displays the qualification test schedule for the 2KMC high-gain antenna.

Figure 13.13 displays the qualification test schedule for the C-band beacom antenna and incorporates the antenna window qualification.

Table 13.5 lists the associated system parameters for these test schedules.

13.13.3 Controls and Displays

Figure 13.14 displays the qualification test schedule for the C&D and defines the test utilization of the hardware enumerated in Table 13.6.

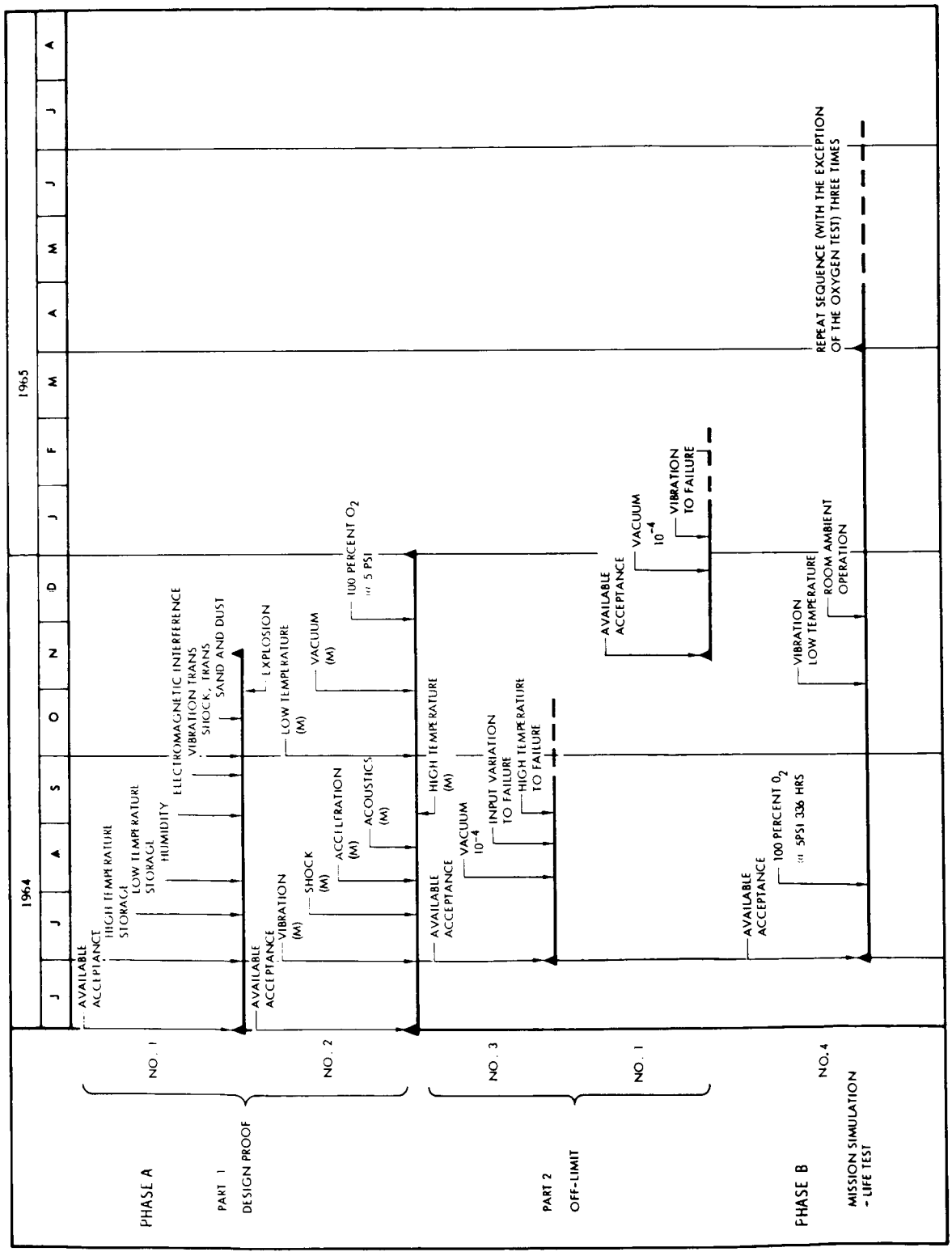

Figure 13.7 TV Equipment Qualification Test Schedule

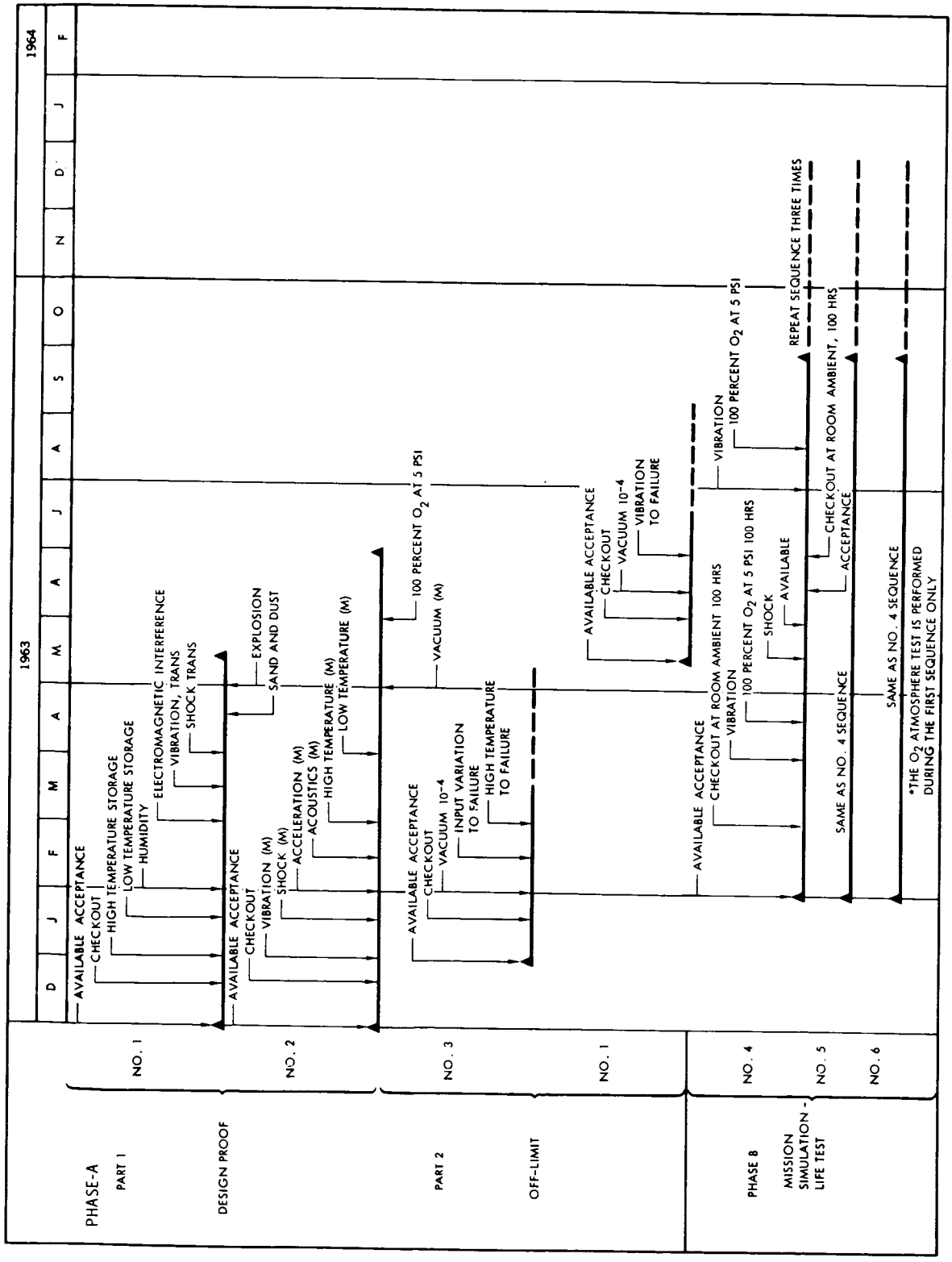

Figure 13.8 CTE Qualification Test Schedule

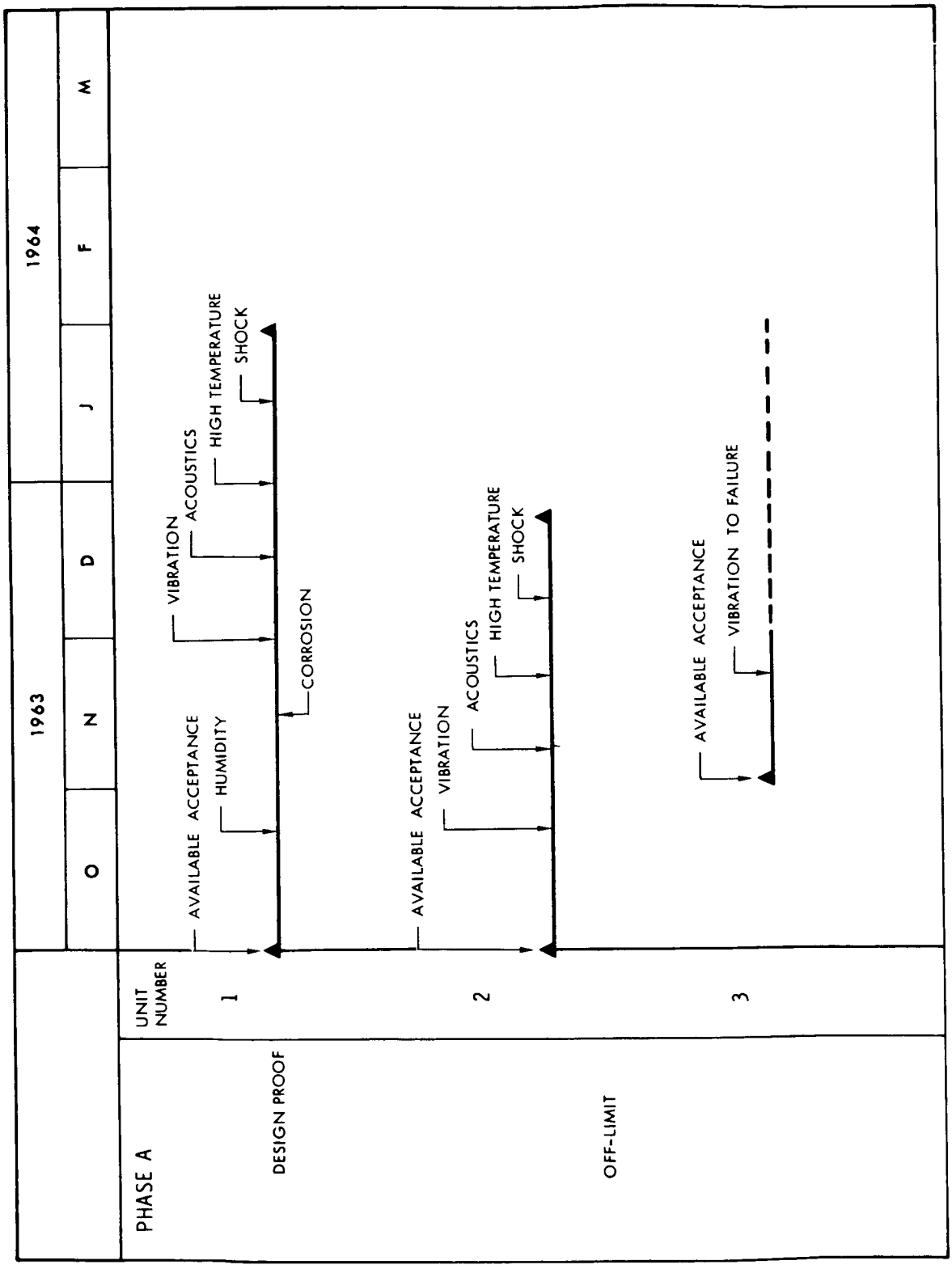

Figure 13.9 HF Recovery Qualification Test Schedule

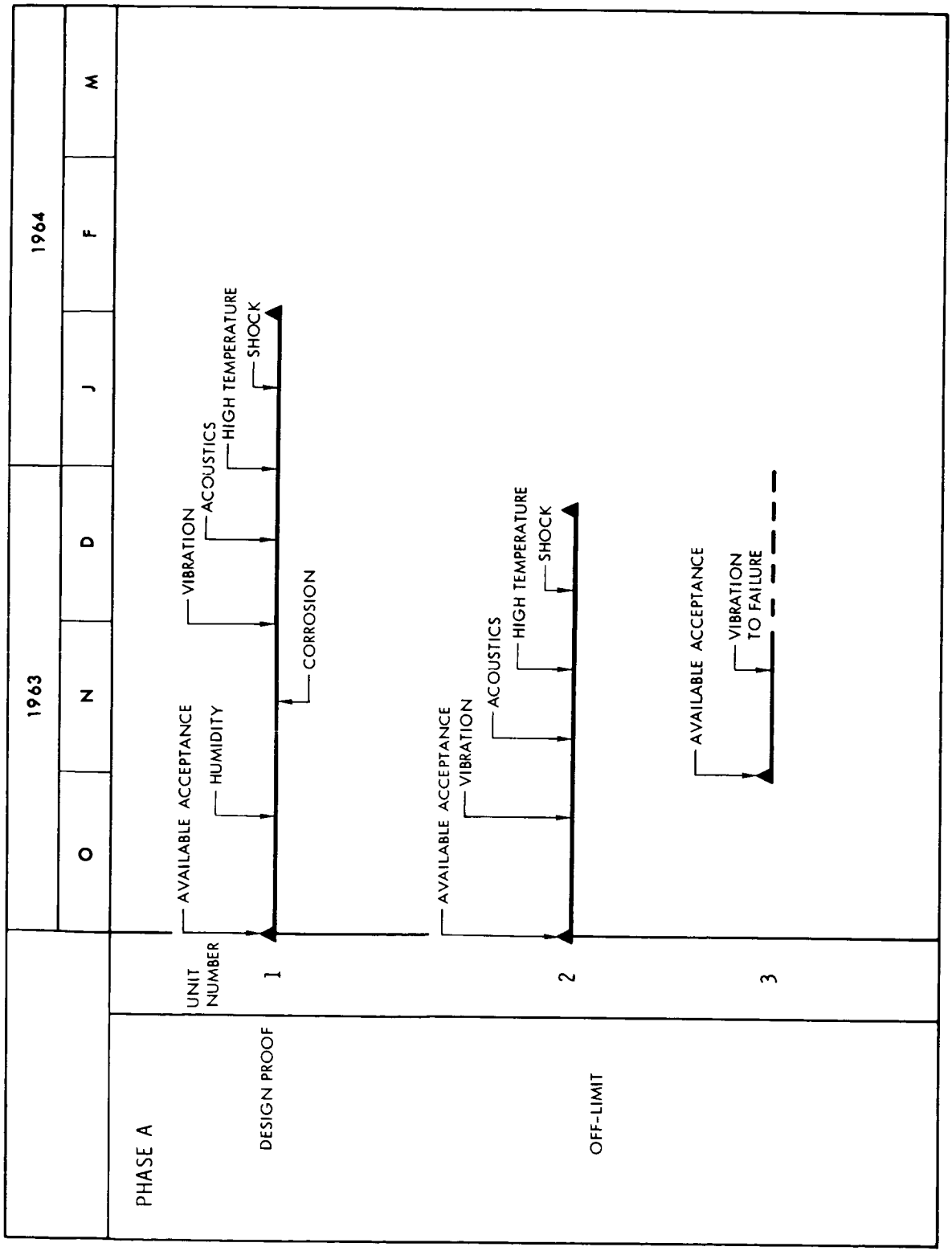

Figure 13.10 VHF Recovery Qualification Test Schedule

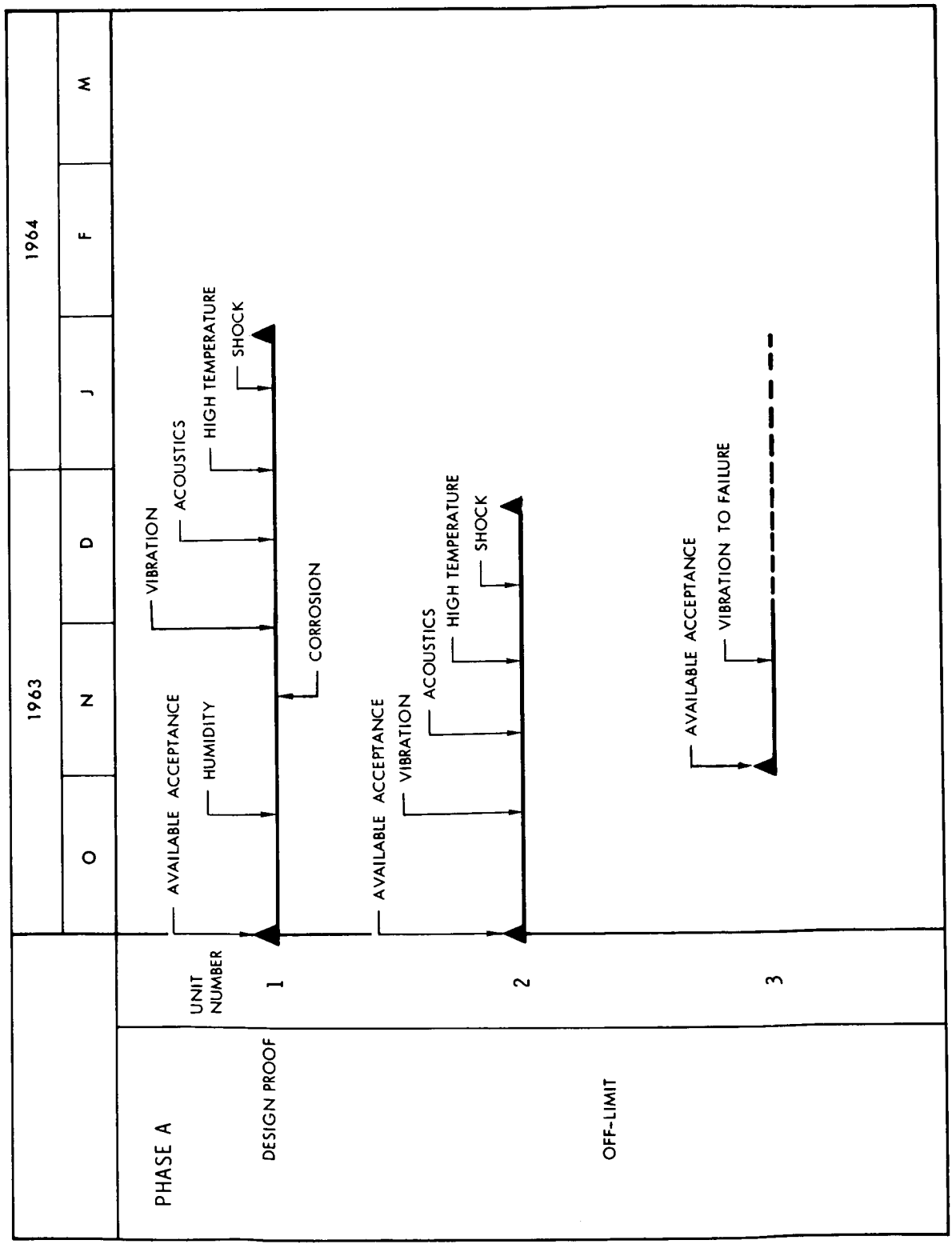

Figure 13.11 VHF Recovery (Back-up) Qualification Test Schedule

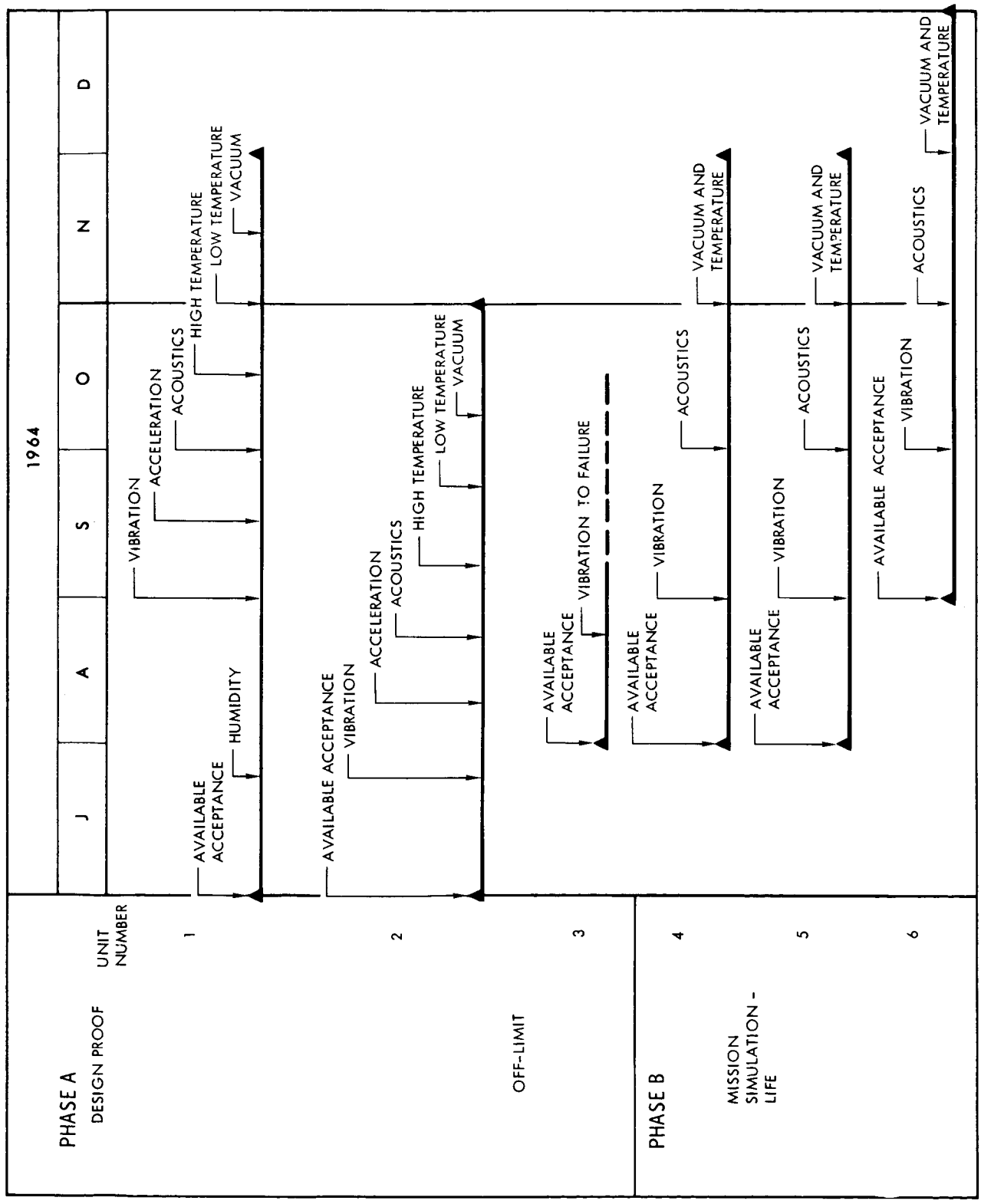

Figure 13.12 Two kmc High-Gain Qualification Test Schedule

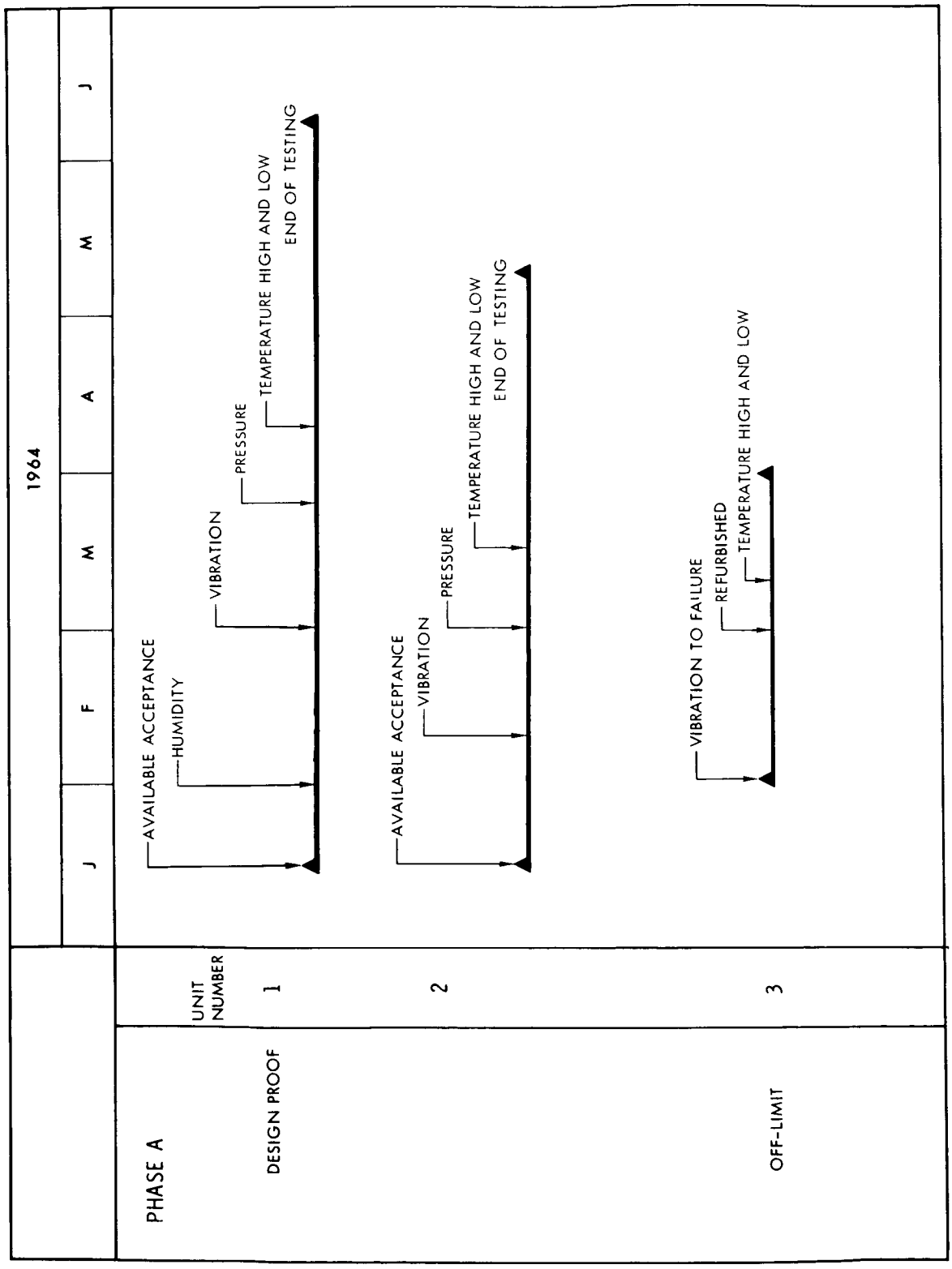

Figure 13.13 C-Band Beacon Qualification Test Schedule

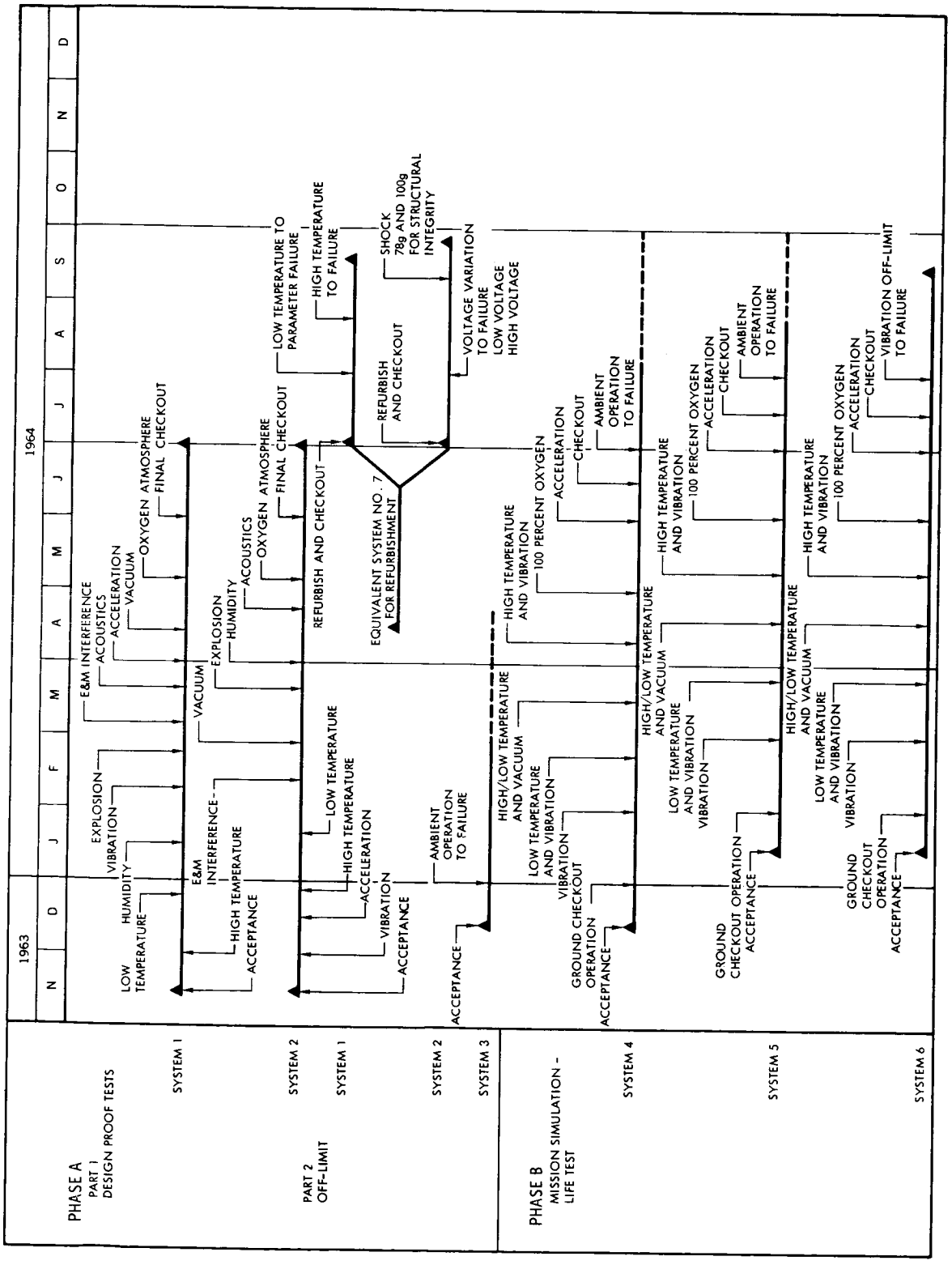

Figure 13.14 C&D Qualification Test Schedule

LIST OF CURRENT PAGES

Page No.	Date	Revised	Classification

SECTION 14.0

LAUNCH ESCAPE SUBSYSTEM

14.1 Introduction

The launch escape system (LES) is intended for use during the lift-off and boost phases to effect separation of the command module from the spacecraft should an abort condition occur. Provision is made to separate the LES from the command module after successful completion of the launch and boost phases of the mission. The system consists of five major subsystems:

1. Launch escape motor, which provides thrust necessary to effect separation of command module from the spacecraft.

2. Pitch control motor, which provides side thrust to establish command module trajectory.

3. Tower jettison motor, which provides thrust to separate tower from command module.

4. Tower structure, which serves as the base for system motors.

5. Tower separation mechanism, which is the mechanism interface between tower and command module.

14.2 Analysis

The Launch Escape Subsystem predicted and apportioned reliability values are shown in Table 14.1.

Logic diagrams and mathematical models are presented for the normal and abort modes of operation (Figures 14.1 and 14.2). Subsystem logic, which forms the basis for the logic block diagram formulation and mathematical model derivation, is based on the results of the failure effects analyses in Table 14.5.

14.3 Launch Escape Motor

Table 14.2 indicates the predicted and apportioned reliability levels for the launch escape motor.

TABLE 14.1

LAUNCH ESCAPE

SUBSYSTEM MISSION RELIABILITY (LOR)

COMPONENT NAME	ITEMS	MISSION TIMES (HRS.)	FAILURE RATE PER 10^6 HOURS OR CYCLES			RELIABILITY		
			APPORTIONED	PREDICTED	ASSESSED	APPORTIONED	PREDICTED	ASSESSED
LAUNCH ESCAPE SUBSYSTEM	--	--	--	--	N.A.	.999950***	0.999994[A]	N.A.
Initiators	2	1 Cycle	1000.0	1000.0[1]	N.A.	.999000	.999000[A]	N.A.
Launch Escape Motor	1	1 Cycle	2000.0	7000.0[1]	N.A.	.998000	.993000[A]	N.A.
*Pitch Control Motor	1	1 Cycle	1000.0	800.0[2]	N.A.	.999000	.999200[A]	N.A.
Tower Jettison Motor	1	1 Cycle	50.0	200.0[3]	N.A.	.999950	.999800[A]	N.A.
Tower Structure	1	0.014 hr.	714.0	71.4[4]	N.A.	.999990***	.999999[A]	N.A.
Tower Separation Mechanics	N.A.	1 Cycle	1.0	1.0[5]	N.A.	.999999**	.999999[A]	N.A.

DATA SOURCE
1. AVCO
2. Lockheed
3. Thiokol
4. NAA Structures Manual
5. Pyrotechnic Mfg. Test Data

N.A.: Not available
* Not required for Mission Success
** Reliability for Bolt-Connector
*** Spec not released
No Spec NAA Apportioned by Method "A"

MATHEMATICAL TECHNIQUE:
A. Analytical Model (Logic Diagram & Known Failure Rate Data)
B. Analytical Method (Weighted Subjective Experience)

~~CONFIDENTIAL~~

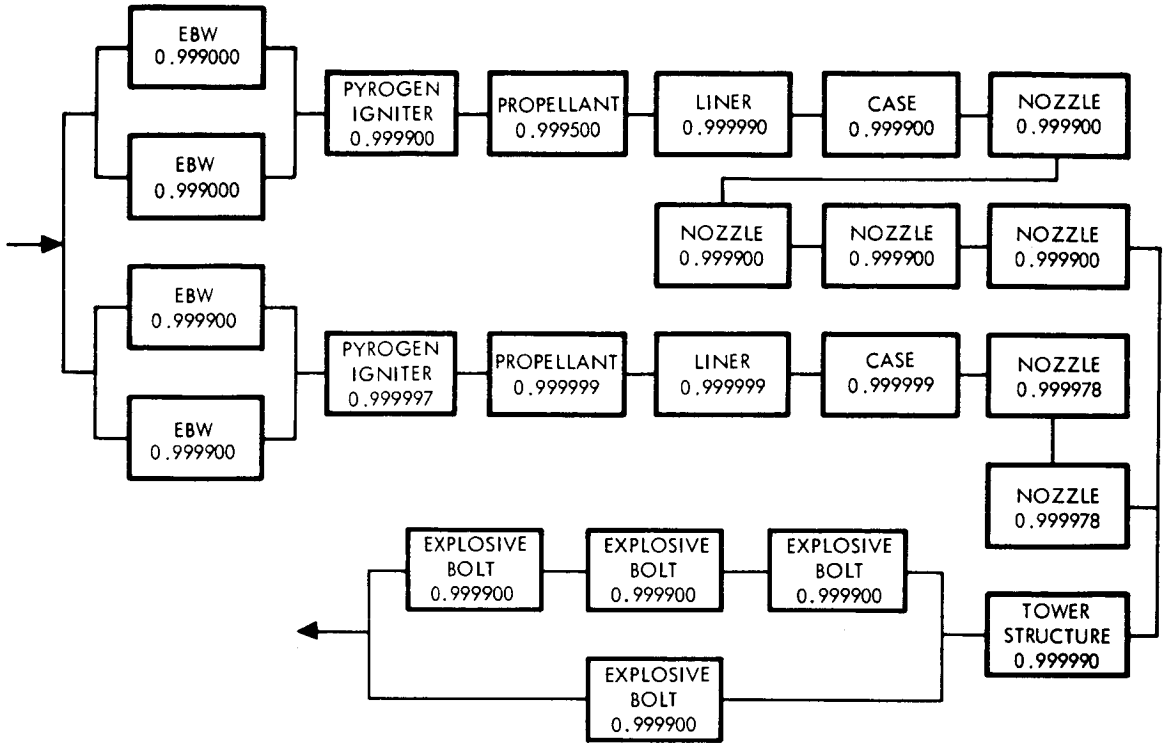

NORMAL MISSION MATH MODEL

$$P_{SUCCESS} = \left[P_1 P_2 + P_1 (1 - P_2) + P_2 (1 - P_1)\right] P_3 P_4 P_5$$

WHERE

P_1 = PROBABILITY OF SUCCESS OF TOWER JETTISON MOTOR

$$= \left[P_{EBW}^2 + 2 P_{EBW} (1 - {}_{EBW}\right] \left[P_{PYROGEN\ IGNITER}\right] \left[P_{PROPELLANT}\right] \left[P_{LINER}\right] \left[P_{CASE}\right] \left[P_{NOZZLE}\right]^2$$

P_2 = PROBABILITY OF SUCCESS OF LAUNCH ESCAPE MOTOR

$$= \left[P_{EBW}^2 + 2 P_{EBW} (1 - P_{EBW})\right] \left[P_{PYROGEN\ IGNITER}\right] \left[P_{PROPELLANT}\right] \left[P_{LINER}\right] \left[P_{CASE}\right] \left[P_{NOZZLE}\right]^4$$

$$P_3 = P_{TOWER\ STRUCTURE}$$

$$P_4 = P_{EBW}^2 P_{CUTTER}^2 + 2 \left[P_{EBW} P_{CUTTER} (1 - P_{EBW} P_{CUTTER})\right]$$

$$P_5 = \left[P_{BOLT}^4 + 4 P_{BOLT}^3 (1 - P_{BOLT})\right]$$

Figure 14.1 Normal Mission Tower Jettison Reliability Logic Diagram

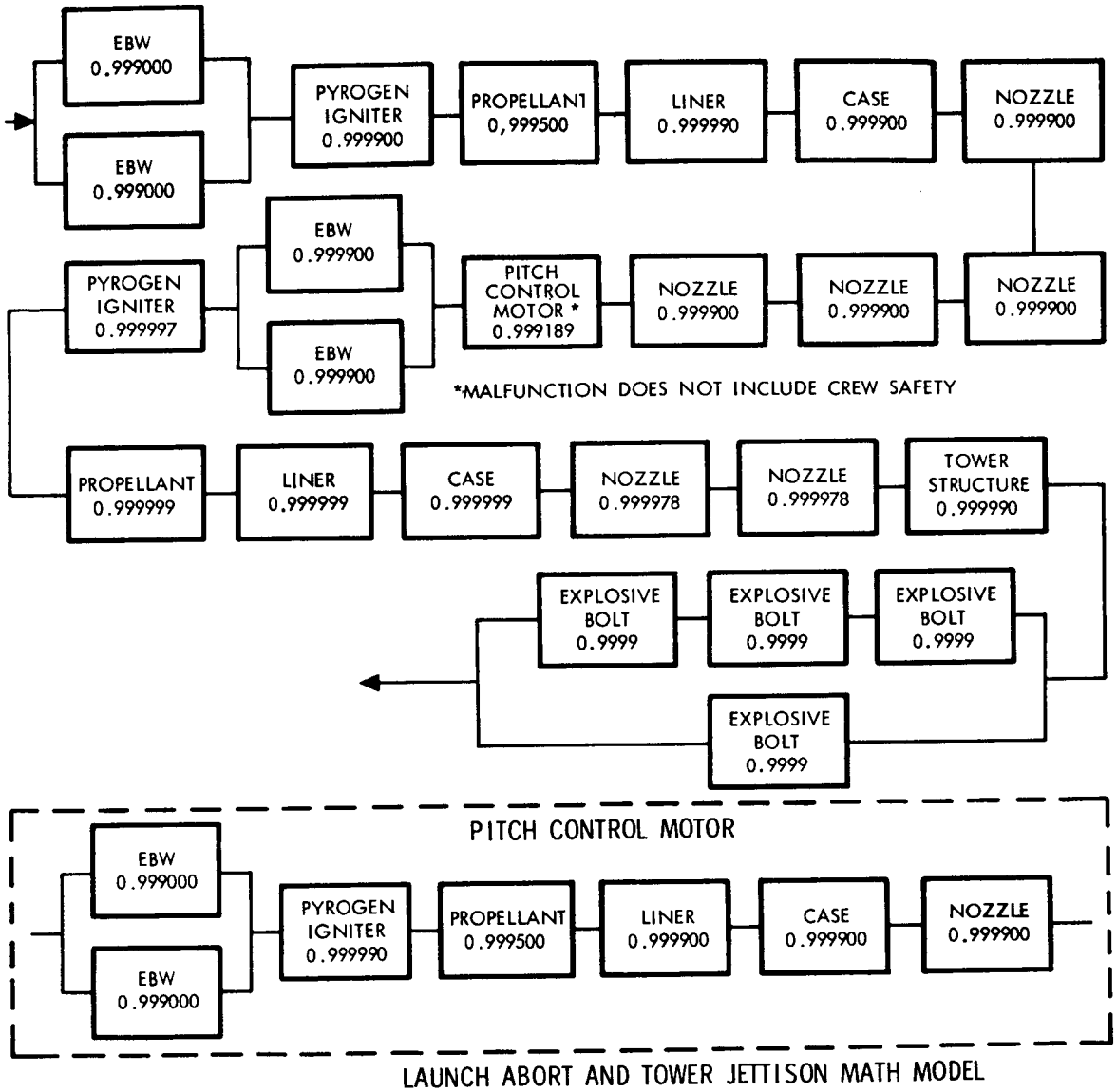

LAUNCH ABORT AND TOWER JETTISON MATH MODEL

$$P_{SUCCESS} = P_1 P_2 P_3 P_4$$

WHERE

P_1 = PROBABILITY OF SUCCESS OF LAUNCH ESCAPE MOTOR

P_2 = PROBABILITY OF SUCCESS OF TOWER JETTISON MOTOR

P_3 = PROBABILITY OF SUCCESS OF PITCH CONTROL MOTOR

$$= \left[P_{EBW}^2 + 2P_{EBW}(1 - P_{EBW})\right]\left[P_{PYROGEN\ IGNITER}\right]\left[P_{PROPELLANT}\right]\left[P_{LINER}\right]\left[P_{CASE}\right]\left[P_{NOZZLE}\right]$$

$$P_4 = \left\{P_{TOWER\ STRUCTURE}\right\}\left\{P_{BOLT}^4 + 4P_{BOLT}^3(1 - P_{BOLT})\right\}$$

Figure 14.2 Launch Abort and Tower Jettison Reliability Logic Diagram

Table 14.2 Launch Escape Motor Apportioned and Predicted Failures Per 10^6 Motors

Component	Failures/10^6 Motors	
	Apportioned	Predicted
Exploding bridge wire (2)*	1000	1000
Pyrogen igniter	500	2000
Propellant	500	1500
Liner	100	950
Case	100	950
Nozzle (4)	800	1600
Total motor	2000	7000

*Not included in total motor

Table 14.3 Pitch Control Motor Apportioned and Predicted Failures Per 10^6 Motors

Component	Failure/10^6 Motors	
	Apportioned	Predicted
Exploding bridge wire (2)*	1000	1000
Pyrogen igniter	20	30
Propellant	540	460
Liner	120	80
Case	120	80
Nozzle	200	150
Total Motor	1000	800

*Not included in total motor

14.4 Pitch Control Motor

The pitch control motor provides side thrust to establish command module trajectory. Table 14.3 indicates the apportioned and predicted reliability values for the pitch control motor.

14.5 Tower Jettison Motor

The tower jettison motor provides the thrust to separate the tower structure from the command module. Apportioned and predicted reliability levels for motor components are indicated in Table 14.4.

Table 14.4 Tower Jettison Motor Apportioned and Predicted Failures

Component	Failures/10^6 Motors	
	Apportioned	Predicted
Exploding bridge wire (2)*	1000	1000
Pyrogen igniters	3	25
Case	1	10
Insulation	1	10
Propellant	1	10
Fixed Nozzles (2)	43	145
Total Motor	50	200

*Not included in total motor

Reliability plans provide for analysis of data accumulated from test firings of motors. The results of these analyses will furnish information as to (1) reliability goals attained, and (2) establishment of new reliability criteria if required.

14.6 Tower Separation Mechanics

The present configuration for separating the tower from the command module consists of four explosive bolts with a removable cartridge on each bolt. Each cartridge is comprised of dual hot-wire initiators and a main charge. The hot-wire initiator has an electrical connecter, bridgewire, primary explosive, and secondary explosive. The cartridge can be removed and checked away from the command module.

The predicted system reliability for successful operation of all four bolts is 0.999996, which exceeds the apportioned reliability of 0.999995.

The predicted reliability is based on the assumption that all four bolts must operate. During a normal tower jettison the launch escape motor could be utilized to break a failed bolt, but this would constitute an abort, since the ablative material surrounding the failed bolt would likely be crushed as the bolt is broken because of a combination of axial and bending loads. Since a failed bolt would constitute an abort, utilizing the launch escape motor to break a failed bolt would improve crew safety but would not affect mission success. For an abort which occurs before normal tower jettison the the launch escape motor could not be utilized since the motor would have burned out before tower jettison.

14.7 Failure Effects Analysis

Table 14.5 presents results of the failure effects analysis of the launch escape subsystem components.

This analysis provides a basis for formulating mathematical logic and is compatible with previously defined subsystem logic.

14.8 Qualification Tests

Qualification testing of launch escape, tower jettison and pitch control motors will be accomplished on representative production samples of units and associated components to determine compliance with functional and performance specification requirements. The number of test motors is based on the requirements deemed necessary to to assess compliance with the specification. The test program will subject the equipment to a series of environments as anticipated in service.

14.8.1 Test-Oriented Reliability Logic Diagram

Figure 14.3 depicts the test oriented logic diagram for the LES. The logic diagram will aid in establishing test continuity and in programing the collection of data for the assessment of reliability by illustrating the interrelationship of system components.

14.8.2 Criticality and Hardware Requirements

Table 14.6 designates the criticality class, as defined in subsection 2.4 of SID 62-109-3 for the LES rocket motors. The table enumerates the hardware requirements for an optimum qualification program as established in subsection 2.5 of SID 63-109-3.

Table 14.5 Launch Escape Motor, Pitch Control Motor, and Tower Jettison Motor

Item	Drawing No.	Electrical Reference Designation	Function	Failure Type	Mission Phase	Failure Effect			Possible Crew Action
						Component Performance	Subsystems Performance	Apollo	
Ignition EBW			Provides ignition of B-kno_3 pellets	Open-bridge wire	See note 4.	Fail to perform required function	None, redundant EBW	None	None
B-kno_3 pyrogen			Provides ignition of pyrogen	Pellets fail to ignite due to chemical decomposition		Motor ignition will not occur	See note 1.	See note 2.	None
Pyrogen			Provides ignition of propellant	Fail to ignite due to resin-rich surfaces or surface leaching		Motor ignition will not occur	See note 1.	See note 2.	None
				Overignition-pyrogen provides too much gas		Cracks, fissures, or break-up	See note 1.	See note 2.	None
Propellant			Provides motor thrust	Cracks, pits, or voids		Uneven burning, non-reproducible burn time	See note 3.	See note 2.	None
				Bond failures (thermal elongation grain-liner bond)		Poor ballistic reproducibility	See note 3.	See note 2.	None
Pressure vessel			Contains propellant and becomes pressure vessel after ignition	Maximum normal pressure case rupture		Catastrophic	See note 1.	See note 2.	None
Forward closure (launch escape motor only)			Provides forward containment of pressure vessel	Ruptures or blows off	See note 4.	Catastrophic	See note 1.	See note 2.	None
Aft closure and nozzle assembly			Provides aft containment of pressure vessel	Ruptures, cracks, or blows off		Catastrophic	See Note 1.	See note 2.	None

Table 14.5 Launch Escape Motor, Pitch Control Motor, and Tower Jettison Motor (Continued)

Item	Drawing No.	Electrical Reference Designation	Function	Failure Type	Mission Phase	Failure Effect			Possible Crew Action
						Component Performance	Subsystems Performance	Apollo	
Nozzle, insert			Liner to protect metal from high temperature	Cracks, excessive erosion		Thrust vector will change	Negligible	None	None
closure			Protects nozzle until firing	Pressure leaks		Negligible	None	None	None
expansion cone			Provides thrust effect	Cracks or voids		Thrust vector will change	Negligible	None	None

NOTES:
1. Should boost failure occur, tower jettison and launch escape motor must function for crew safety and mission success. For normal mission, launch escape motor is redundant to tower jettison motor.
2. Mission success and crew safety are both lost if tower jettison motor fails after launch escape motor has fired because of boost failure.
3. Providing premature burn-out does not occur, sufficient thrust will be furnished to provide mission success and crew safety.
4. All motor firing will occur during mission phases 1, 2, and 3.
5. All motors are of comparable design, thus failures are of the same order and type.

~~CONFIDENTIAL~~

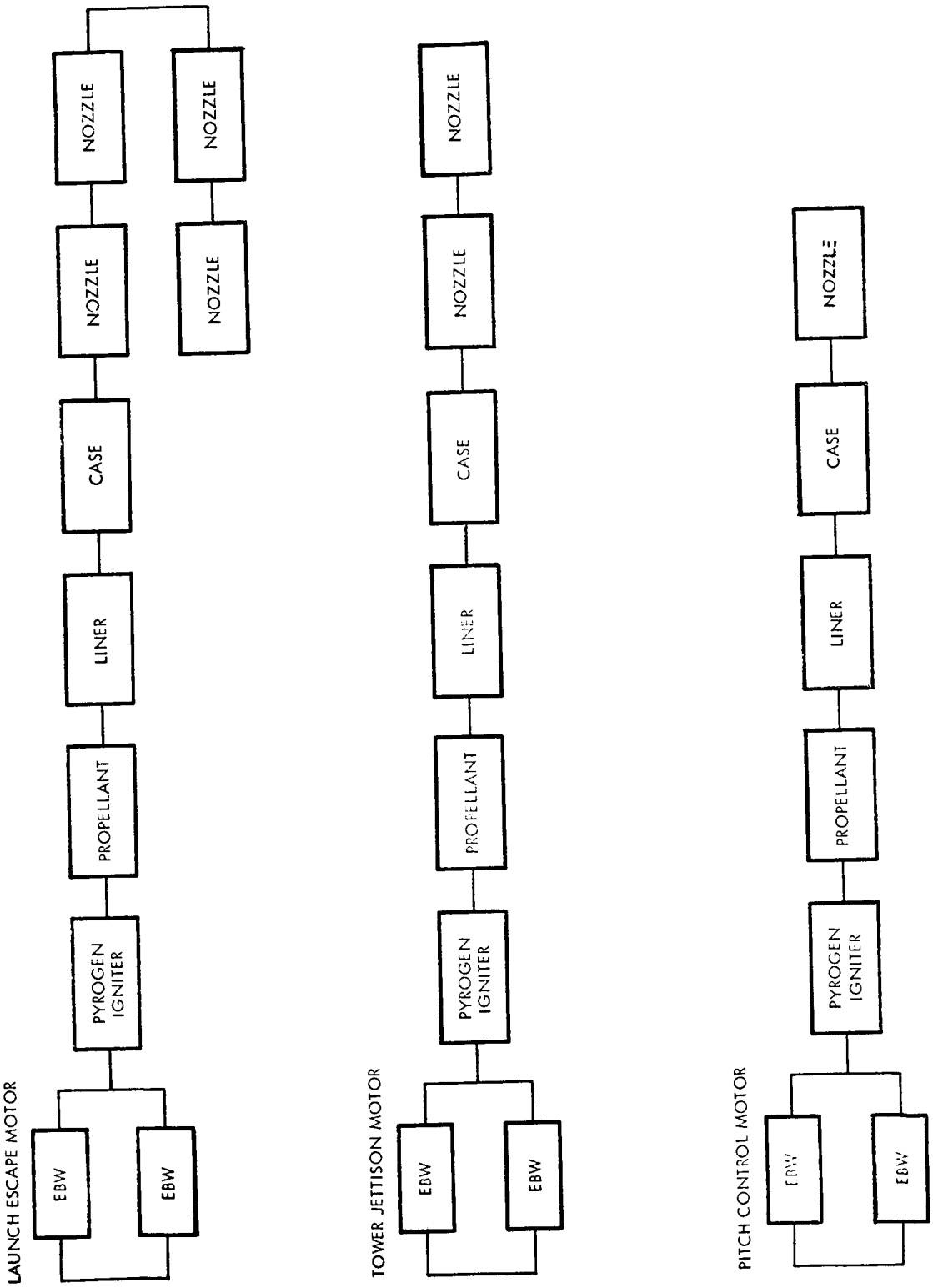

Figure 14.3 LES Test Oriented Reliability Logic Diagram

~~CONFIDENTIAL~~

Table 14.6 LES Rocket Motor Criticality and Hardware Requirements

Component	Criticality	Number of Units Required
Tower jettison motor	2	28
Launch escape motor	2	28
Pitch control motor	3	30
NOTE: Additional pitch control motors are required for acceleration tests. See Table 14.8.		

14.8.3 Qualification Test Schedule

14.8.3.1 Tower Jettison Motor

Figure 14.4 displays the qualification test schedule for the LES tower jettison motor. Table 14.7 programs the test articles enumerated in Table 14.6 in accordance with the test schedule. Since the test utilization of the launch escape motor hardware is similar to that of the tower jettison motor, Table 14.7 is also applicable to the launch escape motor.

14.8.3.2 Launch Escape Motor

Figure 14.5 displays the qualification test schedule for the LES Motor. The schedule defines the test utilization of the hardware enumerated in Table 14.6 in accordance with the test program of Table 14.7.

14.8.3.3 Pitch Control Motor

Figure 14.6 displays the qualification test schedule for the LES Pitch Control Motor. The schedule defines the test utilization of the hardware enumerated in Table 14.6 in accordance with the test program of Table 14.8.

~~CONFIDENTIAL~~

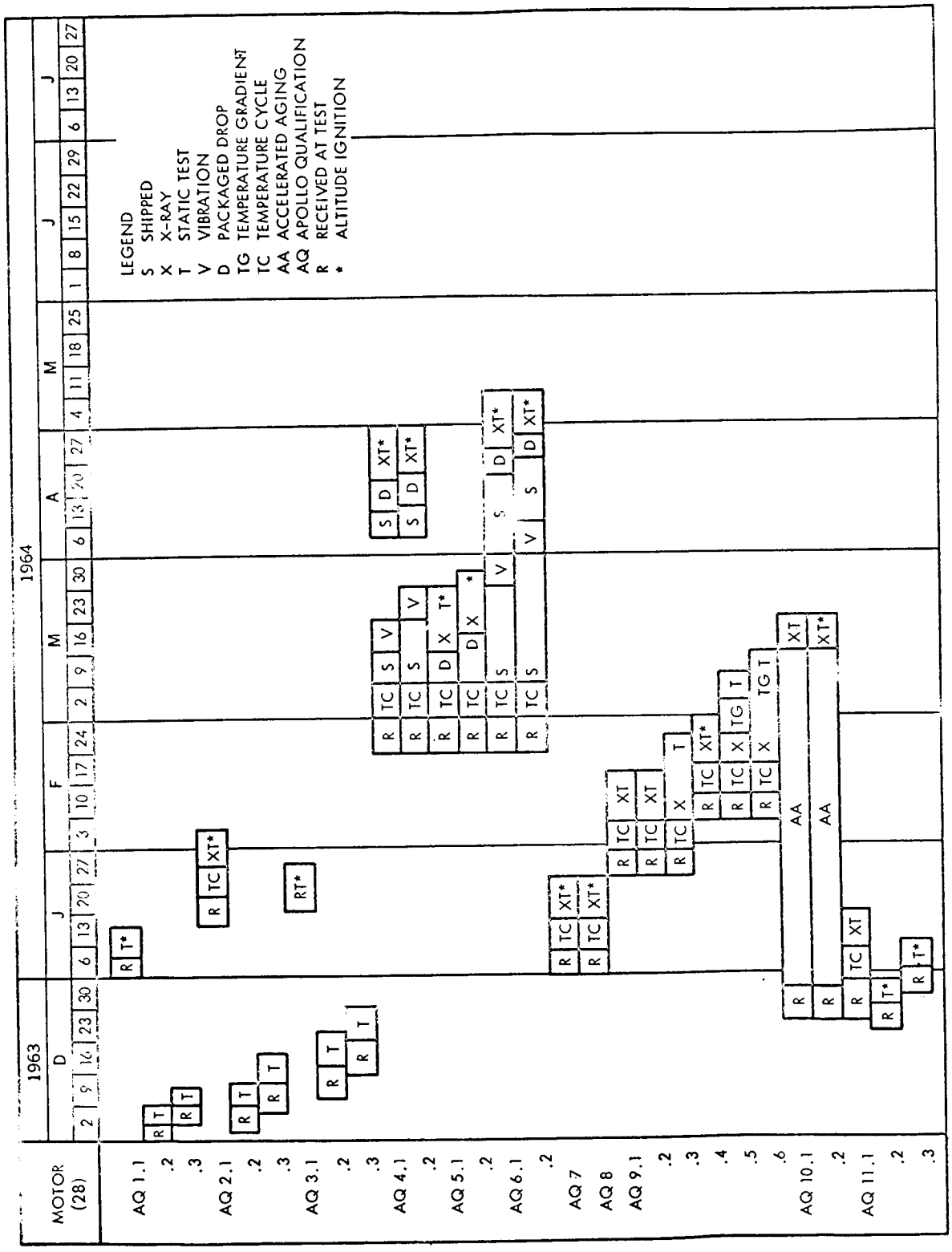

Figure 14.4 LES Tower Jettison Motor Test Schedule

~~CONFIDENTIAL~~

Table 14.7 Program for Test Articles, Tower Jettison and Launch Escape Motors

	Test Group and Number of Motors										
	I (3)	II (3)	III (3)	IV (2)	V (2)	VI (2)	VII (1)	VIII (1)	IX (6)	X (2)	XI (3)
Statistical Firing											
High Temperature	2								1		
Normal Temperature		2							1		1
Low Temperature			2						1		
Sequential Treatment											
Temperature Cycle		1		2	2	2	1	1	6		1
Vibration											
High Temperature				2							
Low Temperature						2					
Drop											
High Temperature				2							
Normal Temperature					2						
Low Temperature						2					
Accelerated Age										2	
Altitude Firing											
High Temperature	1			1	1	1		1		1	
Normal Temperature		1							1		2
Low Temperature			1	1	1	1	1			1	
Temperature Gradient											
High to Low									1		
Low to High									1		

~~CONFIDENTIAL~~

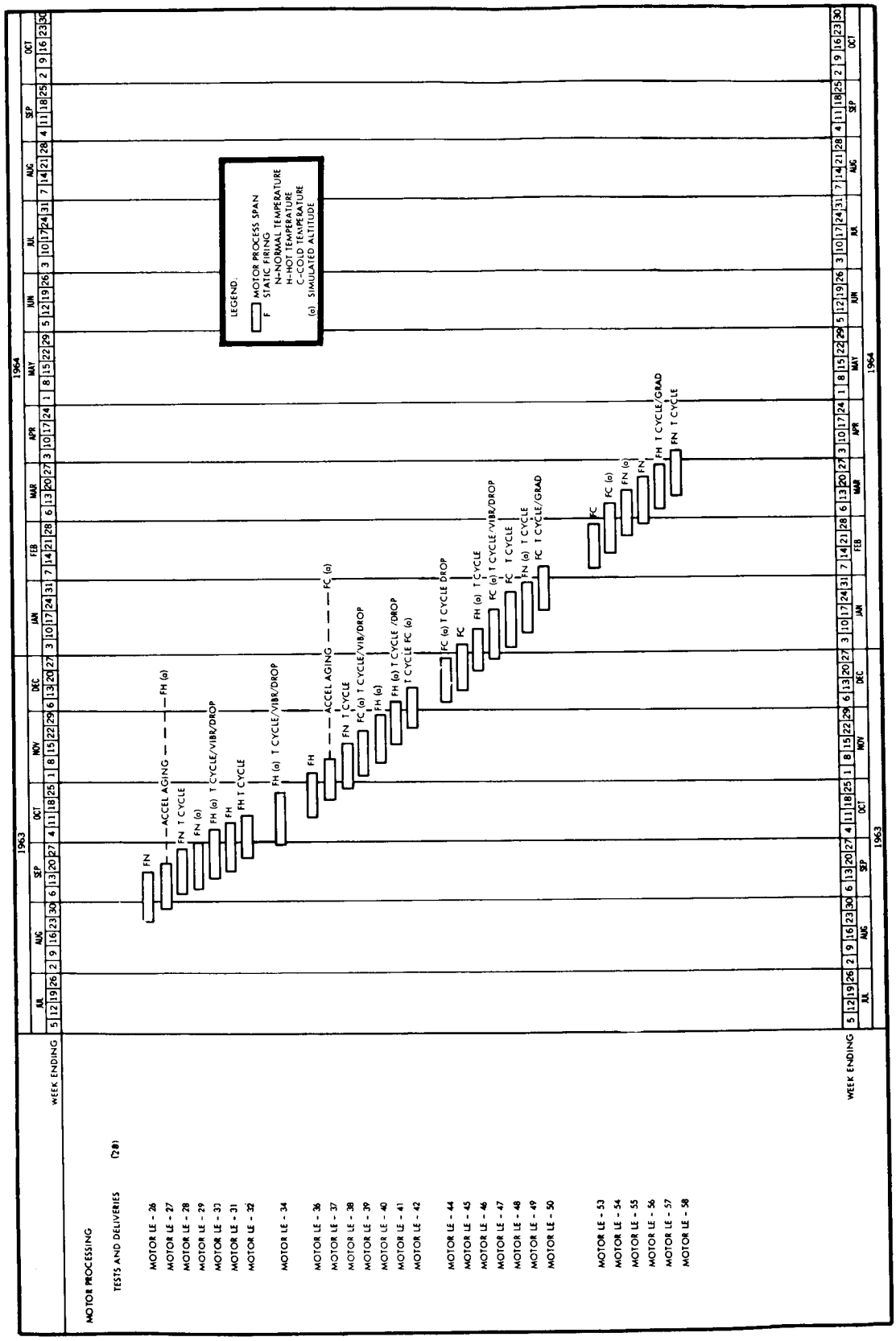

Figure 14.5. Launch Escape Motor Qualification Test Schedule

~~CONFIDENTIAL~~

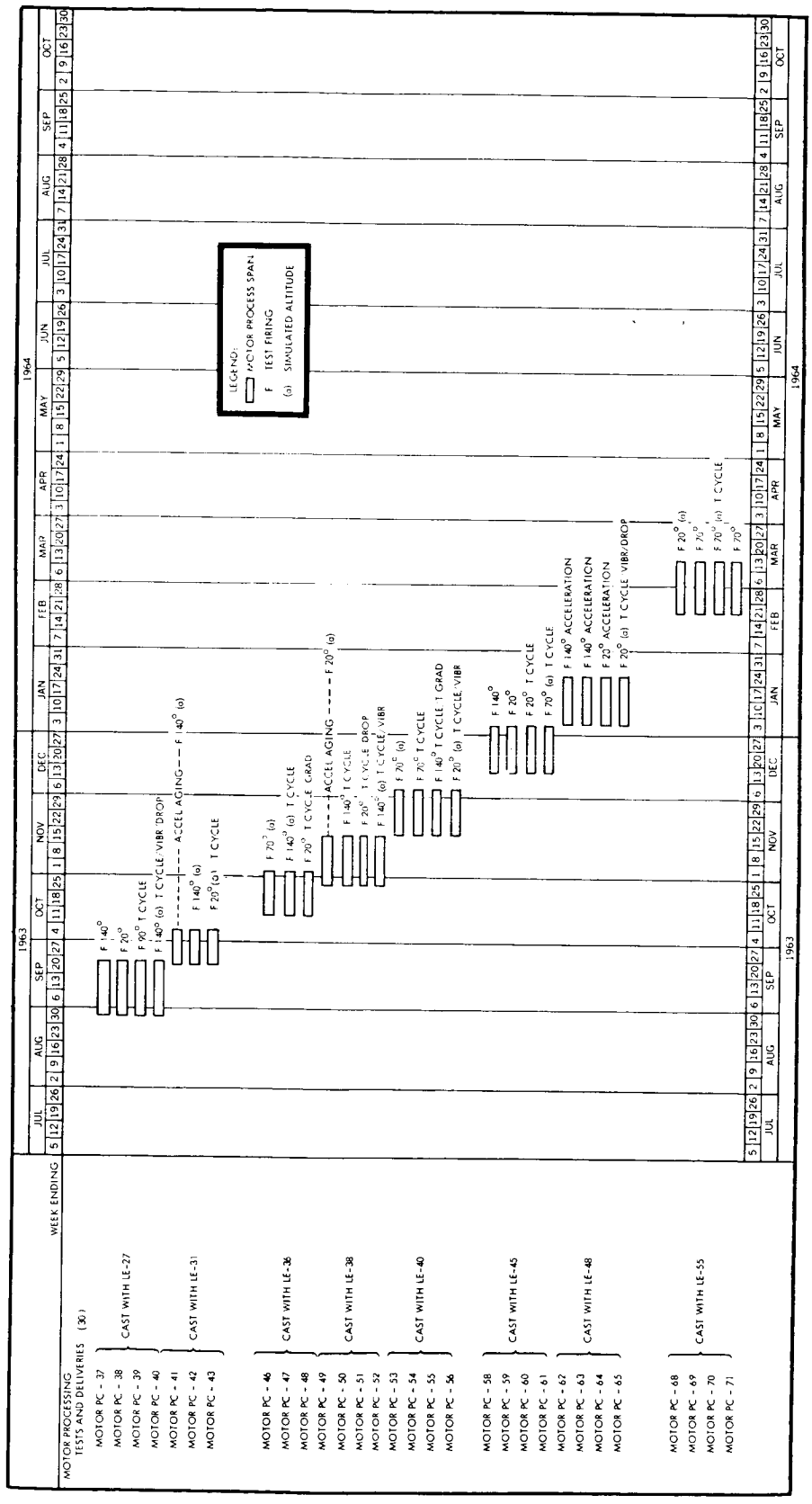

Figure 14.6 Pitch Control Motor Qualification Test Schedule

Table 14.8 Program for Test Articles, Pitch Control Motor

	Test Group and Number of Motors											
	I (3)	II (3)	III (3)	IV (2)	V (1)	VI (2)	VII (1)	VIII (1)	IX (6)	X (2)	XI (3)	XII (3)
Statistical firing												
High temperature	2								1			
Normal temperature		2							1		1	
Low temperature			2						1			
Sequential temperature												
Temperature cycle		1		2	1	2	1	1	1		1	
Vibration												
High temperature				2								
Low temperature						2						
Drop												
High temperature				2								
Normal temperature					1							
Low temperature												
Acceleration												
High temperature												2
Low temperature												1
Accelerated age										2		
Altitude firing												
High temperature	1			1	1	1		1		1		
Normal temperature		1							1		2	
Low temperature			1	1		1	1			1		
Temperature gradient												
High to low									1			
Low to high									1			