[redacted]

WANL-TNR-081

MASTER

FAILURE MODE ANALYSIS SUMMARY NERVA CONTROL DRUM ACTUATOR PROPOSED BY GENERAL ELECTRIC (MODEL AG-14)

(Title Unclassified)

Astronuclear Laboratory
Westinghouse Electric Corporation

[redacted]

SNPA-C 64-673

TNR-081

CONFIDENTIAL

MASTER

Astronuclear

WANL - TNR - 081

FAILURE MODE ANALYSIS SUMMARY
NERVA CONTROL DRUM ACTUATOR
PROPOSED BY GENERAL ELECTRIC
(MODEL AG-14)

By

I. R. Spezialetti

January 15, 1963

NOTICE

This report was prepared as an account of work sponsored by the United States Government. Neither the United States nor the United States Energy Research and Development Administration, nor any of their employees, nor any of their contractors, subcontractors, or their employees, makes any warranty, express or implied, or assumes any legal liability or responsibility for the accuracy, completeness or usefulness of any information, apparatus, product or process disclosed, or represents that its use would not infringe privately owned rights.

WESTINGHOUSE ELECTRIC CORPORATION
ASTRONUCLEAR LABORATORY

CONFIDENTIAL

DISTRIBUTION:

Dr. S. Krasik

Mr. H. S. McCreary

Dr. H. S. Kirschbaum

Mr. H. F. Faught

Mr. F. W. Henning

Mr. R. A. Neal

Mr. W. J. Rowan

Mr. W. O. Anthony

TABLE OF CONTENTS

Summary ---------- 1

Introduction ---------- 2

Recommendations ---------- 2

Description of Proposed
General Electric Pneumatic Actuator ---------- 4

Failure Mode Analysis Procedure ---------- 4

Results and Discussion ---------- 6

LIST OF FIGURES AND TABLES

Figure 1. General Electric AG-14
Pneumatic Actuator Assembly --------- 13

Figure 2. Schematic of General Electric
AG-14 Actuator ---------- 14

Figure 3. General Electric AG-14
Pneumatic Actuator Assembly --------- 15

Figure 4. General Electr AG-14
Pneumatic Actuator Assembly --------- 16

Figure 5. Servo Valve & Torque
Motor Assembly ---------- 17

Table I. Planning Parts List ---------- 18

Table II. Failure Mode Analysis Summary ------- 24

RESTRICTED DATA

FAILURE MODE ANALYSIS SUMMARY
NERVA CONTROL DRUM ACTUATOR
PROPOSED BY GENERAL ELECTRIC
(MODEL AG-14)

SUMMARY

A failure mode analysis of the NERVA control drum actuator design proposed by General Electric has been made. The results are summarized with emphasis on the design recommendations to improve the over-all reliability of the actuator.

RESTRICTED DATA
1954

CONFIDENTIAL
RESTRICTED DATA
Atomic Energy Act - 1954

FAILURE MODE ANALYSIS SUMMARY
NERVA CONTROL DRUM ACTUATOR
PROPOSED BY GENERAL ELECTRIC
(MODEL AG-14)

INTRODUCTION

In the preliminary design phase of the NERVA reactor, several basically different designs are being considered for the control drum actuators. One of those being proposed is a pneumatic actuator designed by General Electric and is identified as their model AG-14, P/N 1076510-761. Reliability, as stated in the NERVA contract, is of extreme importance. Because of this importance, a failure mode analysis of the NERVA control drum actuator design proposed by General Electric is considered desirable. This report presents the results of the failure mode analysis and indicates areas in which design changes may be made to improve the reliability of the design.

RECOMMENDATIONS

It is recommended that further design action be considered for the following areas to improve the over-all reliability of the proposed General Electric AG-14 pneumatic actuator:

1. Provide means to protect orifices from clogging.
2. Provide more positive methods for locking and/or retaining pins, nuts and adjustments.

CONFIDENTIAL
RESTRICTED DATA
Atomic Energy Act - 1954

3. Change the servo linkage pivot pins material to a more ductile steel.
4. Provide spring loaded bypass around the filters for supply gas and cooling gas.
5. Improve the electrical connector.
6. Assure that failure in the electrical feedback circuit and torque motor circuit results in or enables the actuator to go to the closed position.
7. Provide a restriction or check valve in the gas lines to and from the actuator.
8. Provide a locking device to se[illegible] actuator in the closed position for shipment.
9. Make the actuator double a[illegible]ng.

Additional considerations should be given to the following:

1. Conduct extensive environmental testing.
2. Provide clean room assembly.

These recommendations are based on the assumption that sticking of only one control drum in the open position can cause a local core hot spot that can result in catastrophic core failure. However, discussion with WANL Nuclear Design indicates that a design analysis is planned to investigate this condition, and possibly to investigate the effect of only one drum sticking in the closed position. Perhaps sticking of only one drum in the closed position may produce thermal gradients that can cause local cracking of the core that can result in catastrophic core failure. In

addition, it was felt that if only one drum were stuck open the engine could be shut down, and if only one drum were stuck closed the engine could be started.

DESCRIPTION OF PROPOSED GENERAL ELECTRIC PNEUMATIC ACTUATOR

The General Electric AG-14 actuator design which was used for the analysis presented in this report is shown in Figure 1. Figures 2, 3, 4, & 5 show the actuator in more detail.

The General Electric AG-14 actuator, which is one of the proposed designs being considered for the NERVA engine, is a pneumatically powered mechanism that positions the reactor control drums to determine the engine power output. The linear motion of a single acting, gas driven piston is converted to rotary motion by means of a rack and pinion. The piston is controlled by a servo valve which regulates pressure, to overcome the control drum return spring force, in response to electrical signals from the reactor control center to a torque motor. A potentiometer is coupled to the output shaft to sense shaft position and provide an electrical feedback signal to the reactor control center. A torsional spring provides snubbing action, when the actuator is driven against its limit stops, to decelerate the control drums and protect them from damage as the result of excessive deceleration forces.

FAILURE MODE ANALYSIS PROCEDURE

The initial step in making this failure mode analysis is to examine the detail drawings and the assembly drawing. From these, a parts list is created. To provide identification, each part is assigned a planning parts list number which will be used throughout the analysis. In addition, this number is associated with the detail

drawing part number; however, if there is future re-design, there may be several part numbers that would be identified with a single planning parts list number.

Each part, now identified by a planning parts list number (See Table 1), is considered separately; part function established; and the details of the part, as visualized from the available information, are studied. For each part, every conceivable mode of failure is noted and the probable cause or causes of each mode is recorded. How the mode of failure affects the operation of the actuator and the over-all mission is next evaluated and enumerated.

Action to eliminate or prevent each mode of failure is determined. The recommended action may: (1) require special quality control effort during the manufacturing phase and consist of special tests, measurements, or procedures; (2) require some special laboratory tests, such as environmental tests, to demonstrate the design integrity; and (3) suggest additional design effort. During the initial design phase, the recommended actions can greatly assist in the attainment of a design with high inherent reliability. It is for this reason that the failure mode analysis of this report has been made.

Results of the failure mode analysis are summarized on a special form (see Table II). This form lists the part name, planning parts list number, mode of failure, hazard, effect on thrust and actuator performance, cause of failure, recommended methods to eliminate or prevent failure, and disposition. In the future, the disposition column is to be used to note the action actually taken.

Since the summary of Table II is aimed at recommending design actions to improve

the reliability of the design, the recommended actions are discussed in greater detail in the following paragraphs:

RESULTS AND DISCUSSION

The General Electric AG-14 actuator as shown in Figures 1, 2, 3, 4, and 5 is the initial design of the configuration using a rack and pinion to transmit actuator output torque. It is at an eary stage of development where a failure mode analysis is highly desirable in that changes, which can aid in attainment of a design with higher reliability, can be recognized and design action taken before changes would be difficult to make. The failure mode analysis represented by the summary of Table II reflects the items where recommendations for design changes to eliminate failure modes will improve the inherent reliability of the General Electric AG-14 actuator. This report is concerned primarily with the recommendations for further design action in the following areas to obtain a higher inherent reliability.

1. Provide Means to Protect Orifices from Clogging

There are five orifices through which cooling and exhaust gases flow immediately before dumping into the actuator exhaust cavity. Should the servo exhaust orifice clog, the actuator will not be able to move to the closed position. Should the cooling flow orifices clog, overheating will result and cause the actuator to jam in a fixed position. It is recommended that these orifices be protected individually from clogging.

2. Provide more Positive Methods for Locking and/or Retaining Pins, Nuts, and Adjustments

There are a number of areas where the locking or retention of pins, nuts and adjustments is dependent upon friction. In view of the stringent requirements of the NERVA system, it is out of proportion to have the success or failure of the system depend upon friction to lock together certain parts. Considering the variable environmental conditions present, which tend to affect friction, a more positive means of locking is in order.

A spring pin (roll pin) is used to trap the pivot pin for the piston bearing and depends solely upon its coil spring action to remain in place. If it were to back out, it could fall into the gear and jam the actuator in a fixed position. A positive method of locking the spring pin or another method of trapping the pivot pi should be considered.

A plug is press fitted and staked in place in the end of the rack bearing cover. Improper machining to obtain the press fit and inadequate staking can allow the plug to fall out and into the gear and jam the actuator in a fixed position. Since staking is done manually, the inherent variation in the process dictates that the possibility of inadequate staking is not remote. Another more positive method of retaining this plug is recommended.

A spring pin (roll pin) is used as the anti-rotation feature for the rack bearing shaft and is retained by staking. For reasons previously stated, staking is undesirable. In this application, a spring pin is undesirable since it is subjected to shear

loading in addition to the compression loading for which it is designed. It is recommended that another type pin or another method of preventing rotation be considered.

A spring pin (roll pin) is used to retain the potentiometer coupling shaft to the soft stop spring and is retained by staking. Should the pin shear, the potentiometer would be disengaged from the actuator output shaft and a fixed position feedback signal results. The actuator then becomes a two position mechanism; either full open or full close. The comments previously stated in regard to staking and shear loading of a roll pin also apply here.

Self-locking nuts are used to retain the control drum shaft coupling to the actuator output shaft, and the soft stop spring to the output shaft. Should the nut retaining the coupling back off, the actuator and control drum shaft disengage and the control drum cannot be operated. It is essential that a positive method of locking the nuts be provided.

Mid-grip helicoil thread inserts are used to lock the servo inlet poppet and the torque motor flapper adjustments. Should the servo inlet poppet insert relax, the poppet will back off its seat and result in an open passage for high pressure supply gas to drive the actuator piston to the full open position or possibly keep the actuator from closing. Should the torque motor flapper adjustment inserts relax, the spring load on the flapper is reduced, the servo manifold nozzle opened and the actuator given the signal to close. More positive methods of locking the poppet and the flapper adjustments should be considered.

3. Change the Servo Linkage Pivot Pins Material to a More Ductile Steel

The servo linkage pivot pins are presently made of AISI 440C steel which has low shock or impact strength. Such strength may be required to withstand the loads as the servo poppets strike against their seats. Should the pivot pins fail, the actuator will either operate in one direction only or become completely inoperative, depending upon which pivot pin failed. It is recommended that a more suitable steel be used as pivot pins in this application.

4. Provide Spring Loaded Bypass Around the Filters for Supply Gas and Cooling Gas

The gas to the actuator flows through filters. Should a filter clog, the actuator either does not operate or it overheats and jams in a fixed position, depending upon which filter was clogged. A spring loaded bypass which can open when a given pressure drop across the screen is reached will permit the flow of gas to operate or cool the actuator, at least until something clogs or sticks.

5. Improve the Electrical Connector

Quick disconnect type electrical connectors are considered to have a high failure potential, which suggests that they be eliminated. It is recommended that some positive means of connection be employed that is not affected by friction, spring loading, vibration, corrosion, etc., as is the quick disconnect type connector. In the event this cannot be effectively accomplished, the use of more than one pin for each circuit to provide redundancy is strongly recommended.

6. Assure that Failure in the Electrical Feedback Circuit and Torque Motor Circuit Results in or Enables the Actuator to go to the Closed Position

The feedback potentiometer senses actuator output position and provides an electrical signal to the engine control center. Should the potentiometer or its circuitry fail, there will be no indication of control drum position and the actuator may be driven to the full open position.

The torque motor responds to electrical signals from the engine control center to control pressure to the actuator piston by means of the servo valve. Should the torque motor or its circuitry fail, the flapper spring will cause the servo nozzle to be closed and the actuator will be driven to the full open position.

In both cases, redundant circuits should be used if at all possible. Furthermore, both items should be designed so that the actuator can never be driven to the open position, resulting in a control drum being stuck open.

7. Provide a Restriction or Check Valve in the Gas Lines to and from the Actuator

There are several failures which will result in the loss of large quantities of hydrogen from the actuator. Some means of limiting this loss is desirable and it is recommended that the use of some type of restriction or check valve for the gas lines to and from the actuator be investigated.

8. Provide a Safety Locking Device to Secure the Actuator

In the present design there is no locking device to secure the actuator and prevent damage to it and the control drum during shipment of the engine. Also,

prior to engine starting, a lock provides positive assurance that the control drum is in the closed position and cannot be moved until desired. It is strongly recommended that a locking device be provided.

9. Make the Actuator Double Acting

At the present time the actuator is gas driven only in the open direction and depends upon the control drum return spring to drive it in the closed direction. Should the control drum return spring fail, the actuator cannot move in the closed direction, and may remain in the failed position or overshoot toward the full open position since the restraining force of the spring is lost.

It is recommended that the actuator be made double acting; that is, the actuator be gas driven in the closed direction as well as the open direction. In this way the control drum return spring becomes a safety feature as well as provides additional force to move the control drum in the closed position.

Additional consideration should be given to the following to improve the over-all actuator reliability:

1. Conduct Extensive Environmental Testing

Since the actuator is a mechanism with many moving parts, the only known procedure to properly evaluate the design is to conduct extensive environmental testing over the full range of operating variables. Plans for a comprehensive test program including vibration, temperature, radiation, shock, thermal shock, exposure to hydrogen, etc., cannot be overemphasized.

2. Clear Room Assembly

There are many seals in the actuator which may leak. Leakage can be caused by contamination lodged on the sealing edges of the seal. There are also five unfiltered orifices which may become clogged by contamination. It is apparent that all parts must be thoroughly cleaned prior to assembly, and contamination held to a minimum during assembly. It is recommended that assembly be performed in an area where special precautions are taken to maintain cleanliness.

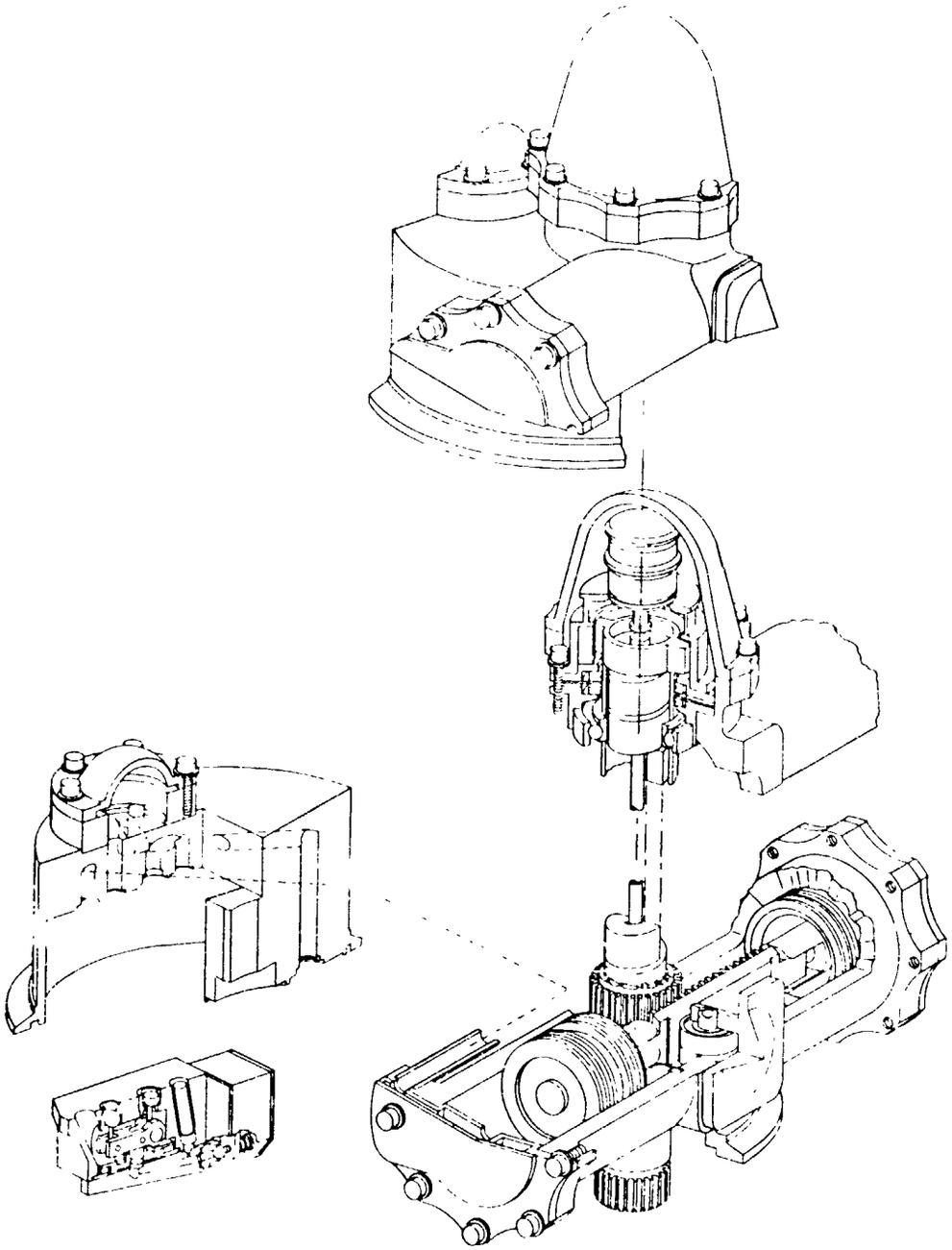

Figure 1
General Electric AG-14
Pneumatic Actuator Assembly

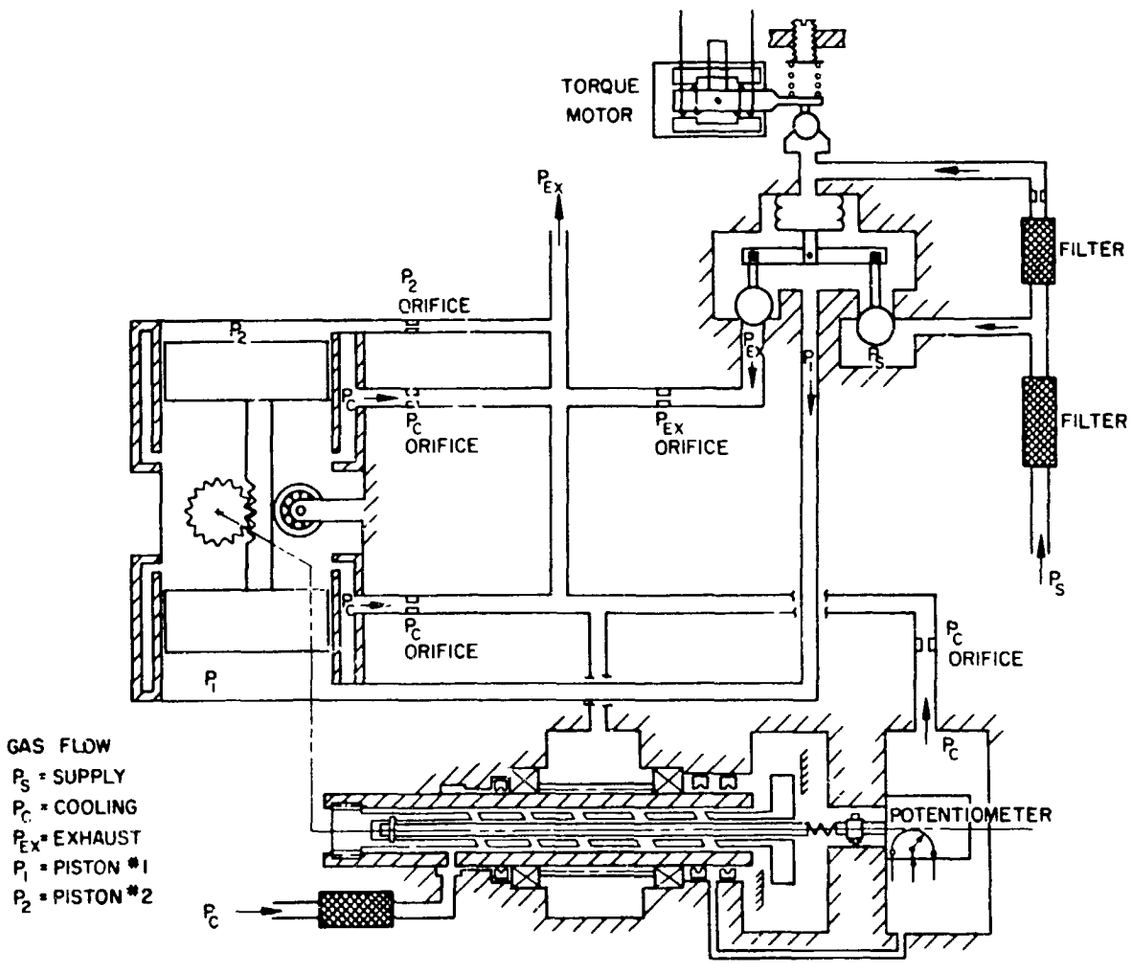

Figure 2
Schematic of General Electric
[illegible]-14 Actuator

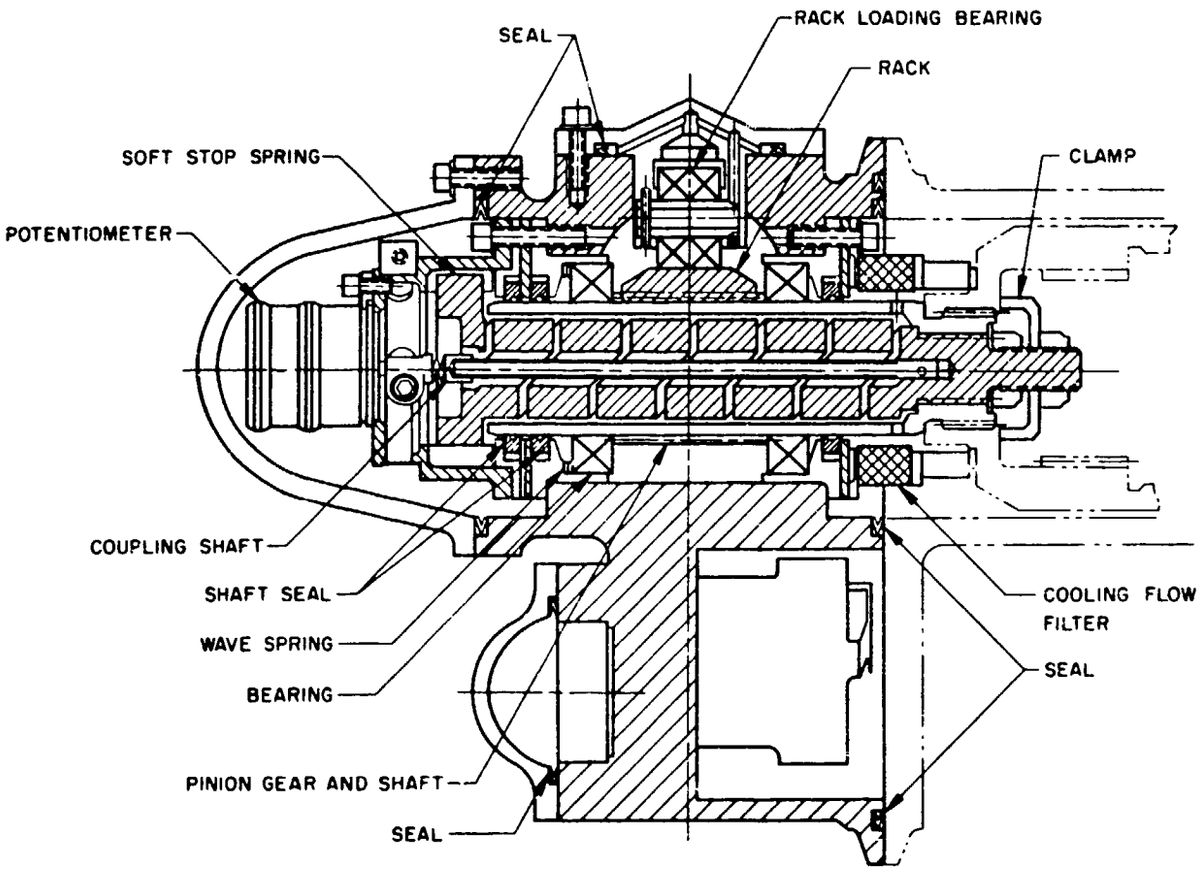

Figure 3
General Electric AG-14
Pneumatic Actuator Assembly

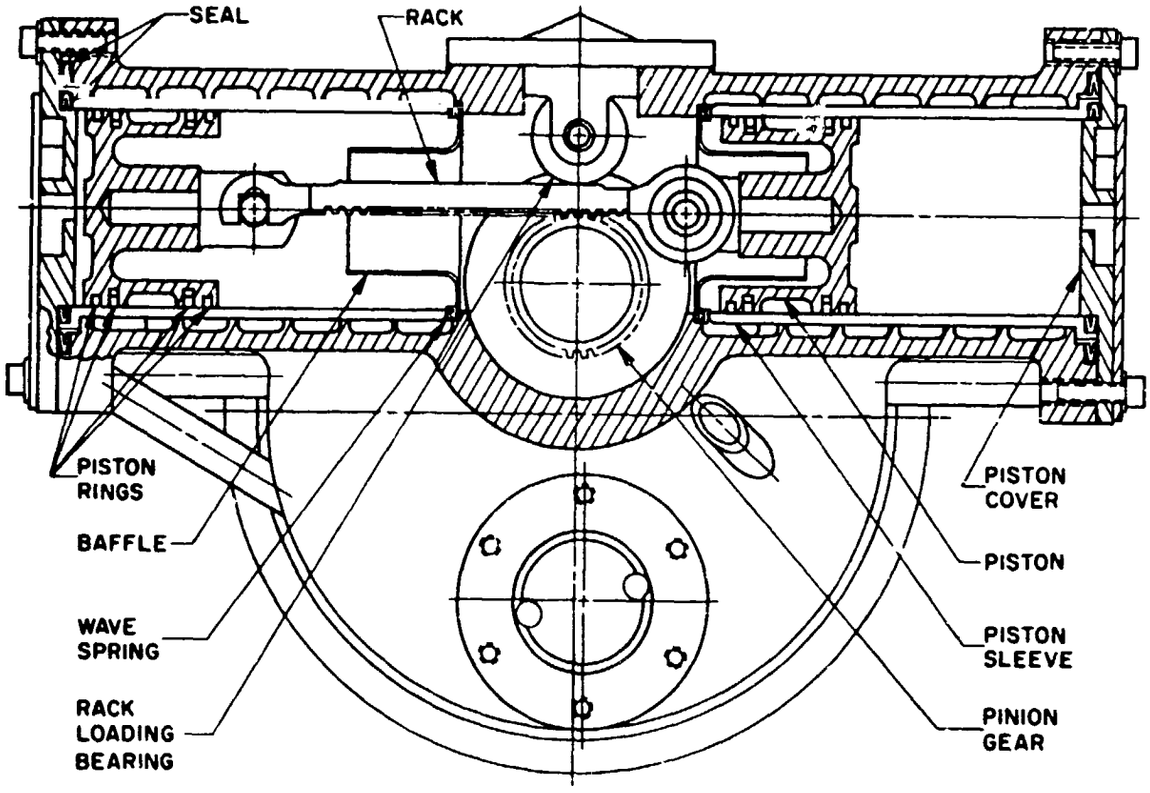

Figure 4
General Electric AG-14
umatic Actuator Assembly

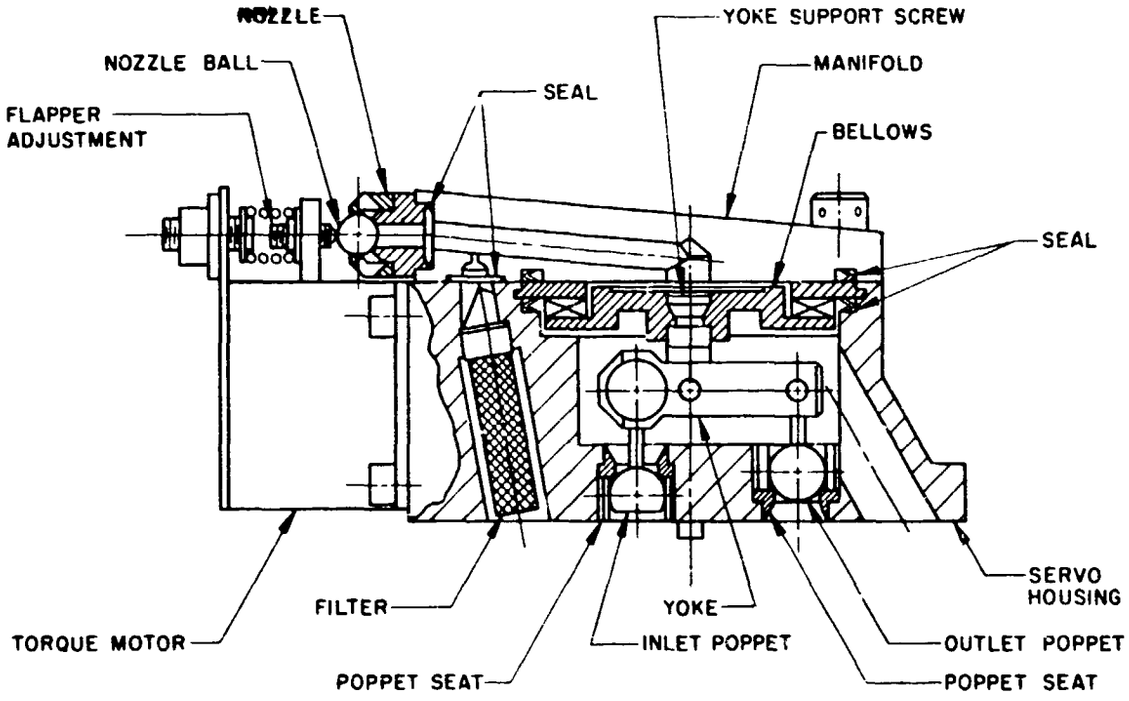

Figure 5
Servo Valve And
Torque Motor Assembly

PLANNING PARTS LIST

PPL C 00 00 REV

SHEET 1 OF 6

PREPARED I. R. Spezialetti DATE 9-12-62

CHECKED

APPROVED

TITLE ACTUATOR - GAS SERVO, GENERAL ELECTRIC AG-14

WESTINGHOUSE ELECTRIC CORPORATION
Astronuclear Laboratory
PITTSBURGH, PA.

PPL NO.	REV	1	2	3	4	5	6	7	8	PART NAME		No. Req'd	TASK NO.
C 00 00		Gas Servo Actuator - GE AG-14										1	
C 01 00			Actuator Housing Assy									1	
C 01 01				Housing								1	
C 01 02				Baffle								2	
C 01 03				Wave Spring								2	
C 01 04				Piston Sleeve								2	
C 01 05				Setscrew Orifice								5	
C 02 00			Rack & Pistons Assy									1	
C 02 01				Rack								1	
C 02 02				Piston								2	
C 02 03				Pin								1	
C 02 04				Spring Pin								1	
C 02 05				Pin								1	
C 02 06				Rod End Bearing								1	
C 02 07				Piston Ring								8	
C 02 08				Piston Ring								4	
C 02 09				Seal								2	
C 02 10				Seal								2	
C 02 11				Seal								4	
C 02 12				Piston Cover								2	

PLANNING PARTS LIST

PPL C 00 00 REV
SHEET 2 OF 6

PREPARED I. R. Spezialetti DATE 9-12-62
CHECKED
APPROVED

TITLE
ACTUATOR - GAS SERVO,
GENERAL ELECTRIC
AG-14

WESTINGHOUSE ELECTRIC CORPORATION
Astronuclear Laboratory
PITTSBURGH, PA.

PPL NO.	REV	1	2	3	4	5	6	7	8	PART NAME		No. Req'd	TASK NO.
C 02 13				Washer - Belleville								16	
C 02 14				Screw - Socket Head								16	
C 03 00				Rack Cover Assy								1	
C 03 01				Cover								1	
C 03 02				Duplex Bearing								1	
C 03 03				Bearing Shaft								1	
C 03 04				Spring Pin								1	
C 03 05				Seal								1	
C 03 06				Washer - Belleville								6	
C 03 07				Screw - Socket Head								6	
C 04 00				Pinion Gear Assy								1	
C 04 01				Pinion Gear								1	
C 04 02				Bearing Housing								2	
C 04 03				Ball Bearing								2	
C 04 04				Wave Spring								1	
C 04 05				Seal								3	
C 04 06				Seal Spacer								1	
C 04 07				Seal Retainer								1	
C 04 08				Seal Spacer								1	
C 04 09				Washer								12	

PLANNING PARTS LIST

PPL C 00 00 REV
SHEET 3 OF 6

PREPARED I. R. Spezialetti DATE 9-12-62
CHECKED
APPROVED

TITLE
ACTUATOR - GAS SERVO,
GENERAL ELECTRIC
AG-14

WESTINGHOUSE ELECTRIC CORPORATION
Astronuclear Laboratory
PITTSBURGH, PA.

PPL NO.	REV	1	2	3	4	5	6	7	8	PART NAME		No. Req'd	TASK NO.
C 04 10										Screw - Socket Head		6	
C 04 11										Screw - Socket Head		6	
C 05 00										Soft Stop & Coupling Assy		1	
C 05 01										Soft Stop Spring		1	
C 05 02										Coupling Shaft		1	
C 05 03										Spring Pin		1	
C 05 04										Washer - Belleville		1	
C 05 05										Screw - Socket Head		1	
C 05 06										Washer - Belleville		1	
C 05 07										Nut - Self Locking		2	
C 05 08										Clamp		1	
C 06 00										Potentiometer Assy		1	
C 06 01										Potentiometer		1	
C 06 02										Cleat		3	
C 06 03										Washer - Belleville		2	
C 06 04										Loop Clamp		1	
C 06 05										Screw - Socket Head		3	
C 06 06										Stop & Potentiometer Mount		1	
C 06 07										Band		1	
C 06 08										Washer - Belleville		1	

PLANNING PARTS LIST

PPL C 00 00 REV

SHEET 4 OF 6

PREPARED I. R. Spezialetti DATE 9-12-62

CHECKED

APPROVED

TITLE

ACTUATOR - GAS SERVO,
GENERAL ELECTRIC
AG-14

WESTINGHOUSE ELECTRIC CORPORATION
Astronuclear Laboratory
PITTSBURGH, PA.

PPL NO.	REV	1	2	3	4	5	6	7	8	PART NAME		No. Req'd	TASK NO.
C 06 09										Screw - Socket Head		1	
C 06 10										Nut		1	
C 06 11										Seal		1	
C 06 12										Cover - Potentiometer		1	
C 06 13										Washer - Belleville		8	
C 06 14										Screw - Socket Head		8	
C 07 00										Servo Valve Assy		1	
C 07 01										Body		1	
C 07 02										Poppet Seat		2	
C 07 03										Yoke		1	
C 07 04										Yoke Support		1	
C 07 05										Pin		2	
C 07 06										Outlet Poppet		1	
C 07 07										Pin - Inlet Poppet		1	
C 07 08										Helical Coil Insert		2	
C 07 09										Inlet Poppet		1	
C 07 10										Screw - Yoke Support		1	
C 07 11										Seal		2	
C 07 12										Bellows		1	
C 07 13										Filter		1	

PLANNING PARTS LIST

PPL C 00 00 REV

SHEET 5 OF 6

PREPARED I. R. Spezialetti DATE 9-12-62

CHECKED

APPROVED

TITLE ACTUATOR - GAS SERVO GENERAL ELECTRIC AG-14

WESTINGHOUSE ELECTRIC CORPORATION

Astronuclear Laboratory PITTSBURGH, PA.

PPL NO.	REV	1	2	3	4	5	6	7	8	PART NAME		No. Req'd	TASK NO.
C 07 14				Seal								2	
C 07 15				Manifold								1	
C 07 16				Nozzle								1	
C 07 17				Washer - Belleville								2	
C 07 18				Screw - Socket Head								2	
C 07 19				Washer - Belleville								4	
C 07 20				Screw - Socket Head								4	
C 07 21				Nozzle Ball								1	
C 07 22				Flapper Screw								1	
C 07 23				Torque Motor								1	
C 07 24				Washer - Belleville								4	
C 07 25				Screw - Socket Head								4	
C 07 26				Exhaust Volume Cover								1	
C 07 27				Seal								1	
C 07 28				Washer - Belleville								6	
C 07 29				Screw - Socket Head								6	
C 07 30				Seal								3	
C 07 31				Seal								1	
C 07 32				Seal								1	
C 07 33				Washer - Belleville								4	

CONFIDENTIAL
RESTRICTED DATA

PLANNING PARTS LIST

PPL C 00 00 REV

SHEET 6 OF 6

PREPARED I. R. Spezialetti DATE 9-12-62

CHECKED

APPROVED

TITLE

ACTUATOR - GAS SERVO
GENERAL ELECTRIC
AG-14

WESTINGHOUSE ELECTRIC CORPORATION
Astronuclear Laboratory
PITTSBURGH, PA.

PPL NO.	REV	1 2 3 4 5 6 7 8	PART NAME		No. Req'd	TASK NO.
C 07 34			Screw - Socket Head		4	
C 08 00			Filter - Cooling Flow		1	
C 09 00			Filter - Supply		1	
C 10 00			Wiring Harness & Receptacles		1	
C 10 01			Wiring Harness		1	
C 10 02			Electrical Receptacle		1	
C 10 03			Seal		1	
C 10 04			Washer - Belleville		8	
C 10 05			Screw - Socket Head		8	
C 10 06			Electrical Receptacle		1	
C 11 00			Assembly Hardware		1	
C 11 01			Seal		1	
C 11 02			Seal		1	
C 11 03			Seal		1	
C 11 04			Seal		2	
C 11 05			Marmon Clamp		1	

TABLE II

FAILURE MODE ANALYSIS SUMMARY

NERVA CONTROL DRUM ACTUATOR

PROPOSED BY GENERAL ELECTRIC

(MODEL AG-14)

LIST OF ABBREVIATIONS AND SYMBOLS USED

Vib. ---------- Vibration

Temp. ---------- Temperature

H_2 ---------- Hydrogen

Q.C. ---------- Quality Control

E.---------- Environmental Test

Assy. ---------- Assembly

Trans. ---------- Transverse

Mtg. ---------- Mounting

FAILURE MODE ANALYSIS SUMMARY — PAGE 1 of 13 PAGES

Actuator - Gas Servo, General Electric AG-14 — TABLE II — DATE 9-28-62 — REV. -----

PART NAME	PLANNING PARTS LIST NUMBER	MODE OF FAILURE	HAZARD	EFFECT ON THRUST* & PERFORMANCE**	CAUSE OF FAILURE	RECOMMENDED METHODS TO ELIMINATE OR PREVENT FAILURE: TESTING MFG.	TESTING DEV.	DESIGN	DISPOSITION
Actuator Housing	C-01-01	Break Trans.	X	5/B	Vib., Flaw	QC	E	Include Fuse or orifice to restrict hydrogen leakage.	
		Break @ Cooling Gas Braze Joint	X	None/H	Vib., Poor Braze	QC	E		
		Break @ Cooling Gas Braze Joint	X	Fluctuate/F	Vib., Poor Braze	QC	E		
		Break @ Supply Gas Braze Joint	X	4/B	Vib., Poor Braze	QC	E		
		Damaged Cooling Gas Seal Surf.	X	None/H	Improper Mach., Careless Handling	QC	-		
		Damaged Supply Gas Seal Surf.	X	5/B	Improper Mach., Careless Handling	QC	-		
		Break @ Cooling Gas Plug Weld	X	None/H	Vib., Poor Weld	QC	E		
		Break @ Supply Gas Plug Weld	X	5/C	Vib., Poor Weld	QC	E		
Cooling Baffle	C.01.02	Break Trans; Act'g. Pist. Bar.		5/G	Vib., Flaw	QC	E		
		Break Trans. Non-Act. Pist. Bar.		None/G	Vib., Flaw	QC	E		
		Break Trans: Either Baffle		4 or 5 /A, B, or C	Vib., Flaw	QC	E		
Wave Spring	C.01.03	Relax; Act'g Piston Sprg.		5/G	Temp.	-	E		
		Relax; Non-Act'g. Piston Sprg.		None/H	Temp.	-	E		
		Break Axial; Act'g. Pist.Sprg.		5/G	Vib., Flaw	QC	E		
		Break Axial; Non-Act. Pist.Sprg		None/H	Vib., Flaw	QC	E		
Piston Sleeve	C.01.04	Break Trans., Act'g. Pist.Slve.		5/G	Vib., Flaw	QC			
		Break Trans., Non-Act. Pist. Slve.		None/H	Vib., Flaw	QC	E		
		Dam. Seal. Surf., Act'g.Pist.Slve.		5/G	Improper Mach., Careless Handling	QC	-		
		Dam. Seal. Surf., Non-Act.Pist.Slve		None/H	Improper Mach., Careless Handling	QC	-		

*EFFECT ON THRUST

1. IMMEDIATE DESTRUCTION
2. EVENTUAL DESTRUCTION
3. DECREASE MORE THAN 20%
4. INCREASE
5. DECREASE LESS THAN 10%

**EFFECT ON ACTUATOR PERFORMANCE

A. FULL OPEN - CAN NOT CLOSE
B. FULL CLOSE - CAN NOT OPEN
C. PARTLY OPEN - CAN NOT MOVE
D. FULL OPEN - CAN CLOSE
E. FULL CLOSE - CAN OPEN
F. OSCILLATES
G. DEGRADED PERFORMANCE
H. NONE

FAILURE MODE ANALYSIS SUMMARY

PAGE 2 of 13 PAGES

Actuator - Gas Servo, General Electric AG-14

TABLE II

DATE 9-28-62 REV. ------

PART NAME	PLANNING PARTS LIST NUMBER	MODE OF FAILURE	HAZARD	EFFECT ON THRUST* & PERFORMANCE**	CAUSE OF FAILURE	RECOMMENDED METHODS TO ELIMINATE OR PREVENT FAILURE: TESTING MFG.	TESTING DEV.	DESIGN	DISPOSITION
		Sticking With Piston Rings		None/G	Improper Mach., Contam., Cleaning Action of H_2	QC	E		
		Seizure with Piston Rings - Full Open Pos.		4/A	Temp., Cleaning Action of H_2, Contam., Dam.Sur.	QC	E		
		Seizure with Piston Rings - Full Close Pos.		None/B	Temp., Cleaning Action of H_2, Contam., Dam.Sur.	QC	E		
		Seizure with Piston Rings-Some Open Pos.		4 or 5/C	Temp., Cleaning Action of H_2, Contam., Dam.Sur.	QC	E		
Setscrew (Orifice)	C.01.05	Clog. Servo Exhaust Line		None/G	Debris, Contam.	QC	-	Filter Screen for Orifice	
		Clog. Cooling Gas Lines		4/A, B, or C	Debris, Contam.	QC	-	Filter Screen for Orifices	
Rack	C.02.01	Break Trans @ Brg. End		5/G	Vib., Flaw	QC	E		
		Break Trans @ Rack		5/G	Vib., Flaw	QC	E		
		Break Trans @ Hook End		None/H	Vib., Flaw	QC	E		
		Seizure with Pinion - Full Open Pos.		4/A	Vib., Temp. H_2 Cleaning Action, Debris	-	E		
		Seizure with Pinion - Full Close Pos.		None/B	Vib., Temp. H_2 Cleaning Action, Debris	-	E		
		Seizure with Pinion - Some Open Pos.		4 or 5/C	Vib., Temp., H_2 Cleaning Action, Debris	-	E		
		Wear		Fluctuates /F	Debris, Contam.	-	E		
Piston	C.02.02	Break Trans., Art'g. Piston		5/G	Vib., Flaw	QC	E		
		Break Trans., Non-Act. Pist.		None/H	Vib., Flaw	QC	E		
		Break Trans., Jam Full Open		4/A	Vib., Flaw	QC	E		
		Break Trans., Jam Full Close		None/B	Vib., Flaw	QC	E		
		Break Trans., Jam Part Open		4 or 5/C	Vib., Flaw	QC	E		

*EFFECT ON THRUST

1. IMMEDIATE DESTRUCTION
2. EVENTUAL DESTRUCTION
3. DECREASE MORE THAN 30%
4. INCREASE
5. DECREASE LESS THAN 10%

**EFFECT ON ACTUATOR PERFORMANCE

A. FULL OPEN - CAN NOT CLOSE
B. FULL CLOSE - CAN NOT OPEN
C. PARTLY OPEN - CAN NOT MOVE
D. FULL OPEN - CAN CLOSE
E. FULL CLOSE - CAN OPEN
F. OSCILLATES
G. DEGRADED PERFORMANCE
H. NONE

FAILURE MODE ANALYSIS SUMMARY

PAGE 3 of 13 PAGES

Actuator - Gas Servo, General Electric AC-14

TABLE II

DATE 9-28-62 REV. -------

PART NAME	PLANNING PARTS LIST NUMBER	MODE OF FAILURE	HAZARD	EFFECT ON THRUST* PERFORMANCE**	CAUSE OF FAILURE	RECOMMENDED METHODS TO ELIMINATE OR PREVENT FAILURE: TESTING MFG.	TESTING DEV.	DESIGN	DISPOSITION
Pin	C.02.03	Break Trans.		5/G	Vib., Flaw	QC	E		
Spring Pin	C.03.04	Break Trans.		None/H	Vib., Flaw	QC	E	Positive Locking for Pin or other Method to Trap Pivot Pin	
		Back-Out		None/H	Vib.	-	E		
		Back-Out - Jam Full Open		4 /A	Vib.	-	E		
		Back-Out - Jam Full Close		None/B	Vib.	-	E		
		Back-Out - Jam Part Open		4 or 5/C	Vib.	-	E		
Pin	C.02.05	Break Trans.		None/H	Vib., Flaw	QC	E		
		Break Trans., Jam Full Open		4/A	Vib., Flaw	QC	E		
		Break Trans., Jam Full Close		None/B	Vib., Flaw	QC	E		
		Break Trans., Jam Part Open		4 or 5/C	Vib., Flaw	QC	E		
Rod End Bearing	C.02.06	Brg. Seizure		None/G	Temp., Cleaning Action of H_2, Contaminants	QC	E		
		Brg. Seizure Jam Full Open		4/A	Temp., Cleaning Action of H_2, Contaminants	QC	E		
		Brg. Seizure Jam Full Close		None/B	Temp., Cleaning Action of H_2 Contaminants	QC	E		
		Brg. Seizure Jam Part Open		4 or 5/C	Temp., Cleaning Action of H_2 Contaminants	QC	E		
Piston Ring	C.02.07	Break Axial.		None/H	Vib., Flaw	QC	E		
		Seizure with Pist. Sleeve - Jam Full Open		4/A	Temp., Cleaning Action of H_2, Contaminants	QC	E		
		Seizure with Pist. Sleeve - Jam Full Close		None/B	Temp., Cleaning Action of H_2 Contaminants	QC	E		
		Seizure with Pist. Sleeve - Jam Part Open		4 or 5/C	Temp., Cleaning Action of H_2 Contaminants	QC	E		
		Damaged Seal Surface		None/H	Careless Handling	QC	-		
Piston Ring	C.02.08	Break Axial.		None/H	Vib., Flaw	QC	E		
		Damaged Seal Surface		None/H	Careless Handling	QC	-		

*EFFECT ON THRUST

1. IMMEDIATE DESTRUCTION
2. EVENTUAL DESTRUCTION
3. DECREASE MORE THAN 30%
4. INCREASE
5. DECREASE LESS THAN 10%

**EFFECT ON ACTUATOR PERFORMANCE

A. FULL OPEN - CAN NOT CLOSE
B. FULL CLOSE - CAN NOT OPEN
C. PARTLY OPEN - CAN NOT MOVE
D. FULL OPEN - CAN CLOSE
E. FULL CLOSE - CAN OPEN
F. OSCILLATES
G. DEGRADED PERFORMANCE
H. NONE

FAILURE MODE ANALYSIS SUMMARY PAGE 4 of 13 PAGES

Actuator - Gas Servo, General Electric AG-14 TABLE II DATE 9-28-62 REV. --------

PART NAME	PLANNING PARTS LIST NUMBER	MODE OF FAILURE	HAZARD	EFFECT ON THRUST* & PERFORMANCE**	CAUSE OF FAILURE	RECOMMENDED METHODS TO ELIMINATE OR PREVENT FAILURE: TESTING MFG.	TESTING DEV.	DESIGN	DISPOSITION
Seal	C.02.09	Damaged Edges		Fluctuates/F	Careless Handling, Contaminants	QC	-		
		Damaged Edges		None/H	Careless Handling Contaminants	QC	-		
Seal	C.02.10	Damaged Edges	X	None/H	Careless Handling, Contaminants	QC	-		
Seal	C.02.11	Damaged Edges	X	None/H	Careless Handling, Contaminants	QC	-		
Piston Cover	C.02.12	Break @ Braze Joint	X	None/H	Vib., Poor Braze	QC	E		
		Break @ Braze Joint - Acting Pist. Cover	X	Fluctuates/F	Vib., Poor Braze	QC	E		
		Damaged Seal Surface	X	None /H	Careless Handling, Improper Machg.	QC	-		
Washer	C.02.13	Omitted @ Ass'y.		None/H	Careless Ass'y.	QC	-		
Screw	C.02.14	Break Trans.	X	None/H	Vib., Overtorque	QC	E		
Back Load Bearing Cover	C.03.01	Break Trans.		None/G	Vib., Flaw	QC	E		
		Plug Fall Out or Break Tran. Jam Full Open		N/A	Vib., Improper Retention, Flaw	QC	E	More Positive Retention Means	
		Plug Fall Out or Break Tran. Jam Full Close		None/P	Vib., Improper Retention, Flaw	QC	E	More Positive Retention Means	
		Plug Fall Out or Break Tran.		4 or 5/C	Vib., Improper Retention, Flaw	QC	E	More Positive Retention Means	
		Damaged Seal Surface	X	None/H	Improper Machg., Careless Handling	QC	E		
Duplex Bearing	C.03.02	Seizure of Balls & Races		None/G	H_2 Cleaning Action, Temp., Contaminants	QC	E		
		Spalling of Balls & Races		None/G	Vib., Overload	-	E		
		Wear		None/G	Temp. Overload. Contaminants	QC	E		
		Ball Breaks		None/G	Defective Ball	QC	E		
		Ball Retain. Breaks		None/G	Vib., Defective Retainer	QC	E		
Bearing Shaft	C.03.03	Break Trans.		None/G	Vib., Flaw	QC	E		

***EFFECT ON THRUST**

1. IMMEDIATE DESTRUCTION
2. EVENTUAL DESTRUCTION
3. DECREASE MORE THAN 30%
4. INCREASE
5. DECREASE LESS THAN 10%

****EFFECT ON ACTUATOR PERFORMANCE**

A. FULL OPEN - CAN NOT CLOSE
B. FULL CLOSE - CAN NOT OPEN
C. PARTLY OPEN - CAN NOT MOVE
D. FULL OPEN - CAN CLOSE
E. FULL CLOSE - CAN OPEN
F. OSCILLATES
G. DEGRADED PERFORMANCE
H. NONE

FAILURE MODE ANALYSIS SUMMARY — PAGE 5 of 13 PAGES

Actuator - Gas Servo, General Electric Ai-15 — TABLE II — DATE 9-28-62 — REV. -------

PART NAME	PLANNING PARTS LIST NUMBER	MODE OF FAILURE	HAZARD	EFFECT ON THRUST* & PERFORMANCE**	CAUSE OF FAILURE	RECOMMENDED METHODS TO ELIMINATE OR PREVENT FAILURE: TESTING MFG.	TESTING DEV.	DESIGN	DISPOSITION
Spring Pin	C.03.04	Break Trans.		None/H	Vib., Wear	-	E	Replace with Another Type Pin or Change Method of Retention	
		Back Out		None/H	Vib., Poor Stake	QC	E		
		Back Out - Jam Full Open		4/A	Vib., Poor Stake	QC	E		
		Back Out - Jam Full Close		None/B	Vib., Poor Stake	QC	E		
		Back Out - Jam Part Open		4 or 5/C	Vib., Poor Stake	QC	E		
Seal	C.03.05	Damaged Seal Surface	X	None/H	Careless Handling, Contaminants	QC	-		
Washer	C.03.06	Omitted		None/H	Careless Ass'y.	QC	-		
Screw	C.03.07	Break Trans.	X	None/H	Vib., Overtorque	QC	E		
Pinion Gear	C.04.01	Seize Intern. Spline		None/H	Vib., Cleaning Action of H_2, Temp.	-	E		
		Seize Extern. Spline or Gear Jam Full Open		4/A	Vib., Cleaning Action of H_2, Temp.	-	E		
		Seize Extern. Spline or Gear Jam Part Open		4 or 5/C	Vib., Cleaning Action of H_2, Temp.	-	F		
		Intern. Spline Wear		None/H	Vib., Contam.	QC	E		
		Extern. Spline Wear		None/G	Vib., Contam.	QC	E		
		Gear Wear		None/G	Vib., Contam.	QC	E		
		Seize Extern. Spline or Gear Jam Full Close		None/G	Vib., Cleaning Action of H_2, Temp.	-	E		
Bearing Housing	C.04.02	Break Trans. - Jam Full Open		4/A	Vib., Flaw	QC	E		
		Break Trans. - Jam Full Close		None/B	Vib., Flaw	QC	E		
		Break Trans. - Jam Part Open		4 or 5/C	Vib., Flaw	QC	E		
		Damaged Seal Surface		None/H	Improper Mach., Careless Handlg., Contaminants	QC	-		
Ball Bearing	C.04.03	Seizure of Balls and Races - Jam Full Open		4/A	Temp., Cleaning Affect of H_2, Contaminants	QC	E		

*EFFECT ON THRUST
1. IMMEDIATE DESTRUCTION
2. EVENTUAL DESTRUCTION
3. DECREASE MORE THAN 30%
4. INCREASE
5. DECREASE LESS THAN 10%

**EFFECT ON ACTUATOR PERFORMANCE
A. FULL OPEN - CAN NOT CLOSE
B. FULL CLOSE - CAN NOT OPEN
C. PARTLY OPEN - CAN NOT MOVE
D. FULL OPEN - CAN CLOSE
E. FULL CLOSE - CAN OPEN
F. OSCILLATES
G. DEGRADED PERFORMANCE
H. NONE

FAILURE MODE ANALYSIS SUMMARY

PAGE 6 of 13 PAGES

Actuator - Gas Servo, General Electric AG-14

TABLE II

DATE 9-28-62 REV. -------

PART NAME	PLANNING PARTS LIST NUMBER	MODE OF FAILURE	HAZARD	EFFECT ON THRUST* & PERFORMANCE**	CAUSE OF FAILURE	RECOMMENDED METHODS TO ELIMINATE OR PREVENT FAILURE: TESTING MFG.	TESTING DEV.	DESIGN	DISPOSITION
		Seizure of Balls and Races - Jam Full Close		None/A	Temp., Cleaning Affect of H_2, Contaminant	QC	F		
		Seizure of Balls and Races - Jam Part Open		4 or 5/C	Temp., Cleaning Affect of H_2 Contaminant	QC	E		
		Spalling of Balls and Races		None/G	Vib.	-	E		
		Wear		None/G	Temp., Contam.	QC	E		
		Ball or Retain Brks.		None/G	Defective Ball or Retainer	QC	-		
		Ball or Retain Brks. - Jam Full Open		4 /A	Defective Ball or Retainer	QC	-		
		Ball or Retain Brks. - Jam Full Close		None/B	Defective Ball or Retainer	QC	-		
		Ball or Retain Brks. - Jam Part Open		4 or 5/C	Defective Ball or Retainer	QC	-		
Wave Spring	C.04.04	Relaxation		4/E	Temp.	-	E		
		Relaxation		None/E	Temp.	-	E		
		Break Axial.		4/B	Vib., Flaw	QC	E		
		Break Axial.		None/E	Vib., Flaw	QC	E		
Seal	C.04.05	Damaged Seal Surfaces		None/H	Careless Handling, Contaminants	QC	-		
Seal Spacer	C.04.06	Damaged Seal Surface		None/H	Improper Machg., Careless Handlg., Contaminants	QC	-		
Seal Retainer	C.04.07	Damaged Seal Surface		None/H	Improper Machg., Careless Handlg., Contaminant	QC	-		
Seal Spacer	C.04.08	Damaged Seal Surface		None/H	Improper Machg., Careless Handling	QC	-		
Washer	C.04.09	Omitted		None/H	Careless Ass'y.	QC	-		
Screw	C.04.10	Break Trans.		None/H	Vib., Overtorque	QC	E		
Screw	C.04.11	Break Trans.		None/H	Vib., Overtorque	QC	E		
Soft Stop Spring	C.05.01	Break Trans.		None/H	Impact, Vib., Flaw	QC	E		

*EFFECT ON THRUST

1. IMMEDIATE DESTRUCTION
2. EVENTUAL DESTRUCTION
3. DECREASE MORE THAN 30%
4. INCREASE
5. DECREASE LESS THAN 10%

**EFFECT ON ACTUATOR PERFORMANCE

A. FULL OPEN - CAN NOT CLOSE
B. FULL CLOSE - CAN NOT OPEN
C. PARTLY OPEN - CAN NOT MOVE
D. FULL OPEN - CAN CLOSE
E. FULL CLOSE - CAN OPEN
F. OSCILLATES
G. DEGRADED PERFORMANCE
H. NONE

FAILURE MODE ANALYSIS SUMMARY

PAGE 1 of 13 PAGES

Actuator - Gas Servo, General Electric AG-14

TABLE II

DATE 9-28-60 REV. -------

PART NAME	PLANNING PARTS LIST NUMBER	MODE OF FAILURE	HAZARD	EFFECT ON THRUST* & PERFORMANCE**	CAUSE OF FAILURE	RECOMMENDED METHODS TO ELIMINATE OR PREVENT FAILURE: TESTING MFG.	TESTING DEV.	DESIGN	DISPOSITION
		Break Spring		None/H	Vib., Flaw	QC	E		
		Break @ Thal. Relief		None/B	Vib., Overtorque	QC	E		
		Spring Relax		None/H	Temp.	-	E		
Coupling Shaft	C.05.02	Break @ Braze Joint		4/D	Vib., Poor Braze	QC	E		
		Break @ Braze Joint		None/E	Vib., Poor Braze	QC	E		
		Break @ Flex.		4/D	Vib., Flaw	QC	E		
		Break @ Flex.		None/E	Vib., Flaw	QC	E		
Spring Pin	C.05.03	Break Trans.		None/E	Vib., Flaw, Shear	QC	E	Replace with another type pin or another method of retaining parts.	
		Break Trans.		4/D	Vib., Flaw, Shear	QC	E		
Washer	C.05.04	Omitted		None/H	Careless Ass'y.	QC	-		
Screw	C.05.05	Break Trans.		4 /D	Vib., Overtorque	QC	E		
		Break Trans.		None/E	Vib., Overtorque	QC	E		
Washer	C.05.06	Omitted		None/H	Careless Ass'y.	QC	-		
Self Locking Nut	C.05.07	Back Off		None/ B or E	Vib.	-	E	Positive method of locking.	
		Back Off		4/D	Vib.	-	E		
Clamp	C.05.08	Break Trans.		None/B	Vib., Flaw., Overtorque Nut	QC	E		
Potentiometer	C.05.01	Elec. Open Circuit		4/D	Vib., Wear, Incorrect Ass'y.	QC	E		
		Elec. Open Circuit		None/E	Vib., Wear, Incorrect Ass'y.	QC	E		
		Open Signal		4 /D	Vib., Wear, Incorrect Ass'y.	QC	E		
		Close Signal		None/E	Vib., Wear, Incorrect Ass'y.	QC	E		
		Intermittant Signal		Fluctuates/ F	Vib., Wear, Contaminants	QC	E		
Cleat	C.06.02	Break Lip.		None/E	Vib., Flaw	QC	E		
		Break Lip.		4 /D	Vib., Flaw	QC	E		
Washer	C.06.03	Omitted		None/H	Careless Ass'y.	QC	-		
Loop Clamp	C.06.04	Break Trans.		None/E	Vib.	-	E		

*EFFECT ON THRUST

1. IMMEDIATE DESTRUCTION
2. EVENTUAL DESTRUCTION
3. DECREASE MORE THAN 30%
4. INCREASE
5. DECREASE LESS THAN 10%

**EFFECT ON ACTUATOR PERFORMANCE

A. FULL OPEN - CAN NOT CLOSE
B. FULL CLOSE - CAN NOT OPEN
C. PARTLY OPEN - CAN NOT MOVE
D. FULL OPEN - CAN CLOSE
E. FULL CLOSE - CAN OPEN
F. OSCILLATES
G. DEGRADED PERFORMANCE
H. NONE

FAILURE MODE ANALYSIS SUMMARY

PAGE 8 of 13 PAGES

Actuator - Gas Servo, General Electric AG-14

TABLE II

DATE 9-28-62 REV. -------

PART NAME	PLANNING PARTS LIST NUMBER	MODE OF FAILURE	HAZARD	EFFECT ON THRUST* & PERFORMANCE**	CAUSE OF FAILURE	RECOMMENDED METHODS TO ELIMINATE OR PREVENT FAILURE: TESTING MFG.	TESTING DEV.	DESIGN	DISPOSITION
		Break Trans.		4/D	Vib.	-	E		
Screw	C.06.05	Break Trans.		None/E	Vib., Overtorque	QC	E		
		Break Trans.		4 /D	Vib., Overtorque	QC	E		
		Back Out		None/E	Vib.	-	E	Provide method of locking.	
		Back Out		4/D	Vib.	-	E	Provide method of locking.	
Stop & Pot Mount	C.06.06	Break Trans. @ Flange		None/E	Vib.	-	E		
		Break Trans. @ Flange		4/D	Vib.	-	E		
		Break Axial. @ Lug.		None/H	Vib., Flaw	QC	E		
		Break Trans. @ Slots		None/E	Vib.	-	E		
		Break Trans. @ Slots		4/D	Vib.	-	E		
		Damaged Seal Surface		None /H	Improper Machg., Careless Handlg., Contaminants	QC	-		
Band	C.06.07	Break Trans.		None /H	Vib.	-	E		
		Damaged Seal Surface		None /H	Improper Machg., Careless Handling, Contaminants	QC	-		
		Improper Loc. of Band Gap		None /H	Improper Ass'y.	QC	-		
Washer	C.06.08	Omitted		None /H	Careless Ass'y.	QC	-		
Screw	C.06.09	Break Trans.		None /E	Vib., Overtorque	QC	E		
		Break Trans.		4 /D	Vib., Overtorque	QC	E		
Nut	C.06.10	None		None /H	None	-	-		
Seal	C.06.11	Damaged Seal Surface	X	None /H	Careless Handlg., Contaminants	QC	-		
Potentiometer Cover	C.06.12	Break Trans.	X	None /H	Vib., Flaw	QC	E		
		Break Axial.	X	None /H	Vib., Flaw	QC	E		
		Damaged Seal Surface	X	None /H	Improper Machg., Careless Handling Contaminants	QC	-		
Washer	C.06.13	Omitted		None /H	Careless Ass'y.	QC	-		

*EFFECT ON THRUST

1. IMMEDIATE DESTRUCTION
2. EVENTUAL DESTRUCTION
3. DECREASE MORE THAN 30%
4. INCREASE
5. DECREASE LESS THAN 10%

**EFFECT ON ACTUATOR PERFORMANCE

A. FULL OPEN - CAN NOT CLOSE
B. FULL CLOSE - CAN NOT OPEN
C. PARTLY OPEN - CAN NOT MOVE
D. FULL OPEN - CAN CLOSE
E. FULL CLOSE - CAN OPEN
F. OSCILLATES
G. DEGRADED PERFORMANCE
H. NONE

FAILURE MODE ANALYSIS SUMMARY — PAGE 9 of 13 PAGES

Actuator - Gas Servo, General Electric AG-14 — TABLE II — DATE 9-28-60 REV. ------

PART NAME	PLANNING PARTS LIST NUMBER	MODE OF FAILURE	HAZARD	EFFECT ON THRUST* & PERFORMANCE**	CAUSE OF FAILURE	RECOMMENDED METHODS TO ELIMINATE OR PREVENT FAILURE: TESTING MFG.	TESTING DEV.	DESIGN	DISPOSITION
Screw	C.06.14	Break Trans.	X	None/H	Vib., Overtorque	QC	E		
Servo Valve Body	C.07.01	Crack or Break		None/B	Vib., Flaw	QC	E		
		Crack or Break		4 /A	Vib., Flaw	QC	E		
		Mtg. Hole Break		None/H	Vib., Flaw	QC	E		
Poppet Seat	C.07.02	Damaged Seat		Fluctuates/F	Improper Machg., Careless Handling, Contaminants	QC	-		
Yoke	C.07.03	Break @ In Poppet Pin		4 /A	Vib., Flaw	QC	E		
		Break @ Out Poppet Pin		None/B	Vib., Flaw	QC	E		
		Break @ Yoke Support Pin		4 or 5/ A or B	Vib., Flaw	QC	E		
		Seize Pin and Yoke		4/D	Temp., Cleaning Action of H_2, Contaminants	QC	E		
		Seize Pin and Yoke		None /H	Temp., Cleaning Action of H_2, Contaminants	QC	E		
Yoke Support	C.07.04	Break Trans.		4 or 5/ A or B	Vib., Flaw	QC	E		
		Seize with Pin		None /H	Temp., Cleaning Action of H_2, Contaminants	QC	E		
Pin	C.07.05	Break Trans.		4 /A	Vib., Flaw	QC	E	Chg. to More Ductile Steel.	
		Break Trans		None /B	Vib., Flaw	QC	E		
Outlet Poppet	C.07.06	Break Trans.		None /B	Vib., Flaw	QC	E		
		Damaged Seat Surf.		Fluctuates/F	Improper Machg., Careless Handling, Contaminants	QC	-		
		Damaged Seat Surf.		None /H	Improper Machg., Careless Handling, Contaminants	QC	-		
Inlet Poppet Pin	C.07.07	Break Trans.		4 /A	Vib., Flaw	QC	E	Chg. to More Ductile Steel.	
Helical Coil Insert	C.07.08	Relax Lock		None /E	Vib., Temp.	-	E	More Positive Locking Action	
		Relax Lock		4 /D	Vib., Temp.	-	E		
		Relax Lock		Fluctuates/F	Vib., Temp.	-	E		

*EFFECT ON THRUST
1. IMMEDIATE DESTRUCTION
2. EVENTUAL DESTRUCTION
3. DECREASE MORE THAN 30%
4. INCREASE
5. DECREASE LESS THAN 10%

**EFFECT ON ACTUATOR PERFORMANCE
A. FULL OPEN - CAN NOT CLOSE
B. FULL CLOSE - CAN NOT OPEN
C. PARTLY OPEN - CAN NOT MOVE
D. FULL OPEN - CAN CLOSE
E. FULL CLOSE - CAN OPEN
F. OSCILLATES
G. DEGRADED PERFORMANCE
H. NONE

FAILURE MODE ANALYSIS SUMMARY PAGE 10 of 13 PAGES

Actuator - Gas Servo, General Electric AG-14 TABLE II DATE 9-28-62 REV. -------

PART NAME	PLANNING PARTS LIST NUMBER	MODE OF FAILURE	HAZARD	EFFECT ON THRUST* & PERFORMANCE**	CAUSE OF FAILURE	RECOMMENDED METHODS TO ELIMINATE OR PREVENT FAILURE: TESTING MFG.	TESTING DEV.	DESIGN	DISPOSITION
Inlet Poppet	C.07.09	Break Trans.		4 /A	Vib., Flaw	QC	E		
		Break Trans.		None /B	Vib., Flaw	QC	E		
		Damaged Seat Surf.		Fluctuates/F	Improper Machg., Careless Handling, Contaminants	QC	-		
		Damaged Seat Surf.		None /H	Improper Machg., Careless Handling, Contaminants	QC	-		
Yoke Support Screw	C.07.10	Break Trans.		None /G	Vib. Overtorque	QC	E		
Seal	C.07.11	Damaged Seal Edges		Fluctuates/F	Careless Handling, Contaminants	QC	-		
Gas Servo Bellows	C.07.12	Bellows Rupture		None /G	Vib., Flaw	QC	E		
		Damaged Seal Surf.		Fluctuates/F	Careless Handling, Contaminants	QC	-		
Servo Filter	C.07.13	Clogged		None /B	Debris, Contam.	QC	-		
		Ruptured Filter		None /B	Vib., Improper Ass'y.	QC	E		
Seal	C.07.14	Damaged Seal Edges		None /G	Careless Handling, Contaminants	QC	-		
		Damaged Seal Edges		Fluctuates/F	Careless Handling, Contaminants	QC	-		
Gas Servo Manifold	C.07.15	Break in Reg. Hole		None /H	Vib., Flaw	QC	E		
		Crack or Break		None /B	Vib., ;	QC	E		
		Damaged Seal Surface		None /B	Improper Machg., Careless Handling	QC	-		
		Clogged Orifice		None /B	Debris, Contam.	QC	-		
Servo Valve Nozzle	C.07.16	Break Trans.		None /H	Vib., Flaw	QC	E		
		Damaged Seat Edge		None /B	Improper Machg., Careless Handling	QC	-		
		Damaged Seal Surface		None /B	Improper Machg., Careless Handlg., Contaminants	QC	-		
Washer	C.07.17	Omitted		None /H	Careless Ass'y.	QC	-		
Screw	C.07.18	Break Trans.		None /H	Vib., Overtorque	QC	E		
Washer	C.07.19	Omitted		None /H	Careless Ass'y.	QC	-		

***EFFECT ON THRUST**

1. IMMEDIATE DESTRUCTION
2. EVENTUAL DESTRUCTION
3. DECREASE MORE THAN 30%
4. INCREASE
5. DECREASE LESS THAN 10%

****EFFECT ON ACTUATOR PERFORMANCE**

A. FULL OPEN - CAN NOT CLOSE
B. FULL CLOSE - CAN NOT OPEN
C. PARTLY OPEN - CAN NOT MOVE
D. FULL OPEN - CAN CLOSE
E. FULL CLOSE - CAN OPEN
F. OSCILLATES
G. DEGRADED PERFORMANCE
H. NONE

FAILURE MODE ANALYSIS SUMMARY PAGE 11 of 13 PAGES

Actuator - Gas Servo, General Electric AG-14 TABLE II DATE 9-28-62 REV. ------

PART NAME	PLANNING PARTS LIST NUMBER	MODE OF FAILURE	HAZARD	EFFECT ON THRUST* & PERFORMANCE**	CAUSE OF FAILURE	RECOMMENDED METHODS TO ELIMINATE OR PREVENT FAILURE: TESTING MFG.	TESTING DEV.	DESIGN	DISPOSITION
Screw	C.07.20	Break Trans.		None /H	Vib., Overtorque	QC	E		
Nozzle Ball	C.07.21	Damaged Surface		None /B	Careless Handling, Contaminants	QC	-		
Flapper Screw	C.07.22	None		None /H	None	-	-		
Torque Motor	C.07.23	Electrical Failure		4 /A	Vib., Temp., Flaw	QC	E		
		Electrical Failure		None /E	Vib., Temp., Flaw	QC	E		
		Mid-Grip Lock Relax		5 /G	Vib., Temp.	-	E	More Positive Method of Lock.	
		Spring Relax		5 /G	Temp.	-	E		
		Intermittent Elec. Contact		Fluctuates/F	Vib., Temp., Flaw	QC	E		
Washer	C.07.24	Omitted		None /H	Careless Ass'y.	QC	-		
Screw	C.07.25	Break Trans.		None /H	Vib., Overtorque	QC	E		
Exhaust Volume Cover	C.07.26	Crack or Break	X	None /H	Vib., Flaw	QC	E		
		Damaged Seal Surface	X	None /H	Improper Machg., Careless Handling, Contaminants	QC	-		
Seal	C.07.27	Damaged Seal Edges	X	None /H	Careless Handling, Contaminants	QC	-		
Washer	C.07.28	Omitted		None /H	Careless Ass'y.	QC	-		
Screw	C.07.29	Break Trans.	X	None /H	Vib., Overtorque	QC	E		
Seal	C.07.30	Damaged Seal Edges		None /H	Careless Handling, Contaminants	QC	-		
Seal	C.07.31	Damaged Seal Edges		None /H	Careless Handling, Contaminants	QC	-		
Seal	C.07.32	Damaged Seal Edges		None /H	Careless Handling, Contaminants	QC	-		
Washer	C.07.33	Omitted		None /H	Careless Ass'y.	QC	-		
Screw	C.07.34	Break Trans.		None /H	Vib., Overtorque	QC	E		
Cooling Flow Filter	C.08.00	Clogged		4 /A	Debris, Contam.	QC	-	Sprg. Load Bypass.	
		Clogged		None /B	Debris, Contam.	QC	-	Sprg. Load Bypass.	
		Wave Spring Break/Relax		4 /A	Vib., Temp., Flaw	QC	E		
		Wave Spring Break/Relax		None /B	Vib., Temp., Flaw	QC	E		

***EFFECT ON THRUST**

1. IMMEDIATE DESTRUCTION
2. EVENTUAL DESTRUCTION
3. DECREASE MORE THAN 30%
4. INCREASE
5. DECREASE LESS THAN 10%

****EFFECT ON ACTUATOR PERFORMANCE**

A. FULL OPEN - CAN NOT CLOSE
B. FULL CLOSE - CAN NOT OPEN
C. PARTLY OPEN - CAN NOT MOVE
D. FULL OPEN - CAN CLOSE
E. FULL CLOSE - CAN OPEN
F. OSCILLATES
G. DEGRADED PERFORMANCE
H. NONE

FAILURE MODE ANALYSIS SUMMARY — PAGE 12 of 13 PAGES

Actuator - Gas Servo, General Electric AG-14 — TABLE II — DATE 9-28-62 — REV. ------

PART NAME	PLANNING PARTS LIST NUMBER	MODE OF FAILURE	HAZARD	EFFECT ON THRUST* & PERFORMANCE**	CAUSE OF FAILURE	RECOMMENDED METHODS TO ELIMINATE OR PREVENT FAILURE: TESTING MFG.	TESTING DEV.	DESIGN	DISPOSITION
		Screen Rupture		4 /A	Vib.	-	E		
		Screen Rupture		None /B	Vib.	-	E		
Supply Filter	C.09.00	Clogged		None /B	Debris, Contam.	QC	-	Sprg. Load Bypass.	
		Screen Rupture		None /H	Vib.	-	E		
Wiring Harness	C.10.01	Broken Wire		4 /D	Vib., Flaw	QC	E	Use Redundant Circuits.	
		Broken Wire		None /E	Vib., Flaw	QC	E		
		Elec. Short		4 /D	Vib., Temp., Insul Abras.	QC	E		
		Elec. Short		None /E	Vib., Temp., Insul Abras.	QC	E		
		Open Circuit		4/D	Broke Connect	QC	E		
		Open Circuit		None /E	Broke Connect	QC	E		
		Incorr. Wire Connections		4 /D	Careless Ass'y.	QC	-		
		Incorr. Wire Connections		None /E	Careless Ass'y.	QC	-		
Electrical Receptacle	C-10.02	Elec. Open Circuit		4 /D	Vib., Broke Pin Poor Solder	QC	E	Replace Quick Disconnect Recep. with Wire. Permanent Type or Use Redund. Circuits.	
		Elec. Open Circuit		None /E	Vib., Broke Pin Poor Solder	QC	E		
Seal	C.10.03	Damaged Seal Edges		None /H	Careless Handling, Contaminants	QC	-		
Washer	C.10.04	Omitted		None /H	Careless Ass'y.	QC	-		
Screw	C.10.05	Break Trans.		None/H	Vib., Overtorque	QC	E		
Electrical Receptacle	C.10.06	Elec. Open		4 /D	Vib., Broke Pin, Poor Solder	QC	E	Replace Quick Disconnect Recep with more Permanent Type or use Redund. Circuits.	
		Elec. Open Circuit		None /E	Vib., Broke Pin, Poor Solder	QC	E		
Seal	C.11.01	Damaged Seal Surface		None /H	Careless Handling, Contaminants	QC	-		
Seal	C.11.02	Damaged Seal Surface	X	None /H	Careless Handling, Contaminants	QC	-		
Seal	C.11.03	Damaged Seal Edges		None /H	Careless Handling, Contaminants	QC	-		
Seal	C.11.04	Damaged Seal Edges		None /H	Careless Handling, Contaminants	QC	-		

*EFFECT ON THRUST
1. IMMEDIATE DESTRUCTION
2. EVENTUAL DESTRUCTION
3. DECREASE MORE THAN 30%
4. INCREASE
5. DECREASE LESS THAN 10%

**EFFECT ON ACTUATOR PERFORMANCE
A. FULL OPEN - CAN NOT CLOSE
B. FULL CLOSE - CAN NOT OPEN
C. PARTLY OPEN - CAN NOT MOVE
D. FULL OPEN - CAN CLOSE
E. FULL CLOSE - CAN OPEN
F. OSCILLATES
G. DEGRADED PERFORMANCE
H. NONE

FAILURE MODE ANALYSIS SUMMARY

PAGE 13 of 13 PAGES

TABLE II

DATE 9-20-60 REV. ------

Actuator - Gas Servo, General Electric AG-14

PART NAME	PLANNING PARTS LIST NUMBER	MODE OF FAILURE	HAZARD	EFFECT ON THRUST* & PERFORMANCE**	CAUSE OF FAILURE	RECOMMENDED METHODS TO ELIMINATE OR PREVENT FAILURE: TESTING MFG.	TESTING DEV.	DESIGN	DISPOSITION
Harmon Clamp	C.11.05	Break Axial	X	None /B	Vib.. Flaw	QC	E		
		Bolt Fail	X	None /B	Vib.	-	E		

*EFFECT ON THRUST

1. IMMEDIATE DESTRUCTION
2. EVENTUAL DESTRUCTION
3. DECREASE MORE THAN 30%
4. INCREASE
5. DECREASE LESS THAN 10%

**EFFECT ON ACTUATOR PERFORMANCE

A. FULL OPEN - CAN NOT CLOSE
B. FULL CLOSE - CAN NOT OPEN
C. PARTLY OPEN - CAN NOT MOVE
D. FULL OPEN - CAN CLOSE
E. FULL CLOSE - CAN OPEN
F. OSCILLATES
G. DEGRADED PERFORMANCE
H. NONE