SD72-SH-0120-10

SPACE SHUTTLE

MASS PROPERTIES STATUS REPORT

(NASA-CR-150954) SPACE SHUTTLE MASS PROPERTIES STATUS REPORT (Rockwell International Corp., Downey, Calif.) 66 p

N76-79009

Unclas

00/98 05288

CONTRACT NAS9-14000

IRD #SE-482T

APPROVED BY:

E. P. SMITH
CHIEF PROGRAM ENGINEER
SPACE SHUTTLE PROGRAM

APPROVED BY:

B. HELLO
VICE PRESIDENT AND
PROGRAM MANAGER
SPACE SHUTTLE PROGRAM

Space Division
Rockwell International
12214 Lakewood Blvd.
Downey, California

REPRODUCED BY
NATIONAL TECHNICAL
INFORMATION SERVICE
U.S. DEPARTMENT OF COMMERCE
SPRINGFIELD, VA. 22161

OCT 1976
RECEIVED
NASA STI FACILITY
INPUT BRANCH

NOTICE

THIS DOCUMENT HAS BEEN REPRODUCED FROM THE BEST COPY FURNISHED US BY THE SPONSORING AGENCY. ALTHOUGH IT IS RECOGNIZED THAT CERTAIN PORTIONS ARE ILLEGIBLE, IT IS BEING RELEASED IN THE INTEREST OF MAKING AVAILABLE AS MUCH INFORMATION AS POSSIBLE.

SD72-SH-0120-10

SPACE SHUTTLE

MASS PROPERTIES STATUS REPORT

2 JULY 1973

CONTRACT NAS9-14000

IRD #SE-482T

APPROVED BY:

E. P. SMITH
CHIEF PROGRAM ENGINEER
SPACE SHUTTLE PROGRAM

APPROVED BY:

B. HELLO
VICE PRESIDENT AND
PROGRAM MANAGER
SPACE SHUTTLE PROGRAM

Space Division
Rockwell International
12214 Lakewood Blvd.
Downey, California

From Best Available Copy

TABLE OF CONTENTS

		PAGE
INTRODUCTION		1
WEIGHT		
ORBITER DRY WEIGHT		2
EXTERNAL TANK DRY WEIGHT		3
SOLID ROCKET MOTOR DRY WEIGHT		4
ORBITER CENTER OF GRAVITY		5
MISSION LAUNCH WEIGHT SUMMARY		6
ORBITER WEIGHT SUMMARY		7
ET & SRB WEIGHT SUMMARY		8
SYSTEM MASS PROPERTIES		9
SEQUENCE MASS PROPERTIES		13
ORBITER WEIGHT/C.G. CHANGE ANALYSIS		23
ORBITER WEIGHT CHANGES		24
CURRENT INVENTORY OF FLUIDS & PROPELLANTS		27
SUMMARY OF CRITICAL MASS PROPERTIES		31
DIAGRAMS		
ORBITER PAYLOAD C.G. LIMITS		32
SHUTTLE SYSTEM	VL72-000088A	33
ORBITER	VL70-000140A	34
EXTERNAL TANK	VL78-000041A	35
SOLID ROCKET BOOSTER	VL77-000036A	36
PENDING/POTENTIAL WEIGHT CHANGE MATRIX		37

INTRODUCTION

This is the tenth in the series of Space Shuttle System monthly Mass Properties Reports to be submitted the first of each month. This is in accordance with IRD No.SE-482T. Estimated data are included for the External Tank and the Solid Rocket Booster until contract award, at which time status statements for each will also be included.

The approved baseline and CCB approved changes shown on the Weight Change Matrix, Page 37 denoted with (-10), have been incorporated in this report.

This is the first reporting of the resized Booster Mass Properties. The sequenced Mass Properties data for Missions 1 and 3A are based on trajectory data. Corresponding trajectory data for Missions 2 and 3B were not available for reporting. The data shown for these two Missions are preliminary and will be updated in the next report.

for H. M. Dunn
J. W. Chapman, Manager
Shuttle Mass Properties

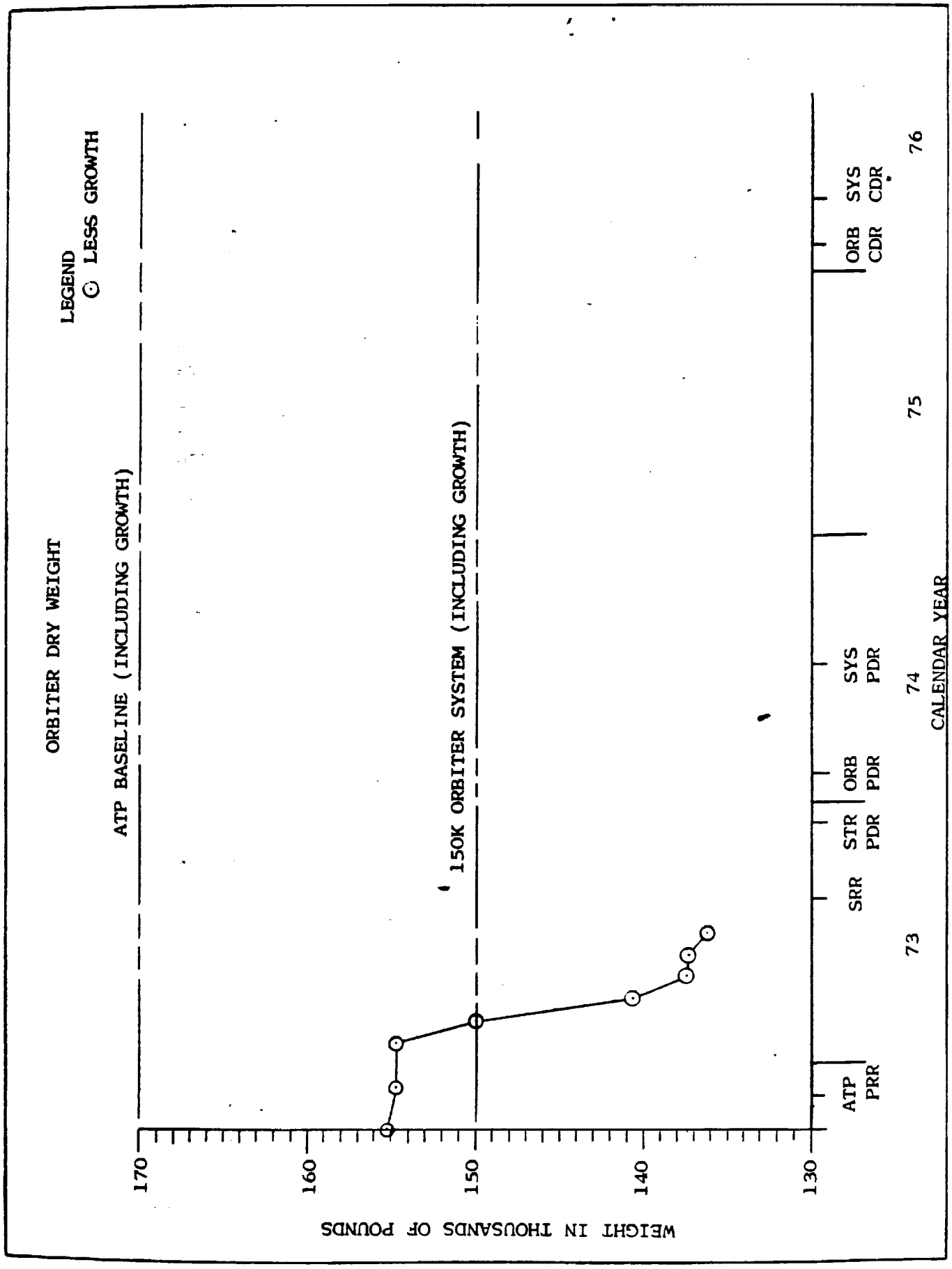
ORBITER DRY WEIGHT
LEGEND
LESS GROWTH
ATP BASELINE (INCLUDING GROWTH)
150K ORBITER SYSTEM (INCLUDING GROWTH)
WEIGHT IN THOUSANDS OF POUNDS
170
160
150
140
130
ATP PRR
SRR
STR PDR
ORB PDR
SYS PDR
ORB CDR
SYS CDR
73
74
75
76
CALENDAR YEAR

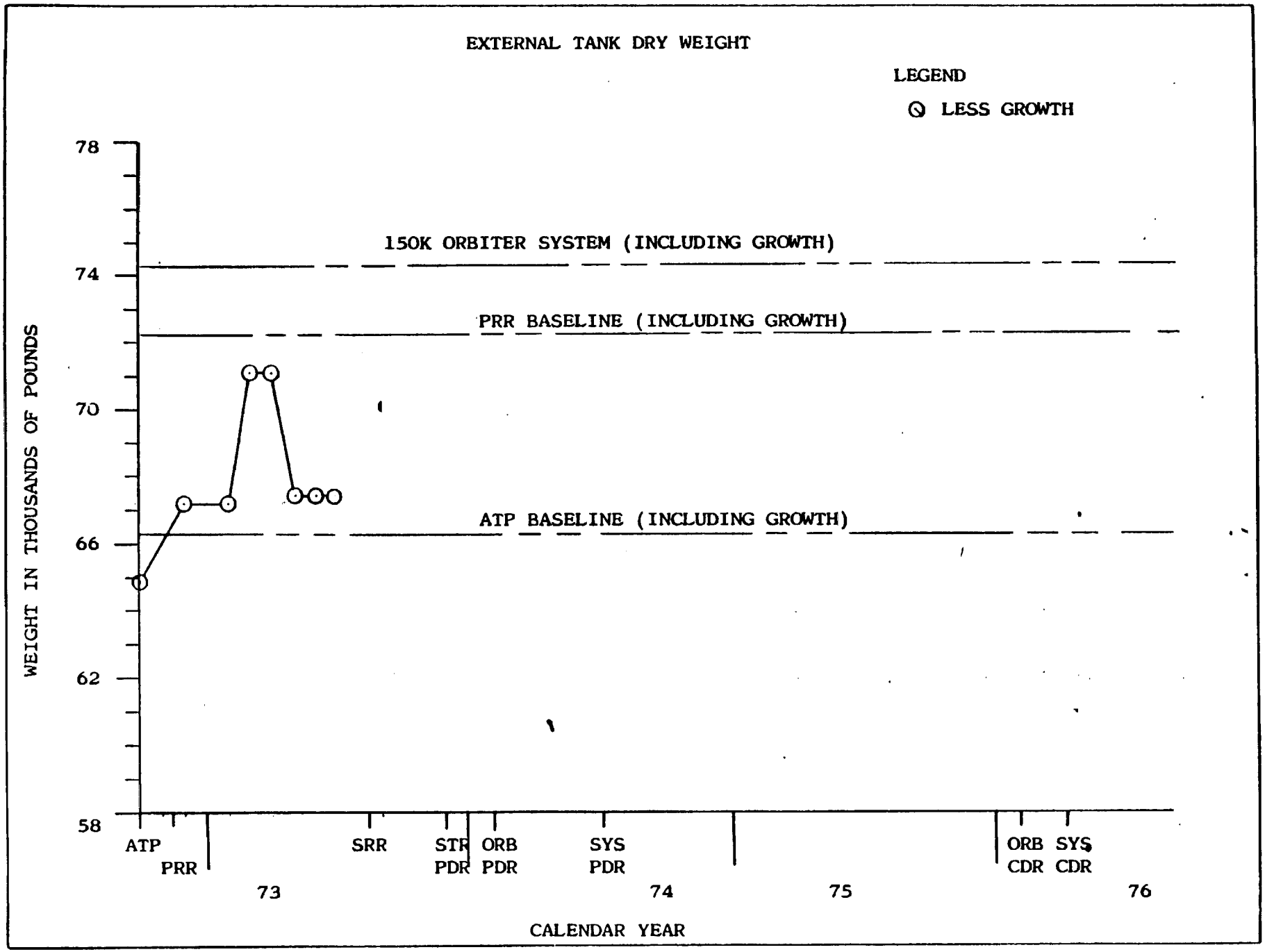
EXTERNAL TANK DRY WEIGHT
LEGEND
LESS GROWTH
150K ORBITER SYSTEM (INCLUDING GROWTH)
PRR BASELINE (INCLUDING GROWTH)
ATP BASELINE (INCLUDING GROWTH)
WEIGHT IN THOUSANDS OF POUNDS
78
74
70
66
62
58
ATP
PRR
SRR
STR PDR
ORB PDR
SYS PDR
ORB CDR
SYS CDR
73
74
75
76
CALENDAR YEAR

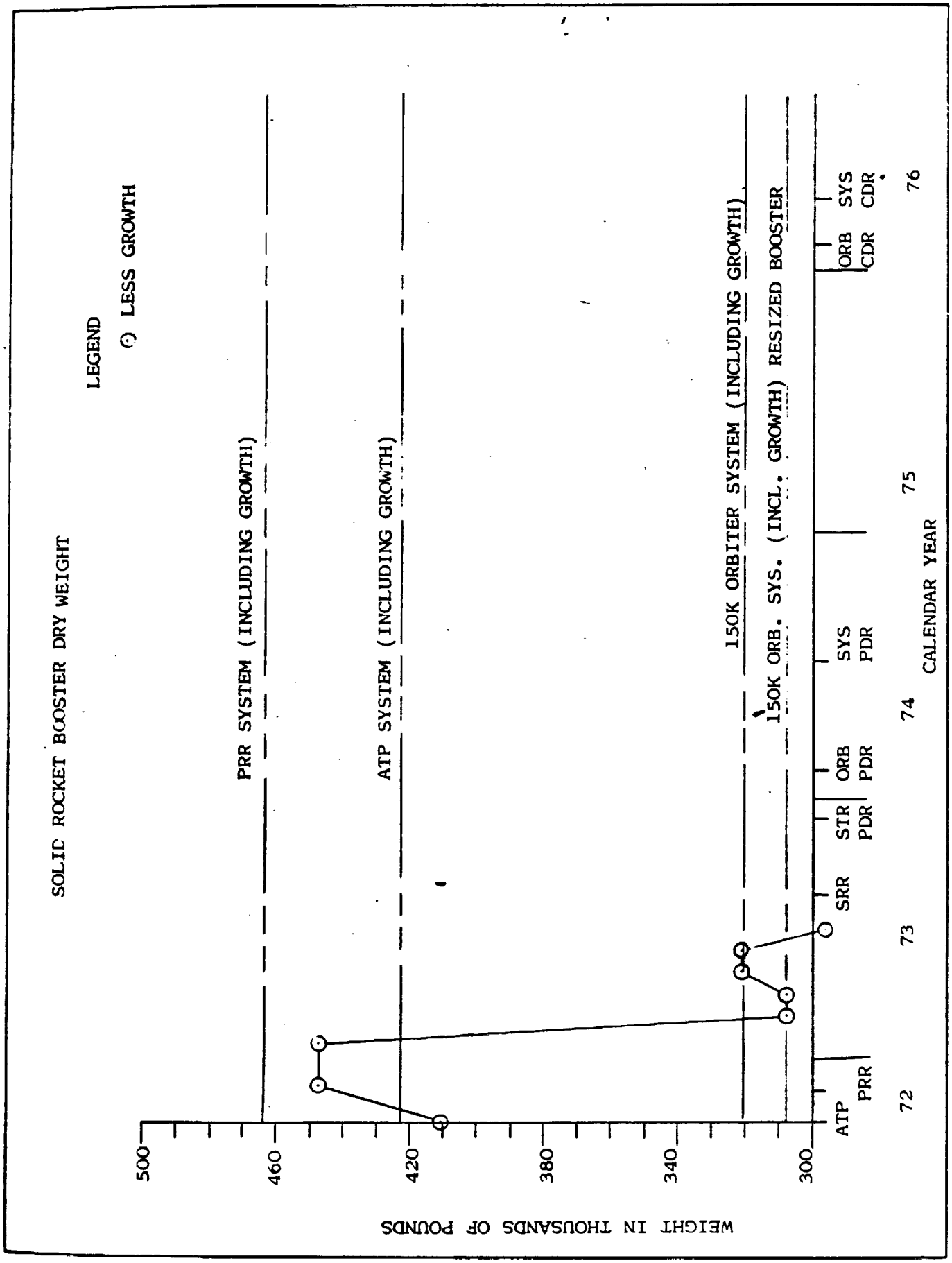
SOLID ROCKET BOOSTER DRY WEIGHT
LEGEND
LESS GROWTH
PRR SYSTEM (INCLUDING GROWTH)
ATP SYSTEM (INCLUDING GROWTH)
150K ORBITER SYSTEM (INCLUDING GROWTH)
150K ORB. SYS. (INCL. GROWTH) RESIZED BOOSTER
WEIGHT IN THOUSANDS OF POUNDS
500
460
420
380
340
300
ATP
PRR
SRR
STR PDR
ORB PDR
SYS PDR
ORB CDR
SYS CDR
72
73
74
75
76
CALENDAR YEAR

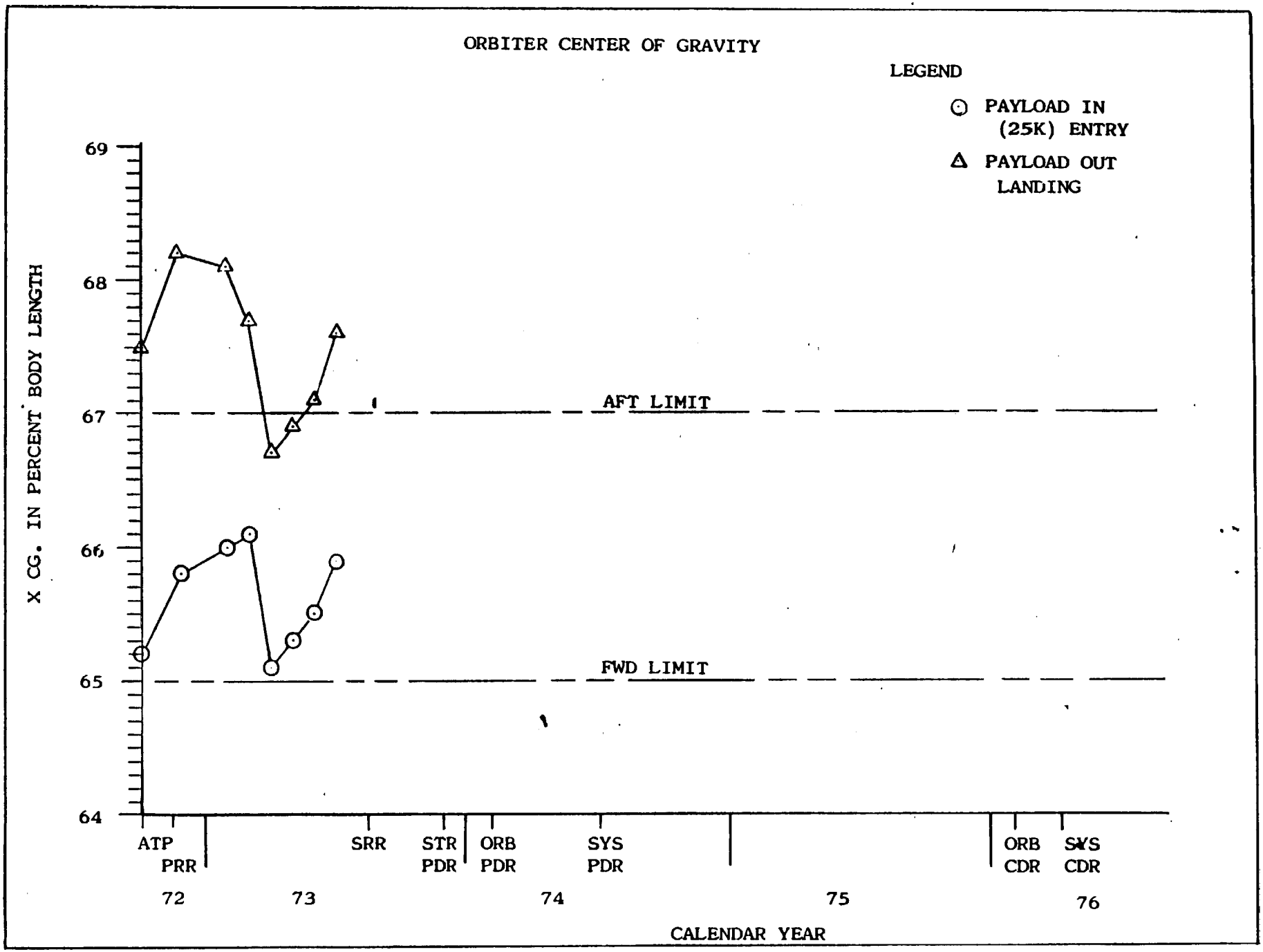
ORBITER CENTER OF GRAVITY
LEGEND
PAYLOAD IN (25K) ENTRY
PAYLOAD OUT LANDING
X CG. IN PERCENT BODY LENGTH
69
68
67
66
65
64
AFT LIMIT
FWD LIMIT
ATP
PRR
SRR
STR PDR
ORB PDR
SYS PDR
ORB CDR
SYS CDR
72
73
74
75
76
CALENDAR YEAR

MISSION LAUNCH WEIGHT SUMMARY

	DUE EAST MISSION	LOGISTICS MISSION	DEPLOY MISSION	RETRIEVE MISSION	HORIZONTAL FLIGHT	FERRY FLIGHTS
ORBITER	246771	213730	206881	185556	TBD	223675
EXTERNAL TANK	1630711	-	-	-	NA	NA
SRM BOOSTER	2327010	-	-	-	NA	NA
GLOW	4204492	4171451	4164602	4143277	NA	NA
ORBITER - DRY	150000	-	-	-	TBD	TBD
_ LANDING	179614	-	-	-	TBD	187469
PAYLOAD WEIGHT - UP	65000	25000	32000	2500	NA	NA
- DOWN	25000	25000	25000	25000	NA	NA

SUMMARY WEIGHT STATEMENT

CONFIGURATION	BY	DATE
150K ORBITERS VL70-000140A	M. R. BEER	JULY 2, 1973

CODE	SYSTEM	A	B	C	D	E	F
1.0	WING GROUP	11208					
2.0	TAIL GROUP	2669					
3.0	BODY GROUP	34868					
4.0	INDUCED ENVIR PROTECT	25164					
5.0	LANDING, DOCKING	9501					
6.0	PROPULSION, ASCENT	26443					
7.0	PROPULSION, CRUISE						
8.0	PROPULSION, AUXILIARY	5223					
9.0	PRIME POWER	3453					
10.0	ELECTRICAL CONV & DIST	4600					
11.0	HYDRAULIC CONV & DIST	1576					
12.0	SURFACE CONTROLS	1837					
13.0	AVIONICS	4181					
14.0	ENVIRONMENTAL CONTROL	4213					
15.0	PERSONNEL PROVISION	1332					
16.0	RANGE SAFETY						
17.0	BALLAST						
18.0	PAYLOAD ACCOMODATION	48					
19.0	GROWTH	13684					
	SUBTOTAL (DRY WT)	150000	150000	150000	150000		
20.0	PERSONNEL	1104	1104	1104	1104		
21.0	CARGO	65000	25000	32000	2500		
22.0	ORDNANCE						
23.0	RESIDUAL FLUIDS	2427	2427	2427	2427		
24.0							
	SUBTOTAL (INERT WT)	218531	178531	185531	156031		
25.0	RESERVE FLUIDS	1083	1083	1083	1083		
26.0	INFLIGHT LOSSES	4069	4069	4069	4069		
27.0	PROPELLANT-ASCENT						
28.0	PROPELLANT-CRUISE						
29.0	PROPELLANT-MANEUV/ACS	-23088	30047	16198	24373		
30.0							
	TOTAL WEIGHT - LB	246771	213730	206881	185556		

DESIGNATIONS:

ITEM
- A DUE EAST MISSION NO. 1
- B LOGISTICS MISSION NO.2
- C DEPLOY MISSION NO. 3A
- D RETRIEVE MISSION NO. 3B
- E
- F

* ADDITIONAL 250 Δ V (3150 LBS PROP.) PROVIDED IN OMS KIT CHARGEABLE TO PAYLOAD

NOTES & SKETCHES

OMS			RCS	
650	95	17660	100	5428
1000 *	95	23870	120	6177
250	350	11738	100	4460
500	500	17300	200	7073
Δ V	Δ V	TOTAL	Δ V	
MISSION REQ.	ORBIT INSERT	PROP WT.		PROP WT.

FORM 3945-A-3 REV 4-73

SUMMARY WEIGHT STATEMENT

CONFIGURATION MISSION NO. 1 EXTERNAL TANK VL78-000041A DUE EAST SOLID ROCKET BOOSTER VL77-000036A | BY L. Drankhan | DATE July 2, 1973

CODE	SYSTEM	A	B	C	D	E	F
1.0	WING GROUP						
2.0	TAIL GROUP						
3.0	BODY GROUP	54029		45290			
4.0	INDUCED ENVIR PROTECT	7103					
5.0	LANDING, DOCKING			11564			
6.0	PROPULSION, ASCENT	5688		226330			
7.0	PROPULSION, CRUISE						
8.0	PROPULSION, AUXILIARY			5396			
9.0	PRIME POWER						
10.0	ELECTRICAL CONV & DIST			1100			
11.0	HYDRAULIC CONV & DIST			7522			
12.0	SURFACE CONTROLS						
13.0	AVIONICS	600					
14.0	ENVIRONMENTAL CONTROL						
15.0	PERSONNEL PROVISION						
16.0	RANGE SAFETY						
17.0	BALLAST						
18.0	GROWTH	3000		11298			
19.0							
	SUBTOTAL (DRY WT)	70420		308500			
20.0	PERSONNEL						
21.0	CARGO						
22.0	ORDNANCE						
23.0	RESIDUAL FLUIDS	7580					
24.0							
	SUBTOTAL (INERT WT)	78000		308500			
25.0	RESERVE FLUIDS	5500					
26.0	INFLIGHT LOSSES						
27.0	PROPELLANT-ASCENT	1547211		2018510			
28.0	PROPELLANT-CRUISE						
29.0	PROPELLANT-MANEUV/ACS						
30.0							
	TOTAL WEIGHT - LB	1630711		2327010			

DESIGNATIONS:

ITEM
- A EXTERNAL TANK
- B
- C SOLID ROCKET BOOSTER (2)
- D
- E
- F

NOTES & SKETCHES

FORM 1185-A-1 REV 4-71

SYSTEMS MASS PROPERTIES

CONFIGURATION	MISSION NO.1	BY	DATE	PAGE OF
150K ORBITER DUE EAST - VL70-000140A		M.R.BEER	JULY 2,1973	

NO.	SYSTEM	WEIGHT LB	CENTER OF GRAVITY INCHES X	Y	Z	MOMENT OF INERTIA SLUG FT^2 X 10^{-6} I_{x-x}	I_{y-y}	I_{z-z}	PRODUCT OF INERTIA SLUG FT^2 X 10^{-6} I_{xy}	I_{xz}	I_{yz}
1.	WING GROUP	11208	1236.4	0.0	269.3	0.119	0.063	0.180	NEG'L	-0.002	NEG'L
2.	TAIL GROUP	2669	1527.1	0.0	647.5	0.006	0.010	0.005	NEG'L	0.001	NEG'L
3.	BODY	34868	992.6	-0.4	368.8	0.090	1.093	1.096	0.001	-0.007	NEG'L
4.	INDUC ENV PROTECT	25164	1087.8	0.0	367.1	0.221	0.840	0.905	NEG'L	0.052	NEG'L
5.	LANDING & DOCKING	9501	1007.5	-3.7	316.2	0.035	0.231	0.251	0.002	0.001	-0.002
6.	ASCENT PROPULSION	26443	1467.6	1.61	376.8	0.030	0.035	0.033	-0.001	0.001	NEG'L
7.	CRUISE PROPULSION										
8.	AUXILIARY PROPULSION	5223	1176.8	0.0	453.3	0.013	0.255	0.260	NEG'L	0.029	NEG'L
9.	PRIME POWER	3453	943.0	-2.3	361.9	0.007	0.086	0.085	0.001	0.015	NEG'L
10.	ELECTRICAL CONV & DIST	4600	832.8	-2.9	328.9	0.009	0.110	0.115	0.001	-0.002	NEG'L
11.	HYDRAULIC CONV & DIST	1576	1349.2	5.0	423.5	0.001	0.002	0.002	NEG'L	NEG'L	NEG'L
12.	SURFACE CONTROLS	1837	1420.8	-1.4	460.1	0.024	0.030	0.027	NEG'L	0.006	NEG'L
13.	AVIONICS	4181	560.8	-5.8	406.8	0.004	0.047	0.047	NEG'L	-0.002	NEG'L
14.	ENVIRO CONTROL	4213	769.0	0.7	397.9	0.001	0.076	0.075	0.001	0.008	NEG'L
15.	PERSONNEL PROVISIONS	1332	490.4	10.5	374.0	0.001	0.001	0.001	NEG'L	NEG'L	NEG'L
16.	RANGE SAFETY										
17.	BALLAST										
18.	PAYLOAD ACCOMMODATIONS	48	1307.0	0.0	328.0	NEG'L	NEG'L	NEG'L	NEG'L	NEG'L	NEG'L
19.	GROWTH	13684	1058.0	0.0	369.5	0.046	0.456	0.448	NEG'L	NEG'L	NEG'L
	SUBTOTAL (DRY WEIGHT)	150000	1113.6	-0.2	371.4	0.694	5.067	5.184	0.012	0.179	-0.001
20.	PERSONNEL	1104	509.7	16.4	420.7	NEG'L	0.001	0.001	NEG'L	NEG'L	NEG'L
21.	CARGO	65000	1020.0	0.0	400.0	0.060	0.632	0.632	NEG'L	NEG'L	NEG'L
22.	ORDNANCE										
23.	RESIDUAL FLUIDS	2427	1026.4	12.8	372.5	0.006	0.073	0.072	-0.001	0.009	NEG'L
24.											
	SUBTOTAL (INERT WEIGHT)	218531	1081.7	0.1	380.1	0.769	5.947	6.055	0.008	0.156	-0.001
25.	RESERVE FLUIDS	1083	989.3	15.6	394.3	0.004	0.040	0.040	-0.001	0.007	NEG'L
26.	INFLIGHT LOSSES	4069	1155.8	19.4	384.0	0.009	0.100	0.100	-0.008	0.015	-0.002
27.	PROPELLANT - ASCENT										
28.	PROPELLANT - CRUISE										
29.	PROPELLANT - MANEUV/ACS	23088	1298.9	0.0	478.6	0.046	0.542	0.572	NEG'L	0.060	NEG'L
30.											
	TOTAL (GROSS WT) LB	246771	1102.9	0.5	389.5	0.872	6.891	6.986	NEG'L	0.334	-0.004

NOTES: NOSE STATION OF ORBITER = 238 INCHES
CARGO BAY CENTERLINE OF ORBITER = 400 INCHES

FORM 3945-A-14 REV 5-73

Space Division
Rockwell International

SYSTEMS MASS PROPERTIES

CONFIGURATION	BY	DATE	PAGE OF
150K ORBITER MISSION NO.2 LOGISTICS - VL70-000140A	M. R. BEER	JULY 2, 1973	

NO.	SYSTEM	WEIGHT LB	CENTER OF GRAVITY INCHES X	Y	Z	MOMENT OF INERTIA SLUG FT^2 X 10-6 I_{x-x}	I_{y-y}	I_{z-z}	PRODUCT OF INERTIA SLUG FT^2 X 10-6 I_{xy}	I_{xz}	I_{yz}
1.	WING GROUP	11208	1236.4	0.0	269.3	0.119	0.063	0.180	NEG'L	-0.002	NEG'L
2.	TAIL GROUP	2669	1527.1	0.0	647.5	0.006	0.010	0.005	NEG'L	0.001	NEG'L
3.	BODY	34868	992.6	-0.4	368.8	0.090	1.093	1.096	0.001	-0.007	NEG'L
4.	INDUC ENV PROTECT	25164	1087.8	0.0	367.1	0.221	0.840	0.905	NEG'L	0.052	NEG'L
5.	LANDING & DOCKING	9501	1007.5	-3.7	316.2	0.035	0.231	0.251	0.002	0.001	-0.002
6.	ASCENT PROPULSION	26443	1467.6	1.61	376.8	0.030	0.035	0.033	-0.001	0.001	NEG'L
7.	CRUISE PROPULSION										
8.	AUXILIARY PROPULSION	5223	1176.8	0.0	453.3	0.013	0.255	0.260	NEG'L	0.029	NEG'L
9.	PRIME POWER	3453	943.0	-2.3	361.9	0.007	0.086	0.085	0.001	0.015	NEG'L
10.	ELECTRICAL CONV & DIST	4600	832.8	-2.9	328.9	0.009	0.110	0.115	0.001	-0.002	NEG'L
11.	HYDRAULIC CONV & DIST	1576	1349.2	5.0	423.5	0.001	0.002	0.002	NEG'L	NEG'L	NEG'L
12.	SURFACE CONTROLS	1837	1420.8	-1.4	460.1	0.024	0.030	0.027	NEG'L	0.006	NEG'L
13.	AVIONICS	4181	560.8	-5.8	406.8	0.004	0.047	0.047	NEG'L	-0.002	NEG'L
14.	ENVIRO CONTROL	4213	769.0	0.7	397.9	0.001	0.076	0.075	0.001	0.008	NEG'L
15.	PERSONNEL PROVISIONS	1332	490.4	10.5	374.0	0.001	0.001	0.001	NEG'L	NEG'L	NEG'L
16.	RANGE SAFETY										
17.	BALLAST										
18.	PAYLOAD ACCOMMODATIONS	48	1307.0	0.0	328.0	NEG'L	NEG'L	NEG'L	NEG'L	NEG'L	NEG'L
19.	GROWTH	13684	1058.0	0.0	369.5	0.046	0.456	0.448	NEG'L	NEG'L	NEG'L
	SUBTOTAL (DRY WEIGHT)	150000	1113.6	-0.2	371.4	0.694	5.067	5.184	0.012	0.179	-0.001
20.	PERSONNEL	1104	509.7	16.4	420.7	NEG'L	0.001	0.001	NEG'L	NEG'L	NEG'L
21.	CARGO	25000	924.0	1.4	400.0	0.021	0.358	0.261	0.002	NEG'L	NEG'L
22.	ORDNANCE										
23.	RESIDUAL FLUIDS	2427	1026.4	12.8	372.5	0.006	0.073	0.072	-0.001	0.009	NEG'L
24.											
	SUBTOTAL (INERT WEIGHT)	178531	1082.1	0.3	375.7	0.725	5.649	5.764	0.009	0.156	-0.001
25.	RESERVE FLUIDS	1083	989.3	15.6	394.3	0.004	0.040	0.040	-0.001	0.007	NEG'L
26.	INFLIGHT LOSSES	4069	1155.8	19.4	384.0	0.009	0.100	0.100	-0.008	0.015	-0.002
27.	PROPELLANT - ASCENT										
28.	PROPELLANT - CRUISE										
29.	PROPELLANT - MANEUV/ACS	26047	1301.2	0.0	478.7	0.059	0.688	0.726	NEG'L	0.076	NEG'L
30.											
	TOTAL (GROSS WT) LB	213730	1113.9	0.7	390.3	0.856	6.807	6.903	0.001	0.378	-0.003

NOTES: NOSE STATION OF ORBITER = 238 INCHES

CARGO BAY CENTERLINE OF ORBITER = 400 INCHES

FORM 3945-A-14 REV 5-73

Space Division
Rockwell International

SYSTEMS MASS PROPERTIES

CONFIGURATION
150K ORBITER MISSION NO.3A DEPLOY - VL70-000140A

BY M. R. BEER | DATE JULY 2, 1973 | PAGE OF

NO.	SYSTEM	WEIGHT LB	CENTER OF GRAVITY INCHES X	Y	Z	MOMENT OF INERTIA SLUG FT^2 X 10^{-6} I_{x-x}	I_{y-y}	I_{z-z}	PRODUCT OF INERTIA SLUG FT^2 X 10^{-6} I_{xy}	I_{xz}	I_{yz}
1.	WING GROUP	11208	1236.4	0.0	269.3	0.119	0.063	0.180	NEG'L	-0.002	NEG'L
2.	TAIL GROUP	2669	1527.1	0.0	647.5	0.006	0.010	0.005	NEG'L	0.001	NEG'L
3.	BODY	34868	992.6	-0.4	368.8	0.090	1.093	1.096	0.001	-0.007	NEG'L
4.	INDUC ENV PROTECT	25164	1087.8	0.0	367.1	0.221	0.840	0.905	NEG'L	0.052	NEG'L
5.	LANDING & DOCKING	9501	1007.5	-3.7	316.2	0.035	0.231	0.251	0.002	0.001	-0.002
6.	ASCENT PROPULSION	26443	1467.6	1.61	376.8	0.030	0.035	0.033	-0.001	0.001	NEG'L
7.	CRUISE PROPULSION										
8.	AUXILIARY PROPULSION	5223	1176.8	0.0	453.3	0.013	0.255	0.260	NEGL	0.029	NEG'L
9.	PRIME POWER	3453	943.0	-2.3	361.9	0.007	0.086	0.085	0.001	0.015	NEG'L
10.	ELECTRICAL CONV & DIST	4600	832.8	-2.9	328.9	0.009	0.110	0.115	0.001	-0.002	NEG'L
11.	HYDRAULIC CONV & DIST	1576	1349.2	5.0	423.5	0.001	0.002	0.002	NEG'L	NEG'L	NEG'L
12.	SURFACE CONTROLS	1837	1420.8	-1.4	460.1	0.024	0.030	0.027	NEG'L	0.006	NEG'L
13.	AVIONICS	4181	560.8	-5.8	406.8	0.004	0.047	0.047	NEG'L	-0.002	NEG'L
14.	ENVIRO CONTROL	4213	769.0	0.7	397.9	0.001	0.076	0.075	0.001	0.008	NEG'L
15.	PERSONNEL PROVISIONS	1332	490.4	10.5	374.0	0.001	0.001	0.001	NEG'L	NEG'L	NEG'L
16.	RANGE SAFETY										
17.	BALLAST										
18.	PAYLOAD ACCOMMODATIONS	48	1307.0	0.0	328.0	NEG'L	NEG'L	NEG'L	NEG'L	NEG'L	NEG'L
19.	GROWTH	13684	1058.0	0.0	369.5	0.046	0.456	0.448	NEG'L	NEG'L	NEG'L
	SUBTOTAL (DRY WEIGHT)	150000	1113.6	-0.2	371.4	0.694	5.067	5.184	0.012	0.179	-0.001
20.	PERSONNEL	1104	509.7	16.4	420.7	NEG'L	0.001	0.001	NEG'L	NEG'L	NEG'L
21.	CARGO	32000	900.0	0.0	400.0	0.029	0.311	0.311	NEG'L	NEG'L	NEG'L
22.	ORDNANCE										
23.	RESIDUAL FLUIDS	2427	1026.4	12.8	372.5	0.006	0.073	0.072	-0.001	0.009	NEG'L
24.											
	SUBTOTAL (INERT WEIGHT)	185531	1082.4	0.1	376.6	0.735	5.672	5.783	0.008	0.156	-0.001
25.	RESERVE FLUIDS	1083	989.3	15.6	394.3	0.004	0.040	0.040	-0.001	0.007	NEG'L
26.	INFLIGHT LOSSES	4069	1155.8	19.4	384.0	0.009	0.100	0.100	-0.008	0.015	-0.002
27.	PROPELLANT - ASCENT										
28.	PROPELLANT - CRUISE										
29.	PROPELLANT - MANEUV/ACS	16198	1307.8	0.0	480.0	0.034	0.357	0.380	NEG'L	0.040	NEG'L
30.											
	TOTAL (GROSS WT) LB	206881	1101.0	0.6	385.0	0.817	6.373	6.473	NEG'L	0.294	-0.003

NOTES:

NOSE STATION OF ORBITER = 238 INCHES

CARGO BAY CENTERLINE OF ORBITER = 400 INCHES

FORM 3945-A-14 REV 5-73

Space Division
Rockwell International

SYSTEMS MASS PROPERTIES

CONFIGURATION
150K ORBITER MISSION NO.3B RETRIEVE - VL70-000140A

BY M. R. BEER | DATE JULY 2, 1973 | PAGE OF

NO.	SYSTEM	WEIGHT LB	CENTER OF GRAVITY INCHES X	Y	Z	MOMENT OF INERTIA SLUG FT^2 X 10^{-6} I_{x-x}	I_{y-y}	I_{z-z}	PRODUCT OF INERTIA SLUG FT^2 X 10^{-6} I_{xy}	I_{xz}	I_{yz}
1.	WING GROUP	11208	1236.4	0.0	269.3	0.119	0.063	0.180	NEG'L	-0.002	NEG'L
2.	TAIL GROUP	2669	1527.1	0.0	647.5	0.006	0.010	0.005	NEG'L	0.001	NEG'L
3.	BODY	34868	992.6	-0.4	368.8	0.090	1.093	1.096	0.001	-0.007	NEG'L
4.	INDUC ENV PROTECT	25164	1087.8	0.0	367.1	0.221	0.840	0.905	NEG'L	0.052	NEG'L
5.	LANDING & DOCKING	9501	1007.5	-3.7	316.2	0.035	0.231	0.251	0.002	0.001	-0.002
6.	ASCENT PROPULSION	26443	1467.6	1.61	376.8	0.030	0.035	0.033	-0.001	0.001	NEG'L
7.	CRUISE PROPULSION										
8.	AUXILIARY PROPULSION	5223	1176.8	0.0	453.3	0.013	0.255	0.260	NEG'L	0.029	NEG'L
9.	PRIME POWER	3453	943.0	-2.3	361.9	0.007	0.086	0.085	0.001	0.015	NEG'L
10.	ELECTRICAL CONV & DIST	4600	832.8	-2.9	328.9	0.009	0.110	0.115	0.001	-0.002	NEG'L
11.	HYDRAULIC CONV & DIST	1576	1349.2	5.0	423.5	0.001	0.002	0.002	NEG'L	NEG'L	NEG'L
12.	SURFACE CONTROLS	1837	1420.8	-1.4	460.1	0.024	0.030	0.027	NEG'L	0.006	NEG'L
13.	AVIONICS	4181	560.8	-5.8	406.8	0.004	0.047	0.047	NEG'L	-0.002	NEG'L
14.	ENVIRO CONTROL	4013	769.0	0.7	397.9	0.001	0.076	0.075	0.001	0.008	NEG'L
15.	PERSONNEL PROVISIONS	1332	490.4	10.5	374.0	0.001	0.001	0.001	NEG'L	NEG'L	NEG'L
16.	RANGE SAFETY										
17.	BALLAST										
18.	PAYLOAD ACCOMMODATIONS	48	1307.0	0.0	328.0	NEG'L	NEG'L	NEG'L	NEG'L	NEG'L	NEG'L
19.	GROWTH	13684	1058.0	0.0	369.5	0.046	0.456	0.448	NEG'L	NEG'L	NEG'L
	SUBTOTAL (DRY WEIGHT)	150000	1113.6	-0.2	371.4	0.694	5.067	5.184	0.012	0.179	-0.001'
20.	PERSONNEL	1104	509.7	16.4	420.7	NEG'L	0.001	0.001	NEG'L	NEG'L	NEG'L
21.	CARGO	2500	940.0	0.0	400.0	0.002	0.024	0.024	NEG'L	NEG'L	NEG'L
22.	ORDNANCE										
23.	RESIDUAL FLUIDS	2427	1026.4	12.8	372.5	0.006	0.073	0.072	-0.001	0.009	NEG'L
24.											
	SUBTOTAL (INERT WEIGHT)	156031	1105.2	0.1	372.2	0.704	5.271	5.386	0.008	0.178	-0.001
25.	RESERVE FLUIDS	1083	989.3	15.6	394.3	0.004	0.040	0.040	-0.001	0.007	NEG'L
26.	INFLIGHT LOSSES	4069	1155.8	19.4	384.0	0.009	0.100	0.100	-0.008	0.015	-0.002
27.	PROPELLANT - ASCENT										
28.	PROPELLANT - CRUISE										
29.	PROPELLANT - MANEUV/ACS	24373	1286.2	0.0	476.1	0.053	0.634	0.668	NEG'L	0.070	NEG'L
30.											
	TOTAL (GROSS WT) LB	185556	1129.4	0.6	386.2	0.818	6.248	6.349	NEG'L	0.355	-0.003

NOTES:
NOSE STATION OF ORBITER = 238 INCHES
CARGO BAY CENTERLINE OF ORBITER = 400 INCHES

FORM 3945-A-14 REV 5-73

Space Division
Rockwell International

SEQUENCE MASS PROPERTIES STATEMENT

CONFIGURATION
150K ORBITER MISSION NO. 1 DUE EAST VL70-000140 A

BY M. R. BEER | DATE JULY 2, 1973 | PAGE OF

NO.	MISSION EVENT	WEIGHT LB.	CENTER OF GRAVITY INCHES X	Y	Z	MOMENT OF INERTIA SLUG FT^2 X 10^6 $I_{x\text{-}x}$	$I_{y\text{-}y}$	$I_{z\text{-}z}$	PRODUCT OF INERTIA SLUG FT^2 X 10^6 I_{xy}	I_{xz}	I_{yz}
	ORBITER DESIGN	246771	1102.9	0.5	389.5	0.872	6.891	6.986	NEG'L	0.334	- 0.004
	ASCENT PROPELLANT	4900	1406.0	15.2	353.7						
	ORBITER LIFTOFF	251671	1108.8	0.8	388.2	0.877	6.993	7.087	0.004	0.324	- 0.005
	EPS REACTANTS	- 257	1373.1	0.0	446.8						
	ASCENT HELIUM	- 35	1369.0	0.0	292.0						
	ASCENT PROPELLANT	- 4900	1406.0	15.2	353.7						
	ORBITER AT TANK END BOOST	246479	1102.6	0.5	389.4	0.872	6.885	6.981	NEG'L	0.333	- 0.004
	EPS REACTANTS	- 143	1359.6	0.0	444.2						
	HYDRAULIC WATER	- 89	1410.0	0.0	452.0						
	RCS PROPELLANT	- 190	1028.4	0.0	462.6						
	OMS PROPELLANT/HELIUM	- 2274	1406.2	0.0	485.7						
	ORBITER AT INSERTION	243783	1099.5	0.5	388.4	0.862	6.818	6.915	NEG'L	0.316	- 0.004
	EPS REACTANTS	- 1160	686.1	0.0	317.4						
	ECS REQUIREMENTS	- 53	600.0	30.0	340.0						
	RCS PROPELLANT	- 4770	896.7	0.0	445.1						
	OMS PROPELLANT/HELIUM	- 15418	1407.0	0.0	486.8						
	PAYLOAD	- 40000	1070.0	0.0	400.0						
	ORBITER AT ENTRY P/L IN	182382	1088.1	0.6	376.6	0.741	5.709	5.821	0.001	0.176	- 0.003
	PAYLOAD	- 25000	940.0	0.0	400.0						
	ORBITER AT ENTRY P/L OUT	157382	1111.6	0.7	372.8	0.714	5.325	5.441	NEG'L	0.198	- 0.003
	PAYLOAD	25000	940.0	0.0	376.6						
	EPS REACTANTS	- 1058	1272.7	0.0	427.9						
	ECS REQUIREMENTS	- 57	1340.1	1.0	465.4						
	HYDRAULIC WATER	- 503	1410.0	0.0	452.0						
	OMS/DROP /HELIUM VENTED	- 372	1401.7	0.0	480.4						
	RCS PROPELLANT	- 468	1430.0	0.0	516.0						
	RCS PROP/HELIUM VENTED	- 310	911.8	0.0	440.2						
	ORBITER LANDING GEAR DOWN	179614	1086.4	0.6	373.2	0.751	5.638	5.734	0.001	0.152	- 0.003
	PAYLOAD	- 25000	940.0	0.0	400.0						
	ORBITER LANDING P/L OUT	154614	1110.1	0.8	368.9	0.723	5.256	5.356	NEG'L	0.176	- 0.003

NOTES:
ORBITER NOSE AT X=238, ORBITER FRL AT Z=400

BODY REFERENCE LENGTH = 1290 INCHES

FORM 3945-A-2 REV 3-73

SEQUENCE MASS PROPERTIES STATEMENT

CONFIGURATION: SHUTTLE SYSTEM VL72-000088A - 150K ORBITER - MISSION NO. 1 DUE EAST

BY: M.R. Beer/ L. Drankhan

DATE: July 2, 1973

PAGE OF

TIME SEC	MISSION EVENT	WEIGHT LB.	CENTER OF GRAVITY INCHES X	Y	Z	MOMENT OF INERTIA SLUG FT^2 X 10^{-6} $I_{x\cdot x}$	$I_{y\cdot y}$	$I_{z\cdot z}$	PRODUCT OF INERTIA SLUG FT^2 X 10^{-6} I_{xy}	I_{xz}	I_{yz}
0	LIFTOFF GLOW	4204492	1380.9	0.2	419.7	34.231	308.700	329.810	0.005	8.720	0.024
	TANK PROPELLANT	-205526									
	SRM PROPELLANT	-1128665									
61.5	COMB MAX Q	2870301	1344.9	0.3	428.9	22.495	221.536	231.852	0.012	9.368	0.022
	TANK PROPELLANT	-173901									
	SRM PROPELLANT	-808363									
114	COMB MAX G	1888037	1220.9	0.5	443.9	11.484	142.155	142.436	0.035	11.581	0.019
	TANK PROPELLANT	-40495									
	SRM PROPELLANT	-81482									
125	COMB STAGING	1766060	1206.9	0.5	446.9	10.347	131.577	130.874	0.038	11.830	0.019
	SRM BURNOUT	-308500									
125	ORBITER & TANK @ STAGING	1457560									
	TANK PROPELLANT	-1117624									
	ORBITER LOSSES	-257									
	ORBITER & TANK @ BURNOUT	339679	1746.6	1.7	642.5	2.510	16.246	15.000	-0.020	2.271	-0.010
	TANK AT BURNOUT	-88265									
	VENTED PROP. IN ORBIT	-4900									
	VENTED HELIUM IN ORBIT	-35									
*	ORBITER VENTED @ TANK B.O.	246479	1853.6	0.5	722.4	0.872	6.885	6.981	NEGL	0.333	-0.004

NOTES: *257 LB. ORBITER FLUIDS CONSUMED

C.G.'S IN THE INTEGRATED VEHICLE REFERENCE SYSTEM, TANK NOSE = 309, TANK ℄ AT Z = 400

FORM 3945-A-2 REV 4-73

SEQUENCE MASS PROPERTIES STATEMENT

CONFIGURATION 150K ORBITER - MISSION NO. 2 LOGISTICS - VL70-000140A

BY M. R. Beer | DATE July 2, 1973 | PAGE OF

NO.	MISSION EVENT	WEIGHT LB.	CENTER OF GRAVITY INCHES X	Y	Z	MOMENT OF INERTIA SLUG FT^2 X 10^{-6} $I_{x\cdot x}$	$I_{y\cdot y}$	$I_{z\cdot z}$	PRODUCT OF INERTIA SLUG FT^2 X 10^{-6} I_{xy}	I_{xz}	I_{yz}
	ORBITER DESIGN	213730	1113.9	0.7	390.3	0.856	6.807	6.903	0.001	0.378	-0.003
	ASCENT PROPELLANT	4900	1406.0	15.2	353.7						
	ORBITER LIFTOFF	218630	1120.4	1.0	389.5	0.862	6.903	6.997	0.004	0.368	-0.005
	EPS REACTANTS	-257	1373.1	0.0	446.5						
	ASCENT HELIUM	-35	1369.0	0.0	292.0						
	ASCENT PROPELLANT	-4900	1406.0	15.2	353.7						
	ORBITER AT TANK END BOOST	213438	1113.5	0.7	390.3	0.856	6.802	6.899	0.001	0.377	-0.003
	EPS REACTANTS	-143	1359.6	0.0	444.2						
	HYDRAULIC WATER	-89	1410.0	0.0	452.0						
	RCS PROPELLANT	-213	954.1	0.0	452.7						
	OMS PROPELLANT/HELIUM	-2054	1406.1	0.0	485.5						
	ORBITER AT CIRCULARIZ.	210939	1110.5	0.7	389.2	0.847	6.740	6.827	0.001	0.363	-0.003
	EPS REACTANTS	-1160	686.1	0.0	317.4						
	ECS REQUIREMENTS	-53	600.0	30.0	340.0						
	RCS PROPELLANT	-5496	844.3	0.0	438.0						
	OMS PROPELLANT/HELIUM	-24998	1383.4	1.4	475.8						
	PAYLOAD	3150	1347.1	0.0	400.0	*					
	ORBITER AT ENTRY P/L IN	182382	1088.1	0.6	376.6	0.740	5.654	5.768	0.001	0.176	-0.003
	PAYLOAD	-25000	940.0	0.0	400.0						
	ORBITER AT ENTRY P/L OUT	157382	1111.6	0.7	372.8	0.714	5.325	5.441	NEGL	0.198	-0.003
	PAYLOAD	25000	940.0	0.0	400.0						
	EPS REACTANTS	-1058	1272.7	0.0	427.0						
	ECS REQUIREMENTS	-57	1340.1	1.0	465.4						
	HYDRAULIC WATER	-503	1410.0	0.0	452.0						
	OMS PROP/HELIUM VENTED	-372	1401.0	0.0	480.4						
	RCS PROPELLANT	-468	1430.0	0.0	516.0						
	RCS PROPELLANT VENTED	-310	911.8	0.0	440.2						
	ORBITER LANDING GEAR DOWN	179614	1086.4	0.6	373.2	0.750	5.583	5.680	0.001	0.152	-0.003
	PAYLOAD	-25000	940.0	0.0	400.0						
	ORBITER LANDING P/L OUT	154614	1110.1	0.8	368.9	0.723	5.256	5.356	NEGL	0.176	-0.003

NOTES: ORBITER NOSE AT X = 238, ORBITER FRL AT Z = 400
BODY REFERENCE LENGTH = 1290 INCHES

* RESULTING X C.G. DERIVED FROM MOMENT CHANGES

FORM 3945-A-2 REV 4-73

SEQUENCE MASS PROPERTIES STATEMENT

CONFIGURATION SHUTTLE SYSTEM VL72-000088A - 150K ORBITER - MISSION NO. 2 LOGISTICS

BY M. R. Beer/ L. Drankhan

DATE July 2, 1973

PAGE OF

TIME SEC	MISSION EVENT	WEIGHT LB.	CENTER OF GRAVITY INCHES X	Y	Z	MOMENT OF INERTIA SLUG FT^2 X 10^{-6} I_{x-x}	I_{y-y}	I_{z-z}	PRODUCT OF INERTIA SLUG FT^2 X 10^{-6} I_{xy}	I_{xz}	I_{yz}
0	LIFTOFF GLOW	4171451	1377.8	0.2	417.3	33.580	306.862	328.608	0.009	7.906	0.026
	TANK PROPELLANT	-205526									
	SRM PROPELLANT	-1129665									
61.5	COMB MAX Q	2837260	1339.6	0.3	425.5	21.881	219.511	230.426	0.017	8.502	0.024
	TANK PROPELLANT	-173901									
	SRM PROPELLANT	-808363									
	COMB MAX G	1854996	1210.9	0.5	439.0	10.927	139.280	140.103	0.041	10.512	0.022
	TANK PROPELLANT	-40495									
	SRM PROPELLANT	-81482									
	COMB STAGING	1733019	1196.0	0.5	441.8	9.802	128.595	128.842	0.044	10.745	0.021
	SRM BURNOUT	-308500									
	ORBITER & TANK @ STAGING	1424519	1076.1	0.6	450.8	5.319	87.073	83.015	0.067	12.660	0.020
	TANK PROPELLANT	-1117624									
	ORBITER LOSSES	-257									
	ORBITER & TANK @ BURNOUT	306638	1742.7	2.0	634.4	2.450	16.150	14.949	-0.018	2.294	-0.009
	TANK AT BURNOUT	-88265									
	VENTED PROP IN ORBITER	-4900									
	VENTED HELIUM IN ORBIT.	-35									
*	ORBITER VENTED @ TANK B.O.	213438	1864.5	0.7	723.3	0.856	6.802	6.899	0.001	0.377	-0.003

NOTES:

*257 LBS. ORBITER FLUIDS CONSUMED.

C.G.'S IN THE INTEGRATED VEHICLE REFERENCE SYSTEM, TANK NOSE = 309, TANK C AT Z = 400

FORM 3945-A-2 REV 4-73

SEQUENCE MASS PROPERTIES STATEMENT

CONFIGURATION
150K ORBITER MISSION NO. 3A DEPLOY VL70-000140 A

BY M. R. BEER | DATE JULY 2, 1973 | PAGE OF

NO.	MISSION EVENT	WEIGHT LB.	CENTER OF GRAVITY INCHES X	Y	Z	MOMENT OF INERTIA SLUG FT^2 X 10^{-6} I_{x-x}	I_{y-y}	I_{z-z}	PRODUCT OF INERTIA SLUG FT^2 X 10^{-6} I_{xy}	I_{xz}	I_{yz}
	ORBITER DESIGN	206881	1101.0	0.6	385.0	0.817	6.373	6.473	NEG'L	0.294	- 0.003
	ASCENT PROPELLANT	4900	1406.0	15.2	353.7						
	ORBITER LIFTOFF	211781	1108.0	0.9	384.3	0.822	6.476	6.575	0.004	0.285	- 0.004
	EPS REACTANTS	- 257	1373.1	0.0	446.5						
	ASCENT HELIUM	- 35	1369.0	0.0	292.0						
	ASCENT PROPELLANT	- 4900	1106.0	15.2	353.7						
	ORBITER AT TANK END BOOST	206589	1100.6	0.6	384.9	0.816	6.367	6.467	NEG'L	0.293	- 0.003
	EPS REACTANTS	- 143	1359.6	0.0	444.2						
	HYDRAULIC WATER	- 89	1410.0	0.0	452.0						
	RCS PROPELLANT	- 156	1094.0	0.0	471.4						
	OMS PROPELLANT/HELIUM	- 4673	1406.6	0.0	486.2						
	ORBITER AT INSERTION	201528	1093.2	0.6	382.5	0.796	6.246	6.349	NEG'L	0.259	- 0.003
	EPS REACTANTS	- 1160	686.1	0.0	317.4						
	ECS REQUIREMENTS	- 53	600.0	30.0	340.0						
	RCS PROPELLANT	- 3836	998.1	0.0	458.5						
	OMS PROPELLANT/HELIUM	- 7097	1406.9	0.0	486.7						
	PAYLOAD	- 7000	1031.4	0.0	400.0						
	ORBITER AT ENTRY P/L IN	182382	1088.1	0.6	376.6	0.741	5.709	5.821	0.001	0.176	- 0.003
	PAYLOAD	- 25000	940.0	0.0	400.0						
	ORBITER AT ENTRY P/L OUT	157382	1111.6	0.7	372.8	0.714	5.325	5.441	NEG'L	0.198	- 0.003
	PAYLOAD	25000	940.0	0.0	400.0						
	EPS REACTANTS	- 1058	1272.7	0.0	427.9						
	ECS REQUIREMENTS	- 57	1340.1	1.0	465.4						
	HYDRAULIC WATER	- 503	1410.0	0.0	452.0						
	OMS DROP/HELIUM VENTED	- 372	1410.7	0.0	480.4						
	RCS PROPELLANT	- 468	1430.0	0.0	516.0						
	RCS PROP/HELIUM VENTED	- 310	911.8	0.0	440.2						
	ORBITER LANDING GEAR DOWN	179614	1086.4	0.6	373.2	0.751	5.638	5.734	0.001	0.152	- 0.003
	PAYLOAD	- 25000	940.0	0.0	400.0						
	ORBITER LANDING P/L OUT	154614	1110.1	0.8	368.9	0.723	5.256	5.356	NEG'L	0.176	- 0.003

NOTES:

ORBITER NOSE AT X=238, ORBITER FRL AT Z=400

BODY REFERENCE LENGTH = 1290 INCHES

FORM 3945-A-2 REV 3-73

SEQUENCE MASS PROPERTIES STATEMENT

CONFIGURATION SHUTTLE SYSTEM VL72-000088A - 150K ORBITER - MISSION NO. 3A DEPLOY

BY M. R. Beer, L. Drankhan | DATE July 2, 1973 | PAGE OF

TIME SEC	MISSION EVENT	WEIGHT LB.	CENTER OF GRAVITY INCHES X	Y	Z	MOMENT OF INERTIA SLUG FT^2 X 10-6 I_{x-x}	I_{y-y}	I_{z-z}	PRODUCT OF INERTIA SLUG FT^2 X 10-6 I_{xy}	I_{xz}	I_{yz}
0	LIFTOFF GLOW	4164602	1376.3	0.4	416.8	33.290	305.258	327.290	0.045	7.356	0.040
	TANK PROPELLANT	-192415									
	SRM PROPELLANT	-1067979									
58	COMB. MAX Q	2904478	1343.4	0.5	424.0	22.416	223.503	235.461	0.056	7.852	0.038
	TANK PROPELLANT	-193474									
	SRM PROPELLANT	-858411									
114	COMB MAX G.	1852593	1212.0	0.8	437.7	10.803	137.825	139.047	0.099	9.831	0.033
	TANK PROPELLANT	-39325									
	SRM PROPELLANT	-92120									
126.5	COMB STAGING	1721148	1193.2	0.9	440.6	9.536	126.189	126.281	0.105	10.115	0.032
	SRM BURNOUT	-308500									
126.5	ORBITER & TANK @ STAGING	1412648	1071.7	1.1	449.4	5.061	84.388	80.585	0.145	11.987	0.030
	TANK PROPELLANT	-1114037									
	ORBITER LOSSES	-257									
489	ORBITER & TANK @ BURNOUT	298354	1732.8	3.8	631.8	2.313	15.382	14.310	-0.019	2.089	-0.021
	TANK AT BURNOUT	-86830									
	VENTED PROP IN ORBITER	-4900									
	VENTED HELIUM IN ORBIT.	-35									
*	ORBITER VENTED @ TANK B.O.	206589	1851.6	0.6	717.9	0.816	6.367	6.467	NEGL	0.293	-0.003

NOTES: *257 LBS. ORBITER FLUIDS CONSUMED

C.G.'S IN THE INTEGRATED VEHICLE REFERENCE SYSTEM, TANK NOSE = 309, TANK ℄ AT Z = 400

FORM 3945-A-2 REV 4-73

SEQUENCE MASS PROPERTIES STATEMENT

CONFIGURATION: 150K ORBITER MISSION NO. 3B RETRIEVE VL70-000140A

BY: M. R. BEER | DATE: JULY 2, 1973 | PAGE OF

NO.	MISSION EVENT	WEIGHT LB.	CENTER OF GRAVITY INCHES X	Y	Z	MOMENT OF INERTIA SLUG FT^2 X 10-6 $I_{x\cdot x}$	$I_{y\cdot y}$	$I_{z\cdot z}$	PRODUCT OF INERTIA SLUG FT^2 X 10-6 I_{xy}	I_{xz}	I_{yz}
	ORBITER DESIGN	185556	1129.4	0.6	386.2	0.818	6.248	6.349	NEG'L	0.355	- 0.003
	ASCENT PROPELLANT	4900	1406.0	15.2	353.7						
	ORBITER LIFTOFF	190456	1136.5	1.0	385.4	0.824	6.334	6.434	0.002	0.347	- 0.005
	EPS REACTANTS	- 257	1373.1	0.0	446.8						
	ASCENT HELIUM	- 35	1369.0	0.0	292.0						
	ASCENT PROPELLANT	- 4900	1406.0	15.2	353.7						
	ORBITER AT TANK END BOOST	185264	1129.0	0.6	386.2	0.818	6.244	6.345	NEG'L	0.354	- 0.003
	EPS REACTANTS	- 143	1359.6	0.0	444.2						
	HYDRAULIC WATER	- 89	1410.0	0.0	452.0						
	RCS PROPELLANT	- 251	1069.6	0.0	468.0						
	OMS PROPELLANT/HELIUM	- 8459	1406.8	0.0	483.4						
	ORBITER AT INSERTION	176322	1115.5	0.7	381.3	0.783	6.058	6.163	NEG'L	0.300	- 0.003
	EPS REACTANTS	- 1160	686.1	0.0	317.4						
	ECS REQUIREMENTS	- 53	600.0	0.0	340.0						
	RCS PROPELLANT	- 6354	955.3	0.0	452.9						
	OMS PROPELLANT/HELIUM	- 8873	1407.0	0.0	483.7						
	PAYLOAD	22500	940.0	0.0	400.0						
	ORBITER AT ENTRY P/L IN	182382	1088.1	0.6	376.6	0.741	5.709	5.821	0.001	0.176	- 0.003
	PAYLOAD	- 25000	940.0	0.0	400.0						
	ORBITER AT ENTRY P/L OUT	157382	1111.6	0.7	372.8	0.714	5.325	5.441	NEG'L	0.198	- 0.003
	PAYLOAD	25000	940.0	0.0	400.0						
	EPS REACTANTS	- 1058	1272.7	0.0	427.9						
	ECS REQUIREMENTS	- 57	1340.1	1.0	465.4						
	HYDRAULIC WATER	- 503	1410.0	0.0	452.0						
	OMS PROP/HELIUM VENTED	- 372	1401.7	0.0	480.4						
	RCS PROPELLANT	- 468	1430.0	0.0	516.0						
	RCS PROP/HELIUM VENTED	- 310	911.8	0.0	440.2						
	ORBITER LANDING GEAR DOWN	179614	1086.4	0.6	373.2	0.751	5.638	5.734	0.001	0.152	- 0.003
	PAYLOAD	- 25000	940.0	0.0	400.0						
	ORBITER LANDING P/L OUT	154614	1110.1	0.8	368.9	0.723	5.256	5.356	NEG'L	0.176	- 0.003

NOTES:

ORBITER NOSE AT X=238, ORBITER FRL AT Z = 400

BODY REFERENCE LENGTH = 1290 INCHES

FORM 3945-A-2 REV 1-73

SEQUENCE MASS PROPERTIES STATEMENT

CONFIGURATION SHUTTLE SYSTEM VL72-000088A - 150K ORBITER - MISSION NO. 3B RETRIEVE

BY M. R. Beer/ L. Drankhan

DATE July 2, 1973

PAGE OF

TIME SEC	MISSION EVENT	WEIGHT LB.	CENTER OF GRAVITY INCHES X	Y	Z	MOMENT OF INERTIA SLUG FT^2 X 10- 6 $I_{x\cdot x}$	$I_{y\cdot y}$	$I_{z\cdot z}$	PRODUCT OF INERTIA SLUG FT^2 X 10-6 I_{xy}	I_{xz}	I_{yz}
0	LIFTOFF GLOW	4143277	1375.1	0.4	415.3	32.900	304.816	327.240	0.046	7.123	0.041
	TANK PROPELLANT	-192145									
	SRM PROPELLANT	-1067979									
58	COMB MAX Q	2883153	1341.4	0.5	421.9	22.045	223.005	235.336	0.057	7.583	0.039
	TANK PROPELLANT	-193474									
	SRM PROPELLANT	-858411									
114	COMB MAX G	1831268	1207.5	0.8	434.5	10.466	136.959	138.522	0.101	9.411	0.035
	TANK PROPELLANT	-39325									
	SRM PROPELLANT	-92120									
126.5	COMB STAGING	1699823	1188.0	0.9	437.2	9.205	125.259	125.684	0.107	9.676	0.034
	SRM BURNOUT	-308500									
126.5	ORBITER & TANK @ STAGING	1391323	1063.5	1.1	445.4	4.751	82.940	79.450	0.149	11.419	0.031
	TANK PROPELLANT	-1114037									
	ORBITER LOSSES	-257									
489	ORBITER & TANK @ BURNOUT	277029	1742.7	4.1	626.0	2.286	15.462	14.419	-0.022	2.212	-0.020
	TANK AT BURNOUT	-86830									
	VENTED PROP IN ORBITER	-4900									
	VENTED HELIUM IN ORBITER	-35									
*	ORBITER VENTED @ TANK B.O	185264	1880.0	0.6	719.2	0.818	6.244	6.345	NEGL.	0.354	-0.003

NOTES:

* 257 LB. ORBITER FLUIDS CONSUMED

C.G.'S IN THE INTEGRATED VEHICLE REFERENCE SYSTEM, TANK NOSE = 309, TANK ℄ AT Z = 400

FORM 3945-A-2 REV 4-73

SEQUENCE MASS PROPERTIES STATEMENT

CONFIGURATION
EXTERNAL TANK - MISSION NO.1 DUE EAST - VL78-000041A

BY L. DRANKHAN | DATE JULY 2, 1973 | PAGE OF

TIME SEC NO.	MISSION EVENT	WEIGHT LB.	CENTER OF GRAVITY INCHES X	Y	Z	MOMENT OF INERTIA SLUG FT^2 X 10– I_{x-x}	I_{y-y}	I_{z-z}	PRODUCT OF INERTIA SLUG FT^2 X 10– I_{xy}	I_{xz}	I_{yz}
0	PRIOR TO LIFTOFF	1630711	855.9	0.9	401.7	0.390	53.022	52.980	0.233	0.476	0.042
	PROPELLANT TR	2711	2075.6	98.6	518.6						
0	LIFTOFF	1628000	853.9	0.8	401.5	0.374	52.140	52.101	0.164	0.393	0.034
	PROPELLANT	-207715	586.8	0.0	400.0						
61.5	MAX Q	1420285	893.0	0.9	401.7	0.374	46.185	46.145	0.154	0.372	0.034
	PROPELLANT	-173901	667.0	0.0	400.0						
113	MAX G	1246384	925.5	1.0	402.0	0.374	41.729	41.690	0.145	0.356	0.034
	PROPELLANT	- 40495	705.8	0.0	400.0						
	STAGING	1205889	931.9	1.0	402.0	0.374	40.708	40.669	0.143	0.352	0.034
	PROPELLANT	-1117624	892.9	0.3	400.3						
	END BOOST	88265	1425.1	10.8	423.6	0.346	5.298	5.270	0.034	0.119	0.021
	VERT. FLUIDS	-10265	1650.4	56.4	458.8						
	INERT WEIGHT	78000	1395.5	4.8	419.0	0.321	5.026	4.996	NEG'L	0.090	0.009

NOTES:
NOSE AT X=309, Y=0, Z=400 IN THE TANK REFERENCE SYSTEM

FORM 1945-A-2 REV 1-73

SEQUENCE MASS PROPERTIES STATEMENT

CONFIGURATION SOLID ROCKET BOOSTER
MISSION NO.1 DUE EAST - VL77-000036A

BY L. DRANKHAN

DATE JULY 2, 1973

PAGE OF

NO.	MISSION EVENT	WEIGHT LB.	CENTER OF GRAVITY INCHES X	Y	Z	MOMENT OF INERTIA SLUG FT^2 X 10- $I_{x\cdot x}$	$I_{y\cdot y}$	$I_{z\cdot z}$	PRODUCT OF INERTIA SLUG FT^2 X 10- I_{xy}	I_{xz}	I_{yz}
0	LIFT-OFF	1163505	1154.1	242.6	400.0	0.705	42.131	42.130	-0.016	-0.022	NEG'L
	PROPELLANT	-564332	1074.7	243.0	400.0						
113	MAX Q	599173	1228.9	242.2	400.0	0.398	19.500	19.500	-0.009	-0.022	NEG'L
	PROPELLANT	-404182	1236.6	243.0	400.0						
125	MAX G	194991	1212.9	240.6	400.0	0.178	9.306	9.305	-0.011	-0.022	NEG'L
	PROPELLANT	- 40741	1236.6	243.0	400.0						
126.5	SRM BURNOUT	154250	1206.6	240.0	400.0	0.155	8.274	8.273	-0.011	-0.022	NEG'L

NOTES: NOSE AT X=200, Y=0, Z=400 IN THE SOLID ROCKET BOOSTER SYSTEM

FORM 3945-A-2 REV. 4-73

FORM 3945-A NEW 8-70

WEIGHT/C.G. CHANGE ANALYSIS

CONFIGURATION	BY	DATE	PAGE
150K ORBITER MISSION NO.1 DUE EAST VL70-000140A	M. R. BEER	JULY 2, 1973	

CODE	SYSTEM	LAST REPORT (6-2-73)		CURRENT REPORT (7-2-73)		CHANGE		CHANGE NOTE
		WEIGHT	C.G.	WEIGHT	C.G.	WEIGHT	C.G.	
1.0	WING GROUP	11208	1244.0	11208	1236.4		+ 7.6	
2.0	TAIL GROUP	2669	1527.1	2669	1527.1			
3.0	BODY GROUP	35552	983.8	34868	992.6	-684	+ 8.8	(1)
4.0	INDUCED ENVIR PROTECTION	25164	1087.8	25164	1087.8			
5.0	LANDING, RECOVERY, DOCKING	9501	1007.4	9501	1007.5		+ 0.1	
6.0	PROPULSION-ASCENT	26441	1464.1	26443	1467.6	2	+ 3.5	(2)
7.0	PROPULSION-CRUISE	0						
8.0	PROPULSION-AUXILIARY	5223	1176.8	5223	1176.8			
9.0	PRIME POWER	3432	924.9	3453	943.0	21	+18.1	(3)
10.0	ELECTRICAL CONVER & DISTR	4604	829.8	4600	832.8	- 4	+ 3.0	(4)
11.0	HYDRALIC CONVER & DISTR	1576	1349.2	1576	1349.2			
12.0	SURFACE CONTROLS	1837	1420.8	1837	1420.8			
13.0	AVIONICS	4522	558.1	4181	560.8	-341	+ 2.7	(5)
14.0	ENVIRONMENTAL CONTROL	4231	755.3	4213	769.0	- 18	+13.7	(6)
15.0	PERSONNEL PROVISIONS	1317	489.5	1332	490.4	15	+ 0.9	(7)
16.0	RANGE SAFETY							
17.0	BALLAST							
18.0	PAYLOAD ACCOMMODATIONS	48	1307.0	48	1307.0			
19.0	GROWTH	12675	1050.0	13684	1058.0	1009	+ 8.0	(8)
	SUBTOTAL (DRY WT)	150000	1108.5	150000	1113.6	0		
20.0	PERSONNEL	1104	509.7	1104	509.7			
21.0	CARGO	65000	1020.0	65000	1020.0			
22.0	ORDNANCE							
23.0	RESIDUAL FLUIDS	2421	1018.4	2427	1026.4	6	+ 8.0	(9)
24.0								
	SUBTOTAL (INERT WT)	218525	1078.1	218531	1081.7	6		
25.0	RESERVE FLUIDS	1083	958.1	1083	989.3			
26.0	INFLIGHT LOSSES	4037	1118.2	4069	1155.8	32	+37.6	(10)
27.0	PROPELLANT-ASCENT							
28.0	PROPELLANT-CRUISE							
29.0	PROPELLANT-MANEUV/ACS	20648	1286.1	23088	1298.9	2440	+12.8	(11)
30.0								
	TOTAL (GROSS-WEIGHT) LB.	244293	1095.8	246771	1102.9	2478	+ 7.1	

Space Division
North American Rockwell

ORBITER WEIGHT CHANGES

CHANGE NOTE	DISCUSSION	DELTA WEIGHT		PAGE 1 of 3
(1)	3.0 BODY GROUP		-684	
	CHANGE CABIN DESIGN FROM CANTILEVERED TO MODIFIED FLOATING DESIGN PER MCR 0161 (BASELINE DEFINITION SPACE SHUTTLE VEHICLE CREW CABIN FORWARD BODY SIZING)	-680		
	DELETE HORIZON SENSOR SUPPORTS AND INSTALLATION PER MCR 0246 (GN&C BASELINE CHANGE #1 - DELETION OF HORIZON SENSORS)	- 4		
(2)	6.0 PROPULSION - MAIN ASCENT		+ 2	
	REDUCE BRACKETS AND HARDWARE FOR ELECTRICAL AND MECHANICAL INTERFACE PANELS PER MCR 0152 (SSME ICD 13M15000 REVIEW & UPDATE)	- 15		
	REVISE HELIUM SYSTEM TO FOUR BOTTLE CONFIGURATION PER ITEM F-1 (REVISE PRESSURANT FOR MPS PURGE (DUMP) UPDATE)	+ 17		
(3)	9.0 PRIME POWER		+ 21	
	DECREASE CRYO TANKS PER MCR 0226 (COMMUNICATION AND TRACKING SYBSYSTEM BASELINE CHANGE NO.1 - C&T REASESSMENT)	- 11		
	REDUCE FUEL CELLS PER MCR 0246	- 1		
	INCREASE CRYO TANKS PER ITEM A-15 (ADD HEATERS TO CABIN)	+ 33		
(4)	10.0 ELECTRICAL CONVERSION & DISTRIBUTION		- 4	
	ADDED WIRING PER MCR 0140 (ONE-WAY DOPPLER TRACKING CAPABILITY)	+ 10		
	DELETE WIRING PER MCR 0246	- 24		
	ADDED WIRING PER ITEM A-15	+ 10		
(5)	13.0 AVIONICS		-341	
	ADDED ONE-WAY DOPPLER PER MCR 0140	+ 13		
	ADDED DOPPLER DISPLAY & CONTROLS PER MCR 0140	+ 2		
	UPDATED COMMUNICATION SYSTEM BASELINE PER MCR 0226	-265		
	DELETE HORIZON SENSORS PER MCR 0246	- 91		

CHANGE NOTE		DISCUSSION	DELTA	WEIGHT	PAGE 2 of 3
(6)	14.0	ENVIRONMENTAL CONTROL		- 18	
		REDUCE REGULATORS, VALVES AND PLUMBING PER MCR 0232 (DELETE THIRD N_2/O_2 PRESSURE SYSTEM LOOP)	- 15		
		ADD HEATER AND SUPPORTS PER ITEM A-15	+ 12		
		TRANSFER SUBLIMATOR ASSOCIATED HARDWARE TO WATER MANAGEMENT CODE 15.0	- 22		
		TRANSFER WATER PRESSURANT VALVE AND REGULATOR FROM WATER MANAGEMENT CODE 15.0	+ 7		
(7)	15.0	PERSONNEL PROVISIONS		+ 15	
		TRANSFER SUBLIMATOR ASSOCIATED HARDWARE FROM HEAT TRANSPORT CODE 14.0	+ 22		
		TRANSFER WATER PRESSURANT VALVE AND REGULATOR TO PRESSURE CONTROL CODE 14	- 7		
(8)	19.0	GROWTH		+1009	
		INCREASE GROWTH ALLOWANCE	+1009		
		DRY WEIGHT CHANGE		0	
(9)	23.0	RESIDUAL FLUIDS		+ 6	
		INCREASE EPS LOX RESIDUAL PER ITEM A-15	+ 5		
		INCREASE EPS LH_2 RESIDUAL PER ITEM A-15	+ 1		
(10)	26.0	INFLIGHT LOSSES		+ 32	
		REDUCE EPS LOX INFLIGHT LOSS PER MCR 0226	- 21		
		REDUCE EPS LH_2 INFLIGHT LOSS PER MCR 0226	- 3		
		REDUCE EPS LOX INFLIGHT LOSS PER MCR 0246	- 3		
		INCREASE EPS LOX INFLIGHT LOSS PER ITEM A-15	+ 52		
		INCREASE EPS LH_2 INFLIGHT LOSS PER ITEM A-15	+ 6		
		INCREASE ASCENT PROP. HELIUM INFLIGHT LOSS PER ITEM F-1	+ 1		

CHANGE NOTE	DISCUSSION	DELTA WEIGHT	WEIGHT	PAGE 3 of 3
(11)	29.0 PROPELLANT - MANEUV/ACS		+2440	
	INCREASE OMS FUEL FOR SUB-ORBITAL TANK INSERTION	+ 921		
	INCREASE OMS OXIDIZER FOR SUB-ORBITAL TANK INSERTION	+1519		
	GROSS WEIGHT CHANGE		+2478	

CURRENT INVENTORY OF FLUIDS AND PROPELLANTS

CONFIGURATION: 150K ORBITER - MISSION NO. 1 DUE EAST - VL70-000140 A

BY: M. R. BEER

DATE: JULY 2, 1973

SYSTEM	DENSITY LB/FT^3	CAPACITY LB	TOTAL WT LB	EXPENDABLE (NOMINAL)	RESERVES LB	RESIDUALS LB
PROPULSION - ASCENT						
OXIDIZER (LOX) EXT TANK	71.0		1334623	1323854	4714	6055
FUEL (LH) EXT TANK	4.4		225668	220642	786	4240
PRESSURANT (HELIUM	2.3		44	35	-	9
PROPULSION - CRUISE						
FUEL (LH)						
PRESSURANT						
PROPULSION - AUXILIARY						
OXIDIZER (LOX)						
MANEUVER N_2O_4	90.2		11362	11178	-	184
ATTITUDE CONTROL						
FUEL						
MANEUVER MMH	54.7		6929	6825	-	104
ATTITUDE CONTROL -HYDRAZ	61.3@125		6399	5709	530	160
PRESSURANT - HELIUM						
MANEUVER	2.5		82	61	-	21
ATTITUDE CONTROL	2.5		44	29	-	15
ENVIRONMENTAL CONTROL						
RADIATOR FLUID (FREON)	90		536	-	-	536
ATMOSPHERE ( )						
OXYGEN - FLUID & HP GAS	69.5&16.9		55	-	50	5
DILUENT (N_2)	14.8		202	55	125	22
WATER						
COOLING	61.0		402	-	-	402
DRINKING	62.0					
WASH AND PURIFICATION						
AMMONIA			90	55	35	-
PRIME POWER						
RADIATOR FLUID ( )	61.0		62	-	-	62
FUEL CELL REACTANTS						
OXIDIZER (LOX)	69.5		1559	1172	248	139
FUEL (LH)	4.3		183	134	29	20
APU REACTANTS						
PRESSURANT (HELIUM)	2.5		4	-	-	4
FUEL (HYDRAZINE)	60@150		1409	1312	66	31
HYDRA CONVER & DISTRIB						
HYDRAULIC FLUID	57.6		638	-	-	688
WATER	61.0		617	592	-	25
MISCELLANEOUS						

FORM 3045-A-8 REV 5-73

Space Division
Rockwell International

CURRENT INVENTORY OF FLUIDS AND PROPELLANTS

CONFIGURATION	BY	DATE
150K ORBITER - MISSION NO. 2 LOGISTICS - VL70-000140 A	M. R. BEER	JULY 2, 1973

SYSTEM	DENSITY LB/FT^3	CAPACITY LB	TOTAL WT LB	EXPENDABLE (NOMINAL)	RESERVES LB	RESIDUALS LB
PROPULSION - ASCENT	71.0		1334623	1323854	4714	6055
OXIDIZER (LOX) EXT TANK	4.4		225668	220642	786	4240
FUEL (LH) EXT TANK	2.3		44	35	-	9
PRESSURANT (HELIUM)						
PROPULSION - CRUISE						
FUEL (LH)						
PRESSURANT						
PROPULSION - AUXILIARY						
OXIDIZER (LOX)						
MANEUVER N_2O_4	90.2		18357	18173 *	-	184
ATTITUDE CONTROL						
FUEL						
MANEUVER MMH	54.7		12389	12285 *	-	104
ATTITUDE CONTROL-HYDRAZ	61.3@125		7148	6458	530	160
PRESSURANT - HELIUM						
MANEUVER	2.5		82	61	-	21
ATTITUDE CONTROL	2.5		44	29	-	15
ENVIRONMENTAL CONTROL						
RADIATOR FLUID (FREON)	90		536	-	-	536
ATMOSPHERE ( )						
OXYGEN - FLUID & HP GAS	69.5&16.9		55	-	50	5
DILUENT (N_2)	14.8		202	55	125	22
WATER						
COOLING	61.0		402	-		402
DRINKING	62.0					
WASH AND PURIFICATION						
AMMONIA			90	55	35	-
PRIME POWER						
RADIATOR FLUID ( )	61.0		62	-	-	62
FUEL CELL REACTANTS						
OXIDIZER (LOX)	69.5		1559	1172	248	139
FUEL (LH)	4.3		183	134	29	20
APU REACTANTS						
PRESSURANT (HELIUM)	2.5		4	-	-	4
FUEL (HYDRAZINE)	60@150		1409	1312	66	31
HYDRA CONVER & DISTRIB						
HYDRAULIC FLUID	57.6		688	-	-	688
WATER	61.0		617	592	-	25
MISCELLANEOUS						

FORM 2015-A-8 REV 5-73

* 1189 LBS FUEL &, 1961 LBS OXIDIZER IN THE OMS KIT. THESE ARE CHARGEABLE TO CARGO.

Space Division
Rockwell International

CURRENT INVENTORY OF FLUIDS AND PROPELLANTS

CONFIGURATION	BY	DATE
150K ORBITER - MISSION NO. 3A DEPLOY - VL70-000140 A	M. R. BEER	JULY 2, 1973

SYSTEM	DENSITY LB/FT^3	CAPACITY LB	TOTAL WT LB	EXPENDABLE (NOMINAL)	RESERVES LB	RESIDUALS LB
PROPULSION - ASCENT	71.0		1334623	1324059	4509	6055
OXIDIZER (LOX) EXT TANK	4.4		225668	220677	751	4240
FUEL (LH) EXT TANK	2.3		44	35	-	9
PRESSURANT (HELIUM)						
PROPULSION - CRUISE						
FUEL (LH)						
PRESSURANT						
PROPULSION - AUXILIARY						
OXIDIZER (LOX)						
MANEUVER N_2O_4	90.2		7675	7491	-	184
ATTITUDE CONTROL						
FUEL						
MANEUVER MMH	54.7		4694	4590	-	104
ATTITUDE CONTROL - HYDRAZ	61.3@125		5431	4741	530	160
PRESSURANT - HELIUM						
MANEUVER	2.5		82	61	-	21
ATTITUDE CONTROL	2.5		44	29	-	15
ENVIRONMENTAL CONTROL						
RADIATOR FLUID (FREON)	90		536	-	-	536
ATMOSPHERE ( )						
OXYGEN - FLUID & HP GAS	69.5&16.9		55	-	50	5
DILUENT (N_2)	14.8		202	55	125	22
WATER						
COOLING	61.0		402	-	-	402
DRINKING	62.0					
WASH AND PURIFICATION						
AMMONIA			90	55	35	-
PRIME POWER						
RADIATOR FLUID ( )	61.0		62	-	-	62
FUEL CELL REACTANTS						
OXIDIZER (LOX)	69.5		1559	1172	248	139
FUEL (LH)	4.3		183	134	29	20
APU REACTANTS						
PRESSURANT (HELIUM)	2.5		4	-	-	4
FUEL (HYDRAZINE)	60@150		1409	1312	66	31
HYDRA CONVER & DISTRIB						
HYDRAULIC FLUID	57.6		688	-	-	688
WATER	61.0		617	592	-	25
MISCELLANEOUS						

FORM 3945-A-8 REV 5-73

Space Division
Rockwell International

CURRENT INVENTORY OF FLUIDS AND PROPELLANTS

CONFIGURATION	BY	DATE
150K ORBITER - MISSION NO. 3B RETRIEVE - VL70-000140 A	M. R. BEER	JULY 2, 1973

SYSTEM	DENSITY LB/FT^3	CAPACITY LB	TOTAL WT LB	EXPENDABLE (NOMINAL)	RESERVES LB	RESIDUALS LB
PROPULSION - ASCENT	71.0		1334623	1324059	4509	6055
OXIDIZER (LOX) EXT TANK	4.4		225668	220677	751	4240
FUEL (LH) EXT TANK	2.3		44	35	-	9
PRESSURANT (HELIUM)						
PROPULSION - CRUISE						
FUEL (LH)						
PRESSURANT						
PROPULSION - AUXILIARY						
OXIDIZER (LOX)						
MANEUVER N_2O_4	90.2		9615	9431	-	184
ATTITUDE CONTROL						
FUEL						
MANEUVER MMH	54.7		8316	8212	-	104
ATTITUDE CONTROL-HYDRAZ	61.3@125		8044	7354	530	160
PRESSURANT - HELIUM						
MANEUVER	2.5		82	61	-	21
ATTITUDE CONTROL	2.5		44	29	-	15
ENVIRONMENTAL CONTROL						
RADIATOR FLUID (FREON)	90		536	-	-	536
ATMOSPHERE ( )						
OXYGEN - FLUID & HP GAS	69.5&16.9		55	-	50	5
DILUENT (N_2)	14.8		202	55	125	22
WATER						
COOLING	61.0		402	-	-	402
DRINKING	62.0					
WASH AND PURIFICATION						
			90	55	35	-
PRIME POWER						
RADIATOR FLUID ( )	61.0		62	-	-	62
FUEL CELL REACTANTS						
OXIDIZER (LOX)	69.5		1559	1172	248	139
FUEL (LH)	4.3		183	134	29	20
APU REACTANTS						
PRESSURANT (HELIUM)	2.5		4	-	-	4
FUEL (HYDRAZINE)	60@150		1409	1312	66	31
HYDRA CONVER & DISTRIB						
HYDRAULIC FLUID	57.6		688	-	-	588
WATER	61.0		617	592	-	25
MISCELLANEOUS						

FORM 3945-A-8 REV 5-73

Space Division
Rockwell International

SUMMARY OF CRITICAL MASS PROPERTIES

CONFIGURATION	BY	DATE
150K ORBITER VL80-000140A	H. M. Dunn	July 2, 1973

MASS PROPERTIES LIMITING VALUES HAVE NOT BEEN ESTABLISHED WITH THE EXCEPTION OF THE FOLLOWING:

CONDITION	LIMIT VALUE	CURRENT VALUE
FWD C.G. - % OF BODY LENGTH - (50° TRIM - ENTRY CONDITION WITH PAYLOAD)	65.0	65.9
AFT C.G. - % OF BODY LENGTH - (-2% STATIC MARGIN - LANDING CONDITION WITHOUT PAYLOAD)	67.0	67.6
ORBITER DRY WEIGHT (LBS.)	150000	150000

FORM 3945-A-11 NEW 8-70

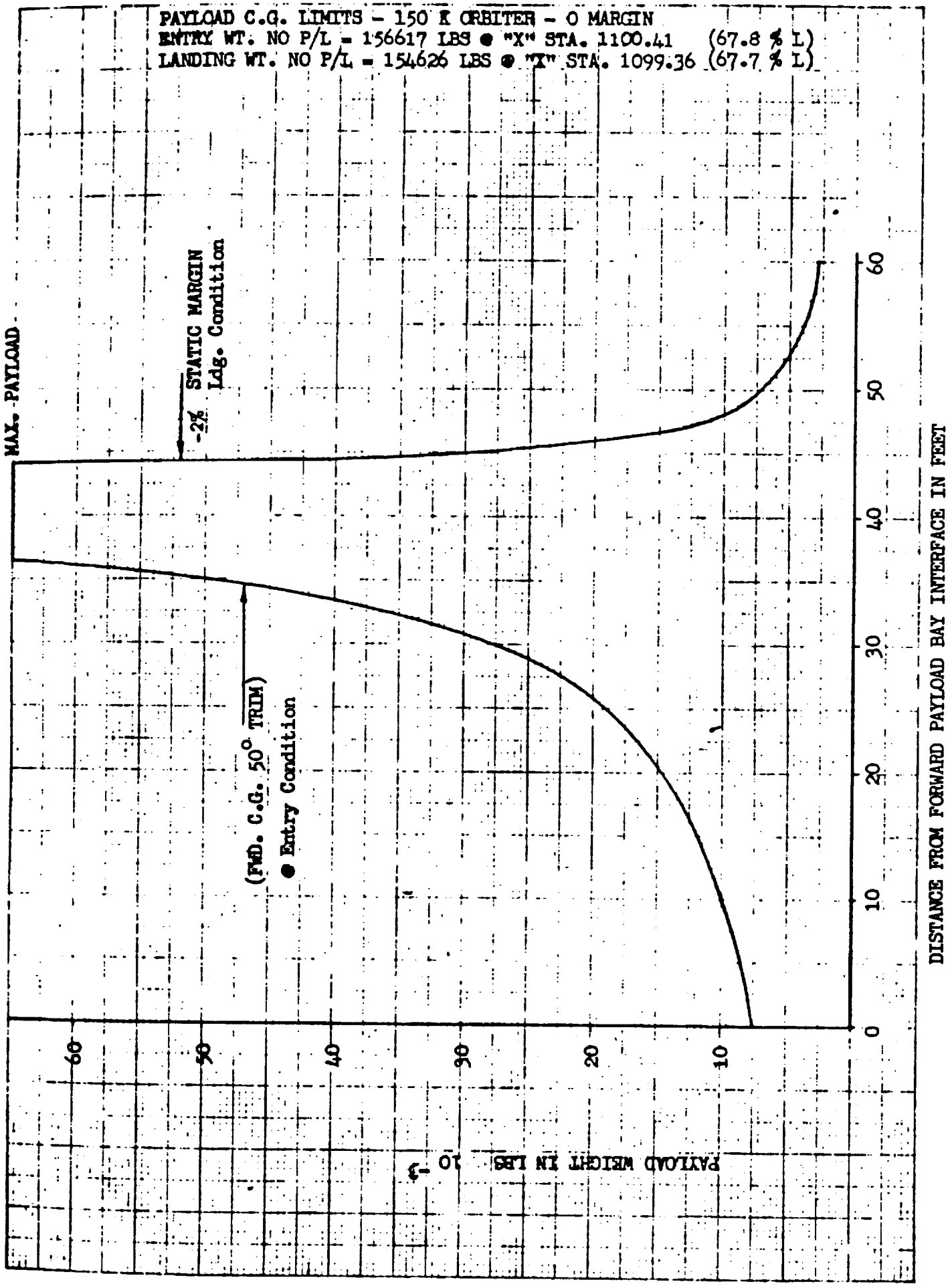
PAYLOAD C.G. LIMITS - 150 K ORBITER - 0 MARGIN
ENTRY WT. NO P/L = 156617 LBS @ "X" STA. 1100.41 (67.8 % L)
LANDING WT. NO P/L = 154626 LBS @ "X" STA. 1099.36 (67.7 % L)
MAX. PAYLOAD
-2% STATIC MARGIN
Ldg. Condition
(FWD. C.G. 50° TRIM)
● Entry Condition
PAYLOAD WEIGHT IN LBS 10 -3
60
50
40
30
20
10
0
DISTANCE FROM FORWARD PAYLOAD BAY INTERFACE IN FEET

EXTE

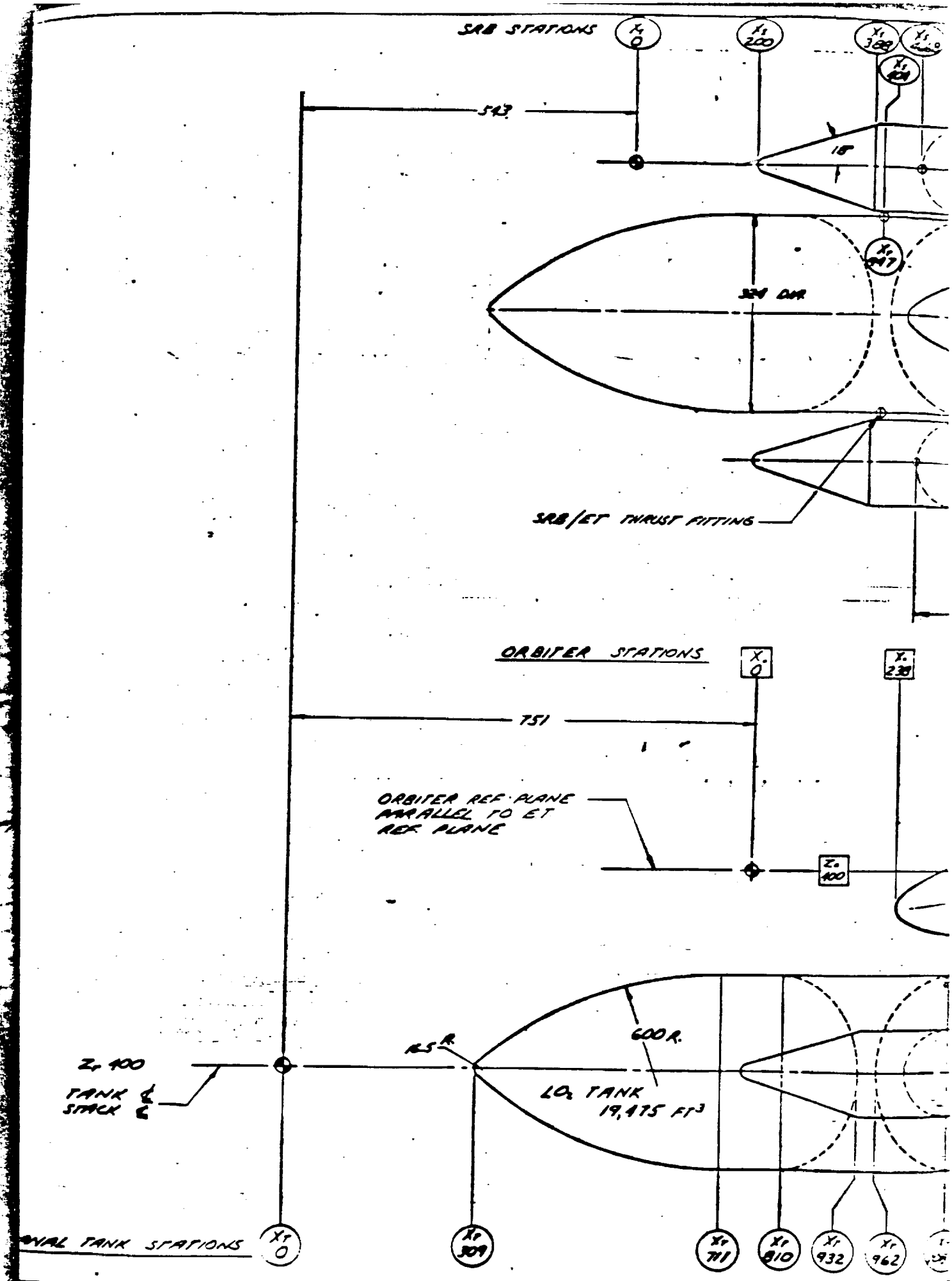
SRB STATIONS
X_T 0
X_T 200
X_T 389
X_T 404
X_T 947
543
15°
324 DIA
SRB/ET THRUST FITTING
ORBITER STATIONS
X_o 0
X_o 238
751
ORBITER REF. PLANE PARALLEL TO ET REF. PLANE
Z_o 100
Z_o 100
TANK ℄ STACK ℄
45 R.
600 R.
LO_2 TANK 19,475 FT^3
NAL TANK STATIONS
X_T 0
X_T 309
X_T 711
X_T 810
X_T 932
X_T 962

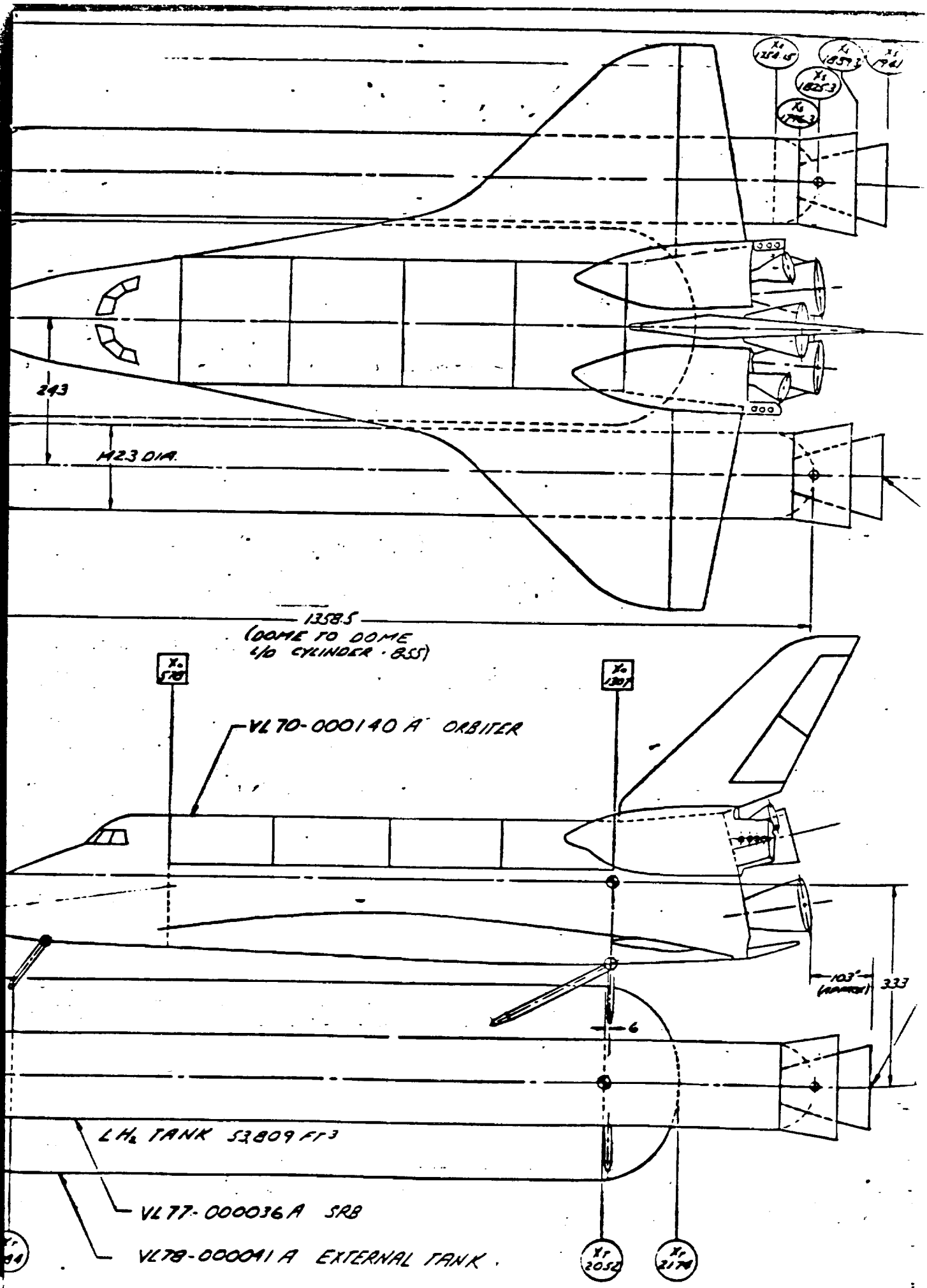
243
H23 DIA.
1358.5
(DOME TO DOME
L/D CYLINDER · 855)
VL70-000140 A ORBITER
333
LH2 TANK 53809 FT3
VL77-000036A SRB
VL78-000041 A EXTERNAL TANK.

0° NULL ±5° GIMBAL

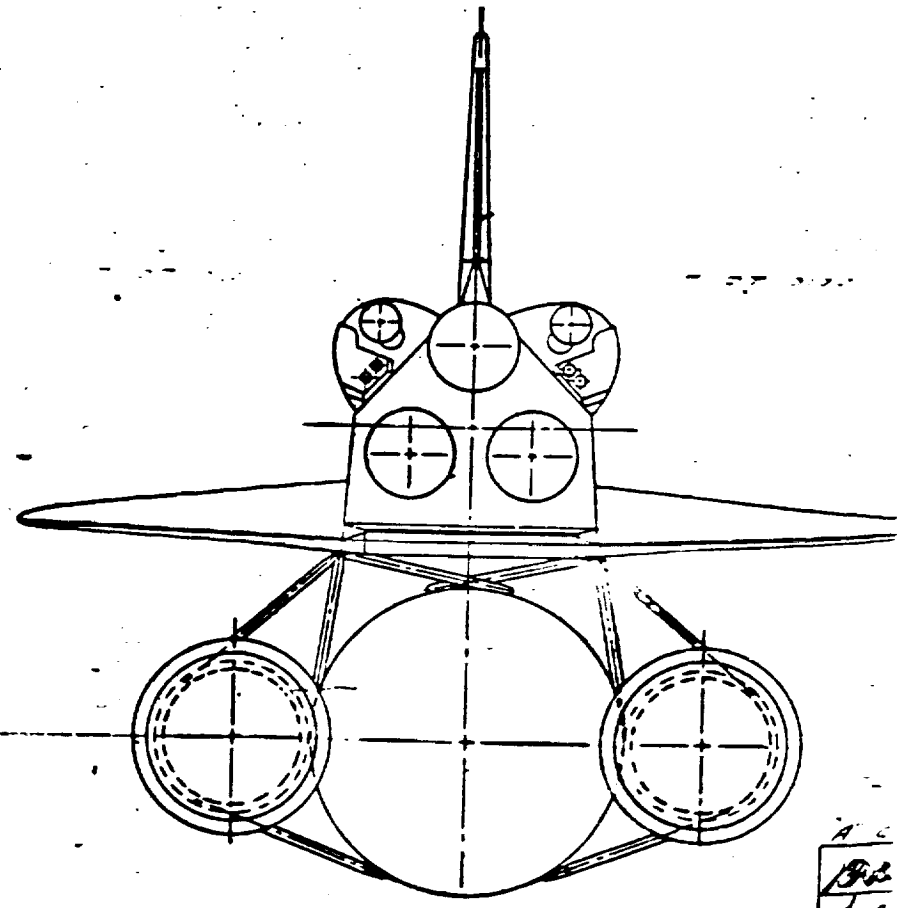

0° NULL ±5° GIMBAL

ET/SRB REF PLANE

A	RESIZED SRB FOR 7:1 EXPANSION RATIO NOZZLE.

REQUIREMENTS / ASSUMPTIONS

1. SRB/ET ATTACH POINT IN ET INTERSTAGE AND ON ET ℄
2. 324" DIA. ET
3. 1423" DIA SRB WITH TVC
4. OGIVE ET FOREBODY
5. ET SIZED FOR 1.55 M LBS PROPELLANT (USABLE)
6. SRB SIZED FOR 1,009,289 LBS PROPELLANT EACH

THIS PRINT REDUCED HALF SIZE

PROJECT OFFICE		
PRELIM DESIGN		4-19-73
SYSTEM ENG		
DIRECTOR		4/19/73
WEIGHTS		4/18/73

SHUTTLE CONFIGURATION CONTROL
MCR 0200 BASELINE REV I
DATED 5-16-73

SPACE DIVISION
NORTH AMERICAN ROCKWELL CORPORATION
LAKEWOOD, CALIFORNIA

VL72-000088
"A" CHANGE
SHT 1 OF 2

RCC

WI

OUTER ML DEFINED ON DWGS. —

FOREBODY	VL70-000143
MIDBODY & WING	VL70-000144
AFTBODY	VL70-000145
VERTICAL TAIL	VL70-000146

OUTER ML DEFINITION

X 238

FUS. NOSE
OUTER ML

Z 338

OUTER ML DEFINED BY
OFFSET THICKNESS
INTERFACE ML

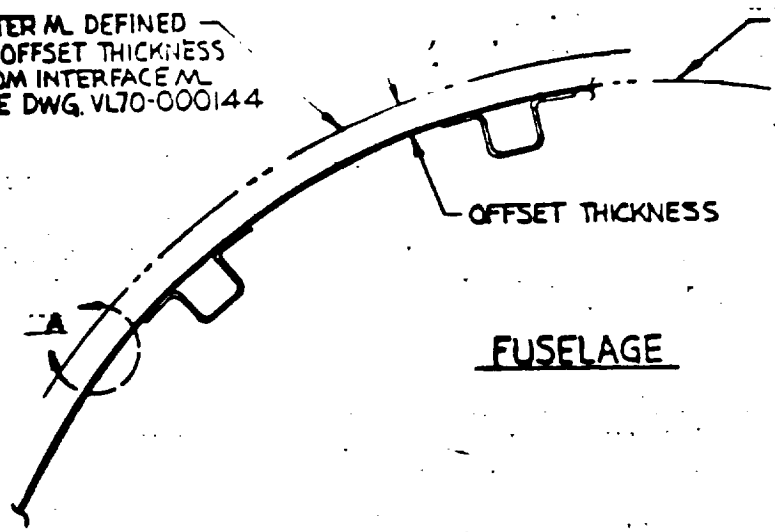

FUSELAGE

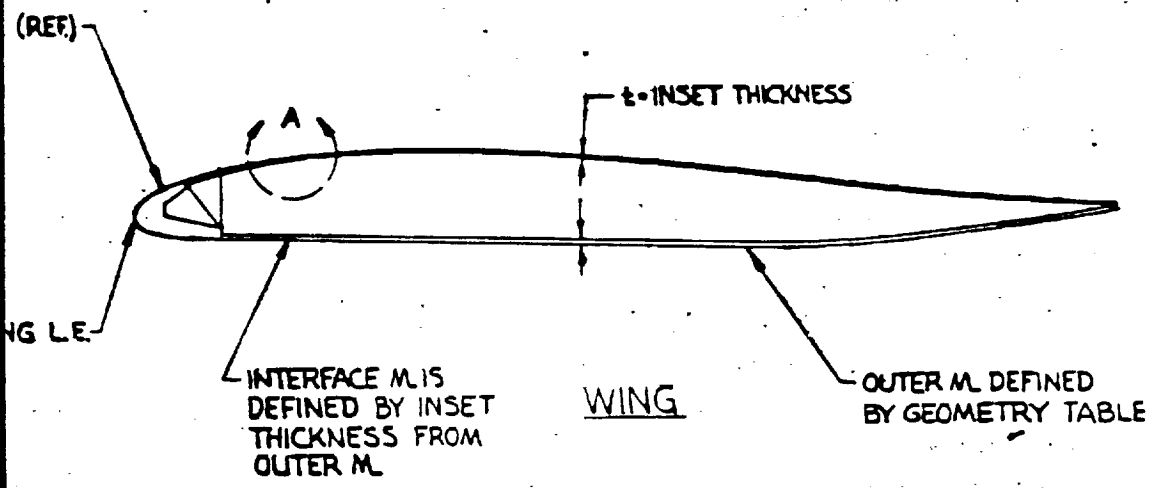

WING

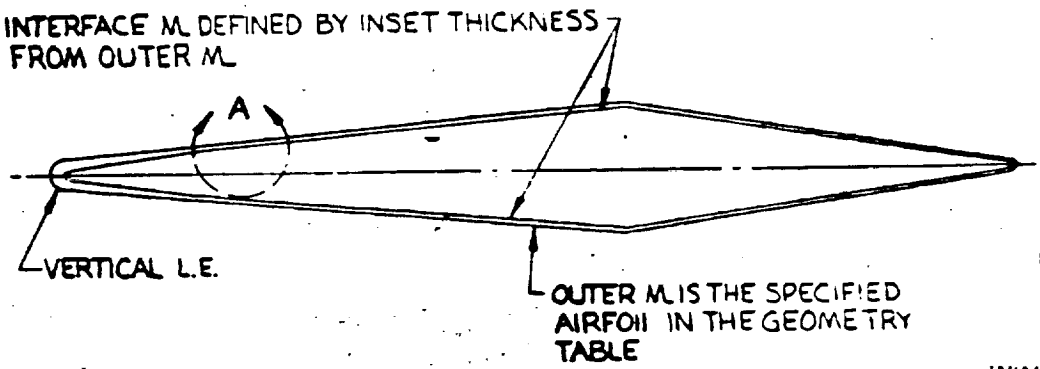

VERTICAL TAIL

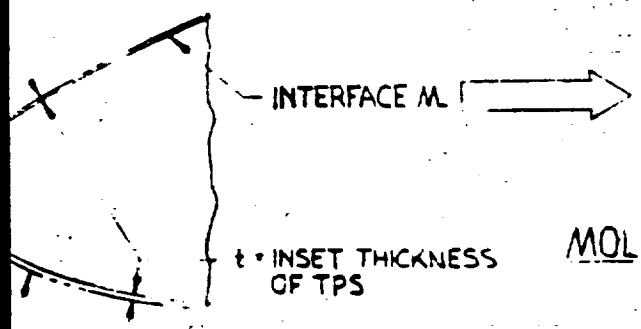

NOSE

MOLD LINE DESCRIPTION

S, FT.²
AR
λ
Λ L.E.
* Γ
α BASIC
t/c Y.0
t/c Y.19
b, IN.
Ca, IN.
Cr IN.
C̄ IN.
C̄ Y. IN
AIRFOIL
Y.199
V (TA
S EXP
S TO
S FT
S F

* DIHEDRAL ALC

FUSELAGE INTERFACE
FUSELAGE OUTER ML
WING OUTER ML
WING INTERFACE ML
FUSELAGE INTERFACE

NOTE. OUTER ML
ON DWGS
THIS CON

GEOMETRY	
WING	VERT.
2690	413.25
2.265	1.675
.20	.404
45°	45°
3° 30'	
WING • 0°-30'	
(FUS.) .083	
T/C TIP 10 TO 12	
936.68	315.72
689.24	268.50
137.85	108.47
474.81	199.81
182.13	(Z) 135.52
TIP 0012-64 MOD.	10° SYM.
0010 MOD.	60-40 WEDGE
(VOL.)	.0537
FT.² 2013	
EXP. FT.² 241	
L FT.² 3930.6	
420	
	106.38

TRAILING EDGE LOWER ML.

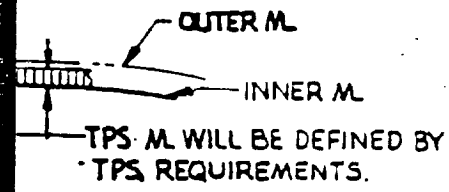

DETAIL A

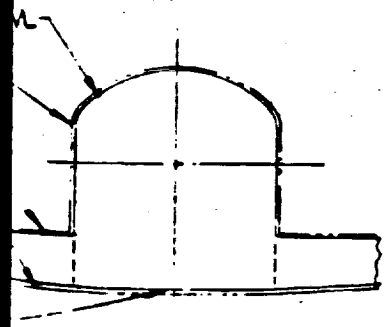

DEFINED FROM OFFSETS SHOWN
ON 009022 & FAIRED FOR
MFG.

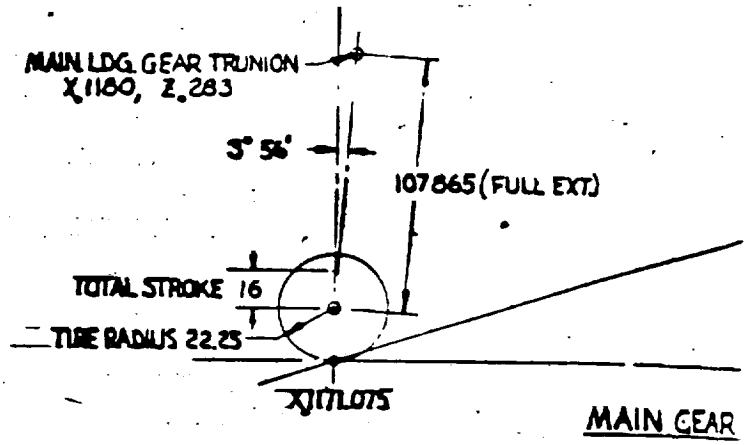

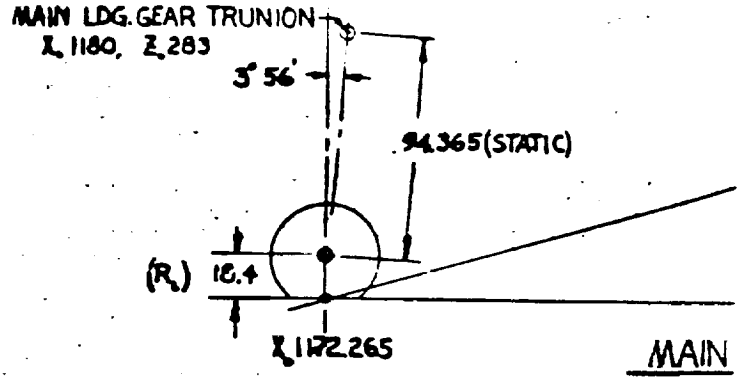

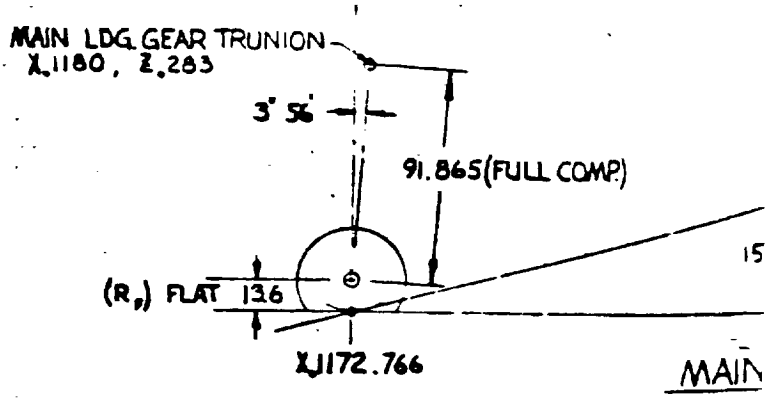

INTERFACE ML DEFINITION

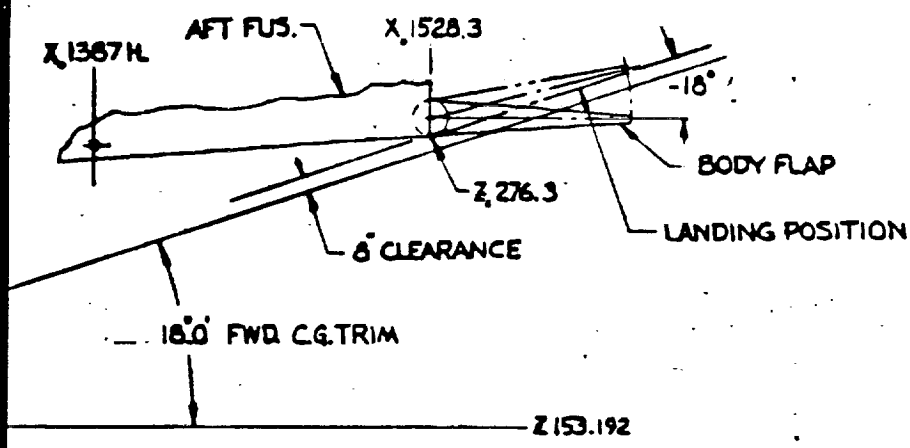

INITIAL CONTACT

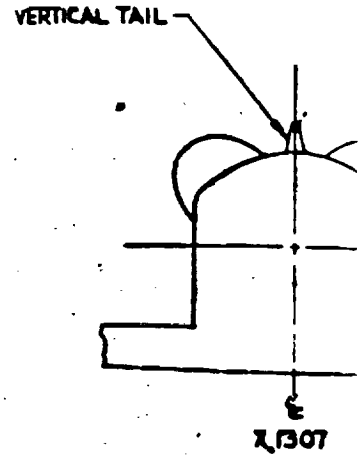

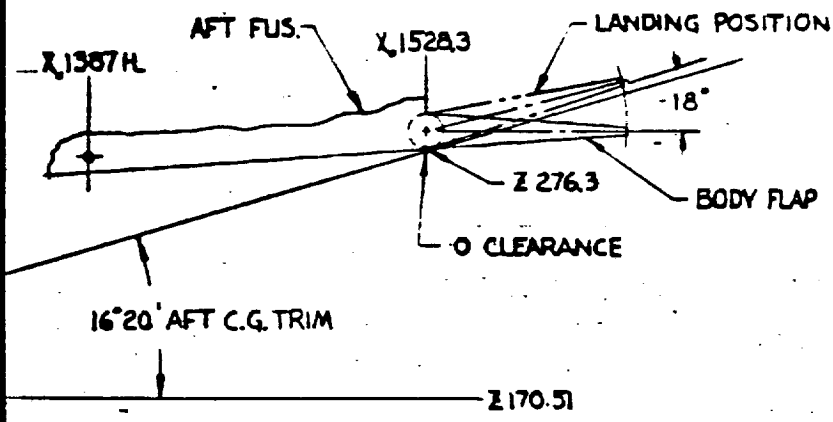

GEAR @ STATIC DEF.

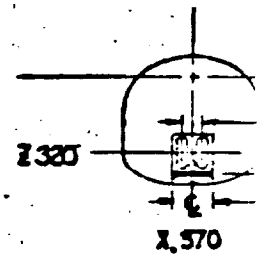

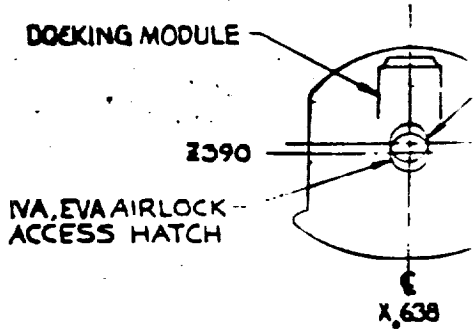

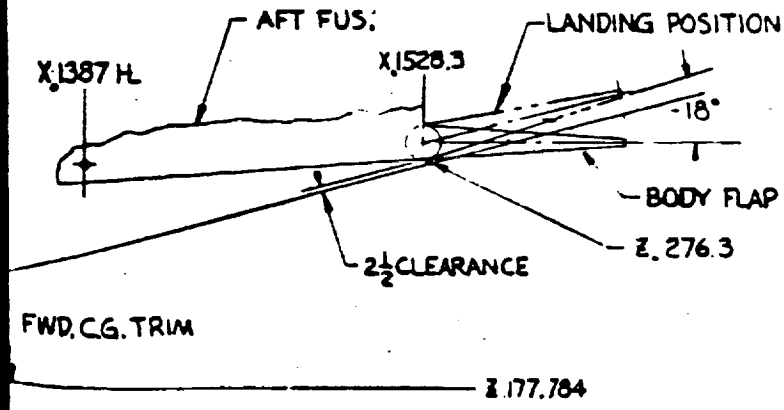

GEAR, TIRES FLAT, STRUT FULL COMP.

SCALE $\frac{1}{40}$

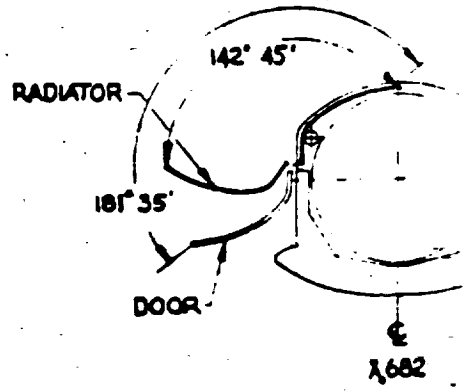

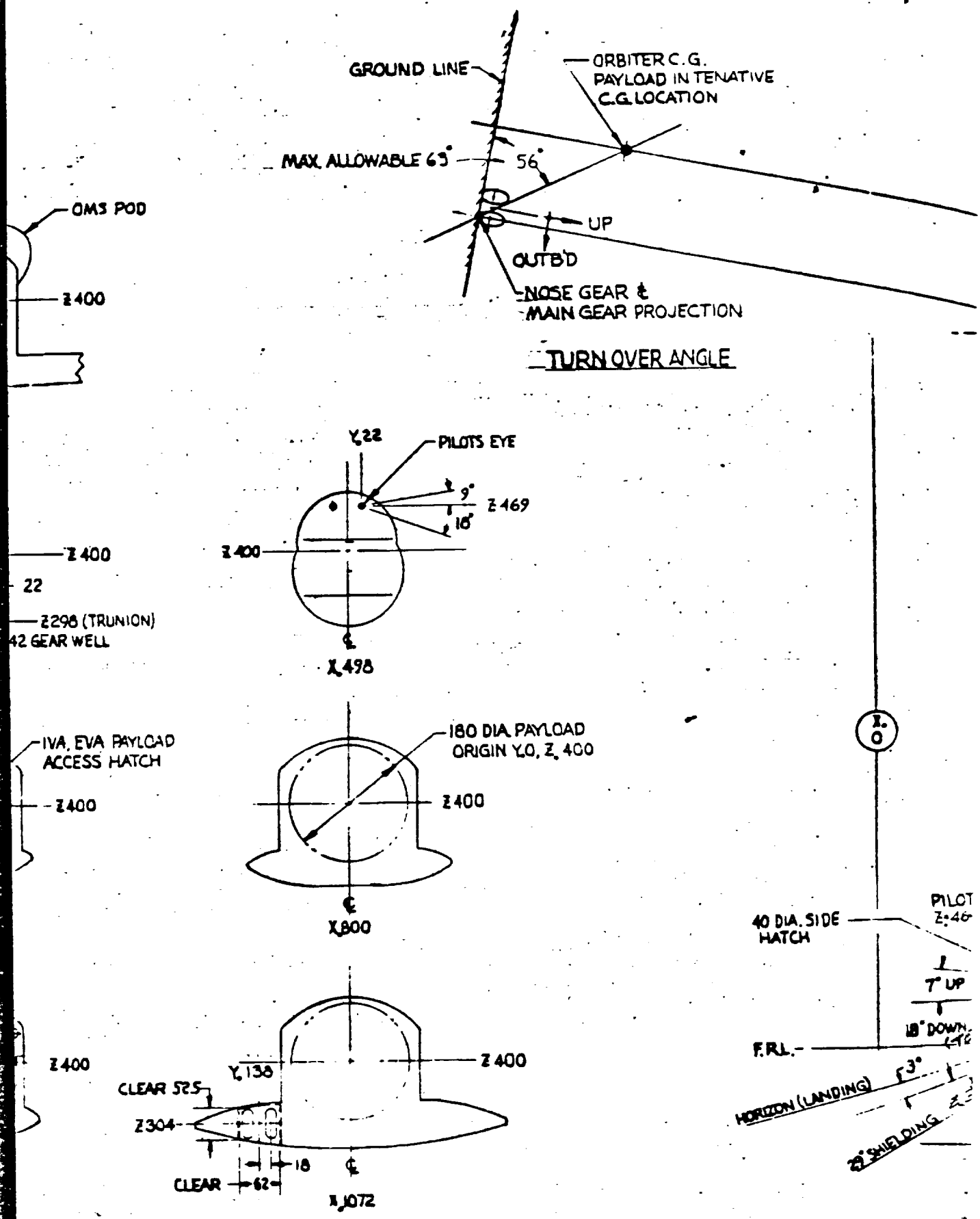

NOTE: FOR ACTUAL CROSS SECTIONS SEE REF. LINES DWGS.

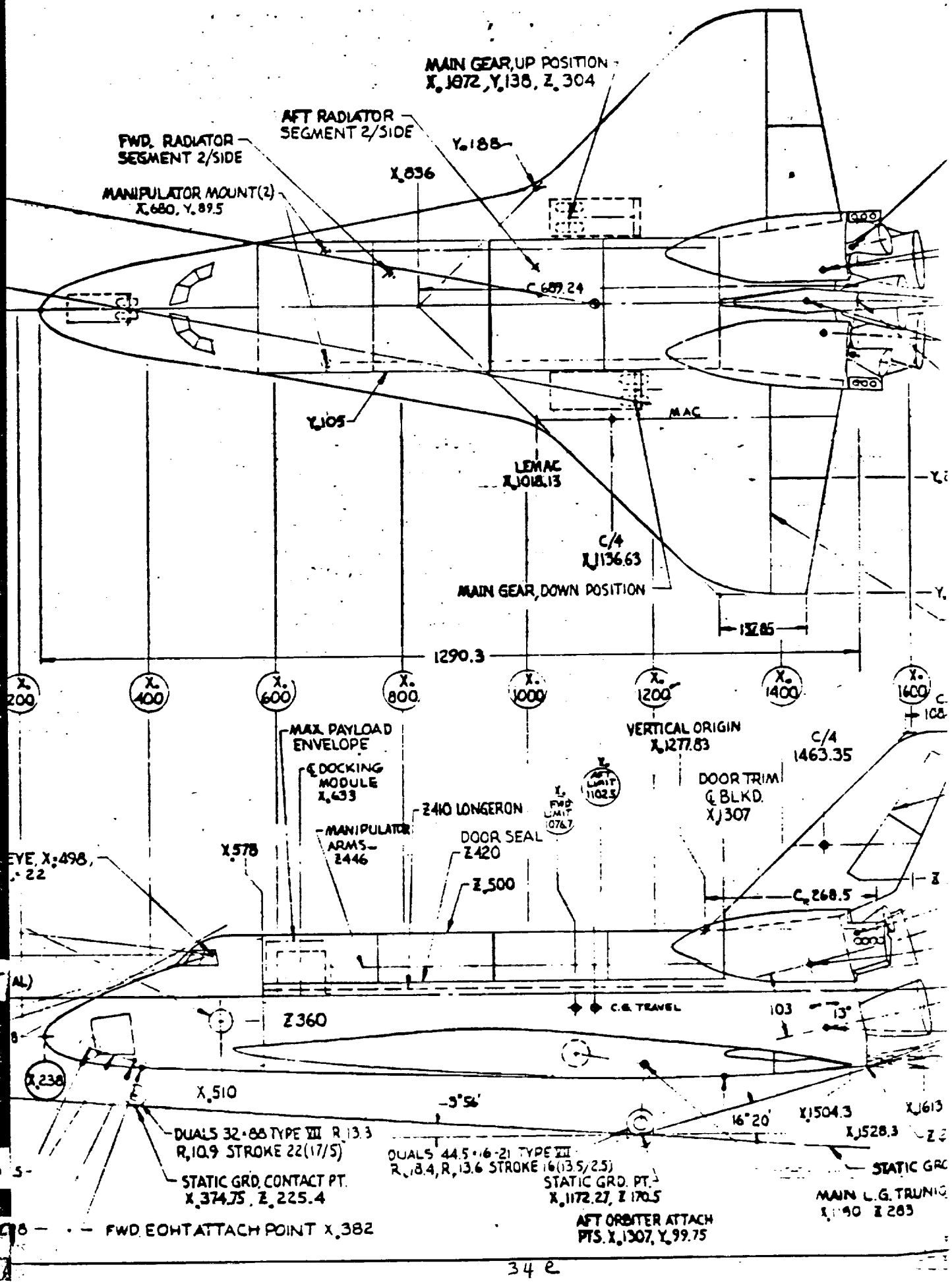
MAIN GEAR, UP POSITION
X.1072, Y.138, Z.304
AFT RADIATOR SEGMENT 2/SIDE
FWD. RADIATOR SEGMENT 2/SIDE
Y.188
X.836
MANIPULATOR MOUNT(2)
X.680, Y.89.5
C.689.24
Y.105
MAC
LEMAC
X.1018.13
C/4
X.1136.63
MAIN GEAR, DOWN POSITION
132.85
1290.3
X. 200
X. 400
X. 600
X. 800
X. 1000
X. 1200
X. 1400
X. 1600
MAX. PAYLOAD ENVELOPE
℄ DOCKING MODULE
X.633
VERTICAL ORIGIN
X.1277.83
C/4
1463.35
DOOR TRIM
℄ BLKD.
X.1307
AFT LIMIT 1102.5
FWD LIMIT 1076.7
Z410 LONGERON
MANIPULATOR ARMS
Z446
DOOR SEAL
Z420
Z.500
X.578
C.268.5
Z360
C.G. TRAVEL
103
13°
X.238
X.510
-3°56'
16°20'
X.1504.3
X.1528.3
X.1613
DUALS 32·88 TYPE VII R.13.3
R.10.9 STROKE 22(17/5)
DUALS 44.5·16-21 TYPE VII
R.18.4, R.13.6 STROKE 16(13.5/2.5)
STATIC GRD. CONTACT PT.
X.374.75, Z.225.4
STATIC GRD. PT.
X.1172.27, Z 170.5
AFT ORBITER ATTACH PTS. X.1307, Y.99.75
MAIN L.G. TRUNIO
X.1190 Z 283
FWD. EOHT ATTACH POINT X.382

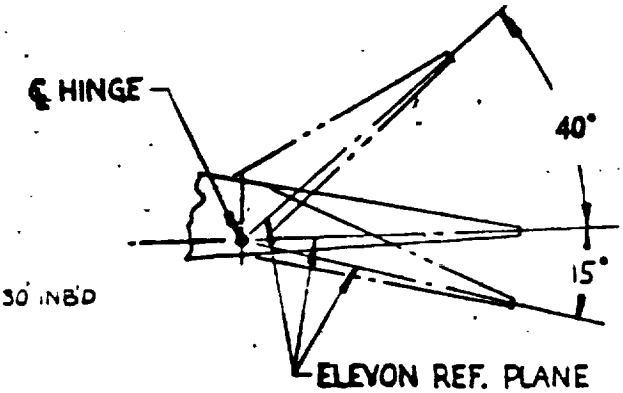

ELEVON DEFLECTIONS

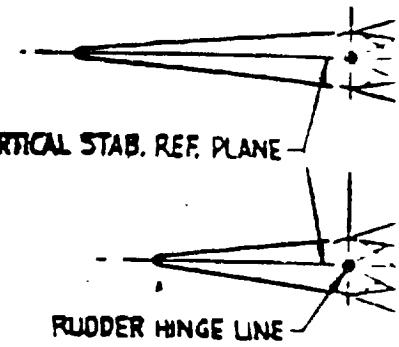

RUDDER TR

OMS YAW NULL 12° 17'
GIMBAL 13° 17' OUTB'D, 2° 30' INB'D
GIMBAL @ Y. 88

MPS LOWER ENGINES
YAW NULL 3° 30' OUTB'D
GIMBAL = 9° @ Y. 53

MPS UPPER ENGINE
YAW NULL 0°
GIMBAL = 9° @ Y. = 0

WING T.E. ℄ @ Y. = 0
Z 279.33

221 01 (40 %)

4 68.34
1987 H. ELEVON

Z 815.72
Z 779

RUDDER H.L. @ .60 C
SPLIT FOR SPEED
BRAKE

Z 578 78

OMS & AFT RCS POD
OMS PITCH NULL 15° 49'
GIMBAL = 8° @ X. 1518, Z. 492

MPS UPPER ENGINE
PITCH NULL 16°
GIMBAL = 11° @ X. 1445, Z. 443

Z. 400

MPS LOWER ENGINES
PITCH NULL 10°, GIMBAL = 11°

FOR ANGLES, SEE
BODY FLAP DEFLECTIONS

Z 277 78

ND LINE

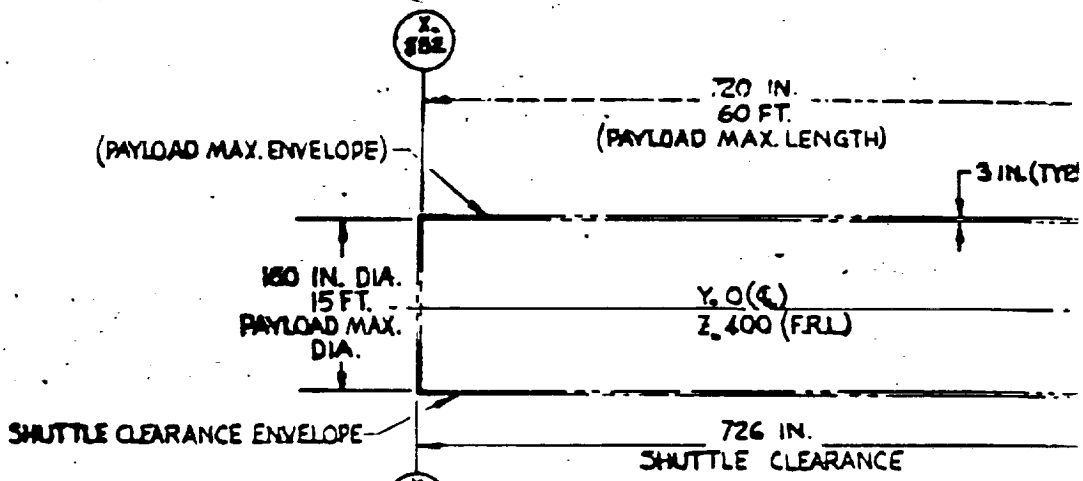

PAYLOAD INSTALLATION

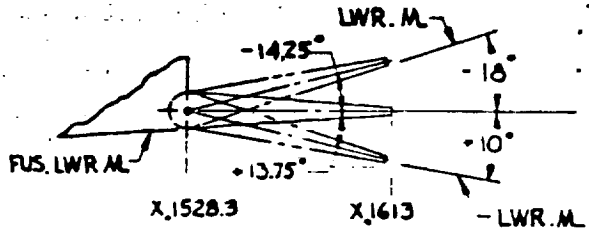

BODY FLAP DEFLECTIONS

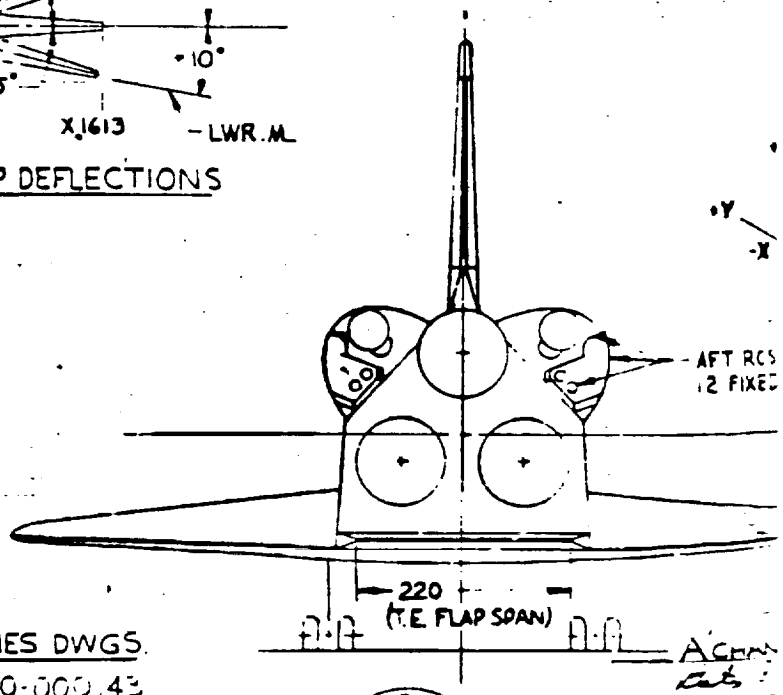

REF. LINES DWGS.

FOREBODY - VL70-000143
MID BODY & WING VL70-000144
AFT BODY VL70-000145
VERT. TAIL VL70-000146

THIS PRINT REDUCED
HALF SIZE

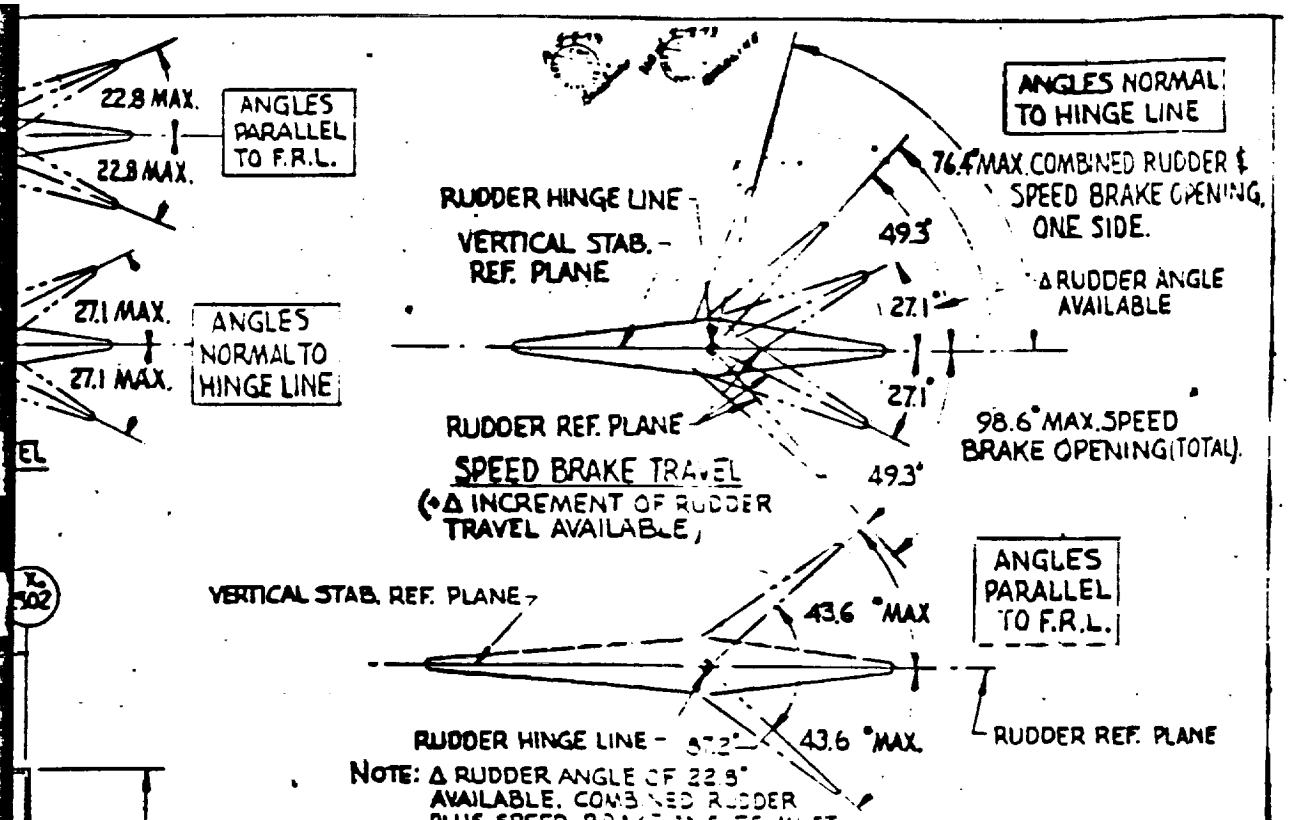

NOTE: Δ RUDDER ANGLE OF 22.8° AVAILABLE. COMBINED RUDDER PLUS SPEED BRAKE ANGLES MUST BE OBTAINED FROM HL ANGLES AND CONVERTED TO F.R.L. ANGLES. (F.R.L. ANGLES CANNOT BE ADDED)

TRAVEL

1302 X 502

186 IN. DIA. (SHUTTLE CLEARANCE)

3 IN. (TYP.)

1305 X 305

REQUIREMENTS/ASSUMPTIONS

1. BODY FWD. STA. X, 238
2. PILOT EYE POINT X, 498
3. NOSE GEAR TRUNION @ X, 375.5 & Z, 298
4. MAIN GEAR TRUNION @ X, 1150, Z, 283 & Y, 138
5. MAIN GEAR LENGTH SAME AS VL70-000898
6. REFAIRED & SHORTENED FWD BODY. (20 IN.)
7. REDUCED LENGTH OF MID BODY (18 IN.)
8. PARALLEL SIDE WALLS IN MIDBODY
9. SHOULDER LOCATED OMS/RCS PODS
10. FOUR PANEL RADIATOR PAYLOAD DOORS/SIDE
11. AFT BODY SIZED FOR MPS ENGINES ± 11° GIMBAL ANGLES PITCH, & ± 9° YAW ANGLES.
12. DOCKING PORT MOVED TO X, 633.
13. FWD VISION ANGLE -7° - 3° AT PILOTS EYE, SIDE VIEW, & ± 14° IN PLAN VIEW.
14. UPPER LONGERON AT Z, 410.
15. PAYLOAD DOOR SEAL AT Z, 420.
16. FWD EQHT AT X, 382.

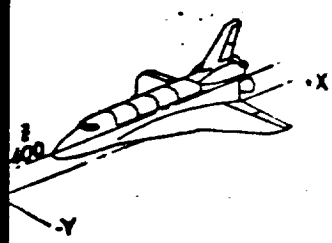

COORDINATE SYSTEM

PKG. 2 SIDES
MOTORS/SIDE

NOTE: THIS DWG. DEFINES CONFIG. VL70-000147B

A CHANGES 4-4-73
1. VL70-000147B CONFIG WAS VL70-000139.
2. DELETED CAB NOTES & DIM.
3. REMOVED WING FAIRING NOTE
4. MAIN GEAR UP POSITION Z 304 WAS Z 311
5. DOCKING MODULE X, 633 WAS X, 638
6. REVISED WING GEO (VERT POSITION & INC.)
7. GENERAL REVISION NL DESCRIP. CALLOUTS
8. ADDED VERT. POSITION WING CALLOUT

DESIGN LANDING SPEED	165 KTS.
DESIGN LANDING WT	179,789 LBS.
PAYLOAD DOWN	25,000 LBS.
MPS	470 [illegible]

4/13	[illegible] 4/13/73	AFFECTED DIRECTOR	
4/13	[illegible] 4/13/73	PRELIMINARY DESIGN	
4/13/73	[illegible] 4/13	SYSTEM ENGINEERING	
4/13/73	[illegible] 4/13/73		
4/13/73	[illegible] 4/13/73	PROJECT	

SIZE CC

NORTH AMERICAN ROCKWELL CORPORATION
LEGAL CONTROL DRAWING, SPACE DIVISION

DELETED [illegible] DWG. [illegible] BASELINE DATED 4-11-73

VL70-000140

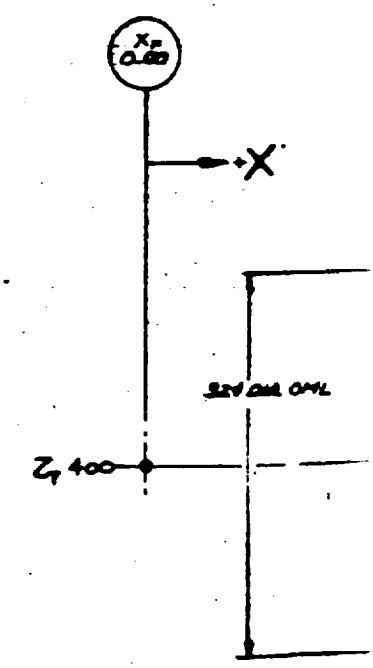
X
Z 400

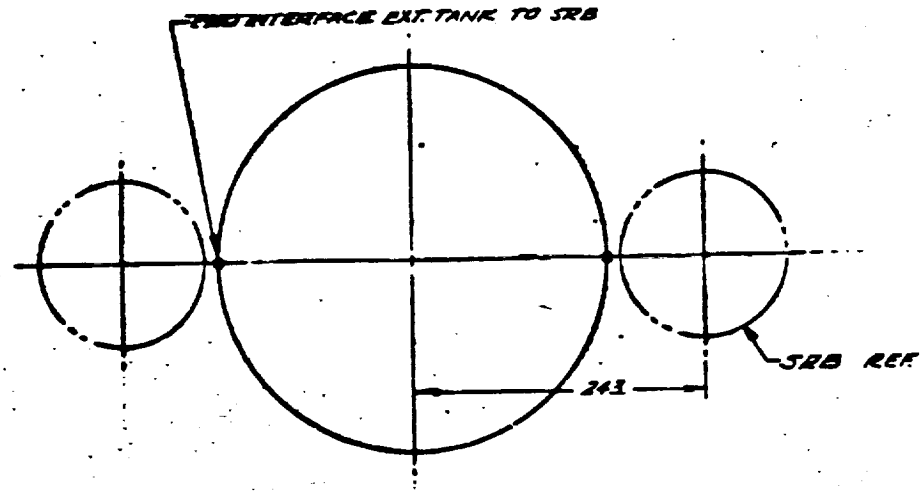

SECTION B-B

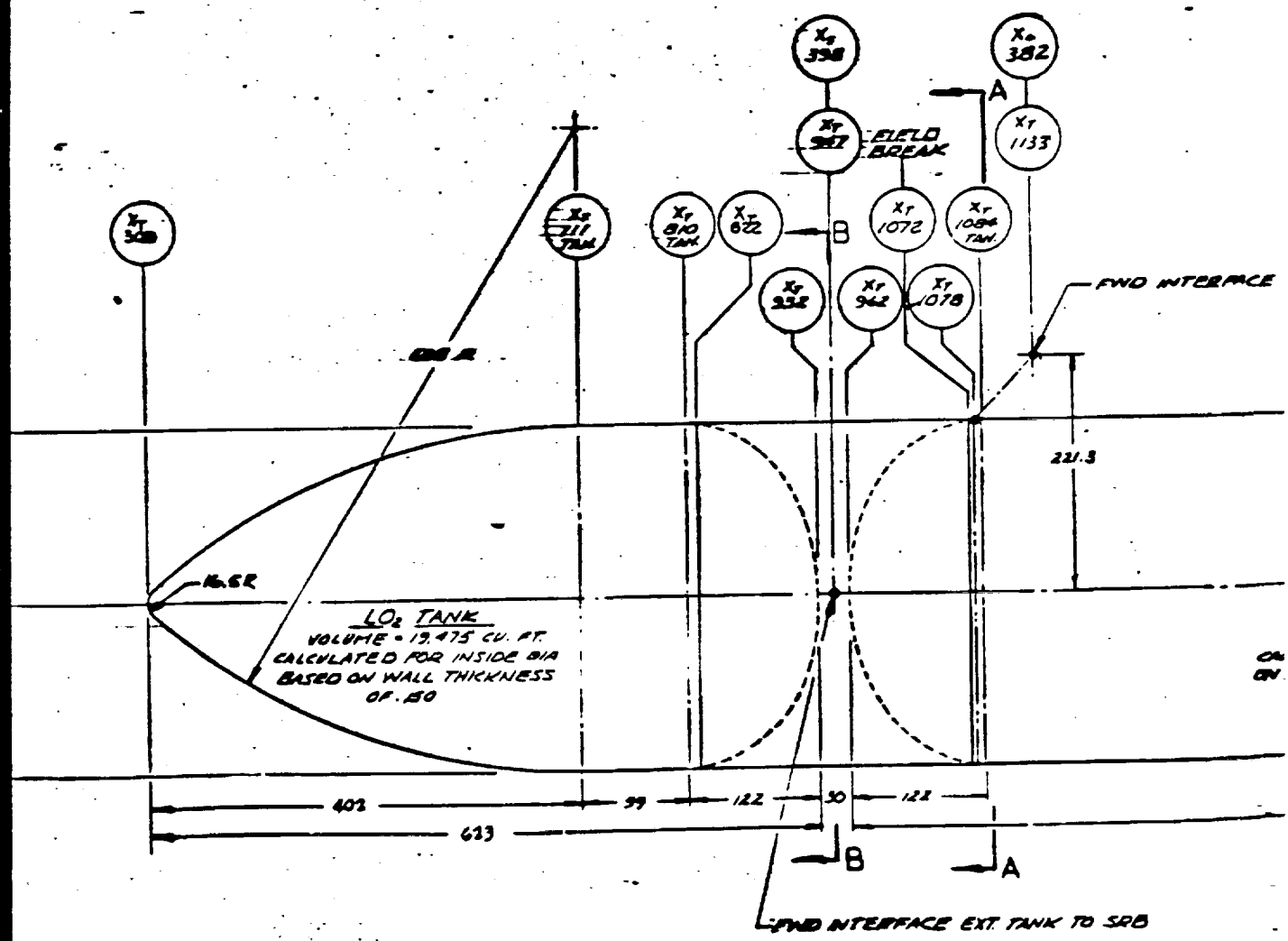

VL78-000041 A

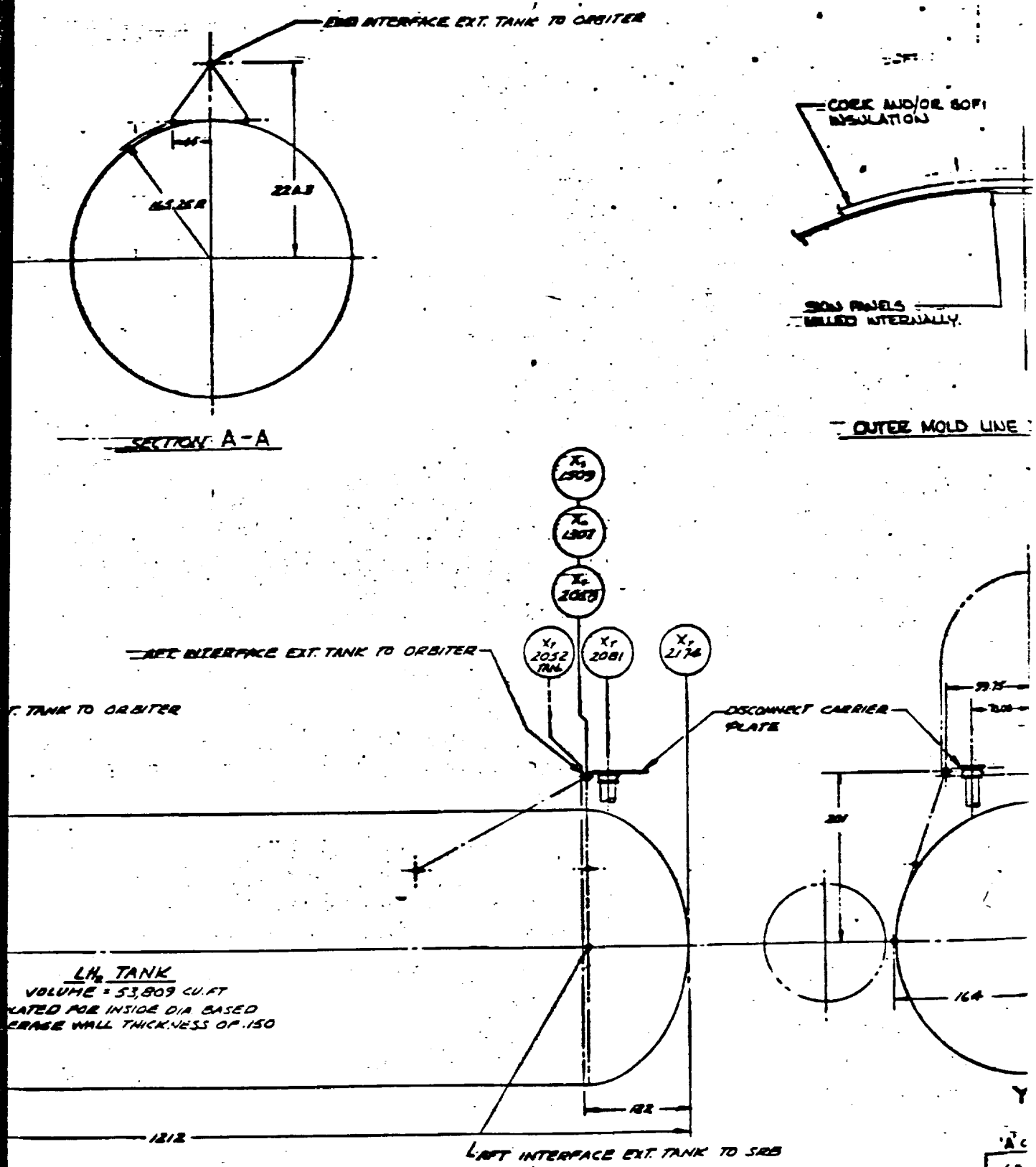

NOTES:

1. GAIL DOES NOT INCLUDE INSULATION
2. X_S DENOTES SRB STATIONS
3. X_O DENOTES ORBITER STATIONS
4. X_T DENOTES EXT TANK STATIONS

LTR	CHANGE
A	REVISED AFT TANK/SRB INTERFACE FROM 2 PT. TO SINGLE POINT ATTACHMENT TO CONCUR WITH ICD6.

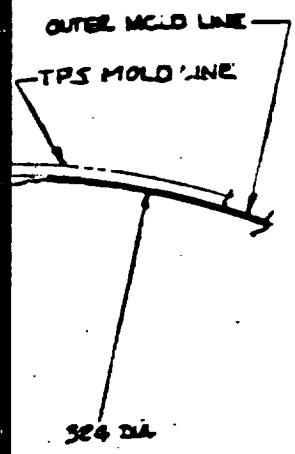

EFINITION

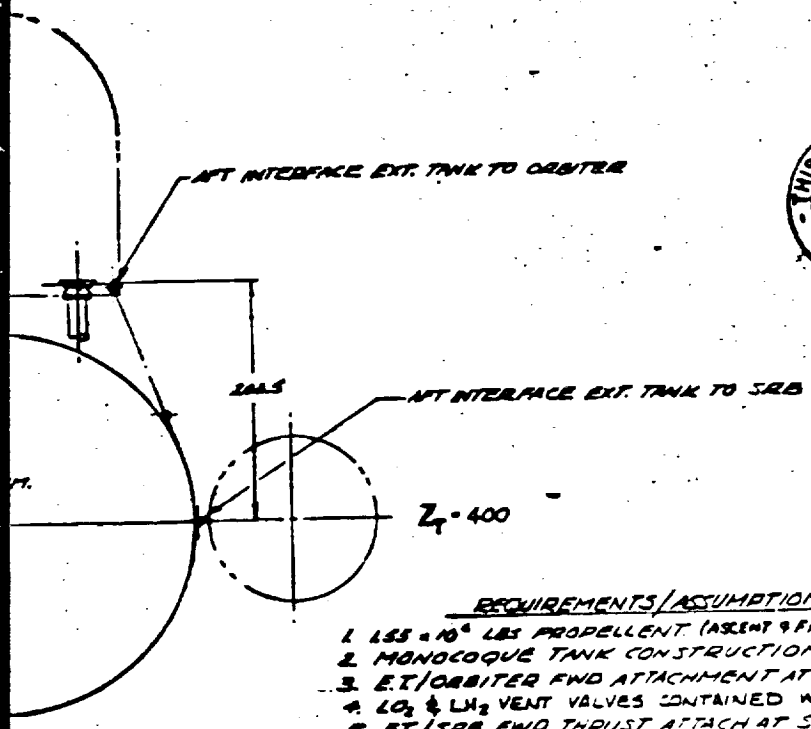

THIS PRINT REDUCED HALF SIZE

REQUIREMENTS/ASSUMPTIONS

1. 1.55 x 10^6 LBS PROPELLENT (ASCENT & FPR)
2. MONOCOQUE TANK CONSTRUCTION.
3. E.T./ORBITER FWD ATTACHMENT AT X_0 382, X_T 1133
4. LO_2 & LH_2 VENT VALVES CONTAINED WITHIN ET.
5. E.T./SRB FWD THRUST ATTACH AT STA. X_T 947
6. E.T./ORBITER & E.T./SRB AFT ATTACH AT STA. X_T 2058
7. NO DEORBIT PROVISIONS.

	PROPULSION	4/16/73
	PRELIM. DESIGN	
	PROJECT OFFICE	
	WEIGHTS	4/16/73
	SYSTEM ENG'G	4/13/73
	DIRECTOR	4/13/73

SCALE 50

NORTH AMERICAN ROCKWELL CORPORATION
LEWIS LABORATORIES SEAL BEACH, DOWNEY, CALIFORNIA

EXTERNAL TANK
CONFIGURATION CONTROL
MICROFICHE REVISION 1 DATED 5-16-73

VL78-000041 A

35 C

1 (4) 2 SD72-SH-0120-10

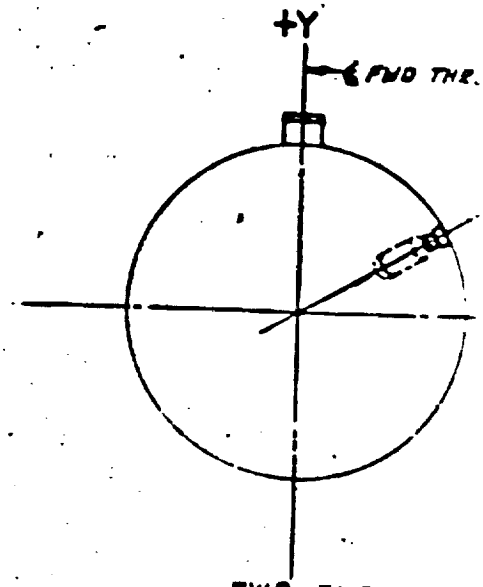

FWD END
VIEW LOOKING AFT

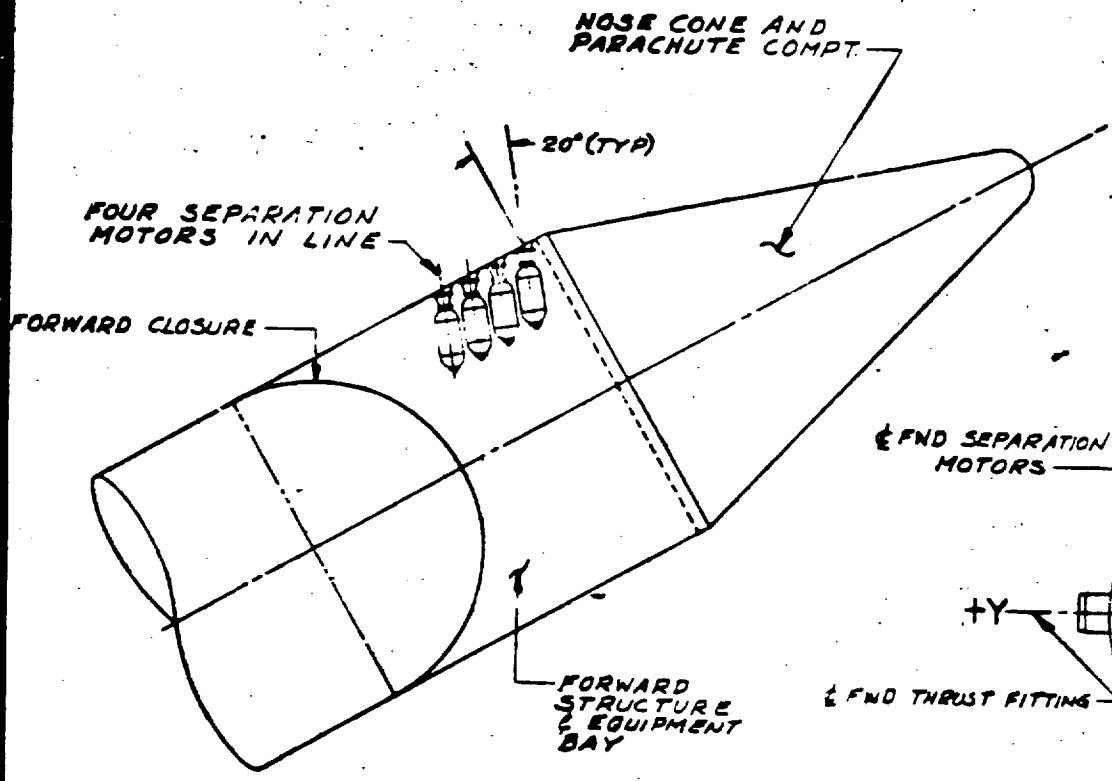

SECTION A-A

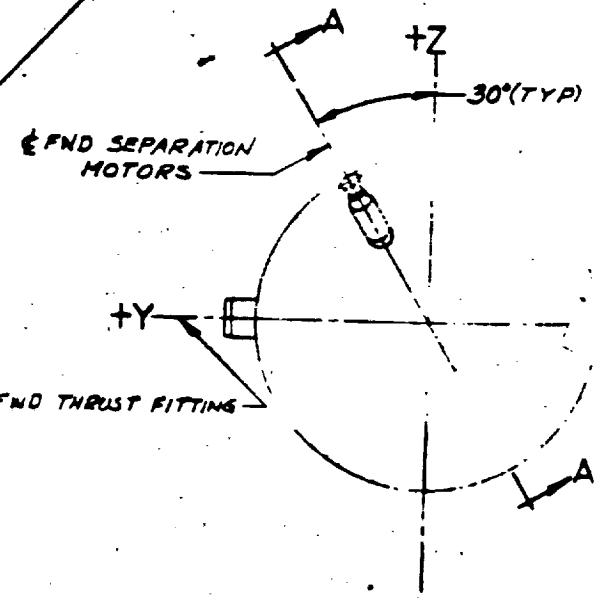

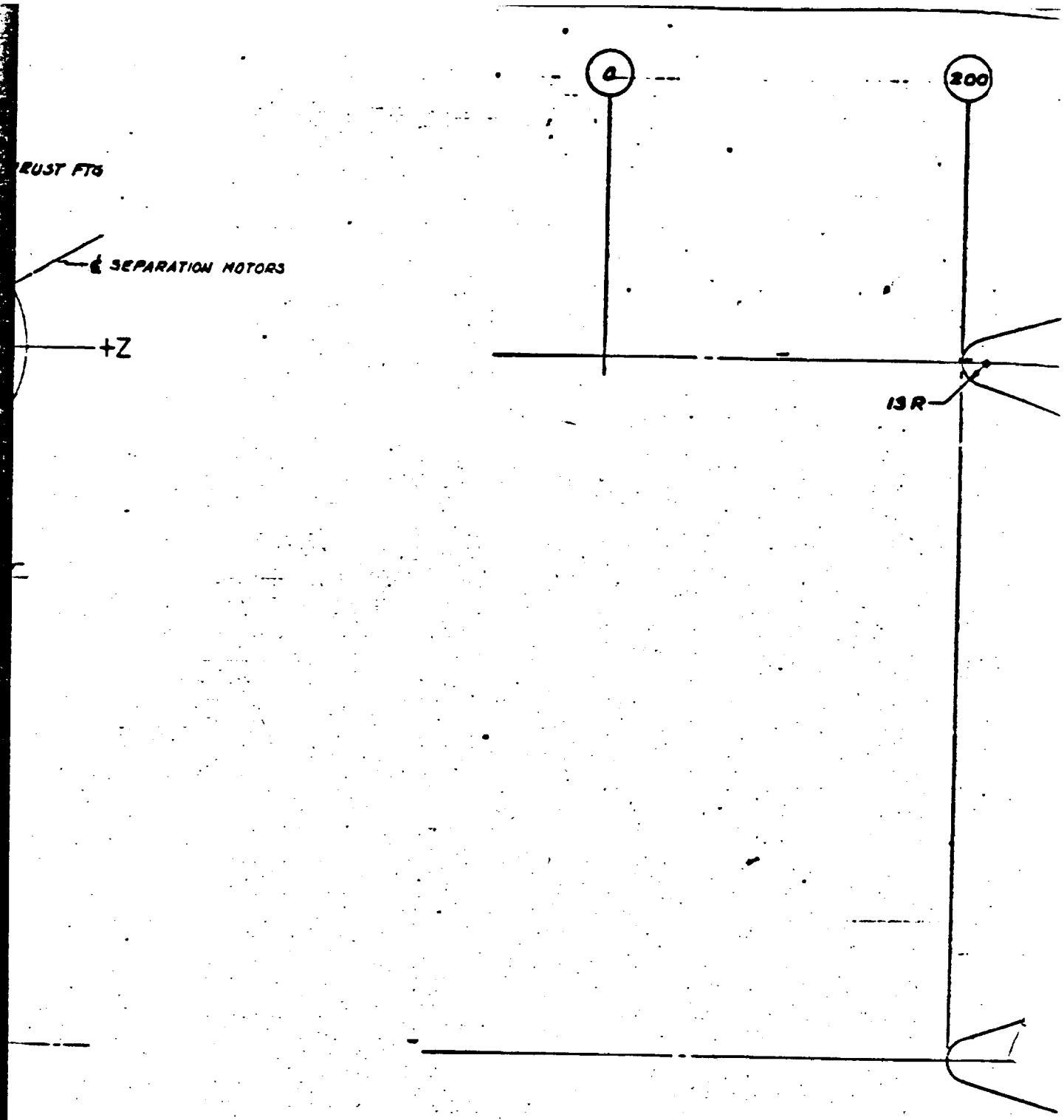
RUST FTG
℄ SEPARATION MOTORS
+Z
a
200
13 R

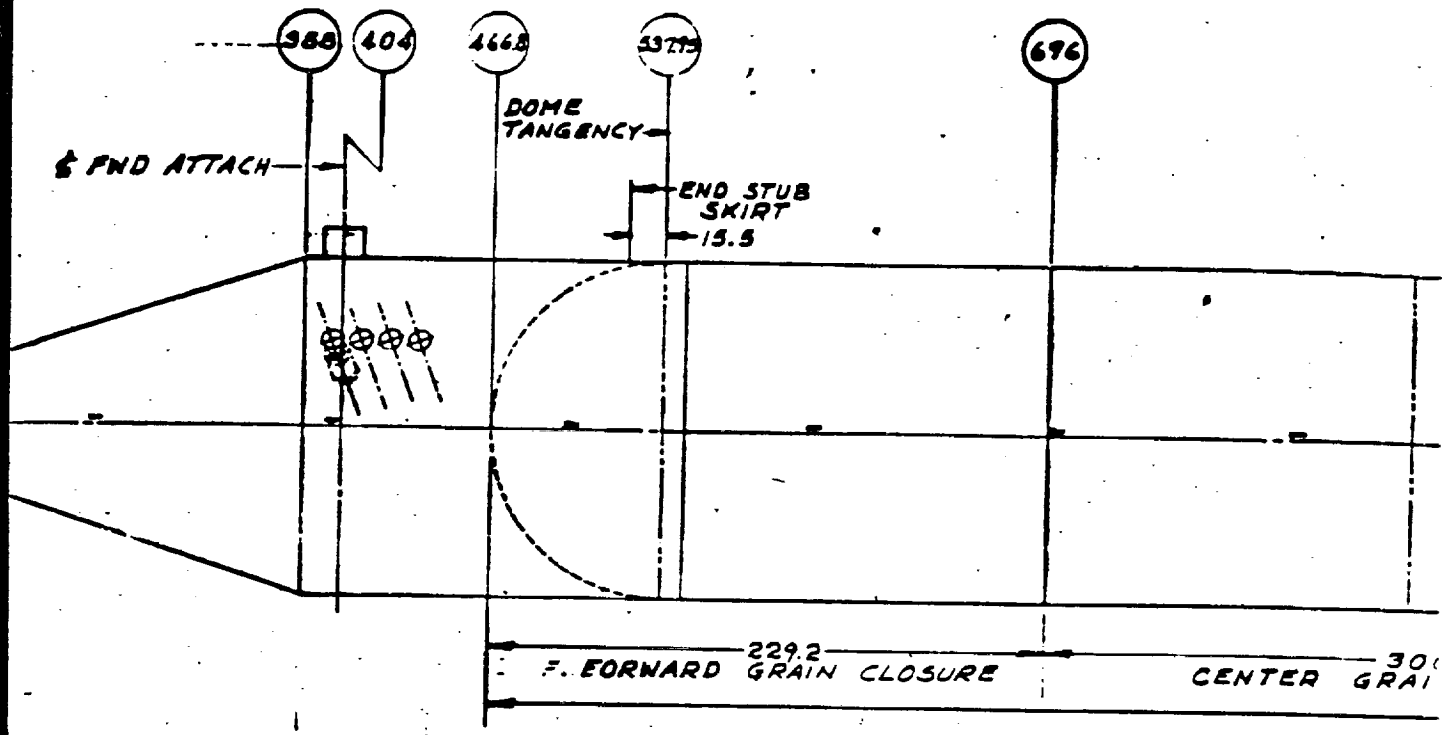
388
404
466.8
537.75
696
DOME TANGENCY
℄ FWD ATTACH
END STUB SKIRT
15.5
229.2
F. FORWARD GRAIN CLOSURE
CENTER GRAI

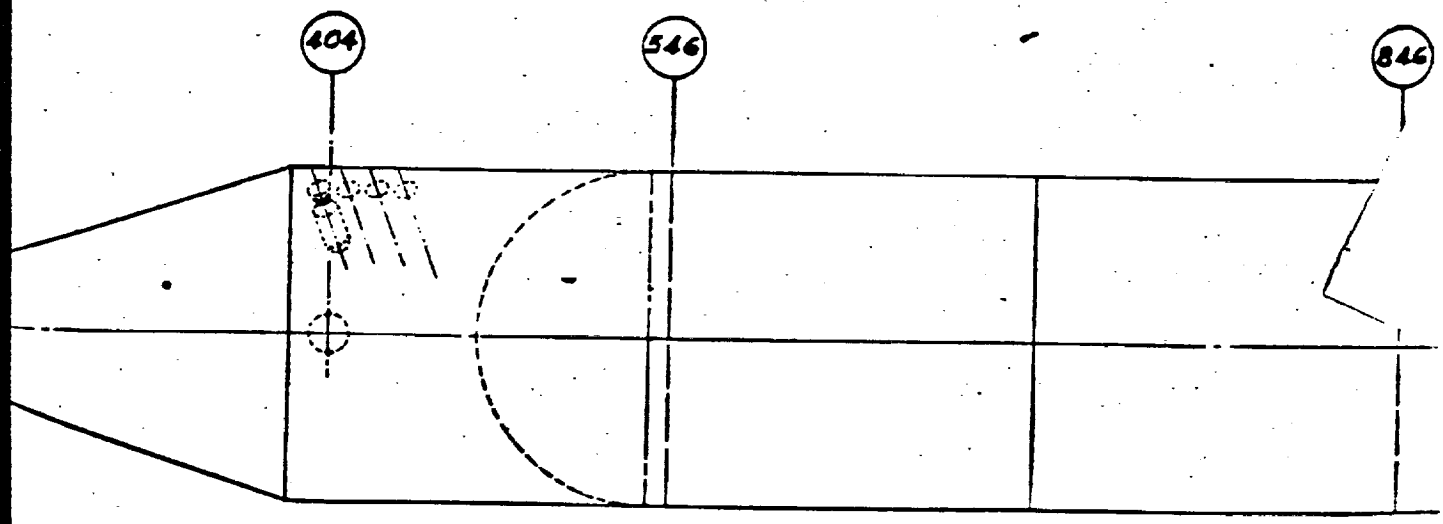
404
546
846

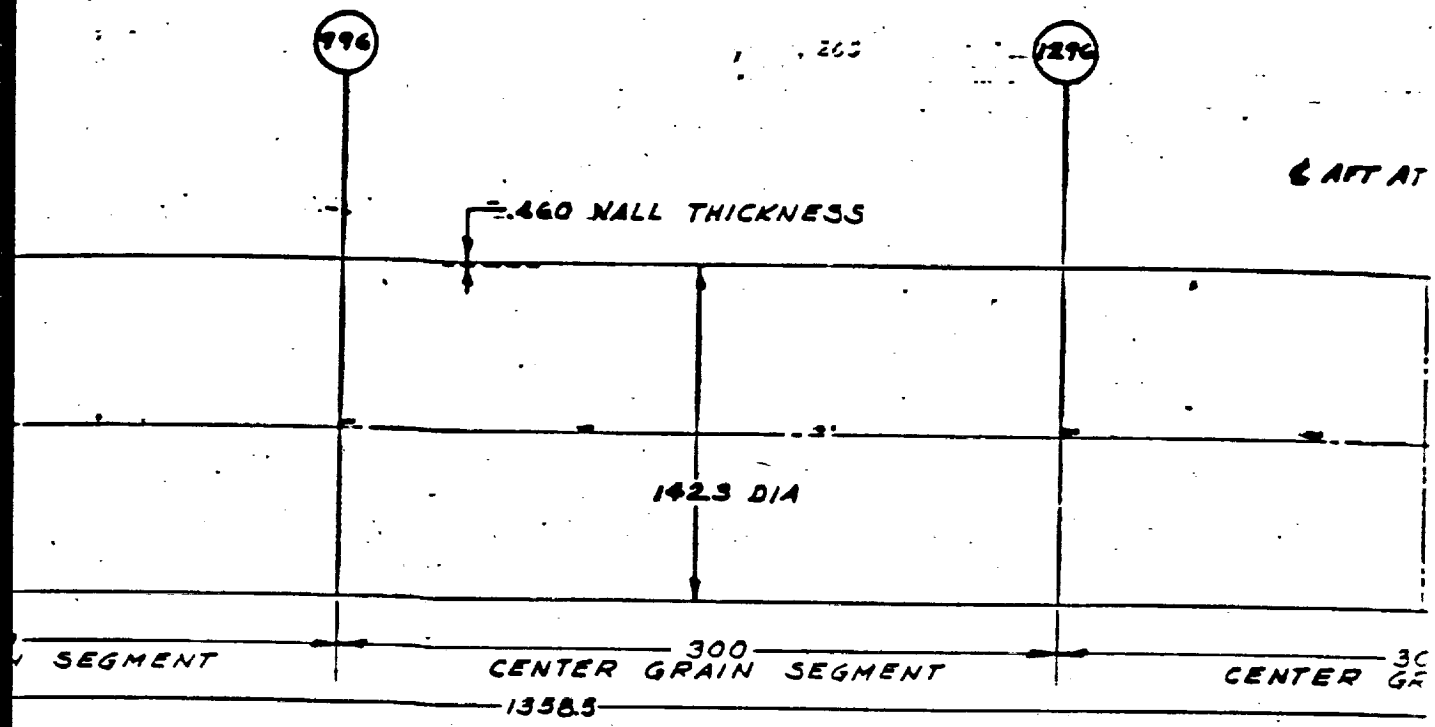

PLAN VIEW
SCALE 1/10

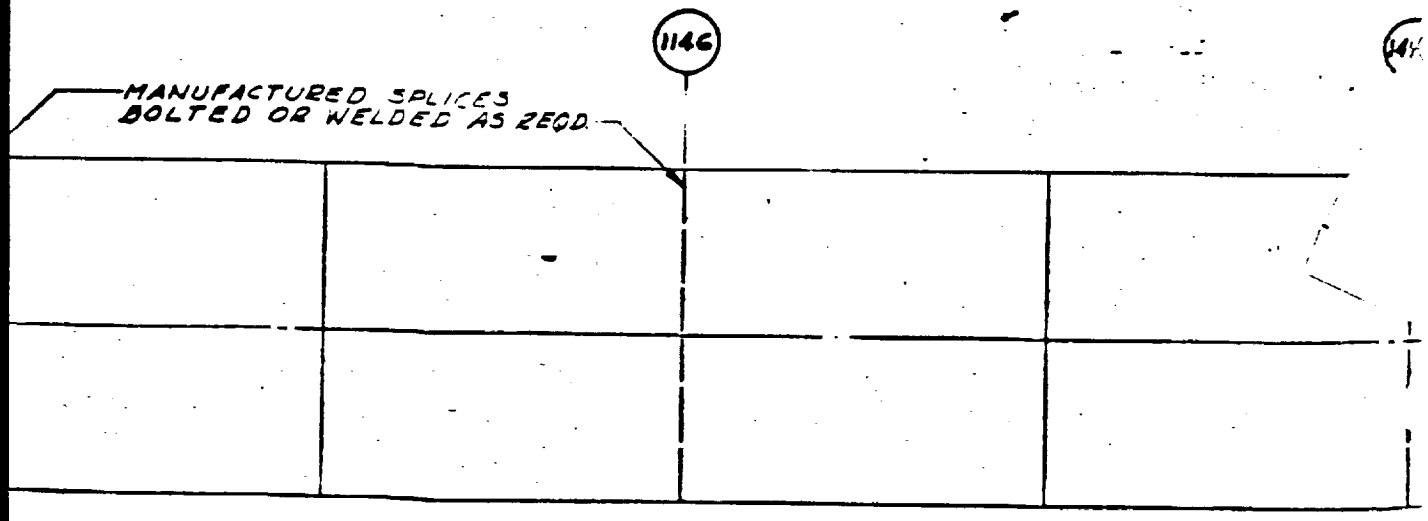

SIDE VIEW
LEFT HAND SHOWN—RIGHT HAND OPPOSITE

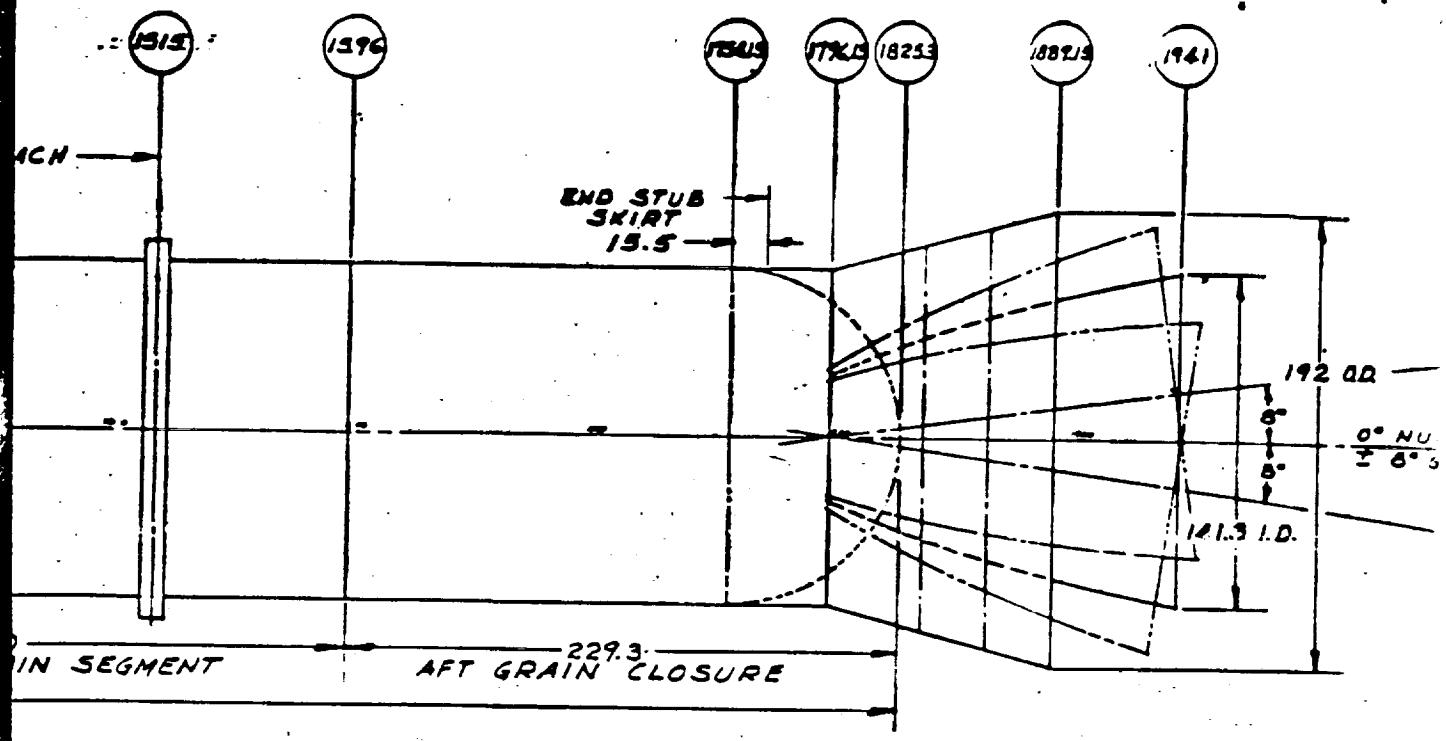
1515
1596
1825.3
1941
END STUB
SKIRT
15.5
192 O.D.
0° NU
± 8°
141.3 I.D.
229.3
IN SEGMENT
AFT GRAIN CLOSURE

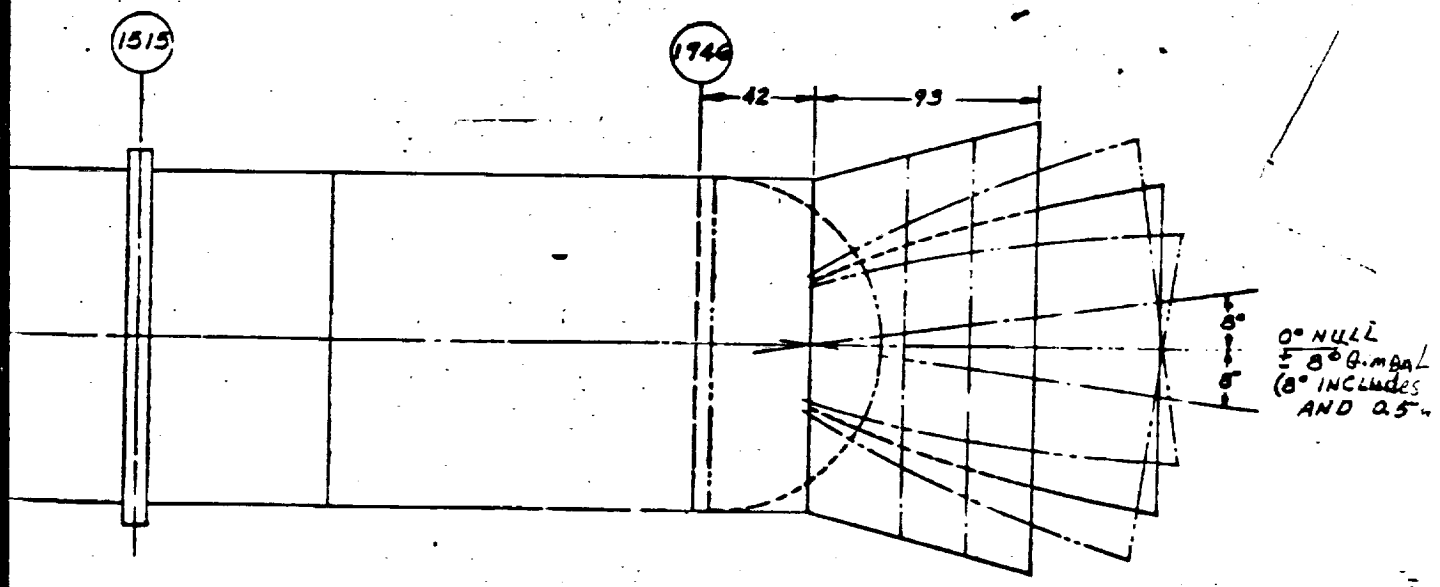
1515
1946
42
93
8°
8°
0° NULL
± 8° Gimbal
(8° INCLUDES
AND 0.5°

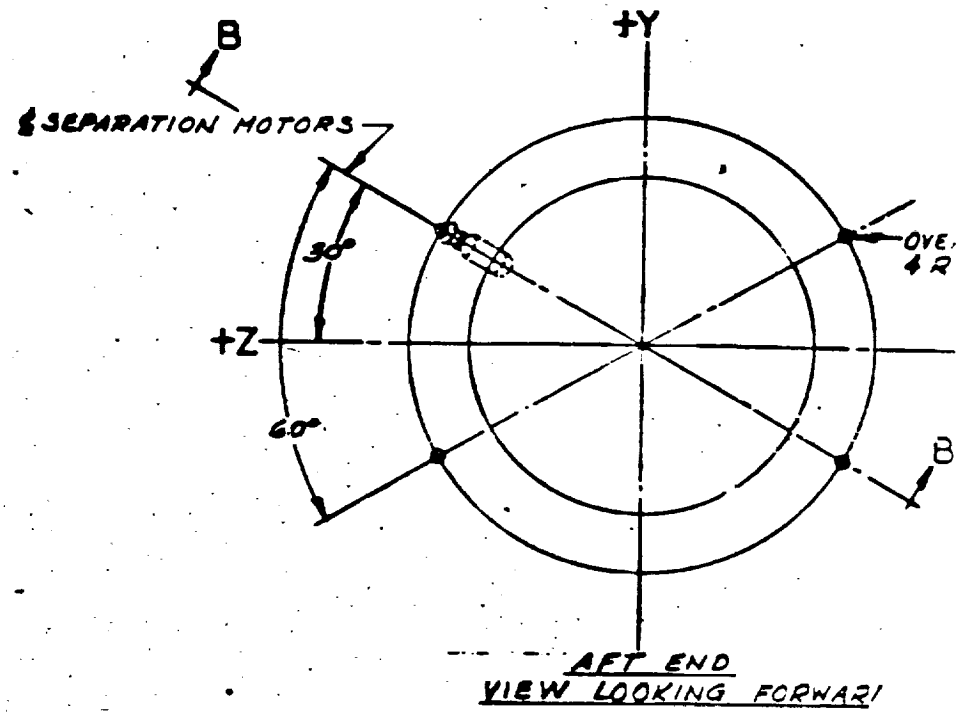

L POSITION
MBAL

AFT SEPARA

POS ITION
OR OVERTRAVEL
ALIGNMENT)

TURN RESTRAINTS
QUIRED

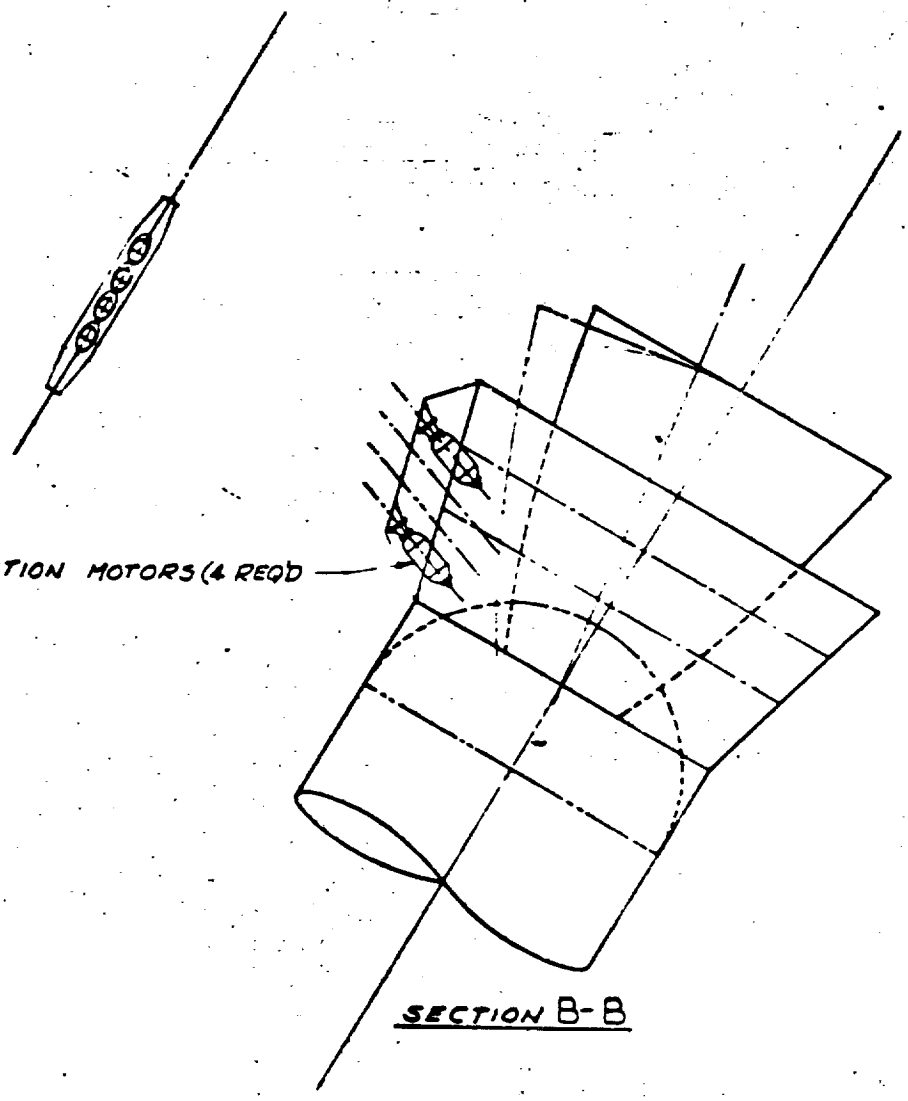

LTR	CHANGE
A	1. REVISED AND RECRAWN TO REFLECT 7:1 EXP RATIO WAS 11:1, RESULTING IN A SMALLER DIA. SKIRT OF 192 WAS 205. G.W.ELLIS 5-22-73

REQUIREMENTS

1. WEIGHT MARGIN INCLUDED IN CONTROL WEIGHT:
   2% ON SRM INERT WEIGHT
   10% ON SRB STRUCTURE AND SUBSYSTEM
2. NOZZLE CANT ANGLE = ZERO
3. NOZZLE EXPANSION RATIO 7:1 CONTOURED; T/W AT LIFTOFF = 1.5
4. I_{sp} VAC = 266.3 INITIAL, NOZZLE EROSION EFFECT TO BE INCLUDED
5. NOZZLE P_c = 737 @ 60°F GRAIN TEMPERATURE AND MEOP = 900 PSI.
6. THRUST TAILOFF TIME AND DISPERSION FOR SIZING = 10 SECONDS WITH 450K MISMATCH.
7. SRB TVC:
   a. ACTUATOR AXIS ORIENTED 45° TO PITCH & YAW
   b. GIMBAL DEFLECTION ± 5° PER AXIS, SQUARE PATTERN FOR CONTROL. (MAX GIMBAL AT CORNERS IS 7.1° PLUS 0.5° FOR ALIGNMENT PLUS 0.4° OVERTRAVEL FOR A TOTAL OF 8°).
   c. DESIGN GIMBAL RATE 3°/SEC.
   d. DUTY CYCLE = 120°
8. SRB AFT SKIRT WITH FOUR(4) POINT FACILITY SUPPORT.
9. NO THRUST TERMINATION.

	26 May 1973	PROJECT OFFICE
	24 May 1973	PRELIM DESIGN
	25 May 1973	WEIGHTS
	25 May 1973	SYSTEMS ENG'G
	25 May 1973	DIRECTOR
	25 May 73	PROPULSION DEPT.
	"A" CHANGE	

SCALE 1/40 — DATE 5-22-73 — SPACE SYSTEMS NORTH AMERICAN ROCKWELL CORPORATION 12214 LAKEWOOD BOULEVARD, DOWNEY, CALIFORNIA

SRB CONFIGURATION CONTROL

MCR 0200 REVISION 1 DATED 5-16-73

VL77-000036A

SD72-SH-0120-10

WEIGHT CHANGE MATRIX

22 June 1973
** CCB Approved
* ERB Approved

Seq No./ (MCR or Item No.)	Title/Issue	Req Source	Wing	Tail	Body	TPS/ TCS	Land	Ascent Prop.	Cruise Prop.	OMS	RCS	Prime Power	Elect Distr	Hyd Distr	Surf. Contr	Avionics	ECLSS	Pers Acc/ PL	Wt Empty Changes	Pers and Prov	Resid. and Reserve	Expend. Fluids	Lift-off Weight Change	ET/ SRB	Sched Resol	Disposition SD 72-SH-0120-
	PENDING WEIGHT CHANGES																									
1-1 (0095)	Delete APU Alternat. (Incr in Freon Loop)											-93	-368	-16			+13		-465			-71	-536		ECP to NASA 5-10	* Approval Requested By 5-31
1-2 (0097)	EVA/IVA Garment Cooling											+32	+12				+61		+95			+52	+147		ECP to NASA 3-6	* Waiting new direction
1-3	Titanium [illegible]	IL 365 001- [illegible]	+160			-630													-470				-470		ERB [illegible]	

(0133)	Alum Elevon	002-73-002																						6-28		
1-4 (0135)	Electro Mechanical Flight Control Study		(-175)	(-25)		(-166)		(+133)				(+513)	(+007)	(-842)	(-61)		(+476)		(+900)		(-222)	(+122)	(+800)		ERB 6-25	
	(Alt No. 1 to MCR 0135) Hydro Mechanical Flight Control Study		(-175)	(-25)				(+500)				(+100)		(+215)	(+220)				(+895)		(-16)	(+193)	(+1073)			
	(Alt No. 2 to MCR 0135) Hydro Mech Flight Controls With Linear TVC Actuator		(-175)	(-25)								(+100)		(+45)	(+220)				(+165)		(-11)	(+162)	(+316)			
	No. 3 to MCR 0135 Hydro Mech RUD/SRB Controls - Linear TVC & Elevon Controls			-25								+100		+10	-225				-140		+1	+120	-19			
1-5 (0139)	Alt Radiator Studies				+12	+33							+7				-452		-400		TBD	TBD	-400		ERB 7-20	
~~1-6~~ (0140)	~~One Way Doppler~~ Tracking Capability												~~+18~~			~~+15~~			~~+35~~				~~+35~~		~~CCB~~ 6-7	~~-10 Report~~
1-7 (0141)	Operational Voice Reqd (Alternate)	RECP DR0048A										+2	+32 (+28)			+39	+2		+75 (+50)			+3	+78 (+53)		CCP 6-21	
~~1-8~~ (0152)	~~SSME ICD~~ 13M 15000 Review & Update Task 1 (A)	~~D. Sapp~~ Verbal 3-29-73						~~-15~~											~~-15~~				~~-15~~		~~CCB~~ 6-7	~~-10 Report~~
1-9 (0153)	Baseline Torsional Payload Bay Doors and Conduct Definition Study A Cabin Change B Mid Body				-300 +400														-300 +400				-300 +400		ERB 7-6	
1-10 (0160)	Orbiter Rendezvous Sensor P/L Bay Location	NASA Ltr 640 MA 3-3			TBD								TBD			TBD	TBD		+250			TBD	+250 +TBD		ERB 6-28	
1-11 (0161)	Crew Cabin/ Fwd Body Struc ~~& Contig Ja~~				~~680~~														~~680~~				~~650~~		~~CCB~~ 6-7	~~-10 Report~~
1-12 (0164)	Orbiter Avionics System	B/L 992 MA 3-8											-40			+387			+347				+347		CCB 6-14	
1-13 (0180)	Integrated Ground to Shuttle Vehicle/Payload Umbilical Study											-16							-15 +TBD				-15 +TBD		ERB 6-27	
1-14 (0183)	Payload Dept Attach	RECP DR00083 3-13			+74														+74				+74		ECP 6-6	
1-15 (0190)	Attach/Separation E1/Orbiter Study	Proj Office Direction 3-28																	TBD				TBD	TBD/	ERB 6-27	
	ALTERNATE	MATERIAL																								
1-16																			-15				-15			was Item A-19

37a

6(191) – Study Inconel

(0197)	Study for Rudder																								
1.17 (0212)	Emergency Cabin Pressure Maintenance System A. Face Mask B. W/O Mask C. Mission Ext				(+4) +4 (+4)							+38 (+38)	(+2) +10 (+10)				(+32) −22 (−22)		(+37) +31 (+31)				(+37) +31 (+31)			To ECB 6-13-73
1.18 (0213)	Powered Nose Gear Uplock Release						−6						+8						+3				+3			
1.19 (0218)	Delete Center Console Keyboard															−8			−8				−8		ECP 6.6	Was Item A-7
1.20 (0226)	Tracking Sub system Baseline																									
	Change No. 4 C&T Reassessment (Formerly MCR 0143)	TBD										11				306			378			34	300		CCB 6.7	10 Report
1.21 (0228)	Food & Waste Management Systems Weight & Volume Reduction Study																		TBD				TBD		ERB 6.26	
1.22 (0231)	Gear Box Redundancy Deletion	Redundancy Evaluation			−95		−30												−125				−125		ECP 7.3	Was Item A 30, Part a
1.23 (0232)	Delete Third N_2/O_2 Pressure Sys Loop	Redundancy Reevaluation															−15		−15				−15		ERB 4.12	10 Report
1.24 (0242)	Electro-Mechanical Drive for the Body Flap												TBD		−40	TBD			−40 +TBD		−4		−44 +TBD		ERB 6.26	
1.26 (0246)	Guidance, Navigation & Control Baseline Change No. 1 - Deletion of Infrared Horizon Sensors (Formerly MCR 0169)	TD-RECP 0R000088			4							1	24			91			−120			−3	−123		CCB 6.7	10 Report
1.27 (0250)	Utilization of Bipropellants in Lieu of Monopropellants for RCS	BASELINE			+46	+65					−300		+40			+30			−180		+88	−1929		−2021		
1.28 (0256)	Launch Pad Servicing Study				+25	+25				+10			+15						+75				+75			Scar Weight
1.29 (A.2)	Increased Structural Requirements a. NLG Slap Down Loads/Increased ET Attach Loads				+240														+240				+240		CCB 6.14	
	b. Increase Cabin Collapse Pressure				+110														+110				+110			
1.30 (A.3)	New Elec Load Analysis				+61	+96						+284	+185				+190		+885			+438	+1121		ERB	Not Included

1-31 (A-16)	~~Add Heaters to Cabin~~	~~Next Load Set~~										+33	+10				+12		+55		+8	+58	+110		6-27	In MCR 1064
1-32 (A-27)	Aux Propulsion RCS Installation				+100	+100				+50									+250				+250		~~ERB 5-2~~	✱✱ -10 Report
1-33 (A-28)	POGO Suppression Passive (Active)	G.H. Cadwell 3-20-73						+360 (+300)											+360 (+300)				+360 (300)		ERB Pend. ERB 8-2	Pending Dynamic Analysis (Spare Provisions Retained)
1-34 (A-34)	Fwd Fuse / Cabin Weight Update				+365														+355				+355		ERB 5-21	✱ Reevaluate
1-35 (B-1)	~~Incorp Tempest Provisions~~	~~TO~~											+36						+36				+36		~~7-30~~	Included in 1-7/(0141)
1-36 (B-4)	Revise Est for Coax	J.D. Doyle 4-10-73														+50			+50				+50		7-13	
1-37 (B-5)	Hydraulic and Surface Controls Baseline Update– Does not include rudder actuator stiffness wt, or the fail safe/fail operate gear box weight change					+31		-48				-58		-184	-181				-410		-82	-230	-722		CCB 7-12	See MCR 0135
1-38 (B-6)	Trade Study AM350 & Titanium Lines for Hyd. Sys.	Hyd. Grp.					-21	-83						-98	-78				-250				-250		ERB 6-27	Preliminary Data
1-39 (B-7)	Study 4000 psi Hyd. Sys.	Hyd. Grp.												TBD	TBD				TBD				TBD		ERB 7-4	
1-40 (D-2A)	Wing Update (1/2° Incid) Increased Loads	Load Rev	+758		+400														+1150				+1150			
1-41 (D-3)	Aft Body Structure Update	In Conjunction with MCR 0163 Study			+840														+840				+840			
1-42 (E-1)	Locate Ground Cooling Loop Disconnects per MCR 0200	Item C-16 MCR 0200															+16		+16				+16			
1-43 (F-1)	~~Revise Pressurant for MPS Purge (Dump) Update~~	~~Ref. MCR 0200 Item C-20~~						+13											+17		+1		+18		~~CCB 6-14~~	✱ d-10 Report
1-44 (G-3)	Stiffened Waffle H_2 Tank (External Tank)																							-4000		External Tank Inert Weight Only
1-45 (G-4)	Solid Rocket Booster Resizing																							-12750		Single Booster Inert Weight Only
1-46 (G-2)	Move GNC drivers to Aft Fuselage												-173			+23			-150				-150			Pending Approval of MCR 0095

31c

1-47	Add On-Orbit Sta Hand Control (Deleted By MCR 0161)	Charles Duke														+26			+25				+26			Closed
2-1 (0244)	Data Bus Error Coding Study																		TBD				TBD			
2-2 (0251)	Deletion of APU Fire Extinguishing System																		TBD				TBD			
2-3	Orbiter Baseline Loose Equipment	TD2200MA															+244	+92	-56	+854			+410			NASA proposed weights shown
2-4	Structural Loads, Fatigue and Stiffness Requirements Update																		TBD				TBD			
2-5	Control System Requirements																		TBD				TBD			
2-6	Thermal/TPS Requirements																		TBD				TBD			
TOTAL PENDING WEIGHT CHANGES																			+2707				+3580			

37d

	STUDIES AND OR/POTENTIAL WEIGHT CHANGES																										
1-48 (0030)	Scar Wt for 30-Day Cryo				+80							+20	+18						+90				+90		ERB 4-3	
1-49 (0046)	Heavy Weight Payload Effect	NASA Ltr 4513 MA			+65														+65				+65		ERB 4-20	Final Report Due 6-23-73
1-50 (0079)	Payload Contamination Assessment & Controls	TD Ltr 4586 MA (Study)																	TBD				TBD		ERB 4-26	
1-51 (0086)	Store Texts & Graphics				+2								+8			+34			+45				+45		ECP to NASA 2 27	*
1-52 (0142)	External Tank Baseline Definition III Item 2 LH_2/LO_2 Loading Time Table Reqmt	G.H. Cadwell Verbal 3-28-73 Part D-8 MCR 0200			+3			+62											+55				+55		CCB 6 14	* Baseline

1.53 (0178)	USA-USSR Compatible Rendezvous and Docking												+35			+170		+195			+3	+198	~~ERB 8-7~~		Incorp in 2.7/(0261)
1.54 (0181)	Main Prop Meas Study	TO 1128 MA																					TBD/	ERB 6-27	
1.55 (0209)	Redundancy Study, APU/Hydraulic Sys. 150K Orb.											TBD		TBD				-590		TBD	TBD	-590 +TBD		ERB 6-22	Report to NASA on 6-28-73
1.56 (0238)	APU 4 Exhaust Ducts vs 1 Duct (APU Relocate Exhaust Duct)			+15 (-10)		+35 (-20)						+125 (-115)						+175 (-145)				+175 (-145)		ERB 8-17	Was Item A-18
1.57 (0252)	RCS Study A. Vernier Location B. Thruster Number																	TBD TBD				TBD TBD			Study Only
1.58 (A-6)	Additional P/L Power & Energy	Awaiting NASA Request for ECP			+20							+360					+20	+390			+650	+1040			
1.59 (A-10)	Aux Propulsion/ OMS Common Regulator Flow Path for Fuel & Oxidizer									-30								-30				-30		ECP Pend.	
1.60 (A-17)	Potential Increase in Instr Meas				+87							+50	+200			+293	+20	+630			+100	+730		9.15	
1.61 (A-18)	Dispersions TPS OMS Study					+955												+955				+955			
1.62 (A-20)	A. Aux Propulsion OMS Series Crossfeed									+40			+10			+10		+60		TBD		+60 +TBD		ECP Pend.	
(A-21)	B. Aux Propulsion OMS POD Dump Time									+200								+200				+200		ECP Pend.	
(A-22)	C. Aux Propulsion OMS Propellant Utilization									+18			+4			+6		+25			TBD	+25 +TBD		Pend. ECP	
1.63 (D-28)	Wing Update (1/2°) Incid) Elevon Hinge Moments		+350									+187		+646	+1027			+2190		+314	+852	+3358			
2.7 (0261)	International Docking Requirements -Avionics												+26			+170		+195			+3	+198			