AE-PB-69-51

(NASA-CR-148948) PROJECT SERV: A SPACE SHUTTLE FEASIBILITY STUDY (Chrysler Corp.) 201 p

N76-79021

Unclas
00/98 06082

PROJECT SERV

A Space Shuttle Feasibility Study

OCT 1976
RECEIVED
NASA STI FACILITY
INPUT BRANCH

LIBRARY COPY
SEP 18 1975
LANGLEY RESEARCH CENTER
LIBRARY, NASA
HAMPTON, VIRGINIA

SPACE DIVISION CHRYSLER CORPORATION

559

AE-PB-69-51

PROJECT SERV

A SPACE SHUTTLE FEASIBILITY STUDY

NOVEMBER 19, 1969

Technical data contained in this brochure shall not be used or disclosed except for evaluation purposes.

Approved by: C.E. Tharratt

C.E. Tharratt, Manager
Advanced Vehicle Systems

Prepared by:

CHRYSLER CORPORATION SPACE DIVISION – POST OFFICE BOX 29200 – NEW ORLEANS, LA. 70129

4078-11-21-69

TABLE OF CONTENTS

Section 1 - INTRODUCTION

Presentation Agenda 2
Study Objectives 4
Ground Rules 6
25K Shuttle Concepts 8
Baseline Configuration 10
MURP Orbiter 12

Section 2 - FLIGHT PERFORMANCE

Introduction 14
Parametric Performance 16
Effect of Varying A_{max} and (T/W) LO 18
Effect of Varying Acceleration Profile 20
MURP Size and Drag Effects 22
Reference Trajectory Parameters 24
Reference Trajectory Parameters (continued). . . 26
Circular Orbit Performance 28
Payload Versus Inclination 30
MURP On-Orbit Capability 32
SERV without Orbiter 34
SERV with Winged Orbiter 36
Delivery of Large Diameter Hardware 38

Section 3 - FLIGHT ENVIRONMENT

Introduction 40
MURP Hypersonic Aerodynamic Characteristics 42
Aerospike Engine Plume Characteristics 44
Integrated Aerospike Installation Water Table Investigation 46
MURP-SERV Drag Characteristics 48
MURP-SERV Shock Impingement 50
MURP-SERV Static Stability Characteristics . . . 52
MURP-SERV Ascent Controllability in Q_{max} Region 54
Rigid Body Bending Moment Distribution 56
SERV Slosh Behavior 58
SERV Reentry Trajectory Parameters 60
Influence of SERV Contour on L/D During Reentry 62
SERV Trim During Reentry 64
SERV Reentry Static Stability Characteristics . . . 66
SERV Reentry Controllability 68
Peak Temperatures 70
Ablator External Surface Temperature 72
Stagnation Point Heating Rate 74
Ablator Temperature Time History at Maximum Thickness 76
Ablator Temperature Distribution at Maximum Thickness 78
Thermal Protection Unit Weight 80
Ablator Thermal Protection Requirements 82

Section 4 - VEHICLE DESIGN

Introduction 84
Design Criteria 86
Vehicle Weight Breakdown 88
SERV Dry Weight Breakdown 90
Fluids Inventory 92
Mass Characteristics During Ascent 94
Primary Propulsion 96
SERV Structural Arrangement 98

TABLE OF CONTENTS (continued)

SERV Structural Weight Breakdown 100
Propellant Pressurization Histories 102
Vehicle Holddown and Aerospike Engine 104
Turbofan Installation 106
Landing Gear Installation 108
Thermal Protection System 110
Door Sealing 112
Combined Trim and Fuel Subsystem 114
Deorbit and Attitude Control RCS 116
Terminal Landing Profile 118
Terminal Navigation Subsystem 120

Section 5 - MANUFACTURING OPERATIONS

Introduction 122
SERV Manufacturing at MAF 124
Manufacturing and Assembly Sequence 126
Manufacturing Building Rearrangement 128
Final Assembly Building 130

Section 6 - DEVELOPMENT AND TEST OPERATIONS

Introduction 132
Major Development Test Activities 134
SERV Testing at MTF 136
Test Stand Operations 138
Reentry Vehicle Flight Testing 140

Section 7 - LAUNCH OPERATIONS

Introduction 142
KSC Operations 144
SERV Landing at KSC 146
Loading on Transport Dolly 148
Loading on Wheeled Transporter 150
Refurbishment Operations 152
Mating and Checkout at VAB 154
Launch at LC-39B 156
Launch at New Complex (LC-39C) 158

Section 8 - SCHEDULES AND COSTS

Introduction 160
SERV Traffic Model 162
Minimum Flight Hardware Acquisition 164
Program Schedule 166
ROM Program Development Cost 168
ROM Hardware Costs 170
Minimum Hardware Investment Cost 172
Recurring Costs 174
Thermal Shield Reuse Cost Effect 176
Thermal Shield Cost Reduction 178
ROM Program Cost Distribution (SERV) 180
ROM Program Cost Distribution (MURP-SERV) 182
ROM Program Cost Distribution (MURP-SERV-SPACE TUG) 184
ROM Program Cost Distribution for Phased Operations 186

Section 9 - CONCLUSIONS

Introduction 188
Further Study Areas 190
Commercial Transportation Application 192
Comparison of Commercial Transportation Fares 194

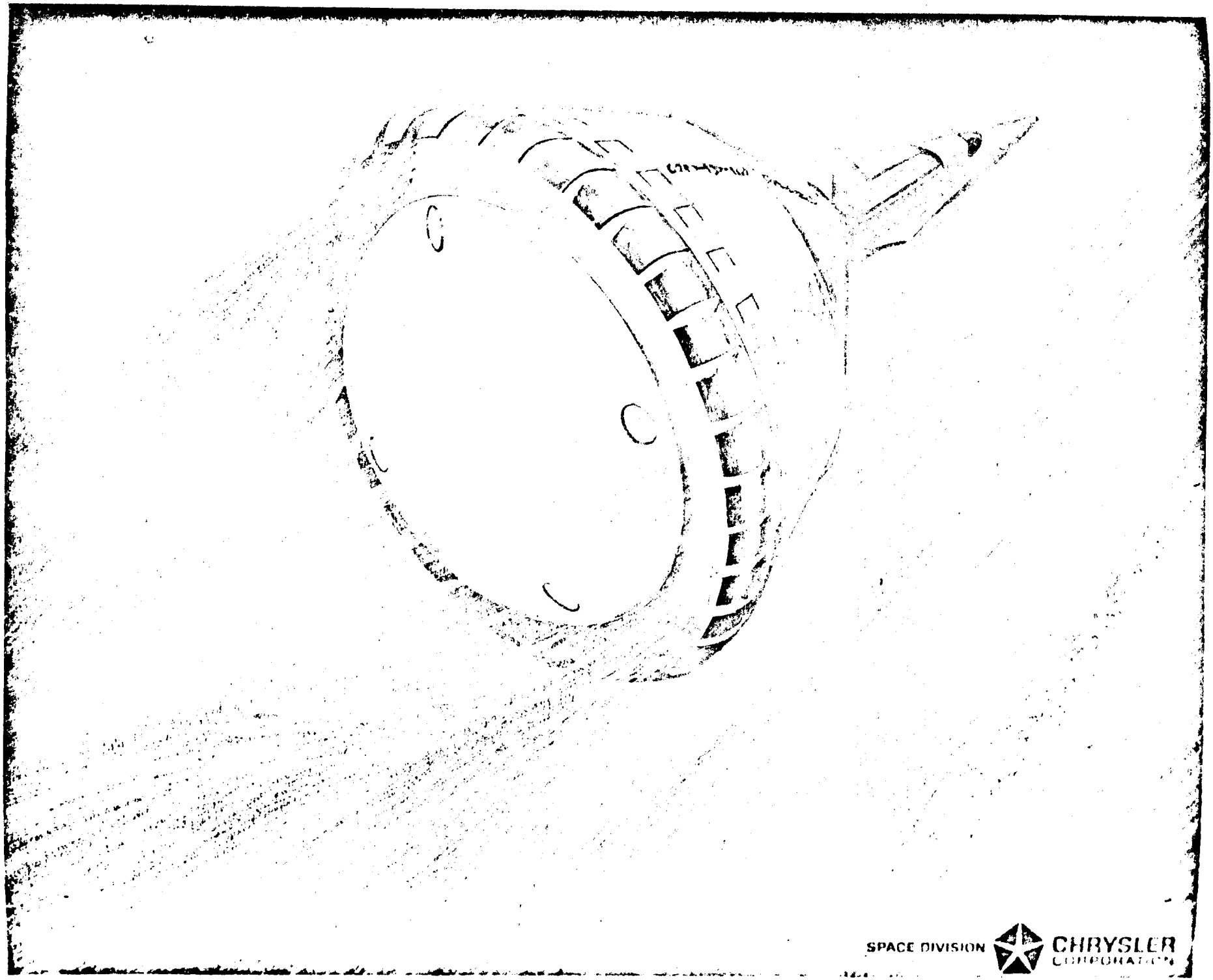

SPACE DIVISION CHRYSLER CORPORATION

FOREWORD

This brochure documents the preliminary results of a space shuttle feasibility study sponsored by the Chrysler Corporation Space Division (CCSD). Known within CCSD as Project SERV (Single-stage Earth-orbital Reusable Vehicle), the study places special emphasis on operational flexibility and reduced dependence on uncertain technological advancement in a near-term development environment. The concept is a logical extension of the Apollo program and draws on the accumulated knowledge and experience that currently exists within NASA and industry including guidance, aerodynamics, heat protection, and reentry of the Apollo command module; the ten years of development of advanced gas turbine lift engines for VTOL aircraft; docking maneuvers of spacecraft in orbit; application of command guidance for automatic landing; development of small hypersonic aircraft; and the application of an integral aerospike rocket engine.

Special attention has been given to meeting NASA requirements for a vehicle that can transport manned and unmanned cargo to and from orbit. Provision has been made for the transportation of 22-foot-diameter modules, an empty S-IVB stage, a propulsive stage with payload, propellants, a space tug, or a 33-foot-diameter nuclear stage.

Acknowledgement is made to the North American Rockwell Rocketdyne Division for providing data and valuable assistance for an integral aerospike rocket engine design, to the North American Rockwell Space Division for providing design data on the MURP vehicles, to the General Motors Allison Engine Division for providing data on lightweight turbojet and turbofan engines, and finally to the National Aeronautics and Space Administration for access to technical data. Questions concerning this brochure should be directed to the following persons:

Chrysler Corporation Space Division
Post Office Box 29200
New Orleans, Louisiana 70129

C. E. Tharratt 504 255-2385
W. R. Baldwin 504 255-2375

Section 1

INTRODUCTION

PRESENTATION AGENDA

This presentation material summarizes the work accomplished and the results obtained during a space shuttle feasibility study conducted by Chrysler Corporation Space Division. The accompanying chart shows the topics that will be discussed in the presentation.

(1) Introduction. This section includes a discussion of the study objectives, ground rules, and space shuttle configurations.

(2) Flight Performance. The results of a preliminary parametric performance analysis are reviewed, the performance of the selected configuration is given, on-orbit performance is discussed, and the performance potential for various missions is outlined.

(3) Flight Environment. Aerodynamic characteristics, base drag considerations, and controllability during ascent and descent are discussed. The thermal environment during reentry is examined and thermal protection requirements outlined.

(4) Vehicle Design. The structural design; propulsion, mechanical, and fluid subsystem requirements; and terminal navigation system approach are reviewed.

(5) Manufacturing Operations. The SERV manufacturing sequence and its impact on MAF facilities are discussed.

(6) Development and Test Operations. An outline of the test approach is given.

(7) Launch Operations. The facility requirements and operational approach are discussed.

(8) Schedules and Costs. The development schedule and a summary of rough-order-of-magnitude (ROM) development and operations cost are presented.

(9) Conclusions. This section includes a brief summary of the study results.

PRESENTATION AGENDA

- INTRODUCTION
- FLIGHT PERFORMANCE
- FLIGHT ENVIRONMENT
- VEHICLE DESIGN
- MANUFACTURING OPERATIONS
- DEVELOPMENT AND TEST OPERATIONS
- LAUNCH OPERATIONS
- SCHEDULES AND COSTS
- CONCLUSIONS

STUDY OBJECTIVES

The overall study objectives, summarized on the accompanying chart, was to provide NASA with a simple, flexible, space shuttle concept competitive with other vehicles already under study and establish the feasibility of a single-stage-to-orbit, fully reusable vehicle. Study requirements included the identification of engineering, resources, and funding for vehicle development and operations.

STUDY OBJECTIVES

- PROVIDE NASA WITH A SHUTTLE CONCEPT COMPETITIVE WITH OTHER VEHICLES ALREADY UNDER STUDY
- ESTABLISH FEASIBILITY OF SINGLE STAGE TO ORBIT FULLY REUSABLE VEHICLE
- IDENTIFY MINIMUM RESOURCES AND FUNDING FOR VEHICLE DEVELOPMENT AND OPERATION
- PROVIDE BACKGROUND WORK IN ANTICIPATION OF NASA PROCUREMENTS IN ADVANCED SPACE TRANSPORTATION

GROUND RULES

The major ground rules used for this study are summarized in the chart. Ground rule number four has the most significant impact on vehicle size. Acceptance that the return of passengers from orbit can be decoupled from cargo return permits a winged orbiter and a boost vehicle of greatly reduced size.

GROUND RULES

- ON ORBIT $\Delta V = 2000$ FPS
- CREW OF TWO PLUS TEN PASSENGERS
- MINIMUM OF 25,000 LB CARGO TO 270 NM x 55 DEGREE INCLINATION
- 50,000 LB RETURN CARGO
- RETURN OF CARGO AND PASSENGERS CAN BE DECOUPLED
- CROSS RANGE OF 1800 NM APPLIES TO PASSENGERS ONLY
- ALL WEATHER OPERATION
- 3G MAXIMUM ACCELERATION OR DECELERATION
- MAN-RATED, SF = 1.4
- 10% STRUCTURAL WEIGHT CONTINGENCY
- NOMINAL CARGO HOLD OF 22 FT DIA. BY 60 FT LONG
- CAPABLE OF TRANSPORTING MODULES UP TO 33 FT DIA. BY 100 FT LONG
- DEPART KSC, RETURN KSC
- CURRENT TECHNOLOGY IN ALL AREAS

25K SHUTTLE CONCEPTS

Cargo weight, cargo volume, landing mode, and cross range requirements play dominant roles in vehicle sizing. If a wing is adopted as the desired method of achieving cross range and for decoupling the landing mode, then, depending upon the cargo weight and volume, very large two stage winged vehicles can result. However, the advent of gas turbine lift engines that made VTOL aircraft an operational reality has also made the wing and long runways obsolete as a preferred decoupled landing mode for future advanced transportation vehicles. The advantages of gas turbine lift engines are not realized for a space shuttle application as long as a wing is required to provide a large cross range capability. Noting, however, that cargo and cross-range requirements were under constant revision by NASA, and that vehicle size limitations of winged concepts were dictating cargo weight and volume, CCSD decided to decouple the animate from the inanimate cargo. This immediately led to a very small winged orbiter capable of returning a crew of 2 plus 10 passengers to earth from orbit with a cross range capability of 1800 miles, and to a VTOL booster of low cross range requirement. The orbiter selected for the study is known as MURP (Manned Upperstage Reusable Payload), a vehicle that has been extensively studied by NASA-LaRC since 1962 both in Langley wind tunnels and by industry under contract to NASA. The drastic reduction in orbiter size and the potential for applying direct lift for the booster landing mode made the concept of a single stage to orbit possible, with MURP relegated in importance to that of an alternate payload.

The accompanying chart shows the MURP-SERV dimensions compared with the NASA-MSC and NASA-LaRC two stage winged concepts. Each of the three concepts are sized for 25,000 pounds cargo to a 270 nautical mile, 55 degree inclination orbit. The greatly reduced size of MURP-SERV is clearly evident. This reduction in size has a marked impact on the complexity of launch operations, and on the use of existing launch facilities, as will be demonstrated in charts to follow. Also, a structural simplicity is possible to which no winged vehicle of known technology can aspire. It will be demonstrated later that this structural simplicity, when married to an integral aerospike engine, makes the single-stage-to-orbit concept feasible.

25K SHUTTLE CONCEPTS

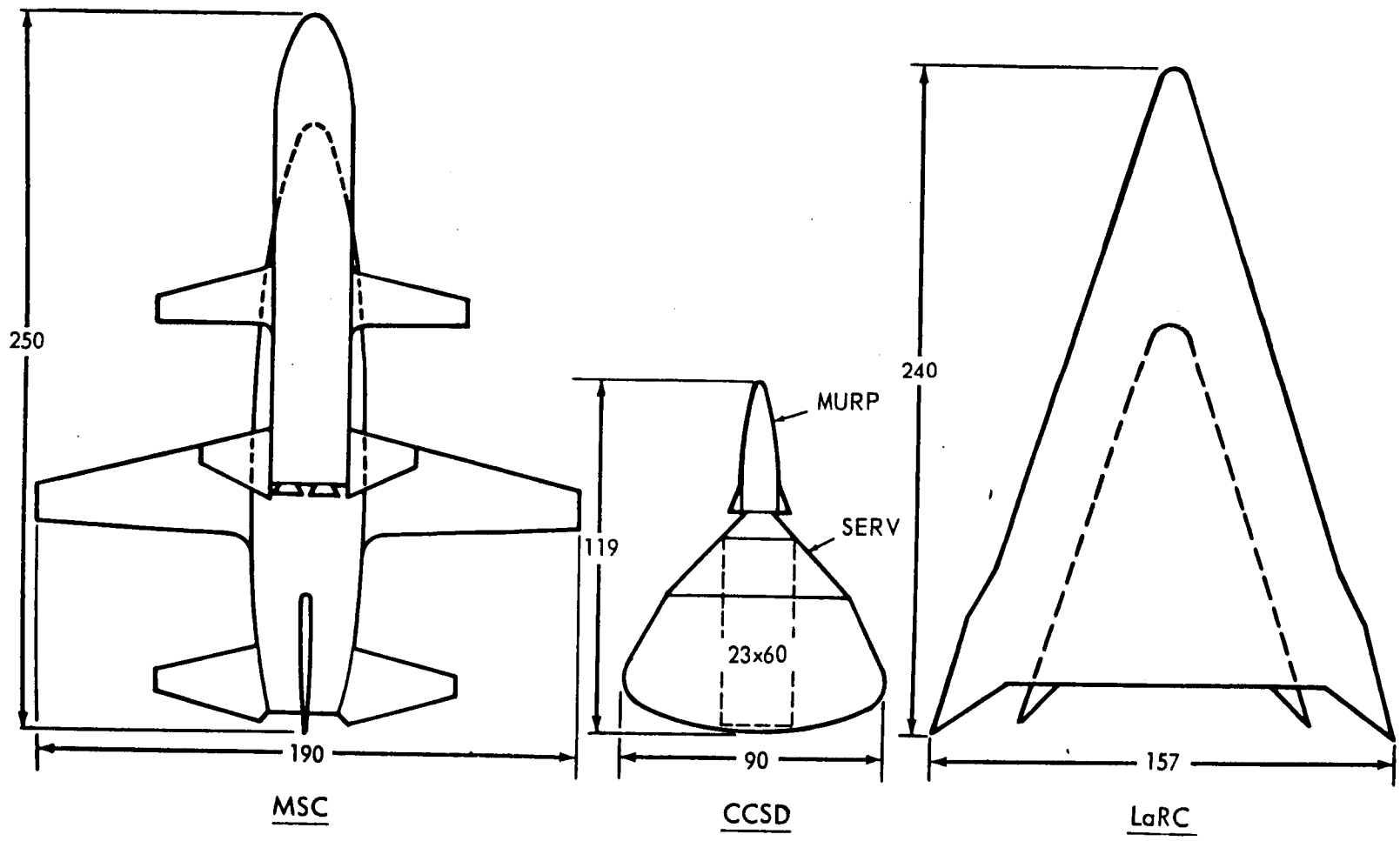

BASELINE CONFIGURATION

The study baseline configuration is shown on this chart. The configuration consists of a single-stage-to-orbit booster with a payload comprising a MURP (D-10) orbiter, a cargo module, propellant for on-orbit maneuvers, and 25,000 pounds of cargo. Overall dimensions are 90 feet in diameter by approximately 120 feet height. Lift-off weight is 4.5 million pounds.

BASELINE CONFIGURATION

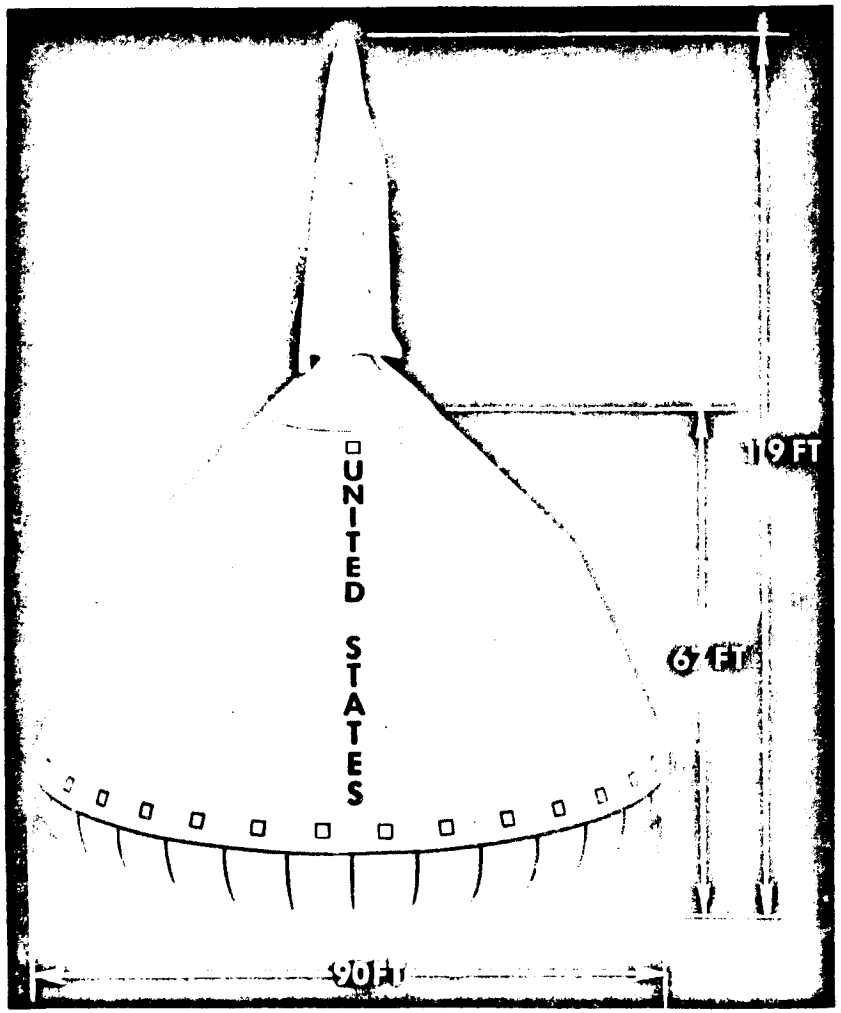

- SINGLE STAGE TO ORBIT VEHICLE
- VEHICLE WEIGHT AT LIFTOFF — 4,500,000 LB
- INJECTED WEIGHT AT 100 NM (55° CIRCULAR ORBIT) — 494,500 LB
- PAYLOAD WEIGHT AT 100 NM × 55° — 88,000 LB
- CARGO WEIGHT TO 270 NM × 55° — 25,000 LB
- RETURN CARGO WEIGHT — 50,000 LB
- CARGO HOLD DIMENSIONS — 23'D × 60'L
- ASCENT AND TERMINAL LANDING MODES — VTOL
- ASCENT PROPULSION (LOX/LH) — INTEGRAL AEROSPIKE
- TERMINAL LANDING PROPULSION — TURBOFAN
- LANDED WEIGHT — 414,500 LB

MURP ORBITER

Details of the D-10 and D-34 MURP orbiters considered for the feasibility study were obtained from North American Rockwell Space Division report NAS SP69-11, dated May 1969, prepared under contract NAS9-9205. The D-10 was selected for inclusion in the study because of its attractive size and weight, and because the many NASA-LaRC wind tunnel test reports on this configuration showed no evidence of undesirable aerodynamic characteristics of the variable-geometry wing arrangement. Its accompanying cargo module of 2833 cubic feet was also adopted in lieu of a more specific module design. The module plus 9889 pounds of expendables are in addition to 25,000 pounds of cargo and may be used as cargo if the module is not required.

The D-10, as currently configured, does not have an airport-to-airport ferry capability because the subsonic gas turbine propulsion system has inadequate thrust. An increase in turbine size would probably result in a larger MURP of increased weight. This, however, is not necessarily a disadvantage for it will be shown that, due to a reduced overall vehicle drag caused by the increased spike effect of a longer vehicle, the weight injected into orbit increases by an amount greater than the increase in MURP structural weight. It is clear, therefore, that more study in this area could be profitable once the requirements have been firmly established.

Schemes for deploying the variable geometry wings have been shown to be practical in General Dynamics Convair Division Report GDC-OCB68-012 dated 12 July 1968, prepared for NASA-Langley under Contract NAS1-7675. The North American Rockwell Space Division report previously mentioned should be referred to for a discussion of the thermal protection system.

MURP ORBITER

(REF. - NAR SP 69-11, ILRV TECHNICAL REVIEW, MAY 1969)

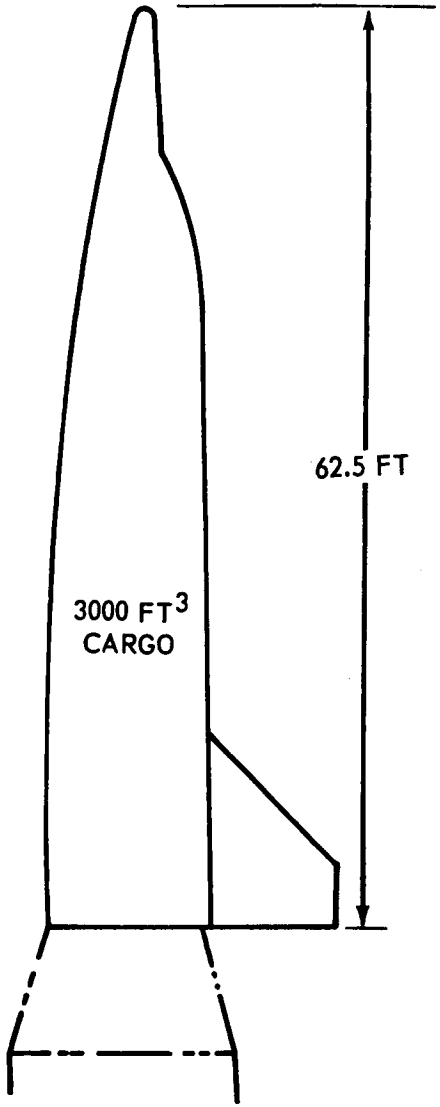

D–34

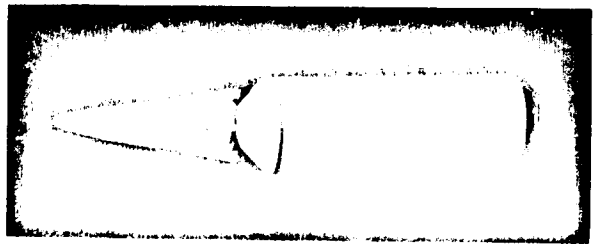

ITEM	D–10	D–34
EMPTY WEIGHT	25,670	35,600
CREW (2) & FURNISHINGS	950	950
GO AROUND FUEL AND EXPENDABLES	3,180	4,700
TOTAL	29,800	41,250

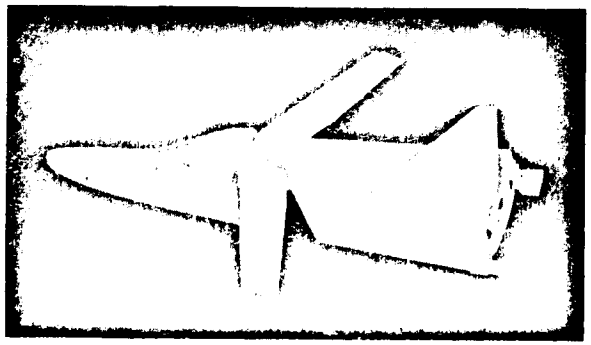

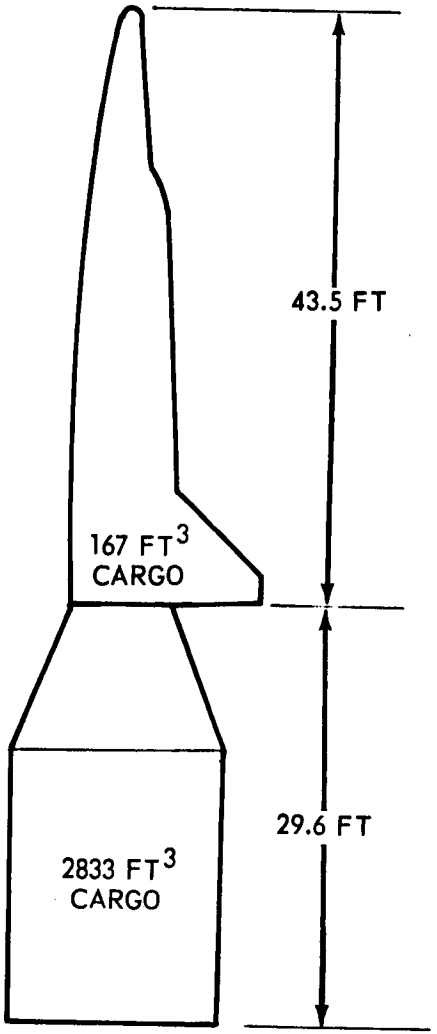

D–10

Section 2

FLIGHT PERFORMANCE

INTRODUCTION

Trade-offs were performed to establish the effect of varying vehicle diameter and nose cone angle. Performance characteristics for the selected vehicle were then estimated. Finally, the potential for a number of mission applications was examined.

FLIGHT PERFORMANCE

- PERFORMANCE TRADE-OFFS
- CIRCULAR ORBIT PERFORMANCE
- ON-ORBIT CAPABILITY
- MISSION POTENTIAL

PARAMETRIC PERFORMANCE

The measure of SERV performance is identified here as its mass ratio; i.e., the ratio of the weight at lift-off to the weight injected into orbit. Using preliminary aerodynamic drag data, a parametric performance evaluation was made for vehicles of different diameters and cone half angles. The baseline for this parametric performance evaluation was a lift-off thrust-to-weight ratio of 1.2, with a maximum acceleration limit of 3.0g, maintained by throttling once the maximum acceleration limit was reached. Trajectory shaping was accomplished by fuel optimization calculus of variations techniques, based on planar flight to the desired orbital insertion conditions. The results of this preliminary analysis are presented on the accompanying chart.

PARAMETRIC PERFORMANCE

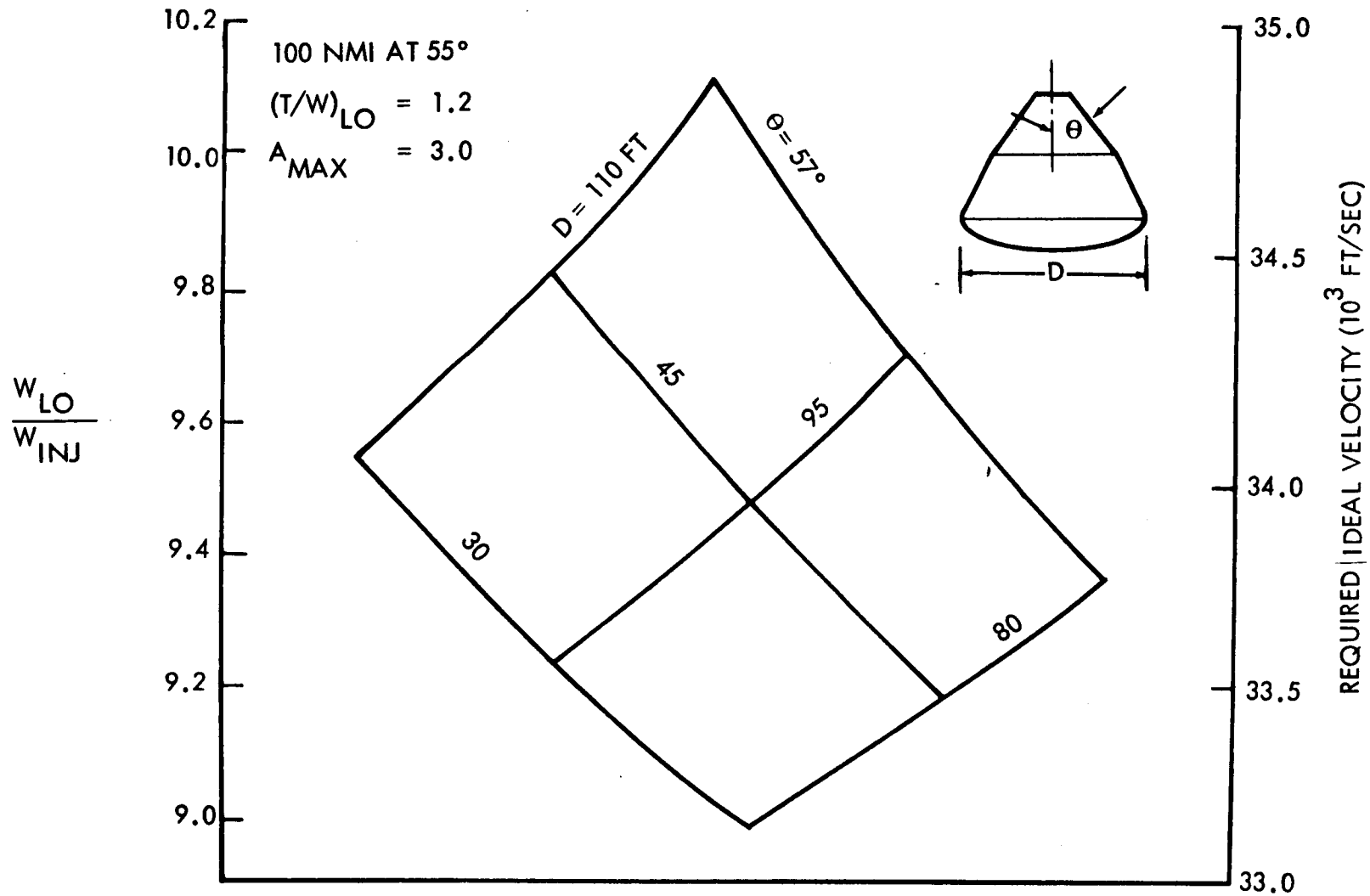

EFFECT OF VARYING MAXIMUM ACCELERATION AND LIFTOFF THRUST-TO-WEIGHT RATIO

Performance trade-off factors to be applied to the previous chart are presented. These factors illustrate the effect of variations of lift-off thrust-to-weight ratio and maximum acceleration limit. The data shows that very little performance improvement over the baseline can be obtained by using the apparent optimum values of the two parameters considered.

Using the apparent optimum value for maximum acceleration will decrease the mass ratio required by only 0.5 percent from that obtained with the 3.0g maximum acceleration baseline. Similarly, with the apparent optimum lift-off thrust-to-weight ratio of 1.35g instead of the 1.2g baseline, only about 1 percent decrease in mass ratio can be realized. These two trade-off factors should not be considered additive.

EFFECT OF VARYING A_{MAX} AND $(T/W)_{LO}$

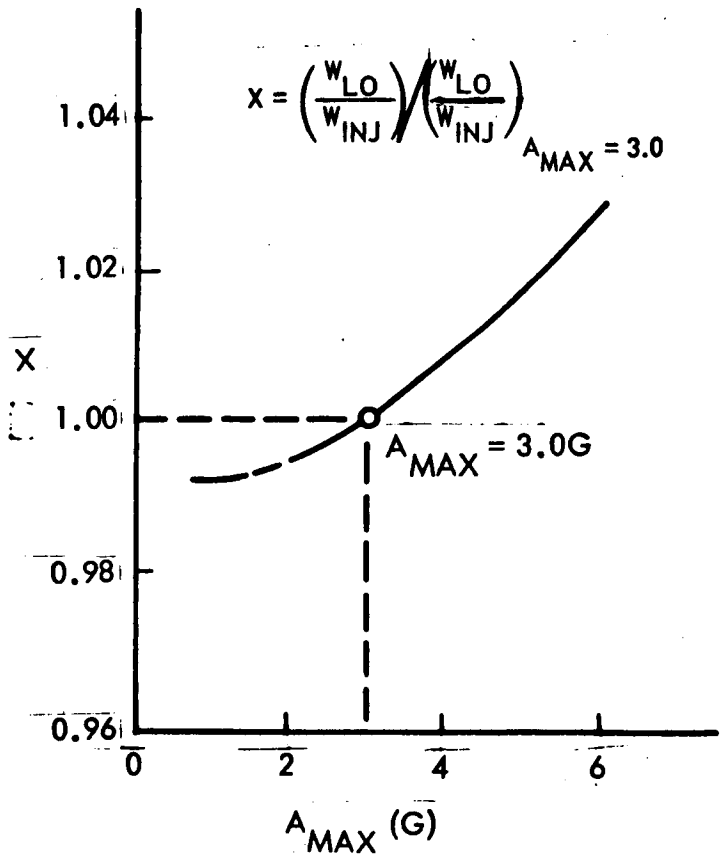

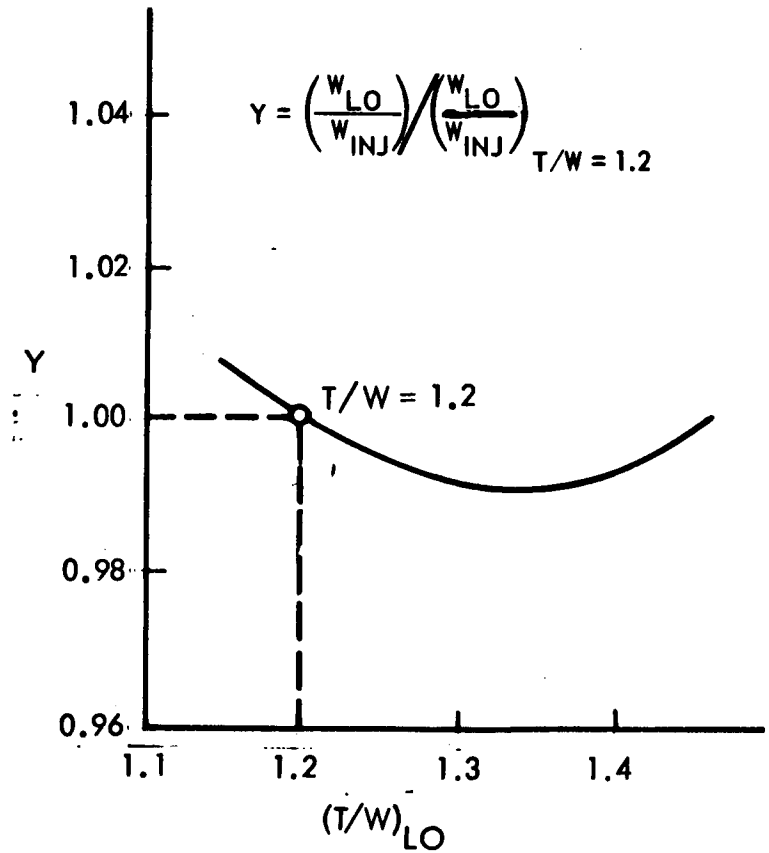

9

EFFECT OF VARYING ACCELERATION PROFILE

This chart shows the effect that various acceleration profiles have on the circular orbit performance capability of the SERV over a range of orbital altitudes. In each case, the maximum acceleration was limited to 3g. The saw tooth acceleration profile was considered to be the easiest to implement; however, other profiles were also examined to establish whether they held any inherent performance advantages. As shown, the constant 3g acceleration profile (lower curve) has a performance advantage for direct ascent missions at low altitudes only. However, since this acceleration profile combined with Hohmann transfer techniques provides a performance advantage over a wide range of altitudes, it was selected for all further performance analyses.

EFFECT OF VARYING ACCELERATION PROFILE

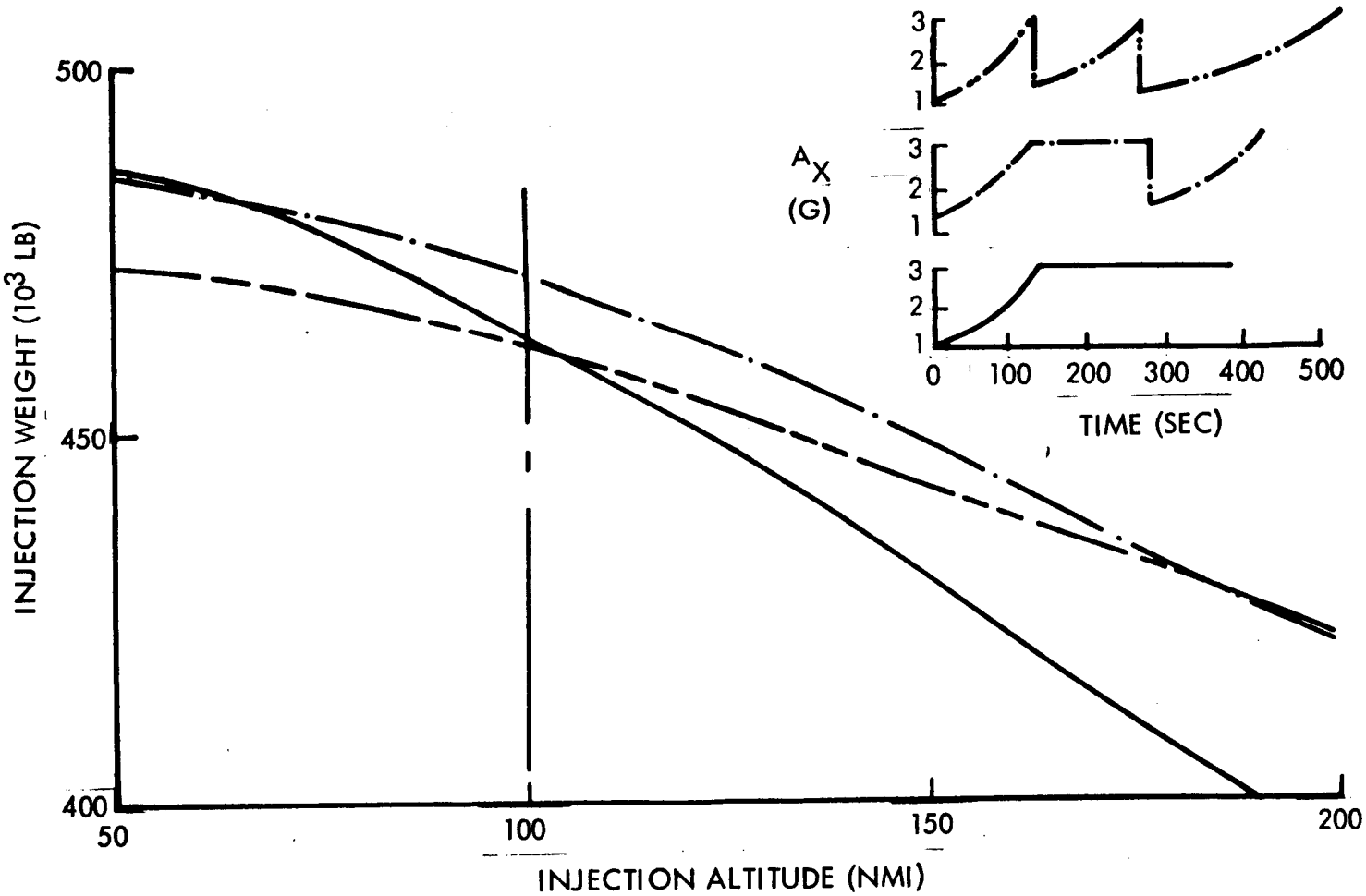

10

SPACE DIVISION CHRYSLER CORPORATION

MURP SIZE AND DRAG EFFECTS

The chart shows the reduction in performance associated with forebody drag and total drag, the difference being due to an assumed base drag. It is clear that base drag has a marked influence on the weight injected into orbit.

The chart also shows the effect of replacing the D-10 MURP with the larger D-34 MURP. It is of interest to note that for the D-34 case considered, the increase in weight injected in orbit was greater by approximately 2,000 pounds than the increase in D-34 structural weight over that of the D-10.

MURP SIZE AND DRAG EFFECTS

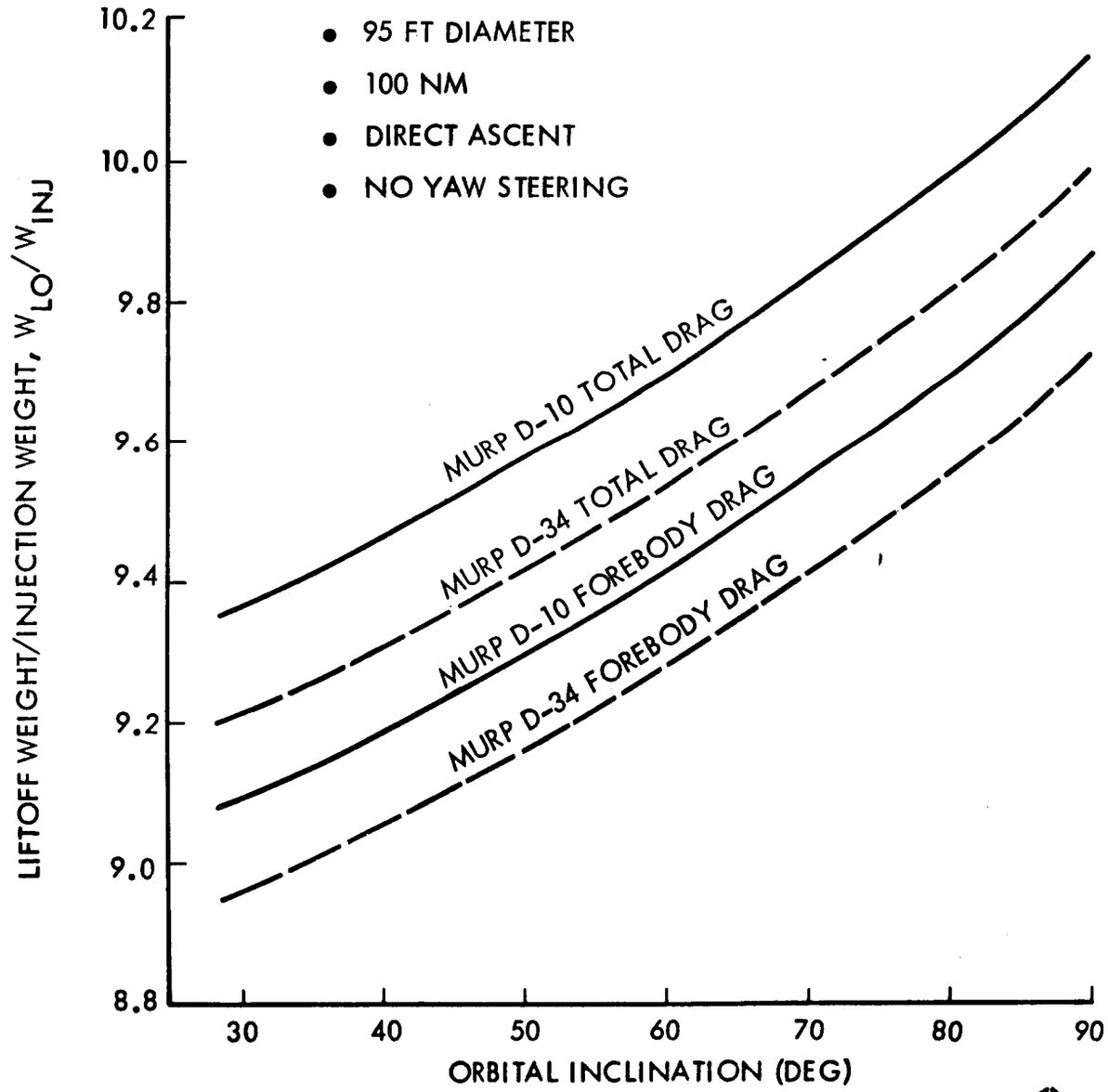

REFERENCE TRAJECTORY PARAMETERS

The following two charts present time histories of pertinent reference trajectory parameters for a 50 by 100 nautical mile orbit. The first chart presents dynamic pressure, drag, and Mach number through the atmospheric portion of flight. The maximum dynamic pressure experienced was 359 pounds per square foot.

REFERENCE TRAJECTORY PARAMETERS

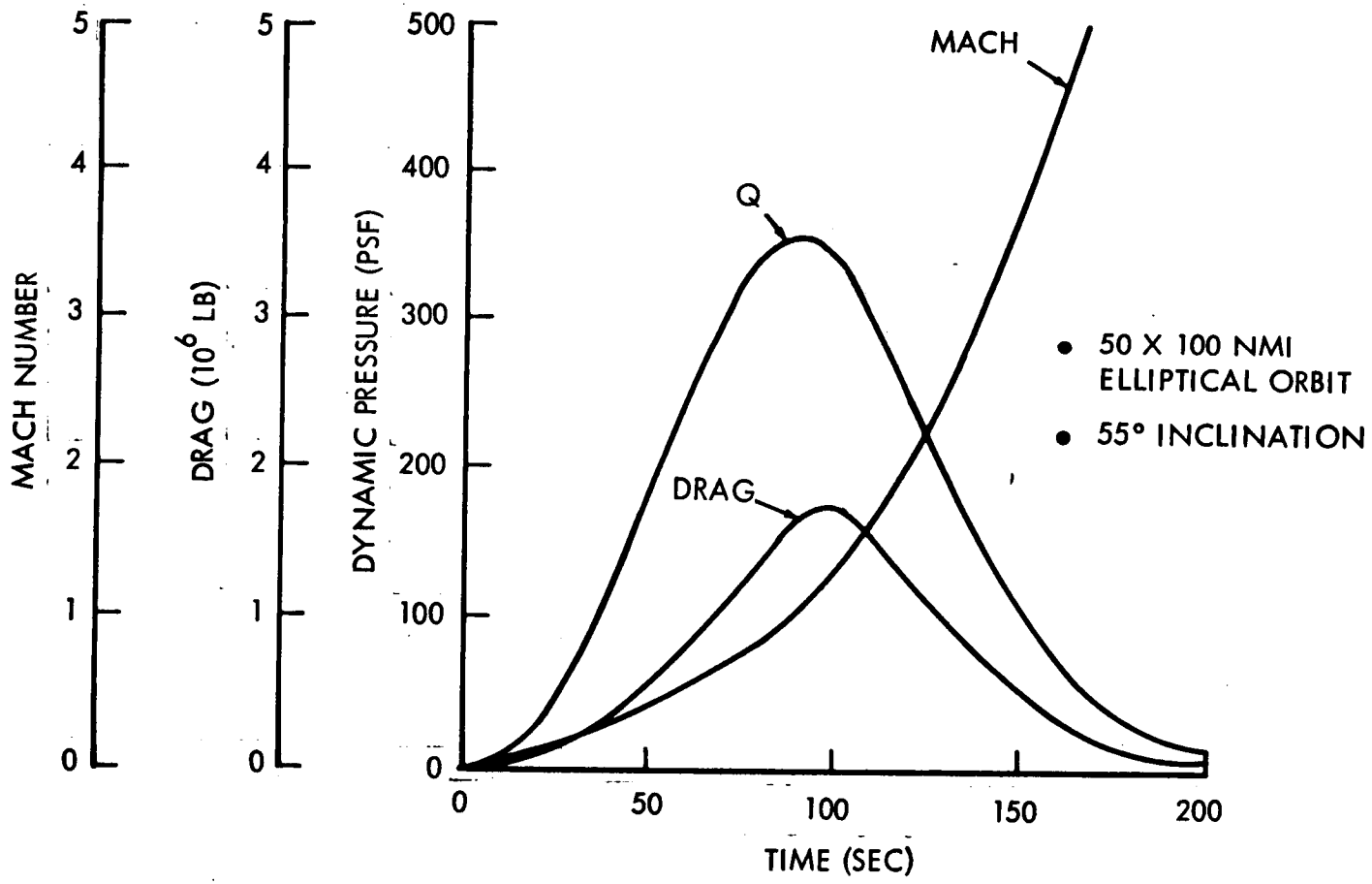

REFERENCE TRAJECTORY PARAMETERS (Continued)

This chart presents time histories of altitude, thrust, weight, and axial acceleration for the reference mission. The thrust is continuously throttled to maintain a constant axial acceleration of 3.0g after this limit has been reached.

REFERENCE TRAJECTORY PARAMETERS (continued)

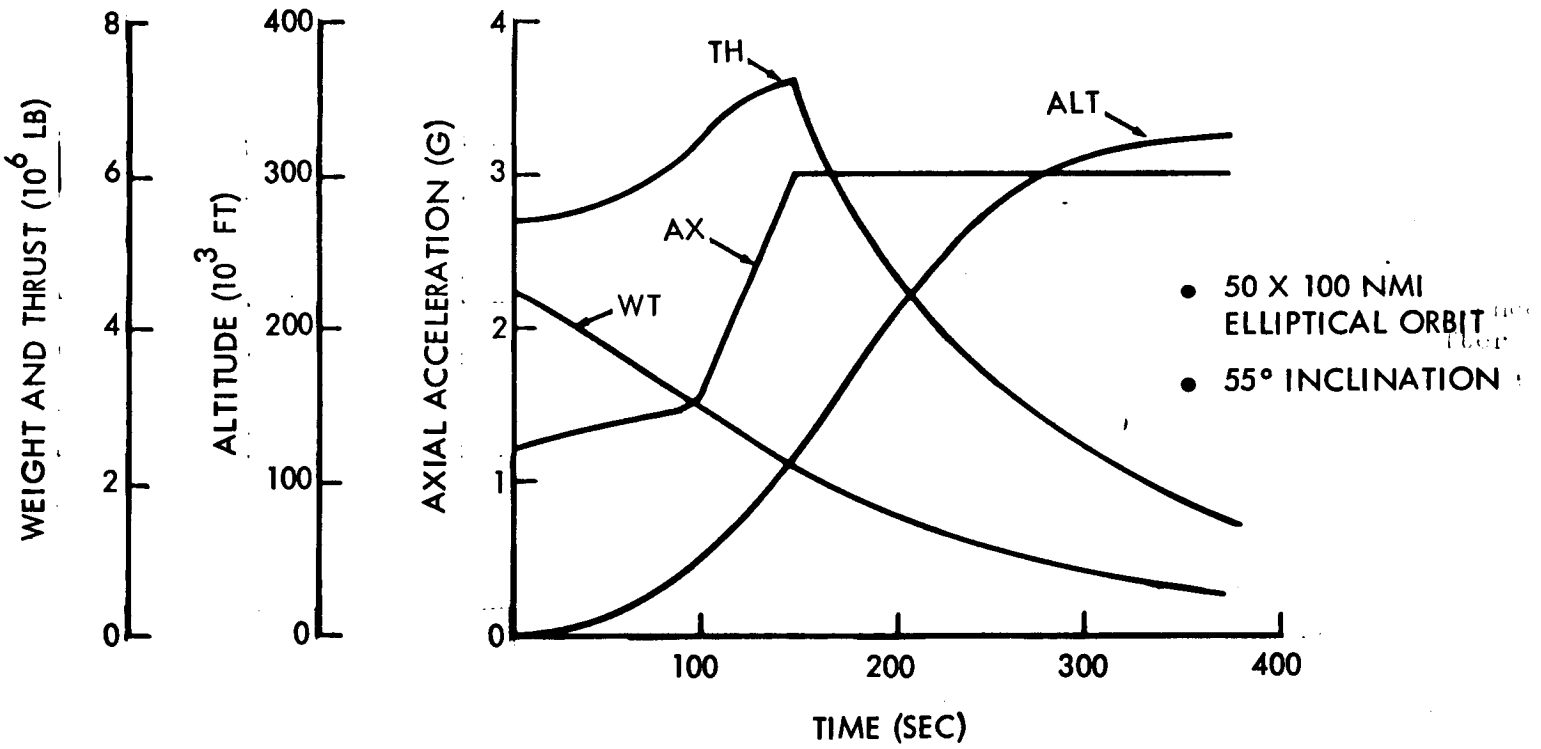

CIRCULAR ORBIT PERFORMANCE

The circular orbit performance for an altitude of 100 nautical miles and an inclination of 55 degrees, as a function of the vehicle diameter, is shown on the chart. Performance is presented in terms of the mass ratio required to achieve orbit by direct ascent and by Hohmann transfer from 50 nautical miles. As the chart shows, the Hohmann transfer technique has a significant advantage over direct ascent of the order of 20,500 pounds at the design point. The design point was established by successive configuration iterations to achieve the smallest diameter vehicle.

CIRCULAR ORBIT PERFORMANCE

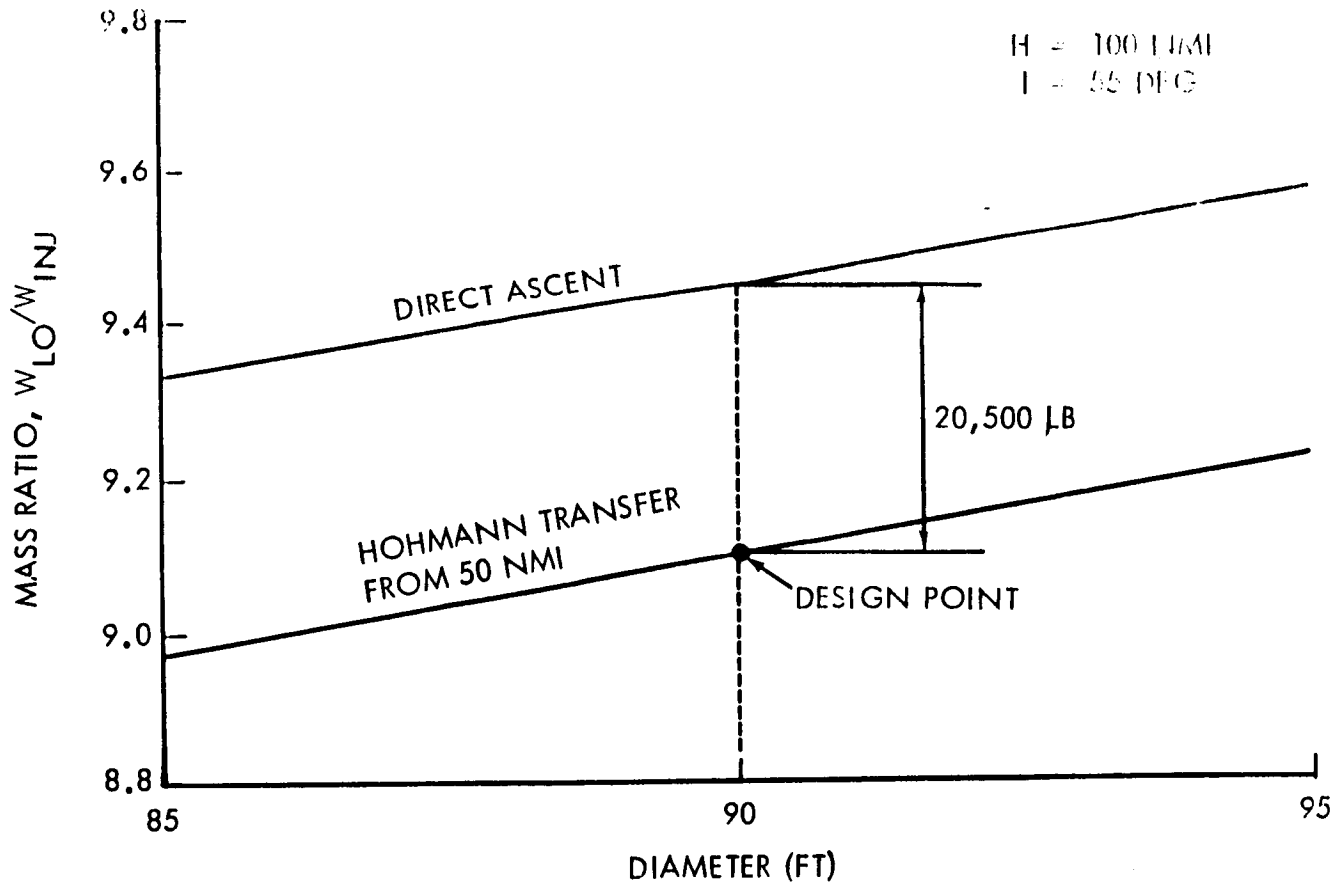

PAYLOAD VERSUS INCLINATION

This chart presents the effect of orbital inclination on the payload capability of the SERV. Both payload and mass ratio are presented for a Hohmann transfer flight profile from 50 to 100 nautical miles. Launch is from KSC, and an "all launch azimuth capability" is assumed. To ensure that SERV can return to KSC, a repeating orbit profile is essential. A 16-revolution, 23.5-to 24-hour repeater has been selected and a correction factor applied to the payload, as shown on this chart, to accommodate variations in orbital altitude as orbital inclination is varied.

PAYLOAD VERSUS INCLINATION

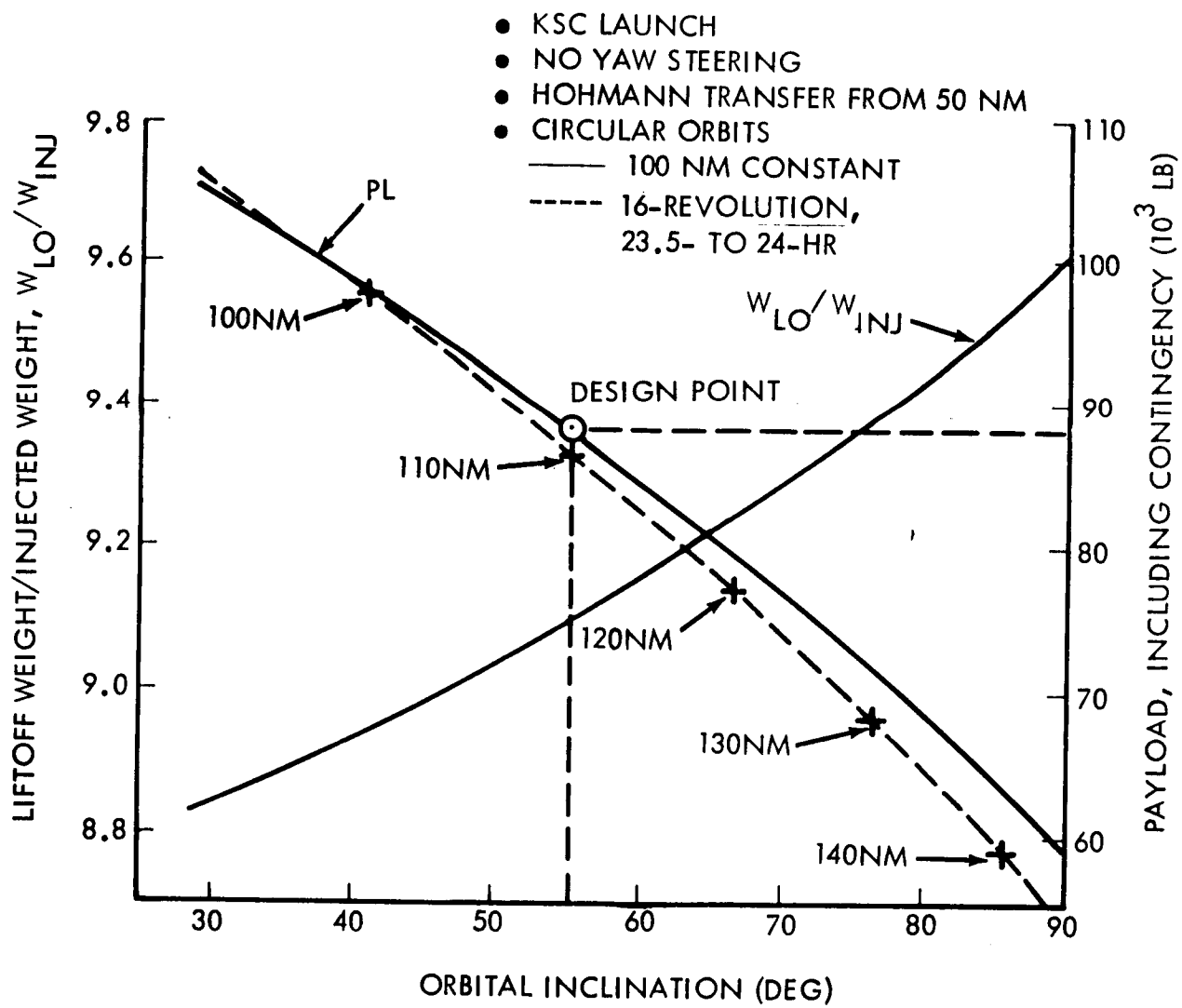

15

SPACE DIVISION CHRYSLER CORPORATION

MURP ON-ORBIT CAPABILITY

The cargo carrying capability of the MURP D-10/Cargo Module configuration is presented on the chart as a function of on-orbit maneuvering velocity capability. The upper line reflects a due east launch of the SERV into low earth orbit while the lower line represents the SERV low earth orbit capability for an inclination of 55 degrees. The nominal design propellant load was set at 12,700 pounds, which corresponds to 40,000 pounds and 25,000 pounds cargo weight for the 28.5 degree and 55 degree cases, respectively. It should be noted that no allowance has been made here for the de-orbit of MURP, since MURP contains its own de-orbit system. For velocity increments (ΔV) requiring less than the nominal propellant load, a one-to-one trade between cargo and propellant weight was assumed. For velocity increments reflecting greater than the nominal load, 1.00 pound of cargo was converted into 0.85 pound of propellant plus 0.15 pound of additional tankage weight. For these results, a specific impulse of 450 seconds was considered.

Because the SERV and the space station have different orbital altitudes their planes will steadily drift apart as orbit stay time increases. Therefore, additional propellant equivalent to a velocity increment equal to 300 feet per second (approximately) for each day of stay time must be carried by MURP to accomplish plane change and rendezvous with the SERV. An allowance of propellant equivalent to an additional velocity increment of 700 feet per second has been included in this first day stay time to accommodate transfer from the space station to SERV and docking. If maximum cargo carrying capability is required for any one mission, the stay time penalty can be eliminated by mission scheduling such that the MURP is transported to orbit on one SERV and its return cargo transported back by another.

MURP ON-ORBIT CAPABILITY

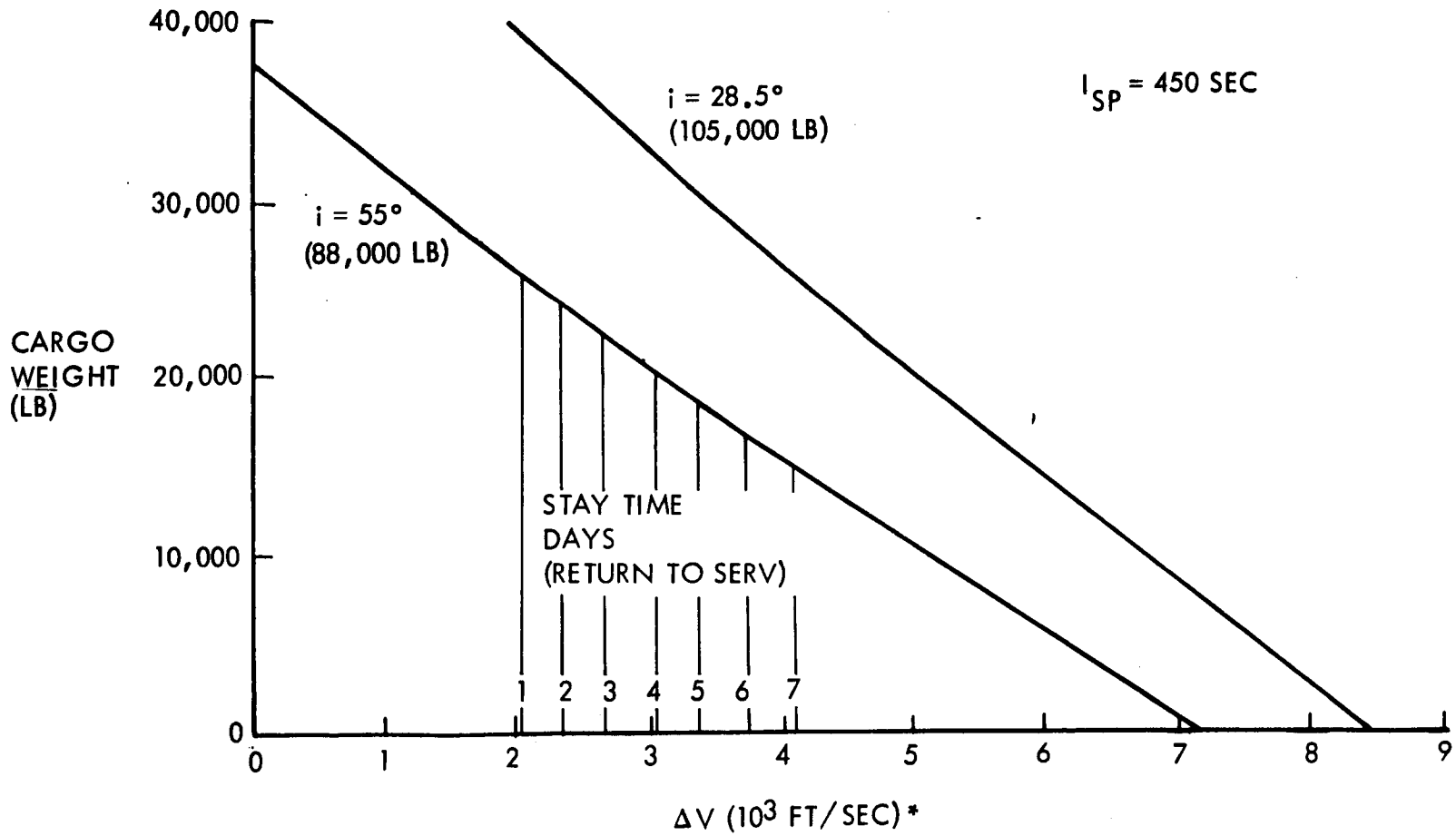

*EXCLUDES MURP DEORBIT ΔV

16

SPACE DIVISION CHRYSLER CORPORATION

SERV WITHOUT ORBITER

SERV is a single stage to orbit, consequently it is not dependent on the presence of an orbiter. Also, many of the planned missions are of a pure cargo carrying unmanned nature. These observations open up a new sphere of activity for the SERV because an orbit-to-orbit Space Tug could transport general cargo, experiment modules, or propellants between a space station and the SERV. Thus an integration of Space Tug and SERV operations appears desirable.

The chart presents the payload capability of the SERV for a number of missions of interest. These payloads are adjusted downwards to accommodate an aerodynamic nose cone (spike) which is required to reduce vehicle drag in the absence of the MURP. This nose cone would be retracted in orbit prior to re-entry.

It will also be noted from the chart that the SERV can deliver 26,000 pounds of cargo (including module) direct to a space station at 270 nautical miles by 55 degrees inclination. In this case, rendezvous and docking would be automatically controlled from the space station.

The case of ascent to a space station without an orbiter is of particular interest since a manned Apollo-type crew module could be adapted as part of the payload. The crew module would return to earth on the SERV but would retain its capability for independent emergency return.

SERV WITHOUT ORBITER

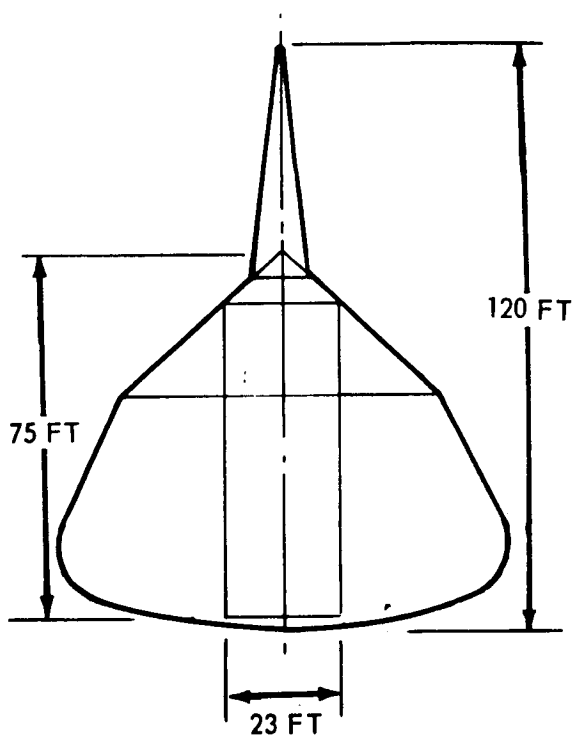

- SERV LAUNCHED WITHOUT ORBITER
- PAYLOAD*

95 NMI – 28.5°	95,000 LB
110 NMI – 55°	77,000 LB
145 NMI – 90°	44,000 LB
270 NMI – 55°	26,000 LB

- APPLICATIONS
  - SPACE TUG TRANSPORT
  - MURP RETRIEVAL
  - PROPELLANT CARRIER
  - S-IVB/CENTAUR SPACE PROBES
  - GENERAL CARGO CARRIER
  - MANNED WITH MODIFIED APOLLO CM

* 10,000 LB NOSE CONE EXCLUDED

CARGO CONTAINER ASSUMED CUSTOM BUILT AS PART OF PAYLOAD

PAYLOADS ADJUSTED TO REPEATING ORBITS

SERV WITH WINGED ORBITER

For this feasibility study, a MURP D-10 configuration shown in NAR Report SP 69-11 was selected as the winged payload. The next chart shows a selection of missions of interest for which the MURP-SERV is well suited. The most important of these is the mission in which cargo is transferred from the SERV to the space station in a 110 nautical mile repeating orbit. The total transfer weight is 88,060 pounds, which includes the weight of the D-10 MURP, propellant for a velocity increment of 2,000 feet per second, and 34,800 pounds of net cargo. Since cargo container requirements were fluid during this feasibility study, an environmentally conditioned cargo module of approximately 3,000 cubic feet was provided; this left 25,000 pounds available for cargo. Up to 10 passengers can be accommodated within the MURP. Their weight is included in the cargo.

The larger D-34 MURP may also be fitted to the SERV. The additional weight of this orbiter would be compensated by an increase in the weight injected into orbit, made possible by the reduced overall vehicle drag when the D-34 is installed.

SERV WITH WINGED ORBITER

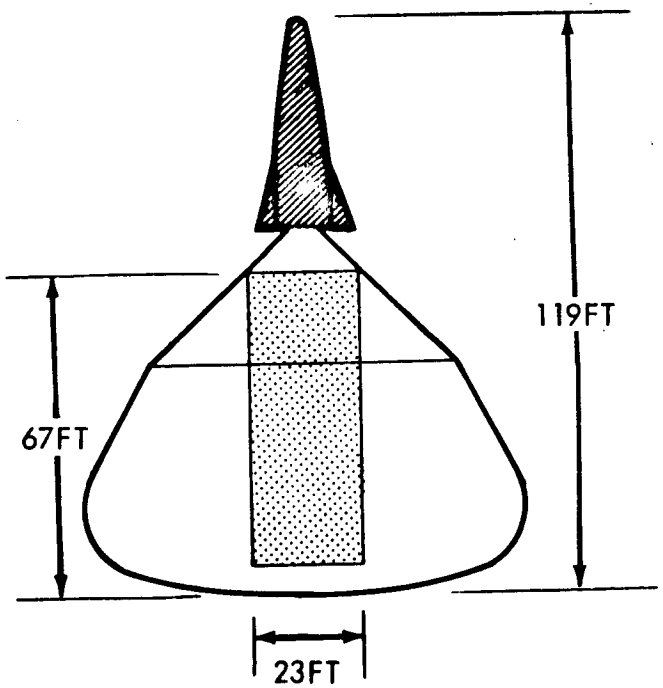

CARGO VOLUME

- SERV – 25,000 FT^3, 23'D × 60'L
- MURP D-10 – 165 FT^3, 5' × 5' × 7'
- MURP D-34 – 3000 FT^3, 15'D × 17'L
- MURP 10-MAN PASSENGER COMPARTMENT

MISSIONS

- SPACE STATION LOGISTICS (270 NM-55°)
  - 34,800 LB UP AND 50,000 LB DOWN MAXIMUM (INCLUDING CARGO CONTAINER)
- SHORT DURATION ORBITAL STATIONS
- MURP RETRIEVAL INSIDE SERV

DELIVERY OF LARGE DIAMETER HARDWARE

One of the most attractive features of the SERV is its potential to transport large diameter modules and stages to orbit. The chart shows a SERV adapted to take a 33-foot-diameter nuclear stage; the nuclear engine is shown projecting into the cargo hold.

Thus the SERV can bring the economic advantages of a reusable shuttle to an entirely new area of activity, an area that currently requires an expendable Saturn V or its derivatives for launch.

The chart identifies the nuclear stage, projected Mars exploration modules, and Space Station modules, all 33 feet in diameter, as potential payloads for the SERV.

DELIVERY OF LARGE DIAMETER HARDWARE

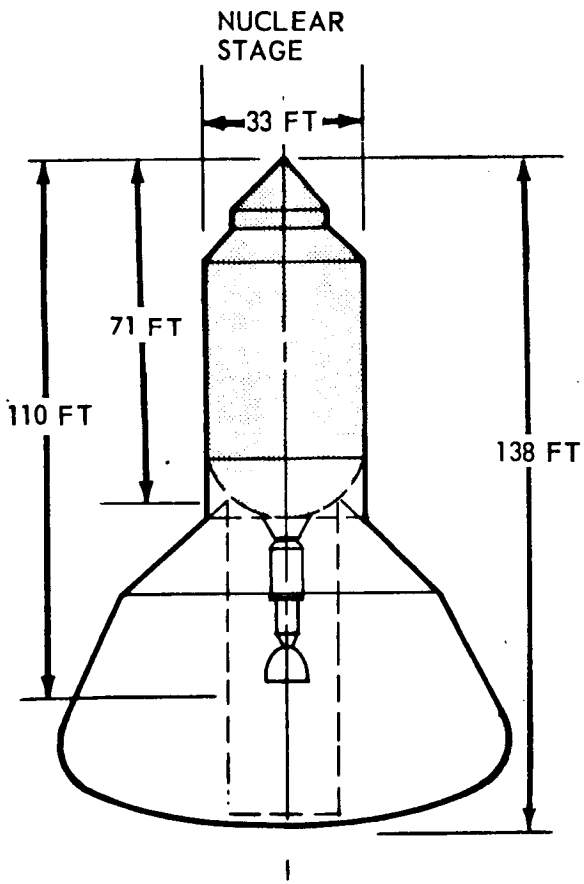

SERV PAYLOAD CAPABILITY TO CIRCULAR ORBIT

- 105,000 LB TO 28.5° ORBITAL INCLINATION (95 NM)
- 88,000 LB TO 55° ORBITAL INCLINATION (110 NM)
- 55,000 LB TO 90° ORBITAL INCLINATION (140 NM)

POTENTIAL PAYLOADS (UTILIZING SPACE TUG FOR ON-ORBIT MANEUVERING)

* SPACE STATION MODULE, 33 × 50 (88K LIMIT)
* NUCLEAR STAGE, 33 × 110 (75K DRY)
* MARS EXPLORATION MODULE, 33 × 25 (105K LIMIT)
* MARS BASE MODULE, 33 × 40 (105K LIMIT)

* AERODYNAMIC NOSE CONE REQUIRED.

Section 3

FLIGHT ENVIRONMENT

INTRODUCTION

The basic elements of the MURP-SERV flight environment during ascent and during descent were examined to identify problem areas affecting concept feasibility. The flight environment of the MURP during descent has been investigated by NASA and was, therefore, not included in this study.

The aerodynamic characteristics, flight dynamics, thermal environment and external loads were considered. Much of the aerodynamic data for the SERV during reentry were obtained from the extensive reports prepared by NASA during the development of tha Apollo Command Module shape. However, additional definitive data is required from wind tunnel tests on the SERV shape.

FLIGHT ENVIRONMENT

- AERODYNAMICS
- CONTROLLABILITY
- LOADS
- THERMAL PROTECTION REQUIREMENTS

MURP HYPERSONIC AERODYNAMIC CHARACTERISTICS

Extensive investigation of the hypersonic aerodynamic characteristics of a MURP planform were performed by the Langley Research Center. These investigations extended from 1962 to the present day, and the results of the tests are well documented.

The hypersonic characteristics presented here were obtained from an Integral Launch and Reentry Vehicle study, Report SP 69-11, conducted by North American Rockwell Space Division under Contract NAS 9-9205.

From the above mentioned data it is clear that the MURP configuration has attractive hypersonic characteristics with a maximum lift to drag ratio of 1.79 at an angle of attack of 13.5 degrees.

MURP HYPERSONIC AERODYNAMIC CHARACTERISTICS

(REF. - NAR SP 69-11, ILRV TECHNICAL REVIEW, MAY 1969)

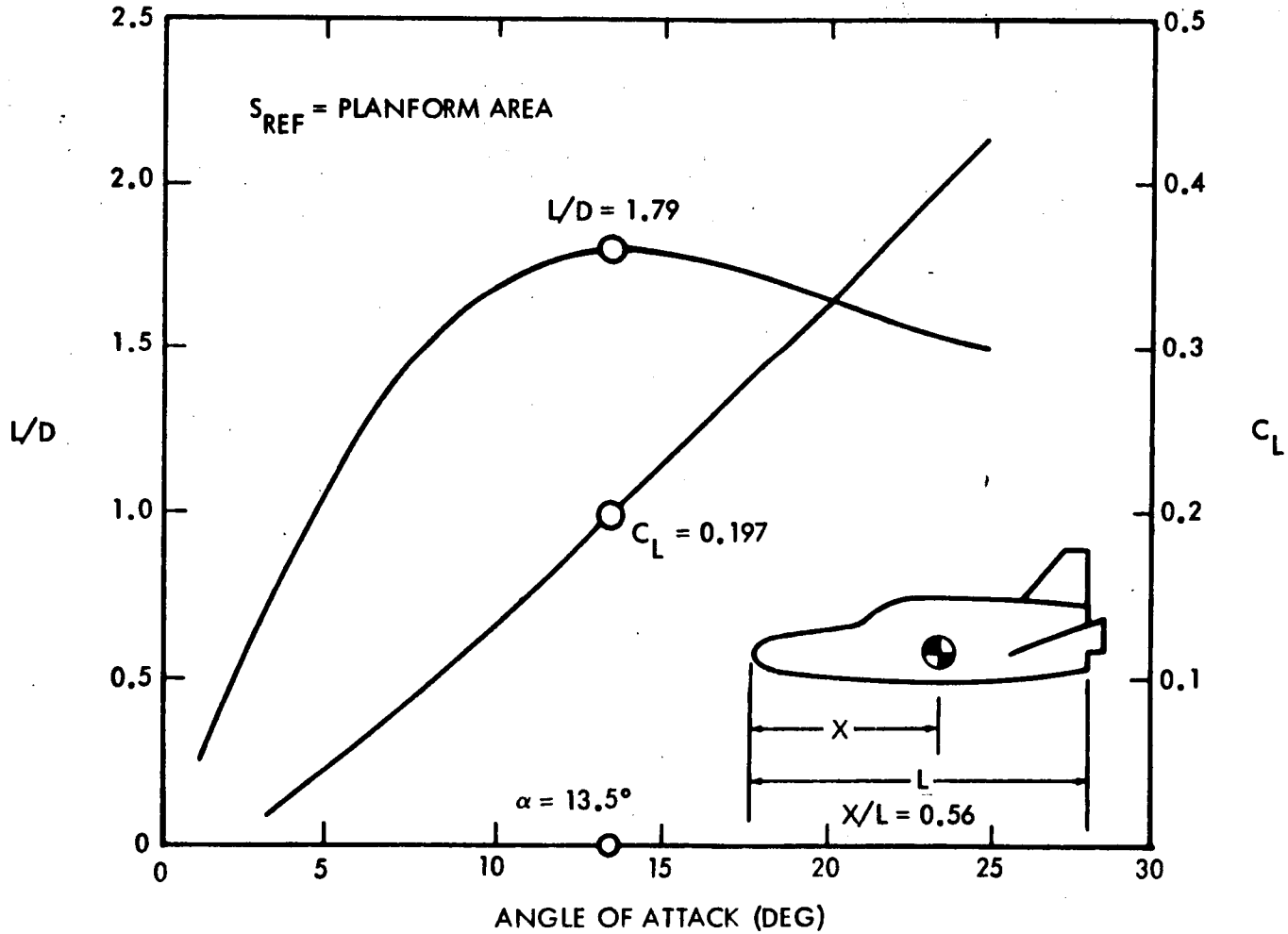

AEROSPIKE ENGINE PLUME CHARACTERISTICS

Base drag during lower atmosphere operation can have a significant effect on vehicle performance. If the thrust of the aerospike engine could be considered as acting over the whole base of the SERV, then the effect of base drag is substantially reduced. Alternatively, if the exhaust efflux behaves as an annular jet, without significant efflux recirculation within the center, then payload degradation will occur. This problem has been analytically examined and simple water flow tests conducted to establish whether the conditions for base flow recirculation exists.

The chart shows the results of a method of characteristics analysis combined with a turbulent jet mixing analysis. For simplicity, a linear jet was considered. The indicated jet boundary describes the region of undisturbed air and the properties listed are for the center core of the jet. Korst theory indicates that the base pressure behind a blunt body without a large sting is influenced by the jet properties at the half radius - in this case 70 feet. Since there is still significant energy in the jet at this point, some recovery of base pressure is indicated. Wind tunnel hot firing tests with external flow will be required to determine the level of the base pressure recovery.

AEROSPIKE PLUME CHARACTERISTICS

LOCATION	X	P_t/P_∞	V(FPS)	T(°F)
A	0	9.45	12,250	4775
B	18	3.1	5,770	2260
C	32	2.7	4,600	1815
D	70	2.0	3,200	1550

ALTITUDE = 5000 FT

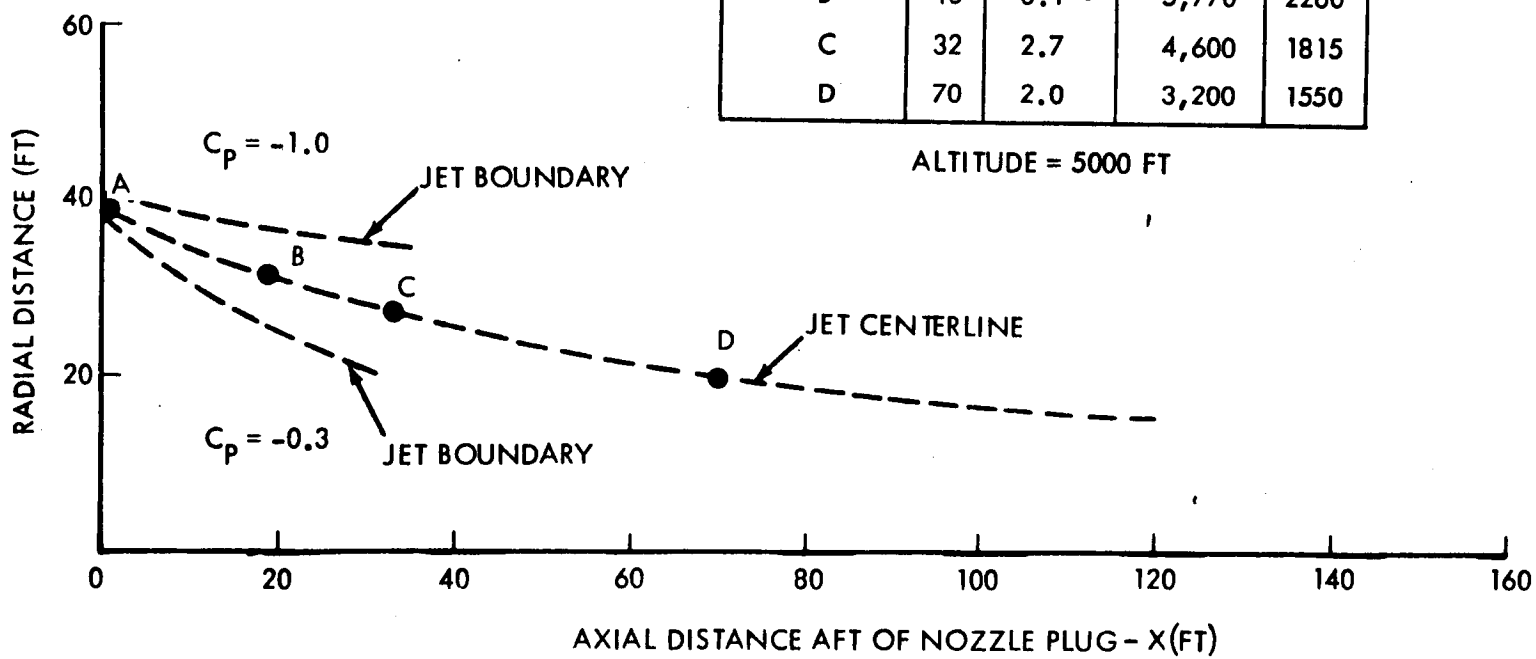

INTEGRATED AEROSPIKE INSTALLATION WATER TABLE INVESTIGATIONS*

A series of water table tests were made using a 1/130-scale model of the MURP-SERV vehicle to evaluate the effect of the aerospike engine flow on the separated flow in the vehicle base region at high subsonic freestream Mach numbers. The tests were run on a 4-feet-long by 3-feet-wide test surface; a small overall model was used to keep wall effects to a minimum. Styrofoam ball flow tracers were used to observe and photograph the freestream flow around the vehicle and in the wake for both engine-on and engine-off. The engine-on simulation was obtained by filling a reservoir in the model to about 4 times the freestream head and exiting the simulated engine exhaust under a sluice gate about the height of the freestream head, for a simulated Mach number of 2 to 3.

The results obtained showed that the freestream wake was held apart for a greater distance downstream with engine-on than for similar conditions but with the engine off. The recirculation pattern observed in the engine-off base flow was eliminated when the engine was turned on. These results indicate qualitatively higher pressures at the base with the engine running. The increase in base pressure during engine operation appeared to result from the large rate of bleed dumped into the separated zone by the engine.

* Contributed by the North American Rockwell Rocketdyne Division.

INTEGRATED AEROSPIKE INSTALLATION WATER TABLE INVESTIGATION

ENGINE OFF

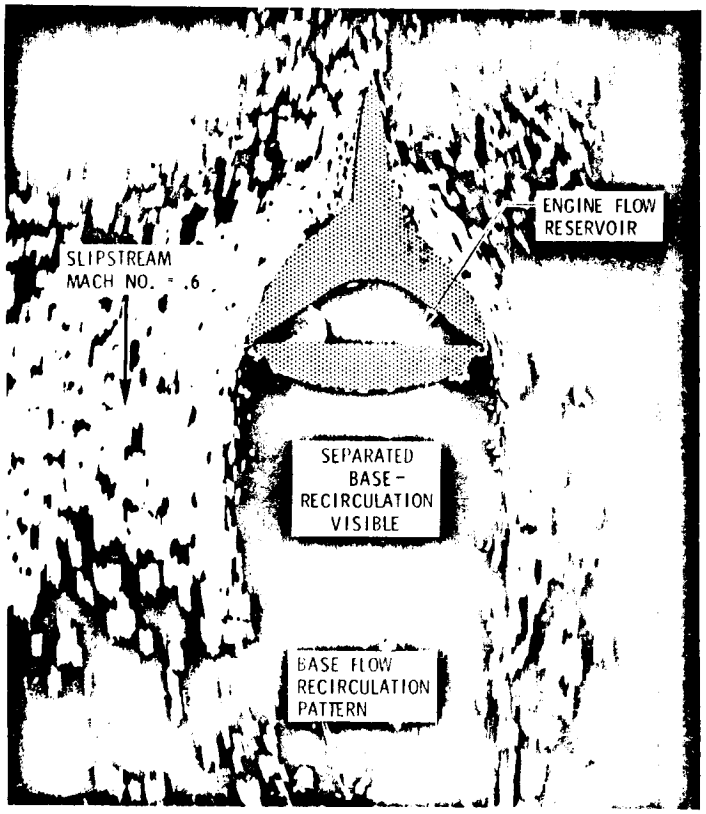

ENGINE ON

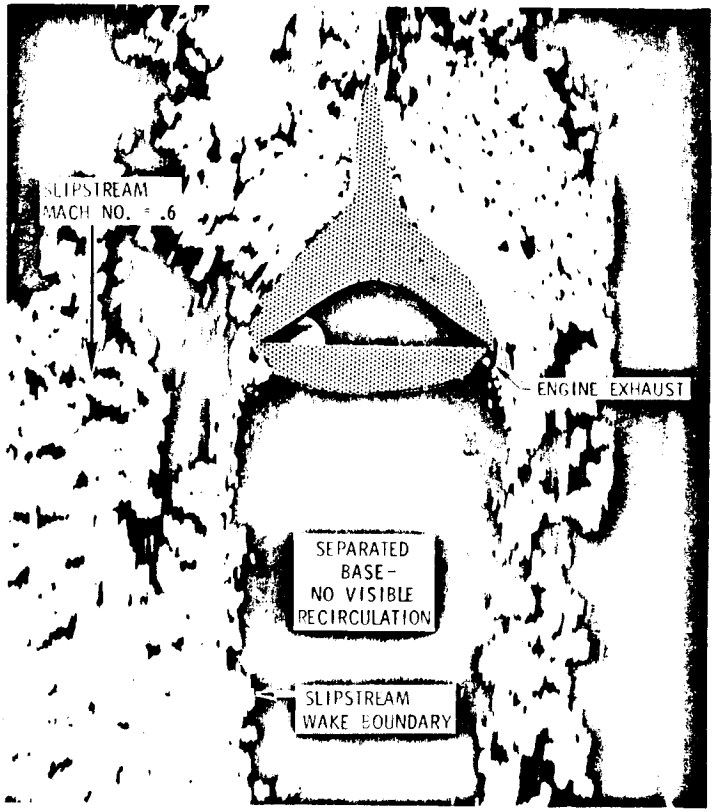

- TEST RESULTS PROVIDE GOOD QUALITATIVE DESCRIPTION OF FLOWFIELD
- RESULTS INDICATE THAT HIGHER PRESSURE ON VEHICLE BASE WILL EXIST WITH THE ENGINE OPERATING

MURP-SERV DRAG CHARACTERISTICS

The chart presents the drag characteristics of the SERV with a D-10 MURP. Because of the uncertain relationship between thrust and base drag in the lower atmosphere, a base drag term has been included for conservatism. As the exhaust plume expands with increasing altitude, the relative base drag reduces until it becomes zero as the central exhaust boundaries intersect and lock-in the local atmospheric pressure. The base drag coefficient is progressively reduced to reflect this process. The chart also reflects the reduction in vehicle drag coefficient when a D-34 MURP is installed and suggests that performance may be increased by the addition of a spike-type nose cone. The characteristics presented are estimated values and require substantiation by wind tunnel testing.

MURP – SERV DRAG CHARACTERISTICS

$\alpha = 0°$ DRAG (LB) = $C_D QA$ $A = 6362\ FT^2$

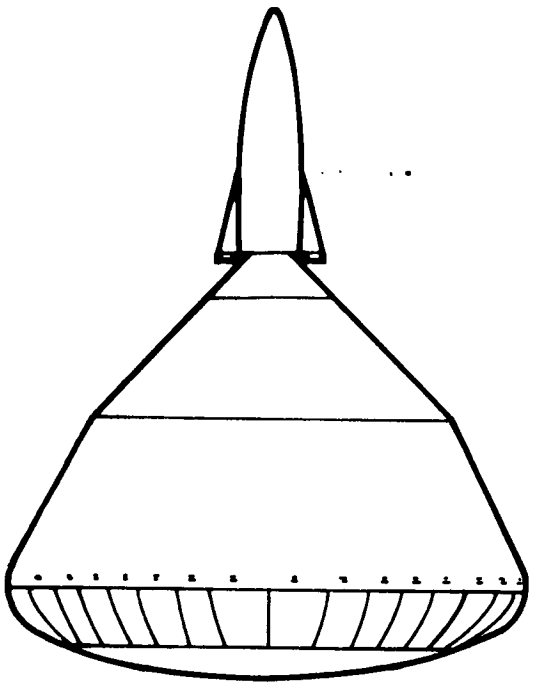

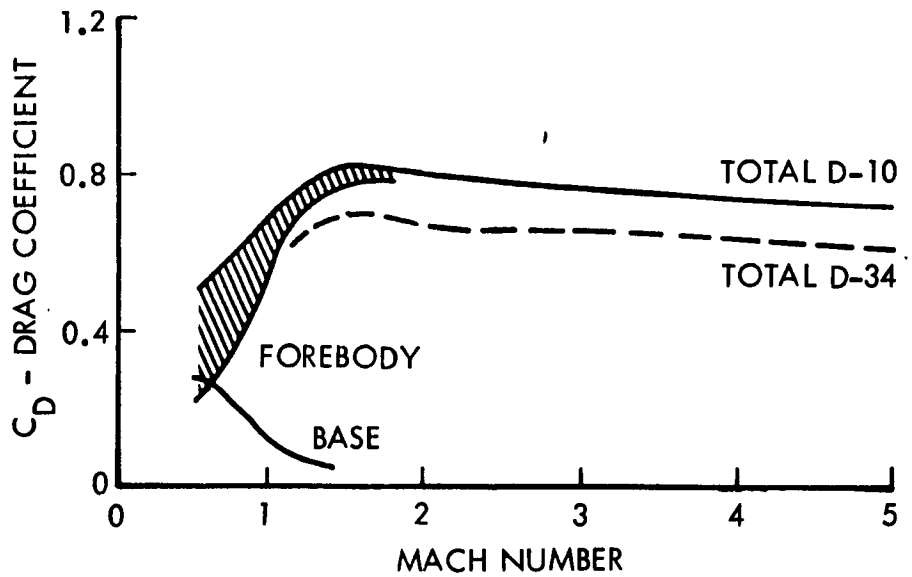

MURP-SERV SHOCK IMPINGEMENT

Local surface pressure coefficients over the MURP-SERV configuration are presented. The increased coefficients in the area of shock impingement are clearly seen. Across the normal shock occurring at the impingement point, in Region 2, the flow is deflected essentially two-dimensionally through an angle of 24 degrees with a corresponding rise in pressure coefficient (referred to freestream conditions) to a peak of about 1.57. The location of the impingement area will vary with angle of attack.

The local surface pressure coefficients presented are estimated values and require substantiation by wind tunnel testing.

For conservatism in structural design, the increased coefficients in the area of shock impingement were considered to act over the entire upper conical shell structure.

MURP-SERV SHOCK IMPINGMENT

$\alpha = 0°$
$M = 2.5$

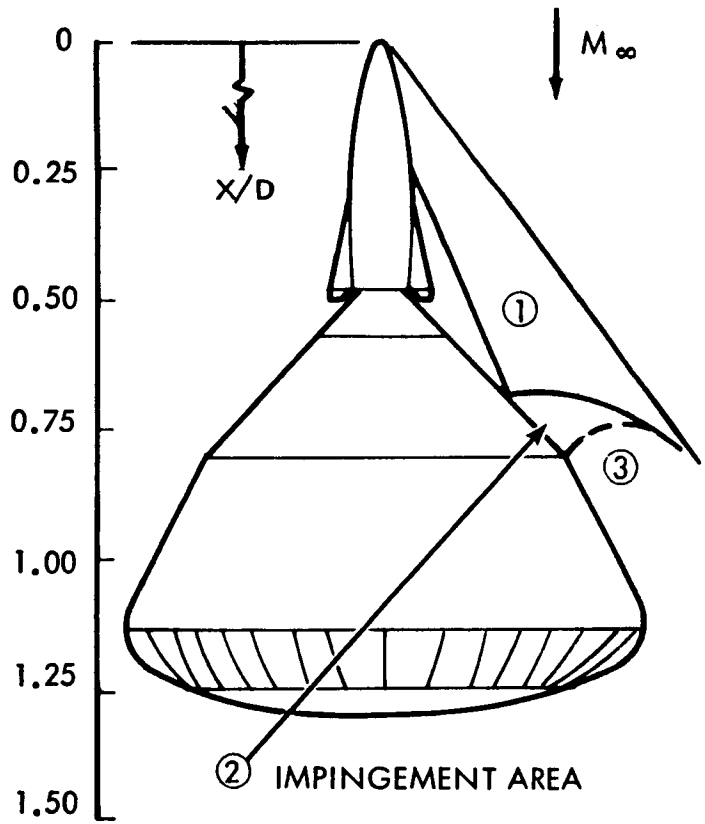

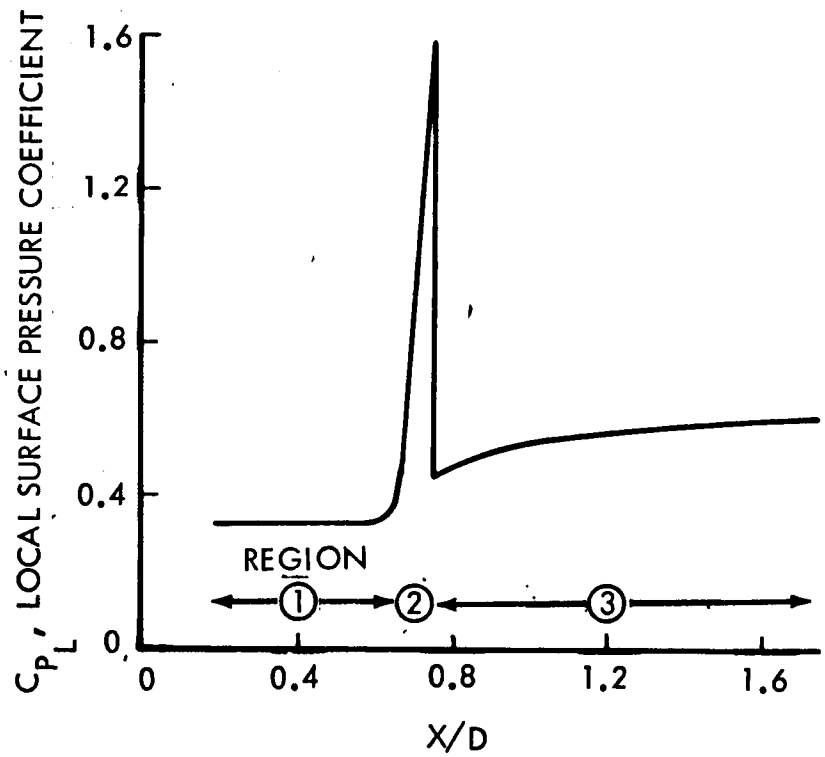

25

SPACE DIVISION CHRYSLER CORPORATION

MURP-SERV STATIC STABILITY CHARACTERISTICS

Estimated static stability characteristics during ascent are presented in the form of normal force coefficient gradient and center of pressure variation with Mach number. The approximate location of the vehicle center of gravity during ascent is also shown. The center of pressure location remains aft of the center of gravity, indicating that the vehicle is aerodynamically stable throughout atmospheric flight. The resultant aerodynamic righting moment requires special consideration since the vehicle tends to automatically turn into the wind.

The center of pressure location is affected by local surface forces and axial forces. Since axial forces play a more dominant role on the MURP-SERV configuration than is encountered with conventional boosters, it is these forces that tend to influence the rearward shift of the center of pressure.

MURP – SERV STATIC STABILITY CHARACTERISTICS

$\alpha = 0°$ D = 90 FT

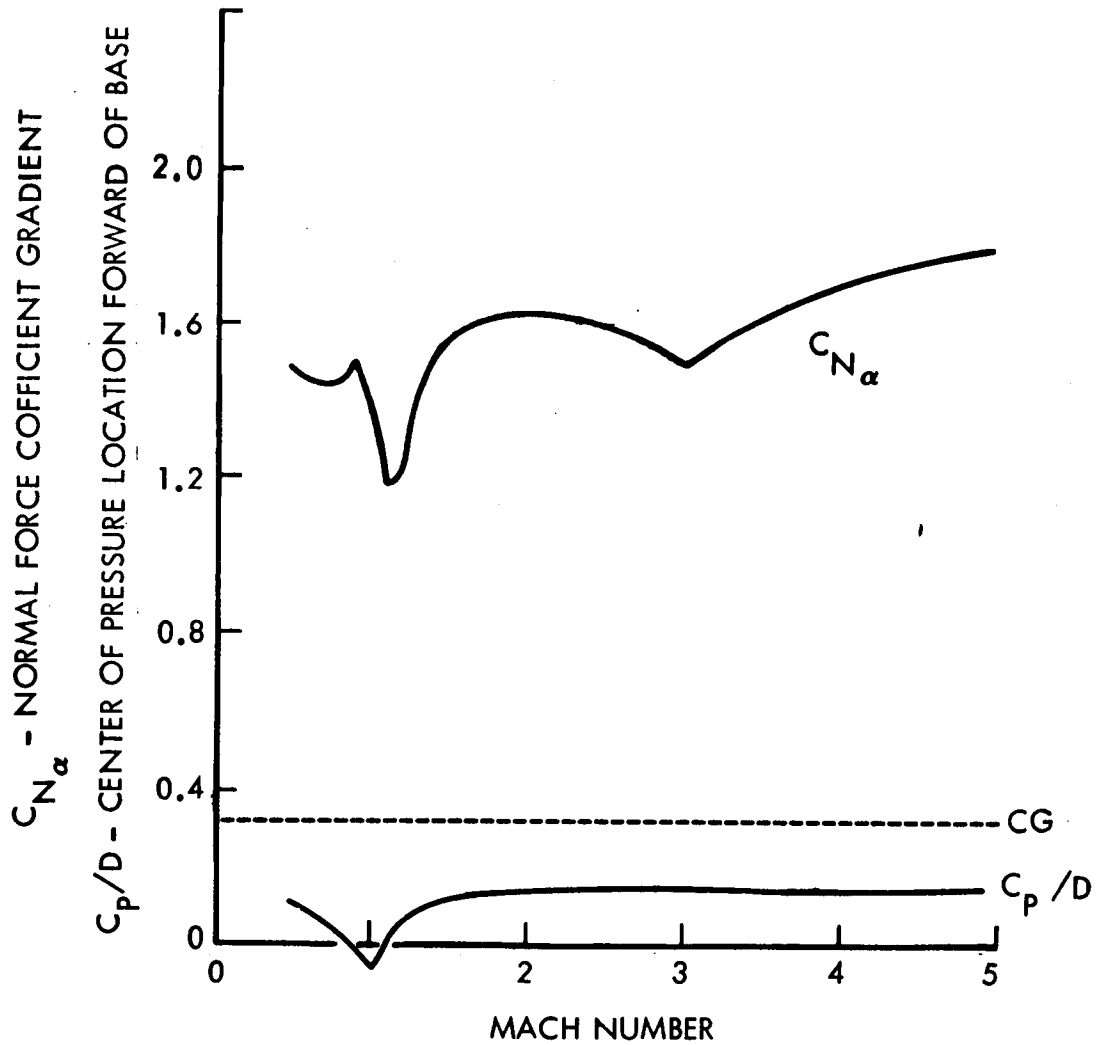

SPACE DIVISION CHRYSLER CORPORATION

MURP-SERV ASCENT CONTROLLABILITY IN THE Q_{MAX} REGION

As the vehicle moves along the required nominal trajectory, winds are encountered which tend to move the vehicle off course. The wind speed profile considered here is a 95 percentile wind speed, with 99 percentile wind shear (wind buildup rate) and a 7.6 meter/second superimposed wind gust. Since these winds also occur in the same altitude range as maximum dynamic pressure (Q_{MAX}) a controllability analysis was performed in this 10-km to 14-km altitude range.

It has previously been established that the vehicle is aerodynamically stable in the Q_{MAX} region; i.e., the center of pressure is aft of the center of gravity, consequently the aerodynamic forces cause the vehicle to turn into the wind or away from the nominal trajectory. During this same period the vehicle velocity is still low, thus, the wind angle-of-attack (α_w) is relatively large. For example; at Q_{MAX}, $\alpha_w = 16.1$ degrees. Thus, large control forces that could produce large structural loads are required to return the vehicle back to the nominal trajectory. It becomes obvious, therefore, that a compromise between high structural loading and an "off nominal" trajectory should be considered. An added factor to be considered is drift velocity.

In establishing the control requirements during ascent, the drift minimum control law was used along with the vehicle equations of motion for rigid body controllability analysis in the Q_{MAX} region of flight. The following three control laws were examined: attitude/attitude-rate feedback; attitude/attitude-rate/acceleration feedback; and attitude/attitude-rate/angle-of-attack feedback.

Considering the three previously mentioned factors (nominal trajectory, loads, and drift) the attitude/attitude-rate/angle-of-attack feedback control law provided the best compromise. The results are shown on the chart. At Q_{MAX}, t = 88 seconds:

(1) Wind angle-of-attack, $\alpha_w = 16.1$ degrees
(2) Vehicle angle-of-attack, $\alpha = 9.9$ degrees
(3) Required control thrust, $T_c = 376{,}000$ lb

The method of obtaining the required control thrust is to utilize a four quadrant arrangement for the integral aerospike engine. By throttling back one quadrant with the remaining three quadrants all operating at full thrust, the required control thrust is obtained. The maximum required control thrust is equivalent to throttling one quadrant to 76 percent of its available thrust at the time of occurence.

MURP-SERV ASCENT CONTROLLABILITY IN Q_{MAX} REGION

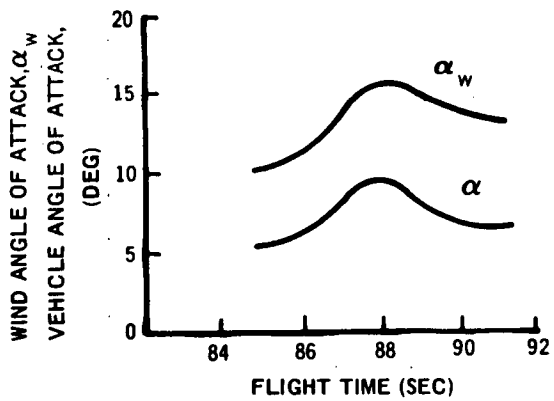

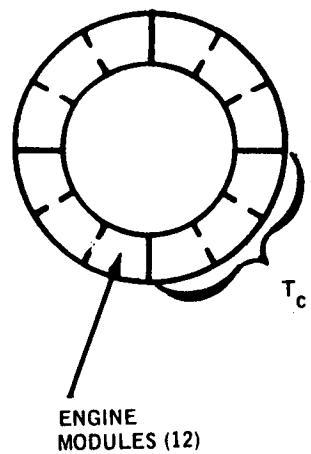

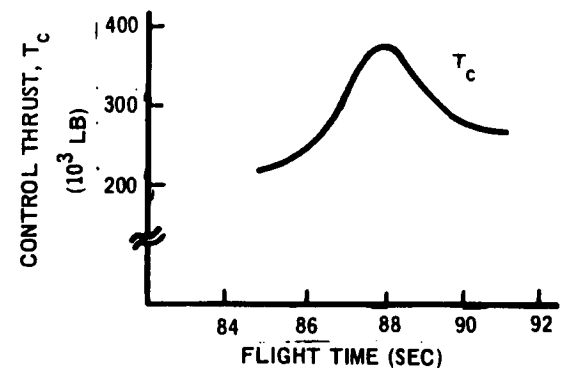

CONTROL LAW - ATTITUDE/ATTITUDE RATE/ANGLE OF ATTACK

ω_n = 2 RADS/SEC

ζ = 0.7

RIGID BODY BENDING MOMENT DISTRIBUTION

The moment distribution shown represents the maximum loading condition for the vehicle. This condition occurs at approximately Q_{MAX}, where t = 90 seconds, and α = 10 degrees.

Aerodynamic data in the form of normal and axial force distribution along the vehicle for the given angle of attack and mach number were utilized.

The weight distribution used included vehicle component weights and propellant loading at the time point investigated, in conjunction with the associated centers of gravity.

RIGID BODY BENDING MOMENT DISTRIBUTION

MACH = 1.074, α = 10°

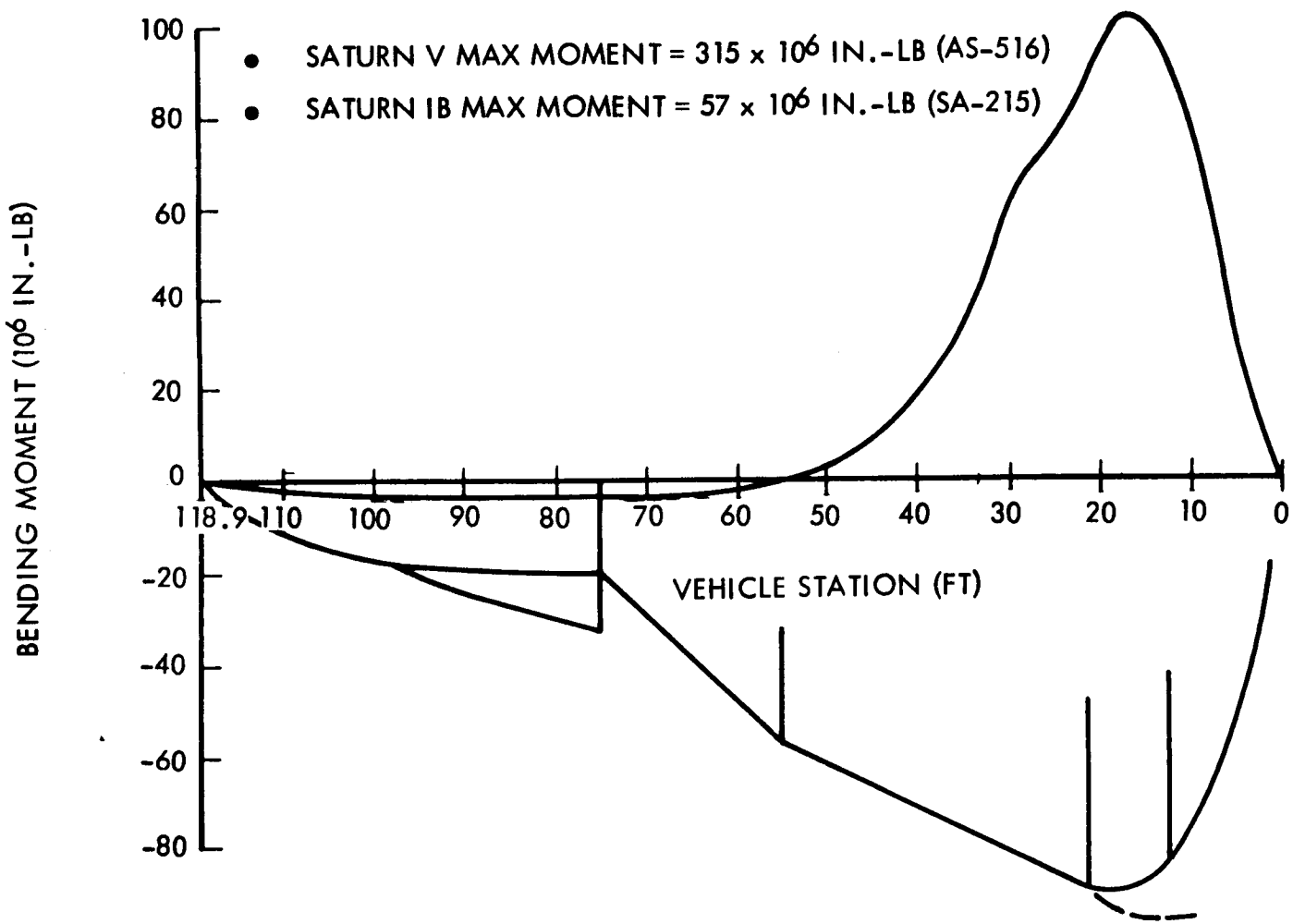

SERV SLOSH BEHAVIOR

A preliminary analysis was made of the propellant sloshing characteristics in the LOX and LH_2 tanks during the ascent phase of flight. The first sloshing frequency range from the LOX tank varies between approximately 1.8 rad/sec to 0.1 rad/sec from tank top to near the tank bottom, respectively. The first sloshing frequency range for the LH_2 tank varies between 2.4 rad/sec to 0.4 rad/sec, approximately, from tank top to tank bottom, respectively. An open loop stability analysis was performed, and, as both LOX and LH_2 system roots were located in the right hand plane of the root locus plot, this indicated an open loop instability. By adding a 4 percent damping the LH_2 root moved into the stable region, however, a 4 percent damping did not bring the LOX root into the stable region. Therefore, the addition of baffles in the LOX tank will be necessary to reduce the effective sloshing mass and raise the LOX sloshing frequency to ensure adequate damping.

SERV SLOSH BEHAVIOR

- UNDAMPED SLOSH FREQUENCIES
  - LH_2 TANK 2.4 RAD/SEC TO 0.4 RAD/SEC
  - LOX TANK 1.8 RAD/SEC TO 0.1 RAD/SEC
- 4 PERCENT DAMPING STABILIZES LH_2 SYSTEM
- TO STABILIZE LOX SYSTEM REQUIRES MORE THAN 4 PERCENT DAMPING
- SLOSH BAFFLES INDICATED FOR LOX TANK TO RAISE SLOSH FREQUENCY AND REDUCE SLOSH MASS

SERV REENTRY TRAJECTORY PARAMETERS

Histories of altitude and dynamic pressure during reentry as a function of reentry velocity are presented. A flight path angle of -2 degrees and a velocity of 25,000 feet per second at an altitude of 400,000 feet were chosen as typical initial conditions. A constant W/C_dA of 50 lb/ft^2 and a constant L/D of 0.3 were assumed. The maximum values of deceleration and dynamic pressure experienced were 2.7 g and 140 lb/ft^2, respectively.

SERV REENTRY TRAJECTORY PARAMETERS

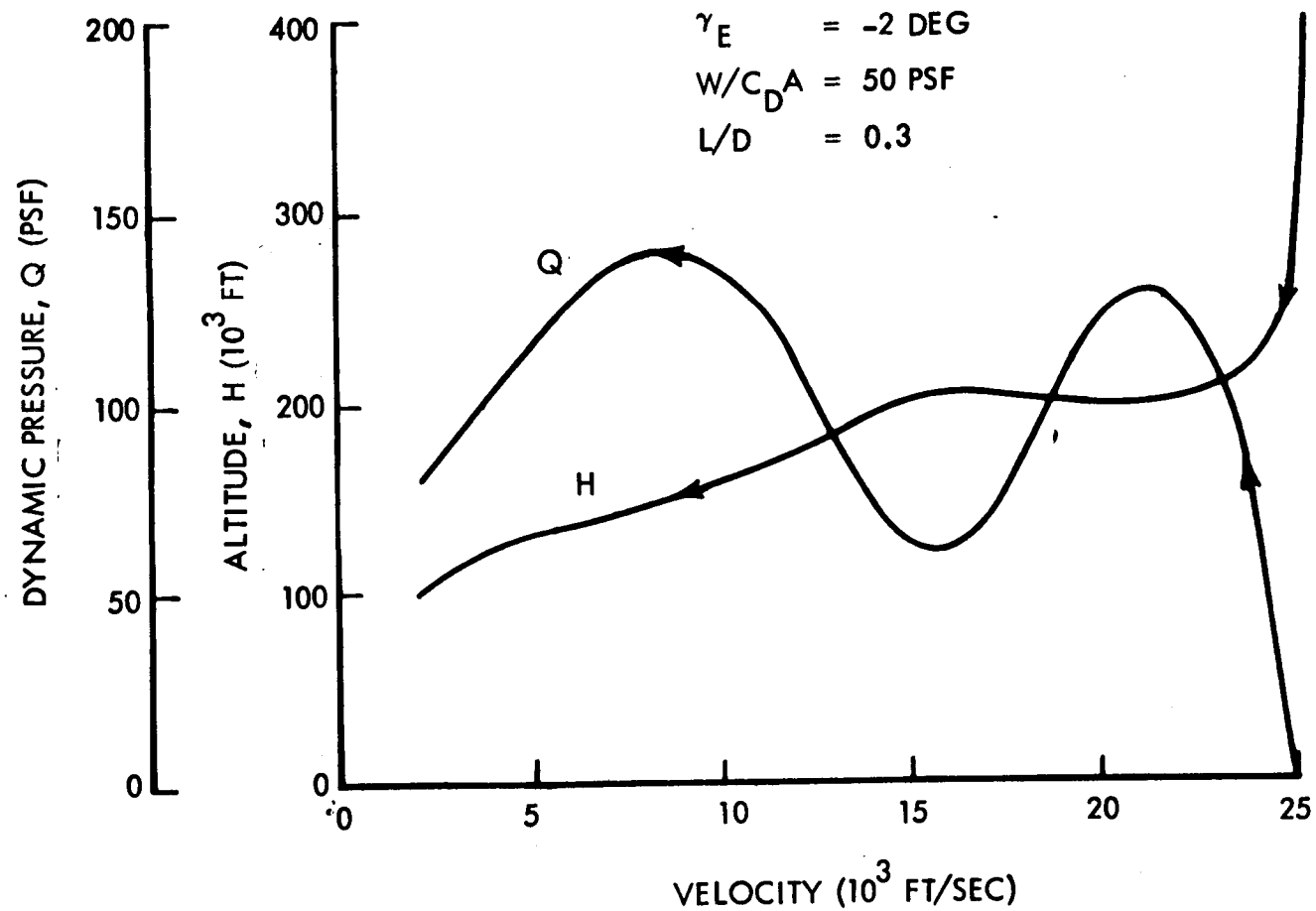

SPACE DIVISION CHRYSLER CORPORATION

INFLUENCE OF SERV CONTOUR ON L/D DURING REENTRY

The hypersonic L/D characteristic of a configuration, such as SERV re-entering the atmosphere at a given angle of attack, is influenced by the diameter and corner radius. Several combinations were considered. The finally selected combination was:

- $L/D = 0.3$
- $R_c = 0.10D$
- $\alpha = 22°$

INFLUENCE OF SERV CONTOUR ON L/D DURING REENTRY

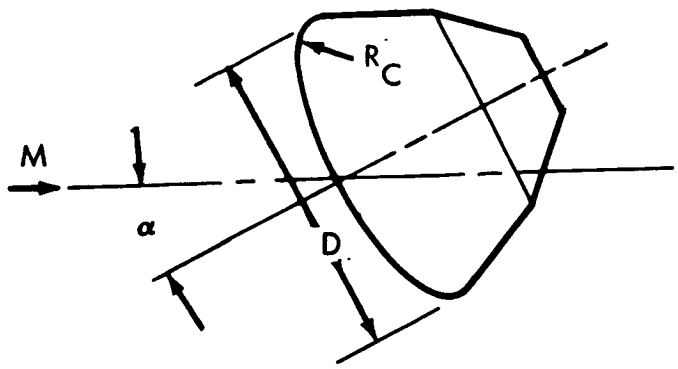

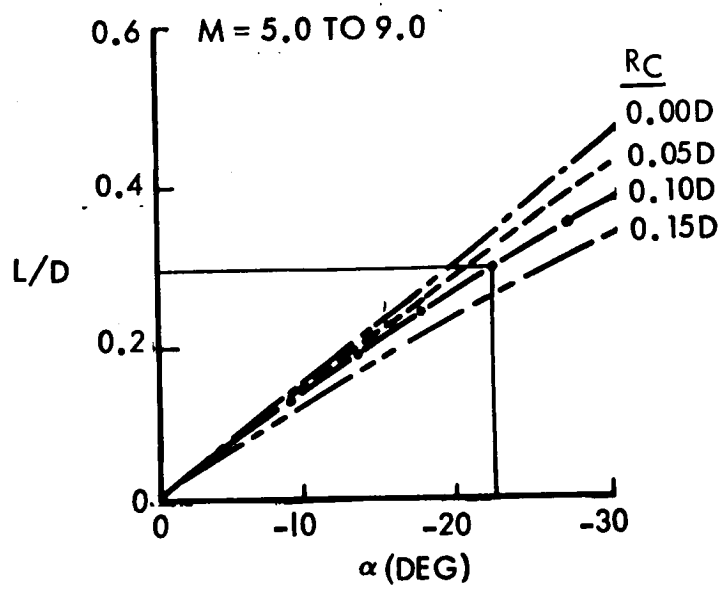

SERV TRIM DURING REENTRY

It is essential to statically trim the vehicle to a given angle of attack to ensure that the desired L/D is achieved. The SERV is already trimmed in orbit prior to reentry at a 22 degree angle of attack because the center of gravity is located 2.68 feet from the vehicle centerline.

Provision is made for fine trimming to accommodate minor center of gravity excursions due to imperfect cargo loading. For subsonic flight and landing, the center of gravity is shifted back to the centerline.

SERV TRIM DURING REENTRY

$\frac{L}{D} = 0.3$

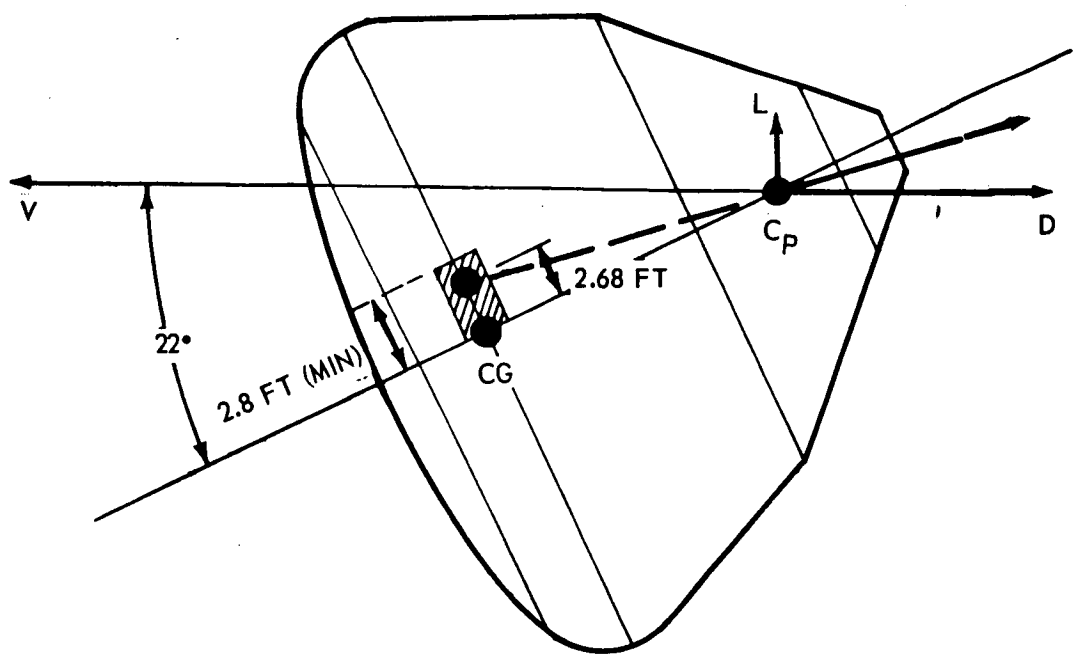

SERV REENTRY STATIC STABILITY CHARACTERISTICS

Center of pressure location and normal force coefficient gradients are presented on this chart. The vehicle re-enters at an angle of attack of -22 degrees. At approximately $M = 4.3$, center of gravity trimming commences and continues until the vehicle is trimmed at zero angle of attack at approximately Mach 1.8. It will be noted that the stability characteristics undergo a marked excursion after center of gravity trim is completed, and that the resultant moment continues to aerodynamically stabilize the vehicle.

SERV REENTRY STATIC STABILITY CHARACTERISTICS

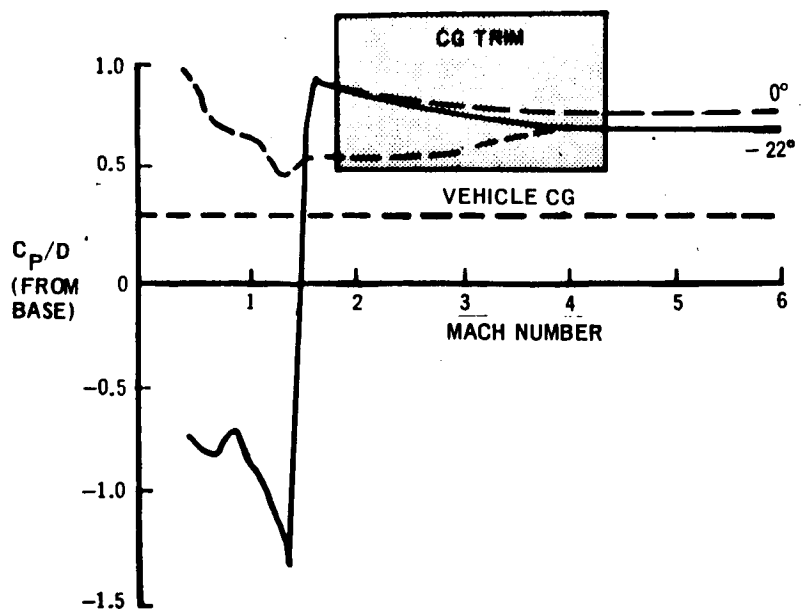

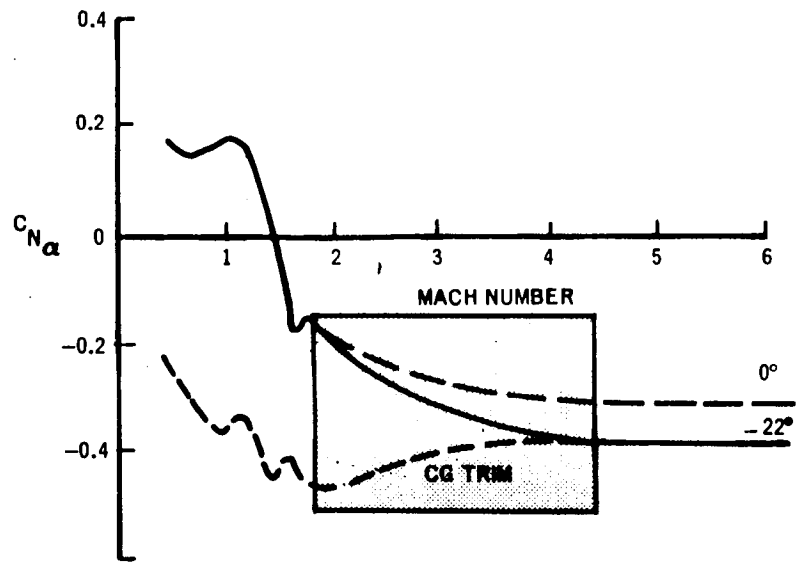

SERV REENTRY CONTROLLABILITY

Following deorbit through Mach 1.8 the SERV is aerodynamically stable, with the desired L/D achieved by trimming the vehicle to the required angle of attack. During this period, limited translation from a nominal trajectory to permit the vehicle to converge on a preselected landing site may be obtained by roll control provided by the RCS thrusters.

At velocities below Mach 1.8 the vehicle enters a region of cross winds that can affect the aerodynamic stability. A preliminary controllability analysis through this period was performed to examine the behavior of the vehicle when subjected to the impact of wind and superimposed wind gusts and to establish control requirements. This analysis indicated that the lowest system weight was obtained by allowing the SERV to follow the relative wind angle by turning into the wind under the influence of its inherent weathercock characteristic. Since the vehicle, at low velocities, oscillates about the mean position, the aforementioned RCS thrusters will be used in a pitch-yaw combination to damp out the oscillations, thereby inhibiting any tendency to diverge. The thrusters would be operated in a "bang-bang" mode by a rate sensor. It is estimated that a pitch or yaw thrust of 2000 to 3000 pounds will be adequate for this purpose. However, more definitive aerodynamic data is required before the system can be accurately sized.

SERV REENTRY CONTROLLABILITY

- SERV AERODYNAMICALLY STABLE FROM HYPERSONIC REENTRY THROUGH MACH 1.8
- ROLL CONTROL PROVIDED TO ACHIEVE DESIRED LANDING SITE WITHIN LANDING FOOTPRINT
- WINDS AND SUPERIMPOSED WINDGUSTS ENCOUNTERED BELOW MACH 1.8
- LET SERV TURN INTO WIND
- DAMP OUT OSCILLATIONS USING PITCH-YAW THRUSTERS, BANG-BANG SYSTEM, RATE SENSOR OPERATED

PEAK TEMPERATURES

Thermal protection for the SERV has been separated into two areas; an ablator on the blunt end and a non-ablative conical portion. The ablator will be a low density silicone elastromeric material in a phenolic honeycomb. The thermal protection on the conical portion will be a radiative shingle of Rene 41 or titanium. The shingle will be attached to a hat section, which in turn, is attached to the stainless steel honeycomb of the main vehicle structure. A strip of MIN-K will be used between the shingles and the hat sections to reduce the heat transfer between the shingles and the stainless steel honeycomb. Titanium shingles will be used in the lower heating areas to save weight. Micro-Quartz insulation will be used between the shingles and the stainless steel honeycomb and the thickness varied according to the variation in heating rate.

The accompanying chart shows the peak external surface temperatures that the SERV will experience during reentry. They are based upon a $L/D = 0.3$, $W/C_DA = 50\ lb/ft^2$, and an entry angle of -2 degrees. The internal temperatures will be less than those shown. The maximum temperature on the ablator surface will be 3300°F and the minimum temperature less than 2990°F. The maximum temperature at the stagnation point will be approximately 3100°F. The conical section has a maximum external temperature of 1320°F and a minimum of 730°F. The ablator design was based on a requirement to maintain the supporting stainless steel honeycomb at a temperature of not more than 800°F.

PEAK TEMPERATURES

$L/D = 0.3 \quad W/C_D A = 50\ LB/FT^2 \quad \gamma_E = -2\ DEG$

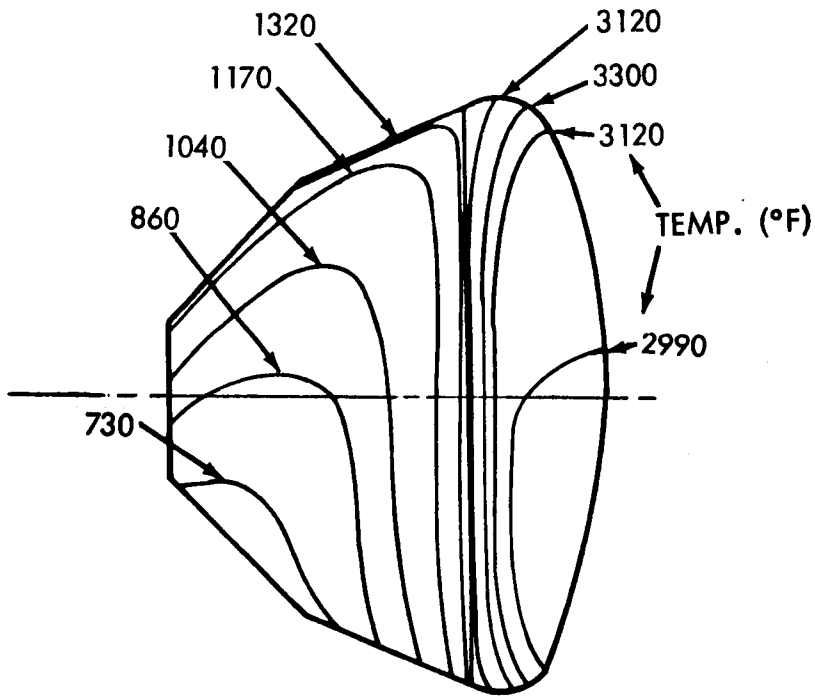

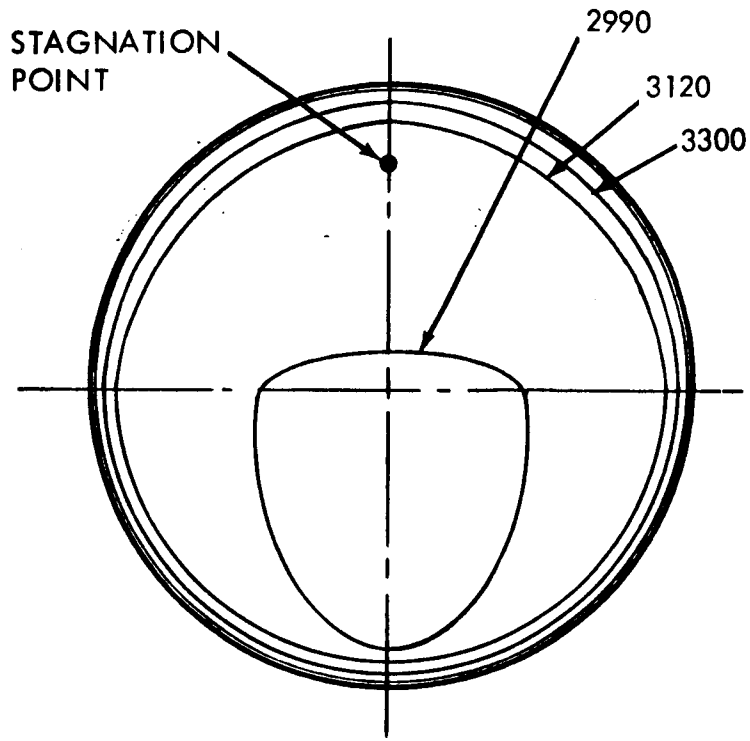

ABLATOR EXTERNAL SURFACE TEMPERATURE

The ablator external surface temperature is presented as a function of time. The results are for the maximum, average, and minimum thickness locations. Temperatures for all three cases peak at 225 seconds, and occur 25 seconds after peak heating. The external surface temperatures respond fairly rapidly to the heating received during the initial phase of the reentry. However, the external surface temperature does not decrease as rapidly as the decrease in heating rate after approximately 400 seconds. This is due to heat that has been absorbed by the heat shield prior to 400 seconds conducting back to the external surface, thereby increasing the external surface temperature.

ABLATOR EXTERNAL SURFACE TEMPERATURE

$L/D = 0.3 \quad W/C_D A = 50\ LB/FT^2 \quad \gamma_E = -2\ DEG$

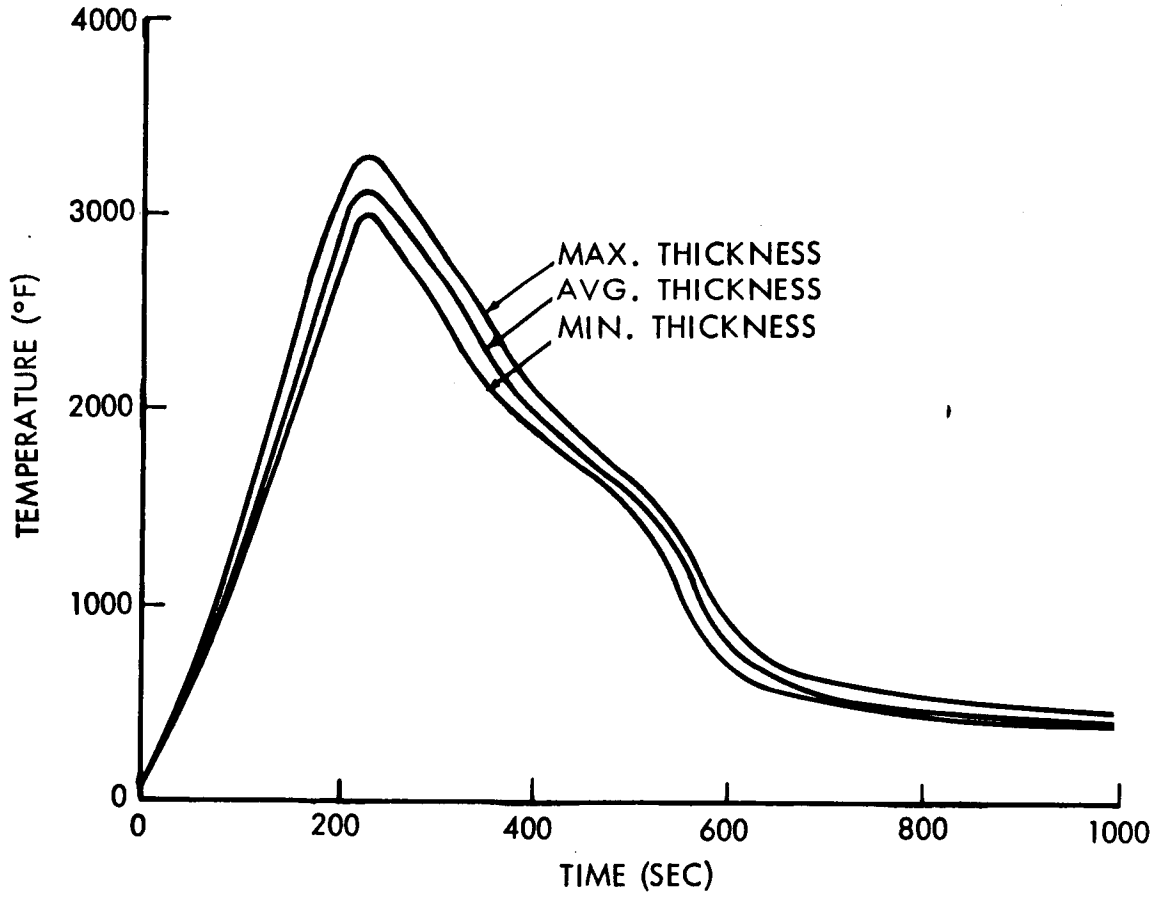

STAGNATION POINT HEATING RATE

The stagnation point during reentry on the SERV will experience the aerodynamic heating rate history presented on the chart. This heating rate was based upon a $L/D = 0.3$, $W/C_DA = 50\ lb/ft^2$, and an entry angle of -2 degrees. The stagnation point will experience an increase in heating to a maximum of 90 $Btu/sec\text{-}ft^2$ at approximately 200 seconds after reentry initiation. This aerodynamic heating rate will then decrease to a relatively low value at approximately 500 seconds. After 600 seconds, aerodynamic cooling will occur on the ablator surface.

The aerodynamic heating rate at other locations on the heat shield will be in ratio to the aerodynamic heating rate at the stagnation point. The maximum heating location on the heat shield will experience heating rates twice as high as that at the stagnation point.

STAGNATION POINT HEATING RATE

$L/D = 0.3 \quad W/C_D A = 50\ LB/FT^2 \quad \gamma_E = -2\ DEG$

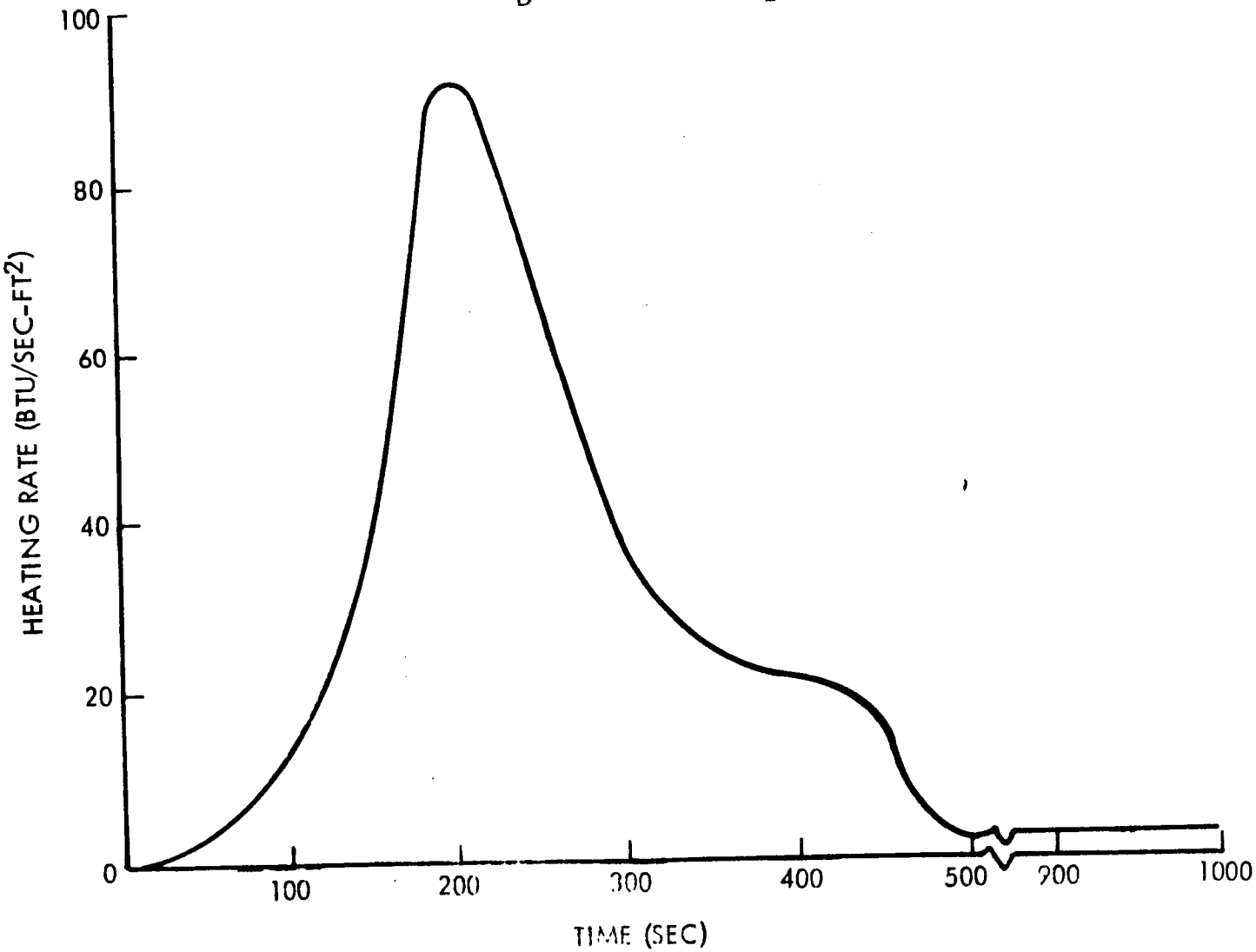

37

SPACE DIVISION CHRYSLER CORPORATION

ABLATOR TEMPERATURE TIME HISTORY AT MAXIMUM THICKNESS

The temperature history of four locations within the ablator is shown on this chart. Results are for a maximum thickness case of 1.2 inches. The general trend at each location is for the temperatures to increase to a maximum value and then decrease. The closer to the external surface, the higher the maximum temperature and the sooner after initiation of reentry will the maximum temperature occur. The external surface experiences a maximum temperature of 3300°F at 225 seconds, while at 0.4 inches from the external surface a maximum temperature of 1400°F occurs at 620 seconds. At 1000 seconds, the temperature at 0.8 inches from the external surface has not quite reached its maximum value. At this time the rear face of the ablator, 1.2 inches from the front face, has just begun to increase in temperature, but has only reached 200°F.

ABLATOR TEMPERATURE TIME HISTORY AT MAXIMUM THICKNESS

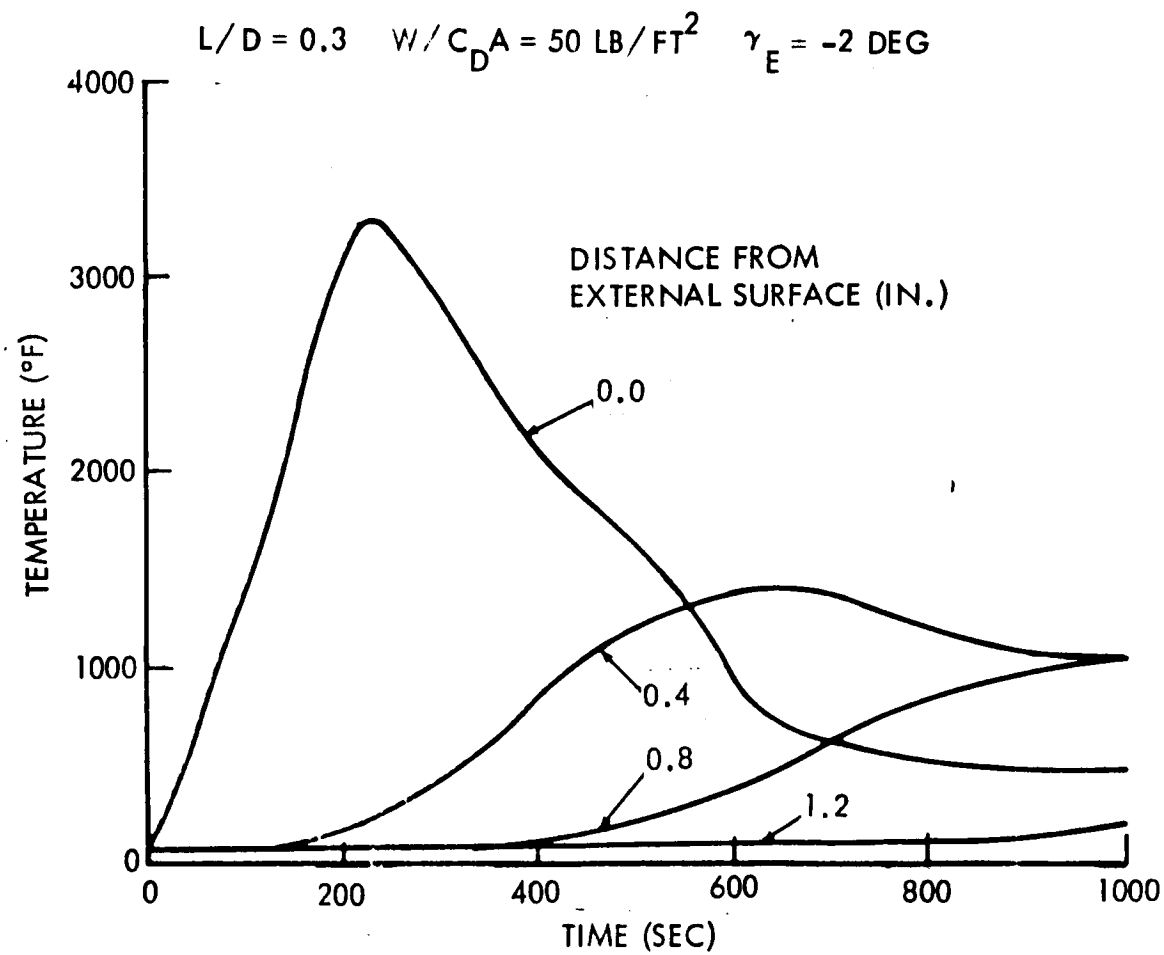

.18

SPACE DIVISION CHRYSLER CORPORATION

ABLATOR TEMPERATURE DISTRIBUTION AT MAXIMUM THICKNESS

The chart presents ablator temperature as a function of distance from the external surface for the maximum ablation thickness case. The temperatures are presented for various times during reentry. From the chart it will be noted that aerodynamic heating at 100 seconds has caused a change in ablator temperature to a depth of approximately 0.3 inches. At 220 seconds (maximum external temperature of 3300°F) the depth of heat penetration is only 0.48 inches, or about 40 percent of the material depth. The temperature distribution at 600 seconds shows that the external temperature has decreased to a value of 900°F, while the maximum temperature of approximately 1450°F occurs at 0.3 inches from the external surface. The temperature of the internal surface at this time has not risen from the initial temperature of 80°F. After maximum external temperature, the maximum temperature of the ablator will decrease and the location of the maximum will move away from the external surface with increasing time. The maximum temperature at 1000 seconds has decreased to 1100°F and occurs at 0.7 inches from the external surface.

ABLATOR TEMPERATURE DISTRIBUTION AT MAXIMUM THICKNESS

$L/D = 0.3 \quad W/C_DA = 50\ LB/FT^2 \quad \gamma_E = -2\ DEG$

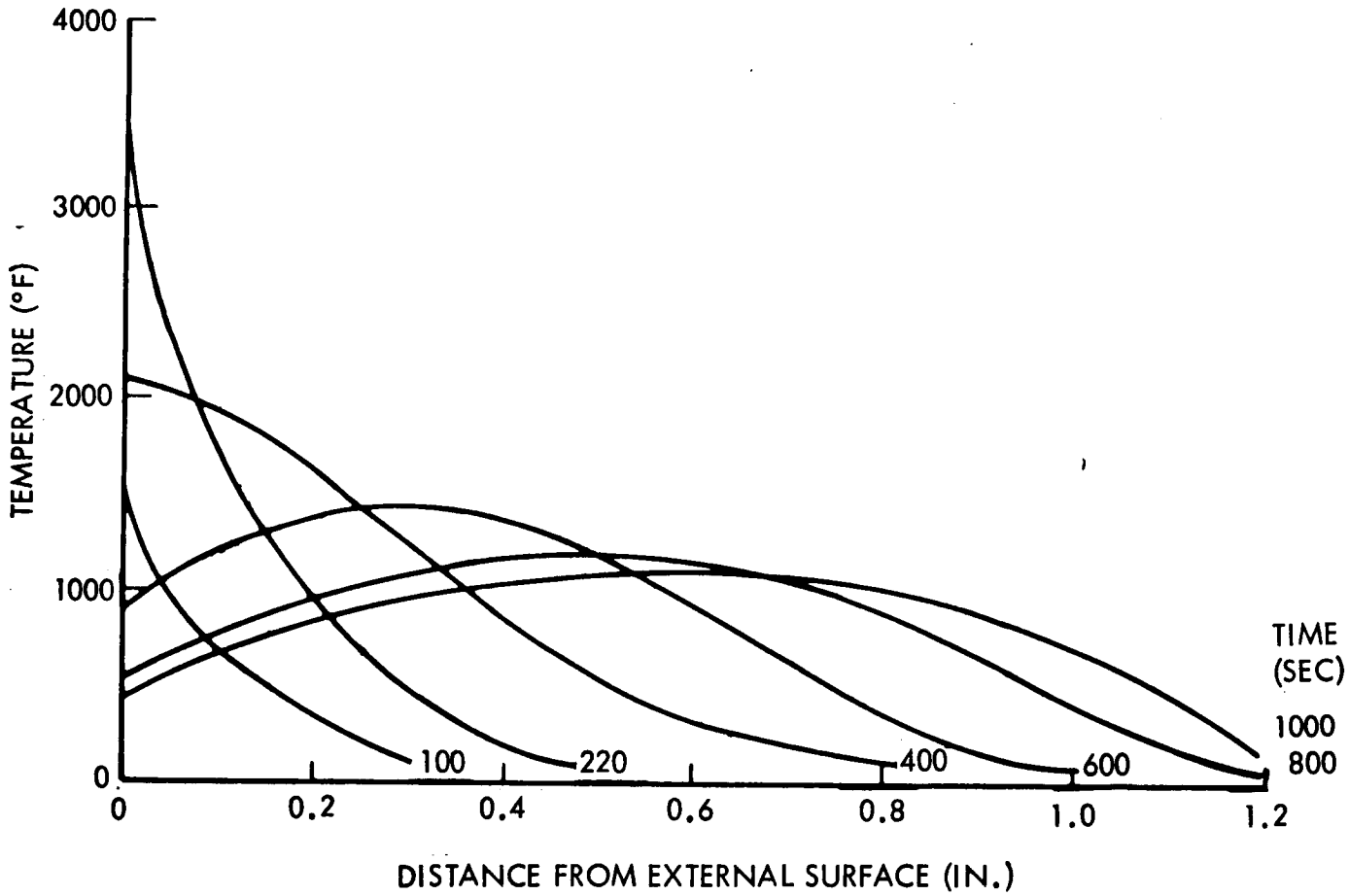

THERMAL PROTECTION UNIT WEIGHT

The SERV thermal protection weight requirements are presented on the next chart. These requirements are based upon reducing the boil-off while on the launch pad, withstanding boost aerodynamic heating, and providing protection of the substructure from aerodynamic heating during reentry. The reentry trajectory is based upon an $L/D = 0.3$, $W/C_DA = 50$ lb/ft^2, and a reentry angle of -2 degrees. The blunt end will be protected by a low density ablator, while the conical portion will be protected by a reusable insulated shingle. The ablator weight will vary from 1.7 lb/ft^2 to 1.9 lb/ft^2. The maximum weight per square foot occurs at the corner, where the heating rate increases to nearly twice the stagnation point heat rate. The thermal protection requirement at the stagnation point will be 1.78 lb/ft^2. The conical portion of the SERV requires thermal protection that varies from 1.4 lb/ft^2 to 2.2 lb/ft^2 in order to maintain a stainless steel honeycomb maximum temperature of less than 800°F. The thermal protection weight on the conical section decreases with increased distance from the windward meridian and from the blunt end.

THERMAL PROTECTION UNIT WEIGHT

$L/D = 0.3 \quad W/C_D A = 50\ LB/FT^2 \quad \gamma_E = -2\ DEG$

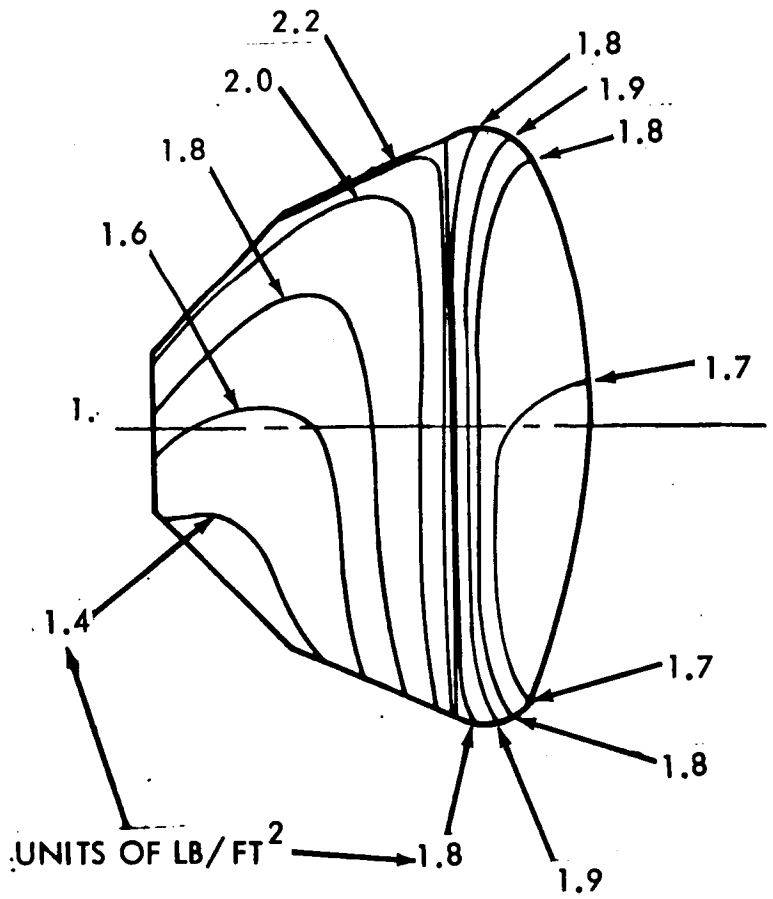

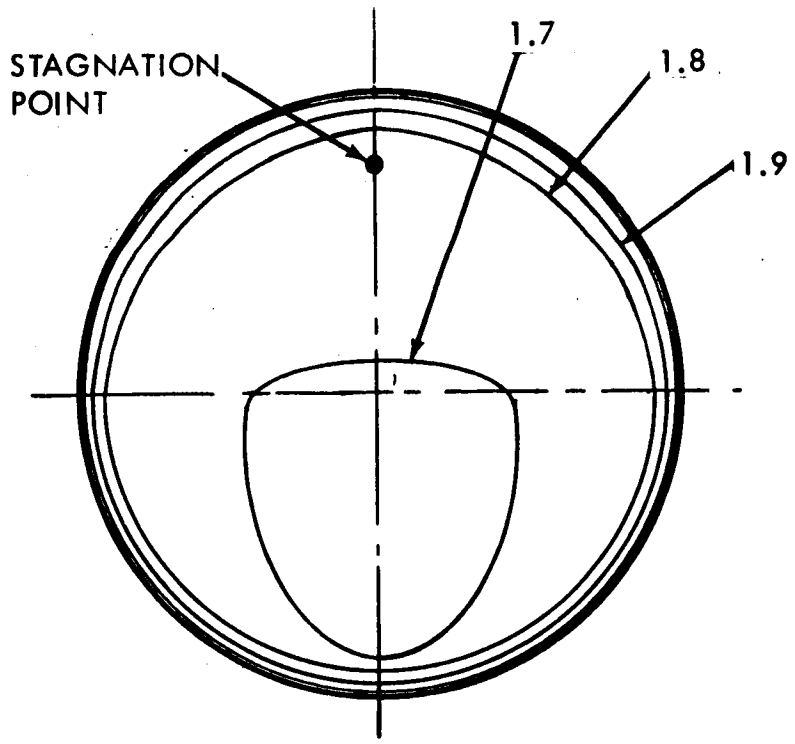

ABLATOR THERMAL PROTECTION REQUIREMENTS

The chart presents a summary of the ablator heat shield weights and thicknesses. These estimates were based upon phenolic honeycomb filled with a low density silicone elastomeric material. The unit weight ranges from a maximum of 1.90 lb/ft^2 to a minimum of 1.70 lb/ft^2 and corresponds to a thickness of 1.20 inches to 1.08 inches, respectively. The average ablator heat shield weight will be 1.80 lb/ft^2. This corresponds to a thickness of 1.14 inches.

ABLATOR THERMAL PROTECTION REQUIREMENTS

$L/D = 0.3 \quad W/C_D A = 50\ LB/FT^2 \quad \gamma_E = -2\ DEG$

HEAT SHIELD REQUIREMENT	UNIT WEIGHT (LB/FT^2)	THICKNESS (IN.)
MAXIMUM	1.90	1.20
AVERAGE	1.80	1.14
MINIMUM	1.70	1.08

Section 4

VEHICLE DESIGN

INTRODUCTION

The feasibility of a single stage to orbit rests on the ability to engineer a structure within given weight constraints without depending on anticipated advanced materials technology or unrealistic weight reduction programs. The key to engineering a light weight structure for the single-stage-to-orbit application demands the avoidance of concentrated point loads, and requires the gentle melding and diffusion of loads into circular structures. CCSD believes that this is not only possible but practicable by the marriage of an aerospike engine to the structure to form an integral stage. The large diameter of the SERV has a performance disadvantage due to its high drag through the lower atmosphere. On the credit side, however, the large diameter permits a drastic reduction in the axial thrust loads per unit length of the perimeter. In the configuration under consideration these unit loads are at the low level of approximately 1,600 pounds per lineal inch, and the type of structure required to support this level of loading can be readily visualized. Clearly, there is a trade-off between loading and drag, and many iterations have been made to arrive at the present 90 foot diameter from an initial selection of 110 feet. The goal of reducing the diameter to 88 feet may be achieved when more precise aerodynamic data become available. This goal has a practical significance because the 88-foot diameter could pass through the lock and bascule bridges at KSC, thereby permitting the full utilization of existing dock facilities.

This section discusses the structural approach adopted, presents structural weights for scrutiny, describes the propulsion systems, and presents the terminal landing approach.

VEHICLE DESIGN

- DESIGN CRITERIA
- STRUCTURES
- PROPULSION
- THERMAL PROTECTION SYSTEM
- SUBSYSTEMS
- TERMINAL LANDING APPROACH

DESIGN CRITERIA

The design criteria used for the structural and system design is shown on the accompanying chart.

DESIGN CRITERIA

- 1.4 STRUCTURAL SAFETY FACTOR
- 1.5 LOADING FACTOR APPLIED TO DYNAMIC PRESSURES AT REENTRY BULKHEAD
- 3G MAXIMUM ASCENT AND DESCENT
- SHOCK IMPINGEMENT LOADING APPLIED OVER UPPER SHELL
- 10% STRUCTURAL CONTINGENCY
- 3% ULLAGE VOLUME
- LANDING IMPACT, 3G LIMIT, 17 FPS VERTICAL, 3 FPS HORIZONTAL AT 10 DEGREES ATTITUDE
- 6 MIN TURBOFAN DURATION AT FULL THRUST
- 50 HR MINIMUM TURBOFAN LIFE, 500 OPERATIONS OF 6 MINUTES AT FULL THRUST
- 15% TURBOFAN THRUST RESERVE OVER HOVER REQUIREMENTS
- ONE TURBOFAN OUT CAPABILITY
- 4 MILES MAXIMUM HORIZONTAL TRANSLATION
- ALL SYSTEMS MANRATED BUT VEHICLE TO OPERATE IN UNMANNED MODE
- ALL-WEATHER OPERATION

VEHICLE WEIGHT BREAKDOWN

The vehicle weight breakdown is shown for ascent and descent. Two configurations are presented for the ascent; one with a MURP, and one without. With the MURP, a cargo module plus 25,000 pounds of cargo and propellant, to give a ΔV equal to 2000 fps, is lofted into orbit. Without the MURP, 77,000 pounds of cargo only is lofted; to achieve this performance an aerodynamic spike is considered necessary to reduce vehicle drag. In each case the gross payload is 88,060 pounds. This payload corresponds to a weight at lift-off of 4.5 million pounds. The return cargo is 50,000 pounds and the weight at touch-down is 414,445 pounds.

VEHICLE WEIGHT BREAKDOWN

(100-NM, 55-DEG CIRCULAR ORBIT)

ITEM	ASCENT WEIGHTS (LB)		SERV DESCENT WEIGHTS (LB)
	WITH MURP	WITHOUT MURP	
PAYLOAD (TOTAL)	(88,060)	(88,060)	(61,000)
NET CARGO	25,000	77,060	50,000
MURP (INCLUDES 2-MAN CREW)	29,800	-	-
ABORT SUBSYSTEM	6,300	-	-
CARGO MODULE (EMPTY)	7,550	-	-
AERODYNAMIC SPIKE	-	10,000	10,000
CONTINGENCY (10%)	4,370	1,000	1,000
EXPENDABLES	2,340	-	-
MANEUVERING PROPELLANTS (2000 FPS ΔV)	12,700	-	-
SERV (TOTAL)	(406,445)	(406,445)	(353,445)
SERV (EMPTY)	336,845	336,845	336,845
JET FUEL (JP-4)	33,600	33,600	12,600
RCS PROPELLANTS (INCLUDING DEORBIT)	21,400	21,400	3,500
FPR PROPELLANTS (0.75%)	8,000	8,000	-
RESIDUALS	6,600	6,600	500
WEIGHT INJECTED INTO CIRCULAR ORBIT	494,505	494,505	-
WEIGHT LANDED	-	-	414,445
ASCENT PROPELLANTS CONSUMED	4,005,495	4,005,495	-
TOTAL WEIGHT AT LIFTOFF	4,500,000	4,500,000	-
ENGINE THRUST AT LIFTOFF	5,400,000	5,400,000	-

SERV DRY WEIGHT BREAKDOWN

This chart shows an inert weight breakdown for the primary systems of the SERV. The total dry weight is 336,845 pounds and includes a 10 percent inert weight contingency.

SERV DRY WEIGHT BREAKDOWN

(POUNDS)

• PRIMARY STRUCTURE	134,494
• THERMAL PROTECTION SYSTEM	31,636
• LANDING GEAR AND SUPPORT	12,000
• ACTUATORS FOR DOORS AND COVERS	3,000
• TURBOFAN JET ENGINES	23,800
• TURBOFAN CONTROL AND SUPPORT STRUCTURE	12,000
• TURBOFAN FUEL TANKS AND LINES	2,000
• PROPELLANT FEED AND PRESSURIZATION	1,200
• GN&C, POWER, AND COMMUNICATIONS	5,000
• AEROSPIKE ROCKET ENGINE	76,000
• RCS AND DEORBIT ENGINE SYSTEM	5,000
• CONTINGENCY (10%)	30,715
TOTAL DRY WEIGHT	336,845

FLUIDS INVENTORY

The propellants on board at lift-off include mainstage LOX and LH_2 required for injection into low earth orbit, a flight performance reserve of 8,000 pounds equivalent to 0.75 percent ideal velocity, and pressurant for the main propellant tanks.

During orbital stay time residual propellant is allowed to boil off to maintain tank pressures at the maximum allowable values; excess gases are vented overboard. RCS/ACS propellants are consumed as required to maintain attitude rates within prescribed limits for coarse or fine hold to position the SERV for cargo docking, and to provide the required reentry retro impulse.

During the reentry phase, RCS propellants are consumed to maintain roll control of the reentering SERV, and to maintain attitude during the transonic and subsonic phase of reentry. Separately stored pressurant is used to pressurize the main propellant tanks to atmospheric pressure.

JP-4 fuel is consumed by turbofan lift engines during the terminal approach and landing phase.

FLUIDS INVENTORY

ITEM	FLIGHT CONDITION			
	LIFT-OFF	BURNOUT	DE-ORBIT	LANDING
FUEL SYSTEM	(612,200)	(40,000)	(35,300)	(1200)
HYDROGEN	573,400	1,000	0	0
PRESSURANT (GH_2)	600*	800*	1,200*	1200
JP-4 FUEL	33,600	33,600	33,600	0
RCS/ACS (LH_2)	3,400	3,400	500	0
FPR (LH_2)	1,200	1,200	0	0
OXIDIZER SYSTEM	(3,463,100)	(29,600)	(7,300)	(4800)
OXYGEN	3,438,100	1,800	0	0
PRESSURANT (GOX)	200	3,000	4,800	4800
RCS/ACS (LOX)	18,000	18,000	2,500	0
FPR (LOX)	6,800	6,800	0	0
TOTAL	4,075,300	69,600	42,600	6000

*500 LB IN SEPARATE STORAGE TANK FOR RE-PRESSURIZATION TO ATMOSPHERIC PRESSURE DURING REENTRY.

MASS CHARACTERISTICS DURING ASCENT

The chart presents the mass characteristics during ascent. The center of gravity during descent is 24.5 feet forward of the heatshield centerline during re-entry.

MASS CHARACTERISTICS DURING ASCENT

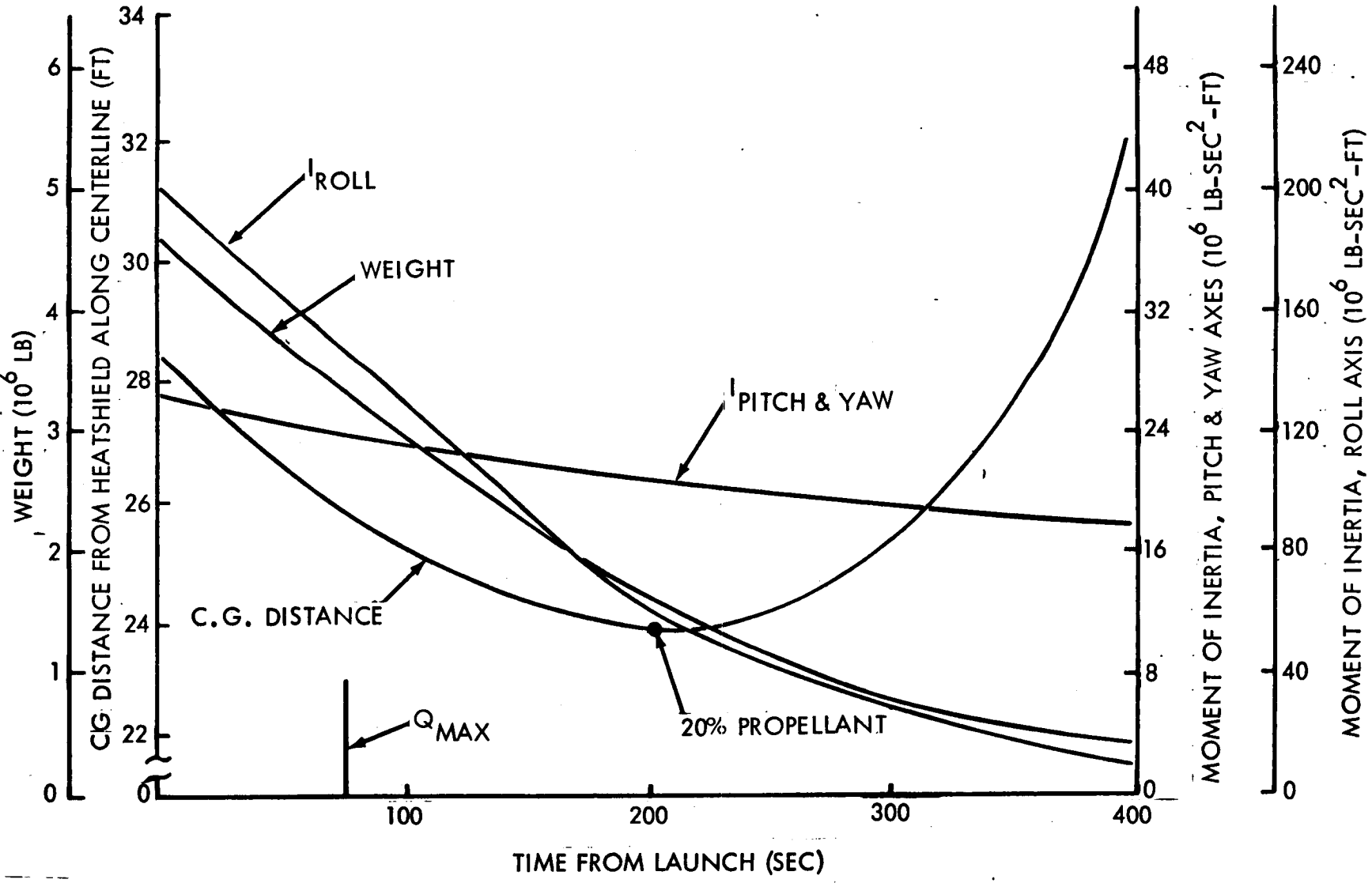

47

SPACE DIVISION CHRYSLER CORPORATION

PRIMARY PROPULSION

The chart lists the characteristics of the primary propulsion for both ascent and descent.

PRIMARY PROPULSION

ASCENT PROPULSION

- INTEGRAL AEROSPIKE ENGINE
- NAR ROCKETDYNE DIVISION
- 5.4M LB SEA LEVEL THRUST
- 12 MODULES AT 450K EACH
- 7.3M LB VACUUM THRUST
- 76,000 LB ENGINE WEIGHT
- 86 FT DIAMETER BY 8 FT LONG
- LOX/LH AT 6:1 MIXTURE RATIO
- 2000 PSI CHAMBER PRESSURE
- 490:1 EXPANSION RATIO

LANDING PROPULSION

- TURBOFAN LIFT JET ENGINES
- ROLLS-ROYCE & GMC ALLISON DIVISION
- 476,000 LB SEA LEVEL THRUST
- 28 ENGINES AT 17K EACH
- ALTITUDE OPERATION TO 26,000 FT
- 20:1 ENGINE THRUST TO WEIGHT
- JP-4 FUEL AT SFC ≈ 0.8
- 6 MINUTE RUN TIME AT FULL THRUST
- 500 6-MINUTE RUNS BETWEEN OVERHAULS

SERV STRUCTURAL ARRANGEMENT

The structural arrangement of the SERV consists of a stepped frustrum symmetrically located around two concentric cylinders with the heatshield as the base of the outer cylinder. A common ring at the intersection of the top of thr frustrum and the inner cylinder serves as a structural interface between the booster and the payload interstage. The thrust ring at the base of the stepped frustrum provides a mount for the aerospike engine, and the attachment point for the aerospike protection doors which complete the closure between the frustrum and the heatshield. A semi-toroidal bulkhead between the inner and outer cylinders completes the liquid hydrogen tank, and a similar bulkhead between the outer cylinder and frustrum base completes the closure for the liquid oxygen tank. The weight and material for each major structural element is presented on the following chart.

SERV STRUCTURAL ARRANGEMENT

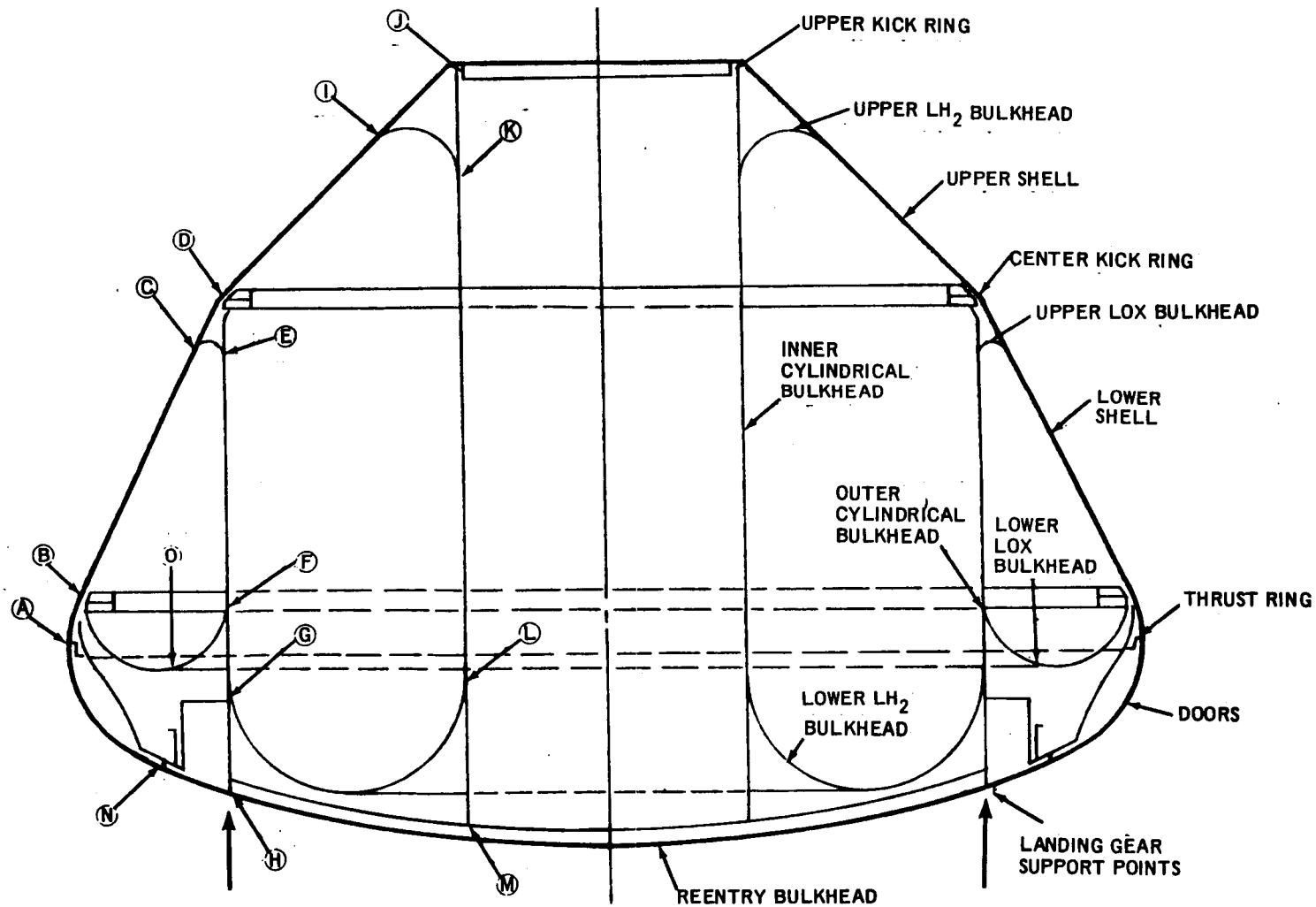

SERV STRUCTURAL WEIGHT BREAKDOWN

This chart shows a weight breakdown for the primary structural components that comprise the SERV. The chart should be used in conjunction with the previous chart and the vehicle weight breakdown.

SERV STRUCTURAL WEIGHT BREAKDOWN

LOCATION	DESCRIPTION	WEIGHT (LB)
A-B	THRUST RING	10,307
B	LOWER KICK RING	3,748
B-C	LOWER SHELL (2.5" HONEYCOMB)	11,525
C-D	LOWER SHELL (4.5" HONEYCOMB)	2,071
D	CENTER KICK RING	3,326
D-H	OUTER CYLINDRICAL BULKHEAD (4.5" HONEYCOMB)	31,296
F-D	PARTIAL LOWER LOX BULKHEAD (0.023 SHEET)	2,474
D-B	PARTIAL LOWER LOX BULKHEAD (3.64" HONEYCOMB)	4,076
D-J	UPPER SHELL (4.9" HONEYCOMB)	9,351
I-J	UPPER SHELL (3.1" HONEYCOMB)	2,394
J	UPPER KICK RING	328
J-M	INNER CYLINDRICAL BULKHEAD (3.9" HONEYCOMB)	8,883
K-J	UPPER LH_2 BULKHEAD (0.010 SHEET)	503
L-G	LOWER LH_2 BULKHEAD (0.010 SHEET)	1,935
H-H	REENTRY BULKHEAD (4.5" HONEYCOMB)	10,110
H-H	SUPPORT BEAMS (10" DEEP)	5,153
N-H	REENTRY BULKHEAD (4.5" HONEYCOMB)	3,261
N-A	AEROSPIKE DOORS (TAPERED HONEYCOMB)	10,963
	JOINTS, BAFFLES, AND MISC BRACKETS	12,790
	TOTAL PRIMARY STRUCTURE WEIGHT	134,494

- ALL STEEL CONSTRUCTION
- ALL HONEYCOMB FROM STRESS SKIN PANELS

PROPELLANT PRESSURIZATION HISTORIES

During the initial portion of the flight, tank liquid head is sufficient to meet the pump inlet requirements, and the tanks are maintained at atmospheric pressure until absolute tank ullage pressure reaches the respective propellant vapor pressure; after this time, the ullage pressure is maintained at the vapor pressure. Resultant tank bottom pressures are also shown. Liquid head and acceleration effects are included.

PROPELLANT PRESSURIZATION HISTORIES

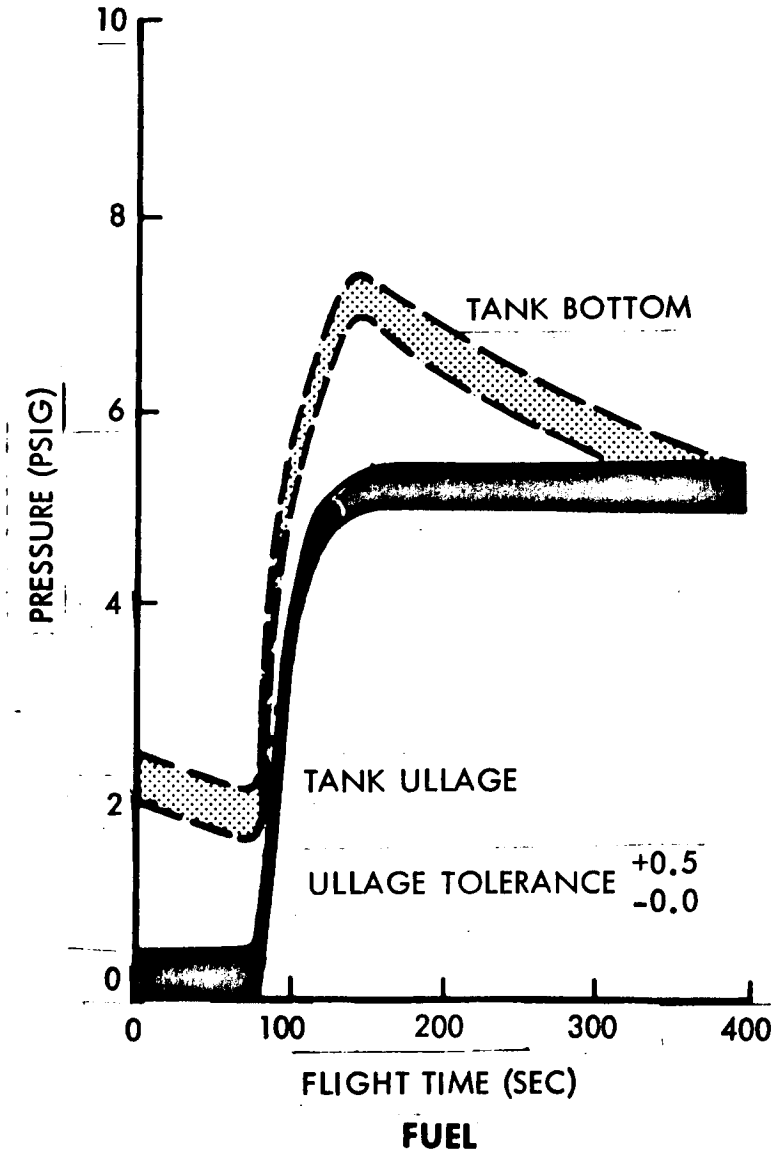

FUEL

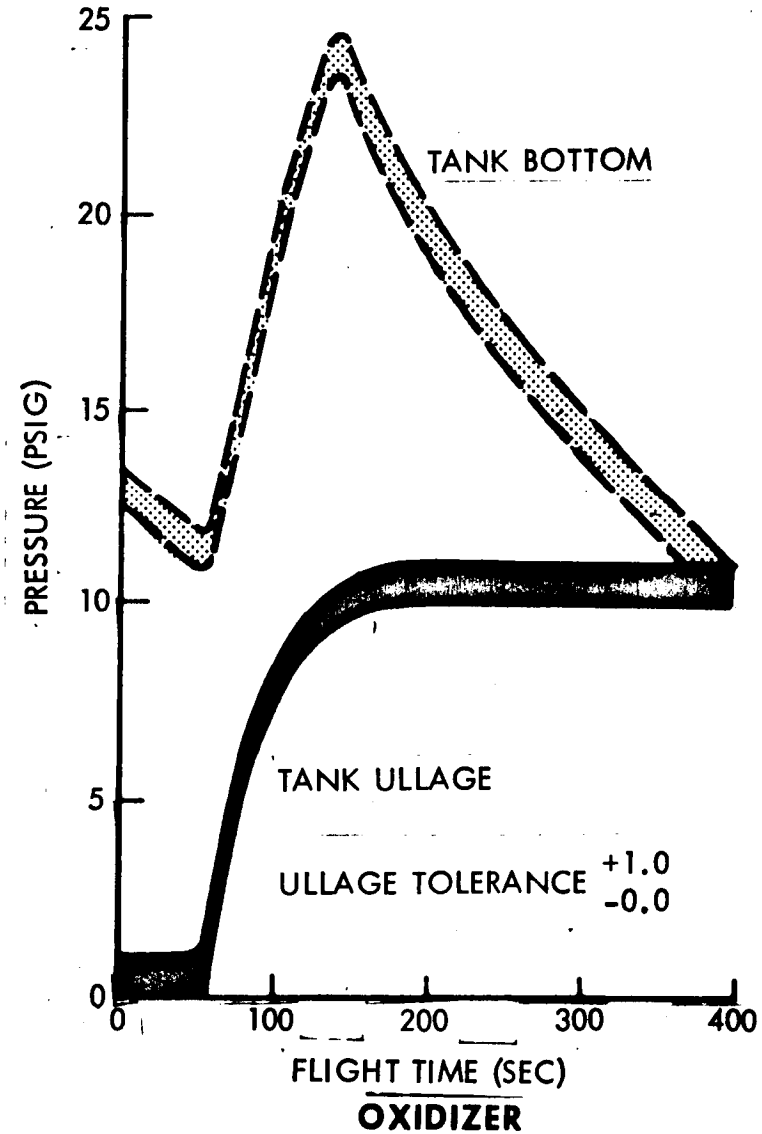

OXIDIZER

51

SPACE DIVISION CHRYSLER CORPORATION

VEHICLE HOLDDOWN AND AEROSPIKE ENGINE

Holddown and rebound support points are located on the vehicle thrust ring, which is secured to the launch pad support by frangible nut assemblies and securing bolts. At vehicle liftoff, separation of the nut assembly is activated and the holddown bolt is ejected into a retainer in the pad support, the nut fragments are held captive by the nut assembly casing attached to the vehicle. The chart also shows the aerospike engine geometry. Turbine exhaust is ejected through holes in a manifold into the base region. Following liftoff, the doors are programmed to move inward and then slowly outward to minimize vehicle drag. At 100,000 feet the outer contour of the exhaust plume is vertical with the doors in a similar position. The doors are fully closed during re-entry to protect the aerospike engine.

VEHICLE HOLDDOWN AND AEROSPIKE ENGINE

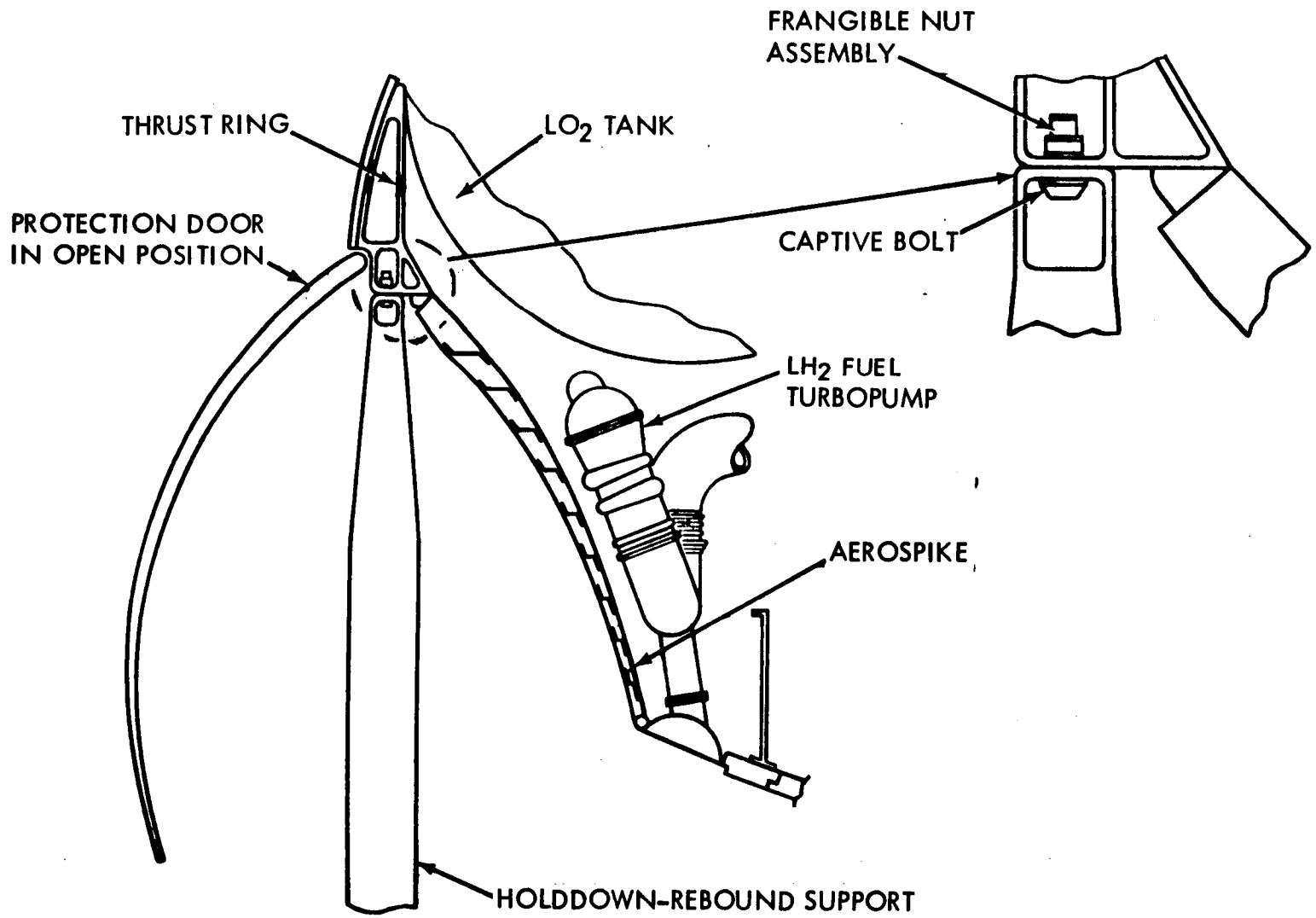

TURBOFAN INSTALLATION

This chart shows the turbofan installation. As currently envisioned, the requirement is for 28 turbofans of 17K thrust (sea level) arranged in four banks of seven. Thrust vectoring is achieved by a swivelling nozzle on each turbofan. It should be noted that further investigation should be made to substitute lightweight turbojets of 15K thrust. The 15K thrust engines have not been considered here because they have a higher system weight for the projected 6-minute flight operation; however, system weight could be substantially reduced by substituting hydrogen as the fuel. The 15K system would then show a weight saving over the turbofan installation. Lightweight turbojet engines using JP-4 fuel are currently in a more advanced stage of development than the turbofan engines.

The turbofans are required to ignite and to operate at approximately Mach 0.3 at an altitude between 26,000 and 15,000 feet. Under these conditions, the external dynamic pressure is approximately 50 lb/ft^2. Air is scooped into an annular space bounded by the LOX tank, outer cylindrical bulkhead, re-entry bulkhead and aerospike engine. This space forms a plenum chamber from which the turbofans draw air. When the lower doors are opened, the turbofans exhaust outlets are subjected to a ram pressure greater than the plenum chamber pressure at the inlets. Since a positive pressure drop across the engine of only 5 percent of the dynamic head required to start the engine, it is proposed to induce this pressure drop aerodynamically by partial opening of the lower doors. The doors are opened fully when the desired operation at low thrust is achieved.

The conditions for engine lightup; i.e., the door settings and locations (to eliminate or minimuze hot gas recirculation), would be determined by full scale wind tunnel tests at the Arnold Engineering Development Center.

TURBOFAN INSTALLATION

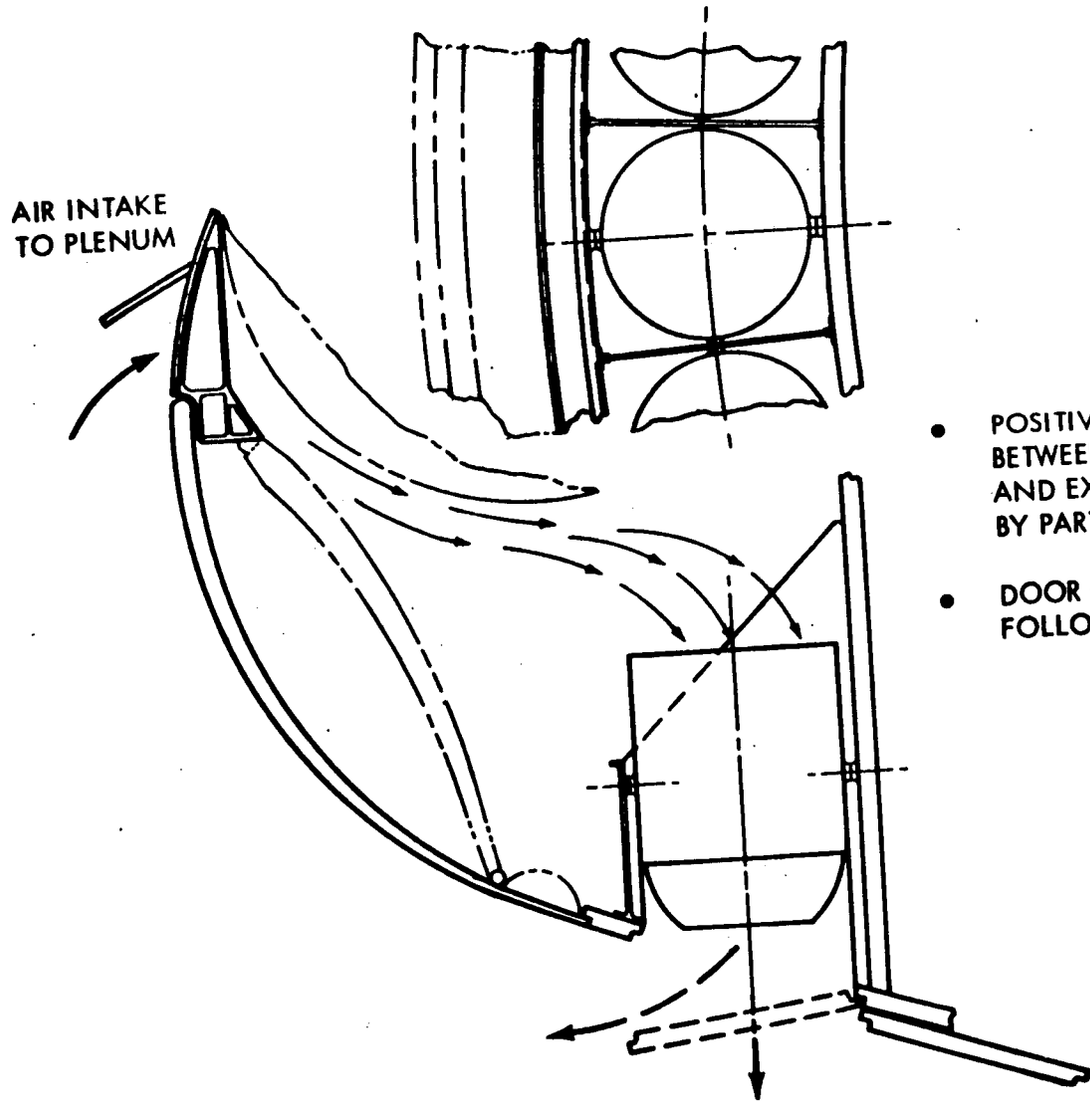

- POSITIVE PRESSURE DIFFERENCE BETWEEN TURBOFAN INLET AND EXHAUST OUTLET INDUCED BY PARTIAL DOOR OPENING
- DOOR OPENED FULLY FOLLOWING ENGINE IGNITION

LANDING GEAR INSTALLATION

Four identical telescoping landing gear leg assemblies are spaced equidistant about the outer cylindrical bulkhead. During ascent the legs are retracted, with the landing gear base forming a smooth contour with that of the heatshield. After re-entry and prior to touchdown, the legs are deployed hydraulically to a locked position. The chart shows the landing gear in the stowed position and in the fully extended position.

LANDING GEAR INSTALLATION

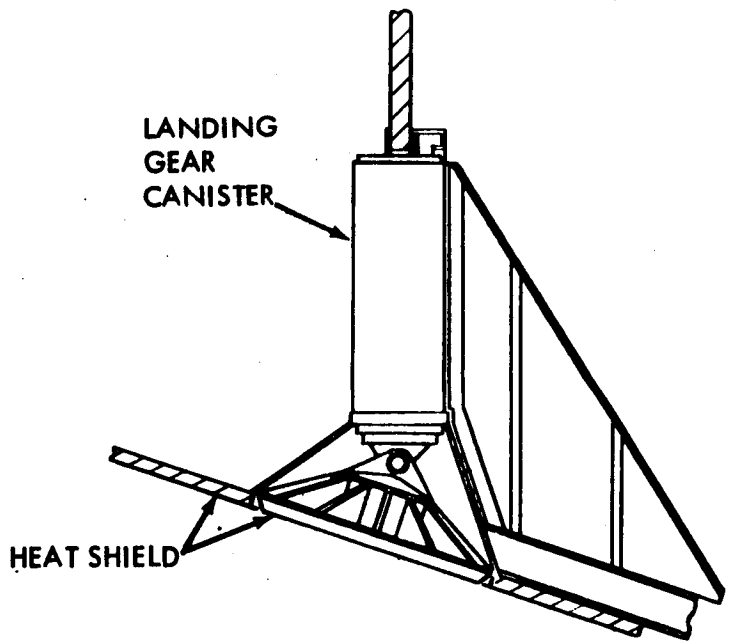

LANDING GEAR STOWED

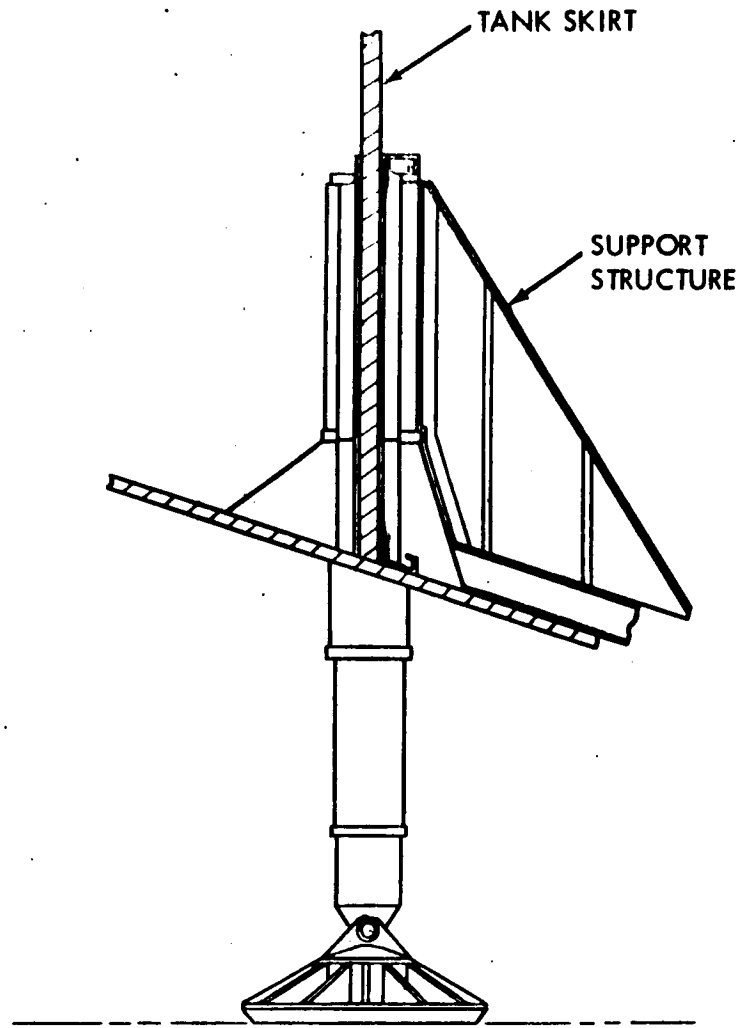

LANDING GEAR EXTENDED

THERMAL PROTECTION SYSTEM

Thermal protection of the aft heat shield is provided by low density silicone elastomeric ablator panels, which are mechanically fastened to the main structure to allow for convenient refurbishment. The ablator panels have oversized clearance holes to accommodate flat-headed attachment bolts, thereby allowing movement relative to the main structure resulting from thermal expansion or contraction. A resiliant spacer is utilized between the ablator and vehicle structure to makeup for irregularities and mismatch and also to act as an insulator. The bolt heads are thermally protected by ablator plugs threaded into fiberglass inserts, which are permanently bonded to the ablator panels.

Thermal protection of the conical forebody is provided by circumferentially beaded shingle panels located on the leeward side of the vehicle. The shingles,constructed of Rene 41 and 8Al-1 MO-IV titanium, are attached to phenolic fiberglass channels by shoulder bolts through oversize holes that allow for expansion. Insulation between the shingles and the main structure consists of three blankets of Micro-Quartz contained in fiberglass cloth facings. The three blanket concept allows for replacement of a part of the insulation if a local area becomes overheated or damaged.

THERMAL PROTECTION SYSTEM

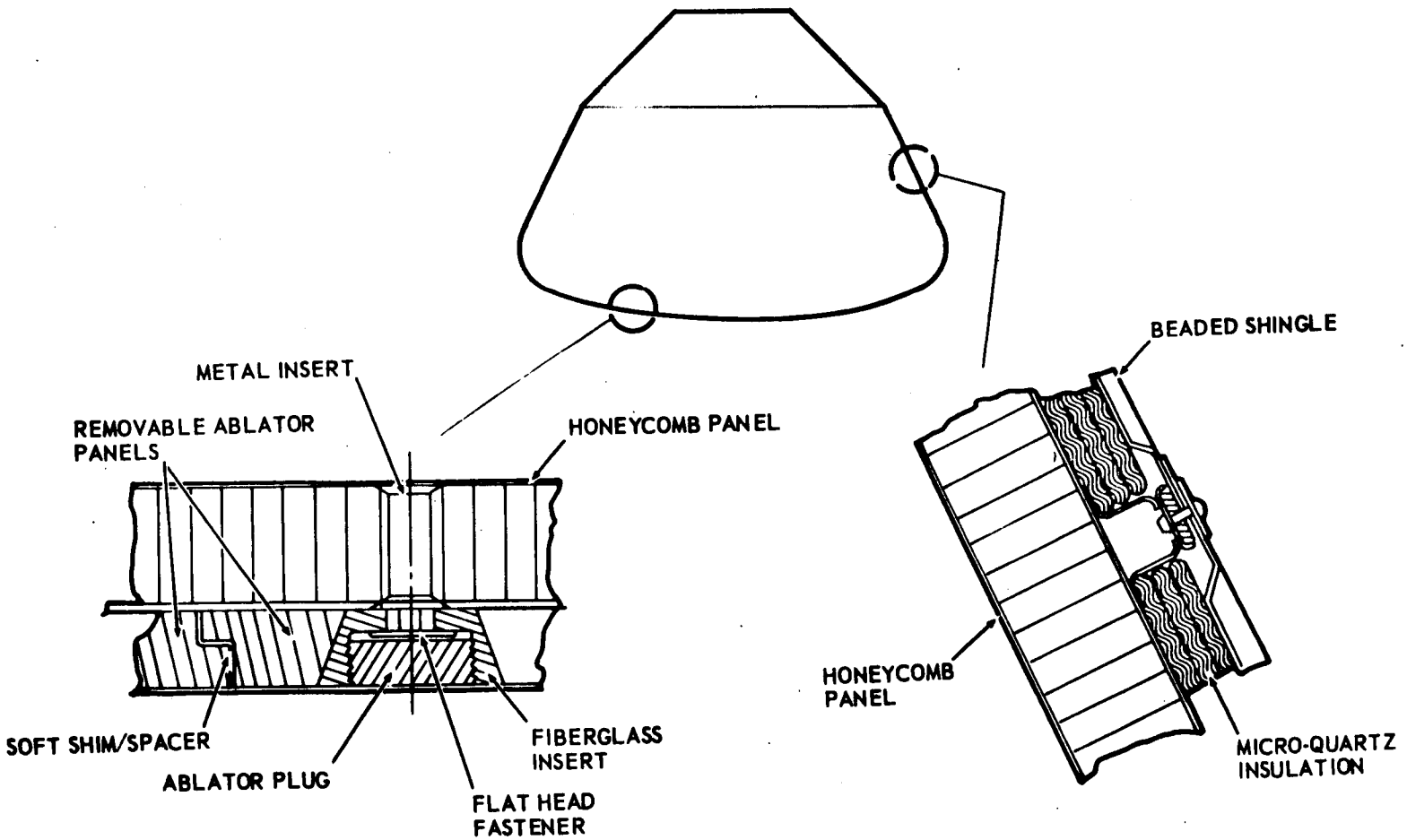

DOOR SEALING

Door sealing is accomplished by using a resiliant silicone ablative sealer, which is attached to the open door edge with a teflon strip. With the door closed, the sealer takes the form of a wedged plug ablator.

DOOR SEALING

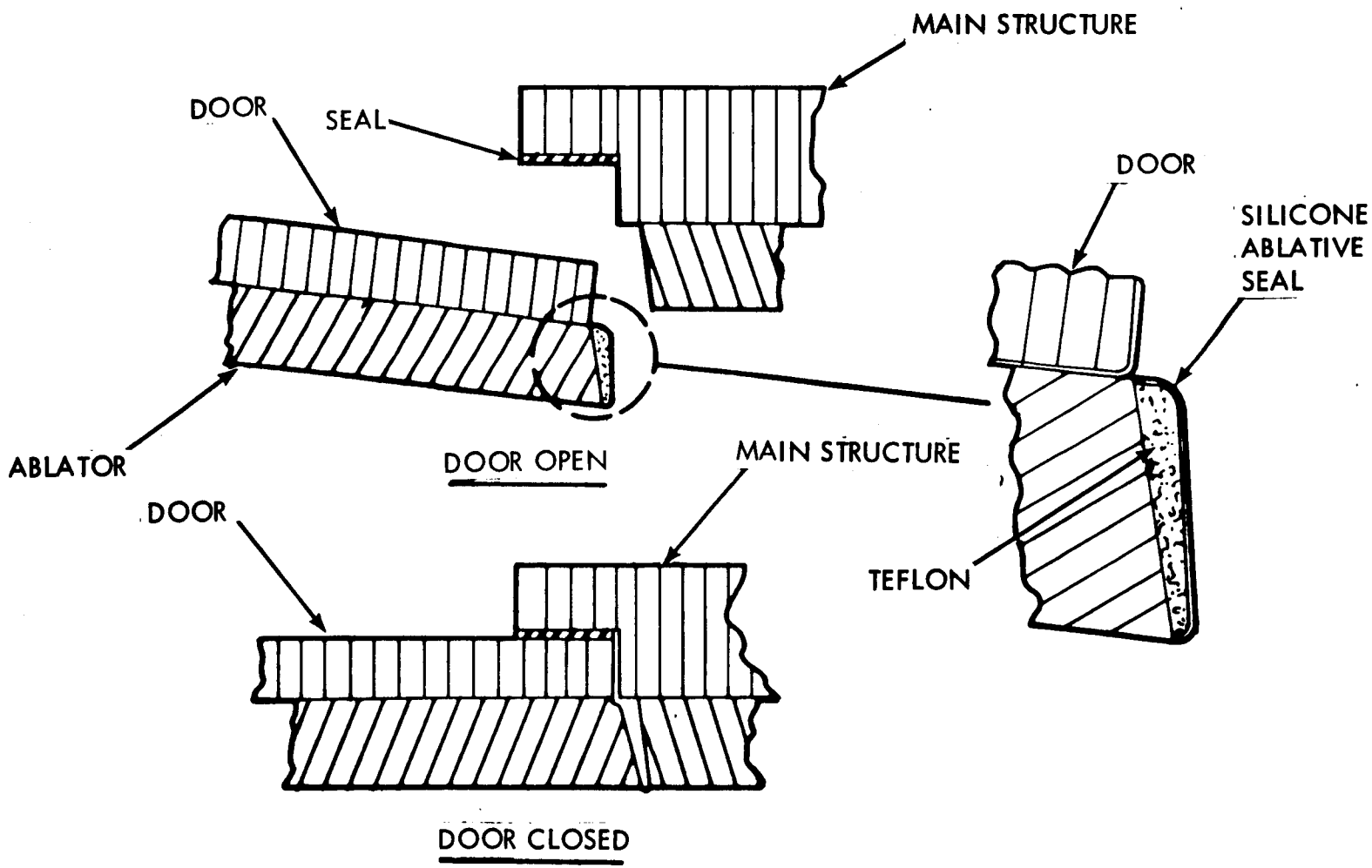

56

SPACE DIVISION CHRYSLER CORPORATION

COMBINED TRIM AND FUEL SUBSYSTEM

Vehicle attitude during hypersonic re-entry is maintained by adjusting the vehicle center of gravity to a location offset from the vehicle centerline. However, during subsonic re-entry the center of gravity must be transferred back to the centerline. The simplest method of achieving the desired vehicle trim is to use the turbofan jet fuel as an adjustable weight.

The combined trim and fuel subsystem consists of fuel tanks located on opposite sides of the vehicle. During ascent fuel is loaded on one side of the vehicle thereby providing an offset center of gravity. At an appropriate time during descent, half the fuel is forced from the tank by high pressure nitrogen. This fuel is transferred to the empty tanks in 50 seconds. Provision is made for a fine trim to accommodate minor center of gravity excursions caused by dispersions in return cargo weight distribution.

COMBINED TRIM AND FUEL SUBSYSTEM

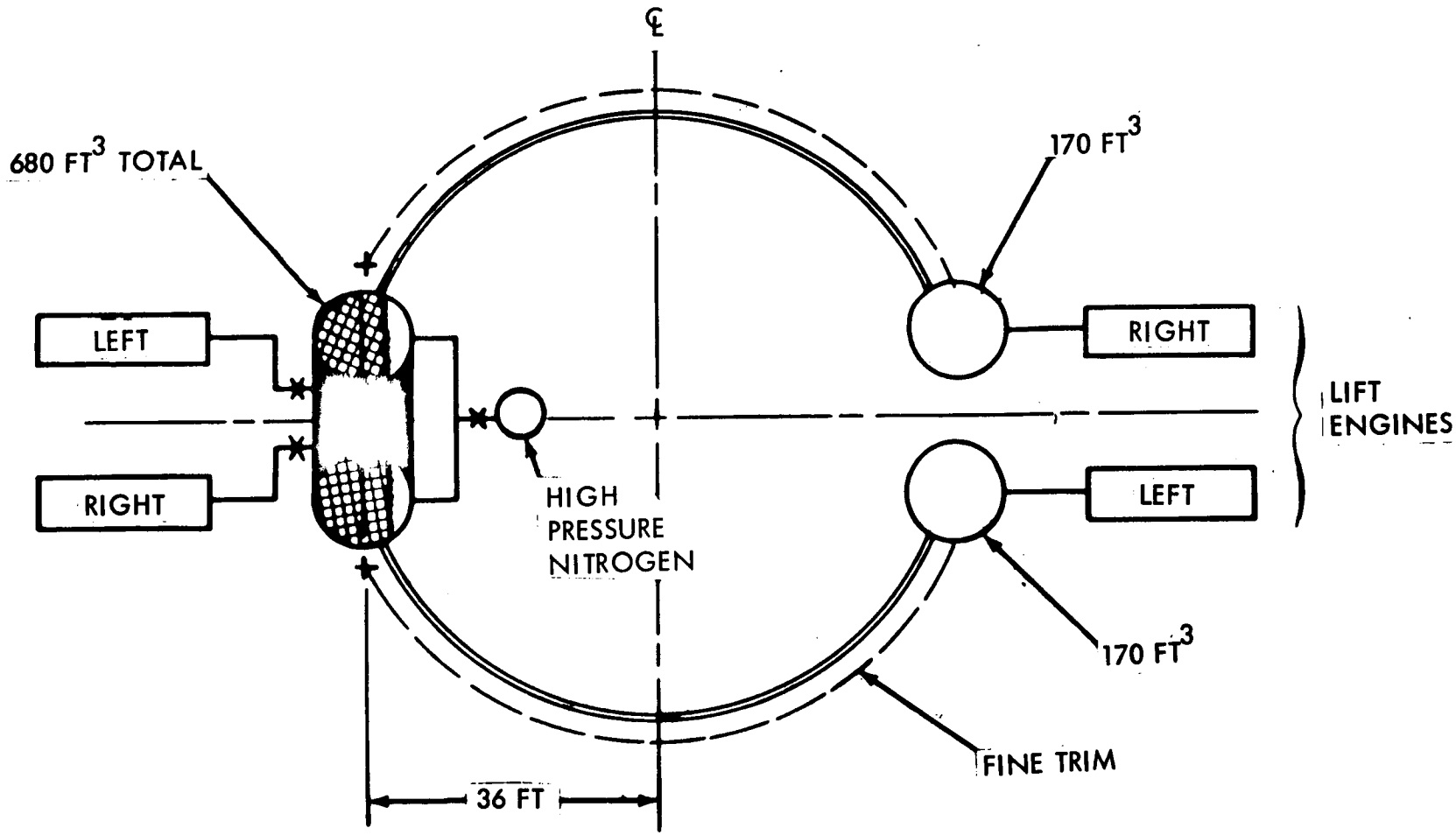

DEORBIT AND ATTITUDE CONTROL RCS

The SERV Reaction Control System (RCS) is required to function during orbital station keeping and re-entry. During the orbital phase, the attitude control system is required to maintain the SERV within coarse attitude and attitude rate limits for the duration of the orbital stay time and will be called upon to stabilize the SERV in a fine attitude hold during docking maneuvers. Re-entry attitude control will require operation of the RCS thrusters to attain proper roll rates and to ensure stability through transonic and subsonic flight when maximum winds occur. The RCS engines will be 1,000-pound-thrust, pressure-fed LOX/LH_2 thrusters supplied with pressurant from separate storage containers. The LH_2 will be stored inside the main LH_2 tank, while the LOX will be stored in the IU area.

The deorbit retro system is also a LOX/LH_2 system and utilizes two 15,000-pound-thrust, RL-10, derivative engines with separate LOX and LH_2 storage in the same location as the RCS propellants. These engines are required to fire once during each mission.

Propellant tank pressurization will utilize propellant boil-off, augmented by heater coils within each tank. Residual GH_2 in the deorbit retro storage containers will be utilized to re-pressurize the main LH_2 tanks during reentry.

DEORBIT AND ATTITUDE CONTROL RCS

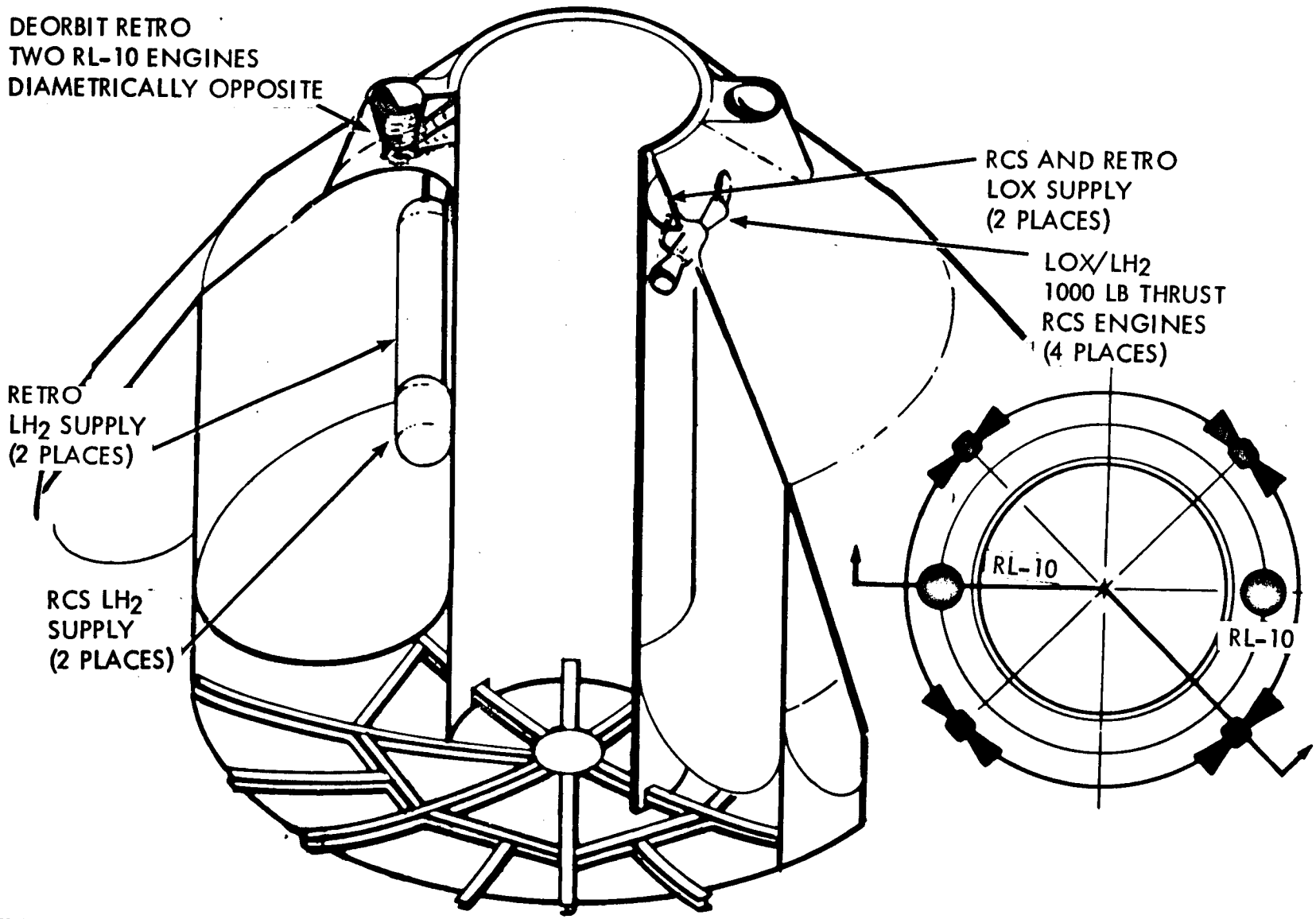

TERMINAL LANDING PROFILE

It is assumed that the SERV will be within four miles of the landing pad when it is at 25,000 feet altitude. Prior to this point, SERV will be tracked by an existing FPS16 radar, and a command transmitter will be transmitting SERV landing site coordinate data. From 25,000 feet to 15,000 feet the turbofan inlet and outlet flaps open and turbofan light-up begins. It takes approximately 8 seconds of the available 40-second timeframe to start the engines. At 15,000 feet the turbofans will be delivering the minimum thrust compatible with reliable operation. This thrust level is maintained down to 6,000 feet to conserve fuel. At 6,000 feet thrust is increased to a level adequate to decelerate the vehicle to a hover at 500 feet. At this altitude the landing gear is deployed and the altitude maintained until SERV has translated directly over the selected landing pad. Thrust is then slightly reduced to permit a controlled descent to the pad, initially at approximately 10 feet per second and finally at 5 feet per second. The chart shows the minimum and maximum flight profiles. Under normal circumstances SERV will land with a minimum of 20 percent fuel residuals.

TERMINAL LANDING PROFILE

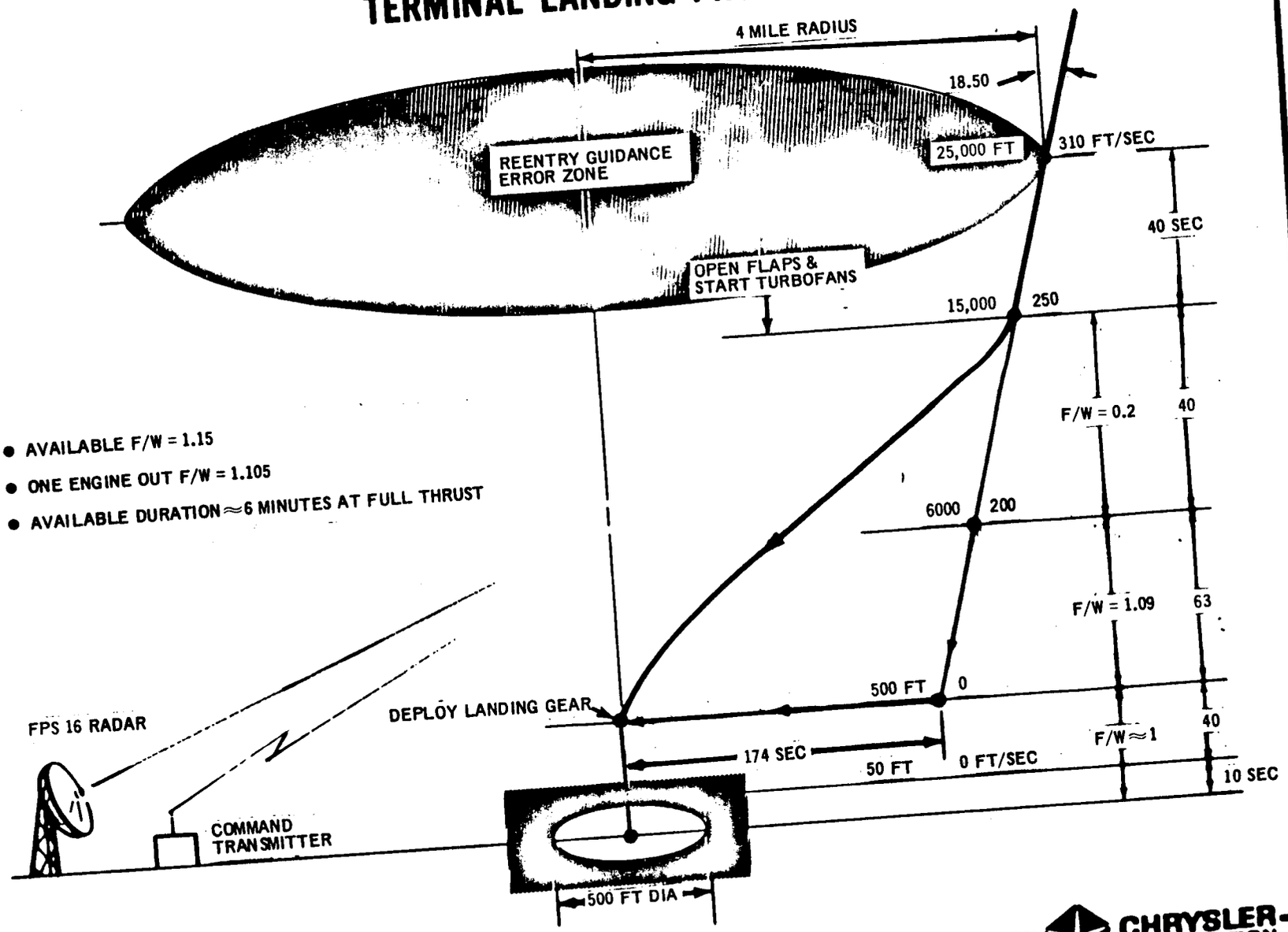

- AVAILABLE F/W = 1.15
- ONE ENGINE OUT F/W = 1.105
- AVAILABLE DURATION ≈ 6 MINUTES AT FULL THRUST

SPACE DIVISION CHRYSLER CORPORATION

TERMINAL NAVIGATION SUBSYSTEM

The terminal navigation subsystem illustrated on the chart will be used during the SERV landing phase. Three main tasks are performed by this system:

(1) SERV position will be determined by FPS 16 tracking radar and an on-board transponder. Earth fixed position with respect to the landing site will be transmitted by a GSE command transmitter to an on-board receiver.

(2) The on-board computer will acquire this vehicle position from the command receiver. It will also collect real-time data from other sensors to compute the attitude commands for the control system. These data will include: (a) space fixed coordinates from an inertial platform; (b) vehicle height from altitude sensors; (c) vehicle lateral and angular accelerations from control rate gyro accelerometers; and (d) predetermined logic from indicators located on the vehicle and a landing execution program stored in the computer memory.

(3) The flight control subsystem responds to attitude commands issued by the on-board computer to provide the necessary control for lateral translation and descent of SERV to the landing site. This subsystem includes: (a) a flight control computer for subsystem gain control; (b) TVC steering control in yaw and pitch; and (c) landing gear control.

TERMINAL NAVIGATION SUBSYSTEM

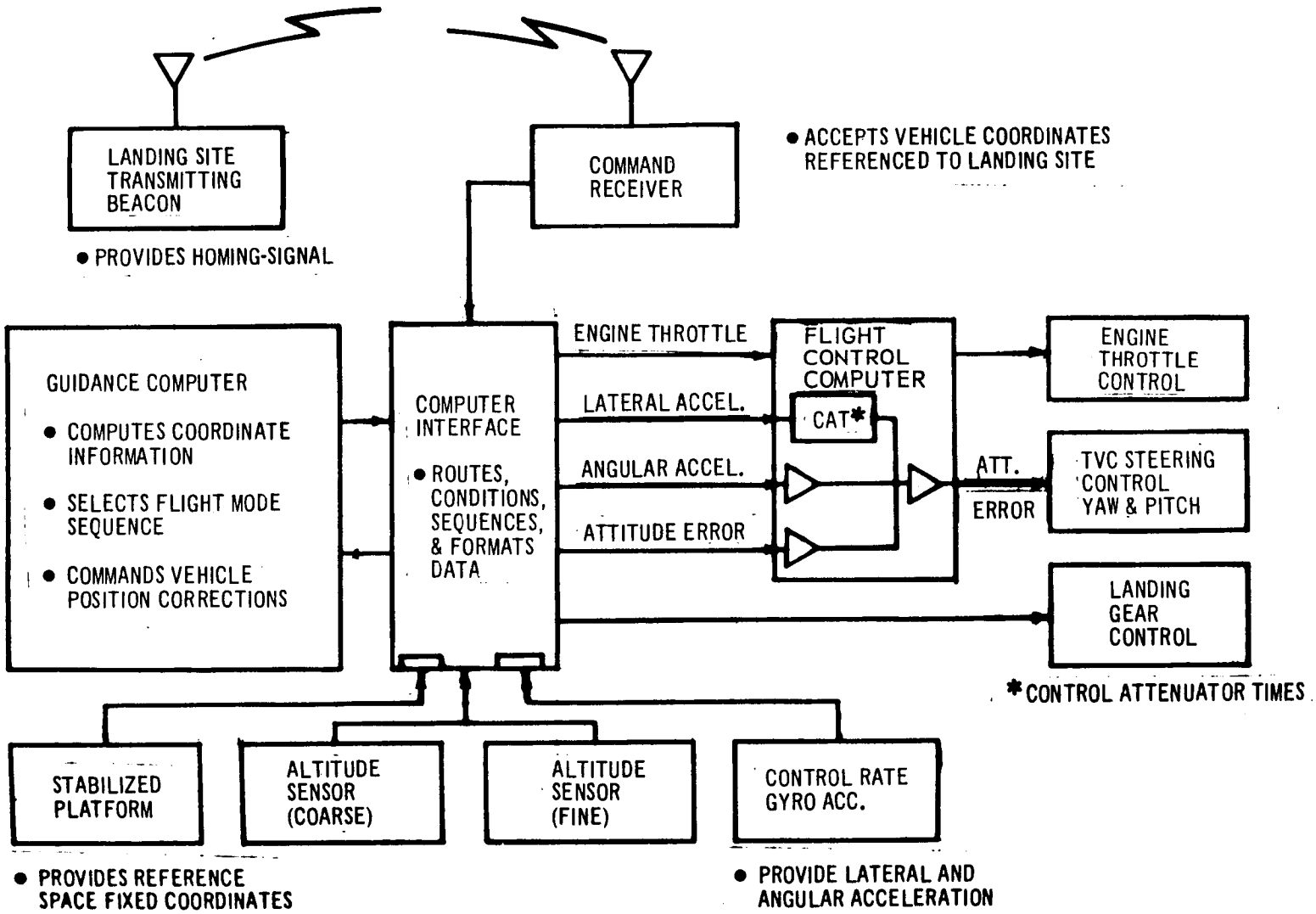

Section 5

MANUFACTURING OPERATIONS

INTRODUCTION

It is planned to manufacture SERV at the Michoud Assembly Facility (MAF). This section outlines the principal manufacturing sequence, the Manufacturing Building rearrangement necessary to accomodate SERV subassemblies, and a new Final Assembly Building. Not discussed in this section, but nevertheless identified here, is need for a new barge for transportation of the SERV from MAF to MTF and from MAF to KSC.

MANUFACTURING OPERATIONS

- MANUFACTURING SEQUENCE
- MAF REARRANGEMENT
- FINAL ASSEMBLY BUILDING

SERV MANUFACTURING AT THE MAF

The Michoud Assembly Facility (MAF) is particularly attractive for the manufacture, assembly and check-out of SERV. Ready access to the Intercoastal Waterway for barge transportation of the assembled vehicle to the Mississippi Test Facility (MTF) and the Kennedy Space Center (KSC) are important features. Some modification and extension of the MAF will be necessary. These modifications include:

(1) A new 120,000 square foot Final Assembly Building (FAB).

(2) A 100-foot wide roadway extension from the FAB to the Michoud Slip.

(3) A partial internal rearrangement of the 820,000 square foot S-IB manufacturing area (Building 103) and the engineering laboratories (Building 111).

Engineering personnel would be located in one half of the Engineering Building (Building 350). Manufacturing, administrative and some engineering test personnel would be located in Buildings 101, 102, 103, and 111. Component and system test would be conducted in Building 111.

Existing road and rail communications to Building 103 are adequate for receiving subcontracted components and subassemblies for installation. A 35 by 35 foot exit from Building 103 permits finished subassemblies to be transported along Saturn Boulevard to the northeast side of the FAB (low bay).

After completion of final assembly and checkout, the SERV will be moved by means of a wheeled transporter to the Michoud Slip and rolled on to a barge for water transportation to MTF or KSC. Site selection for the FAB was influenced by available property at MAF and proximity to the Intercoastal Waterway.

SERV MANUFACTURING AT MAF

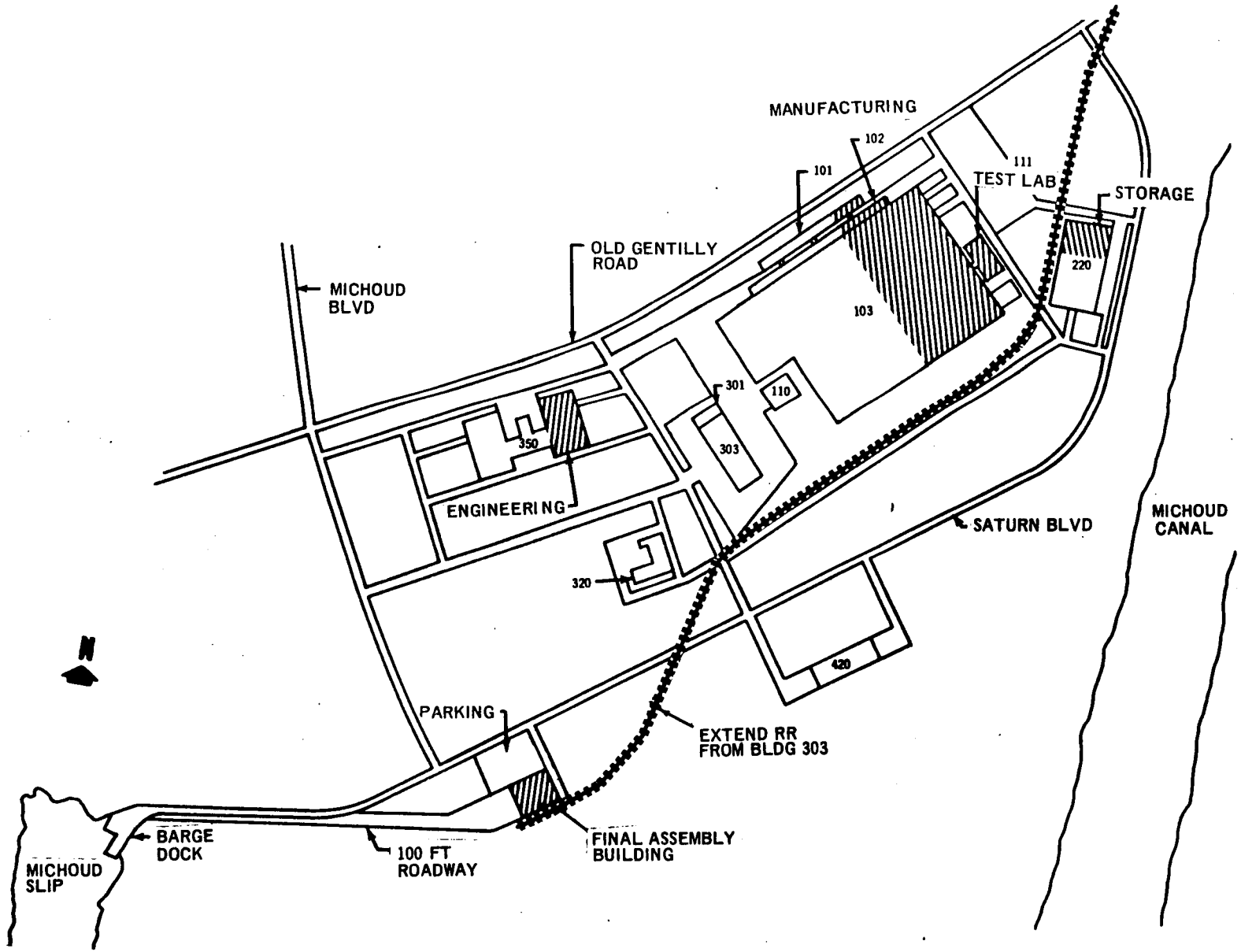

SPACE DIVISION CHRYSLER CORPORATION

MANUFACTURING AND ASSEMBLY SEQUENCE

The flow diagram shows the subassemblies and assemblies developed in the existing Manufacturing Building (Building 103) and in the FAB.

Structural and avionic components, assemblies, and subassemblies will be produced on a make-buy basis in Building 103 and will be transferred to the FAB to be mated into final assemblies and incorporated in the SERV build-up.

The final build-up of the SERV structure will be developed from the initial positioning of the main thrust ring assembly on a hard-point fixture.

It is planned that the systems supplied by associate contractors or subcontractors, especially those delivered to the FAB, will arrive fully assembled, or as nearly so as possible. This approach will reduce time, operations involved, and floor space requirements.

MANUFACTURING AND ASSEMBLY SEQUENCE

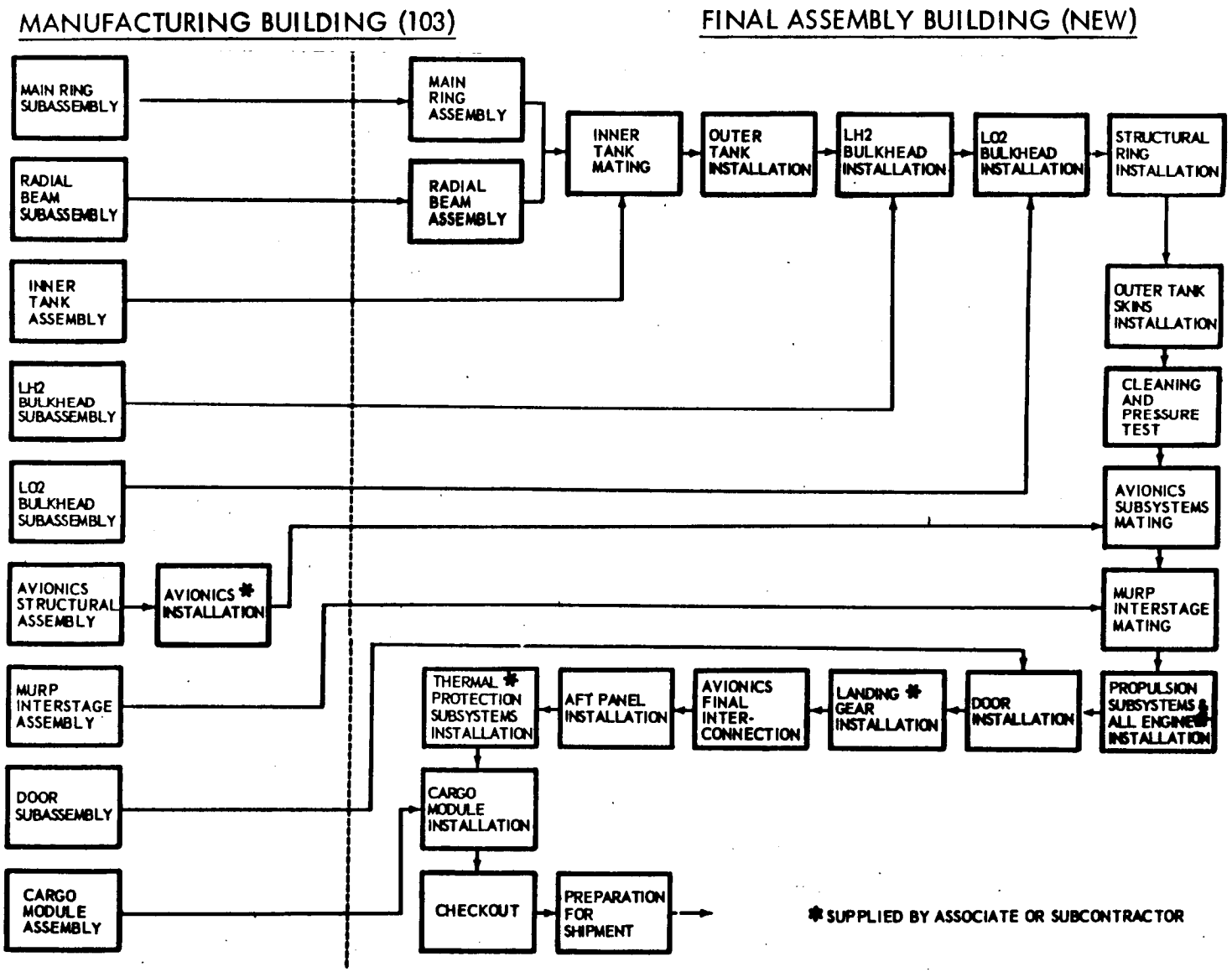

SPACE DIVISION CHRYSLER CORPORATION

MANUFACTURING BUILDING REARRANGEMENT

Rearrangement of the Manufacturing Building (103) for the SERV involves approximately 25 percent of the S-IB stage assembly area. Modifications are limited primarily to the northern floor area. The remaining 75 percent of this area will be used in a support capacity to both programs.

The rectangular area north of the main aisle of the current arrangement is presently fully utilized as storage for stages S-IB-6 through S-IB-14, and includes two checkout stations. Based on the projected AAP schedule and the proposed SERV schedule, adequate storage and checkout capability has been provided for S-IB-10 through S-IB-14 during the period of facility modification and initial development of SERV flight hardware.

All receiving and inspection activity of purchased or subcontracted items designated for the Manufacturing Building (103), or the Final Assembly Building, will be conducted in Building 103.

MANUFACTURING BUILDING REARRANGEMENT

CURRENT ARRANGEMENT

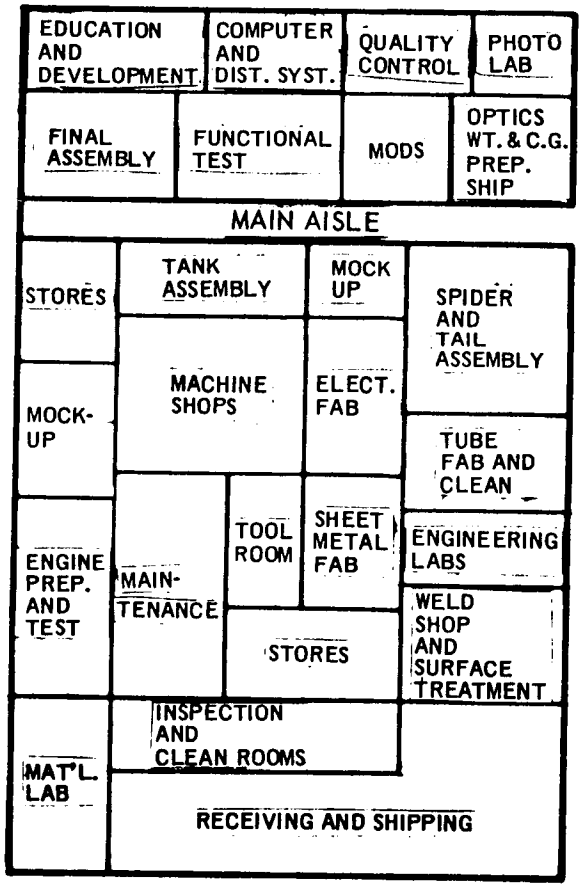

N

ONLY MODIFIED AREAS ARE INDICATED

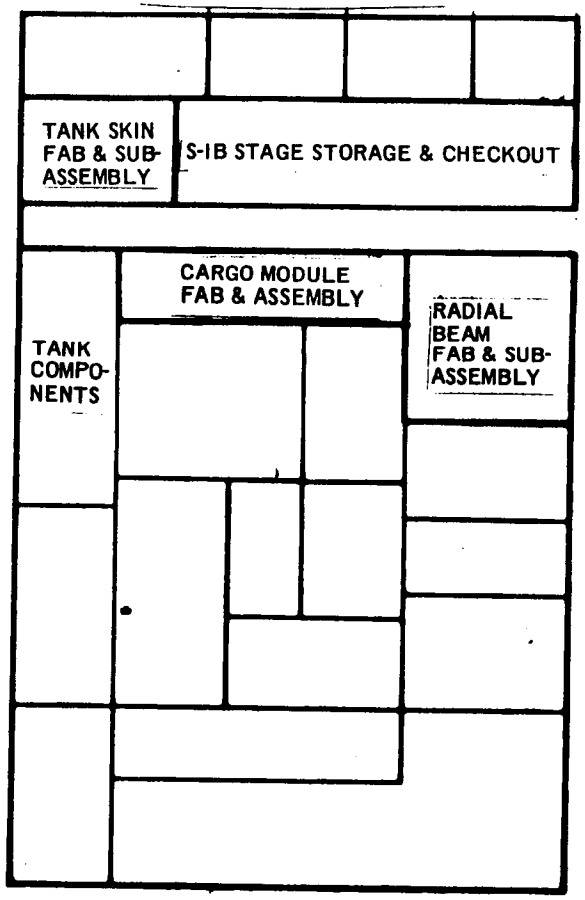

FINAL ASSEMBLY BUILDING

The FAB consists of a 30,000 square foot low bay area for subassembly and parts storage and a high bay vertical assembly area of 90,000 square feet. The high bay is divided into four assembly areas; two for subassemblies and two for final assemblies. In addition, offices and laboratories are located along the northwest side of the FAB outside the high bay area.

The low bay area receives subassemblies and components from manufacturing (Building 103) via road and railway. Typical items delivered to the FAB from contractors, after completing receiving inspection in Building 103, are turbofan jet engines, aerospike rocket engines, heat shield, skin panels, landing gear, and avionic assemblies.

Activity in the high bay subassembly area consists of installing and assembling the radial beam and main thrust ring segments in Assembly Fixture No. 1. The inner tank welded assembly (enclosing the cargo volume) from Building 103 is installed. The outer tank assembly (wall between LO_2/LH_2) panels are then welded directly on the fixture.

The total assembly is then moved to Fixture No. 2 where the LH_2 and LO_2 upper and lower bulkhead subassemblies are welded in place. This operation is followed by the installation of the upper structural ring at the breakpoint where the conical skin segments meet. The outer skin panels are then welded in place to complete the structural assembly.

After cleaning of the propellant tanks, safety curtains are drawn around the vehicle and pressure tests are performed in a similar manner to the present operation in the S-IC VAB.

Installation of the various systems from avionics to cargo module are installed, final checkout is performed, and the SERV prepared for shipment.

FINAL ASSEMBLY BUILDING

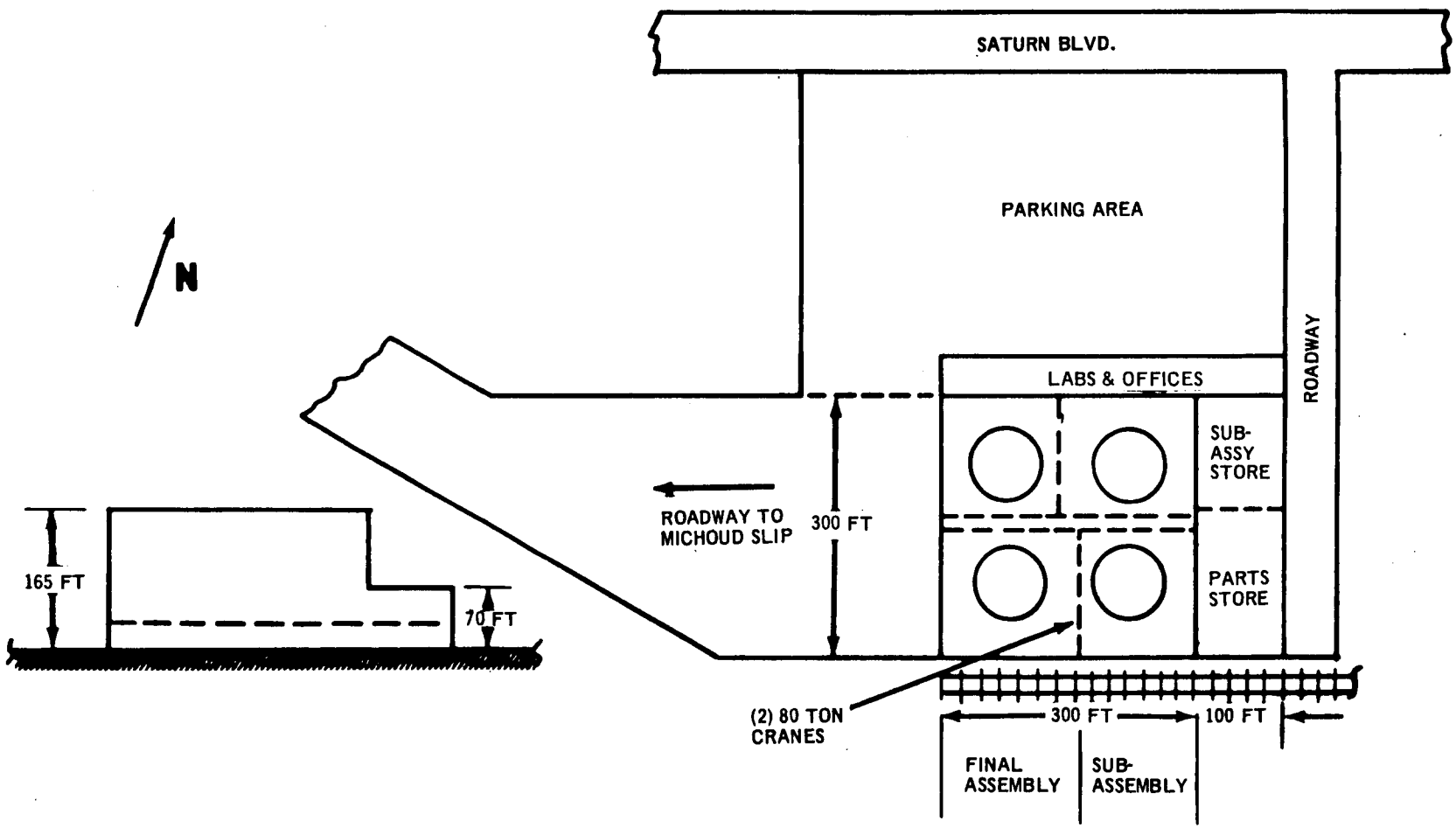

65

SPACE DIVISION CHRYSLER CORPORATION

Section 6

DEVELOPMENT AND TEST OPERATIONS

INTRODUCTION

The elements of a test program to qualify the SERV vehicle are summarized in this section. Wind tunnel tests to provide aerodynamic and thermodynamic data should be commenced at the earliest opportunity since these are critical path inputs to the vehicle design. A plan is presented for development and qualification testing of major components.

It is planned to perform propellant cold flow tests, structural loading tests, static firing tests, and dynamic testing at MTF.

It is planned to perform orbital flight tests on the MURP, through injection into orbit, using a Saturn IB. It is assumed that subsonic qualification flights of MURP will take place at the Edwards Air Force Base.

Finally, it is planned to conduct lower atmospheric test flights of the SERV at KSC in the vicinity of the skid strip.

DEVELOPMENT AND TEST OPERATIONS

- AERO-THERMO TESTS
- MAJOR COMPONENT TESTS
- MTF OPERATIONS
- REENTRY VEHICLE FLIGHT TESTING

MAJOR DEVELOPMENT TEST ACTIVITIES

A detailed breakdown of all development tests to be performed on the MURP and SERV are beyond the scope of a feasibility study; however, it is important to know which major tests will be performed and the location of these tests. The chart, therefore, outlines the major development test activities that are planned for the MURP and SERV. MURP testing is not discussed since this has already been covered by NASA under Contract NAS9-9205, but special mention is made of the desirability to inject the MURP into orbit by a Saturn IB so that orbital maneuvers and reentry characteristics may be analyzed.

MAJOR DEVELOPMENT TEST ACTIVITIES

SERV

- COMPONENT AND SUBSYSTEM DEVELOPMENT AND QUALIFICATION AT MAF AND CONTRACTOR LOCATIONS
- VEHICLE DEVELOPMENT TESTS - COLD FLOW, STATIC LOADING, STATIC FIRING, AND DYNAMIC LOADING AT MTF
- AERODYNAMIC TESTS - LOADS, ACOUSTICS, AND STATIC STABILITY, AT LaRC[1], LTV[2], CAL[3], AND AEDC[4]
- THERMODYNAMIC TESTS - AERO HEATING DURING ASCENT AND DESCENT, BASE AND LAUNCH DEFLECTOR HEATING, AT CAL, LaRC, AND AEDC
- AEROSPIKE ENGINE DEVELOPMENT AND QUALIFICATION TESTS AT SSFL[5], NFL[6], AND MTF
- TURBOFAN JET ENGINE LIGHTUP TESTS AND AIRFLOW INVESTIGATIONS AT AEDC, DEVELOPMENT, AND QUALIFICATION TESTS AT CONTRACTOR LOCATION
- SUBSCALE VEHICLE TESTS AT EAFB[7] TO CHECK FLIGHT CHARACTERISTICS AND GN&C SUBSYSTEM
- PROTOTYPE VEHICLE VTOL AND GN&C TESTS AT KSC
- PROTOTYPE VEHICLE ORBITAL FLIGHTS AND REENTRY AT KSC
- VEHICLE QUALIFICATION FLIGHT TESTS AT KSC

MURP

- OVERALL TEST PROGRAM AS DESCRIBED BY MURP STUDY CONTRACTOR
- ORBITAL AND REENTRY FLIGHT TESTS - LAUNCHED FROM KSC ON SATURN IB WITH LANDING AT EAFB

---

1 LaRC - LANGLEY RESEARCH CENTER
2 LTV - LING-TEMCO-VOUGHT
3 CAL - CORNELL AERONAUTICAL LABORATORY
4 AEDC - ARNOLD ENGINEERING DEVELOPMENT CENTER
5 SSFL - SANTA SUSANNA FIELD LABORATORY
6 NFL - NEVADA FIELD LABORATORY
7 EAFB - EDWARDS AIR FORCE BASE

SERV TESTING AT MTF

It is proposed to test the SERV at the Mississippi Test Facility (MTF), although it should be noted that KSC is an alternate site. MTF is located about 40 miles northeast of MAF; consequently, design and development personnel at MAF would be readily available to assist MTF personnel during the vehicle test program. MTF, with its extensive test equipment and existing barge accessibility, is therefore strategically located for the test program envisioned. Such a program would require a new test complex, and only an extension of the currently available service and data transmission lines to the SERV test area.

The requirement for a new test site and its suggested location southeast of the S-IC test complex is based upon:

(1) The increased radius required for a given overpressure value, compared to that necessary for the S-IC and S-II stages, in order to comply with MTF requirements.
(2) The comparatively modest cost saving involved between completely rebuilding an existing test stand and building a new facility.
(3) The dislocation of existing facilities involved when these facilities are modified.
(4) The possibility of no further testing of Saturn V stages.

Present MTF overpressure requirements are limited to 0.5 psi between stands and 0.2 psi in non-test designated areas. The overpressures shown at various radii on the chart are for a 10% TNT equivalency when the propellant tanks are filled. Lower overpressure levels could be obtained by a reduction of propellant in the tanks. The location of the new site provides an existing turning basin for propellant and stage barges to maneuver and no new real estate or canal are required.

Service lines, etc. for the new site would be connected to existing plant, pumping stations, etc. In addition, test data would be fed to the existing Data Acquisition Center for correlation and evaluation. This center presently supports both S-II stands and the dual S-IC stand. No modification would be required to the lock or bascule bridge entering the facility. LO_2 and LH_2 propellant delivery to the test complex would be by barge in accordance with current practice.

SERV TESTING AT MTF

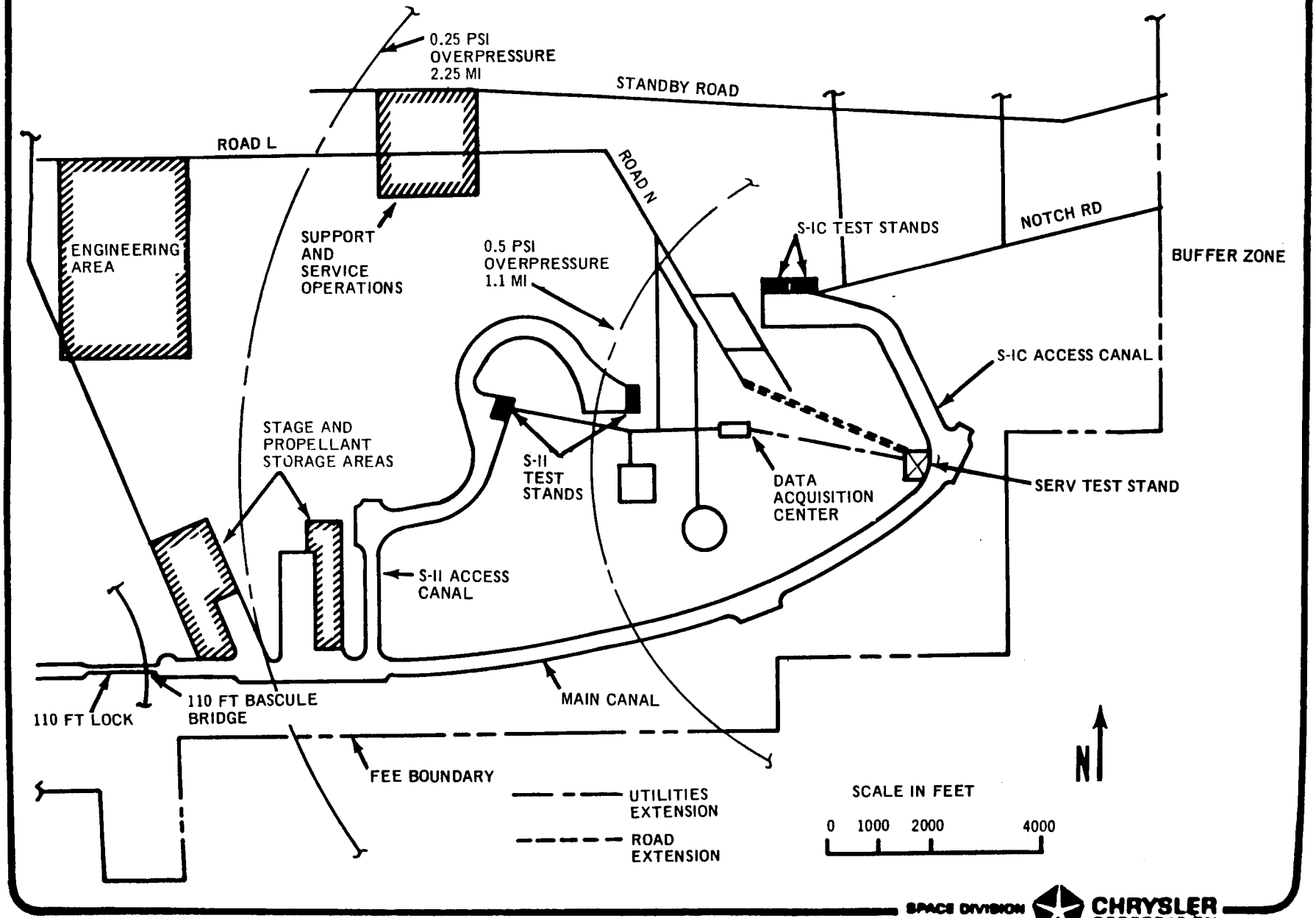

SPACE DIVISION CHRYSLER CORPORATION

TEST STAND OPERATIONS

All vehicle testing will be conducted at MTF. On delivery, the SERV will be rolled off the barge onto the ground test area and then hoisted by crane onto a circular ground test stand which incorporates a similar method of support to that used at LC-39C.

Operational ground and flight design static loads would be applied. Dynamic response tests would be performed. Such system tests would include hydraulic, pneumatic, mechanical, structural, and avionic components and subsystems.

Following completion of the static loads tests, the SERV will be hoisted onto a 50 foot high stand for cold flow tests followed by hot firing static test.

During the hot firing static test, the exhaust efflux is directed onto a 360 degree film-cooled flame deflector. Thermal protection will be provided to protect the stand stanchions and the elevator, which are the only obstructions below the test stand.

TEST STAND OPERATIONS

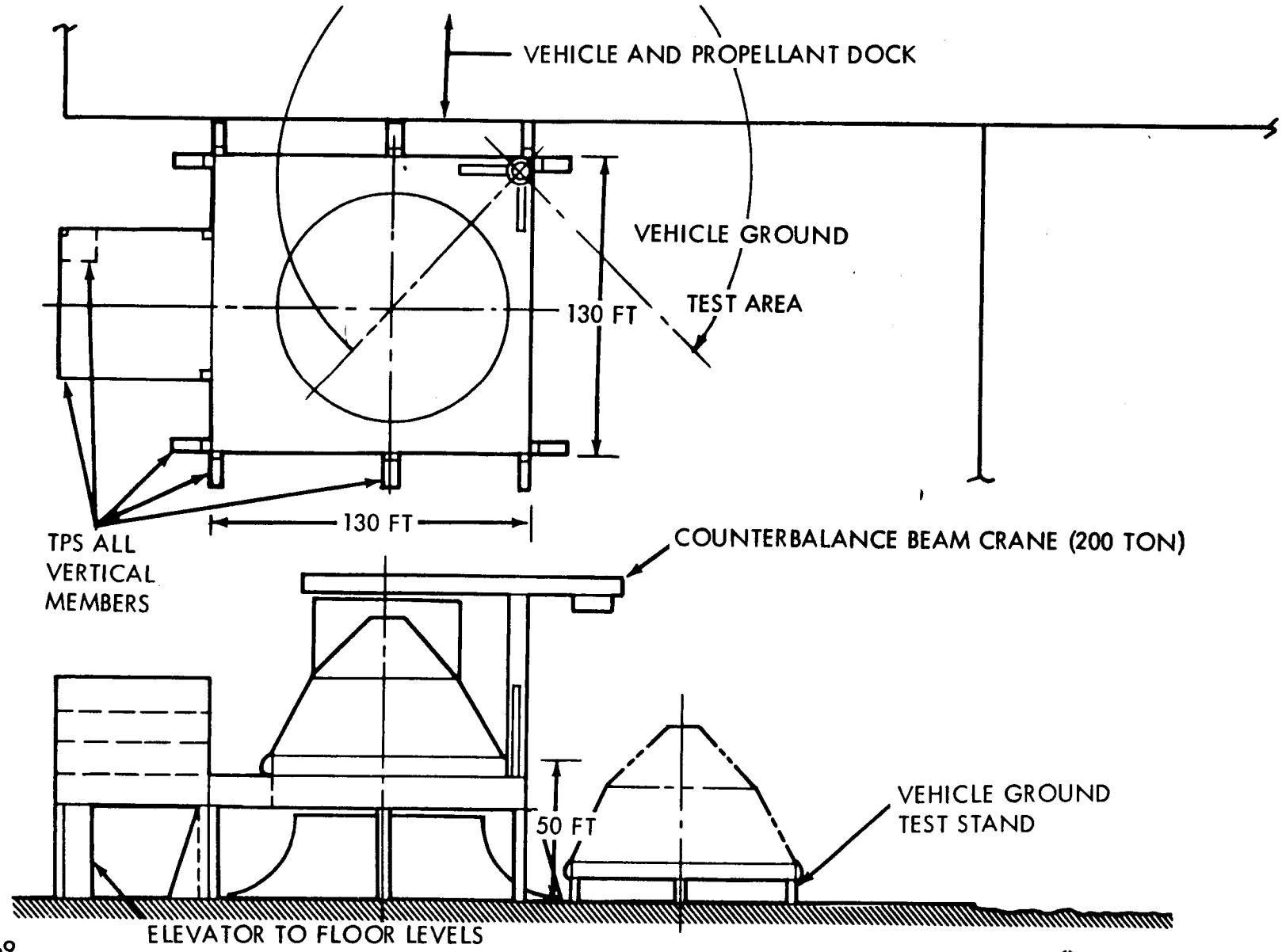

SPACE DIVISION CHRYSLER CORPORATION

REENTRY VEHICLE FLIGHT TESTING

One of the attractive features of the MURP-SERV concept is the relative ease with which the MURP can be tested in orbit and during reentry from orbit. The size and weight of the MURP is within the capability of a Saturn IB to loft into orbit, after completion of ground and atmosphere flight testing. This will greatly simplify the orbital test program for a winged reentry vehicle.

Two launches are proposed and costs for the Saturn IB vehicles and associated launch have been included in the development costs.

To support such a program, Saturn Vehicle SA-212 and Stages S-IB-13 and S-IB-14 are already available and uncommitted at this time. The use of the Saturn IB as the launch vehicle for such a test program would permit parallel development of the SERV and MURP vehicles.

Launch Complex 37 is proposed as the appropriate launch site because LC-34 is presently identified for AAP activities. However, if current AAP scheduling is changed then consideration should be given to MURP flight testing from LC-34, thereby eliminating a launch complex reactivation cost of $8 to 10 million. LC-34 modification costs would be minimal as all services are presently available.

REENTRY VEHICLE FLIGHT TESTING

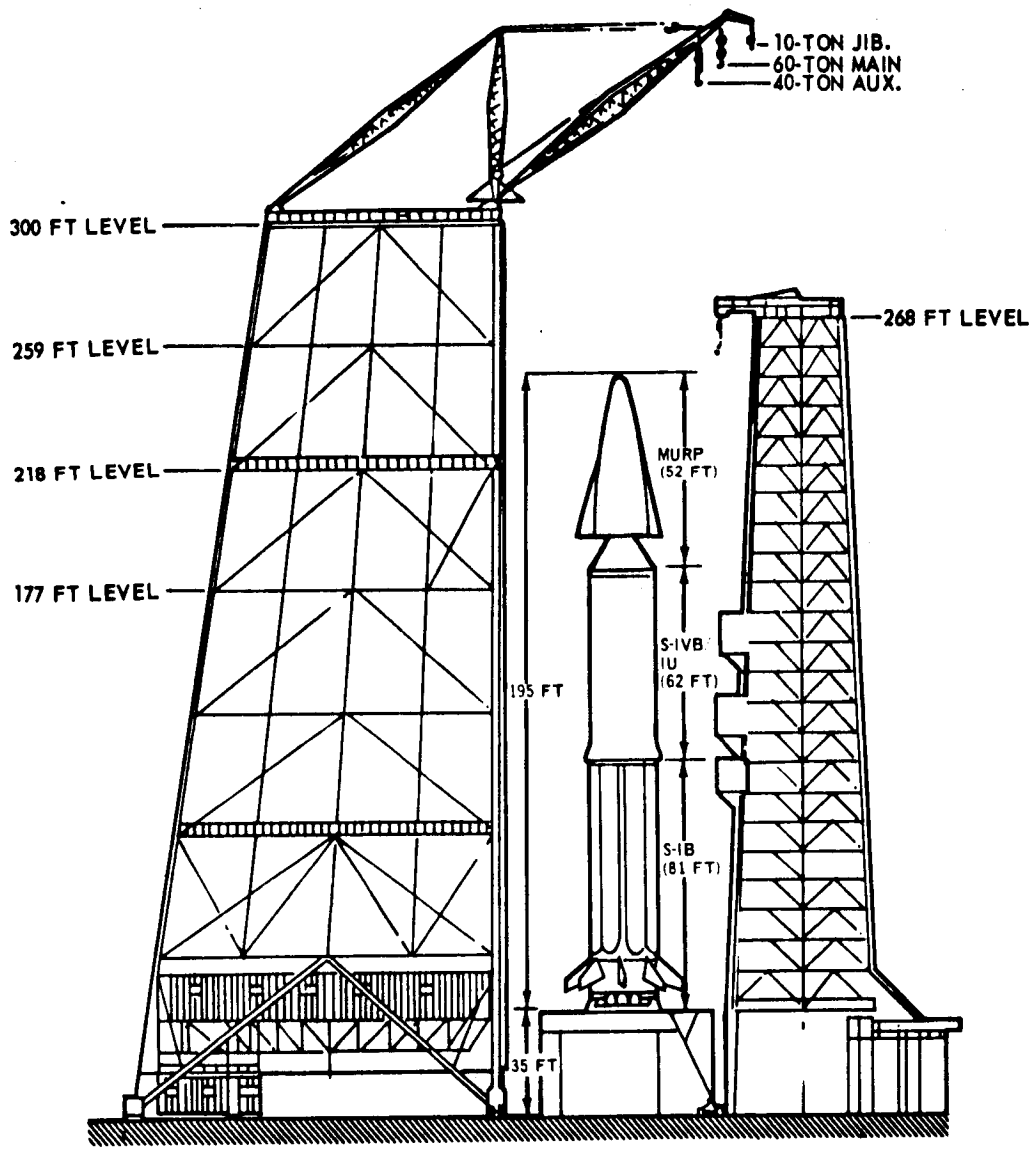

SPACE DIVISION CHRYSLER CORPORATION

Section 7

LAUNCH OPERATIONS

INTRODUCTION

In this Section the landing sites for the SERV and MURP are discussed, the method adopted for transportation from the landing site to the refurbishment area is outlined, and new facilities are identified. Because the MURP-SERV is relatively small compared to the Saturn V, the VAB and LC-39B can be used with only nominal modification. The mobile-crawler will be used without modification. Again, because of the small vehicle size, no land acquisition or major modifications to existing support facilities are necessary.

LAUNCH OPERATIONS

- OPERATIONS
- TRANSPORTATION
- FACILITIES

KSC OPERATIONS

The SERV will be transported from MTF to KSC by a new barge to a new roll-on dock and 100-foot wide jetty and road. This new docking facility is necessary because the 90 foot diameter of the SERV requires a barge of at least the same beam width. It is, therefore, not possible to pass the SERV through Port Canaveral into the Banana River to the VAB dock unless the two 90 foot bascule bridges are widened, the 90 foot port lock is widened, and the river dredged to double its present width. It should be noted, however, that further refinement of SERV design may permit a reduction in diameter to 88 feet, in which case the existing bascule bridges and lock would be adequate and the only requirement would be to dredge the river.

The proposed SERV route from the coastline utilizes the existing crawlerway with a minimum extension to the docking area.

The projected low launch rate of the Saturn V makes a combination of the MURP-SERV and Saturn V launch facilities economically attractive. Therefore, three launch areas will be used for the combined launch rate of the two launch vehicles. These three launch areas would consist of LC-39A, LC-39B, and a new LC-39C. In precedence of operation, LC-39A will be used solely for Saturn V launches, the new LC-39C will be used solely for MURP-SERV, and LC-39B will be adapted to accept either Saturn V or the MURP-SERV. In this manner, maximum economic benefit would be derived from the use of common facilities and equipment. This approach will:

(1) Provide dual launch capability for either launch vehicle.

(2) Provide an additional launch complex when saturation launch capability has been reached on either LC-39A or the new LC-39C.

(3) Provide a backup launch complex in the event of failure on LC-39A or LC-39C.

The location of two SERV landing pads, the MURP landing strip, and the ORSB (Overhaul, Refurbish, and Storage Building) are shown on the chart. The selection of these sites was influenced by turnaround time and the need to be close to the crawlerway and VAB. The existing skid strip is shown as an alternate MURP landing strip. Transportation of the MURP between the skid strip and the ORSB will be by road transporter.

Initial, low-altitude, development flight tests of the SERV (powered only by the turbofans) are planned to take place in the vicinity of the skid strip. To accomplish this activity the SERV will be delivered to Port Canaveral and transferred to the skid strip by transporter over a specially widened roadway.

All of the aforementioned facilities are located within the existing KSC boundary. No new land acquisition is required.

KSC OPERATIONS

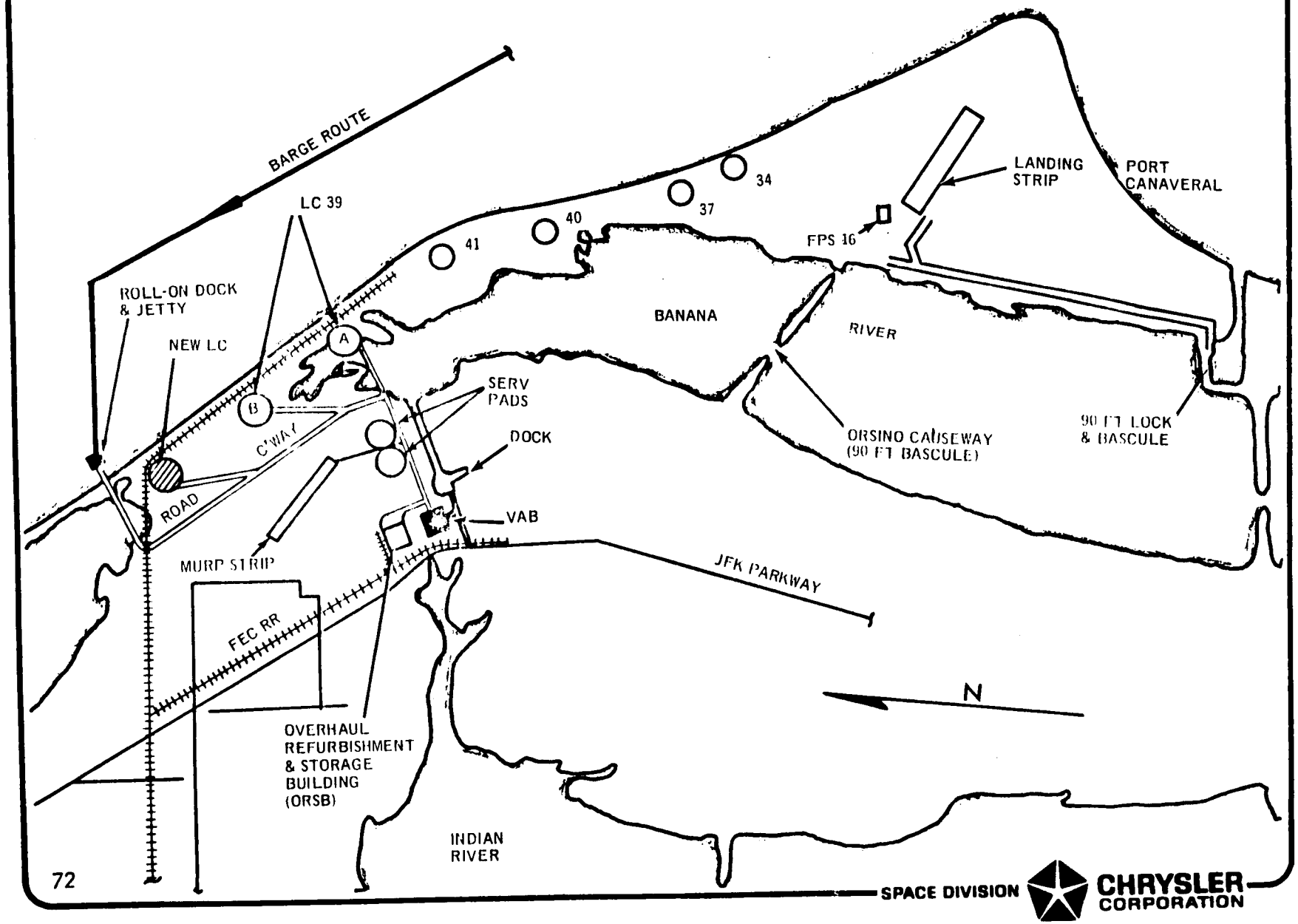

72

SPACE DIVISION CHRYSLER CORPORATION

SERV LANDING AT KSC

The SERV returns from orbit unmanned with terminal navigation to the landing pads being fully automatic under the influence of ground-based command guidance. The chart shows the SERV descending vertically to one of the two landing pads. The relative position of the MURP strip, VAB, and ORSB are also shown. Existing FPS 16 tracking radar will be used as part of the terminal navigation loop.

SERV LANDING AT KSC

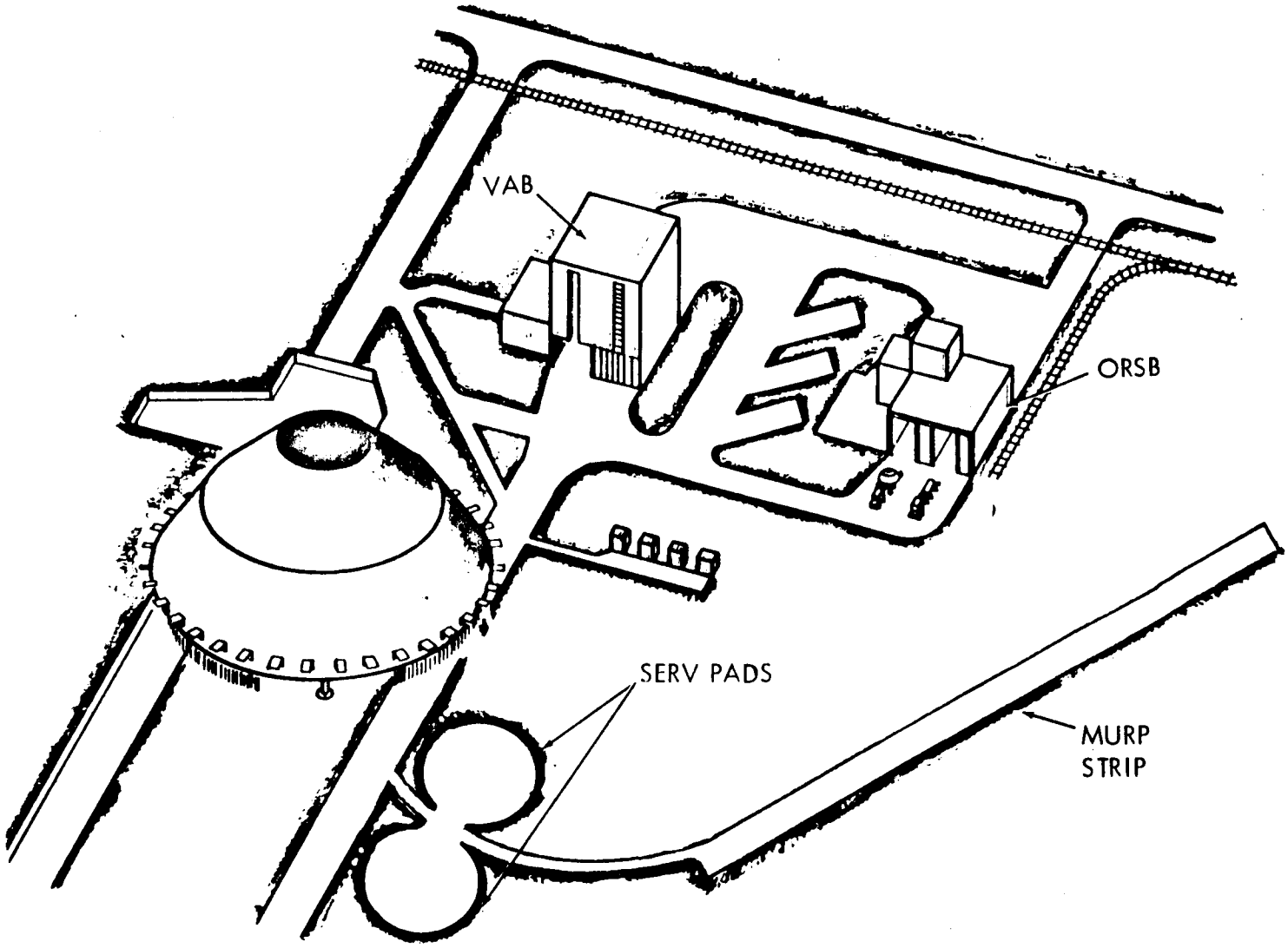

73

SPACE DIVISION CHRYSLER CORPORATION

LOADING ON TRANSPORT DOLLY

A modified heavy duty fork lift truck will be used to vertically raise each leg of the landing gear to permit a wheeled transport dolly to be located beneath. These dollies will provide local mobility of the SERV after landing.

On approaching a vertical leg of the landing gear, two C-beams attached to the front end of the fork-lift truck straddle the leg and, after engagement of the tie rod, the C-beams are lowered to the ground on two forward pads. Dual lift jacks located on the C-beams are then extended, thereby lowering cables for attachment to lugs located on the pad of the vertical leg. The jacks are retracted to lift the pad 2 feet above the ground so the dolly can be positioned under the pad and locked in position. The procedure is then repeated for each of the remaining legs. The dollies provide vehicle mobility and permit the SERV to ride up the ramp of a wheeled transporter.

The hydraulic system of the SERV landing gear possesses a bleed system that permits each leg to be retracted in a controlled manner to maintain the SERV in a level position at all times during this operation.

It is estimated that the SERV will have cooled down to a safe handling temperature approximately 30 minutes after landing on the pad.

LOADING ON TRANSPORT DOLLY

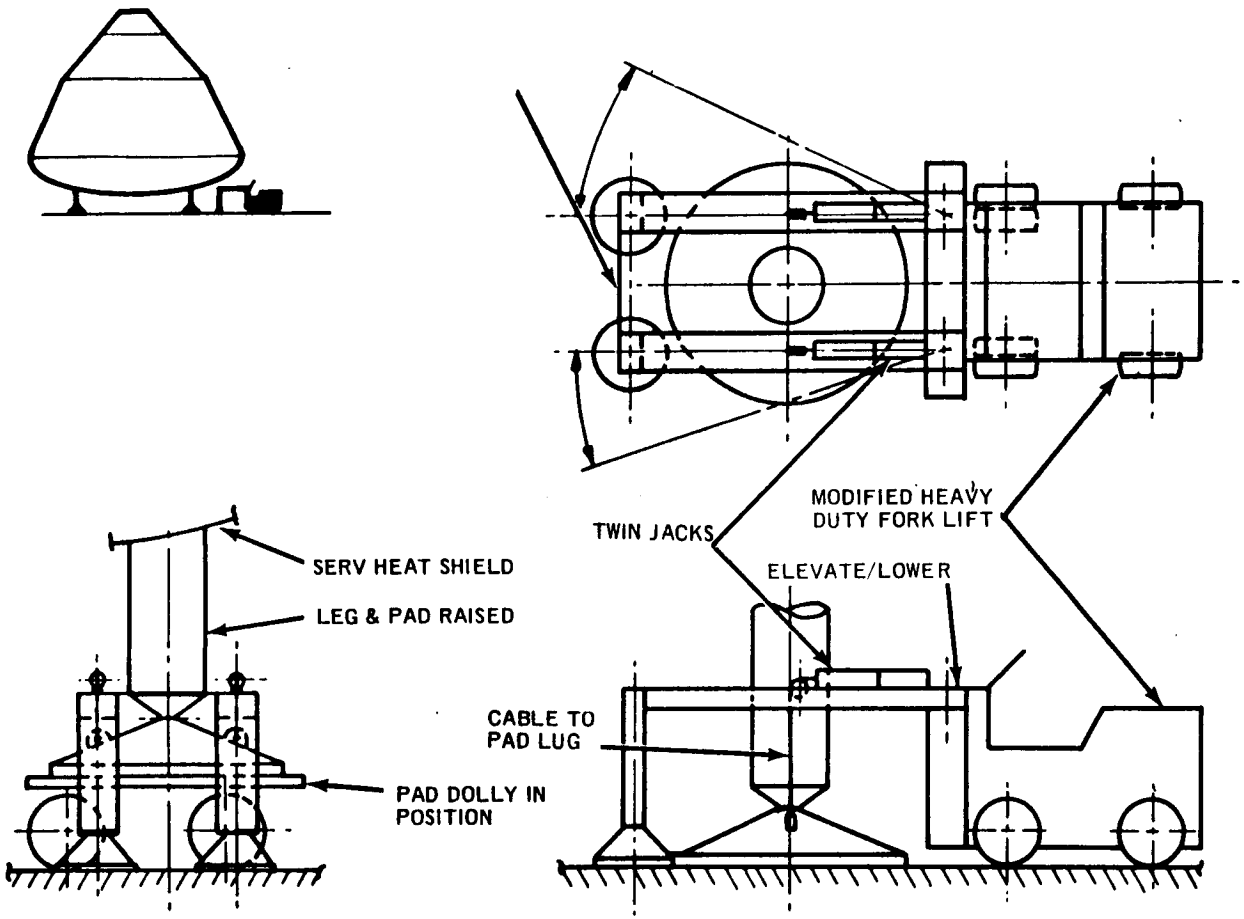

LOADING ON WHEELED TRANSPORTER

The transporter performs the following two functions:

- In conjunction with the barge to transport the SERV from the Final Assembly Building (FAB) at MAF to the Overhaul, Refurbishment and Storage Building (ORSB) at KSC.
- To transport the SERV from the landing pad to the ORSB for recycling.

The transporter has six walking beams mounted on a frame with four wheels to each beam. Two longitudinal tracks for the SERV to stand on are also mounted on the frame.

To prepare the transporter for loading, the tractor withdraws both loading ramps from the transporter. All wheels are locked and chocked. Cables are extended and attached to the landing gear and the SERV is pulled onto the transporter by dual winches located on the longitudinal beams.

The wheels of the walking beams are individually steered by the appropriate front and rear operators when under tow by the tractor. All-wheel braking is provided and wheel loads are limited to a maximum of 25,000 pounds per wheel for paved surface operation.

Operations requirements indicate the three transporters are required.

LOADING ON WHEELED TRANSPORTER

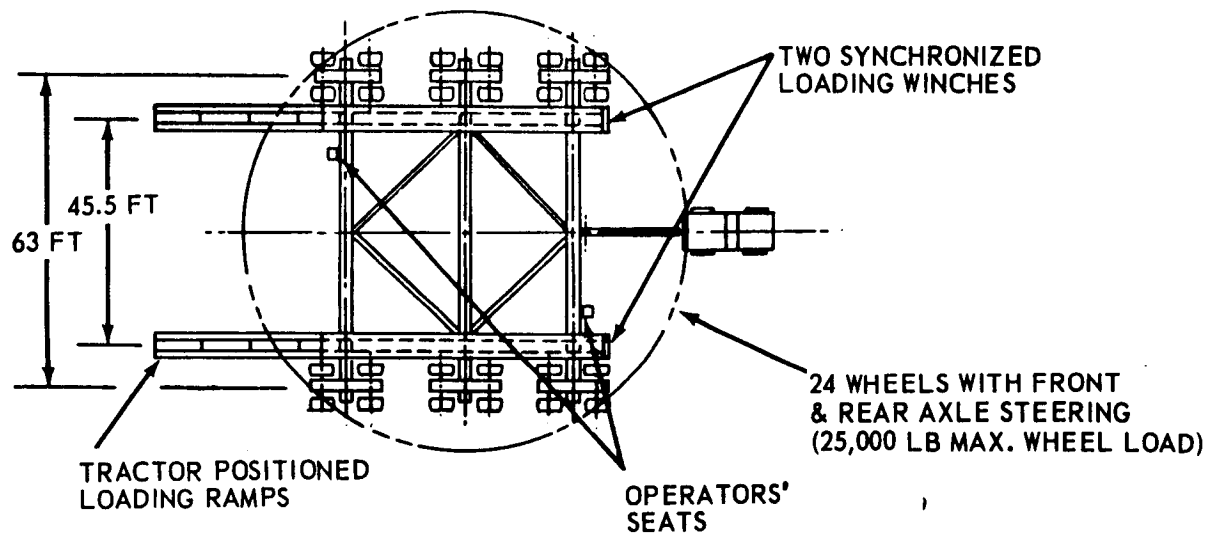

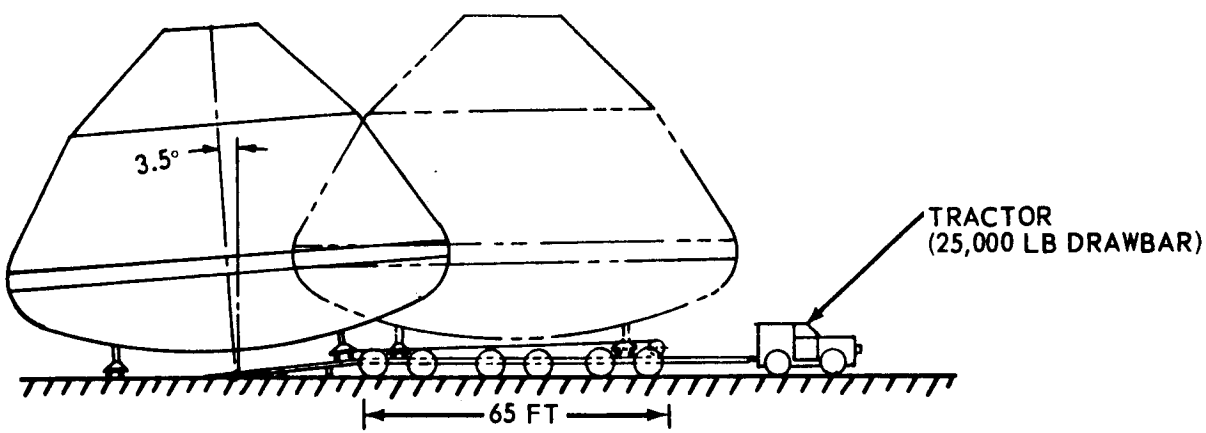

REFURBISHMENT OPERATIONS

Mission preparation involves two buildings: two cells of the existing VAB, and a new Overhaul Refurbishment, and Storage Building (ORSB) of approximately 325,000 ft^2.

After landing and following vehicle safing, personnel egress, and purging operations, the SERV and MURP are transferred to the ORSB; the SERV returns via the crawlerway on its transporter, and the MURP is tractor drawn.

The MURP is refurbished and put into storage awaiting new assignments.

The SERV enters a 40,000 square foot high-bay area, and, with the aid of a 30-ton gantry crane, the cargo module is removed and transferred to its area for unloading and eventual storage prior to reloading. The SERV heat shield is removed and renewed as required, and the vehicle is refurbished prior to storage. A separate 40,000 square foot area is provided for the heat shield refurbishment operation.

Operations in the ORSB will be conducted on a remove and replace (R&R) basis to reduce vehicle downtime. R&R activities include avionics, doors, actuators, and minor structural damage to vehicles. Where major repair or damage has occurred or after the maximum permissible number of missions have been performed, the vehicle system will be returned to the appropriate contractor for overhaul, inspection and test.

In preparation for a mission, a SERV is taken out of storage, checked out in the ORSB and then transported to one of the two available VAB high-bay cells where the 250-ton bridge crane transfers it onto a mobile launcher base. In the interim, the MURP (if required) and a loaded Cargo Module are transported to the VAB center aisle via the 55 ft x 94 ft door at the low bay end of the VAB. If the cargo is cryogenic fluids, the appropriate Cargo Module will be loaded in the VAB and the cryogenics loaded at the launch pad.

The transfer of Saturn V VAB operations to the two west cells permits a more rapid turn around time for the shuttle vehicles in the two east cells as the transportation route to the pad is more direct. All systems will have been checked out before vehicle transfer from VAB to the launch pad.

Operational requirements indicate that four new launcher-umbilical towers are required. Three additional Apollo-type crawler-tractors are required to meet the maximum launch rate.

Access for support services to both VAB and ORSB operations is the same as presently available by road, rail, and water.

REFURBISHMENT OPERATIONS

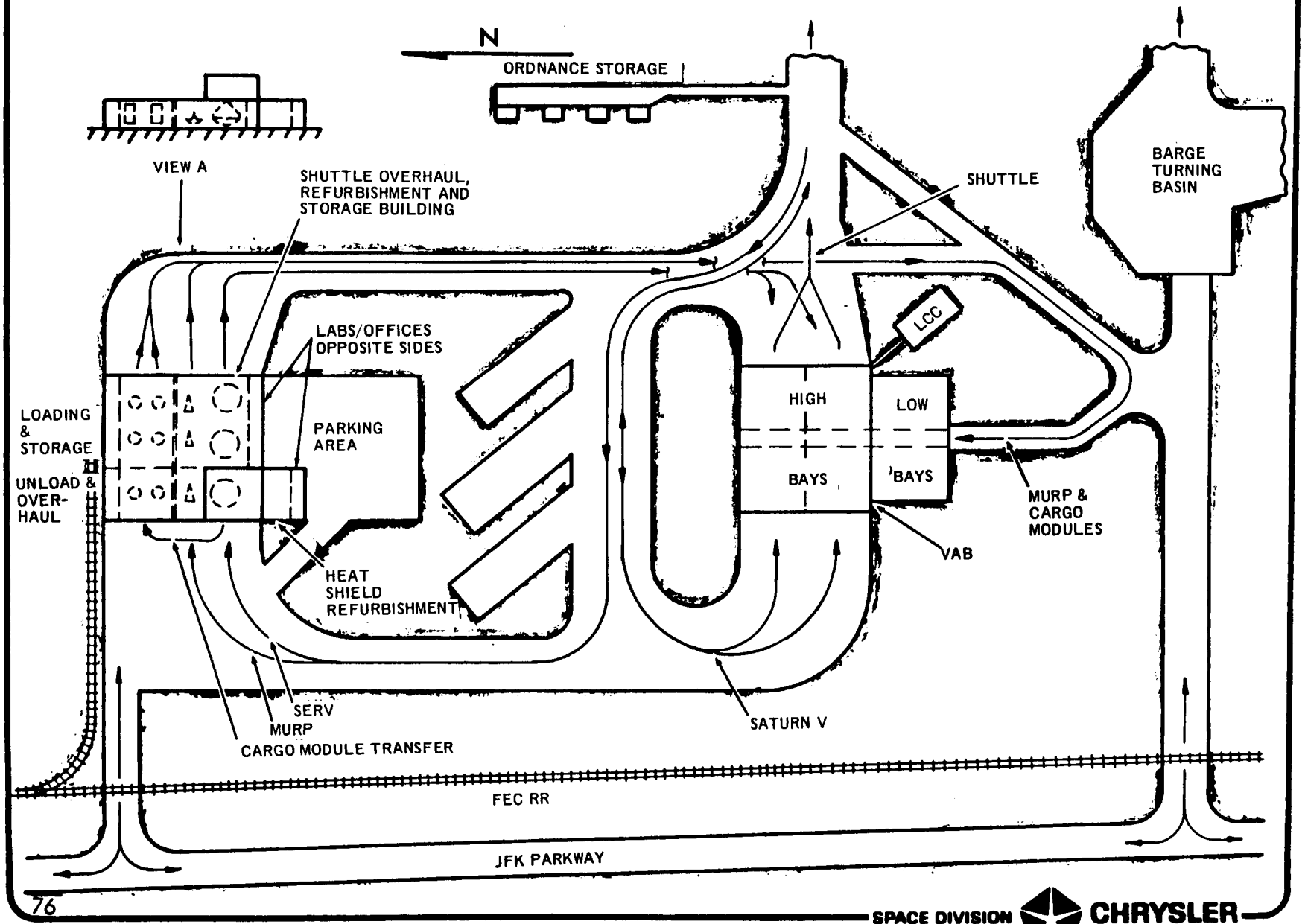

76

SPACE DIVISION CHRYSLER CORPORATION

MATING AND CHECKOUT IN VAB

The attractiveness of using the VAB for the assembly of the shuttle vehicle is enhanced by:

(1) The size of the existing building and its crane capacities.

(2) The excess capability to assemble and checkout the Saturn V vehicles in the VAB when compared to the presently anticipated launch rate of the vehicle through the 1970's. Thus two of the existing four high bay cells could be made available for SERV checkout.

(3) Direct access from the VAB to the crawlerway and supporting road, rail, and water transportation.

Upon delivery of a SERV into a high bay cell from the ORSB, the 250-ton bridge crane hoists the SERV clear of its wheeled transporter. The transporter is then removed and a crawler-tractor carrying a launcher-umbilical tower enters the cell where it positions the launcher-umbilical tower and then withdraws. With aerospike protection doors open, the SERV is lowered onto a support ring located on the deck of the launcher and mated. Umbilical and power lines from the SERV to the launcher are then attached.

If mission requirements dictate the use of a MURP or a Cargo Module, or both, these components are also hoisted by crane from the center aisle and lowered onto, or into, the SERV and mated.

As presently conceived, all systems leave the ORSB in a fully ready condition, and main activities after assembly in the VAB are the vehicle-to-launcher interface tests and on-board checkout. Upon completion of the checkout, the crawler-tractor transports the vehicle to the launch pad. For manpower economy and technical continuity, a small master crew stays with each vehicle through all major ORSB, VAB, and pad operations; however, supporting specialist crews accept each vehicle as it comes into each facility in preparation for the mission. An alternative is to assign crews in each operation to a specific vehicle; however, this approach is unnecessarily expensive during period of low launch rates.

MATING AND CHECKOUT IN VAB

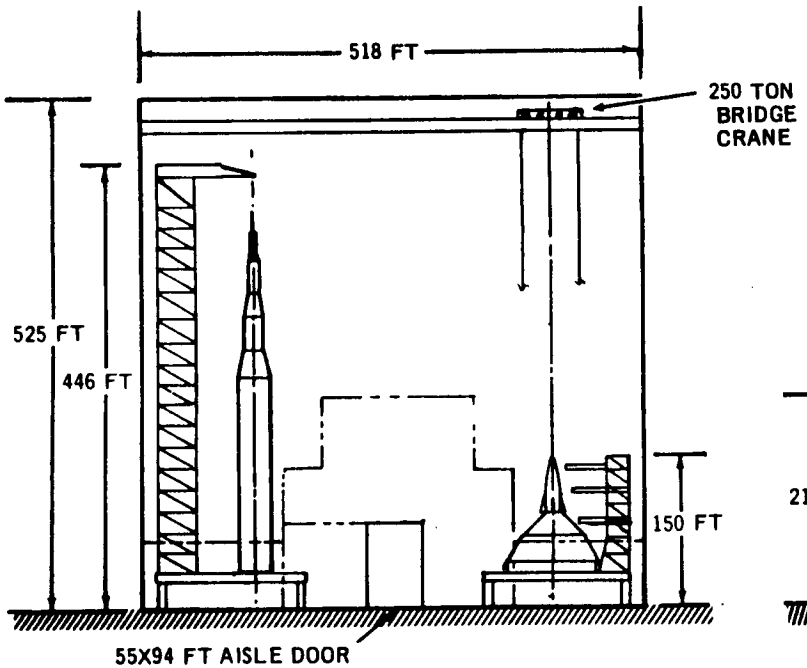

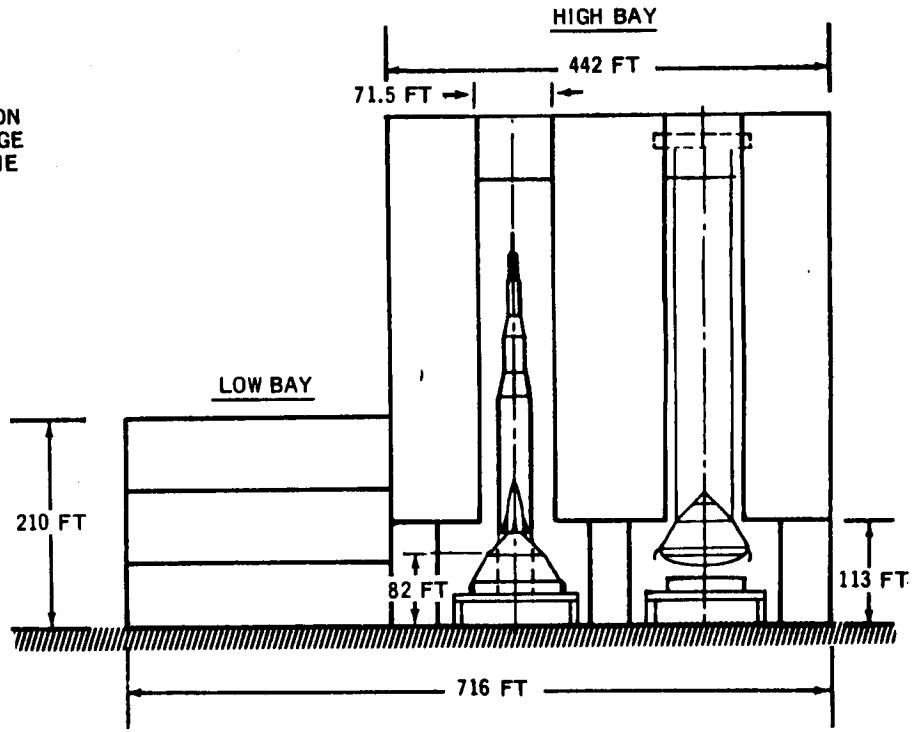

- MINOR MODIFICATIONS TO INTERNAL ACCESS STRUCTURE UP TO 77 FT LEVEL
- INSTALL CHECKOUT EQUIPMENT

LAUNCH AT LC-39B

The approach illustrated here is applicable to LC-39B; however, LC-39A could also be adapted in a similar manner if future requirements showed this to be desirable.

No major modification to the pad itself appears necessary. The chief modification to the complex will be to increase the LH_2 facility tankage from a present 850,000 gallon capacity to a 1,100,000 gallon capacity necessary to satisfy the SERV requirements.

Upon arrival at the pad, the crawler-tractor positions and lowers the new and lighter mobile base onto the pad. The legs of the new mobile base are identical, both in terms of location and method of attachment, to those of the Apollo mobile base. Mating of mobile base-to-pad connections is made and the two circular segment flame deflectors located within the mobile base are extended. These water cooled deflectors direct the exhaust efflux into the existing flame trench.

Propellant loading of the SERV is through a point just above the aerospike protection doors. Propellant loading of the MURP is via a service arm of the umbilical tower. Propellant loading of the cargo module for a tanker mission is also by way of a service arm into the transition section below the MURP.

To provide operation flexibility, and because pad time is critical, the service arms have ready vertical adjustment in addition to an Apollo-type service arm telescopic and swing clear capability.

After completion of propellant loading, including the cargo module if required, the crew and passengers would be loaded, a final on-board checkout performed, and launch initiated.

Pad emergency escape from the MURP will be similar to that used on the Apollo Program. It will incorporate a high-speed, 20-man elevator (600 fpm) to the mobile base and down into the existing underground rubber room.

Allowance has been made for a launch drift angle of 10 degrees to clear the top of the umbilical tower.

Holddown and launch initiation are by explosive bolts connecting the cylindrical support ring on the mobile launcher deck to the SERV thrust ring.

LAUNCH AT LC-39B

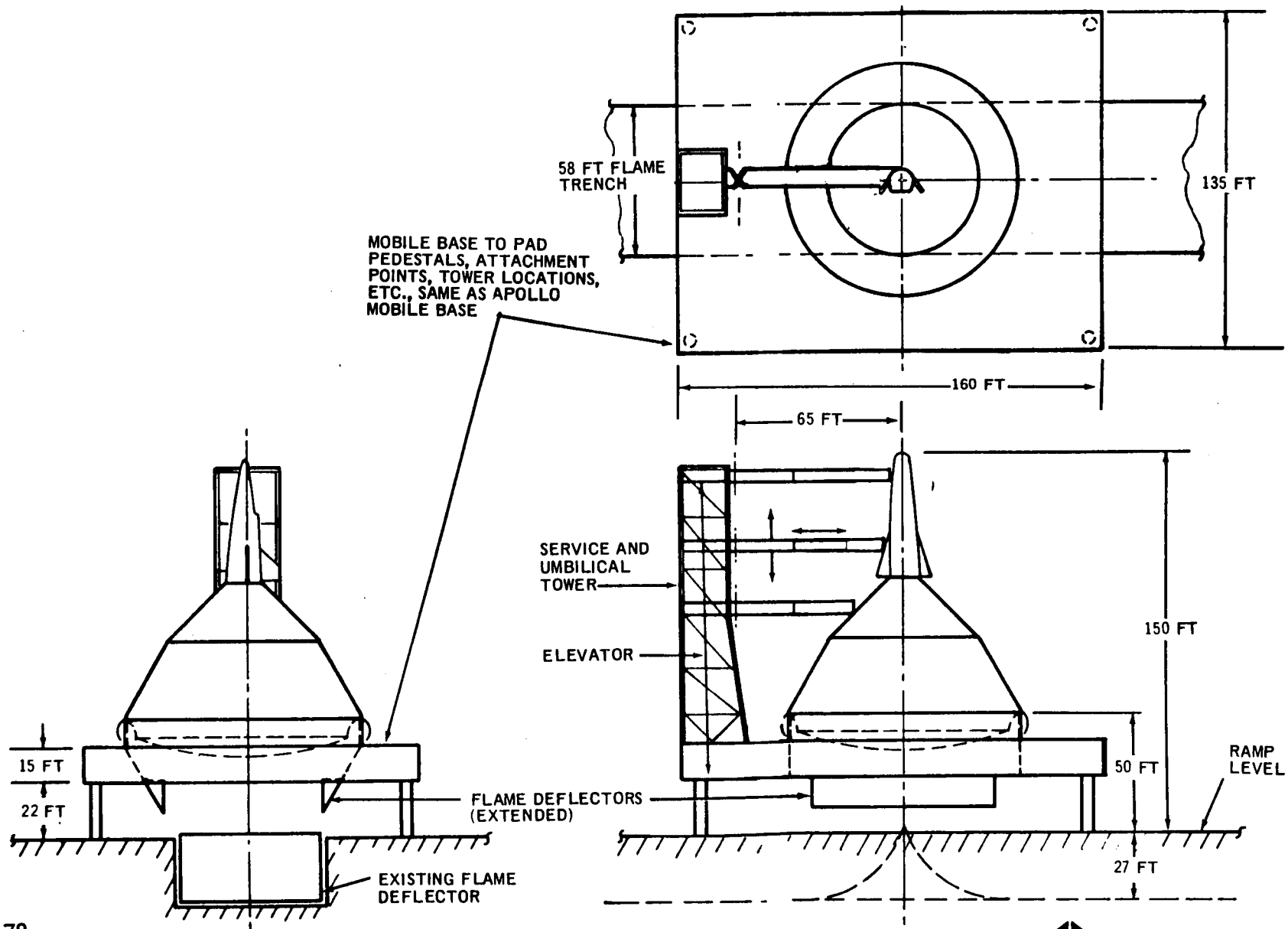

LAUNCH AT NEW COMPLEX (LC-39C)

As discussed in a previous chart, the majority of shuttle launches would be performed off the new complex (LC-39C) with overload launches from LC-39B.

The major differences between the new complex and the existing LC-39B launch complex are at the pad. The LC-39B type flame trench is eliminated and a 360 degree circular, film cooled flame deflector substituted. This approach permits a relatively flat and cheaper pad to be constructed. The basis for this approach is the large toroidal shape of the exhaust plume with its cooler temperature at a given distance from the nozzle exit and its relatively low thrust per lineal foot when compared with the concentrated heat and thrust of the S-IC exhaust.

All pad-to-mobile-base interconnections are identical to those on LC-39B.

All comments on the operational approach for LC-39B are applicable except that the two circular segment flame deflectors remain retracted inside the mobile base.

LAUNCH AT NEW COMPLEX (LC-39C)

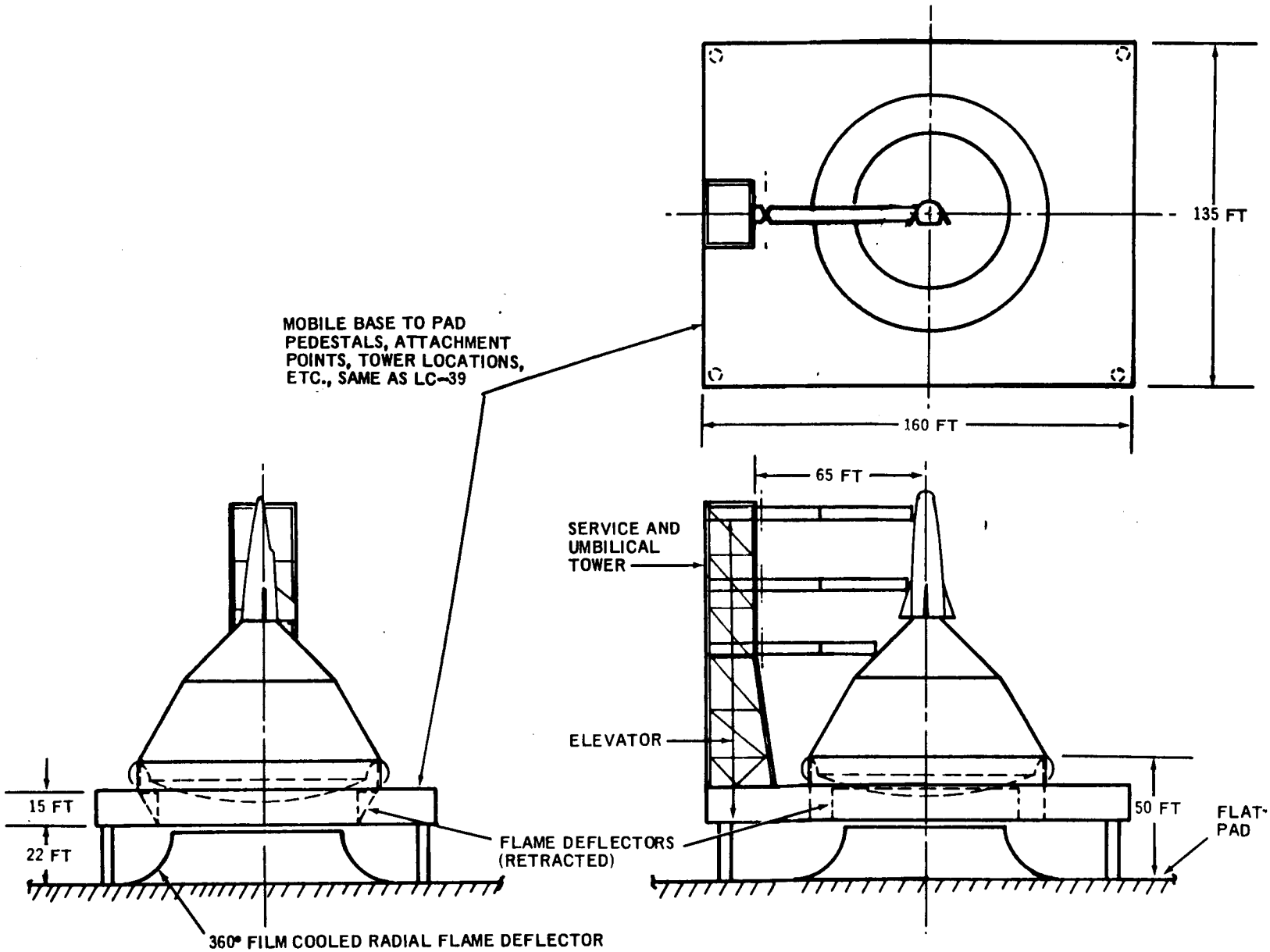

79

SPACE DIVISION CHRYSLER CORPORATION

Section 8

SCHEDULES AND COSTS

INTRODUCTION

The engineering, manufacture, test, and launch activities have been discussed in previous sections. In this section the mission requirements are examined, and the scheduling activities to implement the program are presented together with the associated rough-order-of-magnitude (ROM) costs.

SCHEDULES AND COSTS

- MISSION MODEL
- PROGRAM PLAN
- ROM COSTS
- HEAT SHIELD TRADE-OFFS
- FUNDING REQUIREMENTS

SERV TRAFFIC MODEL

The normal space shuttle traffic model shown on this chart includes flights in support of:

(1) A space station leading to a space base in 1982

(2) An unmanned planetary program

(3) An unmanned satellite program

(4) The lunar exploration program

(5) Space tug logistics

The model shows 25 flights the first year. With the initiation of the lunar program in 1980, the number of flights increase to 75 flights per year. The traffic remains relatively steady at this level thereafter. The dominant missions in this period are support of the space base and the lunar program.

Missions are identified on the chart as either a SERV mission (unmanned logistic flight) or a MURP-SERV mission (manned flight). The ratio of SERV flights to the total flights is shown on the chart and illustrates the unmanned bias in the missions.

SERV TRAFFIC MODEL

ST = SERV-TUG SM = SERV-MURP	CALENDAR YEARS AND CONFIGURATION															
	77		78		79		80		81		82		83		84	
	ST	SM	ST	SM	ST	SM	ST	SM	ST	SM	ST	SM	ST	SM	ST	SM
SPACE STATION LOGISTICS	3	4	3	4	3	4	3	4	3	4						
SPACE BASE LOGISTICS											3	20	3	20	3	20
UNMANNED PLANETARY FLIGHTS	7		1		8		3		4		6		5		2	
UNMANNED EARTH SATELLITES	2		2		2		2		2		2		2		2	
LUNAR PROGRAM							42	6	42	6	28	6	28	6	28	6
SPACE TUG PROPELLANTS	9		3		9		15		15		15		15		10	
TOTALS	21	4	9	4	22	4	65	10	66	10	51	26	50	26	47	26
TOTAL ANNUAL FLIGHTS	25		13		26		75		76		77		76		73	
PERCENT SERV-TUG FLIGHTS	88		69		85		87		87		66		66		64	

MINIMUM FLIGHT HARDWARE ACQUISITION

The estimated number of hardware units required for an operational flight program were calculated based on the following assumption:

(1) Mission length of seven calendar days.

(2) Turnaround time of ten working days (fourteen calendar days) after return from orbit.

(3) A ten-hour, five-hundred start capability for the Space Tug propulsion system.

(4) A sixty percent unmanned flight ratio.

(5) A five year flight program projection.

(6) Each projected flight program year contains ten space probe type missions.

(7) For space probe missions, the Space Tug is assumed to operate for 15 minutes; for a nominal logistics run from 100-nm orbit to 270-nm orbit and return, a 3-minute engine operation is assumed.

MINIMUM FLIGHT HARDWARE ACQUISITION

FLIGHTS PER YEAR	SERV	MURP	SPACE TUG
24	2	1	2
48	3	2	3
72	5	2	3
100	6	3	4

NOTE: (1) 60% OF FLIGHTS ARE UNMANNED.
(2) SPARES ARE EXCLUDED.

PROGRAM SCHEDULE

The SERV program schedule is outlined on the accompanying chart. This schedule shows a projection for the Phase B, C, and D activities and those elements that have a major impact on the program. Earlier charts have identified facility modifications at MAF, MTF, and KSC. The most critical of these at MAF is the rearrangement of Building 103 and the construction of a new Final Assembly Building. To meet an IOC in mid-1977, it is essential that these changes be commenced early in 1971. The new tooling and major assembly fixtures to go into the aforementioned facilities are shown commencing with the Phase D.

It is proposed to build three test vehicles. The first test vehicle will be used for cold flow tests, static loading tests, a static firing, and dynamic testing. Turbofans and associated systems will not be fitted to this vehicle. The tests will be carried out at MTF and the schedule shows the facility modifications at MTF being completed approximately three months before the tests are due to commence. This first test vehicle will be used for testing only, and it will never fly. The second test vehicle will be fitted with turbofan engines and the terminal GN&C system. Aerospike engines will not be fitted. The vehicle will be transported to KSC for horizontal and vertical translation flight tests. The tests are scheduled to take nine months and be completed six months before the completion of manufacture of the first flight test vehicle. Following satisfactory completion of the horizontal and vertical translation tests, the second test vehicle will be returned to MAF for inspection, overhaul and recycling as a production vehicle. In parallel with these tests, subscale test vehicle flight trials will be conducted to ensure that the basic terminal landing and GN&C system functions satisfactorily before the second test vehicle translation tests are initiated. The third test vehicle is known as the first flight vehicle, and will be used for orbital flight tests. Following satisfactory completion of these tests, the vehicle will be returned to MAF for inspection, overhaul, and recycling as a production vehicle. The three test vehicles, two of which are subsequently fitted as production vehicles, are followed by the first production vehicle, with IOC scheduled for June 1977.

Throughout this period, and commencing with the initiation of the Phase D activities, system, subsystem and component development and qualification tests will be performed at MAF and appropriate contractor facilities. These tests include such systems as: landing gear, door and flap mechanisms, RCS, avionics, combined fuel and trim systems, aerodynamic, and thermodynamic investigations.

Finally, the chart shows the development schedule for the aerospike engine and the turbofan engines. The critical path is: 1) the initiation of FAB (MAF) modifications; 2) completion of Building 103 (MAF) plant modification and the first set of tooling and fixtures; 3) FAB activation with first set of tooling and fixtures; 4) delivery of aerospike engine modules; 5) completion of subscale test vehicle; 6) delivery of turbofan engines; 7) completion of flight tests of subscale test vehicle; 8) completion of static test, dynamic test and low altitude translation tests at MTF and KSC respectively; 9) KSC facility checkout, 10) the first orbital flight test; and 11) IOC.

PROGRAM SCHEDULE

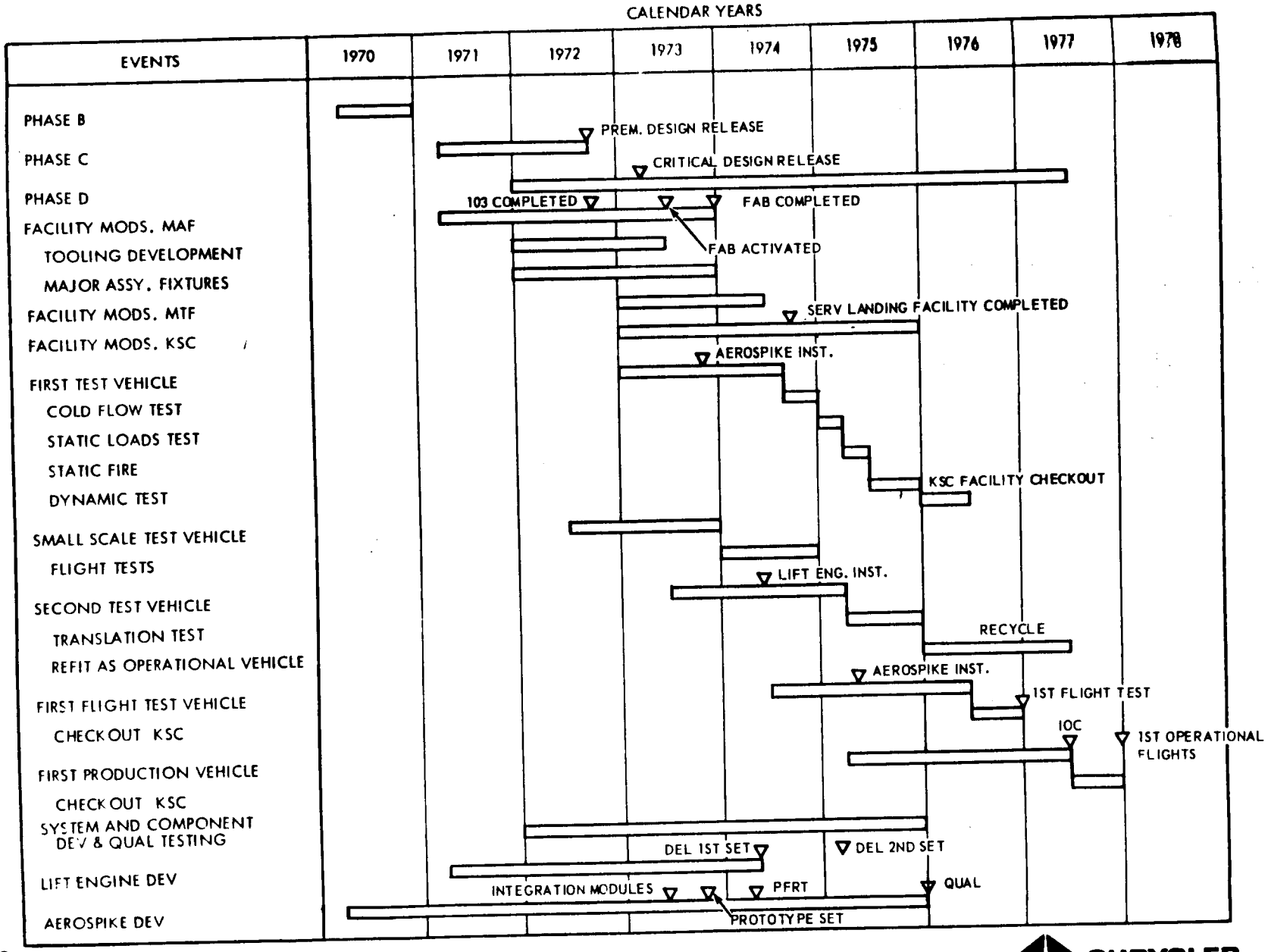

83

SPACE DIVISION CHRYSLER CORPORATION

ROM PROGRAM DEVELOPMENT COST

The development cost for the SERV and Space Tug were either estimated by CCSD, provided by engine manufacturers, or developed from NASA CER's. The chart shows ROM development costs for the SERV, MURP, and Space Tug. The development cost for the MURP was taken from North American Rockwell report SP #69-11 developed under Contract NAS9-9205.

The development cost category includes costs for the engineering design and development of the concept plus costs for test hardware and facilities. The test hardware includes a test vehicle for static and dynamic testing, a prototype test vehicle, and flight test vehicle. It should be noted that the prototype will be re-built and the flight test vehicle will be overhauled for use as production vehicles. The facility development cost includes costs for new and modified facilities at MAF and KSC. All non-recurring cost are included in the program development cost.

ROM PROGRAM DEVELOPMENT COST

(MILLIONS OF DOLLARS)

SERV		1847
STRUCTURES	450	
ELECTRONICS	400	
AUXILIARY SYSTEMS	200	
PROPULSION	382	
SUBTOTAL	1432	
FACILITIES	235	
TEST ARTICLES	95	
PROTOTYPE	85	
SUBTOTAL	415	
MURP		2300
SPACE TUG		600
TOTAL PROGRAM DEVELOPMENT COST		4747

ROM HARDWARE COST

The hardware costs presented include all costs associated with the initial procurement of hardware required for an operational flight program. The hardware costs for the SERV were developed either through the estimates of specialists, or with the aid of NASA CER's where feasible. MURP costs were obtained from North American Rockwell report SP #69-11 under Contract NAS9-9205.

The Space Tug hardware cost is a projection for a minimum capability vehicle. Since the Space Tug will probably eventually be a sophisticated vehicle capable of performing many functions, the unit cost used may be considered as an amortized allotment to the SERV application.

The costs shown on the chart include all direct labor and burden costs for Support Engineering, Manufacturing, Quality Control, Material, Training, and Systems Test.

ROM HARDWARE COST

(UNIT COST IN MILLIONS)

SERV	
STRUCTURE	18.2
THERMAL PROTECTION	3.1
STABILIZATION AND CONTROL	14.0
ELECTRICAL POWER	2.5
GUIDANCE AND NAVIGATION	4.0
COMMUNICATIONS AND INSTRUMENTATION	4.5
LANDING, RECOVERY, AND DOCKING	5.0
PROPULSION	44.0
UNIT COST	95.3
MURP UNIT COST	72.1
VEHICLE UNIT COST	167.3
SPACE TUG UNIT COST	40.0

MINIMUM HARDWARE INVESTMENT COST

Hardware investment includes costs for the initial procurement of the reusable hardware required for an operational flight program. The chart shows the minimum hardware requirements and does not include any spare flight units. Spare flight units were not considered necessary due to the ample capability that exists in the majority of the flight programs described by the traffic model. Specific program requirements would dictate actual spares requirements for each flight program.

The estimated number of flight units required for a flight program was based on the assumptions previously stated on the chart entitled, "Minimum Flight Hardware Acquisition."

MINIMUM HARDWARE INVESTMENT COST

(100 FLIGHTS PER YEAR)

	NUMBER REQUIRED	TOTAL INVESTMENT (MILLIONS)
SERV	6	571.2
MURP	3	216.3
SPACE TUG	4	160.0
TOTAL HARDWARE INVESTMENT COST		947.5

RECURRING COST

This chart shows the recurring cost per launch in a 100-flight-per-year program. Costs for institutional activities of space operations are not included.

The cost for flight operations and sub-system spares were developed as representative of the effort required in these areas.

The primary costs in the refurbishment and launch operations is the replacement of the ablative heat shield.

The propellant costs were determined using:

- 50¢ per lb for LH_2
- 1.25¢ per lb for LOX
- 2¢ per lb for JP-4 fuel

Vehicle amortization was based on a 60 percent unmanned flight ratio resulting in the following amortization:

• One SERV x $95 M	=	$95 M
• 40% of one MURP unit x $72 M	=	$29 M
• 66% of one Space Tug x $40 M	=	$26 M
		$150 M

Cost per pound of payload was based on a round trip to and from a 100 nm by 55° inclination circular orbit and was calculated using 75,000 payload for SERV flights and 47,500 payload for the MURP-SERV flights.

RECURRING COST

(100 FLIGHTS PER YEAR)

RECURRING COST PER FLIGHT (MILLIONS)	
REFURBISHMENT AND LAUNCH OPERATIONS	0.995
FLIGHT OPERATIONS	0.200
PROPELLANTS	0.300
SPARES	0.500
VEHICLE AMORTIZATION	1.500
TOTAL	3.495
RECURRING COST PER YEAR (MILLIONS)	349.5
PAYLOAD UNIT COST ($/LB)	54.5

NOTE:
- SERV FLIGHTS - 75K PAYLOAD
- MANNED MURP FLIGHTS - 47.5K PAYLOAD
- 60% UNMANNED FLIGHTS ASSUMED

THERMAL SHIELD REUSE COST EFFECT

This chart shows the effect of reuse of the ablative heat shield on cost per pound of payload and on the recurring cost per year. A design point of $80.00 per square foot was used for the analysis.

To estimate the cost of reuse, additional ablation thickness was added proportional to the amount estimated to be charred during reentry. The effective payload was adjusted downward by the amount of weight associated with the additional thickness. Because the MURP-SERV configuration has the lowest cargo weight, these flights were assumed to be scheduled to have heat shields with sufficient ablation material for that flight only.

When considering current ablation materials, two uses (one reuse) appear to be the optimum. From this investigation it is clear that SR&T activities should be directed toward producing ablators that char to a lesser depth so that the payload degradation is reduced, thereby making more reuses possible.

THERMAL SHIELD REUSE COST EFFECT

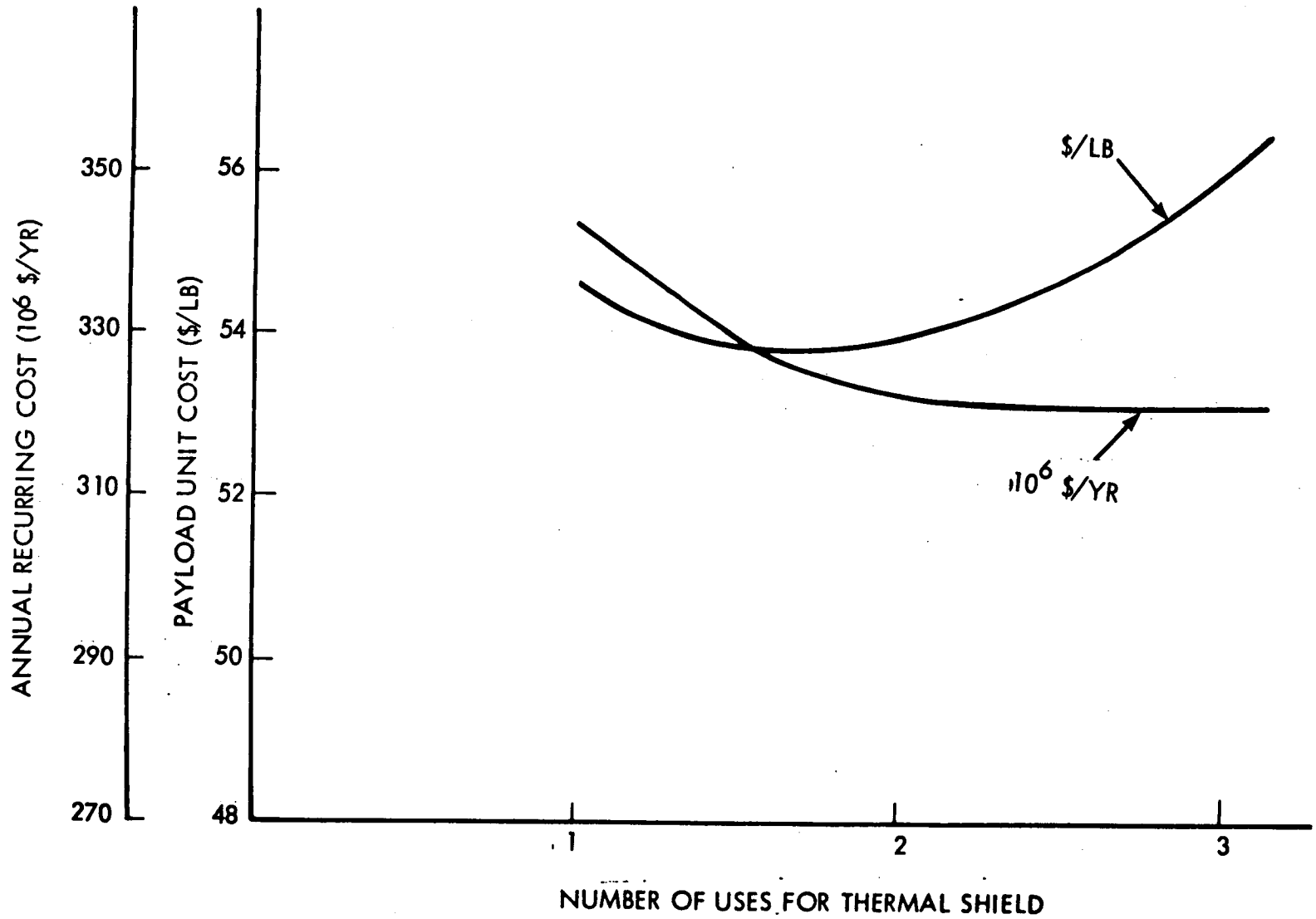

SPACE DIVISION CHRYSLER CORPORATION

THERMAL SHIELD COST REDUCTION

Having established that a maximum of two uses of a heat shield is most practical with current ablators, the effect of $/lb and $/year of reducing the ablator cost was examined. This is anticipated to yield substantial economic advantages because the large quantities of panels and ablator material offer the possibility of semi-mass production by commercial methods. The chart indicates that with a 40 percent reduction in the current estimated (small lot) cost, the cost of one pound of payload into a 100 nm orbit (55° inclination) can be reduced to below $50/lb. Although this cost does not vary significantly between one and two uses of a heat shield, there is, nevertheless, a substantial reduction in the recurring cost per year. This analysis indicates the need for a detailed investigation of potential mass production methods for the large scale manufacture of the ablative shield.

THERMAL SHIELD COST REDUCTION

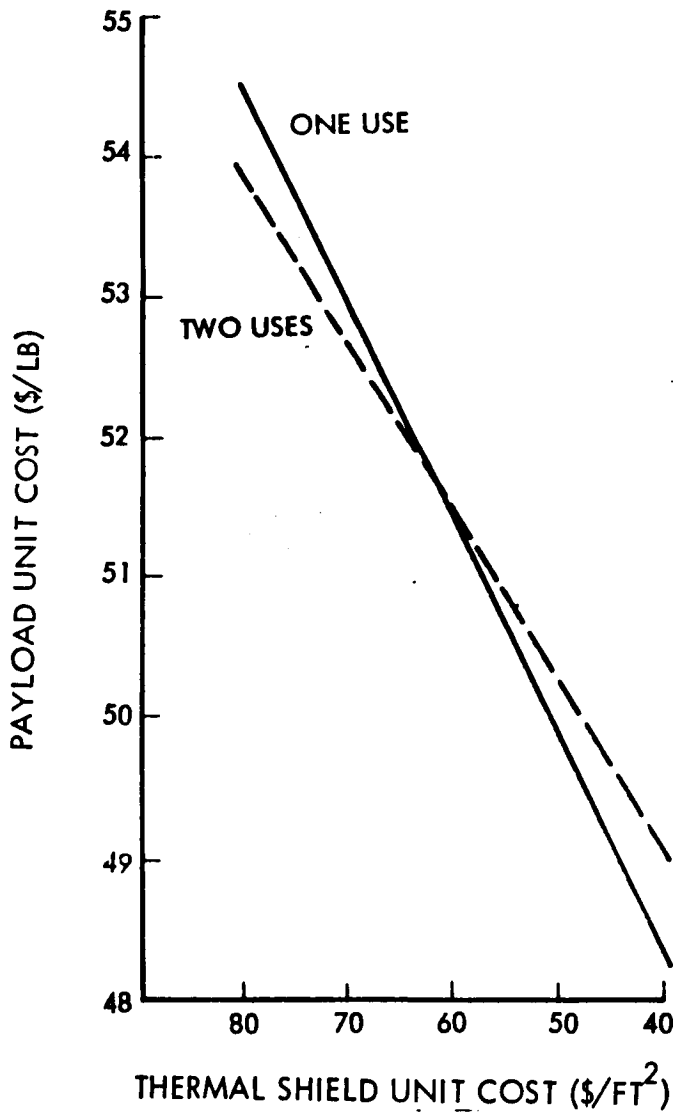

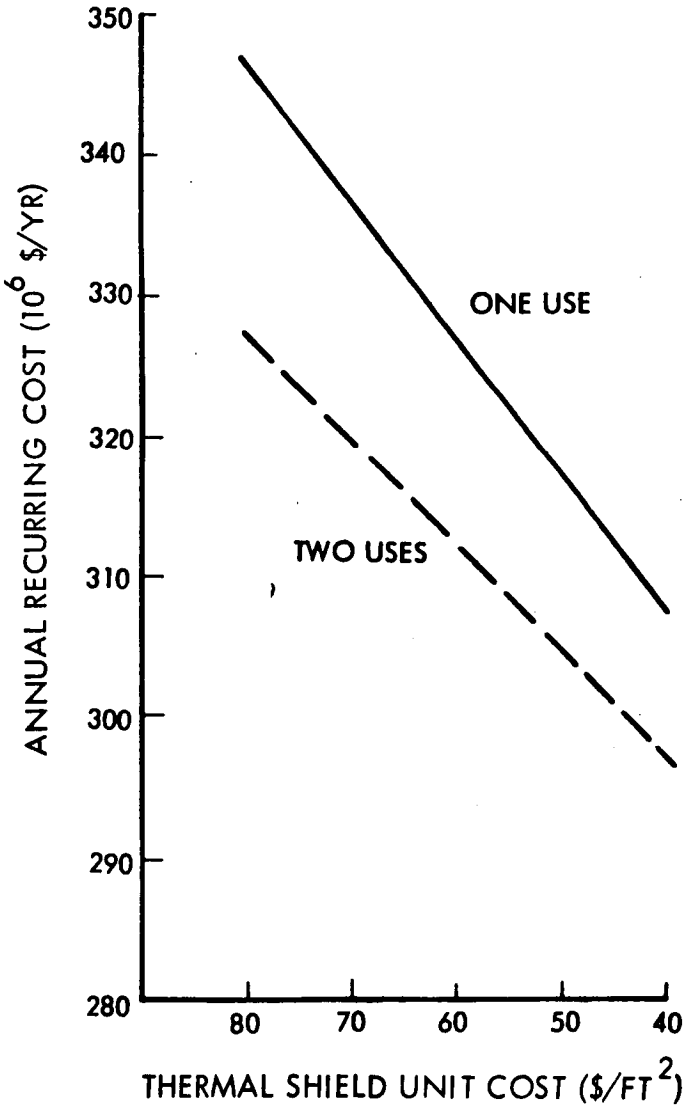

ROM PROGRAM COST DISTRIBUTION (SERV)

Since future space activities will be limited by available funding, the next four charts present costs for various program alternatives and show how the funding requirements may be reduced by phasing of space transportation activities.

Option No. 1 considers funding only for the production of the SERV to transport cargo (26,000 lb) to a space station. As an interim measure, Saturn IB launch vehicles will be used to transport personnel to and from the space station, to be followed by SERV launches with Apollo-type crew modules. Thus, the SERV could be used in a manned or unmanned mode during ascent and descent for little additional cost above that of the crew module.

The accompanying chart shows the development, hardware, and operations costs for producing and operating the SERV alone. For this option, the peak annual funding is approximately $400 million, and the accumulated total to FY 1985 is $3.7 billion.

ROM PROGRAM COST DISTRIBUTION (SERV)

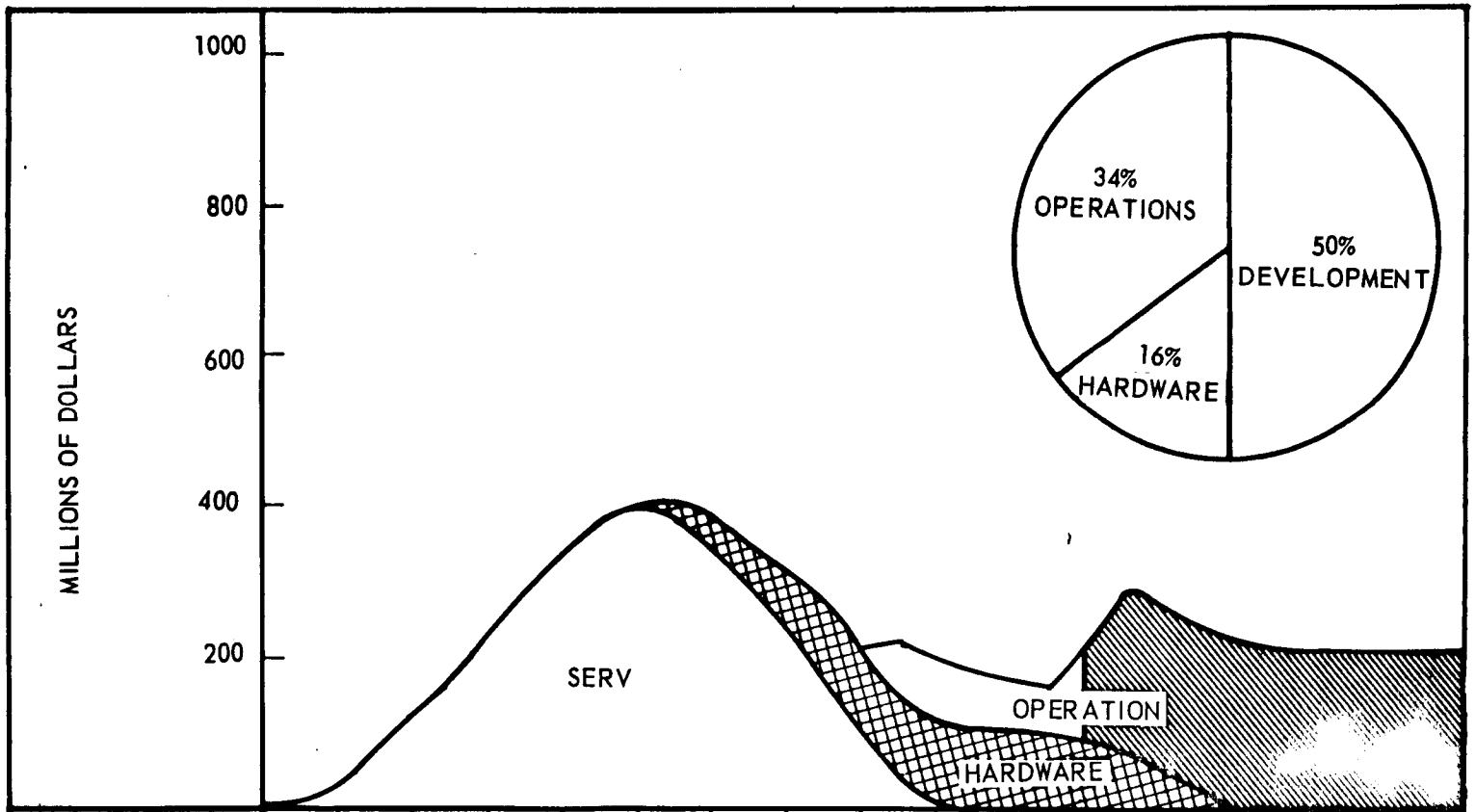

FISCAL YEARS	70	71	72	73	74	75	76	77	78	79	80	81	82	83	84	85
ANNUAL COST	9	74	168	296	388	413	346	268	211	191	171	284	244	214	214	214
TOTAL COST		83	251	547	935	1348	1694	1962	2173	2365	2536	2820	3064	3278	3492	3705

SPACE DIVISION CHRYSLER CORPORATION

ROM PROGRAM COST DISTRIBUTION (MURP-SERV)

Option No. 2 considers the manufacture and development of the MURP and SERV. A combination of these two vehicles provides the capability to transport men and material (25,000 lb) to and from the space station. In addition, a substantial cross range capability is provided.

The accompanying chart shows the development, hardware, and operations costs for producing and operating the MURP-SERV combination. For this option, the peak annual funding is approximately $900 million, and the accumulated total to FY 1985 is $6.4 billion.

ROM PROGRAM COST DISTRIBUTION (MURP-SERV)

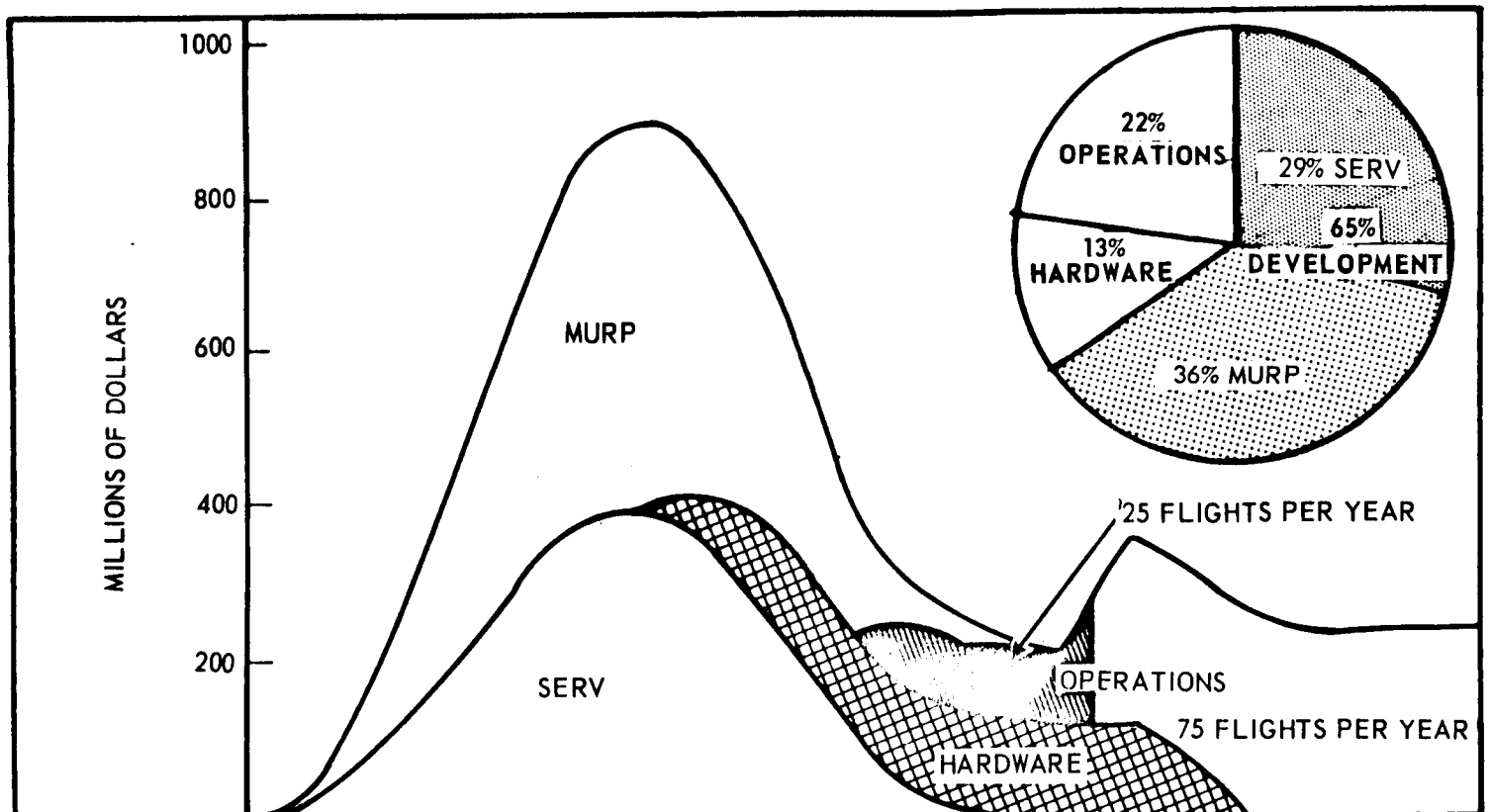

FISCAL YEAR	70	71	72	73	74	75	76	77	78	79	80	81	82	83	84	85
ANNUAL COST	21	166	377	663	871	896	763	502	296	252	205	367	292	242	242	242
TOTAL COST		187	564	1227	2098	2994	3757	4259	4555	4807	5012	5379	5671	5913	6155	6397

ROM PROGRAM COST DISTRIBUTION (MURP-SERV-SPACE TUG)

Option No. 3 considers the combined manufacture and development of the MURP, SERV, and Space Tug. This option gives the greatest program operational capability in terms of payload and flexibility to move this payload (25,000 lb cargo to a space station, 77,000 lb cargo to low earth orbit).

The accompanying chart shows the development, hardware, and operations costs for producing and operating the MURP, SERV, and Space Tug. For this option, the peak annual funding is approximately $1.05 billion, and the accumulated total to FY 1985 is $7.3 billion.

ROM PROGRAM COST DISTRIBUTION (MURP-SERV-SPACE TUG)

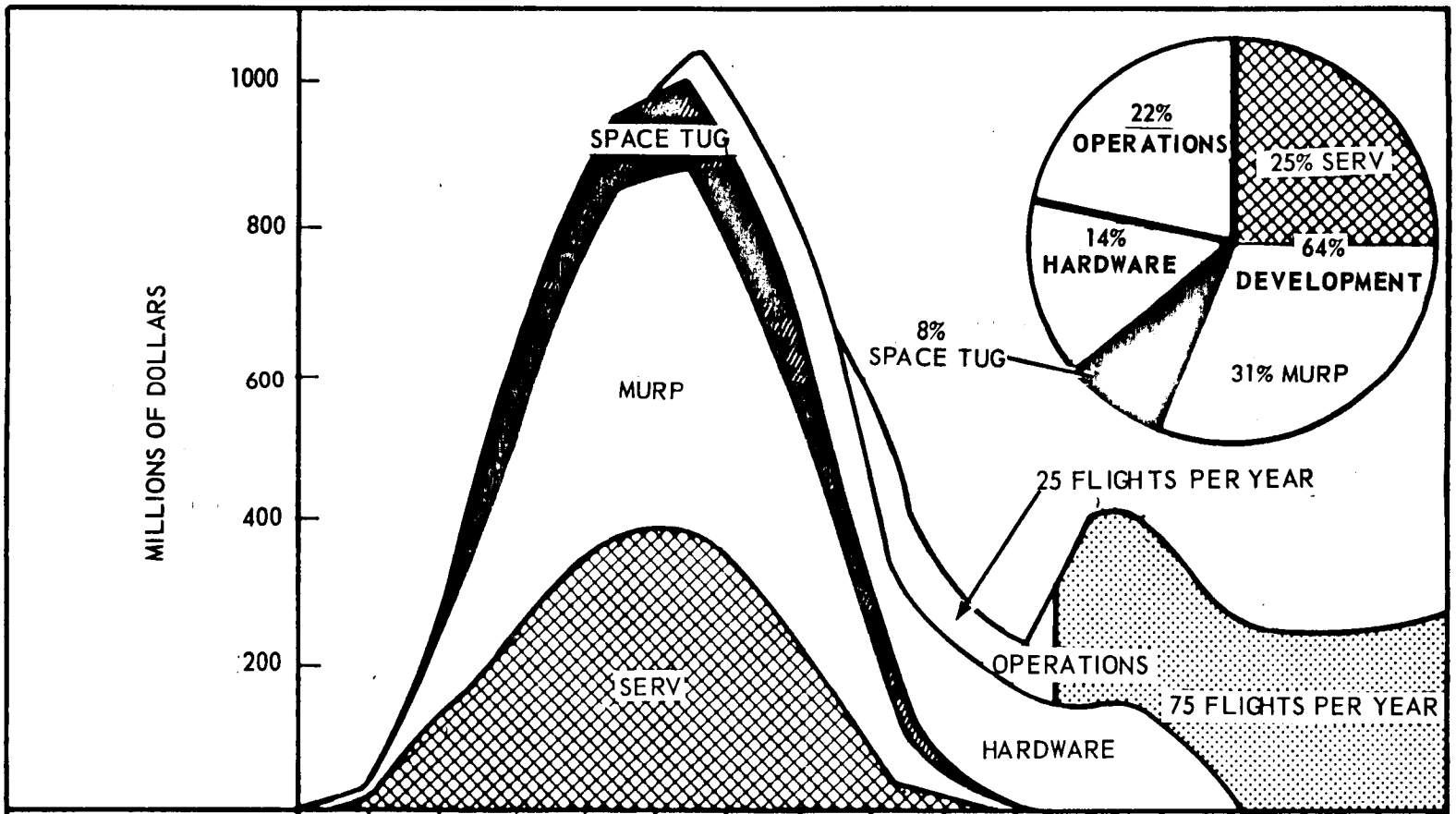

FISCAL YEARS	70	71	72	73	74	75	76	77	78	79	80	81	82	83	84	85
ANNUAL COST	21	169	401	718	967	1047	914	623	383	296	244	412	337	262	262	262
TOTAL COST	–	190	591	1309	2276	3323	4237	4860	5243	5539	5783	6195	6532	6794	7056	7318

ROM PROGRAM COST DISTRIBUTION FOR PHASED OPERATIONS

Option No. 4 considers the phased introduction of SERV, MURP, and Space Tug. With this option, IOC for the SERV is CY 1977, IOC for the MURP is CY 1979, and IOC for the Space Tug is CY 1981. Manned support to the SERV would be provided by Saturn IB launch vehicles (cost not included) until the introduction of the MURP. The commissioning of the SPACE TUG in CY 1981 would ensure full use of the great operational flexibility of the complete transport system.

With Option No. 4, peak funding requirement is limited to approximately $800 million, and the accumulated total to FY 1985 is $7.26 billion.

This option makes possible the tailoring of mission requirements to funding limitations, and is one of the attractive features of the SERV concept.

ROM PROGRAM COST DISTRIBUTION FOR PHASED OPERATIONS

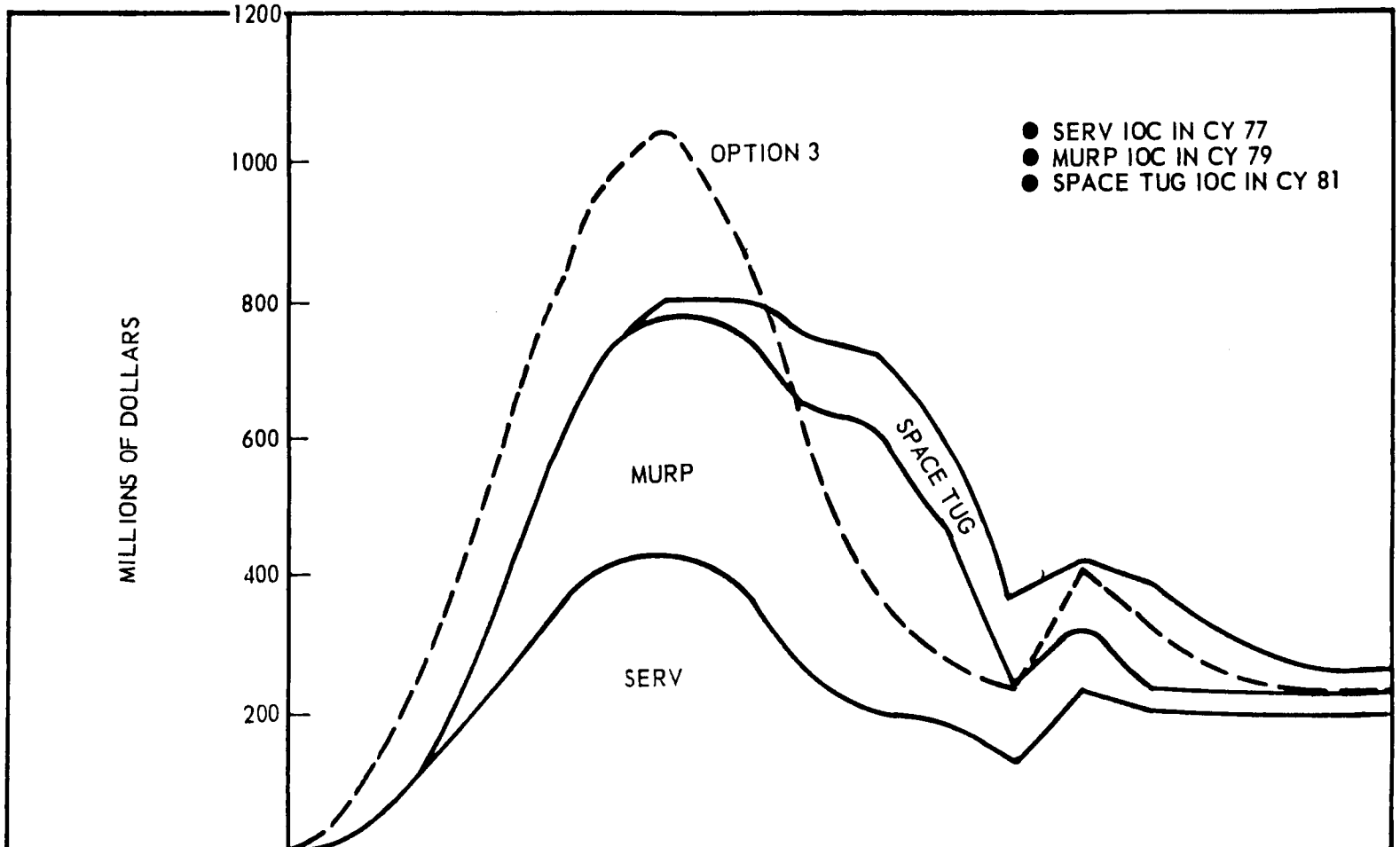

FISCAL YEARS	70	71	72	73	74	75	76	77	78	79	80	81	82	83	84	85
ANNUAL COST	9	74	230	488	705	801	800	752	739	600	372	423	392	331	282	262
TOTAL COST	–	83	313	801	1506	2307	3107	3859	4572	5198	5570	5993	6385	6716	6998	7260

SPACE DIVISION CHRYSLER CORPORATION

Section 9

CONCLUSIONS

INTRODUCTION

The main conclusions to be drawn from this feasibility study are presented in this section together with recommendations for further study areas.

The most important conclusion to be drawn from this study is that the SERV single-to-stage-to-orbit concept is feasible and that only state of the art technology is necessary for its success. In certain areas problems exist due to a lack of suitable data, notably aerodynamic and thermodynamic wind tunnel data; however, tests have been recommended to overcome this deficiency.

It is evident that decoupling the animate cargo from inanimate cargo provides a notable increase in operational flexibility and a markedly reduced vehicle size that greatly enhances ease of launch operations. Also, the orbiter vehicle and SERV can be developed independently of each other. Recognition of this fact leads to the important conclusion that the phased introduction of the SERV followed by MURP and finally the Space Tug results in the lowest peak fiscal funding requirement. With phased introduction, the transportation of personnel to the space station could be accomplished by the Saturn IB as an interim measure until the MURP becomes operational.

It has been shown that the impact on MAF, MTF, and KSC facilities is only nominal and that the relatively small size of SERV greatly simplifies launch operations.

It has also been shown how the SERV can be adapted to accept 33-foot-diameter modules, such as a nuclear stage (33 foot diameter by 100 foot long) or a space station module, thus bringing the economic transportation costs of a space shuttle to a sphere of activity that currently depends on the high cost of expendable launch vehicles.

Finally, it is concluded that the proposed concept can serve NASA in a wider sphere of endeavor than currently considered possible.

CONCLUSIONS

- SINGLE STAGE TO ORBIT IS FEASIBLE
- ONLY STATE OF THE ART TECHNOLOGY NECESSARY
- SEMI-MASS PRODUCTION TECHNIQUES CAN REDUCE HEAT SHIELD RECURRING COSTS
- DECOUPLING ANIMATE FROM INANIMATE CARGO PROVIDES INCREASED OPERATIONAL FLEXIBILITY
- ORBITER AND SERV CAN BE DEVELOPED INDEPENDENTLY
- PHASED INTRODUCTION OF SERV, MURP, AND SPACE TUG REQUIRES LOWEST PEAK FUNDING ($775 M) WITH HARDWARE IOC IN 1977, 1979, AND 1981, RESPECTIVELY
- MAF, MTF, AND KSC REQUIRE ONLY NOMINAL FACILITY MODIFICATION
- SMALL SIZE AND SINGLE STAGE CONCEPT SIMPLIFY LAUNCH OPERATIONS
- SERV CAN LOFT 33-FOOT-DIAMETER MODULES, REDUCING DEPENDENCE ON HIGH COST EXPENDABLE SATURN V

FURTHER STUDY AREAS

One result of this feasibility study is the identification of areas recommended for further investigation to ensure that data is available for the engineering phase. The more important of these further study areas include:

(1) Aerodynamic testing to provide data for ascent and descent controllability and for refined structural design analysis and subsystem tradeoffs.

(2) Thermodynamic testing to establish base heating, pressure distribution and flow characteristics, and to more thoroughly examine the thermal protection requirements during reentry heating.

(3) Examine alternate winged reentry vehicles, and reconfigure the MURP to provide a ferry capability.

(4) Analyse the terminal navigation requirements in greater detail.

(5) Establish the vehicle and component development and qualification requirements.

(6) Examine on-orbit operations in greater detail.

(7) Define flight test requirements and operations.

(8) Establish preliminary plans for program implementation.

FURTHER STUDY AREAS

- AERODYNAMIC AND THERMODYNAMIC TESTING
- REFINE STRUCTURAL ANALYSIS AND SUBSYSTEM TRADEOFFS
- EXAMINE ADAPTATION OF TURBOJETS TO CONSUME HYDROGEN FUEL
- ESTABLISH HEAT SHIELD COST UNDER QUANTITY PRODUCTION
- RECONFIGURE MURP TO PROVIDE FERRY CAPABILITY
- EXAMINE ALTERNATE WINGED REENTRY VEHICLES
- PERFORM MORE DETAILED ANALYSIS OF TERMINAL NAVIGATION REQUIREMENTS
- INTEGRATE FACILITY MODIFICATIONS AT MAF, MTF, AND KSC
- ESTABLISH VEHICLE AND COMPONENT DEVELOPMENT AND QUALIFICATION REQUIREMENTS
- EXAMINE ON-ORBIT OPERATIONS IN GREATER DETAIL
- DEFINE FLIGHT TEST REQUIREMENTS AND OPERATIONS
- ESTABLISH PRELIMINARY PLANS FOR PROGRAM IMPLEMENTATION

COMMERCIAL TRANSPORT APPLICATION

The concept of a space shuttle is based on the premise that an airline operations approach will substantially reduce space transportation operating costs. Having established that the SERV concept is feasible, and noting the extreme simplicity of the ground facilities and operations required to launch SERV, CCSD also examined the potential of SERV as a forerunner of an entirely new mode of commercial transport.

The ability to land near vertically and to take off near vertically presents an intriguing combination and one that is particularly suited for the method of approach and departure at major airports. Also, the problem of sonic boom currently perplexing both Government and industry is practically nonexistent provided the combined descent-ascent site is situated a reasonable distance from major built-up areas. It is proposed, therefore, to examine the economics of a SERV launched into suborbital flight between any two major cities not greater than 5500 nautical miles apart; maximum altitude is 100 nautical miles and the reentry angle is -2 degrees. The chart shows how all the major cities can be reached - naturally cities at lesser distances can also be accommodated. The maximum journey time between two points on the globe, approximately 5500 nautical miles apart, is about 40 minutes. This short time interval allows, for the first time, consideration of launch only after receiving clearance from the reception area.

COMMERCIAL TRANSPORT APPLICATION

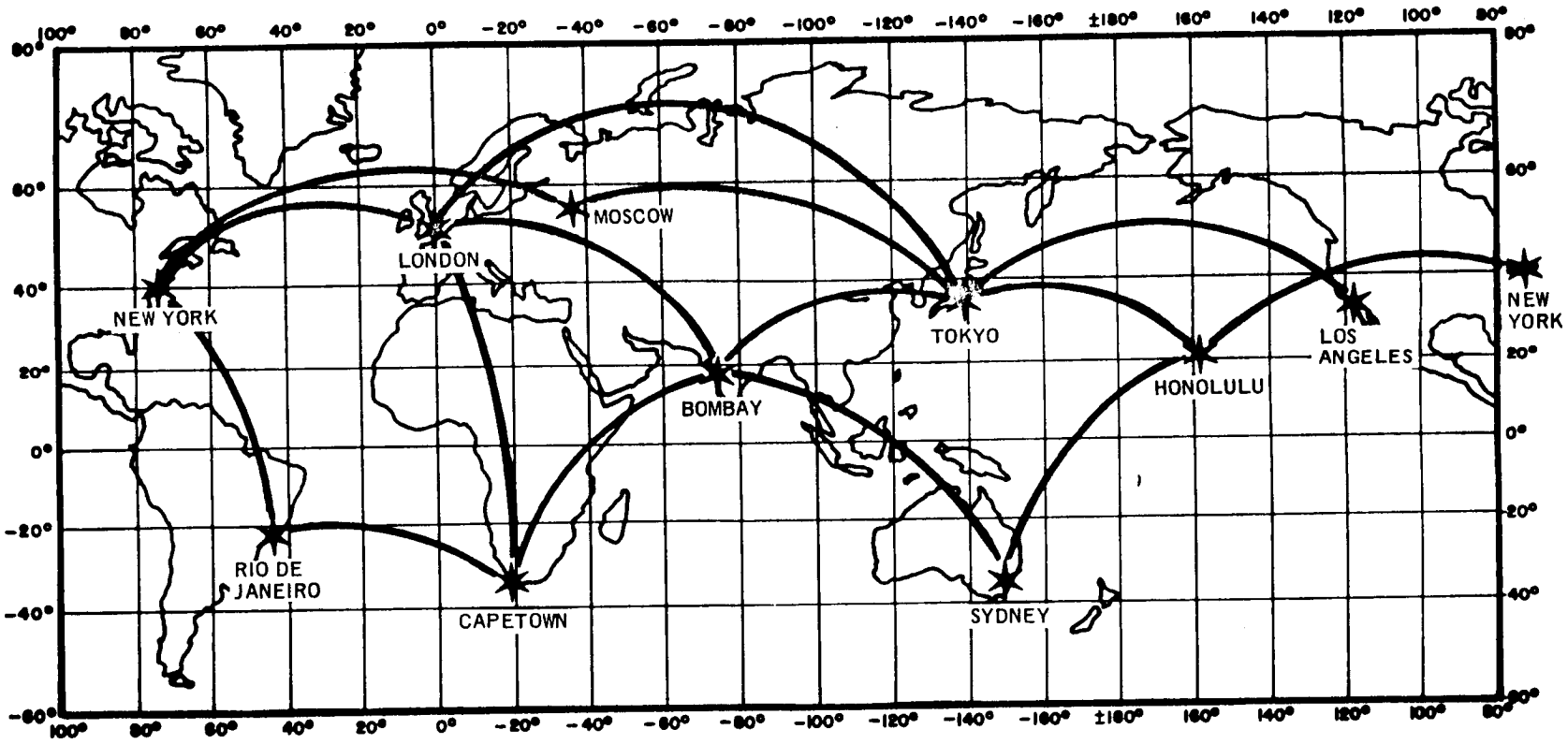

SAMPLE TRIP TIME – NEW YORK TO SYDNEY – 2 HR 18 MIN

NEW YORK TO HONOLULU			REFUEL	HONOLULU TO SYDNEY		
ACCELERATE	6	39 MIN	60 MIN	ACCELERATE	6	39 MIN
COAST	20			COAST	20	
DECELERATE	13			DECELERATE	13	

COMPARISON OF COMMERCIAL TRANSPORTATION FARES

In arriving at a comparison of commercial passenger fares for the SERV and present day commercial aircraft, a number of assumptions had to be made. These assumptions are listed on the chart and the associated economics are outlined. Based on these assumptions, the passenger fare by SERV would be 50 percent greater than the comparable airline passenger fare. However, if the propellant cost could be reduced to one quarter of present day costs (and the large quantities involved open up this possibility), then the fares become comparable. Under these circumstances the SERV has a definite advantage over current sonic and subsonic aircraft due to the greatly reduced transit time. It is recognized that the costs presented here may be oversimplified, but the potential of SERV for this application cannot be discarded and further study appears to be desirable.

COMPARISON OF COMMERCIAL TRANSPORTATION FARES

ASSUMPTIONS

- COMMERCIAL PAYLOAD OF 100,000 POUNDS
- DAILY FLIGHTS FROM NEW YORK TO SYDNEY (VIA HONOLULU)
- ABLATOR HEAT SHIELD AT $40 PER FT^2 HAVING 10 USES
- PROPELLANT COSTS AT 50% CURRENT COST
- VEHICLE AMORTIZATION OVER 1000 HOUR SYSTEM LIFETIME

ECONOMICS	SERV APPLICATION	
	SPACE	COMMERCIAL
• REFURBISHMENT	$0.817M	$0.040M
• LAUNCH OPERATIONS	0.178	0.016
• FLIGHT OPERATIONS	0.200	0.055
• PROPELLANTS	0.300	0.300
• SPARES	0.500	0.055
• VEHICLE AMORTIZATION	1.500	0.042
• TOTAL COST PER FLIGHT	$3.495M	$0.508M
• PAYLOAD WEIGHT	75,000 LB	100,000 LB
• PAYLOAD UNIT COST	$54.5/LB	$5.08/LB
• SERV FARE PER 200-LB PASSENGER	$10,900	$1,016
• SERV FARE (PROPELLANT COSTS AT 25% OF CURRENT COST)	$7,469	$696
• CURRENT AIRLINE TOURIST FARE	-	$650

97