JPL PUBLICATION 77-29

Evaluation of Battery Models for Prediction of Electric Vehicle Range

(NASA-CR-155045) EVALUATION OF BATTERY MODELS FOR PREDICTION OF ELECTRIC VEHICLE RANGE (Jet Propulsion Lab.) 67 p HC A04/MF A01 CSCL 10C

N77-32593

Unclas

G3/44 49076

National Aeronautics and
Space Administration

Jet Propulsion Laboratory
California Institute of Technology
Pasadena, California 91103

TECHNICAL REPORT STANDARD TITLE I

1. Report No. JPL Pub. 77-29	2. Government Accession No.	3. Recipient's Catalog No.
4. Title and Subtitle Evaluation of Battery Models for Prediction of Electric Vehicle Range		5. Report Date August 1, 1977 6. Performing Organization Code
7. Author(s) H. A. Frank, A. M. Philips		8. Performing Organization Report No.
9. Performing Organization Name and Address JET PROPULSION LABORATORY California Institute of Technology 4800 Oak Grove Drive Pasadena, California 91103		10. Work Unit No. 11. Contract or Grant No. NAS 7-100 13. Type of Report and Period Covered JPL Publication
12. Sponsoring Agency Name and Address NATIONAL AERONAUTICS AND SPACE ADMINISTRATION Washington, D.C. 20546		14. Sponsoring Agency Code
15. Supplementary Notes		

16. Abstract

The objective of this investigation was to evaluate three different battery analytical models for predicting electric vehicle battery output and the corresponding electric vehicle range for various driving cycles as described by SAE-J227a. The approach consisted of using the models to predict output and range, then comparing the results with experimentally determined values. The latter were determined by laboratory tests on batteries, using discharge cycles identical to those encountered by an actual electric vehicle while on the SAE cycles. Results indicated that the so-called Modified Hoxie Model gave the best predictions with an accuracy of about 97-98% in most cases and 86% in the worst case. Solution of this model required lengthy iterative calculations that were carried out with a computer. The program that was written to perform these calculations is included in this report. Also described are the program and hardware that were used to automatically discharge the battery in accord with the current profiles corresponding to the SAE driving cycles. Future effects are recommended using these models to predict the effect of battery type on range of a wide variety of vehicles.

17. Key Words (Selected by Author(s)) Engineering (General) Electronics and Electrical Engineering Computer Programming and Software Systems Analysis		18. Distribution Statement Unclassified - Unlimited	
19. Security Classif. (of this report) Unclassified	20. Security Classif. (of this page) Unclassified	21. No. of Pages 66	22. Price

JPL PUBLICATION 77-29

Evaluation of Battery Models for Prediction of Electric Vehicle Range

H. A. Frank
A. M. Phillips

August 1, 1977

National Aeronautics and
Space Administration

Jet Propulsion Laboratory
California Institute of Technology
Pasadena, California 91103

PREFACE

The work described in this report was performed by the Control and Energy Conversion Division of the Jet Propulsion Laboratory.

ACKNOWLEDGEMENT

We would like to acknowledge the assistance of Mr. Fred Akers in setting up the computer program for solving the battery model. We would also like to acknowledge the helpful discussions with Mr. W. Rippel for his support of this effort.

ABSTRACT

The objective of this investigation was to evaluate three different battery analytical models for predicting electric vehicle battery output and the corresponding electric vehicle range for various driving cycles as described by SAE-J227a. The approach consisted of using the models to predict output and range, then comparing the results with experimentally determined values. The latter were determined by laboratory tests on batteries, using discharge cycles identical to those encountered by an actual electric vehicle while on the SAE cycles. Results indicated that the so-called Modified Hoxie Model gave the best predictions with an accuracy of about 97-98% in most cases and 86% in the worst case. Solution of this model required lengthy iterative calculations that were carried out with a computer. The program that was written to perform these calculations is included in this report. Also described are the program and hardware that were used to automatically discharge the battery in accord with the current profiles corresponding to the SAE driving cycles. Future efforts are recommended using these models to predict the effect of battery type on range of a wide variety of vehicles.

PRECEDING PAGE BLANK NOT FILMED

CONTENTS

I	INTRODUCTION	1-1
II	APPROACH	2-1
III	DESCRIPTION OF MODELS	3-1
	A. Fractional Utilization Model	3-1
	B. Shepherd Model	3-2
	C. Modified Hoxie Model	3-3
IV	DRIVING CYCLES AND CURRENT PROFILES	4-1
V	INPUT DATA FOR MODELS	5-1
	A. Fractional Utilization Model	5-1
	B. Shepherd Model	5-1
	C. Modified Hoxie Model	5-3
VI	DRIVING CYCLE LABORATORY SIMULATION TESTS	6-1
VII	RESULTS	7-1
VIII	SUMMARY AND CONCLUSIONS	8-1
IX	RECOMMENDED FUTURE EFFORTS	9-1
X	REFERENCES	10-1

APPENDICES

A-1	DESCRIPTION OF PROGRAM VCTIR AND PROGRAM VCTIR LISTING	A-1
A-2	AUTOMATIC CHARGE-DISCHARGE CONTROLLER AND DATA PROCESSING SYSTEM	A-2
A-3	VOLTAGE PRINTOUTS FOR SCHEDULES "B", "C", AND "D"	A-3

FIGURES

1.	Typical Load Profile for Original Hoxie Model	3-4
2.	Generalized Load Profile for Modified Hoxie Model	3-6
3.	Schematic of SAE-J227a Driving Cycle	4-2
4.	Velocity Profile of Ripp-Electric Vehicle on Schedule "B"	4-3
5.	Velocity Profile of Ripp-Electric Vehicle on Schedule "C"	4-3
6.	Velocity Profile of Ripp-Electric Vehicle on Schedule "D"	4-4
7.	Current Profile of Ripp-Electric Vehicle Battery on Schedule "B"	4-4

 PRECEDING PAGE BLANK NOT FILMED

8. Current Profile of Ripp-Electric Vehicle Battery on Schedule "C" 4-5

9. Current Profile of Ripp-Electric Vehicle Battery on Schedule "D" 4-5

10. Stepwise Current Approximation for Ripp-Electric Vehicle Battery on Schedule "B" 4-6

11. Stepwise Current Approximation for Ripp-Electric Vehicle Battery on Schedule "C" 4-7

12. Stepwise Current Approximation for Ripp-Electric Vehicle Battery on Schedule "D" 4-7

13. Manufacturers' Supplied Performance Data on EV-106 Battery . . 5-2

TABLES

1. Range Predicted by Models Compared to Laboratory Simulation . . 7-2

SECTION I
INTRODUCTION

Public Law 94-413, the Electric and Hybrid Research, Development, and Demonstration Act of 1976, authorizes a broad program designed to promote electric and hybrid vehicle technologies and to demonstrate the commercial feasibility of these systems. Activities under the Act will require a great deal of road testing of existing and advanced vehicles. This testing is quite time consuming and costly due to the need for a) development and integration of complex instrumentation systems, b) transportation of vehicles to and from test tracks, c) track costs, d) per diem costs, e) lengthy test procedures which must often be repeated due to weather conditions, f) computer time for processing data, and g) appreciable amounts of engineering labor for data reduction and analysis. Throughout the course of the Act the road tests alone could amount to several hundreds of thousands of dollars or even millions of dollars depending upon the required number of tests.

One method for sharply reducing the time and cost of such tests is by development and use of analytical vehicle models. Once these models are developed, it is possible to carry out computer simulation runs and determine all the information that could be obtained in a road test, i.e., range, energy economy, acceleration capability, gradability, component and overall vehicle efficiency, etc. The runs can be carried out at a fraction of the cost of the road tests.

Successful development of a vehicle model requires detailed knowledge and analytical models of the vehicle's powertrain components including charger, battery, controller, motor, and gear train.

The scope of this investigation was limited to study of one of the above components, the battery. The objective was to test the relative accuracies of three previously proposed battery models in predicting battery performance. In particular it was desired to establish which of the three models gave the best prediction of electric vehicle battery output and corresponding electric vehicle range when subjected to selected driving patterns. The models of concern are referred to as the a) Fractional Utilization Model,[1] b) Shepherd Model,[2]

and c) Modified Hoxie Model.[3] The driving patterns of concern are Schedules B, C, and D, of SAE-J227a.[4]

SECTION II

APPROACH

Approach to the problem consisted of both analytical and experimental investigations on an ESB EV-106 lead-acid battery. The analytical effort consisted of using the models to predict battery output when subjected to discharge regimes associated with the SAE driving cycles. The calculated outputs were then used to predict vehicle range in the manner described below. The experimental effort consisted of laboratory tests on the battery to determine actual outputs when subjected to the identical regimes as above. The measured outputs were then used to calculate range in the manner described below. A comparison was then made of actual and analytically predicted output to test accuracy of the models.

A. ANALYTICAL

Theoretical prediction of range for each of the models was carried out in the following manner. First, a current-time profile curve was obtained for each of the driving cycles. These profile curves were taken from prior road tests on the experimental Ripp-Electric vehicle (described in Section IV). Next, the current values from these profile curves were inserted into the models (with EV-106 constants) which were then solved to yield the number of driving cycles an EV-106 battery could complete to a defined end point. The range per cycle was then computed from the known velocity profile associated with the cycle. Finally, the total predicted range was taken as the product of number of cycles and range in kilometers (miles) per cycle.

B. EXPERIMENTAL

Experimental determination of range was carried out in the following manner. First, the same current-time profiles as above were taken for each of the driving cycles. Next, a computer program was written to have JPL's Automatic Charge-Discharge Controller and Data Processing System operate hardware (power supply and load) to discharge an EV-106 battery in accord with the given current-time profile. Then the test was performed to determine the number of cycles to a defined cutoff point. Finally, the range was computed in the same manner as above, i.e., product of number of cycles and range in kilometers (miles) per cycle.

SECTION III
DESCRIPTION OF MODELS

A. FRACTIONAL UTILIZATION MODEL

The Fractional Utilization Model was examined for its range prediction capability in a recent study by the General Research Co.[1] The model is based on the assumption that during each increment of time, Δt, a portion of the battery weight is depleted. As employed here, the term "depleted" means the expenditure of a given amount of discharge energy. This does not imply that the portion of the battery weight is permanently lost, as it can be subsequently recharged to supply additional energy. The portion depleted is:

$$\Delta W_B = \frac{P_j \, \Delta t}{E \, (P_j/W_B)} \tag{1}$$

where

ΔW_B = portion of battery depleted during Δt, kg (lbs)

P_j = battery power required during the jth interval, watts (product of average voltage and known current)

Δt = time of jth interval, hrs

$E(P_j/W_B)$ = specific energy density, watt-hrs/kg (watt-hrs/lb), which corresponds to the power density, P_j/W_B, watts/lb (this may be obtained from the manufacturer's plot of energy density vs. power density, or may be obtained experimentally).

The current profile during each driving cycle is approximated by a series of constant current steps, and the weight of the battery consumed during each step is computed by Eq. 1. The individual weights are then summed to give the total weight consumed per cycle. The number of cycles is obtained by dividing the total battery weight by the weight consumed per cycle. The range is taken as product of number of cycles and kilometers (miles) per cycle as above. The computational process is quite simple and can readily be carried out by means of a hand calculator.

B. SHEPHERD MODEL

The Shepherd Model was developed several years ago to characterize battery discharge data. It has, however, only recently been considered for use in electric vehicle applications. The model gives the relationship between battery voltages and current in accord with the following equation:

$$E = E_s - Ni - \left(\frac{Q}{Q-it}\right) Ki \qquad (2)$$

where

E = battery operating voltage, volts

i = current, amps

= time, hrs

E_s = experimentally determined constant that corresponds to reference voltage, volts

N = experimentally determined constant that corresponds to internal resistance, ohms

K = experimentally determined constant that corresponds to polarization resistance, ohms

Q = experimentally determined constant that corresponds to battery capacity, amp-hrs.

Values of the constants E_s, N, K, and Q can be obtained either by the method given by Shepherd[2] or by Taylor and Siwek.[3] In this investigation, the constants were determined by the latter method, employing constant current discharge data supplied by ESB.[5]

The model is used to predict range in the following manner. First, the battery is assumed to be completely discharged when its terminal voltage reaches

3.00 volts at the highest discharge current. On this basis, we substitute the value of 3.00 volts for "E" in Eqn. 2. Next, the current profile during a driving cycle is approximated by a series of constant current steps as above. The product "it" is computed for each step and then summed for the cycle. The highest value of current from the above steps is then substituted for the value of "i" in Eqn. 2. The number of cycles "n" that the battery can deliver is then determined by substituting the above values in Eqn. 2 and solving for "n"

$$3.00 = E_s - Ni_{max} - \left(\frac{Q}{Q-nit}\right) Ki_{max} \qquad (3)$$

Range is taken as the product of number of cycles and kilometers (miles) per cycle as above. The computational process is quite simple and can be carried out by means of a hand calculator.

C. MODIFIED HOXIE MODEL

The original Hoxie Model[6] was used to calculate the number of positive plates required for a battery to meet a specified load profile, such as given in Fig. 1. The model required discharge data in the form of time to cutoff at a specified voltage versus discharge rate. The required number of plates was determined by the following equation

$$P = \frac{A_1}{R_1} + \frac{A_2 - A_1}{R_2} + \frac{A_3 - A_2}{R_3} + \ldots \frac{A_n - A_{n-1}}{R_n} \qquad (4)$$

where

P = number of plates required

$A_1, A_2, A_3 \ldots$ = amperes for periods 1, 2, 3 etc

$T_1, T_2, T_3 \ldots$ = time in hrs as indicated in Fig. 1

$R_1, R_2, R_3 \ldots$ = amperes per positive plate for times T_1, T_2, and $T_3, \ldots$ respectively (these currents are taken from the time to cutoff vs. discharge rate data referred to above).

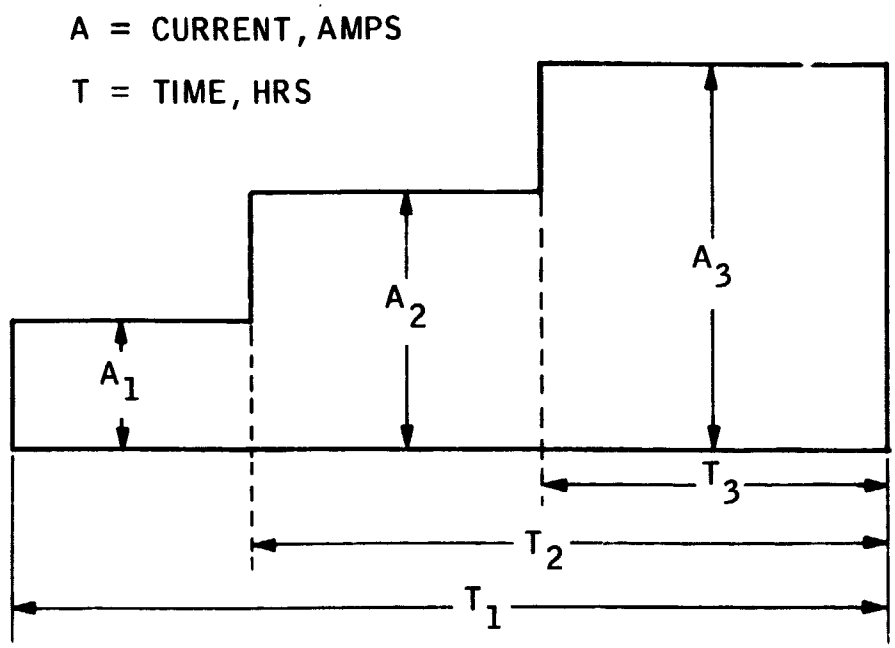

Figure 1. Typical Load Profile for Original Hoxie Model

A unique feature of the Hoxie Model is that it allows for capacity recuperation effects during periods of low current and open circuit as will subsequently be shown.

Another application of the Hoxie Model is to solve for the output time at known current and with a fixed number of plates. This requires an iterative computational process, as the time for complete discharge, T_1, is unknown. One must first assume a value of T_1, calculate the summation in Eqn. 4, and then compare the result with the selected number of plates. The process is repeated until the summation equals the selected number of plates.

This latter approach has served as a basis for development of the so-called Modified Hoxie Model given by Taylor and Siwek.[3] The model is used to predict the output of a single battery, rather than a number of plates. The model requires discharge data (as above) that relates time to cutoff and discharge rate. This discharge data can be expressed analytically in terms of the Shepherd constants given as follows:

$$i = \frac{\Delta E\ t_c + Q(N + K)}{2N\ t_c} + \sqrt{\frac{(\Delta E t_c + NQ + KQ)^2}{4N^2\ t_c^{\ 2}}} - \frac{Q\Delta E}{Nt_c} \qquad (5)$$

where

i = current, amps

t_c = time to cutoff to a given voltage, hrs

ΔE = $E_s - E_c$, volts (E_s is a Shepherd constant and E_c is cutoff voltage, 3.00 volts in the case of EV-106 batteries)

Q = Shepherd constant as above

N = Shepherd constant as above

K = Shepherd constant as above

The model states that the battery is completely discharged when the sum of the terms on the right-hand side of the following equation equals one:

$$1 = \frac{A_1}{R(t_1)} + \frac{A_2 - A_1}{R(t_2)} + \frac{A_3 - A_2}{R(t_3)} \ldots + \frac{A_n - A_{n-1}}{R(t_n)} \qquad (6)$$

where

1 = one complete battery

$A_1, A_2, A_3 \ldots$ = amperes for periods 1, 2, 3 etc in Fig. 2

$t_1, t_2, t_3 \ldots$ = time in hrs as indicated in Fig. 2

$R(t_1), R(t_2)$ $R(t_3)$ = amperes per battery for times $t_1, t_2, t_3 \ldots$ respectively (these currents are computed from Eqn. 5).

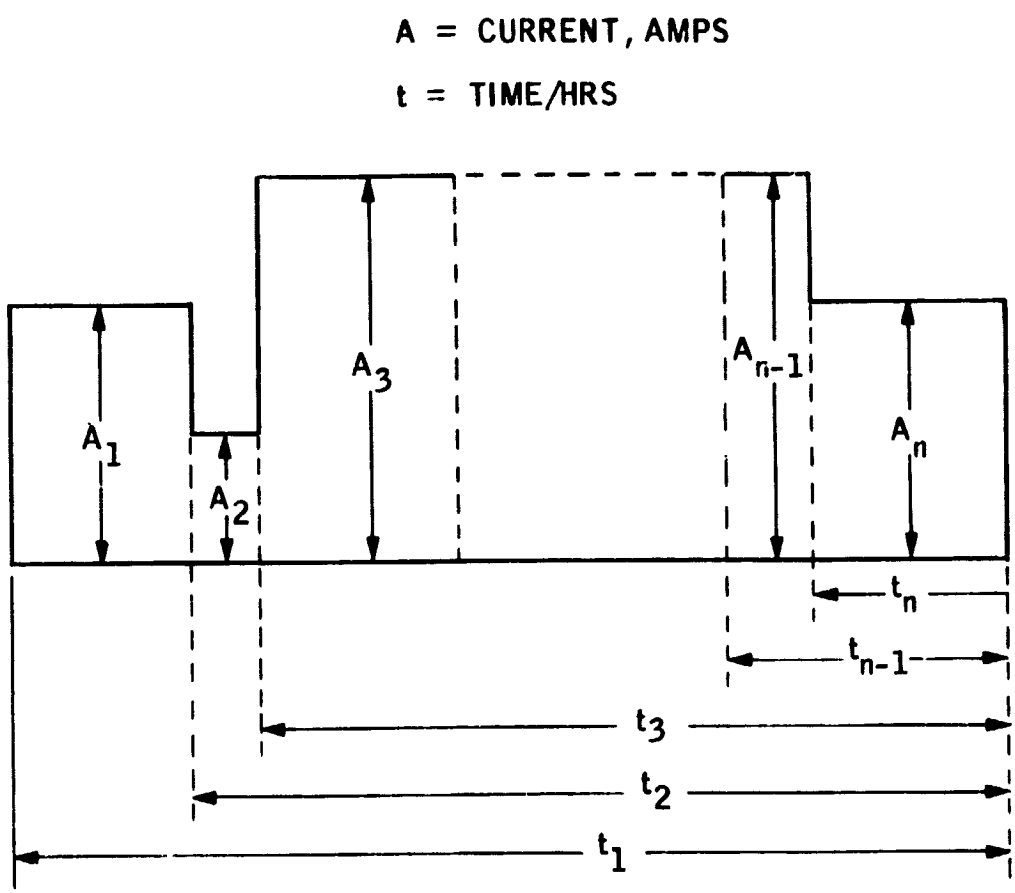

Figure 2. Generalized Load Profile for Modified Hoxie Model

Eqn. 6 is solved by the iterative process described above, i.e., by assuming a value of t_1, computing the sum, and then repeating the process if the sum is greater or less than one.

Due to the lengthy calculations, it was necessary to set up a computer program to solve Eqn. 6 for the total operating time and number of driving cycles. A complete description of the program labeled Program "VCTIR" is given in Appendix A-1. Input parameters are given as currents and times of the driving cycles as well as values of the Shepherd constants. Output of the program is total operating time and number of driving cycles that the battery can deliver. Range is again taken as product of number of driving cycles and kilometers (miles) per cycle. It is well to point out that now that the program has been set up, it can be used not only to predict the effect of type of driving cycle on range, as

is done herein, but also the effect of type of battery on range (by merely inserting the appropriate Shepherd constants for the battery of interest).

SECTION IV

DRIVING CYCLES AND CURRENT PROFILES

A schematic of an SAE J227-a driving cycle is given in Fig. 3. The cycle is broken down into five periods consisting of an acceleration period (t_a), a cruise period (t_{cr}), a coast period (t_{co}), a brake period (t_b), and an idle period (t_i). Time and maximum speed attained during the acceleration period are specified in the SAE procedure. Time and speed of the cruise period are specified in the procedure. Time of the coast period is specified in the procedure, and speed at the end of this period is determined experimentally on the vehicle. Time of the brake period and zero speed at the end of this period are specified in the procedure. Time and zero speed during the idle period are also specified in the procedure.

Figures 4, 5, and 6 give the velocity profiles of the Ripp-Electric Vehicle while on Driving Schedules "B", "C", and "D" of SAE-J227a. Maximum cruise speeds for Schedules "B", "C", and "D" are noted to be 32.2, 48.3, and 72.4 km/hr (20, 30, and 45 mph) respectively. Total operating times on Schedules "B", "C", and "D" are noted to be 72, 80, and 122 sec/cycle respectively. Distance traveled during each cycle may be computed by taking the sum of the product of average speed and indicated times during each segment of the cycle. For Schedules "B", "C", and "D" the computed distances are 0.3377, 0.5389, and 1.5451 km/cycle (0.2099, 0.3349, and 0.9603 miles/cycle) respectively.

Road tests established how battery currents varied during the course of a driving cycle. During acceleration, for example, the current was found to increase in an essentially linear manner with time. At the completion of the acceleration period, the current dropped sharply to a lower level and maintained this level during the cruise period. At the completion of the cruise period, the current dropped sharply to zero and maintained this value during the periods of coast, brake, and idle.

Figures 7, 8, and 9 give the current profiles experienced by the Ripp-Electric Vehicle battery during the course of vehicle operation on driving schedules "B", "C", and "D" of SAE-J227a. Figure 7 gives the profile for schedule "B". It is noted therein that the peak current attained after 19 sec of acceleration is 100 amp and that the steady current during the 19 sec of cruise is 30 amp.

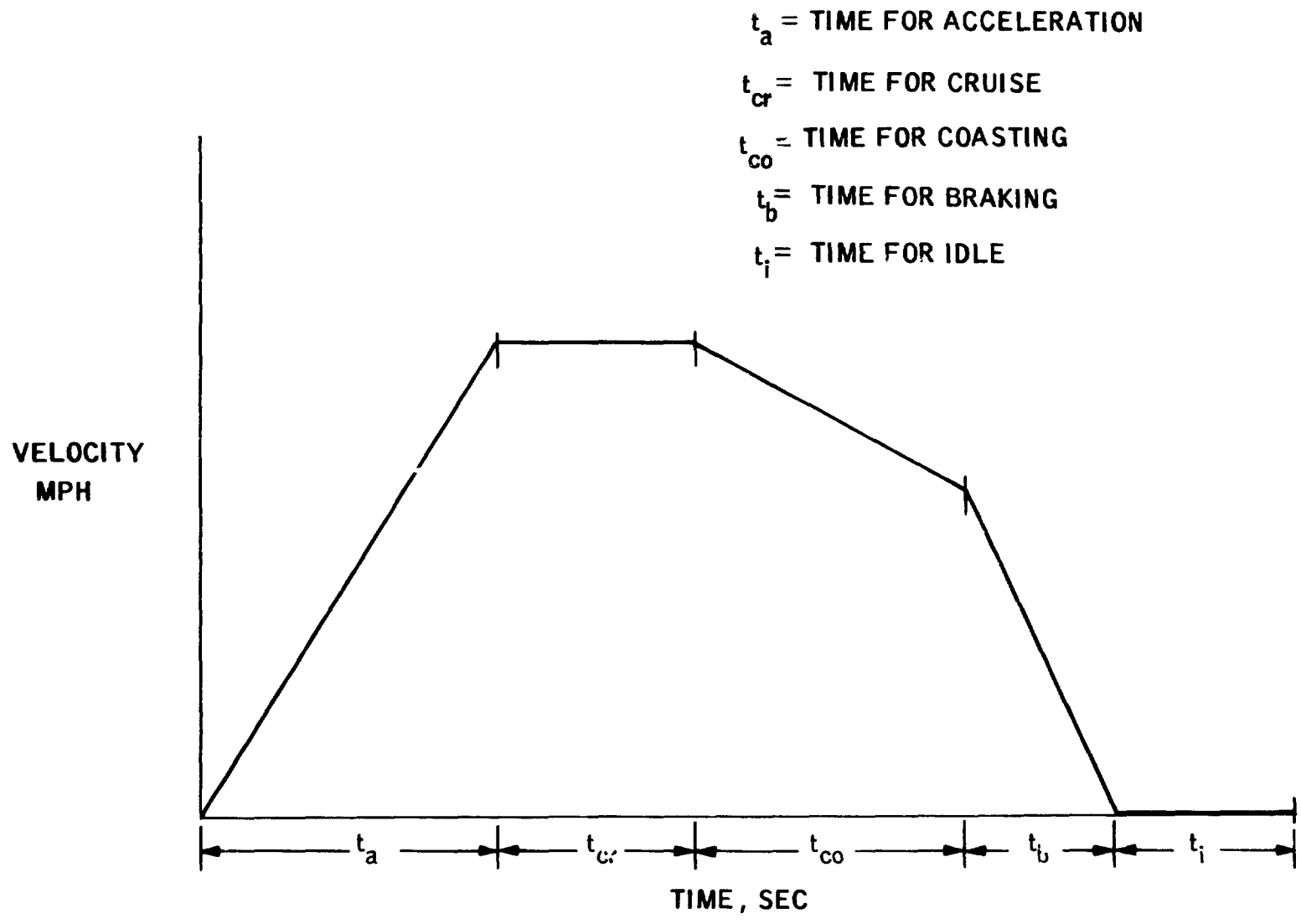

Figure 3. Schematic of SAE-J227a Driving Cycle

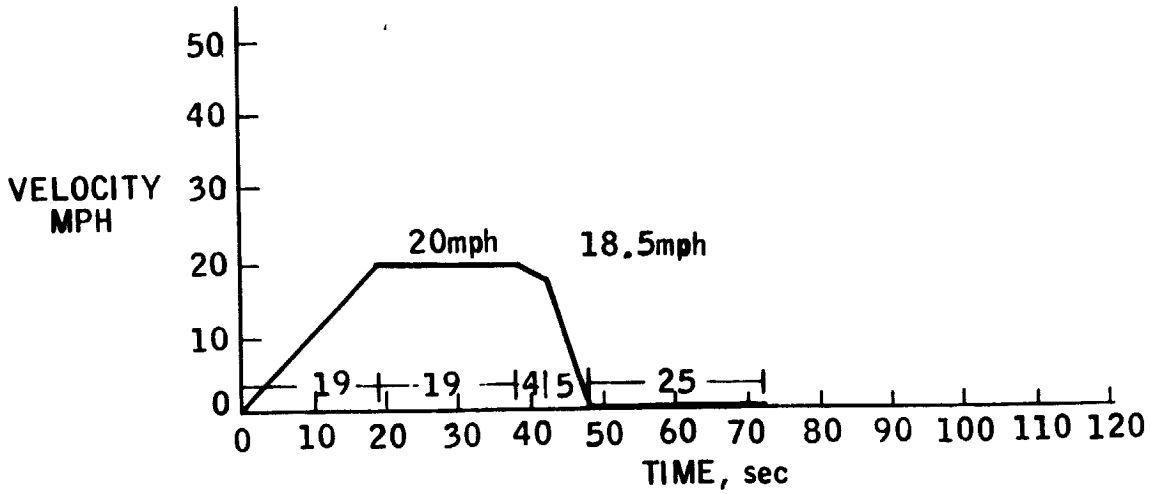

Figure 4. Velocity Profile of Ripp-Electric Vehicle on Schedule "B"

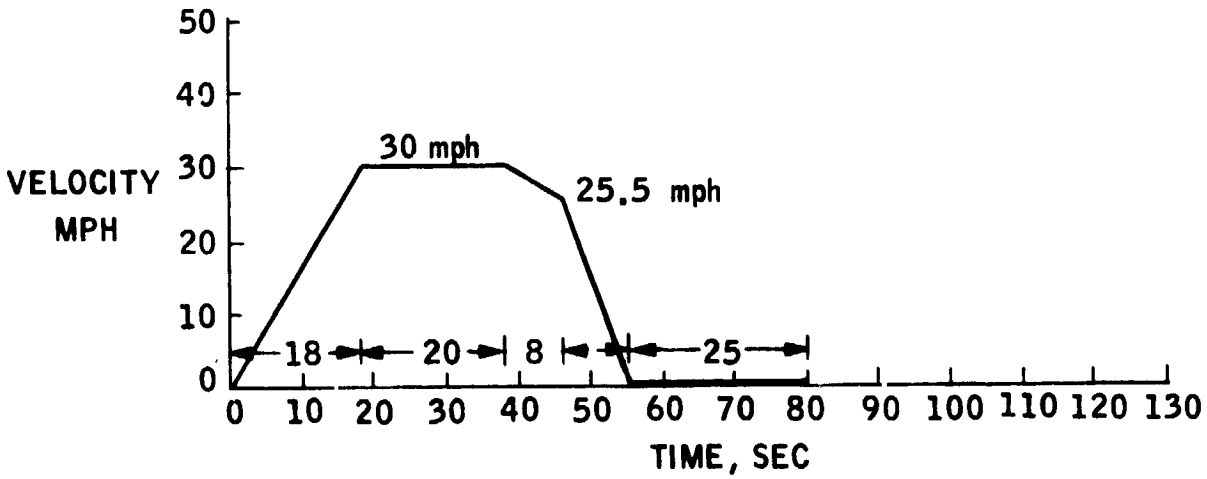

Figure 5. Velocity Profile of Ripp-Electric Vehicle on Schedule "C"

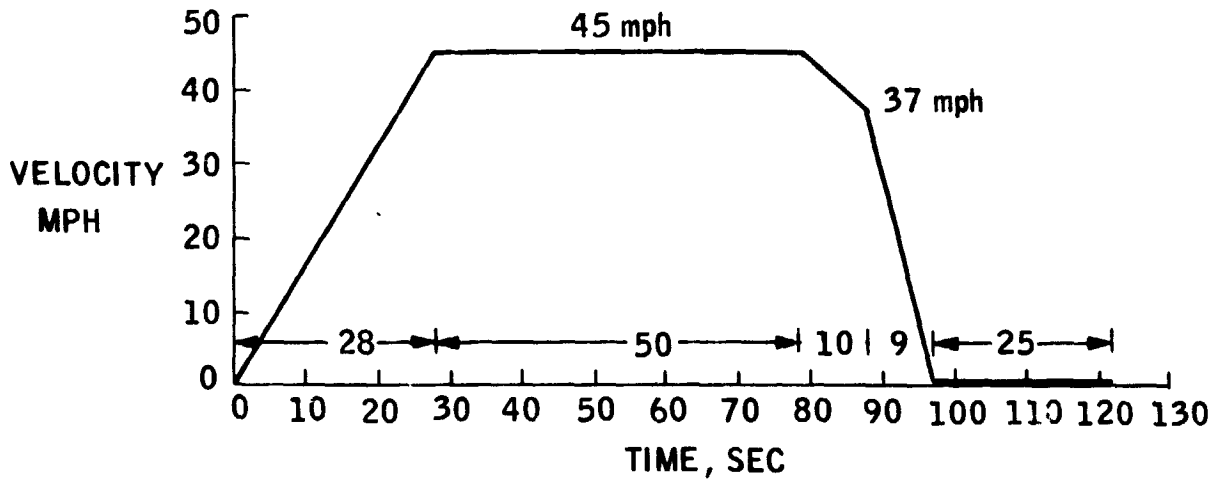

Figure 6. Velocity Profile of Ripp-Electric Vehicle on Schedule "D"

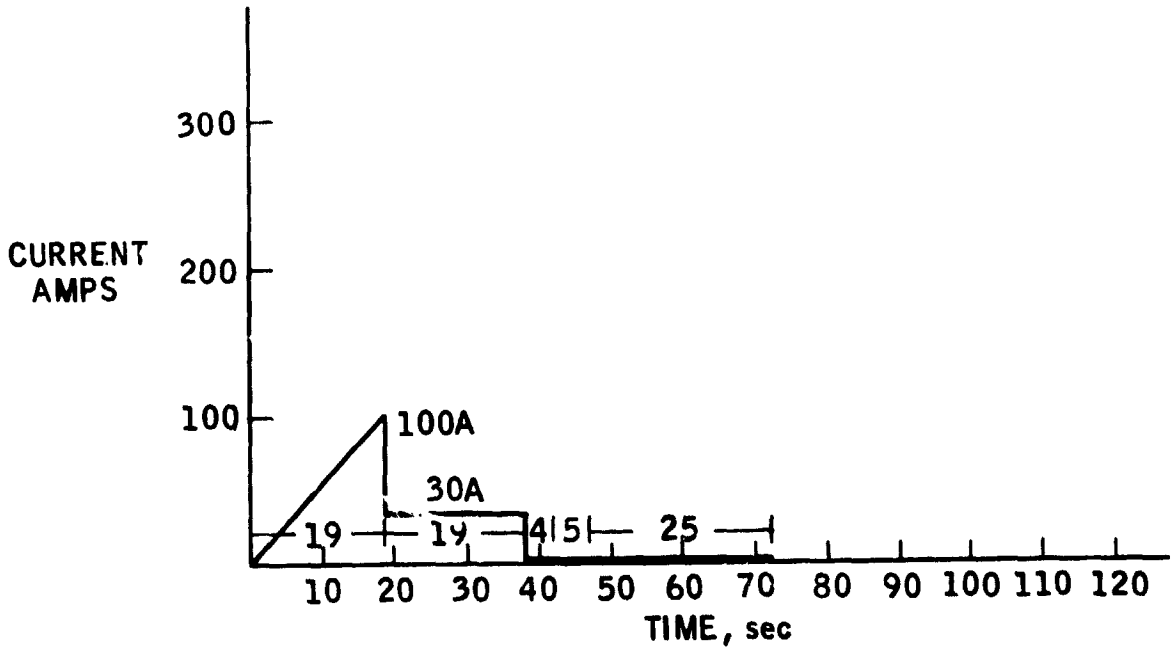

Figure 7. Current Profile of Ripp-Electric Vehicle Battery on Schedule "B"

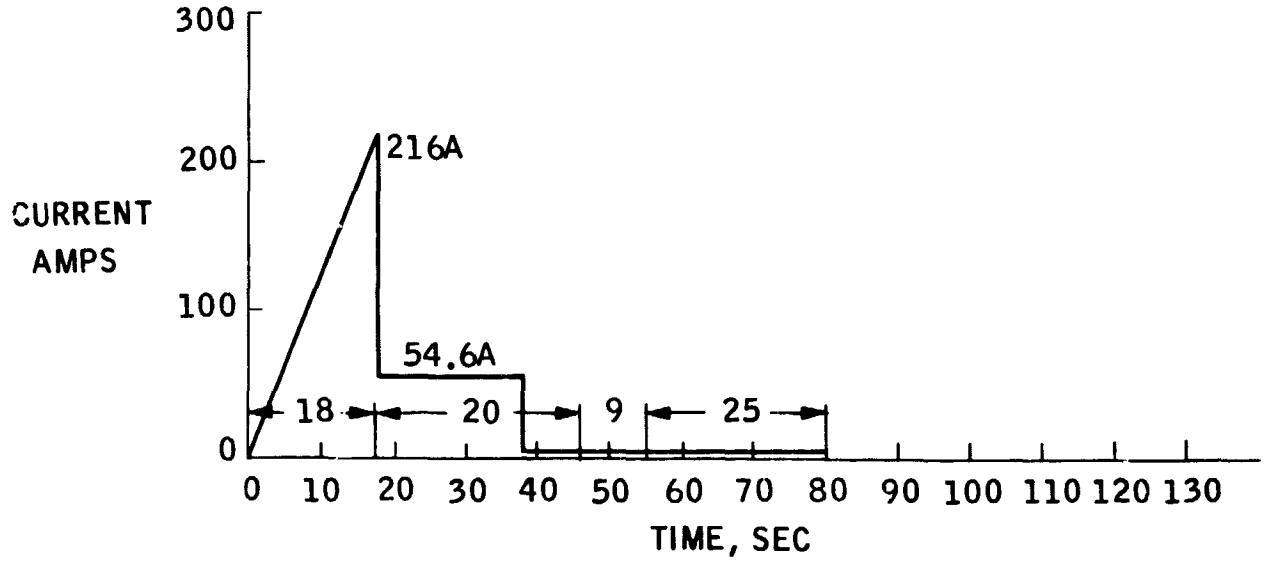

Figure 8. Current Profile of Ripp-Electric Vehicle Battery on Schedule "C"

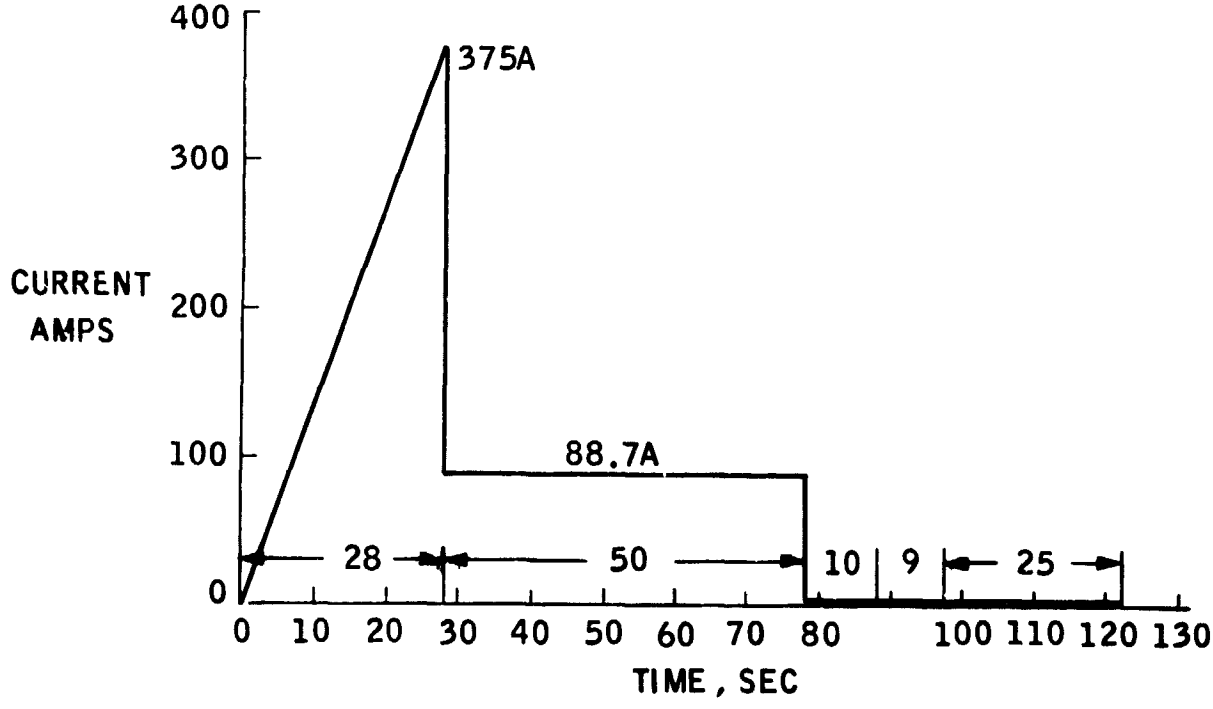

Figure 9. Current Profile of Ripp-Electric Vehicle Battery on Schedule "D"

Figure 8 gives the profile for schedule "C". It is noted therein that the peak current attained after the 18 sec of acceleration is 216 amp and that the steady current during the 20 sec of cruise is 54.6 amp. Figure 9 gives the profile for schedule "D". It is noted therein that the peak current attained after 28 sec of acceleration is 375 amp and that the steady current during the 50 sec of cruise is 88.7 amp.

Input data format for the models described herein requires constant current, rather than linearly varying current with time. For this reason, the linearly varying current ramp during acceleration is approximated by a series of step currents as indicated in Figs. 10, 11, and 12 for schedules "B", "C", and "D", respectively. For schedule "B" in Fig. 10, the 19 sec acceleration ramp is divided into two equal periods of 9.5 sec each. During the first 9.5 sec period the current is specified as 25 amp or 1/4 of the peak current of 100 amp. During the second 9.5 sec period the current is specified as 75 amp or 3/4 of the peak current of 100 amp. In this manner, the average current is the same as for the

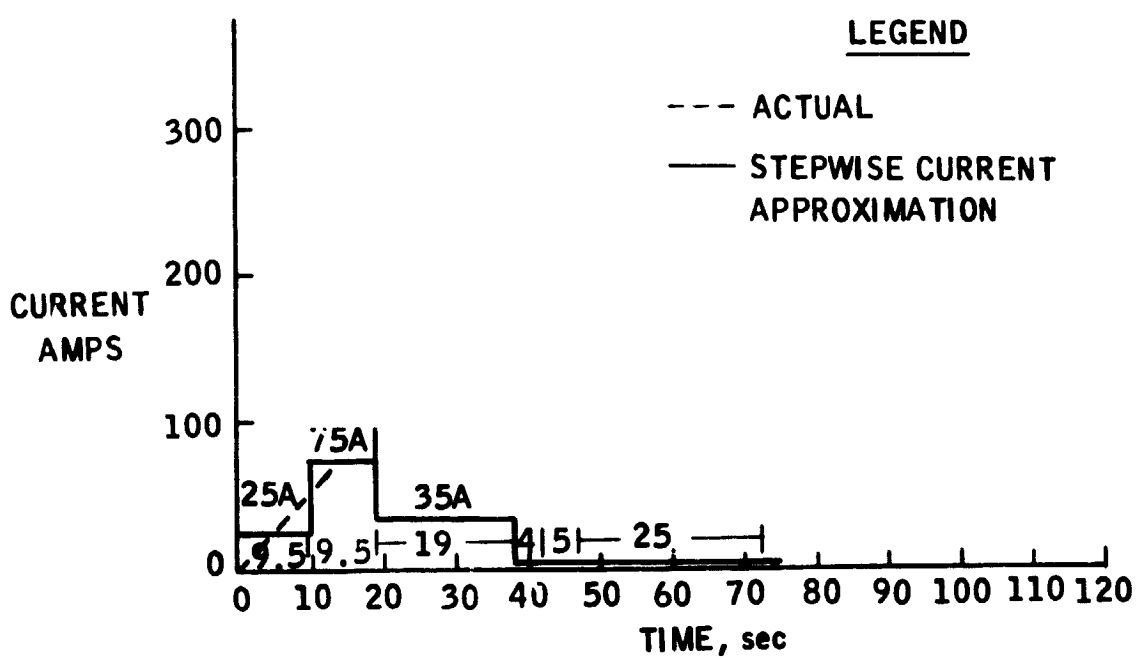

Figure 10. Stepwise Current Approximation for Ripp-Electric Vehicle Battery on Schedule "B"

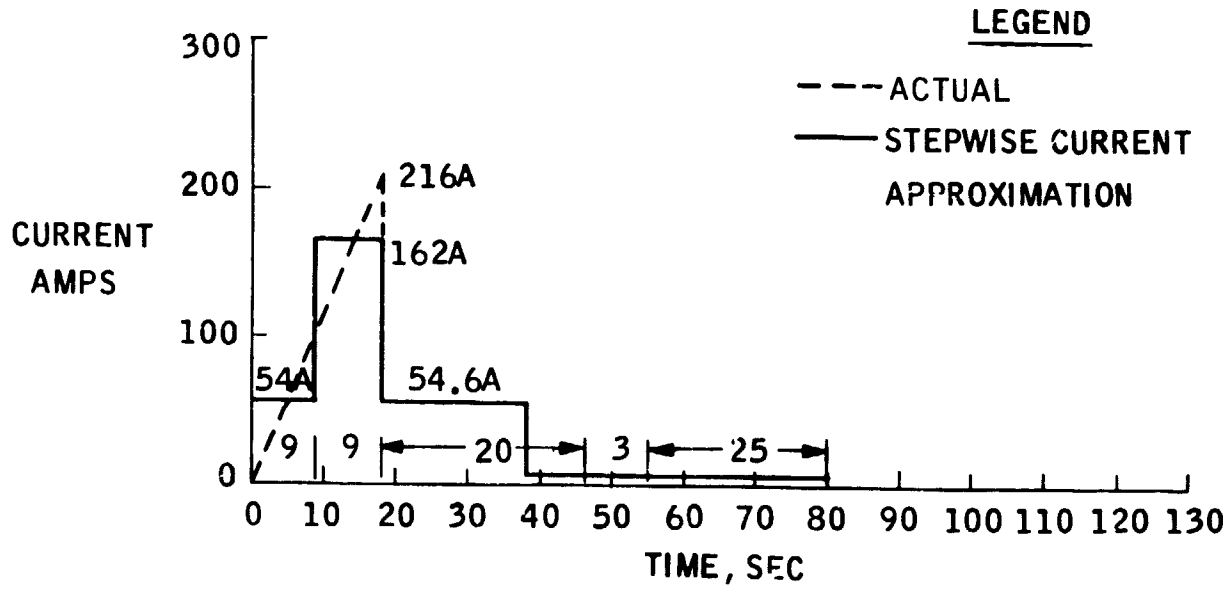

Figure 11. Stepwise Current Approximation for Ripp-Electric Vehicle Battery on Schedule "C"

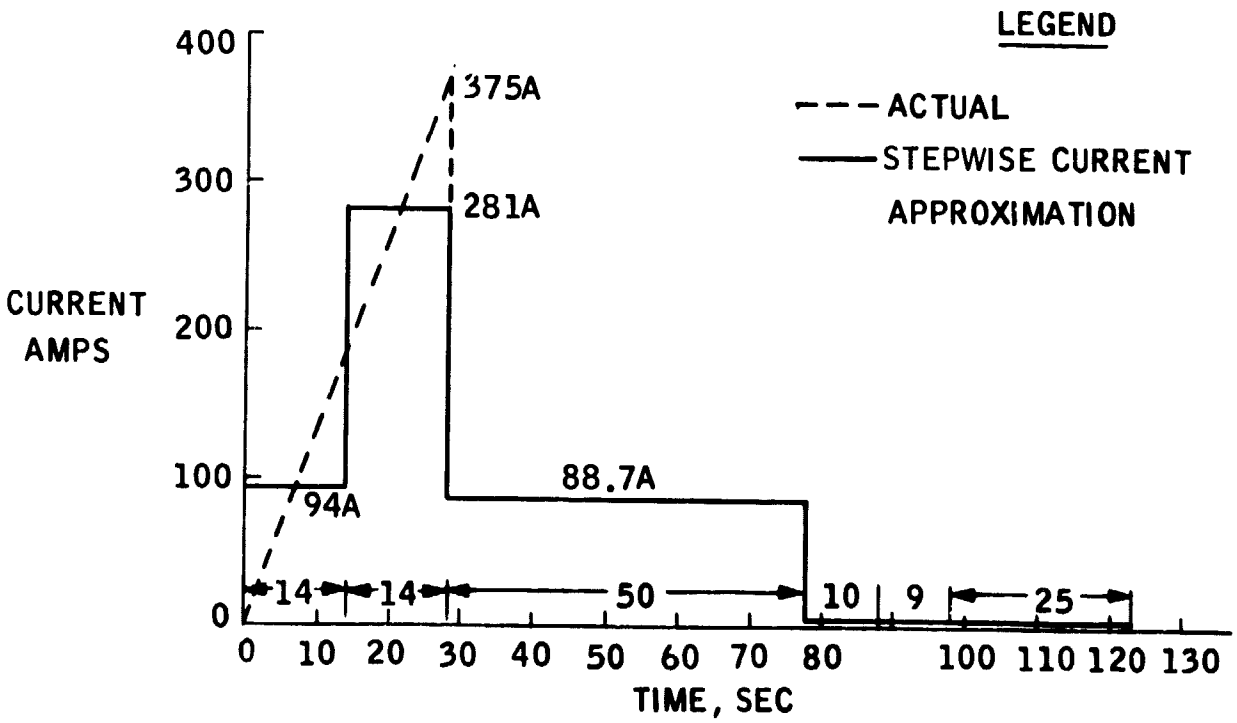

Figure 12. Stepwise Current Approximation for Ripp-Electric Vehicle Battery on Schedule "D"

case where the current increases linearly to 100 amp over a 19 sec period. Similarly for schedule "C" in Fig. 11 the 18 sec acceleration ramp is divided into two 9 sec periods, during the first of which the current is 54 amp, and during the second of which the current is 162 amp. Similarly for schedule "D" in Fig. 12, the 28 sec acceleration ramp is divided into two 14 sec periods, during the first of which the current is 94 amp, and during the second of which the current is 281 amp.

SECTION V

INPUT DATA FOR MODELS

Range prediction via each of the models required the following input data for cycle and EV-106 parameters.

A. FRACTIONAL UTILIZATION MODEL

(1) Weight of battery = 28.4 kg (62.5 lbs)

(2) Average assumed discharge voltage = 5.65 volts

(3) Step current profiles (as given in Figs 10 through 12)

(4) Energy density vs. power density (from manufacturers' data given in Fig. 13)[5]

(5) Range per cycle = 0.3377 km/cycle (0.2099 mi/cycle for schedule "B")
= 0.5389 km/cycle (0.3349 mi/cycle for schedule "C")
= 1.5451 km/cycle (0.9603 mi/cycle for schedule "D").

B. SHEPHERD MODEL

(1) E_{cutoff} = 3.00 volts (this represents manufacturers' recommended cutoff; the value can, of course, be varied)

(2) E_s = 6.15 volts

(3) Q = 170 amp-hr

(4) N = -0.0013 ohms

(5) K = 0.0038 ohms

(6) Step current profiles (as given in Figs. 10 through 12)

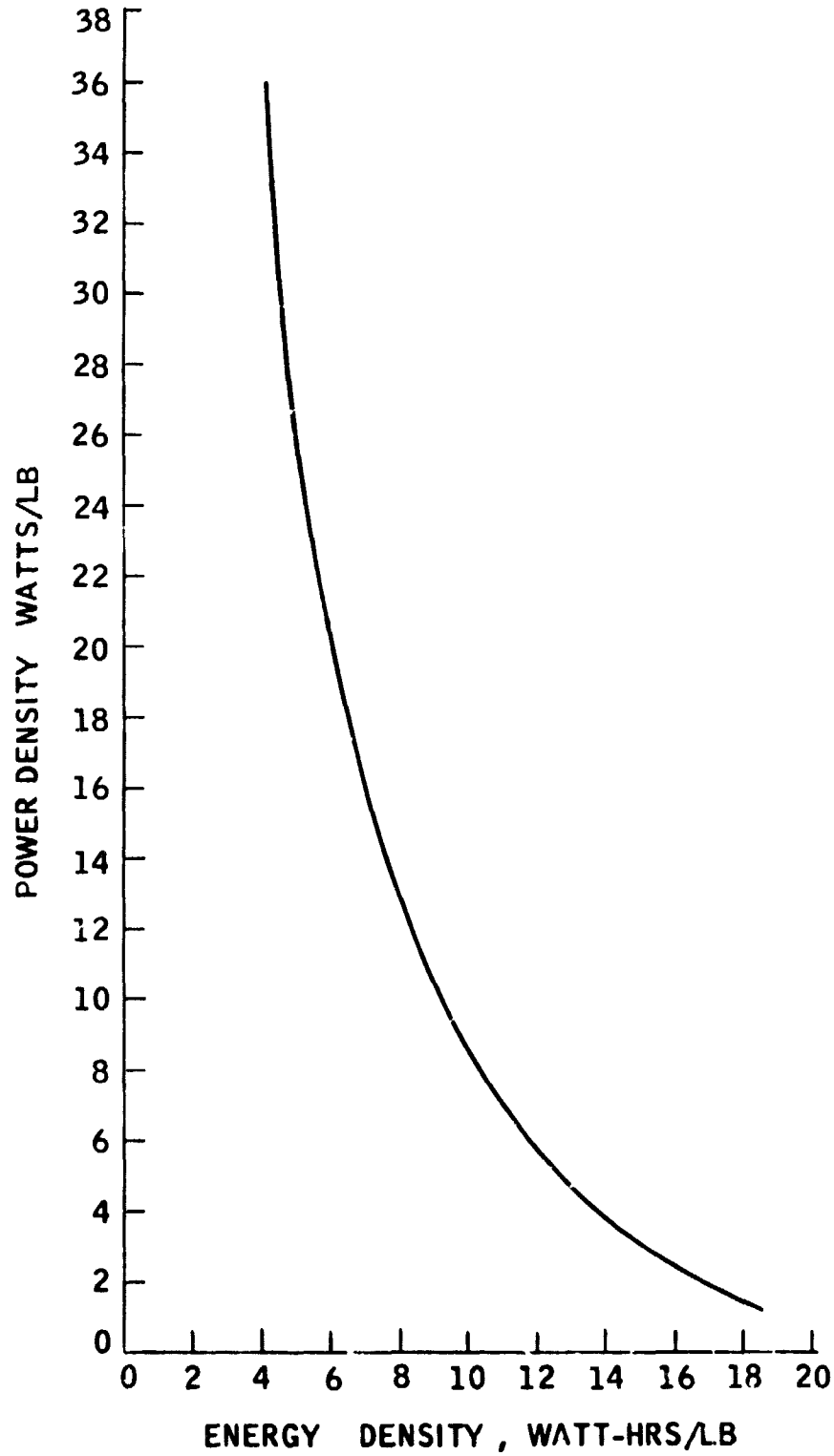

Figure 13. Manufacturers' Supplied Performance Data on EV-106 Battery[5]

(7) Range per cycle = 0.3377 km/cycle (0.2099 mi/cycle for schedule "B")
0.5389 km/cycle (0.3349 mi/cycle for schedule "C")
1.5451 km/cycle (0.9603 mi/cycle for schedule "D").

C. MODIFIED HOXIE MODEL*

(1) E_s = 6.15 volts

(2) $\Delta E = E_s - E_{cutoff}$ = 6.15 volts - 5.25 volts = 0.90 volts

(3) Q = 170 amp-hr

(4) N = -0.0013 ohms

(5) K = 0.0038 ohms

(6) Peak current at end of acceleration ramp
100 amps for schedule "B"
216 amps for schedule "C"
375 amps for schedule "D"

(7) Time duration of acceleration ramp
19 sec for schedule "B"
18 sec for schedule "C"
29 sec for schedule "D"

(8) Number of steps in acceleration ramp
2 for schedules "B", "C", and "D"

(9) Current during cruise period
35.0 amps for schedule "B"
54.6 amps for schedule "C"
88.7 amps for schedule "D"

---

*NOTE: A computer program designated "Program VCTIR" was set up to solve Eqn. 6 for a) time to cutoff, and b) number of cycles using the above or any other values of cycle and battery parameters. This program is described in Appendix A-1.

(10) Time duration of cruise period

19 sec for schedule "B"

20 sec for schedule "C"

50 sec for schedule "D"

(11) Time duration at open circuit (coast time + brake time + idle time)

34 sec for schedule "B"

42 sec for schedule "C"

44 sec for schedule "D"

(12) Range per cycle = 0.3377 km/cycle (0.2099 mi/cycle for schedule "B")

0.5389 km/cycle (0.3349 mi/cycle for schedule "C")

1.5451 km/cycle (0.9603 mi/cycle for schedule "D")

SECTION VI
DRIVING CYCLE LABORATORY SIMULATION TESTS

A computer program operating in a real-time operating system environment on JPL's Automatic Charge-Discharge Controller and Data Processing System (ACDCDPS) simulates various driving cycle current profiles according to SAE 227A requirements. Parameters input during the initial execution of this program predetermine the driving schedule that will be simulated and the voltage limit for termination of the test.

The program transmits data to a relay-output card and a resistance output card, both located in an HP 6941B Multiprogrammer Extender (Digital Input/Output Multiplexor Subsystem) within the ACDCDPS. The relay-output card operates a 400A contactor that controls the two states of the battery under test; discharge or open circuit. The resistance output card controls the output current of a resistance-programmable, constant current HP 6466C DC Power Supply through the battery and a diode load network. An HP-supplied subroutine is entered at several locations in the program to suspend execution. The resulting delays in execution control the resistance card output and relay output with respect to time.

An operator enters the time delays in units of 10-milliseconds and two octal integers that relate to the peak current during acceleration and constant current during cruise, respectively. Then, an additional entry to display the values entered, start the testing, or stop program execution entirely.

Battery voltage is measured (1) approximately 30 milliseconds before the start of the acceleration current profile, (2) approximately 30 milliseconds after the peak current is reached at the end of the acceleratio current ramp, and (3) again approximately 30 milliseconds after the end of the constant current cruise period.

A diagram of the ADCDDPS, the test layout, and program listing, designated as "BTEST", appear in Appendix A-2.

The current profiles to which the EV-106 battery was subjected are given in Figs. 7, 8, and 9 for schedules "B", "C", and "D" respectively.

The batteries were charged overnight at constant current until specific gravities were in the range of 1.29 to 1.30 at 90°F. Discharge was carried out at ambient temperature near 70°F.

SECTION VII
RESULTS

Table 1 gives a comparison of the analytically predicted driving cycles and range with the experimentally determined driving cycles and range as simulated in the laboratory with an EV-106 battery. The first column designates the type of predictive model and also the experimental result. The next two columns give both predicted and actual number of cycles and corresponding range when subjected to the current profile of Schedule "B". The next two columns give both predicted and actual number of cycles and corresponding range when subjected to the current profile of Schedule "C". The last two columns give both predicted and actual number of cycles and corresponding range when subjected to the current profile of Schedule "D". Experimentally determined battery voltages during the course of these tests are given in Appendix A-3.

Experimentally determined amp-hr outputs for Schedules "B", "C", and "D" were 173.2 AH, 155.0 AH, and 131.5 AH, respectively.

Table 1. Range Predicted by Models Compared to Laboratory Simulation

Model	Schedule B		Schedule C		Schedule D	
	No. Cycles	Range, km (mi)	No. Cycles	Range, km (mi)	No. Cycles	Range, km (mi)
1) Fractional Utilization	329	110.7 (68.8)	127	68.4 (42.5)	31	47.9 (29.8)
2) Shepherd	345	116.2 (72.2)	165	89.0 (55.3)	44	68.1 (42.3)
3) Modified Hoxie	364	122.6 (76.2)	189	101.8 (63.3)	56	86.4 (53.7)
Laboratory Simulation	369	124.5 (77.4)	184	99.0 (61.5)	49	75.9 (47.2)

SECTION VIII
SUMMARY AND CONCLUSIONS

Inspection of Table 1 indicates that the Modified Hoxie model gives the highest predicted range and number of driving cycles. This result is explained by the fact that this model takes into account battery recuperative effects while the other models do not take these effects into account. Further, it is noted that the experimental results agree very favorably with those predicted by the Modified Hoxie model. For Schedules C and D, the model overestimates the range by 2% and 14%, respectively, and for Schedule B the model underestimates range by 2%. The Shepherd model predicts somewhat lower ranges than actual although the discrepancy is not too large (from 6 to 10% less depending on the Schedule). The Fractional Utilization model yields appreciably lower ranges than actual (from 11 to 37% less depending on the Schedule) and is the least accurate of the models.

Based on the above, it appears that the Modified Hoxie model may be used with high degree of confidence in predicting vehicle range. Accuracy of the model is 97 to 98% in most cases and 86% in the worst case.

Range prediction via the Modified Hoxie model is quite simple and rapid once the computer program has been written to solve the model's iterative calculations. Required inputs are simply: a) maximum current at end of acceleration and during cruise, b) the specified times associated with the various segments of the SAE J227a driving cycles, and c) the Shepherd constants for the battery of interest. This input data has already been obtained in the case of the Ripp-Electric vehicle with EV-106 batteries. The data may be obtained quite readily for other vehicles and batteries by short-term tests on these vehicles and batteries. Once the input data is entered, the computer solves for number of cycles and range in a matter of only a few seconds.

SECTION IX
RECOMMENDED FUTURE EFFORTS

Having demonstrated a high degree of accuracy of the Modified Hoxie model, it can now be used in a number of significant applications. One of these would involve range prediction for the Ripp-Electric Vehicle on the SAE driving schedules with batteries other than the EV-106's. Amongst the other batteries to be examined are other types of lead-acid batteries as well as Ni-Zn, Ni-Fe, $Zn-Cl_2$, $Zn-Br_2$ Fe-Air, Na-S, and LiAl-FeS batteries. Another application would involve range predictions for other electric vehicles on the SAE driving schedules with the EV-106 and other batteries described above. Another application would involve range predictions for advanced electric vehicles that remain yet on the drawing board. These predictions could be carried out for the SAE driving schedules with EV-106 and other batteries described above. In this case, the currents during acceleration and cruise would be estimated from overall vehicle design models.

Results of the above efforts will help to implement in a timely and cost-effective manner the provisions of the Electric and Hybrid Research and Development Act of 1976 (Public Law 94-413), dealing with development of advanced electric vehicles. On this basis, it is strongly recommended that the proposed efforts be initiated as soon as possible.

SECTION X

REFERENCES

1. Brennand, J., "Refinement of Electric Car Performance Estimates," ERDA Contract E(04-3)-1180, General Research Corporation, Santa Barbara, CA, (to be published).

2. Shepherd, C.M., "Design of Primary and Secondary Cells, II An Equation Describing Battery Discharge," J. Electrochem Soc. 112, No. 7, July 1975.

3. Taylor, D.F. and Siwek, E.G., "The Dynamic Characterization of Lead-Acid Batteries for Vehicular Applications," International Automotive Engineering Congress, Detroit, Michigan, SAE Paper 7302J2, January 1973.

4. Electric Vehicle Test Procedure - SAE J227a, SAE Recommended Practice, Last Revised February 1976, Society of Automotive Engineers Inc., 400 Commonwealth Drive, Warrendale, PA 15096.

5. ESB data sheets on EV-106 batteries supplied by F. Vergilli, ESB, Inc., Cleveland, Ohio 44101, February 1977.

6. Hoxie, E.A., "Some Discharge Characteristics of Lead-Acid Batteries." AIEE Transactions, Part II, Vol. 73, 1954.

APPENDIX A-1

- Description of Program "VCTIR"
- Listing of Program VCTIR

APPENDIX A-1

DESCRIPTION OF PROGRAM VCTIR

Program VCTIR calculates the number of driving cycles and the total elapsed time for a battery (having specified battery constants) to be reduced to its cutoff voltage. The method used is to divide each cycle into intervals of constant amperage levels and calculate the following sum over all cycles:

$$S2 = \frac{A_1}{I_1} + \frac{A_2 - A_1}{I_2} + \frac{A_3 - A_2}{I_3} + \ldots + \frac{A_N - A_{N-1}}{I_N}$$

where A_1, A_2, A_3, ... A_N are the amperage levels over all cycles, and I_1, I_2, I_3, ... I_N are the values of the current for which the battery will reach its cutoff voltage in time T_1, T_2, T_3, ... T_N. T_1 is the total time for all cycles, $T_2 = T_1$ - (time duration of level A_1), $T_3 = T_2$ - (time duration of level A_2), ... and T_N is the time duration of the last amperage level. The value of T_1 for which S2 = 1 is the theoretical time for the battery to reach its cutoff voltage for the specified driving cycle.

The driving cycle consists of the following three parts:

1) A discharge ramp from zero amps to some level A_{max} amps in time TR hours. (A linear ramp is approximated by NINC rectangular steps.) The first and last steps are AINC amps in height, and the intervening steps are ASTEP amps in height, where ASTEP = AH/NINC amps and AINC = ASTEP/2 amps. The time duration of each step in the ramp is TINC = TR/NINC hours.

2) A constant discharge (cruise) amperage level of AL amps for a time duration of TDL hours.

3) An open circuit period of TO hours.

The program calculates the value of T_1 for which S2 = 1, using successive approximations. That is, a guess is made for T_1, then S2 is calculated for that T_1. If S2 = 1 somewhere within the last cycle for that value of T_1, the calculation is finished. Otherwise, a better guess is made for T_1, the sum S2 is again calculated, and so on until the sum S2 = 1.

The program listing is given on the following pages.

```
0001  FTN4,L
0002        PROGRAM VCTIR
0003  C PROGRAM TO CALCULATE NO. OF DRIVING CYCLES AND TOTAL ELAPSED TIME
0004  C FOR A BATTERY, HAVING SPECIFIED BATTERY CONSTANTS, TO BE REDUCED TO
0005  C ITS CUTOFF VOLTAGE
0006  C THE METHOD USED IS TO DIVIDE EACH CYCLE INTO INTERVALS OF CONSTANT
0007  C AMPERAGE LEVEL AND CALCULATE THE FOLLOWING SUM OVER ALL CYCLES:
0008  C
0009  C     S2 = A1/I1 + (A2-A1)/I2 + (A3-A2)/I3 +      + (AN-A(N- ))/IN
0010  C
0011  C WHERE A1,A2,A3,. .AN ARE THE AMPERAGE LEVELS OVER ALL CYCLES
0012  C AND I1,I2,I3,  .IN ARE THE VALUES OF THE CURRENT FOR WHICH THE
0013  C BATTERY WILL REACH ITS CUTOFF VOLTAGE IN TIME T1,T2,T3....TN
0014  C T1 IS THE TOTAL TIME, IN HOURS, FOR ALL CYCLES, T2=T1-(TIME DURA-
0015  C TION OF LEVEL A1), T3=T2-(TIME DURATION OF LEVEL A2)      AND TN IS
0016  C THE TIME DURATION OF THE LAST AMPERAGE LEVEL.
0017  C THE VALUE OF T1 FOR WHICH S2=1 IS THE THEORETICAL TIME FOR THE
0018  C BATTERY TO REACH ITS CUTOFF VOLTAGE FOR THE SPECIFIED DRIVING
0019  C CYCLE   T1 IS CALCULATED USING SUCCESSIVE APPROXIMATIONS (I E ,
0020  C GUESS T1 THEN CALCULATE S2)
0021  C
0022        DIMENSION IRMP(5)
0023        REAL N,K
0024        DATA JY/1HY/,JN/1HN/
0025  C DEFAULT BATTERY CONSTANTS
0026  C     E = INITIAL BATTERY VOLTAGE MINUS CUTOFF VOLTAGE (VOLTS)
0027  C     Q = REFERENCE CAPACITY (AMP-HRS)
0028  C     N = INTERNAL RESISTANCE (OHMS)
0029  C     K = POLARIZATION RESISTANCE (OHMS)
0030        DATA E/.900/,Q/215 0/,N/- 004100/,K/ 006600/
0031  C SET LOGICAL UNIT NO. FOR I/O TO LOGICAL UNIT NO  OF USER'S DEVICE
0032        CALL RMPAR(IRMP)
0033        LU=IRMP(1)
0034        IF (LU EQ.0) LU=1
0035        WRITE (LU,900)
0036  900   FORMAT (/"PROGRAM VCTIR READY:")
0037        WRITE (LU,902)
0038  902   FORMAT ("NOTE, WHILE ENTERING CYCLE PARAMETERS YOU MA/"/
0039       C "      TERMINATE THE PROGRAM BY ENTERING A NEGATIVE NUMBER "/)
0040  C
0041  C INPUT DRIVING CYCLE PARAMETERS
0042  C DRIVING CYCLE WILL CONSIST OF 3 PARTS, AS FOLLOWS:
0043  C     A) A DISCHARGE RAMP  GOING FROM 0 AMPS TO AH AMPS IN TIME TR HRS.
0044  C        (A LINEAR RAMP WILL BE APPROXIMATED BY NINC RECTANGULAR
0045  C        STEPS   THE FIRST AND LAST STEPS WILL BE AINC AMPS IN HEIGHT
0046  C        AND THE INTERVENING STEPS WILL BE ASTEP AMPS IN HEIGHT, WHERE
0047  C        ASTEP=AH/NINC AMPS AND AINC=ASTEP/2 AMPS  THE TIME DURATION
0048  C        OF EACH STEP IN THE RAMP IS TINC=TR/NINC HRS )
0049  C     B) A CONSTANT DISCHARGE (CRUISE) AMPERAGE LEVEL OF AL AMPS FOR
0050  C        A TIME DURATION OF TDL HRS
0051  C     C) AN OPEN-CIRCUIT PERIOD OF TO HRS
0052  C
0053  80    WRITE (LU,910)
0054  910   FORMAT ("PEAK RAMP DISCHARGE RATE (AMPS):       ")
0055        READ (LU,*) AH
0056        IF (AH LT 0) STOP
```

```
0057          WRITE (LU,911)
0058   911    FORMAT ("LOW (CRUISE) DISCHARGE RATE (AMPS):    _")
0059          READ (LU,*) AL
0060          IF (AL.LT.0) STOP
0061          WRITE (LU,9113)
0062   9113   FORMAT ("TIME DURATION OF RAMP (SEC):           _")
0063          READ (LU,*) TR
0064          IF (TR.LT.0) STOP
0065          TR=TR/3600.
0066          WRITE (LU,9116)
0067   9116   FORMAT ("NO. OF STEPS IN RAMP:                   _")
0068          READ (LU,*) NINC
0069          IF (NINC.LT.0) STOP
0070          WRITE (LU,913)
0071   913    FORMAT ("TIME DURATION AT LOW DISCHARGE (SEC): _")
0072          READ (LU,*) TDL
0073          IF (TDL.LT.0) STOP
0074          TDL=TDL/3600.
0075          WRITE (LU,914)
0076   914    FORMAT ("TIME DURATION AT OPEN CIRCUIT (SEC):  _")
0077          READ (LU,*) TO
0078          IF (TO.LT.0) STOP
0079          TO=TO/3600.
0080   C
0081   C CHECK IF DEFAULT BATTERY CONSTANTS TO BE USED
0082   C
0083   100    WRITE (LU,916)
0084   916    FORMAT ("USE DEFAULT BATTERY CONSTANTS?  Y/N:  _")
0085          READ (LU,917) KIN
0086   917    FORMAT (A1)
0087          IF (KIN.EQ.JY) GOTO 250
0088          IF (KIN.NE.JN) GOTO 100
0089   C
0090   C GET BATTERY CONSTANTS
0091   C
0092          WRITE (LU,918)
0093   918    FORMAT ("DELTA E (VOLTS): _")
0094          READ (LU,*) E
0095          WRITE (LU,920)
0096   920    FORMAT ("Q (AMP-HRS):      _")
0097          READ (LU,*) Q
0098          WRITE (LU,922)
0099   922    FORMAT ("N (OHMS):         _")
0100          READ (LU,*) N
0101          WRITE (LU,924)
0102   924    FORMAT ("K (OHMS):         _")
0103          READ (LU,*) K
0104   C
0105   C COMBINE PARAMETERS FOR EFFICIENCY
0106   C
0107   250    F=Q*(N+K)
0108          B=2*N
0109          C=B*B
0110          D=Q*E/N
0111   C ASTEP = AMPERAGE DIFFERENTIAL FOR INTERMEDIATE STEPS OF RAMP
0112          ASTEP=AH/NINC
```

```
C AINC = AMPERAGE VALUE FOR FIRST STEP IN RAMP
      AINC=ASTEP/2
C TINC = TIME INTERVAL OF EACH STEP OF RAMP (HRS)
      TINC=TR/NINC
C TC = TIME OF ONE COMPLETE CYCLE (HRS)
      TC=TR+TDL+TO
C AD = AMPERAGE DIFFENENCE BETWEEN CONSTANT DISCHARGE (CRUISE) RATE
C AND LAST STEP OF RAMP
      AD=AL-AH+AINC
C
C USE SUCCESIVE GUESSES TO FIND THE TOTAL TIME AND NO  OF CYCLES TO
C REACH THE BATTERY CUTOFF VOLTAGE   FIRST, FIND A VALUE OF TIME, T,
C FOR WHICH S2>1   START WITH THE GUESS T=10 HRS   NC = NO  OF CYCLES
C IN 10 HRS
C
      NC=10./TC
      MC=NC
C EACH TIME GUESS, T, WILL ALWAYS BE AT THE END OF THE CRUISE PART
C OF A CYCLE (SINCE S2 IS NOT A SMOOTH FUNCTION OF T IT SHOULD ALWAYS
C BE EVALUATED AT THE SAME POINT IN A CYCLE)
260   T=MC*TC+TR+TDL
      S2=SUM(T,NINC,AINC,TINC,ASTEP,AL,AD,E,F,B,C,D,TR,TDL,TO,TC,NCYC)
C IF S2=1 WE'RE DONE
      IF (S2-1  ) 280,400,300
280   MC=MC+NC
      GOTO 260
C
C WE'VE FOUND A T WHICH MAKES S2>1, NOW REVERSE DIRECTION AND CREEP
C UP ON THE VALUE OF T WHICH MAKES THE SUM=1   WE MAY MAKE T TOO
C LARGE OR TOO SMALL AND HAVE TO REVERSE DIRECTION ADDITIONAL TIMES
C BEFORE WE GET THERE
C
300   NC=-NC
310   IF (IABS(NC) NE 1) NC=NC/2
      T=T+NC*TC
C SAVE PREVIOUS CALCULATION OF SUM
      S1=S2
C CALCULATE NEW VALUE OF SUM
      S2=SUM(T,NINC,AINC,TINC,ASTEP,AL,AD,E,F,B,C,D,TR,TDL,TO,TC,NCYC)
C IF S2=1 WE'RE DONE
      IF (S2 EQ 1 ) GOTO 400
C CALCULATE SUM FOR ONE LESS CYCLE (SPRE) AND SUM FOR ONE MORE CYCLE
C (SPOST)
      TPRE=T-TC
      SPRE=SUM(TPRE,NINC,AINC,TINC,ASTEP,AL,
     CAD,E,F,B,C,D,TR,TDL,TO,TC,NCYC)
      TPOST=T+TC
      SPOST=SUM(TPOST,NINC,AINC,TINC,ASTEP,AL,
     CAD,E,F,B,C,D,TR,TDL,TO,TC,NCYC)
C IF SPRE AND SPOST ARE ON OPPOSITE SIDES OF ONE (EITHER IS LESS THAN
C ONE AND THE OTHER IS GREATER THAN ONE) WE'RE DONE
      IF (SPRE LT 1   AND  SPOST GT 1 ) GOTO 400
      IF (SPRE GT 1   AND  SPOST LT 1 ) GOTO 400
C PREPARE FOR NEXT LOOP   IF (1-S1) AND (1-S2) ARE OF OPPOSITE SIGN
C WE HAVE BRACKETED THE VALUE SUM=1 AND WE MUST CHANGE T IN THE
C OPPOSITE DIRECTION
```

```
0169          IF (SIGN(1.,(1.-S1)).EQ SIGN(1.,(1.-S2))) GOTO 310
0170          GOTO 300
0171    C IF S2 > OR = 1, THE SUM IS EQUAL TO ONE IN THE PRECEDING CYCLE
0172    400   IF (S2.LT.1.) GOTO 410
0173          T=T-TC
0174    C IF T<0, WE REACHED CUTOFF IN THE FIRST CYCLE
0175          IF (T.LT.0) GOTO 420
0176          NCYC=NCYC-1
0177    410   WRITE (LU,960) T,NCYC
0178    960   FORMAT ("TIME TO CUTOFF=",F7.2," HOURS,  #CYCLES=",I8/)
0179          GOTO 80
0180    420   WRITE (LU,962)
0181    962   FORMAT ("CUTOFF OCCURS IN FIRST CYCLE"/)
0182          GOTO 80
0183          END
```

** NO ERRORS** PROGRAM = 01033 COMMON = 00000

REPRODUCIBILITY OF THE ORIGINAL PAGE IS POOR

```
C SUBROUTINE TO EVALUATE SUM
C
C   SUM = A1/IA + (A2-A1)/I2 + (A3-A2)/I3 +  .. + N-A(N-1)/IN
C
C USING THE FOLLOWING INPUT PARAMETERS:
C   T = TOTAL TIME FOR ALL CYCLES (HRS)
C   NINC = NO. OF STEPS IN RAMP
C   AINC = AMPERAGE LEVEL OF FIRST RAMP STEP (AMPS)
C   TINC = TIME OF EACH STEP IN RAMP (HRS)
C   ASTEP = AMPERAGE DIFFERENTIAL BETWEEN RAMP STEPS (AMPS)
C   AL = CONSTANT DISCHARGE RATE AT CRUISE (AMPS)
C   AD = AMPERAGE DIFFERENCE BETWEEN CRUISE DISCHARGE RATE AND LAST
C        STEP OF RAMP (AMPS)
C   E = BATTERY INITIAL VOLTAGE MINUS CUTOFF VOLTAGE (VOLTS)
C   F = Q*(N+K)
C   B = 2*N
C   C = S*B
C   D = Q*E/N
C   TR = TIME DURATION OF RAMP (HRS)
C   TDL = TIME DURATION OF CONSTANT DISCHARGE (CRUISE) (HRS)
C   TO = TIME DURATION OF OPEN CIRCUIT (HRS)
C   TC = TIME DURATION OF ONE CYCLE (HRS)
C AND PRODUCING THE FOLLOWING OUTPUT PARAMETERS:
C   SUM = SUM SHOWN ABOVE
C   NCYC = NO. OF CYCLES IN TIME T
C
      FUNCTION SUM (T,NINC,AINC,TINC,ASTEP,AL,
     CAD,E,F,B,C,D,TR,TDL,TO,TC,NCYC)
      U=T
      SUM=0.
      SN=0.
      NCYC=0
C LOOP UNTIL U IS < OR = 0
C SR = TERM FOR FIRST STEP OF RAMP
100   SR=AINC/EX(U,E,F,B,C,D)
      IF (NINC.LE.1) GOTO 200
C LOOP THROUGH STEPS OF RAMP
      DO 200 NN=1,NINC-1
      U=U-TINC
C SR = SUM OF TERMS FOR FIRST NN+1 STEPS OF RAMP
      SR=SR+ASTEP/EX(U,E,F,B,C,D)
200   CONTINUE
      U=T-(NCYC*TC+TR)
C ADD PREVIOUSLY-CALCULATED TERMS PLUS TERM FOR CRUISE PART OF CYCLE
      SUM=SUM+SN+SR+AD/EX(U,E,F,B,C,D)
      IF (U.LE.TC) RETURN
      U=U-TDL
C CALCULATE TERM FOR OPEN CIRCUIT PART OF CYCLE
      SN=-AL/EX(U,E,F,B,C,D)
      NCYC=NCYC+1
      U=U-TO
      GOTO 100
      END
```

** NO ERRORS** PROGRAM = 00197 COMMON = 00000

```
PAGE  0001          FTN4 COMPILER: HP24177  (SEPT  1974)

0237  C SUBROUTINE TO CALCULATE CUTOFF VOLTAGE FOR GIVEN TIME.
0238  C INPUT PARAMETERS:
0239  C    T = TIME FOR WHICH CUTOFF VOLTAGE IS TO BE CALCULATED (HRS)
0240  C    E = BATTERY INITIAL VOLTAGE MINUS CUTOFF VOLTAGE (VOLTS)
0241  C    F = Q*(N+K)
0242  C    B = 2*N
0243  C    C = B*B
0244  C    D = Q*E/N
0245  C OUTPUT PARAMETER:
0246  C    EX = CALCULATED CUTOFF VOLTAGE
0247  C
0248        FUNCTION EX(T,E,F,B,C,D)
0249        X=E*T+F
0250        EX=X/(B*T)+SQRT((X*X)/(C*T*T)-D/T)
0251        RETURN
0252        END

**  NO ERRORS**    PROGRAM = 00087      COMMON = 00000
```

APPENDIX A-2

- Diagram of Automatic Charge-Discharge Controller and Data Processing System
- Diagram of Test Layout
- Program Listing for Driving Cycle Simulation Tests -- "BTEST"

FOLDOUT FRAME

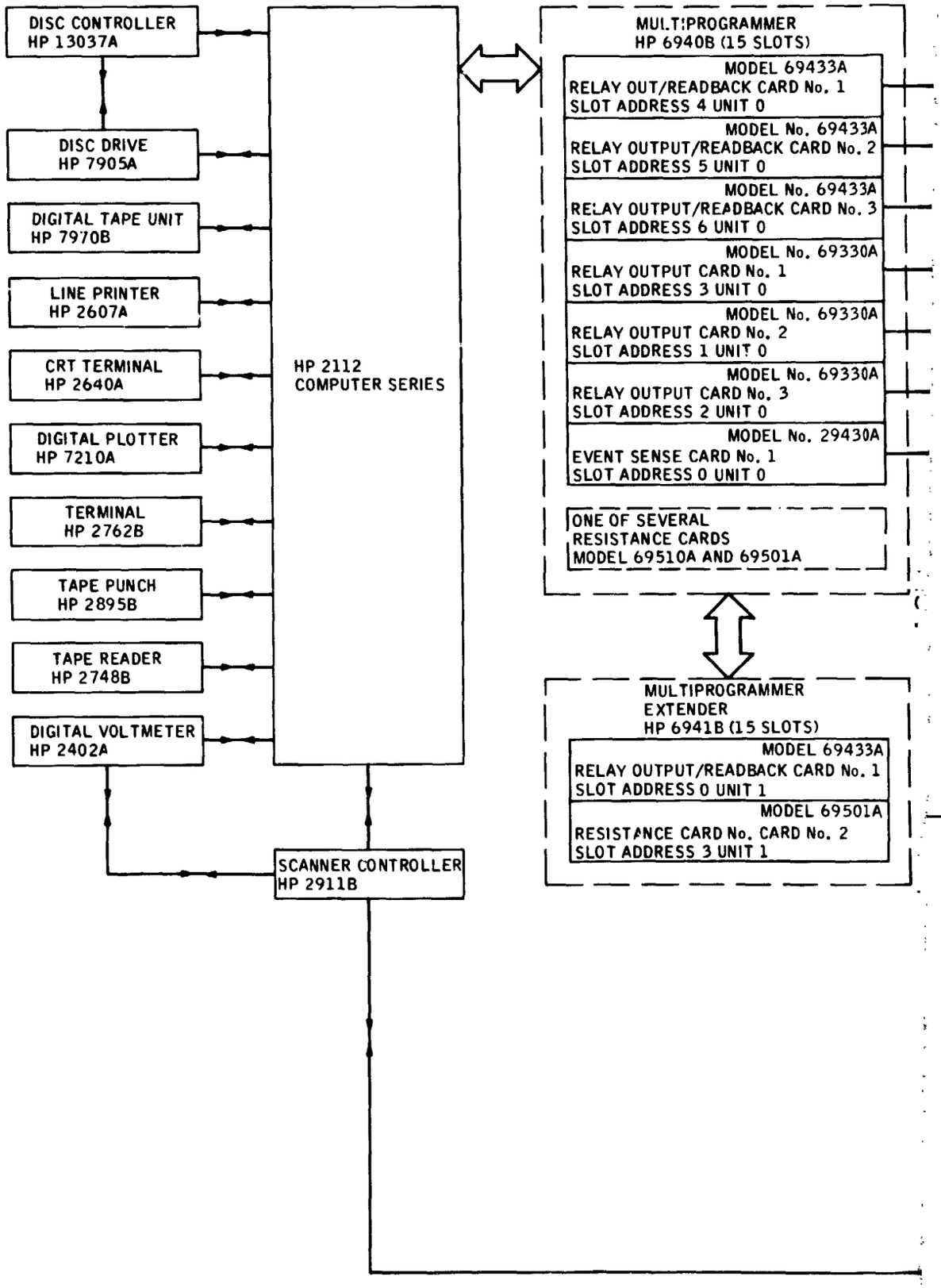

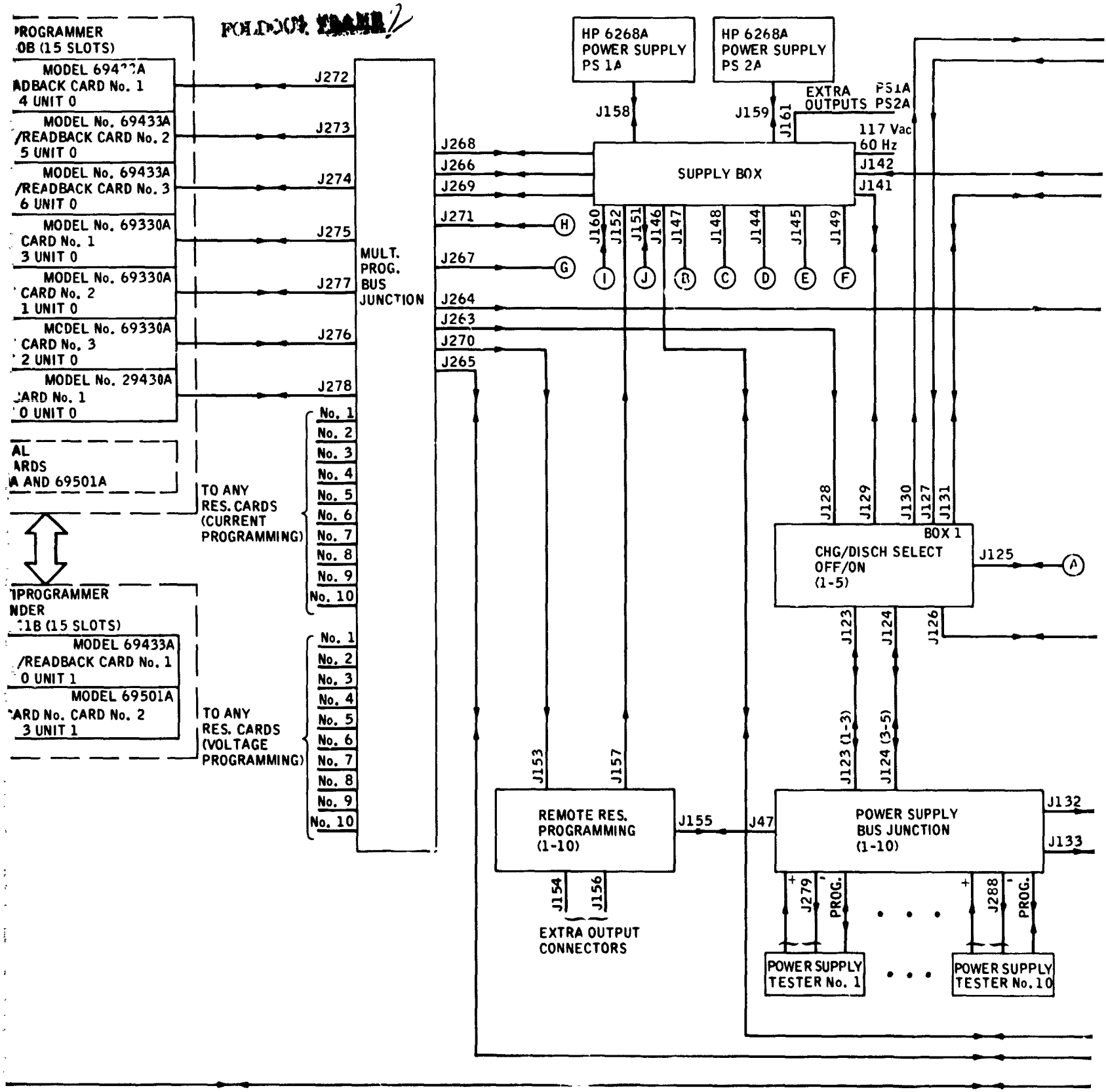
PROGRAMMER
OB (15 SLOTS)
MODEL 69433A
ADBACK CARD No. 1
4 UNIT 0
MODEL No. 69433A
/READBACK CARD No. 2
5 UNIT 0
MODEL No. 69433A
/READBACK CARD No. 3
6 UNIT 0
MODEL No. 69330A
CARD No. 1
3 UNIT 0
MODEL No. 69330A
CARD No. 2
1 UNIT 0
MODEL No. 69330A
CARD No. 3
2 UNIT 0
MODEL No. 29430A
CARD No. 1
0 UNIT 0
AL
ARDS
A AND 69501A
TO ANY
RES. CARDS
(CURRENT
PROGRAMMING)
PROGRAMMER
NDER
1B (15 SLOTS)
MODEL 69433A
/READBACK CARD No. 1
0 UNIT 1
MODEL 69501A
ARD No. CARD No. 2
3 UNIT 1
TO ANY
RES. CARDS
(VOLTAGE
PROGRAMMING)
J272
J273
J274
J275
J277
J276
J278
No. 1
No. 2
No. 3
No. 4
No. 5
No. 6
No. 7
No. 8
No. 9
No. 10
MULT.
PROG.
BUS
JUNCTION
J268
J266
J269
J271
J267
J264
J263
J270
J265
HP 6268A
POWER SUPPLY
PS 1A
HP 6268A
POWER SUPPLY
PS 2A
J158
J159
J161
EXTRA
OUTPUTS
PS1A
PS2A
117 Vac
60 Hz
J142
J141
SUPPLY BOX
J160
J152
J151
J146
J147
J148
J144
J145
J149
H
G
I
J
B
C
D
E
F
J128
J129
J130
J127
J131
BOX 1
CHG/DISCH SELECT
OFF/ON
(1-5)
J125
A
J123
J124
J126
J123 (1-3)
J124 (3-5)
J153
J157
REMOTE RES.
PROGRAMMING
(1-10)
J155
J47
POWER SUPPLY
BUS JUNCTION
(1-10)
J132
J133
J154
J156
EXTRA OUTPUT
CONNECTORS
+
J279
-
PROG.
+
J288
-
PROG.
POWER SUPPLY
TESTER No. 1
POWER SUPPLY
TESTER No. 10

FOLDOUT FRAME 3

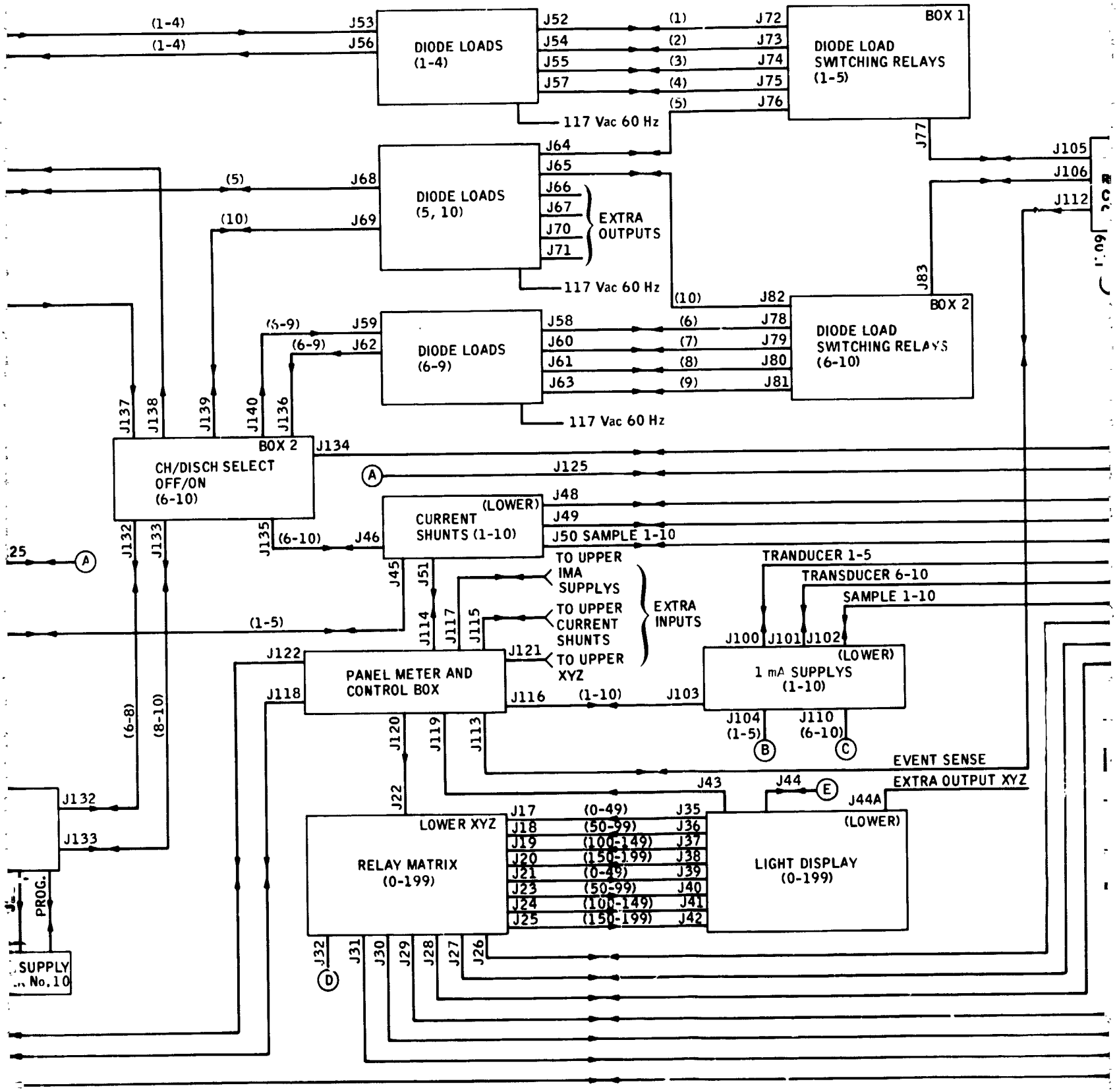

FOLDOUT FRAME 4

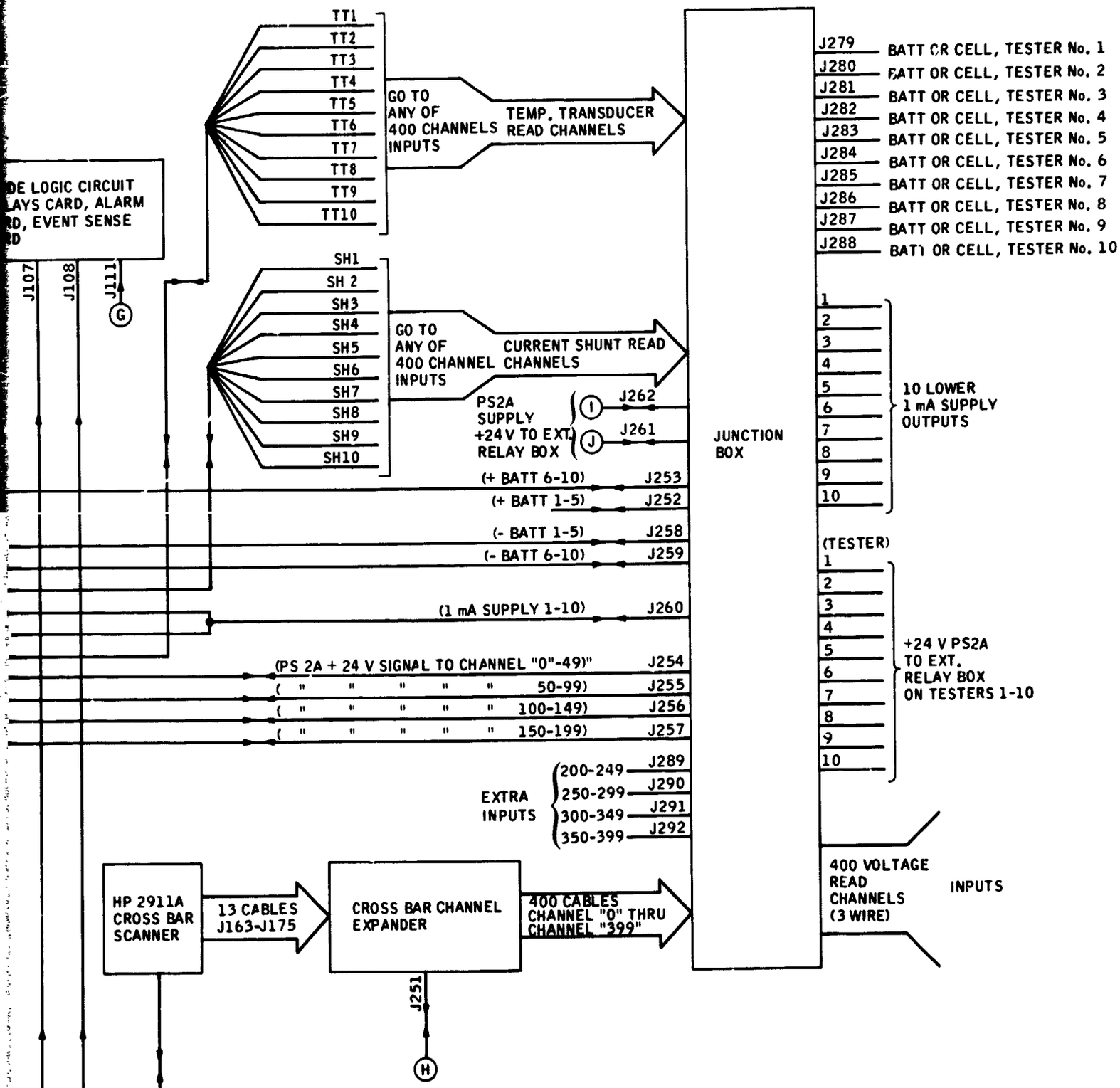

SYSTEM CABLING DIAGRAM

AUTOMATIC CHARGE-DISCHARGE CONTROLLER AND DATA PROCESSING SYSTEM

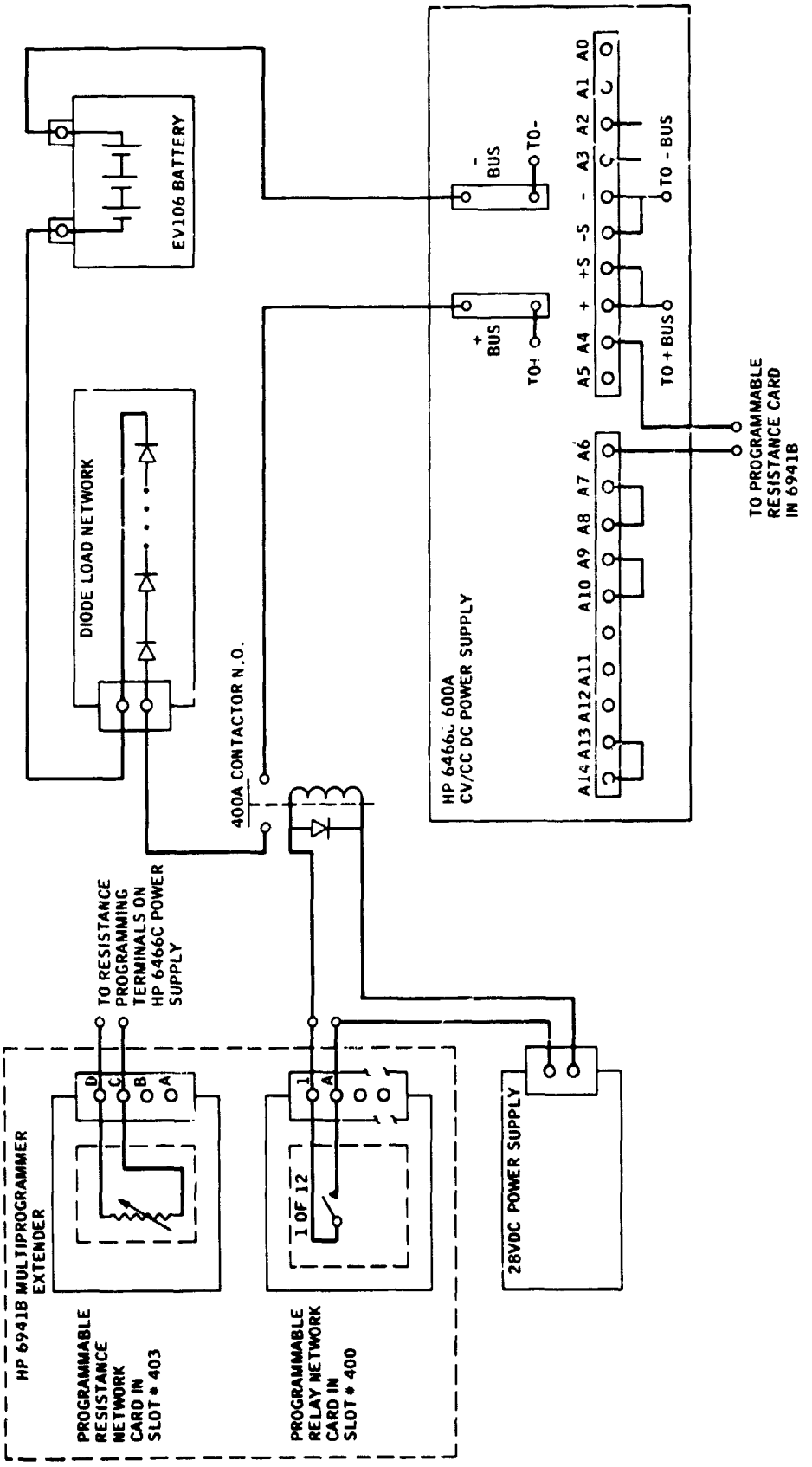

Diagram of Test Layout

```
FTN4,L
      PROGRAM BTEST
C     PROGRAM NAME: BTEST
C     PROGRAMMER:   A. M. PHILLIPS
C     DATE:         MARCH 14,1977
C     PURPOSE:      PERFORMS SIMULATED DRIVING CYCLE CURRENT PROFILES
C                   ON A LEAD-ACID BATTERY
C
C     PROGRAM CONTROL PARAMETERS ARE OPERATOR INPUTS INTO ARRAY IAR TO
C     VARY PROGRAM EXECUTION SO THAT CURRENT AND TIMES SIMULATE SCHE-
C     DULES B, C, OR D.
C
      DIMENSION IDATA(3),IAR(6),ITME(5),IYEAR(1),VLIM(1)
C
C     IDATA IA A THREE WORD DATA AND CONTROL BUFFER FOR THE SYSTEM
C     MULTIPROGRAMMER(DIGITAL I/O SUBSYSTEM).
C
C
C     IAR(1)= 10-MILLISECONDS IN FIRST WAIT
C     IAR(2)= 10-MILLISECONDS IN INCREMENT DELAY(ACCELERATION LOOP)
C     IAR(3)= OCTAL WORD THAT CONTROLS PEAK AMPS IN ACCELERATION
C     IAR(4)= OCTAL WORD THAT CONTROLS CRUISE AMPS
C     IAR(5)= 10-MILLISECONDS TO WAIT IN CRUISE
C     IAR(6)= 10-MILLISECONDS TO WAIT BEFORE REPEAT OF CYCLE
C
C     ITME IS AN ARRAY TO CONTAIN VALUES RETURNED FROM THE SYSTEM CLOCK
C
10    IPAGE=0
C     INITIALIZE PAGE COUNTER
      LINE=0
C     INITIALIZE LINE COUNTER
      IC=0
C     INITIALIZE CYCLE COUNTER
      VLIM=0.0
C     INITIALIZE STORAGE FOR LOWER VOLTAGE LIMIT VALUE
      IDATA(1)=170041B
C     CONTROL WORD TO ENABLE 6941B MULTIPROGRAMMER EXTENDER
      IDATA(2)=030031B
C     DATA WORD FOR RESISTANCE OUTPUT CARD IN SLOT#403 OF THE 6941B
      IDATA(3)=0
C     DATA WORD FOR RELAY OUTPUT CARD IN SLOT#400 OF THE 6941B
      ICODE=11
C     SPECIFY TIME REQUEST FOR EXEC CALL PARAMETER  ICODE
      ICNWD=107B
C     SPECIFY DEVICE REFERENCE NUMBER FOR 6941B AND TYPE OF DATA
C     TRANSFER
      MON=0
C     INITIALIZE LOCATION TO CONTAIN MONTH OF YEAR
      IWD=3044B
C     SPECIFY 23200 DVM/SCANNER ANALOG TO DIGITAL SUBSYSTEM CONTROL
C     WORD. 3044B= 27MSECONDS DELAY 10VDC RANGE.
      NCH=1
C     VOLTAGE MESSUREMENT CHANNEL IS 1
      IFLAG=-1
C     BATTERY VOLTAGE AT OR BELOW LIMIT FLAG
      CALL EXEC(ICODE,ITME,IYEAR)
C     REQUEST TIME AND YEAR
      KDAY=ITME(5)
      CALL DATE(KDAY,MON)
C     PASS JULIAN DAY TO SUBROUTINE TO RETURN  MONTH AND DATE
```

REPRODUCIBILITY OF THE ORIGINAL PAGE IS POOR

```
      WRITE 10,1000)MON,KDAY,IYEAR
C     OUTPUT MONTH,DATE,YEAR TO SYSTEM LOG DEVICE AND IDENTIFY PROG
1000  FORMAT(2(I2,"/"),I4,5X,'DRIVING CYCLE SIMULATION TEST"//)
100   WRITE(10,1005)
1005  FORMAT("BATTERY CUTOFF VOLTAGE?
      READ(10,*)VLIM
C     GET BATTERY VOLTAGE LIMIT FROM TEST OPERATOR
105   WRITE(10,1010)
1010  FORMAT("ENTER: ARRAY POSITION,ARRAY VALUE   THEN 0 TO START, 99 TO
     * DISPLAY ARRAY VALUES, OR -1 TO EXIT")
110   READ(10,*)I,II
C     GET PROGRAM PARAMETERS AND/OR OPERATOR COMMANDS
      IF(I)900,200,115
115   IF(I.NE.99) GO TO 140
      DO 130 K=1,6
      IF((K.EQ.3) .OR. (K.EQ.4)) GO TO 120
C     DISPLAY ARRAY VALUES IN DECIMAL INTEGER FORMAT, EXCEPT DISPLAY
C     ROW 3 AND 4 VALUES IN OCTAL INTEGER FORMAT
      WRITE(10,1020)K,IAR(K)
1020  FORMAT("IAR(",I2,")= ",I6)
      GO TO 130
120   WRITE(10,1030)K,IAR(K)
1030  FORMAT("IAR(",I2,")= ",K6)
130   CONTINUE
140   IAR(I)=II
      GO TO 110
200   CALL EXEC(ICODE,ITME)
C     TIME REQUEST
      IHR=ITME(4)
      IMN=ITME(3)
      ISC=ITME(2)
      IC=IC+1
      CALL MEAS(V,IWD,NCH,IST)
C     CALL ROUTINE TO TAKE A VOLTAGE MEASUREMENT ON THE 2320A A/D
      IF(IST.NE.0) GO TO 850
      LINE=LINE+1
C     INCREMENT LINE COUNTER
      IF(IPAGE EQ.0) GO TO 205
C     TEST FOR FIRST PAGE CONDITION
202   IF(LINE.LT.60) GO TO 210
C     TEST FOR LAST LINE ON PAGE
      WRITE(10,1035)
1035  FORMAT(//////)
205   IPAGE=IPAGE+1
      WRITE(10,1037)MON,KDAY,IYEAR,IPAGE
1037  FORMAT(2(I2,"/"),I4,5X,"DRIVING CYCLE SIMULATION TEST, PAGE#",I4/)
      WRITE(10,1038)
1038  FORMAT("   TIME    CYCLE     S.O.A.V.  E O.A.V   E O C V "/)
      LINE=5
210   WRITE(10,1040)IHR,IMN,ISC,IC,V
1040  FORMAT(I3,2(":",I2),3X,I3,5X,F8 3,"_")
      IDATA(3)=1
C     DATA TO RELAY OUTPUT CARD(CLOSES CONTACTOR)
      CALL EXEC(2,ICNWD,IDATA,3,1)
C     TRANSFER DATA TO 6941B
      CALL WAIT(IAR(1),0,IERR)
C     CALL ROUTINE TO DELAY EXECUTION OF PROGRAM
      IF(IERR.GT.1) GO TO 880
220   IDATA(2)=IDATA(2)+1
      IF(IDATA(2).EQ.IAR(3)) GO TO 300
```

```
C       TEST FOR MAXIMUM RESISTANCE OUTPUT AT END OF ACCELERATION
        CALL EXEC(2,ICNWD,IDATA,3,1)
        CALL WAIT(IAR(2),0,IERR)
        IF(IERR.GT.1) GO TO 880
        GO TO 220
300     CALL MEAS(V,IWD,NCH,IST)
        IF(IST.NE 0) GO TO 850
        IF(V.LE VLIM) IFLAG=1
C       TEST FOR VOLTAGE LIMIT CONDITION AT END OF ACCELERATION
310     WRITE(10,1050)V
1050    FORMAT(2X,F8 3,"_")
        IDATA(2)=IAR(4)
C       DATA TO RESISTANCE OUTPUT CARD FOR CRUISE CURRENT
        CALL EXEC(2,ICNWD,IDATA,3,1)
C       TRANSFER DATA TO 6941B
        CALL WAIT(IAR(5),0,IERR)
        IF(IERR GT.1) GO TO 880
        CALL MEAS(V,IWD,NCH,IST)
        IF(IST.NE.0) GO TO 850
320     WRITE(10,1060)V
1060    FORMAT(2X,F8.3)
        IDATA(2)=030031B
        IDATA(3)=0
C       DATA TO RELAY OUTPUT CARD(OPENS CONTACTOR)
        CALL EXEC(2,ICNWD,IDATA,3,1)
C       TRANSFER DATA TO 6941B
        CALL WAIT(IAR(6),0,IERR)
        IF(IERR.GT.1) GO TO 880
        IF(IFLAG)330,340
C       TEST VOLTAGE LIMIT FLAG
330     I=IFBRK(IMY)
C       TEST FOR OPERATOR INTERRUPT REQUEST
        IF(I)10,200
C       IF I NEGATIVE THEN INTERRUPT REQUESTED
340     LINE=LINE+1
        IF(LINE LT.60) GO   / 350
        WRITE(10,1065)
1065    FORMAT(//////)
350     WRITE(10,1070)
1070    FORMAT("EOA VOLTAGE IS LESS THAN OR EQUAL TO VOLTAGE LIMIT
       ******TEST STOPPED*****")
        LINE=(66-LINE)/2
        DO 360 I=1,LINE
        WRITE(10,1080)
1080    FORMAT(/)
360     CONTINUE
        GO TO 900
850     WRITE(10,1100)
1100    FORMAT("DVM SUBSYSTEM ERROR*******TEST ABORTED****")
        GO TO 890
880     WRITE(10,1110)
1110    FORMAT("ISA WAIT ROUTINE ERROR****TEST ABORTED****")
C       NEXT THREE LINES ARE A SEQUENCE TO STOP THE TEST
890     IDATA(2)=030031B
        IDATA(3)=0
        CALL EXEC(2,ICNWD,IDATA,3,1)
900     STOP
        END
C C C C C C C C C C C C C C C C C C C C C C C C C C C C C C C C C C C C C C
        SUBROUTINE DATE(KDAY,MONTH)
```

REPRODUCIBILITY OF THE ORIGINAL PAGE IS POOR

```
      DIMENSION MT(12)
      MT(1)=31
      MT(2)=28
      MT(3)=31
      MT(4)=30
      MT(5)=31
      MT(6)=30
      MT(7)=31
      MT(8)=31
      MT(9)=30
      MT(10)=31
      MT(11)=30
      MT(12)=31
   10 IF(KDAY)99,99,20
   20 DO 30 K=1,12
      IF(KDAY-MT(K))40,40,30
   30 KDAY=KDAY-MT(K)
   40 MONTH=K
      RETURN
   99 WRITE(10,100)
  100 FORMAT("DATE ERROR")
      RETURN
      END
C C C C C C C C C C C C C C C C C C C C C C C C C C C C C C C C C C C C
      SUBROUTINE MEAS(DTA,IWD,NCH,IST)
      DIMENSION IBF(3),IRG(2)
      EQUIVALENCE(REG,IRG,IA),(IRG(2),IB),(DAT,IBF(1)),(JF,IBF(3))
C
C     DTA- DATA TO THE CALLING PROGRAM
C     IWD- 2320A SUBSYSTEM CONTROL WORD FROM THE CALLING PROGRAM
C     NCH- SCANNER CHANNEL NO. FROM CALLING PROGRAM
C     IST- STATUS INFOMATION FOR THE CALLING PROGRAM
C          0=OK, 1=DOWN, 2=BUSY, 3=OVERLOAD, 4=TRANSMISSION ERROR
C     IBF- BUFFER FOR BCD DATA RETURNED TO THIS PROGRAM BY DVR76
C          BCD DATA FORMAT FOLLOWS.
C          IBF(1)= D4 D3 D2 D1
C          IBF(2)=  R  F D6 D5
C          IBF(3=            F
C     IRG- BUFFER TO CONTAIN A- AND B- REGISTER RETURNS
C          FOLLOWING EXEC CALL WITH ICODE=1
      IET5=0
      IET4=0
C     CLEAR STORAGE FOR DSI EQT WORDS 5 AND 4
      JWD=140000B
C     JWD IS AN 'AND MASK' FOR DSI EQT WORD 5
      CALL EXEC(13,9,IET5,IET4)
C     GET DEVICE STATUS WITH THIS CALL
      IF(IAND(IET5,JWD))40,10,30
C     ARE BITS 15 AND 14 OF DSI EQT WORD 5 =0, =1, OR >=2 ?
C     0=READY, 1=DOWN, 2=BUSY(IN OPERATION)
10    IF(NCH.GT.199) NCH=NCH-200
      REG=EXEC(1,9,IBF,3,NCH,IWD)
C     TAKE A MEASUREMENT
C     ICODE=1  READ REQUEST
C     IDRT =9. DSI LUB
      IF(IAND(IA,JWD))40,20,30
   20 IF(IB.EQ.0) GO TO 50
C     IB=0 MEANS THAT NO DATA WAS TRANSMITTED
      IF(JF.EQ.9) GO TO 60
C     JF=9  MEANS 'OVERLOAD'
```

```
      DTA=CONV(DAT)
C     BCD TO FLOATING POINT CONVERSION ROUTINE
      IST=0
C     SET MY STATUS CODE TO 'OK'
      RETURN
   30 IST=1
C     SET MY STATUS CODE TO 'DOWN'
      GO TO 70
   40 IST=2
C     SET MY STATUS CODE TO 'BUSY'
      GO TO 70
   50 IST=4
C     SET MY STATUS CODE TO 'TRANSMISSION ERROR'
      GO TO 70
   60 IST=3
C     SET MY STATUS CODE TO 'OVERLOAD'
   70 DTA=0.0
C     ERROR RETURN PATH FOR 'NO DATA'
      END
      END$
```

APPENDIX A-3

- Voltage Printout for Schedule "B"
- Voltage Printout for Schedule "C"
- Voltage Printout for Schedule "D"

Note:

SOAV = Voltage at Start of Acceleration Period, Volts

EOAV = Voltage at End of Acceleration Period, Volts

EOCV = Voltage at End of Open Circuit Period, Volts

SCHEDULE B

3/30/1977 DRIVING CYCLE SIMULATION TEST, PAGE# 1

TIME	CYCLE	S.O.A.V.	E.O.A.V.	E.O.C.V.
9:29:49	1	6.879	6.258	6.341
9:31: 4	2	6.524	6.046	6.234
9:32:15	3	6.447	6.023	6.224
9:33:27	4	6.439	6.021	6.223
9:34:38	5	6.436	6.021	6.222
9:35:50	6	6.434	6.020	6.222
9:37: 1	7	6.433	6.019	6.221
9:38:12	8	6.431	6.019	6.221
9:39:24	9	6.430	6.019	6.221
9:40:35	10	6.428	6.018	6.220
9:41:47	11	6.427	6.017	6.219
9:42:58	12	6.426	6.017	6.219
9:44: 9	13	6.424	6.016	6.218
9:45:21	14	6.423	6.016	6.217
9:46:32	15	6.421	6.015	6.217
9:47:44	16	6.420	6.014	6.216
9:48:55	17	6.418	6.013	6.215
9:50: 6	18	6.417	6.012	6.214
9:51:18	19	6.415	6.012	6.213
9:52:29	20	6.414	6.011	6.213
9:53:41	21	6.412	6.010	6.212
9:54:52	22	6.411	6.009	6.211
9:56: 3	23	6.409	6.008	6.210
9:57:15	24	6.408	6.007	6.209
9:58:26	25	6.406	6.006	6.208
9:59:38	26	6.405	6.005	6.207
10: 0:49	27	6.403	6.004	6.206
10: 2: 1	28	6.401	6.003	6.204
10: 3:12	29	6.400	6.002	6.203
10: 4:23	30	6.399	6.001	6.202
10: 5:35	31	6.397	6.000	6.201
10: 6:46	32	6.396	5.999	6.200
10: 7:57	33	6.394	5.997	6.199
10: 9: 9	34	6.392	5.996	6.198
10:10:20	35	6.391	5.995	6.197
10:11:32	36	6.389	5.994	6.195
10:12:43	37	6.388	5.993	6.194
10:13:55	38	6.386	5.992	6.193
10:15: 6	39	6.384	5.990	6.192
10:16:17	40	6.383	5.989	6.190
10:17:29	41	6.381	5.988	6.189
10:18:40	42	6.380	5.986	6.188
10:19:52	43	6.378	5.985	6.187
10:21: 3	44	6.377	5.983	6.185
10:22:14	45	6.375	5.982	6.184
10:23:26	46	6.374	5.981	6.182
10:24:37	47	6.372	5.980	6.181
10:25:47	48	6.370	5.978	6.180
10:27: 0	49	6.368	5.977	6.178
10:28:11	50	6.367	5.976	6.177
10:29:23	51	6.365	5.974	6.176
10:30:34	52	6.364	5.973	6.174
10:31:46	53	6.362	5.971	6.173
10:32:57	54	6.361	5.970	6.172
10:34: 8	55	6.359	5.969	6.170

REPRODUCIBILITY OF THE ORIGINAL PAGE IS POOR

SCHEDULE B (contd)

3/30/1977 DRIVING CYCLE SIMULATION TEST, PAGE# 2

TIME	CYCLE	S.O.A.V.	E.O.A.V.	E.O.C.V.
10:35:20	56	6.357	5.967	6.169
10:36:31	57	6.355	5.966	6.167
10:37:43	58	6.354	5.965	6.166
10:38:54	59	6.352	5.963	6.165
10:40: 6	60	6.351	5.962	6.164
10:41:17	61	6.349	5.960	6.162
10:42:28	62	6.348	5.959	6.160
10:43:40	63	6.346	5.957	6.159
10:44:51	64	6.344	5.956	6.158
10:46: 3	65	6.343	5.954	6.156
10:47:14	66	6.341	5.953	6.155
10:48:25	67	6.339	5.951	6.153
10:49:37	68	6.338	5.950	6.152
10:50:48	69	6.336	5.948	6.150
10:52: 0	70	6.334	5.947	6.149
10:53:11	71	6.333	5.946	6.147
10:54:22	72	6.331	5.944	6.146
10:55:34	73	6.330	5.942	6.144
10:56:45	74	6.328	5.941	6.143
10:57:57	75	6.326	5.940	6.141
10:59: 8	76	6.325	5.938	6.140
11: 0:19	77	6.323	5.937	6.138
11: 1:31	78	6.321	5.935	6.137
11: 2:42	79	6.320	5.933	6.135
11: 3:54	80	6.318	5.932	6.134
11: 5: 5	81	6.316	5.930	6.132
11: 6:16	82	6.315	5.928	6.131
11: 7:28	83	6.313	5.928	6.130
11: 8:39	84	6.312	5.926	6.128
11: 9:51	85	6.310	5.924	6.127
11:11: 2	86	6.308	5.923	6.125
11:12:13	87	6.307	5.922	6.124
11:13:25	88	6.305	5.920	6.122
11:14:36	89	6.303	5.919	6.121
11:15:48	90	6.302	5.917	6.119
11:16:59	91	6.300	5.915	6.118
11:18:10	92	6.298	5.914	6.116
11:19:22	93	6.297	5.912	6.115
11:20:33	94	6.295	5.911	6.113
11:21:45	95	6.293	5.909	6.112
11:22:56	96	6.292	5.907	6.110
11:24: 8	97	6.290	5.906	6.109
11:25:19	98	6.289	5.905	6.107
11:26:30	99	6.287	5.903	6.105
11:27:42	100	6.285	5.901	6.104
11:28:53	101	6.284	5.900	6.103
11:30: 5	102	6.282	5.898	6.101
11:31:16	103	6.280	5.897	6.100
11:32:27	104	6.279	5.895	6.098
11:33:39	105	6.277	5.894	6.097
11:34:50	106	6.276	5.892	6.095
11:36: 2	107	6.274	5.891	6.093
11:37:13	108	6.272	5.889	6.092
11:38:24	109	6.270	5.887	6.090
11:39:36	110	6.269	5.885	6.089

SCHEDULE B (contd)

3/30/1977 DRIVING CYCLE SIMULATION TEST, PAGE# 3

TIME	CYCLE	S.O.A.V.	E.O.A.V.	E.O.C.V.
11:40:47	111	6.267	5.884	6.087
11:41:59	112	6.266	5.883	6.086
11:43:10	113	6.264	5.881	6.084
11:44:22	114	6.262	5.880	6.082
11:45:33	115	6.261	5.877	6.081
11:46:44	116	6.259	5.876	6.079
11:47:56	117	6.257	5.874	6.078
11:49: 7	118	6.256	5.873	6.076
11:50:19	119	6.254	5.870	6.075
11:51:30	120	6.253	5.869	6.073
11:52:41	121	6.251	5.867	6.072
11:53:53	122	6.249	5.866	6.070
11:55: 4	123	6.247	5.865	6.068
11:56:16	124	6.246	5.863	6.067
11:57:27	125	6.244	5.861	6.065
11:58:38	126	6.243	5.860	6.064
11:59:50	127	6.241	5.858	6.062
12: 1: 1	128	6.239	5.856	6.061
12: 2:13	129	6.238	5.854	6.059
12: 3:24	130	6.236	5.853	6.058
12: 4:35	131	6.235	5.851	6.056
12: 5:47	132	6.233	5.850	6.054
12: 6:58	133	6.231	5.849	6.053
12: 8:10	134	6.230	5.846	6.051
12: 9:21	135	6.228	5.845	6.049
12:10:33	136	6.226	5.843	6.048
12:11:44	137	6.225	5.841	6.046
12:12:55	138	6.223	5.840	6.045
12:14: 7	139	6.221	5.838	6.043
12:15:18	140	6.220	5.836	6.042
12:16:30	141	6.218	5.835	6.040
12:17:41	142	6.216	5.834	6.039
12:18:52	143	6.215	5.831	6.037
12:20: 4	144	6.214	5.830	6.035
12:21:15	145	6.212	5.827	6.034
12:22:27	146	6.210	5.826	6.032
12:23:38	147	6.209	5.825	6.031
12:24:49	148	6.207	5.823	6.029
12:26: 1	149	6.205	5.822	6.028
12:27:12	150	6.204	5.820	6.026
12:28:24	151	6.202	5.817	6.024
12:29:35	152	6.201	5.816	6.023
12:30:46	153	6.199	5.814	6.021
12:31:58	154	6.197	5.813	6.020
12:33: 9	155	6.196	5.812	6.018
12:34:21	156	6.194	5.810	6.017
12:35:32	157	6.193	5.808	6.015
12:36:43	158	6.191	5.806	6.013
12:37:55	159	6.189	5.805	6.012
12:39: 6	160	6.187	5.803	6.010
12:40:18	161	6.186	5.802	6.009
12:41:29	162	6.185	5.800	6.007
12:42:41	163	6.183	5.798	6.005
12:43:52	164	6.181	5.797	6.004
12:45: 3	165	6.180	5.795	6.003

SCHEDULE B (contd)

3/30/1977 DRIVING CYCLE SIMULATION TEST, PAGE# 4

TIME	CYCLE	S.O.A.V.	E.O.A.V.	E.O.C.V.
12:46:15	166	6.178	5.793	6.001
12:47:26	167	6.176	5.791	5.999
12:48:38	168	6.175	5.790	5.998
12:49:49	169	6.173	5.788	5.996
12:51: 0	170	6.172	5.786	5.994
12:52:12	171	6.170	5.784	5.993
12:53:23	172	6.168	5.783	5.991
12:54:35	173	6.167	5.781	5.989
12:55:46	174	6.165	5.779	5.988
12:56:58	175	6.164	5.778	5.986
12:58: 9	176	6.162	5.776	5.985
12:59:20	177	6.160	5.774	5.983
13: 0:32	178	6.159	5.772	5.981
13: 1:43	179	6.157	5.770	5.980
13: 2:55	180	6.155	5.769	5.978
13: 4: 6	181	6.154	5.766	5.976
13: 5:17	182	6.152	5.765	5.975
13: 6:29	183	6.150	5.762	5.973
13: 7:40	184	6.149	5.761	5.972
13: 8:52	185	6.147	5.759	5.970
13:10: 3	186	6.145	5.757	5.968
13:11:14	187	6.144	5.755	5.966
13:12:26	188	6.142	5.754	5.964
13:13:37	189	6.141	5.752	5.963
13:14:49	190	6.139	5.750	5.961
13:16: 0	191	6.137	5.748	5.960
13:17:11	192	6.136	5.747	5.958
13:18:23	193	6.134	5.742	5.956
13:19:34	194	6.132	5.742	5.954
13:20:46	195	6.131	5.740	5.953
13:21:57	196	6.129	5.738	5.951
13:23: 8	197	6.127	5.737	5.949
13:24:20	198	6.126	5.734	5.948
13:25:31	199	6.124	5.732	5.946
13:26:43	200	6.123	5.731	5.944
13:27:54	201	6.121	5.729	5.943
13:29: 6	202	6.119	5.726	5.941
13:30:17	203	6.117	5.725	5.939
13:31:28	204	6.116	5.723	5.937
13:32:40	205	6.114	5.721	5.935
13:33:51	206	6.113	5.719	5.933
13:35: 3	207	6.111	5.716	5.932
13:36:14	208	6.109	5.715	5.930
13:37:25	209	6.108	5.713	5.928
13:38:37	210	6.106	5.711	5.926
13:39:48	211	6.104	5.709	5.925
13:41: 0	212	6.103	5.707	5.923
13:42:11	213	6.101	5.705	5.921
13:43:22	214	6.099	5.703	5.920
13:44:34	215	6.098	5.702	5.918
13:45:45	216	6.096	5.699	5.916
13:46:57	217	6.094	5.696	5.913
13:48: 8	218	6.092	5.694	5.911
13:49:19	219	6.091	5.691	5.909
13:50:31	220	6.089	5.689	5.907

SCHEDULE B (contd)

3/30/1977 DRIVING CYCLE SIMULATION TEST, PAGE# 5

TIME	CYCLE	S.O.A.V.	E.O.A.V.	E.O.C.V.
13:51:42	221	6.087	5.687	5.905
13:52:54	222	6.086	5.685	5.904
13:54: 5	223	6.084	5.683	5.902
13:55:17	224	6.082	5.681	5.900
13:56:28	225	6.081	5.677	5.898
13:57:39	226	6.079	5.677	5.896
13:58:51	227	6.077	5.674	5.894
14: 0: 2	228	6.075	5.672	5.893
14: 1:14	229	6.074	5.670	5.891
14: 2:25	230	6.072	5.668	5.889
14: 3:36	231	6.070	5.665	5.887
14: 4:48	232	6.068	5.663	5.885
14: 5:59	233	6.067	5.661	5.883
14: 7:11	234	6.065	5.659	5.881
14: 8:22	235	6.063	5.656	5.879
14: 9:33	236	6.061	5.654	5.877
14:10:45	237	6.060	5.652	5.875
14:11:56	238	6.058	5.650	5.873
14:13: 8	239	6.056	5.647	5.872
14:14:19	240	6.055	5.645	5.870
14:15:31	241	6.053	5.643	5.868
14:16:42	242	6.051	5.640	5.866
14:17:53	243	6.049	5.638	5.864
14:19: 5	244	6.047	5.635	5.862
14:20:16	245	6.046	5.633	5.860
14:21:28	246	6.044	5.631	5.858
14:22:39	247	6.042	5.629	5.856
14:23:50	248	6.040	5.626	5.854
14:25: 2	249	6.039	5.624	5.851
14:26:13	250	6.037	5.621	5.849
14:27:25	251	6.035	5.619	5.847
14:28:36	252	6.033	5.616	5.845
14:29:47	253	6.032	5.614	5.843
14:30:59	254	6.030	5.611	5.841
14:32:10	255	6.028	5.609	5.839
14:33:22	256	6.026	5.606	5.837
14:34:33	257	6.024	5.604	5.835
14:35:44	258	6.023	5.601	5.832
14:36:56	259	6.021	5.598	5.831
14:38: 7	260	6.019	5.596	5.829
14:39:19	261	6.017	5.594	5.827
14:40:30	262	6.015	5.591	5.824
14:41:42	263	6.013	5.588	5.821
14:42:53	264	6.012	5.584	5.819
14:44: 4	265	6.010	5.582	5.816
14:45:16	266	6.008	5.579	5.814
14:46:27	267	6.006	5.576	5.811
14:47:39	268	6.004	5.573	5.809
14:48:50	269	6.002	5.570	5.807
14:50: 1	270	6.000	5.567	5.805
14:51:13	271	5.998	5.565	5.803
14:52:24	272	5.996	5.562	5.800
14:53:36	273	5.994	5.559	5.798
14:54:47	274	5.992	5.556	5.796
14:55:58	275	5.990	5.553	5.793

SCHEDULE B (contd)

3/30/1977 DRIVING CYCLE SIMULATION TEST, PAGE# 6

TIME	CYCLE	S.O.A.V.	E.O.A.V.	E.O.C.V.
14:57:10	276	5.988	5.550	5.791
14:58:21	277	5.987	5.548	5.788
14:59:33	278	5.985	5.545	5.786
15: 0:44	279	5.983	5.541	5.784
15: 1:56	280	5.981	5.539	5.781
15: 3: 7	281	5.978	5.536	5.779
15: 4:18	282	5.977	5.533	5.776
15: 5:30	283	5.975	5.530	5.774
15: 6:41	284	5.973	5.528	5.771
15: 7:53	285	5.971	5.523	5.769
15: 9: 4	286	5.969	5.520	5.766
15:10:15	287	5.966	5.517	5.764
15:11:27	288	5.965	5.514	5.761
15:12:38	289	5.962	5.510	5.759
15:13:50	290	5.960	5.507	5.756
15:15: 1	291	5.958	5.504	5.753
15:16:12	292	5.956	5.500	5.751
15:17:24	293	5.954	5.497	5.748
15:18:35	294	5.952	5.493	5.745
15:19:47	295	5.950	5.490	5.742
15:20:58	296	5.947	5.486	5.739
15:22: 9	297	5.945	5.483	5.737
15:23:21	298	5.943	5.479	5.734
15:24:32	299	5.941	5.476	5.731
15:25:44	300	5.939	5.472	5.728
15:26:55	301	5.937	5.468	5.725
15:28: 7	302	5.934	5.465	5.722
15:29:18	303	5.932	5.462	5.719
15:30:29	304	5.930	5.457	5.716
15:31:41	305	5.927	5.454	5.713
15:32:52	306	5.925	5.449	5.710
15:34: 4	307	5.923	5.445	5.706
15:35:15	308	5.920	5.441	5.703
15:36:26	309	5.918	5.436	5.700
15:37:38	310	5.916	5.432	5.697
15:38:49	311	5.913	5.427	5.693
15:40: 1	312	5.910	5.423	5.690
15:41:12	313	5.908	5.419	5.686
15:42:23	314	5.906	5.414	5.683
15:43:35	315	5.903	5.410	5.679
15:44:46	316	5.900	5.405	5.676
15:45:58	317	5.898	5.401	5.672
15:47: 9	318	5.895	5.396	5.668
15:48:21	319	5.892	5.391	5.664
15:49:32	320	5.890	5.386	5.661
15:50:43	321	5.887	5.381	5.657
15:51:55	322	5.884	5.375	5.653
15:53: 6	323	5.881	5.370	5.649
15:54:17	324	5.878	5.365	5.645
15:55:29	325	5.875	5.360	5.641
15:56:40	326	5.872	5.354	5.636
15:57:52	327	5.870	5.348	5.631
15:59: 3	328	5.866	5.341	5.626
16: 0:15	329	5.863	5.336	5.621
16: 1:26	330	5.860	5.329	5.616

SCHEDULE B (contd)

3/30/1977 DRIVING CYCLE SIMULATION TEST, PAGE# 7

TIME	CYCLE	S.O.A.V.	E.O.A.V.	E.O.C.V.
16: 2:37	331	5.857	5.322	5.611
16: 3:49	332	5.853	5.316	5.606
16: 5: 0	333	5.850	5.309	5.601
16: 6:12	334	5.846	5.302	5.596
16: 7:23	335	5.843	5.295	5.591
16: 8:34	336	5.839	5.288	5.585
16: 9:46	337	5.835	5.280	5.580
16:10:57	338	5.831	5.272	5.574
16:12: 9	339	5.827	5.264	5.568
16:13:20	340	5.823	5.255	5.561
16:14:31	341	5.819	5.247	5.555
16:15:43	342	5.814	5.238	5.549
16:16:54	343	5.810	5.228	5.542
16:18: 6	344	5.805	5.219	5.535
16:19:17	345	5.800	5.209	5.528
16:20:28	346	5.795	5.198	5.519
16:21:40	347	5.790	5.185	5.509
16:22:51	348	5.785	5.172	5.500
16:24: 3	349	5.779	5.159	5.490
16:25:14	350	5.773	5.145	5.480
16:26:26	351	5.767	5.130	5.469
16:27:37	352	5.760	5.114	5.458
16:28:48	353	5.753	5.097	5.446
16:30: 0	354	5.746	5.079	5.433
16:31:11	355	5.738	5.059	5.419
16:32:23	356	5.729	5.036	5.404
16:33:34	357	5.721	5.011	5.387
16:34:45	358	5.711	4.984	5.369
16:35:57	359	5.701	4.954	5.349
16:37: 8	360	5.690	4.916	5.324
16:38:20	361	5.677	4.868	5.293
16:39:31	362	5.664	4.807	5.255
16:40:42	363	5.648	4.715	5.204
16:41:54	364	5.630	4.551	5.123
16:43: 5	365	5.609	4.267	4.962
16:44:17	366	5.580	3.932	4.715
16:45:28	367	5.542	3.612	4.472
16:46:39	368	5.498	3.264	4.229
16:47:51	369	5.442	2.763	3.914

EOA VOLTAGE IS LESS THAN OR EQUAL TO VOLTAGE LIMIT *****TEST STOPPED*****

SCHEDULE C

3/23/1977 DRIVING CYCLE SIMULATION TEST, PAGE# 1

TIME	CYCLE	S.O.A.V.	E.O.A.V.	E.O.C.V.
8:39:38	1	6.825	5.718	6.131
8:40:59	2	6.421	5.646	6.124
8:42:19	3	6.421	5.658	6.133
8:43:39	4	6.426	5.663	6.137
8:45: 0	5	6.427	5.666	6.140
8:46:20	6	6.426	5.668	6.140
8:47:40	7	6.424	5.668	6.140
8:49: 0	8	6.421	5.668	6.139
8:50:21	9	6.418	5.668	6.137
8:51:41	10	6.415	5.666	6.135
8:53: 1	11	6.412	5.665	6.133
8:54:22	12	6.409	5.663	6.131
8:55:42	13	6.406	5.662	6.130
8:57: 2	14	6.402	5.660	6.128
8:58:22	15	6.399	5.659	6.126
8:59:43	16	6.396	5.657	6.124
9: 1: 3	17	6.393	5.655	6.123
9: 2:23	18	6.390	5.653	6.120
9: 3:43	19	6.387	5.652	6.118
9: 5: 4	20	6.384	5.649	6.116
9: 6:24	21	6.382	5.648	6.115
9: 7:44	22	6.379	5.646	6.113
9: 9: 5	23	6.376	5.644	6.110
9:10:25	24	6.373	5.641	6.108
9:11:45	25	6.370	5.639	6.106
9:13: 5	26	6.367	5.638	6.105
9:14:26	27	6.364	5.636	6.103
9:15:46	28	6.362	5.634	6.100
9:17: 6	29	6.359	5.631	6.097
9:18:27	30	6.356	5.628	6.095
9:19:47	31	6.353	5.626	6.092
9:21: 7	32	6.350	5.623	6.090
9:22:27	33	6.347	5.620	6.087
9:23:48	34	6.344	5.619	6.085
9:25: 8	35	6.341	5.616	6.082
9:26:28	36	6.338	5.613	6.080
9:27:49	37	6.335	5.612	6.078
9:29: 9	38	6.333	5.609	6.076
9:30:29	39	6.330	5.607	6.073
9:31:49	40	6.327	5.604	6.071
9:33:10	41	6.324	5.602	6.069
9:34:30	42	6.321	5.600	6.066
9:35:50	43	6.318	5.597	6.064
9:37:11	44	6.315	5.594	6.062
9:38:31	45	6.312	5.592	6.060
9:39:51	46	6.310	5.589	6.057
9:41:11	47	6.307	5.587	6.054
9:42:32	48	6.304	5.584	6.051
9:43:52	49	6.301	5.581	6.048
9:45:12	50	6.298	5.578	6.045
9:46:33	51	6.295	5.575	6.043
9:47:53	52	6.292	5.573	6.040
9:49:13	53	6.289	5.570	6.038
9:50:34	54	6.287	5.567	6.035
9:51:54	55	6.284	5.564	6.033

SCHEDULE C (contd)

3/23/1977 DRIVING CYCLE SIMULATION TEST, PAGE# 2

TIME	CYCLE	S.O.A.V.	E.O.A.V.	E.O.C.V.
9:53:14	56	6.281	5.562	6.030
9:54:34	57	6.278	5.559	6.028
9:55:55	58	6.275	5.556	6.025
9:57:15	59	6.272	5.553	6.022
9:58:35	60	6.269	5.550	6.020
9:59:56	61	6.266	5.547	6.017
10: 1:16	62	6.263	5.544	6.015
10: 2:36	63	6.261	5.542	6.013
10: 3:56	64	6.258	5.539	6.010
10: 5:17	65	6.255	5.535	6.007
10: 6:37	66	6.252	5.532	6.003
10: 7:57	67	6.249	5.529	6.000
10: 9:18	68	6.246	5.525	5.997
10:10:38	69	6.243	5.522	5.995
10:11:58	70	6.240	5.519	5.992
10:13:18	71	6.238	5.515	5.989
10:14:39	72	6.235	5.512	5.987
10:15:59	73	6.232	5.510	5.983
10:17:19	74	6.229	5.506	5.981
10:18:40	75	6.226	5.502	5.978
10:20: 0	76	6.223	5.500	5.976
10:21:20	77	6.220	5.496	5.973
10:22:40	78	6.217	5.492	5.970
10:24: 1	79	6.214	5.489	5.967
10:25:21	80	6.211	5.485	5.964
10:26:41	81	6.208	5.482	5.962
10:28: 2	82	6.206	5.478	5.959
10:29:22	83	6.203	5.475	5.956
10:30:42	84	6.200	5.471	5.952
10:32: 2	85	6.197	5.467	5.949
10:33:23	86	6.194	5.463	5.945
10:34:43	87	6.191	5.459	5.942
10:36: 3	88	6.188	5.454	5.939
10:37:24	89	6.185	5.451	5.936
10:38:44	90	6.182	5.447	5.933
10:40: 4	91	6.179	5.443	5.930
10:41:24	92	6.176	5.439	5.927
10:42:45	93	6.173	5.434	5.923
10:44: 5	94	6.170	5.430	5.921
10:45:25	95	6.167	5.427	5.917
10:46:46	96	6.164	5.422	5.914
10:48: 6	97	6.161	5.418	5.911
10:49:26	98	6.158	5.414	5.908
10:50:46	99	6.155	5.410	5.905
10:52: 7	100	6.152	5.405	5.902
10:53:27	101	6.149	5.401	5.899
10:54:47	102	6.146	5.396	5.895
10:56: 8	103	6.143	5.391	5.890
10:57:28	104	6.140	5.386	5.887
10:58:48	105	6.137	5.375	5.883
11: 0: 9	106	6.134	5.376	5.880
11: 1:29	107	6.131	5.371	5.876
11: 2:49	108	6.128	5.366	5.873
11: 4: 9	109	6.125	5.361	5.870
11: 5:30	110	6.122	5.356	5.866

SCHEDULE C (contd)

3/23/1977 DRIVING CYCLE SIMULATION TEST, PAGE# 3

TIME	CYCLE	S.O.A.V.	E.O.A.V.	E.O.C.V.
11: 6:50	111	6.119	5.351	5.862
11: 8:10	112	6.115	5.346	5.858
11: 9:31	113	6.112	5.3	5.855
11:10:51	114	6.109	5.336	5.851
11:12:11	115	6.106	5.330	5.848
11:13:32	116	6.103	5.325	5.844
11:14:52	117	6.100	5.320	5.840
11:16:12	118	6.096	5.314	5.837
11:17:32	119	6.093	5.309	5.833
11:18:53	120	6.090	5.303	5.828
11:20:13	121	6.087	5.296	5.824
11:21:33	122	6.084	5.289	5.819
11:22:54	123	6.080	5.284	5.815
11:24:14	124	6.077	5.277	5.810
11:25:34	125	6.074	5.271	5.806
11:26:54	126	6.070	5.265	5.802
11:28:15	127	6.067	5.259	5.798
11:29:35	128	6.063	5.252	5.793
11:30:55	129	6.060	5.244	5.788
11:32:16	130	6.056	5.238	5.784
11:33:36	131	6.053	5.231	5.779
11:34:56	132	6.049	5.223	5.774
11:36:16	133	6.046	5.216	5.770
11:37:37	134	6.042	5.209	5.765
11:38:57	135	6.038	5.201	5.760
11:40:17	136	6.035	5.193	5.755
11:41:38	137	6.031	5.185	5.750
11:42:58	138	6.027	5.176	5.743
11:44:18	139	6.023	5.167	5.737
11:45:38	140	6.019	5.158	5.730
11:46:59	141	6.015	5.148	5.724
11:48:19	142	6.011	5.138	5.718
11:49:39	143	6.007	5.127	5.711
11:51: 0	144	6.003	5.118	5.704
11:52:20	145	5.999	5.106	5.698
11:53:40	146	5.994	5.095	5.691
11:55: 0	147	5.989	5.083	5.683
11:56:21	148	5.985	5.071	5.676
11:57:41	149	5.980	5.058	5.667
11:59: 1	150	5.975	5.044	5.659
12: 0:22	151	5.970	5.030	5.650
12: 1:42	152	5.964	5.015	5.641
12: 3: 2	153	5.959	5.001	5.631
12: 4:23	154	5.953	4.985	5.622
12: 5:43	155	5.947	4.970	5.612
12: 7: 3	156	5.941	4.955	5.602
12: 8:23	157	5.934	4.937	5.590
12: 9:44	158	5.928	4.920	5.579
12:11: 4	159	5.921	4.903	5.568
12:12:24	160	5.913	4.885	5.557
12:13:45	161	5.906	4.868	5.547
12:15: 5	162	5.898	4.851	5.535
12:16:25	163	5.891	4.834	5.525
12:17:45	164	5.883	4.815	5.514
12:19: 6	165	5.875	4.797	5.503

REPRODUCIBILITY OF THE ORIGINAL PAGE IS POOR

SCHEDULE C (contd)

3/23/1977 DRIVING CYCLE SIMULATION TEST, PAGE# 4

TIME	CYCLE	S.O.A.V.	E.C.A.V.	E.O.C.V.
12:20:26	166	5.868	4.778	5.491
12:21:46	167	5.860	4.758	5.479
12:23: 7	168	5.852	4.737	5.468
12:24:27	169	5.844	4.715	5.455
12:25:47	170	5.836	4.690	5.442
12:27: 8	171	5.827	4.665	5.428
12:28:28	172	5.818	4.639	5.413
12:29:48	173	5.809	4.608	5.397
12:31: 8	174	5.800	4.575	5.380
12:32:29	175	5.790	4.538	5.362
12:33:49	176	5.780	4.496	5.341
12:35: 9	177	5.769	4.444	5.315
12:36:30	178	5.757	4.380	5.287
12:37:50	179	5.745	4.296	5.253
12:39:10	180	5.730	4.177	5.211
12:40:30	181	5.715	3.990	5.154
12:41:51	182	5.697	3.717	5.068
12:43:11	183	5.677	3.357	4.932
12:44:31	184	5.652	2.895	4.718

EOA VOLTAGE IS LESS THAN OR EQUAL TO VOLTAGE LIMIT *****TEST STOPPED****

SCHEDULE D

3/22/1977 DRIVING CYCLE SIMULATION TEST, PAGE# 1

TIME	CYCLE	S.O.A.V.	E.O.A.V.	E.O.C.V.
8:47:55	1	6.736	5.266	6.054
8:50: 0	2	6.442	5.295	6.054
8:52: 5	3	6.432	5.293	6.047
8:54:11	4	6.417	5.286	6.038
8:56:16	5	6.403	5.277	6.029
8:58:22	6	6.389	5.268	6.021
9: 0:27	7	6.377	5.258	6.012
9: 2:32	8	6.365	5.255	6.003
9: 4:38	9	6.353	5.238	5.995
9: 6:43	10	6.342	5.227	5.986
9: 8:48	11	6.332	5.217	5.976
9:10:54	12	6.321	5.204	5.966
9:12:59	13	6.311	5.191	5.956
9:15: 5	14	6.300	5.179	5.946
9:17:10	15	6.290	5.165	5.936
9:19:15	16	6.279	5.153	5.928
9:21:21	17	6.269	5.140	5.918
9:23:26	18	6.259	5.125	5.906
9:25:32	19	6.248	5.109	5.895
9:27:37	20	6.238	5.093	5.884
9:29:42	21	6.227	5.077	5.872
9:31:48	22	6.216	5.060	5.861
9:33:53	23	6.206	5.044	5.849
9:35:59	24	6.195	5.028	5.838
9:38: 4	25	6.184	5.010	5.825
9:40: 9	26	6.173	4.990	5.811
9:42:15	27	6.162	4.969	5.798
9:44:20	28	6.150	4.950	5.784
9:46:25	29	6.139	4.928	5.771
9:48:31	30	6.127	4.907	5.757
9:50:36	31	6.115	4.884	5.742
9:52:42	32	6.103	4.860	5.726
9:54:47	33	6.091	4.834	5.709
9:56:52	34	6.078	4.807	5.692
9:58:58	35	6.065	4.778	5.674
10: 1: 3	36	6.051	4.749	5.657
10: 3: 9	37	6.037	4.717	5.637
10: 5:14	38	6.023	4.683	5.616
10: 7:19	39	6.008	4.643	5.592
10: 9:25	40	5.992	4.601	5.567
10:11:30	41	5.975	4.552	5.541
10:13:35	42	5.958	4.500	5.512
10:15:41	43	5.938	4.438	5.480
10:17:46	44	5.918	4.363	5.441
10:19:52	45	5.895	4.262	5.393
10:21:57	46	5.868	4.125	5.343
10:24: 2	47	5.838	3.892	5.256
10:26: 8	48	5.802	3.291	5.144
10:28:13	49	5.759	1.775	4.313

EOA VOLTAGE IS LESS THAN OR EQUAL TO VOLTAGE LIMIT *****TEST STOPPED*****

NASA—JPL—Coml., L.A., Calif.